MADE BY VB-SERVICES

VEHICLE LIFT AND SUPPORT LOCATIONS

1. NOTICE ABOUT VEHICLE CONDITION WHEN JACKING UP VEHICLE

(a) The vehicle must be unloaded before jacking up / lifting up the vehicle. Never jack up / lift up a heavily loaded vehicle.

(b) When removing heavy parts such as the engine and transmission, the center of gravity of the vehicle may shift. To stabilize the vehicle, place a balance weight in a location where it will not roll or shift, or use a mission jack to hold the jacking support.

2. NOTICE FOR USING 4 POST LIFT

(a) Follow the safety procedures outlined in the lift instruction manual.

(b) Use precautionary measures to prevent the free wheel beam from damaging tires or wheels.

(c) Use wheel chocks to secure the vehicle.

3. NOTICE FOR USING JACK AND SAFETY STAND

(a) Work on a level surface. Use wheel chocks at all times.

(b) Set the jack and rigid racks to the specified locations of the vehicle accurately.

(c) When jacking up the vehicle, first release the parking brake and move the shift lever to N.

(d) When jacking up the entire vehicle:

(1) When jacking up the front wheels first, make sure wheel chocks are behind the rear wheels.

(2) When jacking up the rear wheels first, make sure wheel chocks are in front of the front wheels.

(e) When jacking up only the front or rear wheels of the vehicle:

(1) Before jacking up the front wheels, place wheel chocks on both sides of the rear wheels.

(2) Before jacking up the rear wheels, place wheel chocks on both sides of the front wheels.

(f) When lowering a vehicle that only has its front or rear wheels jacked up:

(1) Before lowering the front wheels, make sure wheel chocks are in front of the rear wheels.

(2) Before lowering the rear wheels, make sure wheel chocks are behind the front wheels.

(g) It is extremely dangerous to perform any work on a vehicle raised on a jack alone, even for work that can be finished quickly. Rigid racks must be used to support the vehicle.

2WD (Except Pre Runner):

Regular Cab: 1,249 mm (49.2 in.)

Access Cab: 1,441 mm (56.7 in.)

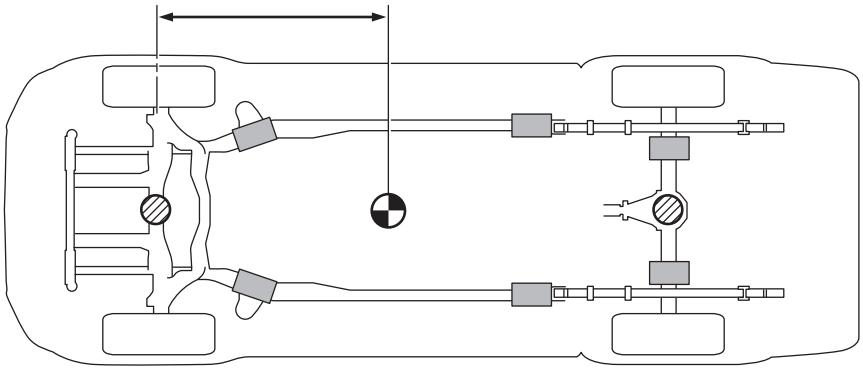

Pre-runner:

Regular Cab: 1,249 mm (49.2 in.)

Access Cab: 1,445 mm (56.9 in.)

Double Cab (Short desk): 1,445 mm (56.9 in.)

Double Cab (Long desk): 1,621 mm (63.8 in.)

4WD:

Regular Cab: 1,186 mm (46.7 in.)

Access Cab: 1,394 mm (54.9 in.)

Double Cab (Short desk): 1,394 mm (54.9 in.)

Double Cab (Long desk): 1,560 mm (61.4 in.)

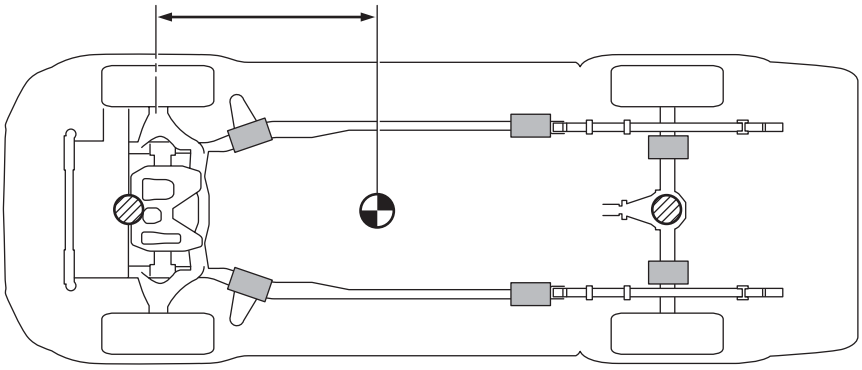

JACK POSITION

SUPPORT POSITION

CENTER OF VEHICLE GRAVITY
(unloaded condition)

Y

A127286E01

4. NOTICE FOR USING SWING ARM TYPE LIFT

(a) Follow safety procedures outlined in its instruction manual.

(b) Use a swing arm equipped with a rubber attachment.

(c) Set in the vehicle so as to make its center of gravity as close as possible to the center of the lift. (L becomes short.)

(d) Place the vehicle horizontally by adjusting the height of the cradle, and match the groove of the cradle and the safety stand support location accurately.

(e) Be sure to lock the swing arms before lifting and during work (if equipped with arm locks).

(f) Lift the vehicle up off the ground. Stand at a safe distance and shake the vehicle to check its stability.

Swing Arm Type Lift

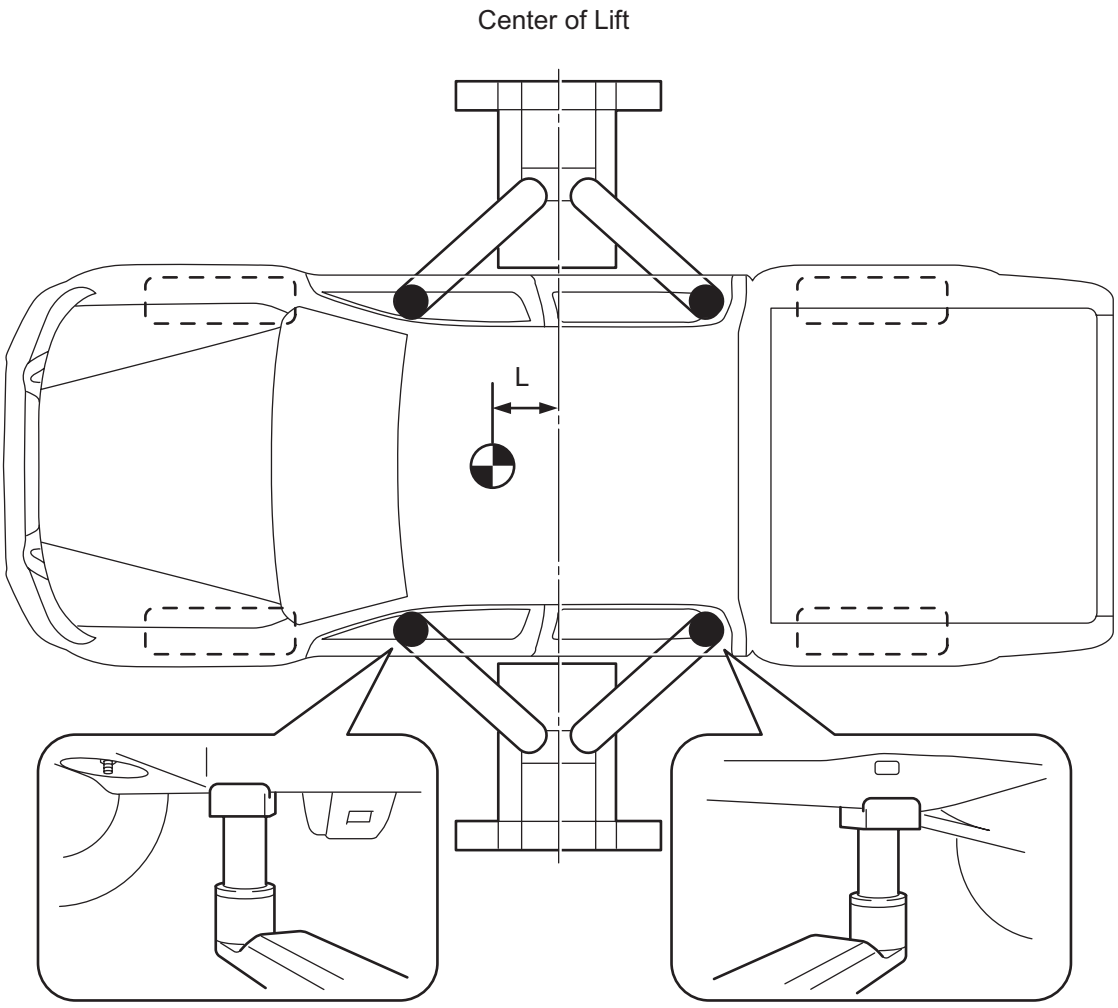

Y

A127287E01

SSM

	08826-00080	Seal Packing Black or equivalent (FIPG)	
	08826-00100	Seal Packing 1282B, THREE BOND 1282B or equivalent (FIPG)	

COOLANT

Item		Capacity	Classification
Engine coolant	Manual transmission	9.7 liters (10.3 US qts, 8.5 lmp.qts)	"TOYOTA SUPER LONG LIFE Antifreeze Coolant" or equivalent
	Automatic transmission	9.8 liters (10.4 US qts, 8.6 lmp.qts)	

RECOMMENDED TOOLS

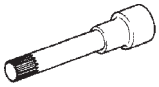	09043-50100	Bi-hexagon Wrench 10 mm	
	09082-00040	TOYOTA Electrical Tester	
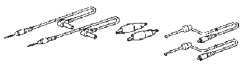	(09083-00150)	Test Lead Set	

EQUIPMENT

Service wire harness	
Ammeter	
Ohmmeter	
Torque wrench	
Vernier calipers	

RECOMMENDED TOOLS

	09904-00010	Expander Set	
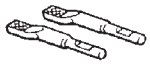	(09904-00020)	No. 1 Claw	
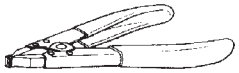	09905-00012	Snap Ring No.1 Expander	

EQUIPMENT

Dial indicator	
Dial indicator or dial indicator with magnetic base	
Feeler gauge	
Micrometer	
Torque wrench	

EQUIPMENT

Torque wrench	

EQUIPMENT

Torque wrench	

SSM

	08833-00070	Adhesive 1324, THREE BOND 1324 or equivalent	

HOW TO DETERMINE NUT STRENGTH

Nut Type

Present Standard Hexagon Nut	Old Standard Hexagon Nut		Class
	Cold Forging Nut	Cutting Processed Nut	
No Mark 			4N
No Mark (w/ Washer) 	No Mark (w/ Washer) 	No Mark 	5N (4T)
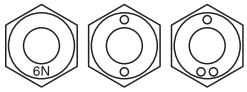			6N
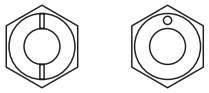 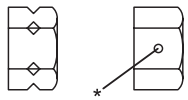			7N (5T)
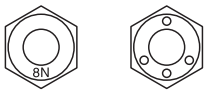			8N
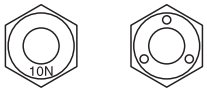	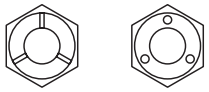	No Mark 	10N (7T)
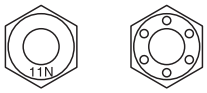			11N
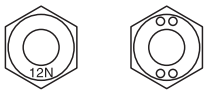			12N

HINT:

- *: Nut with 1 or more marks on one side surface of the nut.
- Use the nut with the same number of the nut strength classification or greater than the bolt strength classification number when tightening parts with a bolt and nut.

Example:

- Bolt = 4T
- Nut = 4N or more

TORQUE SPECIFICATIONS

Part Tightened	N*m	kgf*cm	ft.*lbf
Park/neutral position switch x Automatic transmission (For nut)	6.9	70	61 in.*lbf
Park/neutral position switch x Automatic transmission (For bolt)	13	130	9.0
Transmission control cable x Automatic transmission	14	143	10
Engine mounting insulator rear No.1 x Automatic transmission	65	663	48
Automatic transmission x Engine (For bolt A)	71	720	53
Automatic transmission x Engine (For bolt B)	37	380	27
Torque converter clutch x Drive plate	48	489	35
Oil cooler tube clamp x Engine (For bolt A)	12	122	9.0
Oil cooler tube clamp x Engine (For bolt B)	5.0	50	43 in.*lbf
Oil cooler outlet tube No.1 x Automatic transmission	34	350	25
Oil cooler inlet tube No.1 x Automatic transmission	34	350	25
Transmission revolution sensor x Automatic transmission	5.4	55	48 in.*lbf
Drain plug x Oil pan	28	285	21
Transmission wire set bolt x Automatic transmission	5.4	55	48 in.*lbf
Transmission wire clamp x Valve body (A)	11	110	8.0
Transmission wire clamp x Valve body (B)	10	100	7.0
Oil strainer x Valve body	10	100	7.0
Oil pan x Transmission case	4.4	45	39 in.*lbf
Shift solenoid valve S1 x Valve body	6.4	65	56 in.*lbf
Shift solenoid valve S2 x Valve body	10	100	7.0
Shift solenoid valve SR x Valve body	6.4	65	56 in.*lbf
Shift solenoid valve SLU, SL2 x Valve body	6.4	65	56 in.*lbf
Shift solenoid valve SLT, SL1 x Valve body	6.4	65	56 in.*lbf
Valve body x Transmission case	11	110	8.0
Floor shift assembly x Body	14	143	10
Overflow plug x Automatic transmission	20	204	15
Refill plug x Automatic transmission	39	400	29
Frame crossmember sub-assembly No.3 x Body	40	408	30
Frame crossmember sub-assembly No.3 x Engine mounting insulator No. 1	19	189	14
Battery x Negative battery terminal	3.9	40	35 in.*lbf
Transmission control cable bracket No. 1 x Automatic transmission	28	286	21
Manifold stay No. 2 x Automatic transmission	40	408	30
Manifold stay x Automatic transmission	40	408	30
Oil with hose cooler x Body	5.0	51	44 in.*lbf
Transmission control cable x Body	5.5	56	49 in.*lbf

TORQUE SPECIFICATIONS

Part tightened	N*m	kgf*cm	ft.*lbf
Transmission filler plug x Manual transmission	37	377	27
Manual transmission case cover x Manual transmission	12	117	8.5
Manual transmission x Engine for bolt A	72	730	53
Manual transmission x Engine for bolt B	37	380	28
Manual transmission x Engine mounting insulator rear No. 1	65	663	48
Frame crossmember sub-assembly No. 3 x Body	40	408	30
Frame crossmember sub-assembly No. 3 x Manual transmission	19	189	14
Manifold stay x Manual transmission	40	408	30
Manifold stay x Manual transmission	40	408	30
Battery x Negative battery terminal cable	3.9	40	35 in.*lbf
Gear shift fork No. 2 x Gear shift fork shaft No. 2	20	199	14
Gear shift fork No. 3 x Gear shift fork shaft No. 3	20	199	14
Transmission front case x Plug	39	400	29
Transmission front case x Interlock bracket	21	214	15
Transmission front case x Back up lamp switch	44	449	33
Shift & select lever x Shift & select lever shaft	33	340	25
Transmission middle case x Drain plug	37	377	27
Transmission front case x Transmission middle case	40	408	30
Reverse idler gear shaft bolt x Reverse idler gear shaft	28	286	21
Transmission oil separator x Transmission middle case	8.5	87	75 in.*lbf
Bearing lock plate x Transmission rear case	11	115	8.3
Transmission rear case x Filler plug	37	377	27
Transmission rear case x Transmission middle case	40	408	30
Transmission rear case x Shift detent ball plug	25	250	18
Transmission rear case x Transmission case cover	18	184	13
Shift lever housing x Shift & select lever shaft	33	340	25
Floor shift control shift lever retainer sub-assembly x Transmission rear case	20	204	15

PARTS LOCATION

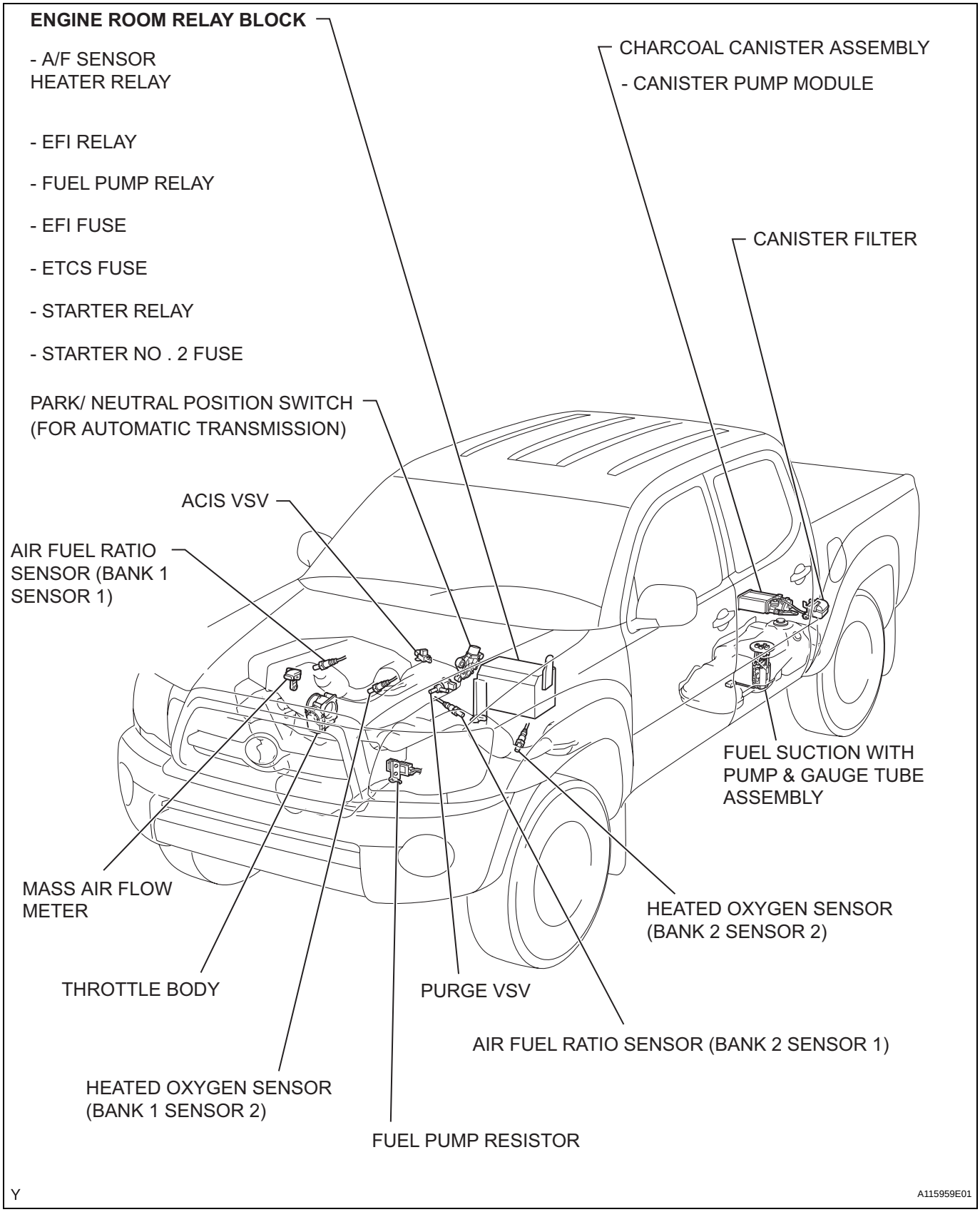

ES

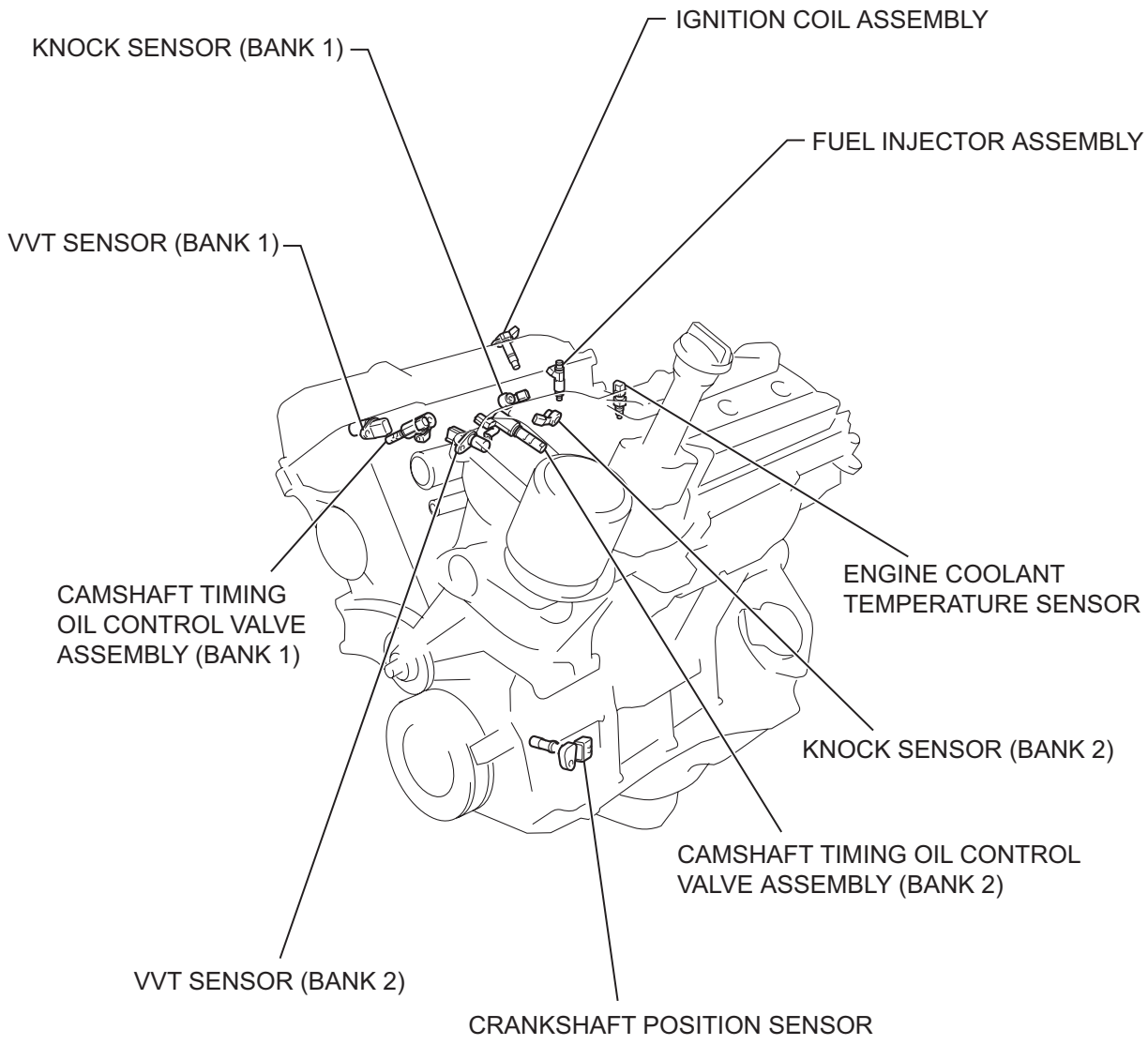
KNOCK SENSOR (BANK 1)
IGNITION COIL ASSEMBLY
FUEL INJECTOR ASSEMBLY
VVT SENSOR (BANK 1)
CAMSHAFT TIMING OIL CONTROL VALVE ASSEMBLY (BANK 1)
ENGINE COOLANT TEMPERATURE SENSOR
KNOCK SENSOR (BANK 2)
CAMSHAFT TIMING OIL CONTROL VALVE ASSEMBLY (BANK 2)
VVT SENSOR (BANK 2)
CRANKSHAFT POSITION SENSOR
Y
A115960E01

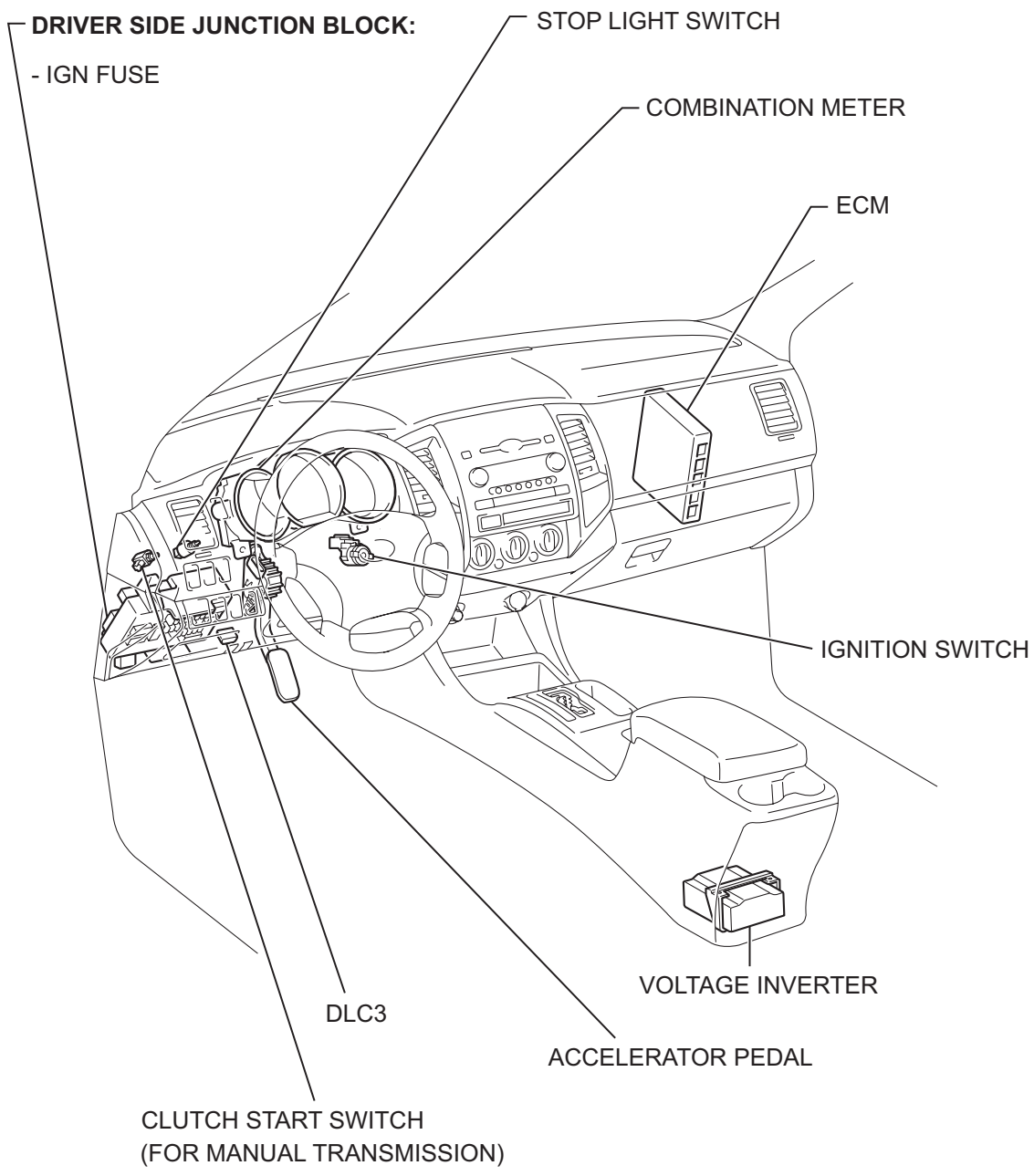
DRIVER SIDE JUNCTION BLOCK:
- IGN FUSE
STOP LIGHT SWITCH
COMBINATION METER
ECM
IGNITION SWITCH
VOLTAGE INVERTER
DLC3
ACCELERATOR PEDAL
CLUTCH START SWITCH
(FOR MANUAL TRANSMISSION)
Y
G034987E04

ES

PARTS LOCATION

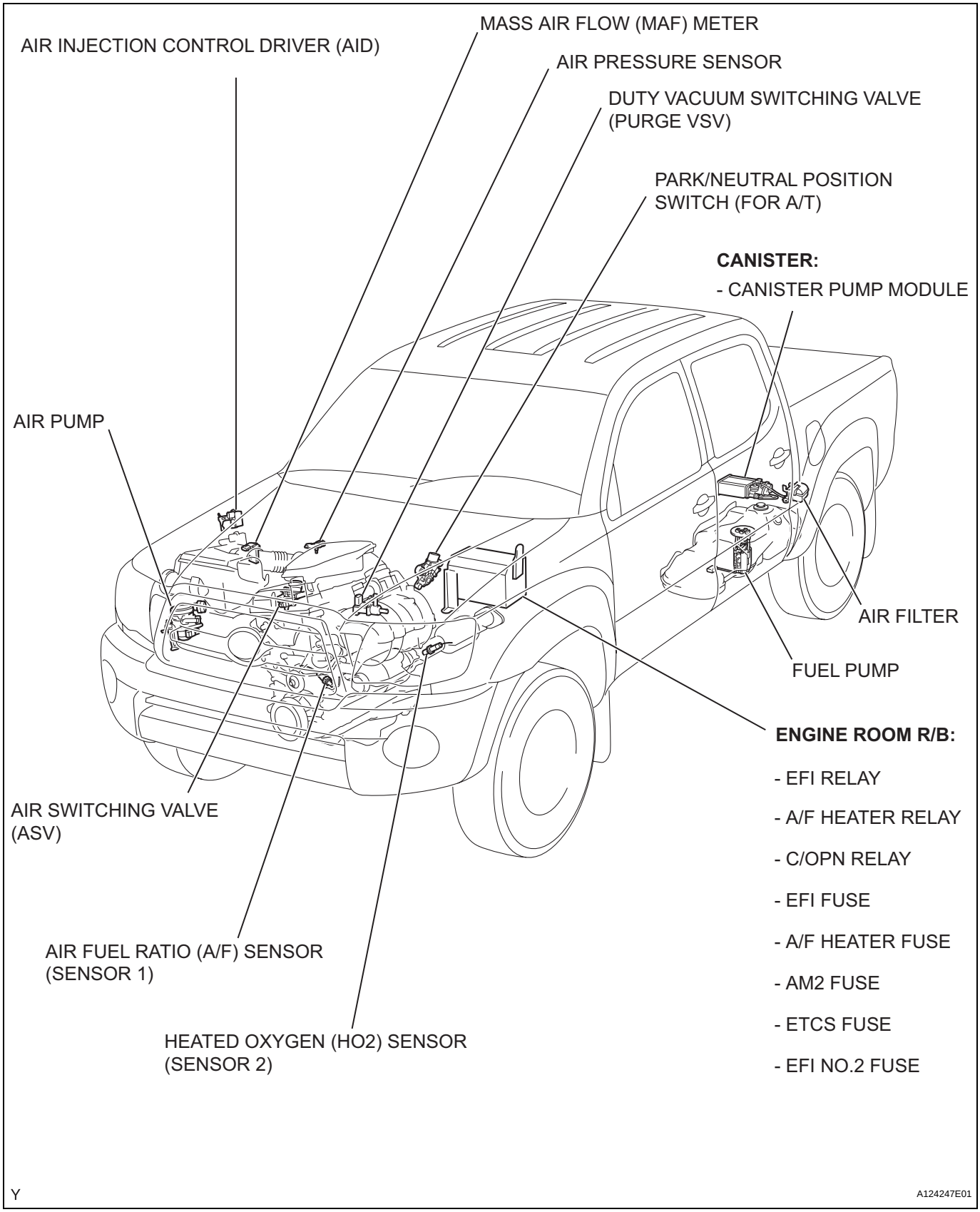

ES

ES

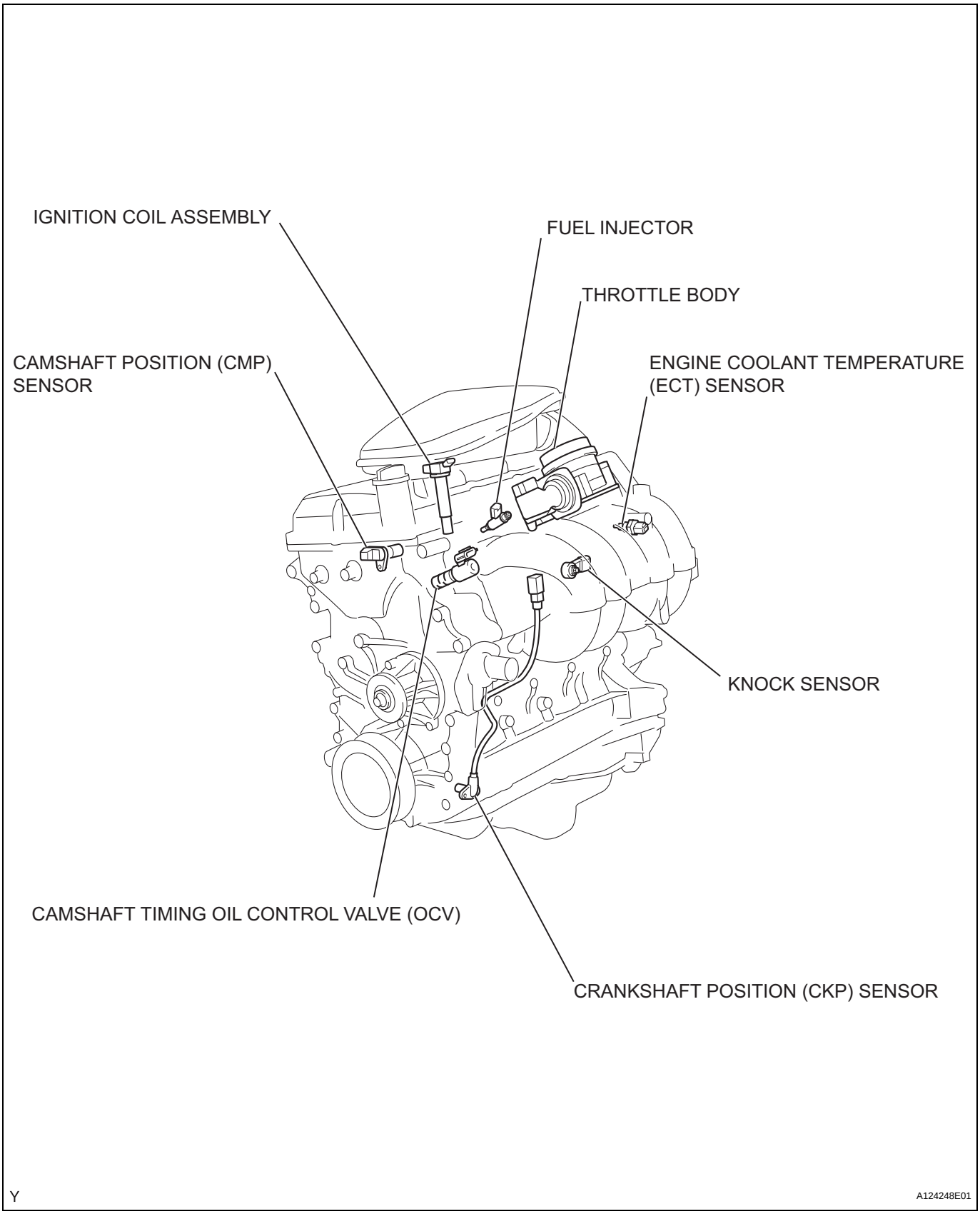
IGNITION COIL ASSEMBLY
FUEL INJECTOR
THROTTLE BODY
CAMSHAFT POSITION (CMP) SENSOR
ENGINE COOLANT TEMPERATURE (ECT) SENSOR
KNOCK SENSOR
CAMSHAFT TIMING OIL CONTROL VALVE (OCV)
CRANKSHAFT POSITION (CKP) SENSOR
Y
A124248E01

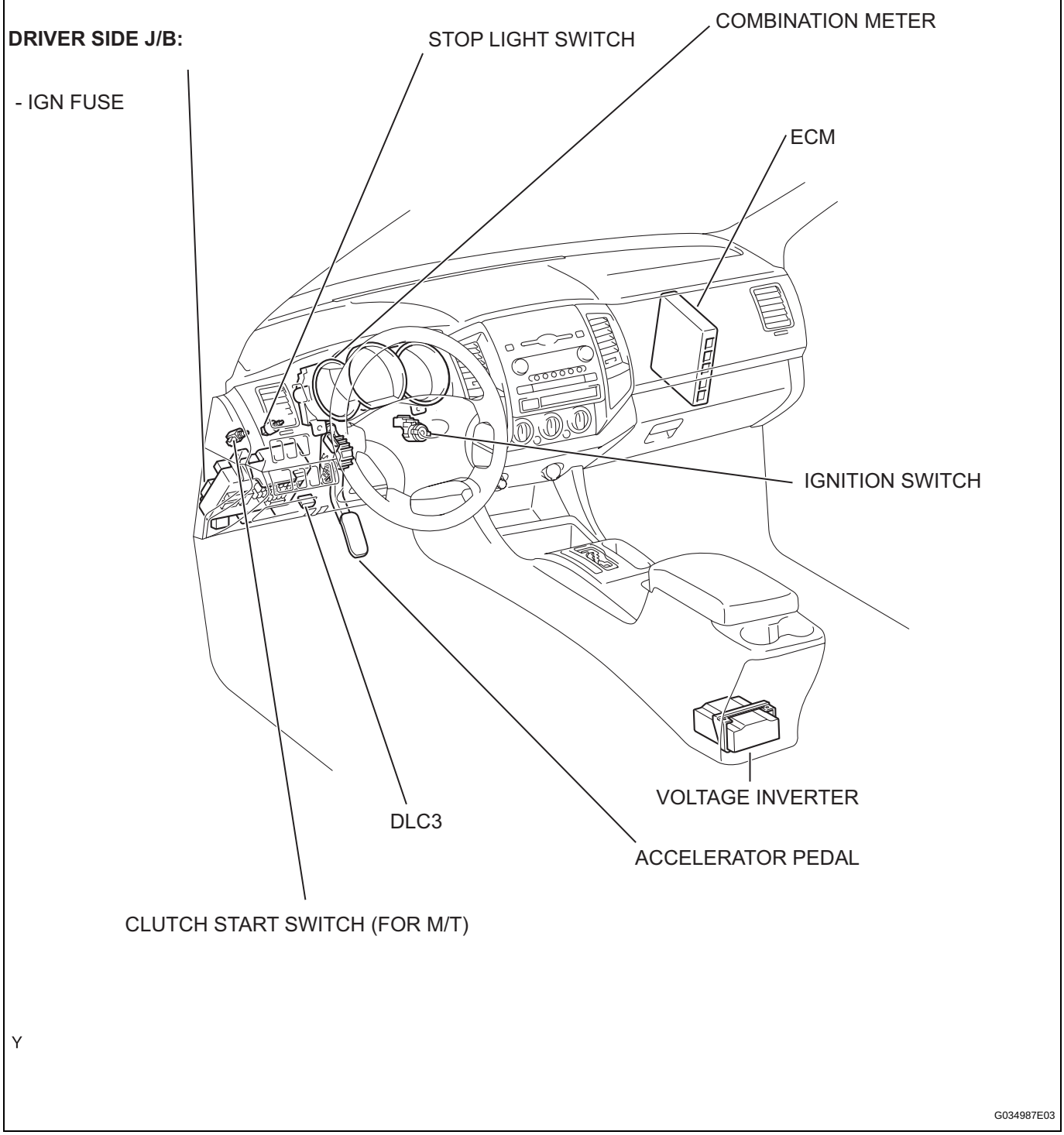
DRIVER SIDE J/B:
- IGN FUSE
STOP LIGHT SWITCH
COMBINATION METER
ECM
IGNITION SWITCH
VOLTAGE INVERTER
DLC3
ACCELERATOR PEDAL
CLUTCH START SWITCH (FOR M/T)
Y
G034987E03

ES

INSTALLATION

1. INSPECT V-RIBBED BELT TENSIONER ASSEMBLY

(a) Check that nothing gets caught in the tensioner by turning it clockwise and counterclockwise.
If a malfunction exists, replace the tensioner.

2. INSTALL FAN AND GENERATOR V BELT

(a) While turning the belt tensioner counterclockwise, align with its holes, and then insert a bar of 6 mm (0.24 in.) into the holes to fix the belt tensioner.

(b) Install the V-ribbed belt.

(c) While turning the belt tensioner counterclockwise, remove the bar.

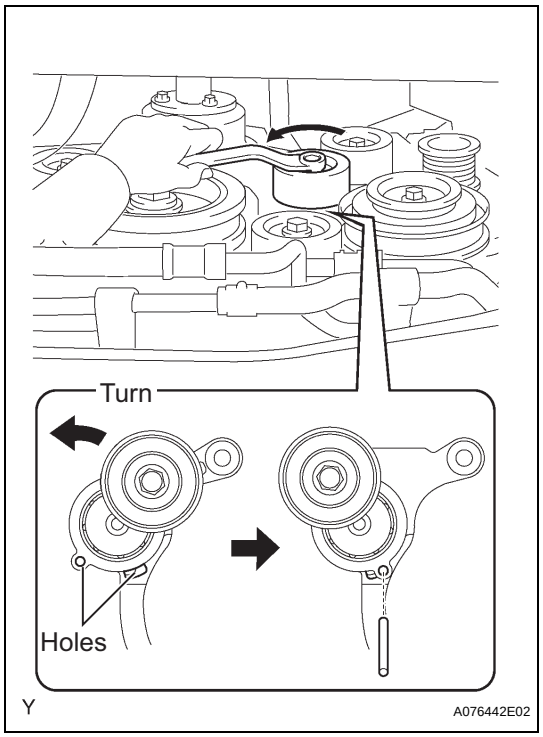

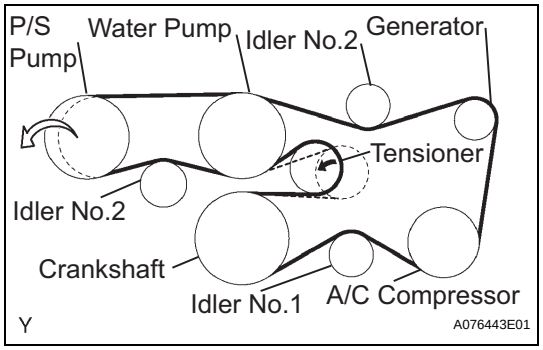

(d) If it is hard to install the V-ribbed belt, perform the following procedure.

(1) Put the V-ribbed belt on all parts except the P/S pump, as shown in the illustration.

(2) While releasing the belt tension by turning the belt tensioner counterclockwise, put the V-ribbed belt on the P/S pump.

3. INSTALL NO.1 ENGINE UNDER COVER SUB-ASSEMBLY (for Pre Runner and 4WD Type)

(a) Install the engine under cover with the 4 bolts.
Torque: 29 N*m (296 kgf*cm, 21 ft.*lbf)

EM

EM

REMOVAL

1. **DISCHARGE FUEL SYSTEM PRESSURE**
   (See page FU-1)
2. **DRAIN ENGINE COOLANT (See page CO-3)**
3. **DRAIN ENGINE OIL (See page LU-4)**
4. **REMOVE ENGINE ASSEMBLY**
   (See page EM-186)
5. **REMOVE TIMING CHAIN OR BELT COVER SUB-ASSEMBLY**
   (See page LU-34)
6. **REMOVE CHAIN SUB-ASSEMBLY**
   (See page EM-44)
7. **REMOVE NO.1 COOL AIR INLET**
   (a) Remove the 2 bolts, then remove the cool air inlet.
8. **REMOVE FRONT NO.2 EXHAUST PIPE ASSEMBLY**
   (See page EX-3)
9. **REMOVE MANIFOLD STAY**
   (a) Remove the 3 bolts, then remove the exhaust manifold stay.
10. **REMOVE EXHAUST MANIFOLD SUB-ASSEMBLY LH**
    (a) Disconnect the air fuel ratio sensor connector.
    (b) Remove the 6 nuts, then remove the exhaust manifold and gasket.
11. **REMOVE INTAKE MANIFOLD (See page EM-93)**
12. **REMOVE WATER BY-PASS JOINT RR (See page EM-93)**
13. **REMOVE NO.1 CHAIN VIBRATION DAMPER**
    (a) Remove the 2 bolts, then remove the chain vibration damper No. 1.
14. **REMOVE CAMSHAFT TIMING GEARS AND NO.2 CHAIN (for Bank 2)**
    (a) While pushing down the chain tensioner No. 2, insert a pin of ϕ 10. mm (0.039 in.) into the hole to fix it.

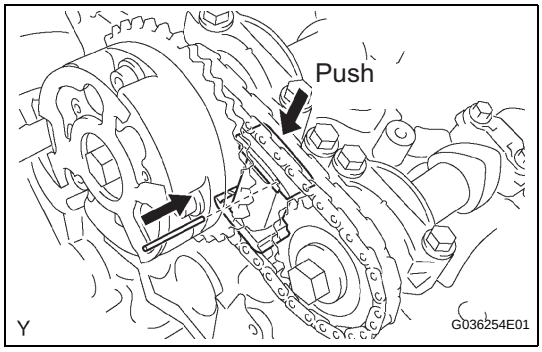

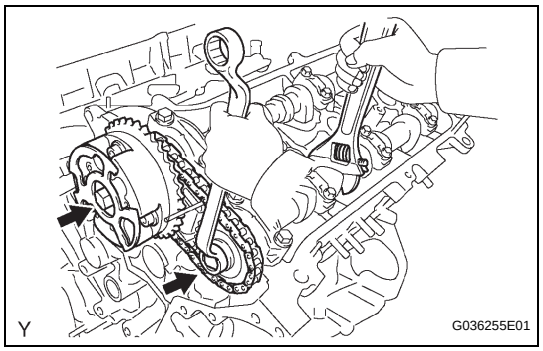

(b) Hold the hexagonal portion of the camshaft with a wrench.
NOTICE:
Be careful not to damage the cylinder head and valve lifter with the wrench.

(c) Remove the 2 bolts, then remove the camshaft timing gear, camshaft timing gear assembly and timing chain No. 2.
NOTICE:
Do not disassemble the camshaft timing gear assembly.

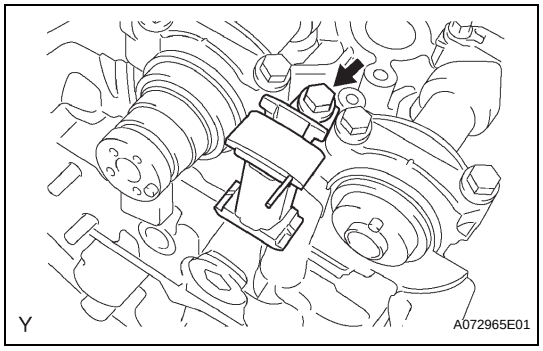

15. REMOVE NO.2 CHAIN TENSIONER ASSEMBLY

(a) Remove the bolt, then remove the chain tensioner No. 3.

16. REMOVE CAMSHAFTS
NOTICE:
Keep the camshaft level while it is being removed. The camshaft thrust clearance is very small and failing to keep it level could crack or damage the cylinder head journal surface, which receives the thrust. This could subsequently lead the camshaft to seize or break. Perform the following steps to avoid such problems.

EM

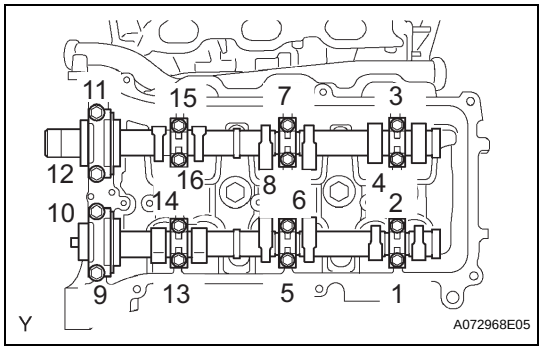

(a) Using several steps, uniformly loosen and remove the 16 bearing cap bolts in the sequence shown in the illustration.

(b) Remove the 8 bearing caps and 2 camshafts.

17. REMOVE CYLINDER HEAD LH

(a) Remove the bolt, then separate the ground cable.

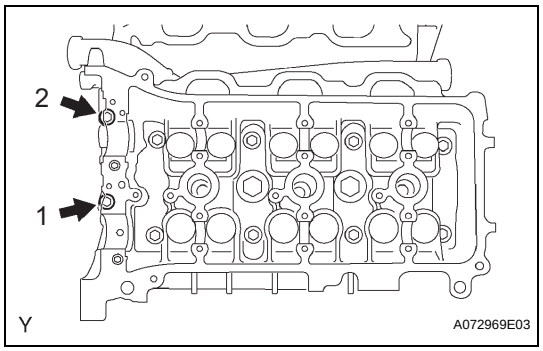

(b) Using several steps, remove the 2 cylinder head bolts on the cylinder head in the sequence shown in the illustration.

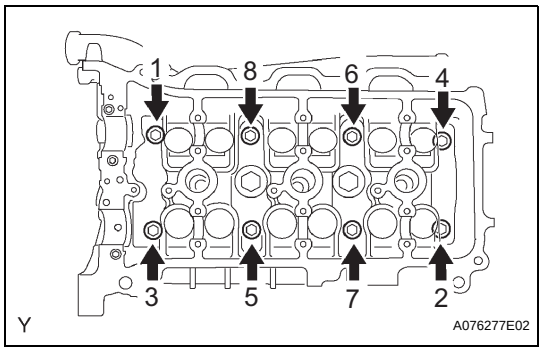

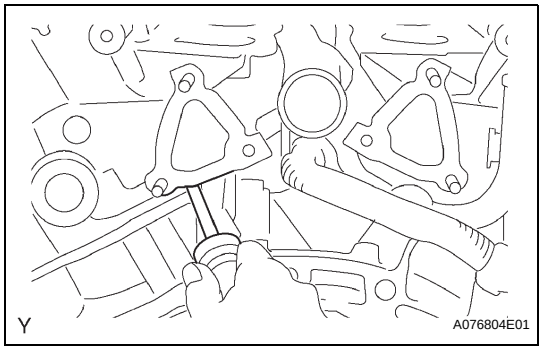

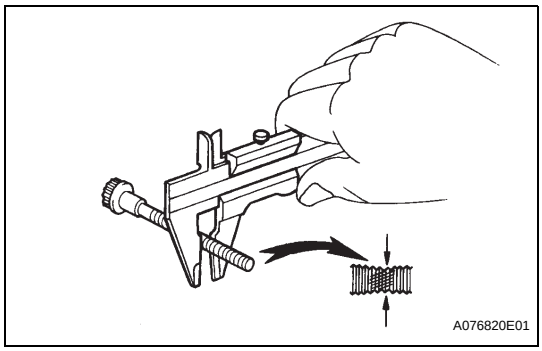

(c) Using several steps, uniformly loosen the 8 cylinder head bolts on the cylinder head with a 10 mm bi-hexagon wrench in the sequence shown in the illustration. Remove the 8 cylinder head bolts and 8 plate washers.

NOTICE:

- **Be careful not to drop the plate washers into the cylinder head.**
- **Cylinder head warpage or cracking could result form removing the bolts in the wrong order.**

(d) Lift the cylinder head from the dowels on the cylinder block, and place the cylinder head on wooden blocks on a bench.

NOTICE:

Be careful not to drop the plate washers into the cylinder head.

If the cylinder head is difficult to remove, pry between the cylinder head and cylinder block with a screwdriver.

18. REMOVE NO.2 CYLINDER HEAD GASKET

INSPECTION

1. INSPECT CYLINDER HEAD SET BOLT

(a) Using vernier calipers, measure the outside diameter of the bolt thread.

Standard outside diameter:
10.85 to 11.00 mm (0.4272 to 0.4331 in.)

Minimum outside diameter:
10.7 mm (0.421 in.)

REMOVAL

1. **REMOVE HOOD SUB-ASSEMBLY**
2. **DISCHARGE FUEL SYSTEM PRESSURE**
   (See page FU-1)
3. **REMOVE NO. 1 ENGINE UNDER COVER SUB-ASSEMBLY (for 4WD and Pre-Runner)**
   (a) Remove the 4 bolts, then remove the No. 1 engine under cover.
4. **REMOVE NO. 2 ENGINE UNDER COVER SUB-ASSEMBLY (for 4WD and Pre-Runner, Regular Cab)**
   (a) Remove the 4 bolts, then remove the No. 2 engine under cover.
5. **DRAIN ENGINE OIL (See page LU-3)**
6. **DRAIN ENGINE COOLANT (See page CO-3)**
7. **REMOVE BATTERY**
8. **REMOVE BATTERY TRAY**
9. **REMOVE RADIATOR SUPPORT TO FRAME SEAL LH (See page CO-12)**
10. **REMOVE FAN SHROUD (See page CO-13)**
11. **REMOVE AIR CLEANER CAP SUB-ASSEMBLY (See page EC-14)**
12. **REMOVE AIR CLEANER FILTER ELEMENT SUB-ASSEMBLY**
13. **REMOVE AIR CLEANER CASE**
    (a) Remove the 3 bolts, then remove the air cleaner case.
14. **SEPARATE VANE PUMP ASSEMBLY**
    (a) Disconnect the vane pump connector.
    (b) Remove the 2 bolts, then separate the vane pump.
    HINT:
    Do not disconnect the hose. Hang the vane pump with a rope.
15. **REMOVE NO. 2 RADIATOR HOSE**

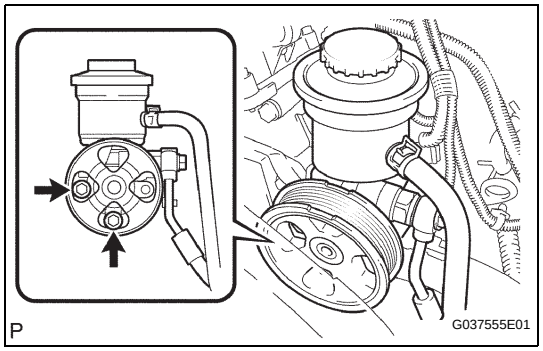

16. **SEPARATE COMPRESSOR AND MAGNETIC CLUTCH (w/ Air Conditioning System)**
    (a) Remove the bolt shown in the illustration.

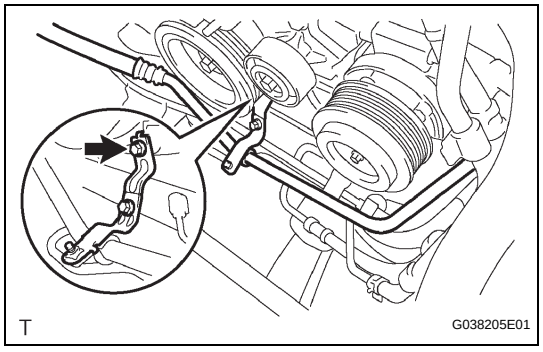

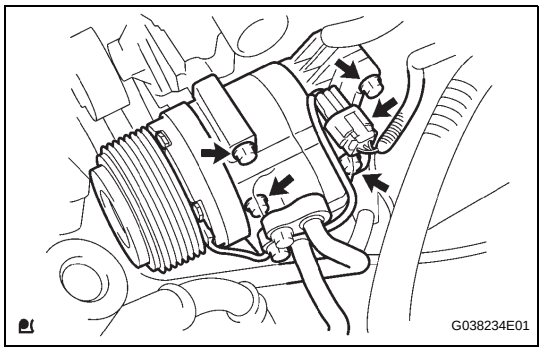

(b) Disconnect the compressor and magnetic clutch connector.
(c) Remove the 4 bolts, then separate the compressor and magnetic clutch.
HINT:
Do not disconnect the hose. Hang the vane pump with a rope.

17. REMOVE RADIATOR HOSE INLET

18. SEPARATE WATER HOSE SUB-ASSEMBLY (See page EM-92)

19. DISCONNECT FUEL HOSE (See page FU-11)

20. DISCONNECT FUEL HOSE NO.2 (See page FU-11)

21. SEPARATE FUEL VAPOR FEED HOSE ASSEMBLY (See page EM-93)

22. DISCONNECT NO. 1 AIR INJECTION HOSE (See page EM-93)

23. DISCONNECT ENGINE WIRE (See page EM-93)

24. REMOVE EXHAUST PIPE ASSEMBLY (See page EX-2)

25. REMOVE FRONT EXHAUST PIPE ASSEMBLY (See page EX-2)

26. REMOVE MANUAL TRANSMISSION UNIT ASSEMBLY

Transmission	See page
R155	MT-6
R155F	MT-8

27. REMOVE AUTOMATIC TRANSMISSION ASSEMBLY (See page AT-109)

28. REMOVE ENGINE ASSEMBLY (See page EM-93)

29. REMOVE CLUTCH COVER ASSEMBLY (for Manual Transmission)

Transmission	See page
R155	CL-30
R155F	CL-35

30. REMOVE CLUTCH DISC ASSEMBLY (for Manual Transmission)

Transmission	See page
R155	CL-30
R155F	CL-35

31. REMOVE FLYWHEEL SUB-ASSEMBLY (for Manual Transmission) (See page EM-77)

32. REMOVE DRIVE PLATE AND RING GEAR SUB-ASSEMBLY (for Automatic Transmission) (See page EM-78)

33. REMOVE REAR END PLATE

(a) Remove the 2 bolts, then remove the rear end plate.

34. REMOVE INTAKE AIR CONNECTOR (See page ES-452)

35. REMOVE GENERATOR ASSEMBLY (See page CH-7)

36. REMOVE V-RIBBED BELT TENSIONER ASSEMBLY (See page CO-5)

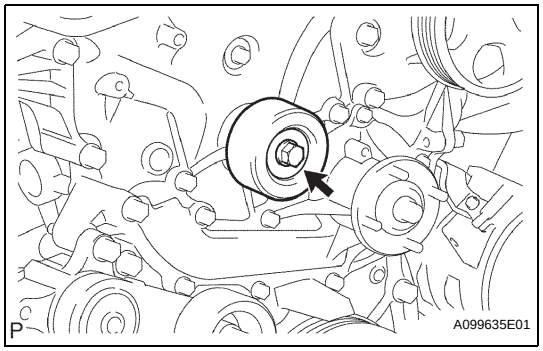

37. REMOVE NO. 1 IDLER PULLEY SUB-ASSEMBLY

(a) Remove the bolt and No. 1 idler pulley sub-assembly.

38. REMOVE IDLE PULLEY ASSEMBLY WITH BRACKET (w/ Air Conditioning System) (See page ES-446)

39. REMOVE CRANKSHAFT POSITION SENSOR (See page ES-444)

40. REMOVE CAMSHAFT POSITION SENSOR (See page ES-444)

41. REMOVE NO. 1 INTAKE MANIFOLD TO HEAD GASKET (See page ES-463)

42. REMOVE CYLINDER HEAD COVER SUB-ASSEMBLY (See page EM-38)

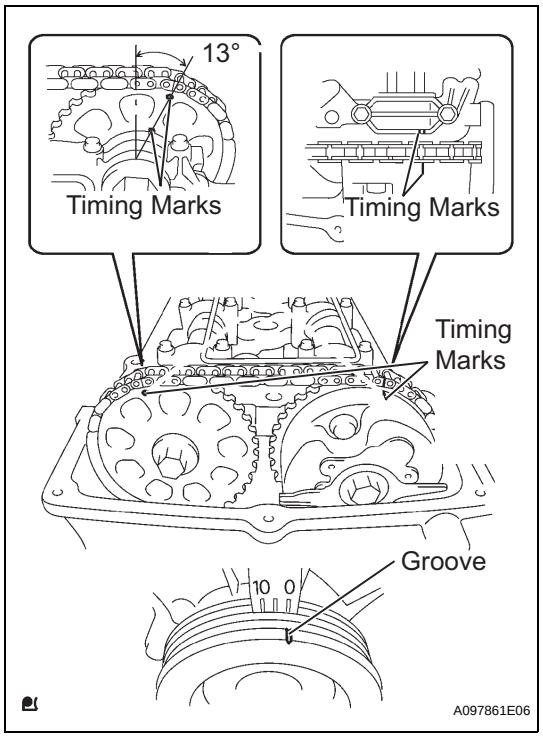

43. REMOVE CRANKSHAFT PULLEY

(a) Set the No. 1 cylinder to the TDC/ compression.

(1) Turn the crankshaft pulley clockwise and align its timing mark notch with the timing mark "0".

(2) Check that the timing marks of the camshaft timing gear are located as illustrated.

HINT:

If not, turn the crankshaft to align the marks.

EM

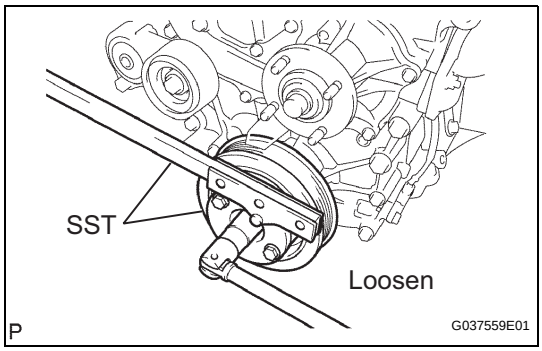

(b) Using SST, loosen the crankshaft pulley bolt.
SST 09213-54015 (91651-60855), 09330-00021
HINT:
Loosen the crankshaft pulley bolt until only 2 or 3 threads are still installed in the crankshaft.

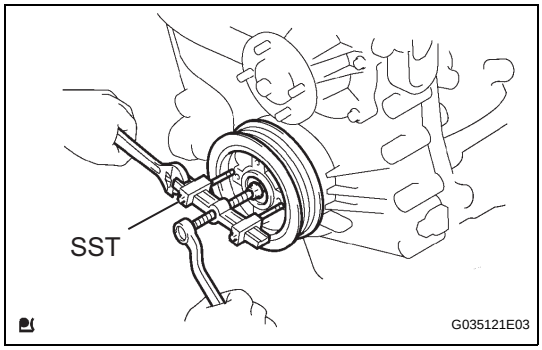

(c) Using SST, remove the crankshaft pulley and crankshaft pulley bolt.
SST 09950-50013 (09951-05010, 09952-05010, 09953-05010, 09954-05021)

44. REMOVE OIL LEVEL GAGE SUB-ASSEMBLY

EM

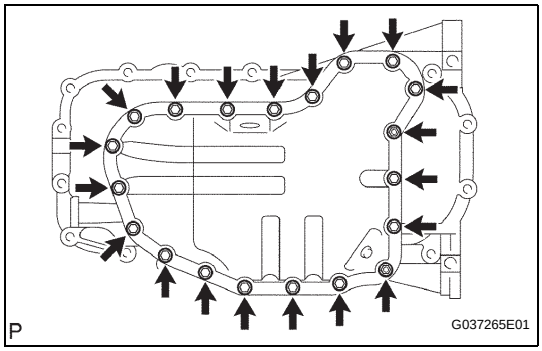

45. REMOVE NO. 2 OIL PAN SUB-ASSEMBLY
(a) Remove the 18 bolts and 2 nuts.

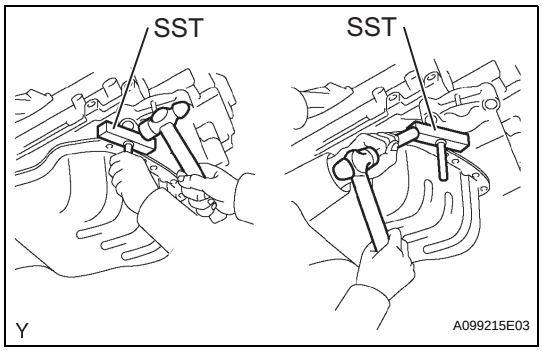

(b) Insert the blade of SST between the pans. Cut through the applied sealer and remove the oil pan.
SST 09032-00100
NOTICE:
Be careful not to damage the contact surface of the oil pans.

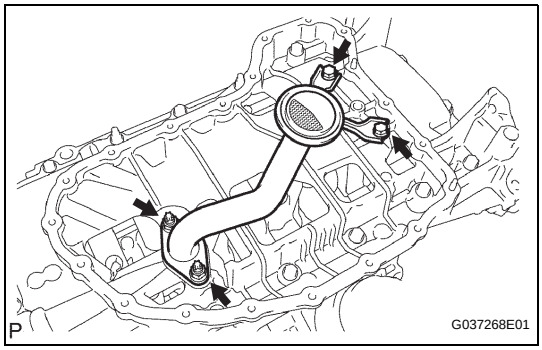

46. REMOVE OIL STRAINER SUB-ASSEMBLY
(a) Remove the 2 bolts, 2 nuts, oil strainer and gasket.

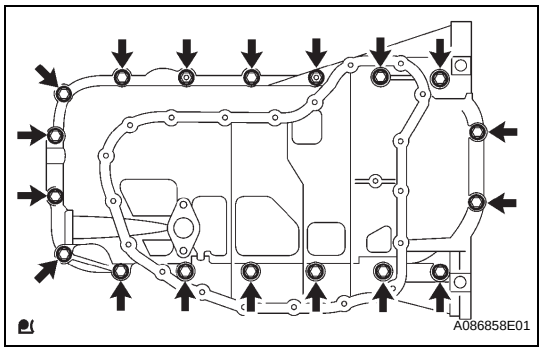

47. REMOVE OIL PAN SUB-ASSEMBLY

(a) Remove the 16 bolts and 2 nuts.

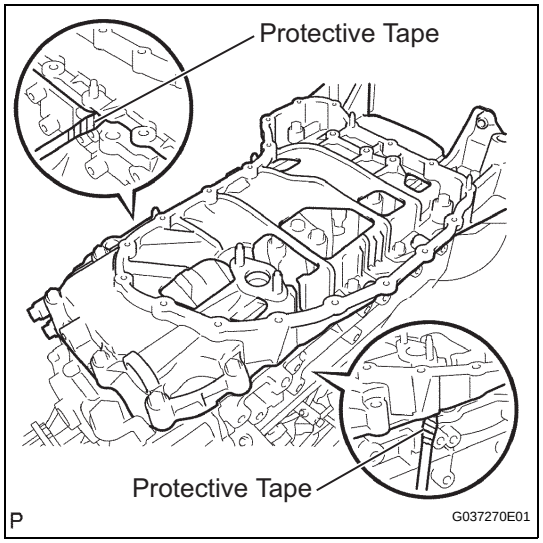

(b) Remove the oil pan by prying between the oil pan and cylinder block with a screwdriver.
HINT:
Tape the screwdriver tip before use.
NOTICE:
Be careful not to damage the contact surfaces of the cylinder block and oil pan.

48. REMOVE TIMING CHAIN COVER (See page LU-21)

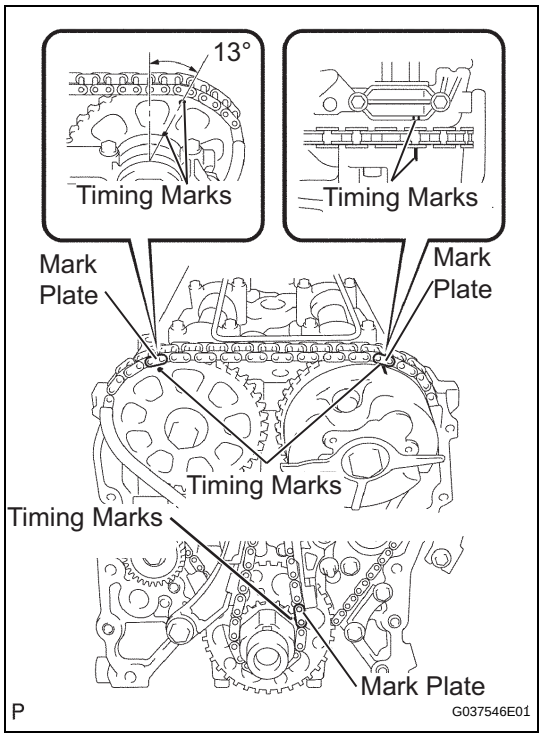

49. REMOVE TIMING CHAIN GUIDE

(a) Make sure that each matchmark is in the position shown in the illustration.

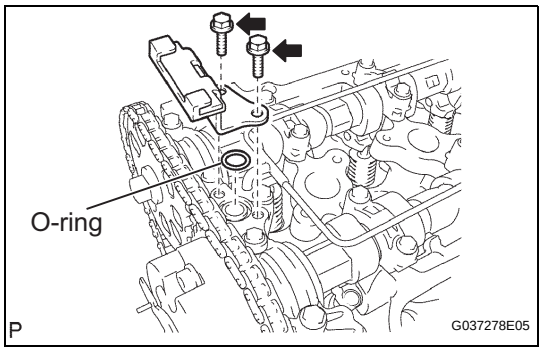

(b) Remove the 2 bolts, timing chain guide and O-ring.

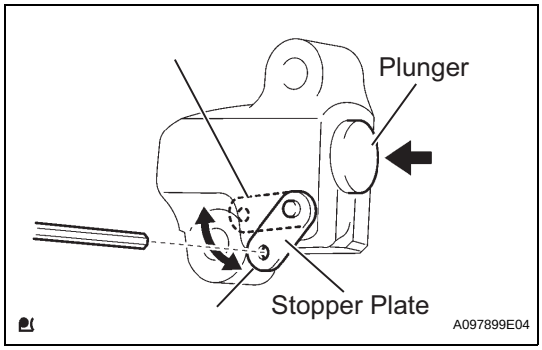

50. REMOVE NO. 1 CHAIN TENSIONER ASSEMBLY

NOTICE:

- **When the chain tensioner is removed, do not rotate the crankshaft.**
- **When the chain is removed and the camshaft needs to be rotated, rotate the crankshaft 90° to the right.**

(a) Move the stopper plate upward to release the lock, and push the plunger deep into the tensioner.

(b) Move the stopper plate downward to set the lock, and insert a 3.0 mm (0.118 in.) diameter bar into the stopper plate hole.

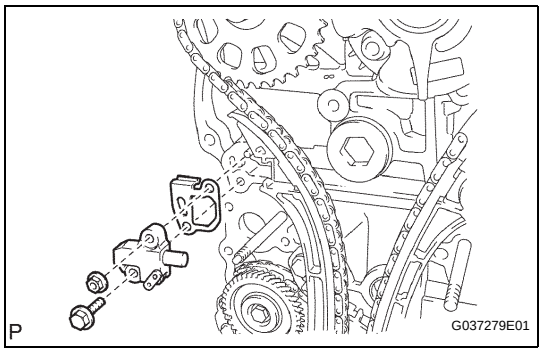

(c) Remove the bolt, nut, chain tensioner and gasket.

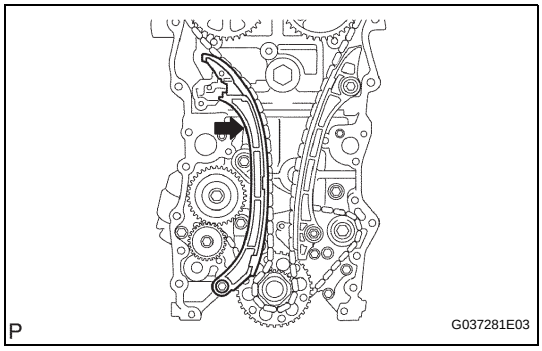

51. REMOVE CHAIN TENSIONER SLIPPER

(a) Remove the bolt and tensioner slipper.

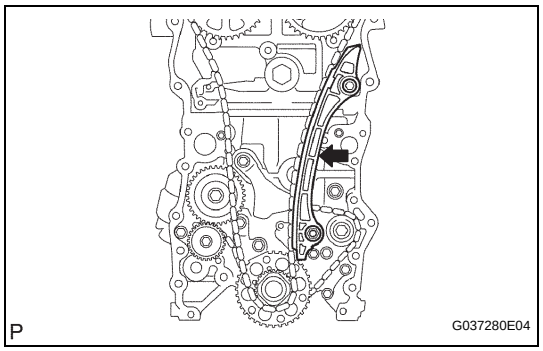

52. REMOVE NO. 1 CHAIN VIBRATION DAMPER

(a) Remove the 2 bolts and vibration damper.

53. REMOVE CHAIN SUB-ASSEMBLY

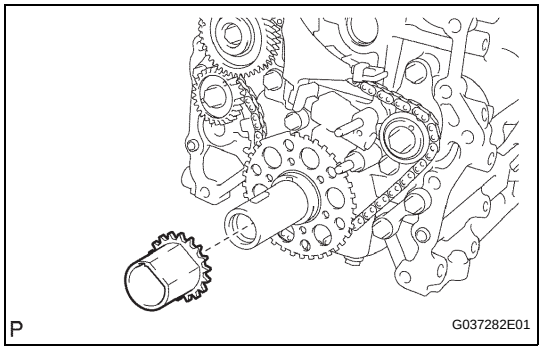

54. REMOVE CRANKSHAFT TIMING GEAR OR SPROCKET

(a) Remove the crankshaft timing gear from the crankshaft.

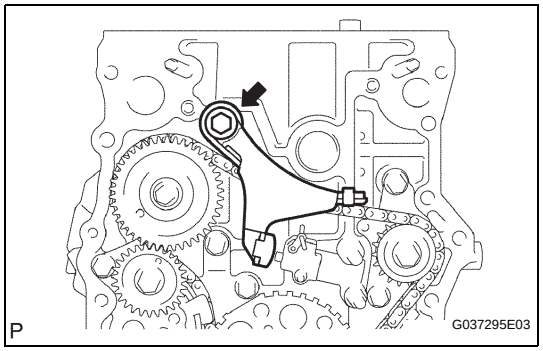

55. REMOVE NO. 2 CHAIN VIBRATION DAMPER

(a) Remove the bolt and No. 2chain vibration damper.

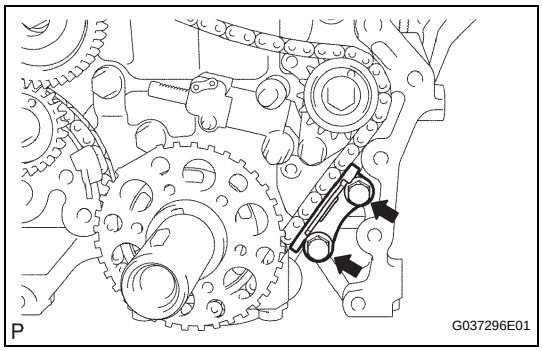

56. REMOVE NO. 3 CHAIN VIBRATION DAMPER

(a) Remove the 2 bolts and No. 3chain vibration damper.

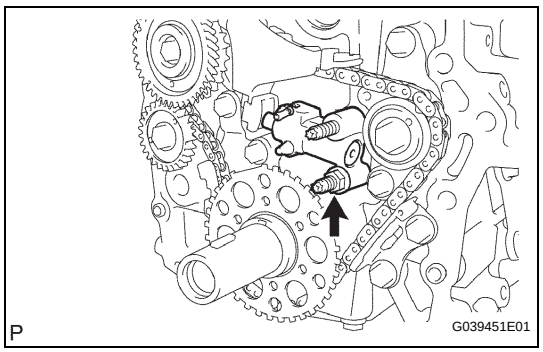

57. REMOVE NO. 2 CHAIN TENSIONER ASSEMBLY

(a) Remove the nut and No. 2 chain tensioner assembly.

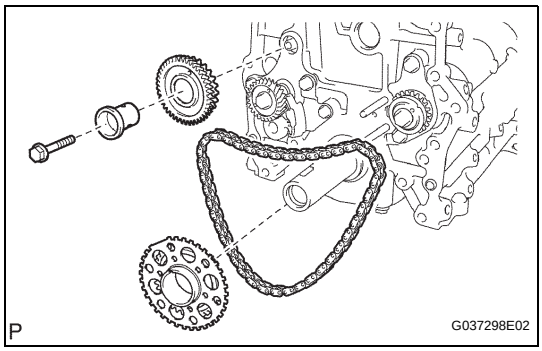

58. REMOVE NO.2 CHAIN SUB-ASSEMBLY

(a) Remove the bolt, balanceshaft drive gear shaft and balanceshaft drive gear.

(b) Remove the crankshaft timing sprocket No. 2 and chain.

INSTALLATION

1. INSTALL NO.2 CHAIN SUB-ASSEMBLY

(a) Install the chain with its mark links aligned with the timing marks on the crankshaft timing sprocket and balanceshaft timing sprocket.

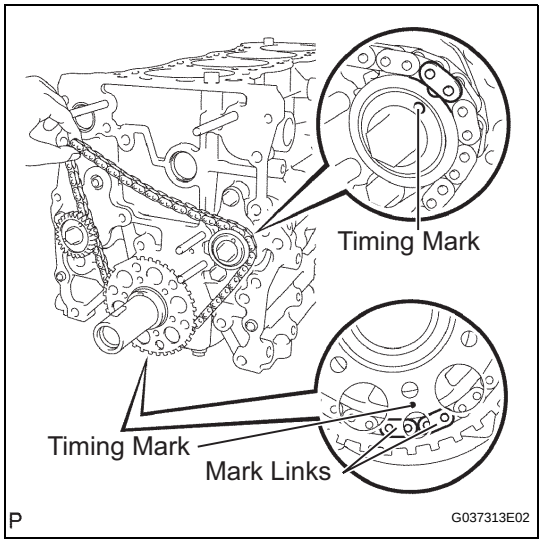

(b) Bring the other mark link of the crankshaft timing sprocket behind the large timing mark of the balanceshaft drive gear.

(c) Insert the balanceshaft drive gear shaft through the balanceshaft drive gear so that it fits into the thrust plate hole.

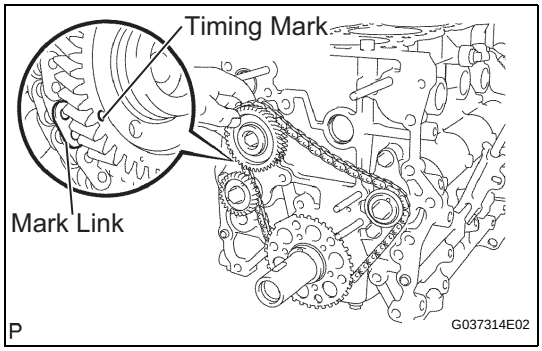

(d) Align the small timing mark of the balanceshaft drive gear with the timing mark of the balanceshaft timing gear.

(e) Install the bolt onto the balanceshaft drive gear and tighten it.

Torque: 25 N*m (250 kgf*cm, 18 ft.*lbf)

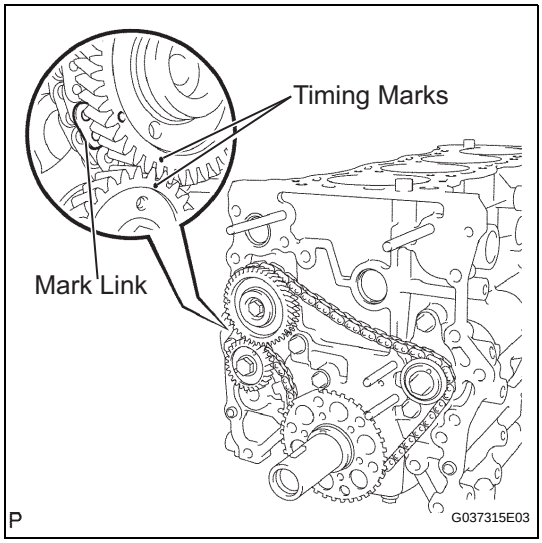

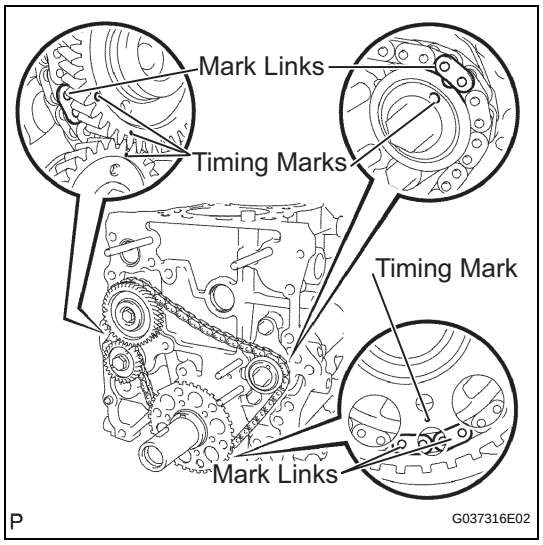

(f) Check that each timing mark is aligned with the corresponding mark link.

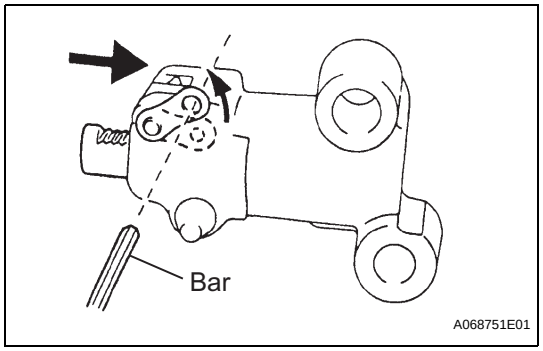

2. INSTALL NO. 2 CHAIN TENSIONER ASSEMBLY

(a) Install the chain tensioner with the nut.
Torque: 18 N*m (185 kgf*cm, 13 ft.*lbf)
NOTICE:
Assemble the chain tensioner with the 3.0 mm (0.118 in.) diameter bar installed, then remove the bar after assembly. When doing this, avoid pushing the vibration damper against the chain.

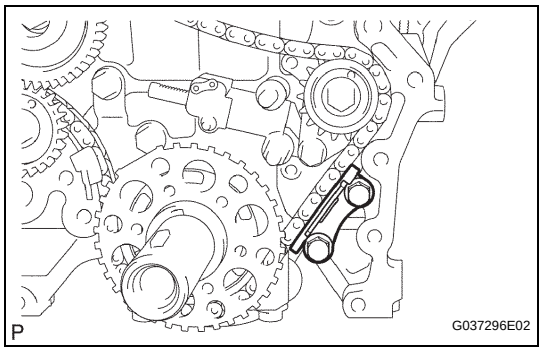

3. INSTALL NO. 3 CHAIN VIBRATION DAMPER

(a) Install the No. 3 chain vibration damper with the 2 bolts.
Torque: 18 N*m (185 kgf*cm, 13 ft.*lbf)

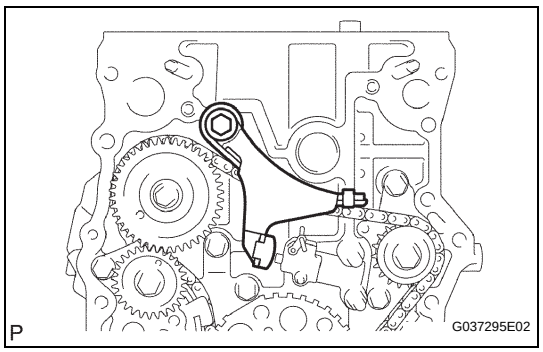

4. INSTALL CHAIN VIBRATION DAMPER NO.2

(a) Install the chain vibration damper with the bolt.
Torque: 27 N*m (270 kgf*cm, 20 ft.*lbf)

(b) Remove the pin from the chain tensioner and release the plunger.

EM

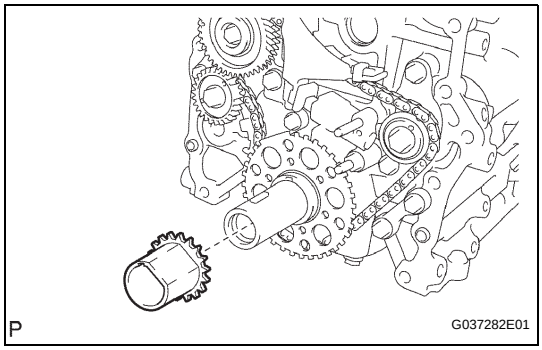

5. INSTALL CRANKSHAFT TIMING GEAR OR SPROCKET

(a) Install the timing sprocket as shown in the illustration.

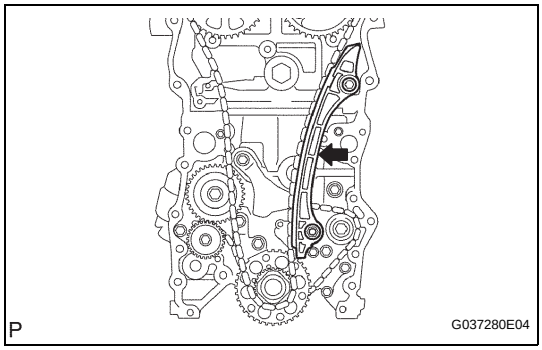

6. INSTALL NO. 1 CHAIN VIBRATION DAMPER

(a) Install the vibration damper with the bolt and nut.
Torque: 21 N*m (214 kgf*cm, 15 ft.*lbf)

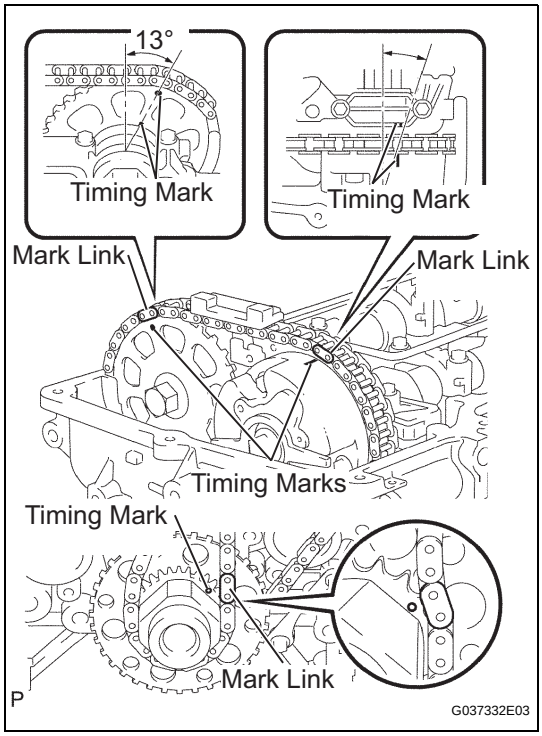

7. INSTALL CHAIN SUB-ASSEMBLY

(a) As shown in the illustration, install the chain onto the sprocket and gear with the painted marks aligned with the timing marks on the sprocket and gear.
HINT:
- The camshaft mark plate is orange.
- The crankshaft mark plate is yellow.

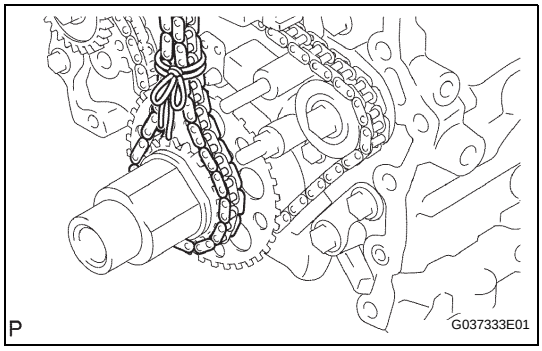

(b) Use a rope to tie the chain of the crankshaft timing sprocket. Tie the rope near the sprocket.
NOTICE:
After the chain tensioner has been installed, the rope must be removed.
HINT:
The rope is tied to prevent gear jumping.

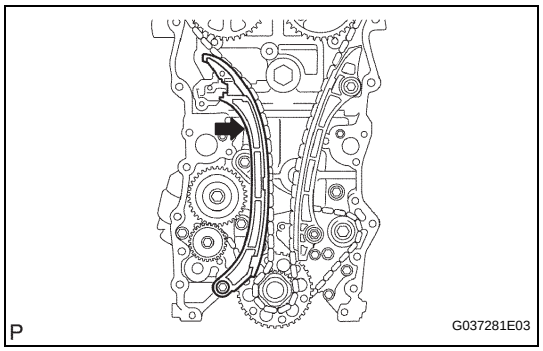

8. INSTALL CHAIN TENSIONER SLIPPER

(a) Install the tensioner slipper with the bolt.
Torque: 21 N*m (214 kgf*cm, 15 ft.*lbf)

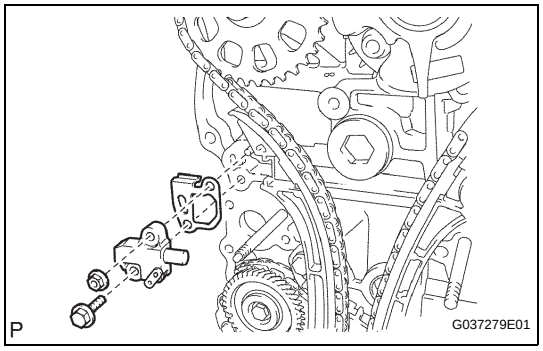

9. INSTALL NO. 1 CHAIN TENSIONER ASSEMBLY

(a) Install a new gasket and the chain tensioner with the bolt and nut.
Torque: 10 N*m (102 kgf*cm, 7 ft.*lbf)

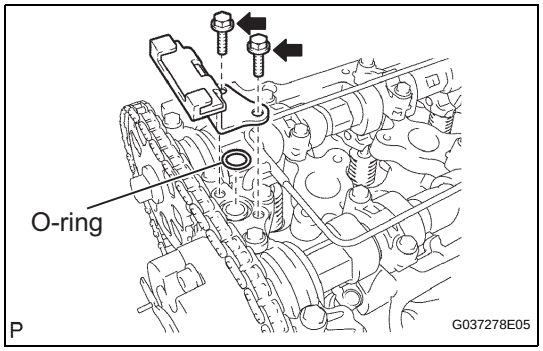

10. INSTALL TIMING CHAIN GUIDE

(a) Install a new O-ring and the chain guide with the 2 bolts.
Torque: 10 N*m (102 kgf*cm, 7 ft.*lbf)

11. INSTALL TIMING CHAIN COVER (See page LU-24)

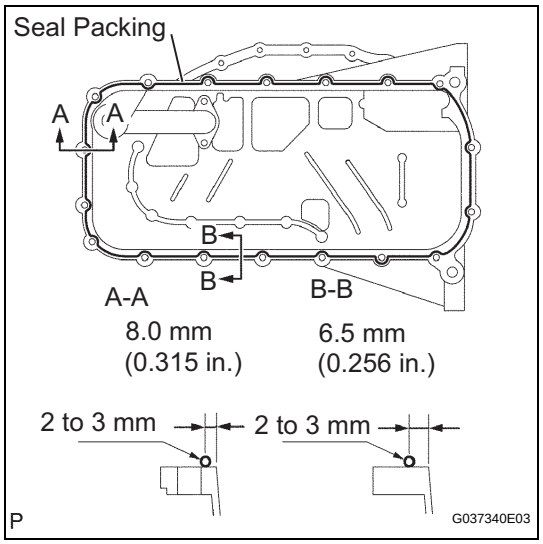

12. INSTALL OIL PAN SUB-ASSEMBLY

(a) Apply continuous beads of seal packing to the places shown in the illustration.
Seal packing:
Part No. 08826-00080 or equivalent
Seal width:
2 to 3 mm (0.079 to 0.118 in.)
NOTICE:
- **Remove any oil from the contact surface.**
- **Install the crankcase within 3 minutes of applying the seal packing.**
- **Do not start the engine for at least 2 hours after installation.**

EM

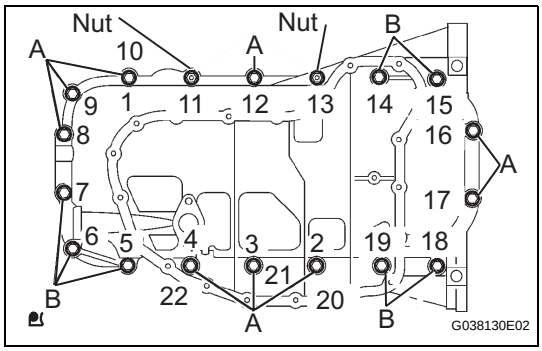

(b) Loosely install the oil pan with the 16 bolts and 2 nuts.
HINT:
Bolt length:
20 mm (0.79 in.) for bolt A,
40 mm (1.57 in.) for bolt B

(c) Uniformly tighten the 16 bolts and 2 nuts in the sequence shown in the illustration.
Torque: 26 N*m (265 kgf*cm, 19 ft.*lbf)

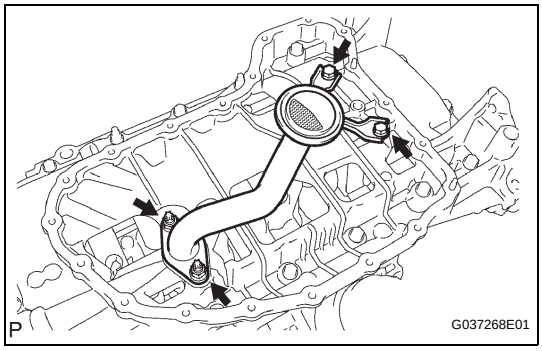

13. INSTALL OIL STRAINER SUB-ASSEMBLY

(a) Install a new gasket and the oil strainer with the 2 bolts and 2 nuts.
Torque: 26 N*m (265 kgf*cm, 19 ft.*lbf)

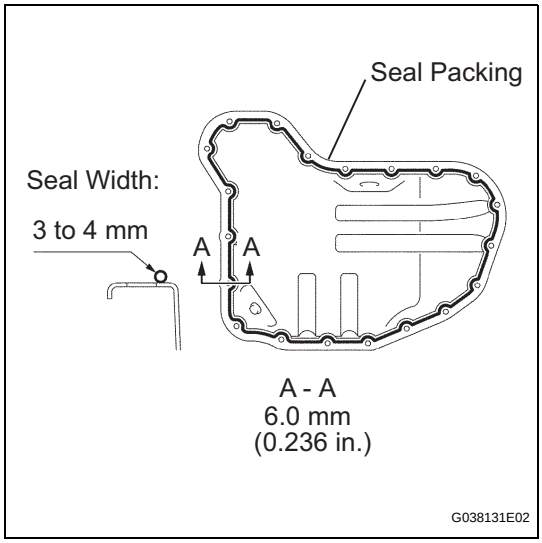

14. INSTALL NO. 2 OIL PAN SUB-ASSEMBLY

(a) Apply continuous beads of seal packing to the places shown in the illustration.
Seal packing:
Part No. 08826-00080 or equivalent
Seal width:
3 to 4 mm (0.118 to 0.157 in.)
NOTICE:
- **Remove any oil from the contact surface.**
- **Install the crankcase within 3 minutes of applying the seal packing.**
- **Do not start the engine for at least 2 hours after installation.**

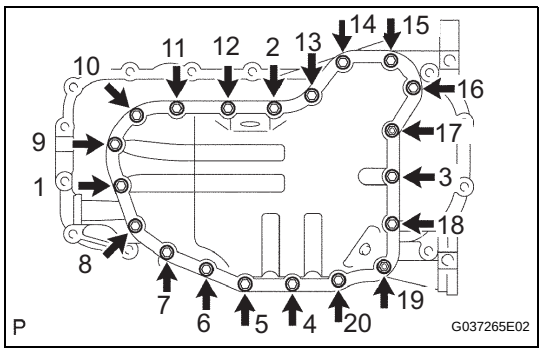

(b) Provisionally install the oil pan with the 18 bolts and 2 nuts.

(c) Uniformly tighten the 18 bolts and 2 nuts in the sequence shown in the illustration.
Torque: 9.0 N*m (92 kgf*cm, 80 in.*lbf)

(d) Install a new gasket and the drain plug.

15. INSTALL OIL LEVEL GAGE SUB-ASSEMBLY

16. INSTALL CRANKSHAFT PULLEY (See page EM-75)

17. INSTALL CYLINDER HEAD COVER SUB-ASSEMBLY (See page EM-48)

18. INSTALL NO. 1 INTAKE MANIFOLD TO HEAD GASKET (See page EM-38)

19. INSTALL CAMSHAFT POSITION SENSOR (See page ES-444)

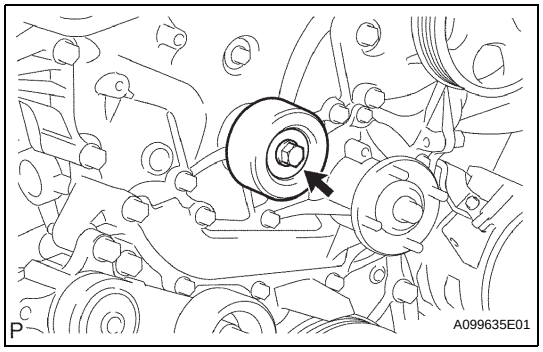

20. **INSTALL CRANKSHAFT POSITION SENSOR (See page ES-444)**

21. **INSTALL IDLE PULLEY ASSEMBLY WITH BRACKET (w/ Air Conditioning System) (See page ES-444)**

22. **INSTALL NO. 1 IDLER PULLEY SUB-ASSEMBLY**
    (a) Install the No. 1 idler pulley sub-assembly with the bolt.
    Torque: 43 N*m (438 kgf*cm, 32 ft.*lbf)

23. **INSTALL V-RIBBED BELT TENSIONER ASSEMBLY (See page CO-6)**

24. **INSTALL GENERATOR ASSEMBLY (See page CH-13)**

25. **INSTALL INTAKE AIR CONNECTOR (See page ES-455)**

26. **INSTALL REAR END PLATE**
    (a) Install the rear end plate with the 2 bolts.
    Torque: 18 N*m (184 kgf*cm, 13 ft.*lbf)

27. **INSTALL DRIVE PLATE AND RING GEAR SUB-ASSEMBLY (for Automatic Transmission) (See page EM-79)**

28. **INSTALL FLYWHEEL SUB-ASSEMBLY (for Manual Transmission) (See page EM-79)**

29. **INSTALL CLUTCH DISC ASSEMBLY (for Manual Transmission)**

Transmission	See page
R155	CL-32
R155F	CL-37

30. **INSTALL CLUTCH COVER ASSEMBLY (for Manual Transmission)**

Transmission	See page
R155	CL-32
R155F	CL-37

31. **INSTALL ENGINE ASSEMBLY (See page EM-98)**

32. **INSTALL AUTOMATIC TRANSMISSION ASSEMBLY** (See page AT-113)

33. **INSTALL MANUAL TRANSMISSION UNIT ASSEMBLY**

Transmission	See page
R155	MT-9
R155F	MT-11

34. **INSTALL EXHAUST PIPE ASSEMBLY FRONT (See page EX-2)**

35. **INSTALL EXHAUST PIPE ASSEMBLY TAIL (See page EX-2)**

36. **CONNECT ENGINE WIRE**

37. **CONNECT NO. 1 AIR INJECTION HOSE (See page EM-99)**

38. **CONNECT FUEL VAPOR FEED HOSE ASSEMBLY (See page EM-99)**
39. **CONNECT NO. 2 FUEL HOSE (See page FU-17)**
40. **CONNECT FUEL HOSE (See page FU-17)**
41. **INSTALL WATER HOSE SUB-ASSEMBLY (See page EM-99)**
42. **INSTALL RADIATOR HOSE INLET**
43. **INSTALL COMPRESSOR AND MAGNETIC CLUTCH (w/ Air Conditioning System)**
    (a) Install the compressor and magnetic clutch with the 4 bolts.
    Torque: 21 N*m (214 kgf*cm, 16 ft.*lbf)
    (b) Connect the compressor and magnetic clutch connector.

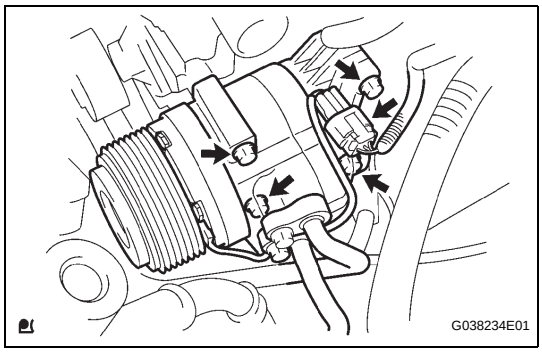

    (c) Install the bolt shown in the illustration.
    Torque: 7.5 N*m (76 kgf*cm, 66 in.*lbf)
44. **INSTALL NO. 2 RADIATOR HOSE**

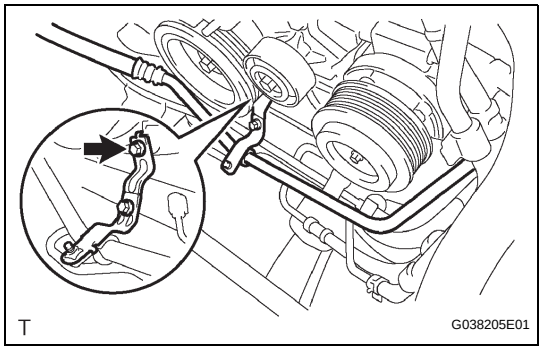

45. **INSTALL VANE PUMP ASSEMBLY**
    (a) Install the vane pump with the 2 bolts.
    Torque: 21 N*m (214 kgf*cm, 16 ft.*lbf)
    (b) Connect the vane pump connector.
46. **INSTALL AIR CLEANER CASE**
    (a) Install the air cleaner case with the 3 bolts.
    Torque: 12 N*m (122 kgf*cm, 9 ft.*lbf)
47. **INSTALL AIR CLEANER FILTER ELEMENT SUB-ASSEMBLY**
48. **INSTALL AIR CLEANER CAP SUB-ASSEMBLY (See page EC-17)**
49. **INSTALL FAN SHROUD (See page CO-18)**
50. **INSTALL RADIATOR SUPPORT TO FRAME SEAL LH (See page CO-19)**
51. **INSTALL BATTERY TRAY**
52. **INSTALL BATTERY**
53. **ADD ENGINE OIL (See page LU-4)**
54. **ADD ENGINE COOLANT (See page CO-3)**
55. **CHECK FOR ENGINE OIL LEVEL**

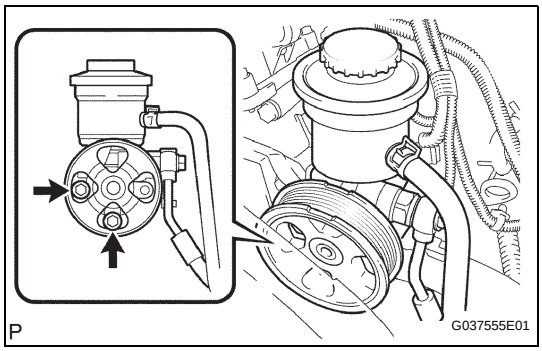

56. CHECK FOR FUEL LEAKAGE

57. CHECK FOR ENGINE COOLANT LEAKAGE (See page CO-2)

58. CHECK FOR OIL LEAKAGE

59. CHECK FOR EXHAUST GAS LEAKAGE

60. INSTALL NO. 1 ENGINE UNDER COVER SUB-ASSEMBLY (for 4WD and Pre-Runner)

(a) Install the No. 1 engine under cover with the 4 bolts.
Torque: 30 N*m (306 kgf*cm, 22 ft.*lbf)

61. INSTALL NO. 2 ENGINE UNDER COVER SUB-ASSEMBLY (for 4WD and Pre-Runner, Regular Cab)

(a) Install the No. 2 engine under cover with the 4 bolts.
Torque: 30 N*m (306 kgf*cm, 22 ft.*lbf)

62. INSTALL HOOD SUB-ASSEMBLY
(See page ED-7)

PARTS LOCATION

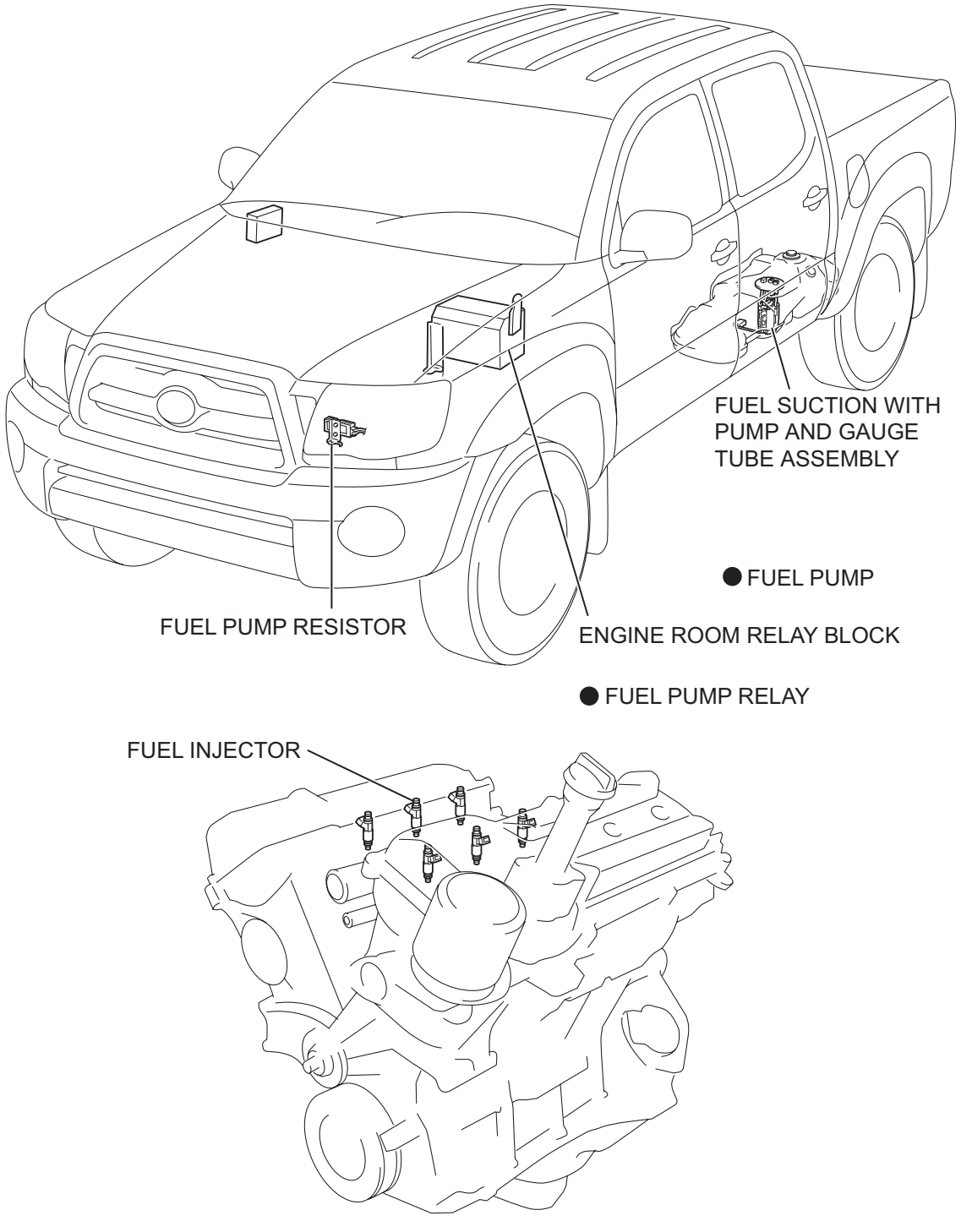

SYSTEM DIAGRAM

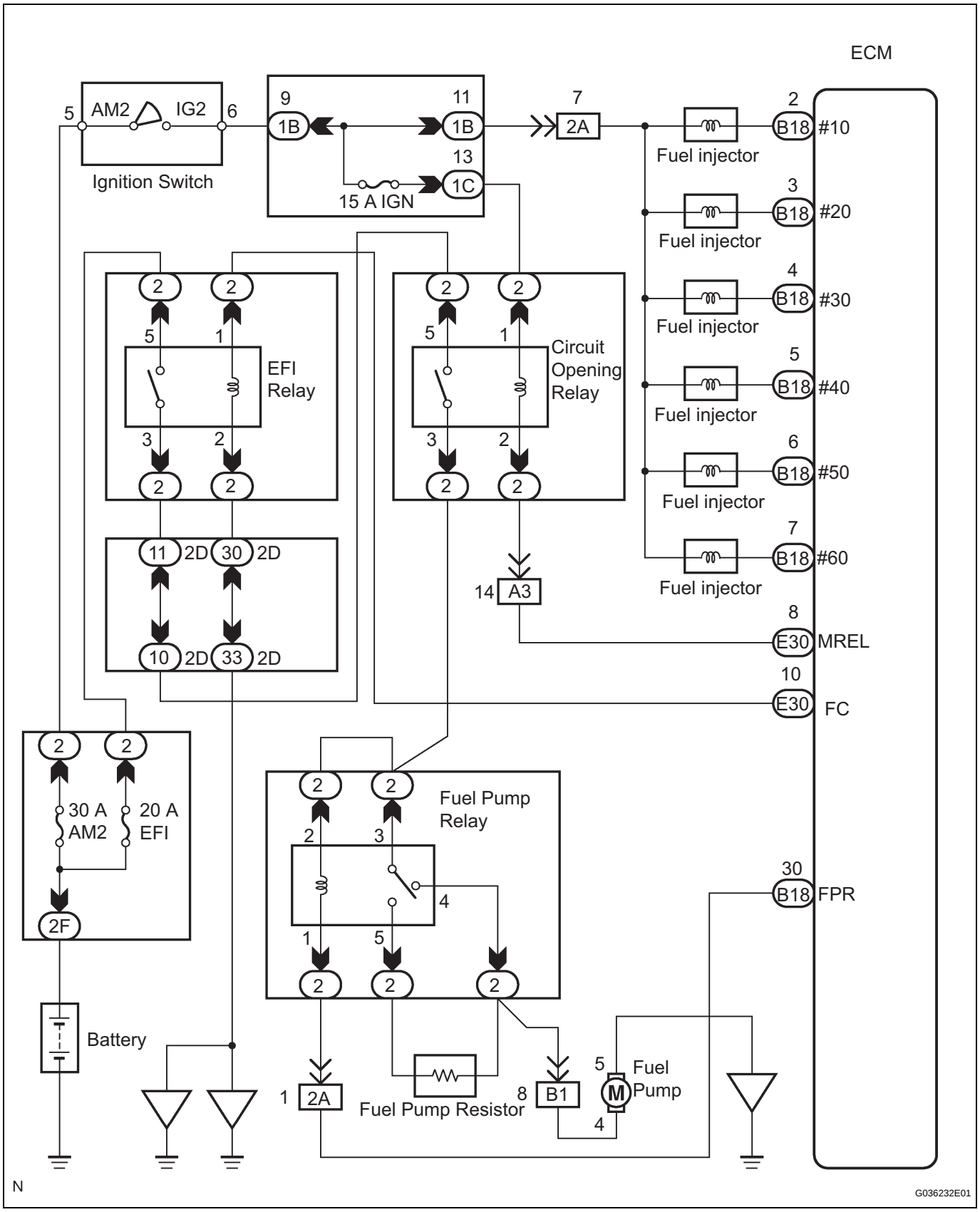

IN

ELECTRONIC CIRCUIT INSPECTION PROCEDURE

1. BASIC INSPECTION

(a) WHEN MEASURING RESISTANCE OF ELECTRONIC PARTS

(1) Unless otherwise stated, all resistance measurements should be made at an ambient temperature of 20°C (68°F). Resistance measurements may be inaccurate if measured at high temperatures, i.e. immediately after the vehicle has been running. Measurements should be made after the engine has cooled down.

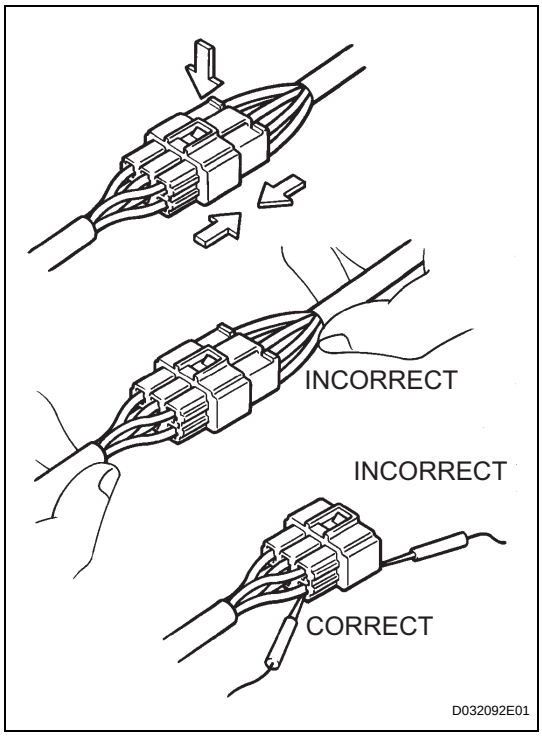

(b) HANDLING CONNECTORS

(1) When disconnecting a connector, first squeeze the mating halves tightly together to release the lock, and then press the lock claw and separate the connector.

(2) When disconnecting a connector, do not pull on the harnesses. Grasp the connector directly and separate it.

(3) Before connecting a connector, check that there are no deformed, damaged, loose or missing terminals.

(4) When connecting a connector, press firmly until it locks with a "click" sound.

(5) If checking a connector with a TOYOTA electrical tester, check the connector from the backside (harness side) using a mini test lead.
NOTICE:
- **As a waterproof connector cannot be checked from the backside, check it by connecting a sub-harness.**
- **Do not damage the terminals by moving the inserted tester needle.**

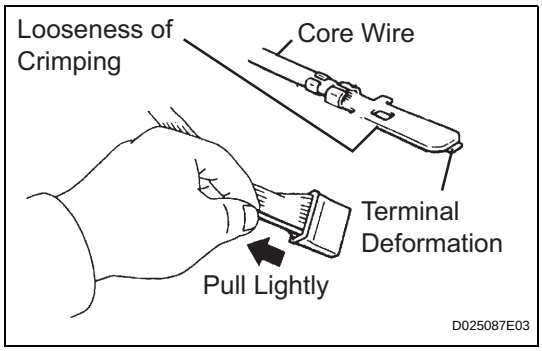

(c) CHECKING CONNECTORS

(1) Checking when a connector is disconnected: Squeeze the connector together to confirm that they are fully connected and locked.

(2) Checking when a connector is disconnected: Check by pulling the wire harness lightly from the backside of the connector. Look for unlatched terminals, missing terminals, loose crimps or broken conductor wires. Check visually for corrosion, metallic or foreign matter and water, and bent, rusted, overheated, contaminated, or deformed terminals.

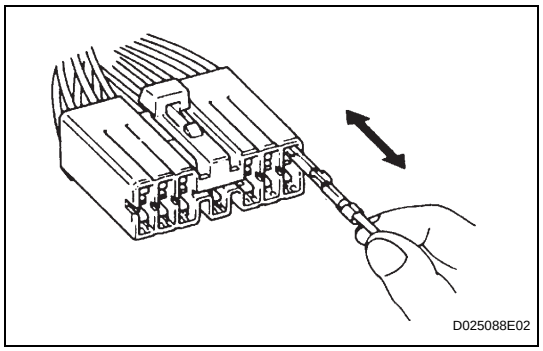

(3) Checking the contact pressure of the terminal:
Prepare a spare male terminal. Insert it into a female terminal, and check for ample tension when inserting and after full engagement.
NOTICE:
When testing a gold-plated female terminal, always use a gold-plated male terminal.

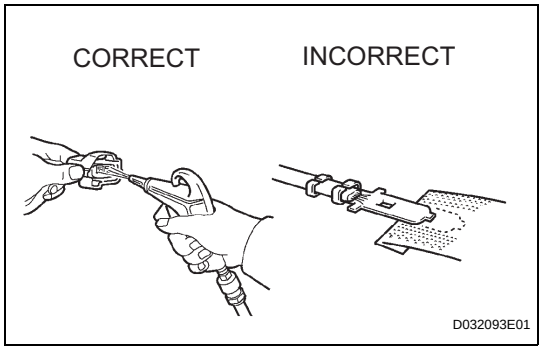

(d) REPAIR METHOD OF CONNECTOR TERMINAL
(1) If there is any foreign matter on the terminal, clean the contact point using an air gun or cloth. Never rub the contact point using sandpaper as the plating may come off.
(2) If there is abnormal contact pressure, replace the female terminal. If the male terminal is gold-plated (gold color), use a gold-plated female terminal; if it is silver-plated (silver color), use a silver-plated female terminal.
(3) Damaged, deformed, or corroded terminals should be replaced. If the terminal does not lock into the housing, the housing may have to be replaced.

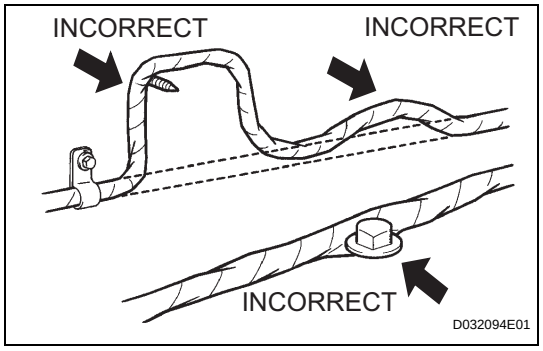

(e) HANDLING OF WIRE HARNESS
(1) If removing a wire harness, check the wiring and clamping before proceeding so that it can be restored in the same way.
(2) Never twist, pull or slacken the wire harness more than necessary.
(3) The wire harness should never come into contact with a high temperature part, or rotating, moving, vibrating or sharp-edged parts. Avoid contact with panel edges, screw tips and other sharp items.
(4) When installing parts, never pinch the wire harness.
(5) Never cut or break the cover of the wire harness. If it is cut or broken, replace it or repair it with vinyl tape.

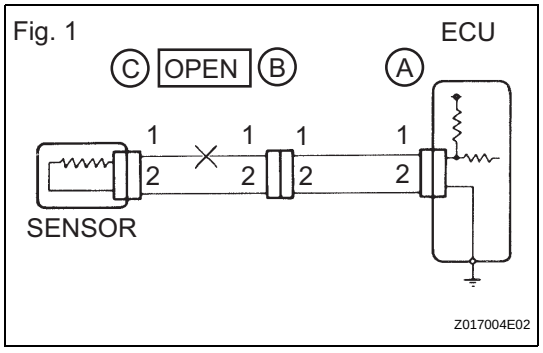

2. CHECK FOR OPEN CIRCUIT

(a) For an open circuit in the wire harness in Fig. 1, check the resistance or voltage, as described below.

Fig. 2

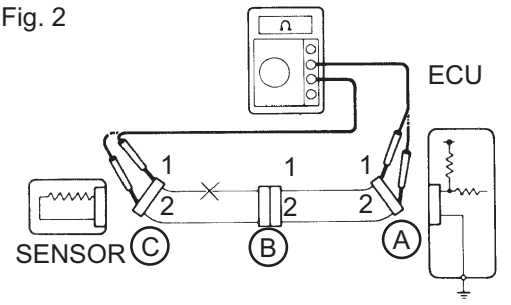

(b) Check the resistance.

(1) Disconnect connectors A and C and measure the resistance between them.

Standard resistance (Fig. 2)

Tester Connection	Specified Condition
Connector A terminal 1 - Connector C terminal 1	10 kΩ or higher
Connector A terminal 2 - Connector C terminal 2	Below 1Ω

HINT:

Measure the resistance while lightly shaking the wire harness vertically and horizontally. If the results match the examples above, an open circuit exists between terminal 1 of connector A and terminal 1 of connector C.

Fig. 3

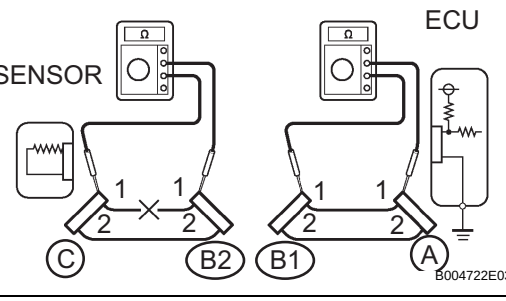

(2) Disconnect connector B and measure the resistance between the connectors.

Standard resistance (Fig. 3)

Tester Connection	Specified Condition
Connector A terminal 1 - Connector B1 terminal 1	Below 1 Ω
Connector B2 terminal 1 - Connector C terminal 1	10 kΩ or higher

If the results match the examples above, an open circuit exists between terminal 1 of connector B2 and terminal 1 of connector C.

Fig. 4

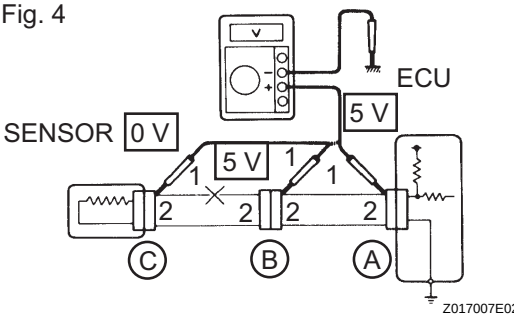

(c) Check the voltage.

(1) In a circuit in which voltage is applied to the ECU connector terminal, an open circuit can be checked by conducting a voltage check.
With each connector still connected, measure the voltage between the body ground and these terminals (in this order): 1) terminal 1 of connector A, 2) terminal 1 of connector B, and 3) terminal 1 of connector C.

Standard voltage (Fig. 4)

Tester Connection	Specified Condition
Connector A terminal 1 - Body ground	5 V
Connector B terminal 1 - Body ground	5 V
Connector C terminal 1 - Body ground	Below 1 V

If the results match the examples above, an open circuit exists in the wire harness between terminal 1 of connector B and terminal 1 of connector C.

Fig. 5

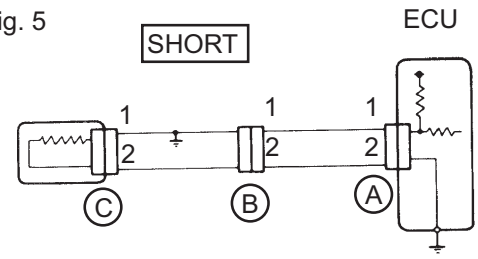

Fig. 6

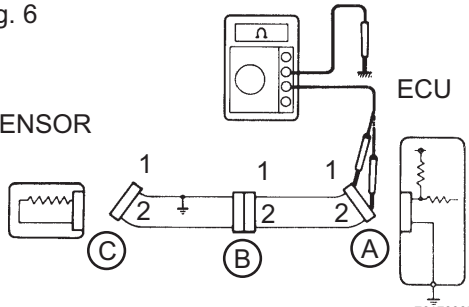

Fig. 7

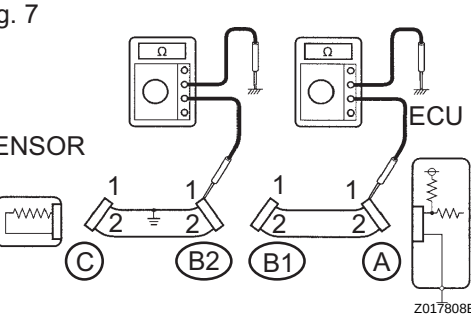

3. CHECK FOR SHORT CIRCUIT

(a) If the wire harness is ground shorted (Fig. 5), locate the section by conducting a resistance check with the body ground (below).

(b) Check the resistance with the body ground.

(1) Disconnect connectors A and C and measure the resistance.

Standard resistance (Fig. 6)

Tester Connection	Specified Condition
Connector A terminal 1 - Body ground	Below 1 Ω
Connector A terminal 2 - Body ground	10 kΩ or higher

HINT:
Measure the resistance while lightly shaking the wire harness vertically and horizontally. If your results match the examples above, a short circuit exists between terminal 1 of connector A and terminal 1 of connector C.

(2) Disconnect connector B and measure the resistance.

Standard resistance (Fig. 7)

Tester Connection	Specified Condition
Connector A terminal 1 - Body ground	10 kΩ or higher
Connector B2 terminal 1 - Body ground	Below 1 Ω

If the results match the examples above, a short circuit exists between terminal 1 of connector B2 and terminal 1 of connector C.

4. CHECK AND REPLACE ECU

NOTICE:

- **The connector should not be disconnected from the ECU. Perform the inspection from the backside of the connector on the wire harness side.**
- **When no measuring condition is specified, perform the inspection with the engine stopped and the ignition switch ON.**
- **Check that the connectors are fully seated. Check for loose, corroded or broken wires.**

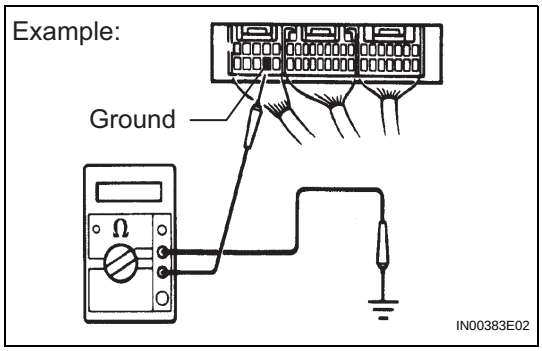

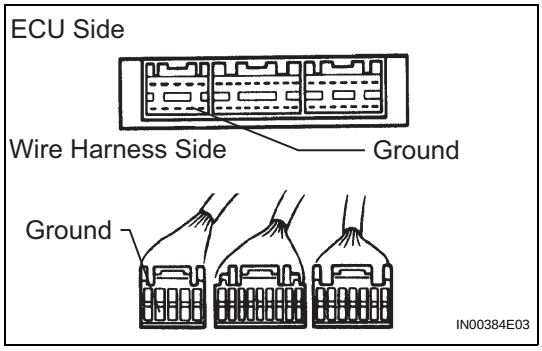

(a) First, check the ECU ground circuit. If it is faulty, repair it. If it is normal, the ECU could be faulty. Temporarily replace the ECU with a normally functioning one and check if the symptoms occur. If the trouble symptoms disappear, replace the original ECU.

(1) Measure the resistance between the ECU ground terminal and body ground.
Standard resistance:
Below 1 Ω

(2) Disconnect the ECU connector. Check the ground terminal on the ECU side and wire harness side for bending, corrosion or foreign matter. Lastly, check the contact pressure of the female terminals.

PARTS LOCATION

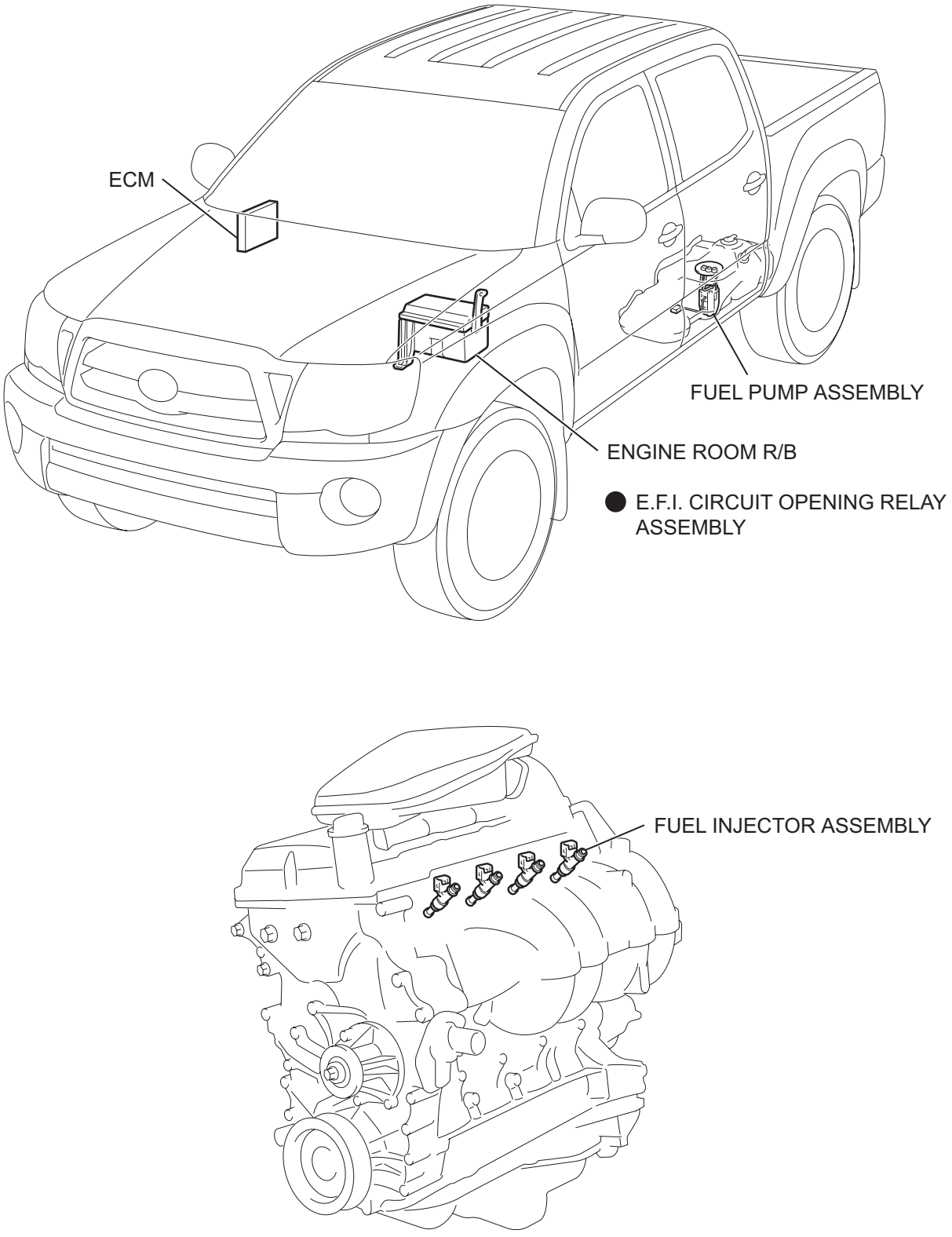

FU

T

A113628E01

SYSTEM DIAGRAM

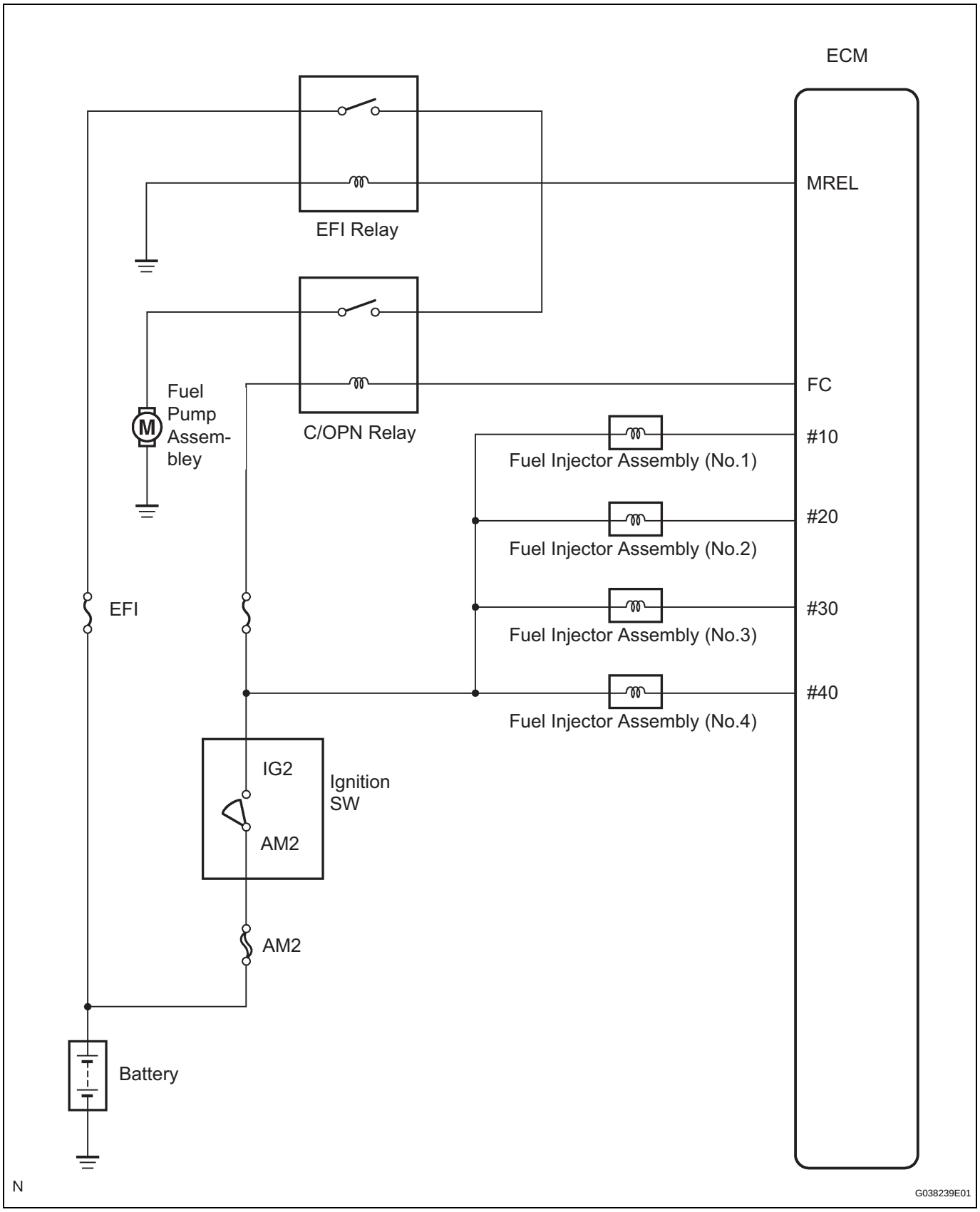

FU

IN

GLOSSARY OF SAE AND TOYOTA TERMS

This glossary lists all SAE-J1930 terms and abbreviations used in this manual in compliance with SAE recommendations, as well as their TOYOTA equivalents.

SAE ABBREVIATIONS	SAE TERMS	TOYOTA TERMS ( )-ABBREVIATIONS
3GR	Third Gear	-
4GR	Fourth Gear	-
A/C	Air Conditioning	Air Conditioner
ACL	Air Cleaner	Air Cleaner, A/CL
AIR	Secondary Air Injection	Air Injection (AI)
AP	Accelerator Pedal	-
B+	Battery Positive Voltage	+B, Battery Voltage
BARO	Barometric Pressure	HAC
CAC	Charge Air Cooler	Intercooler
CARB	Carburetor	Carburetor
CFI	Continuous Fuel Injection	-
CKP	Crankshaft Position	Crank Angle
CL	Closed Loop	Closed Loop
CMP	Camshaft Position	Cam Angle
CPP	Clutch Pedal Position	-
CTOX	Continuous Trap Oxidizer	-
CTP	Closed Throttle Position	LL ON, Idle ON
DFI	Direct Fuel Injection	Direct Injection (DI/INJ)
DI	Distributor Ignition	-
DLC3	Data Link Connector 3	OBD II Diagnostic Connector
DTC	Diagnostic Trouble Code	Diagnostic Trouble Code
DTM	Diagnostic Test Mode	-
ECL	Engine Coolant Level	-
ECM	Engine Control Module	Engine Electronic Control Unit (ECU)
ECT	Engine Coolant Temperature	Coolant Temperature, Water Temperature (THW)
EEPROM	Electrically Erasable Programmable Read Only Memory	Electrically Erasable Programmable Read Only Memory (EEPROM)
EFE	Early Fuel Evaporation	Cold Mixture Heater (CMH), Heat Control Valve (HCV)
EGR	Exhaust Gas Recirculation	Exhaust Gas Recirculation (EGR)
EI	Electronic Ignition	Distributorless Ignition (DLI)
EM	Engine Modification	Engine Modification (EM)
EPROM	Erasable Programmable Read Only Memory	Programmable Read Only Memory (PROM)
EVAP	Evaporative Emission	Evaporative Emission Control (EVAP)
FC	Fan Control	-
FEEPROM	Flash Electrically Erasable Programmable Read Only Memory	-
FEPROM	Flash Erasable Programmable Read Only Memory	-
FF	Flexible Fuel	-
FP	Fuel Pump	Fuel Pump
GEN	Generator	Alternator
GND	Ground	Ground (GND)
HO2S	Heated Oxygen Sensor	Heated Oxygen Sensor (HO2S)
IAC	Idle Air Control	Idle Speed Control (ISC)

SAE ABBREVIATIONS	SAE TERMS	TOYOTA TERMS ( )-ABBREVIATIONS
IAT	Intake Air Temperature	Intake or Inlet Air temperature
ICM	Ignition Control Module	-
IFI	Indirect Fuel Injection	Indirect Injection (IDL)
IFS	Inertia Fuel-Shutoff	-
ISC	Idle Speed Control	-
KS	Knock Sensor	Knock Sensor
MAF	Mass Air Flow	Air Flow Meter
MAP	Manifold Absolute Pressure	Manifold Pressure Intake Vacuum
MC	Mixture Control	Electric Bleed Air Control Valve (EBCV) Mixture Control Valve (MCV) Electric Air Control Valve (EACV)
MDP	Manifold Differential Pressure	-
MFI	Multiport Fuel Injection	Electronic Fuel Injection (EFI)
MIL	Malfunction Indicator Lamp	Check Engine Lamp
MST	Manifold Surface Temperature	-
MVZ	Manifold Vacuum Zone	-
NVRAM	Non-Volatile Random Access Memory	-
O2S	Oxygen Sensor	Oxygen Sensor, O2 Sensor (O2S)
OBD	On-Board Diagnostic	On-Board Diagnostic System (OBD)
OC	Oxidation Catalytic Converter	Oxidation Catalyst Converter (OC), CCo
OL	Open Loop	Open Loop
PAIR	Pulsed Secondary Air Injection	Air Suction (AS)
PCM	Powertrain Control Module	-
PNP	Park/Neutral Position	-
PROM	Programmable Read Only Memory	-
PSP	Power Steering Pressure	-
PTOX	Periodic Trap Oxidizer	Diesel Particulate Filter (DPF) Diesel Particulate Trap (DPT)
RAM	Random Access Memory	Random Access Memory (RAM)
RM	Relay Module	-
ROM	Read Only Memory	Read Only Memory (ROM)
RPM	Engine Speed	Engine Speed
SC	Supercharger	Supercharger
SCB	Supercharger Bypass	E-ABV
SFI	Sequential Multiport Fuel Injection	Electronic Fuel Injection (EFI), Sequential Injection
SPL	Smoke Puff Limiter	-
SRI	Service Reminder Indicator	-
SRT	System Readiness Test	-
ST	Scan Tool	-
TB	Throttle Body	Throttle Body
TBI	Throttle Body Fuel Injection	Single Point Injection Central Fuel Injection (Ci)
TC	Turbocharger	Turbocharger
TCC	Torque Converter Clutch	Torque Converter
TCM	Transmission Control Module	Transmission ECU, ECT ECU
TP	Throttle Position	Throttle Position
TR	Transmission Range	-
TVV	Thermal Vacuum Valve	Bimetallic Vacuum Switching Valve (BVSV) Thermostatic Vacuum Switching Valve (TVSV)

SAE ABBREVIATIONS	SAE TERMS	TOYOTA TERMS ( )-ABBREVIATIONS
TWC	Three-Way Catalytic Converter	Three-Way Catalytic (TWC) Manifold Converter CCRO
TWC+OC	Three-Way + Oxidation Catalytic Converter	CCR + CCo
VAF	Volume Air Flow	Air Flow Meter
VR	Voltage Regulator	Voltage Regulator
VSS	Vehicle Speed Sensor	Vehicle Speed Sensor
WOT	Wide Open Throttle	Full Throttle
WU-OC	Warm Up Oxidation Catalytic Converter	-
WU-TWC	Warm Up Three-Way Catalytic Converter	-

SYSTEM DIAGRAM

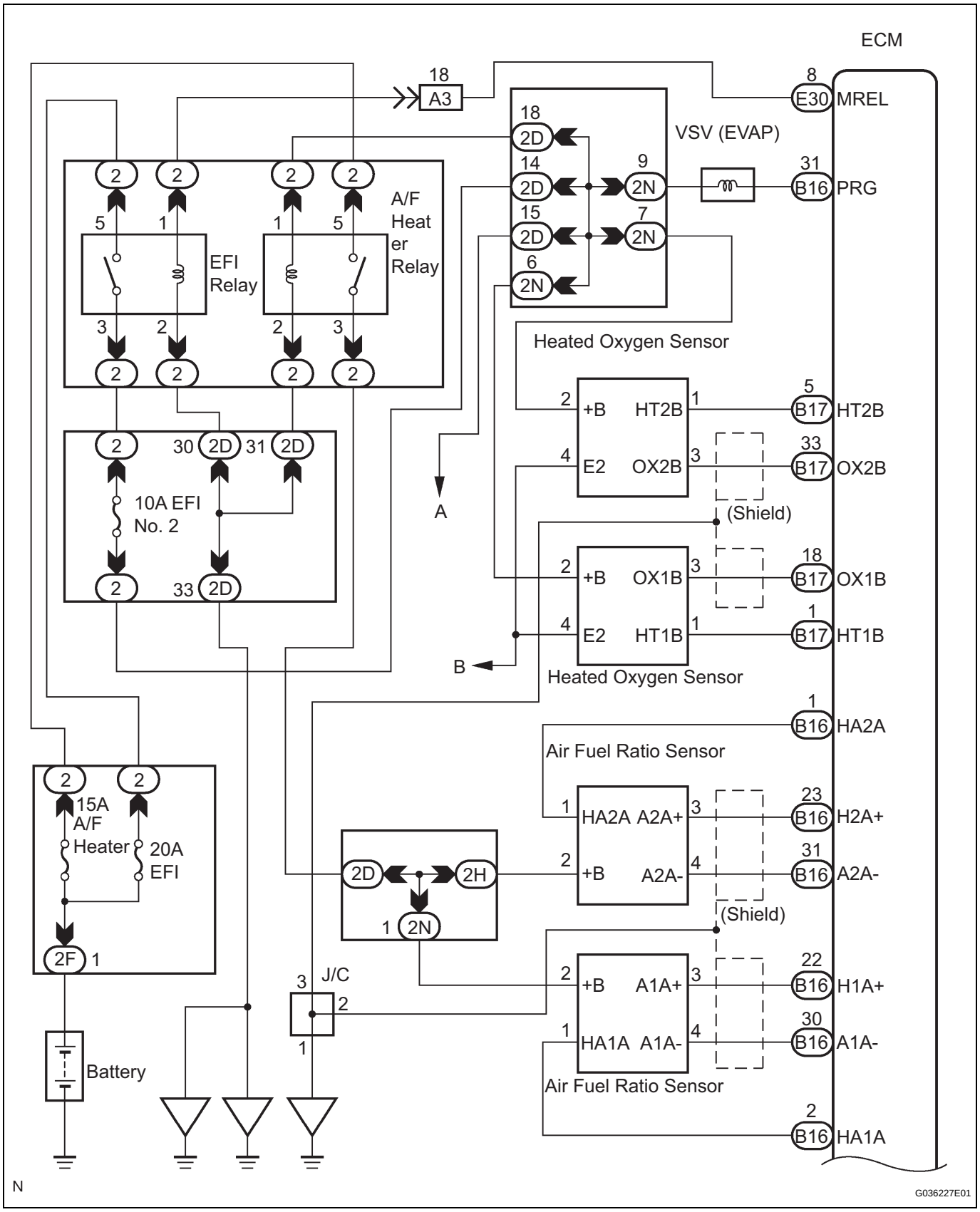

EC

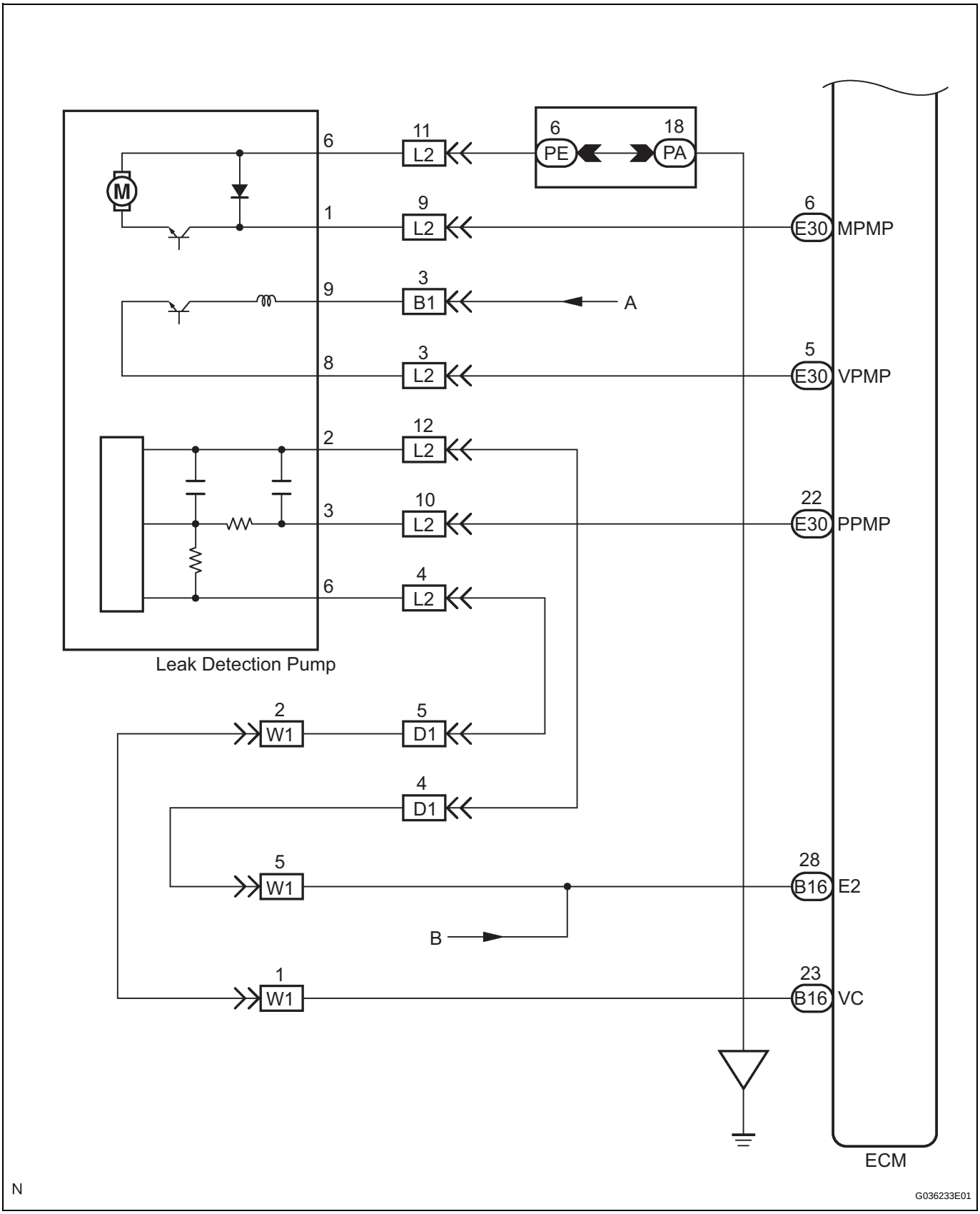
6
11
L2
6
PE
18
PA
M
1
9
L2
6
E30
MPMP
9
3
B1
A
8
3
L2
5
E30
VPMP
2
12
L2
3
10
L2
22
E30
PPMP
6
4
L2
Leak Detection Pump
2
W1
5
D1
4
D1
5
W1
28
B16
E2
B
1
W1
23
B16
VC
ECM
N
G036233E01

SYSTEM DIAGRAM

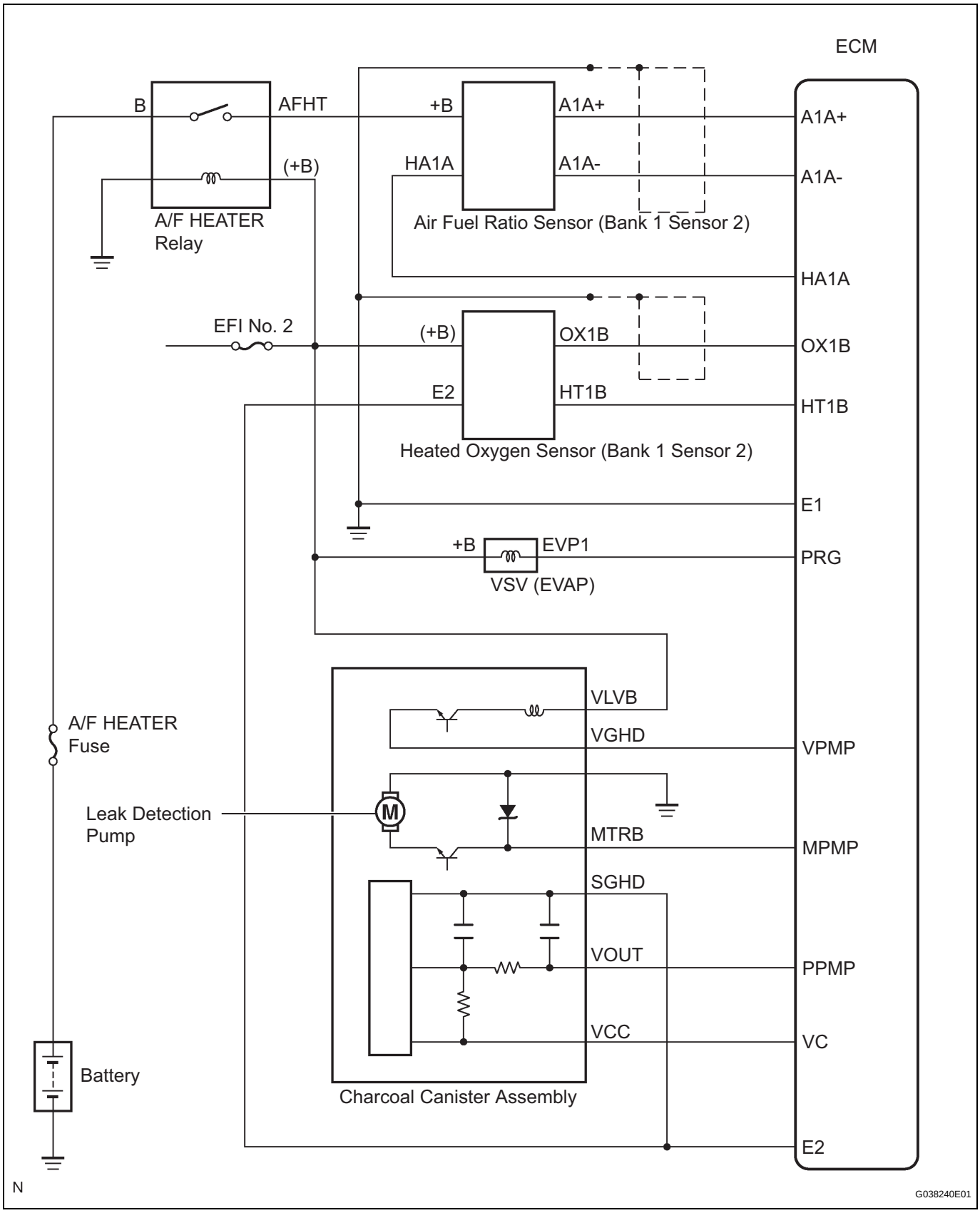

EC

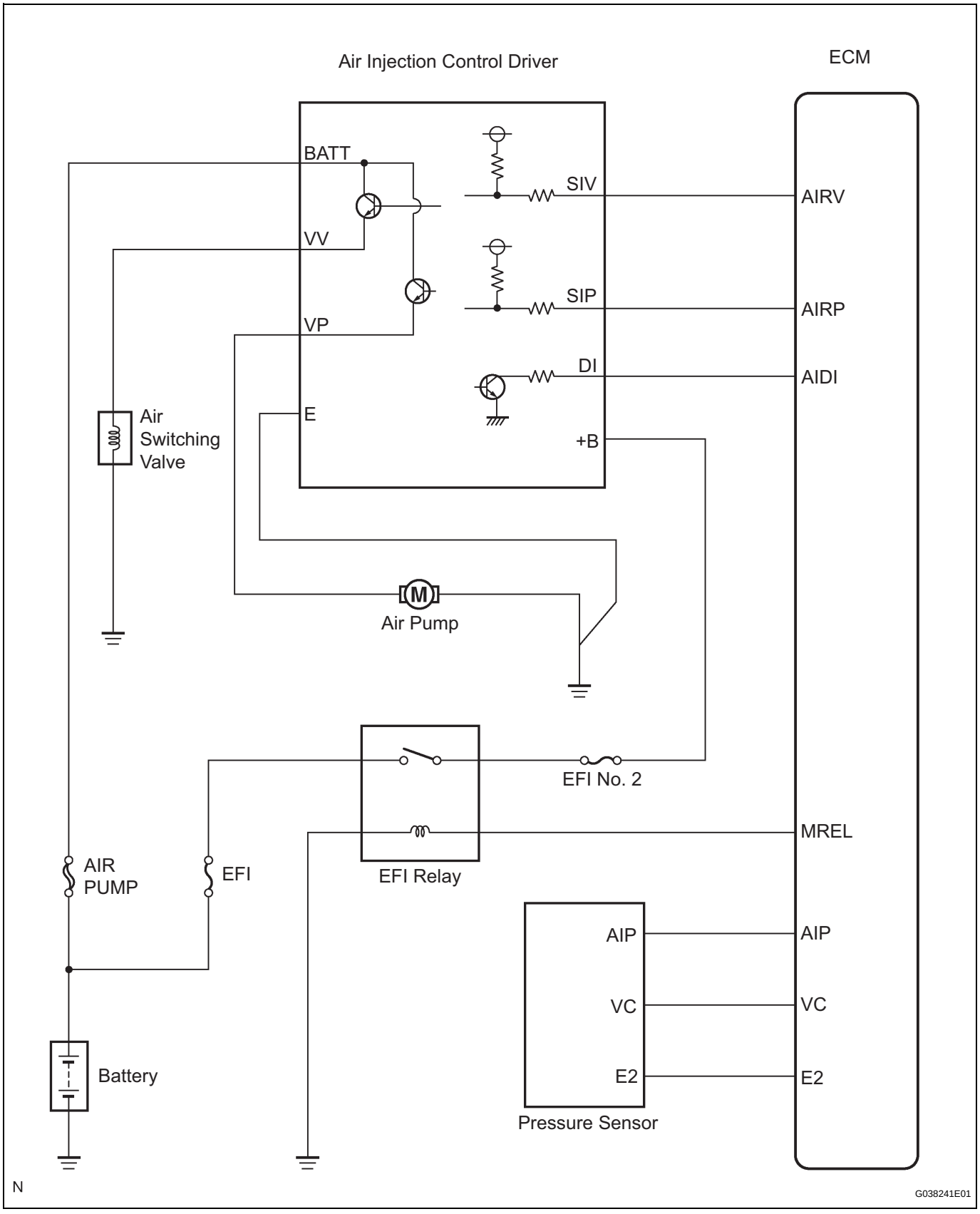
Air Injection Control Driver
ECM
BATT
SIV
AIRV
VV
SIP
AIRP
VP
DI
AIDI
E
+B
Air
Switching
Valve
M
Air Pump
EFI No. 2
MREL
AIR
PUMP
EFI
EFI Relay
AIP
AIP
VC
VC
E2
E2
Battery
Pressure Sensor
N
G038241E01

EC

ON-VEHICLE INSPECTION

1. INSPECT INTAKE AIR CONTROL FUNCTION

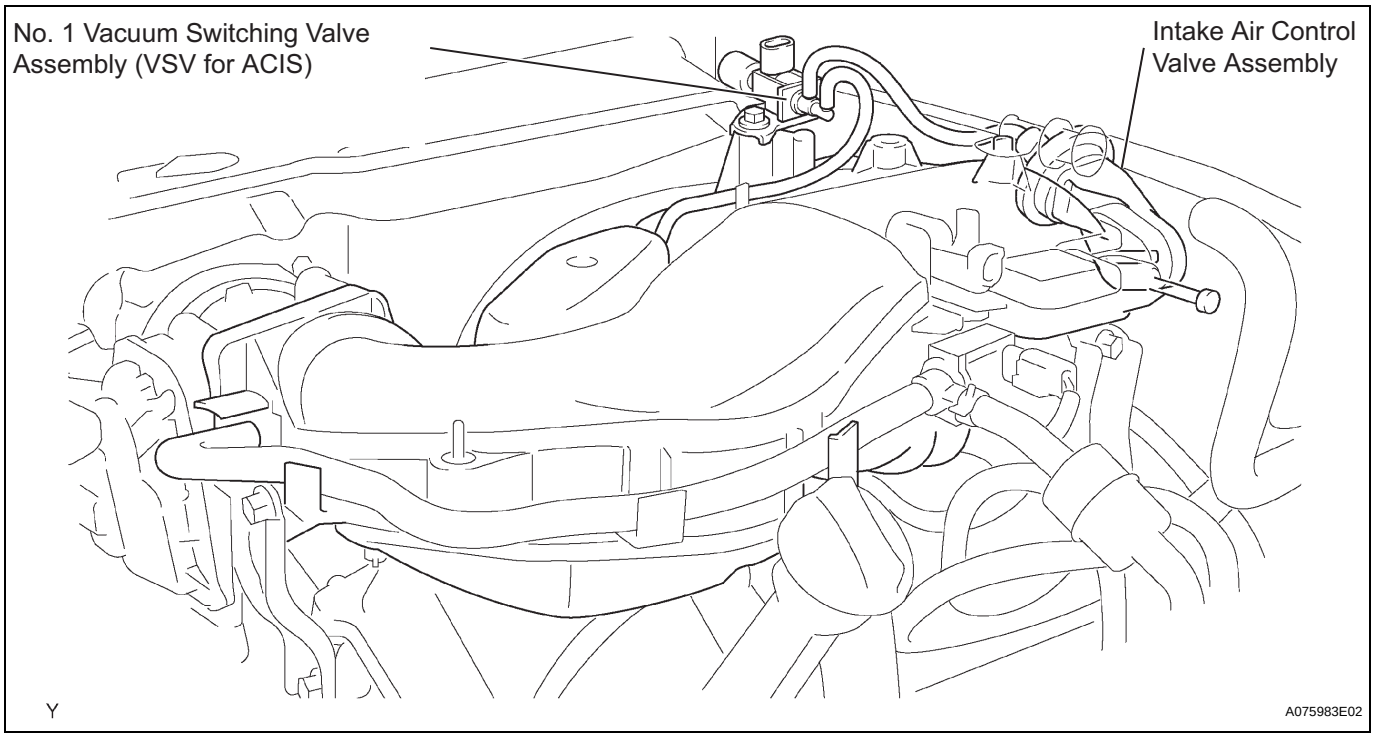

(a) Remove the V-bank cover.
(b) Warm up the engine.
(c) Turn the ignition switch to OFF.

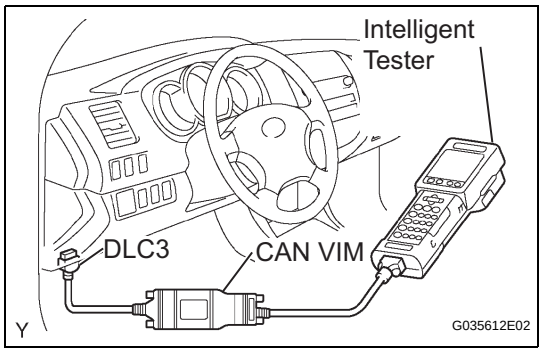

(d) Connect the intelligent tester to the DLC3.
(e) Start the engine and allow it to idle.
(f) Turn the intelligent tester ON.
(g) Select the following menu items: DIAGNOSIS / ENHANCED OBD II / ACTIVE TEST / INTAKE CTL VSV1 / ON.
    (1) Check that the intake air control valve is pulled out.
    If the intake air control valve does not operate, replace the VSV for ACIS or intake air surge tank.
(h) Select the following menu items: DIAGNOSIS / ENHANCED OBD II / ACTIVE TEST / INTAKE CTL VSV1 / OFF.
    (1) Check that the intake air control valve is returned to its original position.
    If the intake air control valve does not operate, replace the VSV for ACIS or intake air surge tank.

IT

(i) Select the following menu items: DIAGNOSIS / ENHANCED OBD II / DATA LIST / ENGINE SPD, THROTTLE POS, INTAKE CTL VSV1, and INTAKE CTL VSV2.
   (1) When depressing the accelerator pedal to the 60 % accelerator opening angle and running the engine at a speed of 2,200 to 4,100 rpm, check that the VSV is ON.
   If the intake air control valve does not operate, replace the Vacuum Switching Valve No. 1.

(j) Release the accelerator pedal when in the condition in step (1) or when the engine is idling, and check that the VSV is OFF.
If the intake air control valve does not operate, replace the Vacuum Switching Valve No. 1.

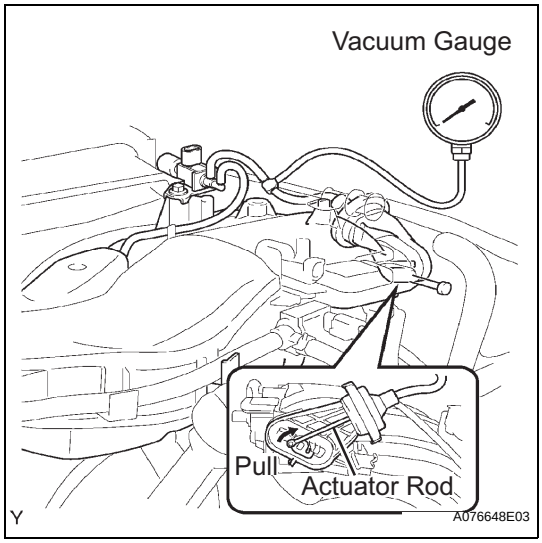

2. INSPECT INTAKE AIR CONTROL VALVE

(a) Remove the V-bank cover.
(b) Using a 3-way connector, connect a vacuum gauge to the actuator hose.
(c) Start the engine.
(d) While the engine is idling, check that the vacuum gauge needle momentarily fluctuates up to approximately. 39.9 kPa (300 mmHg, 11.8 in.Hg). (The actuator rod is pulled out.)
If the intake air control valve does not operate, replace the intake air surge tank.
(e) Rapidly depress the accelerator pedal to the fully open position and check that the vacuum gauge needle points to 0 kPa (0 mmHg, 0 in.Hg). (The actuator rod is returned to its original position.)
If the intake air control valve does not operate, replace the intake air surge tank.

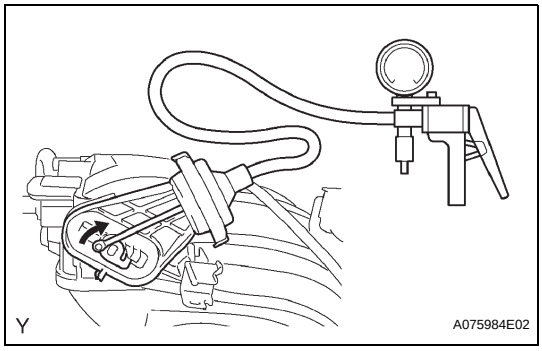

INSPECTION

1. INSPECT INTAKE AIR SURGE TANK

(a) Inspect the diaphragm.
   (1) Check that the lever moves when a vacuum of 26.6 kPa (200 mmHg) is applied with the Vacuum gage on.
   (2) Check that the vacuum of 26.6 kPa (200 mmHg) is sustained for 1 minute in the above state.

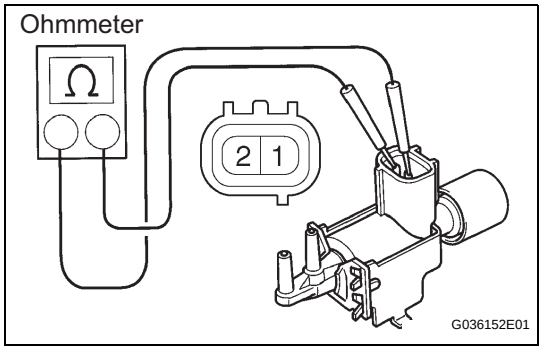

2. INSPECT NO. 1 VACUUM SWITCHING VALVE ASSEMBLY

(a) Check the resistance.
   (1) Using an ohmmeter, measure the resistance between the terminals.
   Standard

Tester Connection	Specified Condition
1 - 2	37 to 44 Ω at 20°C (68°F)

If the result is not as specified, replace the vacuum switching valve No. 1.

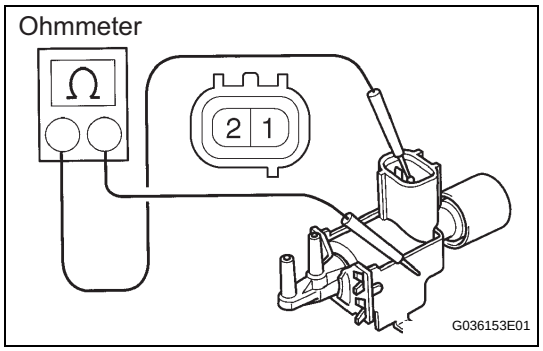

(b) Check the vacuum switching valve No. 1 for ground.
(1) Using an ohmmeter, measure the resistance between each terminal and the body.
Standard

Tester Connection	Specified Condition
1 - Body	10 kΩ or higher
2 - Body	10 kΩ or higher

If the result is not as specified, replace the vacuum switching valve No. 1.

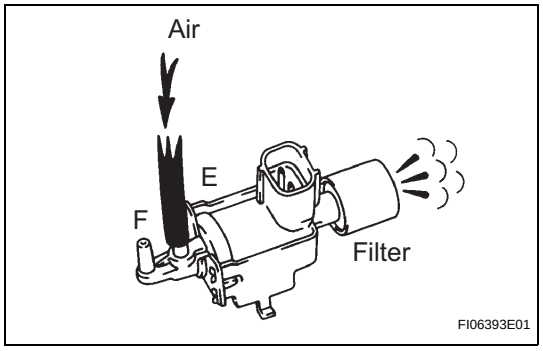

(c) Check the operation.
(1) Check that air does not flow from port E to port F.
If the operation is not as specified, replace the vacuum switching valve No. 1.

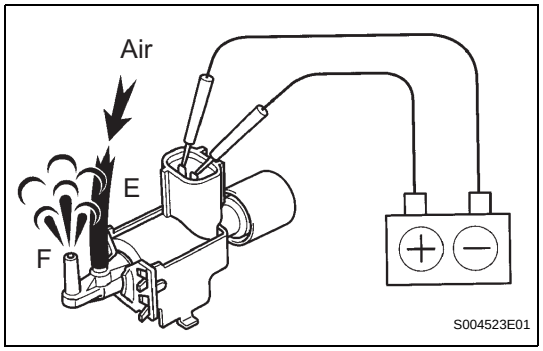

(2) Apply battery voltage across the terminals.
(3) Check that air flows from port E to port F.
If the operation is not as specified, replace the vacuum switching valve No. 1.

REMOVAL

1. **DISCONNECT CABLE FROM NEGATIVE BATTERY TERMINAL**
2. **REMOVE HEATED OXYGEN SENSOR (See page EC-19)**
3. **REMOVE EXHAUST PIPE ASSEMBLY CENTER**
   (a) Remove the 2 bolts and 2 compression springs, then separate the exhaust pipe center.
   (b) Separate the 4 insulators from the exhaust tail pipe, then remove the exhaust pipe center.
4. **REMOVE EXHAUST FRONT PIPE ASSEMBLY NO.2**
   (a) Remove the 2 bolts and 2 nuts, then separate the exhaust front pipe No. 2 from the exhaust front pipe.
   (b) Remove the 2 nuts, then separate the exhaust front pipe No. 2 from the exhaust manifold LH.
   (c) Separate the insulator, then remove the exhaust front pipe No. 2.
5. **REMOVE EXHAUST PIPE ASSEMBLY FRONT**
   (a) Remove the 2 nuts, then remove the exhaust front pipe.

INSTALLATION

1. INSTALL EXHAUST PIPE ASSEMBLY FRONT

(a) Install a new gasket onto the exhaust manifold RH.

(b) Install the exhaust front pipe with the new 2 nuts.
Torque: 62 N*m (632 kgf*cm, 46 ft.*lbf)

2. INSTALL EXHAUST FRONT PIPE ASSEMBLY NO.2

(a) Install a new gasket onto the exhaust manifold LH.

(b) Install a new gasket onto the exhaust front pipe.

(c) Install the exhaust front pipe No. 2 onto the insulator.

(d) Install the exhaust front pipe No. 2 onto the exhaust manifold LH with the new 2 nuts.
Torque: 62 N*m (632 kgf*cm, 46 ft.*lbf)

(e) Install the exhaust front pipe No. 2 onto the exhaust front pipe with the 2 bolts and 2 nuts.
Torque: 48 N*m (489 kgf*cm, 35 ft.*lbf)

(f) Install a new gasket onto the exhaust front pipe No. 2.

(1) Using a wooden block and plastic- faced hammer, tap in a new gasket until it is flush with the exhaust front pipe No. 2.
NOTICE:
- **Make sure that the gasket is in the correct direction when installing.**
- **Do not reuse the removed gasket.**

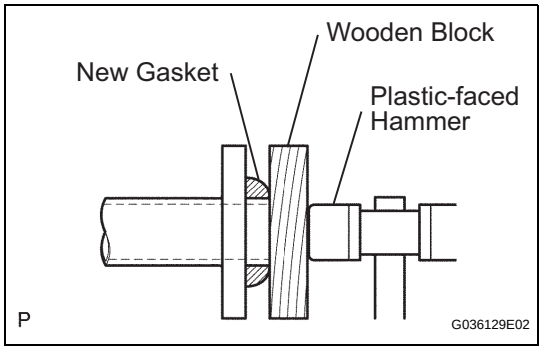

EX

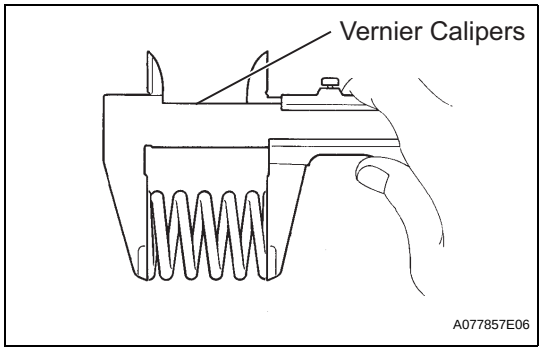

3. INSTALL EXHAUST PIPE ASSEMBLY CENTER

(a) Check the free length.

(1) Using vernier calipers, measure the free length of the compression spring.
Minimum:
40.5 mm (1.594 in.)
If the free length is less than the minimum, replace the compression spring.

(b) Install the exhaust tail pipe onto the 4 insulators.

(c) Install the exhaust pipe center onto the exhaust front pipe No. 2 with the 2 bolts and 2 springs.
Torque: 43 N*m (438 kgf*cm, 32 ft.*lbf)

4. INSTALL HEATED OXYGEN SENSOR (See page EC-19)

5. CONNECT CABLE TO NEGATIVE BATTERY TERMINAL
Torque: 3.9 N*m (40 kgf*cm, 35 in.*lbf)

6. CHECK FOR EXHAUST GAS LEAKAGE

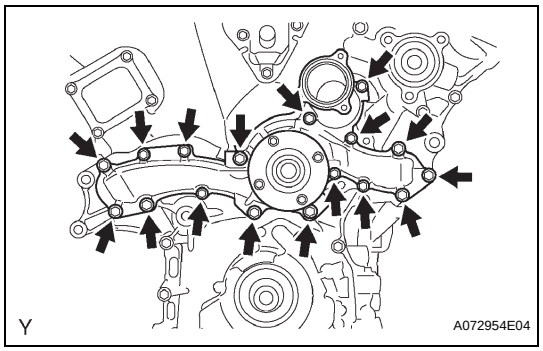

INSTALLATION

1. **INSTALL WATER PUMP ASSEMBLY**
   (a) Install a new gasket and the water pump with the 17 bolts.
   Torque: 9.0 N*m (92 kgf*cm, 80 in.*lbf) for bolt A
   23 N*m (235 kgf*cm, 17 ft.*lbf) for bolt B

2. **INSTALL V-RIBBED BELT TENSIONER ASSEMBLY**
   HINT:

Drive Type	See Page
2WD	EM-26
Pre Runner and 4WD	EM-48

3. **INSTALL COOLER COMPRESSOR ASSEMBLY (See page ES-410)**

4. **INSTALL GENERATOR ASSEMBLY (See page CH-13)**

5. **INSTALL NO. 2 IDLER PULLEY SUB-ASSEMBLY**
   (a) Install the 2 idler pulleys with the 2 bolts.
   Torque: 39 N*m (398 kgf*cm, 29 ft.*lbf)

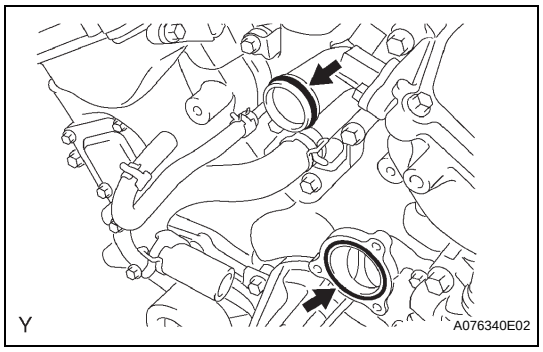

6. **INSTALL WATER INLET**
   (a) Install a new O-ring onto the water outlet pipe.
   (b) Install a new gasket onto the water pump.
   (c) Apply soapy water to the O-ring.

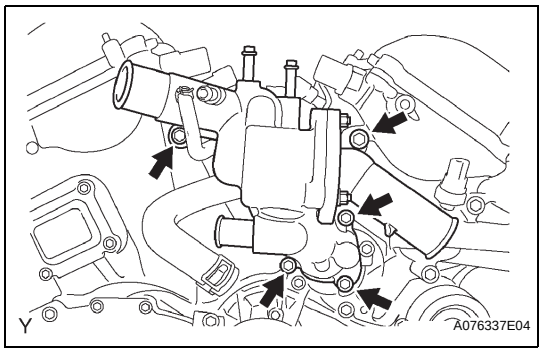

   (d) Install the water inlet with the 5 bolts.
   Torque: 9.0 N*m (92 kgf*cm, 80 in.*lbf)
   (e) Connect the 5 water by-pass hoses.
   (f) Connect the 2 radiator hoses.
   (g) Connect the 2 oil cooler hoses (with oil cooler).

7. **INSTALL AIR CLEANER ASSEMBLY (See page ES-416)**

8. **INSTALL FAN SHROUD (See page CO-20)**

9. **INSTALL RADIATOR SUPPORT TO FRAME SEAL LH**

10. **CONNECT CABLE TO NEGATIVE BATTERY TERMINAL**
    Torque: 3.9 N*m (40 kgf*cm, 35 in.*lbf)

11. **ADD ENGINE COOLANT (See page CO-3)**

12. **CHECK FOR ENGINE COOLANT LEAKAGE (See page CO-4)**

13. **INSTALL V-BANK COVER**
    (a) Install the V-bank cover with the 2 nuts.
    Torque: 7.5 N*m (76 kgf*cm, 66 in.*lbf)

14. INSTALL NO. 1 ENGINE UNDER COVER SUB-ASSEMBLY (for Pre Runner and 4WD Type)

(a) Install the engine under cover with the 4 bolts.
Torque: 30 N*m (306 kgf*cm, 22 ft.*lbf)

NOTICE:
The above pumping speed is for the first pumping only (in order to close the vacuum valve). After the first pumping, the pumping speed can be reduced.
HINT:
Use the tester's maximum reading as the opening pressure. If the opening pressure is less than the minimum, replace the radiator cap.

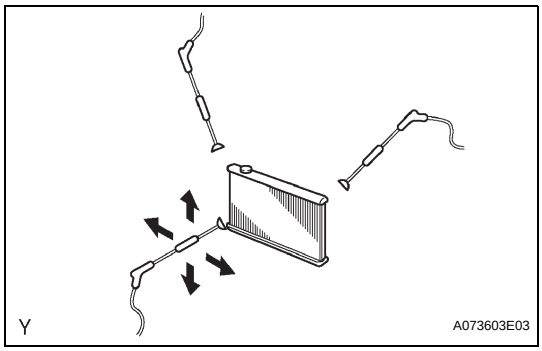

ON-VEHICLE CLEANING

1. CHECK FINS FOR BLOCKAGE

(a) If the fins are clogged, wash them with water or a steam cleaner and then dry them with compressed air.

NOTICE:

- **If the distance between the steam cleaner and core is too small, the fins may be damaged. So, keep to the following injection distances.**

Injection Pressure kPa (kgf/cm^2, psi)	Injection Distance mm (in.)
2,942 to 4,903 (30 to 50, 427 to 711)	300 (11.811)
4,903 to 7,845 (50 to 80, 711 to 1,138)	500 (19.685)

- **If the fins are bent, straighten them with a screwdriver or pliers.**
- **Be careful not to expose electronic components to water.**

REMOVAL

1. **DISCONNECT CABLE FROM NEGATIVE BATTERY TERMINAL**

2. **REMOVE NO. 1 ENGINE UNDER COVER SUB-ASSEMBLY (for Pre Runner and 4WD Type)**
   (a) Remove the 4 bolts, then remove the engine under cover No. 1.

3. **DRAIN ENGINE COOLANT (See page CO-3)**

4. **REMOVE RADIATOR SUPPORT TO FRAME SEAL LH**
   (a) Disengage the 9 clips, then remove the radiator support to frame seal LH.

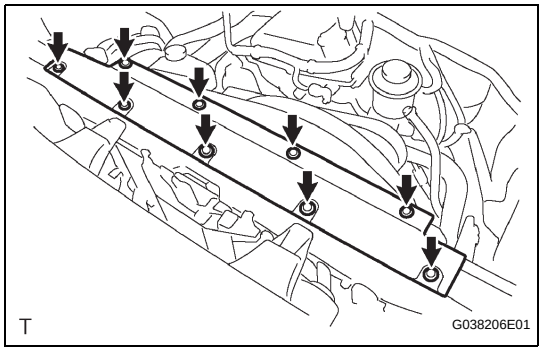

5. **REMOVE FAN SHROUD**
   (a) Loosen the 4 nuts shown in the illustration.
   (b) Remove the fan and generator V belt.

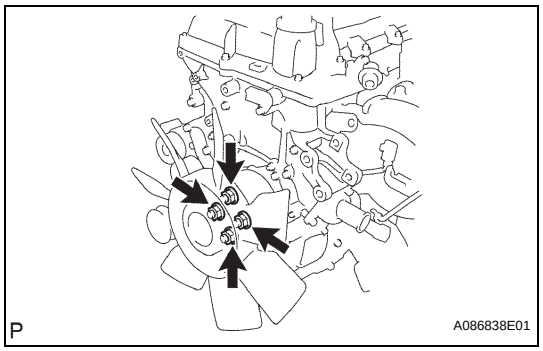

   (c) Disconnect the radiator reserve tank hose from the radiator.

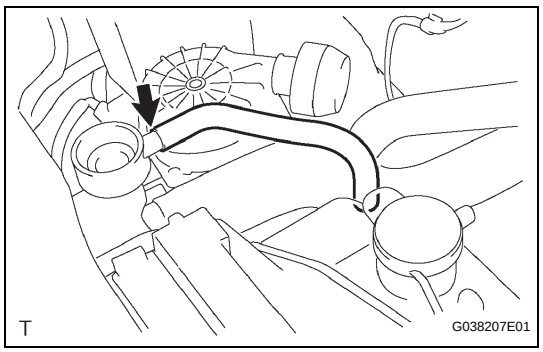

   (d) Disconnect the oil cooler inlet and outlet hoses from the fan shroud. (for Automatic Transmission)

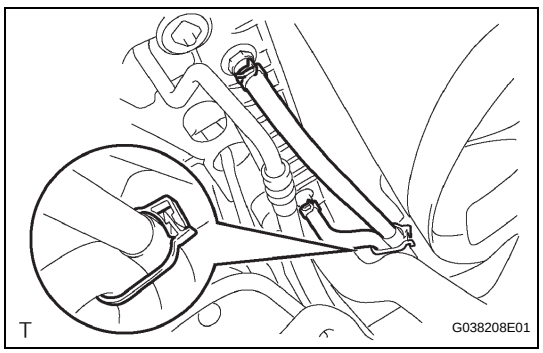

CO

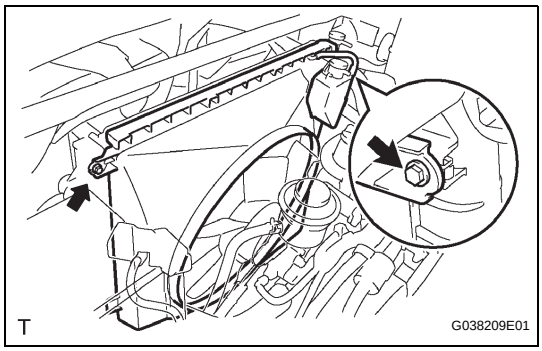

(e) Remove the 2 bolts shown in the illustration.

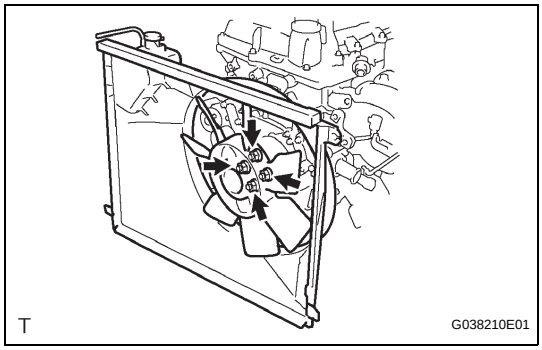

(f) Remove the 4 nuts, then remove the fan shroud and fan with fluid coupling together.
NOTICE:
Make sure that the fan shroud and fan with fluid coupling do not make any contact with the radiator when they are removed.

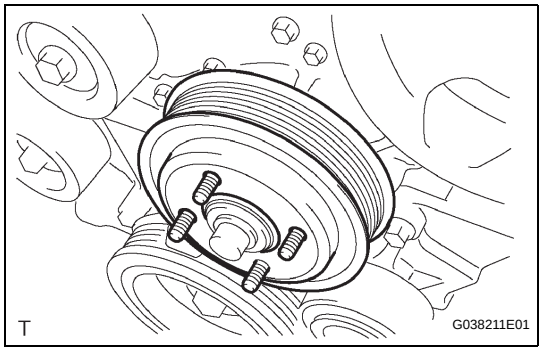

(g) Remove the fan pulley.

CO

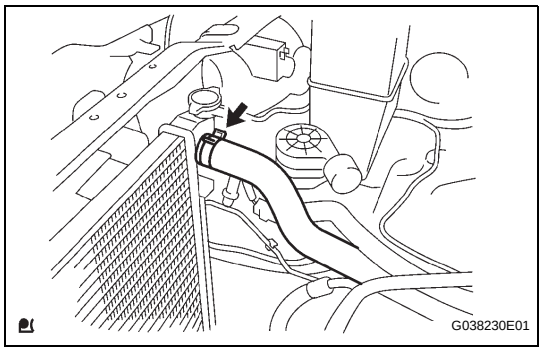

6. REMOVE RADIATOR ASSEMBLY

(a) Disconnect the radiator hose inlet.

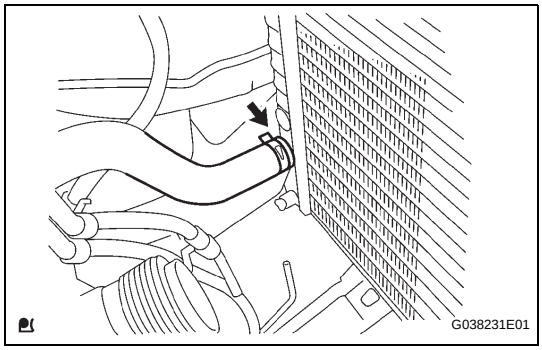

(b) Disconnect the radiator hose No. 2.

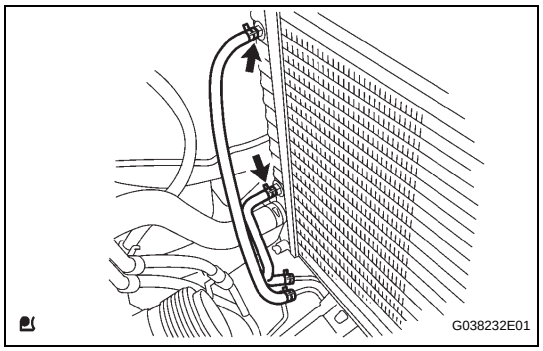

(c) Disconnect the oil cooler inlet and outlet hoses. (for Automatic Transmission)
(d) Remove the 4 bolts, then remove the radiator.

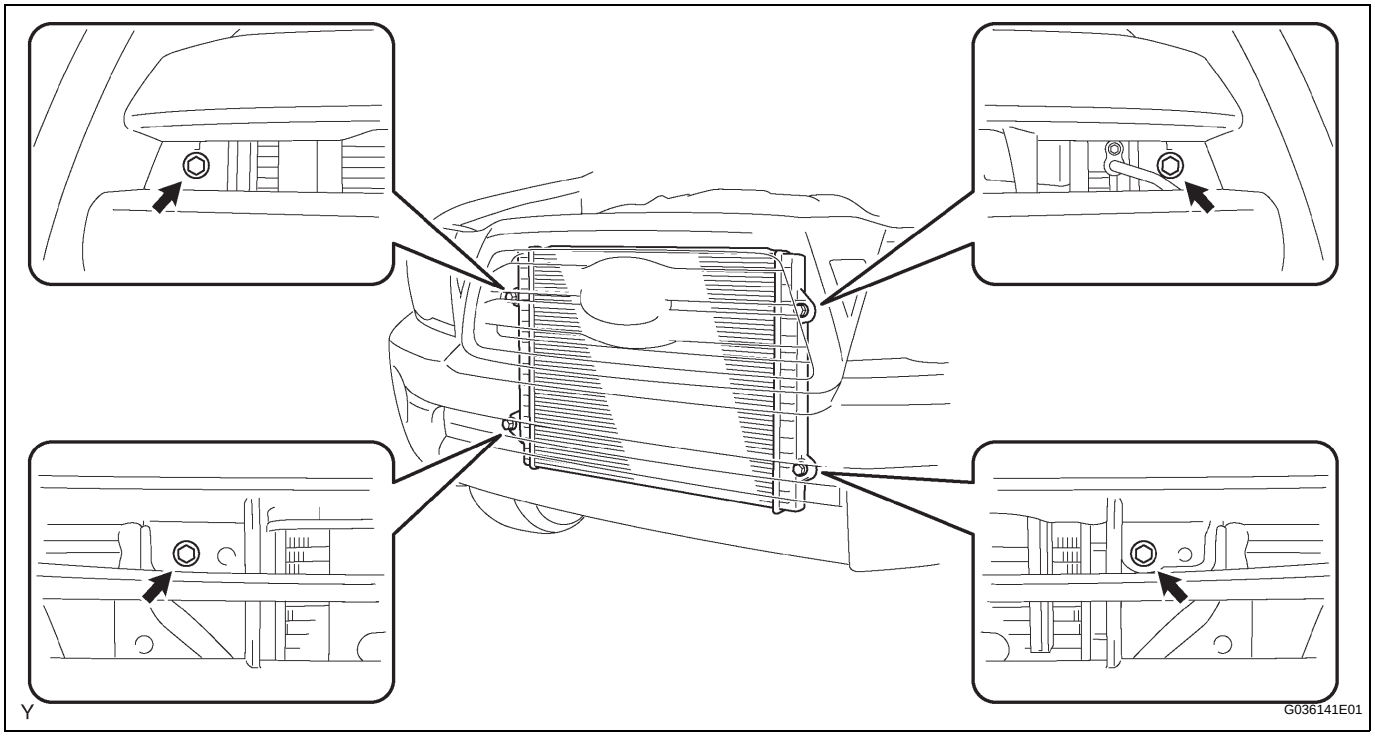

ON-VEHICLE INSPECTION

1. CHECK ENGINE OIL LEVEL

(a) Warm up the engine, then stop the engine and wait for 5 minutes.

(b) Check that the engine oil level is between the low level and full level marks on the level gauge.
If low, check for leakage and top oil up to the full level mark.
NOTICE:
Do not fill with engine oil to above the full level mark.

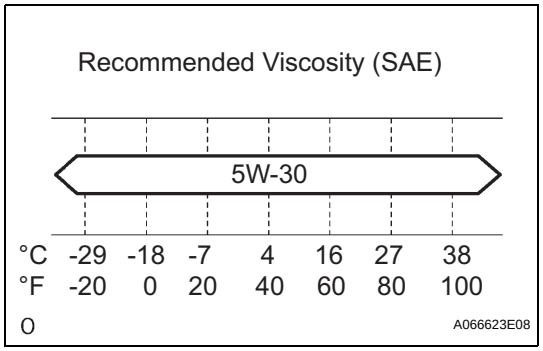

2. CHECK ENGINE OIL QUALITY

(a) Check the oil for deterioration, water intrusion, discoloration or thinning.
If the quality is visibly poor, replace the oil.
Oil grade:
Use API grade SM "Energy-Conserving" or ILSAC multigrade engine oil.
SAE 5W-30 is the best choice for good fuel economy and good starting in cold weather.
If SAE 5W-30 is not available, use SAE 10W-30.
However, it should be replaced with SAE 5W-30 at the next oil replacement.

3. INSPECT OIL PRESSURE

(a) Disconnect the oil pressure switch connector.

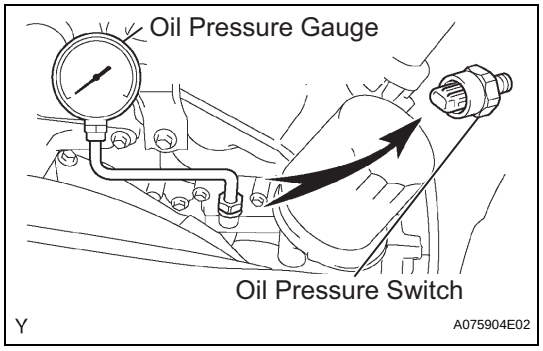

(b) Using a 24 mm deep socket wrench, remove the oil pressure switch.

(c) Install the oil pressure gauge.

(d) Warm up the engine.

(e) Inspect the oil pressure.
Oil pressure

When Idling	**29 kPa (0.3 kgf*cm^2, 4.3 psi) or more**
At 3,000 rpm	**294 to 588 kPa (3.0 to 6.0kgf*cm^2, 43 to 85 psi)**

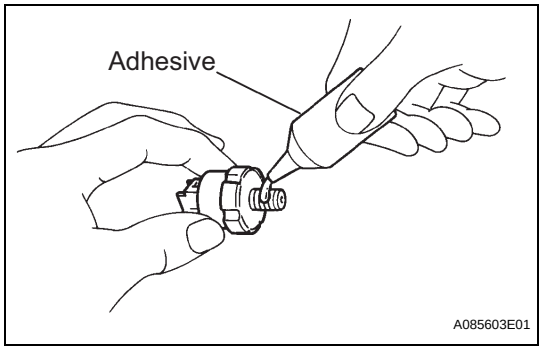

(f) Apply adhesive to 2 or 3 threads of the oil pressure switch.
Adhesive:
Part No. 08833-00080, THREE BOND 1344, LOCTITE 242 or equivalent

(g) Using a 24 mm deep socket wrench, install the oil pressure switch.
Torque: 15 N*m (153 kgf*cm, 11 ft.*lbf)
NOTICE:
Do not start the engine within 1 hour of installation.

(h) Connect the oil pressure switch connector.

(i) Check for engine oil leakage.

REMOVAL

1. **REMOVE HOOD SUB-ASSEMBLY**
2. **DISCHARGE FUEL SYSTEM PRESSURE**
   (See Page FU-1)
3. **REMOVE ENGINE UNDER COVER SUB-ASSEMBLY NO.1 (for Pre Runner and 4WD Type)**
   (a) Remove the 4 bolts, then remove the engine under cover No. 1.
4. **REMOVE ENGINE UNDER COVER SUB-ASSEMBLY NO.2 (for Pre Runner and 4WD Type, Regular Cab)**
   (a) Remove the 4 bolts, then remove the engine under cover No. 2.
5. **DRAIN ENGINE OIL (See page LU-3)**
6. **DRAIN ENGINE COOLANT (See page CO-3)**
7. **REMOVE BATTERY**
8. **REMOVE BATTERY TRAY**
9. **REMOVE RADIATOR SUPPORT TO FRAME SEAL LH (See page CO-12)**
10. **REMOVE FAN SHROUD (See page CO-13)**
11. **REMOVE AIR CLEANER CAP SUB-ASSEMBLY (See page EC-14)**
12. **REMOVE AIR CLEANER FILTER ELEMENT SUB-ASSEMBLY**
13. **REMOVE AIR CLEANER CASE**
    (a) Remove the 3 bolts, then remove the air cleaner case.
14. **SEPARATE VANE PUMP ASSEMBLY (See page EM-21)**
15. **REMOVE RADIATOR HOSE NO.2**
16. **SEPARATE COMPRESSOR AND MAGNETIC CLUTCH (With Air Conditioning) (See page EM-21)**
17. **REMOVE RADIATOR HOSE INLET**
18. **SEPARATE WATER HOSE SUB-ASSEMBLY (See page EM-92)**
19. **DISCONNECT FUEL HOSE (See page FU-11)**
20. **DISCONNECT FUEL HOSE NO.2 (See page FU-11)**
21. **SEPARATE FUEL VAPOR FEED HOSE ASSEMBLY (See page EM-93)**
22. **DISCONNECT AIR INJECTION SYSTEM NO.1 HOSE (See page EM-93)**
23. **DISCONNECT ENGINE WIRE (See page EM-93)**
24. **REMOVE EXHAUST PIPE ASSEMBLY TAIL (See page EX-2)**

25. **REMOVE EXHAUST PIPE ASSEMBLY FRONT (See page EX-2)**

26. **REMOVE MANUAL TRANSMISSION UNIT ASSEMBLY**

Transmission	See page
R155	MT-6
R155F	MT-8

27. **REMOVE AUTOMATIC TRANSMISSION ASSEMBLY** (See Page AT-109)

28. **REMOVE ENGINE ASSEMBLY (See page EM-93)**

29. **REMOVE CLUTCH COVER ASSEMBLY (for Manual Transmission)**

Transmission	See page
R155	CL-30
R155F	CL-35

30. **REMOVE CLUTCH DISC ASSEMBLY (for Manual Transmission)**

Transmission	See page
R155	CL-30
R155F	CL-35

31. **REMOVE FLYWHEEL SUB-ASSEMBLY (for Manual Transmission) (See page EM-77)**

32. **REMOVE DRIVE PLATE & RING GEAR SUB-ASSEMBLY (for Automatic Transmission) (See page EM-78)**

33. **REMOVE REAR END PLATE (See page EM-66)**

34. **REMOVE INTAKE AIR CONNECTOR (See page ES-452)**

35. **REMOVE GENERATOR ASSEMBLY (See page CH-7)**

36. **REMOVE V-RIBBED BELT TENSIONER ASSEMBLY (See page CO-5)**

37. **REMOVE IDLER PULLEY SUB-ASSEMBLY NO.1 (See page EM-23)**

38. **REMOVE IDLE PULLEY ASSEMBLY W/BRACKET (With Air Conditioning) (See page ES-446)**

39. **REMOVE CRANKSHAFT POSITION SENSOR (See page ES-446)**

40. **REMOVE CAMSHAFT POSITION SENSOR (See page ES-444)**

41. **REMOVE INTAKE MANIFOLD TO HEAD GASKET NO. 1 (See page ES-460)**

42. **REMOVE CYLINDER HEAD COVER SUB-ASSEMBLY (See page EM-38)**

43. **REMOVE CRANKSHAFT PULLEY (See page EM-74)**

44. REMOVE OIL LEVEL GAGE SUB-ASSEMBLY

45. REMOVE OIL PAN SUB-ASSEMBLY NO.2 (See page EM-24)

46. REMOVE OIL STRAINER SUB-ASSEMBLY (See page EM-24)

47. REMOVE OIL PAN SUB-ASSEMBLY (See page EM-25)

48. REMOVE OIL PUMP

(a) Remove the 2 nuts, then separate the water by-pass pipe No. 1.

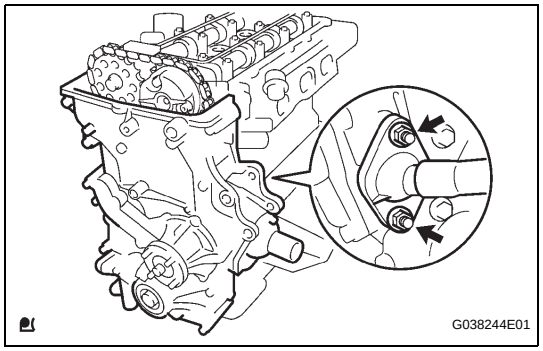

(b) Remove the 19 bolts and 2 nuts shown in the illustration.
HINT:
If the vehicle is equipped with air conditioning, bolts A are already removed since they are for installing the idle pulley with bracket.

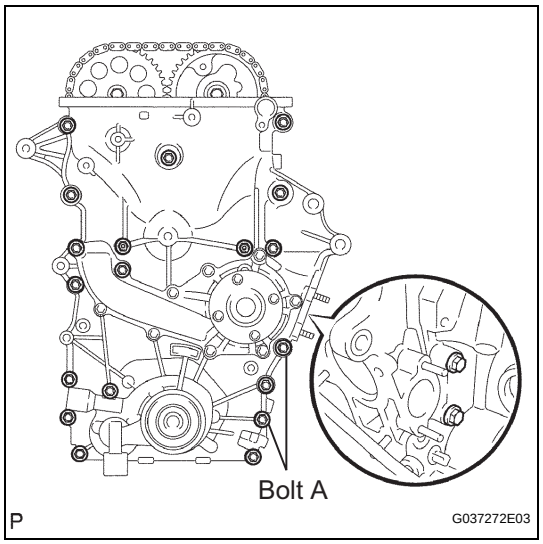

(c) Remove the oil pump by prying between the oil pump and cylinder head or cylinder block with a screwdriver.
HINT:
Tape the screwdriver tip before use.
NOTICE:
Be careful not to damage the contact surfaces of the cylinder head, cylinder block and timing chain cover.

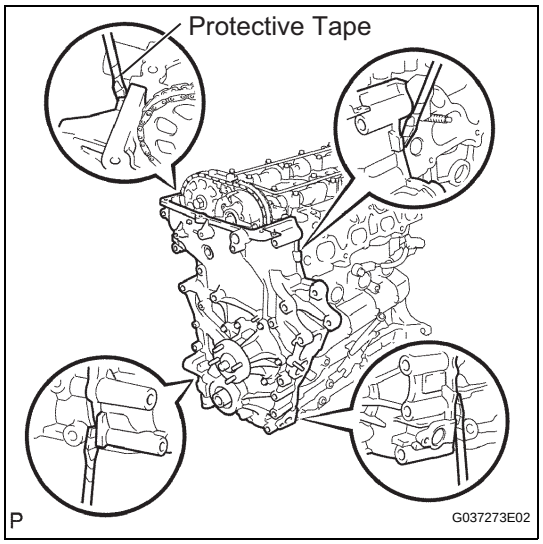

LU

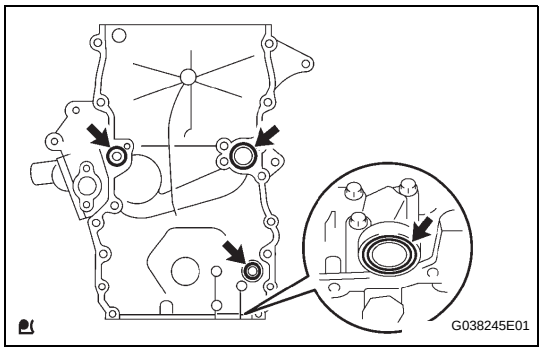

(d) Remove the 4 O-rings.

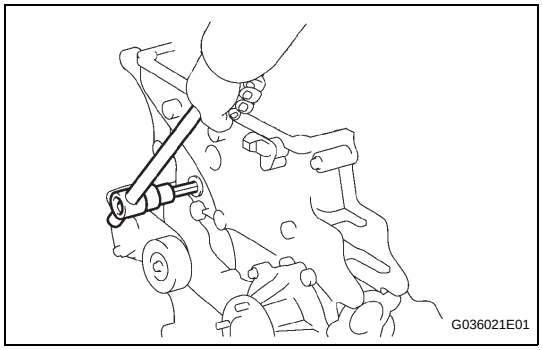

(e) Using a 10 mm socket hexagon wrench, remove the head straight screw plug.

49. REMOVE WATER INLET (See page CO-7)

50. REMOVE THERMOSTAT (See page CO-7)

51. REMOVE TIMING GEAR CASE OR TIMING CHAIN CASE OIL SEAL (See page EM-149)

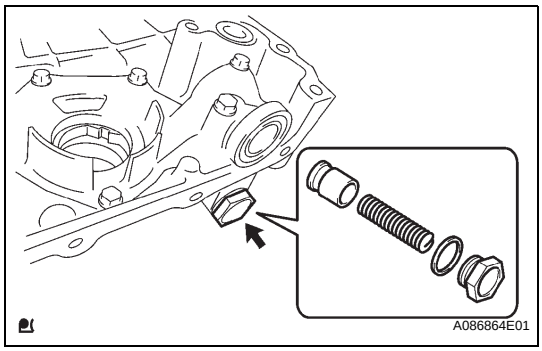

DISASSEMBLY

1. REMOVE OIL PUMP RELIEF VALVE

(a) Using a 27 mm socket wrench, remove the relief valve plug and gasket.

(b) Remove the valve spring and oil pump relief valve.

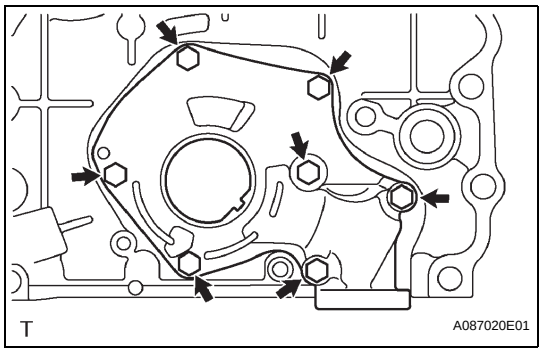

2. REMOVE OIL PUMP COVER

(a) Remove the 7 bolts and oil pump cover.

3. REMOVE OIL PUMP ROTOR SET

(a) Remove the oil pump rotor set from the timing chain cover.

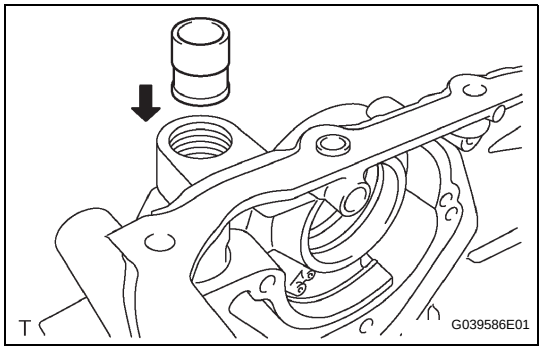

INSPECTION

1. REMOVE OIL PUMP RELIEF VALVE

(a) Coat the relief valve with engine oil and drop it into the relief valve hole.

(b) Check that the relief valve falls in smoothly by its own weight.
If it does not, replace the relief valve. If necessary, replace the timing chain cover.

LU

RECOMMENDED TOOLS

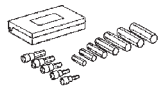	09040-00011	Hexagon Wrench Set	
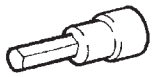	(09043-20080)	Socket Hexagon Wrench 8	
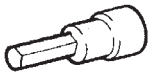	(09043-20100)	Socket Hexagon Wrench 10	
	(09043-30140)	Straight Hexagon Wrench 14	
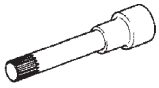	09043-50100	Bi-hexagon Wrench 10 mm	

PP

EQUIPMENT

Abrasive compound	
Brush	
Caliper gauge	
Carbide cutter	
V-block	
Pin hole grinder	
Piston ring compressor	
Piston ring expander	
CO/HC meter	
Compression gauge	
Connecting rod aligner	
Cylinder gauge	
Dial indicator	
Dye penetrant	
Engine tune-up tester	
Groove cleaning tool	
Feeler gauge	
Micrometer	
Precision straight edge	
Press	
Reamer	
Ridge reamer	
Soft brush	
Solvent	
Radiator cap tester	
Steel square	
Tachometer	
Torque wrench	
"Torx" socket wrench	
Valve seat cutter	
Valve guide bushing brush	
Vernier caliper	
Wire brush	
Dial indicator with magnetic base	
Deep socket wrench	
Slide calipers	
Sandpaper	
Wooden block	
Chain block	
Spring tester	
Plastigage	
Heater	
Timing light	
Bar	
Straight edge	

ON-VEHICLE INSPECTION

1. CHECK IGNITION COIL ASSEMBLY AND PERFORM SPARK TEST

(a) Check for DTCs.

NOTICE:

If any DTC is present, perform troubleshooting in accordance with a procedure for that DTC.

(b) Check that sparks occur.

(1) Remove the ignition coils.

(2) Using a 16 mm plug wrench, remove the spark plugs.

(3) Install the spark plugs to each ignition coil, and connect the ignition coil connectors.

(4) Disconnect the 6 injector connectors.

(5) Ground the spark plugs.

(6) Check if sparks occur at each spark plug while the engine is being cranked.

NOTICE:

- **Be sure to ground the spark plug when checking.**
- **Replace the ignition coil if it receives an impact.**
- **Do not crank the engine for more than 2 seconds.**

If sparks do not occur, perform the following test:

(c) Spark test flow chart.

(1) Check that the wire harness side connector of ignition coil with igniter is securely connector.

Result

Result	Proceed to
NG	Connect securely.
OK	Go to next step.

(2) Perform spark test on each ignition coil with igniter.

1.Replace ignition coil with igniter with a normal one.

2.Perform spark test again.

Result

Result	Proceed to
NG	Replace ignition coil with igniter.
OK	Go to next step.

(3) Check power supply to ignition coil.

1.Turn ignition switch ON.

2.Check that there is battery positive (+) voltage at ignition coil positive (+) terminal.

Result

Result	Proceed to
NG	Check wiring between ignition switch and ignition coil assembly.
OK	Go to next step.

(4) Check resistance in VVT sensor out put voltage (see step 2).

Result

Result	Proceed to
NG	Following test 1 and 2.
OK	Go to next step.

1. Check that the wiring between VVT sensor and ECM.

Result

Result	Proceed to
NG	Repair wiring between VVT sensor and ECM.
OK	Repair VVT sensor

(5) Check resistance in crankshaft position sensor.

Standard resistance

Standard condition	Specified condition
at 20°C (68°F)	1850 to 2450 Ω

Result

Result	Proceed to
NG	Replace the crankshaft position sensor.
OK	Go to next step.

(6) Check IGT signal from ECM.

Result

Result	Proceed to
NG	Check ECM
OK	Repair wiring between ignition coil and ECM.

(d) Using a 16 mm plug wrench, install the spark plugs.
(e) Install the ignition coils.

2. CHECK SPARK PLUG

NOTICE:

- **Never use a wire brush for cleaning.**
- **Never attempt to adjust the electrode gap on a used spark plug.**
- **The spark plug should be replaced every 200,000 km (120,000 miles).**

(a) Remove the engine cover.
(b) Remove the air cleaner.
(c) Remove the ignition coil.
(d) Remove the spark plug.

IG

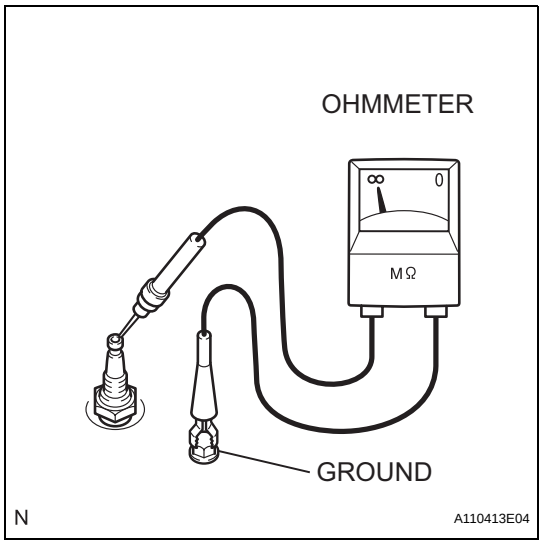

(e) Check the electrode.
(1) Using an ohmmeter, measure the insulation resistance.
Correct insulation resistance:
10 MΩ or more
If the resistance is below the specified range, remove the spark plug.
HINT:
If an ohmmeter is not available, perform the following simple inspection.

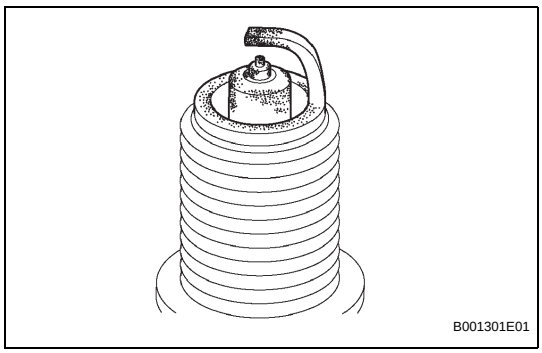

(f) Alternative inspection method:
(1) Quickly accelerate the engine to 4,000 rpm 5 times.
(2) Remove the spark plug.
(3) Visually check the spark plug.
If the electrode is dry, the spark plug is functioning properly. If the electrode is damp, proceed to the next step.

(g) Check the spark plug for any damage on its threads and insulator.
If there is damage, replace the spark plug. If not, reinstall the spark plug.
Recommended spark plug

Manufacturer	Spark Plug Type
DENSO	K20HR-U11
NGK	LFR6C11

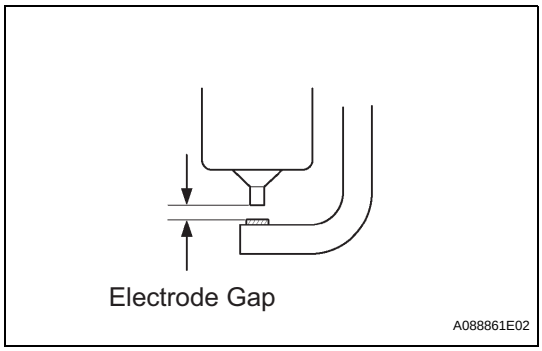

(h) Check the spark plug electrode gap.
Standard electrode gap:
1.0 to 1.1 mm (0.039 to 0.043 in.)
If the electrode gap is larger than the standard, replace the spark plug.

SSM

	08826-00080	Seal Packing Black or equivalent (FIPG)	
	08826-00100	Seal Packing 1282B, THREE BOND 1282B or equivalent (FIPG)	
	08833-00070	Adhesive 1324, THREE BOND 1324 or equivalent	

RECOMMENDED TOOLS

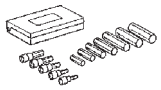	09040-00011	Hexagon Wrench Set	
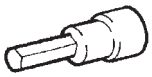	(09043-20080)	Socket Hexagon Wrench 8	
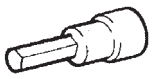	(09043-20100)	Socket Hexagon Wrench 10	
	(09043-30100)	Straight Hexagon Wrench 10	
	09090-04020	Engine Sling Device	

EQUIPMENT

Abrasive compound	
Brush	
Caliper gauge	
Carbide cutter	
V-block	
Pin hole grinder	
Piston ring compressor	
Piston ring expander	
CO/HC meter	
Compression gauge	
Connecting rod aligner	
Cylinder gauge	
Dial indicator	
Dye penetrant	
Engine tune-up tester	
Groove cleaning tool	
Feeler gauge	
Micrometer	
Precision straight edge	
Press	
Reamer	
Ridge reamer	
Soft brush	
Solvent	
Radiator cap tester	
Steel square	
Tachometer	
Torque wrench	
"Torx" socket wrench	
Valve seat cutter	
Valve guide bushing brush	
Vernier caliper	
Wire brush	
Dial indicator with magnetic base	
Deep socket wrench	
Slide calipers	
Sandpaper	
Wooden block	
Chain block	
Spring tester	
Plastigage	
Heater	
Timing light	
Bar	
Straight edge	

SSM

	08826-00080	Seal Packing Black or equivalent (FIPG)	
	08826-00100	Seal Packing 1282B, THREE BOND 1282B or equivalent (FIPG)	
	08833-00070	Adhesive 1324, THREE BOND 1324 or equivalent	

RECOMMENDED TOOLS

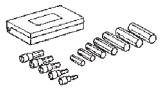	09040-00011	Hexagon Wrench Set	
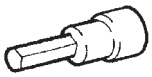	(09043-20080)	Socket Hexagon Wrench 8	
	09082-00040	TOYOTA Electrical Tester	
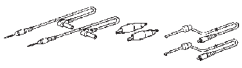	(09083-00150)	Test Lead Set	

EQUIPMENT

Stopwatch	
Measuring flask	
Radiator cap tester	
Torque wrench	
Clip	

RECOMMENDED TOOLS

	09082-00040	TOYOTA Electrical Tester	
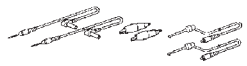	(09083-00150)	Test Lead Set	

EQUIPMENT

Stopwatch	
Measuring flask	
Radiator cap tester	
Torque wrench	
Clip	

EQUIPMENT

Ohmmeter	
Torque wrench	
Hand-held vacuum pump	

EQUIPMENT

Ohmmeter	
Torque wrench	
Hand-held vacuum pump	

COOLANT

Item		Capacity	Classification
Engine coolant	Manual transmission	8.7 liters (9.2 US qts, 7.7 lmp.qts)	"TOYOTA SUPER LONG LIFE Antifreeze Coolant" or equivalent
	Automatic transmission	8.6 liters (9.1 US qts, 7.6 lmp.qts)	

EQUIPMENT

Hexagon wrench	
Feeler gauge	
Precision straight edge	
Torque wrench	
Vernier caliper	
Dial indicator with magnetic base	
Sand paper	
Wooden block	
Chain block	
Straight edge	

LUBRICANT

Item	Capacity	Classification
Oil grade	-	API grade SM, Energy-Conserving or ILSAC multigrade engine oil, SAE 5W-30
w/ Oil filter change (for 2WD)	4.5 liter (4.8 US qts, 4.0lmp. qts)	-
w/ Oil filter change (for PRE RUNNER and 4WD)	5.2 liter (5.5 US qts, 4.6 lmp. qts)	-
w/o Oil filter change (for 2WD)	4.2 liter (4.4 US qts, 3.7 lmp. qts)	-
w/o Oil filter change (for PRE RUNNER and 4WD)	4.9 liter (5.2 US qts, 4.3 lmp. qts)	-
Dry fill (for 2WD)	5.6 liter (5.9 US qts, 4.9lmp. qts)	-
Dry fill (for PRE RUNNER and 4WD)	6.0 liter (6.3 US qts, 5.3lmp. qts)	-

SSM

	08826-00080	Seal Packing Black or equivalent (FIPG)	
	08826-00100	Seal Packing 1282B, THREE BOND 1282B or equivalent (FIPG)	

EQUIPMENT

Hexagon wrench	
Feeler gauge	
Precision straight edge	
Torque wrench	
Vernier caliper	
Dial indicator with magnetic base	
Sand paper	
Wooden block	
Chain block	
Straight edge	

LUBRICANT

Item	Capacity	Classification
Oil grade	-	API grade SM, Energy-Conserving or ILSAC multigrade engine oil, SAE 5W-30
w/ Oil filter change	5.8 liter (6.1 US qts, 5.1 lmp. qts)	-
w/o Oil filter change	5.1 liter (5.4 US qts, 4.5 lmp. qts)	-
Dry fill	6.1 liter (6.4 US qts, 5.4lmp. qts)	-

SSM

	08826-00080	Seal Packing Black or equivalent (FIPG)	
	08826-00100	Seal Packing 1282B, THREE BOND 1282B or equivalent (FIPG)	
	08833-00070	Adhesive 1324, THREE BOND 1324 or equivalent	

EQUIPMENT

Service wire harness	
Ammeter	
Ohmmeter	
Torque wrench	
Vernier calipers	

EQUIPMENT

Straight edge	
Vernier calipers	
Dial indicator or dial indicator with magnetic base	
Torque wrench	
Hexagon wrench (6 mm)	
Slide calipers	

LUBRICANT

Item	Capacity	Classification
Automatic transaxle fluid Dry fill Drain and refill	- 12.3 liters (13.0 US qts, 10.8 lmp.qts) 2.0 liters (2.1 US qts, 1.8 lmp.qts)	- Toyota Genuine ATF Type T-IV

SSM

	08826-00090	Seal Packing 1281, THREE BOND 1281 or equivalent (FIPG)	

EQUIPMENT

Straight edge	
Vernier calipers	
Dial indicator or dial indicator with magnetic base	
Torque wrench	
Hexagon wrench (6 mm)	
Slide calipers	

LUBRICANT

Item	Capacity	Classification
Automatic transmission fluid Dry fill Drain and refill	- 10.9 liter (11.5 US qts, 9.6 Imp.qts) 3.0 liter (3.2 US qts, 2.6 Imp.qts)	- Toyota Genuine ATF WS

EQUIPMENT

Straight edge	
Vernier calipers	
Dial indicator or dial indicator with magnetic base	
Torque wrench	
Hexagon wrench (6 mm)	
Slide calipers	

LUBRICANT

Item	Capacity	Classification
Automatic transmission fluid Dry fill Drain and refill	- 10.9 liter (11.5 US qts, 9.6 Imp.qts) 3.0 liter (3.2 US qts, 2.6 Imp.qts)	- Toyota Genuine ATF WS

EQUIPMENT

Vernier calipers	
Dial indicator with magnetic base	
Torque wrench	

LUBRICANT

Item	Capacity	Classification
Brake fluid	-	SAE J1703 or FMVSS NO. 116 DOT3

RECOMMENDED TOOLS

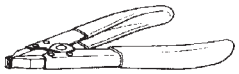	09905-00012	Snap Ring No.1 Expander	

EQUIPMENT

Cylinder gauge	
Dial indicator	
Feller gauge	
Micrometer	
Torque wrench	
Vernier calipers	
Press	
V-block	

LUBRICANT

Item	Capacity	Classification
Manual transmission oil	2.6 liters (2.7 US qts, 2.3 lmp. qts)	API GL-4 or GL-5 SAE 75W-90

SSM

	08826-00090	Seal Packing 1281, THREE BOND 1281 or equivalent (FIPG)	

RECOMMENDED TOOLS

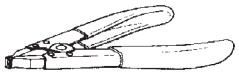	09905-00012	Snap Ring No.1 Expander	

EQUIPMENT

Cylinder gauge	
Dial indicator	
Feller gauge	
Micrometer	
Torque wrench	
Vernier calipers	
Press	
V-block	

LUBRICANT

Item	Capacity	Classification
Manual transmission oil	2.2 liters (2.3 US qts, 1.9 lmp. qts)	API GL-4 or GL-5 SAE 75W-90

SSM

	08826-00090	Seal Packing 1281, THREE BOND 1281 or equivalent (FIPG)	

LUBRICANT

Item	Capacity	Classification
Transfer oil	1.0 liters (1.1 US qts, 0.9 Imp. qts)	API GL-4 or GL-5 SAE 75W-90

EQUIPMENT

Torque wrench	

LUBRICANT

Item	Capacity
Front drive shaft outboard joint grease	260 to 280 g (9.2 to 9.9 oz.)
Front drive shaft inboard joint grease	182 to 202 g (6.4 to 7.1 oz.)

RECOMMENDED TOOLS

	09011-12301	Socket Wrench 30 mm	
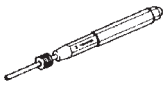	09031-00030	Pin Punch	
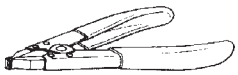	09905-00012	Snap Ring No.1 Expander	
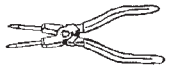	09905-00013	Snap Ring Pliers	

EQUIPMENT

Torque wrench	
Micrometer	
Dial indicator	
Feeler gauge	
Vernier caliper	
Deep Socket Wrench 24 mm	
Slide calipers	
Press	
Angle gauge	

LUBRICANT

Item		Capacity	Classification
Front differential oil		1.45 to 1.55 liters (1.54 to 1.64 US qts, 1.28 to1.36 lmp. qts)	Hypoid gear oil APL GL-5 Above -18 °C (0 °F): SAE 90 Below -18 °C (0 °F): SAE 80W or 80W - 90
Rear differential oil	2WD	3.26 to 3.36 liters (3.45 to 3.55 US qts, 2.87 to 2.95 lmp. qts)	Hypoid gear oil APL GL-5 Above -18 °C (0 °F): SAE 90 Below -18 °C (0 °F): SAE 80W or 80W - 90
Rear differential oil	Pre, 4WD	2.75 to 2.85 liters (2.91 to 3.01 qts, 2.42 to 2.50 lmp. qts)	Hypoid gear oil APL GL-5 Above -18 °C (0 °F): SAE 90 Below -18 °C (0 °F): SAE 80W or 80W - 90

RECOMMENDED TOOLS

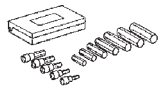	09040-00011	Hexagon Wrench Set	
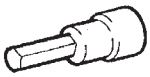	(09043-20060)	Socket Hexagon Wrench 6	
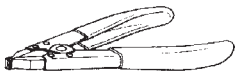	09905-00012	Snap Ring No.1 Expander	
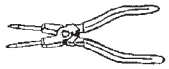	09905-00013	Snap Ring Pliers	

EQUIPMENT

Dial indicator with magnetic base	
Torque wrench	

RECOMMENDED TOOLS

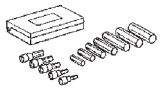	09040-00011	Hexagon Wrench Set	
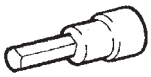	(09043-20060)	Socket Hexagon Wrench 6	

EQUIPMENT

Torque wrench	
Dial indicator with magnetic base	
Tire pressure gauge	
Alignment tester	
Toe-in gauge	
Wheel balancer	
Angle gauge	
Camber-caster-kingpin gauge	
Drill	

EQUIPMENT

Torque wrench	

EQUIPMENT

Torque wrench	
Micrometer	
Ruler	
Dial indicator with magnetic base	
Brake drum gauge	
Slide caliper	

LUBRICANT

Item	Capacity	Classification
Brake fluid	-	SAE J1703 or FMVSS No. 116 DOT3

RECOMMENDED TOOLS

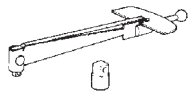	09025-00010	Torque Wrench (30 kgf-cm)	
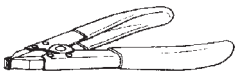	09905-00012	Snap Ring No.1 Expander	

EQUIPMENT

Dial indicator with magnetic base	
Feeler gauge	
Micrometer	
Torque wrench	
Vernier caliper	
Wooden block	

LUBRICANT

Item	Capacity	Classification
Power steering fluid	-	ATF "DEXRON" II or III

SSM

	08833-00080	Adhesive 1344 THREE BOND 1344 LOCTITE 242 or equivalent	

EQUIPMENT

Voltmeter	
Ammeter	
Ohmmeter	
Vacuum pump	
Vinyl tape	
Torx socket wrench	
Dial indicator or dial indicator with magnetic base	
Torque wrench	
Service wire harness	
Radiator cap tester	

LUBRICANT

Item	Capacity	Classification
Compressor oil	-	RL-897 or equivalent
When replacing cooler evaporator	40 cc (1.4 fl. oz.)	RL-897 or equivalent
When replacing cooler condenser	40 cc (1.4 fl. oz.)	RL-897 or equivalent

EQUIPMENT

Battery	
Bolt	
Knife	
Ohmmeter	
Plastic bag	
Service-purpose wire harness	
Shop rag or pice of cloth	
Tire	
Tire with disk wheel	
Torque wrench	
Service wire harness	

EQUIPMENT

Clip remover	
Knife	
Ohmmeter	
Plastic bag	
Torque wrench	

ON-VEHICLE INSPECTION

NOTICE:
In this section, the terms "cold" and "hot" refer to the temperature of the coils. "Cold" means approximately -10 to 50°C (14 to 122°F). "Hot" means approximately 50 to 100°C (122 to 212°F).

1. PERFORM SPARK TEST

(a) Check for DTCs.
NOTICE:
If a DTC is present, perform troubleshooting procedures for that DTC.

(b) Check if sparks occur.
(1) Remove the ignition coil.
(2) Remove the spark plug.
(3) Install the spark plug to the ignition coil and connect the ignition coil connector.
(4) Disconnect the 4 injector connectors.
(5) Ground the spark plug.
(6) Visually check that sparks occur while the engine is being cranked.
NOTICE:
- **Be sure to ground the spark plug when checking.**
- **If the ignition coil has been struck or dropped, replace it.**
- **Do not crank the engine for more than 2 seconds.**

(c) Spark test flow chart.
(1) Check that the wire harness side connector of the ignition coil with igniter is securely connected.
Result

Result	Proceed to
NG	Connect securely
OK	Go to next step

(2) Perform spark test on each ignition coil with igniter.
1. Replace ignition coil with igniter with a normal one.
2. Perform spark test again.
Result

Result	Proceed to
OK	Replace ignition coil with igniter
NG	Go to next step

(3) Check power supply to ignition coil with igniter.
1. Turn the ignition switch ON.

2. Check that there is battery voltage at ignition coil positive (+) terminal.
Result

Result	Proceed to
NG	Check wiring between engine switch and ignition coil with igniter
OK	Go to next step

(4) Check resistance of camshaft position sensor.
Standard resistance

Temperature	Specified Condition
Cold	835 to 1,400 Ω
Hot	1,060 to 1,645 Ω

Result

Result	Proceed to
NG	Replace camshaft position sensor
OK	Go to next step

(5) Check resistance of crankshaft position sensor.
Standard resistance

Temperature	Specified Condition
Cold	1,690 to 2,740 Ω
Hot	2,065 to 3,225 Ω

Result

Result	Proceed to
NG	Replace crankshaft position sensor.
OK	Go to next step

(6) Check IGT signal from ECM.
Result

Result	Proceed to
NG	Check ECM
OK	Repair wiring between ignition coil and ECM

(d) Using a 16 mm plug wrench, install the spark plug.
Torque: 18 N*m (183 kgf*cm, 13 ft.*lbf)
(e) Install the ignition coil.
Torque: 9.0 N*m (92 kgf*cm, 80 in.*lbf)

2. CHECK SPARK PLUG
NOTICE:
- **Do not use a wire brush for cleaning.**
- **Do not attempt to adjust the electrode gap of a used spark plug.**

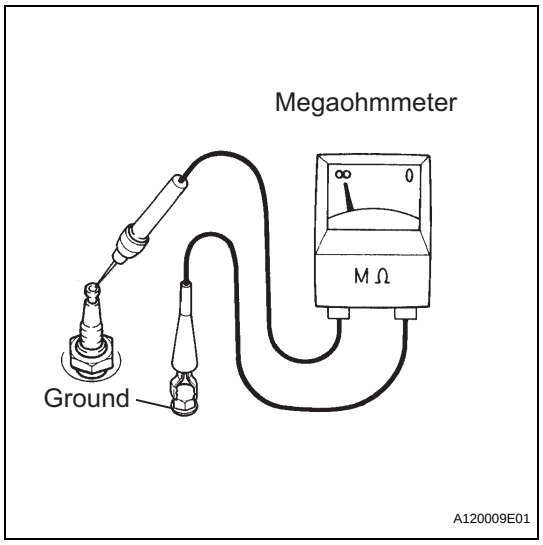

(a) Check the electrode.
(1) Using a megohmmeter, measure the insulation resistance.
Insulation resistance:
10 MΩ or more
HINT:
If a megohmmeter is not available, perform the following simple inspection instead.

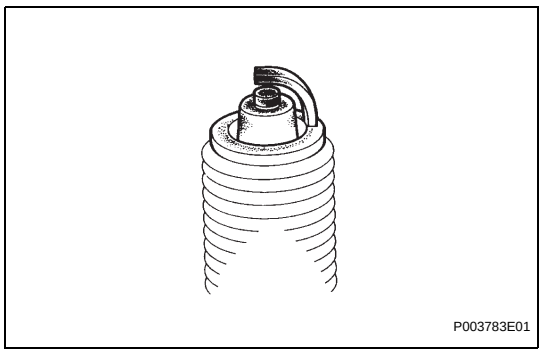

(b) Alternative inspection method:
(1) Quickly accelerate the engine to 4,000 rpm 5 times.
(2) Remove the spark plug.
(3) Visually check the spark plug.
If the electrode is dry, the spark plug is functioning properly. If the electrode is damp, proceed to the next step.

(c) Check the spark plug for any damage on its thread and insulator.
If there is damage, replace the spark plug. If not, reinstall the spark plug.
Recommended spark plug

Manufacturer	Spark Plug Type
DENSO made	SK20R11
NGK made	ILFR6C11

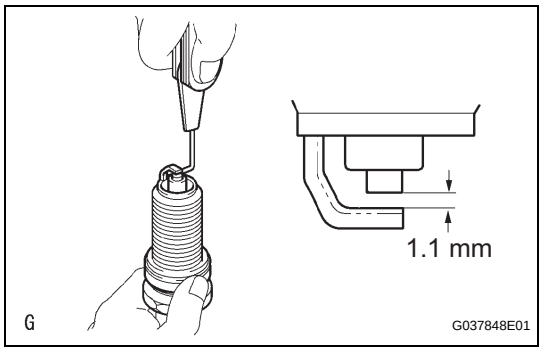

(d) Check the spark plug electrode gap.
Maximum electrode gap for used spark plug:
1.3 mm (0.051 in.)
If the gap is greater than the maximum, replace the spark plug.
Electrode gap for new spark plug:
1.1 mm (0.043 in.)
NOTICE:
When adjusting the gap of a new spark plug, bend only the base of the ground electrode. Do not touch the tip. Never attempt to adjust the gap of a used plug.

IG

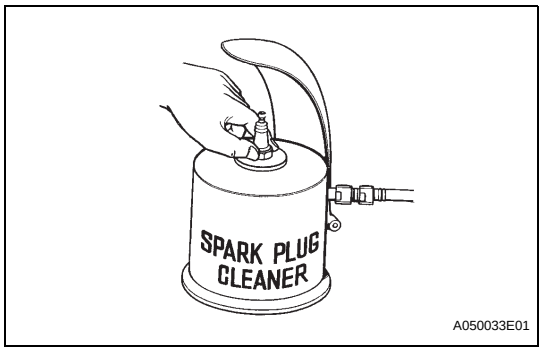

(e) Clean the spark plugs.
If the electrode has traces of wet carbon, clean the electrode with a spark plug cleaner and then dry it.
Air pressure:
588 kPa (6 kgf/cm^2, 85 psi)
Duration:
20 seconds or less
HINT:
Only use the spark plug cleaner when the electrode is free of oil. If the electrode has traces of oil, use gasoline to clean off the oil before using the spark plug cleaner.

REASSEMBLY

1. INSTALL STARTER ARMATURE ASSEMBLY

(a) Apply grease to the bearings, and install it onto the starter yoke.

2. INSTALL STARTER BRUSH HOLDER ASSEMBLY

(a) Place the brush holder on the armature.

(b) Using a screwdriver, install the 4 brushes.

(c) Install a new O-ring onto the groove of the field frame.

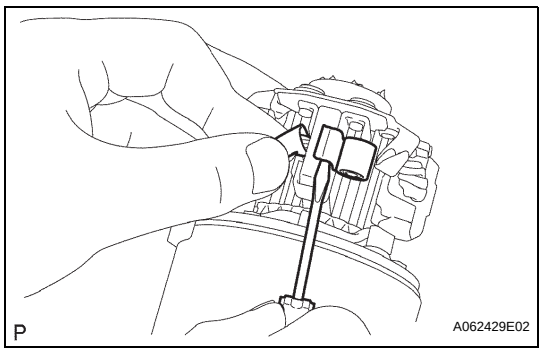

(d) Install the end frame with the 2 screws.
Torque: 3.8 N*m (39 kgf*cm, 34 in.*lbf)

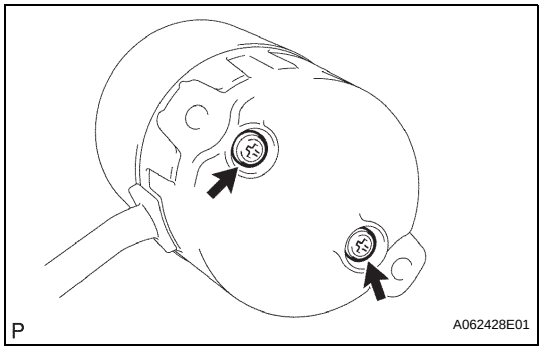

3. INSTALL MAGNET STARTER SWITCH ASSEMBLY

(a) Apply grease to the steel ball, and install it onto the clutch shaft hole.

(b) Apply grease to parts (2) - (5), and install all the parts below onto the starter drive housing.

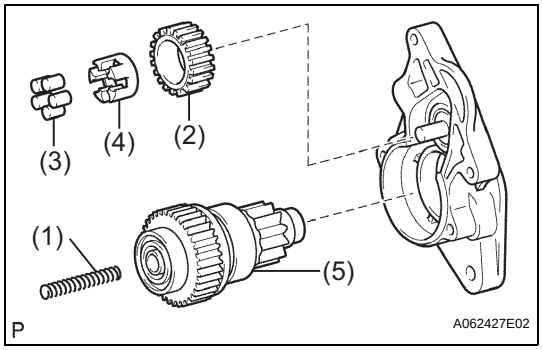

(1)	Starter magnet switch return spring
(2)	Starter idle gear pinion
(3)	Starter idle gear clutch roller
(4)	Starter idle gear retainer
(5)	Starter clutch

(c) Install the magnet starter switch with the 2 screws.
Torque: 9.3 N*m (95 kgf*cm, 82 in.*lbf)

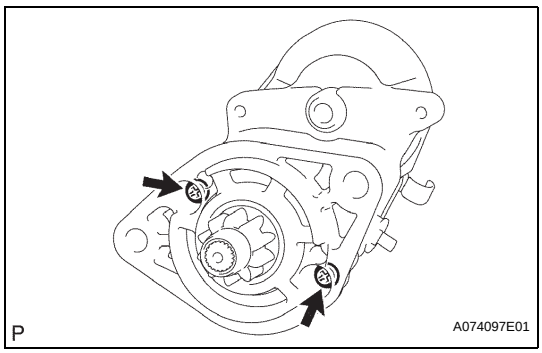

4. INSTALL STARTER YOKE ASSEMBLY

(a) Install a new O-ring onto the groove of the starter yoke.

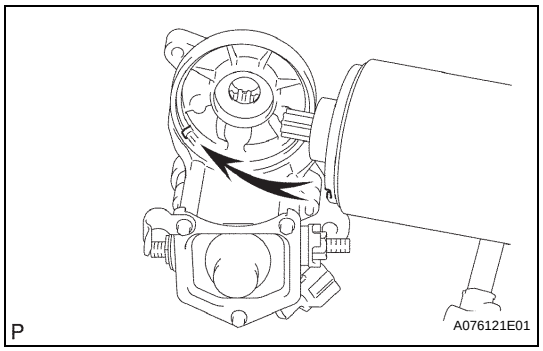

(b) Align the key of the starter yoke with the groove of the magnet starter switch.

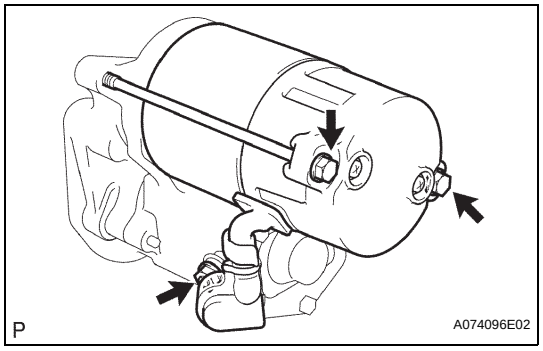

(c) Install the starter yoke and armature with the 2 through bolts.
Torque: 9.3 N*m (95 kgf*cm, 82 in.*lbf)

(d) Connect the lead wire to terminal C with the nut.
Torque: 5.9 N*m (60 kgf*cm, 52 in.*lbf)

SYSTEM DIAGRAM

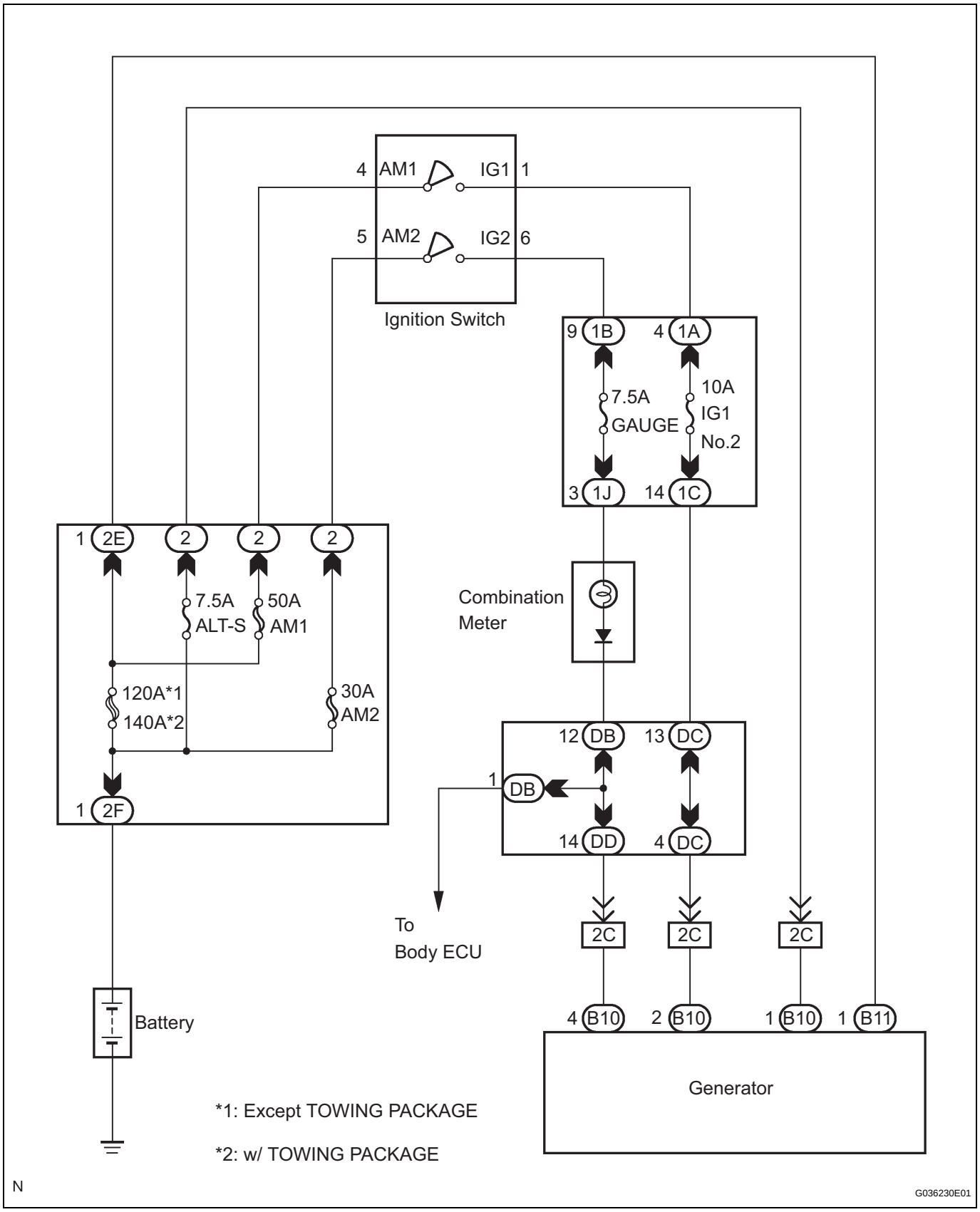

CH

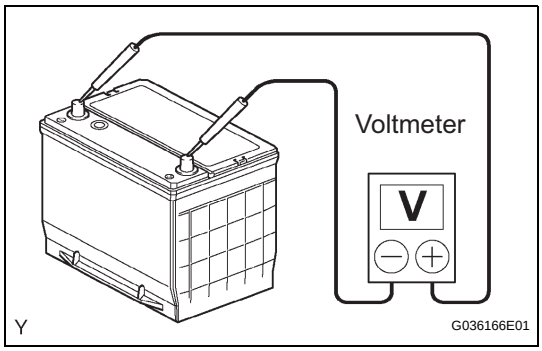

ON-VEHICLE INSPECTION

1. INSPECT BATTERY (for Maintenance Free Battery)

(a) Check the voltage.

(1) If it has been less than 20 minutes since you stopped driving the vehicle or since the engine was stopped, turn the ignition switch and electrical systems (headlight, blower motor, rear defogger etc.) to the ON position for 60 seconds. This will remove the surface charge on the battery.

(2) Turn the ignition switch to OFF.

(3) Turn the electrical systems to OFF.

(4) Using a voltmeter, measure the battery voltage between the negative (-) and positive (+) terminals of the battery.

Standard:

12.6 to 12.9 V at 20°C(68°F)

If the result is not as specified, replace the battery.

(b) Check the indicator is as shown in the illustration.

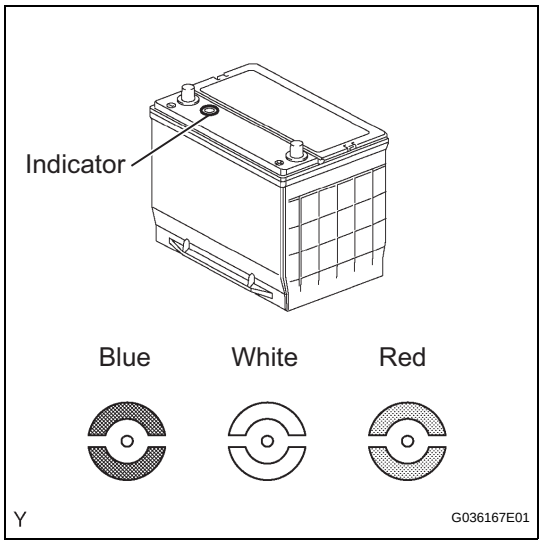

Indicator Color	Condition
Blue	Ready
White	Charging Necessary
Red	Have battery checked by your Toyota dealer

2. INSPECT BATTERY TERMINALS, FUSIBLE LINK AND FUSES

(a) Visually check the battery terminals.

(1) Check that the battery terminals are not loose or corroded.

(b) Visually check the fusible link and fuses.

(1) Check that there is continuity between the fusible links, high current fuses and regular fuses.

3. INSPECT DRIVE BELT

(a) Visually check the belt for excessive wear, frayed cords, etc..

- If any defects are found, replace the V-ribbed belt.
- Cracks on the rib side of the belt are considered acceptable. If the belt has chunks missing from the ribs, it should be replaced.

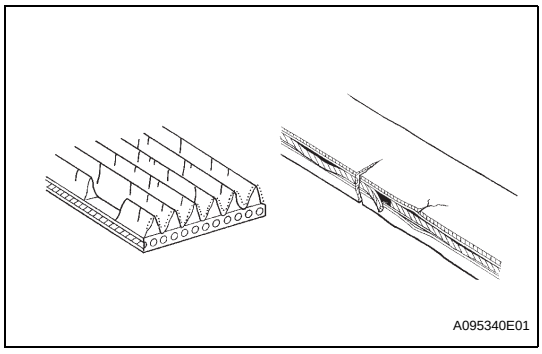

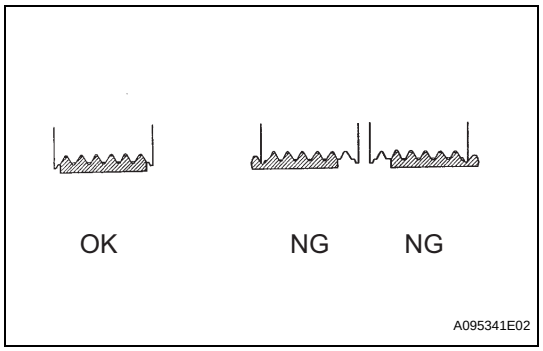

(b) Check that the belt fits properly in the ribbed grooves. Confirm by hand that the belt has not slipped out of the grooves on the bottom of the pulley.

4. INSPECT GENERATOR WIRING

(a) Visually check the generator wiring.
  (1) Check that the wiring is in good condition.

5. INSPECT ABNORMAL NOISES

(a) Listen for abnormal noises from the generator.
  (1) Check that no abnormal noises are heard from the generator while the engine is running.

6. INSPECT CHARGING WARNING LIGHT CIRCUIT

(a) Turn the ignition switch to ON. Check that the charge warning light comes on.
(b) Start the engine and check that the light goes off. If the light does not operate as specified, troubleshoot the charge warning light circuit.

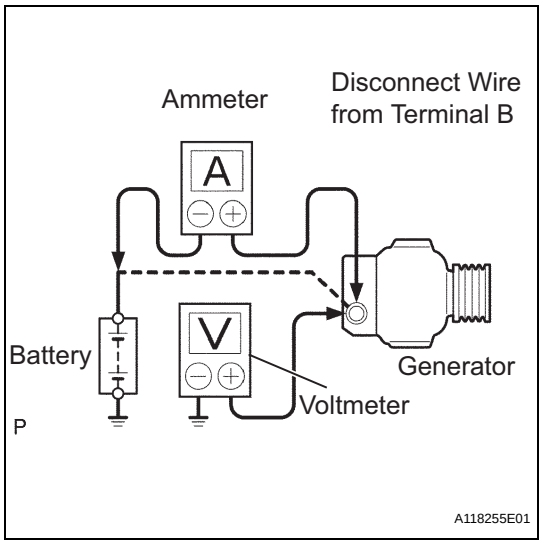

7. INSPECT CHARGING CIRCUIT WITHOUT LOAD

(a) If a tester is not available, connect a voltmeter and ammeter to the charging circuit as follows.
  (1) Disconnect the wire from terminal B of the generator, then connect it to the negative (-) lead of the ammeter.
  (2) Connect the positive (+) lead of the ammeter to terminal B of the generator.
  (3) Connect the positive (+) lead of the voltmeter to terminal B of the generator.
  (4) Ground the negative (-) lead of the voltmeter.
(b) Check the charging circuit.
  (1) Maintain the engine speed at 2,000 rpm and check the reading on the ammeter and voltmeter.
  Standard:
  10 A or less for amperage
  13.2 to 14.8 V for voltage

8. INSPECT CHARGING CIRCUIT WITH LOAD

(a) With the engine running at 2,000 rpm, turn the high beam headlights ON and turn the heater blower switch to the HI position.
(b) Check the reading on the ammeter.
  Standard:
  30 A or more
  - If the ammeter reading is less than the standard amperage, repair the generator.
  - If the battery is fully charged, the indication will sometimes be less than the standard amperage.

SYSTEM DIAGRAM

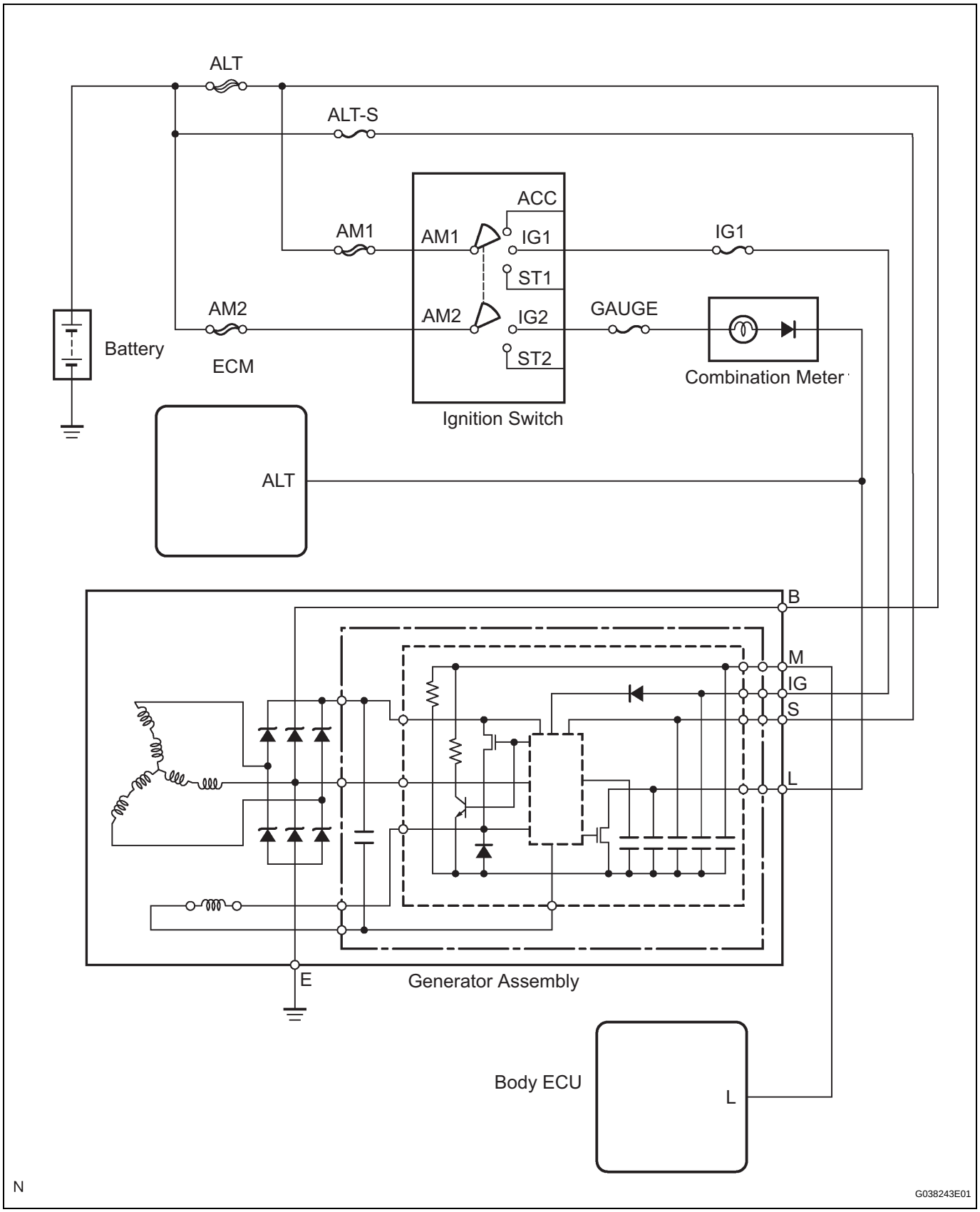

CH

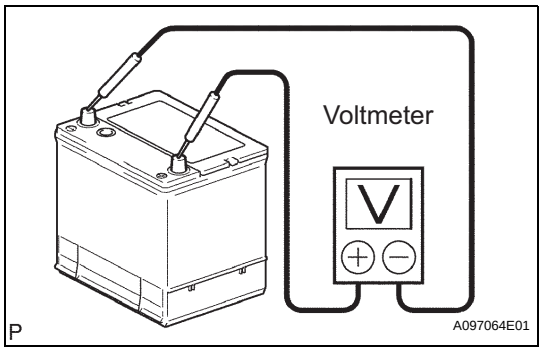

ON-VEHICLE INSPECTION

1. INSPECT BATTERY (for Maintenance Free Battery)

(a) Check the voltage.

(1) If it has been less than 20 minutes since you stopped driving the vehicle or since the engine was stopped, turn the ignition switch and electrical systems (headlight, blower motor, rear defogger etc.) to the ON position for 60 seconds. This will remove the surface charge on the battery.

(2) Turn the ignition switch to OFF.

(3) Turn the electrical systems OFF.

(4) Using a voltmeter, measure the battery voltage between the negative (-) and positive (+) terminals of the battery.

Standard voltage:

12.5 to 12.9 V at 20°C (68°F)

If the voltage is less than the minimum, charge or replace the battery.

(b) Check the indicator is as shown in the illustration.

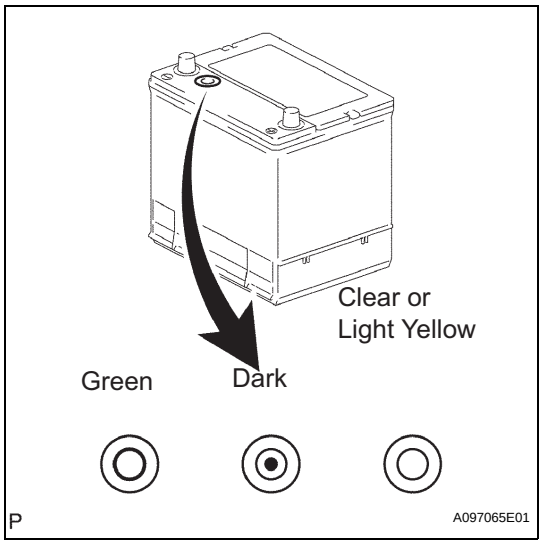

Indicator Color	Condition
Green	OK
Dark	Charging Necessary
Clear or Light Yellow	Insufficient Water

2. INSPECT BATTERY TERMINALS, FUSIBLE LINK AND FUSES

(a) Visually check the battery terminals.

(1) Check that the battery terminals are not loose or corroded.

(b) Visually check the fusible links and fuses.

(1) Check that there is continuity between the fusible links, high current fuses and regular fuses.

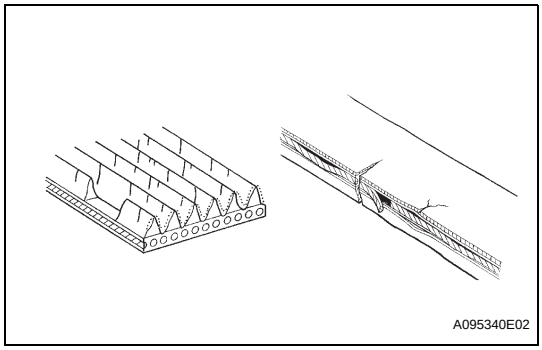

3. INSPECT V-RIBBED BELT

(a) Visually check the belt for excessive wear, frayed cords, etc..

- If any defects are found, replace the V-ribbed belt.
- Cracks on the rib side of the belt are considered acceptable. If the belt has chunks missing from the ribs, it should be replaced.

4. INSPECT GENERATOR WIRING

(a) Visually check the generator wiring.

(1) Check that the wiring is in good condition.

5. CHECK FOR ABNORMAL NOISES

(a) Listen for abnormal noises from the generator.

(1) Check that no abnormal noises are heard from the generator while the engine is running.

6. INSPECT CHARGE WARNING LIGHT CIRCUIT

(a) Turn the ignition switch to ON. Check that the charge warning light comes on.

(b) Start the engine and check that the light goes off. If the light does not operate as specified, troubleshoot the charge warning light circuit.

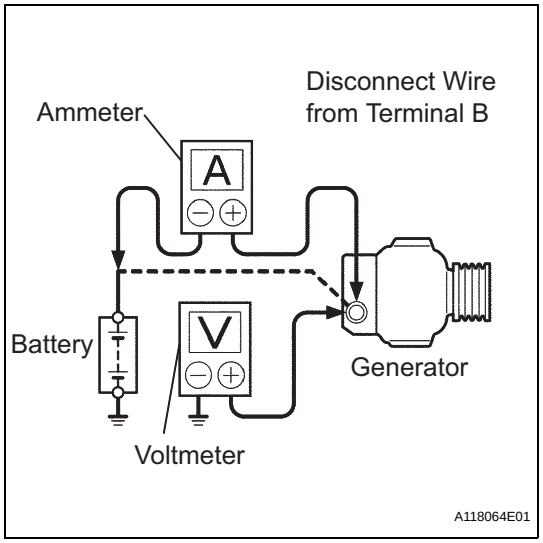

7. INSPECT CHARGING CIRCUIT WITHOUT LOAD

(a) If a tester is not available, connect a voltmeter and ammeter to the charging circuit as follows.

(1) Disconnect the wire from terminal B of the generator, then connect it to the negative (-) lead of the ammeter.

(2) Connect the positive (+) lead of the ammeter to terminal B of the generator.

(3) Connect the positive (+) lead of the voltmeter to terminal B of the generator.

(4) Ground the negative (-) lead of the voltmeter.

(b) Check the charging circuit.

(1) Maintain the engine speed at 2,000 rpm and check the reading on the ammeter and voltmeter.

Standard:

10 A or less for amperage

13.2 to 14.8 V for voltage

8. INSPECT CHARGING CIRCUIT WITH LOAD

(a) With the engine running at 2,000 rpm, turn the high beam headlights ON and turn the heater blower switch to the HI position.

(b) Check the reading on the ammeter.

Standard:

30 A or more

- If the ammeter reading is less than the standard amperage, repair the generator.
- If the battery is fully charged, the indication will sometimes be less than the standard amperage.

DEFINITION OF TERMS

Term	Definition
Monitor description	Description of what the ECM monitors and how it detects malfunctions (monitoring purpose and its details).
Related DTCs	A group of diagnostic trouble code that are output by the ECM based on the same malfunction detection logic.
Typical enabling conditions	Preconditions that allow the ECM to detect malfunctions. With all preconditions satisfied, the ECM sets the DTC when the monitored value(s) exceeds the malfunction threshold(s).
Sequence of operation	The priority order that is applied to monitoring, if multiple sensors and components are used to detect the malfunction. While one sensor is being monitored, the next sensor or component will not be monitored until the previous monitoring has been completed.
Required sensors/components	The sensors and components that are used by the ECM to detect malfunctions.
Frequency of operation	The number of times that the ECM checks for malfunctions per driving cycle. "Once per driving cycle" means that the ECM detects the malfunction only one time during a single driving cycle. "Continuous" means that the ECM detects the malfunction every time the enabling conditions are met.
Duration	The minimum time that the ECM must detect a continuous deviation in the monitored value(s) before setting a DTC. This timing begins after the "typical enabling conditions" are met.
Malfunction thresholds	Beyond this value, the ECM determines that there is a malfunction and sets a DTC.
MIL operation	MIL illumination timing after a defect is detected. "Immediate" means that the ECM illuminates the MIL the instant the ECM determines that there is a malfunction. "2 driving cycles" means that the ECM illuminates the MIL if the same malfunction is detected again in a 2nd driving cycle.
Component operating range	Normal operation range of sensors and solenoids under normal driving conditions. These ranges are for a reference. They cannot be used to determine whether a sensor or solenoid is defective or not.

PARTS LOCATION

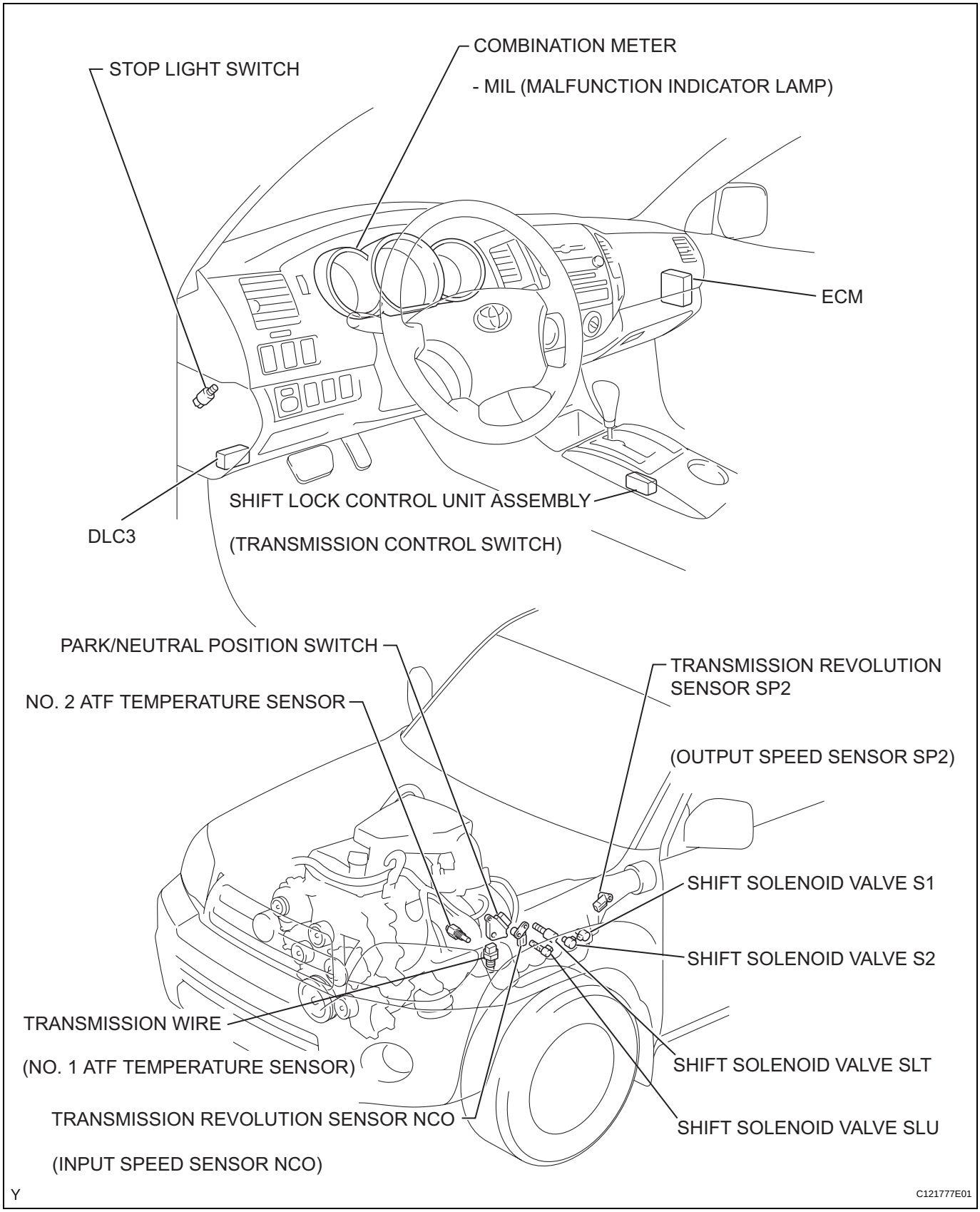

REMOVAL

1. **REMOVE CONSOLE UPPER REAR PANEL SUB-ASSEMBLY (for Separate Seat Type) (See page IP-9)**
2. **REMOVE REAR CONSOLE BOX ASSEMBLY (for Separate Seat Type) (See page IP-10)**
3. **REMOVE INSTRUMENT PANEL CUP HOLDER TRAY (for Separate Seat Type) (See page IP-10)**
4. **REMOVE FRONT CONSOLE BOX (for Separate Seat Type) (See page IP-10)**
5. **REMOVE FRONT CONSOLE BOX (for Bench Seat Type) (See page IP-11)**

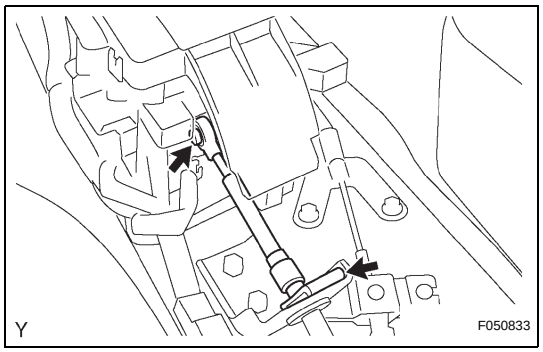

6. **DISCONNECT TRANSMISSION CONTROL CABLE ASSEMBLY**
   (a) CABLE TYPE:
      (1) Disconnect the transmission control cable assembly from the shift lever assembly.
      (2) Remove the clip and disconnect the transmission control cable.

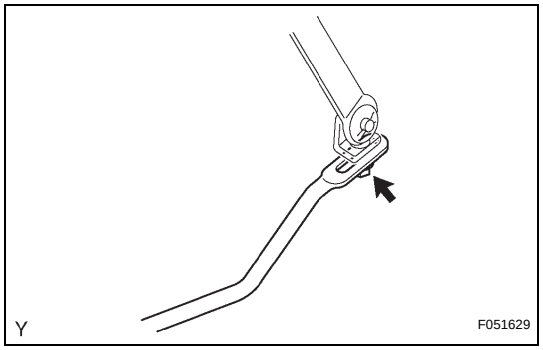

7. **SEPARATE FLOOR SHIFT GEAR SHIFTING ROD SUB-ASSEMBLY**
   (a) ROD TYPE:
      (1) Remove the nut, then separate the floor shift gear shifting rod.

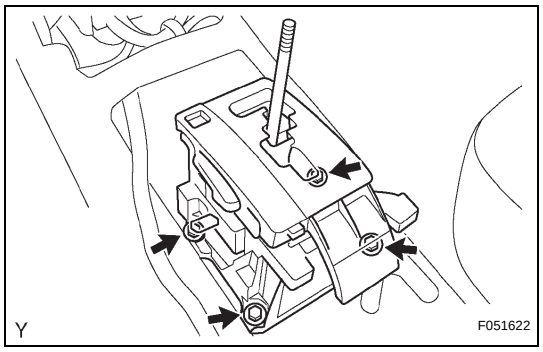

8. **REMOVE FLOOR SHIFT ASSEMBLY**
   (a) Disconnect the 2 connectors and 2 clamps.
   (b) Remove the 4 bolts and floor shift assembly.

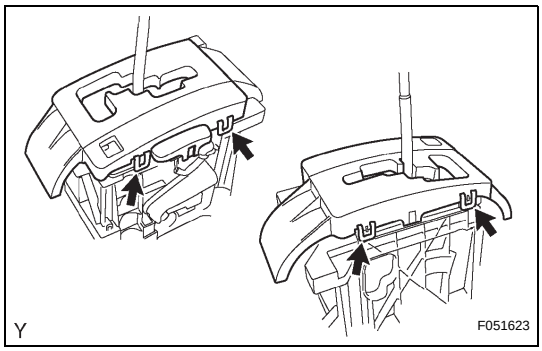

DISASSEMBLY

1. REMOVE UPPER POSITION INDICATOR HOUSING

(a) Release the 4 claws with a screwdriver and remove the position indicator housing and slide cover.

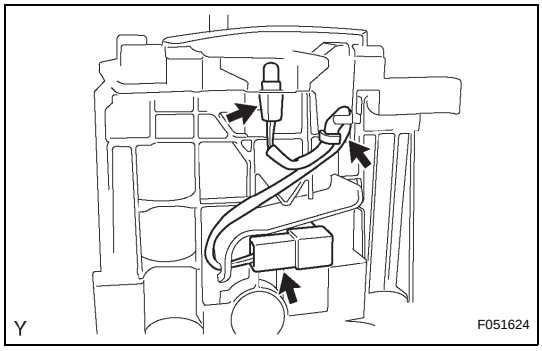

2. REMOVE INDICATOR LAMP WIRE SUB-ASSEMBLY

(a) Remove the indicator lamp wire sub-assembly.

(b) Remove the bulb from the indicator lamp wire sub-assembly.

3. REMOVE SHIFT LOCK RELEASE BUTTON

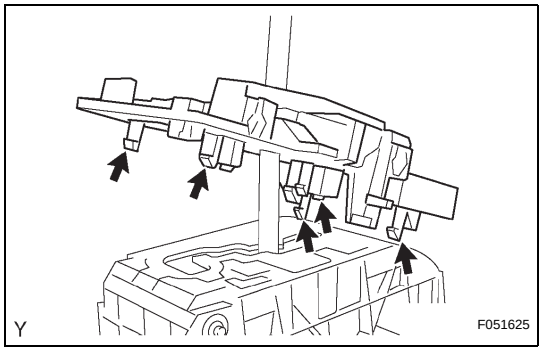

4. REMOVE LOWER POSITION INDICATOR HOUSING

(a) CABLE TYPE:

(1) Release the 5 claws with a screwdriver and remove the position indicator housing lower.

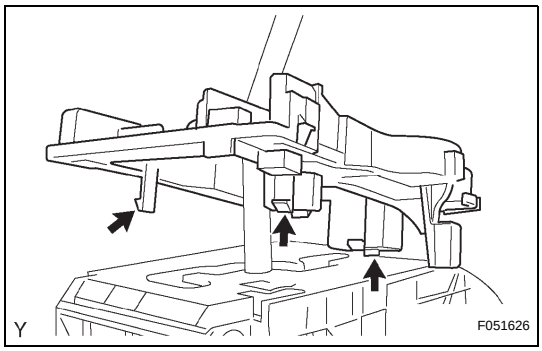

(b) ROD TYPE:

(1) Release the 3 claws with a screwdriver and remove the position indicator housing lower.

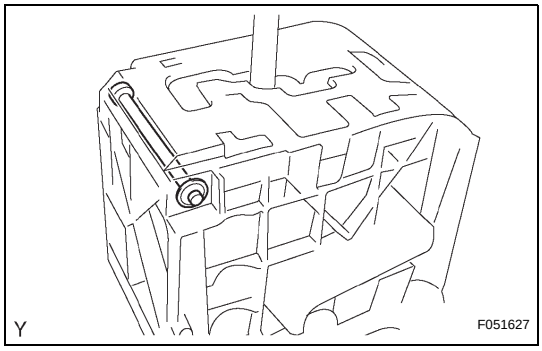

5. REMOVE SHIFT LOCK CONTROL ECU SUB-ASSEMBLY

(a) Remove the shift lever nut and shift lever lock pin.

(b) Remove the shift lever guide housing.

(c) Release the 2 claws with a screwdriver and remove the shift lock release link and spring.

(d) Remove the 2 screws and the shift lock control ECU.

DEFINITION OF TERMS

Term	Definition
Monitor description	Description of what the ECM monitors and how it detects malfunctions (monitoring purpose and its details).
Related DTCs	A group of diagnostic trouble codes that are output by the ECM based on the same malfunction detection logic.
Typical enabling conditions	Preconditions that allow the ECM to detect malfunctions. With all preconditions satisfied, the ECM sets the DTC when the monitored value(s) exceeds the malfunction threshold(s).
Sequence of operation	The priority order that is applied to monitoring, if multiple sensors and components are used to detect the malfunction. While one sensor is being monitored, the next sensor or component will not be monitored until the previous monitoring has been completed.
Required sensor/components	The sensors and components that are used by the ECM to detect malfunctions.
Frequency of operation	The number of times that the ECM checks for malfunctions per driving cycle. "Once per driving cycle" means that the ECM detects the malfunction only one time during a single driving cycle. "Continuous" means that the ECM detects the malfunction every time the enabling conditions are met.
Duration	The minimum time that the ECM must detect a continuous deviation in the monitored value(s) before setting a DTC. This timing begins after the "typical enabling conditions" are met.
Malfunction thresholds	Beyond this value, the ECM determines that there is a malfunction and sets a DTC.
MIL operation	MIL illumination timing after a defect is detected. "Immediate" means that the ECM illuminates the MIL the instant the ECM determines that there is a malfunction. "2 driving cycles" means that the ECM illuminates the MIL if the same malfunction is detected again in a 2nd driving cycle.
Component operating range	Normal operation range of sensors and solenoids under normal driving conditions. These ranges are for a reference. They cannot be used to determine whether a sensor or solenoid is defective or not.

PARTS LOCATION

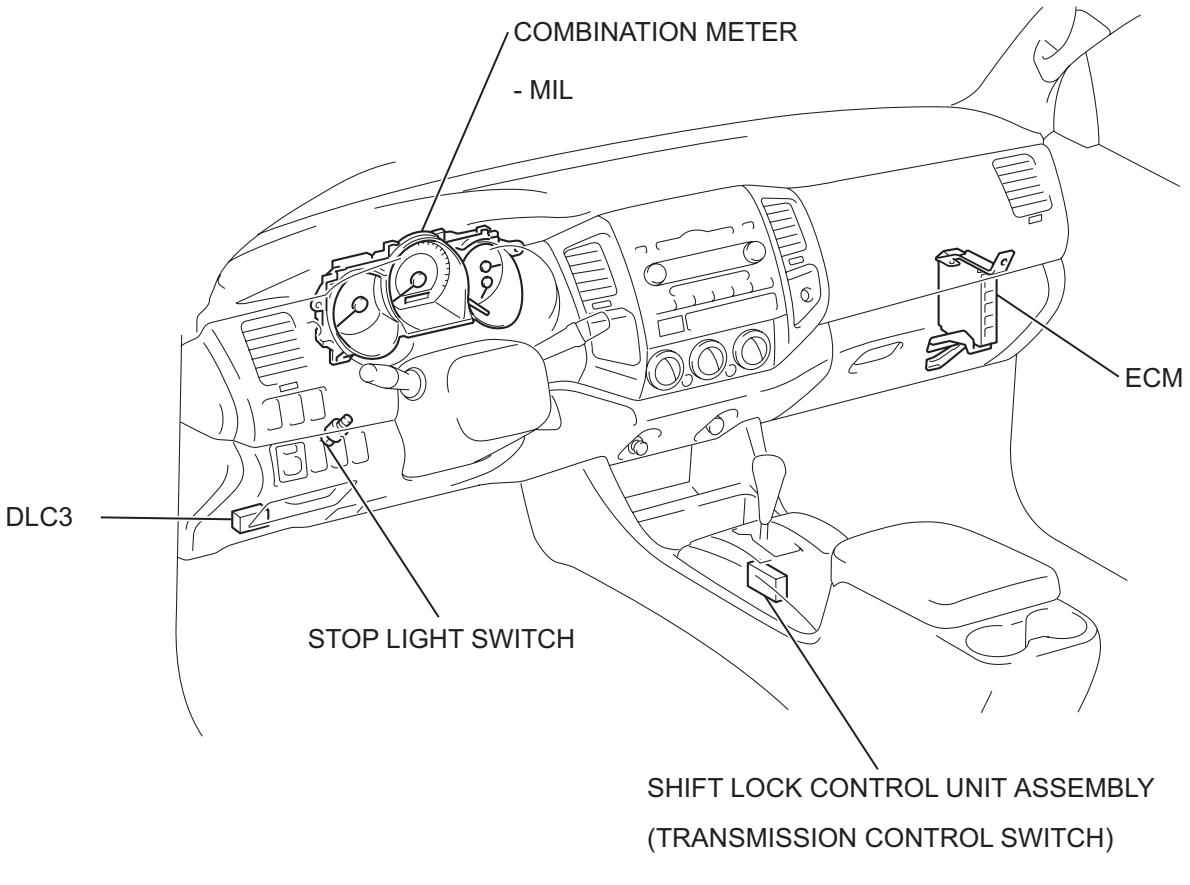

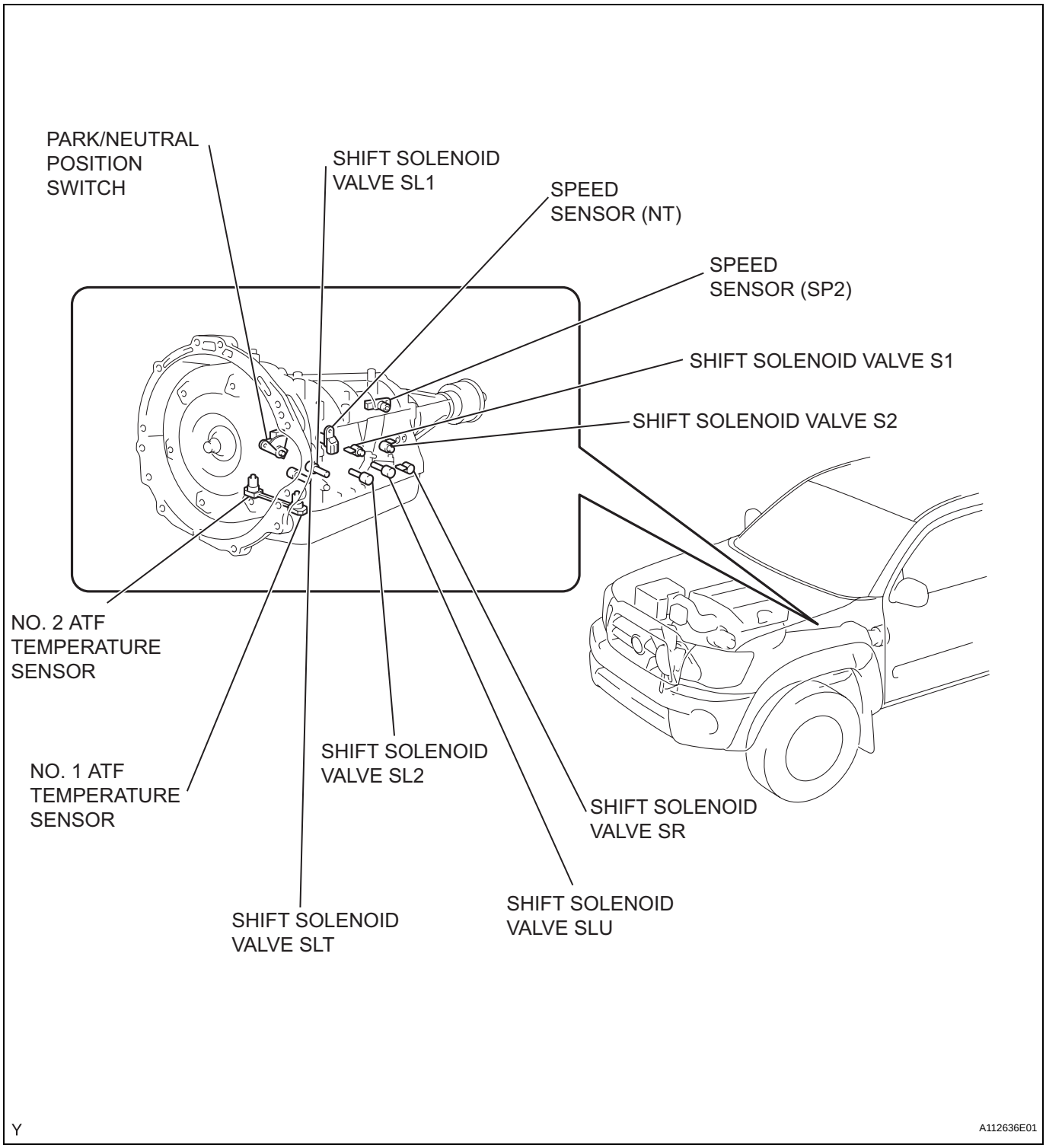
PARK/NEUTRAL POSITION SWITCH
SHIFT SOLENOID VALVE SL1
SPEED SENSOR (NT)
SPEED SENSOR (SP2)
SHIFT SOLENOID VALVE S1
SHIFT SOLENOID VALVE S2
NO. 2 ATF TEMPERATURE SENSOR
NO. 1 ATF TEMPERATURE SENSOR
SHIFT SOLENOID VALVE SL2
SHIFT SOLENOID VALVE SR
SHIFT SOLENOID VALVE SLT
SHIFT SOLENOID VALVE SLU
Y
A112636E01

REMOVAL

1. **REMOVE CONSOLE UPPER REAR PANEL SUB-ASSEMBLY (for Separate Seat Type) (See page IP-9)**
2. **REMOVE REAR CONSOLE BOX ASSEMBLY (for Separate Seat Type) (See page IP-10)**
3. **REMOVE INSTRUMENT PANEL CUP HOLDER TRAY (for Separate Seat Type) (See page IP-10)**
4. **REMOVE FRONT CONSOLE BOX (for Separate Seat Type) (See page IP-10)**
5. **REMOVE FRONT CONSOLE BOX (for Bench Seat Type) (See page IP-11)**
6. **DISCONNECT TRANSMISSION CONTROL CABLE ASSEMBLY**
   (a) CABLE TYPE:
      (1) Disconnect the transmission control cable assembly from the shift lever assembly.
      (2) Remove the clip and disconnect the transmission control cable.

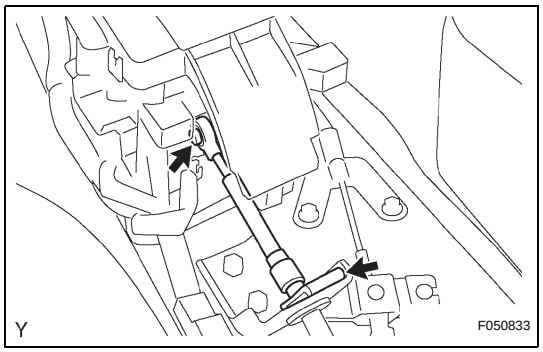

7. **SEPARATE FLOOR SHIFT GEAR SHIFTING ROD SUB-ASSEMBLY**
   (a) ROD TYPE:
      (1) Remove the nut, then separate the floor shift gear shifting rod.

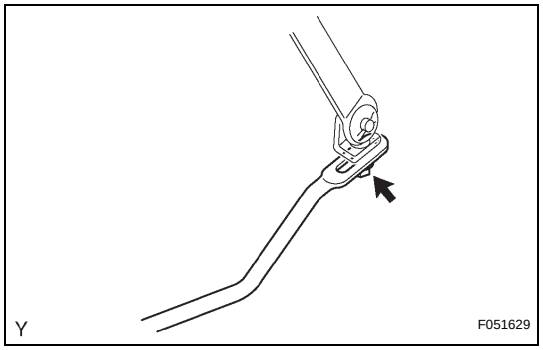

8. **REMOVE FLOOR SHIFT ASSEMBLY**
   (a) Disconnect the 2 connectors and 2 clamps.
   (b) Remove the 4 bolts and floor shift assembly.

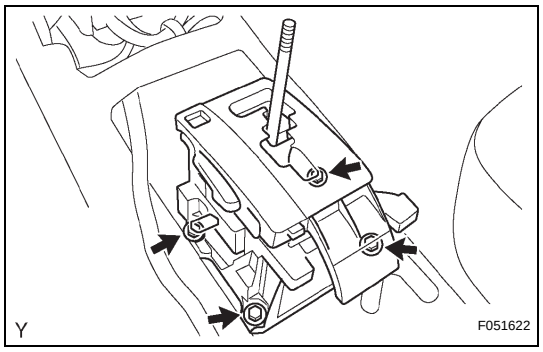

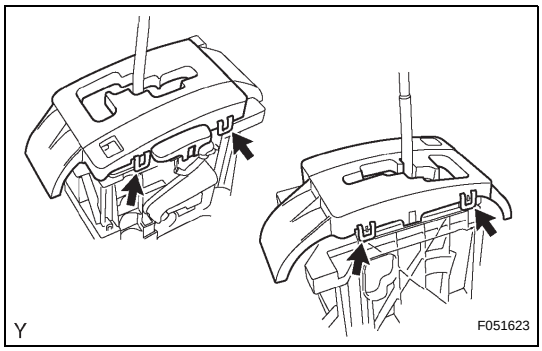

DISASSEMBLY

1. REMOVE UPPER POSITION INDICATOR HOUSING

(a) Release the 4 claws with a screwdriver and remove the position indicator housing and slide cover.

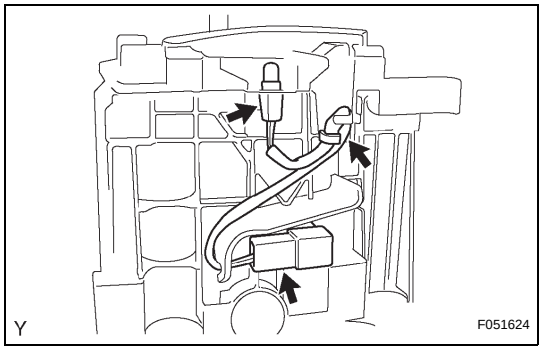

2. REMOVE INDICATOR LAMP WIRE SUB-ASSEMBLY

(a) Remove the indicator lamp wire sub-assembly.

(b) Remove the bulb from the indicator lamp wire sub-assembly.

3. REMOVE SHIFT LOCK RELEASE BUTTON

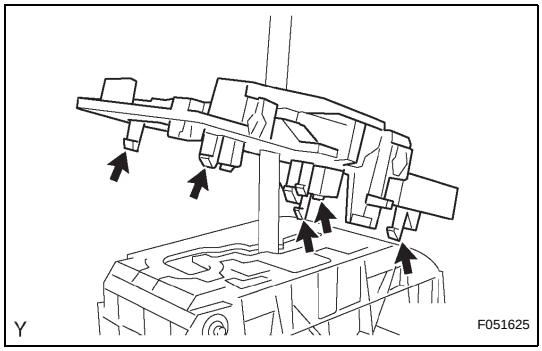

4. REMOVE LOWER POSITION INDICATOR HOUSING

(a) CABLE TYPE:

(1) Release the 5 claws with a screwdriver and remove the position indicator housing lower.

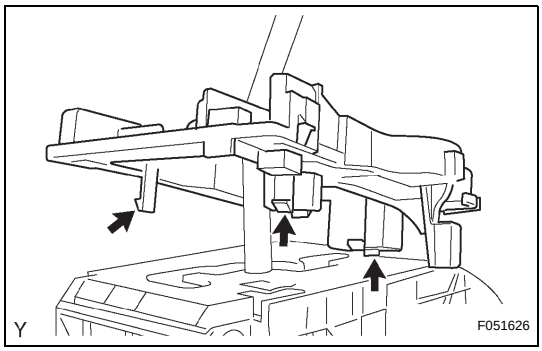

(b) ROD TYPE:

(1) Release the 3 claws with a screwdriver and remove the position indicator housing lower.

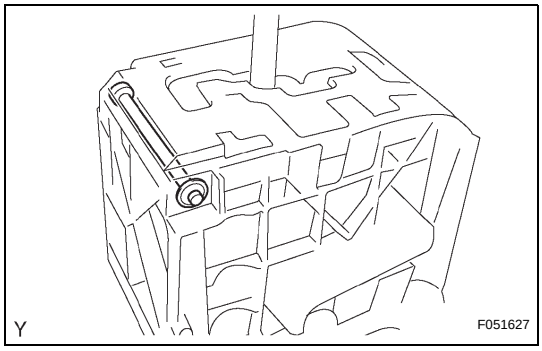

5. REMOVE SHIFT LOCK CONTROL ECU SUB-ASSEMBLY

(a) Remove the shift lever nut and shift lever lock pin.

(b) Remove the shift lever guide housing.

(c) Release the 2 claws with a screwdriver and remove the shift lock release link and spring.

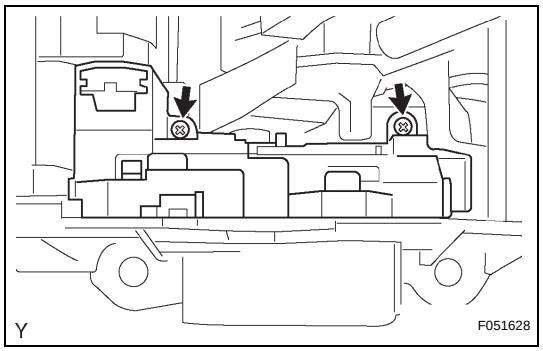

(d) Remove the 2 screws and the shift lock control ECU.

DEFINITION OF TERMS

Term	Definition
Monitor description	Description of what the ECM monitors and how it detects malfunctions (monitoring purpose and its details).
Related DTCs	A group of diagnostic trouble codes that are output by the ECM based on the same malfunction detection logic.
Typical enabling conditions	Preconditions that allow the ECM to detect malfunctions. With all preconditions satisfied, the ECM sets the DTC when the monitored value(s) exceeds the malfunction threshold(s).
Sequence of operation	The priority order that is applied to monitoring, if multiple sensors and components are used to detect the malfunction. While one sensor is being monitored, the next sensor or component will not be monitored until the previous monitoring has been completed.
Required sensor/components	The sensors and components that are used by the ECM to detect malfunctions.
Frequency of operation	The number of times that the ECM checks for malfunctions per driving cycle. "Once per driving cycle" means that the ECM detects the malfunction only one time during a single driving cycle. "Continuous" means that the ECM detects the malfunction every time the enabling conditions are met.
Duration	The minimum time that the ECM must detect a continuous deviation in the monitored value(s) before setting a DTC. This timing begins after the "typical enabling conditions" are met.
Malfunction thresholds	Beyond this value, the ECM determines that there is a malfunction and sets a DTC.
MIL operation	MIL illumination timing after a defect is detected. "Immediate" means that the ECM illuminates the MIL the instant the ECM determines that there is a malfunction. "2 driving cycles" means that the ECM illuminates the MIL if the same malfunction is detected again in a 2nd driving cycle.
Component operating range	Normal operation range of sensors and solenoids under normal driving conditions. These ranges are for a reference. They cannot be used to determine whether a sensor or solenoid is defective or not.

PARTS LOCATION

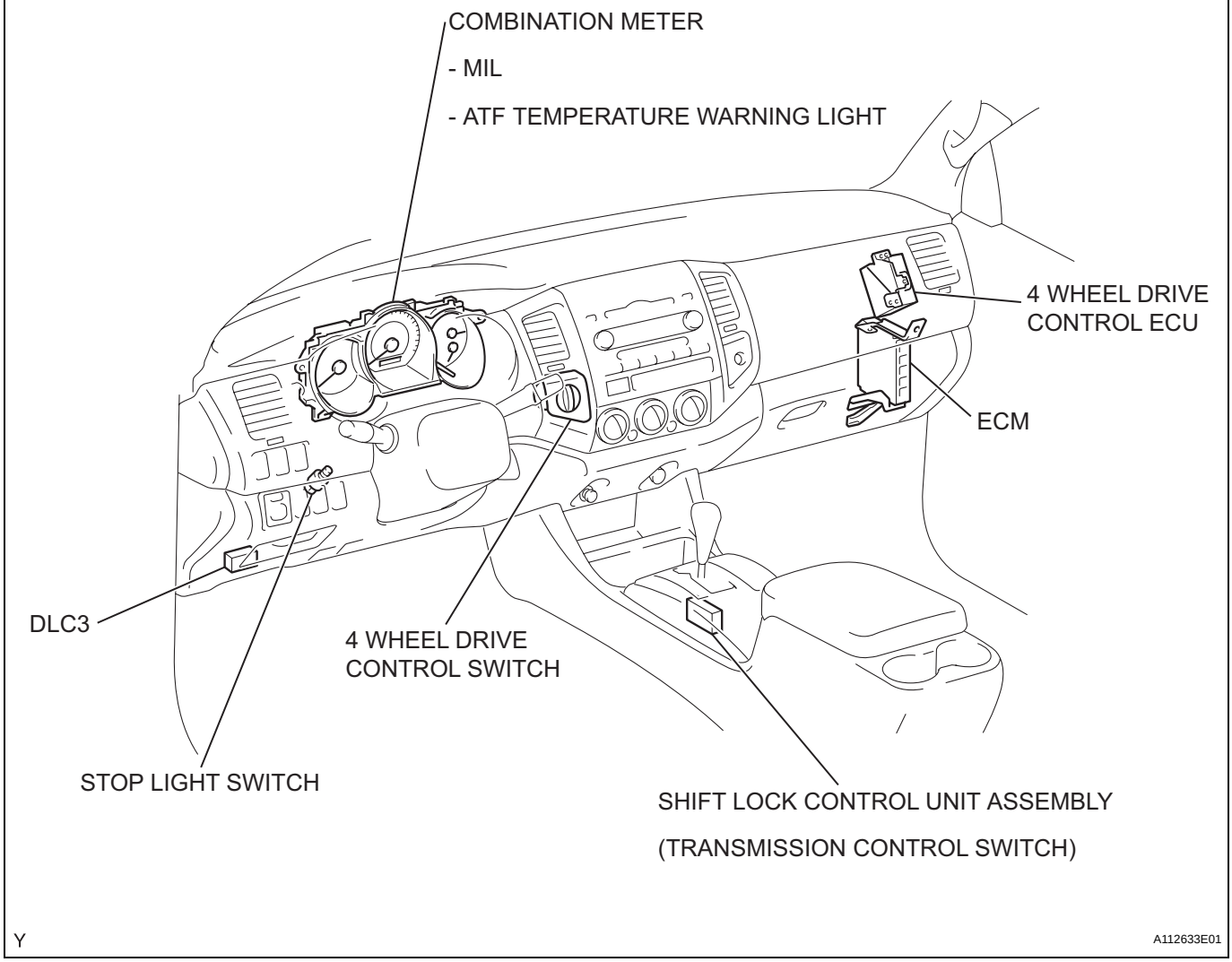

AT

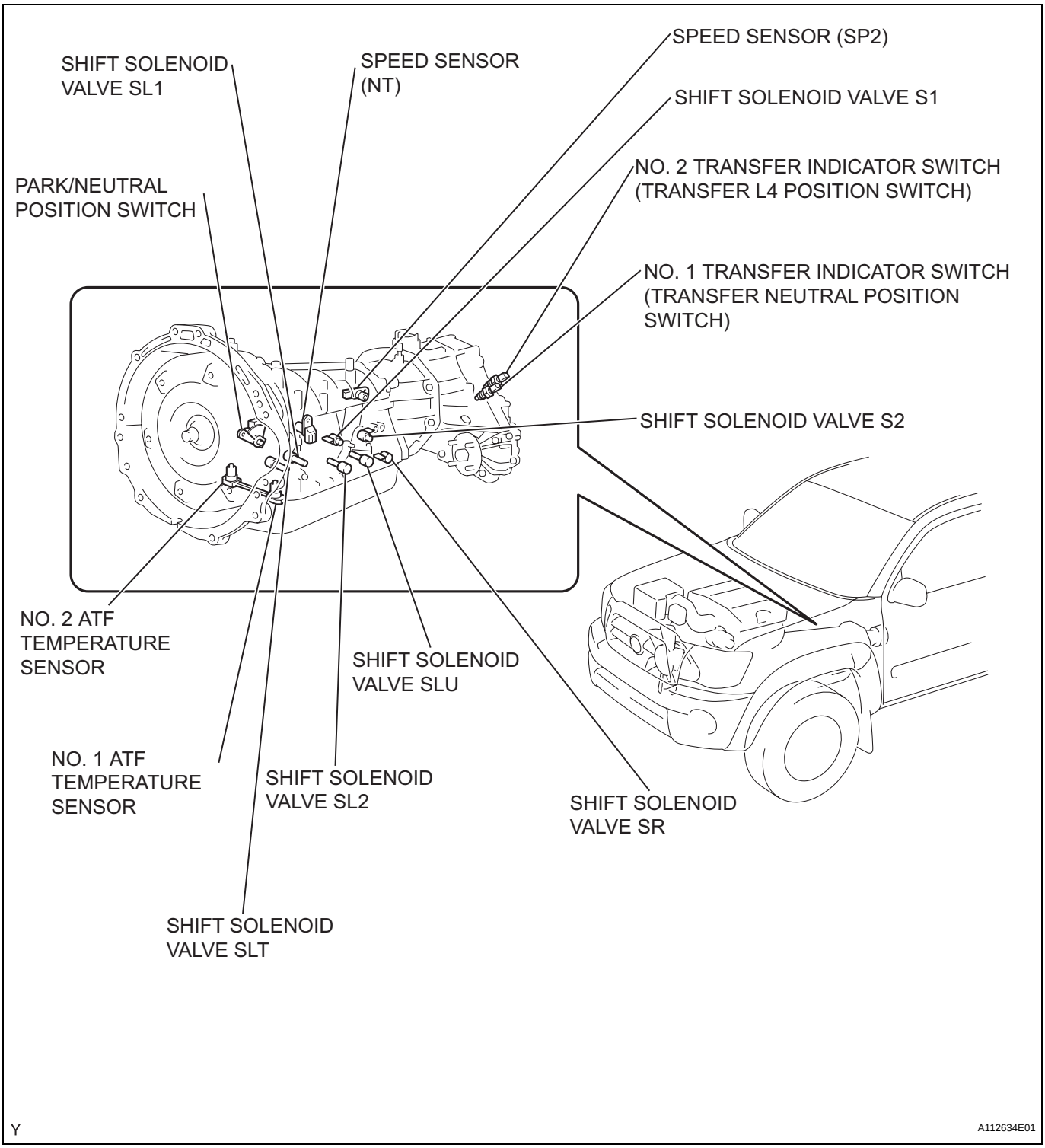
SHIFT SOLENOID VALVE SL1
SPEED SENSOR (NT)
SPEED SENSOR (SP2)
SHIFT SOLENOID VALVE S1
NO. 2 TRANSFER INDICATOR SWITCH (TRANSFER L4 POSITION SWITCH)
PARK/NEUTRAL POSITION SWITCH
NO. 1 TRANSFER INDICATOR SWITCH (TRANSFER NEUTRAL POSITION SWITCH)
SHIFT SOLENOID VALVE S2
NO. 2 ATF TEMPERATURE SENSOR
SHIFT SOLENOID VALVE SLU
NO. 1 ATF TEMPERATURE SENSOR
SHIFT SOLENOID VALVE SL2
SHIFT SOLENOID VALVE SR
SHIFT SOLENOID VALVE SLT
Y
A112634E01

REMOVAL

1. **DISCONNECT CABLE FROM NEGATIVE BATTERY TERMINAL**
2. **REMOVE NO.1 ENGINE UNDER COVER SUB-ASSEMBLY**
3. **REMOVE NO. 2 ENGINE UNDER COVER (w/ No. 2 Engine Under Cover)**
4. **DISCONNECT OXYGEN SENSOR**
5. **REMOVE EXHAUST PIPE**
   (See page EX-3)
6. **REMOVE PROPELLER SHAFT ASSEMBLY FRONT (See page PR-16)**
7. **REMOVE PROPELLER WITH CENTER BEARING SHAFT ASSEMBLY (See page PR-8)**
8. **DRAIN AUTOMATIC TRANSMISSION FLUID**
   (a) Remove the drain plug and gasket, and drain ATF.
   (b) Install a new gasket and drain plug.
   Torque: 28 N*m (285 kgf*cm, 21 ft.*lbf)
9. **REMOVE MANIFOLD STAY**
   (a) Remove the 3 bolts and manifold stay.

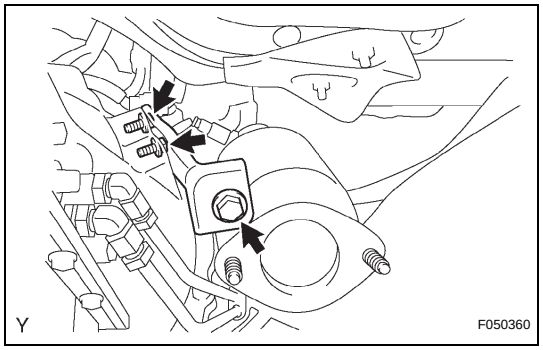

10. **REMOVE NO.2 MANIFOLD STAY**
    (a) Remove the 3 bolts and manifold stay No. 2.

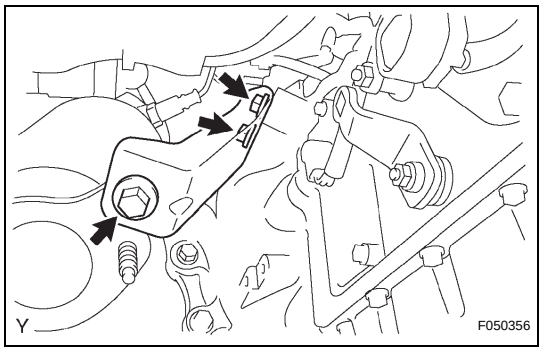

11. **DISCONNECT NO.1 OIL COOLER INLET TUBE**
    (a) Remove the 3 bolts and 2 clamps.

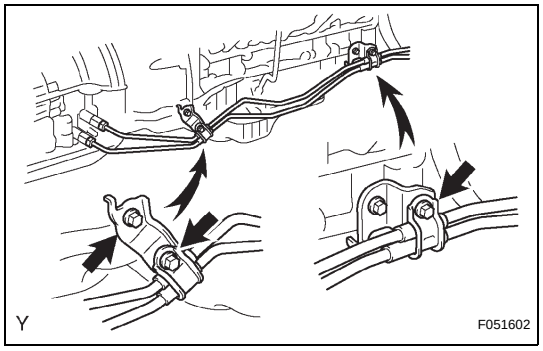

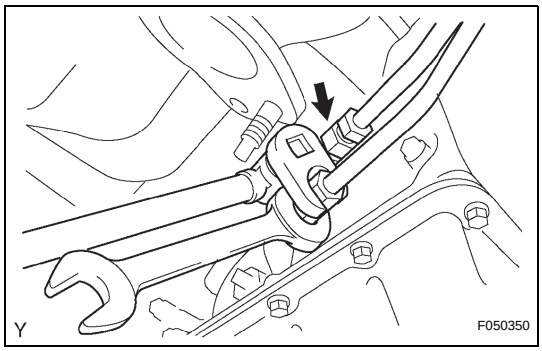

(b) Using SST, disconnect the oil cooler inlet tube No. 1.
SST 09023-12701

12. DISCONNECT NO.1 OIL COOLER OUTLET TUBE

(a) Using SST, disconnect the oil cooler outlet tube No. 1.
SST 09023-12701

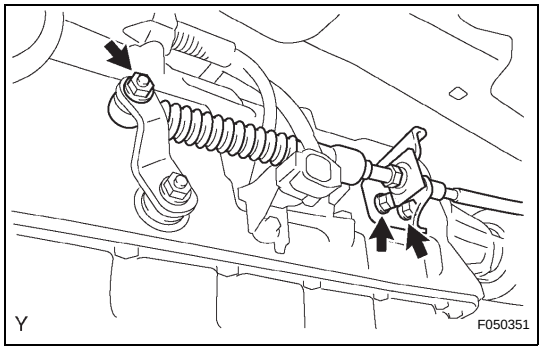

13. DISCONNECT TRANSMISSION CONTROL CABLE ASSEMBLY

(a) Remove the nut and disconnect the transmission control cable.
(b) Remove the 2 bolts and disconnect the transmission control cable.

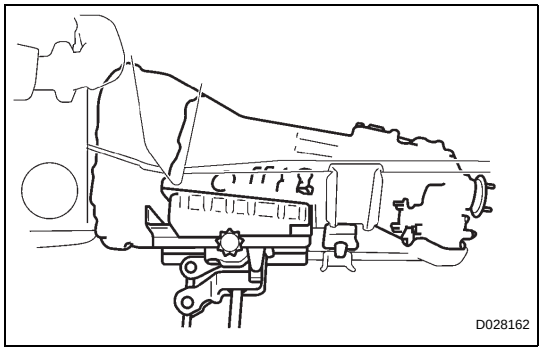

14. SUPPORT AUTOMATIC TRANSMISSION WITH TRANSFER

(a) Support the automatic transmission assembly with a transmission jack.

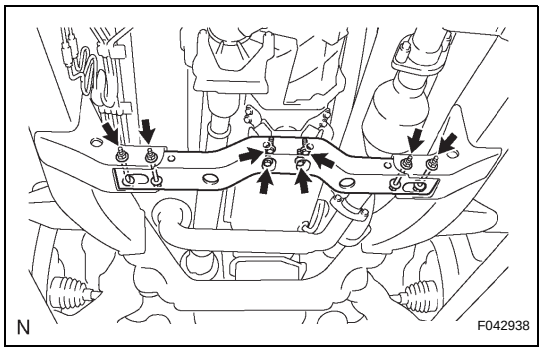

15. REMOVE NO.3 FRAME CROSSMEMBER SUB-ASSEMBLY

(a) Remove the 4 bolts on the frame crossmember sub-assembly No. 3.
(b) Remove the 4 nuts, 4 bolts and frame crossmember sub-assembly No. 3.

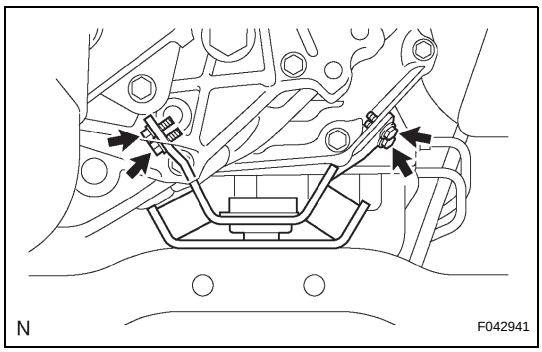

16. REMOVE REAR NO.1 ENGINE MOUNTING INSULATOR

(a) Remove the 4 bolts and engine mounting insulator rear from the automatic transmission.

17. DISCONNECT CONNECTOR

(a) Disconnect the park/neutral position switch connector.
(b) Disconnect the transmission wire connector.
(c) Disconnect the 2 speed sensor connectors.
(d) Disconnect the transfer shift actuator connector.

(e) Disconnect the indicator switch No. 1 connector.
(f) Disconnect the indicator switch No. 2 connector.

18. DISCONNECT WIRE HARNESS

19. REMOVE STARTER ASSEMBLY (See page ST-13)

20. REMOVE FLYWHEEL HOUSING SIDE COVER

(a) Remove the flywheel housing side cover from the cylinder block.

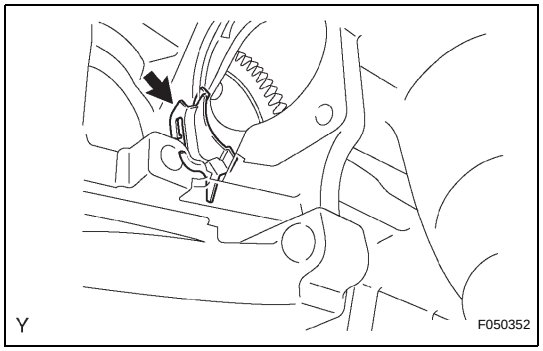

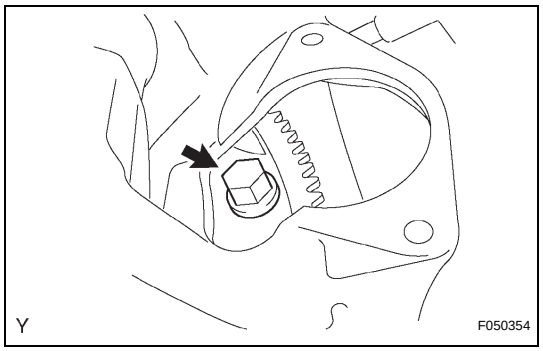

21. REMOVE AUTOMATIC TRANSMISSION WITH TRANSFER

(a) Turn the crankshaft to gain access to each bolt.
(b) Hold the crankshaft pulley nut with a wrench and remove the 6 bolts.

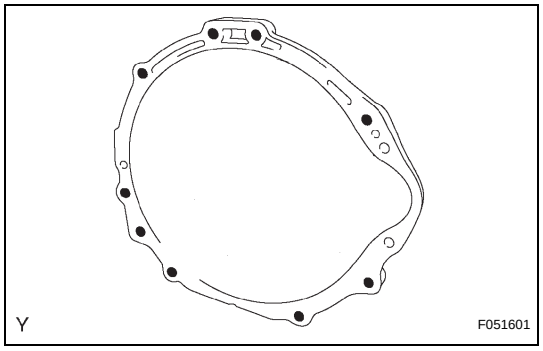

(c) Remove the 9 bolts.
(d) Separate and remove the automatic transmission.

22. REMOVE TORQUE CONVERTER CLUTCH ASSEMBLY

23. REMOVE TRANSFER ASSEMBLY (See page TF-14)

AT

INSTALLATION

1. **INSTALL TRANSFER ASSEMBLY (See page TF-38)**
2. **INSPECT TORQUE CONVERTER CLUTCH ASSEMBLY (See page AT-169)**
3. **INSTALL TORQUE CONVERTER CLUTCH ASSEMBLY**
   (a) Install the torque converter clutch onto the automatic transmission.
   (b) Using calipers and a straight edge, measure dimension A, between the engine and the end surface of the drive plate, shown in the illustration.

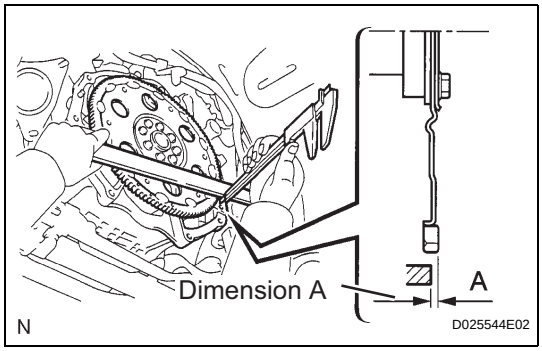

   (c) Using calipers and a straight edge, measure dimension B shown in the illustration and check that B is greater than A measured in (b).
   Standard:
   A+1 mm or more

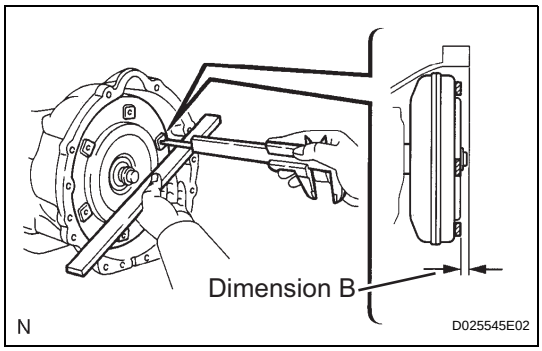

4. **INSTALL AUTOMATIC TRANSMISSION WITH TRANSFER**
   (a) Install the automatic transmission onto the engine with the 9 bolts.
   Torque: 71 N*m (720 kgf*cm, 53 ft.*lbf) for bolt A
   37 N*m (380 kgf*cm, 27 ft.*lbf) for bolt B

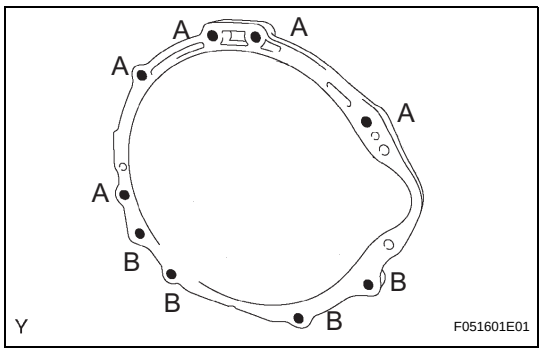

   (b) Install the 6 torque converter clutch mounting bolts.
   Torque: 48 N*m (489 kgf*cm, 35 ft.*lbf)
   HINT:
   First install the black bolt and then the other 5 bolts.

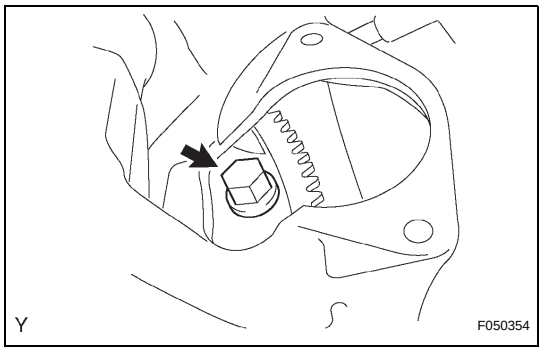

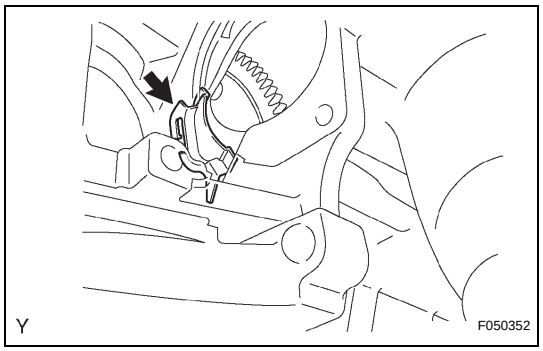

5. INSTALL FLYWHEEL HOUSING SIDE COVER

(a) Install the flywheel housing side cover onto the cylinder block.

6. INSTALL STARTER ASSEMBLY (See page ST-19)

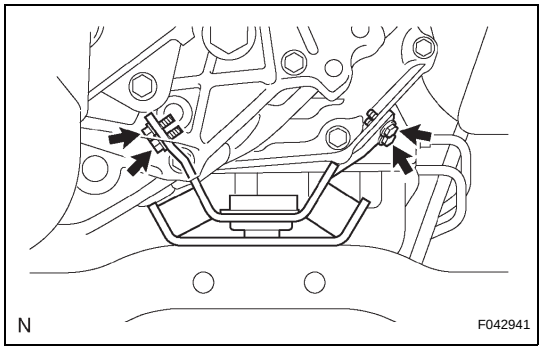

7. INSTALL REAR NO.1 ENGINE MOUNTING INSULATOR

(a) Install the engine mounting insulator rear and 4 bolts onto the automatic transmission.
Torque: 65 N*m (663 kgf*cm, 48 ft.*lbf)

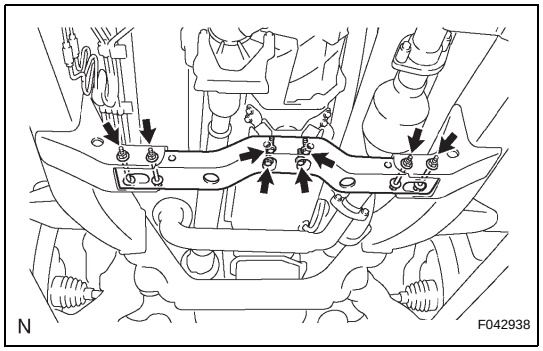

8. INSTALL NO.3 FRAME CROSSMEMBER SUB-ASSEMBLY

(a) Install the frame crossmember sub-assembly No. 3 with the 4 bolts and 4 nuts.
Torque: 40 N*m (408 kgf*cm, 30 ft.*lbf)

(b) Install the frame crossmember sub-assembly No. 3 with the 4 bolts.
Torque: 19 N*m (189 kgf*cm, 14 ft.*lbf)

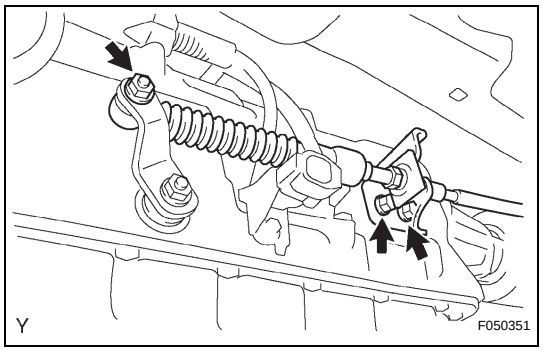

9. INSTALL TRANSMISSION CONTROL CABLE ASSEMBLY

(a) Install the transmission control cable bracket No. 1 with the 2 bolts.
Torque: 28 N*m (286 kgf*cm, 21 ft.*lbf)

(b) Connect the transmission control cable with the nut.
Torque: 14 N*m (143 kgf*cm, 10 ft.*lbf)

10. INSTALL NO.1 OIL COOLER OUTLET TUBE

(a) Provisionally install the oil cooler outlet tube No. 1.

(b) Provisionally install the oil cooler inlet tube No. 1.

(c) Install the 2 clamps and 2 bolts.
Torque: 12 N*m (122 kgf*cm, 9 ft.*lbf) for bolt A
5.0 N*m (50 kgf*cm, 43 in.*lbf) for bolt B

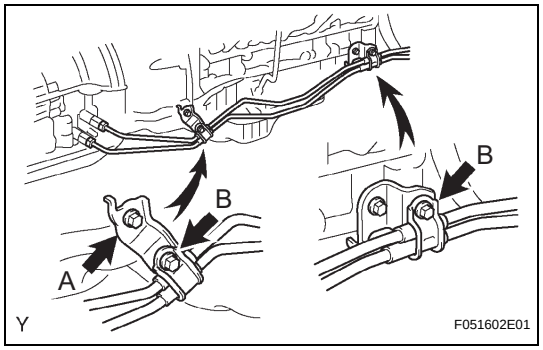

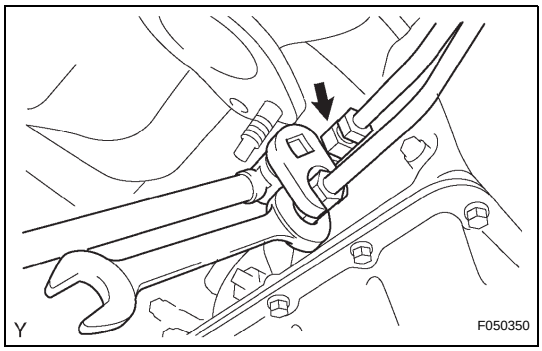

(d) Using SST, tighten the oil cooler outlet tube No. 1.
SST 09023-12701
Torque: 34 N*m (350 kgf*cm, 25 ft.*lbf)

11. INSTALL NO.1 OIL COOLER INLET TUBE
(a) Using SST, tighten the oil cooler inlet tube No. 1.
SST 09023-12701
Torque: 34 N*m (350 kgf*cm, 25 ft.*lbf)

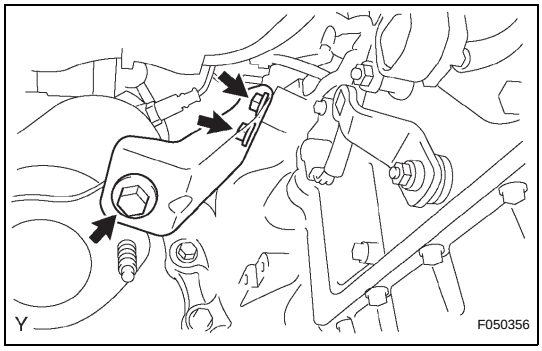

12. INSTALL NO.2 MANIFOLD STAY
(a) Install manifold stay No. 2 with the 3 bolts.
Torque: 40 N*m (408 kgf*cm, 30 ft.*lbf)

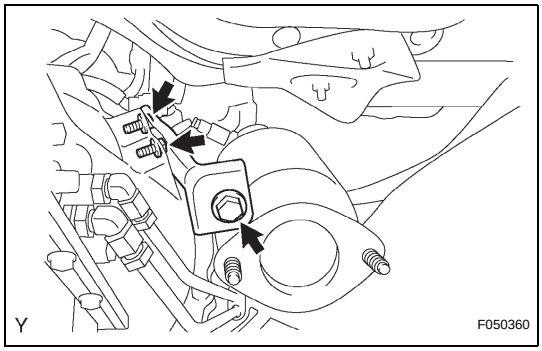

13. INSTALL MANIFOLD STAY
(a) Install the manifold stay with the 3 bolts.
Torque: 40 N*m (408 kgf*cm, 30 ft.*lbf)

14. INSTALL PROPELLER WITH CENTER BEARING SHAFT ASSEMBLY (See page PR-8)

15. INSTALL FRONT PROPELLER SHAFT ASSEMBLY (See page PR-19)

16. INSTALL EXHAUST PIPE
(See page EX-3)

17. CONNECT OXYGEN SENSOR

18. CONNECT CABLE TO NEGATIVE BATTERY TERMINAL
Torque: 3.9 N*m (40 kgf*cm, 35 in.*lbf)

19. PERFORM INITIALIZATION
(See pageAT-17)

20. ADD AUTOMATIC TRANSMISSION FLUID
(See page AT-139)

21. INSPECT SHIFT LEVER POSITION (See page AT-158)

22. CHECK FOR EXHAUST GAS LEAKAGE

23. INSTALL NO. 2 ENGINE UNDER COVER (w/ No. 2 Engine Under Cover)

24. INSTALL NO. 1 ENGINE UNDER COVER SUB-ASSEMBLY

CL

REMOVAL

1. REMOVE CLUTCH MASTER CYLINDER ASSEMBLY
(See page CL-11)

2. REMOVE TURN OVER SPRING SEAT COMPRESSION SPRING

(a) Remove the compression spring.

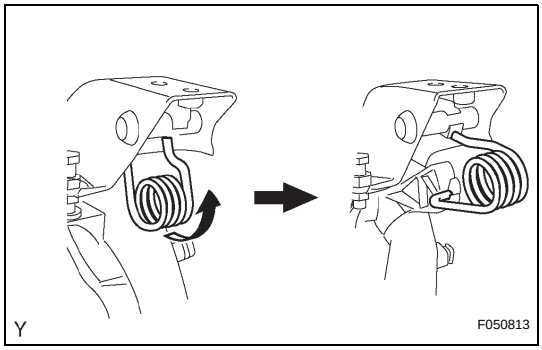

3. REMOVE CLUTCH PEDAL SUB-ASSEMBLY

(a) Remove the bolt and nut.

(b) Remove the clutch pedal from the clutch pedal support.

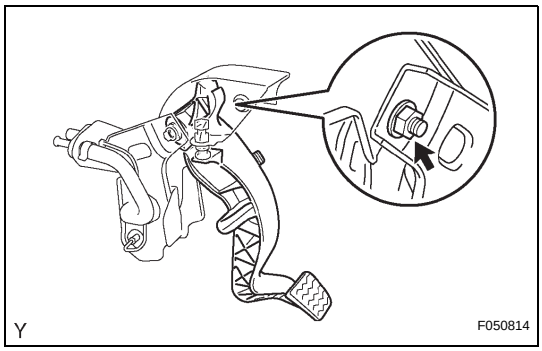

4. REMOVE CLUTCH PEDAL SPRING HOLDER

(a) Remove the clutch pedal spring holder from the clutch pedal support.

5. REMOVE CLUTCH PEDAL PAD

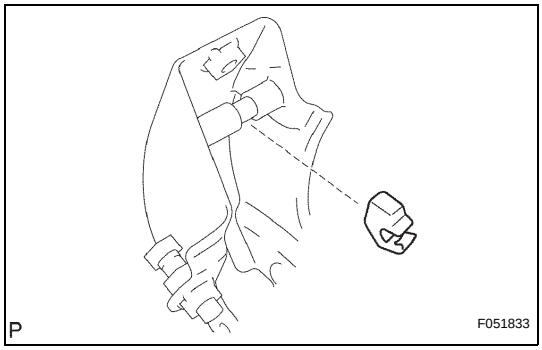

6. REMOVE CLUTCH PEDAL BUSH

(a) Remove the 2 bushes from the clutch pedal.

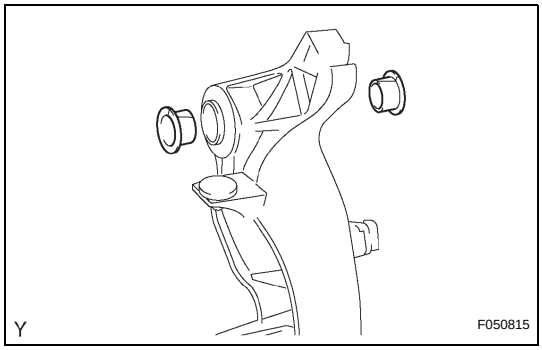

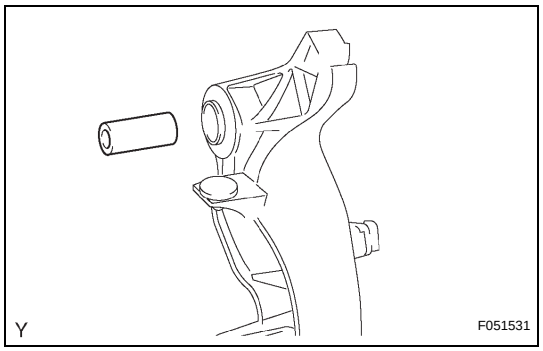

7. REMOVE CLUTCH PEDAL SHAFT COLLAR

(a) Remove the clutch pedal shaft collar.

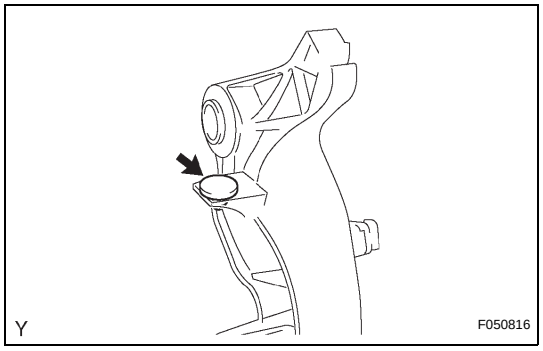

8. REMOVE CLUTCH PEDAL NO.1 CUSHION

(a) Using needle-nose pliers, remove the No. 1 cushion from the clutch pedal.

DISASSEMBLY

1. REMOVE CLUTCH RELEASE CYLINDER KIT

(a) Remove the boot from the cylinder body.

(b) Remove the push rod from the cylinder body.

(c) Using compressed air, remove the piston together with the spring from the cylinder.

NOTICE:
Be careful not to damage the inside of the cylinder body.

(d) Remove the bleeder plug cap from the bleeder plug.

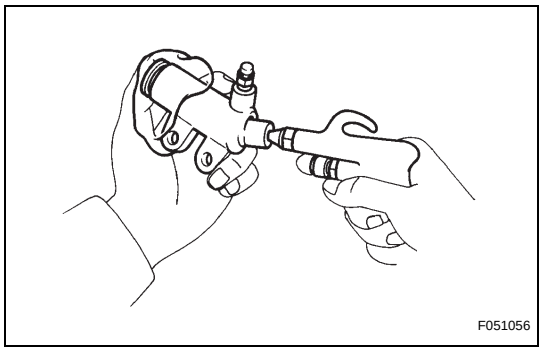

2. REMOVE RELEASE CYLINDER BLEEDER PLUG

CL

REASSEMBLY

1. **INSTALL RELEASE CYLINDER BLEEDER PLUG**
   Torque: 11 N*m (110 kgf*cm, 8.0 ft.*lbf)

2. **INSTALL CLUTCH RELEASE CYLINDER KIT**
   (a) Install the bleeder plug cap onto the bleeder plug.
   (b) Install the spring onto the cylinder body.

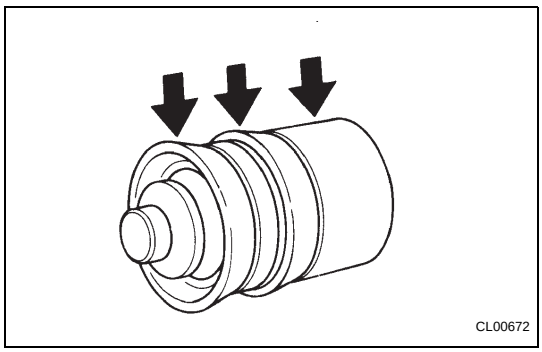

   (c) Apply lithium soap base glycol grease to the portions shown in the illustration.
   (d) Install the piston onto the cylinder body.
   NOTICE:
   Be careful not to damage the inside of the cylinder body.
   (e) Install the push rod into the cylinder body.
   (f) Install the boot onto the cylinder body.

INSTALLATION

1. **INSTALL CLUTCH RELEASE CYLINDER ASSEMBLY**
   (a) Install the clutch release cylinder with the 2 bolts.
   Torque: 12 N*m (120 kgf*cm, 8.7 ft.*lbf)

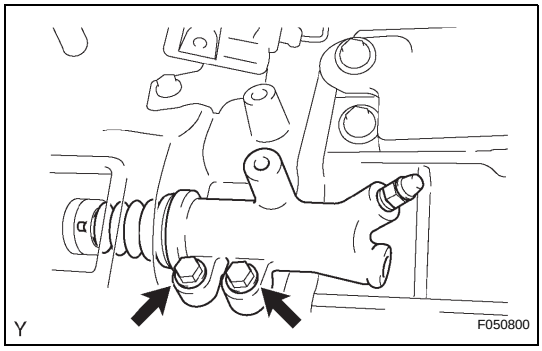

2. **CONNECT CLUTCH RELEASE CYLINDER TO FLEXIBLE HOSE TUBE**
   (a) Using SST, connect the flexible hose tube.
   SST 09023-00101
   Torque: 15 N*m (155 kgf*cm, 11 ft.*lbf)
   (b) Install the clutch line bracket.
   Torque: 12 N*m (120 kgf*cm, 8.7 ft.*lbf)

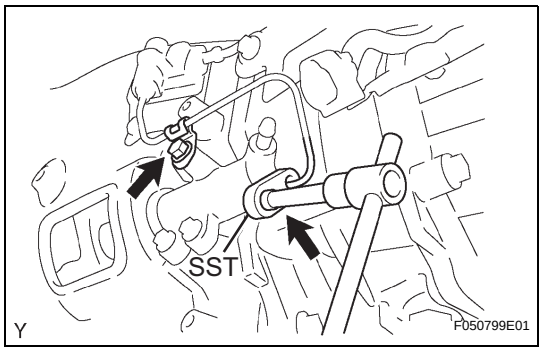

3. **BLEED CLUTCH PIPE LINE**
   (a) Fill the brake reservoir tank with brake fluid and bleed the clutch system.
   Torque: 11 N*m (110 kgf*cm, 8.0 ft.*lbf)

4. **CHECK FOR CLUTCH FLUID LEAKAGE**

5. **INSTALL NO. 1 CLUTCH HOUSING COVER**
   (a) Install the clutch housing cover No. 1 with the 3 bolts.
   Torque: 12 N*m (120 kgf*cm, 8.7 ft.*lbf)

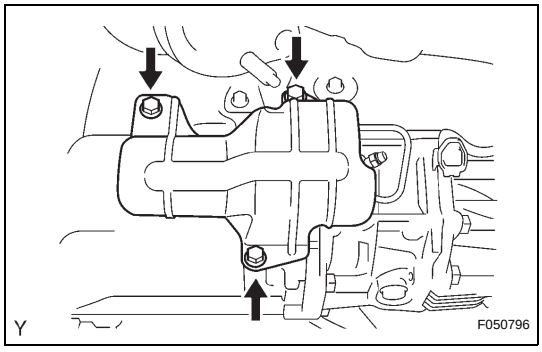

TORQUE SPECIFICATIONS

Part Tightened		N*m	kgf*cm	ft.*lbf
Engine under cover sub-assembly No. 1 x Frame assembly		29	296	21
Camshaft bearing cap x Cylinder head sub-assembly	10 mm (0.39 in.) head	9.0	92	80 in.*lbf
	12 mm (0.47 in.) head	24	245	18
Chain tensioner No. 1 x Cylinder head sub-assembly		10	102	7
Chain tensioner No. 2 x Cylinder head sub-assembly		19	194	14
Chain tensioner No. 3 x Cylinder head sub-assembly		19	194	14
Camshaft timing gear assembly x Camshaft		100	1,020	74
Camshaft timing gear or sprocket x Camshaft		100	1,020	74
Timing chain cover plate x Timing chain or belt cover sub-assembly		9.0	92	80 in.*lbf
Ignition coil assembly x Cylinder head cover sub-assembly		10	102	7
V-bank cover x Intake air surge tank		7.5	76	66 in.*lbf
Engine hanger No. 1 x Cylinder head sub-assembly RH		33	336	24
Engine hanger No. 2 x Cylinder head sub-assembly LH		33	336	24
Spark plug x Cylinder head sub-assembly		20	204	15
Oil filler cap housing x Cylinder head cover sub-assembly LH		9.0	92	80 in.*lbf
Camshaft timing oil control valve assembly x Cylinder head cover sub-assembly		9.0	92	80 in.*lbf
Oil filter bracket sub-assembly x Timing chain or belt cover sub-assembly		19	194	14
Engine mounting bracket front No. 1 RH x Cylinder block sub-assembly		43	435	31
Engine mounting bracket front No. 1 LH x Cylinder block sub-assembly		43	435	31
Engine mounting insulator front No. 1 RH x Frame assembly		38	387	28
Engine mounting insulator front No. 1 LH x Frame assembly		38	387	28
Engine wire No. 2 (ground cable) x Cylinder block sub-assembly		13	133	9
Hood sub-assembly x Hood hinge assembly RH & LH		13	133	10
Hood support RH & LH x Body		18	184	13
Engine rear oil seal retainer x Cylinder block sub-assembly		9.0	92	80 in.*lbf
Knock sensor x Cylinder block sub-assembly		20	204	15
Water outlet pipe No. 1 x Cylinder block sub-assembly		10	102	7
Cylinder head sub-assembly RH x Cylinder block sub-assembly	1st	36	367	27
	2nd	Turn 180°	Turn 180°	Turn 180°
Cylinder head sub-assembly LH x Cylinder block sub-assembly	Recessed head 1st	36	367	27
	2nd	Turn 180°	Turn 180°	Turn 180°
	14 mm (0.55 in.) head	30	306	22
Chain vibration damper No. 1 x Cylinder block sub-assembly		19	194	14
Idle gear No. 1 x Cylinder block sub-assembly		60	612	44
Timing chain or belt cover sub-assembly x Cylinder head and block		23	235	17
Water pump assembly x Timing chain or belt cover sub-assembly	10 mm (0.39 in.) head	9.0	92	80 in.*lbf
	12 mm (0.47 in.) head	23	235	17
Oil pan stud bolt x Oil pan sub-assembly		4.0	41	35 in.*lbf

SS

Part Tightened		N*m	kgf*cm	ft.*lbf
Oil pan sub-assembly x Cylinder block and timing chain or belt cover	10 mm (0.39 in.) head	10	102	7
	12 mm (0.47 in.) head	21	214	16
Oil strainer sub-assembly x Oil pan sub-assembly		9.0	92	80 in.*lbf
Oil pan sub-assembly No. 2 x Oil pan sub-assembly	Nut	1.0	102	7
	Bolt	9.0	92	80 in.*lbf
Oil pan drain plug x Oil pan sub-assembly No. 2		40	408	30
Crankshaft pulley x Crankshaft		250	2,549	185
Cylinder head cover sub-assembly x Cylinder head sub-assembly RH	Nut	9.0	92	80 in.*lbf
	Bolt A	10	102	7
	Bolt B	9.0	92	80 in.*lbf
Cylinder head cover sub-assembly LH x Cylinder head sub-assembly LH	Nut	9.0	92	80 in.*lbf
	Bolt A	10	102	7
	Bolt B	9.0	92	80 in.*lbf
Ventilation valve x Cylinder head cover sub-assembly LH		27	275	20
Oil control valve filter plug x Cylinder head sub-assembly		62	632	46
Crankshaft position sensor x Cylinder block sub-assembly		9.0	92	80 in.*lbf
VVT sensor x Timing chain or belt cover sub-assembly		8.0	82	71 in.*lbf
Cylinder block water drain cock sub-assembly x Cylinder block sub-assembly		25	255	18
Oil level gauge guide x Cylinder head sub-assembly		9.0	92	80 in.*lbf
Oil pan sub-assembly x Transmission		37	377	27
Idler pulley sub-assembly No. 1 x Timing chain or belt cover sub-assembly		54	551	40
Idler pulley sub-assembly No. 2 x Timing chain or belt cover sub-assembly		39	398	29
V-ribbed belt tensioner assembly x Cylinder block sub-assembly		36	367	27
Vane pump assembly x Cylinder block sub-assembly		43	438	32
Intake air surge tank x Intake manifold		28	286	21
Surge tank stay x Intake air surge tank and cylinder head		21	214	15
Throttle body bracket x Throttle body with motor and cylinder head		21	214	15
Oil baffle plate x Surge tank stay No. 1		9.0	92	80 in.*lbf
Ground cable x Cylinder head sub-assembly		8.0	82	71 in.*lbf
Water by-pass joint RR x Cylinder head sub-assembly		9.0	92	80 in.*lbf
Intake manifold x Cylinder head sub-assembly		26	265	19
Exhaust manifold sub-assembly RH x Cylinder head sub-assembly RH		21	214	16
Exhaust manifold sub-assembly LH x Cylinder head sub-assembly LH		21	214	16
Manifold stay x Exhaust manifold sub-assembly RH and transmission		40	408	30
Manifold stay No. 2 x Exhaust manifold sub-assembly LH and transmission		40	408	30
Cool air inlet No. 1 x Body		12	122	9
Drive plate & ring gear sub-assembly x Crankshaft		83	846	61
Flywheel x Crankshaft		83	846	61
Stud bolt x Cylinder head sub-assembly and cylinder head LH (See page)	A	4.0	41	35 in.*lbf
	B	9.0	92	80 in.*lbf
	C	4.0	41	35 in.*lbf
Union x Cylinder head sub-assembly and cylinder head LH		15	150	11
With Head taper screw plug x Cylinder head sub-assembly and cylinder head LH		80	816	59
Connecting rod cap x Connecting rod	1st	25	250	18
	2nd	Turn 90°	Turn 90°	Turn 90°

Part Tightened		N*m	kgf*cm	ft.*lbf
Main bearing cap x Cylinder block sub-assembly	12 pointed head 1st	61	622	45
	2nd	Turn 90°	Turn 90°	Turn 90°
	12 mm head	25	255	18
Stud bolt x Cylinder block sub-assembly	A	11	112	8.1
	B	4.5	46	40 in.*lbf
Sub-assembly oil nozzle No. 1 x Cylinder block sub-assembly		9.0	92	80 in.*lbf
Negative battery terminal		3.9	40	35 in.*lbf

REMOVAL

1. **DISCONNECT CABLE FROM NEGATIVE BATTERY TERMINAL**
2. **REMOVE CONSOLE UPPER REAR PANEL SUB-ASSEMBLY (for Separate Seat Type) (See page IP-9)**
3. **REMOVE REAR CONSOLE BOX ASSEMBLY (for Separate Seat Type) (See page IP-10)**
4. **REMOVE FRONT CONSOLE BOX (for Separate Seat Type) (See page IP-11)**
5. **REMOVE FRONT CONSOLE BOX (for Bench Seat Type) (See page IP-11)**
6. **REMOVE SHIFT LEVER BOOT ASSEMBLY**
   (a) Remove the 2 screws A, 2 clips B and floor shift lever assembly.

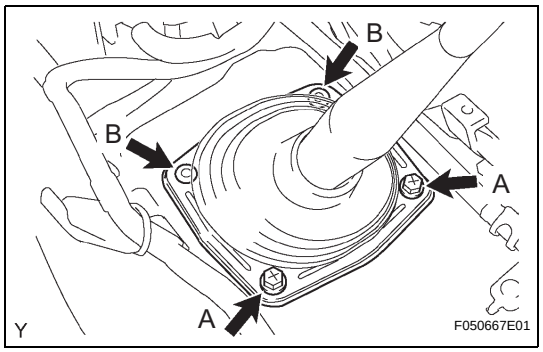

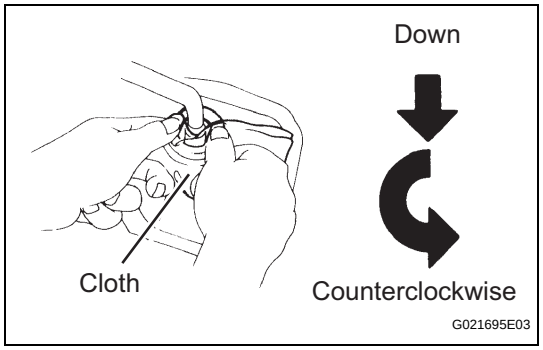

7. **REMOVE FLOOR SHIFT SHIFT LEVER ASSEMBLY**
   (a) Cover the shift lever cap with a cloth.
   (b) While pressing down on the shift lever, turn it counterclockwise to remove.
   (c) Pull out the shift lever.
8. **REMOVE NO. 2 ENGINE UNDER COVER SUB-ASSEMBLY**
   (a) Remove the 4 bolts and engine under cover No. 2.
9. **DRAIN MANUAL TRANSMISSION OIL**
   Torque: 37 N*m (377 kgf*cm, 27 ft.*lbf)
10. **REMOVE FRONT EXHAUST PIPE ASSEMBLY (See page EX-2)**
11. **REMOVE PROPELLER WITH CENTER BEARING SHAFT ASSEMBLY (for Access Cab) (See page PR-8)**
12. **REMOVE PROPELLER SHAFT ASSEMBLY (for Regular Cab) (See page PR-3)**
13. **REMOVE STARTER ASSEMBLY (See page ST-5)**

MT

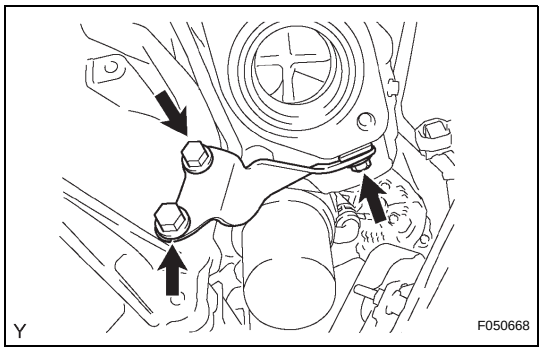

14. REMOVE MANIFOLD STAY

(a) Remove the 3 bolts and manifold stay.

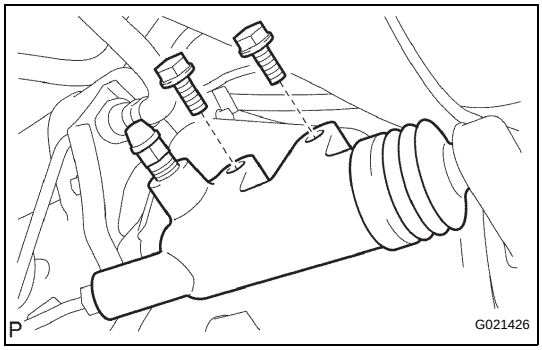

15. SEPARATE CLUTCH RELEASE CYLINDER ASSEMBLY

(a) Remove the 2 bolts and separate the clutch release cylinder assembly.

16. REMOVE NO. 3 FRAME CROSSMEMBER SUB-ASSEMBLY

(a) Support the transmission rear side with a transmission jack.

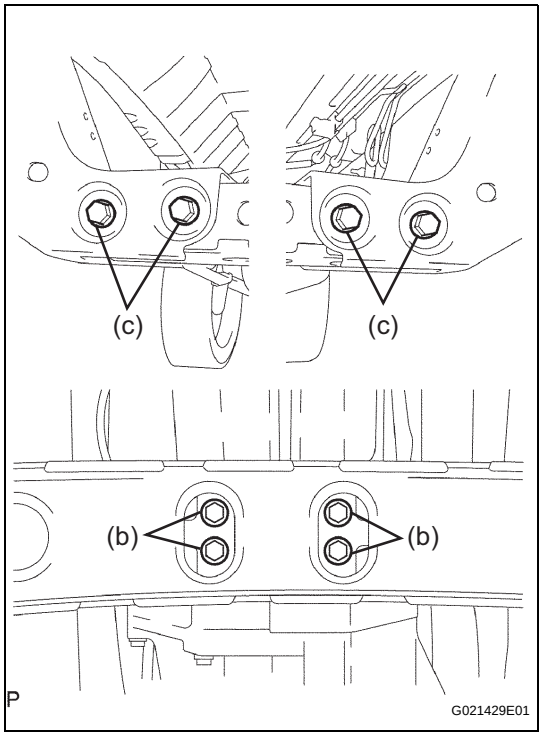

(b) Remove the 4 bolts from the engine rear mounting.

(c) Remove the 4 bolts, nuts and flame crossmember sub-assembly No. 3.

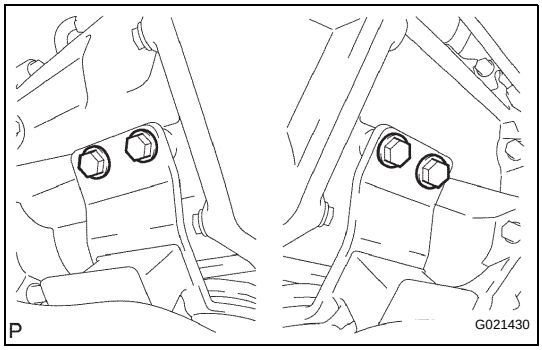

17. REMOVE NO. 1 ENGINE MOUNTING INSULATOR REAR

(a) Remove the 4 bolts and engine mounting insulator rear No. 1.

18. DISCONNECT WIRE HARNESS

(a) Tilt the transmission assembly downward.
NOTICE:
Make sure that the cooling fan does not come in contact with the fan shroud.

(b) Disconnect the back-up lamp switch connector.

(c) Disconnect the speed sensor connector.
(d) Disconnect the wire harness clamp from the transmission assembly.

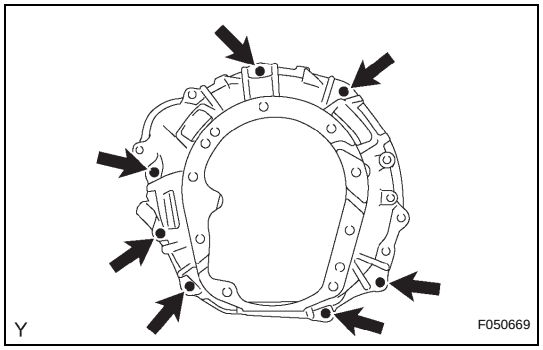

19. REMOVE MANUAL TRANSMISSION UNIT ASSEMBLY

(a) Remove the 7 bolts and remove the transmission assembly.

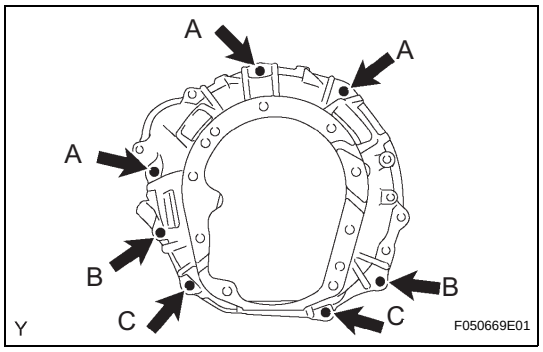

INSTALLATION

1. INSTALL MANUAL TRANSMISSION UNIT ASSEMBLY

(a) Align the input shaft with the clutch disc and install the transmission unit assembly onto the engine.
(b) Install the 7 bolts.
Torque: 72 N*m (730 kgf*cm, 53 ft.*lbf) for bolt A
37 N*m (379 kgf*cm, 27 ft.*lbf) for bolt B and C
HINT:
Install bolt B from the direction of the front of the vehicle.

2. CONNECT WIRE HARNESS

(a) Connect the wire harness clamp to the transmission assembly.
(b) Connect the back-up lamp switch connector.
(c) Connect the speed sensor connector.

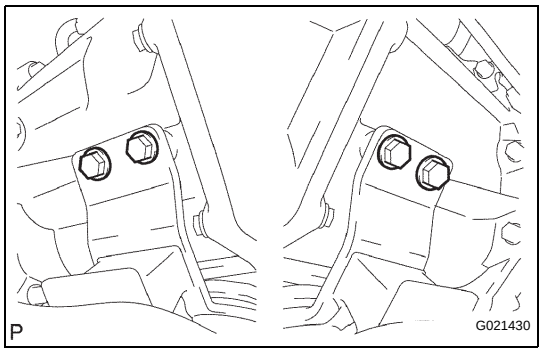

3. INSTALL NO. 1 ENGINE MOUNTING INSULATOR REAR

(a) Install the engine mount insulator rear No. 1 onto the transmission assembly with 4 bolts.
Torque: 65 N*m (663 kgf*cm, 48 ft.*lbf)

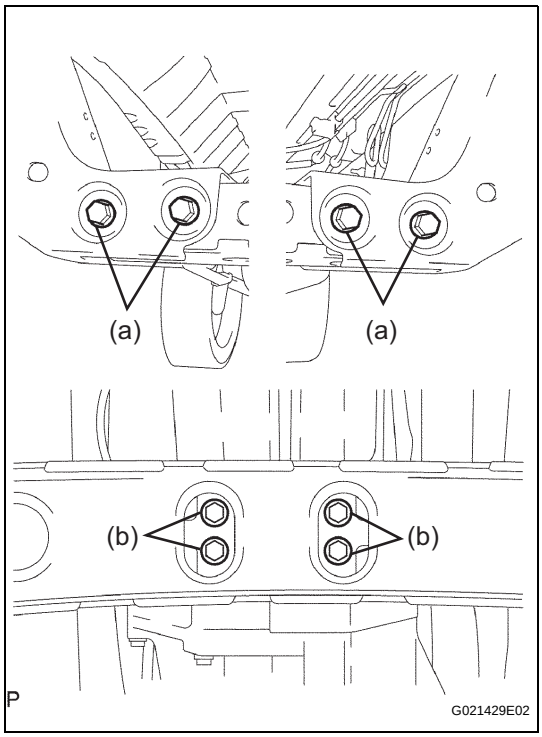

4. **INSTALL NO. 3 FRAME CROSSMEMBER SUB-ASSEMBLY**
   (a) Install the frame crossmember sub-assembly No. 3 with the 8 bolts and nuts.
   Torque: 40 N*m (408 kgf*cm, 30 ft.*lbf)
   (b) Install the 4 bolts onto the engine mounting insulator rear No. 1.
   Torque: 19 N*m (189 kgf*cm, 14 ft.*lbf)

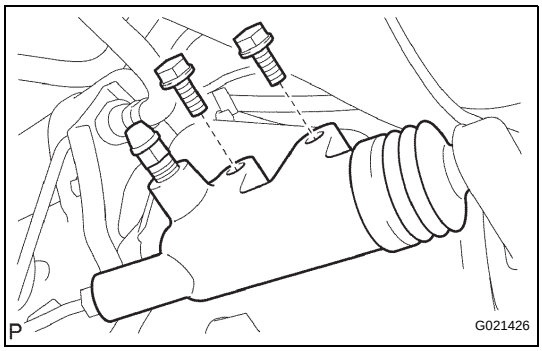

5. **INSTALL CLUTCH RELEASE CYLINDER ASSEMBLY**
   (a) Install the clutch release cylinder assembly with the 2 bolts.
   Torque: 12 N*m (120 kgf*cm, 9 ft.*lbf)

6. **INSTALL STARTER ASSEMBLY (See page ST-10)**

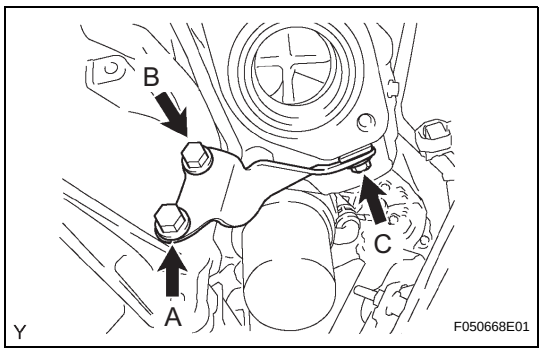

7. **INSTALL MANIFOLD STAY**
   (a) Install the manifold stay with the 3 bolts.
   Torque: 72 N*m (730 kgf*cm, 53 ft.*lbf) for bolt A
   44 N*m (449 kgf*cm, 33 ft.*lbf) for bolt B
   30 N*m (306 kgf*cm, 22 ft.*lbf) for bolt C

8. **INSTALL PROPELLER WITH CENTER BEARING SHAFT ASSEMBLY (for Access Cab) (See page PR-13)**

9. **INSTALL PROPELLER SHAFT ASSEMBLY (for Regular Cab) (See page PR-6)**

10. **INSTALL FRONT EXHAUST PIPE ASSEMBLY (See page EX-2)**

11. **ADD MANUAL TRANSMISSION OIL**

12. **ADJUST MANUAL TRANSMISSION OIL (See page MT-2)**

13. **INSTALL NO. 2 ENGINE UNDER COVER SUB-ASSEMBLY**
   (a) Install the engine under cover No. 2 with the 4 bolts.
   Torque: 30 N*m (306 kgf*cm, 22 ft.*lbf)

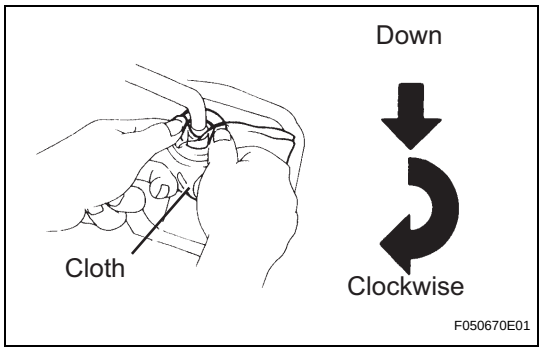

14. **INSTALL FLOOR SHIFT SHIFT LEVER ASSEMBLY**
    (a) Cover the shift lever cap with a cloth.
    (b) While pressing down on the shift lever cap, turn it clockwise to install.
    NOTICE:
    Apply MP grease to the tip of the shift lever.

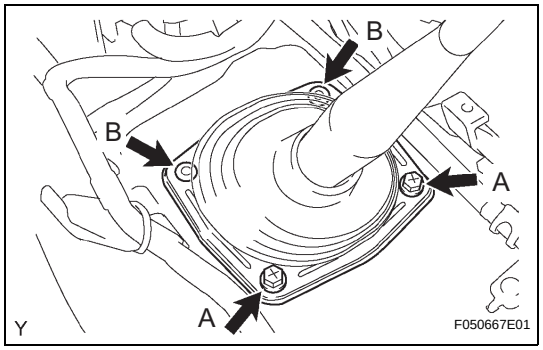

15. **INSTALL SHIFT LEVER BOOT ASSEMBLY**
    (a) Install the shift lever boot assembly with the 2 screws A and 2 clips B.
16. **INSTALL FRONT CONSOLE BOX (for Bench Seat Type) (See page IP-22)**
17. **INSTALL FRONT CONSOLE BOX (for Separate Seat Type) (See page IP-23)**
18. **INSTALL REAR CONSOLE BOX ASSEMBLY (for Separate Seat Type) (See page IP-24)**
19. **INSTALL CONSOLE UPPER REAR PANEL SUB-ASSEMBLY (for Separate Seat Type) (See page IP-25)**
20. **CONNECT CABLE TO NEGATIVE BATTERY TERMINAL**
    Torque: 3.9 N*m (40 kgf*cm, 35 in.*lbf)
21. **CHECK FOR MANUAL TRANSMISSION OIL LEAKAGE**

MT

TORQUE SPECIFICATIONS

Part Tightened		N*m	kgf*cm	ft.*lbf
Engine mounting bracket front No. 1 RH x Cylinder block sub-assembly		51	520	38
Spark plug x Cylinder head cover sub-assembly		18	184	13
Ventilation pipe x Cylinder head cover sub-assembly		18	184	13
Water by - pass pipe No. 1 x Timing chain cover		18	178	13
Engine coolant temperature sensor x Cylinder block sub-assembly		20	204	15
Engine mounting bracket front No. 1 LH x Cylinder block sub-assembly		51	520	38
Oil level gage guide x Engine mounting bracket front No. 1 LH		20	204	15
Engine mounting insulator front x Body		38	387	28
Air cleaner case x Body		12	122	9
Engine under cover No. 1 x Body		30	306	22
Engine under cover No. 2 x Body		30	306	22
Balanceshaft drive gear sub-assembly x Cylinder block sub-assembly		25	250	18
Chain tensioner assembly No. 2 x Cylinder block sub-assembly		18	185	13
Chain vibration damper No. 3 x Cylinder block sub-assembly		18	185	13
Chain vibration damper No. 2 x Cylinder block sub-assembly		27	270	20
Chain vibration damper No. 1 x Cylinder head sub-assembly	Bolt	21	214	15
Chain vibration damper No. 1 x Cylinder block sub-assembly	Nut	21	214	15
Chain tensioner slipper x Cylinder block sub-assembly		21	214	15
Chain tensioner assembly No. 1 x Cylinder head sub-assembly		10	102	7
Oil pan sub-assembly x Cylinder block sub-assembly		26	265	19
Oil pan sub-assembly x Oil strainer sub-assembly		26	265	19
Oil pan sub-assembly No. 2 x Oil pan sub-assembly		9	92	80 in.*lbf
Idler pulley sub-assembly x Timing chain cover		43	438	32
Compressor and magnetic clutch x Idle pulley assembly with bracket		21	214	16
Vane pump assembly x Timing chain cover		21	214	16
Camshaft timing gear assembly x Camshaft		78	795	58
Camshaft oil delivery pipe x Cylinder head sub-assembly	Bolt A	12	122	9
	Except Bolt A	16	158	11
Camshaft timing gear x No. 2 camshaft		78	795	58
Timing chain cover x Head straight screw plug		17	170	12
Timing chain guide x Cylinder head sub-assembly		10	102	7
Cylinder head cover sub-assembly x Cylinder head sub-assembly		9	92	80 in.*lbf
Ignition coil x Cylinder head cover sub-assembly		9	92	80 in.*lbf
Cylinder head sub-assembly x Cylinder block sub-assembly	1st	39	398	29
	2nd	Turn 90°	Turn 90°	Turn 90°
	3rd	Turn 90°	Turn 90°	Turn 90°
Exhaust manifold x Cylinder head sub-assembly		36	367	27
Crankshaft pulley x Crankshaft		260	2651	192
Flywheel sub-assembly x Crankshaft	1st	27	270	20
	2nd	Turn 90°	Turn 90°	Turn 90°
Drive plate & ring gear sub-assembly		74	755	55
Battery x Battery negative terminal		3.9	40	35 in.*lbf
Engine rear oil seal retainer x Cylinder block		13	133	10
Oil filter bracket union x Oil filter bracket sub-assembly		25	255	18
Oil filter union x Oil filter bracket sub-assembly		43	439	32
Oil filter bracket union x Cylinder block		25	255	18
Oil filter bracket sub-assembly x Cylinder block		25	255	18

Part Tightened		N*m	kgf*cm	ft.*lbf
Oil filter bracket sub-assembly x Screw plug		49	500	36
Oil filter x Oil filter bracket sub-assembly		17	175	13
Teper screw plug No. 1 x Cylinder block		25	250	18
Cylinder head x Cylinder block	1st	39	398	29
	2nd	Turn 90°	Turn 90°	Turn 90°
	3rd	Turn 90°	Turn 90°	Turn 90°
Camshaft Timing gear assembly x Camshaft		78	795	58
Camshaft Timing gear or sprocket x Camshaft No. 2		78	795	58
Camshaft bearing cap x Cylinder head	Bolt A	12	122	9
	Others	16	160	11
Chain vibration damper No. 1 x Cylinder block		21	214	15
Chain tensioner slipper x Cylinder block		21	214	15
Chain tensioner No. 1 x Cylinder block		10	102	7
Timing chain guide x Cylinder head		10	102	7
Water pump assembly x Timing chain cover		9.0	92	80 in.*lbf
Timing chain cover x Cylinder block	Bolt A	46	469	34
	Others	21	214	15
Oil pan sub-assembly x Cylinder block		26	265	19
Oil strainer sub-assembly x Oil pan sub-assembly		26	265	19
Oil pan sub-assembly No. 2 x Oil pan sub-assembly		9.0	92	80 in.*lbf
Drain plug x Oil pan sub-assembly No. 2		38	382	28
Crankshaft pulley x crankshaft		260	2,650	192
Cylinder head cover x Cylinder head		9.0	92	80 in.*lbf
Ventilation valve sub-assembly x Cylinder head cover		5.0	51	44 in.*lbf
Camshaft position sensor x Timing chain cover		8.5	87	75 in.*lbf
Crankshaft position sensor x Timing chain cover		8.5	87	75 in.*lbf
Camshaft timing control valve x Timing chain cover		8.0	82	71 in.*lbf
Chain vibration damper No. 2 x Cylinder block		27	270	20
Chain vibration damper No. 3 x Cylinder block		18	185	13
Chain vibration damper No. 4 x Cylinder block		18	185	13
Chain tensioner No. 2 x Cylinder block		18	185	13
Balanceshaft drive gear sub-assembly x Cylinder block		25	255	18
Stud bolt x Oil pan sub-assembly	Bolt A	7.5	76	66 in.*lbf
	Bolt B	3.0	31	27 in.*lbf
Straight screw plug No. 1 x Cylinder head		44	449	32
Straight screw plug No. 2 x Cylinder head		90	918	66
Stud bolt x Cylinder head	Bolt A	3.0	31	27 in.*lbf
	Bolt B	7.5	76	66 in.*lbf
	Bolt C	9.5	97	84 in.*lbf
Screw plug x Cylinder head		30	306	22
Oil nozzle No. 1 sub-assembly x Cylinder block		7.0	71	62 in.*lbf
Water drain cock sub-assembly x Cylinder block		25	250	18
Water Drain cook sub-assembly x Water Drain cook plug		13	130	9
Crankshaft bearing cap x Cylinder block	1st	39	398	29
	2nd	Turn 90°	Turn 90°	Turn 90°
Connecting rod cap x Connecting rod	1st	25	255	18
	2nd	Turn 90°	Turn 90°	Turn 90°
Balanceshaft driven gear No. 1 x No. 1 balanceshaft		36	365	26
Balanceshaft driven gear No. 2 x No. 2 balanceshaft		36	365	26

Part Tightened	N*m	kgf*cm	ft.*lbf
Balanceshaft thrust washer No. 1 x Cylinder block	18	184	13
Balanceshaft thrust washer No. 2 x Cylinder block	18	184	13

TORQUE SPECIFICATIONS

Part Tightened	N*m	kgf*cm	ft.*lbf
Park/neutral position switch x Automatic transmission (For nut)	6.9	70	61 in.*lbf
Park/neutral position switch x Automatic transmission (For bolt)	13	130	9.0
Transmission control cable x Automatic transmission	14	143	10
Engine mounting insulator rear No. 1 x Automatic transmission	65	663	48
Automatic transmission x Engine (For bolt A)	71	720	53
Automatic transmission x Engine (For bolt B)	37	380	27
Torque converter clutch x Drive plate	48	489	35
Oil cooler tube clamp x Engine (For bolt A)	12	122	9.0
Oil cooler tube clamp x Engine (For bolt B)	5.0	50	43 in.*lbf
Oil cooler outlet tube No. 1 x Automatic transmission	34	350	25
Oil cooler inlet tube No. 1 x Automatic transmission	34	350	25
Transmission revolution sensor x Automatic transmission	5.4	55	48 in.*lbf
Drain plug x Oil pan	28	285	21
Transmission wire set bolt x Automatic transmission	5.4	55	48 in.*lbf
Transmission wire clamp x Valve body (A)	11	110	8.0
Transmission wire clamp x Valve body (B)	10	100	7.0
Oil strainer x Valve body	10	100	7.0
Oil pan x Transmission case	4.4	45	39 in.*lbf
Shift solenoid valve S1 x Valve body	6.4	65	56 in.*lbf
Shift solenoid valve S2 x Valve body	10	100	7.0
Shift solenoid valve SR x Valve body	6.4	65	56 in.*lbf
Shift solenoid valve SLU, SL2 x Valve body	6.4	65	56 in.*lbf
Shift solenoid valve SLT, SL1 x Valve body	6.4	65	56 in.*lbf
Valve body x Transmission case	11	110	8.0
Floor shift assembly x Body	14	143	10
Overflow plug x Automatic transmission	20	204	15
Refill plug x Automatic transmission	39	400	29
Frame crossmember sub-assembly No. 3 x Body	40	408	30
Frame crossmember sub-assembly No. 3 x Engine mounting insulator No. 1	19	189	14
Battery x Negative battery terminal	3.9	40	35 in.*lbf
Transmission control cable bracket No. 1 x Automatic transmission	28	286	21
Manifold stay No. 2 x Automatic transmission	40	408	30
Manifold stay x Automatic transmission	40	408	30
Oil with hose cooler x Body	5.0	51	44 in.*lbf
Transmission control cable x Body	5.5	56	49 in.*lbf

TORQUE SPECIFICATIONS

Part tightened	N*m	kgf*cm	ft.*lbf
Manual transmission unit assembly x Engine Bolt A	72	730	53
Manual transmission unit assembly x Engine Bolt B and C	37	379	27
Engine mount insulator rear No. 1 x Manual transmission unit assembly	65	663	48
Frame crossmember No. 3 x Engine mount insulator rear No. 1	19	189	14
Frame crossmember No. 3 x Frame	40	408	30
Starter assembly x Manual transmission unit assembly	37	377	27
Clutch release cylinder assembly x Manual transmission unit assembly	12	122	9
Manifold stay x Manual transmission unit assembly Bolt A	72	730	53
Manifold stay x Manual transmission unit assembly Bolt B	44	449	33
Manifold stay x Exhaust manifold	30	306	22
Exhaust pipe assembly front x Exhaust manifold	43	438	32
Exhaust pipe assembly front x Exhaust tail pipe	48	489	35
Propeller shaft x Rear differential	88	899	65
Propeller shaft center bearing x Frame	36	369	27
Engine under cover sub-assembly No. 2 x Frame	30	306	22
Manual transmission filler plug x Manual transmission case	37	380	27
Manual transmission drain plug x Manual transmission case	37	380	27
Release fork support x Clutch housing	47	480	35
Clutch housing x Manual transmission case	36	370	27
Back up light switch x Manual transmission case	44	450	32
Speedometer sensor x Extension housing	11	112	8
Reverse restrict pin assembly x Extension housing	37	380	27
Floor shift control shift lever retainer x Extension housing	18	185	13
Shift lever housing x Shift and select lever shaft	33	340	25
Manual transmission case x Extension housing	37	380	27
Reverse restrict pin plug x Extension housing	18.5	189	14
Oil receiver pipe x Extension housing	11	112	8
Front bearing retainer x Manual transmission case	46.5	168	12
Shift detent ball spring seat x Intermediate plate	18.5	189	14
Shift fork set bolt x Shift fork shaft	195	199	14
Reverse shift arm bracket x Intermediate plate	18	185	13
Output shaft rear bearing retainer x Intermediate plate	18	185	13

TORQUE SPECIFICATIONS

Part tightened	N*m	kgf*cm	ft.*lbf
Manual transmission unit assembly x Engine Bolt A	72	730	53
Manual transmission unit assembly x Engine Bolt B and C	37	379	27
Engine mount insulator rear No. 1 x Manual transmission unit assembly	65	663	48
Frame crossmember No. 3 x Engine mount insulator rear No. 1	19	189	14
Frame crossmember No. 3 x Frame	40	408	30
Starter assembly x Manual transmission unit assembly	37	377	27
Clutch release cylinder assembly x Manual transmission unit assembly	12	122	9
Manifold stay x Manual transmission unit assembly Bolt A	72	730	53
Manifold stay x Manual transmission unit assembly Bolt B	44	449	33
Manifold stay x Exhaust manifold	30	306	22
Exhaust pipe assembly front x Exhaust manifold	43	438	32
Exhaust pipe assembly front x Exhaust tail pipe	48	489	35
Propeller shaft x Rear differential	88	899	65
Propeller shaft center bearing x Frame	36	369	27
Propeller shaft assembly front x Front differential	88	899	65
Engine under cover sub-assembly No. 2 x Frame	30	306	22
Manual transmission unit assembly x Transfer	24	240	17
Manual transmission filler plug x Manual transmission case	37	380	27
Manual transmission drain plug x Manual transmission case	37	380	27
Release fork support x Clutch housing	47	480	35
Clutch housing x Manual transmission case	36	370	27
Back up light switch x Manual transmission case	44	450	32
Reverse restrict pin assembly x Transfer adaptor	37	380	27
Floor shift control shift lever retainer x Transfer adaptor	18	185	13
Shift lever housing x Shift and select lever shaft	33	340	25
Manual transmission case x Transfer adaptor	37	380	27
Reverse restrict pin plug x Transfer adaptor	18.5	189	14
Front bearing retainer x Manual transmission case	46.5	168	12
Shift detent ball spring seat x Intermediate plate	18.5	189	14
Shift fork set bolt x Shift fork shaft	195	199	14
Reverse shift arm bracket x Intermediate plate	18	185	13
Output shaft rear bearing retainer x Intermediate plate	18	185	13

TORQUE SPECIFICATIONS

Part tightened	N*m	kgf*cm	ft.*lbf
Transmission filler plug x Manual transmission	37	377	27
Manual transmission case cover x Manual transmission	12	117	8.5
Manual transmission x Engine for bolt A	72	730	53
Manual transmission x Engine for bolt B	37	380	28
Manual transmission x Engine mounting insulator rear No. 1	65	663	48
Frame crossmember sub-assembly No. 3 x Body	40	408	30
Frame crossmember sub-assembly No. 3 x Manual transmission	19	189	14
Manifold stay x Manual transmission	40	408	30
Manifold stay No. 2 x Manual transmission	40	408	30
Battery x Negative battery terminal cable	3.9	40	35 in.*lbf
Gear shift fork No. 2 x Gear shift fork shaft No. 2	20	199	14
Gear shift fork No. 3 x Gear shift fork shaft No. 3	20	199	14
Transmission front case x Plug	39	400	29
Transmission front case x Interlock bracket	21	214	15
Transmission front case x Back up light switch	44	449	33
Shift & select lever x Shift & select lever shaft	33	340	25
Transmission middle case x Drain plug	37	377	27
Transmission front case x Transmission middle case	40	408	30
Reverse idler gear shaft bolt x Reverse idler gear shaft	28	286	21
Transmission oil separator x Transmission middle case	8.5	87	75 in.*lbf
Bearing lock plate x Transmission rear case	11	115	8.3
Transmission rear case x Filler plug	37	377	27
Transmission rear case x Transmission middle case	40	408	30
Transmission rear case x Shift detent ball plug	25	250	18
Transmission rear case x Transmission extension housing	29	296	21
Speedometer x Transmission extension housing	13	133	10
Shift lever housing x Shift & select lever shaft	33	340	25
Floor shift control shift lever retainer sub-assembly x Transmission rear case	20	204	15

TORQUE SPECIFICATIONS

Part tightened	N*m	kgf*cm	ft.*lbf
Transfer x Automatic transmission assembly	24	240	17
Transfer case plug x Transfer case front	18.6	190	14
Oil pump body x Case front	7.5	76	66 in.*lbf
Oil separator x Case front	7.5	76	66 in.*lbf
Transfer indicator switch No.1	37	377	27
Shift actuator assembly x Case rear	20	204	15
Shift shaft stopper set bolt x Transfer case rear	19	194	14
Shift detent ball spring plug x Transfer gear shift fork	18.6	190	14
Case front x Case rear	28	286	21
Extension housing x Case rear	12	112	9.0
Speedometer driven gear assembly w/ sensor set bolt x Extension housing	11.5	117	8.0
Front and rear companion flange lock nut	118	1,203	87
Front bearing retainer x Case front	11.5	117	8.0
Case cover x Case front	18	184	13
Case lower protector x Case front	18	184	13
Transfer case plug Transfer case rear	37	377	27

TORQUE SPECIFICATIONS

Part tightened	N*m	kgf*cm	ft.*lbf
Front differential carrier assembly (4WD)			
Drive pinion x Companion flange	370	3,773	273
No, 1 Differential front mounting support x Frame	137	1,400	101
No, 2 Differential front mounting support x Frame	137	1,400	101
Differential carrier assembly front x Differential vacuum actuator assembly	21	210	15
No, 2 Differential front mounting support x Front differential tube assembly	110	1,122	81
No, 1 Differential front mounting support x Front differential carrier assembly	186	1,899	138
No, 2 Differential front mounting support x Front differential carrier assembly	160	1,631	118
No, 3 Differential front mounting support x Front differential carrier assembly	108	1,100	80
No. 1 Front differential mount nut	87	889	64
Ring gear x Differential case	97	984	71
Front differential carrier assembly x Breather tube	13	129	8
Front differential carrier assembly x Side bearing retainer	50	510	37
Front differential carrier assembly x Differential case	110	1,121	81
No.1 Engine under cover x frame	30	306	22
No. 2 Engine under cover x frame	30	306	22
Negative battery terminal	3.9	40	35 in.*lbf
Front wheel	113	1,152	83
Rear Differential			
Differential carrier	(w/ differential lock)		
Drive pinion x Companion flange	370	3,773	273
Differential carrier x Axle housing	45	459	33
Differential case x Ring gear	97	985	71
Bearing cap x Differential carrier	85	870	63
Adjusting nut lock x Bearing cap	13	130	9
RH differential case x LH differential case	47	480	35
Screw x Differential carrier	22	220	16
Actuator x Differential carrier	27	270	20
Indicator switch	40	410	30
Shaft retainer x Differential case	24	240	17
Differential carrier			
Differential case x Ring gear	451	4,600	333
Differential carrier x Axle housing	45	459	33
Bearing cap x Differential carrier (1st)	113	1,152	83
RH differential case x LH differential case (LSD)	47	480	35
Differential case x differential ring gear	125	1,270	92
Negative battery terminal	3.9	40	35 in.*lbf

TORQUE SPECIFICATIONS

2WD

Part Tightened	N*m	kgf*cm	ft.*lbf
Tie rod end lock nut	55.5	566	41
Front suspension support sub-assembly x Shock absorber assembly front	27	275	20
Front shock absorber with coil spring x Frame	64	653	47
Front Wheel	113	1,152	83
Shock absorber assembly front x Front suspension lower arm	83	846	61
Battery negative terminal x Battery	3.9	40	35 in.*lbf
Front suspension upper arm x Steering knuckle	110	1,122	81
Front flexible hose x Shock absorber assembly front	32	326	24
Skid control sensor wire x Front suspension upper arm	5.0	51	44 in.*lbf
Skid control sensor wire x Steering knuckle	5.0	51	44 in.*lbf
Front suspension upper arm x Frame	82	836	60
Front spring bumper x Front suspension lower arm	31	316	23
Front suspension lower arm x Front lower ball joint attachment	140	1,428	103
Front lower ball joint attachment x Steering knuckle	160	1,631	118
Front suspension lower arm x Suspension cross member	210	2,141	155
Front stabilizer bracket No. 1 x Frame	21	214	16
Front stabilizer link assembly x Front stabilizer bar	19	194	14
Front stabilizer link assembly x Front suspension lower arm	69	704	51
Rear spring u bolt x Spring u bolt seat sub-assembly	50	510	37
Rear spring bumper No. 1 x Frame	15	153	11
Parking brake cable assembly No. 3 x Rear leaf spring	12.5	127	9
Rear Wheel	113	1,152	83
Rear leaf spring x Rear spring shackle sub-assembly No. 2	120	1,224	89
Rear leaf spring x Frame	120	1,224	89
Rear spring shackle sub-assembly No. 2 x Frame	120	1,224	89
Rear shock absorber x Spring u bolt seat sub-assembly	100	1,020	74
Rear shock absorber x Frame	20	204	15
Rear stabilizer bracket cover x Rear axle housing	27	275	20
Rear stabilizer link assembly x Rear stabilizer bar	69	704	51
Rear stabilizer link assembly x Frame	69	704	51

4WD and Pre-Runner

Part Tightened	N*m	kgf*cm	ft.*lbf
Tie rod end lock nut	55.5	566	41
Front suspension support sub-assembly x Shock absorber assembly front	27	275	20
Front shock absorber with coil spring x Frame	64	653	47
Front stabilizer link assembly x Steering knuckle	70	714	52
Engine under cover sub-assembly No. 1 x Frame	30	306	22
Front Wheel	113	1,152	83
Shock absorber assembly front x Front suspension lower arm	83	846	61
Front suspension upper arm x Steering knuckle	110	1,122	81
Skid control sensor wire x Front suspension upper arm	12.5	127	9
Skid control sensor wire x Steering knuckle	12.5	127	9
Front suspension upper arm x Frame	115	1,173	85
Front suspension lower arm x Front lower ball joint attachment	140	1,428	103
Front lower ball joint attachment x Steering knuckle	160	1,631	118

Part Tightened	N*m	kgf*cm	ft.*lbf
Front suspension lower arm x Suspension cross member	135	1,377	100
Front stabilizer bracket No. 1 x Frame	40	408	30
Front stabilizer link assembly x Front stabilizer bar	70	714	52
Rear spring u bolt x Spring u bolt seat sub-assembly	50	510	37
Parking brake cable assembly No. 3 x Rear leaf spring	12.5	127	9
Rear Wheel	113	1,152	83
Rear leaf spring x Rear spring shackle sub-assembly No. 2	120	1,224	89
Rear leaf spring x Frame	120	1,224	89
Rear spring shackle sub-assembly No. 2 x Frame	120	1,224	89
Rear shock absorber x Rear axle housing	100	1,020	74
Rear shock absorber x Frame	20	204	15

REMOVAL

1. **DISCONNECT CABLE FROM NEGATIVE BATTERY TERMINAL**
2. **REMOVE CONSOLE UPPER REAR PANEL SUB-ASSEMBLY (for Separate Seat Type) (See page IP-9)**
3. **REMOVE REAR CONSOLE BOX ASSEMBLY (for Separate Seat Type) (See page IP-10)**
4. **REMOVE FRONT CONSOLE BOX (for Separate Seat Type) (See page IP-11)**
5. **REMOVE FRONT CONSOLE BOX (for Bench Seat Type) (See page IP-11)**
6. **REMOVE SHIFT LEVER BOOT ASSEMBLY**
   (a) Remove the 2 screws A, 2 clips B and floor shift lever assembly.

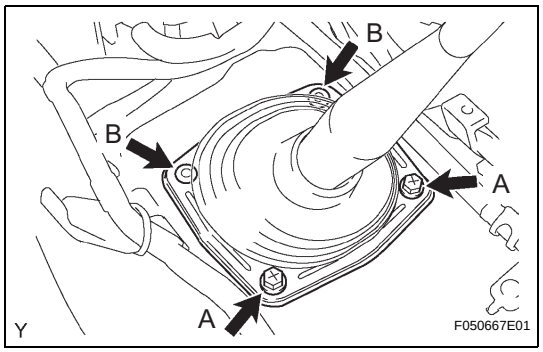

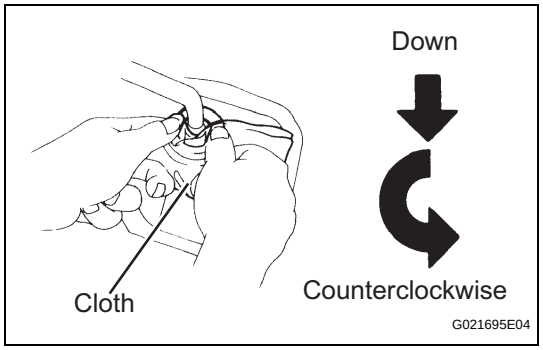

7. **REMOVE FLOOR SHIFT SHIFT LEVER ASSEMBLY**
   (a) Cover the shift lever cap with a cloth.
   (b) While pressing down on the shift lever cap, turn it counterclockwise to remove.
   (c) Pull out the shift lever.
8. **REMOVE NO. 2 ENGINE UNDER COVER SUB-ASSEMBLY**
   (a) Remove the 4 bolts and engine under cover No. 2.
9. **DRAIN MANUAL TRANSMISSION OIL**
   Torque: 37 N*m (377 kgf*cm, 27 ft.*lbf)
10. **REMOVE FRONT EXHAUST PIPE ASSEMBLY (See page EX-2)**
11. **REMOVE FRONT PROPELLER SHAFT ASSEMBLY (See page PR-16)**
12. **REMOVE PROPELLER WITH CENTER BEARING SHAFT ASSEMBLY (for Access Cab) (See page PR-27)**
13. **REMOVE PROPELLER SHAFT ASSEMBLY (for Regular Cab) (See page PR-22)**
14. **REMOVE STARTER ASSEMBLY (See page ST-5)**

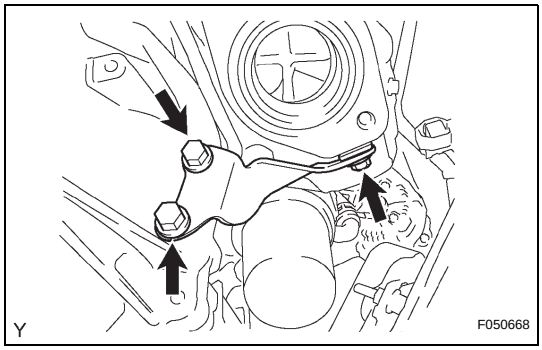

15. REMOVE MANIFOLD STAY

(a) Remove the 3 bolts and manifold stay.

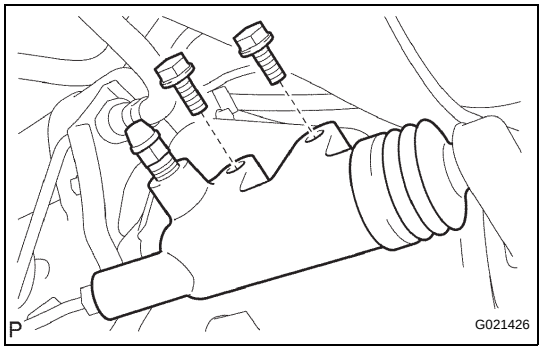

16. SEPARATE CLUTCH RELEASE CYLINDER ASSEMBLY

(a) Remove the 2 bolts and separate the clutch release cylinder assembly.

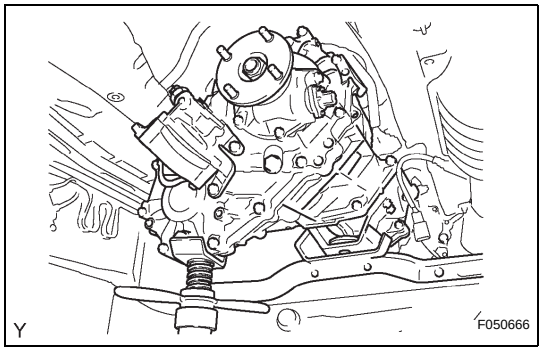

17. REMOVE NO. 3 FRAME CROSSMEMBER SUB-ASSEMBLY

(a) Support the transfer with a support stand.

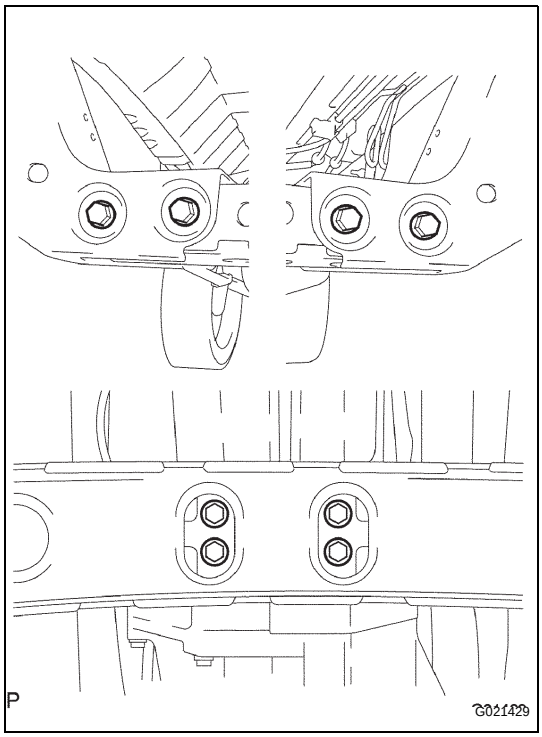

(b) Remove the 4 bolts from the engine rear mounting.

(c) Remove the 4 bolts, nuts and frame crossmember sub- assembly No. 3.

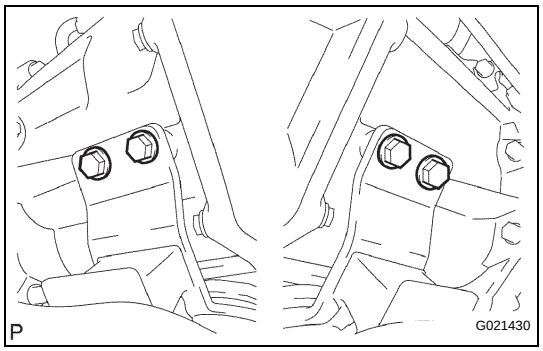

18. REMOVE NO. 1 ENGINE MOUNTING INSULATOR REAR

(a) Remove the 4 bolts and engine mounting insulator rear No. 1.
(b) Using a transmission jack, support the transmission unit assembly.
(c) Remove the support stand from the rear side of the transfer.

19. DISCONNECT WIRE HARNESS

(a) Tilt the transmission assembly downward.
NOTICE:
Make sure that the cooling fan does not come in contact with the fan shroud.
(b) Disconnect the back-up lamp switch connector.
(c) Disconnect the speed sensor connector.
(d) Disconnect the 2 transfer indicator switch connectors.
(e) Disconnect the transfer shift actuator motor connector.
(f) Disconnect the wire harness clamp from the transmission w/ transfer assembly.

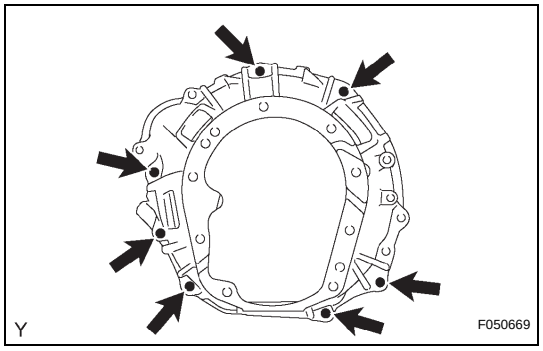

20. REMOVE MANUAL TRANSMISSION WITH TRANSFER

(a) Remove the 7 bolts and remove the transmission assembly.

21. REMOVE TRANSFER ASSEMBLY (See page TF-14)

MT

REMOVAL

1. **DISCONNECT CABLE FROM NEGATIVE BATTERY TERMINAL**
2. **REMOVE CONSOLE UPPER REAR PANEL SUB-ASSEMBLY (See page IP-9)**
3. **REMOVE REAR CONSOLE BOX ASSEMBLY (See page IP-10)**
4. **REMOVE SHIFT LEVER KNOB SUB-ASSEMBLY**
5. **REMOVE FRONT CONSOLE BOX (See page IP-11)**
6. **REMOVE SHIFT LEVER BOOT ASSEMBLY**
   (a) Remove the 2 screws and 2 clips, then remove the shift lever boot.

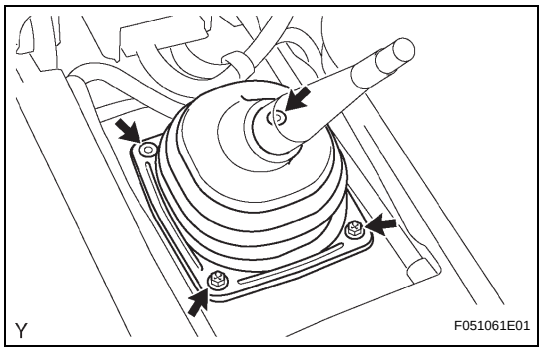

7. **REMOVE FLOOR SHIFT SHIFT LEVER ASSEMBLY**
   (a) Separate the shift lever cap boot from the manual transmission.

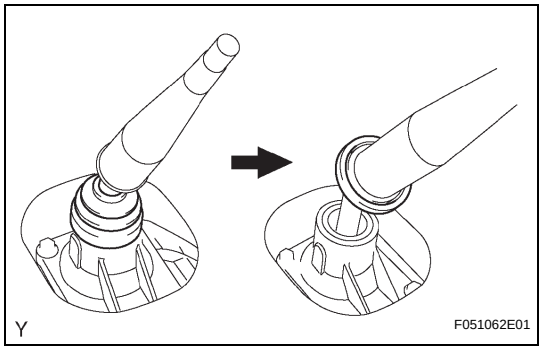

   (b) Cover the shift lever cap with a cloth.
   (c) Pressing down on the shift lever cap, turn it counterclockwise to remove the shift lever.
   (d) Pull out the shift lever.

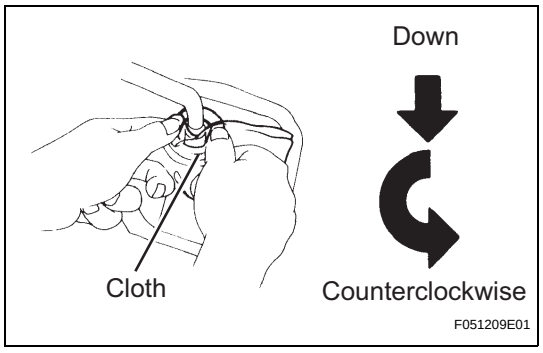

8. **REMOVE NO. 2 ENGINE UNDER COVER**
9. **DRAIN MANUAL TRANSMISSION OIL**
   (a) Remove the drain plug, gasket and then drain the manual transmission oil.
   (b) Install a new gasket and the drain plug.
   Torque: 37 N*m (377 kgf*cm, 27 ft.*lbf)
10. **REMOVE EXHAUST PIPE (See page EX-3)**
11. **REMOVE PROPELLER WITH CENTER BEARING SHAFT ASSEMBLY (See page PR-8)**

MT

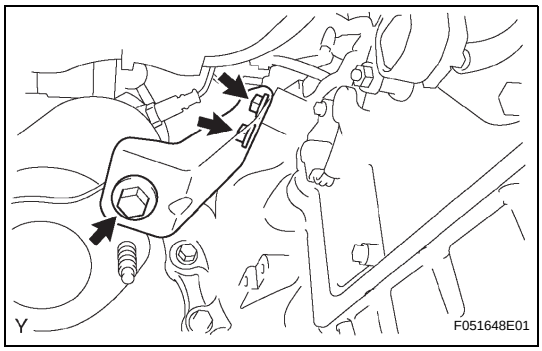

12. REMOVE NO. 2 MANIFOLD STAY

(a) Remove the 3 bolts and manifold stay No. 2.

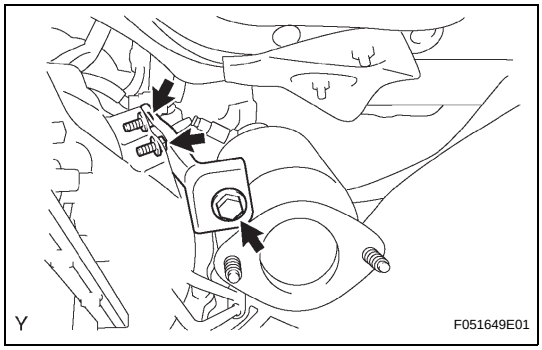

13. REMOVE MANIFOLD STAY

(a) Remove the 3 bolts and manifold stay.

14. REMOVE STARTER ASSEMBLY (See page ST-5)

15. REMOVE NO. 1 CLUTCH HOUSING COVER (See page CL-21)

16. REMOVE CLUTCH RELEASE CYLINDER ASSEMBLY (See page CL-21)

17. REMOVE CLUTCH ACCUMULATOR ASSEMBLY (See page CL-26)

18. SUPPORT MANUAL TRANSMISSION UNIT ASSEMBLY

(a) Support the manual transmission with a transmission jack.

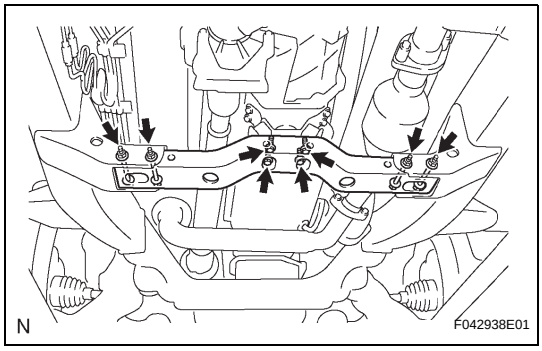

19. REMOVE NO.3 FRAME CROSSMEMBER SUB-ASSEMBLY

(a) Remove the 4 bolts on the frame crossmember sub-assembly No. 3.

(b) Remove the 4 nuts, 4 bolts and frame crossmember sub-assembly No. 3.

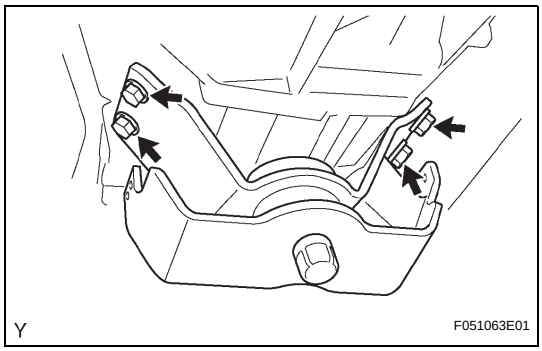

20. REMOVE NO. 1 ENGINE MOUNTING INSULATOR REAR

(a) Remove the 4 bolts and the engine mounting insulator rear No. 1.

21. DISCONNECT CONNECTOR

(a) Tilt down the transmission.

(b) Disconnect the speedometer sensor connector.

(c) Disconnect the back up lamp switch connector.

22. DISCONNECT WIRE HARNESS

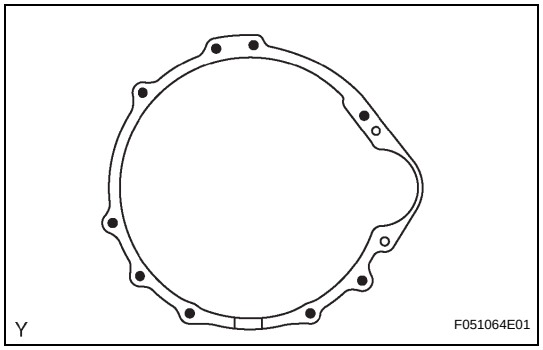

23. REMOVE MANUAL TRANSMISSION UNIT ASSEMBLY

(a) Remove the 9 bolts.

(b) Separate and remove the manual transmission.

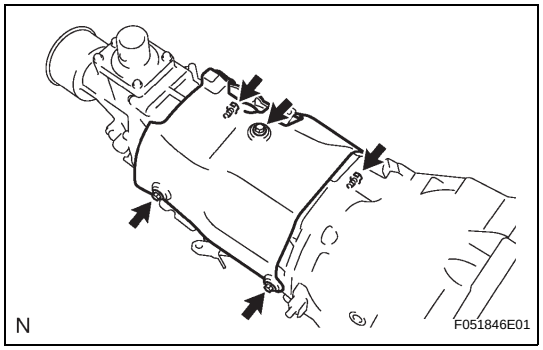

24. REMOVE MANUAL TRANSMISSION CASE COVER SUB-ASSEMBLY

(a) Remove the 5 bolts and manual transmission case cover.

MT

INSTALLATION

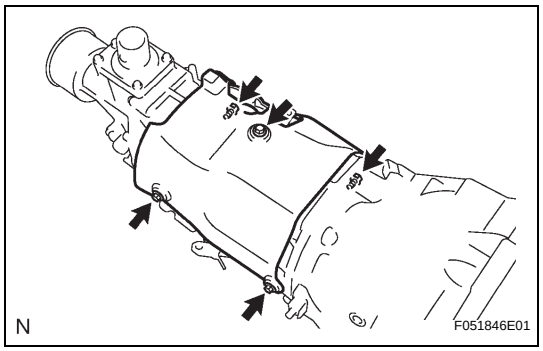

1. INSTALL MANUAL TRANSMISSION CASE COVER SUB-ASSEMBLY

(a) Install the manual transmission case cover with the 5 bolts.

Torque: 12 N*m (117 kgf*cm, 8.5 ft.*lbf)

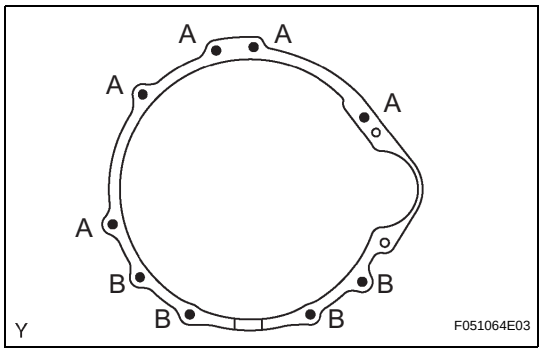

2. INSTALL MANUAL TRANSMISSION UNIT ASSEMBLY

(a) Install the manual transmission with the 9 bolts.

Torque: 72 N*m (730 kgf*cm, 53 ft.*lbf) for bolt A
37 N*m (380 kgf*cm, 28 ft.*lbf) for bolt B

3. CONNECT WIRE HARNESS

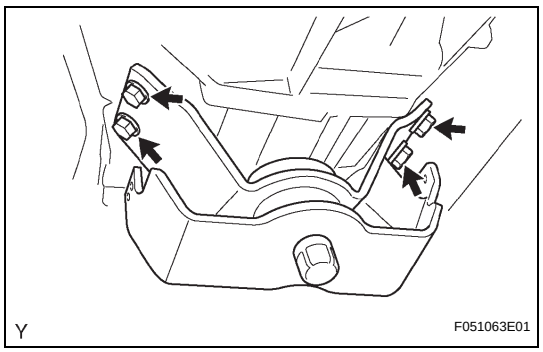

4. INSTALL NO. 1 ENGINE MOUNTING INSULATOR REAR

(a) Install the engine mounting insulator rear No. 1 with the 4 bolts.

Torque: 65 N*m (663 kgf*cm, 48 ft.*lbf)

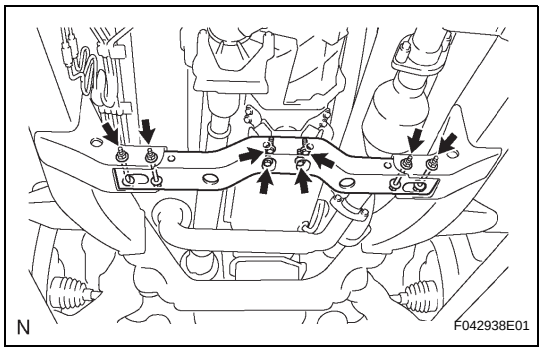

5. **INSTALL NO.3 FRAME CROSSMEMBER SUB-ASSEMBLY**
   (a) Install the frame crossmember sub-assembly No. 3 with the 4 bolts and 4 nuts.
   Torque: 40 N*m (408 kgf*cm, 30 ft.*lbf)
   (b) Install the frame crossmember sub-assembly No. 3 with the 4 bolts.
   Torque: 19 N*m (189 kgf*cm, 14 ft.*lbf)
6. **INSTALL CLUTCH ACCUMULATOR ASSEMBLY (See page CL-26)**
7. **INSTALL CLUTCH RELEASE CYLINDER ASSEMBLY (See page CL-22)**
8. **INSTALL NO. 1 CLUTCH HOUSING COVER (See page CL-22)**
9. **INSTALL STARTER ASSEMBLY (See page ST-11)**
10. **INSTALL MANIFOLD STAY**
    (a) Install the manifold stay with the 3 bolts.
    Torque: 40 N*m (408 kgf*cm, 30 ft.*lbf)

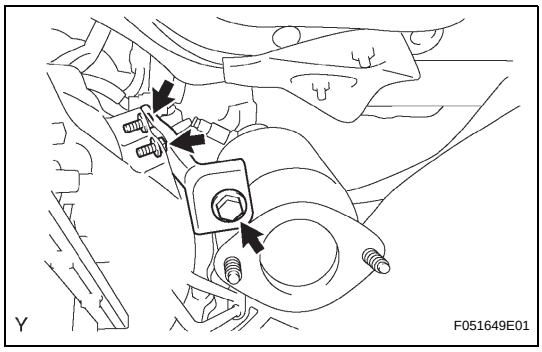

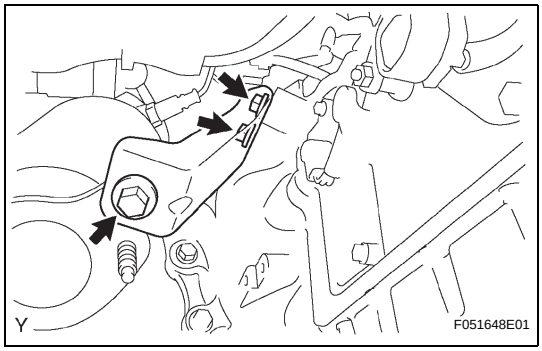

11. **INSTALL NO. 2 MANIFOLD STAY**
    (a) Install the manifold stay No. 2 with the 3 bolts.
    Torque: 40 N*m (408 kgf*cm, 30 ft.*lbf)
12. **INSTALL PROPELLER WITH CENTER BEARING SHAFT ASSEMBLY (See page PR-13)**
13. **INSTALL EXHAUST PIPE (See page EX-3)**
14. **ADD MANUAL TRANSMISSION OIL**
15. **ADJUST MANUAL TRANSMISSION OIL (See page MT-2)**
16. **INSTALL NO.2 ENGINE UNDER COVER**
17. **INSTALL FLOOR SHIFT SHIFT LEVER ASSEMBLY**
    (a) Apply MP grease to the tip of the shift lever.

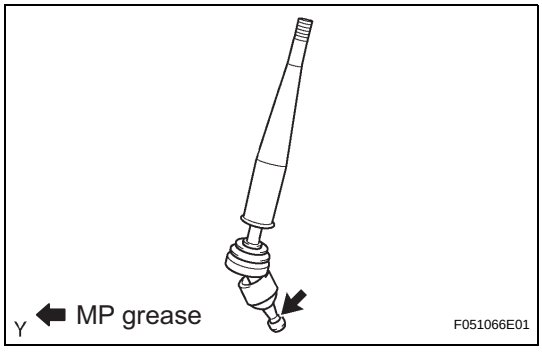

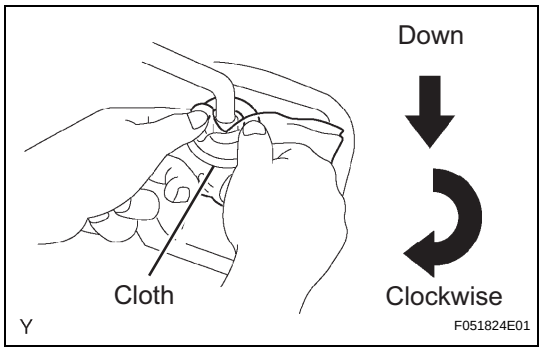

(b) Cover the shift lever cap with a cloth.
(c) Pressing down on the shift lever cap, turn it clockwise to install the shift lever.

18. INSTALL SHIFT LEVER BOOT ASSEMBLY
(a) Install the shift lever boot with the 2 screws and 2 clips.

19. INSTALL FRONT CONSOLE BOX (See page IP-23)

20. INSTALL SHIFT LEVER KNOB SUB-ASSEMBLY

21. INSTALL REAR CONSOLE BOX ASSEMBLY (See page IP-24)

22. INSTALL CONSOLE UPPER REAR PANEL SUB-ASSEMBLY (See page IP-25)

23. CONNECT CABLE TO NEGATIVE BATTERY TERMINAL
Torque: 3.9 N*m (40 kgf*cm, 35 in.*lbf)

MT

REMOVAL

1. **DISCONNECT CABLE FROM NEGATIVE BATTERY TERMINAL**
2. **REMOVE CONSOLE UPPER REAR PANEL SUB-ASSEMBLY (See page IP-9)**
3. **REMOVE REAR CONSOLE BOX ASSEMBLY (See page IP-10)**
4. **REMOVE SHIFT LEVER KNOB SUB-ASSEMBLY**
5. **REMOVE FRONT CONSOLE BOX (See page IP-11)**
6. **REMOVE SHIFT LEVER BOOT ASSEMBLY**
   (a) Remove the 2 screws and 2 clips, then remove the shift lever boot.

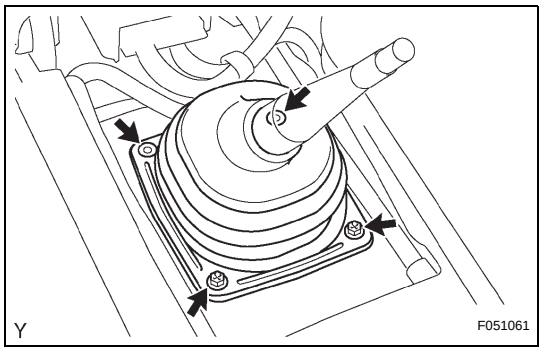

7. **REMOVE FLOOR SHIFT SHIFT LEVER ASSEMBLY**
   (a) Separate the shift lever cap boot from the manual transmission.

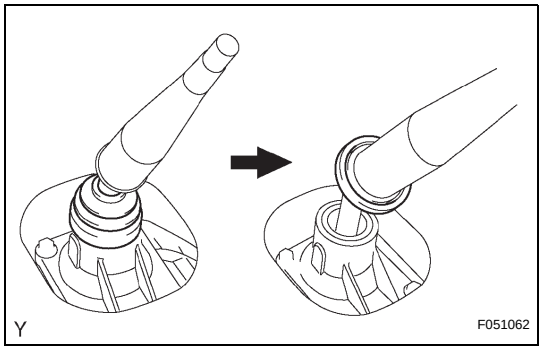

   (b) Cover the shift lever cap with a cloth.
   (c) Pressing down on the shift lever cap, turn it counterclockwise to remove the shift lever.
   (d) Pull out the shift lever.

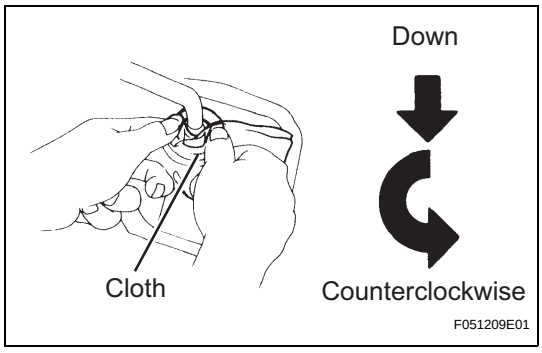

8. **REMOVE NO. 2 ENGINE UNDER COVER**
9. **DRAIN MANUAL TRANSMISSION OIL**
   (a) Remove the drain plug, gasket and then drain the manual transmission oil.
   (b) Install a new gasket and drain plug.
   Torque: 37 N*m (377 kgf*cm, 27 ft.*lbf)
10. **REMOVE EXHAUST PIPE ASSEMBLY (See page EX-3)**
11. **REMOVE FRONT PROPELLER SHAFT ASSEMBLY (See page PR-16)**
12. **REMOVE PROPELLER WITH CENTER BEARING SHAFT ASSEMBLY (See page PR-27)**

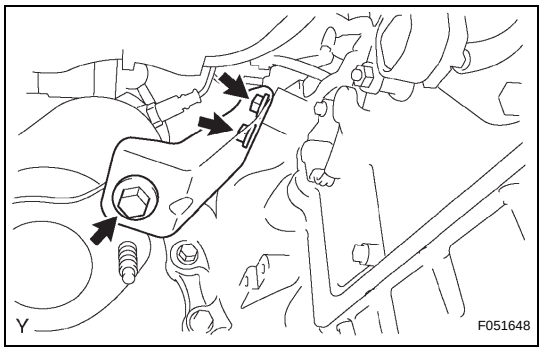

13. REMOVE NO. 2 MANIFOLD STAY

(a) Remove the 3 bolts and manifold stay No. 2.

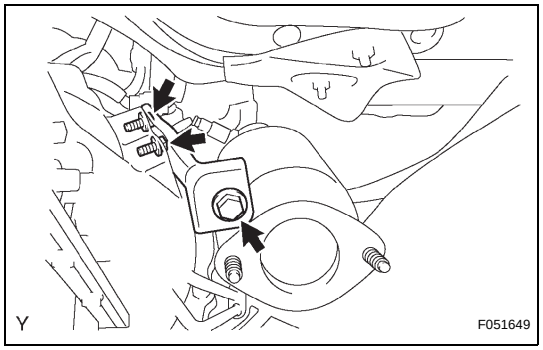

14. REMOVE MANIFOLD STAY

(a) Remove the 3 bolts and manifold stay.

15. REMOVE STARTER ASSEMBLY (See page ST-13)

16. REMOVE NO. 1 CLUTCH HOUSING COVER (See page CL-24)

17. REMOVE CLUTCH RELEASE CYLINDER ASSEMBLY (See page CL-24)

18. REMOVE CLUTCH ACCUMULATOR ASSEMBLY (See page CL-28)

19. SUPPORT MANUAL TRANSMISSION WITH TRANSFER

(a) Support the manual transmission with a transmission jack.

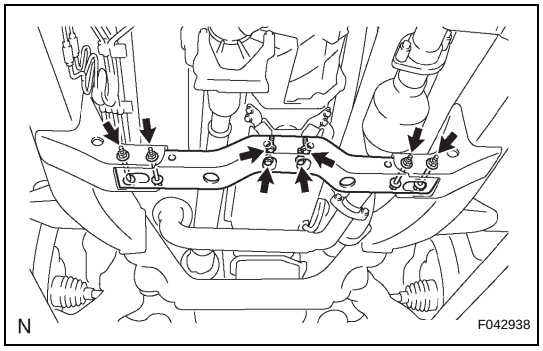

20. REMOVE NO. 3 FRAME CROSSMEMBER SUB-ASSEMBLY

(a) Remove the 4 bolts on the frame crossmember sub-assembly No. 3.

(b) Remove the 4 nuts, 4 bolts and frame crossmember sub-assembly No. 3.

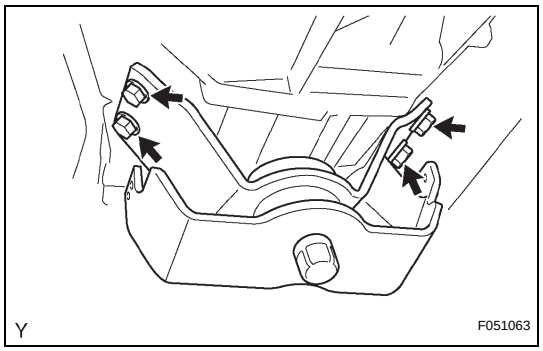

21. REMOVE NO. 1 ENGINE MOUNTING INSULATOR REAR

(a) Remove the 4 bolts and engine mounting insulator rear from the manual transmission.

22. DISCONNECT CONNECTOR

(a) Tilt down the transmission.

(b) Disconnect the transfer shift actuator connector.

(c) Disconnect the transfer indicator switch No. 1 connector.

(d) Disconnect the transfer indicator switch No. 2 connector.

(e) Disconnect the speedometer sensor connector.

(f) Disconnect the back up lamp switch connector.

23. DISCONNECT WIRE HARNESS

MT

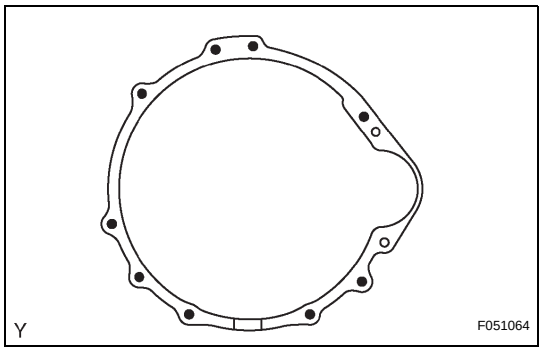

24. REMOVE MANUAL TRANSMISSION WITH TRANSFER

(a) Remove the 9 bolts.

(b) Separate and remove the manual transmission.

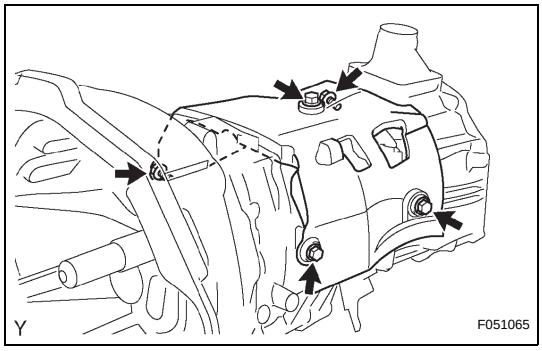

25. REMOVE MANUAL TRANSMISSION CASE COVER SUB-ASSEMBLY

(a) Remove the 5 bolts and manual transmission case cover.

26. REMOVE TRANSFER ASSEMBLY (See page TF-14)

REMOVAL

1. **DISCONNECT CABLE FROM NEGATIVE BATTERY TERMINAL**
2. **DRAIN TRANSFER OIL**
3. **REMOVE TRANSFER CASE LOWER PROTECTOR**
   (a) Remove the 4 bolts and remove the transfer case lower protector.

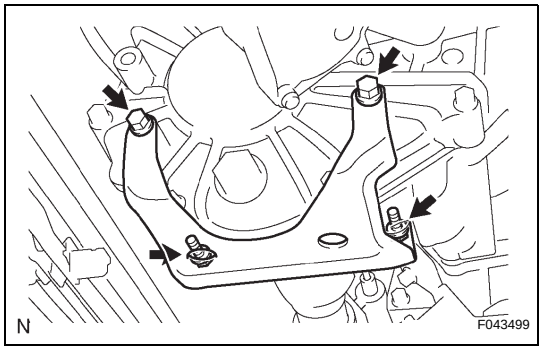

4. **REMOVE MANUAL TRANSMISSION ASSEMBLY (for R155F)**
   (See page MT-8)
5. **REMOVE MANUAL TRANSMISSION ASSEMBLY (for RA60F)**
   (See page MT-6)
6. **REMOVE AUTOMATIC TRANSMISSION ASSEMBLY (for A750F)**
   (See page AT-162)
7. **REMOVE TRANSFER ASSEMBLY**
   (a) Remove the 8 transfer adaptor rear mounting bolts.
   (b) Pull the transfer straight up and remove it from the transmission.
   NOTICE:
   Take care not to damage the adaptor rear oil seal with the transfer input gear spline.

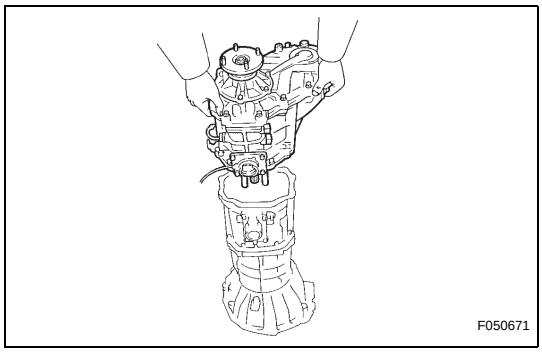

DISASSEMBLY

1. **REMOVE TRANSFER CASE COVER SUB-ASSEMBLY**
   (a) Remove the 4 bolts and the case cover sub-assembly.

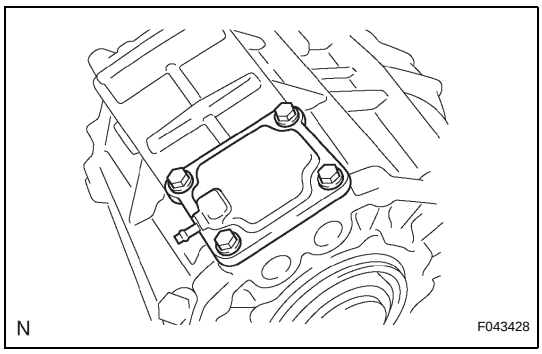

2. **REMOVE BREATHER OIL DEFLECTOR SUB-ASSEMBLY**
3. **REMOVE TRANSFER RH BEARING RETAINER SUB-ASSEMBLY**
   (a) Remove the 5 bolts and the front bearing retainer sub-assembly.
   HINT:
   If necessary, tap the retainer sub-assembly with a plastic hammer to remove it.

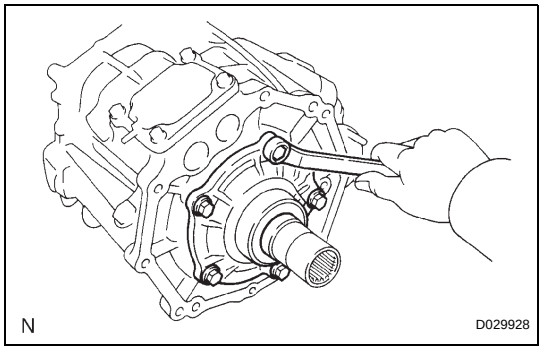

4. **REMOVE TRANSFER RH BEARING RETAINER OIL SEAL (for R155F/A750F)**
   (a) Using a screwdriver and hammer, remove the transfer RH bearing retainer oil seal.

5. REMOVE TRANSFER RH BEARING RETAINER OIL SEAL (for RA60F)

(a) Using a screwdriver and hammer, remove the 2 transfer RH bearing retainer oil seals.

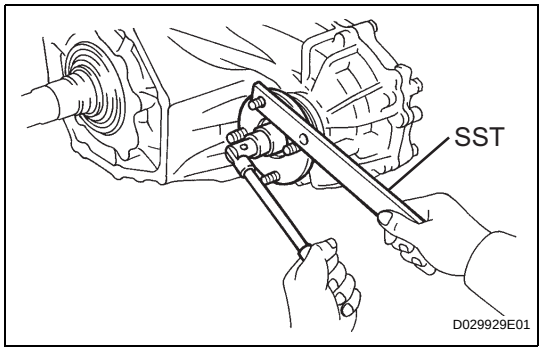

6. REMOVE OUTPUT SHAFT COMPANION FLANGE SUB-ASSEMBLY

(a) Using a chisel and hammer, loosen the staked part of the output shaft companion flange lock nut.

(b) Using SST to hold the output shaft companion flange, remove the output shaft companion flange lock nut.

SST 09330-00021

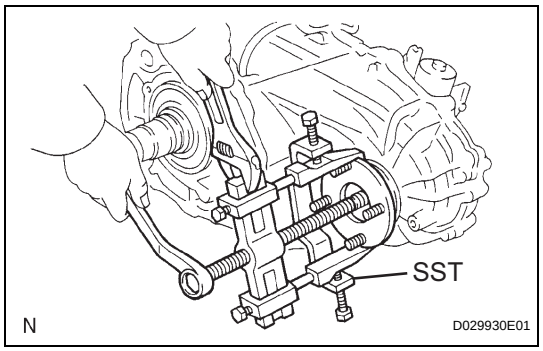

(c) Using SST, remove the output shaft companion flange sub-assembly (front side).

SST 09950-40011 (09951-04020, 09952-04010, 09953-04030, 09954-04010, 09955-04051, 09957-04010, 09958-04011)

7. REMOVE TRANSFER OUTPUT SHAFT COMPANION FLANGE OIL SEAL

(a) Using a screwdriver and hammer, remove the companion flange oil seal.

8. REMOVE OUTPUT SHAFT COMPANION FLANGE SUB-ASSEMBLY

(a) Remove the rear output shaft companion flange sub-assembly using the same procedure as for the front output shaft companion flange sub-assembly (rear side).

SST 09330-00021, 09950-40011 (09951-04020, 09952-04010, 09953-04030, 09954-04010, 09955-04051, 09957-04010, 09958-04011)

9. REMOVE TRANSFER OUTPUT SHAFT COMPANION FLANGE OIL SEAL

(a) Using a screwdriver and hammer, remove the companion flange oil seal.

10. REMOVE SPEEDOMETER DRIVEN GEAR SUB-ASSEMBLY (for R155F/RA60F)

(a) Remove the bolt and speedometer driven gear w/ sensor.

11. REMOVE SPEEDOMETER DRIVEN HOLE COVER SUB-ASSEMBLY (for A750F)

(a) Remove the bolt and speedometer hole cover sub-assembly.

TF

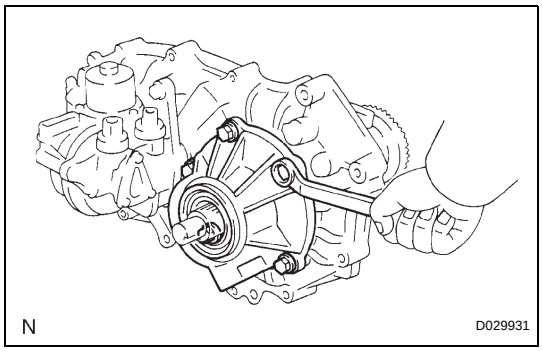

12. REMOVE TRANSFER EXTENSION HOUSING SUB-ASSEMBLY FRONT

(a) Remove the 5 bolts and extension housing sub-assembly.
HINT:
If necessary, tap the extension housing sub-assembly with a plastic hammer to remove it.

13. REMOVE TRANSFER EXTENSION HOUSING TYPE T OIL SEAL

(a) Using a screwdriver and hammer, remove the type T oil seal.

14. REMOVE TRANSFER OUTPUT WASHER

15. REMOVE TRANSFER SPEEDOMETER DRIVE GEAR

(a) Remove the speedometer drive gear.
(b) Using a magnetic finger, remove the speedometer drive gear ball.

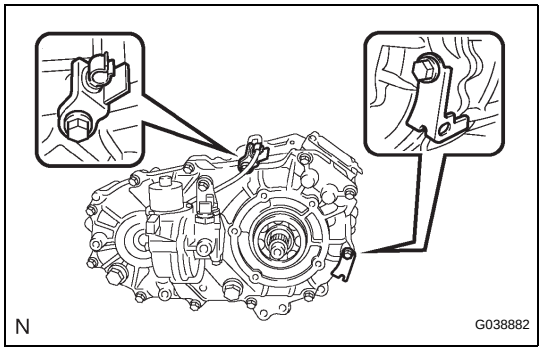

16. REMOVE TRANSFER REAR CASE

(a) Remove the 12 bolts and 2 brackets.
(b) Remove the transfer case rear.
HINT:
If necessary, tap the transfer case rear with a plastic hammer to remove it.

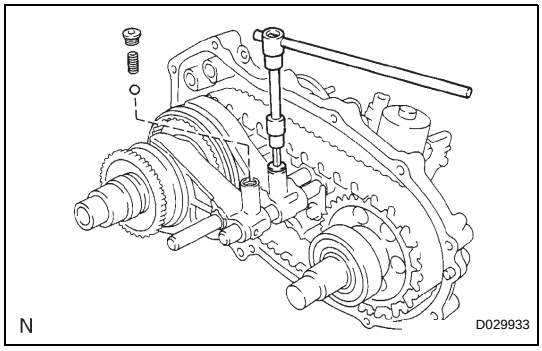

17. REMOVE TRANSFER FRONT DRIVE SHIFT FORK SHAFT

(a) Using a hexagon wrench (6 mm), remove the 2 shift detent ball spring plugs, 2 shift fork compression springs and 2 shift detent balls.

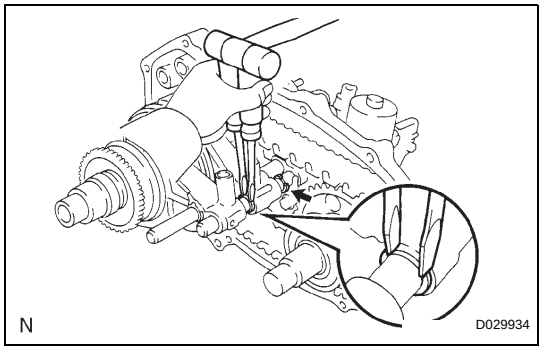

(b) Using 2 screwdrivers and a hammer, tap out the 2 shift fork shaft snap rings.

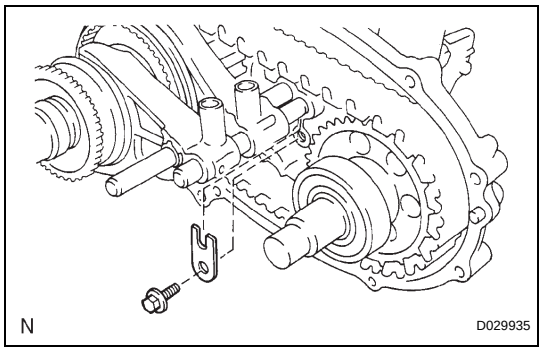

(c) Remove the bolt and shift shaft stopper.

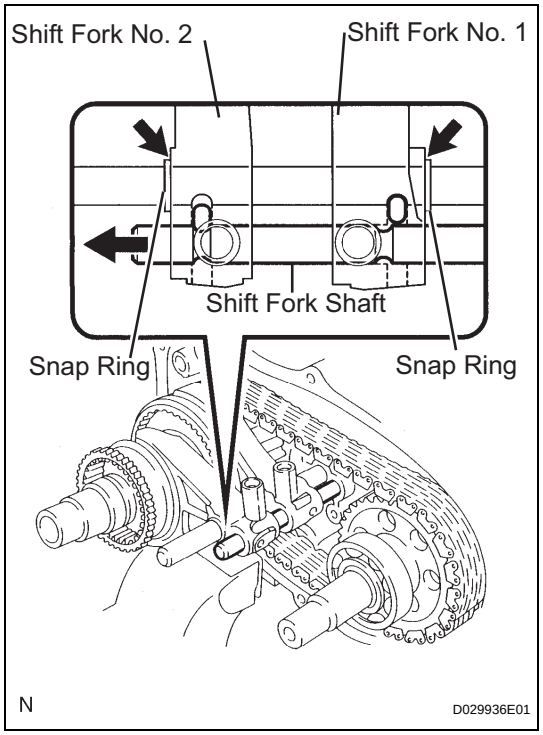

(d) To pull out the shift fork shaft, shift the shift fork No. 1 and No. 2 to the positions shown in the illustration.
(e) Pull out the shift fork shaft.

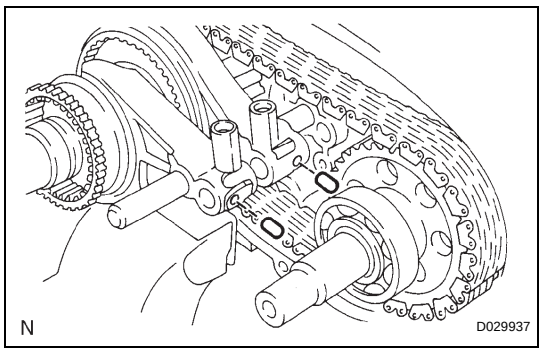

(f) Using a magnetic finger, remove the 2 shift inter lock pins.

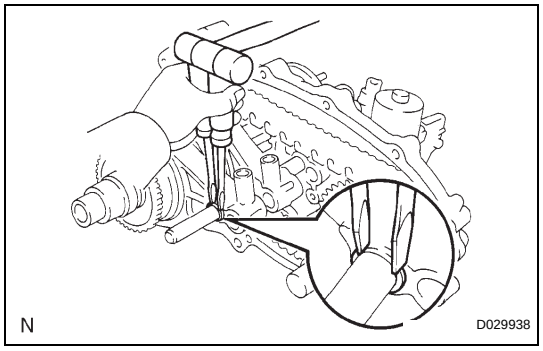

18. REMOVE REAR OUTPUT SHAFT ASSEMBLY, FRONT DRIVE CHAIN, DRIVEN SPROCKET ASSEMBLY, SHIFT FORK NO. 1 AND NO. 2

(a) Using 2 screwdrivers and a hammer, tap out the shift fork shaft snap ring.
HINT:
Remove only the snap ring on the front side of the shift fork shaft.

TF

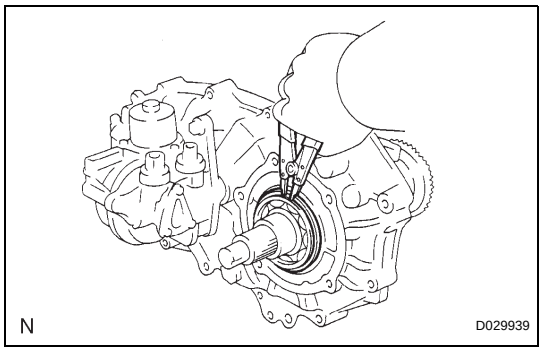

(b) Using a snap ring expander, remove the output shaft snap ring.

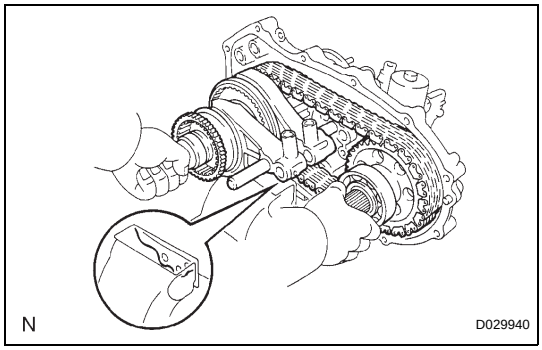

(c) Mount the transfer case rear in a vise.
(d) Using a plastic hammer, carefully tap the transfer case rear and remove the rear output shaft assembly, driven sprocket assembly, front drive chain, shift fork No. 1 and No. 2.
(e) Remove the driven sprocket assembly, front drive chain, shift fork No. 1 and No. 2 from the rear output shaft assembly.

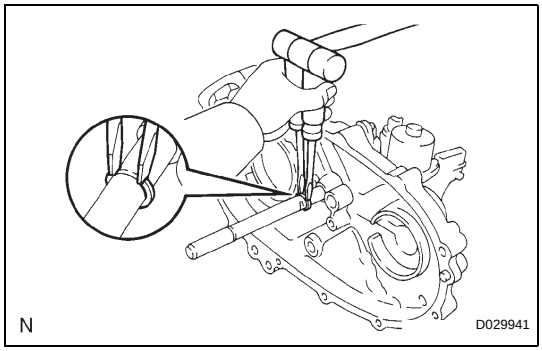

19. REMOVE TRANSFER SHIFT ACTUATOR ASSEMBLY
(a) Using 2 screwdrivers and a hammer, remove the shift fork shaft snap ring.
(b) Remove the 3 bolts and shift actuator assembly.

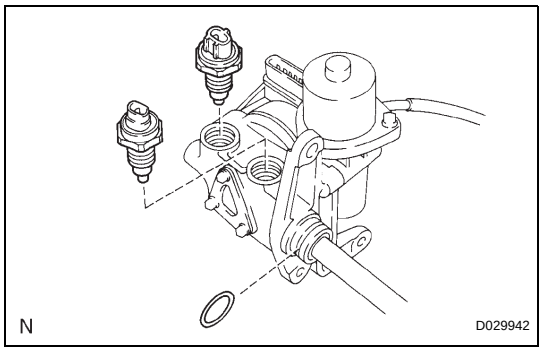

20. REMOVE TRANSFER INDICATOR SWITCH NO.1
(a) Remove the O-ring, the 2 indicator switches No. 1 and 2 gaskets.

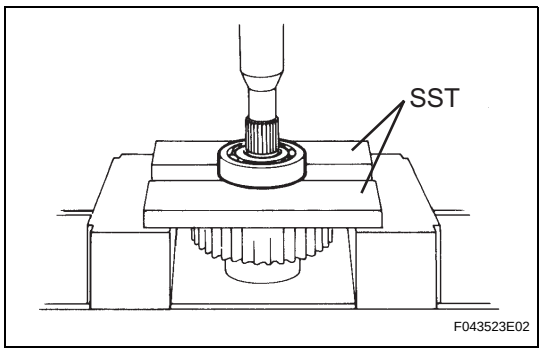

21. REMOVE TRANSFER DRIVEN SPROCKET BEARING
(a) Using SST and a press, remove the driven sprocket bearing.
SST 09527-10011

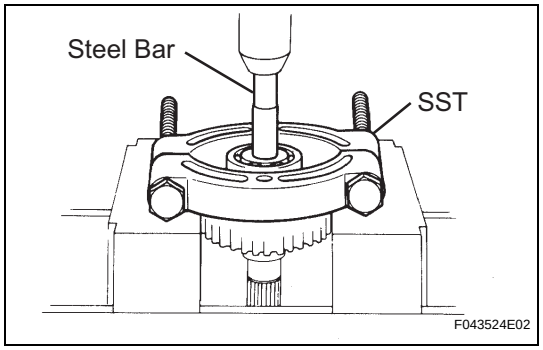

22. REMOVE TRANSFER INPUT GEAR RADIAL BALL BEARING

(a) Using SST, a press and steel bar, remove the input gear radial ball bearing.
SST 09555-55010

23. REMOVE TRANSFER CASE PLUG

(a) Remove the transfer case plug No. 1 (filler plug) and gasket.

24. REMOVE TRANSFER CASE PLUG

(a) Remove the transfer case plug (drain plug) and gasket.

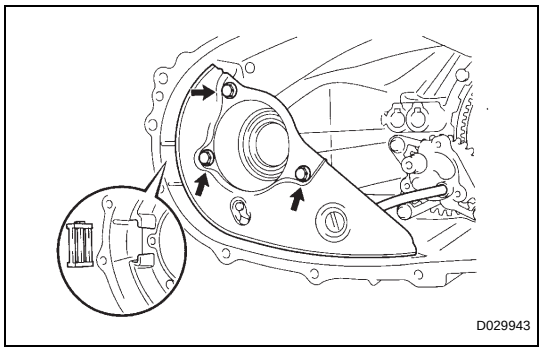

25. REMOVE TRANSFER OIL SEPARATOR SUB-ASSEMBLY

(a) Remove the 3 bolts and oil separator sub-assembly.

26. REMOVE TRANSFER CASE MAGNET

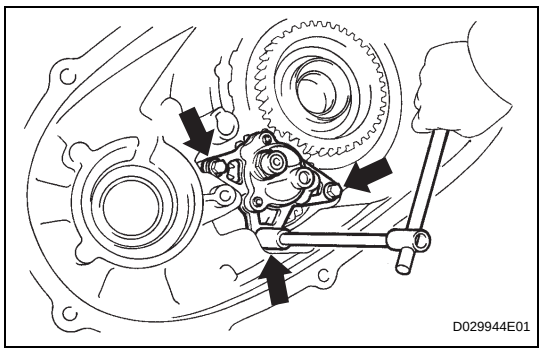

27. REMOVE TRANSFER OIL PUMP BODY SUB-ASSEMBLY

(a) Remove the 3 bolts and oil pump body sub-assembly.

28. REMOVE TRANSFER OIL PUMP GEAR

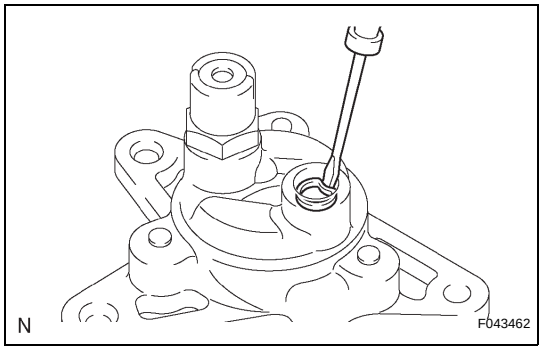

29. REMOVE TRANSFER OIL PUMP BODY O-RING

(a) Using a screwdriver, remove the oil pump body O-ring.

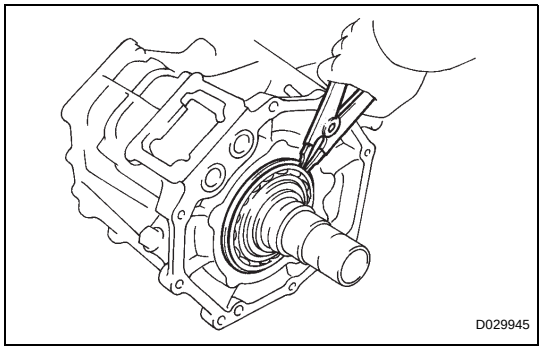

30. REMOVE LOW PLANETARY GEAR ASSEMBLY WITH INPUT SHAFT SUB-ASSEMBLY

(a) Using a snap ring expander, remove the low planetary gear bearing shaft snap ring.

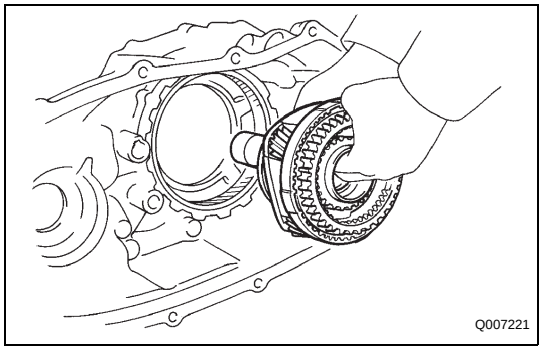

(b) Remove the low planetary gear assembly w/ input shaft assembly.

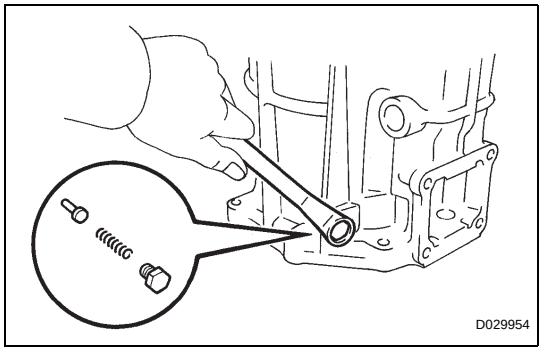

31. REMOVE TRANSFER CASE PLUG

(a) Remove the case plug.
(b) Using a magnetic finger, remove the spring and pin.

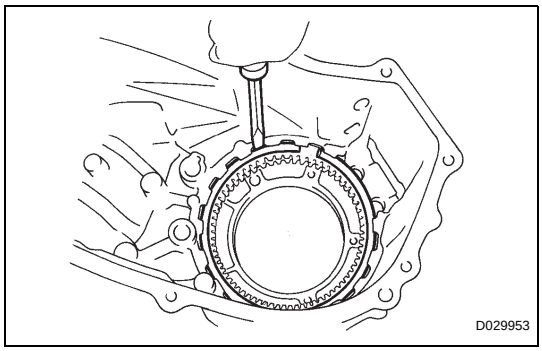

32. REMOVE TRANSFER LOW PLANETARY RING GEAR

(a) Using a screwdriver, remove the hole snap ring.
(b) Remove the low planetary ring gear from the front case.

33. REMOVE TRANSFER CASE OIL SEAL

(a) Using a screwdriver and hammer, remove the transfer case oil seal.

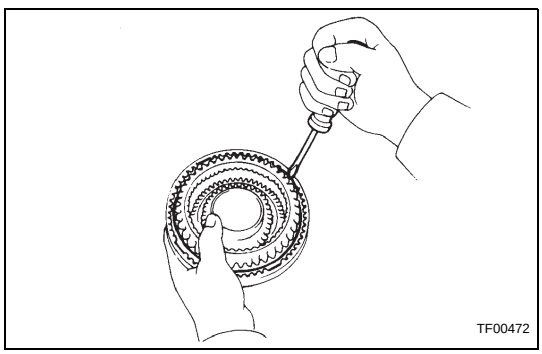

34. REMOVE TRANSFER LOW PLANETARY GEAR SPLINE PIECE

(a) Using a screwdriver, remove the low planetary gear shaft snap ring.

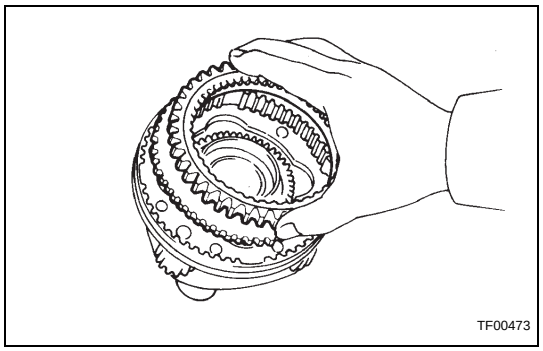

(b) Remove the low planetary gear spline piece.

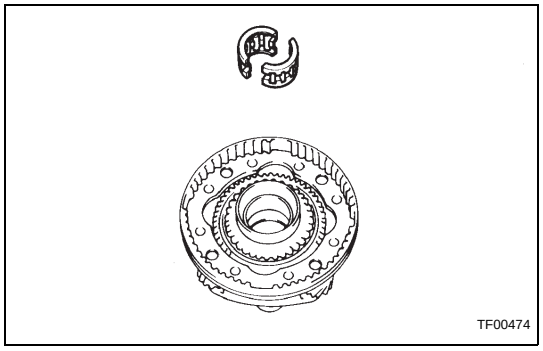

35. REMOVE TRANSFER OUTPUT SHAFT FRONT NEEDLE ROLLER BEARING

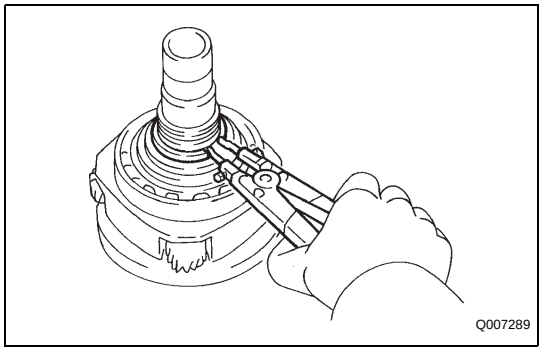

36. REMOVE TRANSFER INPUT GEAR STOPPER SHAFT SNAP RING

(a) Using a snap ring expander, remove the input gear stopper shaft snap ring.

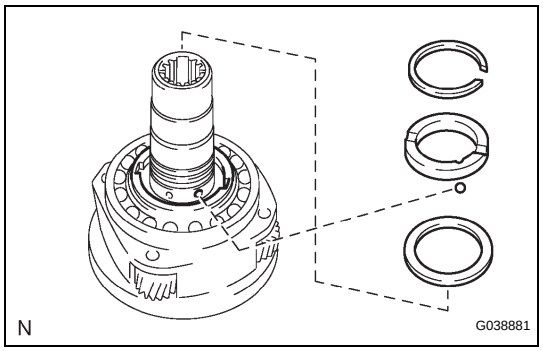

37. REMOVE TRANSFER INPUT GEAR STOPPER

38. REMOVE TRANSFER INPUT GEAR STOPPER BALL

39. REMOVE MANUAL TRANSFER PLANETARY CARRIER WASHER

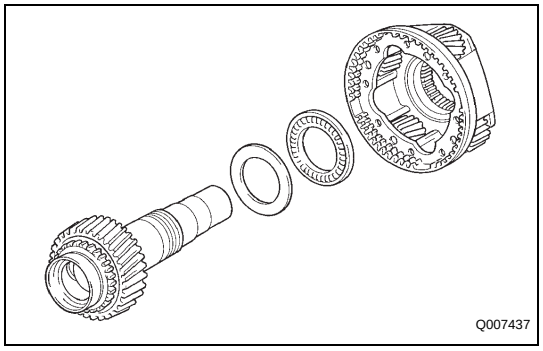

40. REMOVE TRANSFER INPUT SHAFT

41. REMOVE TRANSFER NO. 1 THRUST BEARING RACE

42. REMOVE TRANSFER LOW PLANETARY GEAR BEARING

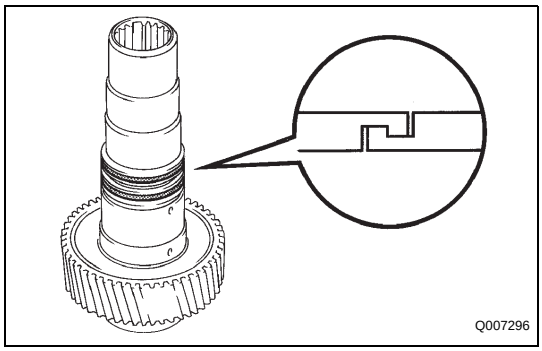

43. REMOVE TRANSFER NO. 1 INPUT SHAFT SEAL RING

(a) Remove the 2 seal rings No. 1.

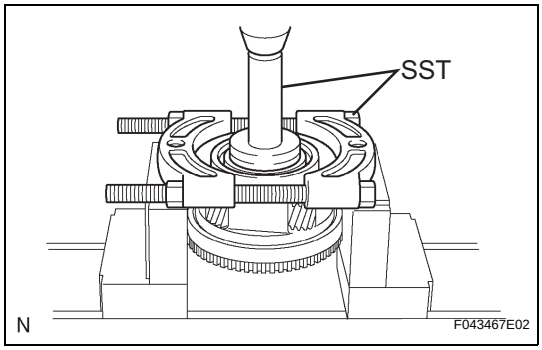

44. REMOVE TRANSFER INPUT SHAFT BEARING

(a) Using a snap ring expander, remove the input bearing shaft snap ring.

(b) Using SST and a press, remove the input shaft bearing.

SST 09554-30011, 09555-55010

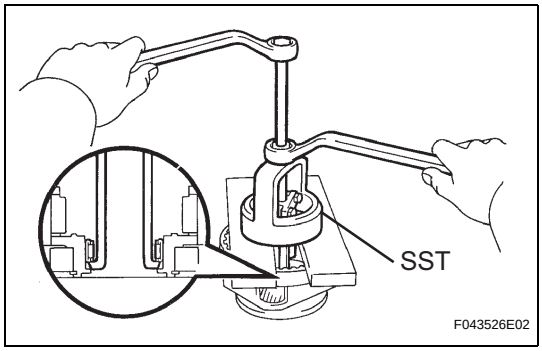

45. REMOVE TRANSFER LOW PLANETARY GEAR BEARING

(a) Using SST, remove the low planetary gear bearing.

SST 09612-65014 (09612-01030, 09612-01050)

NOTICE:

Hang SST securely to the clearance between the bearing and the low planetary gear.

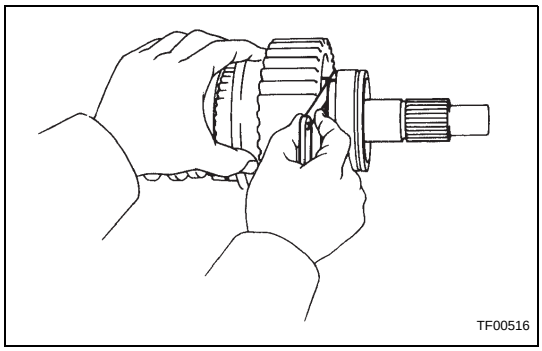

46. INSPECT DRIVE SPROCKET THRUST CLEARANCE

(a) Using a feeler gauge, measure the drive sprocket thrust clearance.

Standard clearance:

0.10 to 0.25 mm (0.0039 to 0.0098 in.)

Maximum clearance:

0.25 mm (0.0098 in.)

If the clearance exceeds the maximum, replace the drive sprocket.

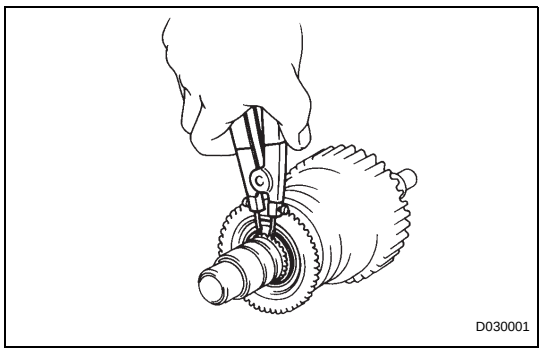

47. REMOVE TRANSFER CLUTCH HUB

(a) Using a snap ring expander, remove the clutch hub shaft snap ring.

(b) Remove the high and low clutch sleeve.

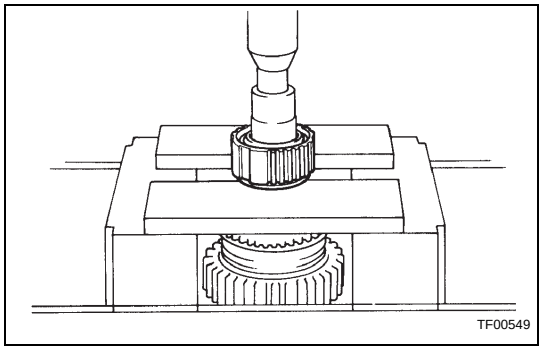

(c) Using a press, remove the clutch hub.

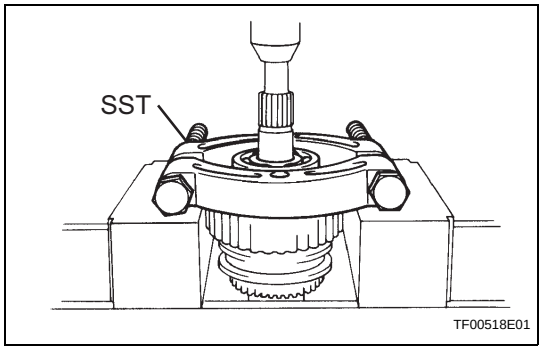

48. REMOVE TRANSFER OUTPUT SHAFT REAR RADIAL BALL BEARING

(a) Using SST and a press, remove the bearing.
SST 09555-55010

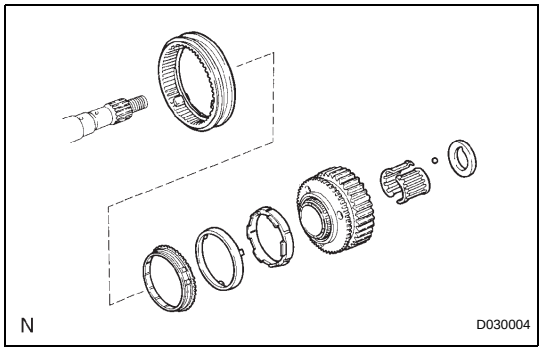

49. REMOVE TRANSFER DRIVE SPROCKET SUB-ASSEMBLY

(a) Remove the output shaft spacer and output shaft spacer ball.
(b) Remove the drive sprocket sub-assembly, synchronizer inner ring, center ring, outer ring and drive clutch sleeve together.
(c) Remove the drive sprocket bearing.
(d) Remove the synchronizer inner ring, center ring, outer ring and drive clutch sleeve.
(e) Remove the 3 synchromesh shifting keys No. 1 and the 2 synchromesh shifting key springs No. 1.

INSPECTION

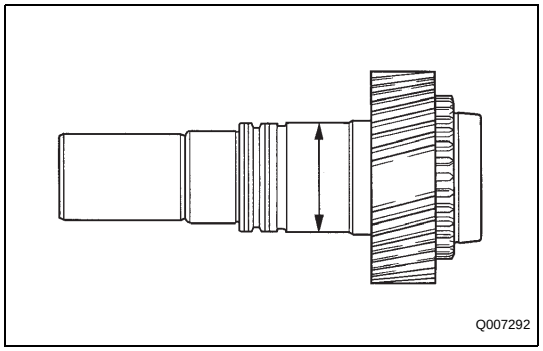

1. INSPECT TRANSFER INPUT SHAFT

(a) Using a micrometer, measure the outer diameter of the input shaft journal surface.
Minimum diameter:
47.59 mm (1.8736 in.)
If the outer diameter is less than the minimum, replace the input shaft.

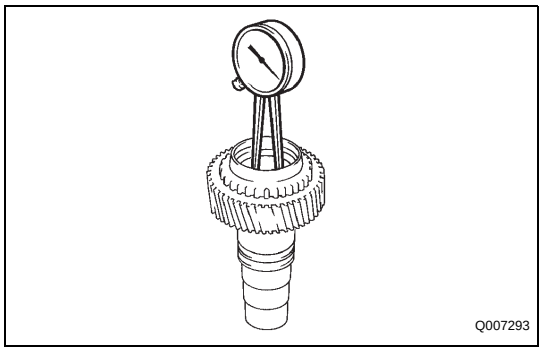

(b) Using a dial indicator, measure the inside diameter of the input shaft bushing.
Maximum diameter:
39.14 mm (1.5409 in.)
If the inside diameter exceeds the maximum, replace the input shaft.

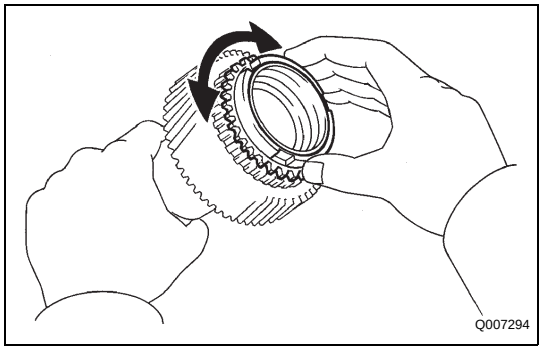

2. INSPECT SYNCHRONIZER RING
(a) Turn the ring and confirm that the input shaft and synchronizer ring are engaged with each other.

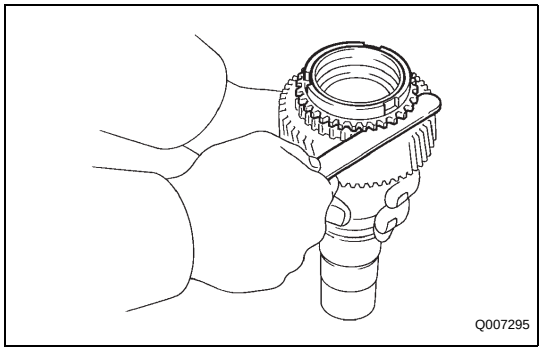

(b) Using a feeler gauge, measure the clearance between the synchronizer ring and the input shaft spline.
Standard clearance:
1.05 to 1.85 mm (0.0413 to 0.0728 in.)
Minimum clearance:
0.80 mm (0.0315 in.)
If the clearance is less than the minimum, replace the synchronizer ring.

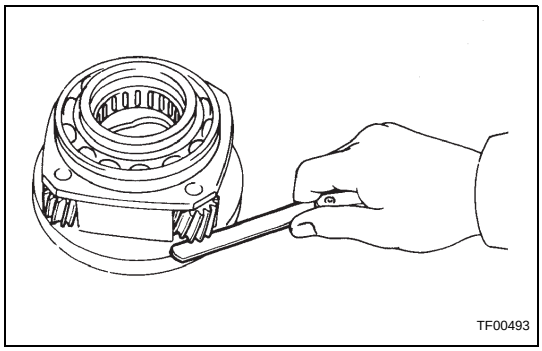

3. INSPECT PLANETARY PINION GEAR THRUST CLEARANCE
(a) Using a feeler gauge, measure the thrust clearance of the planetary pinion gear.
Standard clearance:
0.11 to 0.84 mm (0.0043 to 0.0331 in.)
Maximum clearance:
0.84 mm (0.0331 in.)
If the clearance exceeds the maximum, replace the planetary gear assembly.

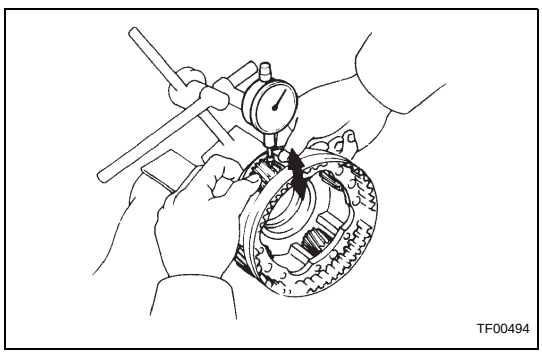

4. INSPECT PLANETARY PINION GEAR RADIAL CLEARANCE
(a) Using a dial indicator, measure the radial clearance of the planetary pinion gear.
Standard clearance:
0.009 to 0.038 mm (0.0004 to 00015 in.)
Maximum clearance:
0.038 mm (0.0015 in.)
If the clearance exceeds the maximum, replace the planetary gear assembly.

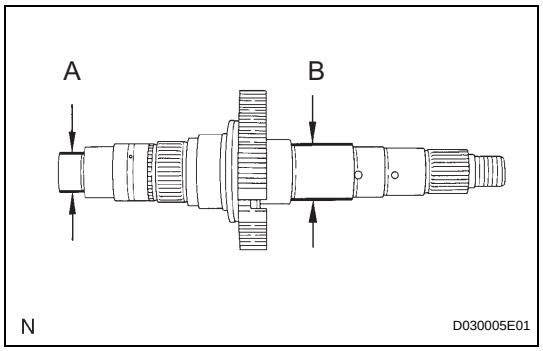

5. INSPECT TRANSFER REAR OUTPUT SHAFT

(a) Using a micrometer, measure the outer diameter of the output shaft rear journal surface.

Minimum diameter:

27.98 mm (1.1016 in.) for part A

36.98 mm (1.4561 in.) for part B

If the outer diameter is less than the minimum, replace the output shaft rear.

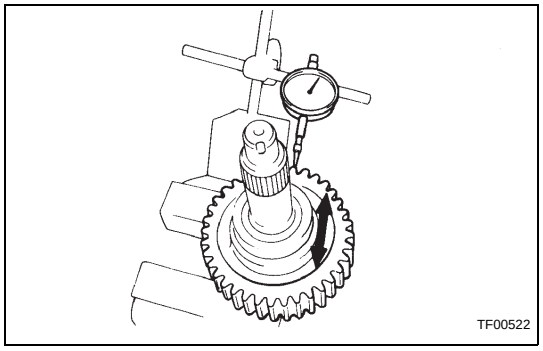

6. INSPECT DRIVE SPROCKET RADIAL CLEARANCE

(a) Using a dial indicator, measure the radial clearance between the sprocket and the shaft with the needle roller bearing installed.

Standard clearance:

0.010 to 0.055 mm (0.0004 to 0.0022 in.)

Maximum clearance:

0.055 mm (0.0022 in.)

If the clearance exceeds the maximum, replace the drive sprocket, rear output shaft and drive sprocket bearing.

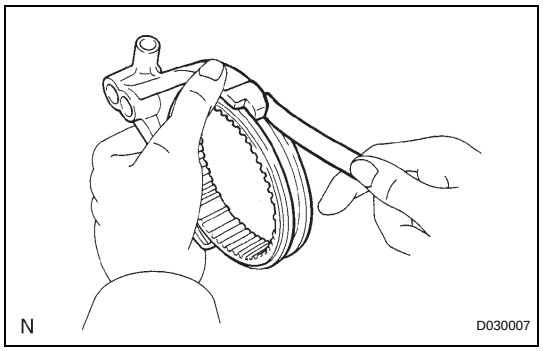

7. INSPECT GEAR SHIFT FORK NO. 1 AND HUB SLEEVE CLEARANCE

(a) Using a feeler gauge, measure the clearance between the gear shift fork No. 1 and drive clutch sleeve.

Maximum clearance:

1.0 mm (0.039 in.)

If the clearance exceeds the maximum, replace the gear shift fork No. 1 and drive clutch sleeve.

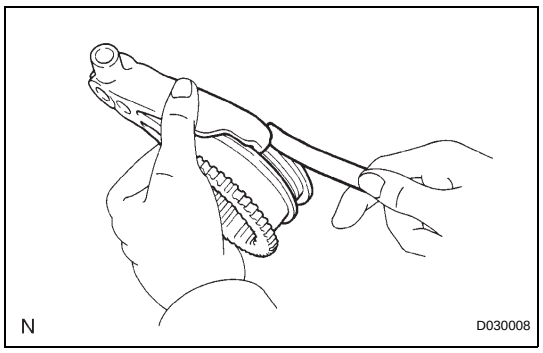

8. INSPECT GEAR SHIFT FORK NO. 2 AND HUB SLEEVE CLEARANCE

(a) Using a feeler gauge, measure the clearance between the gear shift fork No. 2 and high and low clutch sleeve.

Maximum clearance:

1.0 mm (0.039 in.)

If the clearance exceeds the maximum, replace the gear shift fork No. 2 and high and low clutch sleeve.

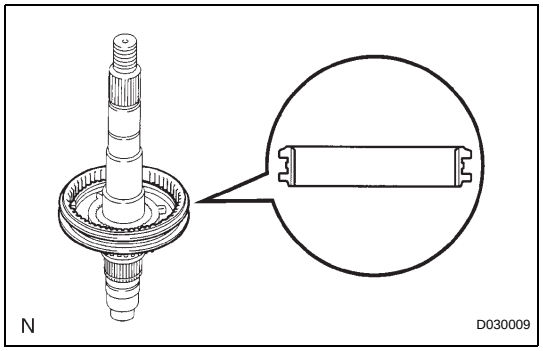

REASSEMBLY

1. INSTALL FRONT DRIVE CLUTCH SLEEVE

(a) Install the drive clutch sleeve onto the rear output shaft.

NOTICE:

Make sure that the clutch sleeve is installed facing in the correct direction.

TF

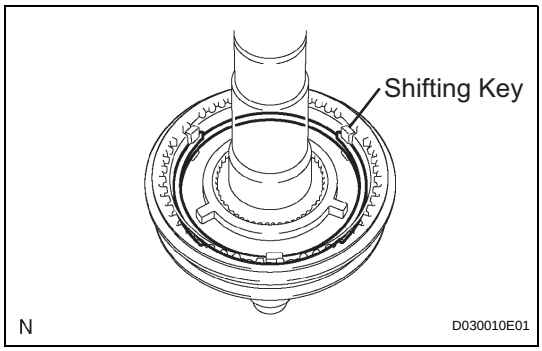

(b) Install the 3 synchromesh shifting keys No. 1 and the 2 synchromesh shifting keys spring No. 1.
NOTICE:
Install the key springs so that their end gaps are not in line.

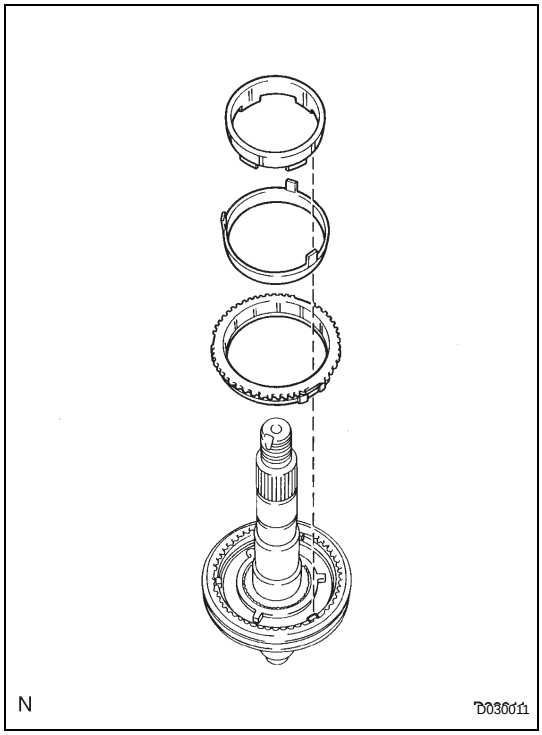

2. INSTALL TRANSFER SYNCHRONIZER RING SET

(a) Install the synchronizer outer ring onto the rear output shaft.
NOTICE:
Align the slots of the synchronizer outer ring with the shifting keys.

(b) Install the synchronizer center and the inner rings onto the rear output shaft.
NOTICE:
Align the slots of the synchronizer outer with those of the inner rings.

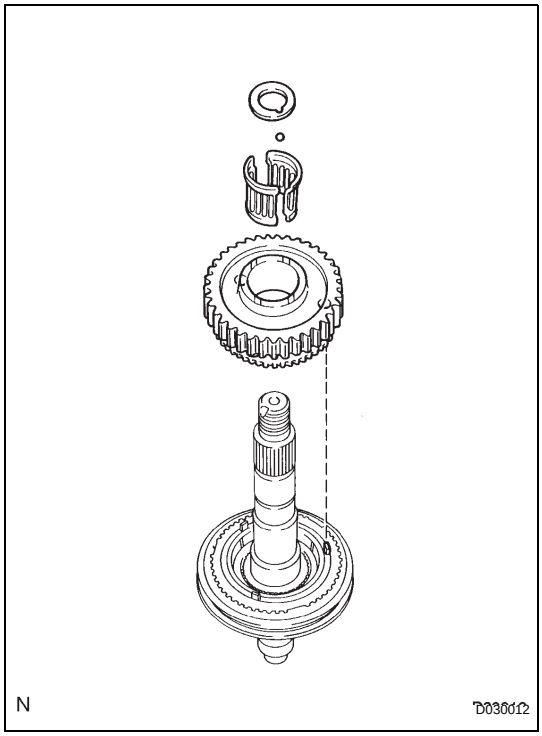

3. INSTALL TRANSFER DRIVE SPROCKET SUB-ASSEMBLY

(a) Install a new drive sprocket bearing.

(b) Install the drive sprocket sub-assembly.
NOTICE:
Align the holes in the drive sprocket with the protrusions on the synchronizer center ring.

(c) Install the output shaft spacer aligned it with the output shaft spacer ball.

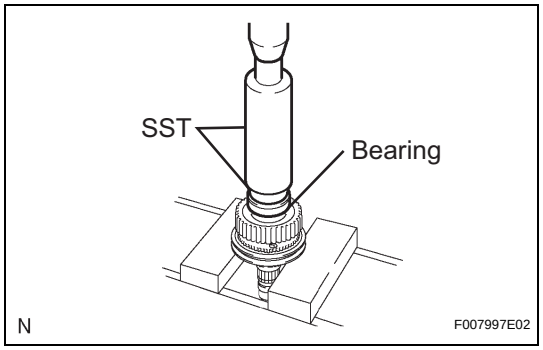

4. INSTALL TRANSFER OUTPUT SHAFT REAR RADIAL BALL BEARING

(a) Using SST and a press, install a new output shaft rear radial ball bearing with the output shaft snap ring groove toward the rear.
SST 09316-60011 (09316-00011, 09316-00071)

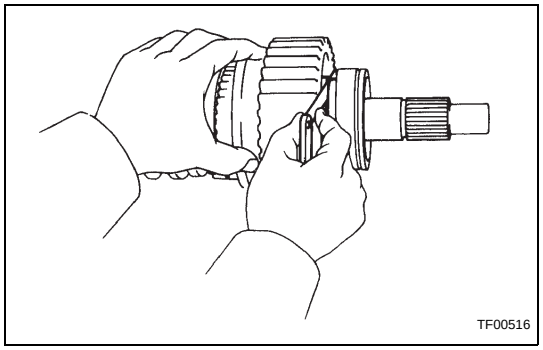

5. INSPECT DRIVE SPROCKET THRUST CLEARANCE

(a) Using a feeler gauge, measure the drive sprocket thrust clearance.
Standard clearance:
0.10 to 0.25 mm (0.0039 to 0.0098 in.)
Maximum clearance:
0.25 mm (0.0098 in.)
If the clearance exceeds the maximum, replace the drive sprocket sub-assembly.

TF

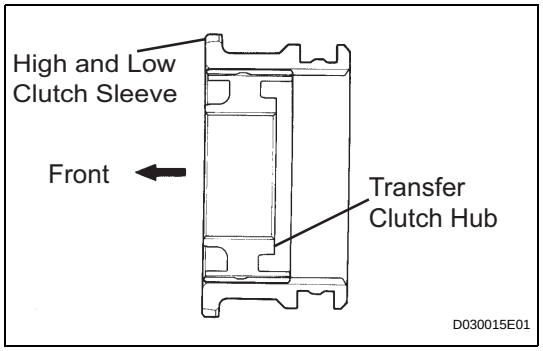

6. INSTALL TRANSFER HIGH AND LOW CLUTCH SLEEVE

(a) Install the high and low clutch sleeve onto the transfer clutch hub.
NOTICE:
Make sure that the high and low clutch hub is installed facing in the correct direction.

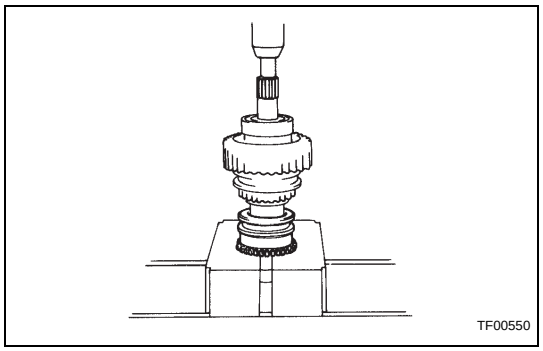

7. INSTALL TRANSFER CLUTCH HUB

(a) Using a press, install the transfer clutch hub.

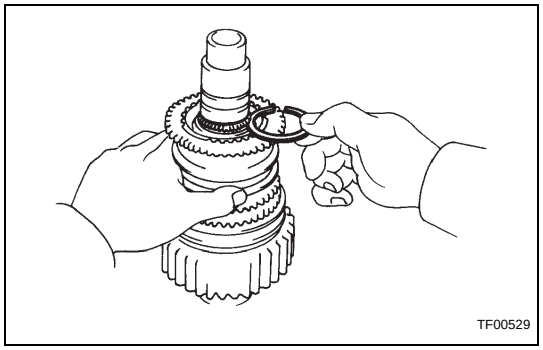

(b) Select an output shaft snap ring that allows the minimum axial play.

Mark	Thickness mm (in.)
A	2.10 to 2.15 (0.0827 to 0.0846)
B	2.15 to 2.20 (0.0846 to 0.0866)
C	2.20 to 2.25 (0.0866 to 0.0886)
D	2.25 to 2.30 (0.0886 to 0.0906)
E	2.30 to 2.35 (0.0906 to 0.0925)
F	2.35 to 2.40 (0.0925 to 0.0945)

Mark	Thickness mm (in.)
G	2.40 to 2.45 (0.0945 to 0.0965)
H	2.45 to 2.50 (0.0965 to 0.0984)
J	2.50 to 2.55 (0.0984 to 0.1004)
K	2.00 to 2.05 (0.0787 to 0.0807)
L	2.05 to 2.10 (0.0807 to 0.0827)

(c) Using a snap ring expander, install the new snap ring.

8. INSTALL TRANSFER LOW PLANETARY RING GEAR

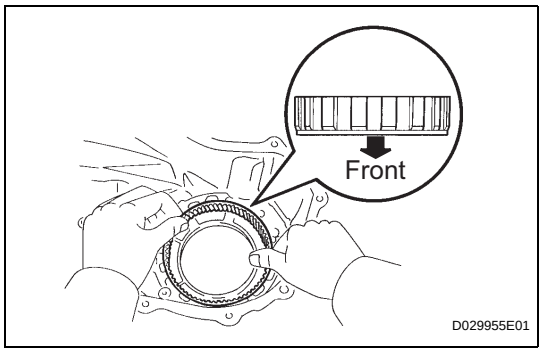

(a) Install the low planetary ring gear onto the transfer case front.

NOTICE:

Be sure to install the low planetary ring gear facing in the correct direction.

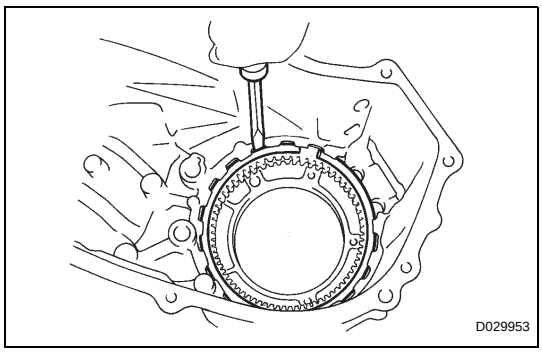

(b) Using a screwdriver, install the hole snap ring.

9. INSTALL TRANSFER CASE PLUG

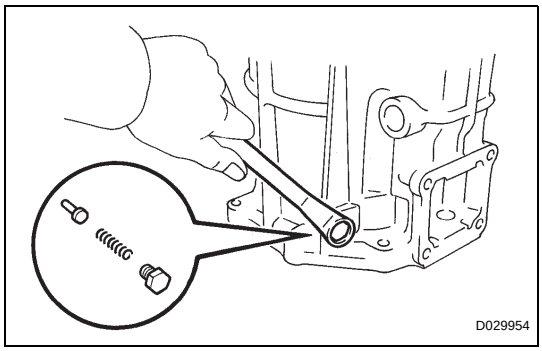

(a) Install the pin and spring.

(b) Apply sealant to the case plug threads.

Sealant:

Part No. 08833-00080, THREE BOND 1344, LOCTITE 242 or equivalent

(c) Install the case plug.

Torque: 18.6 N*m (190 kgf*cm, 14 ft.*lbf)

10. INSTALL TRANSFER LOW PLANETARY GEAR BEARING

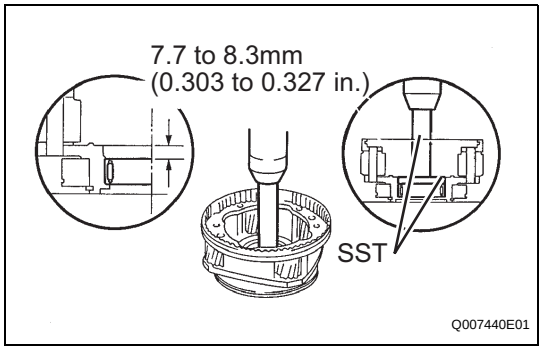

(a) Using SST and a press, tap in a new low planetary gear bearing.

SST 09950-60010 (09951-00570), 09950-70010 (09951-07100)

Press in depth:

7.7 to 8.3 mm (0.303 to 0.327 in.)

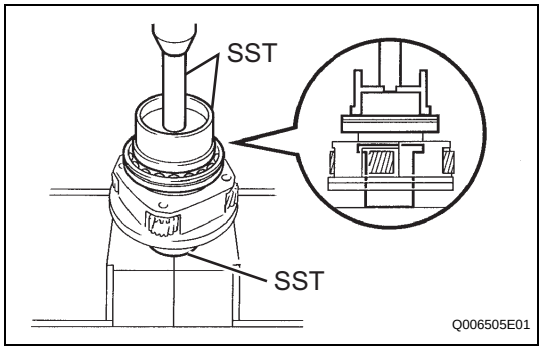

11. INSTALL TRANSFER INPUT SHAFT BEARING

(a) Using SST and a press, install a new input shaft bearing with the groove facing forward.

SST 09223-15020, 09515-30010, 09950-70010 (09951-07100)

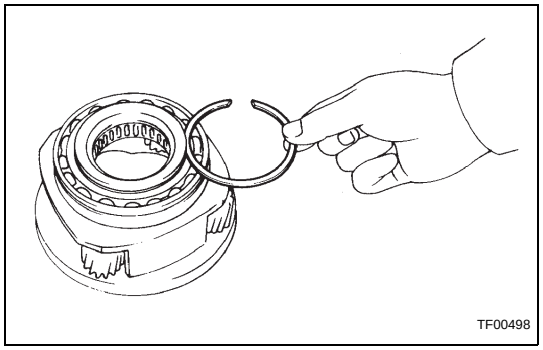

(b) Select a snap ring that allows 0.1 mm (0.004 in.) or less axial play.

Mark	Thickness mm (in.)
1	1.45 to 1.50 (0.0571 to 0.0591)
2	1.50 to 1.55 (0.0591 to 0.0610)
3	1.55 to 1.60 (0.0610 to 0.0630)
4	1.60 to 1.65 (0.0630 to 0.0650)
5	1.65 to 1.70 (0.0650 to 0.0669)

(c) Using a snap ring expander, install the new input bearing shaft snap ring.

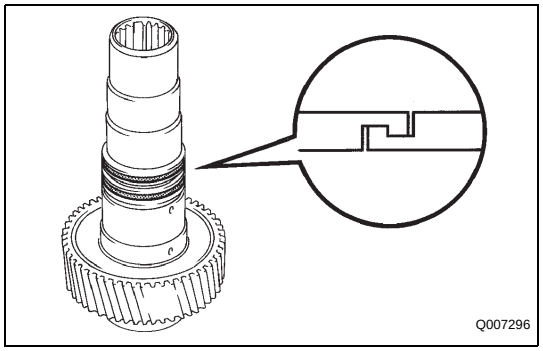

12. INSTALL TRANSFER NO. 1 INPUT SHAFT SEAL RING

(a) Apply gear oil to the 2 input shaft seal ring No. 1.

(b) Engage the rings securely to eliminate any clearance, as shown in the illustration.

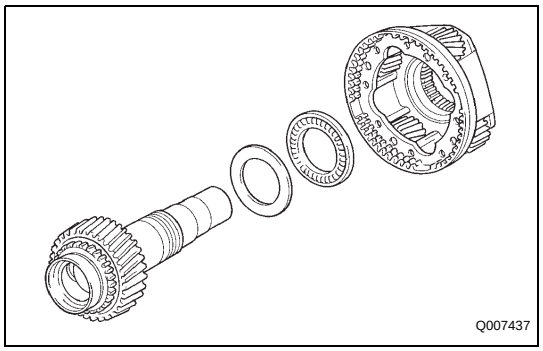

13. INSTALL TRANSFER LOW PLANETARY GEAR BEARING

NOTICE:

Be sure to install the transfer low planetary gear facing in the correct direction.

14. INSTALL TRANSFER NO. 1 THRUST BEARING RACE

15. INSTALL TRANSFER INPUT SHAFT

TF

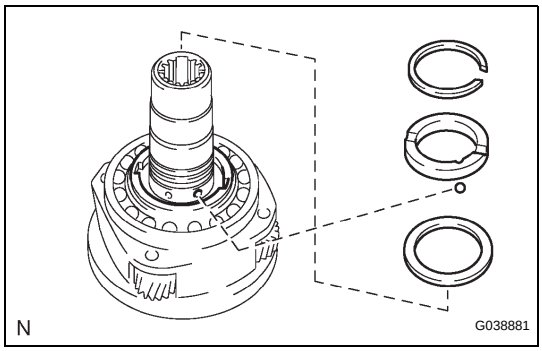

16. INSTALL MANUAL TRANSFER PLANETARY CARRIER WASHER

17. INSTALL TRANSFER INPUT GEAR STOPPER BALL

18. INSTALL TRANSFER INPUT GEAR STOPPER

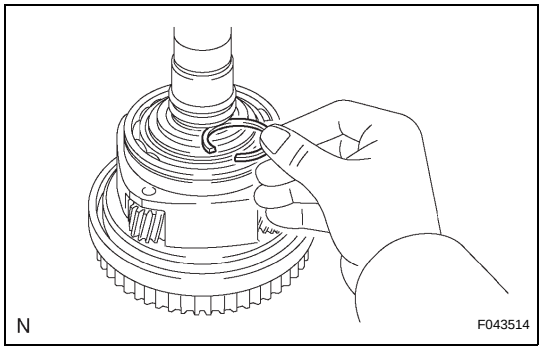

19. INSTALL TRANSFER INPUT GEAR STOPPER SHAFT SNAP RING

(a) Select an input gear stopper shaft snap ring that allows 0.05 to 0.15 mm (0.0020 to 0.0059 in.) axial play.

Mark	Thickness mm (in.)
A	2.10 to 2.15 (0.0827 to 0.0846)
B	2.15 to 2.20 (0.0846 to 0.0866)
C	2.20 to 2.25 (0.0866 to 0.0886)
D	2.25 to 2.30 (0.0886 to 0.0906)
E	2.30 to 2.35 (0.0906 to 0.0925)
F	2.35 to 2.40 (0.0925 to 0.0945)
G	2.40 to 2.45 (0.0945 to 0.0965)
H	2.45 to 2.50 (0.0965 to 0.0984)
J	2.50 to 2.55 (0.0984 to 0.1004)
K	2.55 to 2.60 (0.1004 to 0.1204)
L	2.60 to 2.65 (0.1024 to 0.1043)
M	2.65 to 2.70 (0.1043 to 0.1063)
N	2.70 to 2.75 (0.1063 to 0.1083)
P	2.75 to 2.80 (0.1083 to 0.1102)
Q	2.80 to 2.85 (0.1102 to 0.1122)
R	2.85 to 2.90 (0.1122 to 0.1142)
S	2.90 to 2.95 (0.1142 to 0.1161)
T	2.95 to 3.00 (0.1161 to 0.1181)
U	3.00 to 3.05 (0.1181 to 0.1201)

(b) Using a snap ring expander, install the new input gear stopper shaft snap ring.

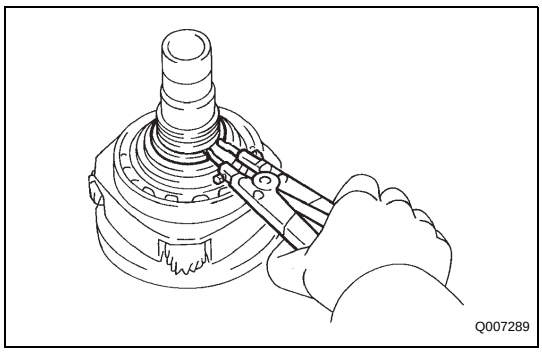

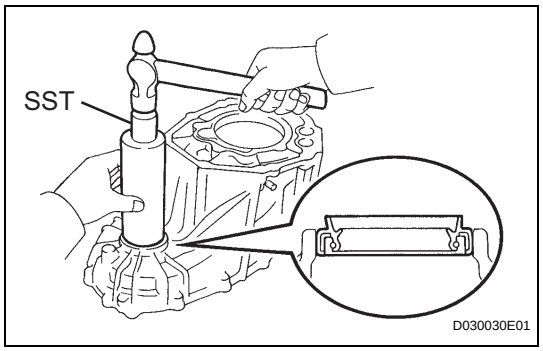

20. INSTALL TRANSFER CASE OIL SEAL

(a) Using SST and a hammer, tap in a new oil seal until its surface is flush with the case upper surface.
SST 09316-60011 (09316-00011)

(b) Coat the lip of the oil seal with MP grease.

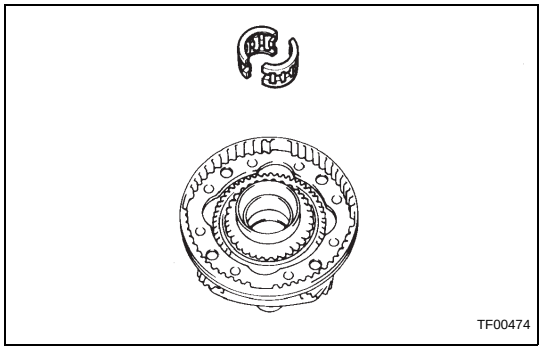

21. INSTALL TRANSFER OUTPUT SHAFT FRONT NEEDLE ROLLER BEARING

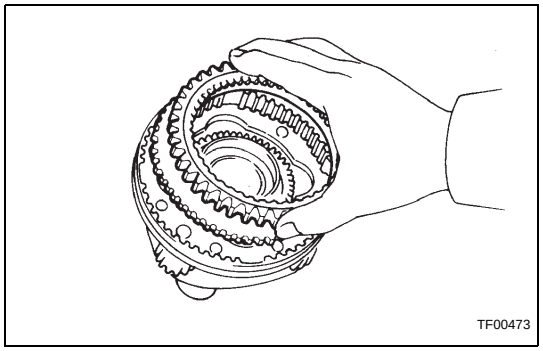

22. INSTALL TRANSFER LOW PLANETARY GEAR SPLINE PIECE

(a) Install the low planetary gear spline piece.

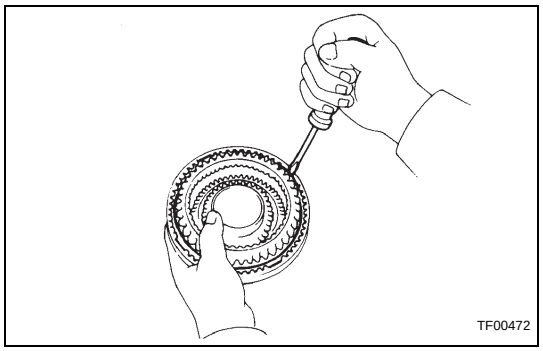

(b) Using a screwdriver, install the low planetary gear shaft snap ring.
NOTICE:
Make sure that the end gap of the snap ring is not aligned with the cutout of the planetary carrier.

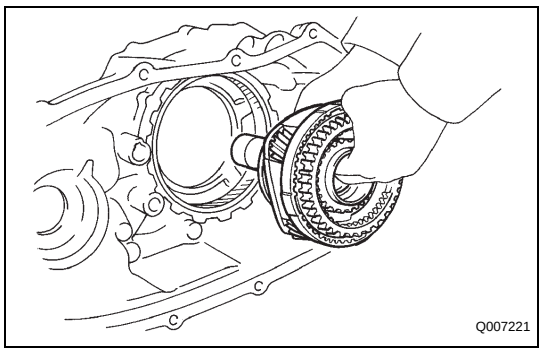

23. INSTALL LOW PLANETARY GEAR ASSEMBLY WITH INPUT SHAFT SUB-ASSEMBLY

(a) Install the low planetary gear assembly w/ input shaft sub-assembly.
HINT:
If necessary, heat the front case to about 50 to 80°C (122 to 176°F).

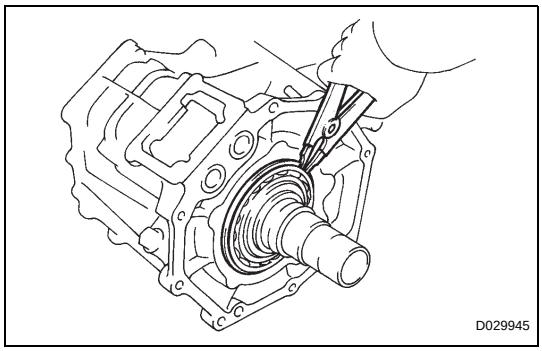

(b) Using a snap ring expander, install the shaft snap ring.

24. INSTALL TRANSFER OIL PUMP GEAR

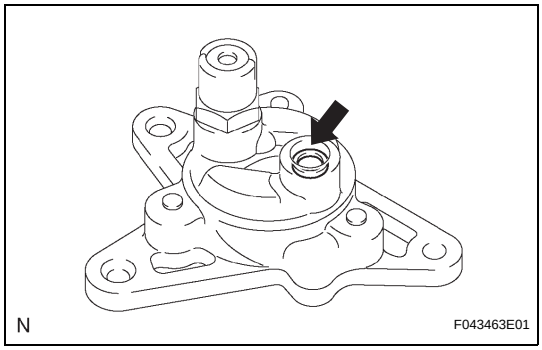

25. INSTALL TRANSFER OIL PUMP BODY O-RING

(a) Coat a new O-ring with gear oil and install it onto the oil pump body.

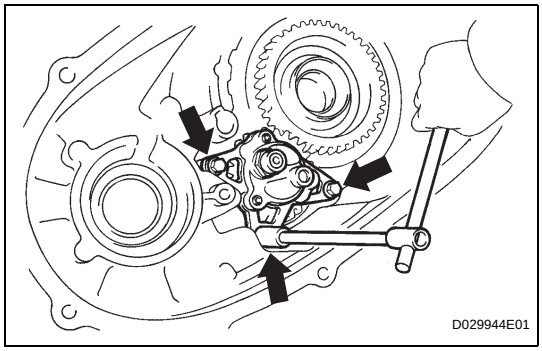

26. INSTALL TRANSFER OIL PUMP BODY SUB-ASSEMBLY

(a) Install the oil pump body sub-assembly with the 3 bolts.
Torque: 7.5 N*m (76 kgf*cm, 66 in.*lbf)

27. INSTALL TRANSFER CASE MAGNET

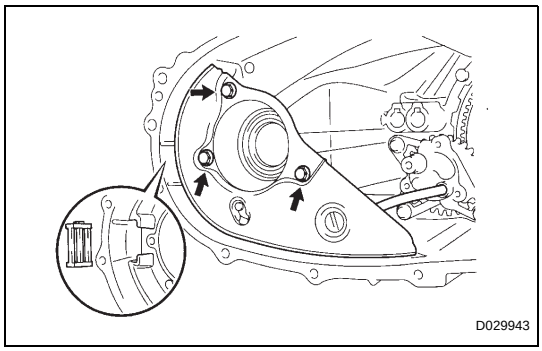

28. INSTALL TRANSFER OIL SEPARATOR SUB-ASSEMBLY

(a) Install the oil separator sub-assembly with the 3 bolts.
Torque: 7.5 N*m (76 kgf*cm, 66 in.*lbf)

29. INSTALL TRANSFER CASE PLUG

(a) Install the case plug No. 1 (filler plug) and a new gasket.
Torque: 37 N*m (377 kgf*cm, 27 ft.*lbf)

30. INSTALL TRANSFER CASE PLUG

(a) Install the case plug (drain plug) and a new gasket.
Torque: 37 N*m (377 kgf*cm, 27 ft.*lbf)

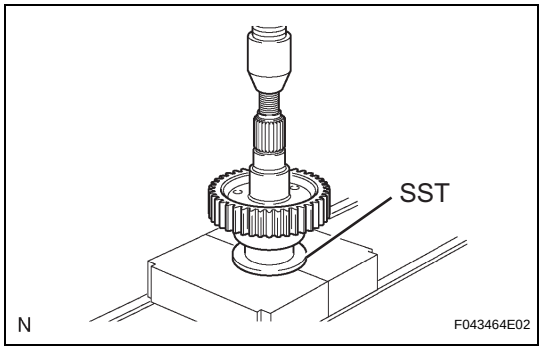

31. INSTALL TRANSFER INPUT GEAR RADIAL BALL BEARING

(a) Using SST and a press, install a new input gear radial ball bearing.
SST 09316-60011 (09316-00031)

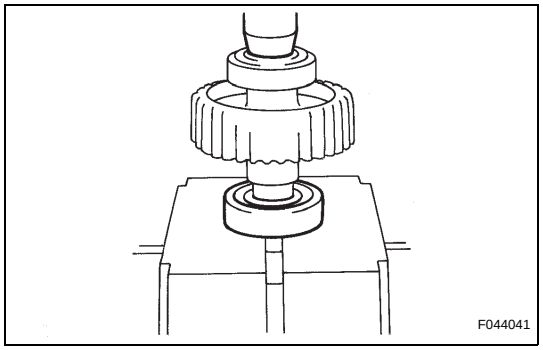

32. INSTALL TRANSFER DRIVEN SPROCKET BEARING

(a) Using a press, install a new driven sprocket bearing.

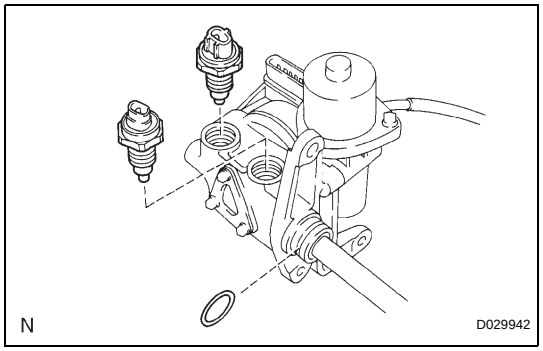

33. INSTALL TRANSFER INDICATOR SWITCH NO.1

(a) Coat a new O-ring with gear oil and install it onto the shift actuator assembly.
(b) Install 2 new gaskets and the 2 indicator switches No. 1 onto the shift actuator assembly.
Torque: 37 N*m (377 kgf*cm, 27 ft.*lbf)

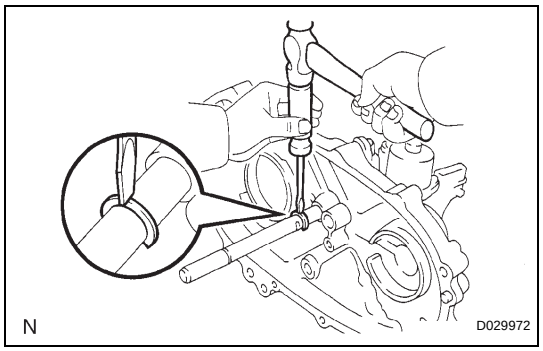

34. INSTALL TRANSFER SHIFT ACTUATOR ASSEMBLY

(a) Install the shift actuator assembly with the 3 bolts.
Torque: 20 N*m (204 kgf*cm, 15 ft.*lbf)
(b) Using a screwdriver and hammer, tap in the shift fork shaft snap ring.
HINT:
Install only the snap ring on the rear side of the shaft.

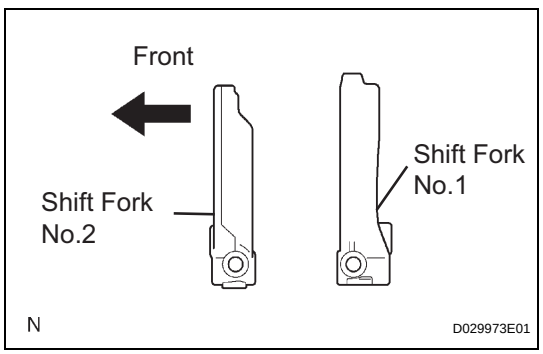

35. INSTALL REAR OUTPUT SHAFT ASSEMBLY, FRONT DRIVE CHAIN, DRIVEN SPROCKET ASSEMBLY, SHIFT FORK NO. 1 AND NO. 2

(a) Install the driven sprocket assembly, front drive chain and shift forks No. 1 and No. 2 onto the rear output shaft assembly.
NOTICE:
Make sure that the shift forks No. 1 and No. 2 are installed facing in the correct direction.

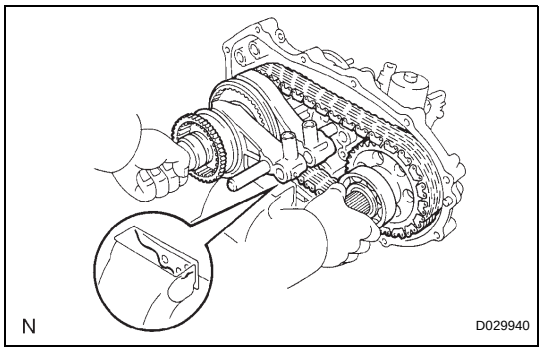

(b) Fix the case rear in a vise.
(c) Install the rear output shaft assembly, front drive chain, driven sprocket assembly and shift forks No. 1 and No. 2 onto the case rear.
NOTICE:
Do not let the clutch sleeve or shifting key drop.
HINT:
If necessary, heat the rear case to about 50 to 80°C (122 to 176°F).

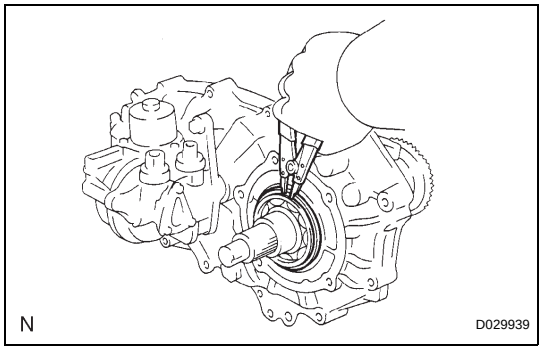

(d) Using a snap ring expander, install the output shaft snap ring.

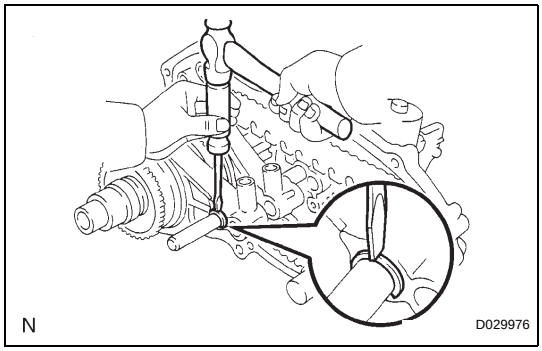

(e) Using a screwdriver and hammer, tap in the shift fork shaft snap ring.
HINT:
Check that the rear output shaft assembly and driven sprocket assembly turn smoothly.

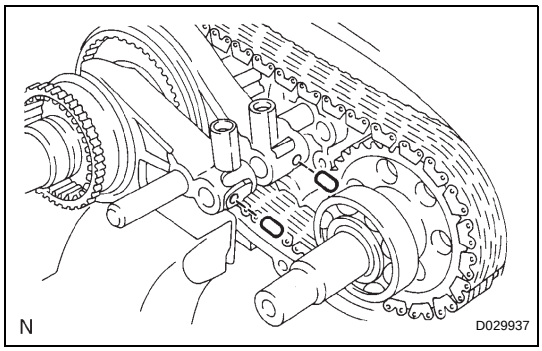

36. INSTALL TRANSFER FRONT DRIVE SHIFT FORK SHAFT
(a) Using a magnetic finger, install the 2 shift inter lock pins onto the shift forks No. 1 and No. 2.

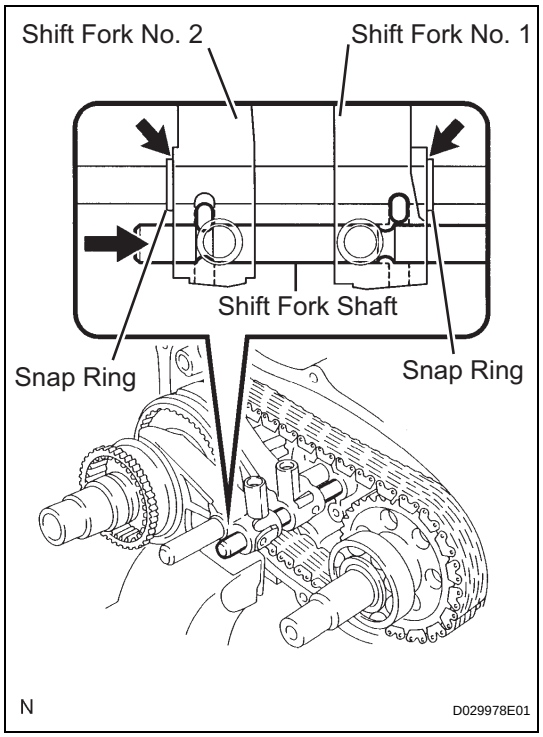

(b) To push in the shift fork shaft, shift the shift fork No. 1 and No. 2 to the positions shown in the illustration.

(c) Push in the shift fork shaft.

NOTICE:
Make sure that the shift fork shaft is installed facing in the correct direction.

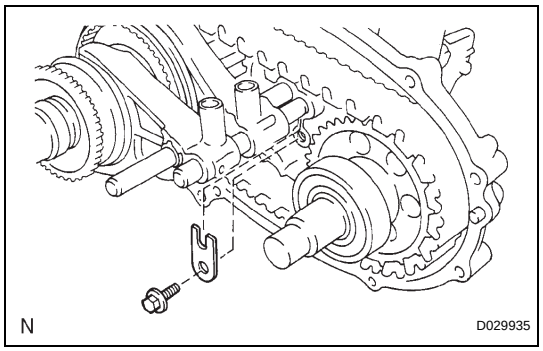

(d) Install the shift shaft stopper with the bolt.
Torque: 19 N*m (194 kgf*cm, 14 ft.*lbf)

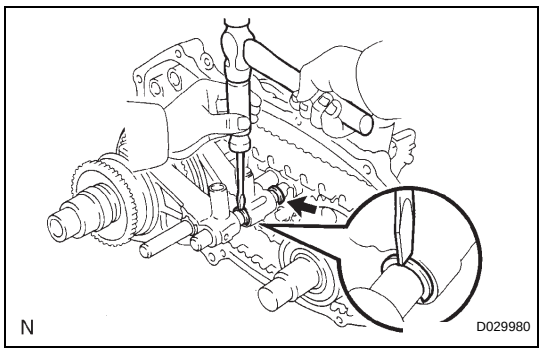

(e) Using a screwdriver and hammer, tap the 2 shift fork shaft snap rings into the shift fork shaft.

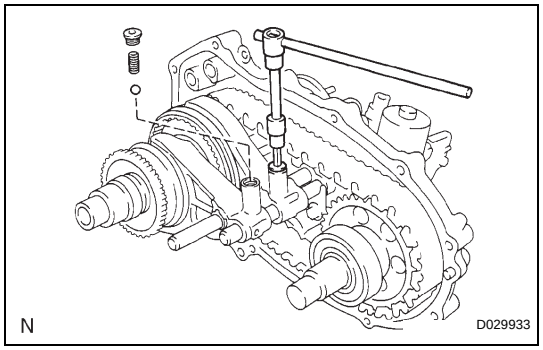

(f) Install the 2 shift detent balls and 2 compression springs onto the shift forks No. 1 and No. 2.

(g) Apply sealant to the shift detent ball spring plug threads.
Sealant:
Part No. 08833-00080, THREE BOND 1344, LOCTITE 242 or equivalent

(h) Using a hexagon wrench (6 mm), install the 2 shift detent ball spring plugs onto the shift forks No. 1 and No. 2.
Torque: 18.6 N*m (190 kgf*cm, 14 ft.*lbf)

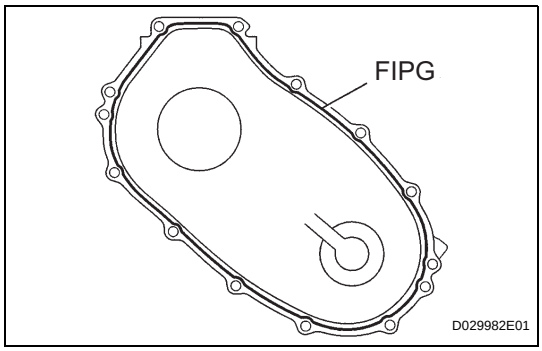

37. INSTALL TRANSFER REAR CASE

(a) Apply FIPG to the case rear, as shown in the illustration.

FIPG:

Part No. 08826-00090, THREE BOND 1281 or equivalent

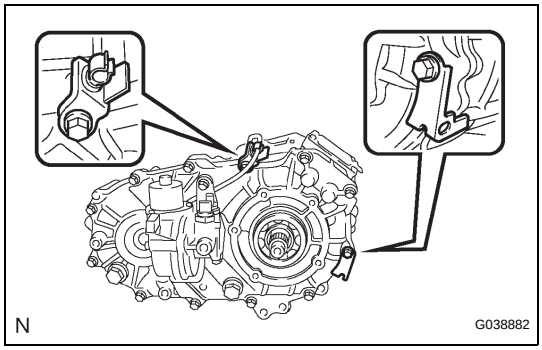

(b) Engage the 2 brackets and install the case rear with the 12 bolts.

Torque: 28 N*m (286 kgf*cm, 21 ft.*lbf)

38. INSTALL TRANSFER SPEEDOMETER DRIVE GEAR

(a) Coat the speedometer drive gear ball with MP grease and install it onto the rear output shaft assembly.

(b) Install the speedometer drive gear.

39. INSTALL TRANSFER OUTPUT WASHER

(a) Install the 2 output washers.

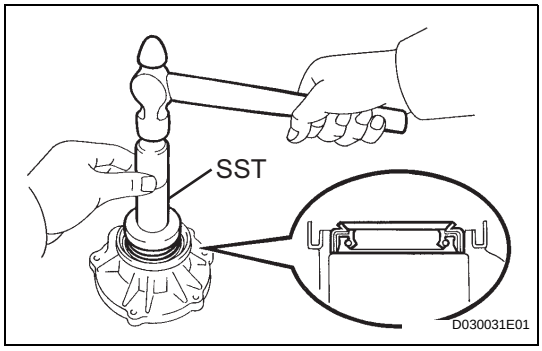

40. INSTALL TRANSFER EXTENSION HOUSING TYPE T OIL SEAL

(a) Using SST and a hammer, tap in a new extension housing type T oil seal until its surface is flush with the housing upper surface.

SST 09554-22010

(b) Coat the lip of the oil seal with MP grease.

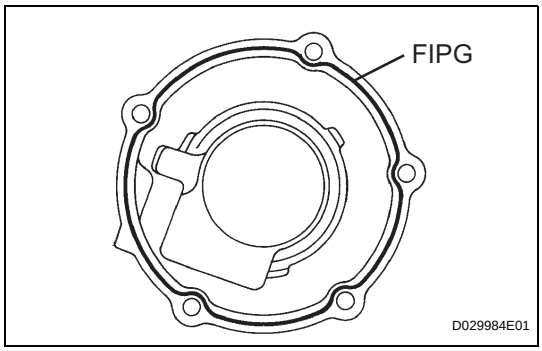

41. INSTALL TRANSFER EXTENSION HOUSING SUB-ASSEMBLY FRONT

(a) Apply FIPG to the extension housing sub-assembly, as shown in the illustration.

FIPG:

Part No. 08826-00090, THREE BOND 1281 or equivalent

(b) Apply sealant to the bolt threads.

Sealant:

Part No. 08833-00080, THREE BOND 1344, LOCTITE 242 or equivalent

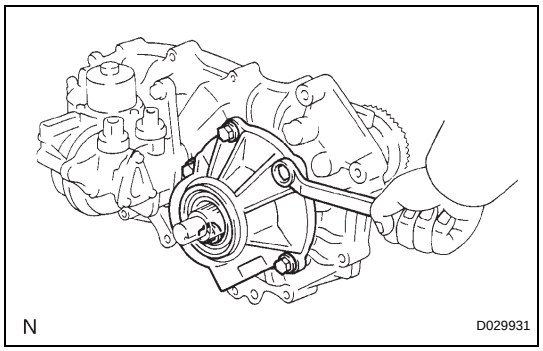

(c) Install the extension housing sub-assembly with the 5 bolts.
Torque: 12 N*m (122 kgf*cm, 9 ft.*lbf)

42. INSTALL SPEEDOMETER DRIVEN GEAR ASSEMBLY WITH SENSOR (for R155F/RA60F)

(a) Install the speedometer driven gear w/ sensor with the bolt.
Torque: 11.5 N*m (117 kgf*cm, 8 ft.*lbf)

43. INSTALL SPEEDOMETER DRIVEN HOLE COVER SUB-ASSEMBLY (for A750F)

(a) Install the speedometer driven hole cover with the bolt.
Torque: 11.5 N*m (117 kgf*cm, 8 ft.*lbf)

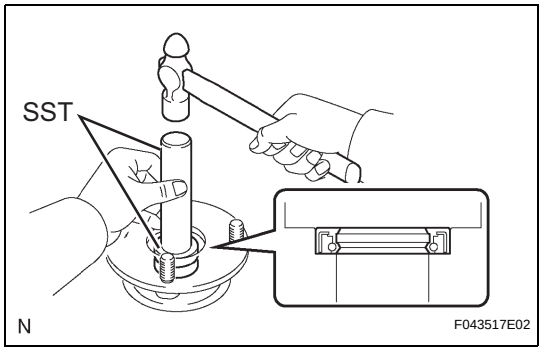

44. INSTALL TRANSFER OUTPUT SHAFT COMPANION FLANGE OIL SEAL

(a) Using SST and a hammer, tap in a new output shaft companion flange oil seal (front side).
SST 09950-60010 (09951-00320), 09950-70010 (09951-07100)

45. INSTALL TRANSFER OUTPUT SHAFT COMPANION FLANGE OIL SEAL

(a) Tap in a new output shaft companion flange oil seal using the same procedure as for the oil seal (rear side).
SST 09950-60010 (09951-00320), 09950-70010 (09951-07100)

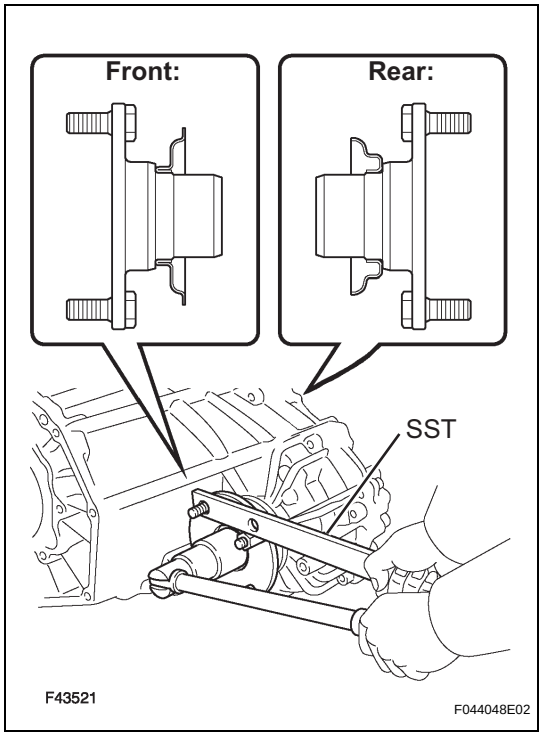

46. INSTALL OUTPUT SHAFT COMPANION FLANGE SUB-ASSEMBLY

(a) Install the companion flange sub-assembly (front side) onto the drive sprocket sub-assembly.
(b) Using SST to hold the companion flange, install a new companion flange lock nut.
SST 09330-00021
Torque: 118 N*m (1,203 kgf*cm, 87 ft.*lbf)
(c) Using a chisel and hammer, stake the companion flange lock nut.

47. INSTALL OUTPUT SHAFT COMPANION FLANGE SUB-ASSEMBLY

(a) Using SST, install the companion flange sub-assembly using the same procedure as for the companion flange sub-assembly (rear side).
SST 09330-00021

TF

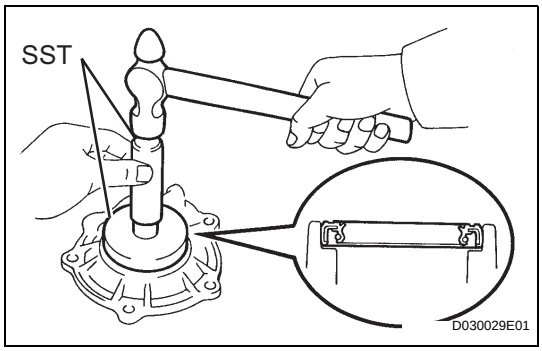

48. INSTALL TRANSFER RH BEARING RETAINER OIL SEAL (for R155F/A750F)

(a) Using SST and a hammer, tap in a new transfer cover type T oil seal until its surface is flush with the retainer upper surface.
SST 09950-60010 (09951-00590), 09950-70010 (09951-07100)

(b) Coat the lip of the oil seal with MP grease.

49. INSTALL TRANSFER RH BEARING RETAINER OIL SEAL (for RA60F)

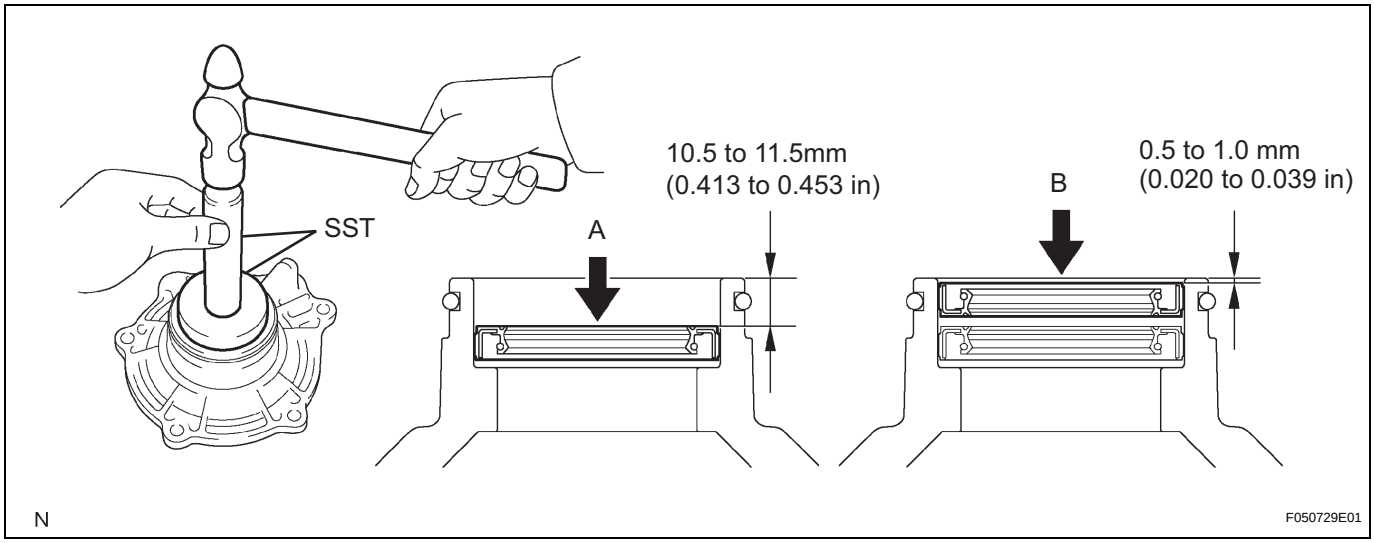

(a) Using SST and a hammer, tap in 2 new transfer cover type T oil seals A and B as shown in the illustration.
SST 09950-60010 (09951-00580), 09950-70010 (09951-07100)
Drive in depth:
10.5 to 11.5 mm (0.413 to 0.453 in.) for oil seal A
0.5 to 1.0 mm (0.020 to 0.039 in.) for oil seal B

(b) Coat the lip of the oil seal with MP grease.

(c) Install a new O-ring onto the transfer RH bearing retainer.
NOTICE:
Apply gear oil to the O-ring when installing the transfer onto the transmission.

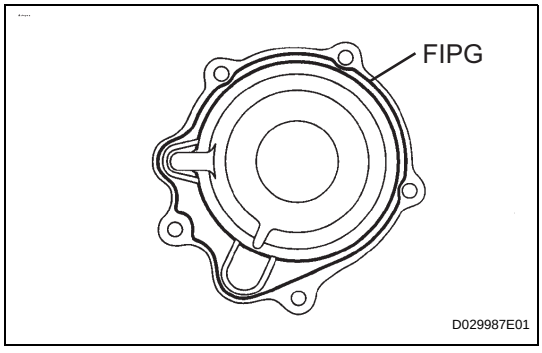

50. INSTALL TRANSFER RH BEARING RETAINER SUB-ASSEMBLY

(a) Apply FIPG to the front bearing retainer sub-assembly, as shown in the illustration.
FIPG:
Part No. 08826-00090, THREE BOND 1281 or equivalent

(b) Apply sealant to the bolt threads.
Sealant:
Part No. 08833-00080, THREE BOND 1344, LOCTITE 242 or equivalent

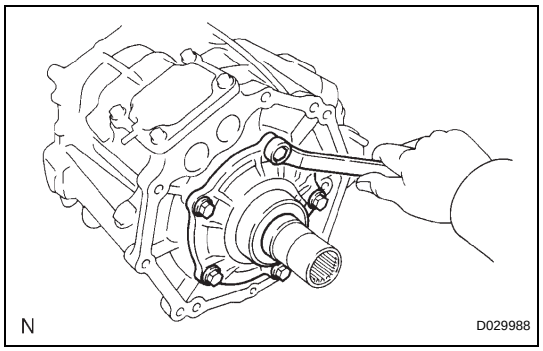

(c) Install the front bearing retainer sub-assembly with the 5 bolts.
Torque: 11.5 N*m (117 kgf*cm, 8 ft.*lbf)

51. INSTALL BREATHER OIL DEFLECTOR SUB-ASSEMBLY

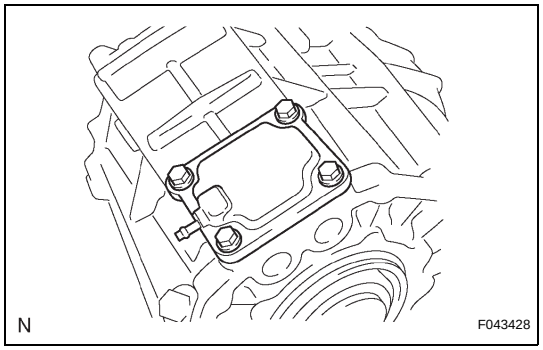

52. INSTALL TRANSFER CASE COVER SUB-ASSEMBLY
(a) Install the case cover sub-assembly with the 4 bolts.
Torque: 18 N*m (184 kgf*cm, 13 ft.*lbf)

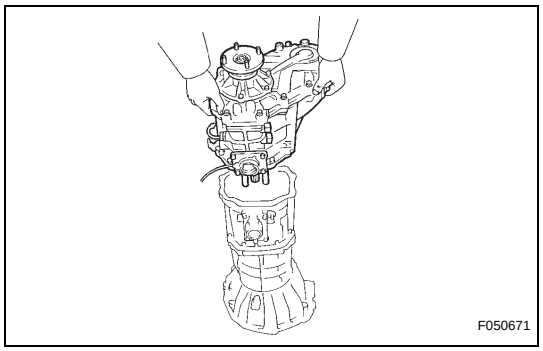

INSTALLATION

1. INSTALL TRANSFER ASSEMBLY
(a) Install the transfer assembly with the 8 bolts.
Torque: 24 N*m (244 kgf*cm, 17 ft.*lbf)
NOTICE:
Take care not to damage the adaptor rear oil seal with the transfer input gear spline.

2. INSTALL MANUAL TRANSMISSION ASSEMBLY (for R155F)
(See page MT-11)

3. INSTALL MANUAL TRANSMISSION ASSEMBLY (for RA60F)
(See page MT-8)

4. INSTALL AUTOMATIC TRANSMISSION ASSEMBLY (for A750F)
(See page AT-165)

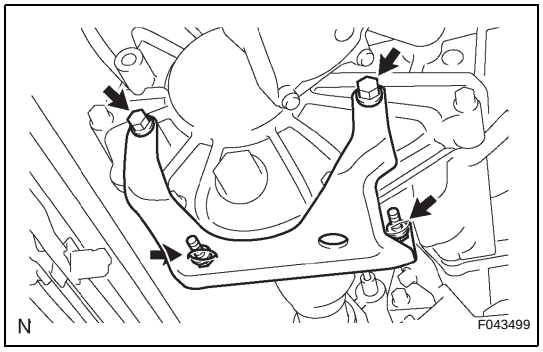

5. INSTALL TRANSFER CASE LOWER PROTECTOR
(a) Install the 4 bolts and the transfer case lower protector.
Torque: 18 N*m (184 kgf*cm, 13 ft.*lbf)

6. ADD TRANSFER OIL

7. INSPECT TRANSFER OIL (See page TF-3)

8. CONNECT CABLE TO NEGATIVE BATTERY TERMINAL
Torque: 3.9 N*m (40 kgf*cm, 35 in.*lbf)

9. CHECK FOR TRANSFER OIL LEAKAGE

10. CHECK FOR EXHAUST GAS LEAKAGE

DISASSEMBLY

1. INSPECT PROPELLER SHAFT UNIVERSAL JOINT SPIDER BEARING

(a) Check the spider bearings for wear and damage.

(b) Check the spider bearing axial play by turning the yoke with holding the shaft tightly.

Maximum bearing axial play:

0 to 0.05 mm (0 to 0.002 in.)

If the bearing axial play is greater than the maximum, replace the spider bearing.

2. REMOVE PROPELLER SHAFT UNIVERSAL JOINT SPIDER BEARING

(a) Place matchmarks on the propeller shaft and yoke.

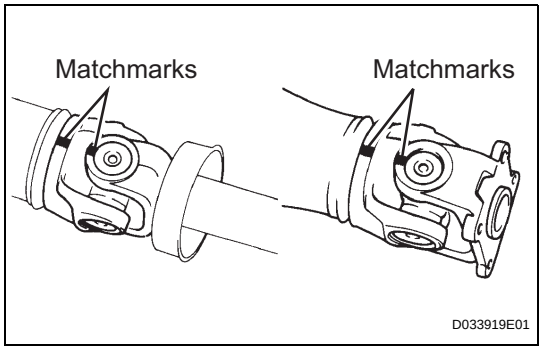

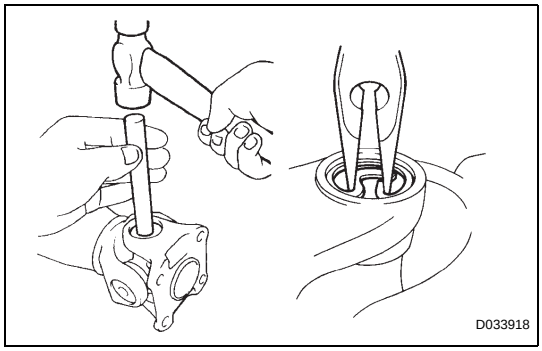

(b) Using a brass bar and a hammer, slightly tap in the spider bearing outer races.

(c) Using needle-nose pliers, remove the 4 snap rings from the grooves.

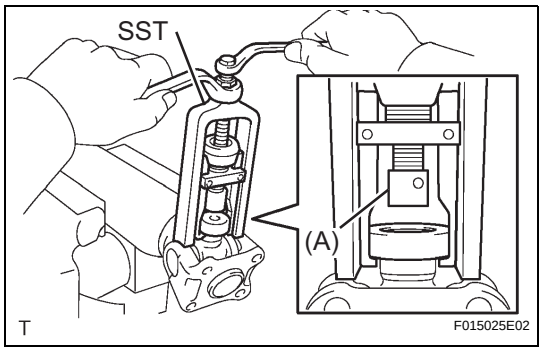

(d) Using SST, push the spider bearing out of the propeller shaft.

SST 09332-25010

HINT:

Sufficiently raise the part indicated by (A) so that it does not come into contact with the spider bearing.

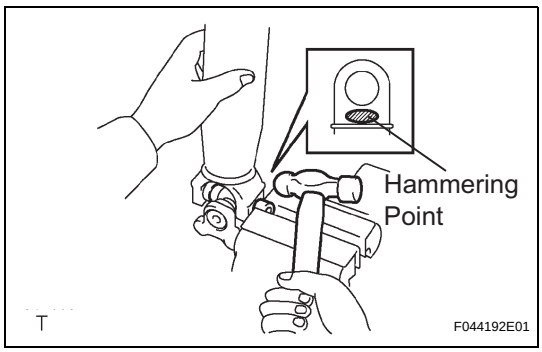

(e) Clamp the spider bearing outer race in a vise and tap off the propeller shaft with a hammer.

NOTICE:

Do not tap the shaft.

HINT:

Remove the spider bearing on the opposite side in the same procedure.

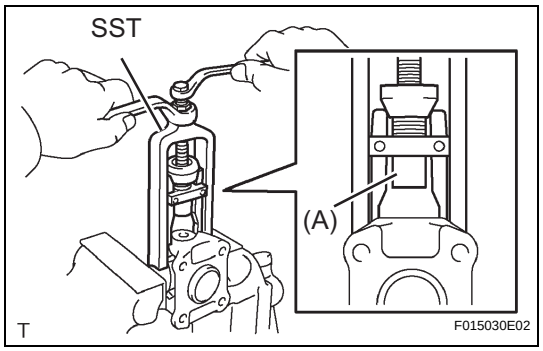

(f) Install the 2 removed spider bearing outer races onto the spider, and clamp them in a vise.
(g) Using SST, push the bearing out of the yoke.
SST 09332-25010
HINT:
Sufficiently raise the part indicated by (A) so that it does not come into contact with the bearing.

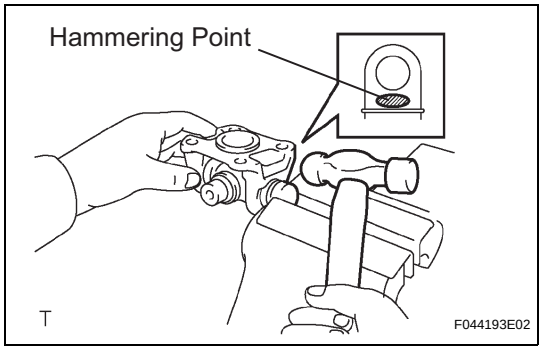

(h) Clamp the outer bearing race in a vise and tap off the yoke with a hammer.
(i) Remove the spider.

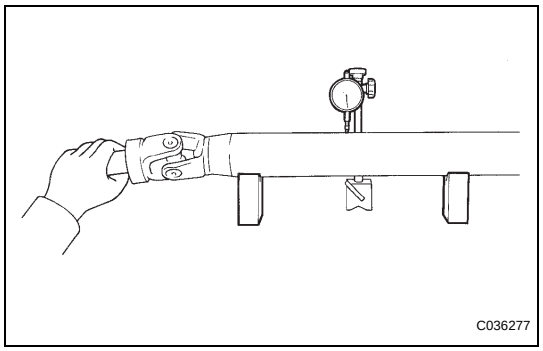

INSPECTION

1. INSPECT PROPELLER SHAFT ASSEMBLY

(a) Using a dial indicator, check the propeller shaft runout.
Maximum runout:
0.6 mm (0.024 in.)
If the shaft runout is greater than the maximum, replace the shaft.

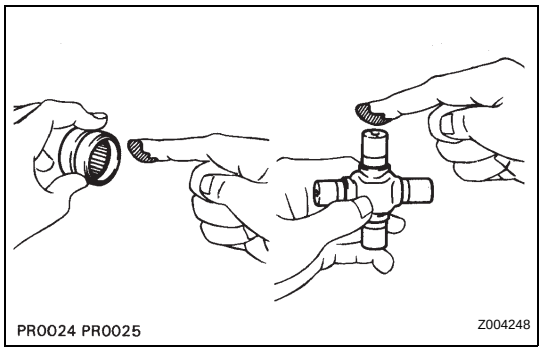

REASSEMBLY

1. INSTALL PROPELLER SHAFT UNIVERSAL JOINT SPIDER BEARING

(a) Apply MP grease No. 2 to a new spider and bearings.
(b) Fit the spider into the flange yoke.

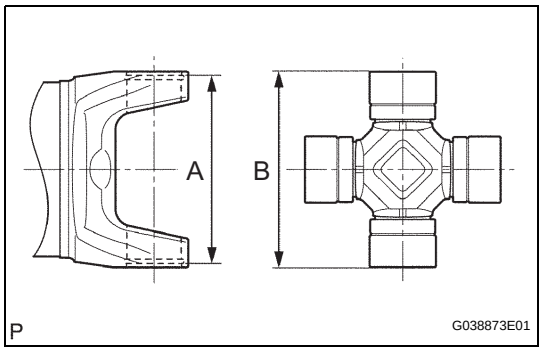

(c) Measure dimension A between the snap ring grooves.
(d) Insert the spider bearing into the spider journal portion, and then measure dimension B of the universal joint.
NOTICE:
When measuring dimension B, fix the spider and spider bearings in a vise and hold them firmly together.

PR

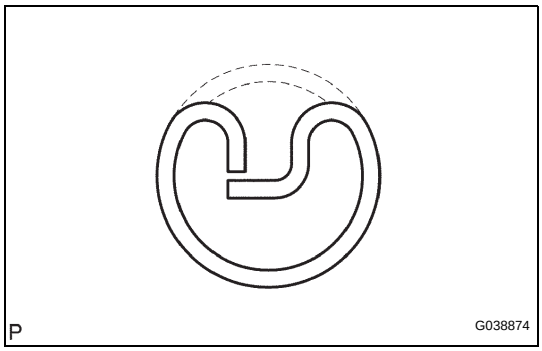

(e) Select snap rings to make dimensions A and B the same.

Snap Ring Type

Color	Thickness mm (in.)
Green	1.384 (0.0545)
Red	1.435 (0.0565)
Black	1.486 (0.0585)
Copper	1.511 (0.0595)
Silver	1.537 (0.0605)
Yellow	1.588 (0.0625)
Blue	1.638 (0.0645)

NOTICE:
- **Use new snap rings.**
- **If possible, use snap rings of the same thickness for both edges.**

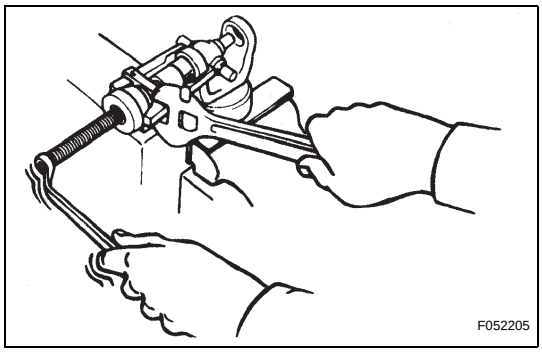

(f) Insert the spider into the yoke, and then using SST, press the spider bearing into the snap ring groove.

(g) Press in the spider bearing on the opposite side in the same way.

SST 09332-25010

NOTICE:

When pressing in the spider bearing, be careful not to damage its lip.

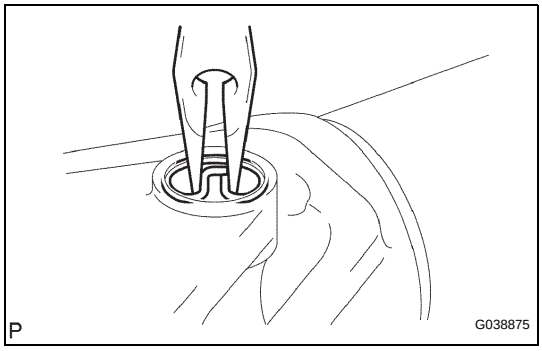

(h) Using needle-nose pliers, install new snap rings into the grooves of the yoke.

2. INSPECT PROPELLER SHAFT UNIVERSAL JOINT SPIDER BEARING

(a) Check the spider bearings for wear and damage.

(b) Check each spider bearing's axial play by turning the yoke while holding the shaft tightly.

Maximum bearing axial play:

0 to 0.05 mm (0 to 0.002 in.)

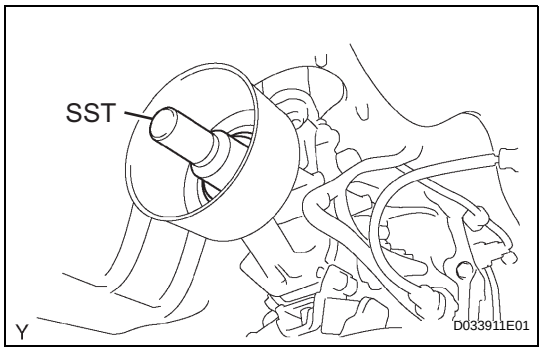

INSTALLATION

1. INSTALL PROPELLER SHAFT ASSEMBLY

(a) Remove SST from the extension housing.

(b) Install the propeller shaft assembly into the extension housing.

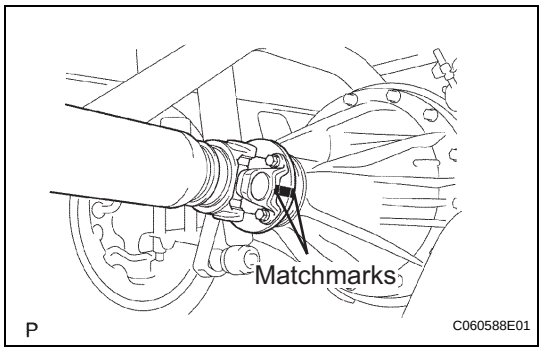

(c) Align the matchmarks on the propeller shaft flange and differential flange.

(d) Install the propeller shaft assembly with the 4 bolts, 4 nuts and 4 washers.
Torque: 88 N*m (899 kgf*cm, 65 ft.*lbf)

2. INSPECT TRANSMISSION OIL LEAKAGE

REMOVAL

1. DISCONNECT CABLE FROM NEGATIVE BATTERY TERMINAL

2. REMOVE FRONT WHEEL

3. DRAIN DIFFERENTIAL OIL

4. SEPARATE FRONT SPEED SENSOR

(a) Remove the bolt and separate the front speed sensor.

(b) Disengage the 2 clamps.

(c) Remove the bolt and separate the speed sensor wire harness from the steering knuckle.

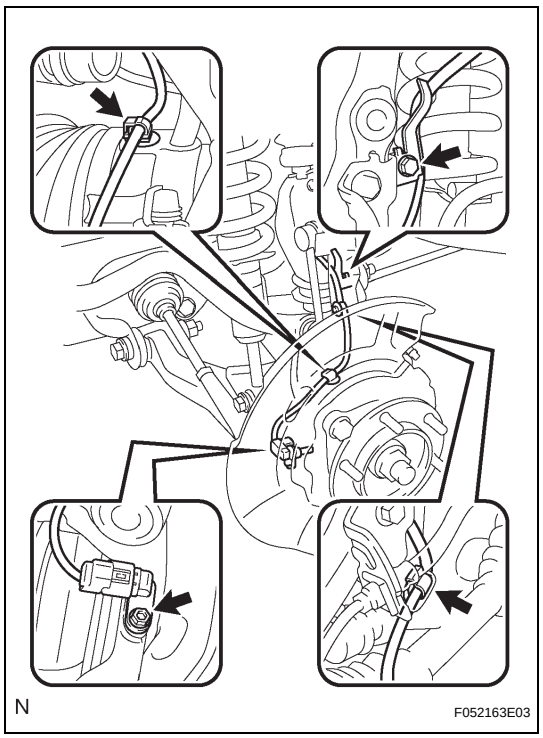

5. SEPARATE TIE ROD END SUB-ASSEMBLY

(a) Remove the cotter pin and nut.

(b) Using SST, separate the tie rod end from the steering knuckle.
SST 09628-62011

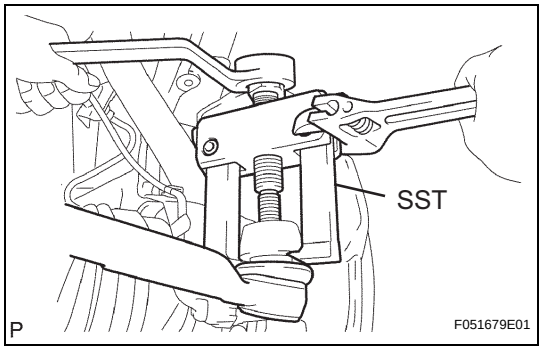

6. REMOVE FRONT AXLE HUB NUT

(a) Using a screwdriver and a hammer, remove the front axle hub grease cap.

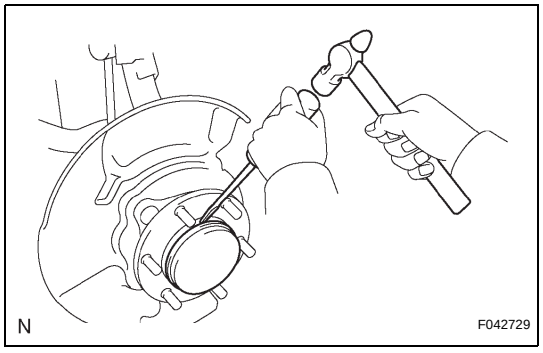

DS

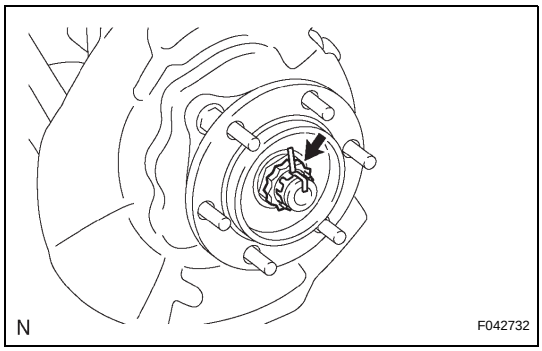

(b) Remove the cotter pin and adjusting cap.
(c) Remove the front axle hub nut.

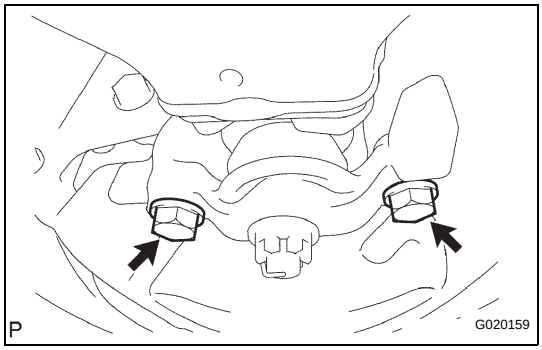

7. SEPARATE FRONT SUSPENSION LOWER ARM

(a) Remove the 2 bolts and separate the front lower ball joint attachment front from the steering knuckle.

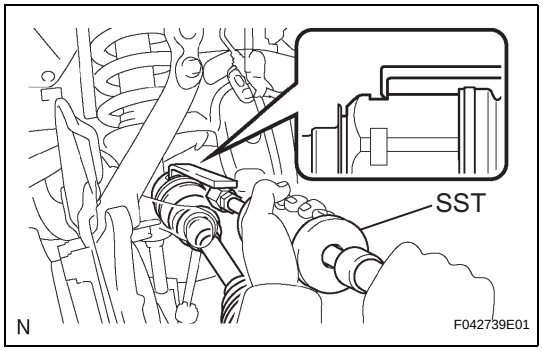

8. REMOVE FRONT DRIVE SHAFT

(a) Using SST, remove the front drive shaft.
SST 09520-01010, 09520-24010 (09520-32040)
NOTICE:
Be careful not to damage the oil seal.

DISASSEMBLY

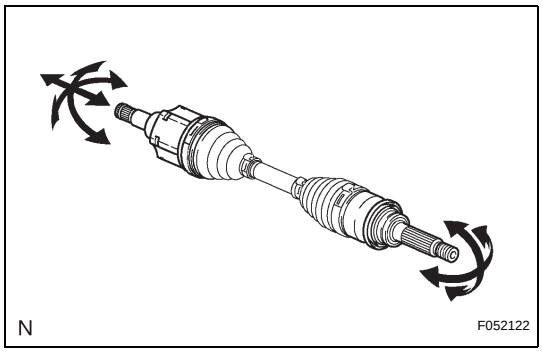

1. INSPECT FRONT DRIVE SHAFT

(a) Check whether there is no remarkable play in the outboard joint.
(b) Check whether the inboard joint slides smoothly in the thrust direction.
(c) Check whether there is no remarkable play in the radial direction of the inboard joint.
(d) Check the boots for damage.
NOTICE:
Move the drive shaft while keeping it level.

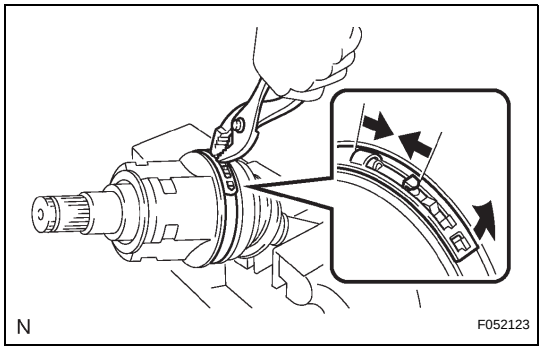

2. REMOVE FRONT AXLE INBOARD JOINT BOOT CLAMP

(a) Using pliers, disengage the hooks together and remove the large clamp.
(b) Using a side cutter, cut the small boot clamp.

3. SEPARATE INBOARD JOINT BOOT

(a) Slide the inboard joint boot toward the outboard joint.

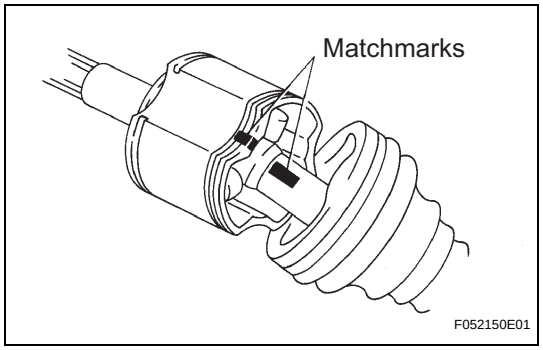

4. REMOVE FRONT DRIVE INBOARD JOINT ASSEMBLY

(a) Place matchmarks on the inboard joint and outboard joint shaft.
NOTICE:
Do not punch the marks.

(b) Remove the inboard joint from the outboard joint shaft.

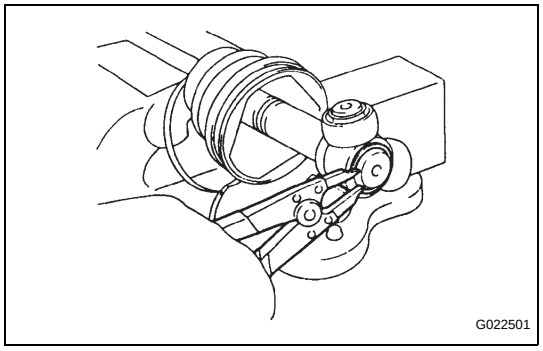

(c) Using a snap ring expander, remove the snap ring.

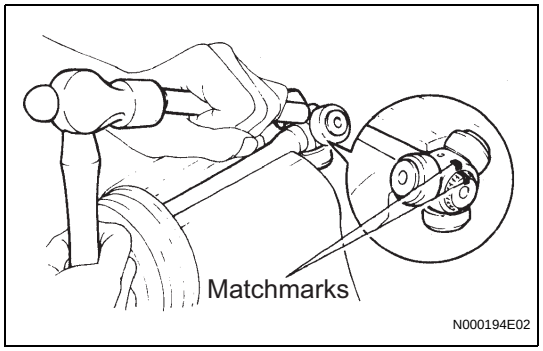

(d) Place matchmarks on the outboard joint shaft and tripod.
NOTICE:
Do not punch the marks.

(e) Using a brass bar and hammer, remove the tripod from the outboard joint shaft.
NOTICE:
Do not tap the roller.

(f) Remove the inboard joint boot from the outboard joint shaft.

5. REMOVE FRONT AXLE OUTBOARD JOINT BOOT CLAMP

(a) Using a side cutter, cut the boot clamps.

6. REMOVE OUTBOARD JOINT BOOT

(a) Remove the outboard joint boot from the outboard joint shaft.

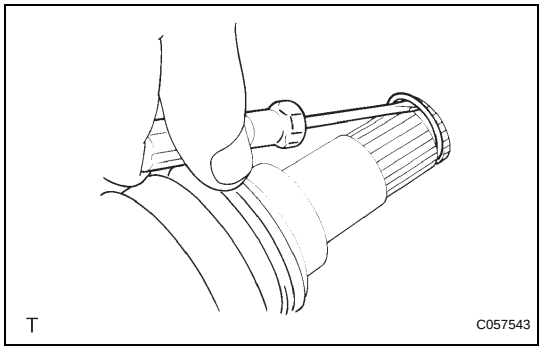

7. REMOVE FRONT DRIVE INNER SHAFT OUTER SHAFT SNAP RING

(a) Using a screwdriver, remove the snap ring.

DS

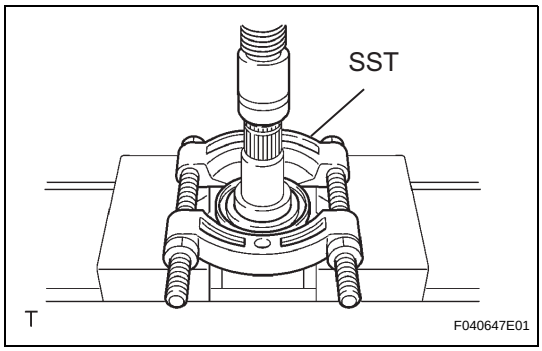

8. REMOVE FRONT DRIVE SHAFT DUST COVER

(a) Using SST and a press, remove the dust cover.
SST 09950-00020

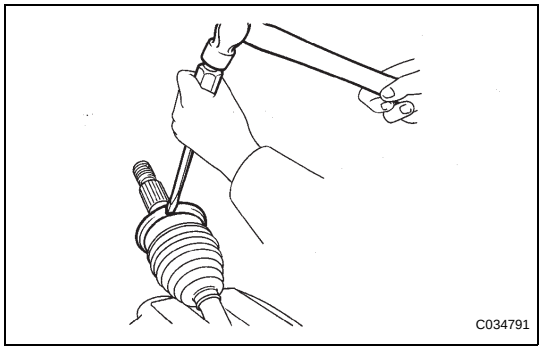

9. REMOVE FRONT AXLE HUB OIL SEAL

(a) Using a screwdriver and a hammer, remove the oil seal.

REASSEMBLY

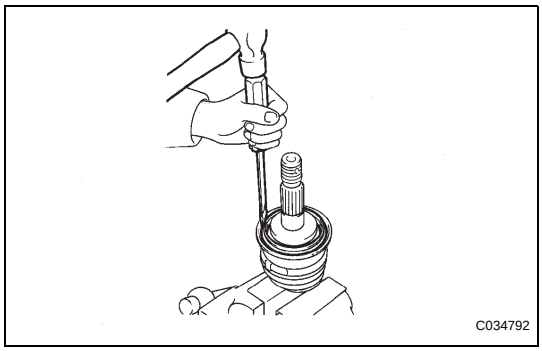

1. INSTALL FRONT AXLE HUB OIL SEAL

(a) Using a screwdriver and a hammer, install a new oil seal.
NOTICE:
Do not damage the oil seal.

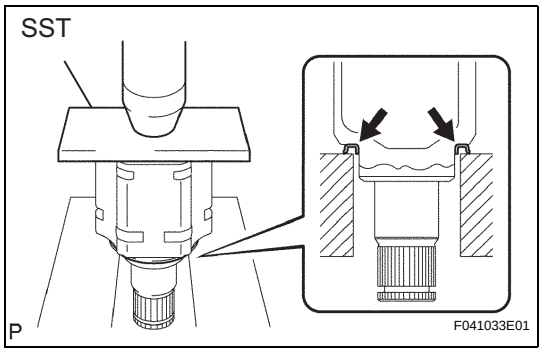

2. INSTALL FRONT DRIVE SHAFT DUST COVER

(a) Using SST and a press, install a new dust cover.
SST 09527-10011

3. INSTALL FRONT DRIVE INNER SHAFT OUTER SHAFT SNAP RING

(a) Install a new snap ring.

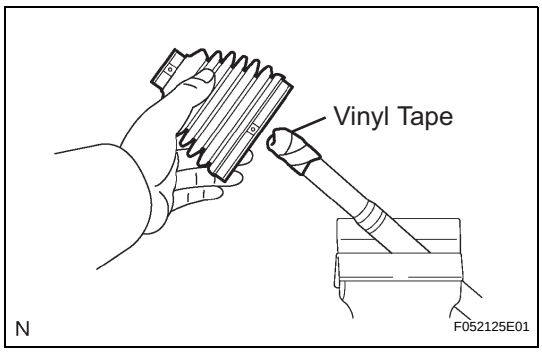

4. INSTALL OUTBOARD JOINT BOOT

HINT:

- Before installing the boots, wrap the spline of the outboard joint with vinyl tape to prevent the boots from being damaged.
- Before installing the boot, place 2 new boot clamps on the small boot end and large boot ends.

(a) Provisionally install a new outboard joint boot with 2 new clamps onto the outboard joint shaft.

(b) Fill the outboard joint and boot with grease in the boot kit.
Grease capacity:
260 to 280 g (9.2 to 9.9 oz.)
(c) Provisionally install the boot onto the outboard joint.

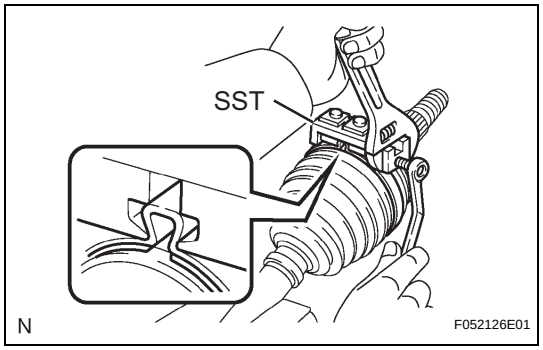

5. INSTALL FRONT AXLE OUTBOARD JOINT BOOT CLAMP
(a) Install the boot clamps onto the boot.
(b) Place SST onto the large boot clamp.
SST 09521-24010
(c) Tighten the SST so that the large boot clamp is pinched.
NOTICE:
Do not overtighten the SST.

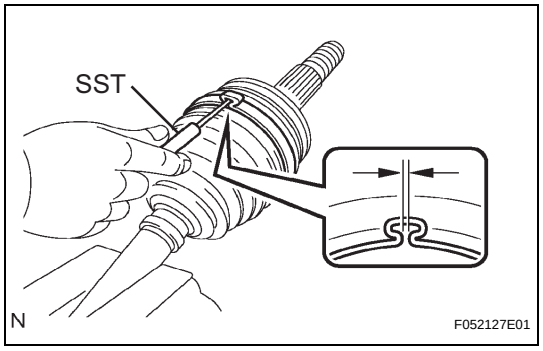

(d) Using SST, adjust the clearance of the large boot clamp.
SST 09240-00020
Clearance:
1.0 to 5.0 mm (0.039 to 0.197 in.)
(e) Use the same procedure for the small boot clamp.

6. INSTALL INBOARD JOINT BOOT
HINT:
Before installing the boot, place a new boot clamp on the small boot end.
(a) Provisionally install a new inboard joint boot with a new clamp onto the outboard joint shaft.

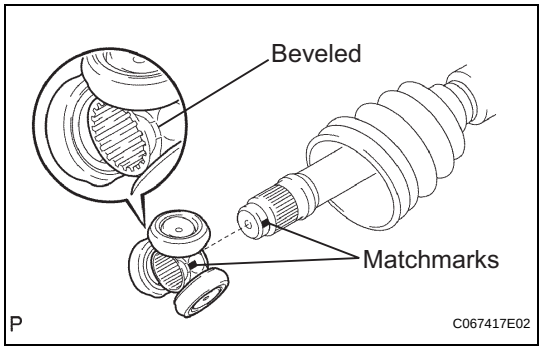

7. INSTALL FRONT DRIVE INBOARD JOINT ASSEMBLY
(a) Place the beveled side of the tripod toward the inboard joint.
(b) Align the matchmarks and install the tripod into the inboard joint.
(c) Using a brass bar and hammer, tap the tripod into the outboard joint shaft.
NOTICE:
Do not tap the roller.

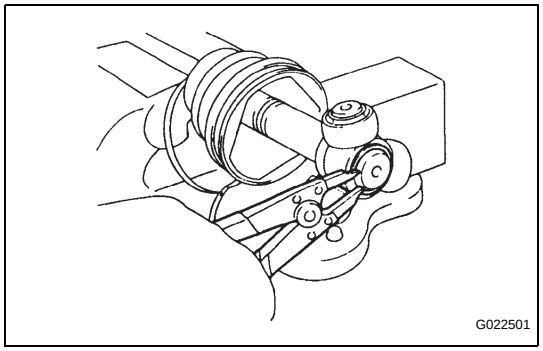

(d) Using a snap ring expander, install a new snap ring.
(e) Pack the inboard joint and boot with grease from the boot kit.
Grease capacity:
182 to 202 g (6.4 to 7.1 oz.)
(f) Align the matchmarks placed before removal and install the inboard joint onto the outboard joint shaft.
(g) Provisionally install the boot onto the inboard joint.

8. INSTALL FRONT AXLE INBOARD JOINT BOOT CLAMP
(a) Place the large boot clamp.

DS

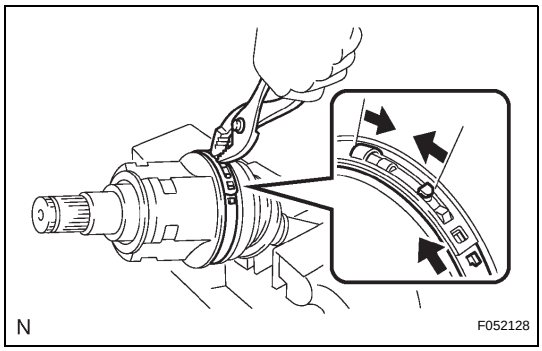

(b) Using pliers, compress the large clamp and attach the claws.

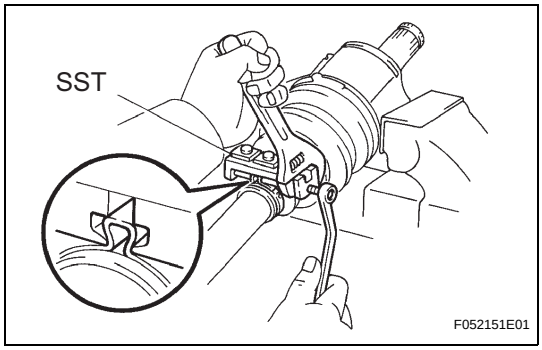

(c) Secure the boot clamp onto the boot.
(d) Place SST onto the small boot clamp.
SST 09521-24010
(e) Tighten the SST so that the small boot clamp is pinched.
NOTICE:
Do not overtighten the SST.

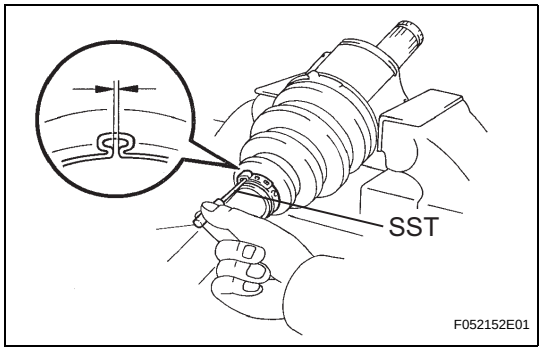

(f) Using SST, adjust the clearance of the small boot clamp.
SST 09240-00020
Clearance:
1.0 to 4.0 mm (0.039 to 0.157 in.)

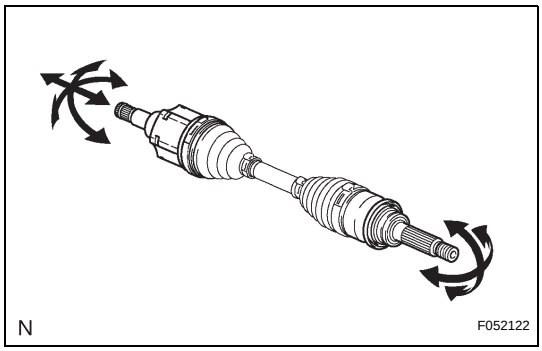

9. INSPECT FRONT DRIVE SHAFT
(a) Check whether there is no remarkable play in the outboard joint.
(b) Check whether the inboard joint slides smoothly in the thrust direction.
(c) Check whether there is no remarkable play in the radial direction of the inboard joint.
(d) Check the boots for damage.
NOTICE:
Move the drive shaft while keeping it level.

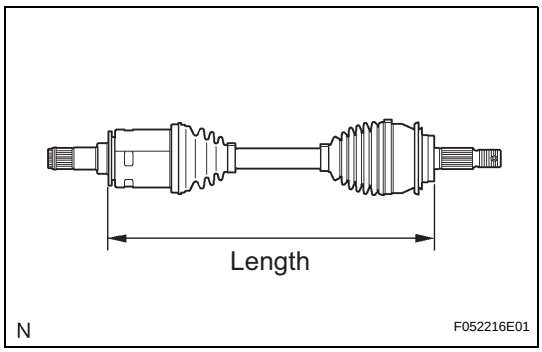

(e) Make sure that the boots are not stretched or contracted when the drive shaft is at standard length.
Drive shaft standard length:
484.4 to 488.4 mm (19.071 to 19.226 in.)
NOTICE:
Move the drive shaft keeping it level.

SYSTEM DIAGRAM

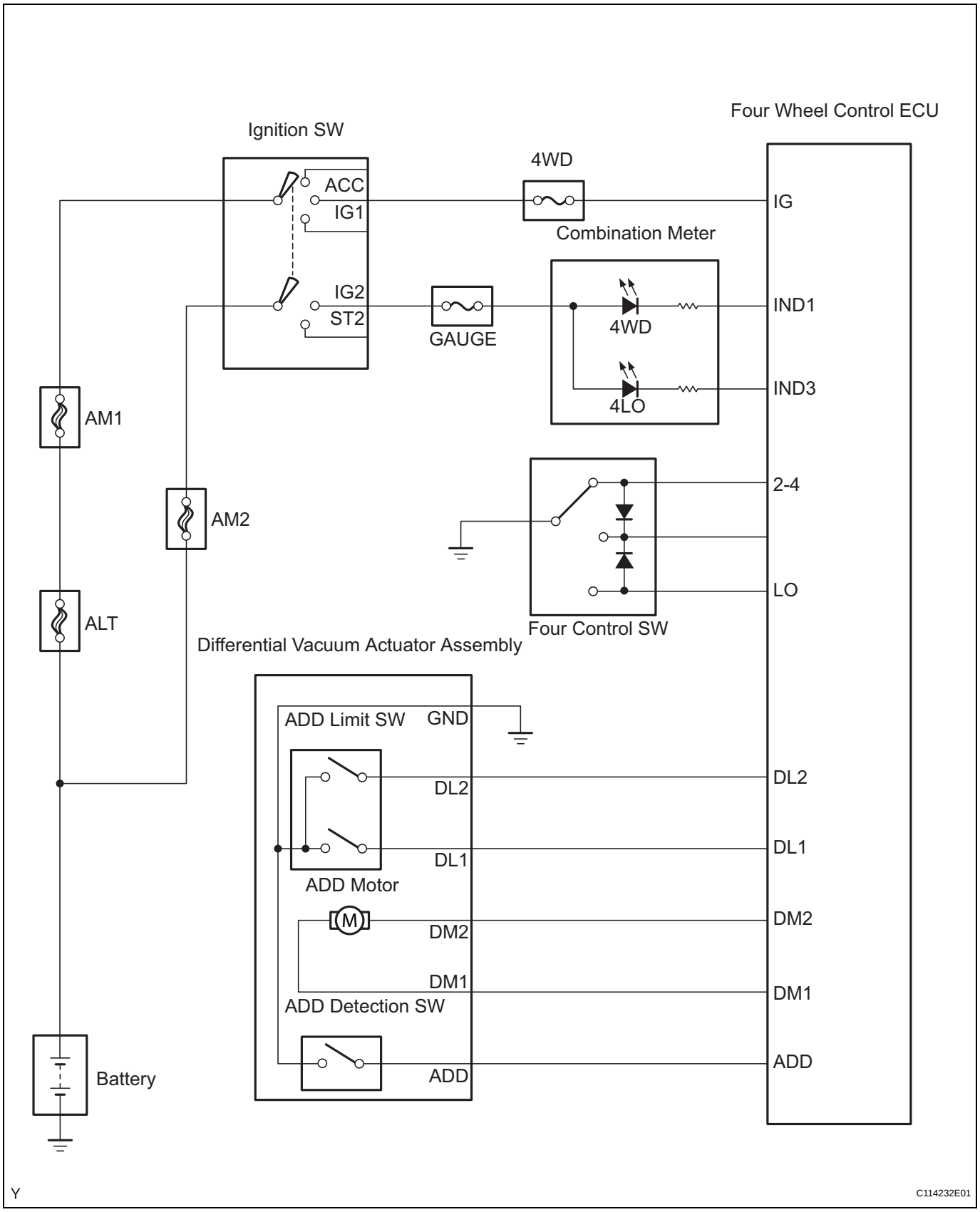

DF

PROBLEM SYMPTOMS TABLE

HINT:
Use the table below to help you find the cause of the problem. The numbers indicate the ranked order of probability of each of the possible causes. Check each part in order. If necessary, replace these parts.

Symptom	Suspected area	See page
Oil leakage from front differential	1. Oil level (Too high or wrong grade)	DF-8
	2. Front differential rear oil seal (Worn or damaged)	DF-12
	3. Companion flange (Loose or damaged)	DF-19
Oil leakage from rear differential	1. Oil level (Too high or wrong grade)	DF-8
	2. Rear differential front oil seal (Worn or damaged)	DF-9
	3. Companion flange (Loose or damaged)	DF-43

REMOVAL

1. DISCONNECT CABLE FROM NEGATIVE BATTERY TERMINAL

2. REMOVE FRONT WHEEL

3. SEPARATE SKID CONTROL SENSOR WIRE

(a) Remove the speed sensor connector.

(b) Remove the 2 bolts, and separate the skid control sensor wire.

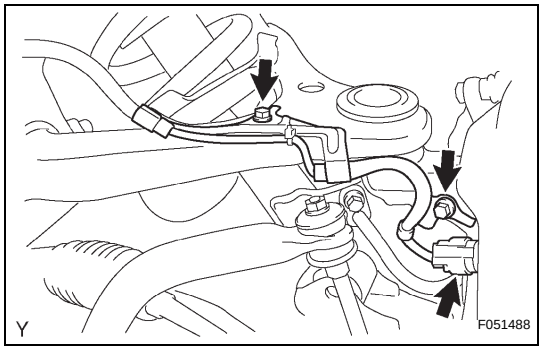

4. REMOVE FRONT SPEED SENSOR

(a) Remove the bolt, and then remove the front speed sensor.

5. SEPARATE FRONT FLEXIBLE HOSE

(a) Remove the bolt, and separate the front flexible hose.

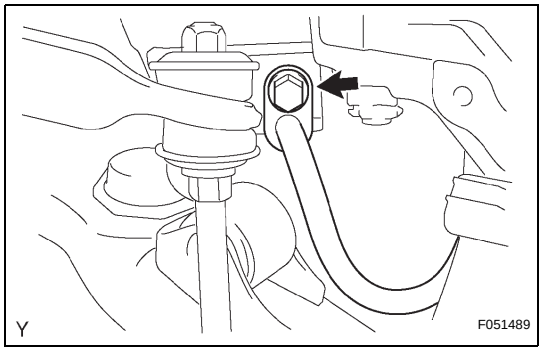

6. REMOVE FRONT DISC BRAKE CALIPER ASSEMBLY

(a) Remove the union bolt and gasket from the disc brake cylinder and then disconnect the flexible hose.

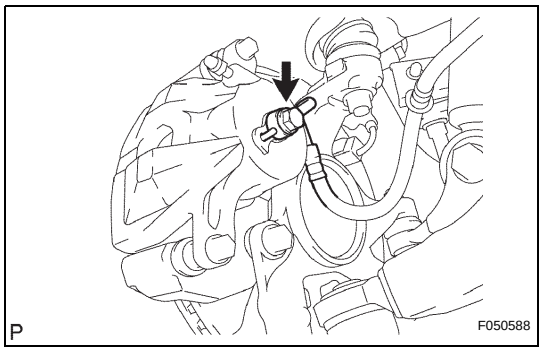

(b) Remove the 2 bolts, and then remove the brake caliper.

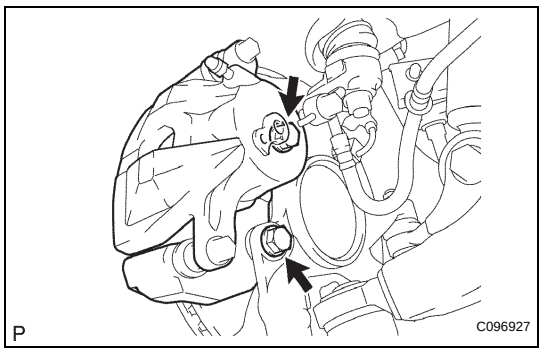

7. REMOVE FRONT DISC

8. SEPARATE TIE ROD END SUB-ASSEMBLY

(a) Remove the cotter pin and nut.

AH

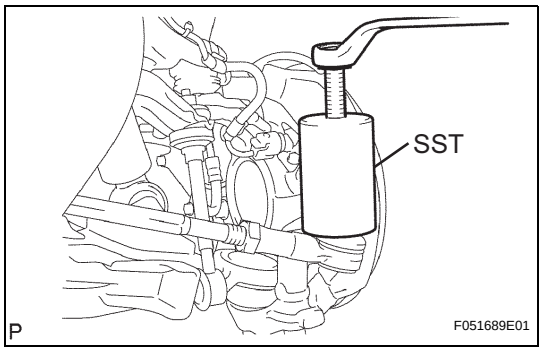

(b) Using SST, separate the tie rod end from the steering knuckle arm.
SST 09610-20012

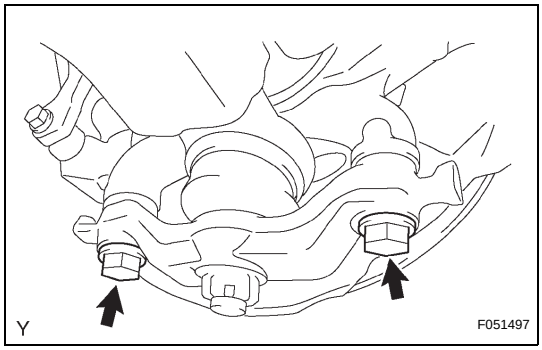

9. SEPARATE FRONT SUSPENSION LOWER ARM
(a) Remove the 2 bolts, and separate the front lower ball joint attachment from the front axle.

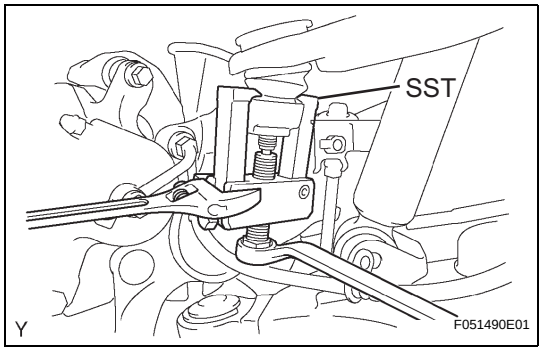

10. SEPARATE FRONT SUSPENSION UPPER ARM
(a) Remove the clip and nut.
(b) Using SST, separate the upper ball joint from the steering knuckle.
SST 09628-62011

11. REMOVE FRONT AXLE HUB

DISASSEMBLY

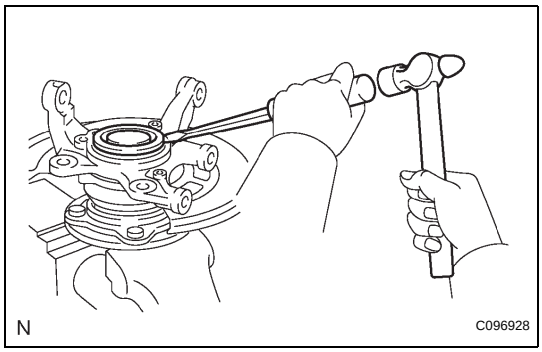

1. REMOVE KNUCKLE GREASE RETAINER CAP
(a) Using a screwdriver and a hammer, tap out the knuckle grease retainer cap.

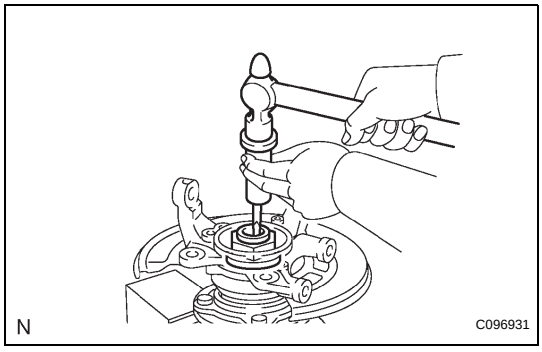

2. REMOVE FRONT AXLE HUB NUT
(a) Using SST and a hammer, loosen the staked part of the lock nut.
SST 09930-00010

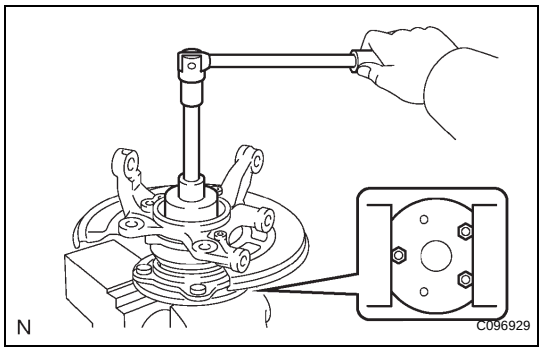

(b) Attach the 3 bolts onto the hub bolt in the position shown in the illustration, and screw them into the flange, then fix them in a vice.
(c) Using a socket wrench (36 mm), remove the lock nut.
(d) Remove the spacer.

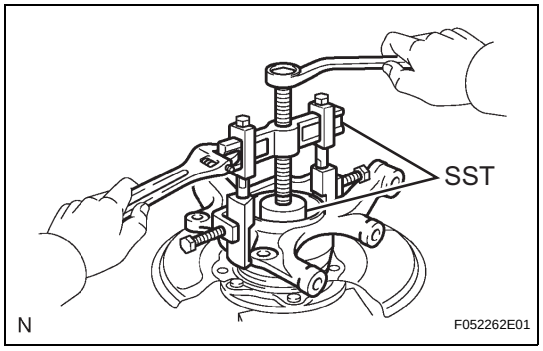

3. REMOVE STEERING KNUCKLE

(a) Remove the 3 bolts and shift the dust cover towards the hub side (outside).
(b) Using SST, remove the steering knuckle.
SST 09710-30021 (09710-03131), 09950-40011 (09951-04020, 09952-04010, 09953-04020, 09954-04010, 09955-04031, 09957-04010, 09958-04011)
(c) Remove the dust cover from the axle hub.

4. REMOVE FRONT AXLE HUB OIL SEAL

(a) Using a screwdriver, pry out the oil seal from the steering knuckle.

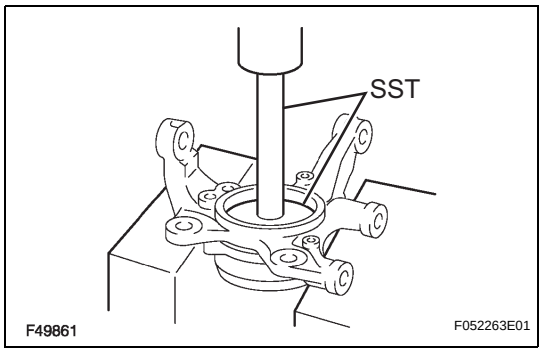

5. REMOVE FRONT AXLE HUB INNER BEARING

(a) Using snap ring pliers, remove the snap ring.
(b) Using SST and a press, press the bearing out of the steering knuckle.
SST 09950-60020 (09951-00710), 09950-70010 (09951-07150)

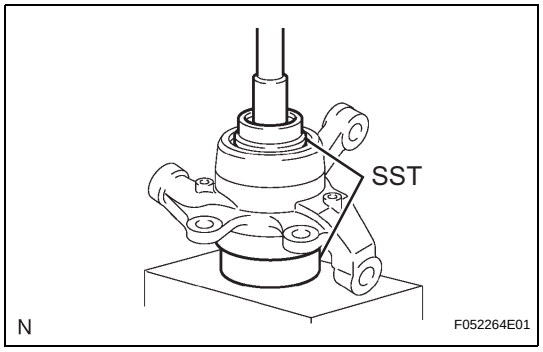

REASSEMBLY

1. INSTALL FRONT AXLE HUB INNER BEARING

(a) Using SST and a press, press a new bearing into the steering knuckle.
SST 09527-17011, 09608-10010
(b) Using snap ring pliers, install a new snap ring.

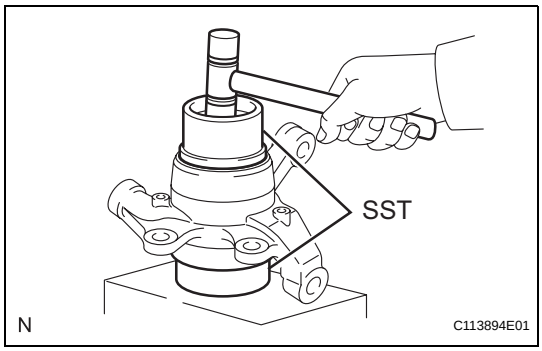

2. INSTALL FRONT AXLE HUB OIL SEAL

(a) Using SST and a plastic-faced hammer, tap in a new oil seal.
SST 09223-15020, 09527-17011

(b) Coat MP grease to the oil seal lip.

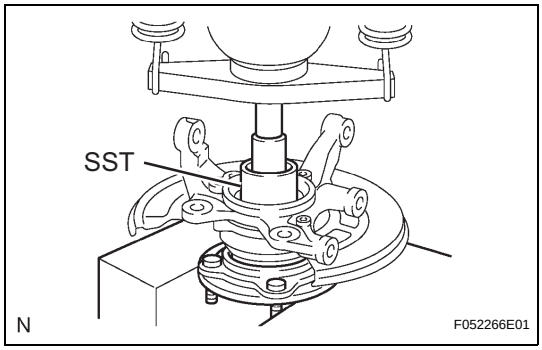

3. INSTALL STEERING KNUCKLE

(a) Install the dust cover onto the steering knuckle with the 3 bolts.
Torque: 8.3 N*m (85 kgf*cm, 73 in.*lbf)

(b) Using SST and a press, press in the axle hub to the steering knuckle.
SST 09710-30050

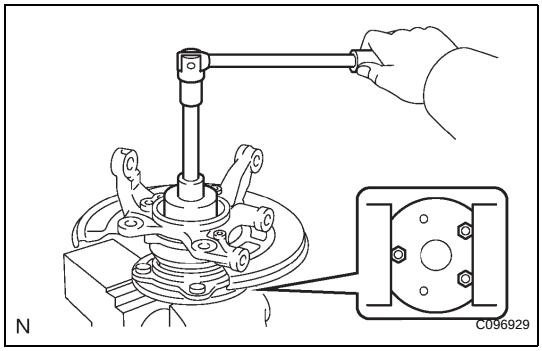

4. INSTALL FRONT AXLE HUB NUT

(a) Attach the 3 bolts onto the hub bolt in the position shown in the illustration, and screw them into the flange, then fix them in a vice.

(b) Install the spacer.

(c) Using a socket wrench (36 mm), install a new lock nut onto the axle hub.
Torque: 199 N*m (2,029 kgf*cm, 147 ft.*lbf)

(d) Using a chisel and hammer, stake the lock nut.

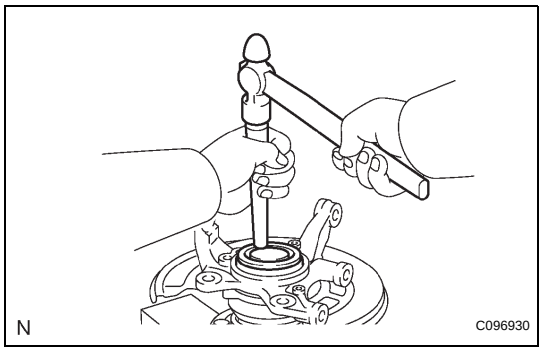

5. INSTALL KNUCKLE GREASE RETAINER CAP

(a) Using a brass bar and hammer, install the knuckle grease retainer cap.
NOTICE:
Do not damage the knuckle grease retainer cap.

AH

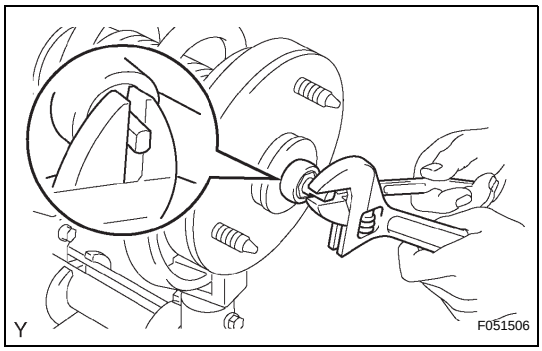

(b) While holding the shock absorber rod, remove the nut.
NOTICE:
Do not use an impact wrench. It will damage the shock absorber rod.

2. **REMOVE FRONT SHOCK ABSORBER CUSHION RETAINER**
3. **REMOVE FRONT SHOCK ABSORBER CUSHION NO. 1**
4. **REMOVE FRONT SUSPENSION SUPPORT SUB-ASSEMBLY**
5. **REMOVE FRONT COIL SPRING INSULATOR UPPER**
6. **REMOVE FRONT SHOCK ABSORBER CUSHION RETAINER**
7. **REMOVE FRONT COIL SPRING**

INSPECTION

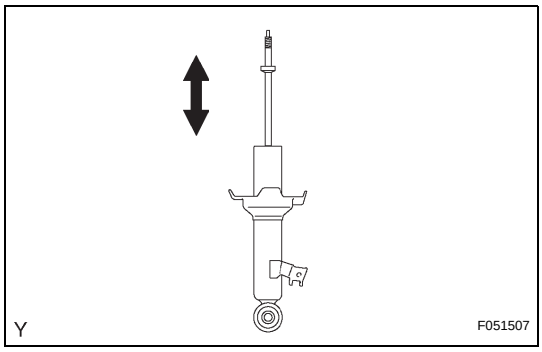

1. **INSPECT SHOCK ABSORBER ASSEMBLY FRONT**
   (a) Compress and extend the shock absorber rod and check that there is no abnormal resistance or unusual sound during operation.
   If there is any abnormality, replace the shock absorber front with a new one.
   NOTICE:
   When disposing of the shock absorber front, see DISPOSAL on page SP-18.

REASSEMBLY

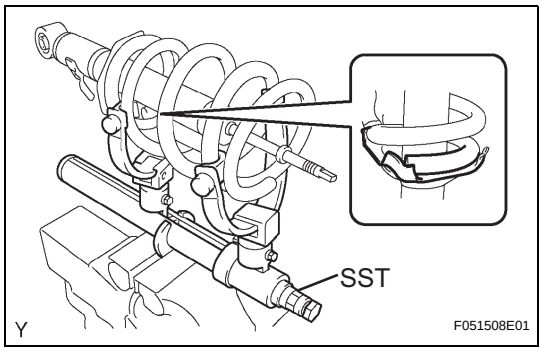

1. **INSTALL FRONT COIL SPRING**
   (a) Using SST, compress the front coil spring LH.
   SST 09727-30021 (09727-00010, 09727-00031), 09727-00060
   NOTICE:
   Do not use an impact wrench. It will damage SST.
   (b) Install the front coil spring onto the shock absorber front.
   HINT:
   Fit the lower end of the front coil spring into the gap of the spring lower seat.
2. **INSTALL FRONT SHOCK ABSORBER CUSHION RETAINER**
3. **INSTALL FRONT COIL SPRING INSULATOR UPPER**
4. **INSTALL FRONT SUSPENSION SUPPORT SUB-ASSEMBLY**
5. **INSTALL FRONT SHOCK ABSORBER CUSHION NO. 1**
6. **INSTALL FRONT SHOCK ABSORBER CUSHION RETAINER**

SP

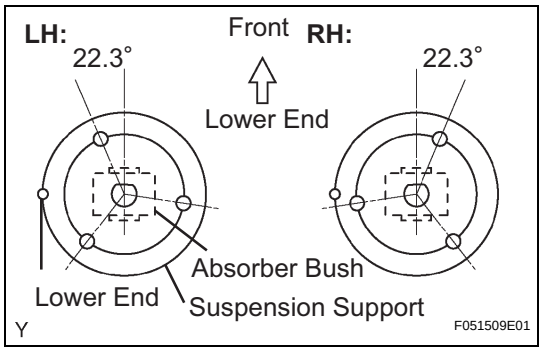

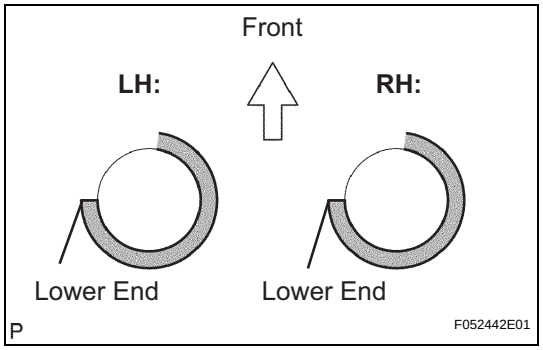

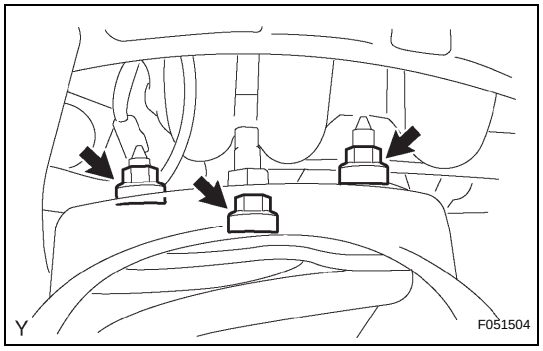

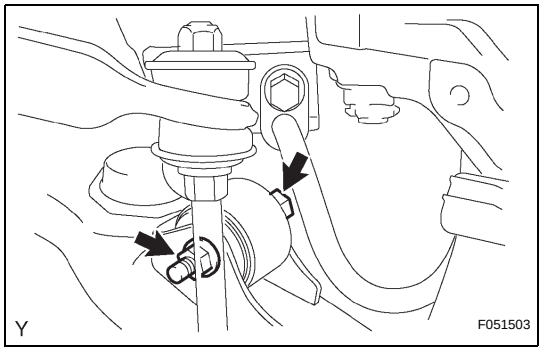

7. INSTALL FRONT SUPPORT TO FRONT SHOCK ABSORBER NUT

(a) Align the suspension support and the absorber bush as shown in the illustration.

(b) Fit and tighten a new lock nut.
Torque: 27 N*m (275 kgf*cm, 20 ft.*lbf)
NOTICE:
Do not use an impact wrench. It will damage the shock absorber rod.

(c) Release the coil spring while checking the position of the suspension support.

INSTALLATION

1. TEMPORARILY TIGHTEN FRONT SHOCK ABSORBER WITH COIL SPRING

(a) LH Side:
(1) Install the coil spring onto the body with the lower end of the coil spring facing the outer side of the vehicle.

(b) RH Side:
(1) Install the coil spring onto the body with the lower end of the coil spring facing the inner side of the vehicle.

(c) Install the 3 nuts onto the upper side of the front shock absorber with coil spring.
Torque: 64 N*m (653 kgf*cm, 47 ft.*lbf)

(d) Temporarily tighten the bolt, nut and washer as shown in the illustration.

2. TEMPORARILY TIGHTEN FRONT SUSPENSION UPPER ARM (See page SP-28)

3. INSTALL FRONT FLEXIBLE HOSE (See page SP-28)

4. INSTALL SKID CONTROL SENSOR WIRE (See page SP-28)

5. INSTALL FRONT WHEEL
Torque: 113 N*m (1,152 kgf*cm, 83 ft.*lbf)

6. STABILIZE SUSPENSION

(a) Jack down the vehicle.

(b) Bounce the vehicle up and down several times to stabilize the suspension.

SP

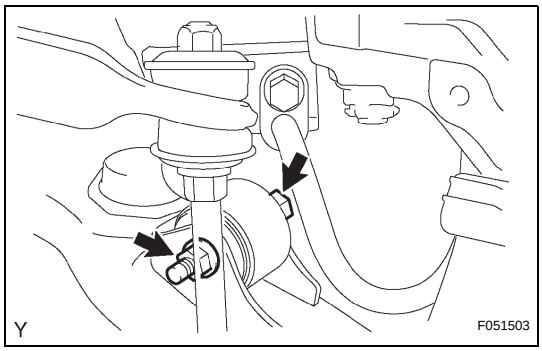

7. FULLY TIGHTEN FRONT SHOCK ABSORBER WITH COIL SPRING

(a) Fully tighten the nut.
Torque: 83 N*m (846 kgf*cm, 61 ft.*lbf)

8. FULLY TIGHTEN FRONT SUSPENSION UPPER ARM (See page SP-28)

9. CONNECT CABLE TO NEGATIVE BATTERY TERMINAL
Torque: 3.9 N*m (40 kgf*cm, 35 in.*lbf)
(See page IN-5)

10. INSPECT AND ADJUST FRONT WHEEL ALIGNMENT
(See page SP-2)

DISPOSAL

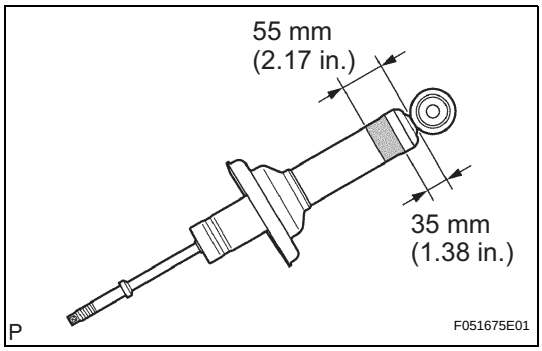

1. DISPOSE OF SHOCK ABSORBER ASSEMBLY FRONT

(a) Fully extend the shock absorber piston rod, and fix it at an angle in a vise or similar tool.

(b) Using a drill or similar tool, slowly make a hole in the shaded area shown in the illustration, and discharge the gas inside.
CAUTION:
- **The gas is colorless, odorless and harmless.**
- **Since the discharged gas may cause chips to scatter, cover the drill with a shop rag when making the hole.**

SP

INSTALLATION

1. INSTALL FRONT STABILIZER BAR

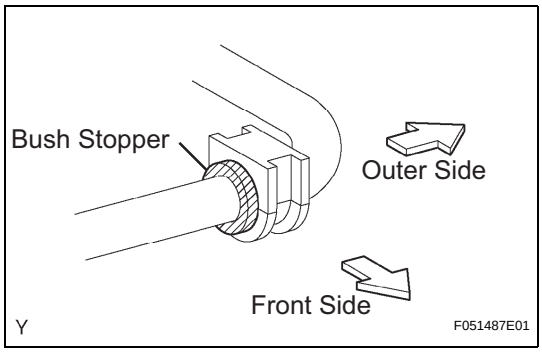

2. INSTALL FRONT STABILIZER LOWER BRACKET BUSH LH

(a) Install the front stabilizer lower bracket bush.
HINT:
- Install the bush onto the inner side of the bush stopper on the stabilizer bar.
- Install the bush onto the stabilizer bar with its cut line facing to the front.

3. INSTALL FRONT STABILIZER LOWER BRACKET BUSH RH

HINT:
The installation procedure for the RH side is the same as that for the LH side.

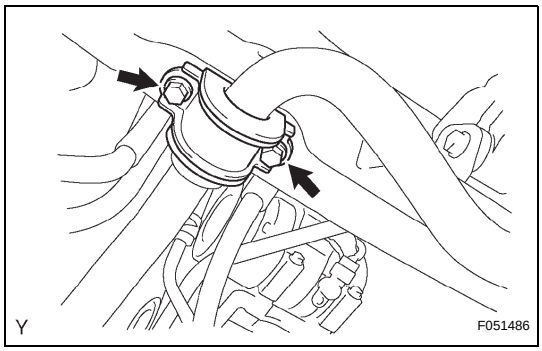

4. INSTALL FRONT STABILIZER BRACKET NO. 1 LH

(a) Install the front stabilizer bracket with the 2 bolts.
Torque: 21 N*m (214 kgf*cm, 16 ft.*lbf)

5. INSTALL FRONT STABILIZER BRACKET NO. 1 RH

HINT:
The installation procedure for the RH side is the same as that for the LH side.

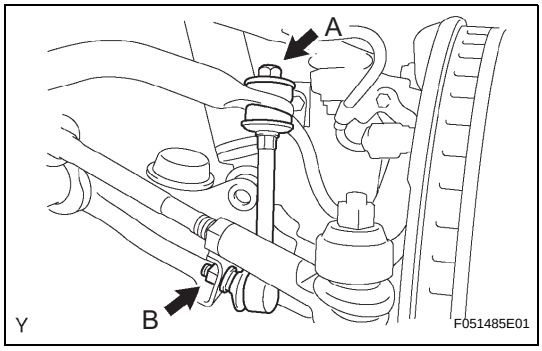

6. INSTALL FRONT STABILIZER LINK ASSEMBLY LH

(a) Install the front stabilizer link LH with the 2 nuts, 2 cushions and 2 retainers.
Torque: Nut A
19 N*m (194 kgf*cm, 14 ft.*lbf)
Nut B
69 N*m (704 kgf*cm, 51 ft.*lbf)
HINT:
If the ball joint turns together with the nut, use a hexagon (6 mm) wrench to hold the stud.

7. INSTALL FRONT STABILIZER LINK ASSEMBLY RH

HINT:
The installation procedure for the RH side is the same as that for the LH side.

8. INSTALL FRONT WHEELS
Torque: 113 N*m (1,152 kgf*cm, 83 ft.*lbf)

PARTS LOCATION

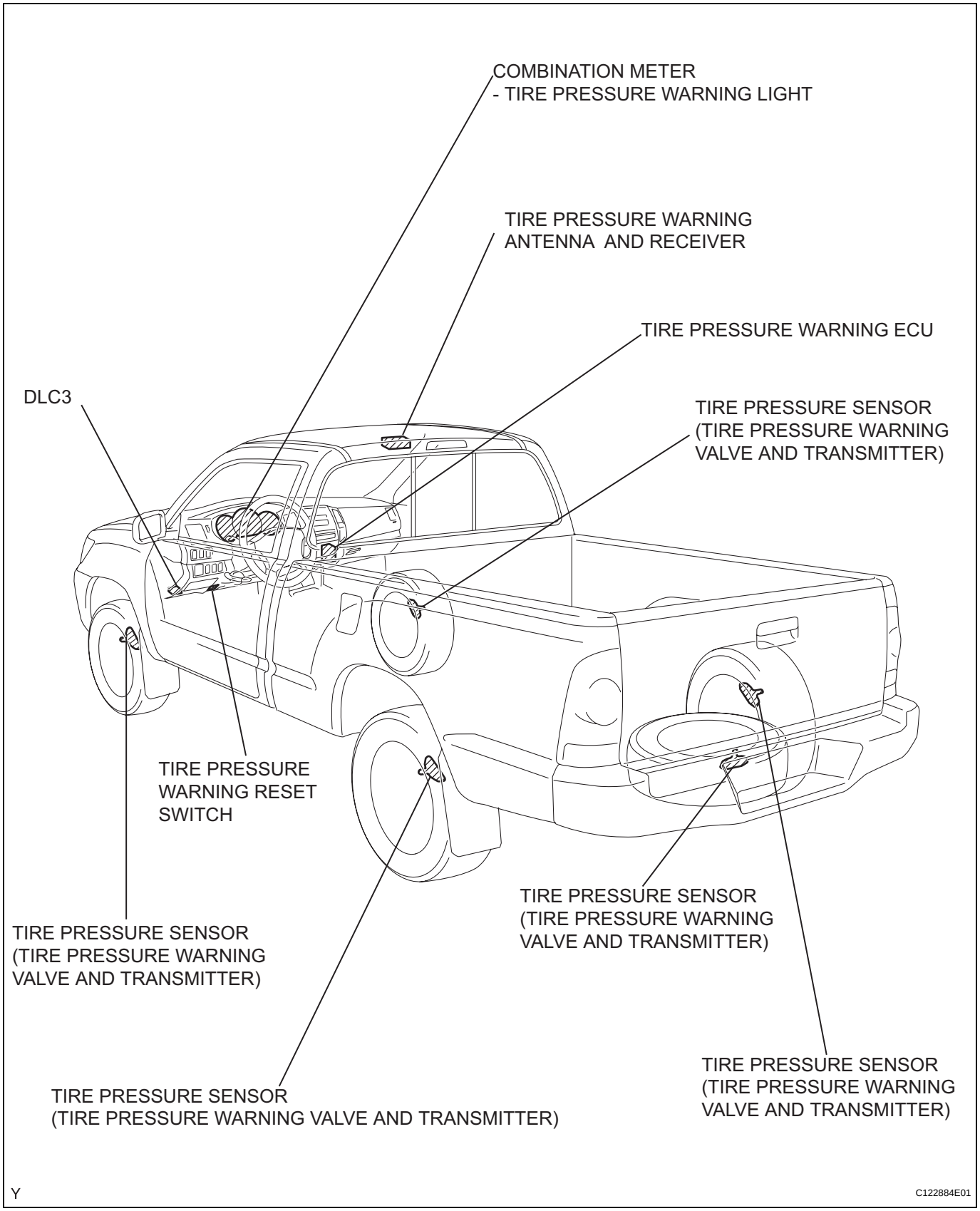

TW

SYSTEM DIAGRAM

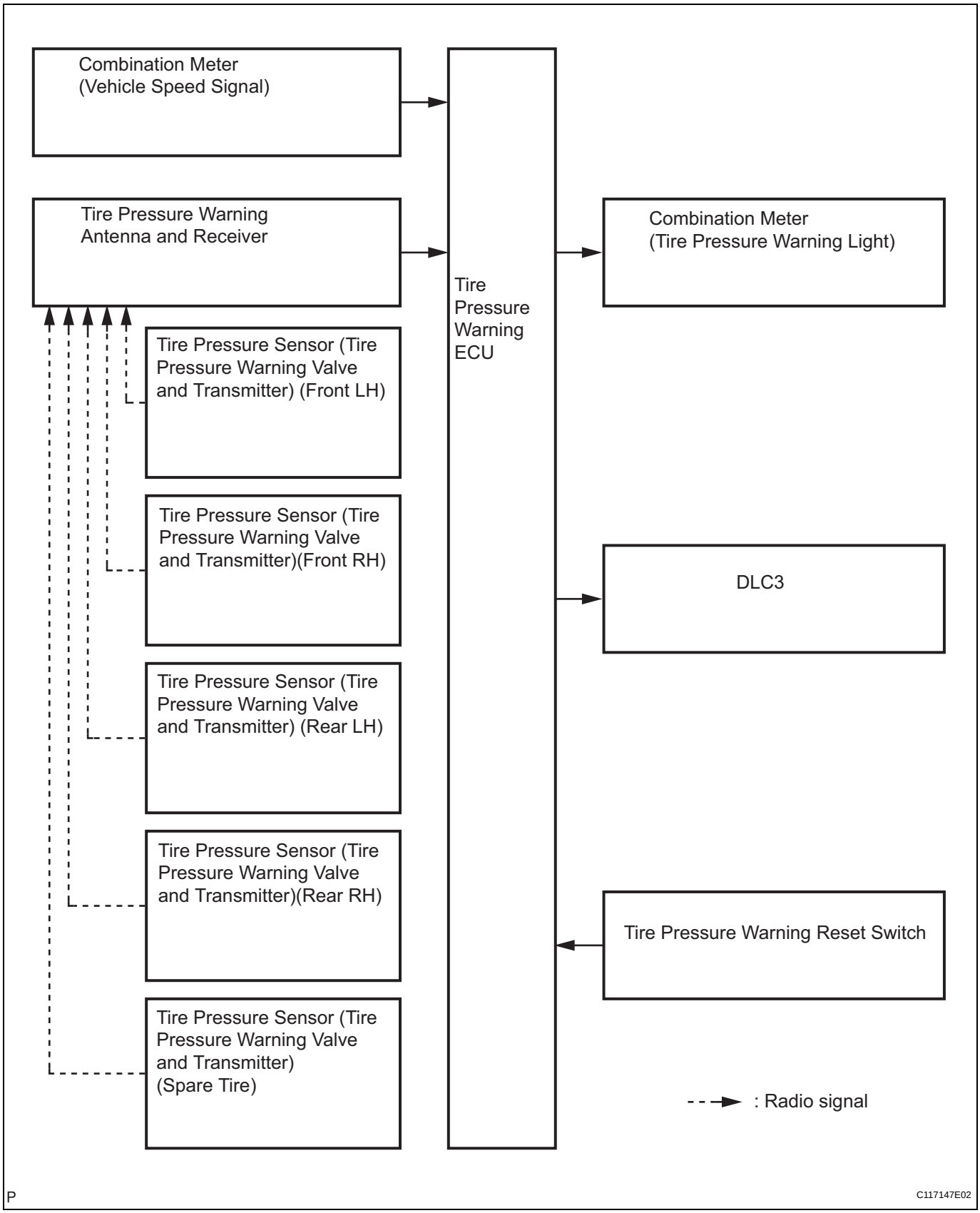

TW

SYSTEM DIAGRAM

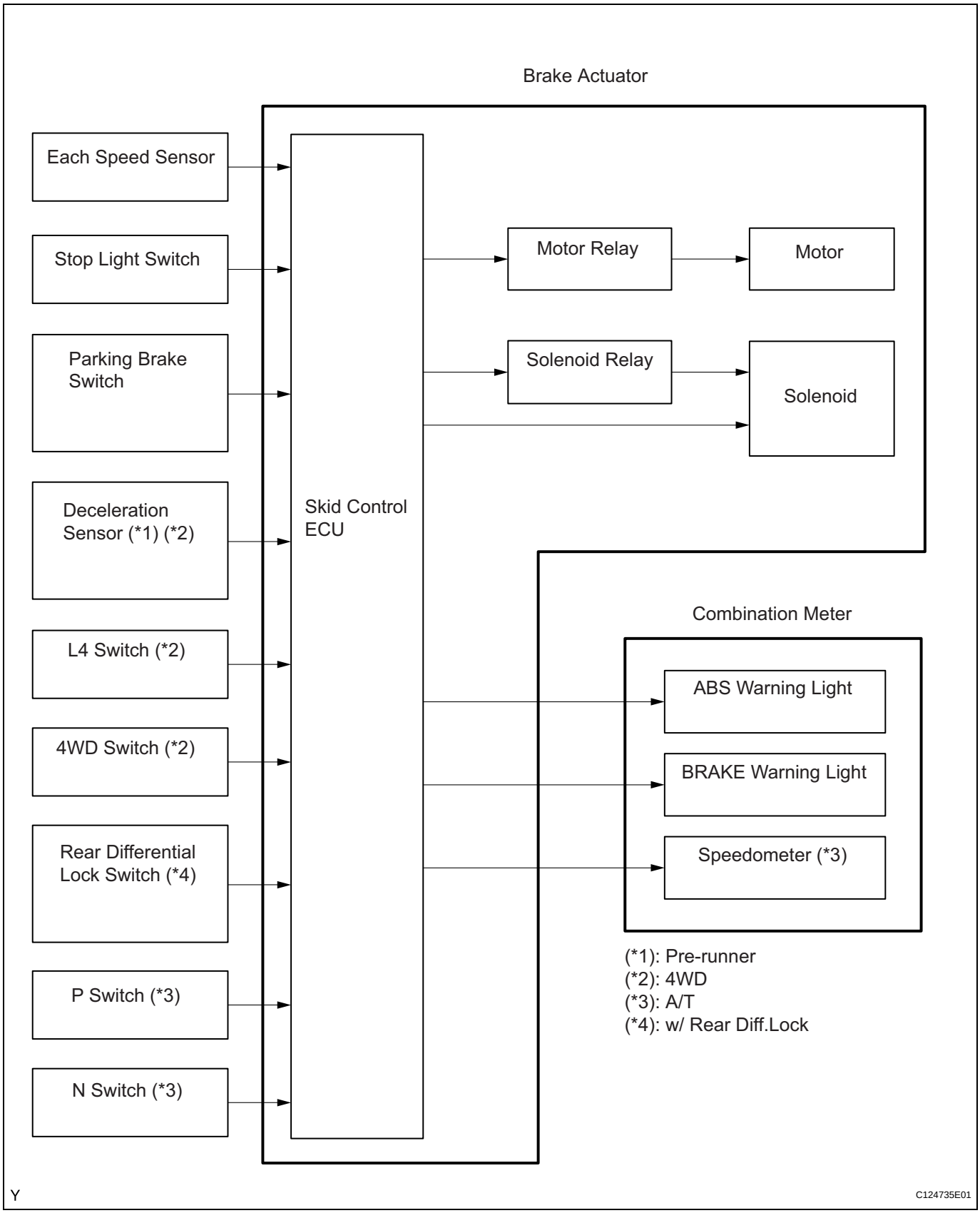

BC

SYSTEM DESCRIPTION

1. SYSTEM DESCRIPTION

HINT:

The skid control ECU is a single unit with brake actuator.

(a) ABS (Anti-lock Brake System)

The ABS helps prevent the wheels from locking when the brakes are applied firmly or when braking on a slippery surface.

(b) EBD (Electronic Brake force Distribution)

The EBD control utilizes ABS, realizing proper brake force distribution between the front and rear wheels in accordance with the driving conditions. In addition, when braking while cornering, it also controls the brake forces of the right and left wheels, helping to maintain the vehicle behavior.

2. ABS with EBD OPERATION

(a) Based on the signals received from the 4 wheel speed sensors, the skid control ECU calculates the speed and deceleration of each wheel, and checks the wheel slipping conditions. The ECU controls the pressure holding valve and pressure reduction valve in order to adjust the fluid pressure of each wheel cylinder according to the slipping conditions.

3. FAIL SAFE FUNCTION

(a) When a failure occurs in the ABS system, the ABS warning light comes on and its operation is prohibited.

In addition to this, when a failure which disables the EBD operation occurs, the brake warning light comes on as well and operation is prohibited (See page BC-19).

HOW TO PROCEED WITH TROUBLESHOOTING

HINT:
The intelligent tester can be used at step 3, 6, 9, 12.

1 **VEHICLE BROUGHT TO WORKSHOP**

NEXT

2 **CUSTOMER PROBLEM ANALYSIS**

NEXT

3 **DTCS AND FREEZE FRAME DATA CHECK AND CLEARANCE**

HINT:
See page BC-18 and BC-16

NEXT

4 **PROBLEM SYMPTOM CONFIRMATION**

Result	Proceed to
Symptom occurs	A
Symptom does not occur	B

B → **SYMPTOM SIMULATION**

A

5 **DTC CHECK**

HINT:
See page BC-16

Result	Proceed to
DTC output	A
DTC not output	B

B → **PROBLEM SYMPTOMS TABLE**

A

6 **DTC CHART**

HINT:
See page BC-22

NEXT

7	**CIRCUIT INSPECTION**

HINT:
When 2 or more DTCs are recorded, and the problem cannot be identified, perform circuit inspection of the other DTCs.

NEXT

8	**PROBLEM IDENTIFICATION**

NEXT

9	**REPAIR OR REPLACEMENT**

NEXT

10	**CONFIRMATION TEST**

NEXT

END

REMOVAL

1. **DISCONNECT CABLE FROM NEGATIVE BATTERY TERMINAL**
2. **REMOVE FRONT FLOOR FOOTREST (See page IR-1)**
3. **REMOVE FRONT DOOR SCUFF PLATE (for Regular Cab) (See page IR-40)**
4. **REMOVE FRONT DOOR SCUFF PLATE (for Access Cab) (See page IR-61)**
5. **REMOVE FRONT DOOR SCUFF PLATE (for Double Cab) (See page IR-12)**
6. **REMOVE COWL SIDE TRIM BOARD (for Regular Cab) (See page IR-40)**
7. **REMOVE COWL SIDE TRIM BOARD (for Access Cab) (See page IR-61)**
8. **REMOVE COWL SIDE TRIM BOARD (for Double Cab) (See page IR-12)**
9. **REMOVE INSTRUMENT PANEL UNDER TRAY (for Automatic Transmission) (See page IP-9)**
10. **REMOVE INSTRUMENT PANEL HOLE COVER (for Manual Transmission) (See page IP-9)**
11. **REMOVE INSTRUMENT PANEL FINISH PANEL LOWER NO. 1 (See page IP-12)**
12. **SEPARATE DRIVER SIDE JUNCTION BLOCK**
13. **SEPARATE MASTER CYLINDER PUSH ROD CLEVIS**
    (a) Remove the clip and push rod pin, then separate the push rod clevis.

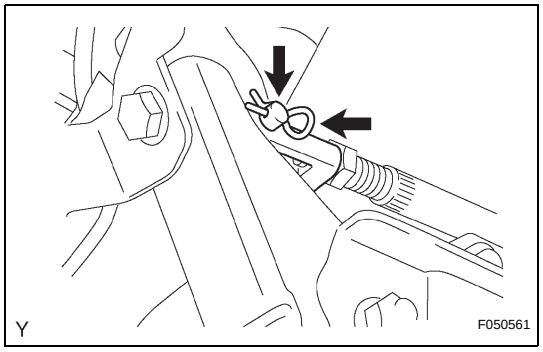

14. **REMOVE BRAKE PEDAL SUPPORT REINFORCEMENT**
    (a) Remove the bolt from the reinforcement.

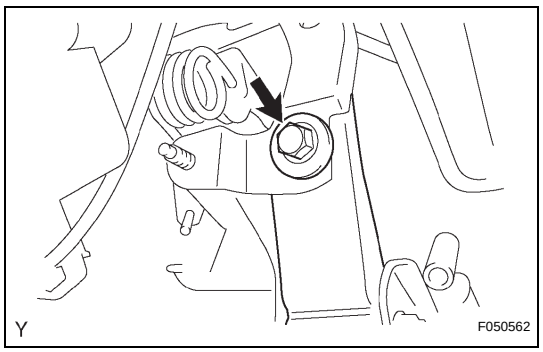

BR

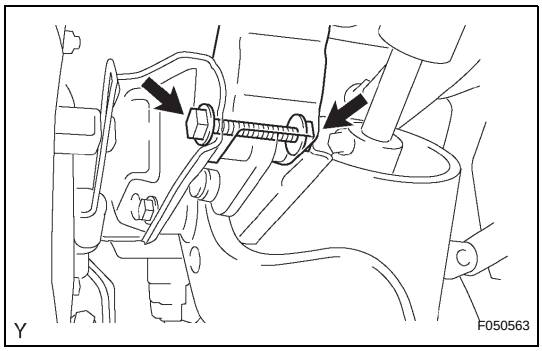

(b) Remove the bolt and nut, then remove the reinforcement from the brake pedal support.

15. REMOVE BRAKE PEDAL SUPPORT SUB-ASSEMBLY

(a) Disconnect the stop light switch connector from the stop lamp switch.

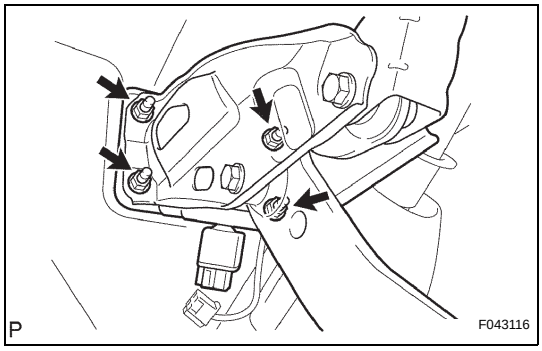

(b) Remove the 4 nuts and brake pedal support.

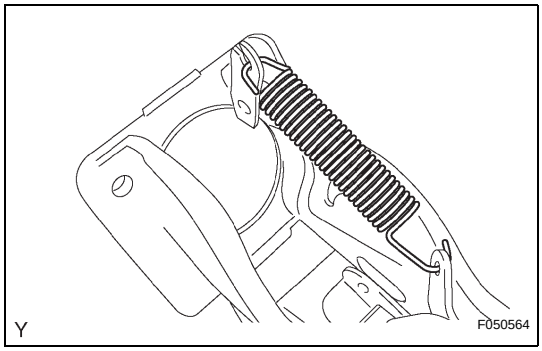

16. REMOVE BRAKE PEDAL RETURN SPRING

(a) Remove the return spring from the brake pedal support and brake pedal.

17. REMOVE STOP LIGHT SWITCH ASSEMBLY

(a) Turn the stop light switch counterclockwise, and remove the stop light switch.
(b) Remove the stop light switch mounting adjuster from the brake pedal support.

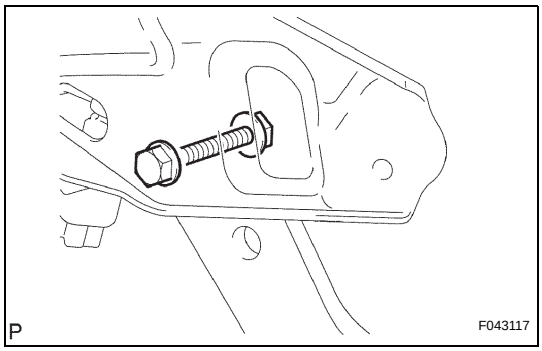

18. REMOVE BRAKE PEDAL

(a) Remove the bolt and nut, then remove the brake pedal from the brake pedal support.
(b) Remove the 4 brake pedal bushes from the brake pedal and brake pedal lever.
(c) Remove the 2 collars from the brake pedal and brake pedal lever.

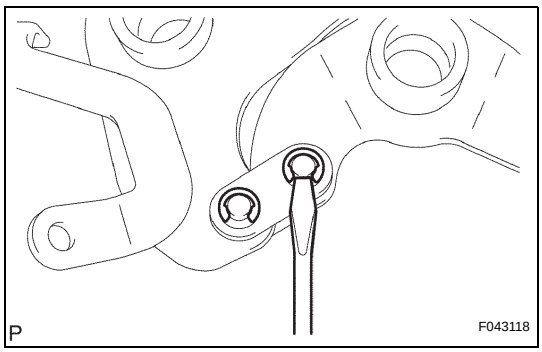

19. REMOVE BRAKE PEDAL LEVER

(a) Using a screwdriver, remove the 2 E-rings from the brake pedal link pin.
(b) Remove the 2 brake pedal link pins, 2 brake pedal shaft collars and 2 brake pedal links.
(c) Remove the brake pedal lever from the brake pedal.

20. REMOVE BRAKE PEDAL PAD

(a) Remove the brake pedal pad from the brake pedal.

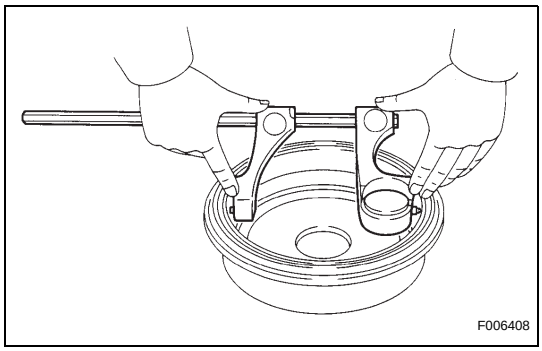

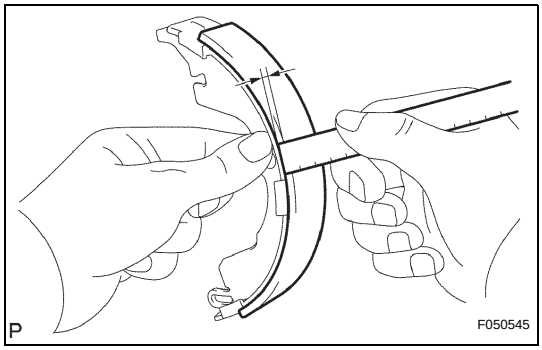

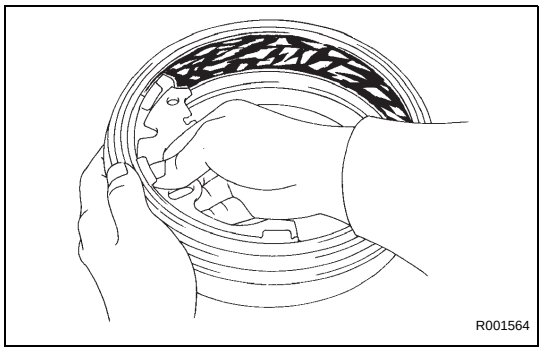

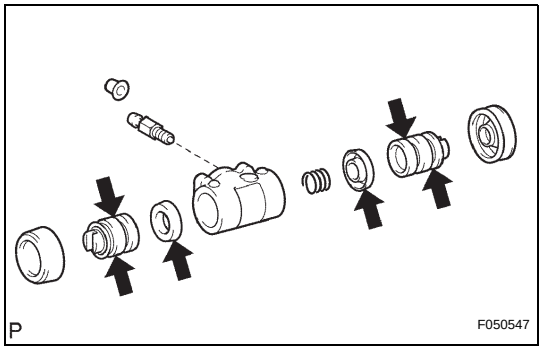

INSPECTION

1. INSPECT BRAKE DRUM INSIDE DIAMETER

(a) Using a brake drum gauge or equivalent, measure the inside diameter of the drum.

Standard inside diameter:
254 mm (10.00 in.)
Maximum inside diameter:
256 mm (10.08 in.)

If the inside diameter is greater than the maximum, replace the brake drum.

2. INSPECT REAR DRUM BRAKE SHOE LINING THICKNESS

(a) Using a ruler, measure the thickness of the shoe lining.

Standard thickness:
5.0 mm (0.197 in.)
Minimum thickness:
1.0 mm (0.039 in.)

If the lining thickness is the minimum value or less, or if there is any severe or uneven wear, replace the brake shoe.

3. INSPECT BRAKE DRUM AND REAR DRUM BRAKE SHOE LINING FOR PROPER CONTACT

(a) Apply chalk to the inside surface of the drum, then grind the brake shoe lining for proper fitting.
If the contact between the drum and the shoe lining is improper, repair it using a brake shoe grinder or replace the brake shoe assembly.

4. INSPECT REAR WHEEL BRAKE CYLINDER

(a) Check the cylinder bore and piston for rust and scoring.

REASSEMBLY

1. INSTALL REAR WHEEL CYLINDER CUP KIT

(a) Provisionally tighten the bleeder plug to the rear wheel brake cylinder, and install the bleeder plug cap.
(b) Apply lithium soap base glycol grease to 2 new cylinder cups and the 2 pistons.
(c) Install the cylinder cup onto each piston.
(d) Install the compression spring and 2 pistons onto the rear wheel brake cylinder.
(e) Install the 2 new wheel cylinder boots onto the rear wheel brake cylinder.

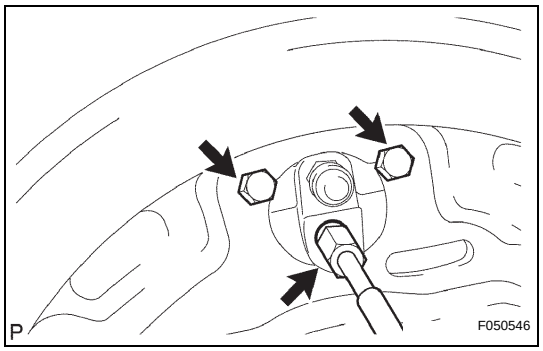

2. INSTALL FRONT OR UPPER REAR WHEEL BRAKE CYLINDER ASSEMBLY

(a) Install the rear wheel brake cylinder assembly with the 2 bolts.
Torque: 9.5 N*m (97 kgf*cm, 84 in.*lbf)

(b) Using SST, connect the brake tube.
Torque: 15.2 N*m (155 kgf*cm, 11 ft.*lbf)

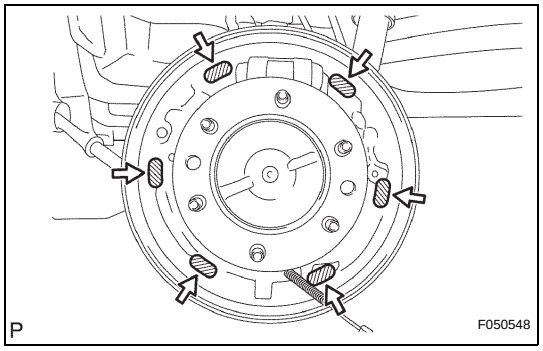

3. APPLY HIGH TEMPERATURE GREASE

(a) Apply high temperature grease to the shoe attached surface of the backing plate.

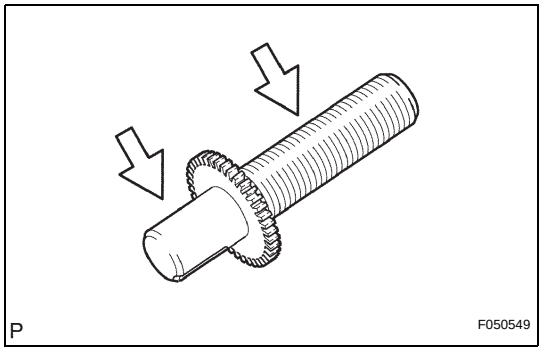

4. INSTALL REAR BRAKE SHOE

(a) Apply high temperature grease to the adjusting bolt.

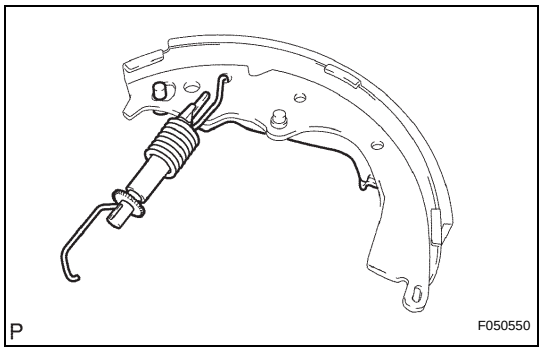

(b) Install the parking brake shoe lever LH and parking brake shoe strut set with the shoe return spring onto the rear brake shoe.

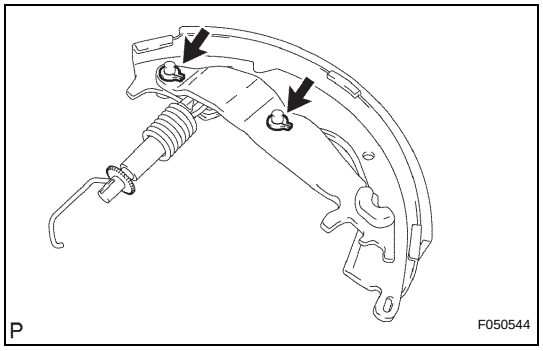

(c) Using pliers, install the parking brake shoe strut set, parking brake reaction lever and parking brake shoe lever LH with 2 new C-washers.

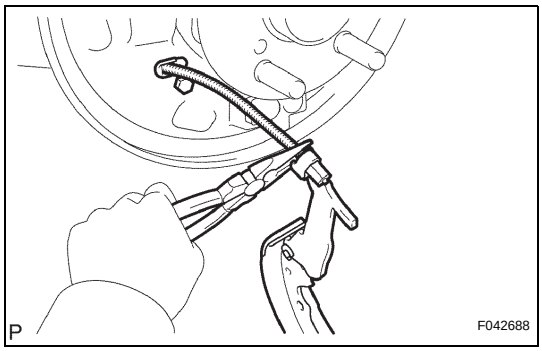

(d) Using needle-nose pliers, connect the parking brake cable No. 3 to the parking brake shoe lever LH.

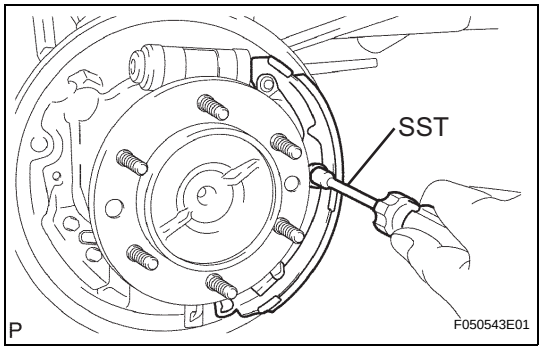

(e) Using SST, install the rear brake shoe, pin, shoe hold down spring and shoe hold down spring cup.
SST 09718-00010

5. INSTALL FRONT BRAKE SHOE

(a) Install the automatic adjust lever LH, automatic adjust lever spring and parking brake shoe strut lower onto the front brake shoe.

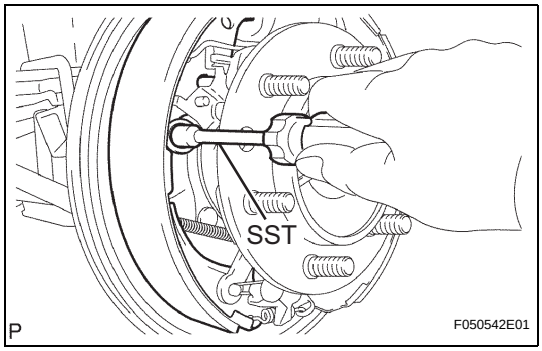

(b) Using SST, install the front brake shoe, pin, shoe hold down spring and shoe hold down spring cup.
SST 09718-00010

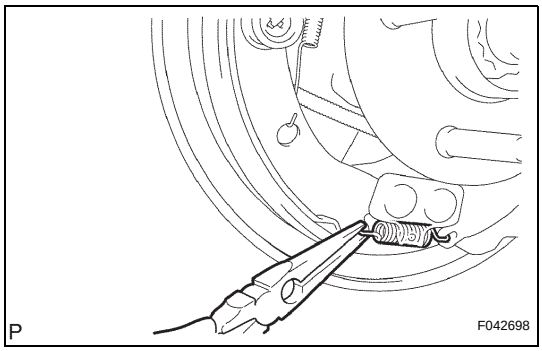

(c) Install the tension spring onto the front brake shoe and rear brake shoe.

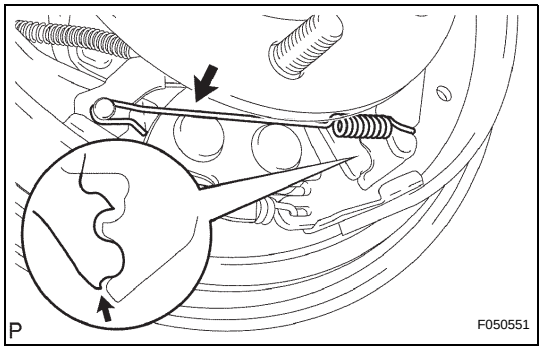

(d) Using needle-nose pliers, install the return spring.

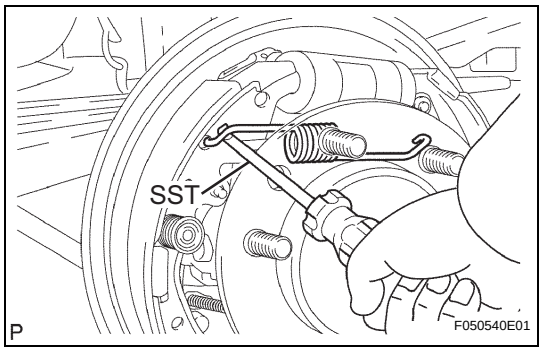

(e) Using SST, install the shoe return spring onto the front brake shoe.
SST 09921-00010

6. INSPECT REAR DRUM BRAKE INSTALLATION

(a) Check that each part is installed properly.

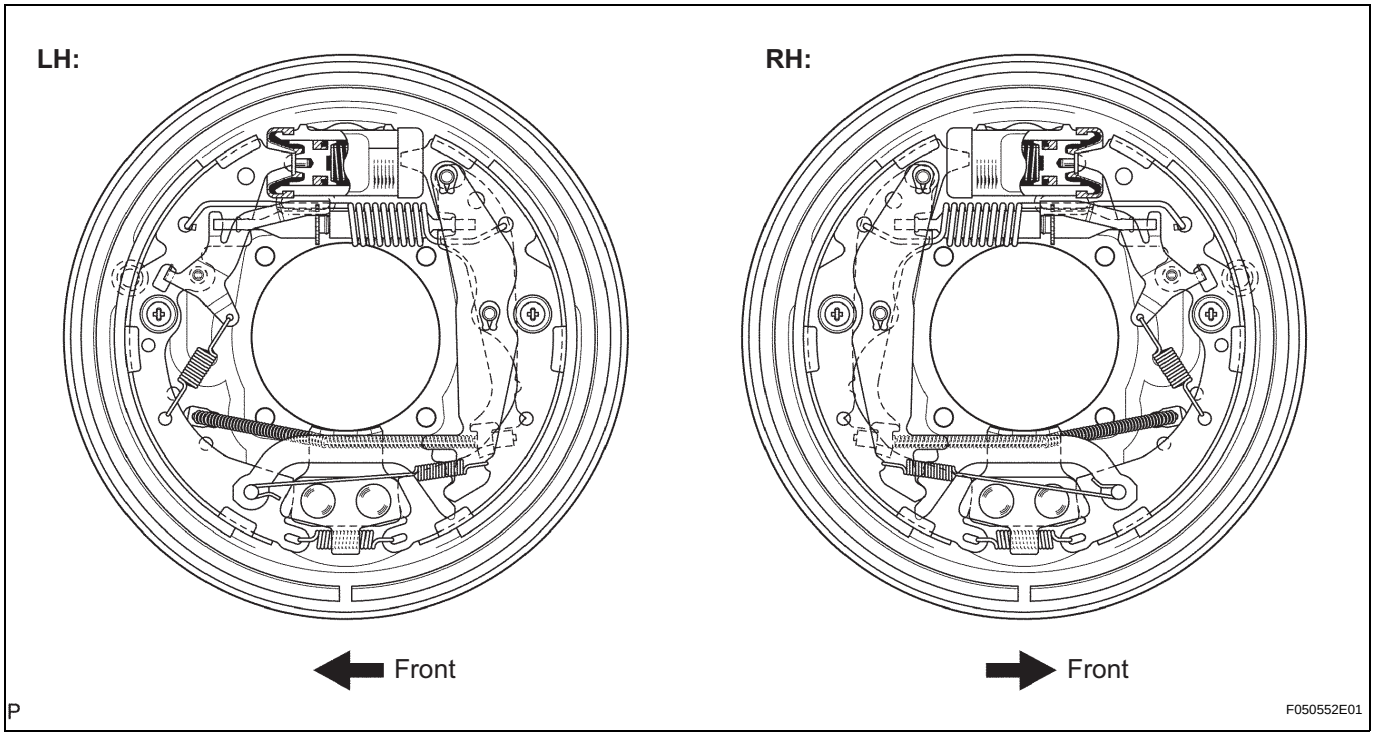

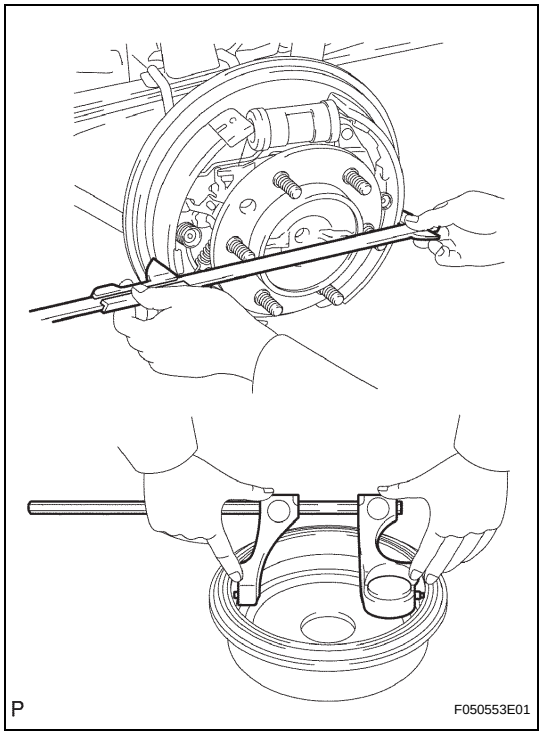

(b) Measure the brake drum inside diameter and the diameter of the brake shoes. Check that difference between the diameters is the specified shoe clearance.
Shoe clearance:
0.5 mm (0.020 in.)
NOTICE:
There should be no oil or grease adhering to the friction surfaces of the shoe lining and the drum.

REMOVAL

1. **DISCONNECT CABLE FROM NEGATIVE BATTERY TERMINAL**
2. **REMOVE FRONT DOOR SCUFF PLATE (for Regular Cab) (See page IR-40)**
3. **REMOVE FRONT DOOR SCUFF PLATE (for Access Cab) (See page IR-61)**
4. **REMOVE FRONT DOOR SCUFF PLATE (for Double Cab) (See page IR-12)**
5. **REMOVE FRONT FLOOR FOOTREST (See page IR-1)**
6. **REMOVE COWL SIDE TRIM BOARD (for Regular Cab) (See page IR-40)**
7. **REMOVE COWL SIDE TRIM BOARD (for Access Cab) (See page IR-61)**
8. **REMOVE COWL SIDE TRIM BOARD (for Double Cab) (See page IR-12)**
9. **REMOVE INSTRUMENT PANEL HOLE COVER (See page IP-9)**
10. **SEPARATE HOOD LOCK CONTROL LEVER SUB-ASSEMBLY (See page ED-3)**
11. **REMOVE INSTRUMENT PANEL FINISH PANEL LOWER NO. 1 (See page IP-12)**
12. **REMOVE PARKING BRAKE LEVER**
    (a) Release the parking brake lever.
    (b) Remove the clip and pin and separate the sleeve.
    (c) Remove the 2 bolts and parking brake lever assembly.

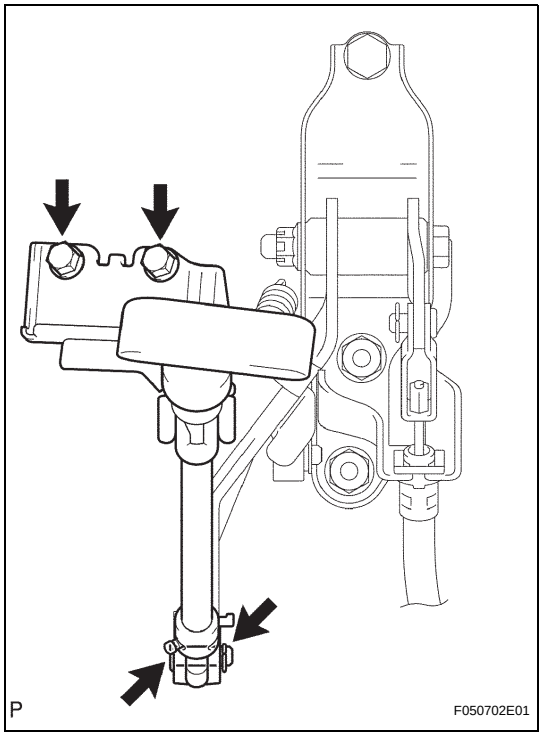

PB

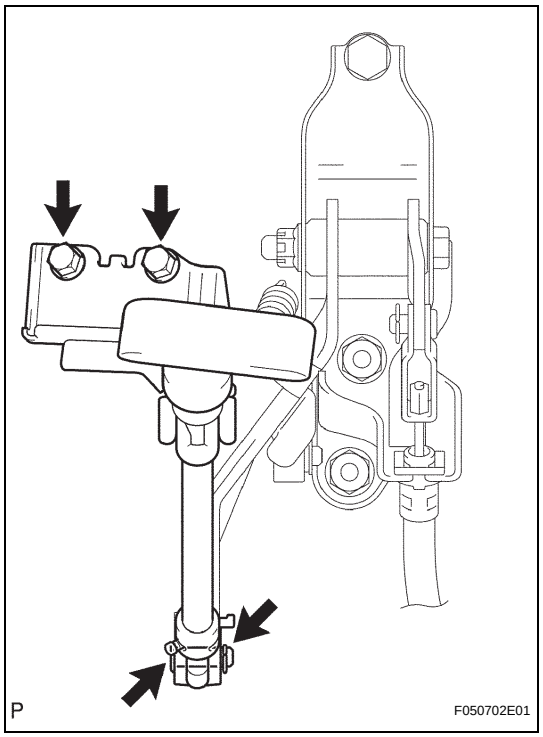

INSTALLATION

1. **INSTALL PARKING BRAKE LEVER**
   (a) Install the parking brake lever assembly with the 2 bolts.
   Torque: 6.0 N*m (61 kgf*cm, 53 in.*lbf)
   (b) Install the sleeve with the pin and clip.
2. **INSTALL INSTRUMENT PANEL FINISH PANEL LOWER NO. 1 (See page IP-22)**
3. **INSTALL HOOD LOCK CONTROL LEVER SUB-ASSEMBLY (See page ED-8)**
4. **INSTALL INSTRUMENT PANEL HOLE COVER (See page IP-25)**
5. **INSTALL COWL SIDE TRIM BOARD (for Regular Cab) (See page IR-52)**
6. **INSTALL COWL SIDE TRIM BOARD (for Access Cab) (See page IR-52)**
7. **INSTALL COWL SIDE TRIM BOARD (for Double Cab) (See page IR-29)**
8. **INSTALL FRONT FLOOR FOOTREST (See page IR-1)**
9. **INSTALL FRONT DOOR SCUFF PLATE (for Regular Cab) (See page IR-52)**
10. **INSTALL FRONT DOOR SCUFF PLATE (for Access Cab) (See page IR-75)**
11. **INSTALL FRONT DOOR SCUFF PLATE (for Double Cab) (See page IR-29)**
12. **CONNECT CABLE TO NEGATIVE BATTERY TERMINAL**
    Torque: 3.9 N*m (40 kgf*cm, 35 in.*lbf)
    (See page IN-5)

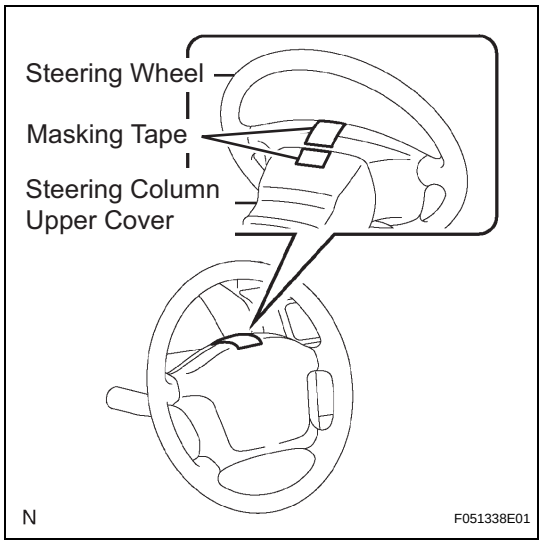

REPAIR

1. STEERING OFF CENTER REPAIR PROCEDURE

(a) Inspect steering wheel off center.

(1) Apply masking tape to the top center of the steering wheel and steering column upper cover.

(2) Drive the vehicle in a straight line for 100 meters at a constant speed of 35 mph (56 km/h), and hold the steering wheel to maintain the course.

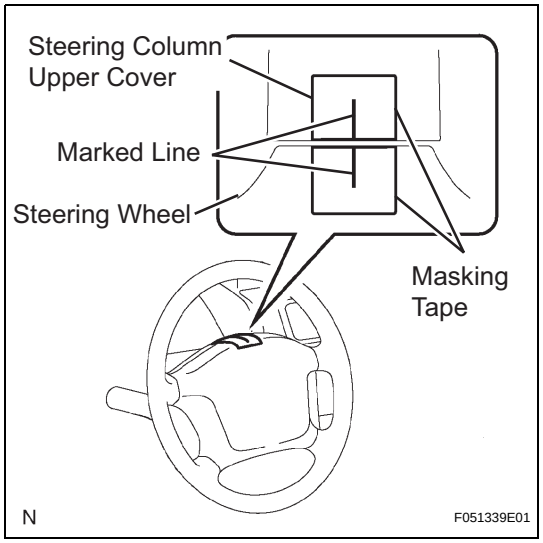

(3) Draw a line on the masking tape as shown in the illustration.

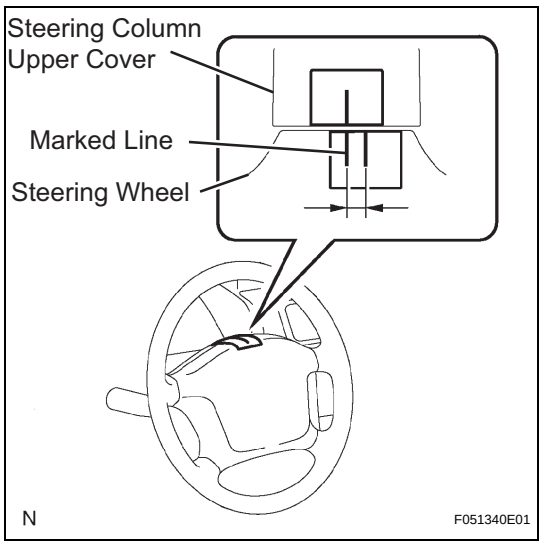

(4) Turn the steering wheel to its straight position.
HINT:
Refer to the steering column upper cover and marked line on the steering wheel for the straight position.

(5) Draw a new line on the masking tape or the steering wheel as shown in the illustration.

(6) Measure the distance between the 2 lines on the masking tape of the steering wheel.

(7) Convert the measured distance to the steering angle.
Measured distance 1 mm (0.04 in.):
Steering angle approximately 1 deg.
HINT:
Make a note of the steering angle.

SR

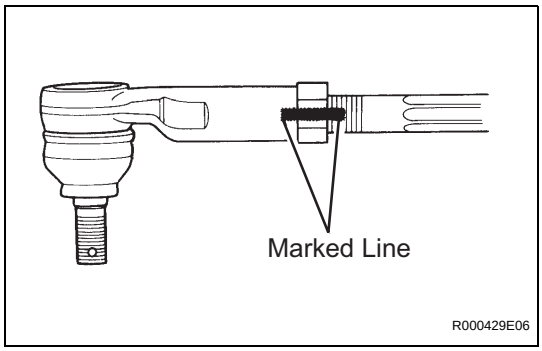

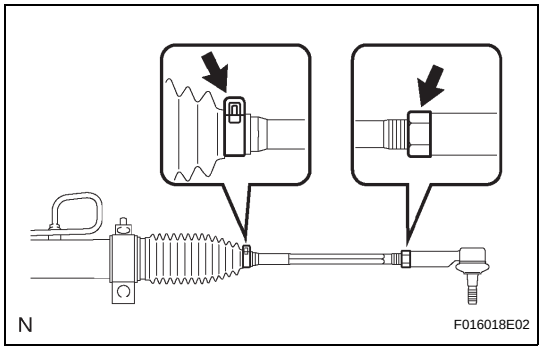

(b) Adjust the steering angle.
  (1) Draw a line on the RH and LH tie rods and on the RH and LH rack ends which can easily be seen.
  (2) Using a paper gauge, measure the distance from RH and LH tie rod ends to the rack end screws.
  HINT:
  - Measure both the RH and LH side.
  - Make a note of the measured values.

  (3) Remove the RH and LH boot clips from the rack boots.
  (4) Loosen the RH and LH lock nuts.
  (5) Turn the RH and LH rack ends by the same amount (but in different directions) according to the steering angle.
  Amount of turn:
  360° turn of rack end (1.5 mm (0.059 in.) horizontal movement) - 12° of steering angle.
  (6) Tighten the RH and LH lock nuts.
  Torque: 55.5 N*m (566 kgf*cm, 41 ft.*lbf)
  NOTICE:
  Make sure that the difference in length between the RH and LH tie rod ends and rack end screws is less than 1.5 mm (0.059 in.).
  (7) Install the RH and LH boot clips.

REMOVAL

1. **DISCONNECT CABLE FROM NEGATIVE BATTERY TERMINAL**
2. **REMOVE ENGINE UNDER COVER SUB-ASSEMBLY NO. 1 (for 4WD and Pre-Runner)**
3. **REMOVE FAN AND GENERATOR V BELT (See page EM-5)**
4. **DRAIN POWER STEERING FLUID**
5. **DISCONNECT OIL RESERVOIR TO PUMP HOSE NO. 1**
   (a) Disengage the clip and disconnect the oil reservoir to pump hose No. 1.

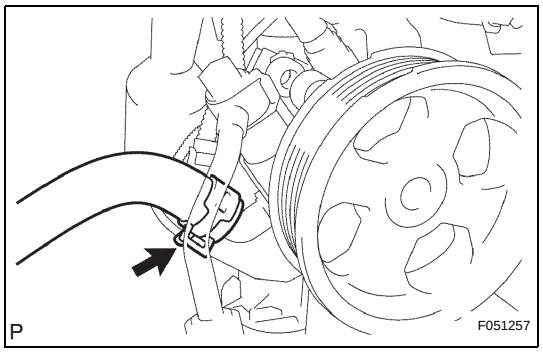

6. **DISCONNECT PRESSURE FEED TUBE ASSEMBLY**
   (a) Remove the union bolt, then disconnect the pressure feed tube.
   (b) Remove the gasket from the pressure feed tube.

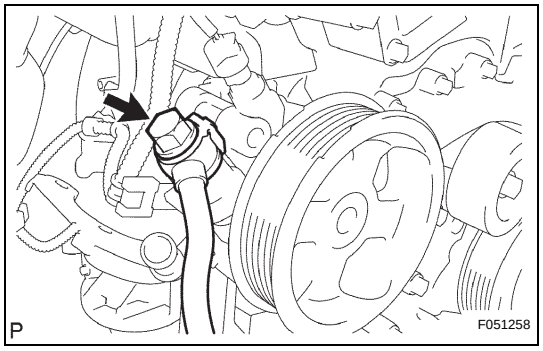

7. **REMOVE VANE PUMP**
   (a) Disconnect the oil pressure switch connector.
   (b) Remove the bolt and wire harness clamp bracket.

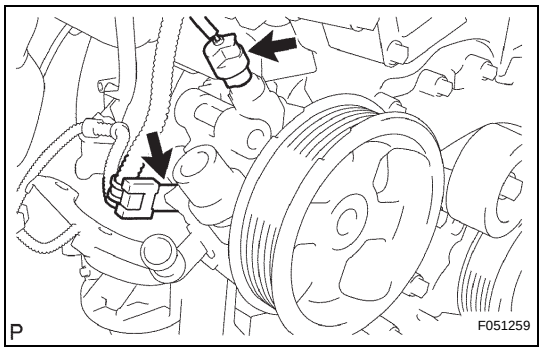

   (c) Remove the 2 bolts and vane pump assembly.

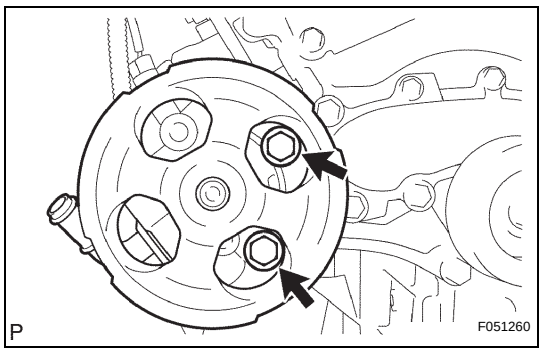

PS

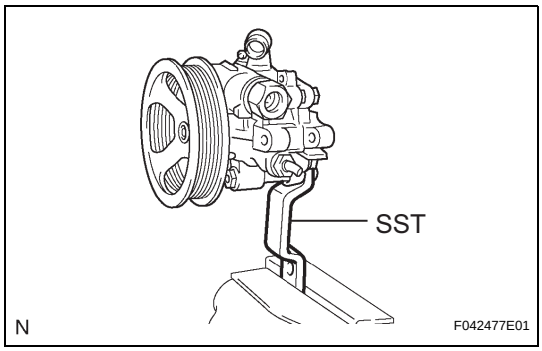

DISASSEMBLY

1. FIX VANE PUMP

(a) Using SST, fix the vane pump assembly in a vise.
SST 09630-00014 (09631-00132)
NOTICE:
When using a vise, do not over tighten it.

2. REMOVE POWER STEERING SUCTION PORT UNION

(a) Remove the bolt and suction port union.
(b) Remove the O-ring from the suction port union.

3. REMOVE FLOW CONTROL VALVE

(a) Remove the pressure port union.
(b) Remove the O-ring from the pressure port union.
(c) Remove the flow control valve and compression spring.

4. REMOVE POWER STEERING OIL PRESSURE SWITCH
NOTICE:
Be careful not to drop or badly damage the oil pressure switch. If damaged, replace it with a new one.

5. REMOVE VANE PUMP HOUSING REAR

(a) Remove the 4 bolts and vane pump housing rear from the vane pump housing front.
(b) Remove the O-ring from the vane pump housing front.

6. REMOVE PULLEY SHAFT SUB-ASSEMBLY
NOTICE:
Be careful not to drop or badly damage the pulley shaft. If damaged, replace it with a new one.

(a) Using a screwdriver, remove the snap ring from the pulley shaft.
(b) Remove the pulley shaft.

PS

7. REMOVE VANE PUMP ROTOR

(a) Remove the 10 vane plates.
(b) Remove the vane pump rotor.

8. REMOVE VANE PUMP CAM RING

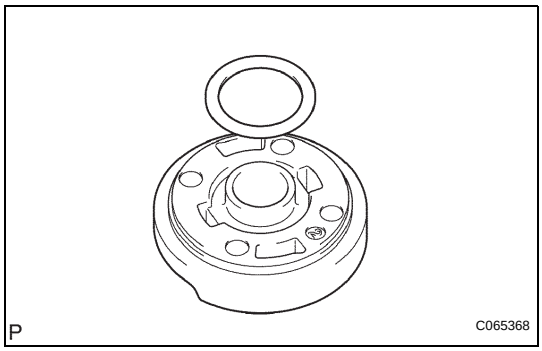

9. REMOVE VANE PUMP SIDE PLATE FRONT

(a) Remove the side plate from the vane pump housing front.
(b) Remove the O-ring from the side plate.

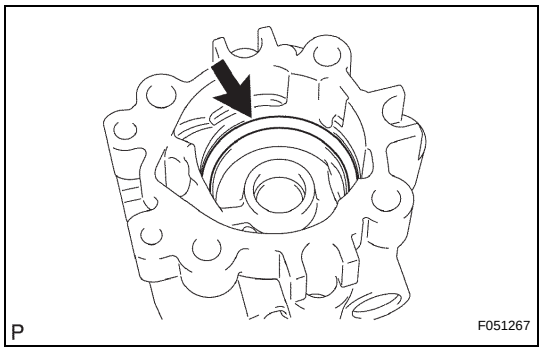

(c) Remove the O-ring from the vane pump housing front.

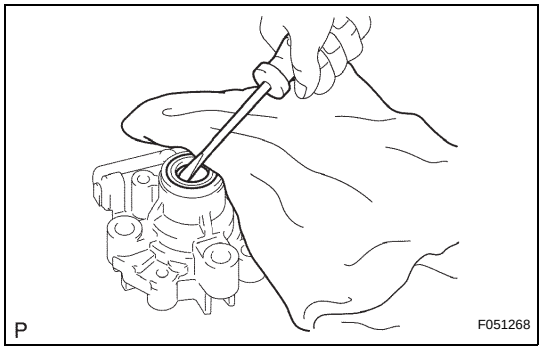

10. REMOVE VANE PUMP HOUSING OIL SEAL

(a) Using screwdriver, remove the oil seal.
NOTICE:
Be careful not to damage the vane pump housing front.

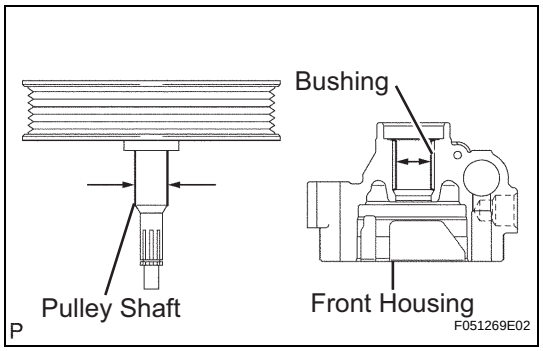

INSPECTION

1. INSPECT OIL CLEARANCE

(a) Using a micrometer and caliper gauge, measure the oil seal clearance.
Standard clearance:
0.021 to 0.043 mm (0.0008 to 0.0017 in.)
Maximum clearance:
0.07 mm (0.0028 in.)
If it is greater than the maximum, replace the vane pump assembly.

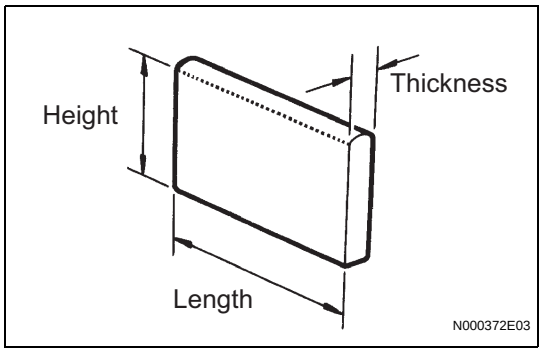

2. INSPECT VANE PUMP ROTOR AND VANE PUMP PLATE

(a) Using a micrometer, measure the height, thickness and length of the vane plates.
Minimum height:
7.7 mm (0.303 in.)
Minimum thickness:
1.408 mm (0.0554 in.)
Minimum length:
11.993 mm (0.4722 in.)

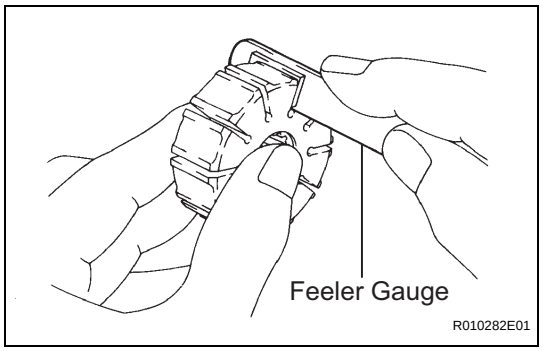

(b) Using a feeler gauge, measure the clearance between a side face of the vane pump rotor groove and vane plate.
Maximum clearance:
0.025 mm (0.0012 in.)
If it is greater than the maximum, replace the vane pump assembly.

PS

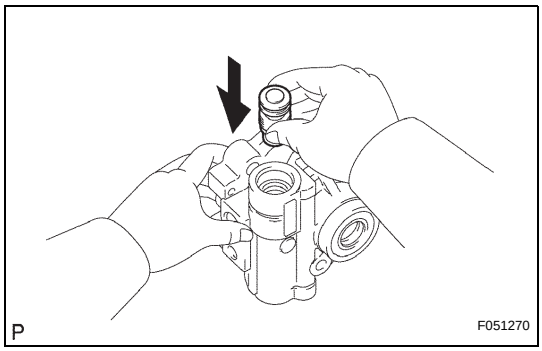

3. INSPECT FLOW CONTROL VALVE

(a) Coat the flow control valve with power steering fluid and check that it falls smoothly into the flow control valve hole under its own weight.

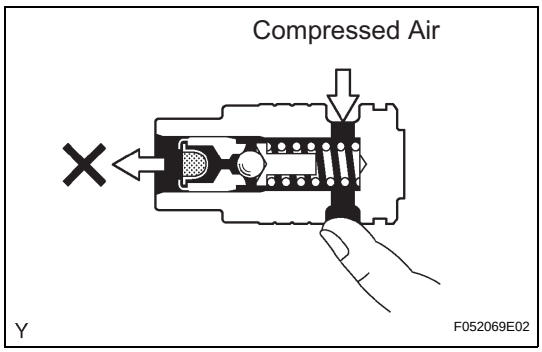

(b) Check the flow control valve for leakage. Close one of the holes and apply compressed air of 392 to 490 kPa (4 to 5 kgf/cm^2, 57 to 71 psi) to the hole on the opposite side. Confirm that the air does not flow out of the end holes.
If necessary, replace the vane pump assembly.

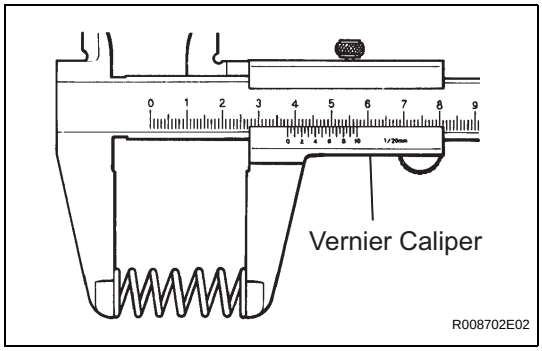

4. INSPECT COMPRESSION SPRING

(a) Using vernier calipers, measure the free length of the spring.
Minimum free length:
36.9 mm (1.453 in.)
If it is not within the specification, replace the vane pump assembly.

5. INSPECT PRESSURE PORT UNION SUB-ASSEMBLY

(a) If the union seat in the pressure port union is badly damaged, it could cause fluid leakage, so replace the vane pump assembly.

PARTS LOCATION

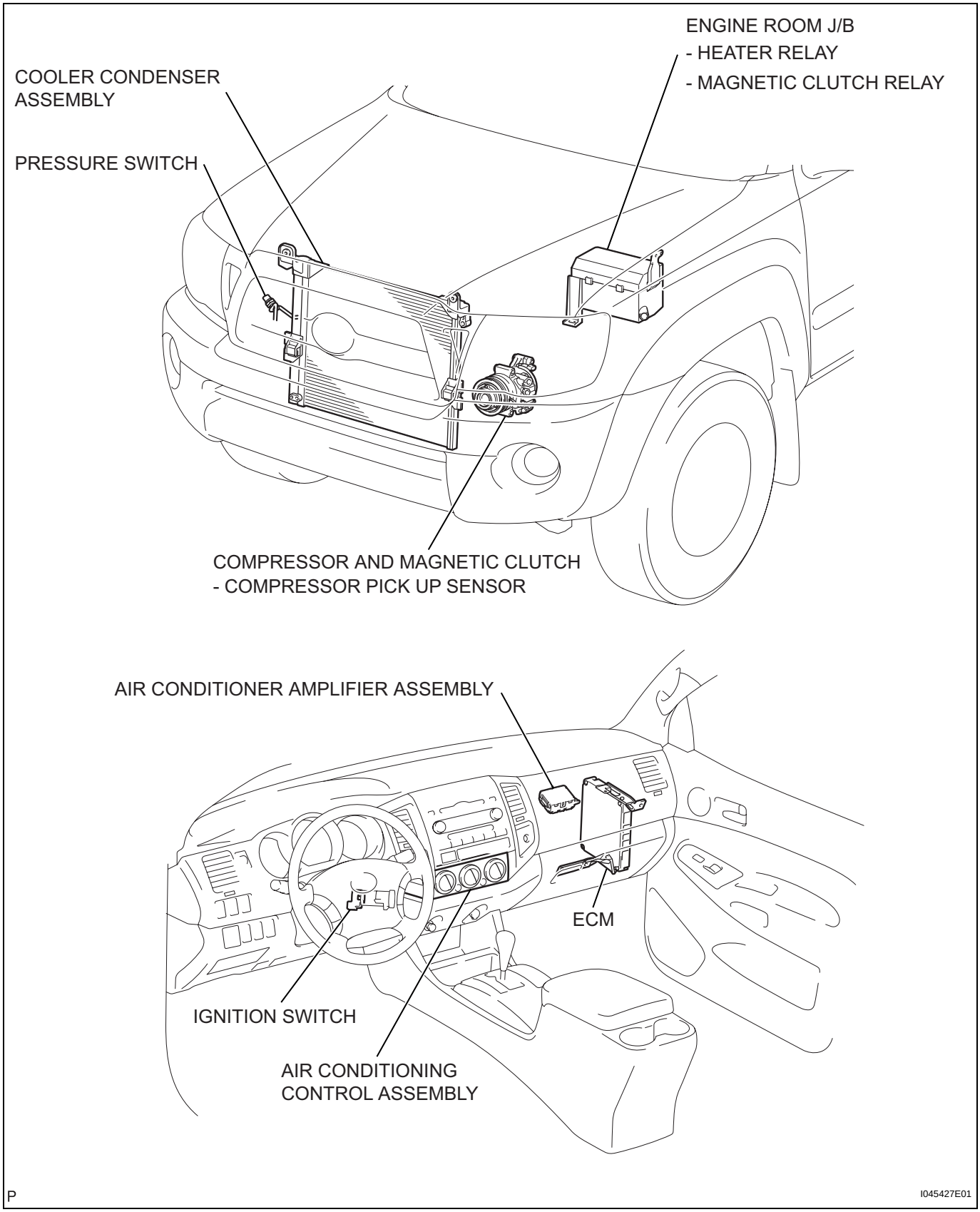

AC

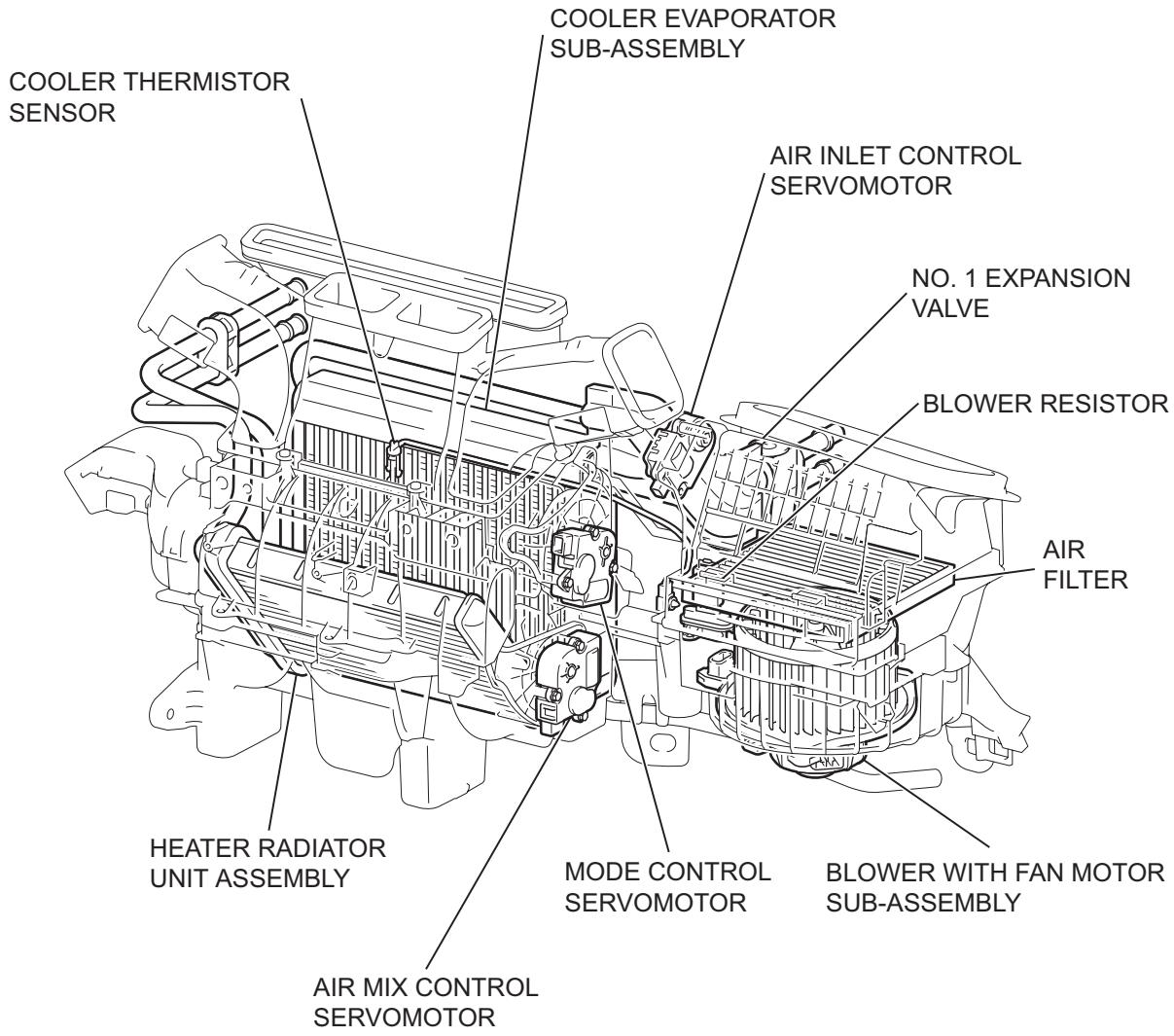

AC

P

I101600E01

PARTS LOCATION

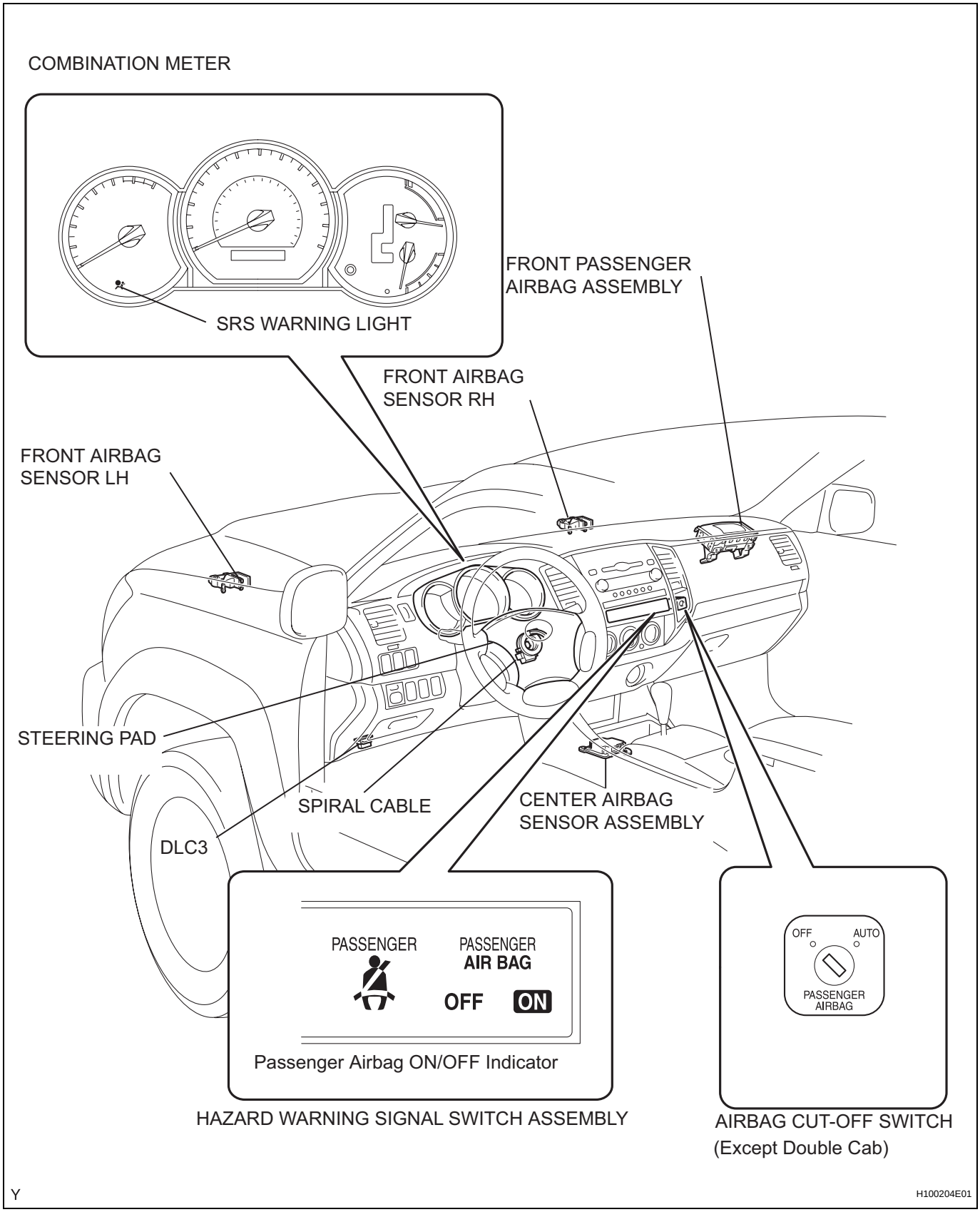

RS

for BENCH SEAT:

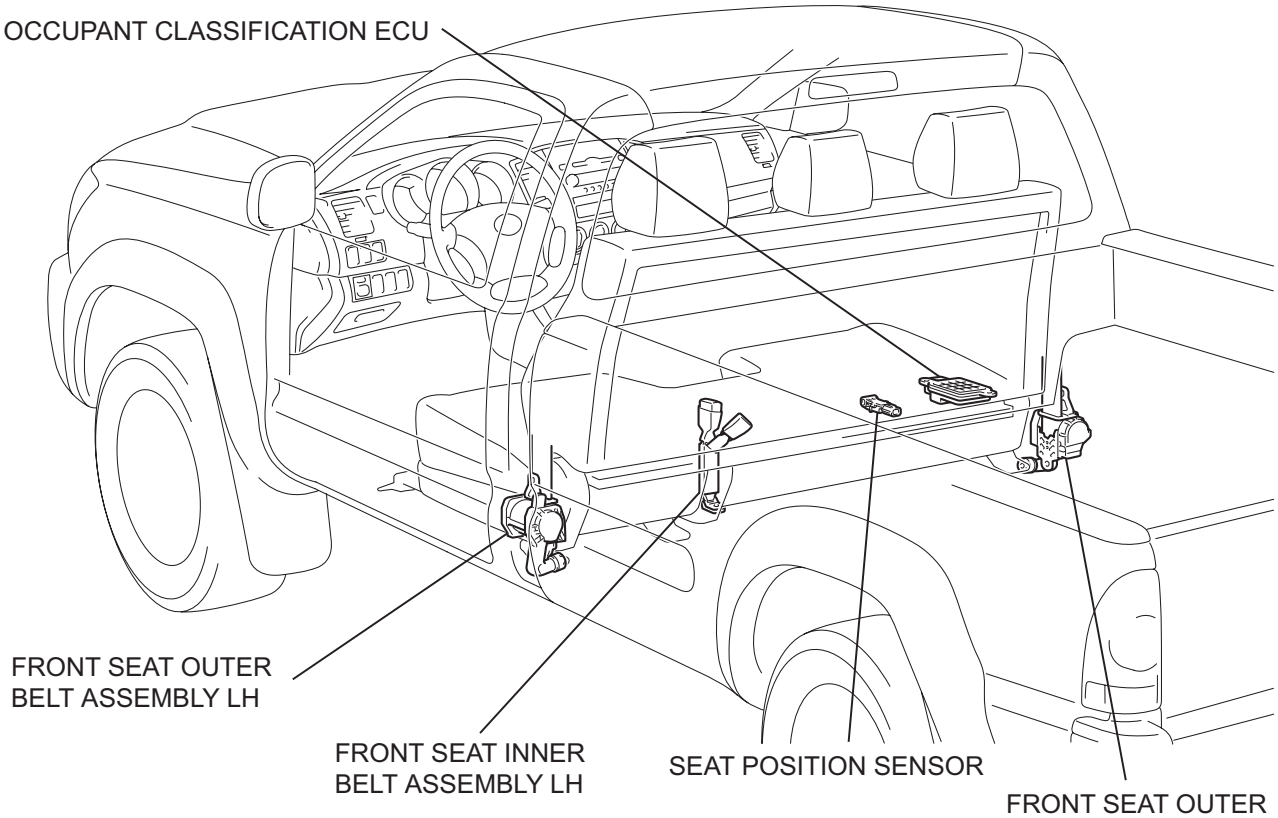

for SEPARATE SEAT:

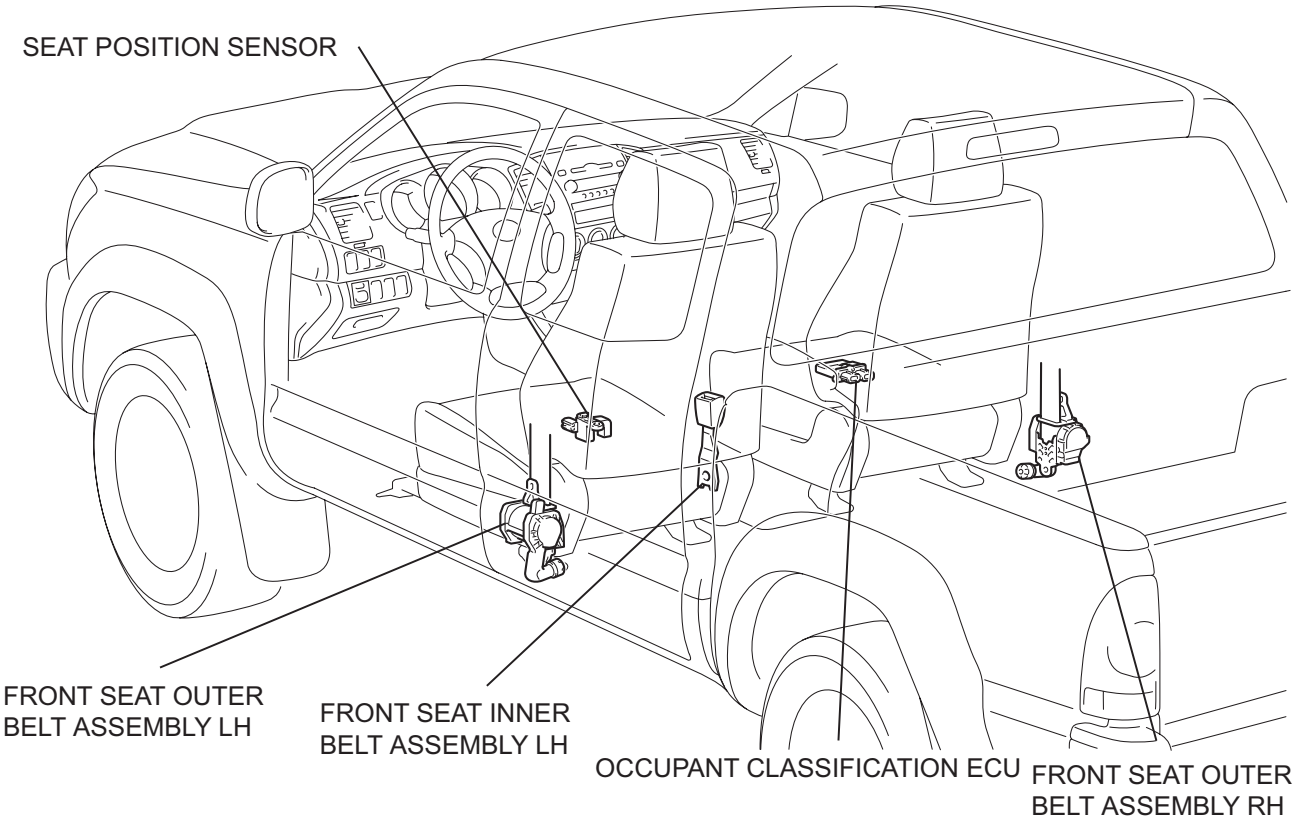

H101844E01

RS

w/ FRONT SEAT SIDE AIRBAG and CURTAIN SHELD AIRBAG :

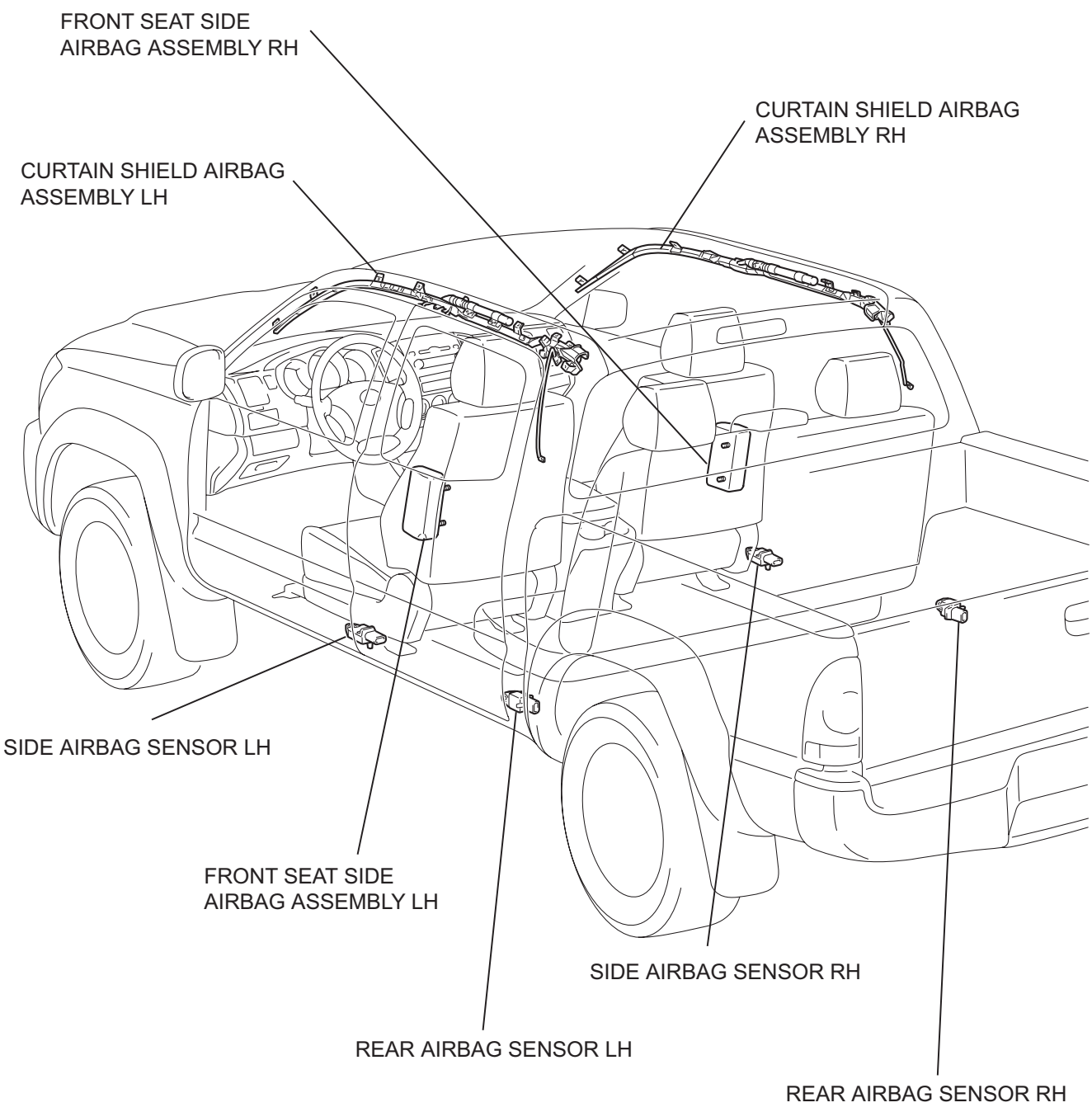

RS

Y

H100207E01

REMOVAL

HINT:
Use the same procedures for the RH side and LH side.

1. **PRECAUTION**
2. **DISCONNECT CABLE FROM NEGATIVE BATTERY TERMINAL**
   Wait for at least 90 seconds after disconnecting the cable to prevent the airbag from working.
3. **REMOVE RADIATOR GRILLE (See page ET-4)**
4. **REMOVE FRONT AIRBAG SENSOR**
   (a) Remove the 2 bolts and front airbag sensor.
   (b) Disconnect the connector from the sensor.

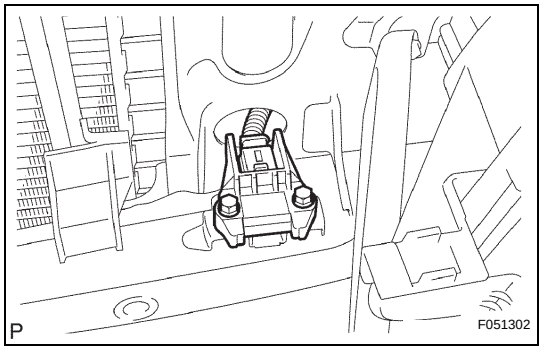

INSTALLATION

HINT:
Use the same procedures for the RH side and LH side.

1. **INSTALL FRONT AIRBAG SENSOR**
   (a) Check that the ignition switch is OFF.
   (b) Check that the cable is disconnected from the battery negative (-) terminal.
   CAUTION:
   After disconnecting cable from the terminal, wait for at least 90 seconds before starting the operation.
   (c) Check that there is no slack in the installation parts of the front airbag sensor.
   (d) Connect the connector to the front airbag sensor.
   (e) Install the front airbag sensor with the bolt.
   Torque: 9.0 N*m (92 kgf*cm, 80 in.*lbf)
   NOTICE:
   - **If the front airbag sensor has been dropped, or there are any cracks, dents or other defects in the case or connector, replace it with a new one.**
   - **When installing the front airbag sensor, make sure that the SRS wiring does not interfere with any other parts and that it is not pinched between other parts.**
2. **INSTALL RADIATOR GRILLE (See page ET-11)**
3. **CONNECT CABLE TO NEGATIVE BATTERY TERMINAL**
   Torque: 3.9 N*m (40 kgf*cm, 35 in.*lbf)
4. **INSPECT SRS WARNING LIGHT**
   (See page RS-28)

SYSTEM DIAGRAM

For Bench Seat:

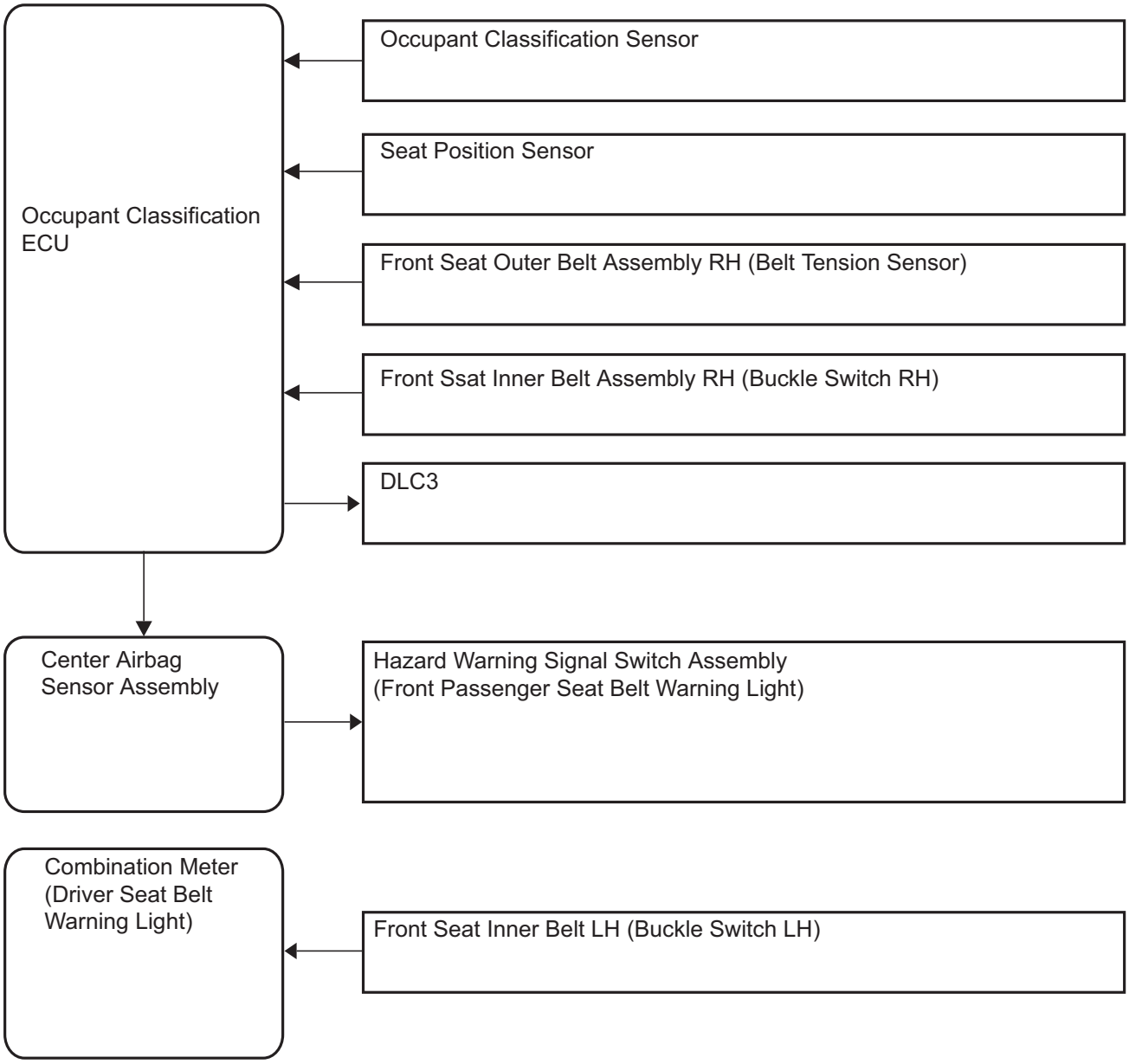

B126120E02

SB

For Separate Seat:

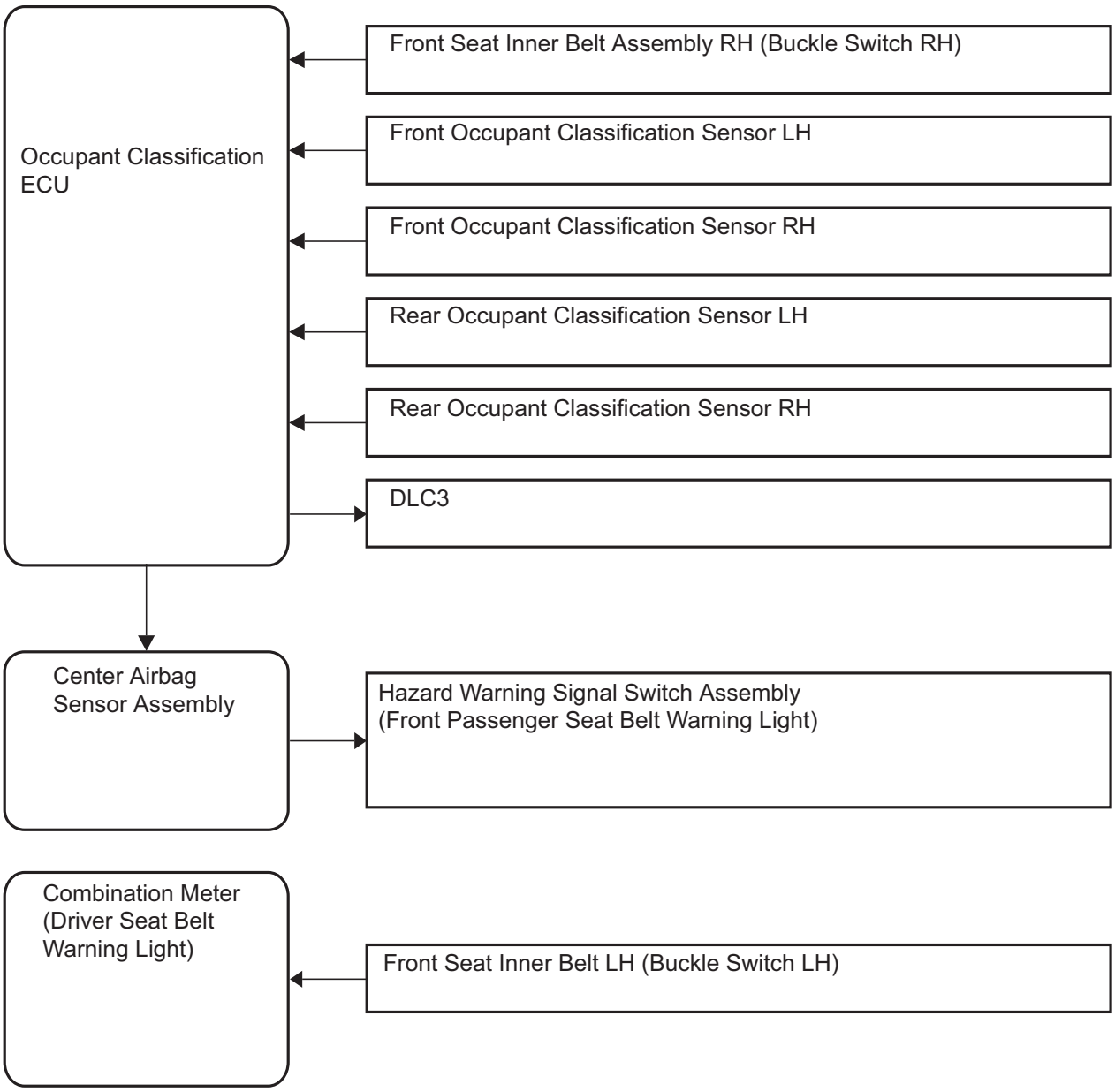

B126119E02

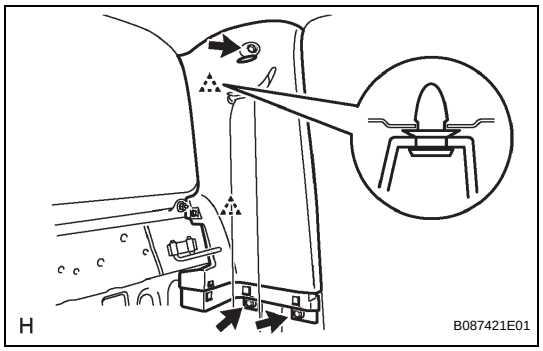

(c) Remove the 3 screws.
(d) Disengage the 2 clips and remove the quarter inside trim board.



9. REMOVE REAR SEAT OUTER BELT ASSEMBLY
(a) Remove the bolt and shoulder anchor.

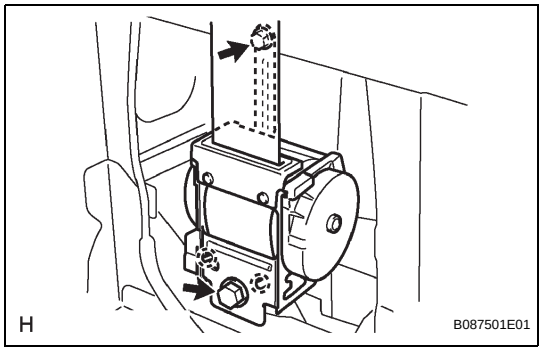

(b) Remove the 2 bolts and retractor.

INSTALLATION

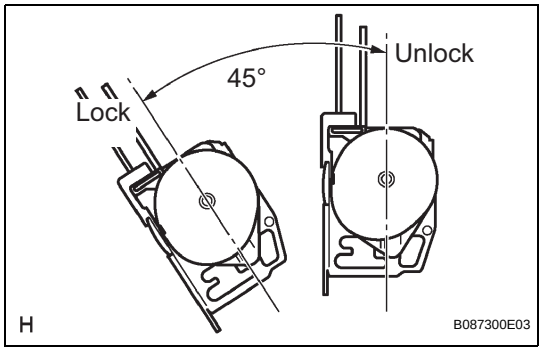

1. INSTALL REAR SEAT OUTER BELT ASSEMBLY
(a) Check the amount of inclination required to lock the retractor.
(1) Gently incline the retractor from its initial position. Check that the belt does not lock when the retractor is inclined 15° or less in any directions. Also check that the belt locks when inclination of the retractor is 45° or more.
NOTICE:
Do not disassemble the retractor.
If operation is not as specified, replace the rear seat outer belt.

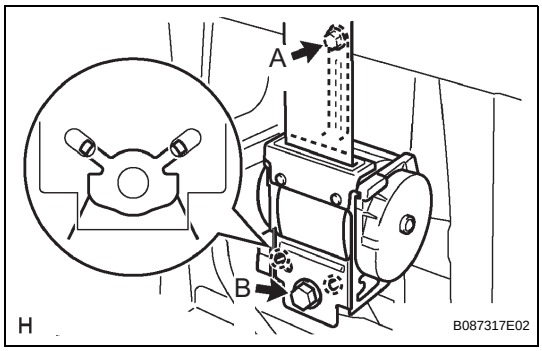

(b) Hook the lower stay of the retractor onto the 2 body hooks.
(c) Tighten bolt A, and then tighten bolt B.
Torque: 8.5 N*m (85 kgf*cm, 75 in.*lbf) (for bolt A)
42 N*m (430 kgf*cm, 31 ft.*lbf) (for bolt B)



(d) Install the shoulder anchor with the bolt.
Torque: 42 N*m (430 kgf*cm, 31 ft.*lbf)
(e) Check that the shoulder anchor rotates smoothly.

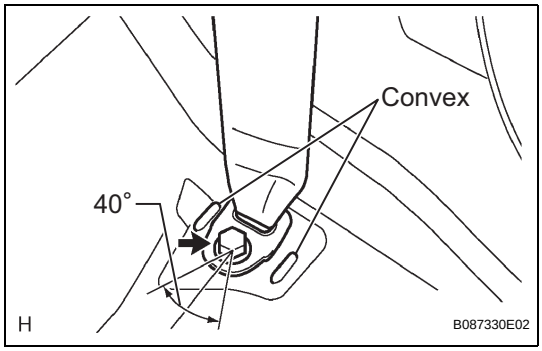

(f) Install the floor anchor with the bolt.
Torque: 42 N*m (430 kgf*cm, 31 ft.*lbf)
NOTICE:
- **Make sure that the rear seat outer belt is oriented in the correct direction when installing.**
- **Be careful not to place the rear seat outer belt over the convex areas of the floor panel.**

(g) Check the ELR lock.
NOTICE:
- **The check should be performed with the rear seat outer belt installed.**
- **Do not allow the anchor part of the rear seat outer belt and the protruding parts of the floor panel to overlap.**

(1) With the belt installed, check that the belt locks when it is pulled out quickly.
If operation is not as specified, replace the rear seat outer belt.

(h) Remove the bolt and floor anchor.

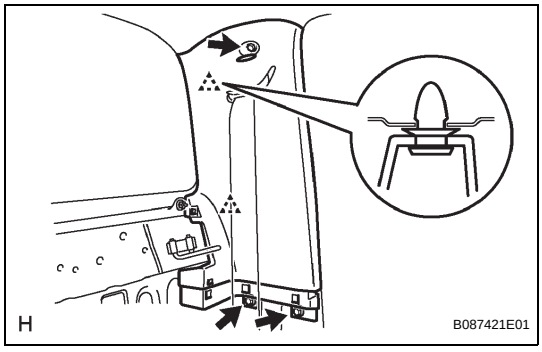

2. INSTALL QUARTER INSIDE TRIM BOARD
(a) Engage the 2 clips and install the quarter inside trim board.
(b) Tighten the 3 screws.

SB

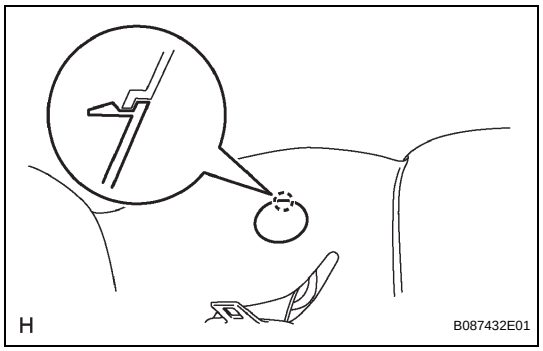

(c) Engage the claw and close the cover.

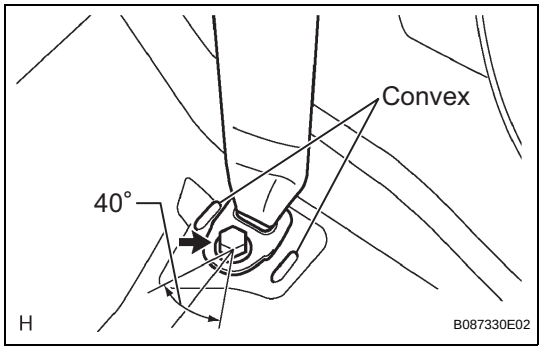

(d) Install the floor anchor of the rear seat belt outer with the bolt.
Torque: 42 N*m (430 kgf*cm, 31 ft.*lbf)
NOTICE:
- **The check should be performed with the rear seat outer belt installed.**
- **Do not allow the anchor part of the rear seat outer belt and the protruding parts of the floor panel to overlap.**

3. INSTALL QUARTER TRIM LOWER PANEL (See page IR-25)

4. INSTALL LUGGAGE COMPARTMENT SIDE TRAY (See page IR-25)

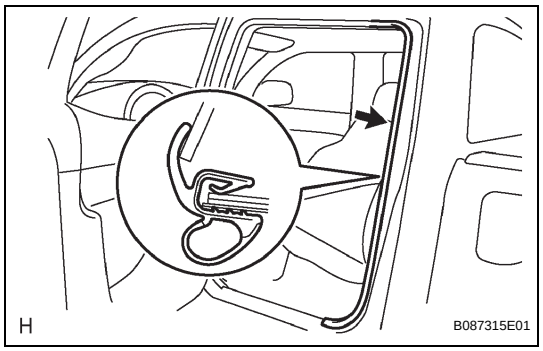

5. INSTALL REAR DOOR OPENING TRIM WEATHERSTRIP
(a) Install the rear door opening trim weatherstrip.

6. INSTALL REAR DOOR SCUFF PLATE (See page IR-29)

7. INSTALL REAR SEAT BACK HINGE SUB-ASSEMBLY (See page SE-77)

8. INSTALL REAR SEAT BACK ASSEMBLY (See page SE-77)

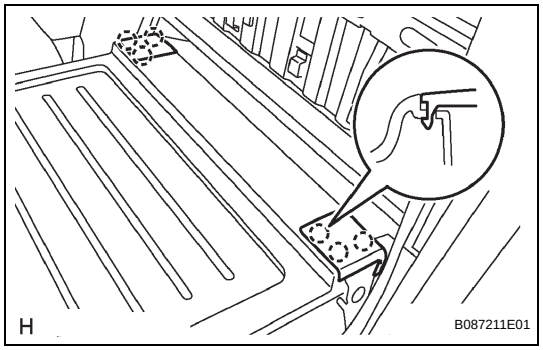

9. INSTALL REAR SEAT BACK HINGE COVER
HINT:
Follow the same procedure as for the opposite side.
(a) Engage the 3 claws and install the rear seat back hinge cover.

SB

SYSTEM DESCRIPTION

1. ENGINE IMMOBILISER SYSTEM DESCRIPTION

The engine immobiliser system is designed to prevent the vehicle from being stolen. This system uses a transponder key ECU that stores the key codes of authorized ignition keys. If an attempt is made to start the engine using an unauthorized key, the transponder key ECU sends a signal to the ECM to prohibit fuel delivery and ignition, effectively disabling the engine.

2. FUNCTION OF MAIN COMPONENT

Component	Outline
Transponder key coil/amplifier	When key is inserted in ignition key cylinder, key coil receives key's code. Then amplifier amplifies ID code and outputs it to transponder key ECU.
Unlock warning switch	Detects if key is in ignition key cylinder and outputs results to transponder key ECU
ECM	Through SFI communication*1, ECM receives ID verification results from transponder key ECU. ECM also verifies ECUs. Then judgment of whether or not to disable engine is made.
Security indicator light	Illuminates or starts flashing. Illumination is controlled by transponder key ECU

3. SYSTEM FUNCTION

When the transponder key ECU detects that the unlock warning switch is ON, the ECU provides current to the transponder key coil and produces a faint electric wave. A transponder chip in the key grip receives the wave. Upon receiving the wave, the transponder chip outputs a key ID code signal. The transponder key coil receives this signal, the transponder key amplifier amplifies it, and then the signal is transmitted to the transponder key ECU. The transponder key ECU matches the key's ID code with the vehicle's ID code, which was previously registered in the transponder key ECU. If the ID codes match, the transponder key ECU turns OFF the security indicator. Then when the ignition key cylinder is turned, the code match results are sent through the transponder key ECU to the ECM. After the identification results show that the key's ID code matches the vehicle's ID code and the transponder key ECU has confirmed their match, the immobiliser system is canceled and the engine starting controls (fuel injection control and ignition control) enter standby mode.

HOW TO PROCEED WITH TROUBLESHOOTING

HINT:

- Use these procedures to troubleshoot the engine immobiliser system.
- *: Use the intelligent tester.

1	VEHICLE BROUGHT TO WORKSHOP

NEXT

2	INSPECT BATTERY VOLTAGE

Standard voltage:

11 to 14 V

If the voltage is below 11 V, recharge or replace the battery before proceeding.

NEXT

3	CRANK ENGINE FOR MORE THAN 10 SECONDS

NEXT

4	CHECK FOR DTCS*

(a) Check for DTCs and note any codes that are output (see page EI-19).

(b) Delete the DTC.

(c) Recheck for DTCs. Based on the DTC output in (a), try to force output of the same SFI system DTC or engine immobiliser system DTC by simulating the original activity indicated by the DTC.

Result:

Result	Proceed to
DTC output does not reoccur	A
SFI system DTC output reoccurs	B
Engine immobiliser system DTC output reoccurs	C

B → GO TO SFI SYSTEM

C → GO TO STEP 8

A

5	READ VALUE OF INTELLIGENT TESTER*

(a) Connect the intelligent tester to the DLC3.

EI

(b) Turn the ignition switch ON and push the intelligent tester main switch ON.
(c) On the intelligent tester, enter the following menus: DIAGNOSIS / ENHANCED OBD II / DATA LIST / IMMOBILISER / KEY SW. Read the values.

Transponder key ECU assembly:

Item	Measurement Item/ Display (Range)	Normal Condition	Diagnostic Note
KEY SW	Unlock warning switch signal/ ON or OFF	OFF: No key is in ignition key cylinder ON: Key is in ignition key cylinder	-

OK:
ON (key is in ignition key cylinder) appears on the screen.

NG → **GO TO DTC B2780**

OK

6 PROBLEM SYMPTOMS TABLE

Result:

Result	Proceed to
Fault is not listed in problem symptoms table	A
Fault is listed in problem symptoms table	B

B → **GO TO STEP 8**

A

7 OVERALL ANALYSIS AND TROUBLESHOOTING*

(a) DATA LIST/ACTIVE TEST (see page EI-19)
(1) Inspection with intelligent tester (DATA LIST)
(2) Inspection with intelligent tester (ACTIVE TEST)
(b) Terminals of ECU (see page EI-13)

NEXT

8 ADJUST, REPAIR OR REPLACE

NEXT

9 CONFIRMATION TEST

NEXT

END

EI

SYSTEM DIAGRAM

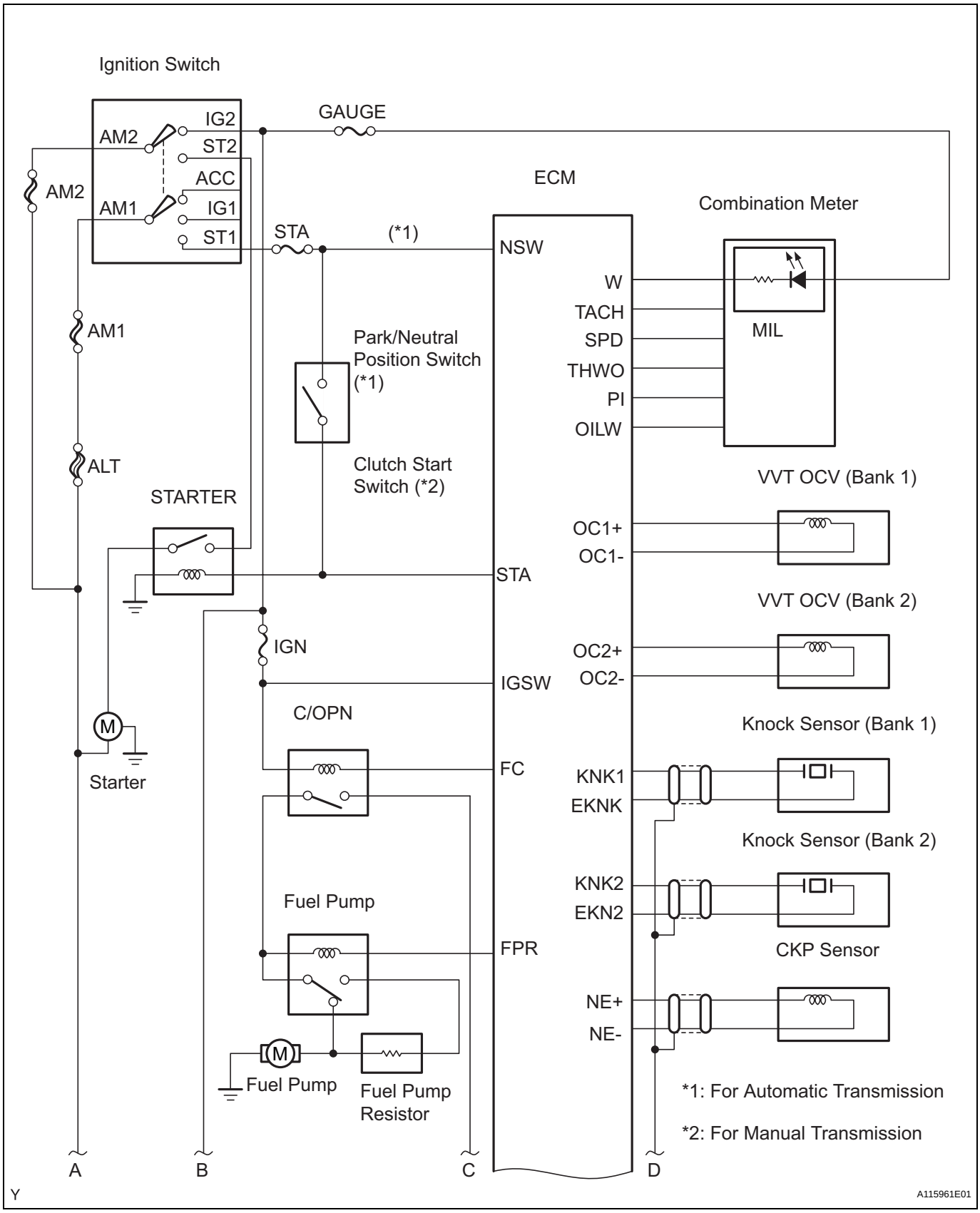

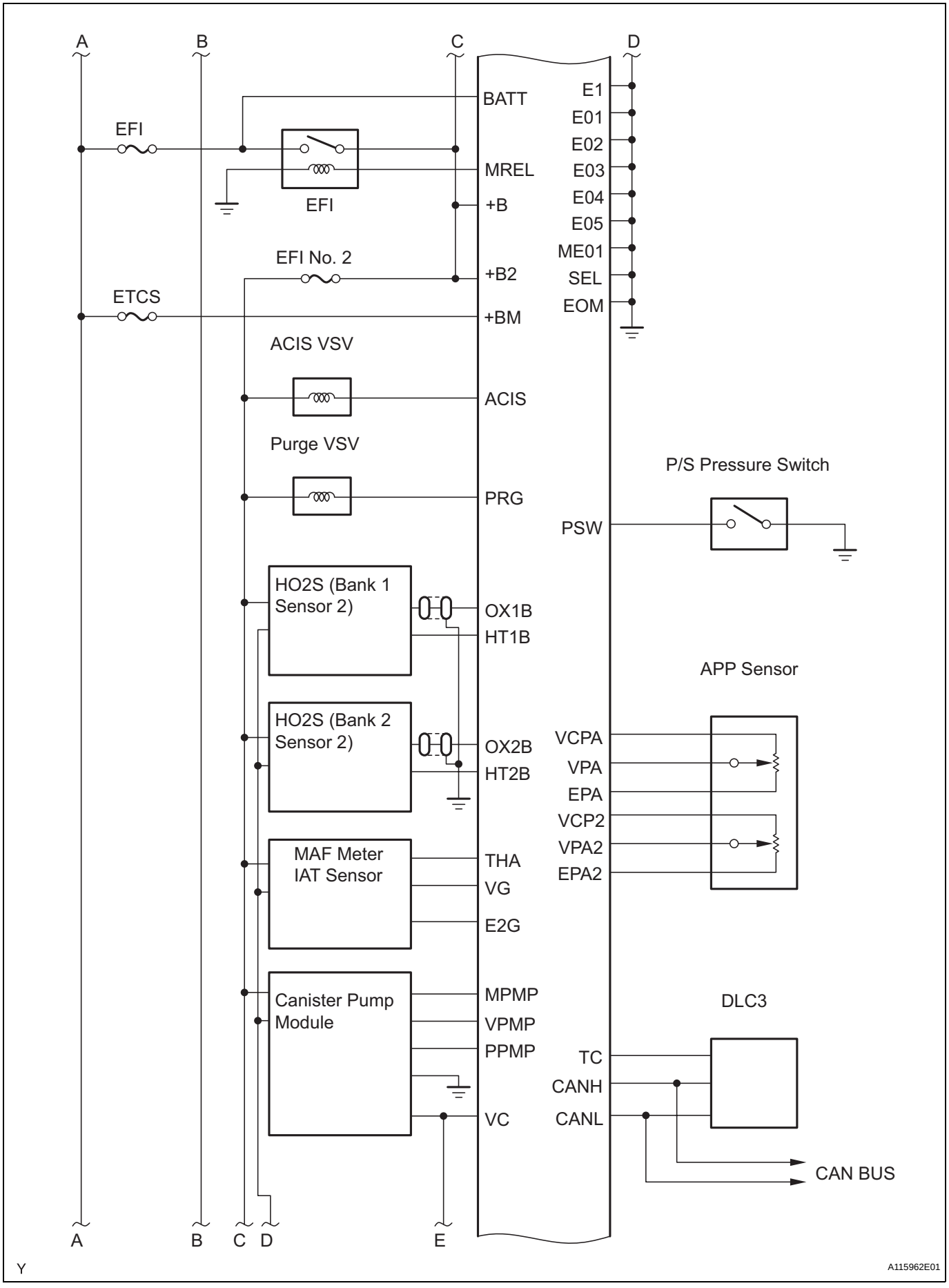
A
B
C
D
EFI
EFI
BATT
MREL
+B
E1
E01
E02
E03
E04
E05
ME01
SEL
EOM
EFI No. 2
+B2
ETCS
+BM
ACIS VSV
ACIS
Purge VSV
PRG
P/S Pressure Switch
PSW
HO2S (Bank 1 Sensor 2)
OX1B
HT1B
APP Sensor
HO2S (Bank 2 Sensor 2)
OX2B
HT2B
VCPA
VPA
EPA
VCP2
VPA2
EPA2
MAF Meter IAT Sensor
THA
VG
E2G
Canister Pump Module
MPMP
VPMP
PPMP
VC
DLC3
TC
CANH
CANL
CAN BUS
A
B
C
D
E
Y
A115962E01

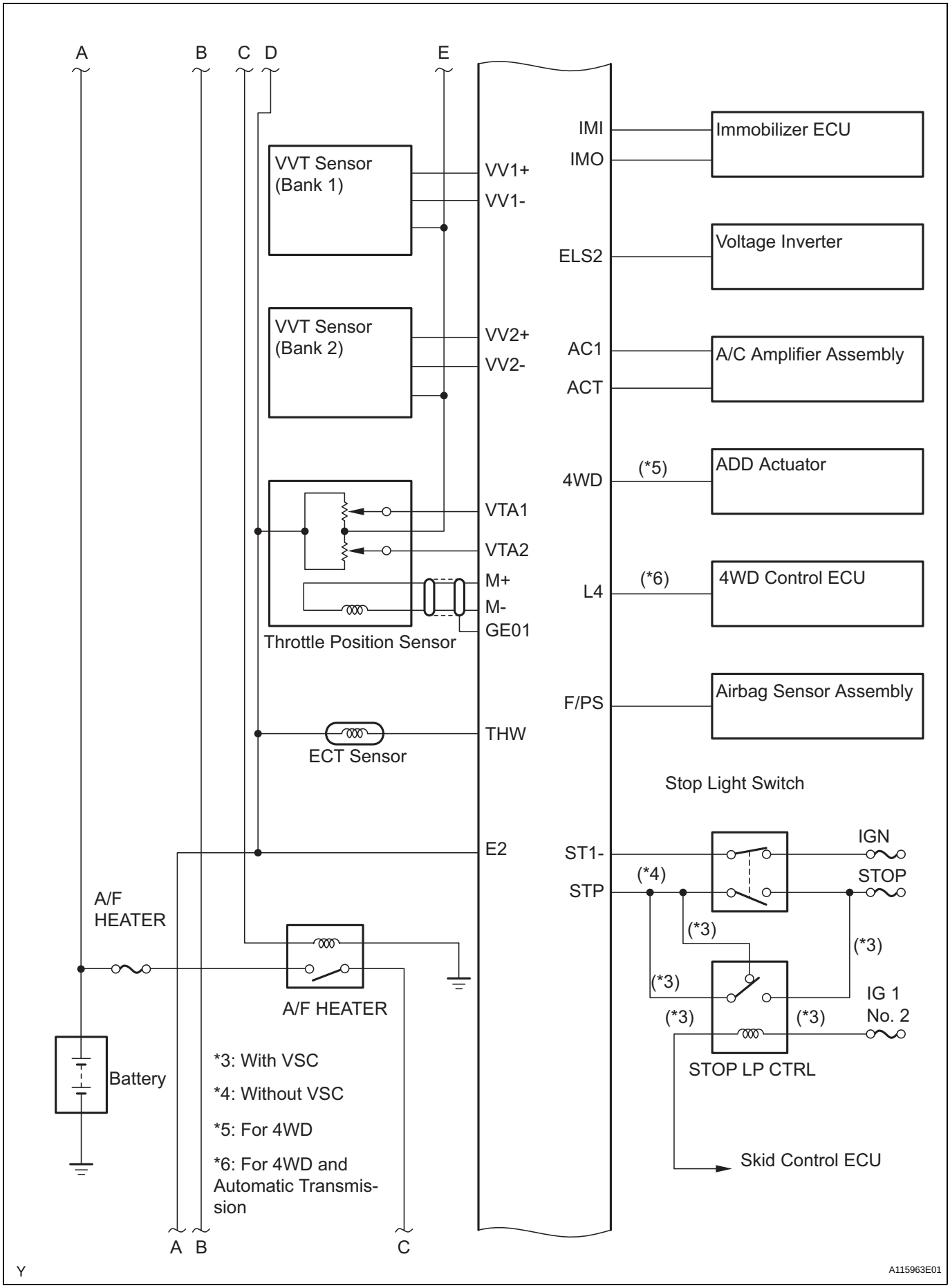
A
B
C
D
E
VVT Sensor (Bank 1)
VV1+
VV1-
VVT Sensor (Bank 2)
VV2+
VV2-
VTA1
VTA2
M+
M-
GE01
Throttle Position Sensor
THW
ECT Sensor
E2
A/F HEATER
A/F HEATER
Battery
*3: With VSC
*4: Without VSC
*5: For 4WD
*6: For 4WD and Automatic Transmission
A B
C
IMI
IMO
Immobilizer ECU
ELS2
Voltage Inverter
AC1
ACT
A/C Amplifier Assembly
4WD
(*5)
ADD Actuator
L4
(*6)
4WD Control ECU
F/PS
Airbag Sensor Assembly
Stop Light Switch
ST1-
STP
(*4)
IGN
STOP
(*3)
(*3)
(*3)
(*3)
(*3)
IG 1
No. 2
STOP LP CTRL
Skid Control ECU
Y
A115963E01

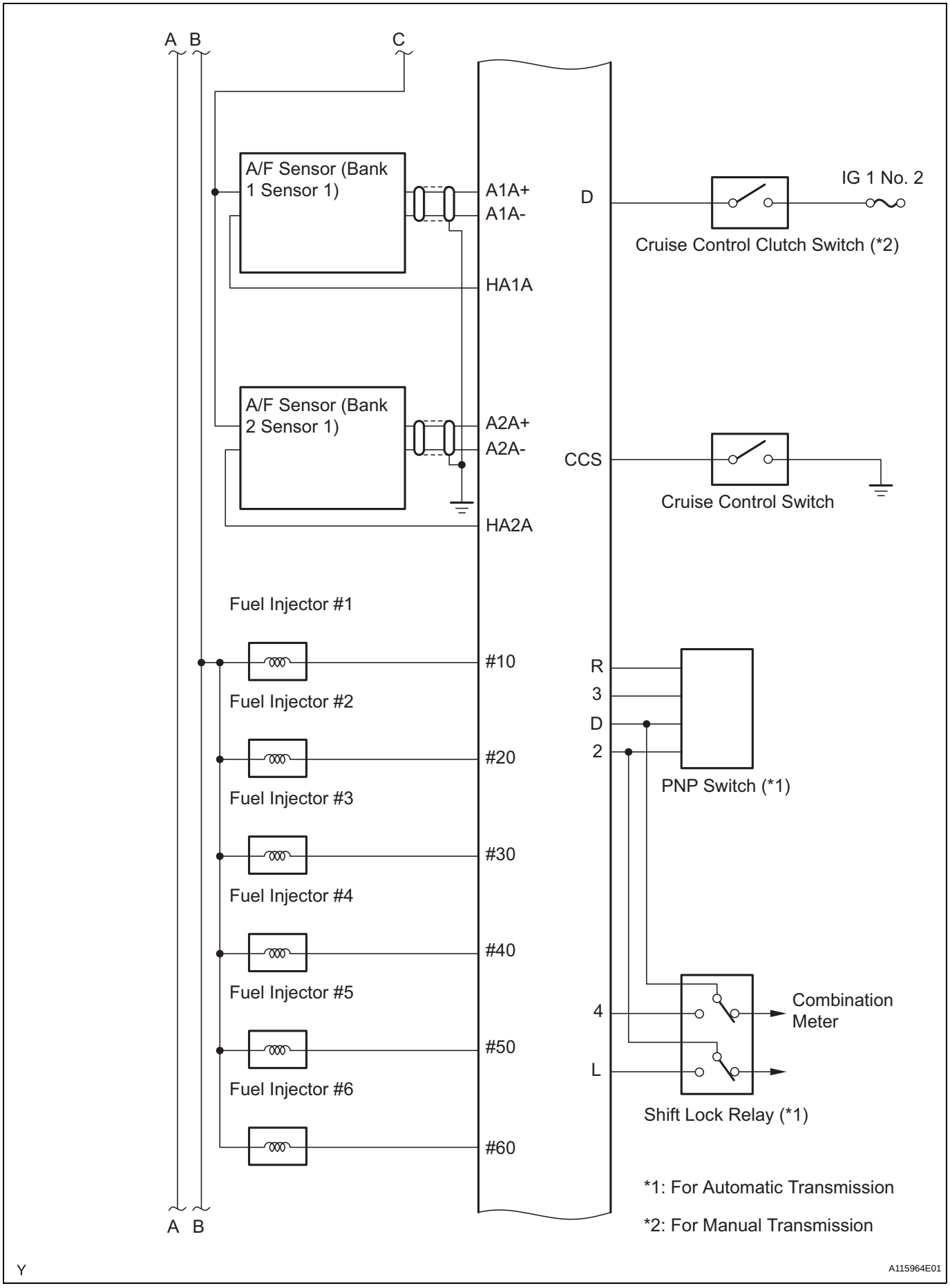
A B
C
A/F Sensor (Bank 1 Sensor 1)
A1A+
A1A-
HA1A
A/F Sensor (Bank 2 Sensor 1)
A2A+
A2A-
HA2A
Fuel Injector #1
#10
Fuel Injector #2
#20
Fuel Injector #3
#30
Fuel Injector #4
#40
Fuel Injector #5
#50
Fuel Injector #6
#60
D
IG 1 No. 2
Cruise Control Clutch Switch (*2)
CCS
Cruise Control Switch
R
3
D
2
PNP Switch (*1)
4
L
Combination Meter
Shift Lock Relay (*1)
*1: For Automatic Transmission
*2: For Manual Transmission
A B
Y
A115964E01

ES

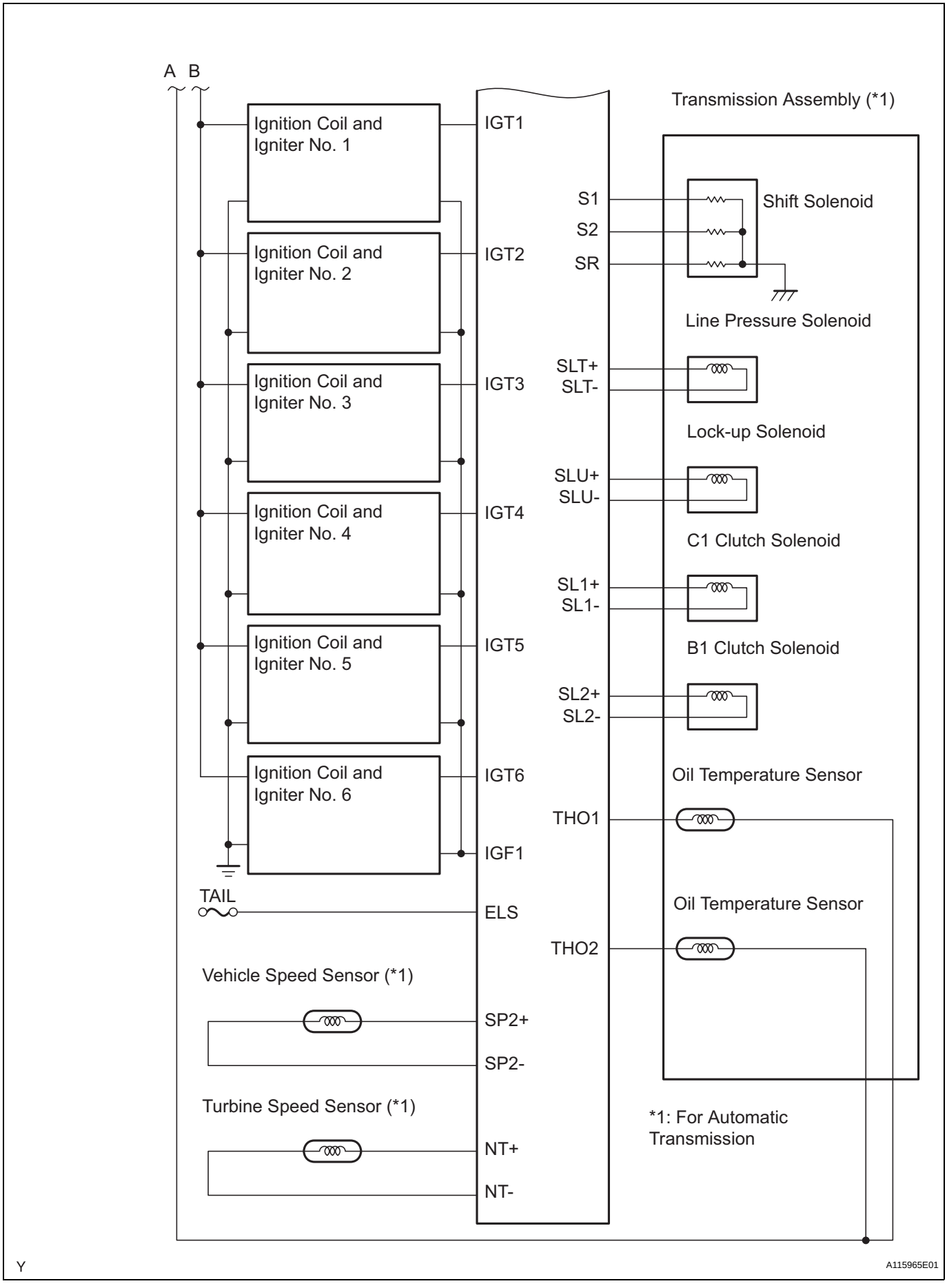
A B
Ignition Coil and Igniter No. 1
Ignition Coil and Igniter No. 2
Ignition Coil and Igniter No. 3
Ignition Coil and Igniter No. 4
Ignition Coil and Igniter No. 5
Ignition Coil and Igniter No. 6
IGT1
IGT2
IGT3
IGT4
IGT5
IGT6
IGF1
TAIL
ELS
Vehicle Speed Sensor (*1)
SP2+
SP2-
Turbine Speed Sensor (*1)
NT+
NT-
Transmission Assembly (*1)
S1
S2
SR
Shift Solenoid
Line Pressure Solenoid
SLT+
SLT-
Lock-up Solenoid
SLU+
SLU-
C1 Clutch Solenoid
SL1+
SL1-
B1 Clutch Solenoid
SL2+
SL2-
Oil Temperature Sensor
THO1
Oil Temperature Sensor
THO2
*1: For Automatic Transmission
Y
A115965E01

SYSTEM DESCRIPTION

1. CRUISE CONTROL SYSTEM

The cruise control system makes it possible to drive at a desired speed without using the accelerator pedal. ECM controls the throttle opening angle based on signals from switches and sensors.

The microcomputer which controls the cruise control system is built into the ECM, and the actuator is the throttle position sensor and motor.

Constant speed control gets ready when the cruise control main switch ON-OFF button is pushed (the CRUISE MAIN indicator light comes on).

Operating the cruise control main switch, the driver can control the following functions.

HINT:

- The cruise control main switch is an automatic return type switch which operates only while it is pushed in one direction and turns off after it is released.
- "SET" and "-", "RES" and "+", "ON" and "OFF" operations are all controlled by using the same switch.

(a) 'SET' function

When the cruise control main switch is pushed down to "-/SET", the ECM stores the set speed and compares it with the actual vehicle speed. If the actual driving speed is greater than the set speed, the ECM sends a signal to the throttle position sensor and motor to close the throttle valve. If lower, it opens the throttle valve. The cruise control operative speed range is between the low and high speed limits.

(b) '+' function

The cruise set speed increases while the cruise control main switch lever is pushed up to "+/RES". The vehicle begins to cruise at the newly set speed when the cruise control main switch lever is released.

(c) Tap-up function

When the cruise control main switch lever is tapped up to "+/RES" (approximately 0.6 seconds), the ECM increases the stored set speed by 1 mph (1.6 km/h) at a time. However, when the difference between the driving and the stored vehicle speeds is more than 3.1 mph (approximately 5 km/h), the stored vehicle speed will not change.

(d) '-' function

The cruise set speed decreases while the cruise control main switch lever is pushed down to "-/SET". The vehicle begins to cruise at the newly set speed when the cruise control main switch lever is released.

(e) Tap-down function
When the cruise control main switch lever is tapped down to "-/SET" (approximately 0.6 seconds), the ECM decreases the stored set speed by 1 mph (1.6 km/h) at a time. However, when the difference between the driving and the stored vehicle speeds is more than 3.1 mph (approximately 5 km/h), the vehicle speed, when the cruise control main switch lever is released from "-/SET", will be stored and constant speed control is maintained.

(f) Low speed limit
The lowest possible limit of the speed setting range is approximately 25 mph (40 km/h). The cruise control system cannot be set when the vehicle speed is below the speed limit. Cruise control operation is automatically canceled when the vehicle speed decreases to below the low speed limit while the cruise control is in operation.

(g) High speed limit
The highest possible limit of the speed setting range is approximately 125 mph (200 km/h). The cruise control system cannot be set when the vehicle speed is over the high speed limit. The speed cannot be in greased using "+/RES" with the cruise control main switch assembly to beyond the high speed limit.

(h) 'RES' function
If the cruise control operation was canceled under the manual cancel condition (other than by turning cruise control main switch ON-OFF button off), and if the driving speed is within the limit range, pushing the cruise control main switch to "+/RES" restores the vehicle speed stored at the time of cancellation, and maintains constant speed control. Even when cruise control is canceled automatically due to the vehicle speed decreasing below the low speed limit, cruise control can be resumed when the vehicle speed returns to over the low speed limit, since the stored vehicle speed remains in the memory.

(i) MANUAL CANSEL function
The ECM cancels the cruise control while driving under the following conditions:
- The cruise control main switch is pulled to "CANCEL".
- The brake pedal is depressed.
- The clutch pedal is depressed (M/T ONLY).
- The cruise control main switch ON-OFF button is pushed off.

- The D position circuit in the neutral start switch is turned from ON to OFF. Models with the 1GR-FE engine (5AT): Shift the gear from the D or 4th position to any of the N, 3rd, 2nd and 1st positions. Models with the 2TR-FE engine (4AT): Shift the gear from the D or 3rd position to any of the N, 2nd and 1st positions.

(j) AUTO CANCEL function

(1) When any of the following malfunctions occurs, the ECM clears the set vehicle speed and deactivates the cruise control.
In this case, the power indicator continues blinking until the cruise control main switch is turned OFF and the ECM allows the cruise control to be reactivated when the main switch is next turned ON again.
- Open or short malfunctions in the stop light switch.
- Abnormalities in the vehicle speed signal.
- Malfunctions in the throttle body.

(2) When any of the following malfunctions occurs, the ECM clears the set vehicle speed and deactivates the cruise control.
In this case, the power indicator continues blinking until the cruise control main switch is turned OFF and the ECM allows the cruise control to be reactivated when the ignition switch is next turned ON again.
- Malfunctions in the stop light switch input circuit.
- Malfunctions in the cancel circuit.

(3) When the vehicle is in one of the following conditions, the ECM deactivates the cruise control (the cruise control can be reset).
- Actual vehicle speed is below the lower vehicle speed limit (the set vehicle speed is retained).
- Actual vehicle speed decreases by 10 mph (16 km/h) from the set vehicle speed (the set vehicle speed is cleared).

HOW TO PROCEED WITH TROUBLESHOOTING

HINT:
*: Use the intelligent tester.

1	VEHICLE BROUGHT TO WORKSHOP

NEXT

2	CUSTOMER PROBLEM ANALYSIS

NEXT

3	CONNECT INTELLIGENT TESTER TO DLC3*

HINT:
If the display indicates a communication fault in the tester, inspect the DLC3.

NEXT

4	CHECK DTC AND FREEZE FRAME DATA*

HINT:
Record or print DTCs and freeze frame data, if necessary.

NEXT

5	CLEAR DTC AND FREEZE FRAME DATA*

NEXT

6	CONDUCT VISUAL INSPECTION

NEXT

7	SET CHECK MODE DIAGNOSIS*

NEXT

8	CONFIRM PROBLEM SYMPTOMS

HINT:
If the engine does not start, perform steps 10 and 12 first.

Result	Proceed To
Malfunction does not occur	A
Malfunction occurs	B

B → GO TO STEP 10

A

9	SIMULATE SYMPTOMS

NEXT

10	CHECK DTC*

Result	Proceed To
Malfunction code	A
No code	B

B → GO TO STEP 12

A

11	REFER TO DTC CHART

NEXT

12	CONDUCT BASIC INSPECTION

Result	Proceed To
Malfunctioning parts not confirmed	A
Malfunctioning parts confirmed	B

B → GO TO STEP 17

A

13	REFER TO PROBLEM SYMPTOMS TABLE

Result	Proceed To
Malfunctioning circuit confirmed	A
Malfunctioning parts confirmed	B

B → GO TO STEP 17

A

14	CHECK ECM POWER SOURCE CIRCUIT

NEXT

15	CONDUCT CIRCUIT INSPECTION

Result	Proceed To
Malfunction not confirmed	A
Malfunction confirmed	B

B → GO TO STEP 18

A

16	CHECK FOR INTERMITTENT PROBLEMS

NEXT

17	CONDUCT PARTS INSPECTION

NEXT

18	IDENTIFY PROBLEM

NEXT

19	ADJUST AND/OR REPAIR

NEXT

20	CONDUCT CONFIRMATION TEST

NEXT

END

ES

CHECK FOR INTERMITTENT PROBLEMS

HINT:
Intelligent tester only:
Inspect the vehicle's ECM using check mode. Intermittent problems are easier to detect with an intelligent tester when the ECM is in check mode. In check mode, the ECM uses 1trip detection logic, which is more sensitive to malfunctions than normal mode (default), which uses 2trip detection logic.

1. Clear DTCs (See page ES-38).
2. Switch the ECM from normal mode to check mode using an intelligent tester (See page ES-41).
3. Perform a simulation test.
4. Check and wiggle the harness(es), connector(s) and terminal(s).

BASIC INSPECTION

When a malfunction is not confirmed by the DTC check, troubleshooting should be carried out in all circuits considered to be possible causes of the problem. In many cases, by carrying out the basic engine check shown in the following flowchart, the location of the problem can be found quickly and efficiently. Therefore, using this check is essential when engine troubleshooting.

1 CHECK BATTERY VOLTAGE

NOTICE:
Carry out this check with the engine stopped and ignition switch OFF.

Result	Proceed To
11 V or more	OK
Below 11 V	NG

NG → **CHARGE OR REPLACE BATTERY**

OK

2 CHECK WHETHER ENGINE WILL CRANK

NG → **PROCEED TO PROBLEM SYMPTOMS TABLE**

OK

3 CHECK WHETHER ENGINE STARTS

NG → **GO TO STEP 6**

OK

4 CHECK AIR FILTER

(a) Visually check that the air filter is not excessively contaminated with dirt or oil.

NG → **REPLACE AIR FILTER**

OK

5 CHECK IDLING SPEED

NG → **TROUBLESHOOT IDLING SPEED AND PROCEED TO NEXT STEP**

OK

6	CHECK FUEL PRESSURE

NG → TROUBLESHOOT FUEL PRESSURE AND PROCEED TO NEXT STEP

OK

7	CHECK FOR SPARK

NG → TROUBLESHOOT SPARK AND PROCEED TO NEXT STEP

OK

PROCEED TO PROBLEM SYMPTOMS TABLE

REGISTRATION

NOTICE:
The Vehicle Identification Number (VIN) must be input into the replacement ECM.
HINT:
The VIN is in the form of a 17-digit alphanumeric vehicle identification number. An intelligent tester is required to resister the VIN.

1. DESCRIPTION

This registration section consists of three parts, Input Instructions, Read VIN and Write VIN.

(a) Input Instructions: Explains the general VIN input instructions using an intelligent tester.
(b) Read VIN: Explains the VIN reading process in a flowchart. This process allows the VIN stored in the ECM to be read, in order to confirm that the two VINs, provided with the vehicle and stored in the vehicle's ECM, are the same.
(c) Write VIN: Explains the VIN writing process in a flowchart. This process allows the VIN to be input into the ECM. If the ECM is changed, or the VIN and VIN do not match, the VIN can be registered, or overwritten in the ECM by following this procedure.

2. INPUT INSTRUCTIONS

(a) Intelligent tester
  (1) The arrow buttons (UP, DOWN, RIGHT and LEFT) and numerical buttons (0 to 9) are used, in order to input the VIN.
(b) Cursor Operation
  (1) To move the cursor around the tester screen, press the RIGHT and LEFT buttons.
(c) Alphabetical Character Input
  (1) Press the UP and DOWN buttons to select the desired alphabetical character.
  (2) After selection, the cursor should move.
(d) Numeric Character Input
  (1) Press the numerical button corresponding to the number that you want to input.
  (2) After input, the cursor should move.
    HINT:
    Numerical characters can be selected by using the UP and DOWN buttons.
(e) Correction
  (1) When correcting the input character(s), put the cursor onto the character using the RIGHT or LEFT buttons.
  (2) Select or input the correct character using the UP/DOWN buttons, or the numerical buttons.
(f) Finishing Input Operation
  (1) Make sure that the input VIN matches the vehicle VIN after input.
  (2) Press the ENTER button on the tester.

3. READ VIN

(a) Confirm the vehicle VIN.
(b) Connect an intelligent tester to the DLC3.
(c) Turn the ignition switch ON.
(d) Turn the tester ON.
(e) Select the following menu items: DIAGNOSIS / ENHANCED OBD II / VIN.

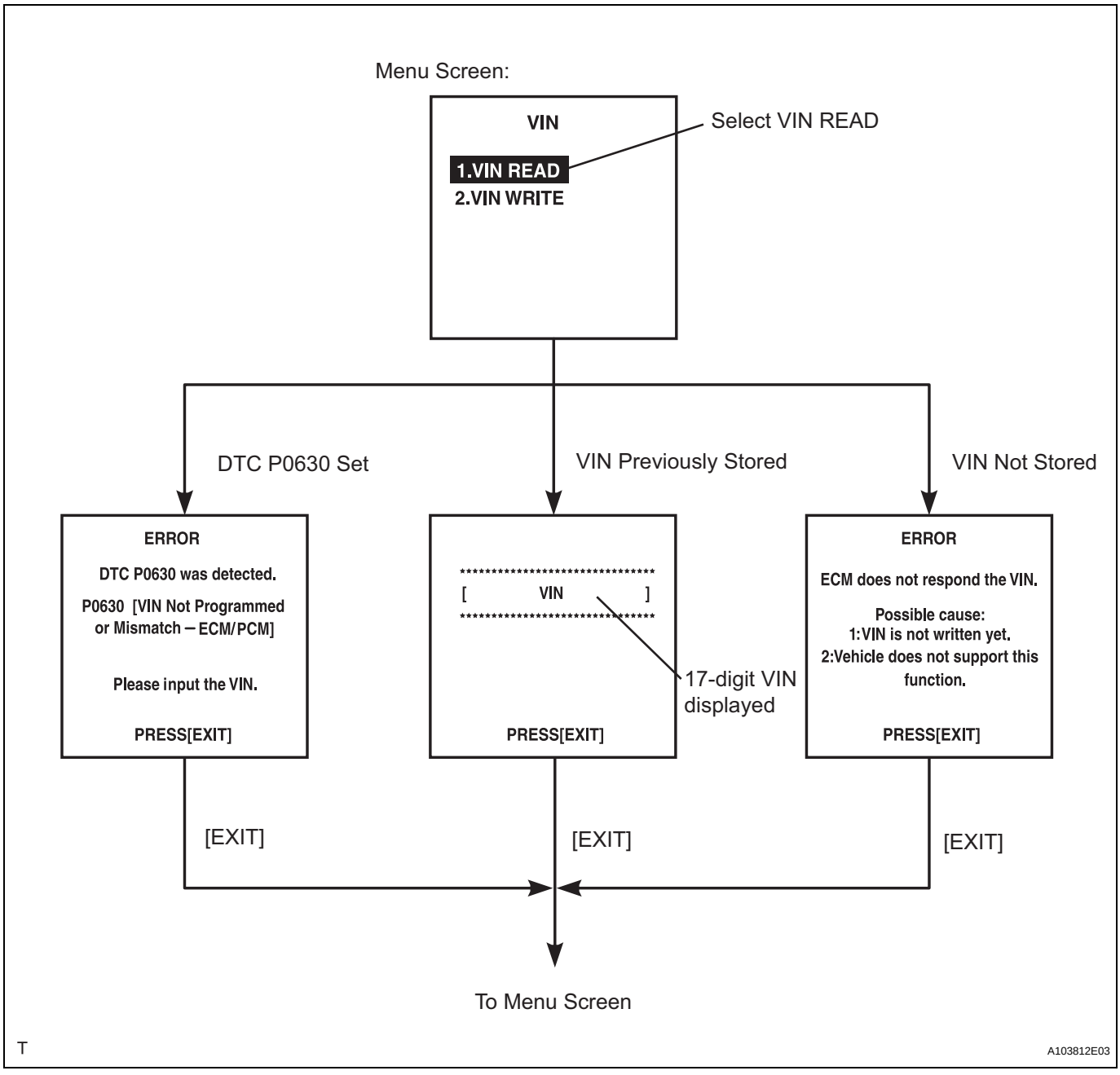

4. WRITE VIN

(a) Confirm the vehicle VIN.
(b) Connect an intelligent tester to the DLC3.
(c) Turn the ignition switch ON.
(d) Turn the tester ON.

(e) Select the following menu items: DIAGNOSIS / ENHANCED OBD II / VIN.

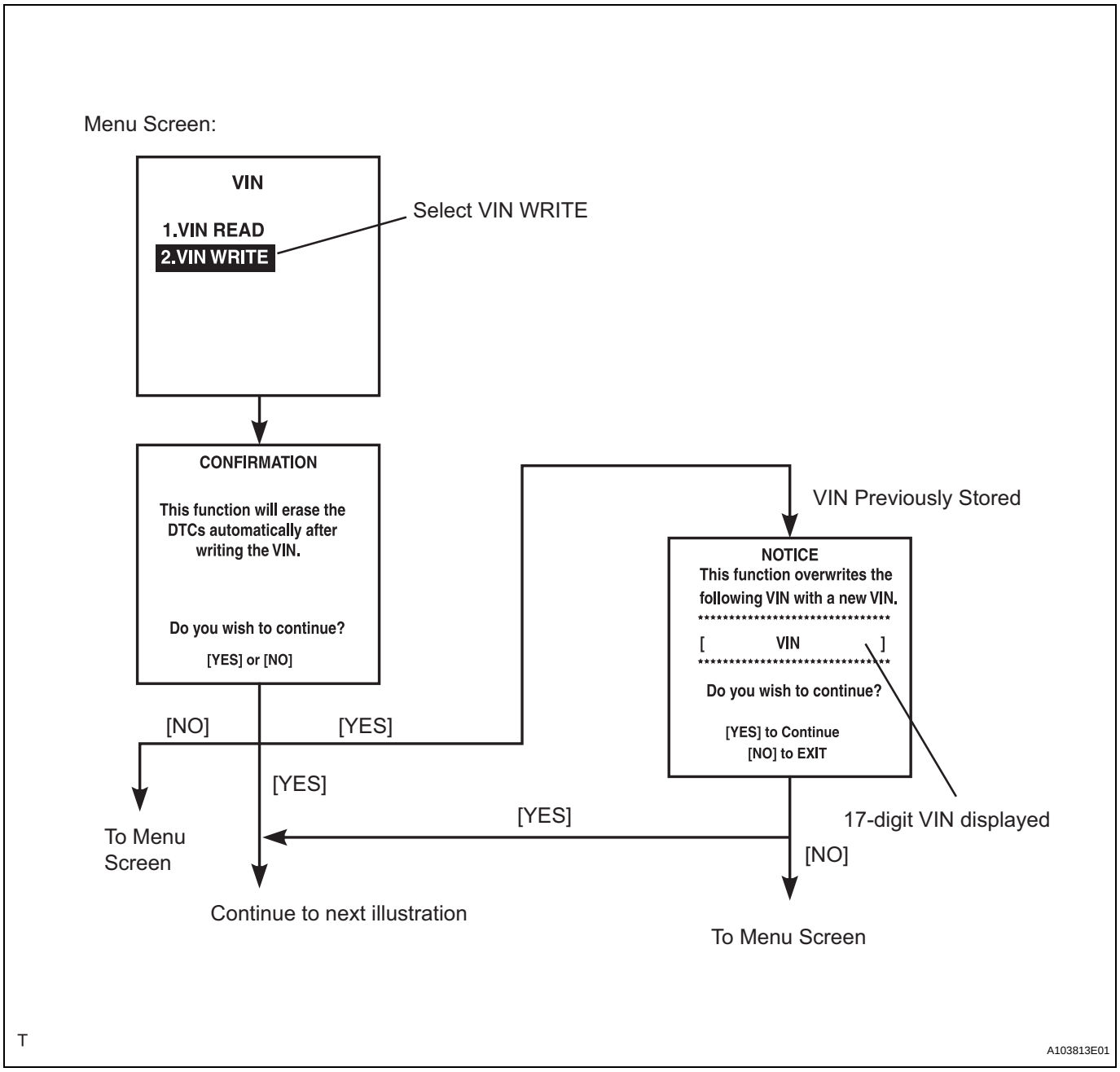

ES

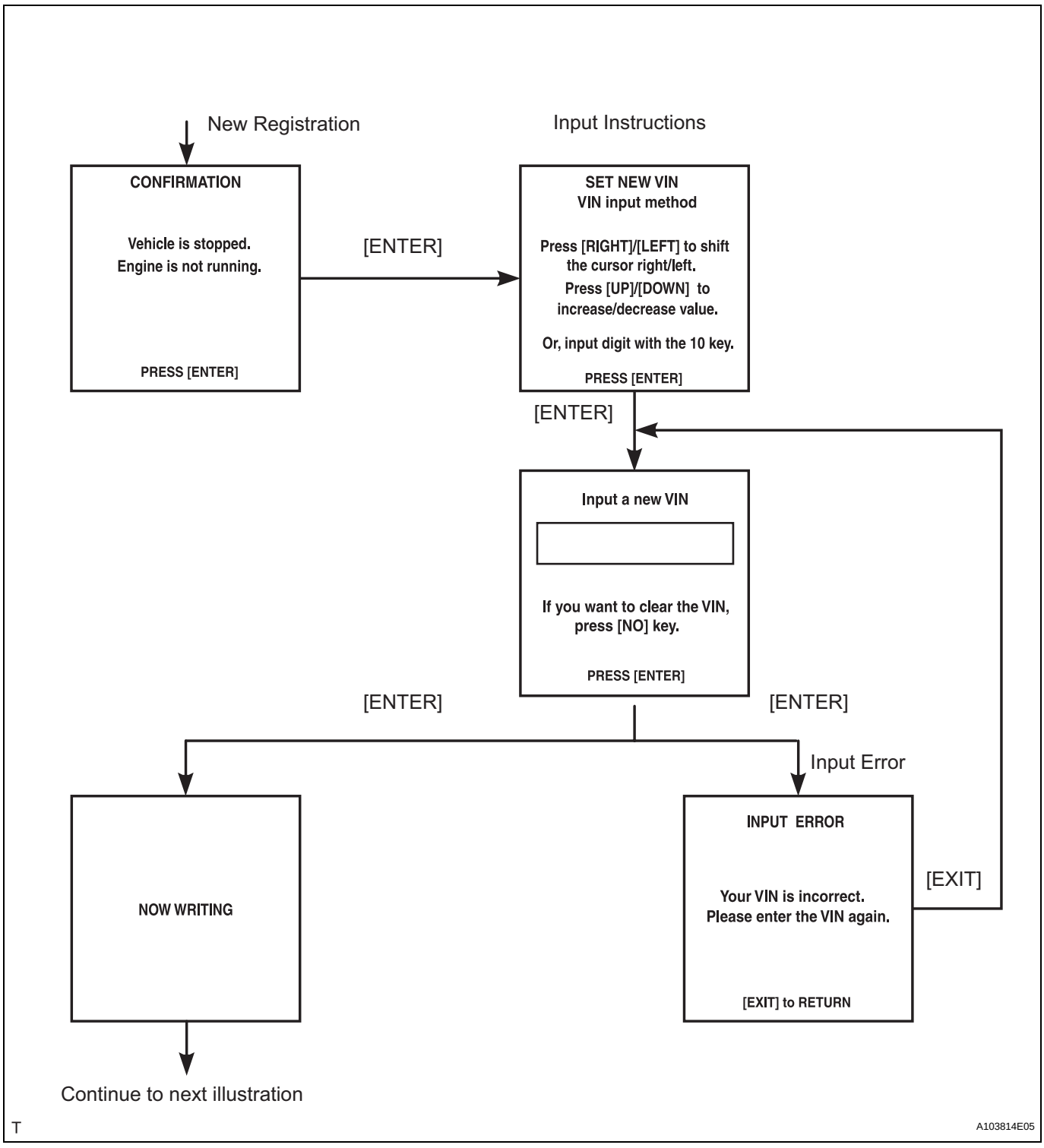
New Registration
Input Instructions
CONFIRMATION
Vehicle is stopped.
Engine is not running.
PRESS [ENTER]
[ENTER]
SET NEW VIN
VIN input method
Press [RIGHT]/[LEFT] to shift the cursor right/left.
Press [UP]/[DOWN] to increase/decrease value.
Or, input digit with the 10 key.
PRESS [ENTER]
[ENTER]
Input a new VIN
If you want to clear the VIN, press [NO] key.
PRESS [ENTER]
[ENTER]
[ENTER]
Input Error
NOW WRITING
INPUT ERROR
Your VIN is incorrect.
Please enter the VIN again.
[EXIT] to RETURN
[EXIT]
Continue to next illustration
T
A103814E05

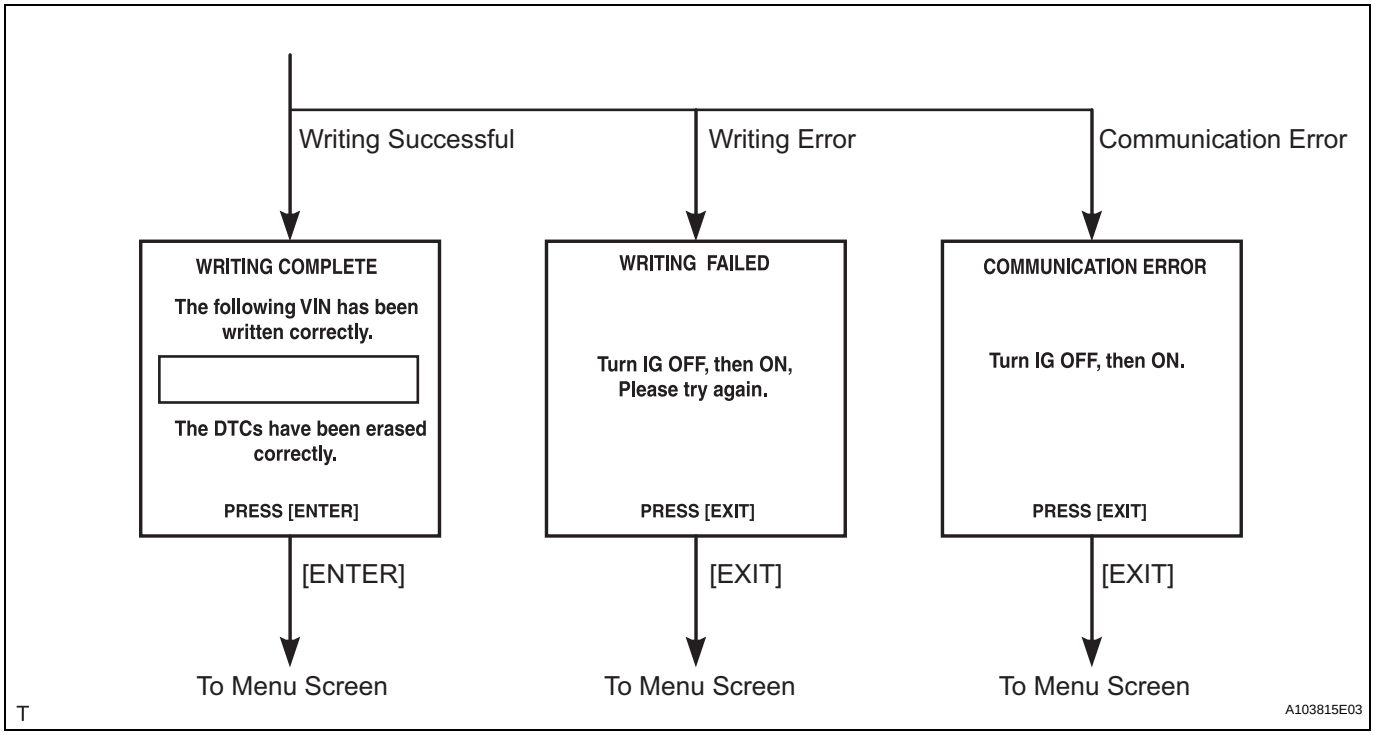
Writing Successful
Writing Error
Communication Error
WRITING COMPLETE
The following VIN has been written correctly.
The DTCs have been erased correctly.
PRESS [ENTER]
WRITING FAILED
Turn IG OFF, then ON, Please try again.
PRESS [EXIT]
COMMUNICATION ERROR
Turn IG OFF, then ON.
PRESS [EXIT]
[ENTER]
[EXIT]
[EXIT]
To Menu Screen
To Menu Screen
To Menu Screen
T
A103815E03

ES

CHECKING MONITOR STATUS

The purpose of the monitor result (mode 06) is to allow access to the results for on-board diagnostic monitoring tests of specific components/systems that are not continuously monitored. Examples are catalyst, evaporative emission (EVAP) and thermostat.

The monitor result allows the OBD II scan tool to display the monitor status, test value, minimum test limit and maximum test limit. These data are displayed after the vehicle has been driven to run the monitor.

When the test value is not between the minimum test limit and maximum test limit, the ECM (PCM) interprets this as a malfunction. When the component is not malfunctioning, if the difference of the test value and test limit is very small, the component will malfunction in the near future.

Perform the following instruction to view the monitor status. Although this instruction reference the Lexus/Toyota diagnostic tester, it can be checked using a generic OBD II scan tool. Refer to your scan tool operator's manual for specific procedures.

1. PERFORM MONITOR DRIVE PATTERN

(a) Connect an intelligent tester to the DLC3.

(b) Turn the ignition switch ON and the tester ON.

(c) Clear DTCs (See page ES-38).

(d) Run the vehicle in accordance with the applicable drive pattern described in READINESS MONITOR DRIVE PATTERN (See page ES-23). Do not turn the ignition switch OFF.

NOTICE:

The test results will be lost if the ignition switch is turned OFF.

2. ACCESS MONITOR RESULT

(a) Select from the intelligent tester menus: DIAGNOSIS, ENHANCED OBDII, MONITOR INFO and MONITOR RESULT. The monitor status appears after the component name.

- INCMP: The component has not been monitored yet.
- PASS: The component is functioning normally.
- FAIL: The component is malfunctioning.

(b) Confirm that the component is either PASS or FAIL.

(c) Select the component and press ENTER. The accuracy test value appears if the monitor status is either PASS or FAIL.

3. CHECK COMPONENT STATUS

(a) Compare the test value with the minimum test limit (MIN LIMIT) and maximum test limit (MAX LIMIT).

(b) If the test value is between the minimum test limit and maximum test limit, the component is functioning normally. If not, the component is malfunctioning. The test value is usually significantly higher or lower than the test limit. If the test value is on the borderline of the test limit, the component will malfunction in the near future.
HINT:
The monitor result might on rare occasions be PASS even if the malfunction indicator lamp (MIL) is illuminated. This indicates the system malfunctioned on a previous driving cycle. This might be caused by an intermittent problem.

4. MONITOR RESULT INFORMATION

If you use a generic scan tool, multiply the value by the scaling value listed below.

A/F Sensor Bank 1

Monitor ID	Test ID	Scaling	Unit	Description
$01	$8E	Multiply by 0.0003	No dimension	Response rate deterioration level for bank 1 sensor 1
$01	$91	Multiply by 0.004	mA	A/F sensor current

A/F Sensor Bank 2

Monitor ID	Test ID	Scaling	Unit	Description
$05	$8E	Multiply by 0.0003	No dimension	Response rate deterioration level for bank 2
$05	$91	Multiply by 0.004	mA	A/F sensor current for bank 2

HO2S Bank 1 Sensor 2

Monitor ID	Test ID	Scaling	Unit	Description
$02	$07	Multiply by 0.001	V	Minimum sensor voltage
$02	$08	Multiply by 0.001	V	Maximum sensor voltage
$02	$8F	Multiply by 0.0003	Grams	Maximum oxygen storage capacity

HO2S Bank 2 Sensor 2

Monitor ID	Test ID	Scaling	Unit	Description
$06	$07	Multiply by 0.001	V	Minimum sensor voltage
$06	$08	Multiply by 0.001	V	Maximum sensor voltage
$06	$8F	Multiply by 0.0003	Grams	Maximum oxygen storage capacity

Catalyst - Bank 1

Monitor ID	Test ID	Scaling	Unit	Description
$21	$A9	Multiply by 0.0003	No dimension	Oxygen storage capacity of catalyst - Bank 1

Catalyst - Bank 2

Monitor ID	Test ID	Scaling	Unit	Description
$22	$A9	Multiply by 0.0003	No dimension	Oxygen storage capacity of catalyst - Bank 2

EVAP

Monitor ID	Test ID	Scaling	Unit	Description
$3D	$C9	Multiply by 0.001	kPa	Test value for small leak (P0456)
$3D	$CA	Multiply by 0.001	kPa	Test value for gross leak (P0455)
$3D	$CB	Multiply by 0.001	kPa	Test value for leak detection pump OFF stuck (P2401)
$3D	$CD	Multiply by 0.001	kPa	Test value for leak detection pump ON stuck (P2402)
$3D	$CE	Multiply by 0.001	kPa	Test value for vent valve OFF stuck (P2420)
$3D	$CF	Multiply by 0.001	kPa	Test value for vent valve ON stuck (P2419)
$3D	$D0	Multiply by 0.001	kPa	Test value for reference orifice low flow (P043E)
$3D	$D1	Multiply by 0.001	kPa	Test value for reference orifice high flow (P043F)
$3D	$D4	Multiply by 0.001	kPa	Test value for purge VSV close stuck (P0441)
$3D	$D5	Multiply by 0.001	kPa	Test value for purge VSV open stuck (P0441)
$3D	$D7	Multiply by 0.001	kPa	Test value for purge flow insufficient (P0441)

Misfire

Monitor ID	Test ID	Scaling	Unit	Description
$A1	$0B	Multiply by 1	Time	Exponential Weighted Moving Average (EWMA) misfire for all cylinders: Misfire counts for last 10 driving cycles - Total
$A1	$0C	Multiply by 1	Time	Misfire rate for all cylinders: Misfire counts for last/ current driving cycles - Total
$A2	$0B	Multiply by 1	Time	EWMA misfire for cylinder 1: Misfire counts for last 10 driving cycles - Total
$A2	$0C	Multiply by 1	Time	Misfire rate for cylinder 1: Misfire counts for last/ current driving cycles - Total
$A3	$0B	Multiply by 1	Time	EWMA misfire for cylinder 2: Misfire counts for last 10 driving cycles - Total

Monitor ID	Test ID	Scaling	Unit	Description
$A3	$0C	Multiply by 1	Time	Misfire rate for cylinder 2: Misfire counts for last/ current driving cycles - Total
$A4	$0B	Multiply by 1	Time	EWMA misfire for cylinder 3: Misfire counts for last 10 driving cycles - Total
$A4	$0C	Multiply by 1	Time	Misfire rate for cylinder 3: Misfire counts for last/ current driving cycles - Total
$A5	$0B	Multiply by 1	Time	EWMA misfire for cylinder 4: Misfire counts for last 10 driving cycles - Total
$A5	$0C	Multiply by 1	Time	Misfire rate for cylinder 4: Misfire counts for last/ current driving cycles - Total
$A6	$0B	Multiply by 1	Time	EWMA misfire for cylinder 5: Misfire counts for last 10 driving cycles - Total
$A6	$0C	Multiply by 1	Time	Misfire rate for cylinder 5: Misfire counts for last/ current driving cycles - Total
$A7	$0B	Multiply by 1	Time	EWMA misfire for cylinder 6: Misfire counts for last 10 driving cycles - Total
$A7	$0C	Multiply by 1	Time	Misfire rate for cylinder 6: Misfire counts for last/ current driving cycles - Total

ES

READINESS MONITOR DRIVE PATTERN

PURPOSE OF READINESS TESTS

- The On-Board Diagnostic (OBD II) system is designed to monitor the performance of emission related components, and indicate any detected abnormalities with DTCs (Diagnostic Trouble Codes). Since various components need to be monitored during different driving conditions, the OBD II system is designed to run separate monitoring programs called Readiness Monitors.
- The intelligent tester's software must be version 9.0 or newer to view the Readiness Monitor status. To view the status, select the following menu items: DIAGNOSIS / ENHANCED OBD II / MONITOR INFO / MONITOR STATUS.
- When the Readiness Monitor status reads COMPL (complete), the necessary conditions have been met for running the performance tests for that Readiness Monitor.
- A generic OBD II scan tool can also be used to view the Readiness Monitor status.

HINT:
Many state Inspection and Maintenance (I/M) programs require a vehicle's Readiness Monitor status to show COMPL before beginning emission tests.
The Readiness Monitor will be reset to INCMPL (incomplete) if:

- The ECM has lost battery power or blown a fuse.
- DTCs have been cleared.
- The conditions for running the Readiness Monitor have not been met.

If the Readiness Monitor status shows INCMPL, follow the appropriate Readiness Monitor Drive Pattern to change the status to COMPL.

CAUTION:
Strictly observe posted speed limits, traffic laws, and road conditions when performing these drive patterns.
NOTICE:
These drive patterns represent the fastest method of satisfying all conditions necessary to achieve complete status for each specific Readiness Monitor.
In the event of a drive pattern being interrupted (possibly due to factors such as traffic conditions), the drive pattern can be resumed. In most cases, the Readiness Monitor will still achieve complete status upon completion of the drive pattern.
To ensure completion of the Readiness Monitors, avoid sudden changes in vehicle load and speed (driving up and down hills and/or sudden acceleration).

Contents

Steps	Section Titles
1	Catalyst Monitor (Active Air-Fuel Ratio Control Type)

Steps	Section Titles
2	EVAP System Monitor (Key-Off Type)
3	Air-Fuel Ratio (A/F) and Heated Oxygen (HO2) Sensor Monitors (Active Air-Fuel Ratio Control Type)
4	Air-Fuel Ratio (A/F) and Heated Oxygen (HO2) Sensor Heater Monitors (Front A/F and Rear HO2 Sensor Type)

1. CATALYST MONITOR (ACTIVE AIR-FUEL RATIO CONTROL TYPE)

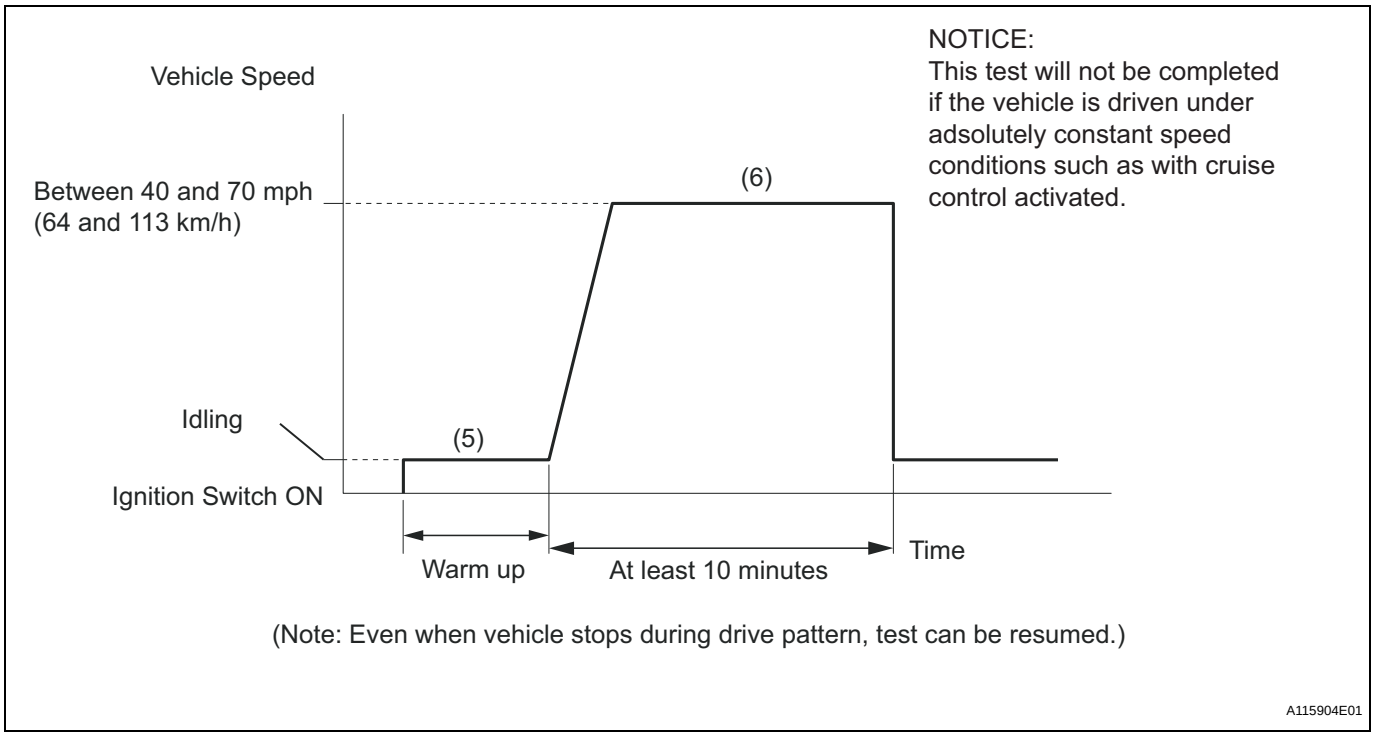

(a) Preconditions
The monitor will not run unless:
- The MIL is OFF

(b) Drive Pattern
(1) Connect an intelligent tester or OBDII scan tool to the DLC3.
(2) Turn the ignition switch ON.
(3) Turn the tester or scan tool ON.
(4) Clear DTCs (where set) (See page ES-38).
(5) Start the engine and warm it up.
(6) Drive the vehicle at between 40 mph and 70 mph (64 km/h and 113 km/h) for at least 10 minutes.

(c) Monitor Status
(1) Check the Readiness Monitor status displayed on the tester or scan tool.
(2) If the status does not switch to COMPL (complete), extend the driving time.

2. EVAP SYSTEM MONITOR (KEY-OFF TYPE)

(a) Preconditions
The monitor will not run unless:
- The fuel tank is less than 90 % full.
- The altitude is less than 8,000 ft (2,450 m).

- The vehicle is at stationary.
- The engine coolant temperature is between 4.4°C and 35°C (40°F to 95°F).
- The intake air temperature is between 4.4°C and 35°C (40°F to 95°F).
- Vehicle was driven in the city area (or on free-way) for 10 minutes or more.

(b) Monitor Conditions

(1) Turn the ignition switch OFF and wait for 6 hours.

HINT:

Do not start the engine until checking Readiness Monitor status. If the engine is started, the step described above must be repeated.

(c) Monitor Status

(1) Connect an intelligent tester to the DLC3.

(2) Turn the ignition switch ON.

(3) Turn the tester or scan tool ON.

(4) Check the Readiness Monitor status displayed on the tester or scan tool.

If the status does not switch to COMPL (complete), restart the engine, make sure that the preconditions have been met, and then perform the Monitor Conditions again.

3. AIR-FUEL RATIO (A/F) AND HEATED OXYGEN (HO2) SENSOR MONITORS (ACTIVE AIR-FUEL RATIO CONTROL TYPE)

(a) Preconditions

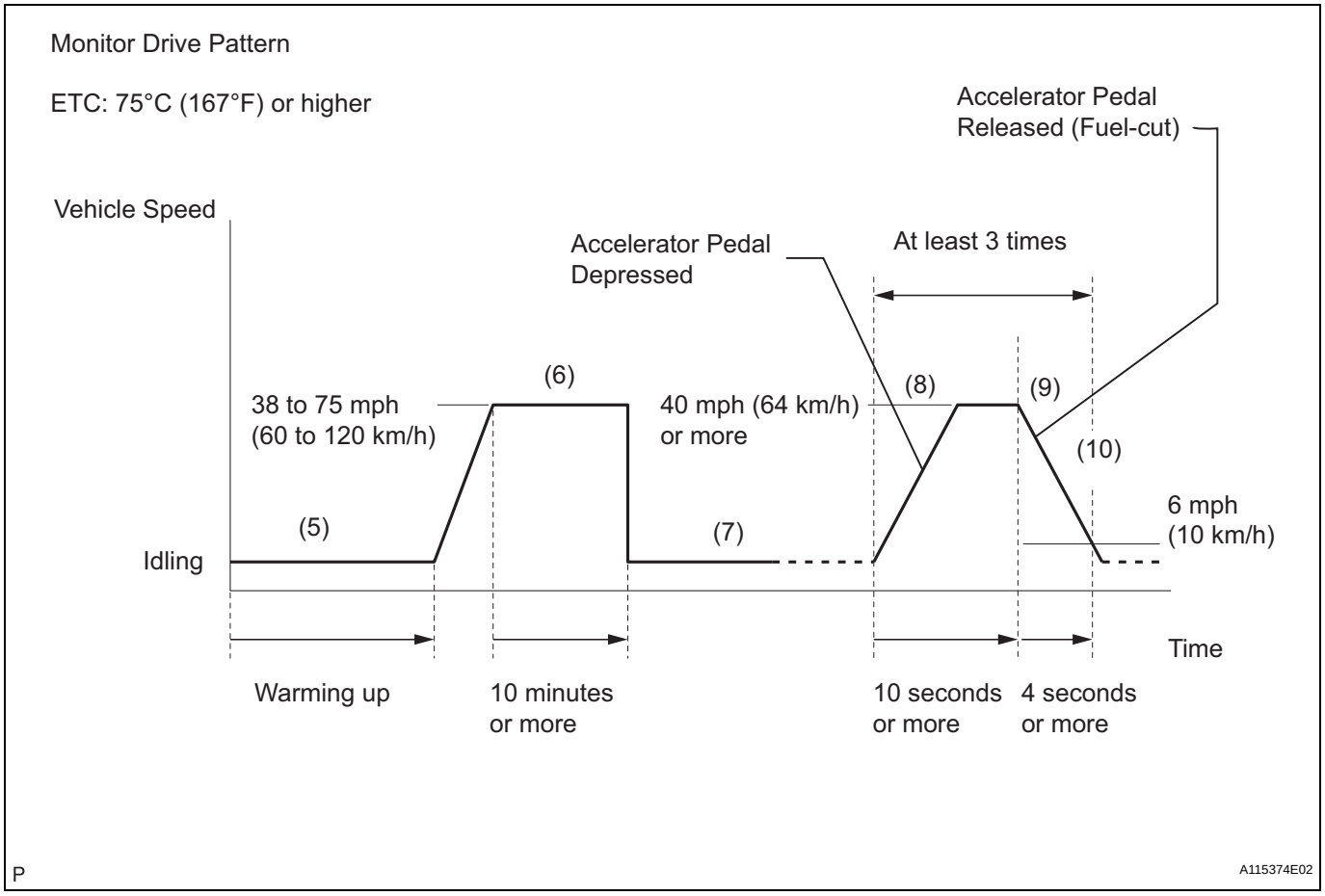

The monitor will not run unless:

- 2 minutes or more have elapsed since the engine was started.
- The Engine Coolant Temperature (ECT) is 75°C (167°F) or more.
- Cumulative driving time at a vehicle speed of 30 mph (48 km/h) or more exceeds 6 minutes.
- Air-fuel ratio feedback control is performed.
- Fuel-cut control is performed for 8 seconds or more (for the Rear HO2 Sensor Monitor)

(b) Drive Pattern for front A/F sensor and HO2 sensor

(1) Connect an intelligent tester to the DLC3.
(2) Turn the ignition switch ON.
(3) Turn the tester ON.
(4) Clear DTCs (See page ES-38).
(5) Start the engine, and warm it up until the ECT reaches 75°C (167°F) or higher.
(6) Drive the vehicle at 38 mph (60 km/h) or more for at least 10 minutes.
(7) Change the transmission to 2nd gear.
(8) Accelerate the vehicle to 40 mph (64 km/h) or more by depressing the accelerator pedal for at least 10 seconds.

(9) Soon after performing step (8) above, release the accelerator pedal for at least 4 seconds without depressing the brake pedal, in order to execute fuel-cut control.
(10) Allow the vehicle to decelerate until the vehicle speed declines to less than 6 mph (10 km/h).
(11) Repeat steps from (8) through (10) above at least 3 times in one driving cycle.

(c) Monitor Status
(1) Check the Readiness Monitor status displayed on the tester.
(2) If the status does not switch to COMPL (complete), make sure that the preconditions have been met, and then perform steps from (5) through (11) in Drive Pattern above.

4. AIR-FUEL RATIO (A/F) AND HEATED OXYGEN (HO2) SENSOR HEATER MONITORS (FRONT A/F AND REAR HO2 SENSOR TYPE)

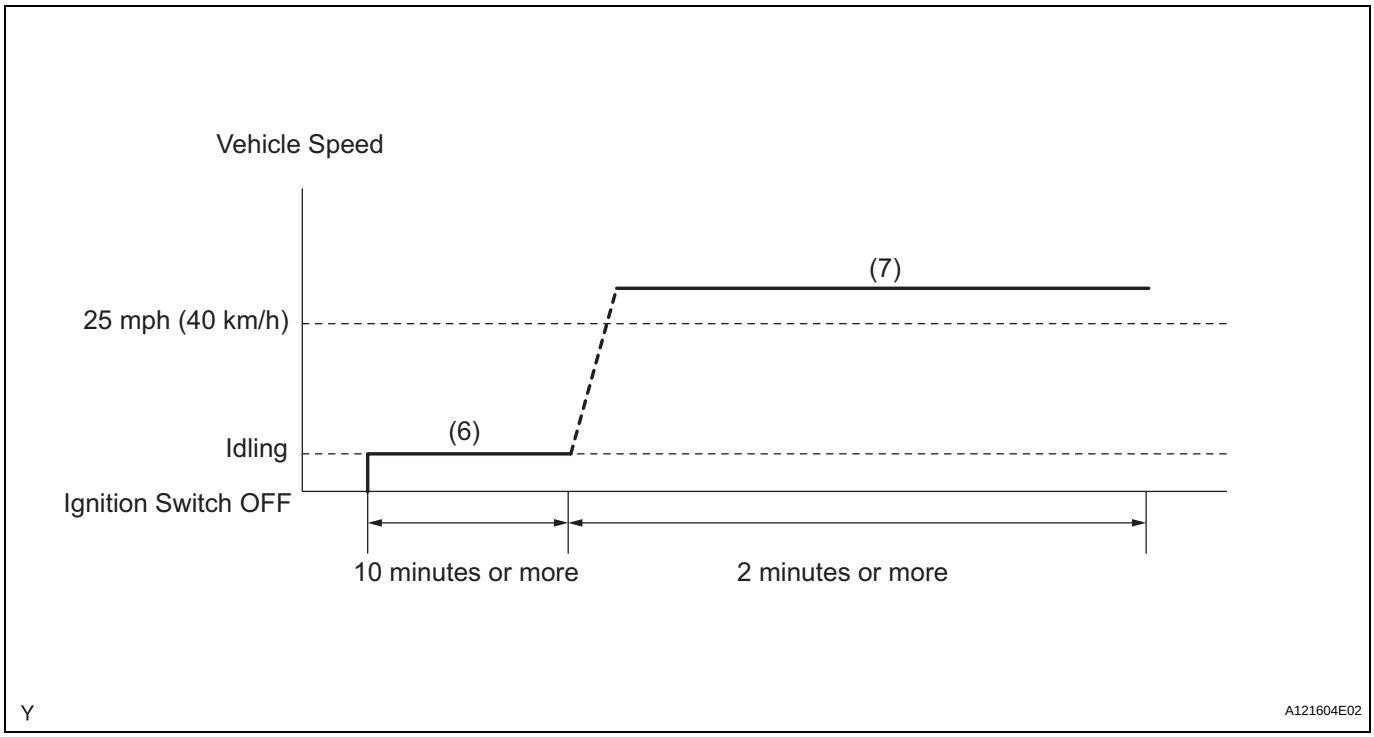

(a) Preconditions
The monitor will not run unless:
- The MIL is OFF

(b) Drive Pattern
(1) Connect an intelligent tester to the DLC3.
(2) Turn the ignition switch ON.
(3) Turn the tester or scan tool ON.
(4) Clear DTCs (See page ES-38).
(5) Start the engine.
(6) Allow the engine to idle for 10 minutes or more.
(7) Drive the vehicle at 25 mph (40 km/h) or more for at least 2 minutes.

(c) Monitor Status

(1) Check the Readiness Monitor status displayed on the tester or scan tool.
If the status does not switch to COMPL (complete), make sure that the preconditions have been met, and repeat steps through (5) to (7) described in the Drive Pattern above.

PROBLEM SYMPTOMS TABLE

HINT:
When a malfunction is not confirmed by a DTC (Diagnostic Trouble Code) check and the cause of problem cannot be identified through a basic inspection, troubleshoot according to the priority order indicated in the table below.

Symptom	Suspected area	See page
Engine does not crank (Does not start)	1. Immobilizer System	EI-3
	2. Starter	ST-3
	3. STARTER relay	ST-3
No initial combustion (Does not start)	1. ECM power source circuit	ES-383
	2. Fuel pump control circuit	ES-391
	3. VC output circuit	ES-388
	4. ECM	ES-29
Engine cranks normally but difficult to start	1. Fuel pump control circuit	ES-391
	2. Compression	EM-2
Difficult to start with cold engine	1. Starter signal circuit	ES-263
	2. Fuel pump control circuit	ES-263
	3. Spark plug	IG-3
	4. Ignition system	ES-192
	5. Injector	FU-6
Difficult to start with warm engine	1. Starter signal circuit	ES-263
	2. Fuel pump control circuit	ES-391
	3. Spark plug	IG-3
	4. Ignition system	ES-192
	5. Injector	FU-6
High engine idling speed (Poor idling)	1. A/C signal circuit (compressor circuit)	-
	2. ECM power source circuit	ES-383
	3. Electronic throttle control system	ES-283
	4. Air induction system	-
	5. PCV hose	-
Low engine idling speed (Poor idling)	1. A/C signal circuit (compressor circuit)	-
	2. Fuel pump control circuit	ES-391
	3. Electronic throttle control system	ES-283
	4. Air induction system	-
	5. PCV hose	-
Rough idling (Poor idling)	1. Compression	EM-2
	2. Fuel pump control circuit	ES-391
	3. Electronic throttle control system	ES-283
	4. Air induction system	-
	5. PCV hose	-
Hunting (Poor idling)	1. ECM power source circuit	ES-383
	2. Fuel pump control circuit	ES-391
	3. Spark plug	IG-3
	4. Ignition system	ES-192
	5. Injector	FU-6
	6. Electronic throttle control system	ES-283
	7. Air induction system	-
	8. PCV hose	-

Symptom	Suspected area	See page
Hesitation/ Poor acceleration (Poor driveability)	1. Fuel pump control circuit	ES-391
	2. A/T faulty* (A750E)	-
	3. A/T faulty* (A750F)	AT-8
	4. Spark plug	IG-3
	5. Ignition system	ES-192
	6. Injector	FU-6
Surging (Poor driveability)	1. Fuel pump control circuit	ES-391
	2. Spark plug	IG-3
	3. Ignition system	ES-192
	4. Injector	FU-6
Engine stalls soon after starting	1. Fuel pump control circuit	ES-391
	2. Spark plug	IG-3
	3. Ignition system	ES-192
	4. Injector	FU-6
Engine stalls during A/C operation	1. A/C signal circuit (Compressor circuit)	-
	2. ECM	ES-29
Unable/difficult to refuel	Refueling valve (canister)	-

TERMINALS OF ECM

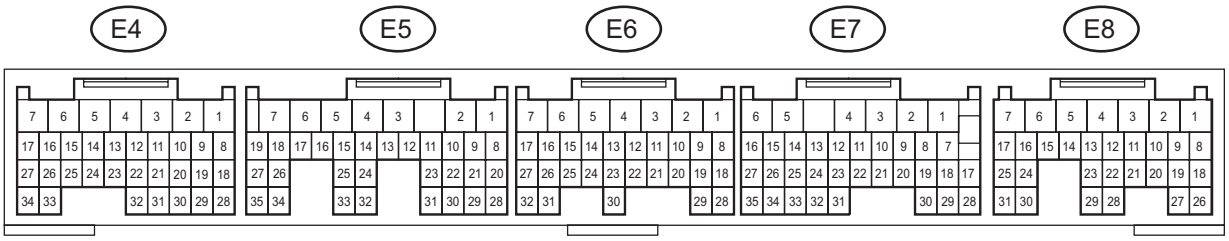

Y

A121603E02

HINT:
The standard normal voltage between each pair of ECM terminals is shown in the table below. The appropriate conditions for checking each pair of terminals are also indicated.
The result of checks should be compared with the standard normal voltage for that pair of terminals, displayed in the STD Voltages column.
The illustration above can be used as a reference to identify the ECM terminal locations.

Symbols (Terminal No.)	Wiring Colors	Terminal Descriptions	Conditions	STD Voltages
BATT (E8-3) - E1 (E6-1)	L - BR	Battery (for measuring the battery voltage and for the ECM memory)	Always	9 to 14 V
+BM (E8-7) - E1 (E6-1)	LG - BR	Power source of throttle motor	Always	9 to 14 V
IGSW (E8-9) - E1 (E6-1)	O - BR	Ignition switch	Ignition switch ON	9 to 14 V
+B (E8-1) - E1 (E6-1)	B - BR	Power source of ECM	Ignition switch ON	9 to 14 V
+B2 (E8-2) - E1 (E6-1)	B - BR	Power source of ECM	Ignition switch ON	9 to 14 V
OC1+ (E6-17) - OC1- (E6-16)	G-Y - L-B	Camshaft timing oil control valve (OCV)	Ignition switch ON	Pulse generation (see waveform 1)
OC2+ (E6-15) - OC2- (E6-14)	L-W - L-R	Camshaft timing oil control valve (OCV)	Ignition switch ON	Pulse generation (see waveform 1)
MREL (E8-8) - E1 (E6-1)	G-W - BR	EFI relay	Ignition switch ON	9 to 14 V
VC (E4-23) - E2 (E4-28)	L - BR	Power source of sensor (specific voltage)	Ignition switch ON	4.5 to 5.0 V
VG (E4-30) - E2G (E4-29)	R-Y - R-W	Mass air flow meter	Idling, Shift lever position P or N, A/C switch OFF	0.5 to 3.0 V
THA (E4-22) - E2 (E4-28)	R-L - BR	Intake air temperature sensor	Idling, Intake air temperature 20°C (68°F)	0.5 to 3.4 V
THW (E4-21) - E2 (E4-28)	Y-B - BR	Engine coolant temperature sensor	Idling, Engine coolant temperature 80°C (176°F)	0.2 to 1.0 V
VTA1 (E4-20) - E2 (E4-28)	G-B - BR	Throttle position sensor (for engine control)	Ignition switch ON, Throttle valve fully closed	0.5 to 1.2 V
VTA1 (E4-20) - E2 (E4-28)	G-B - BR	Throttle position sensor (for engine control)	Ignition switch ON, Throttle valve fully open	3.2 to 4.8 V

Symbols (Terminal No.)	Wiring Colors	Terminal Descriptions	Conditions	STD Voltages
VTA2 (E4-19) - E2 (E4-28)	G-W - BR	Throttle position sensor (for sensor malfunction detection)	Ignition switch ON, Accelerator pedal fully released	2.1 to 3.1 V
VTA2 (E4-19) - E2 (E4-28)	G-W - BR	Throttle position sensor (for sensor malfunction detection)	Ignition switch ON, Accelerator pedal fully depressed	4.5 to 5.0 V
VPA (E8-18) - EPA (E8-20)	R-Y - LG-B	Accelerator pedal position sensor (for engine control)	Ignition switch ON, Accelerator pedal fully released	0.5 to 1.1 V
VPA (E8-18) - EPA (E8-20)	R-Y - LG-B	Accelerator pedal position sensor (for engine control)	Ignition switch ON, Accelerator pedal fully depressed	2.6 to 4.5 V
VPA2 (E8-19) - EPA2 (E8-21)	GR-B - R-B	Accelerator pedal position sensor (for sensor malfunction detection)	Ignition switch ON, Accelerator pedal fully released	1.2 to 2.0 V
VPA2 (E8-19) - EPA2 (E8-21)	GR-B - R-B	Accelerator pedal position sensor (for sensor malfunction detection)	Ignition switch ON, Accelerator pedal fully depressed	3.4 to 5.0 V
VCPA (E8-26) - EPA (E8-20)	R - LG-B	Power source of accelerator pedal position sensor (for VPA)	Ignition switch ON	4.5 to 5.0 V
VCP2 (E8-27) - EPA2 (E8-21)	L-W - R-B	Power source of accelerator pedal position sensor (for VPA2)	Ignition switch ON	4.5 to 5.0 V
HA1A (E5-2) - E04 (E5-7) HA2A (E5-1) - E05 (E5-6)	R - W-B B-W - W-B	A/F sensor heater	Idling	Below 3.0 V
HA1A (E5-2) - E04 (E5-7) HA2A (E5-1) - E05 (E5-6)	R - W-B B-W - W-B	A/F sensor heater	Ignition switch ON	9 to 14 V
A1A+ (E5-22) - E1 (E6-1)	P - BR	A/F sensor	Ignition switch ON	3.3 V*1
A2A+ (E5-23) - E1 (E6-1)	W - BR	A/F sensor	Ignition switch ON	3.3 V*1
A1A- (E5-30) - E1 (E6-1)	L - BR	A/F sensor	Ignition switch ON	2.9 V*1
A2A- (E5-31) - E1 (E6-1)	R - BR	A/F sensor	Ignition switch ON	2.9 V*1
HT1B (E4-1) - E1 (E6-1) HT2B (E5-5) - E1 (E6-1)	G - BR L - BR	Heated oxygen sensor heater	Idling	Below 3.0 V
HT1B (E4-1) - E1 (E6-1) HT2B (E5-5) - E1 (E6-1)	G - BR L - BR	Heated oxygen sensor heater	Ignition switch ON	9 to 14 V
OX1B (E4-18) - E2 (E4-28) OX2B (E5-33) - E2 (E4-28)	W - BR B - BR	Heated oxygen sensor	Maintain engine speed at 2,500 rpm for 2 minutes after warming up	Pulse generation (see waveform 2)
#10 (E6-2) - E01 (E4-7) #20 (E6-3) - E01 (E4-7) #30 (E6-4) - E01 (E4-7) #40 (E6-5) - E01 (E4-7) #50 (E6-6) - E01 (E4-7) #60 (E6-7) - E01 (E4-7)	R-L - W-B B - W-B R - W-B G - W-B Y - W-B L - W-B	Injector	Ignition switch ON	9 to 14 V
#10 (E6-2) - E01 (E4-7) #20 (E6-3) - E01 (E4-7) #30 (E6-4) - E01 (E4-7) #40 (E6-5) - E01 (E4-7) #50 (E6-6) - E01 (E4-7) #60 (E6-7) - E01 (E4-7)	R-L - W-B B - W-B R - W-B G - W-B Y - W-B L - W-B	Injector	Idling	Pulse generation (see waveform 3)
KNK1 (E5-29) - EKNK (E5-28)	B - W	Knock sensor	Maintain engine speed at 4,000 rpm after warming up	Pulse generation (see waveform 4)
KNK2 (E5-21) - EKN2 (E5-20)	G - R	Knock sensor	Maintain engine speed at 4,000 rpm after warming up	Pulse generation (see waveform 4)
VV1+ (E6-19) - VV1- (E6-29)	R - G	Variable valve timing (VVT) sensor	Idling	Pulse generation (see waveform 5)

Symbols (Terminal No.)	Wiring Colors	Terminal Descriptions	Conditions	STD Voltages
VV2+ (E6-18) - VV2- (E6-28)	Y - L	Variable valve timing (VVT) sensor	Idling	Pulse generation (see waveform 5)
NE+ (E6-21) - NE- (E6-20)	B - W	Crankshaft position sensor	Idling	Pulse generation (see waveform 5)
IGT1 (E4-8) - E1 (E6-1) IGT2 (E4-9) - E1 (E6-1) IGT3 (E4-10) - E1 (E6-1) IGT4 (E4-11) - E1 (E6-1) IGT5 (E4-12) - E1 (E6-1) IGT6 (E4-13) - E1 (E6-1)	P - BR P-L - BR LG - BR LG-B - BR GR - BR G - BR	Ignition coil with igniter (ignition signal)	Idling	Pulse generation (see waveform 6)
IGF1 (E4-24) - E1 (E6-1)	W-R - BR	Ignition coil with igniter (ignition confirmation signal)	Ignition switch ON	4.5 to 5.0 V
IGF1 (E4-24) - E1 (E6-1)	W-R - BR	Ignition coil with igniter (ignition confirmation signal)	Idling	Pulse generation (see waveform 6)
PRG (E4-34) - E1 (E6-1)	Y - BR	Purge VSV	Ignition switch ON	9 to 14 V
PRG (E4-34) - E1 (E6-1)	Y - BR	Purge VSV	Idling	Pulse generation (see waveform 7)
SPD (E7-8) - E1 (E6-1)	V-W - BR	Speed signal from combination meter	Ignition switch ON, Rotate driving wheel slowly	Pulse generation (see waveform 8)
STA (E6-11) - E1 (E6-1)	B-Y - BR	Starter signal	Cranking	9 to 14 V
STP (E8-15) - E1 (E6-1)	L - BR	Stop light switch	Brake pedal depressed	7.5 to 14 V
STP (E8-15) - E1 (E6-1)	L - BR	Stop light switch	Brake pedal released	Below 1.5 V
ST1- (E8-16) - E1 (E6-1)	V-W - BR	Stop light switch (opposite to STP terminal)	Ignition switch ON, Brake pedal depressed	Below 1.5 V
ST1- (E8-16) - E1 (E6-1)	V-W - BR	Stop light switch (opposite to STP terminal)	Ignition switch ON, Brake pedal released	7.5 to 14 V
NSW (E5-8) - E1 (E6-1)	V - BR	Park/Neutral position switch	Ignition switch ON, Shift lever position in P or N	Below 3.0 V
NSW (E5-8) - E1 (E6-1)	V - BR	Park/Neutral position switch	Ignition switch ON, Shift lever position other than P and N	9 to 14 V
M+ (E4-5) - ME01 (E5-3)	P - W-B	Throttle motor	Idling with warm engine	Pulse generation (see waveform 9)
M- (E4-4) - ME01 (E5-3)	L - W-B	Throttle motor	Idling with warm engine	Pulse generation (see waveform 10)
FC (E8-10) - E1 (E6-1)	L-B - BR	Fuel pump control	Ignition switch ON	9 to 14 V
FPR (E6-30) - E1 (E6-1)	Y-R - BR	Fuel pump control	Ignition switch ON	9 to 14 V
W (E7-30) - E1 (E6-1)	BR - BR	MIL	Ignition switch ON	Below 3.0 V
W (E7-30) - E1 (E6-1)	BR - BR	MIL	Idling	9 to 14 V
ELS (E7-13) - E1 (E6-1)	G - BR	Electric load	Defogger switch OFF	0 to 1.5 V
ELS (E7-13) - E1 (E6-1)	G - BR	Electric load	Defogger switch ON	7.5 to 14 V
ELS2 (E7-12) - E1 (E6-1)	B-W - BR	Electric load	Taillight switch OFF	0 to 1.5 V
ELS2 (E7-12) - E1 (E6-1)	B-W - BR	Electric load	Taillight switch ON	7.5 to 14 V
TC (E8-23) - E1 (E6-1)	P-B - BR	Terminal TC of DLC 3	Ignition switch ON	9 to 14 V
TACH (E7-1) - E1 (E6-1)	B-W - BR	Engine speed	Idling	Pulse generation (see waveform 11)
ACIS (E4-33) - E1 (E6-1)	W-L - BR	VSV for ACIS	Ignition switch ON	9 to 14 V
PSW (E6-10) - E1 (E6-1)	G-W - BR	P/S pressure switch	Ignition switch ON	9 to 14 V
VPMP (E8-5) - E1 (E6-1)	V-W - BR	Vent valve (built into canister pump module)	Ignition switch ON	9 to 14 V
MPMP (E8-6) - E1 (E6-1)	G - BR	Leak detection pump (built into canister pump module)	Leak detection pump OFF	0 to 3 V

Symbols (Terminal No.)	Wiring Colors	Terminal Descriptions	Conditions	STD Voltages
MPMP (E8-6) - E1 (E6-1)	G - BR	Leak detection pump (built into canister pump module)	Leak detection pump ON	9 to 14 V
PPMP (E8-22) - E2 (E4-28)	GR - BR	Canister pressure sensor (built into canister pump module)	Ignition switch ON	3 to 3.6 V
F/PS (E7-32) - E1 (E6-1)	R - BR	Airbag sensor assembly	Idling with warm engine	Pulse generation (see waveform 12)
CANH (E7-33) - E1 (E6-1)	B - BR	CAN communication line	Ignition switch ON	Pulse generation (see waveform 13)
CANL (E7-34) - E1 (E6-1)	W - BR	CAN communication line	Ignition switch ON	Pulse generation (see waveform 14)

*1: The ECM terminal voltage is constant regardless of the output voltage from the sensor.

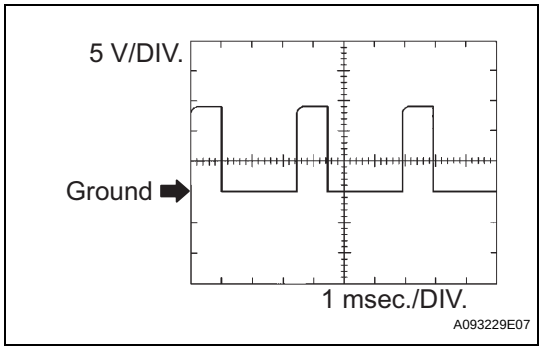

1. WAVEFORM 1
Camshaft timing oil control valve (OCV)

ECM Terminal Names	Between OC1+ and OC1- or OC2+ and OC2-
Tester Ranges	5 V/DIV, 1 msec./DIV
Conditions	Idling

HINT:
The wavelength becomes shorter as the engine rpm increases.

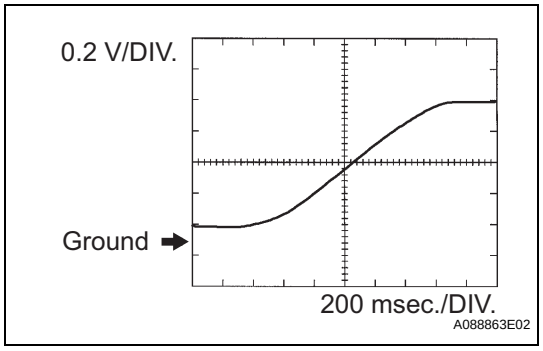

2. WAVEFORM 2
Heated oxygen sensor

ECM Terminal Names	Between OX1B and E2 or OX2B and E2
Tester Ranges	0.2 V/DIV, 200 msec./DIV
Conditions	Engine speed maintained at 2,500 rpm for 2 minutes after warming up sensor

HINT:
In the DATA LIST, item O2S B1S2 or O2S B2S2 shows the ECM input values from the heated oxygen sensor.

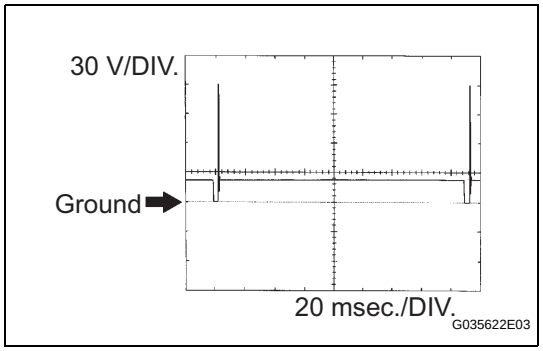

3. WAVEFORM 3
Fuel injector

ECM Terminal Names	Between #10 (to 60) and E01
Tester Ranges	30 V/DIV, 20 msec./DIV
Conditions	Idling

HINT:
The wavelength becomes shorter as the engine rpm increases.

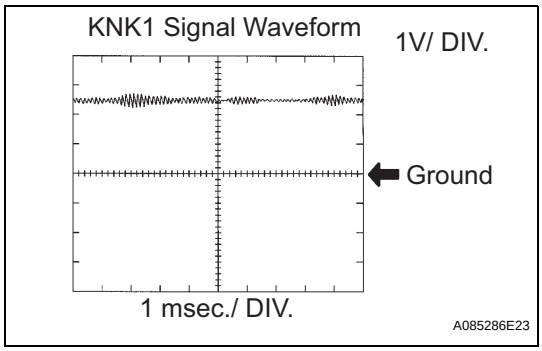

4. WAVEFORM 4
Knock sensor

ECM Terminal Names	Between KNK1 and EKNK or KNK2 and EKN2
Tester Ranges	0.01 to 10 V/DIV, 0.01 to 10 msec./DIV
Conditions	Engine speed maintained at 4,000 rpm after warming up engine

HINT:
- The wavelength becomes shorter as the engine rpm increases.
- The waveforms and amplitudes displayed on the tester differ slightly depending on the vehicle.

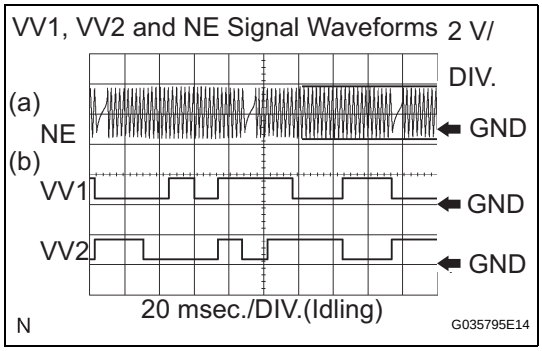

5. WAVEFORM 5
(a) VVT sensor
(b) Crankshaft position sensor

ECM Terminal Names	(a) Between NE+ and NE- (b) Between VV1+ and VV1- or VV2+ and VV2-
Tester Ranges	2 V/DIV, 20 msec./DIV
Conditions	Idling

HINT:
The wavelength becomes shorter as the engine rpm increases.

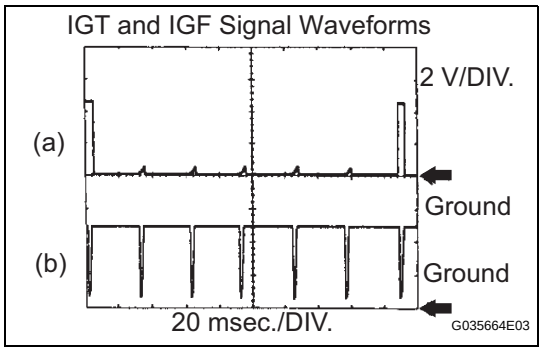

6. WAVEFORM 6
(a) Igniter IGT signal (from ECM to igniter)
(b) Igniter IGF signal (from igniter to ECM)

ECM Terminal Names	(a) Between IGT (1 to 6) and E1 (b) Between IGF1 and E1
Tester Ranges 2	2 V/DIV, 20 msec./DIV
Conditions	Idling

HINT:
The wavelength becomes shorter as the engine rpm increases.

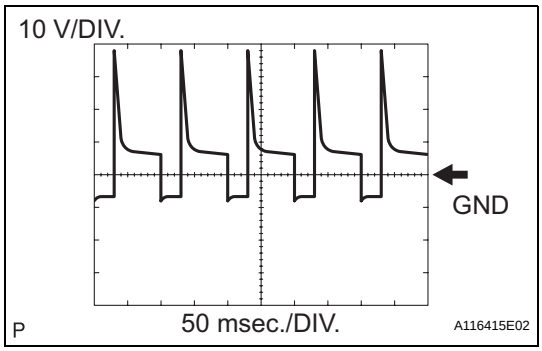

7. WAVEFORM 7
Purge VSV

ECM Terminal Names	Between PRG and E01
Tester Ranges	10 V/DIV, 50 msec./DIV
Conditions	Idling

HINT:
If the waveform is not similar to the illustration, check the waveform again after idling for 10 minutes or more.

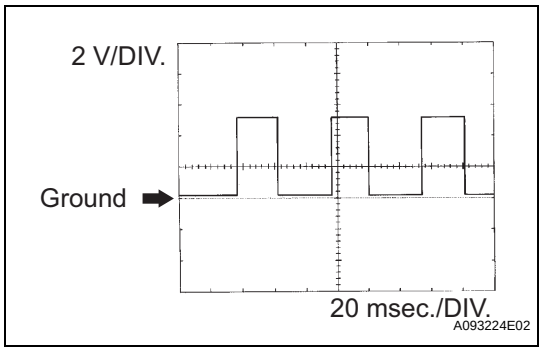

8. WAVEFORM 8
Vehicle speed signal

ECM Terminal Names	Between SPD and E1
Tester Ranges	2 V/DIV, 20 msec./DIV
Conditions	Driving at 12 mph (20 km/h)

HINT:
The wavelength becomes shorter as the vehicle speed increases.

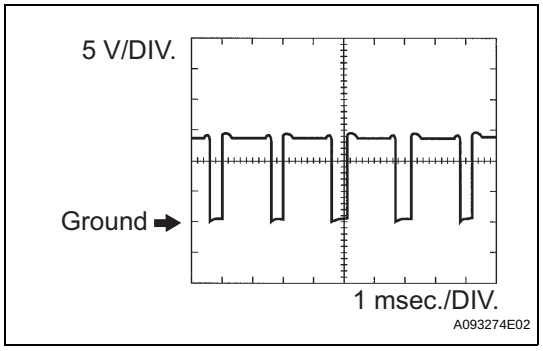

9. WAVEFORM 9
Throttle actuator positive terminal

ECM Terminal Names	Between M+ and ME01
Tester Ranges	5 V/DIV, 1 msec./DIV
Conditions	Idling with warm engine

HINT:
The duty ratio varies depending on the throttle actuator operation.

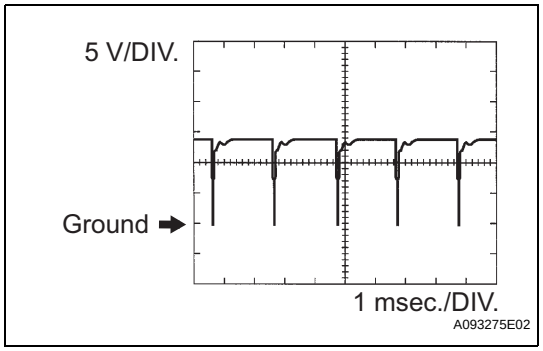

10. WAVEFORM 10
Throttle actuator negative terminal

ECM Terminal Names	Between M- and ME01
Tester Ranges	5 V/DIV, 1 msec./DIV
Conditions	Idling with warm engine

HINT:
The duty ratio varies depending on the throttle actuator operation.

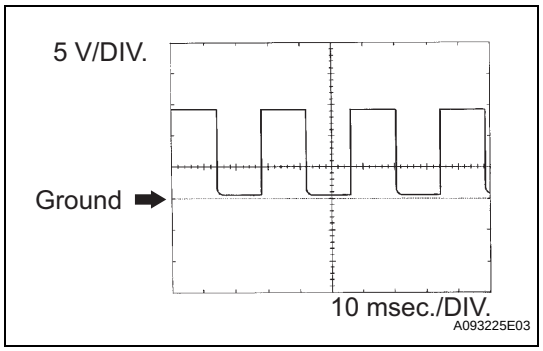

11. WAVEFORM 11
Engine speed signal

ECM Terminal Names	Between TACH and E1
Tester Ranges	5 V/DIV, 10 msec./DIV
Conditions	Idling

HINT:
The wavelength becomes shorter as the engine rpm increases.

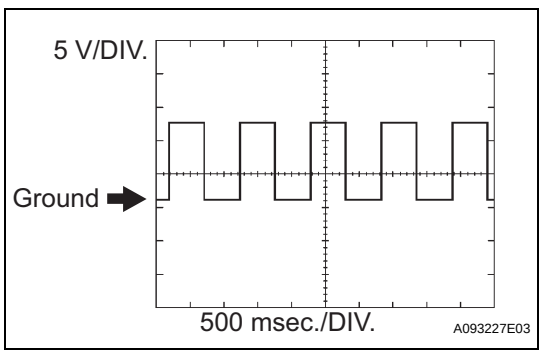

12. WAVEFORM 12
Airbag sensor assembly

ECM Terminal Names	Between F/PS and E1
Tester Ranges	5 V/DIV, 500 msec./DIV
Conditions	Idling with warm engine

ES

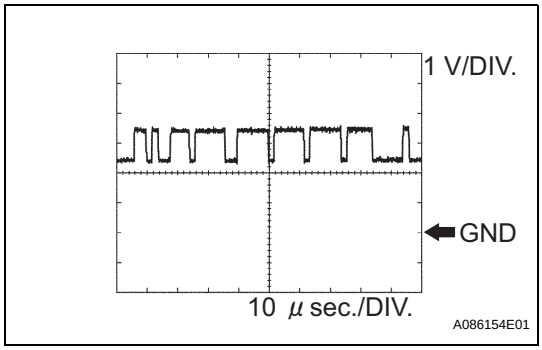

13. WAVEFORM 13
CAN communication signal

ECM Terminal Names	Between CANH and E1
Tester Ranges	1 V/DIV, 10μsec./DIV
Conditions	Stop engine and ignition switch ON

HINT:
The wavelength varies depending on the CAN communication signal.

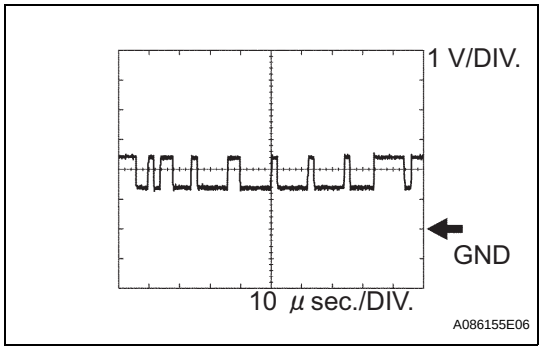

14. WAVEFORM 14
CAN communication signal

ECM Terminal Names	Between CANL and E1
Tester Ranges	1 V/DIV, 10μsec./DIV
Conditions	Stop engine and ignition switch ON

HINT:
The wavelength varies depending on the CAN communication signal.

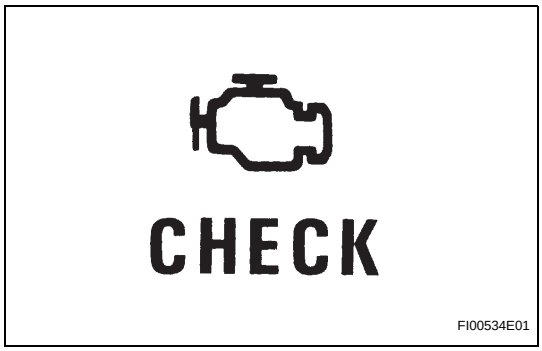

DIAGNOSIS SYSTEM

1. DESCRIPTION

When troubleshooting OBD II (On-Board Diagnostics) vehicles, an intelligent tester (complying with SAE J1987) must be connected to the DLC3 (Data Link Connector 3) of the vehicle. Various data in the vehicle's ECM (Engine Control Module) can be then read.
OBD II regulations require that the vehicle's on-board computer illuminates the MIL (Malfunction Indicator Lamp) on the instrument panel when the computer detects a malfunction in:

(a) The emission control systems and components
(b) The power train control components (which affect vehicle emissions)

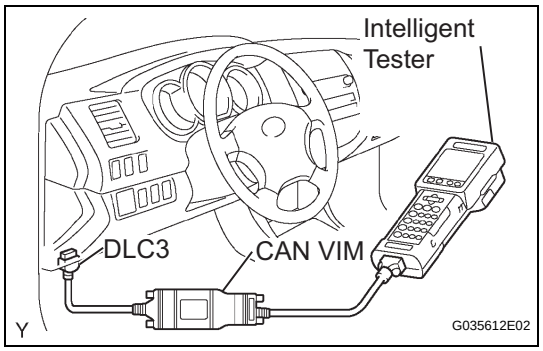

(c) The computer itself
In addition, the applicable DTCs (Diagnostic Trouble Codes) prescribed by SAE J2012 are recorded on 3 consecutive trips, the MIL turns off automatically but the DTCs remain recorded in the ECM memory.
To check DTCs, connect an intelligent tester to the DLC3. The tester displays DTCs, freeze frame data, and a variety of engine data. The DTCs and freeze frame data can be erased with the tester (See page ES-38).
In order to enhance OBD function on vehicles and develop the Off-Board diagnosis system, CAN communication is introduced in this system (CAN: Controller Area Network). It minimizes a gap between technician skills and vehicle technology. CAN is a network, which uses a pair of data transmission lines, spanning multiple computers and sensors. It allows a high speed communication between the systems and to simplify the wire harness connection.
Since this system is equipped with the CAN communication, connecting the CAN VIM (VIM: Vehicle Interface Module) with an intelligent tester is necessary to display any information from the ECM. (Also the communication between an intelligent tester and the ECM uses CAN communication signals.) When confirming the DTCs and any data of the ECM, connect the CAN VIM between the DLC3 and an intelligent tester.

2. NORMAL MODE AND CHECK MODE

The diagnosis system operates in normal mode during normal vehicle use. In normal mode, 2 trip detection logic is used to ensure accurate detection of malfunctions. Check mode is also available as an option for technicians. In check mode, 1 trip detection logic is used for simulating malfunction symptoms and increasing the system's ability to detect malfunctions, including intermittent problems (intelligent tester only) (See page ES-12).

3. 2 TRIP DETECTION LOGIC

When a malfunction is first detected, the malfunction is temporarily stored in the ECM memory (1st trip). If the same malfunction is detected during the next subsequent drive cycle, the MIL is illuminated (2nd trip).

4. FREEZE FRAME DATA

Freeze frame data record the engine condition (fuel system, calculated engine load, engine coolant temperature, fuel trim, engine speed, vehicle speed, etc) when malfunctions are detected. When troubleshooting, freeze frame data can help determine if the vehicle was moving or stationary, if the engine was warmed up or not, if the air-fuel ratio was lean or rich, and other data, from the time the malfunction occurred.

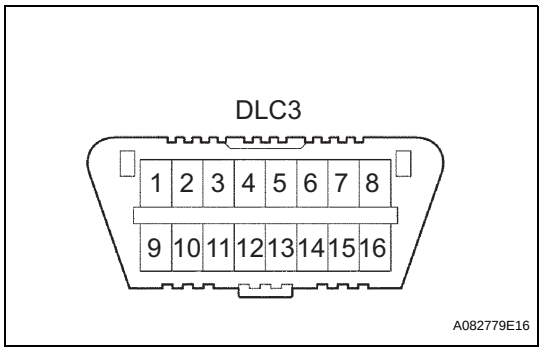

5. DLC3 (Data Link Connector 3)

The vehicle's ECM uses the ISO 15765-4 for communication protocol. The terminal arrangement of the DLC3 complies with SAE J1962 and matches the ISO 15765-4 format.

Symbols	Terminal No.	Names	Reference terminals	Results	Conditions
SIL	7	Bus "+" line	5 - Signal ground	Pulse generation	During transmission
CG	4	Chassis ground	Body ground	1 Ω or less	Always
SG	5	Signal ground	Body ground	1 Ω or less	Always
BAT	16	Battery positive	Body ground	9 to 14 V	Always
CANH	6	CAN "High" line	CANL	54 to 69 Ω	Ignition switch OFF
CANH	6	CAN "High" line	Battery positive	1 MΩ or higher	Ignition switch OFF
CANH	6	CAN "High" line	CG	1 kΩ or higher	Ignition switch OFF
CANL	14	CAN "Low" line	Battery positive	1 MΩ or higher	Ignition switch OFF
CANL	14	CAN "Low" line	CG	1 kΩ or higher	Ignition switch OFF

HINT:
The DLC3 is the interface prepared for reading various data from the vehicle's ECM. After connecting the cable of an intelligent tester, turn the ignition switch ON and turn the tester ON. If a communication failure message is displayed on the tester screen (on the tester: UNABLE TO CONNECT TO VEHICLE), a problem exists in either the vehicle or tester. In order to identify the location of the problem, connect the tester to another vehicle.
If communication is normal: Inspect the DLC3 on the original vehicle.
If communication is impossible: The problem is probably with the tester itself. Consult the Service Department listed in the instruction manual.

6. BATTERY VOLTAGE

Battery Voltage:

11 to 14 V

If the voltage is below 11 V, recharge the battery before proceeding.

7. MIL (Malfunction Indicator Lamp)

(a) The MIL is illuminated when the ignition switch is first turned ON (the engine is not running).

(b) The MIL should turn off when the engine is started. If the MIL remains illuminated, the diagnosis system has detected a malfunction or abnormality in the system.
HINT:
If the MIL is not illuminated when the ignition switch is first turned ON, check the MIL circuit (See page ES-402).

DTC CHECK / CLEAR

NOTICE:
When the diagnosis system is changed from normal mode to check mode or vice versa, all DTCs and freeze frame data recorded in normal mode are erased. Before changing modes, always check and make a note of DTCs and freeze frame data.
HINT:

- DTCs which are stored in the ECM can be displayed on an intelligent tester. An intelligent tester can display current and pending DTCs.
- Some DTCs are not set if the ECM does not detect the same malfunction again during a second consecutive driving cycle. However, such malfunctions, detected on only one occasion, are stored as pending DTCs.

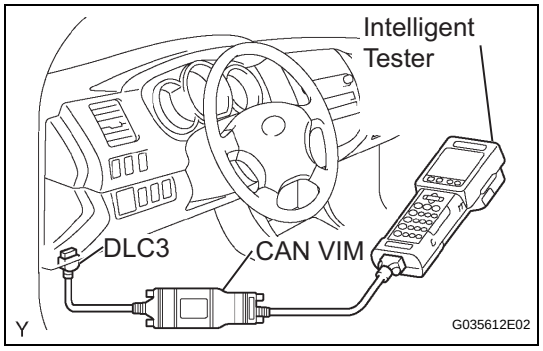

1. CHECK DTC (Using an intelligent tester)
(a) Connect an intelligent tester to the DLC3.
(b) Turn the ignition switch ON.
(c) Turn the tester ON.
(d) Select the following menu items: DIAGNOSIS / ENHANCED OBD II / DTC INFO / CURRENT CODES.
(e) Check the DTC(s) and freeze frame data, and then write them down.
(f) Check the details of the DTC(s) (See page ES-54).

2. CLEAR DTC (Using an intelligent tester)
(a) Connect an intelligent tester to the DLC3.
(b) Turn the ignition switch ON.
(c) Turn the tester ON.
(d) Select the following menu items: DIAGNOSIS / ENHANCED OBD II / DTC INFO / CLEAR CODES.
(e) Press the YES button.

3. CLEAR DTC (Without using an intelligent tester)
(a) Perform either one of the following operations.
(1) Disconnect the negative battery cable for more than 1 minute.
(2) Remove the EFI and ETCS fuses from the Relay Block (R/B) located inside the engine compartment for more than 1 minute.

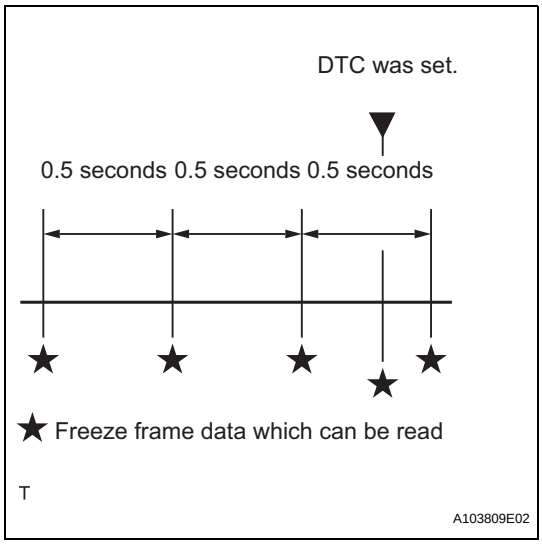

ES

FREEZE FRAME DATA

1. DESCRIPTION

Freeze frame data record the engine conditions (fuel system, calculated load, engine coolant temperature, fuel trim, engine speed, vehicle speed, etc.) when a malfunction is detected. When troubleshooting, it can help determine if the vehicle was running or stopped, the engine was warmed up or not, the air-fuel ratio was LEAN or RICH, and other data, from the time the malfunction occurred.

HINT:

If it is impossible to replicate the problem even though a DTC is detected, confirm the freeze frame data.

The ECM records engine conditions in the form of freeze frame data every 0.5 seconds. Using an intelligent tester, five separate sets of freeze frame data, including the data values at the time when the DTC was set, can be checked.

- 3 data sets before the DTC was set
- 1 data set when the DTC was set
- 1 data set after the DTC was set

These data sets can be used to simulate the conditions of the vehicle around the time of the occurrence of the malfunction. The data may assist in identifying of the cause of the malfunction, and in judging whether it was temporary or not.

2. LIST OF FREEZE FRAME DATA

LABEL (Intelligent Tester Display)	Measure Item/Range	Diagnostic Note
INJECTOR	Injector	-
IGN ADVANCE	Ignition advance	-
CALC LOAD	Calculate load	Calculated load by ECM
VEHICLE LOAD	Vehicle load	-
MAF	Mass air flow volume	If value approximately 0.0 g/sec: • Mass air flow meter power source circuit open or short • VG circuit open or short If value 160.0 g/sec or more: • E2G circuit open
ENGINE SPD	Engine speed	-
VEHICLE SPD	Vehicle speed	Speed indicated on speedometer
COOLANT TEMP	Engine coolant temperature	If value -40°C, sensor circuit open If value 140°C or more, sensor circuit shorted
INTAKE AIR	Intake air temperature	If value -40°C, sensor circuit open If value 140°C or more, sensor circuit shorted
AIR-FUEL RATIO	Air-fuel ratio	-
PURGE DENSITY	Learning value of purge density	-
PURGE FLOW	Purge flow	-
EVAP PURGE VSV	EVAP purge VSV duty ratio	-
EVAP VAPOR PRES	EVAP vapor pressure	-
KNOCK CRRT VAL	Correction learning value of knocking	-
KNOCK FB VAL	Feedback value of knocking	-
ACCEL POS #1	Absolute Accelerator Pedal Position (APP) No. 1	-

LABEL (Intelligent Tester Display)	Measure Item/Range	Diagnostic Note
ACCEL POS #2	Absolute APP No. 2	-
THROTTLE POS	Throttle position	Read value with ignition switch ON (Do not start engine)
THROTTLE POS	Throttle sensor positioning	Read value with ignition switch ON (Do not start engine)
THROTTLE POS #2	Throttle sensor positioning #2	-
THROTTLE MOT	Throttle motor	-
O2S B1 S2	Heated oxygen sensor output	Performing INJ VOL or A/F CONTROL function of ACTIVE TEST enables technician to check voltage output of sensor
O2S B2 S2	Heated oxygen sensor output	Performing INJ VOL or A/F CONTROL function of ACTIVE TEST enables technician to check voltage output of sensor
AFS B1 S1	A/F sensor output	Performing INJ VOL or A/F CONTROL function of ACTIVE TEST enables technician to check voltage output of sensor
AFS B2 S1	A/F sensor output	Performing INJ VOL or A/F CONTROL function of ACTIVE TEST enables technician to check voltage output of sensor
TOTAL FT #1	Total fuel trim	-
SHORT FT #1	Short-term fuel trim	Short-term fuel compensation used to maintain air-fuel ratio at stoichiometric air-fuel ratio
LONG FT #1	Long-term fuel trim	Overall fuel compensation carried out in long-term to compensate a continual deviation of short-term fuel trim from central valve
FUEL SYS #1	Fuel system status (Bank1)	• OL (Open Loop): Has not yet satisfied conditions to go closed loop • CL (Closed Loop): Using heated oxygen sensor as feedback for fuel control • OL DRIVE: Open loop due to driving conditions (fuel enrichment) • OL FAULT: Open loop due to detected system fault • CL FAULT: Closed loop but heated oxygen sensor, which used for fuel control, malfunctioning
O2FT B1 S2	Fuel trim at heated oxygen sensor	Same as SHORT FT #1
O2FT B2 S2	Fuel trim at heated oxygen sensor	Same as SHORT FT #1
AF FT B1 S1	Fuel trim at A/F sensor	-
AF FT B2 S1	Fuel trim at A/F sensor	-
CAT TEMP B1 S1	Catalyst temperature	-
CAT TEMP B2 S1	Catalyst temperature	-
CAT TEMP B1 S2	Catalyst temperature	-
CAT TEMP B2 S2	Catalyst temperature	-
INI COOL TEMP	Initial engine coolant temperature	-
INI INTAKE TEMP	Initial intake air temperature	-
INJ VOL	Injection volume	-
STARTER SIG	Starter signal	-
PS SW	Power steering signal	-
PS SIGNAL	Power steering signal (history)	This signal status usually ON until battery terminals disconnected
CTP SW	Closed throttle position switch	-
A/C SIG	A/C signal	-
ELECT LOAD SIG	Electrical load signal	-
STOP LIGHT SW	Stop light switch	-

LABEL (Intelligent Tester Display)	Measure Item/Range	Diagnostic Note
BATTERY VOLTAGE	Battery voltage	-
ATM PRESSURE	Atmospheric pressure	-
ACT VSV	A/C cut status for Active Test	-
EVAP VSV	EVAP purge VSV	VSV for EVAP controlled by ECM (ground side duty control)
FUEL PUMP / SPD	Fuel pump speed status	-
VVT CTRL B1	VVT control status	-
VACUUM PUMP	Key-off EVAP system pump status	-
EVAP VENT VAL	Key-off EVAP system vent valve status	-
TC/TE1	TC and TE1 terminals of DLC3	-
VVTL AIM ANGL #1	VVT aim angle	-
VVT CHNG ANGL #1	VVT change angle	-
VVT OCV DUTY B1	VVT OCV operation duty	-
FC IDL	Idle fuel cut	ON: when throttle valve fully closed and engine speed over 2,800 rpm
FC TAU	FC TAU	Fuel cut being performed under very light load to prevent engine combustion from becoming incomplete
IGNITION	Ignition	-
CYL #1	Cylinder #1 misfire rate	Displayed in only idling
CYL #2	Cylinder #2 misfire rate	Displayed in only idling
CYL #3	Cylinder #3 misfire rate	Displayed in only idling
CYL #4	Cylinder #4 misfire rate	Displayed in only idling
CYL #5	Cylinder #5 misfire rate	Displayed in only idling
CYL #6	Cylinder #6 misfire rate	Displayed in only idling
CYL ALL	All cylinder misfire rate	Displayed in only idling
MISFIRE RPM	Misfire RPM	-
MISFIRE LOAD	Misfire load	-
MISFIRE MARGIN	Margin to detect engine misfire	-
ENG RUN TIME	Accumulated engine running time	-
TIME DTC CLEAR	Cumulative time after DTC cleared	-
DIST DTC CLEAR	Accumulated distance from DTC cleared	-
WU CYC DTC CLEAR	Warm-up cycle after DTC cleared	-
MODEL CODE	Identifying the model code	GRN2###
FAN MOTOR	Electric fan motor	-
VAPOR PRESS	Vapor pressure	EVAP system pressure as read by canister pressure sensor
ENG OIL PRES SW	Engine oil pressure switch signal	Always ON while engine is running
ENGINE TYPE	Identifying the engine type	1GR
CYLINDER NUMBER	Identifying the cylinder number	6
DESTINATION	Identifying the destination	A (America)
MODEL YEAR	Identifying the model year	200#
SYSTEM	Identifying the engine system	GASLIN (gasoline engine)

CHECK MODE PROCEDURE

HINT:
Intelligent tester only:
Compared to normal mode, check mode is more sensitive to malfunctions. Therefore, check mode can detect the malfunctions that cannot be detected by normal mode.
NOTICE:
All the stored DTCs and freeze frame data are erased if: 1) the ECM is changed from normal mode to check mode or vice versa; or 2) the ignition switch is turned from ON to ACC or OFF while in check mode.
Before changing modes, always check and make a note of any DTCs and freeze frame data.

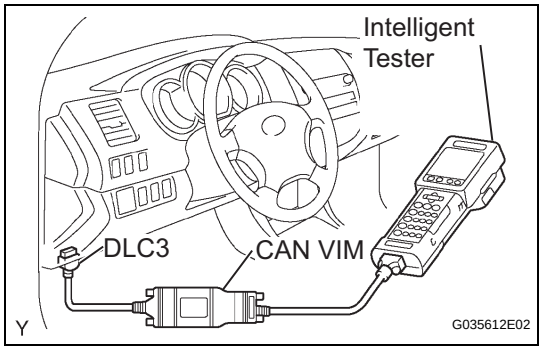

1. CHECK MODE PROCEDURE (Using an intelligent tester)

(a) Check and ensure the following conditions:
  (1) Battery voltage 11 V or more
  (2) Throttle valve fully closed
  (3) Transmission in the P or N positions
  (4) A/C switched OFF
(b) Turn the ignition switch OFF.
(c) Connect an intelligent tester to the DLC3.
(d) Turn the ignition switch ON.
(e) Turn the tester ON.
(f) Select the following menu items: DIAGNOSIS / ENHANCED OBD II / CHECK MODE.
(g) Switch the ECM from normal mode to check mode.

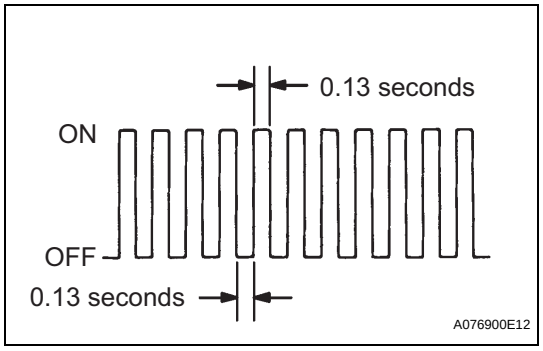

(h) Make sure the MIL flashes as shown in the illustration.
(i) Start the engine.
(j) Make sure the MIL turns off.
(k) Simulate the conditions of the malfunction described by the customer.
(l) Check DTCs and freeze frame data using the tester.

FAIL-SAFE CHART

If any of the following DTCs are set, the ECM enters fail-safe mode to allow the vehicle to be driven temporarily.

DTCs	Components	Fail-Safe Operations	Fail-Safe Deactivation Conditions
P0031, P0032, P0051 and P0052	Air-Fuel Ratio (A/F) Sensor Heater	ECM turns off A/F sensor heater.	Ignition switch OFF
P0037, P0038, P0057 and P0058	Heated Oxygen (HO2) Sensor Heater	ECM turns off HO2 sensor heater.	Ignition switch OFF
P0100, P0102 and P0103	Mass Air Flow (MAF) Meter	ECM calculates ignition timing according to engine speed and throttle valve position.	Pass condition detected
P0110, P0112 and P0113	Intake Air Temperature (IAT) Sensor	ECM estimates IAT to be 20°C (68°F).	Pass condition detected
P0115, P0117 and P0118	Engine Coolant Temperature (ECT) Sensor	ECM estimates ECT to be 80°C (176°F).	Pass condition detected
P0120, P0121, P0122, P0123, P0220, P0222, P0223, P0604, P0606, P0607, P0657, P2102, P2103, P2111, P2112, P2118, P2119 and P2135	Electronic Throttle Control System (ETCS)	ECM cuts off throttle actuator current and throttle valve returned to 6° throttle position by return spring. ECM then adjusts engine output by controlling fuel injection (intermittent fuel-cut) and ignition timing in accordance with accelerator pedal opening angle, to allow vehicle to continue at minimal speed.*	Pass condition detected and then ignition switch turned OFF
P0327, P0328, P0332 and P0333	Knock Sensor	ECM sets ignition timing to maximum retard.	Ignition switch OFF
P0351 to P0356	Igniter	ECM cuts fuel.	Pass condition detected
P2120, P2121, P2122, P2123, P2125, P2127, P2128 and P2138	Accelerator Pedal Position (APP) Sensor	APP sensor has 2 sensor circuits: Main and Sub. If either of circuits malfunctions, ECM controls engine using other circuit. If both of circuits malfunction, ECM regards accelerator pedal as being released. As a result, throttle valve is closed and engine idles.	Pass condition detected and then ignition switch turned OFF

NOTICE:

*** The vehicle can be driven slowly when the accelerator pedal is depressed firmly and slowly. If the accelerator pedal is depressed quickly, the vehicle may speed up and slow down erratically.**

REMOVAL

1. **DISCONNECT CABLE FROM NEGATIVE BATTERY TERMINAL**
2. **REMOVE RADIATOR GRILLE (See page ET-4)**
3. **REMOVE FRONT BUMPER COVER (See page ET-4)**
4. **REMOVE FRONT BUMPER FILLER (See page ET-6)**
5. **REMOVE HEADLIGHT ASSEMBLY**
   (a) Remove the bolt and 3 screws.
   (b) Disconnect the 3 connectors, then remove the LH headlight assembly.

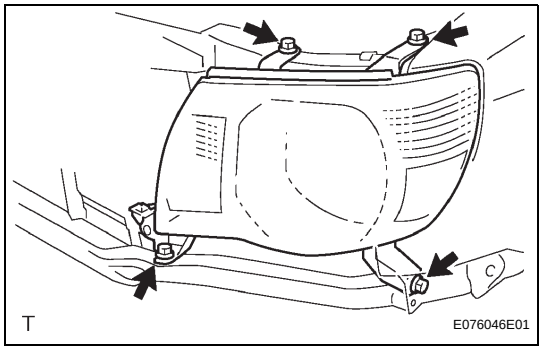

6. **REMOVE FRONT TURN SIGNAL LIGHT BULB**
   (a) To remove the front turn signal light socket and bulb, turn them in the direction indicated by the arrow in the illustration.
   (b) Remove the front turn signal light bulb from the light socket.

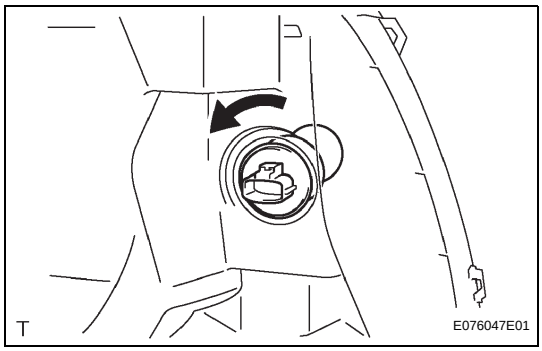

7. **REMOVE CLEARANCE LIGHT BULB**
   (a) To remove the clearance light bulb socket and bulb, turn them in the direction indicated by the arrow in the illustration.
   (b) Remove the clearance light bulb from the light socket.

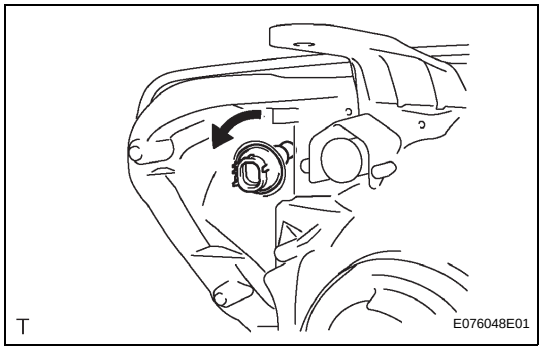

8. **REMOVE NO. 1 HEADLIGHT, BULB**
   (a) Remove the socket cover.

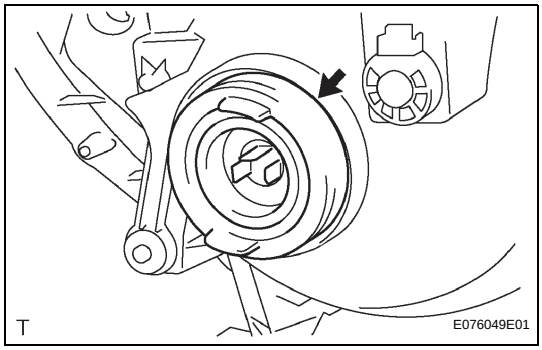

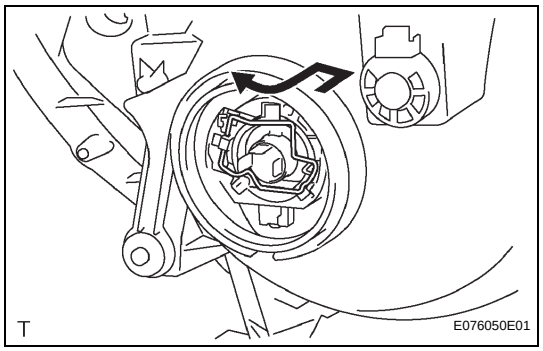

(b) Push the set spring in the direction indicated by the arrow in the illustration.

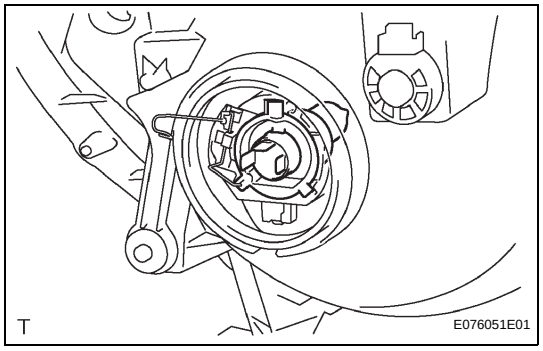

(c) Remove the No. 1 headlight bulb.
NOTICE:
Do not touch the bulb glass with your fingers.

Connector Front Side:

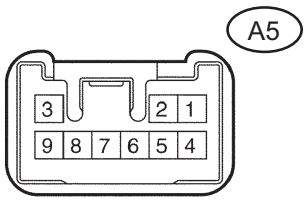

P E064833E01

ON-VEHICLE INSPECTION

1. INSPECT TOWING CONVERTER RELAY

(a) Measure the voltage and check the result in accordance with the value(s) in the table below.

Standard

Tester Connection	Condition	Specified Condition
1 - Body ground	Constant	Battery positive voltage
2 - Body ground	Turn signal switch (right turn) OFF → ON	0 V → 10 to 14 V (60 to 120 times per minute)
2 - Body ground	Depress brake pedal	Battery positive voltage
3 - Body ground	Turn signal switch (right turn) OFF → ON	0 V → 10 to 14 V (60 to 120 times per minute)
4 - Body ground	Turn signal switch (left turn) OFF → ON	0 V → 10 to 14 V (60 to 120 times per minute)
4 - Body ground	Depress brake pedal	Battery positive voltage
6 - Body ground	Constant	Below 1 Ω
8 - Body ground	Depress brake pedal	Battery positive voltage
9 - Body ground	Turn signal switch (left turn) OFF → ON	0 V → 10 to 14 V (60 to 120 times per minute)

REMOVAL

1. BOLT, SCREW AND NUT TABLE

mm (in.) (L = Length)

Code	Shape	Code	Shape	Code	Shape
<A>	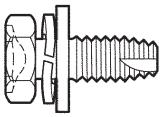 φ = 6 (0.24) L = 16 (0.63) 90080-11157	<B>	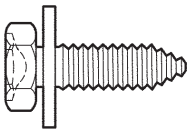 φ = 6 (0.24) L = 20 (0.79) 90080-11353	<C>	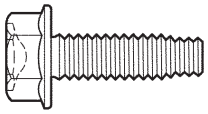 φ = 6 (0.24) L = 16 (0.63) 90105-A0007
<D>	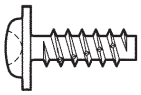 φ = 5 (0.20) L = 14 (0.55) 90080-16100	<E>	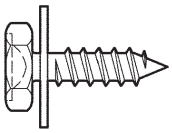 φ = 5 (0.20) L = 18 (0.71) 90159-A0034	<F>	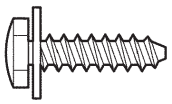 φ = 5 (0.20) L = 20 (0.79) 90159-50192
<G>	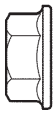 φ = 6 (0.24) 90178-A0023				

P

B085808E01

HINT:
All bolts, screws and nuts relevant to installing and removing the instrument panel are shown along with their alphabetic codes in the table below.

2. DISCONNECT CABLE FROM NEGATIVE BATTERY TERMINAL
Wait for at least 90 seconds after disconnecting the cable to prevent the airbag from working.

3. REMOVE FRONT FLOOR FOOTREST (See page IR-1)

4. REMOVE FRONT DOOR SCUFF PLATE LH (for Regular Cab) (See page IR-40)

5. REMOVE FRONT DOOR SCUFF PLATE LH (for Access Cab) (See page IR-61)

6. REMOVE FRONT DOOR SCUFF PLATE LH (for Double Cab)

7. REMOVE FRONT DOOR SCUFF PLATE RH (for Regular Cab) (See page IR-40)

8. REMOVE FRONT DOOR SCUFF PLATE RH (for Access Cab) (See page IR-61)

9. REMOVE FRONT DOOR SCUFF PLATE RH (for Double Cab)

10. REMOVE COWL SIDE TRIM BOARD LH (for Regular Cab) (See page IR-40)
11. REMOVE COWL SIDE TRIM BOARD LH (for Access Cab) (See page IR-61)
12. REMOVE COWL SIDE TRIM BOARD LH (for Double Cab) (See page IR-12)
13. REMOVE COWL SIDE TRIM BOARD RH (for Regular Cab) (See page IR-40)
14. REMOVE COWL SIDE TRIM BOARD RH (for Access Cab) (See page IR-61)
15. REMOVE COWL SIDE TRIM BOARD RH (for Double Cab) (See page IR-12)
16. SEPARATE FRONT DOOR OPENING TRIM WEATHERSTRIP LH (See page IP-8)
17. SEPARATE FRONT DOOR OPENING TRIM WEATHERSTRIP RH (See page IP-8)
18. REMOVE FRONT PILLAR GARNISH LH (for Regular Cab) (See page IR-41)
19. REMOVE FRONT PILLAR GARNISH LH (for Access Cab) (See page IR-62)
20. REMOVE FRONT PILLAR GARNISH LH (for Double Cab) (See page IR-13)
21. REMOVE FRONT PILLAR GARNISH RH (for Regular Cab) (See page IR-41)
22. REMOVE FRONT PILLAR GARNISH RH (for Access Cab) (See page IR-63)
23. REMOVE FRONT PILLAR GARNISH RH (for Double Cab) (See page IR-14)
24. REMOVE INSTRUMENT PANEL UNDER TRAY (for Pedal Type Parking Brake) (See page IP-9)
25. REMOVE INSTRUMENT PANEL HOLE COVER (for Lever Type Parking Brake) (See page IP-9)
26. REMOVE CONSOLE UPPER REAR PANEL SUB-ASSEMBLY (for Automatic Transmission on Separate Seat Type) (See page IP-9)
27. REMOVE CONSOLE UPPER REAR PANEL SUB-ASSEMBLY (for Manual Transmission on Separate Seat Type) (See page IP-9)
28. REMOVE REAR CONSOLE BOX ASSEMBLY (for Separate Seat Type) (See page IP-10)
29. REMOVE INSTRUMENT PANEL CUP HOLDER TRAY (for Automatic Transmission on Separate Seat Type) (See page IP-10)

30. **REMOVE FRONT CONSOLE BOX (for Automatic Transmission on Separate Seat Type) (See page IP-10)**
31. **REMOVE FRONT CONSOLE BOX (for Manual Transmission on Separate Seat Type) (See page IP-11)**
32. **REMOVE FRONT CONSOLE BOX (for Automatic Transmission on Bench Seat Type) (See page IP-11)**
33. **REMOVE FRONT CONSOLE BOX (for Manual Transmission on Bench Seat Type) (See page IP-11)**
34. **REMOVE AIR CONDITIONING CONTROL ASSEMBLY (See page IP-12)**
35. **REMOVE RADIO RECEIVER ASSEMBLY (See page AV-69)**
36. **SEPARATE HOOD LOCK CONTROL LEVER SUB-ASSEMBLY (See page ED-3)**
37. **REMOVE LOWER NO. 1 INSTRUMENT PANEL FINFISH PANEL (See page IP-12)**
38. **REMOVE INSTRUMENT CLUSTER FINISH PANEL SUB-ASSEMBLY (See page IP-12)**
39. **REMOVE COMBINATION METER ASSEMBLY (See page IP-13)**
40. **REMOVE INSTRUMENT CLUSTER CENTER FINISH PANEL SUB-ASSEMBLY (See page IP-13)**
41. **REMOVE GLOVE COMPARTMENT DOOR ASSEMBLY (See page IP-13)**
42. **REMOVE INSTRUMENT PANEL LOWER FINISH PANEL SUB-ASSEMBLY RH (See page IP-14)**
43. **REMOVE LOWER INSTRUMENT PANEL LH (See page IP-14)**
44. **REMOVE LOWER INSTRUMENT COVER SUB-ASSEMBLY (See page IP-14)**
45. **REMOVE INSTRUMENT SIDE PANEL RH (See page IP-14)**
46. **DISCONNECT PASSENGER AIRBAG CONNECTOR (See page RS-576)**
47. **REMOVE INSTRUMENT PANEL SUB-ASSEMBLY W/ PASSENGER AIRBAG ASSEMBLY (See page IP-14)**

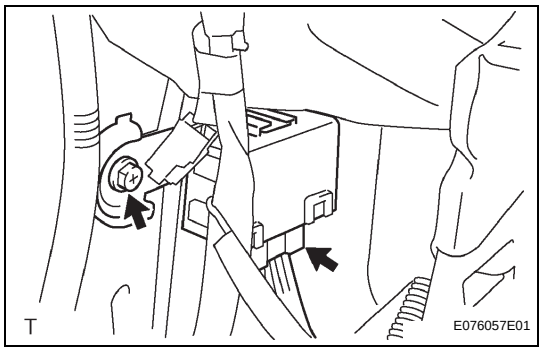

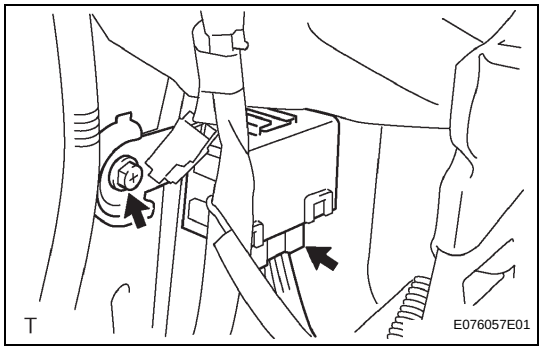

48. **REMOVE TOWING CONVERTER RELAY**
    (a) Disconnect the connector.
    (b) Remove the bolt and towing converter relay.

INSTALLATION

1. **INSTALL TOWING CONVERTER RELAY**
    (a) Install the towing converter relay with the bolt.
    Torque: 7.0 N*m (71 kgf*cm, 62 in.*lbf)
    (b) Connect the connector.
2. **INSTALL INSTRUMENT PANEL SUB-ASSEMBLY W/ PASSENGER AIRBAG ASSEMBLY (See page IP-18)**
3. **CONNECT PASSENGER AIRBAG CONNECTOR**
4. **INSTALL INSTRUMENT SIDE PANEL RH (See page IP-20)**
5. **INSTALL INSTRUMENT LOWER COVER SUB-ASSEMBLY (See page IP-20)**
6. **INSTALL LOWER INSTRUMENT PANEL LH (See page IP-20)**
7. **INSTALL INSTRUMENT PANEL LOWER FINISH PANEL SUB-ASSEMBLY RH (See page IP-20)**
8. **INSTALL GLOVE COMPARTMENT DOOR ASSEMBLY (See page IP-20)**
9. **INSTALL INSTRUMENT CLUSTER CENTER FINISH PANEL SUB-ASSEMBLY (See page IP-21)**
10. **INSTALL COMBINATION METER ASSEMBLY (See page IP-21)**
11. **INSTALL INSTRUMENT CLUSTER FINISH PANEL SUB-ASSEMBLY (See page IP-21)**
12. **INSTALL LOWER NO.1 INSTRUMENT PANEL FINISH PANEL (See page IP-22)**
13. **CONNECT HOOD LOCK CONTROL LEVER SUB-ASSEMBLY (See page ED-8)**
14. **INSTALL RADIO RECEIVER ASSEMBLY (See page AV-70)**
15. **INSTALL AIR CONDITIONING CONTROL ASSEMBLY (See page IP-22)**
16. **INSTALL FRONT CONSOLE BOX (for Manual Transmission on Bench Seat Type) (See page IP-22)**
17. **INSTALL FRONT CONSOLE BOX (for Automatic Transmission on Bench Seat Type) (See page IP-23)**

18. INSTALL FRONT CONSOLE BOX (for Manual Transmission on Separate Seat Type) (See page IP-23)
19. INSTALL FRONT CONSOLE BOX (for Automatic Transmission on Separate Seat Type) (See page IP-24)
20. INSTALL INSTRUMENT PANEL CUP HOLDER TRAY (for Automatic Transmission on Separate Seat Type) (See page IP-24)
21. INSTALL REAR CONSOLE BOX ASSEMBLY (for Separate Seat Type) (See page IP-24)
22. INSTALL CONSOLE UPPER REAR PANEL SUB-ASSEMBLY (for Manual Transmission on Separate Seat Type) (See page IP-25)
23. INSTALL CONSOLE UPPER REAR PANEL SUB-ASSEMBLY (for Automatic Transmission on Separate Seat Type) (See page IP-25)
24. INSTALL INSTRUMENT PANEL HOLE COVER (for Lever Type Parking Brake) (See page IP-25)
25. INSTALL INSTRUMENT PANEL UNDER TRAY (for Pedal Type Parking Brake) (See page IP-25)
26. INSTALL FRONT PILLAR GARNISH LH (for Regular Cab) (See page IR-51)
27. INSTALL FRONT PILLAR GARNISH LH (for Access Cab) (See page IR-74)
28. INSTALL FRONT PILLAR GARNISH LH (for Double Cab) (See page IR-28)
29. INSTALL FRONT PILLAR GARNISH RH (for Regular Cab) (See page IR-52)
30. INSTALL FRONT PILLAR GARNISH RH (for Access Cab) (See page IR-74)
31. INSTALL FRONT PILLAR GARNISH RH (for Double Cab) (See page IR-28)
32. INSTALL FRONT DOOR OPENING TRIM WEATHERSTRIP LH
33. INSTALL FRONT DOOR OPENING TRIM WEATHERSTRIP RH
34. INSTALL COWL SIDE TRIM BOARD LH (for Regular Cab) (See page IR-52)
35. INSTALL COWL SIDE TRIM BOARD LH (for Access Cab) (See page IR-75)
36. INSTALL COWL SIDE TRIM BOARD LH (for Double Cab) (See page IR-29)
37. INSTALL COWL SIDE TRIM BOARD RH (for Regular Cab) (See page IR-52)

38. **INSTALL COWL SIDE TRIM BOARD RH (for Access Cab) (See page IR-75)**
39. **INSTALL COWL SIDE TRIM BOARD RH (for Double Cab) (See page IR-29)**
40. **INSTALL FRONT DOOR SCUFF PLATE LH (for Regular Cab) (See page IR-52)**
41. **INSTALL FRONT DOOR SCUFF PLATE LH (for Access Cab) (See page IR-75)**
42. **INSTALL FRONT DOOR SCUFF PLATE LH (for Double Cab) (See page IR-29)**
43. **INSTALL FRONT DOOR SCUFF PLATE RH (for Regular Cab) (See page IR-52)**
44. **INSTALL FRONT DOOR SCUFF PLATE RH (for Access Cab) (See page IR-75)**
45. **INSTALL FRONT DOOR SCUFF PLATE RH (for Double Cab) (See page IR-29)**
46. **INSTALL FRONT FLOOR FOOTREST (See page IR-1)**
47. **CONNECT CABLE TO NEGATIVE BATTERY TERMINAL**
    Torque: 3.9 N*m (40 kgf*cm, 35 in.*lbf)
48. **INSPECT SRS WARNING LIGHT**
    (See page RS-28)

SYSTEM DIAGRAM

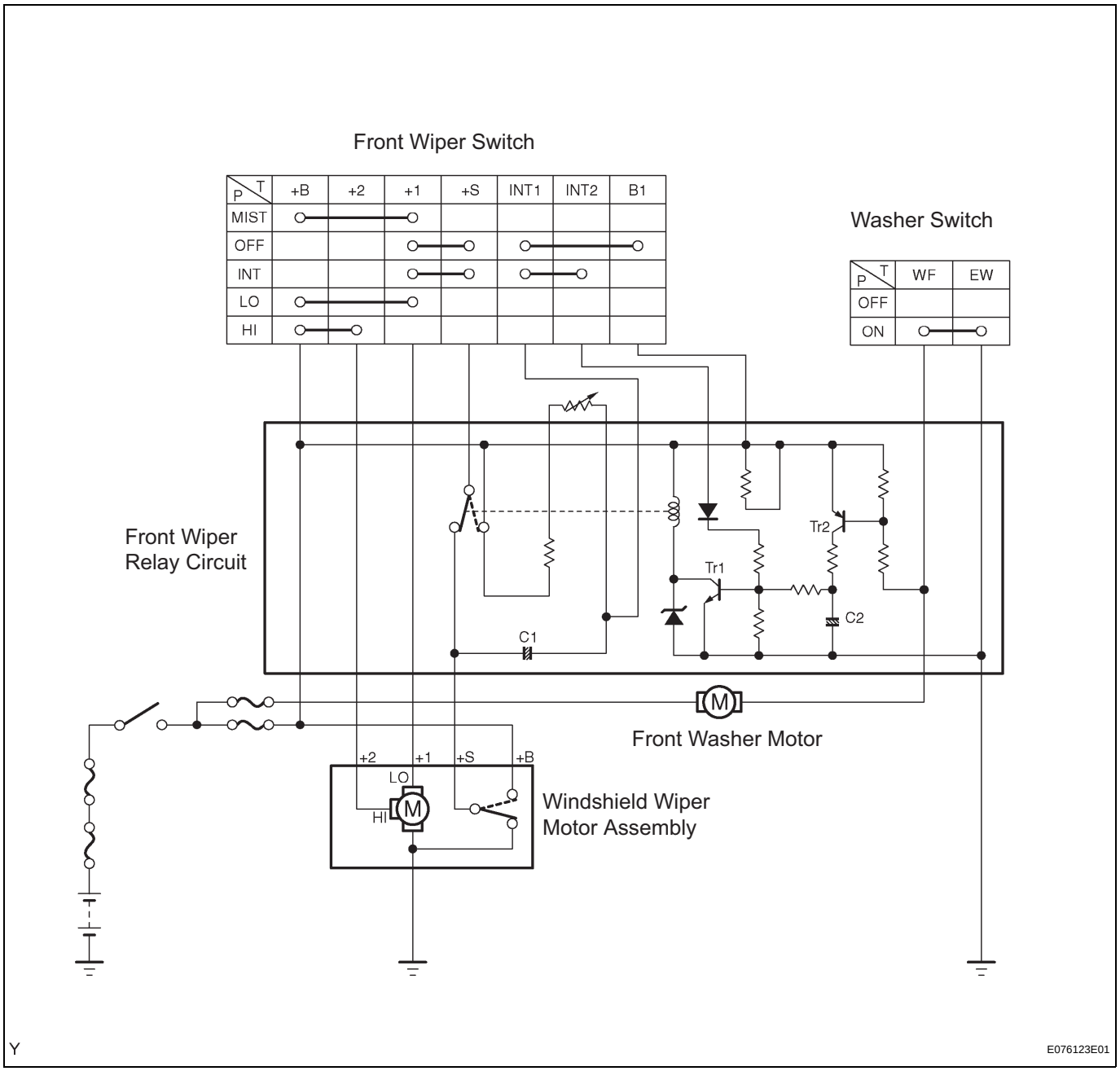

WW

SYSTEM DESCRIPTION

1. WASHER LINKED OPERATION

(a) This system operates the front wipers at low speed immediately after washer fluid is ejected when the front washer switch is on for 0.3 seconds or more. When the washer switch is pressed for 1.5 seconds or more, the system operates the front wipers at low speed for approximately 2.2 seconds and then stops the operation.

2. INTERMITTENT OPERATION

(a) The system operates the front wipers once every 1.6 to 10.7 seconds when the front wiper switch is turned to the INT position. The intermittent time can be adjusted to between 1.6 and 10.7 seconds by using the intermittent time adjust dial.

(b) When the wiper control switch is turned to the INT position, current flows from the precharged capacitor C1, through terminals INT1 and INT2 of the wiper control switch, to Tr1 (transistor). When transistor Tr1 is turned on, current flows from terminal +S of the wiper control switch to terminal +1 of the wiper control switch, to terminal +1 of the wiper motor, to the wiper motor and finally to ground, causing the wiper motor to operate. At the same time, current flows from capacitor C1 to terminal INT1 of the wiper control switch and then to INT2. When the current flow from capacitor C1 stops, transistor Tr1 turns off to stop the relay contact point and halts the wiper motor. When the relay contact is off, capacitor C1 begins to charge

again and Tr1 remains off until the charging is complete. This period corresponds to the time interval between wiper operations. When capacitor C1 is fully charged, Tr1 turns on and then the relay contact point turns on, causing the motor to operate again. This is the cycle of the intermittent wiper operation. The time interval can be adjusted by using the intermittent time adjust dial (variable resistor) to change the charging time of capacitor C1.

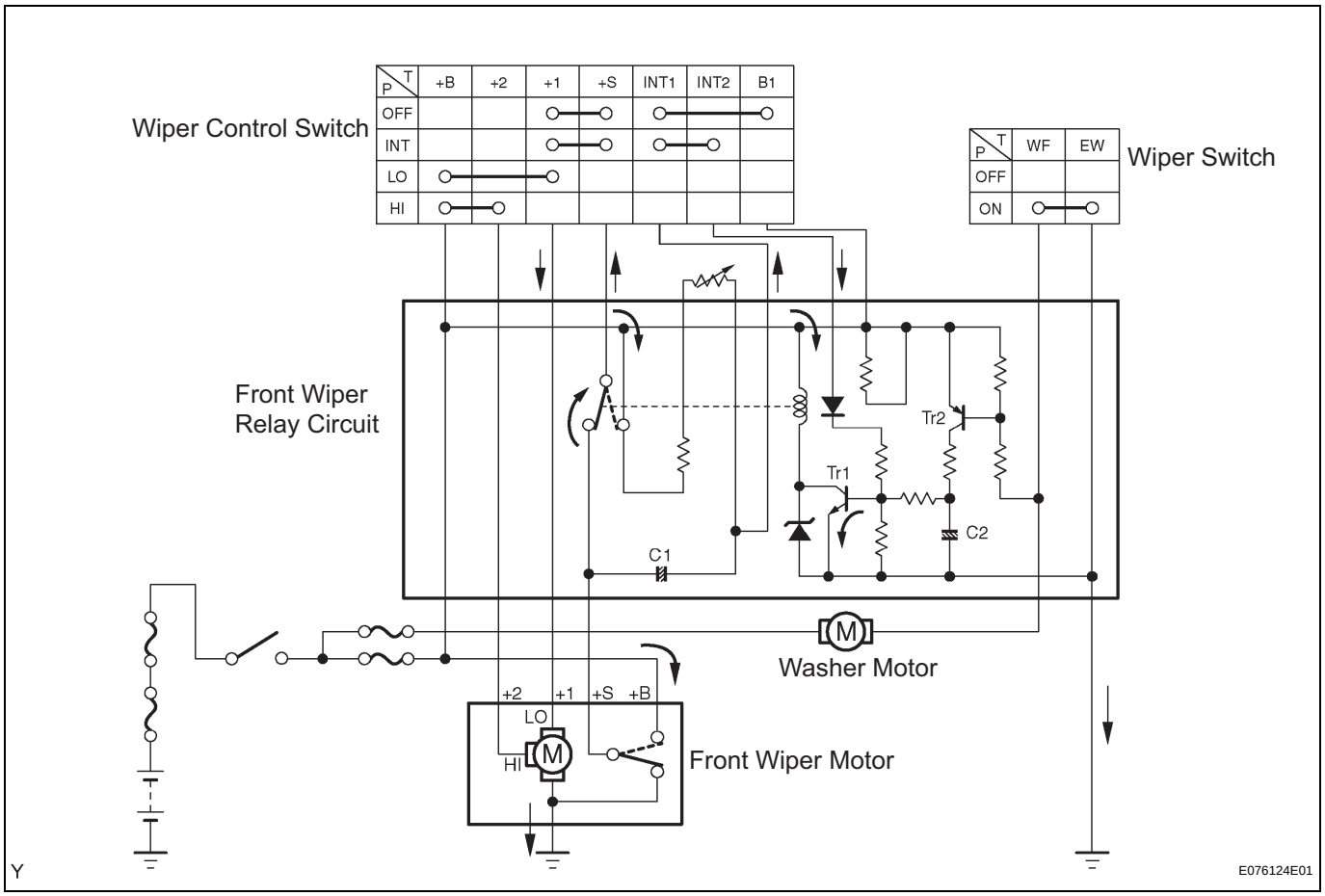

SYSTEM DESCRIPTION

1. POWER DOOR LOCK CONTROL SYSTEM DESCRIPTION

(a) The power door lock system locks/unlocks all the doors simultaneously.

- The master switch and the door control switch (on the passenger side door) send lock/unlock request signals to the multiplex network body ECU. Then, the multiplex network body ECU transmits these requests to the lock motors in each door to lock/unlock all the doors simultaneously.
- Operating the driver side and passenger side door locks using a key sends lock/unlock request signals to the multiplex network body ECU. The driver side door key-linked lock function has an optional unlock method called the "2-step unlock function." Refer to the chart below in step (b) for details on this function.

(b) The power door lock control system has the following functions:

Function	Description
Key-linked lock and unlock function	This function locks/unlocks all doors simultaneously when driver side or passenger side door key cylinder (linked with driver side and passenger side door lock) is turned with key.
Key lock-in prevention function	When key is inserted into ignition key cylinder and door lock operation is performed with driver side door open, all doors are unlocked.
Door control switch* unlock prohibition function	Performing door lock operation with transmitter or key prohibits the unlock operation by door lock control switch.
2-step unlock function	Driver side door can be unlocked by turning key cylinder once; remaining doors can be unlocked by turning key cylinder second time.

*: Master switch and door control switch (passenger side)

HOW TO PROCEED WITH TROUBLESHOOTING

HINT:

- Use these procedures to troubleshoot the power door lock control system.

1	VEHICLE BROUGHT TO WORKSHOP

NEXT

2	CUSTOMER PROBLEM ANALYSIS CHECK SYMPTOM CHECK)

NEXT

3	PROBLEM SYMPTOMS TABLE

(a) If the fault is not listed on the problem symptoms table, proceed to A.
(b) If the fault is listed on the problem symptoms table, proceed to B.

B → Go to step 6

A

4	OVERALL ANALYSIS AND TROUBLESHOOTING

(a) On-vehicle inspection (See page DL-7)
(b) Inspection
(c) Terminals of ECU (See page DL-5)

NEXT

5	ADJUSTMENT, REPAIR OR REPLACEMENT

NEXT

6	CONFIRMATION TEST

NEXT

END

SYSTEM DIAGRAM

Combination Meter Assembly:

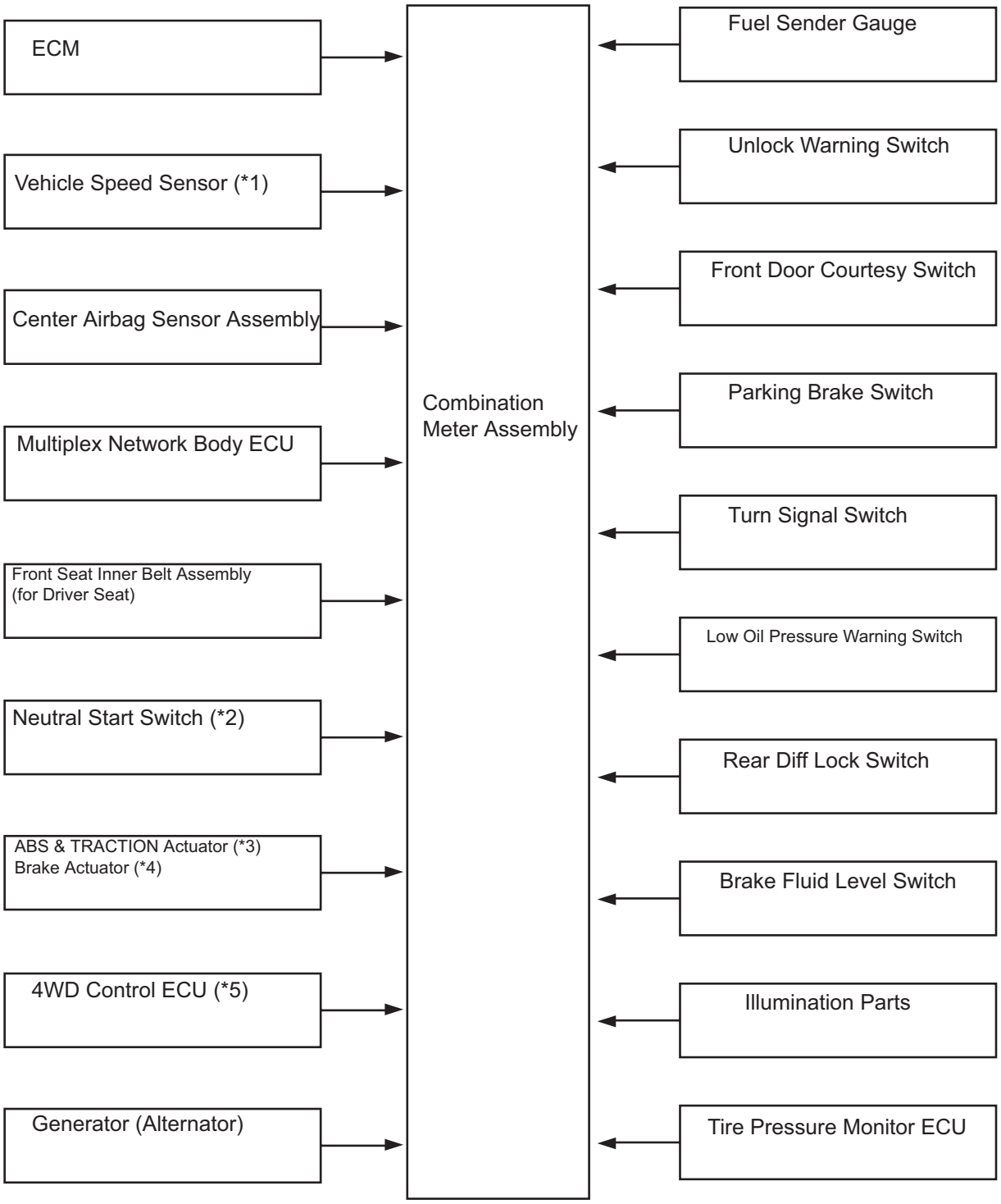

*1: M/T Vehicle *3: w/ VSC *5: 4WD Vehicle
*2: A/T Vehicle *4: w/o VSC

B127007E02

SYSTEM DESCRIPTION

1. METER GAUGE AND WARNING/INDICATOR

GAUGE:

Item	Detail
Speedometer (with VSC)	Based on signals received from wheel speed sensor, hydraulic brake booster calculates vehicle speed and transmits data to meter.
Tachometer	ECM transmits engine speed to meter to display.
ODO/TRIP meter	Combination meter assembly.
Fuel	Displays fuel level in accordance with signal from fuel sender gauge.
Water Temperature	Displays water temperature in accordance with signal from ECM.

WARNING / INDICATOR:

Item	Signal Description
TURN	Turn signal switch is ON.
BEAM	Displays reception of signal from multiplex network body ECU.
CHARGE	Receives malfunction signals from generator (alternator).
OIL PRESSURE	Warning is displayed when oil pressure is low (pressure switch is ON).
MIL	Receives malfunction signals from ECM.
DOOR	Open door indicator comes on when signal is received from multiplex network body ECU.
SEAT BELT	Driver's seat belt buckle switch is OFF (Unfastened).
BRAKE	Displays warning when parking brake switch is ON or brake fluid level warning switch is ON.
MAINT (Blinks)	Blinks when 4,500 miles has been run after ODO/TRIP switch is set.
MAINT (Comes on)	Comes on when 5,000 miles has been run after ODO/TRIP switch is set.
CRUISE	Receives malfunction signals from ECM.
AIR BAG	Receives malfunction signals from airbag ECU.
FUEL	Receives fuel empty signals from fuel sender gauge.
A/T P (A/T)	Receives P signals from neutral start switch.
A/T R (A/T)	Receives R signals from neutral start switch.
A/T N (A/T)	Receives N signals from neutral start switch.
A/T D (A/T)	Receives D signals from neutral start switch.
A/T 4 (A/T)	Receives 4 signals from neutral start switch.
A/T 3 (A/T)	Receives 3 signals from neutral start switch.
A/T 2 (A/T)	Receives 2 signals from neutral start switch.
A/T L (A/T)	Receives L signals from neutral start switch.
TAIL	Displays when receiving signals from multiplex network body ECU.
A/T OIL TEMP	Displays when receiving signals from ECU.
AUTO LSD	Receives signals from hydraulic brake booster while AUTO LSD is operating.
SLIP	• Receives signals from hydraulic brake booster while VSC, TRAC, A-TRAC, A-LSD, DAC, RR DIFF LOCK and HCA are operating. • Receives malfunction signals of TRAC, A-TRAC and A-LSD from hydraulic brake booster.
VSC TRAC	Receives malfunction signals of VSC, TRAC, A-TRAC, A-LSD, DAC and HAC from hydraulic brake booster.
VSC OFF	• Receives signals from hydraulic brake booster while H4L, L4L and RR DIFF LOCK are operating. • Receives malfunction signals of VSC from hydraulic brake booster.
DAC	• Receives signals from hydraulic brake booster while DAC and RR DIFF LOCK are operating. • Receives malfunction signals of the DAC from hydraulic brake booster.
4WD	Receives signals from 4WD control ECU while 4WD is operating.
4LO	Receives signals from 4WD control ECU while 4LO is operating.
RR DIFF LOCK	Receives signals from 4WD control ECU while RR DIFF LOCK is operating.
ABS	• Receives signals from hydraulic brake booster while DIFF LOCK is operating. • Receives malfunction signals of ABS, BRAKE ASSIST, and EBD from hydraulic brake booster.
TIRE PRESSURE	Receives signals from tire pressure monitor ECU.

BUZZER:

Item	Signal Description
Key Reminder	Buzzer is ON: Ignition switch is OFF, key is inserted, and door is open.
Fasten Belt	Buzzer is ON: Ignition switch is ON and seat belt is unfastened.
Manual Shift Reverse (6MT)	Buzzer is ON: Ignition switch is ON, shift position is reverse.

2. SYSTEM FEATURES

The combination meter in this vehicle has the following features:

(a) Built-in buzzer for the reminder system (key and seat belt).

(b) Integrated rheostat, trip and odometer knobs.
- Rotate the knob to adjust the interior illumination.
- Press and release the knob to scroll through trip A, trip B, and odometer features.
- Press and hold the trip knob to reset the trip meter functions.

(c) Oil maintenance indicator.
- 4,500 miles after the ODO/TRIP switch is set, the maintenance indicator blinks for 15 seconds after the ignition switch is turned to the ON position.
- 5,000 miles after ODO/TRIP switch is set, the maintenance indicator comes on.

(d) How to reset oil maintenance indicator (See page ME-24).

SYSTEM DIAGRAM

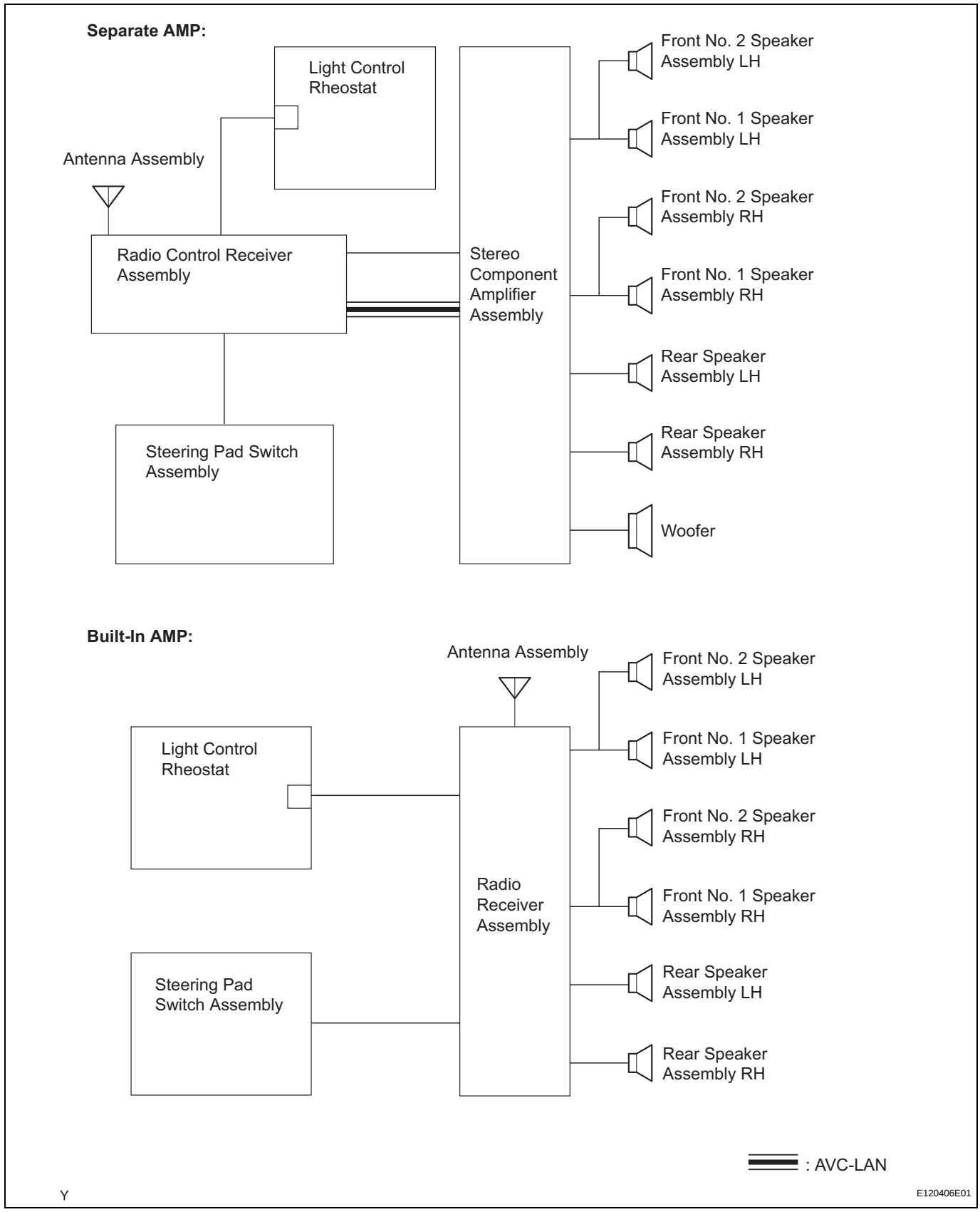

SYSTEM DESCRIPTION

1. COMPACT DISC PLAYER

(a) Compact Disc (hereafter called CD) players use a laser beam pick-up to read the digital signals recorded on CDs and reproduce analog signals of the music etc. 4.7 in. (12 cm) and 3.2 in. (8 cm) discs are available for the CD player.
HINT:
Never disassemble or apply oil to any part of the player unit. Do not insert any objects other than discs into the CD player.
NOTICE:
CD players use an invisible laser beam which could cause hazardous radiation exposure. Be sure to operate the player correctly as instructed.

2. MAINTENANCE CD Player/Disc Cleaning

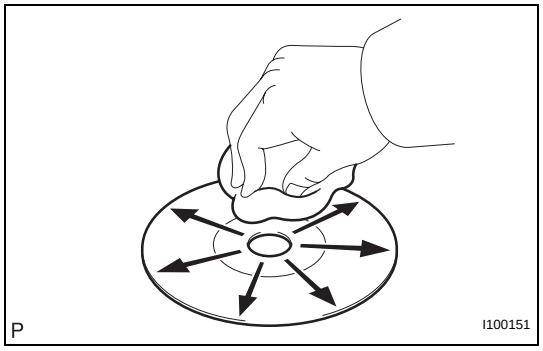

(a) If the disc gets dirty, clean the disc by wiping the surface from the center to the outside, in a radial direction, with a soft cloth as shown in the illustration.
NOTICE:
Do not use a conventional record cleaner or anti-static preservative.

AV

3. OUTLINE OF AVC-LAN

(a) What is AVC-LAN?

AVC-LAN is an abbreviation for Audio Visual Communication-Local Area Network. This is a unified standard co-developed by 6 audio manufacturers associated with Toyota Motor Corporation. The unified standard includes signals, such as audio, visual and signals for switch indication and communication.

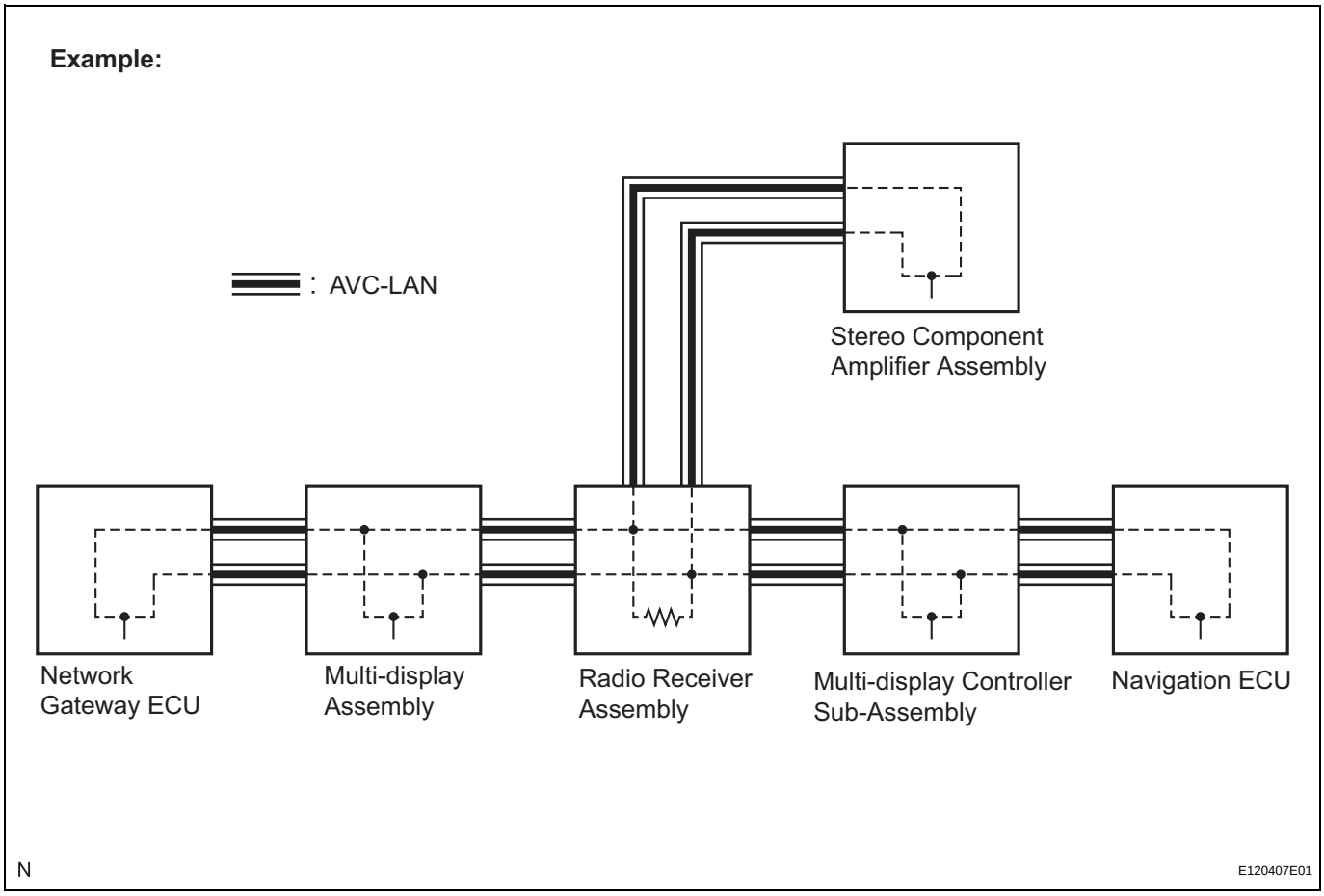

(b) Objectives

Recent development in car audio systems has been rapid and functions have been changed drastically. The conventional system has been switched to a multi-media type such as the navigation system. At the same time customers want to upgrade their audio systems. This is the factor that lies behind this standardization.

The concrete objectives are explained below.

(1) When products of different manufacturers are combined together, malfunctions such as sound failure can occur. This problem can be solved by the standardization of signals.

(2) Various types of after market products are available.

(3) In general, new products developed by particular manufacturers could not be used due to a lack of compatibility with other manufacturer's products. By developing this new standard, users can enjoy a range of compatible products from different manufacturers.
HINT:
- When a +B short or GND short is detected in the AVC-LAN circuit, communication stops, and the audio system does not function.
- When the audio system is not equipped with a navigation system, the audio head unit is the master unit. When the audio system is equipped with a navigation system, the multi-display is the master unit.
- The radio receiver assembly is equipped with a resistor (60 to 80 Ω) for communication.
- All car audio systems using AVC-LAN circuits have diagnostic functions.
- Each unit has its own specified number called a physical address (three-digit number). Numbers are also allotted to each function, which are called logical addresses (two-digit number).

4. COMMUNICATION SYSTEM

(a) Components in the audio system communicate with each other through the AVC-LAN. (Radio receiver with CD changer control function)

(b) When a short circuit or circuit breakdown occurs in the AVC-LAN circuit, the audio system does not operate normally due to the communication cutoff.

5. DIAGNOSTIC FUNCTION

(a) The audio system has a diagnostic function (the diagnostic result is displayed on the LCD of the radio receiver assembly). (Radio receiver with CD changer control function)

(b) The component code (physical address), or three-digit number (in hexadecimal) is set for each component comprising AVC-LAN.

(c) The logical address, or two-digit number (in hexadecimal) is set for each function and component unit in each component.

AVC-LAN:

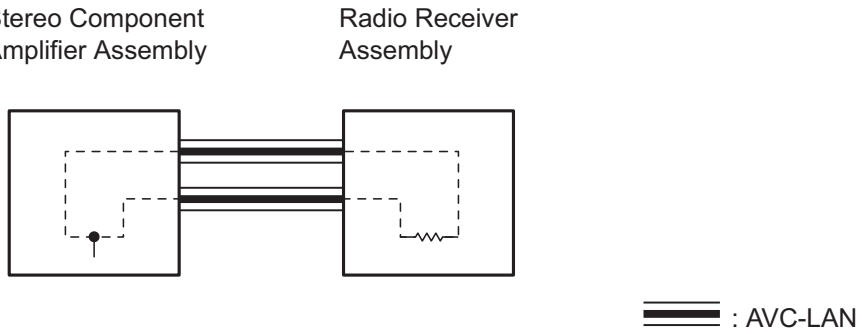

6. DIAGNOSTIC TROUBLE CODE CHART

Terms	Description
Physical address	Three-digit code (shown in hexadecimal) which is given to each component comprising AVC-LAN. Corresponding to the function, individual symbols are specified.
Logical address	Two-digit code (shown in hexadecimal) which is given to each function comprising inner system of AVC-LAN.

HINT:
Titles for each unit are stated in the following order: physical address (part name).
(a) 190 (RADIO RECEIVER ASSEMBLY)

Logical address: 01 (Communication control)

DTC	Diagnosis Item	Diagnostic Content	Troubleshooting
D5 *1	Registered Component Disconnected	Component shown by sub code is or was disconnected from system with ignition switch in ACC or ON. Communication with component shown by sub code is not ensured when engine is started.	• Check harness for power supply system of component shown by sub code. • Check harness for communication system of component shown by sub code.
D6 *1	Absence of Master	Component in which this code is recorded was disconnected from system or master component with ignition switch in ACC or ON.	• Check harness for power supply system of radio receiver assembly. • Check harness for communication system of radio receiver assembly.
D7 *5	Connection Check Error	Component in which this code is recorded was disconnected from system or master component with ignition switch in ACC or ON.	• Check harness for power supply system of radio receiver assembly. • Check harness for communication system of radio receiver assembly.
D8 *2	No Response to Connection Check	Component shown by sub code is or was disconnected from system after engine start.	• Check harness for power supply system of component shown by sub code. • Check harness for communication system of component shown by sub code.

DTC	Diagnosis Item	Diagnostic Content	Troubleshooting
D9 *1	Last Mode Error	Audio or visual component operated before engine stop is or was disconnected with ignition switch in ACC or ON.	• Check harness for power supply system of component shown by sub code. • Check harness for communication system of component shown by sub code.
DA	No Response to ON/OFF Instruction	No response is identified when changing mode (audio and visual mode change). Sound and picture do not change by button operation.	• Check harness for power supply system of component shown by sub code. • Check harness for communication system of component shown by sub code. • If error occurs again, replace component shown by sub code.
DB *1	Mode Status Error	Dual alarm is detected.	• Check harness for power supply system of component shown by sub code. • Check harness for communication system of component shown by sub code.
DC *3	Transmission Error	Transmission to component shown by sub code has failed. (Detecting this DTC does not necessarily mean actual failure.)	If same sub code is recorded in other component, check harness for power supply and communication systems of all components shown by code. (If not, delete DTC and recheck.)
DD *4	Master Reset (Momentary Interruption)	After engine was started, master component was disconnected from system.	• Check harness for power supply system of radio receiver assembly. • Check harness for communication system of radio receiver assembly. • If this error occurs frequently, replace radio receiver assembly.
DE *4	Slave Reset (Momentary Interruption)	After engine was started, component shown by sub code was disconnected from system.	• Check harness for power supply system of component shown by sub code. • Check harness for communication system of component shown by sub code.
DF *4	Master Error	Due to defective condition of component with display, master function is switched to audio equipment.	• Check harness for power supply system of radio receiver assembly. • Check harness for communication system of radio receiver assembly.
E0 *1	Registration Completion Instruction Error	Registration completion instruction command from master cannot be received.	Since this DTC is provided for engineering purposes, it may be set when no actual failure exists.
E1 *1	Voice Processing Device ON Error	Amp device records that amp output does not function even while source device is operating.	• Check harness for power supply system of radio receiver assembly. • Check harness for communication system of radio receiver assembly.
E2	ON/OFF Instruction Parameter Error	Error occurs in ON/OFF controlling command from master component.	Replace radio receiver assembly.

AV

DTC	Diagnosis Item	Diagnostic Content	Troubleshooting
E3 *1	Registration Request Transmission	Registration request command is output from component shown by sub code. Receiving connection check instruction, Registration request command is output from sub-master component.	Since this DTC is provided for engineering purposes, it may be set when no actual failure exists.
E4 *1	Multiple Frame Abort	Multiple frame transmission is aborted.	Since this DTC is provided for engineering purposes, it may be set when no actual failure exists.
22	RAM Error	Abnormal condition of RAM is detected.	Replace radio receiver assembly.

HINT:

- *1: This DTC may be recorded depending on the battery condition or engine start voltage even if no failure is detected.
- *2: If the power connector is disconnected after the engine starts, this DTC is recorded after 180 seconds.
- *3: This DTC may be stored if the ignition key is turned to the START position again when the engine is already running.
- *4: This DTC may be stored if the ignition key is held in the START position for one minute or more before returning to the ON position.
- *5: The DTC is stored 210 seconds after the master component power supply connector is disconnected with the ignition switch in ACC or IG.

Logical address: 62 (CD player)

DTC	Diagnosis Item	Diagnostic Content	Troubleshooting
42	No Disc Readout	Disc cannot be read.	• Inspect CD • Replace radio receiver assembly
44	CD player Error	Error is detected in CD player.	Replace radio receiver assembly
45	EJECT Error	Disc cannot be ejected.	Replace radio receiver assembly
46	Disc has scratches on the reverse surface	CD has dirt or scratches on reverse side.	• Inspect CD • If same code is detected, replace radio receiver assembly

Logical address: 63 (In-dash CD player)

DTC	Diagnosis Item	Diagnostic Content	Troubleshooting
42	No Disc Readout	Disc cannot be read.	• Inspect CD • Replace radio receiver assembly
44	CD player Error	Error is detected in CD player.	Replace radio receiver assembly
45	EJECT Error	Disc cannot be ejected.	Replace radio receiver assembly
46	Disc has scratches on the reverse surface	CD has dirt or scratches on reverse side.	• Inspect CD • If same code is detected, replace radio receiver assembly
51	Elevator Error	Mechanical error occurred during elevator operation.	Replace radio receiver assembly
52	Clamp Error	Error occurs on clamp	Replace radio receiver assembly

(b) 440 (STEREO COMPONENT AMPLIFIER ASSEMBLY)

Logical address: 01 (Communication control)

DTC	Diagnosis Item	Diagnostic Content	Troubleshooting
D6 *1	Absence of Master	Component in which this code is recorded was disconnected from system with ignition switch in ACC or ON. Alternatively radio receiver assembly was disconnected when this code was recorded.	• Check harness for power supply system of radio receiver assembly. • Check harness for power supply system of stereo component amplifier assembly. • Check harness for communication system of stereo component amplifier assembly.
D7	Communication Check Error	Component in which this code is recorded is or was disconnected from system after engine start. Alternatively radio receiver assembly was disconnected when this code was recorded.	• Check harness for power supply system of radio receiver assembly. • Check harness for power supply system of stereo component amplifier assembly. • Check harness for communication system of stereo component amplifier assembly.
DC *2	Transmission Error	Transmission to component shown by sub code has failed. (Detecting this DTC does not necessarily mean actual failure.)	If same sub code is recorded in other component, check harness for power supply and communication systems of all components shown by code. (If not, delete DTC and recheck.)
DD *3	Master Reset (Momentary Interruption)	After engine was started, master component was disconnected from system.	• Check harness for power supply system of radio receiver assembly. • Check harness for power supply system of stereo component amplifier assembly. • Check harness for communication system of stereo component amplifier assembly. • If this error occurs frequently, replace radio receiver assembly.
DD *4	Master Error	Due to defective condition of component with display, master function is switched to audio equipment. Error occurs in communication between sub-master (audio) and master component.	• Check harness for power supply of radio receiver assembly. • Check harness for communication system of stereo component amplifier assembly. • Check harness for communication system between multi-display assembly and sub-master component.
E0 *1	Registration Completion Instruction Error	Registration completion instruction command from master cannot be received.	Since this DTC is provided for engineering purposes, it may be set when no actual failure exists.
E1 *1	Audio processor ON Error	While source device is operating, amp output stops.	• Check harness for power supply system of radio receiver assembly. • Check harness for communication system of radio receiver assembly.

AV

DTC	Diagnosis Item	Diagnostic Content	Troubleshooting
E2	ON/OFF Instruction Parameter Error	Error occurs in ON/OFF controlling command from master component.	Replace radio receiver assembly.
E3 *1	Registration Request Transmission	Registration request command is output from slave component.	Since this DTC is provided for engineering purposes, it may be set when no actual failure exists.

HINT:

- *1: This DTC may be recorded depending on the battery condition or engine start voltage even if no failure is detected.
- *2: This DTC may be stored if the ignition key is turned to the START position again when the engine is already running.
- *3: This DTC may be stored if the ignition key is held in the START position for one minute or more before returning to the ON position.
- *4: If the device is reported as not existing during verification, check the power source circuit and AVC-LAN circuit for the device.

AV

INSTALLATION

1. **INSTALL RADIO ANTENNA CORD SUB-ASSEMBLY**

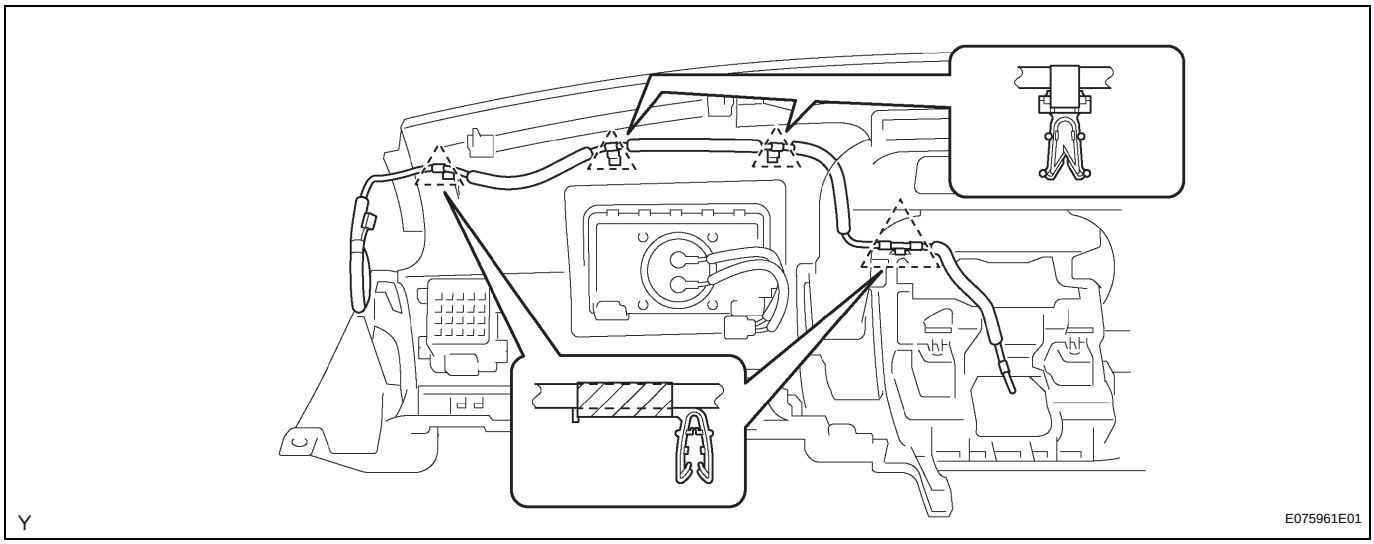

(a) Engage the 4 claws and install the Radio antenna cord.

2. **INSTALL INSTRUMENT PANEL SUB-ASSEMBLY**
3. **INSTALL INSTRUMENT PANEL PASSENGER AIRBAG ASSEMBLY (See page IP-18)**
4. **CONNECT PASSENGER AIRBAG CONNECTOR (See page RS-577)**
5. **INSTALL INSTRUMENT SIDE PANEL RH (See page IP-20)**
6. **INSTALL INSTRUMENT LOWER COVER SUB-ASSEMBLY (See page IP-20)**
7. **INSTALL LOWER INSTRUMENT PANEL LH (See page IP-20)**
8. **INSTALL INSTRUMENT PANEL LOWER FINISH PANEL SUB-ASSEMBLY RH (See page IP-20)**
9. **INSTALL GLOVE COMPARTMENT DOOR ASSEMBLY (See page IP-20)**
10. **INSTALL CENTER INSTRUMENT CLUSTER FINISH PANEL SUB-ASSEMBLY (See page IP-21)**
11. **INSTALL COMBINATION METER ASSEMBLY (See page ME-65)**
12. **INSTALL INSTRUMENT CLUSTER FINISH PANEL SUB-ASSEMBLY (See page IP-21)**
13. **INSTALL NO. 1 LOWER INSTRUMENT PANEL FINISH PANEL (See page IP-22)**
14. **INSTALL HOOD LOCK CONTROL LEVER SUB-ASSEMBLY (See page ED-8)**
15. **INSTALL RADIO RECEIVER ASSEMBLY (See page AV-70)**

16. **INSTALL AIR CONDITIONING CONTROL ASSEMBLY (See page AC-96)**
17. **INSTALL FRONT CONSOLE BOX (for Manual Transmission on Bench Seat Type) (See page IP-22)**
18. **INSTALL FRONT CONSOLE BOX (for Automatic Transmission on Bench Seat Type) (See page IP-23)**
19. **INSTALL FRONT CONSOLE BOX (for Manual Transmission on Separate Seat Type) (See page IP-23)**
20. **INSTALL FRONT CONSOLE BOX (for Automatic Transmission on Separate Seat Type) (See page IP-24)**
21. **INSTALL INSTRUMENT PANEL CUP HOLDER TRAY (for Automatic Transmission on Separate Seat Type) (See page IP-24)**
22. **INSTALL REAR CONSOLE BOX ASSEMBLY (for Separate Seat Type) (See page IP-24)**
23. **INSTALL CONSOLE UPPER REAR PANEL SUB-ASSEMBLY (for Manual Transmission on Separate Seat Type) (See page IP-25)**
24. **INSTALL CONSOLE UPPER REAR PANEL SUB-ASSEMBLY (for Automatic Transmission on Separate Seat Type) (See page IP-25)**
25. **INSTALL INSTRUMENT PANEL HOLE COVER (for Lever Type Parking Brake) (See page IP-25)**
26. **INSTALL INSTRUMENT PANEL UNDER TRAY (for Pedal Type Parking Brake) (See page IP-25)**
27. **INSTALL FRONT PILLAR GARNISH RH (See page IR-52)**
28. **INSTALL FRONT PILLAR GARNISH LH (See page IR-51)**
29. **INSTALL FRONT DOOR OPENING TRIM WEATHERSTRIP RH (See page IR-29)**
30. **INSTALL FRONT DOOR OPENING TRIM WEATHERSTRIP LH (See page IR-28)**
31. **INSTALL COWL SIDE TRIM BOARD RH (See page IR-52)**
32. **INSTALL COWL SIDE TRIM BOARD LH (See page IR-52)**
33. **INSTALL FRONT DOOR SCUFF PLATE RH (See page IR-52)**
34. **INSTALL FRONT DOOR SCUFF PLATE LH (See page IR-52)**
35. **INSTALL FRONT FLOOR FOOTREST (See page IR-1)**

36. CONNECT CABLE TO NEGATIVE BATTERY TERMINAL
Torque: 3.9 N*m (40 kgf*cm, 35 in.*lbf)

SYSTEM DESCRIPTION

1. POWER WINDOW CONTROL SYSTEM DESCRIPTION

(a) The power window control system controls the UP/DOWN function of the power windows by using the regulator motors.

The main components of this system are: the power window regulator master switch assembly, which is built into the driver side door, and the power window regulator switch, which is built into the passenger side door and rear doors. Pressing the regulator switch or either of the four switches on the master switch assembly transmits an UP/DOWN signal to the corresponding power window regulator motor.

(b) The power window control system has the following functions:

Function	Outline
Manual UP / DOWN function	Driver side power window: Function that causes window to rise while power window switch is being pulled up, and to lower while pushed halfway down. Window stops as soon as the switch is released. Passenger side power window and rear door power window: Function that causes window to rise while power window switch is being pulled up and to lower while pushed down. Window stops as soon as the switch is released.
AUTO DOWN function	Function that enables window of driver side door to be fully open by one press of power window switch.
Remote control function	Function that allows power window master switch assembly to control manual UP/DOWN operation of passenger door power window and rear door power window.
Key-off operation function	Function that makes it possible to operate power window for approximately 43 seconds after ignition switch is turned to ACC or LOCK position if neither front door is opened.
Window lock function	Function where passenger side power window and rear door power window operations are disabled when window lock switch of the master switch assembly is pressed. Passenger side power window and rear door power window can be operated when window lock switch is pressed again.

HOW TO PROCEED WITH TROUBLESHOOTING

HINT:

- Use these procedures to troubleshoot the power window control system.

1 VEHICLE BROUGHT TO WORK SHOP

NEXT

2 CUSTOMER PROBLEM ANALYSIS CHECK AND SYMPTOM CHECK

NEXT

3 PROBLEM SYMPTOM TABLE

Result

Result	Proceed to
Fault is not listed in problem symptoms table	A
Fault is listed in problem symptoms table	B

B → Go to step 5

A

4 OVERALL ANALYSIS AND TROUBLE SHOOTING*

(a) On-vehicle Inspection (See page WS-9)
(b) Inspection
(c) Terminals of ECU (See page WS-5)

NEXT

5 ADJUST, REPAIR OR REPLACEMENT

NEXT

6 CONFIRMATION TEST

NEXT

END

PROBLEM SYMPTOMS TABLE

Symptom	Suspected area	See page
Mirror dose not operate	ACC fuse	
	Outer mirror switch assembly	MI-11
	Outer rear view mirror assembly LH	MI-9
	Outer rear view mirror assembly RH	MI-9
	Wire harness	
Mirror operate abnormally	ACC fuse	
	Outer mirror switch assembly	MI-11
	Outer rear view mirror assembly LH	MI-9
	Outer rear view mirror assembly RH	MI-9
	Wire harness	

SYSTEM DIAGRAM

1. SYSTEM DIAGRAM

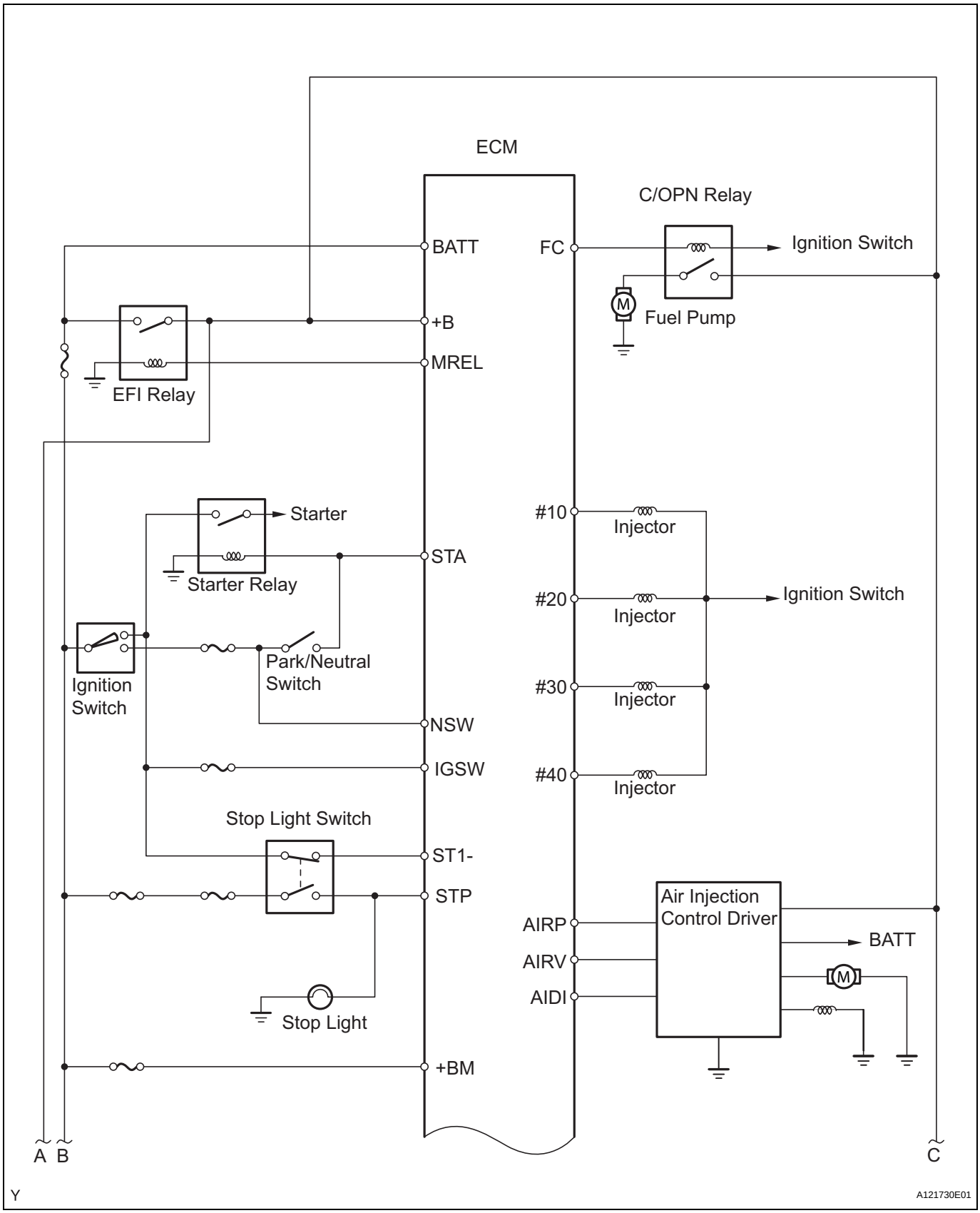

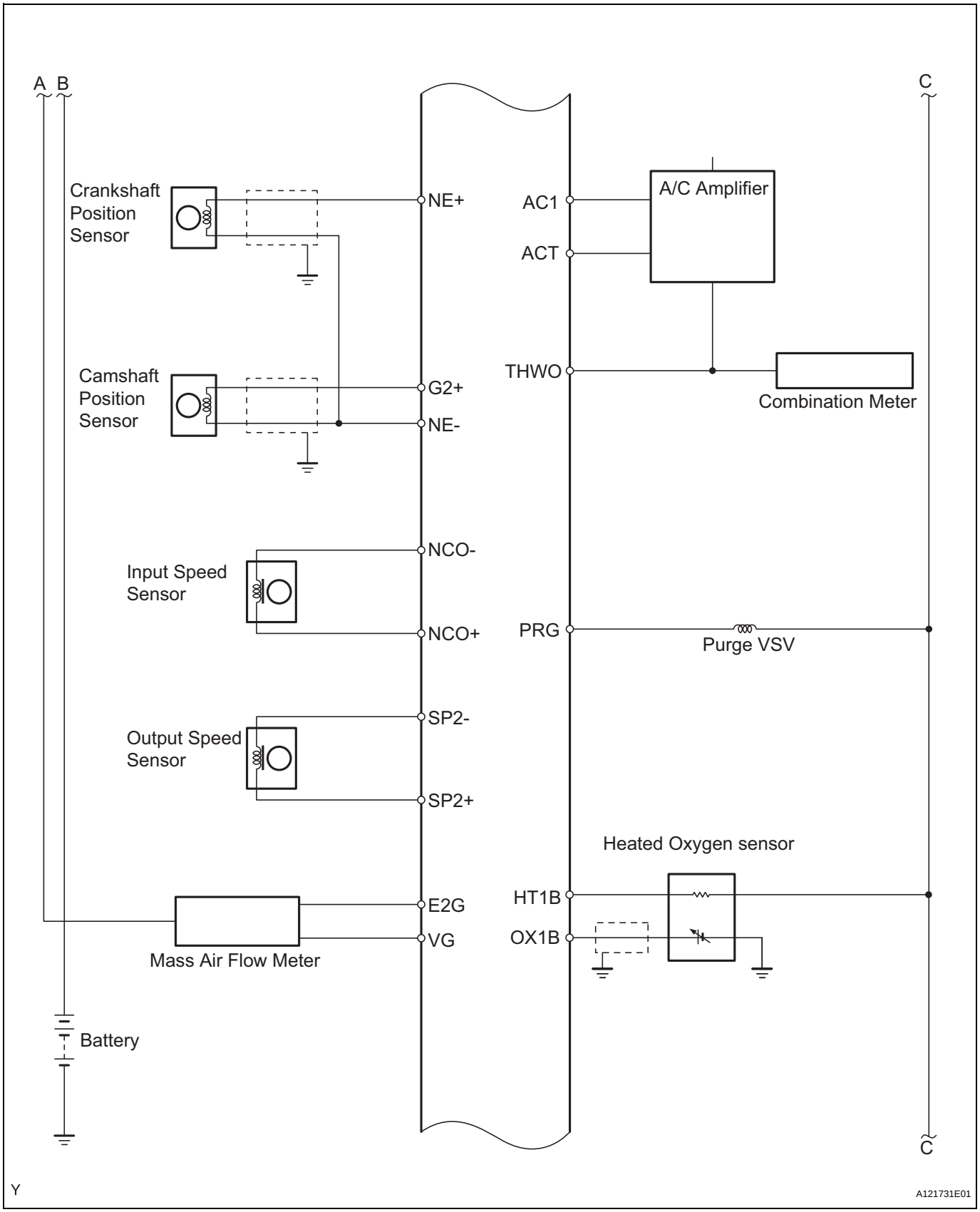
A B
C
Crankshaft Position Sensor
NE+
AC1
A/C Amplifier
ACT
Camshaft Position Sensor
G2+
NE-
THWO
Combination Meter
NCO-
Input Speed Sensor
NCO+
PRG
Purge VSV
SP2-
Output Speed Sensor
SP2+
Heated Oxygen sensor
HT1B
E2G
OX1B
VG
Mass Air Flow Meter
Battery
C
Y
A121731E01

ES

ES

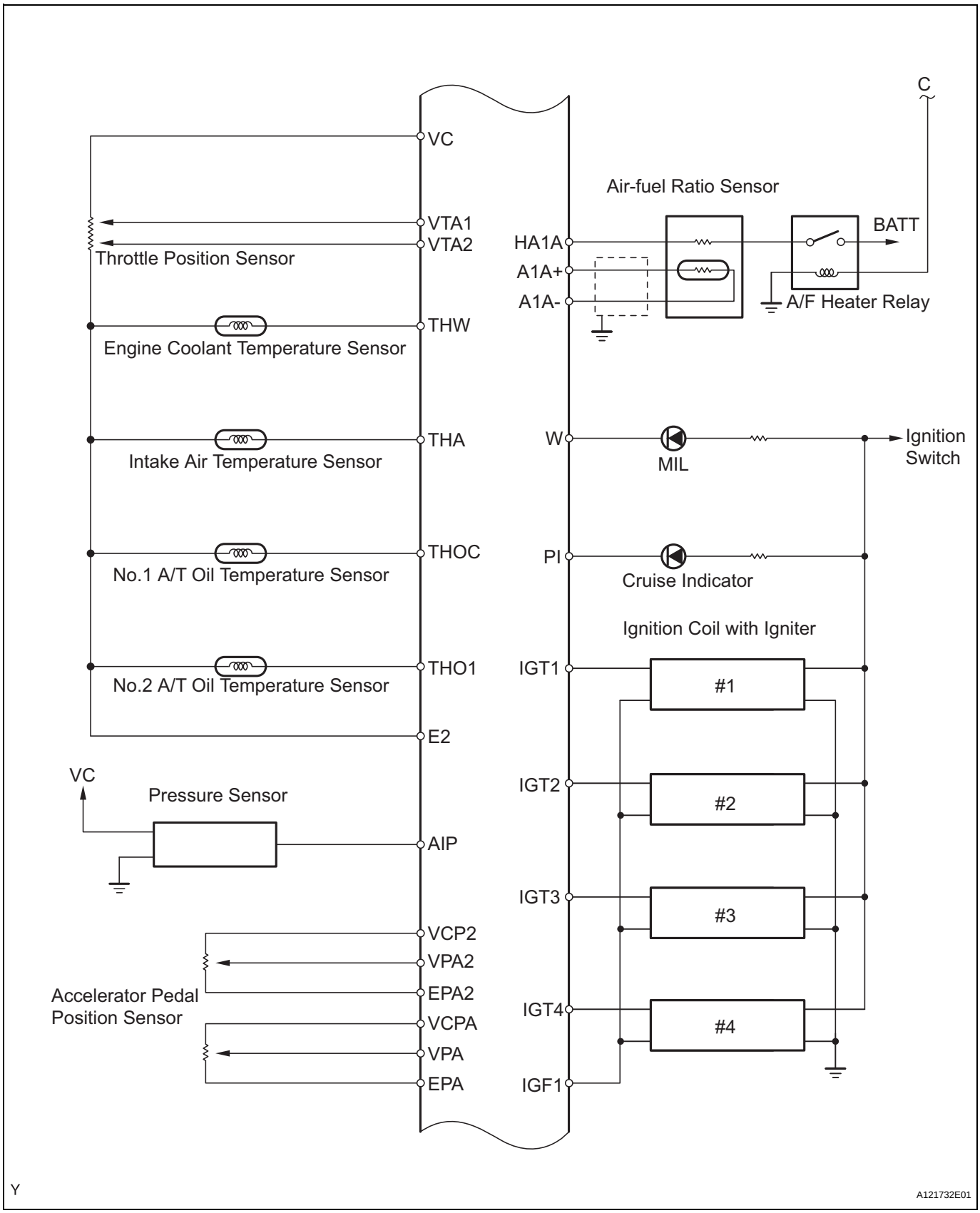
C
VC
Air-fuel Ratio Sensor
VTA1
VTA2
Throttle Position Sensor
HA1A
A1A+
A1A-
BATT
A/F Heater Relay
THW
Engine Coolant Temperature Sensor
THA
Intake Air Temperature Sensor
W
MIL
Ignition Switch
THOC
No.1 A/T Oil Temperature Sensor
PI
Cruise Indicator
Ignition Coil with Igniter
THO1
No.2 A/T Oil Temperature Sensor
IGT1
#1
E2
VC
Pressure Sensor
IGT2
#2
AIP
IGT3
#3
VCP2
VPA2
EPA2
Accelerator Pedal Position Sensor
IGT4
#4
VCPA
VPA
EPA
IGF1
Y
A121732E01

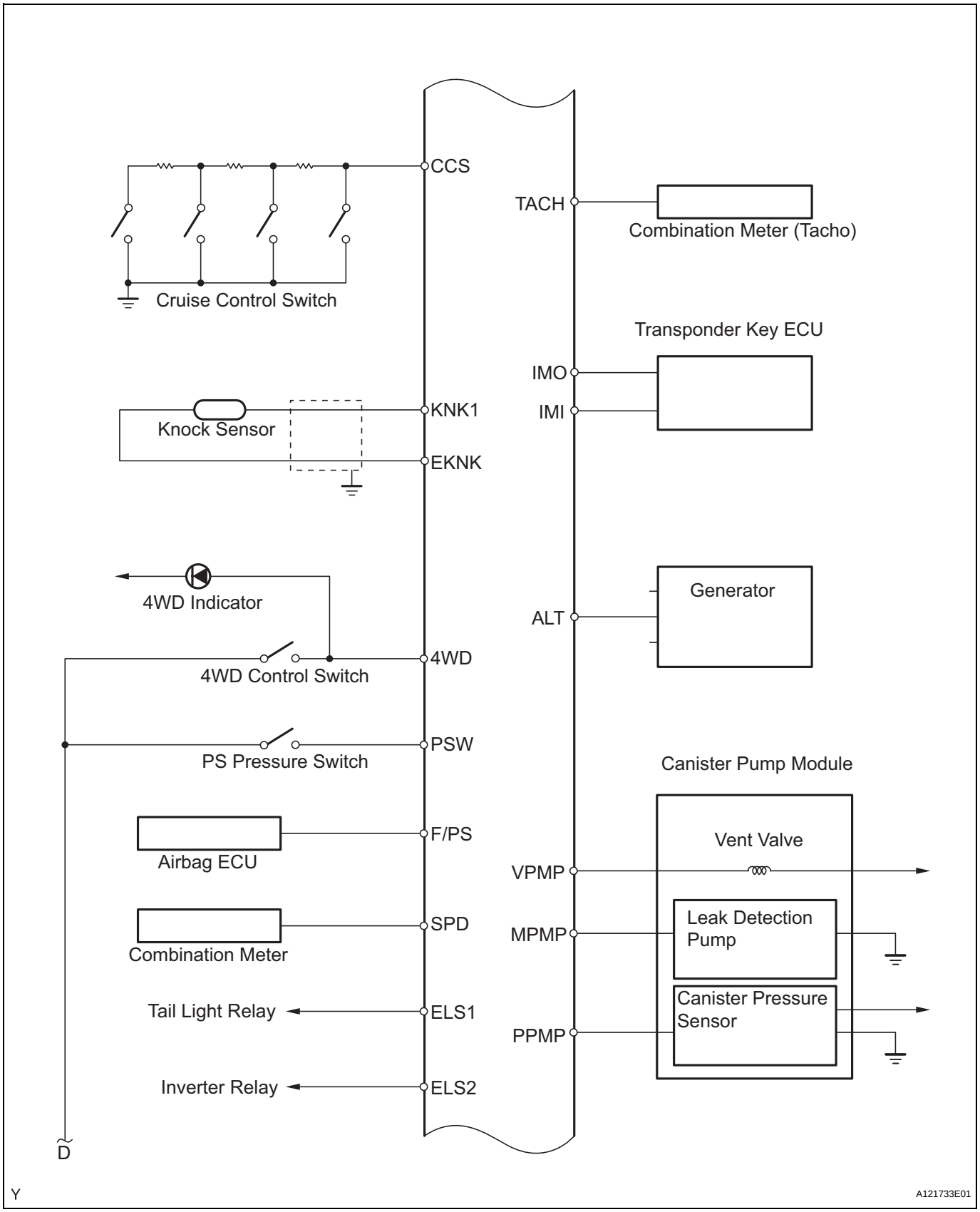
CCS
Cruise Control Switch
TACH
Combination Meter (Tacho)
Transponder Key ECU
IMO
IMI
KNK1
Knock Sensor
EKNK
4WD Indicator
Generator
ALT
4WD
4WD Control Switch
PSW
PS Pressure Switch
Canister Pump Module
Vent Valve
F/PS
Airbag ECU
VPMP
SPD
MPMP
Leak Detection Pump
Combination Meter
Canister Pressure Sensor
Tail Light Relay
ELS1
PPMP
Inverter Relay
ELS2
D
Y
A121733E01

ES

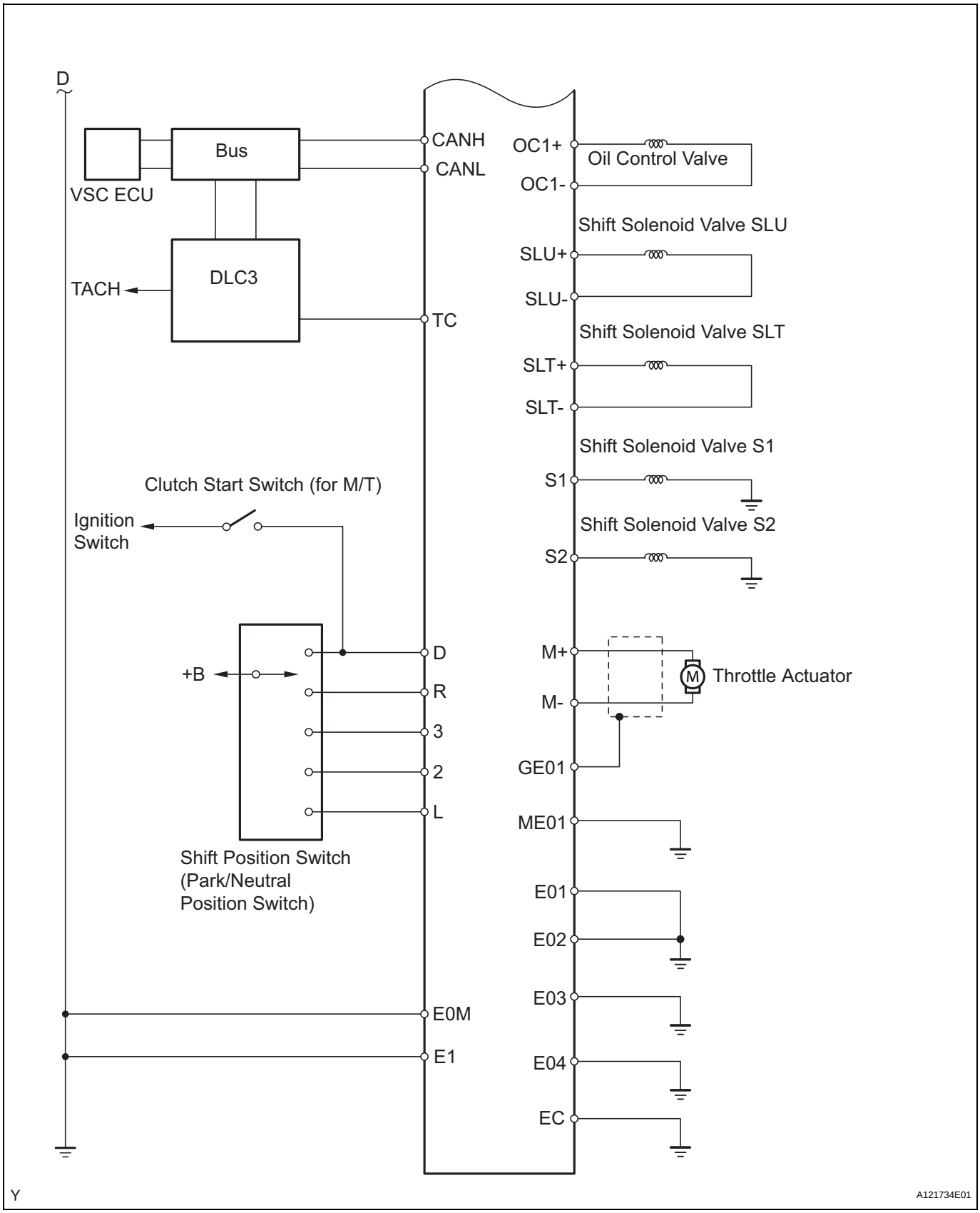
D
Bus
VSC ECU
DLC3
TACH
CANH
CANL
TC
OC1+
OC1-
Oil Control Valve
Shift Solenoid Valve SLU
SLU+
SLU-
Shift Solenoid Valve SLT
SLT+
SLT-
Shift Solenoid Valve S1
S1
Clutch Start Switch (for M/T)
Ignition Switch
Shift Solenoid Valve S2
S2
+B
D
R
3
2
L
M+
M-
Throttle Actuator
GE01
ME01
Shift Position Switch (Park/Neutral Position Switch)
E01
E02
E03
E0M
E1
E04
EC
Y
A121734E01

2. COMMUNICATION WITH OTHER COMPUTERS

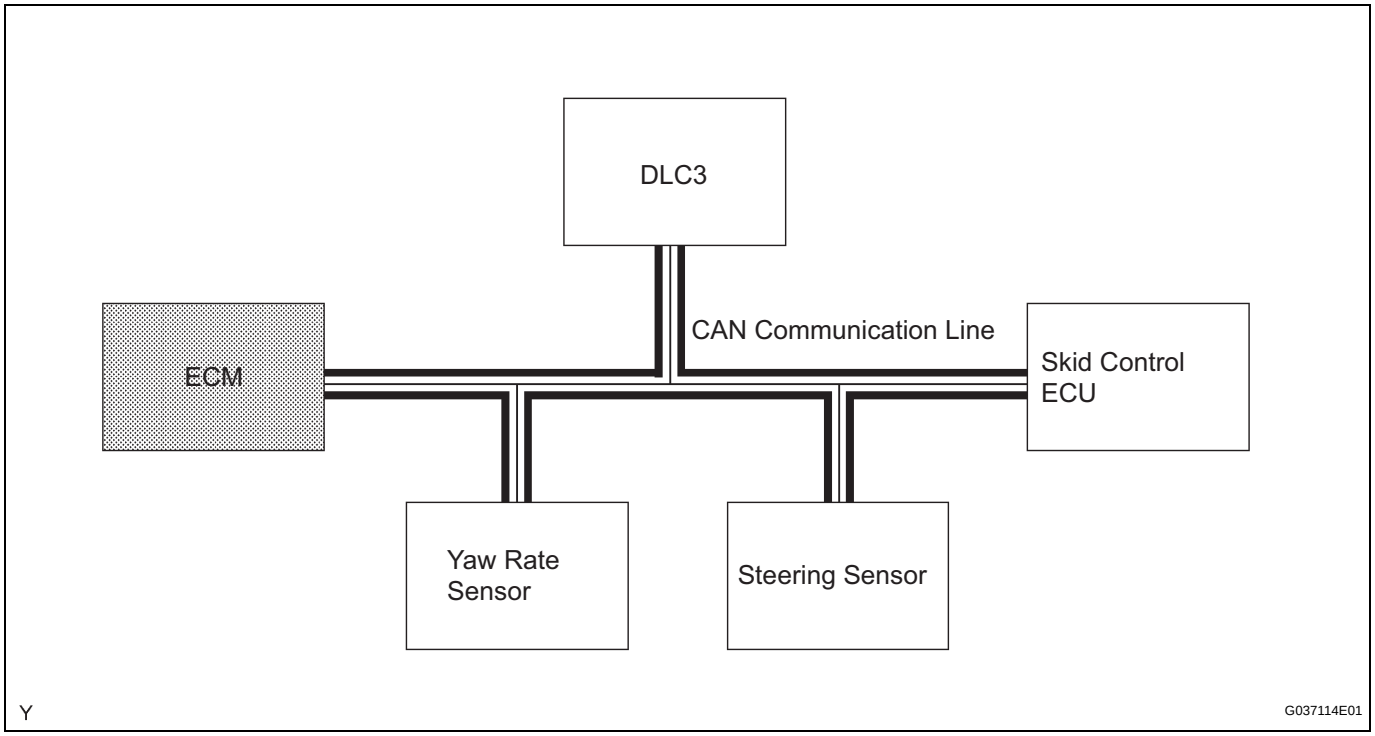

HINT:
Refer to CAN COMMUNICATION SYSTEM (See page CA-4).

3. COMMUNICATION SIGNALS

Transmitter	Receiver	Signal	Communication Line
ECM	Skid Control ECU	• Intake air temperature signal • Check mode signal • Engine rpm signal • Throttle position signal • Cruise control operation signal • VSC prohibition requirement signal • Shift position signal • Destination signal • Engine system malfunction signal • Ignition timing signal	CAN
Skid Control ECU	ECM	• VSC/TRC operation signal • VSC/TRC system malfunction signal • Fuel cut requirement signal • Cruise control cancel requirement signal • Torque requirement signal	CAN

HINT:
Refer to CAN COMMUNICATION SYSTEM (See page CA-4).

HOW TO PROCEED WITH TROUBLESHOOTING

*: Use the intelligent tester.

1	VEHICLE BROUGHT TO WORKSHOP

NEXT

2	CUSTOMER PROBLEM ANALYSIS

NEXT

ES

3	CONNECT INTELLIGENT TESTER TO DLC3*

HINT:
If the display indicates a communication fault in the tester, inspect the DLC3.

NEXT

4	CHECK DTC AND FREEZE FRAME DATA*

HINT:
Record or print DTCs (See page ES-40) and freeze frame data (See page ES-41), if necessary.

NEXT

5	CLEAR DTC AND FREEZE FRAME DATA*

HINT:
Refer to DTC Check / Clear (See page ES-40).

NEXT

6	CONDUCT VISUAL INSPECTION

NEXT

7	SET CHECK MODE DIAGNOSIS*

HINT:
Refer to Check Mode Procedure (See page ES-43).

NEXT

8	CONFIRM PROBLEM SYMPTOMS

HINT:
If the engine does not start, perform steps 10 and 12 first.

Result	Proceed To
Malfunction does not occur	A
Malfunction occurs	B

B → GO TO STEP 10

A

9	SIMULATE SYMPTOMS

ES

NEXT

10	CHECK DTC*

HINT:
Refer to DTC Check / Clear (See page ES-40).

Result	Proceed To
Malfunction code	A
No code	B

B → GO TO STEP 12

A

11	REFER TO DTC CHART

HINT:
Refer to Diagnostic Trouble Code Chart (See page ES-54).

NEXT

GO TO STEP 14

12	CONDUCT BASIC INSPECTION

HINT:
Refer to Basic Inspection (See page ES-14).

Result	Proceed To
Malfunctioning parts not confirmed	A
Malfunctioning parts confirmed	B

B → GO TO STEP 17

A

13	REFER TO PROBLEM SYMPTOMS TABLE

HINT:
Refer to Problem Symptoms Table (See page ES-29).

Result	Proceed To
Malfunctioning circuit confirmed	A
Malfunctioning parts confirmed	B

B → GO TO STEP 17

A

14	CHECK ECM POWER SOURCE CIRCUIT

HINT:
Refer to ECM Power Source Circuit (See page ES-425).

NEXT

15	CONDUCT CIRCUIT INSPECTION

Result	Proceed To
Malfunction not confirmed	A
Malfunction confirmed	B

B → GO TO STEP 18

A

16	CHECK FOR INTERMITTENT PROBLEMS

HINT:
Refer to Check for Intermittent Problems (See page ES-14).

NEXT

GO TO STEP 18

17	CONDUCT PARTS INSPECTION

NEXT

18	IDENTIFY PROBLEM

NEXT

19	ADJUST AND/OR REPAIR

NEXT

20	CONDUCT CONFIRMATION TEST

NEXT

END

REMOVAL

1. **TABLE OF BOLT, SCREW AND NUT**
   HINT:
   All bolts, screws and nuts relevant to installing and removing the instrument panel are shown along with their alphabetic codes in the table below.

mm (in.) (L = Length)

Code	Shape	Code	Shape	Code	Shape
<A>	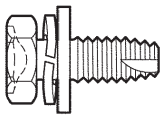 φ = 6 (0.24) L = 16 (0.63) 90080-11157	<B>	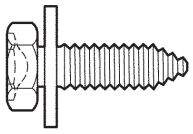 φ = 6 (0.24) L = 20 (0.79) 90080-11353	<C>	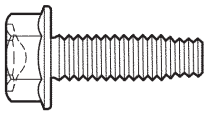 φ = 6 (0.24) L = 16 (0.63) 90105-A0007
<D>	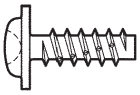 φ = 5 (0.20) L = 14 (0.55) 90080-16100	<E>	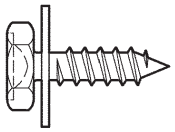 φ = 5 (0.20) L = 18 (0.71) 90159-A0034	<F>	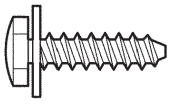 φ = 5 (0.20) L = 20 (0.79) 90159-50192
<G>	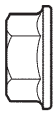 φ = 6 (0.24) 90178-A0023				

P

B085808E01

2. **DISCONNECT CABLE FROM NEGATIVE BATTERY TERMINAL**
   Wait at least for 90 seconds after disconnecting the cable to prevent the airbag from working.
3. **REMOVE FRONT FLOOR FOOTREST (See page IR-1)**
4. **REMOVE FRONT DOOR SCUFF PLATE LH (for Regular Cab) (See page IR-40)**
5. **REMOVE FRONT DOOR SCUFF PLATE LH (for Access Cab) (See page IR-61)**
6. **REMOVE FRONT DOOR SCUFF PLATE LH (for Double Cab) (See page IR-12)**

7. **REMOVE FRONT DOOR SCUFF PLATE RH (for Regular Cab) (See page IR-41)**
8. **REMOVE FRONT DOOR SCUFF PLATE RH (for Access Cab) (See page IR-61)**
9. **REMOVE FRONT DOOR SCUFF PLATE RH (for Double Cab) (See page IR-12)**
10. **REMOVE COWL SIDE TRIM BOARD LH (for Regular Cab) (See page IR-40)**
11. **REMOVE COWL SIDE TRIM BOARD LH (for Access Cab) (See page IR-61)**
12. **REMOVE COWL SIDE TRIM BOARD LH (for Double Cab) (See page IR-12)**
13. **REMOVE COWL SIDE TRIM BOARD RH (for Regular Cab) (See page IR-40)**
14. **REMOVE COWL SIDE TRIM BOARD RH (for Access Cab) (See page IR-61)**
15. **REMOVE COWL SIDE TRIM BOARD RH (for Double Cab) (See page IR-12)**
16. **SEPARATE FRONT DOOR OPENING TRIM WEATHERSTRIP LH**
    (a) Separate the front door opening trim weatherstrip LH.
17. **SEPARATE FRONT DOOR OPENING TRIM WEATHERSTRIP RH**
    (a) Separate the front door opening trim weatherstrip RH.
18. **REMOVE FRONT PILLAR GARNISH LH (for Regular Cab) (See page IR-41)**
19. **REMOVE FRONT PILLAR GARNISH LH (for Access Cab) (See page IR-62)**
20. **REMOVE FRONT PILLAR GARNISH LH (for Double Cab) (See page IR-13)**
21. **REMOVE FRONT PILLAR GARNISH RH (for Regular Cab) (See page IR-41)**
22. **REMOVE FRONT PILLAR GARNISH RH (for Access Cab) (See page IR-63)**
23. **REMOVE FRONT PILLAR GARNISH RH (for Double Cab) (See page IR-14)**

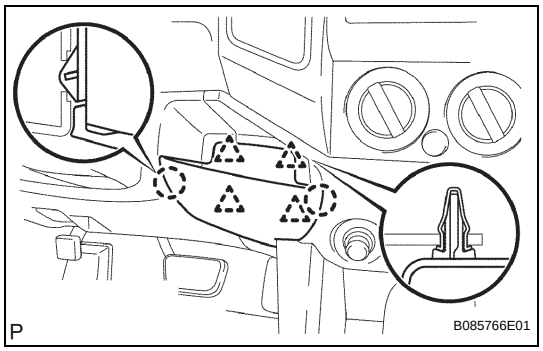

24. REMOVE INSTRUMENT PANEL UNDER TRAY (for Pedal Type Parking Brake)

(a) Disengage the 4 clips and 2 claws, and remove the instrument panel under tray.

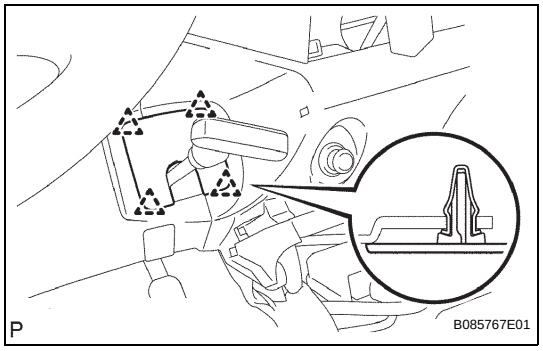

25. REMOVE INSTRUMENT PANEL HOLE COVER (for Lever Type Parking Brake)

(a) Disengage the 4 clips and remove the instrument panel hole cover.

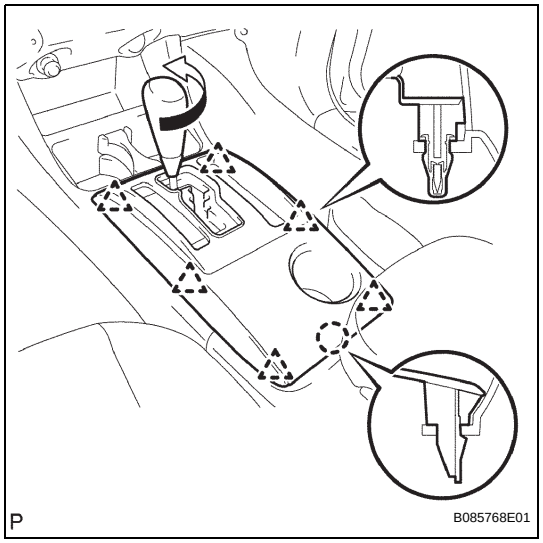

26. REMOVE CONSOLE UPPER REAR PANEL SUB-ASSEMBLY (for Automatic Transmission on Separate Seat Type)

(a) Remove the shift knob.

(b) Disengage the 6 clips and claw, and remove the console upper rear panel sub-assembly.

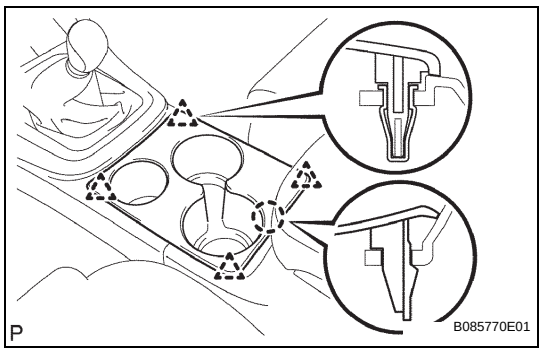

27. REMOVE CONSOLE UPPER REAR PANEL SUB-ASSEMBLY (for Manual Transmission on Separate Seat Type)

(a) Disengage the 4 clips and claw, and remove the console upper rear panel sub-assembly.

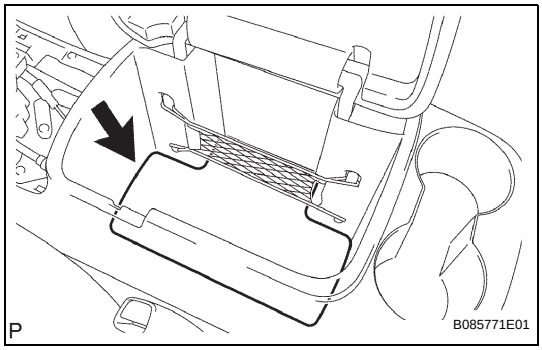

28. REMOVE REAR CONSOLE BOX ASSEMBLY (for Separate Seat Type)

(a) Remove the console box carpet.

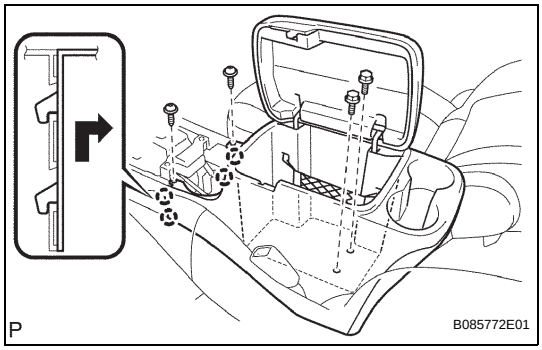

(b) Remove the 2 screws <F> and 2 bolts <B>.

(c) Disengage the 4 claws and remove the rear console box assembly.

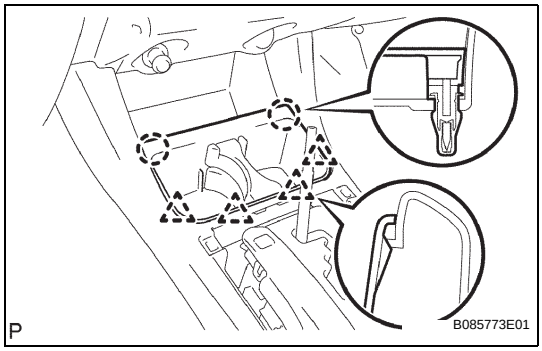

29. REMOVE INSTRUMENT PANEL CUP HOLDER TRAY (for Automatic Transmission on Separate Seat Type)

(a) Disengage the 2 clips and 4 claws, and remove the instrument panel cup holder tray.

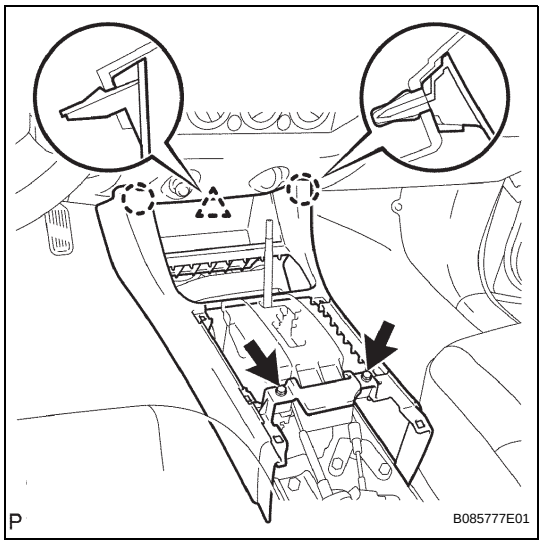

30. REMOVE FRONT CONSOLE BOX (for Automatic Transmission on Separate Seat Type)

(a) Remove the 2 screws <F>.

(b) Disengage the 2 clips and claw, and remove the front console box.

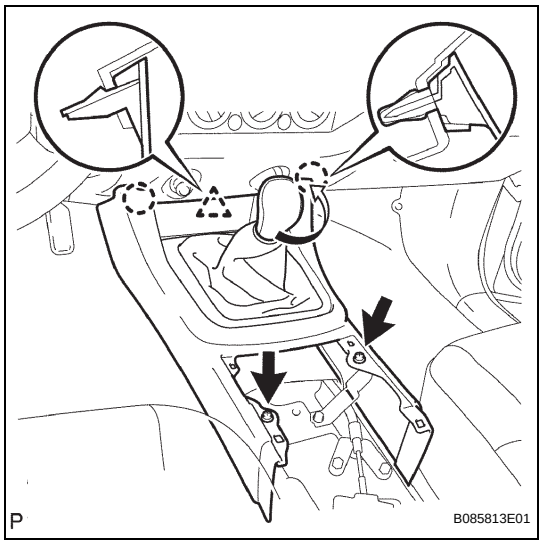

31. REMOVE FRONT CONSOLE BOX (for Manual Transmission on Separate Seat Type)

(a) Remove the shift knob.
(b) Remove the 2 screws <F>.
(c) Disengage the 2 clips and claw, and remove the front console box.

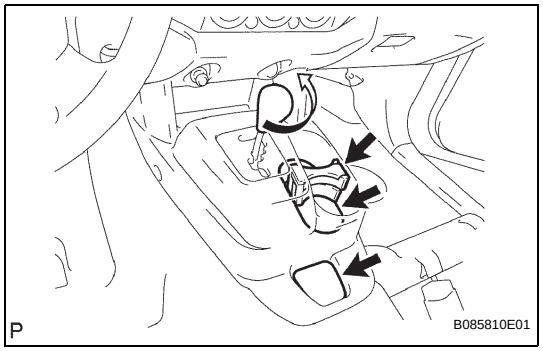

32. REMOVE FRONT CONSOLE BOX (for Automatic Transmission on Bench Seat Type)

(a) Remove the shift knob.
(b) Remove the box bottom mat.
(c) Remove the instrument panel cup holder.
(d) Remove the No. 2 box bottom mat.

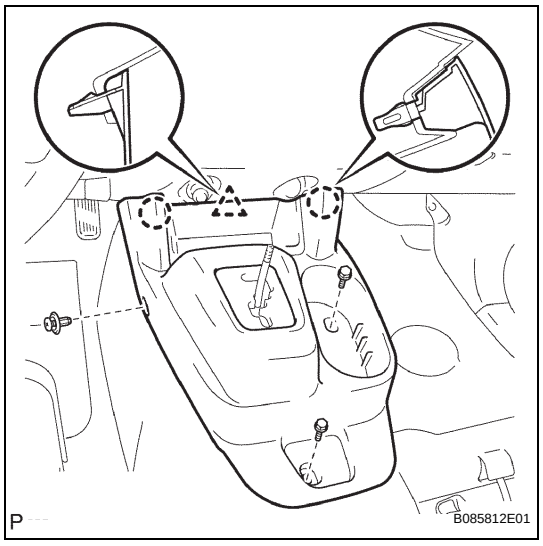

(e) Remove the clip and 2 bolts <A>.
(f) Disengage the 2 clips and claw, and remove the front console box.

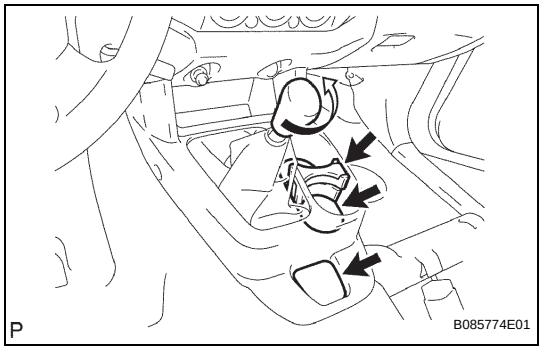

33. REMOVE FRONT CONSOLE BOX (for Manual Transmission on Bench Seat Type)

(a) Remove the shift knob.
(b) Remove the box bottom mat.
(c) Remove the instrument panel cup holder.
(d) Remove the No. 2 box bottom mat.

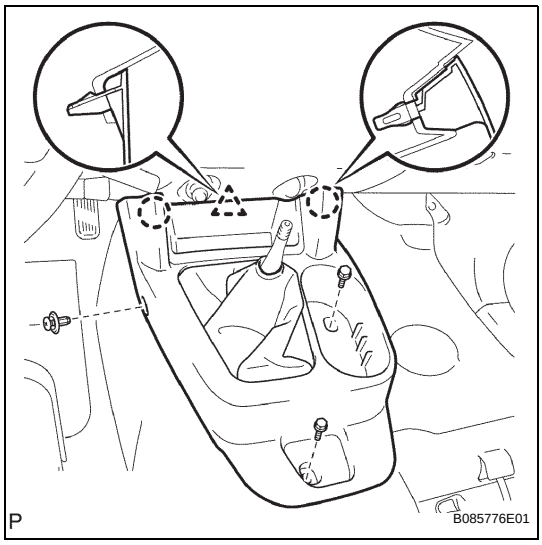

(e) Remove the clip and 2 bolts <A>.
(f) Disengage the 2 clips and claw, and remove the front console box.

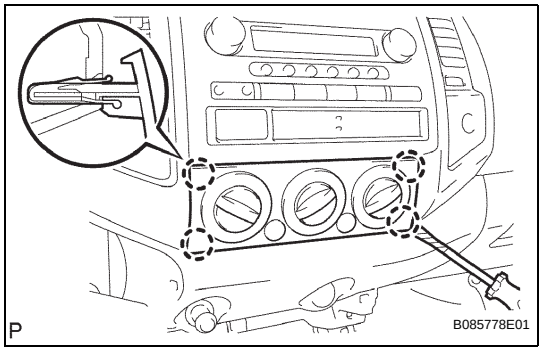

34. REMOVE AIR CONDITIONING CONTROL ASSEMBLY
(a) Using a screwdriver, disengage the 4 clips and remove the air conditioning control assembly.
HINT:
Tape up the screwdriver tip before use.
(b) Disconnect the 2 connectors.

35. REMOVE RADIO RECEIVER ASSEMBLY (See page AV-69)

36. SEPARATE HOOD LOCK CONTROL LEVER SUB-ASSEMBLY (See page ED-3)

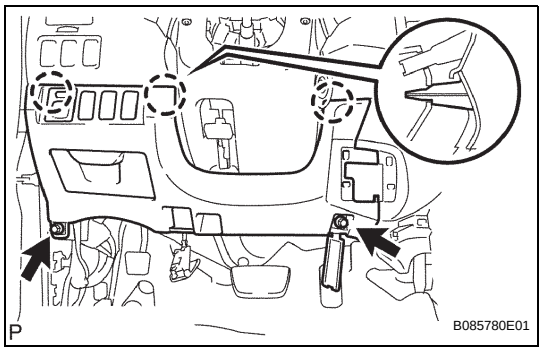

37. REMOVE LOWER NO. 1 INSTRUMENT PANEL FINISH PANEL
(a) Remove the 2 bolts <B>.
(b) Disengage the 3 clips and remove the lower No. 1 instrument panel finish panel.
(c) Disconnect the connectors.

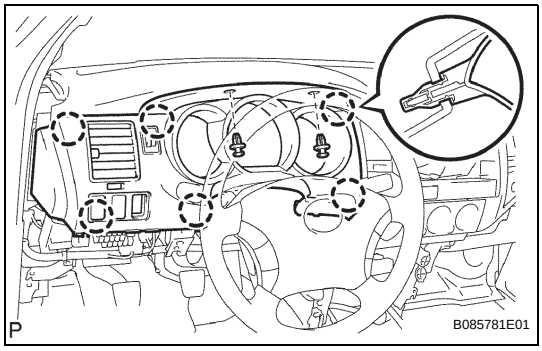

38. REMOVE INSTRUMENT CLUSTER FINISH PANEL SUB-ASSEMBLY
(a) Remove the 2 clips.
(b) Disengage the 6 clips and remove the instrument cluster finish panel sub-assembly.
(c) Disconnect the connectors.

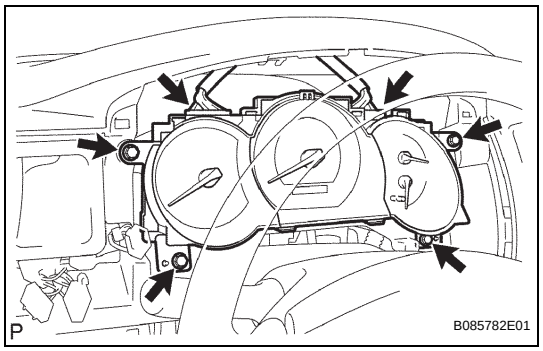

39. REMOVE COMBINATION METER ASSEMBLY

(a) Remove the 4 screws <E> and the combination meter assembly.

(b) Disconnect the 2 connectors.

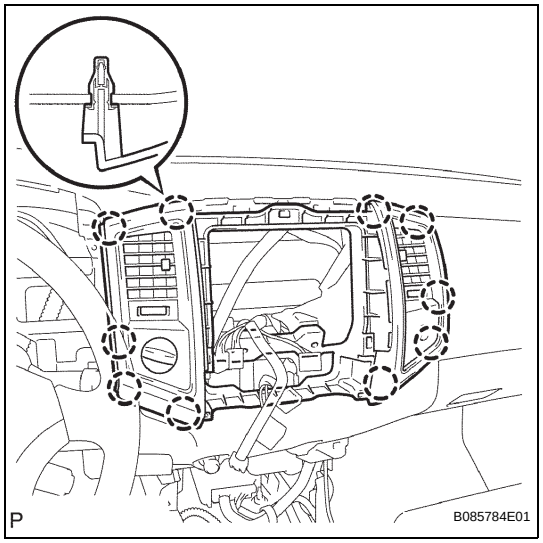

40. REMOVE INSTRUMENT CLUSTER CENTER FINISH PANEL SUB-ASSEMBLY

(a) Disengage the 10 clips and remove the instrument cluster center finish panel sub-assembly.

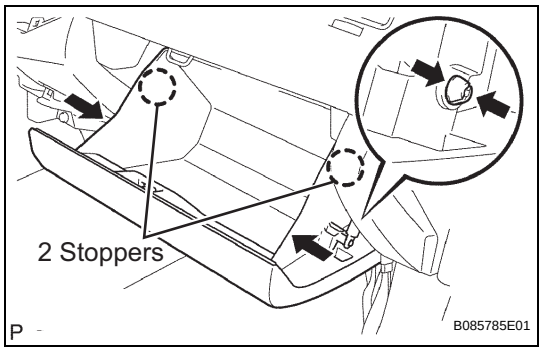

41. REMOVE GLOVE COMPARTMENT DOOR ASSEMBLY

(a) Disengage the claw and separate the glove compartment door stopper from the glove compartment door assembly.

(b) Slightly deform the upper part of the glove compartment door assembly to release the 2 stoppers and open the glove compartment door assembly until it becomes horizontal.

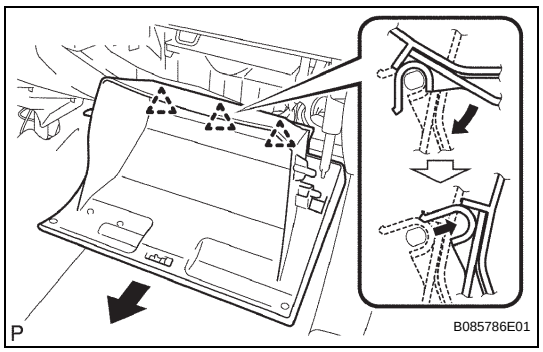

(c) Pull the glove compartment door assembly toward the rear of the vehicle to release the 3 hinges and remove the glove compartment door assembly.

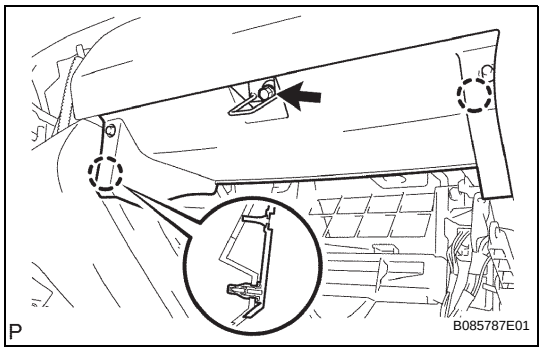

42. REMOVE INSTRUMENT PANEL LOWER FINISH PANEL SUB-ASSEMBLY RH

(a) Remove the bolt <B>.
(b) Disengage the 2 clips and remove the instrument panel lower finish panel sub-assembly RH.

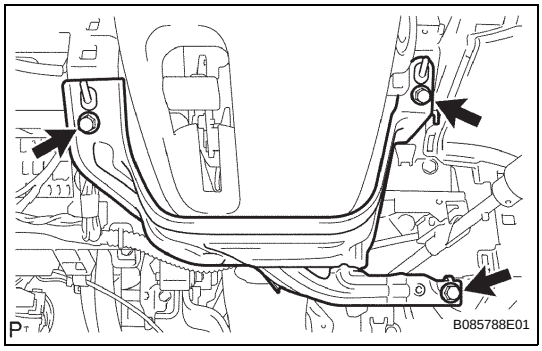

43. REMOVE LOWER INSTRUMENT PANEL LH

(a) Remove the 3 bolts <B> and the lower instrument panel LH.

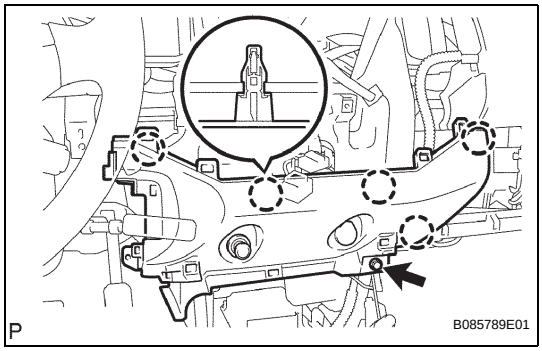

44. REMOVE INSTRUMENT LOWER COVER SUB-ASSEMBLY

(a) Remove the bolt <B>.
(b) Disengage the 5 clips and remove the instrument lower cover sub-assembly.
(c) Disconnect the 2 connectors.

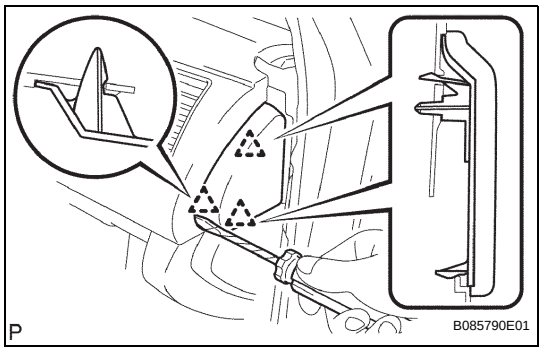

45. REMOVE INSTRUMENT SIDE PANEL RH

(a) Using a screwdriver, disengage the 3 claws and remove the instrument side panel RH.
HINT:
Tape up the screwdriver tip before use.

46. DISCONNECT PASSENGER AIRBAG CONNECTOR (See page RS-576)

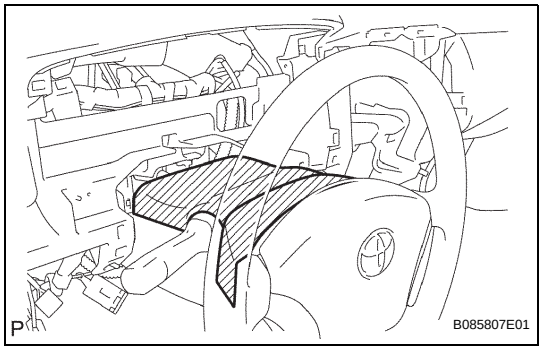

47. REMOVE INSTRUMENT PANEL SUB-ASSEMBLY W/ PASSENGER AIRBAG ASSEMBLY

(a) Tape up the steering column cover upper and steering wheel sub-assembly in protective tape.
(b) Disengage the 4 clamps and disconnect the 4 connectors.

(c) Remove the 8 bolts, nut and instrument panel sub-assembly w/ passenger air bag assembly.

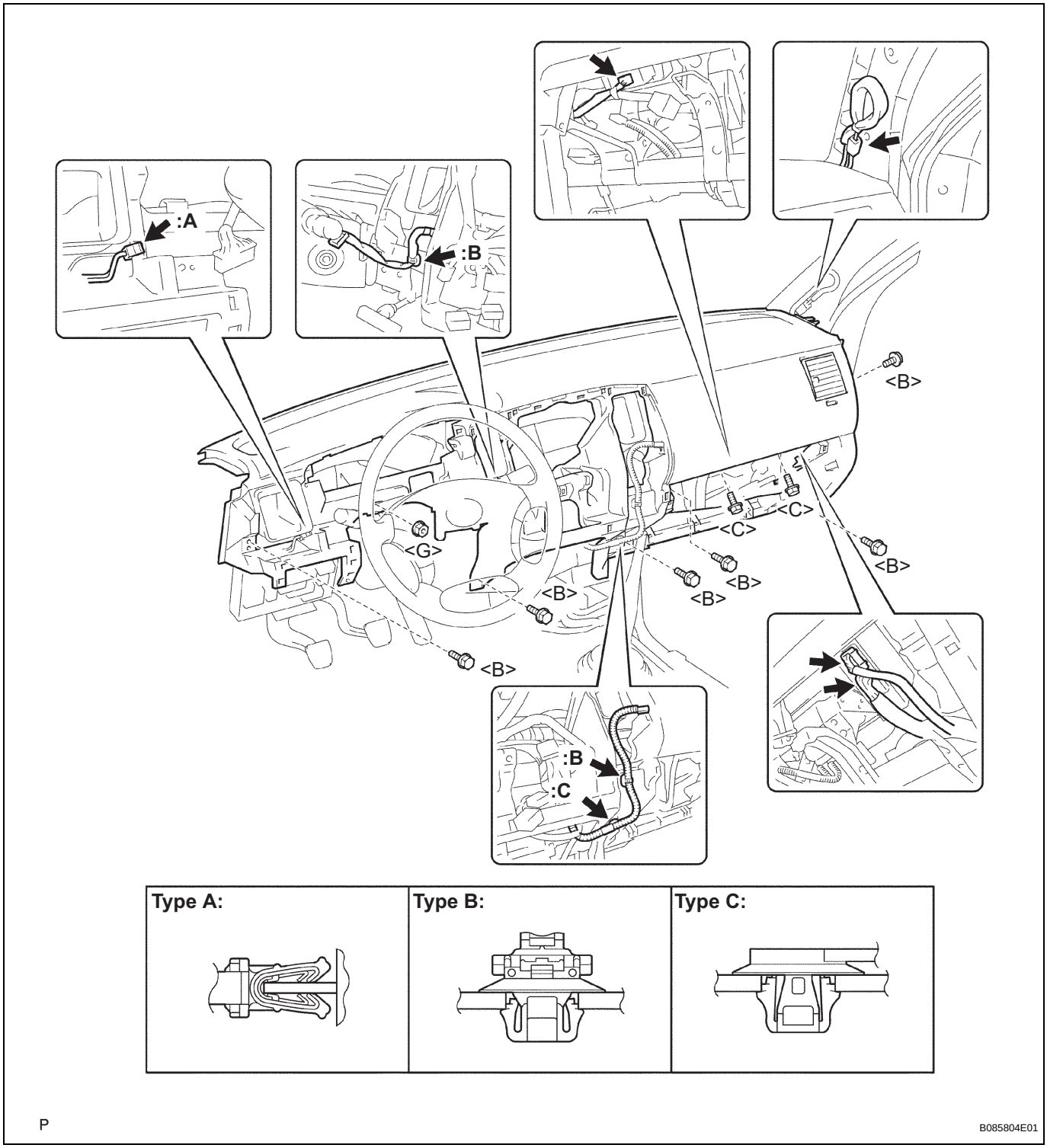

IP

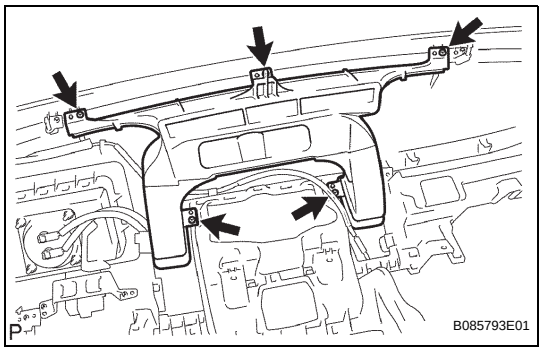

48. REMOVE DEFROSTER NOZZLE ASSEMBLY W/ NO.2 HEATER TO REGISTER DUCT

(a) Remove the 5 screws <D> and defroster nozzle assembly w/ No. 2 heater to register duct.

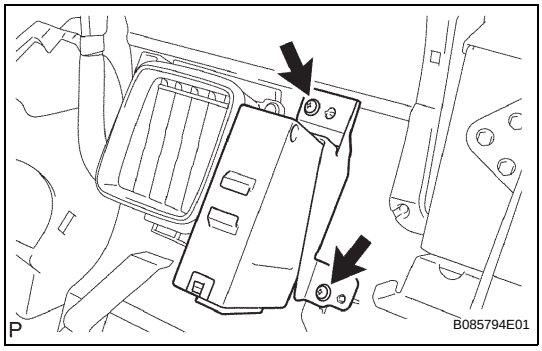

49. REMOVE FOUR WHEEL DRIVE CONTROL ECU

(a) Remove the 2 screws <D> and four wheel drive control ECU.

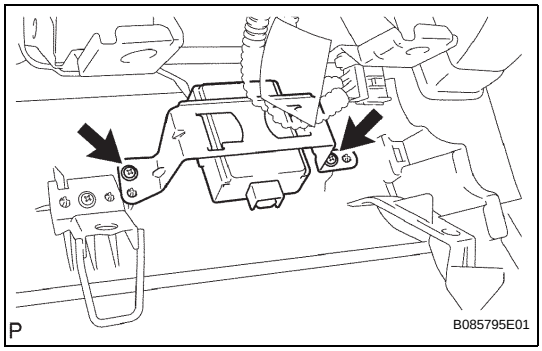

50. REMOVE DOOR CONTROL RECEIVER

(a) Remove the 2 screws <D> and door control receiver.

51. REMOVE FRONT PASSENGER AIRBAG ASSEMBLY (See page RS-577)

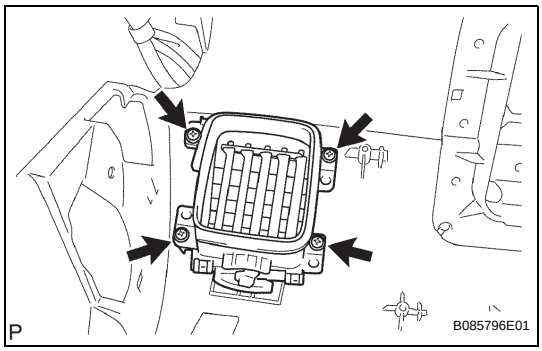

52. REMOVE NO.1 INSTRUMENT PANEL REGISTER ASSEMBLY

(a) Remove the 4 screws <D> and No. 1 instrument panel register assembly.

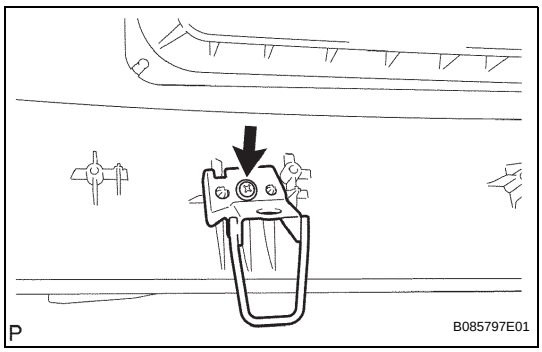

53. REMOVE INSTRUMENT PANEL CENTER BRACKET SUB-ASSEMBLY

(a) Remove the screw <D> and instrument panel center bracket sub-assembly center.

54. REMOVE ANTENNA CORD SUB-ASSEMBLY (See page AV-94)

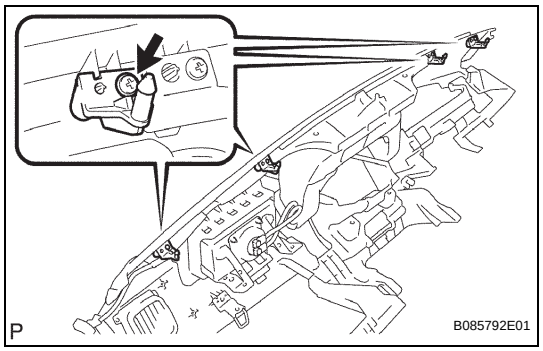

55. REMOVE NO. 1 INSTRUMENT PANEL PIN

(a) Remove the 4 screws <D> and the 4 No. 1 instrument panel pins.

56. REMOVE INSTRUMENT PANEL CUSHION

57. REMOVE INSTRUMENT PANEL SUB-ASSEMBLY

CHECK FOR INTERMITTENT PROBLEMS

HINT:
Intelligent tester only:
Inspect the vehicle's ECM using check mode. Intermittent problems are easier to detect with a intelligent tester when the ECM is in check mode. In check mode, the ECM uses 1 trip detection logic, which is more sensitive to malfunctions than normal mode (default), which uses 2 trip detection logic.

1. Clear DTCs (see page ES-40).
2. Switch the ECM from normal mode to check mode using a intelligent tester (see page ES-43).
3. Perform a simulation test (see page IN-34).
4. Check and wiggle the harness(es), connector(s) and terminal(s) (see page IN-34).

BASIC INSPECTION

When a malfunction is not confirmed by the DTC check, troubleshooting should be carried out in all circuits considered to be possible causes of the problem. In many cases, by carrying out the basic engine check shown in the following flowchart, the location of the problem can be found quickly and efficiently. Therefore, using this check is essential when engine troubleshooting.

1 CHECK BATTERY VOLTAGE

NOTICE:
Carry out this check with the engine stopped and ignition switch OFF.

Result	Proceed To
11 V or more	OK
Below 11 V	NG

NG → **CHARGE OR REPLACE BATTERY**

OK

2 CHECK WHETHER ENGINE WILL CRANK

NG → **PROCEED TO PROBLEM SYMPTOMS TABLE**

OK

3 CHECK WHETHER ENGINE STARTS

NG → **GO TO STEP 6**

OK

4 CHECK AIR FILTER

(a) Visually check that the air filter is not excessively contaminated with dirt or oil.

NG → **REPLACE AIR FILTER**

OK

5 CHECK IDLING SPEED

HINT:
Refer to Engine Mechanical (See page EM-2).

NG → PROCEED TO PROBLEM SYMPTOMS TABLE

OK

6	CHECK FUEL PRESSURE

HINT:
Refer to Fuel System (See page FU-6).

NG → PROCEED TO FUEL SYSTEM AND CONTINUE TROUBLESHOOTING

OK

ES

7	CHECK FOR SPARK

HINT:
Refer to Ignition System (See page IG-3).

NG → PROCEED TO IGNITION SYSTEM AND CONTINUE TROUBLESHOOTING

OK

PROCEED TO PROBLEM SYMPTOMS TABLE

REGISTRATION

NOTICE:
The Vehicle Identification Number (VIN) must be input into the replacement ECM.
HINT:
The VIN is in the form of a 17-digit alphanumeric vehicle identification number. A intelligent tester is required to register the VIN.

1. DESCRIPTION

This registration section consists of three parts, Input Instructions, Read VIN and Write VIN.

(a) Input Instructions: Explains the general VIN input instructions using a intelligent tester.

(b) Read VIN: Explains the VIN reading process in a flowchart. This process allows the VIN stored in the ECM to be read, in order to confirm that the two VINs, provided with the vehicle and stored in the vehicle's ECM, are the same.

(c) Write VIN: Explains the VIN writing process in a flowchart. This process allows the VIN to be input into the ECM. If the ECM is changed, or the VIN and VIN do not match, the VIN can be registered, or overwritten in the ECM by following this procedure.

2. INPUT INSTRUCTIONS

(a) Intelligent tester
  (1) The arrow buttons (UP, DOWN, RIGHT and LEFT) and numerical buttons (0 to 9) are used, in order to input the VIN.

(b) Cursor Operation
  (1) To move the cursor around the tester screen, press the RIGHT and LEFT buttons.

(c) Alphabetical Character Input
  (1) Press the UP and DOWN buttons to select the desired alphabetical character.
  (2) After selection, the cursor should move.

(d) Numeric Character Input
  (1) Press the numerical button corresponding to the number that you want to input.
  (2) After input, the cursor should move.
  HINT:
  Numerical characters can be selected by using the UP and DOWN buttons.

(e) Correction
  (1) When correcting the input character(s), put the cursor onto the character using the RIGHT or LEFT buttons.
  (2) Select or input the correct character using the UP/DOWN buttons, or the numerical buttons.

(f) Finishing Input Operation
  (1) Make sure that the input VIN matches the vehicle VIN after input.
  (2) Press the ENTER button on the tester.

3. READ VIN

(a) Explains the VIN reading process in a flowchart. Reading the VIN stored in the ECM is necessary when comparing it to the VIN provided with the vehicle.
(b) Read VIN using the intelligent tester.
(c) Check the vehicle's VIN.
(d) Connect the intelligent tester to the DLC3.
(e) Turn the ignition switch to ON.
(f) Turn the tester ON.
(g) Enter the following menus: DIAGNOSIS / ENHANCED OBD II / VIN.

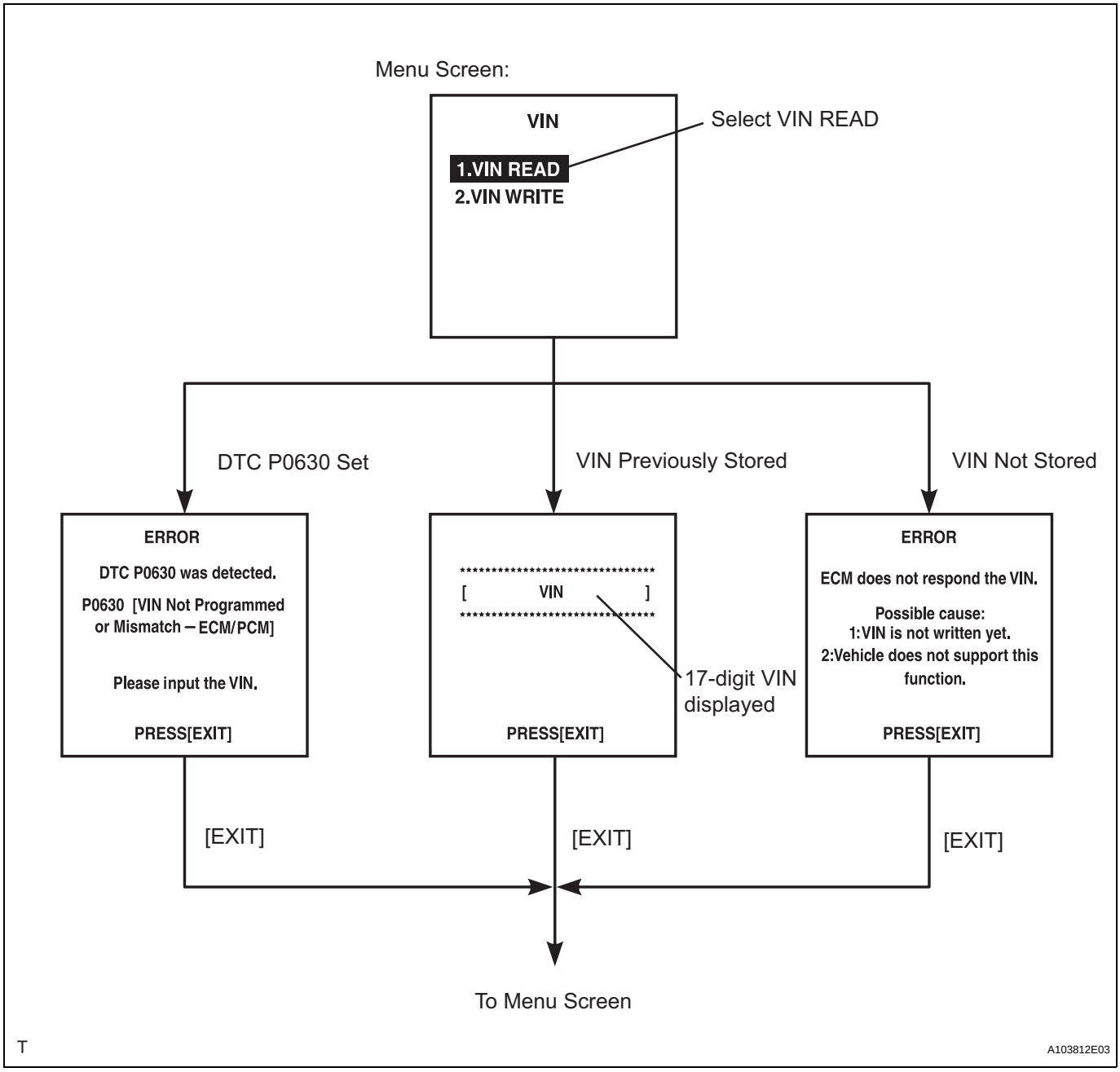

4. WRITE VIN

(a) Explains the VIN writing process in a flowchart. This process allows the VIN to be input into the ECM. If the ECM is changed, or the ECM VIN and Vehicle VIN do not match, the VIN can be registered, or overwritten in the ECM by following this procedure.
(b) Write VIN using the intelligent tester.
(c) Connect the intelligent tester to the DLC3.
(d) Turn the ignition switch to ON.
(e) Turn the tester ON.
(f) Enter the following menus: DIAGNOSIS / ENHANCED OBD II / VIN.

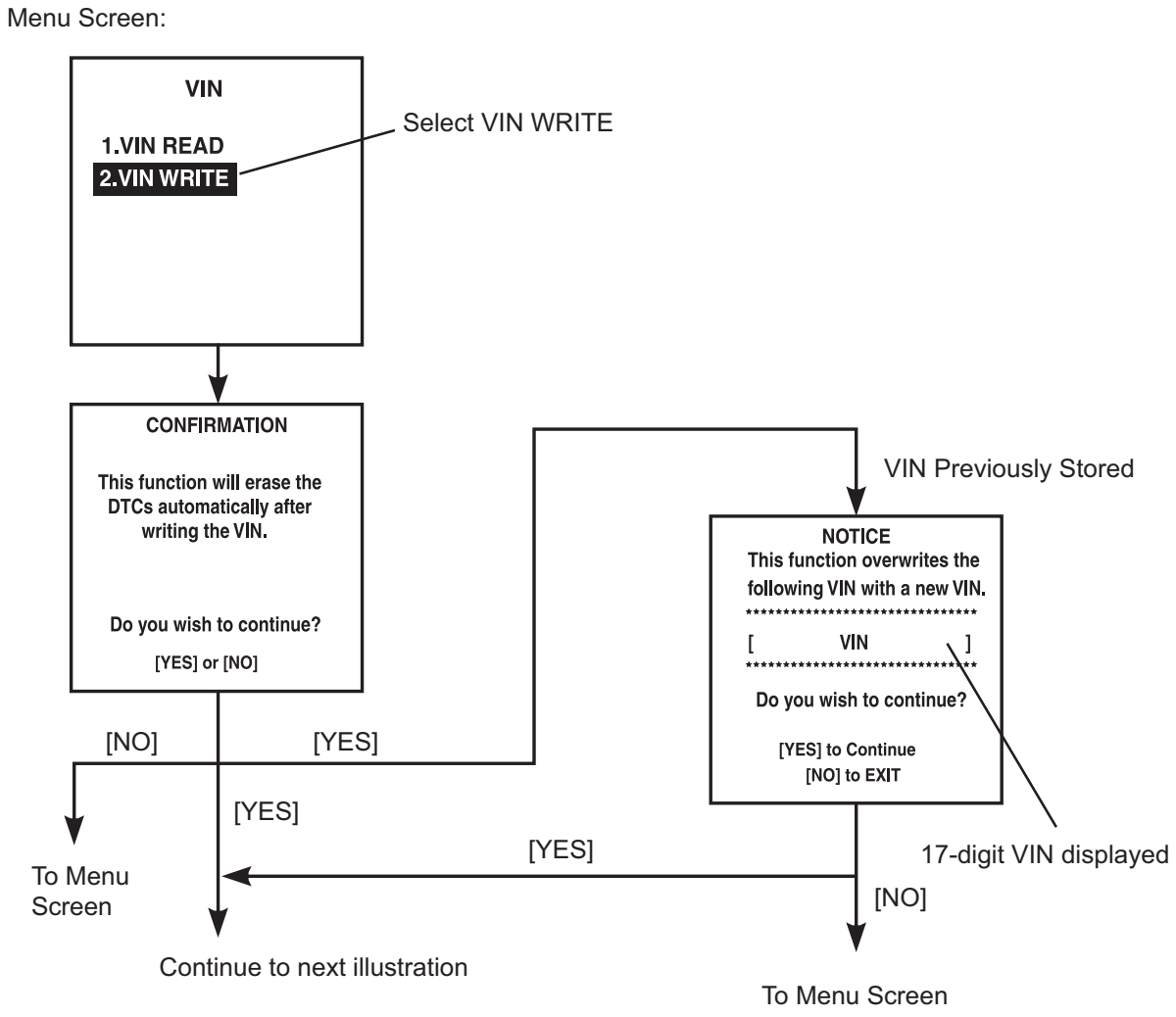

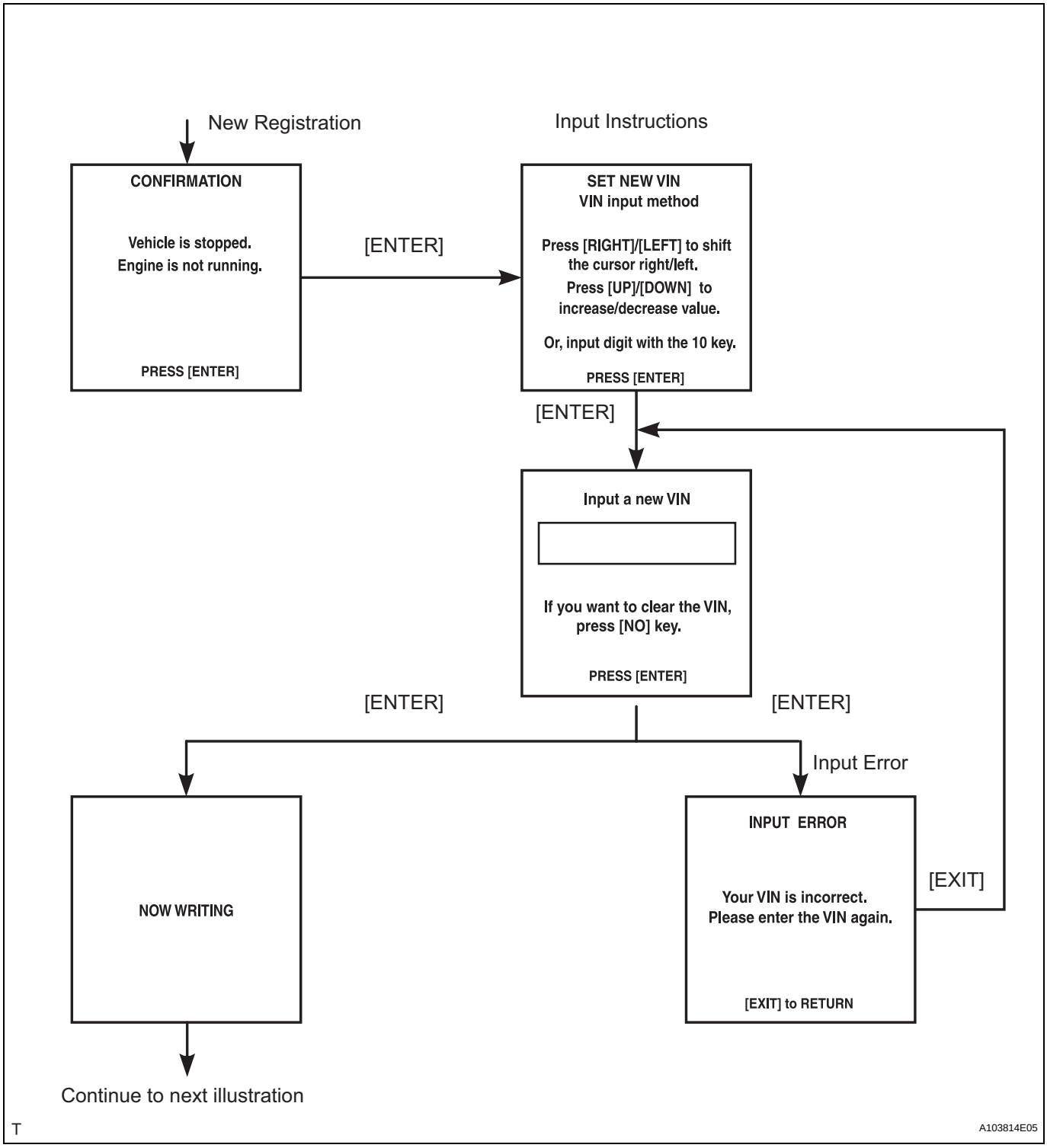
New Registration
Input Instructions
CONFIRMATION
Vehicle is stopped.
Engine is not running.
PRESS [ENTER]
[ENTER]
SET NEW VIN
VIN input method
Press [RIGHT]/[LEFT] to shift the cursor right/left.
Press [UP]/[DOWN] to increase/decrease value.
Or, input digit with the 10 key.
PRESS [ENTER]
[ENTER]
Input a new VIN
If you want to clear the VIN, press [NO] key.
PRESS [ENTER]
[ENTER]
[ENTER]
Input Error
NOW WRITING
INPUT ERROR
Your VIN is incorrect.
Please enter the VIN again.
[EXIT] to RETURN
[EXIT]
Continue to next illustration
T
A103814E05

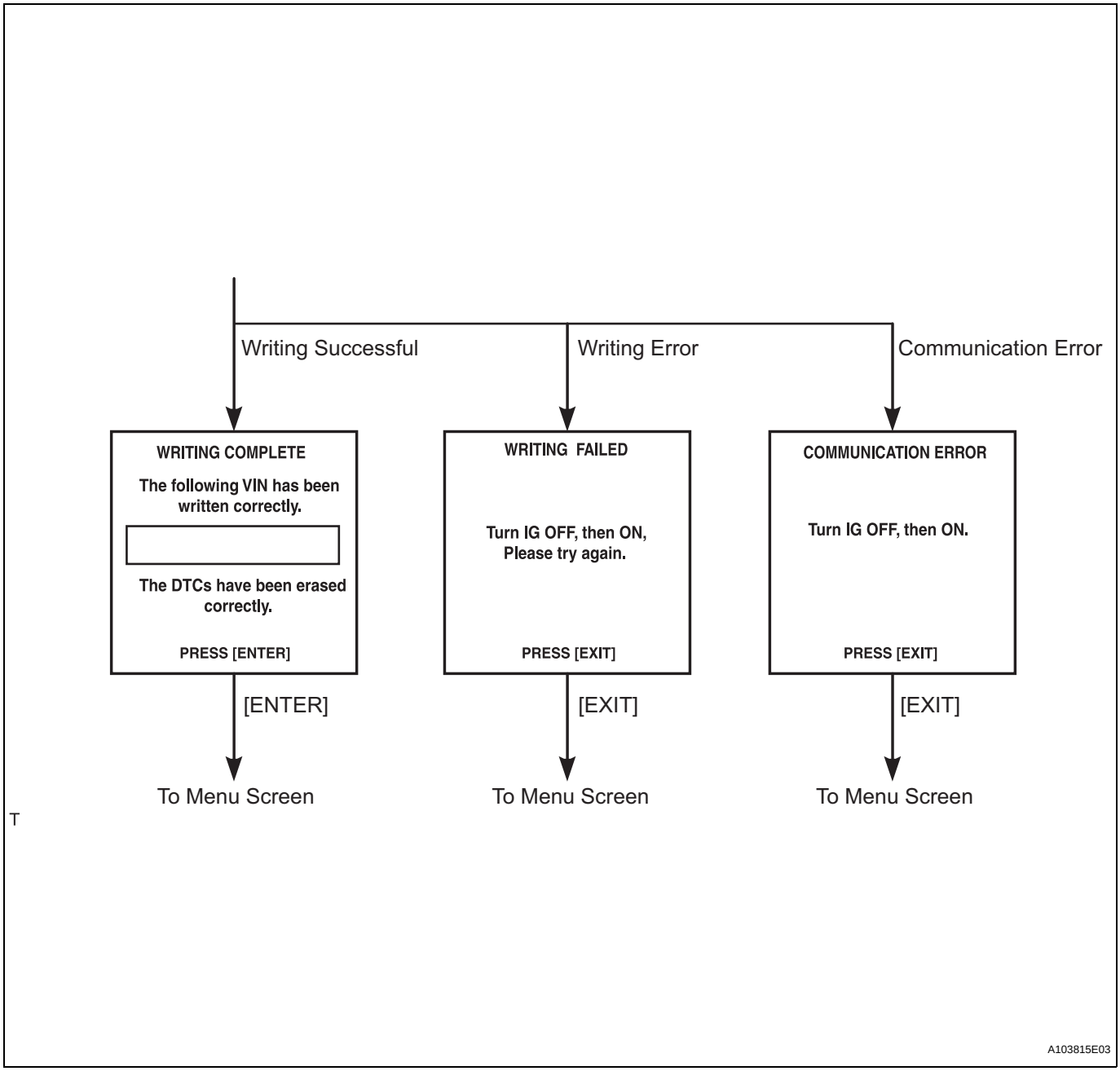
Writing Successful
Writing Error
Communication Error
WRITING COMPLETE
The following VIN has been written correctly.
The DTCs have been erased correctly.
PRESS [ENTER]
WRITING FAILED
Turn IG OFF, then ON, Please try again.
PRESS [EXIT]
COMMUNICATION ERROR
Turn IG OFF, then ON.
PRESS [EXIT]
[ENTER]
[EXIT]
[EXIT]
To Menu Screen
To Menu Screen
To Menu Screen
A103815E03

ES

T

CHECKING MONITOR STATUS

The purpose of the monitor result (mode 06) is to allow access to the results for on-board diagnostic monitoring tests of specific components/systems that are not continuously monitored. Examples are catalyst, evaporative emission (EVAP) and thermostat.

The monitor result allows the intelligent tester to display the monitor status, test value, minimum test value and maximum test limit. These data are displayed after the vehicle has been driven to run the monitor.

When the test value is not between the minimum test limit and maximum test limit, the ECM (PCM) interprets this as a malfunction. When the component is not malfunctioning, if the difference of the test value and test limit is very small, the component will malfunction in the near future. Perform the following instructions to view the monitor status. Although these instructions refer to the Lexus/Toyota diagnostic tester, it can be checked using a generic OBD II scan tool. Refer to your scan tool operator's manual for specific procedures.

1. PERFORM MONITOR DRIVE PATTERN

(a) Connect the intelligent tester to the DLC3.

(b) Turn the ignition switch and intelligent tester ON.

(c) Clear the DTCs (see page ES-40).

(d) Run the vehicle in accordance with the applicable drive pattern described in READINESS MONITOR DRIVE PATTERN (see page ES-25). Do not turn the ignition switch OFF.

NOTICE:

The test results will be lost if the ignition switch is turned OFF.

2. ACCESS MONITOR RESULT

(a) Select from the intelligent tester menus: DIAGNOSIS / ENHANCED OBD II / MONITOR INFO and MONITOR RESULT. The monitor status appears after the component name.

- INCMP: The component has not been monitored yet.
- PASS: The component is functioning normally.
- FAIL: The component is malfunctioning.

(b) Confirm that the component is either PASS or FAIL.

(c) Select the component and press ENTER. The accuracy test value appears if the monitor status is either PASS or FAIL.

3. CHECK COMPONENT STATUS

(a) Compare the test value with the minimum test limit (MIN) and maximum test limit (MAX).

(b) If the test value is between the minimum test limit and maximum test limit, the component is functioning normally. If not, the component is malfunctioning. The test value is usually significantly higher or lower than the test limits. If the test value is on the borderline of the test limits, the component will malfunction in the near future.
HINT:
The monitor result might on rare occasions be PASS even if the malfunction indicator lamp (MIL) is illuminated. This indicates the system malfunctioned on a previous driving cycle. This might be caused by an intermittent problem.

4. MONITOR RESULT INFORMATION

If you use a generic scan tool, multiply the test value by the scaling value listed below.

A/F Sensor Bank 1

Monitor ID	Test ID	Scaling	Unit	Description
$01	$8E	Multiply by 0.001	V	Response rate deterioration level for bank 1 sensor 1
$01	$91	Multiply by 0.004	mA	A/F sensor current

HO2S Bank 1 Sensor 2

Monitor ID	Test ID	Scaling	Unit	Description
$02	$05	Multiply by 0.001	Seconds	Rich - Lean switch time
$02	$06	Multiply by 0.001	Seconds	Lean - Rich switch time
$02	$07	Multiply by 0.001	V	Minimum sensor voltage
$02	$08	Multiply by 0.001	V	Maximum sensor voltage
$02	$8A	Multiply by 1	Time	Frequency of sensor switching
$02	$8F	Multiply by 0.0003	Grams	Maximum oxygen storage capacity

Catalyst - Bank 1

Monitor ID	Test ID	Scaling	Unit	Description
$21	$A9	Multiply by 0.0003	No dimension	Oxygen storage capacity of catalyst - Bank 1

EVAP

Monitor ID	Test ID	Scaling	Unit	Description
$3D	$C9	Multiply by 0.001	kPa	Test value for small leak (P0456)
$3D	$CA	Multiply by 0.001	kPa	Test value for gross leak (P0455)
$3D	$CB	Multiply by 0.001	kPa	Test value for leak detection pump stuck OFF (P2401)
$3D	$CD	Multiply by 0.001	kPa	Test value for leak detection pump stuck ON (P2402)
$3D	$CE	Multiply by 0.001	kPa	Test value for vent valve stuck OFF (P2420)

Monitor ID	Test ID	Scaling	Unit	Description
$3D	$CF	Multiply by 0.001	kPa	Test value for vent valve stuck ON (P2419)
$3D	$D0	Multiply by 0.001	kPa	Test value for reference orifice low flow (P043E)
$3D	$D1	Multiply by 0.001	kPa	Test value for reference orifice high flow (P043F)
$3D	$D4	Multiply by 0.001	kPa	Test value for purge VSV stuck closed (P0441)
$3D	$D5	Multiply by 0.001	kPa	Test value for purge VSV stuck open (P0441)
$3D	$D7	Multiply by 0.001	kPa	Test value for purge flow insufficient (P0441)

Secondary Air Injection (AIR)

Monitor ID	Test ID	Scaling	Unit	Description
$71	$E1	Multiply by 0.01	Gram per second	Test value of AIR insufficient
$71	$E2	Multiply by 0.01	kPa	Test value of AIR pump stuck ON
$71	$E3	Multiply by 0.01	kPa	Test value of AIR pump stuck OFF
$71	$E4	Multiply by 0.01	kPa	Test value of AIR control valve ON
$71	$E5	Multiply by 0.01	kPa	Test value of AIR control valve OFF

Misfire

Monitor ID	Test ID	Scaling	Unit	Description
$A1	$0B	Multiply by 1	Time	Exponential Weighted Moving Average (EWMA) misfire for all cylinders: Misfire counts for last ten driving cycle - Total
$A1	$0C	Multiply by 1	Time	Misfire rate for all cylinders: Misfire counts for last/ current driving cycles - Total
$A2	$0B	Multiply by 1	Time	EWMA misfire for cylinder 1: Misfire counts for last ten driving cycle - Total
$A2	$0C	Multiply by 1	Time	Misfire rate for cylinder 1: Misfire counts for last/ current driving cycles - Total
$A3	$0B	Multiply by 1	Time	EWMA misfire for cylinder 2: Misfire counts for last ten driving cycle - Total
$A3	$0C	Multiply by 1	Time	Misfire rate for cylinder 2: Misfire counts for last/ current driving cycles - Total

Monitor ID	Test ID	Scaling	Unit	Description
$A4	$0B	Multiply by 1	Time	EWMA misfire for cylinder 3: Misfire counts for last ten driving cycle - Total
$A4	$0C	Multiply by 1	Time	Misfire rate for cylinder 3: Misfire counts for last/ current driving cycles - Total
$A5	$0B	Multiply by 1	Time	EWMA misfire for cylinder 4: Misfire counts for last ten driving cycle - Total
$A5	$0C	Multiply by 1	Time	Misfire rate for cylinder 4: Misfire counts for last/ current driving cycles - Total

READINESS MONITOR DRIVE PATTERN

1. PURPOSE OF READINESS TESTS

- The On-Board Diagnostic (OBD II) system is designed to monitor the performance of emission related components, and indicate any detected abnormalities with DTCs (Diagnostic Trouble Codes). Since various components need to be monitored during different driving conditions, the OBD II system is designed to run separate monitoring programs called Readiness Monitors.
- The intelligent tester software must be version 9.0 or newer to view the Readiness Monitor status. To view the status, select the following menu items: DIAGNOSIS / ENHANCED OBD II / MONITOR INFO / MONITOR STATUS.
- When the Readiness Monitor status reads COMPL (complete), the necessary conditions have been met for running the performance tests for that Readiness Monitor.
- A generic OBD ll scan tool can also be used to view the Readiness Monitor status.

HINT:
Many state Inspection and Maintenance (I/M) programs require a vehicle's Readiness Monitor status to show COMPL before beginning emission tests.
The Readiness Monitor will be reset to INCMPL (incomplete) if:

- The ECM has lost battery power or blown a fuse.
- DTCs have been cleared.
- The conditions for running the Readiness Monitor have not been met.

If the Readiness Monitor status shows INCMPL, follow the appropriate Readiness Monitor Drive Pattern to change the status to COMPL.

CAUTION:
Strictly observe posted speed limits, traffic laws, and road conditions when performing these drive patterns.
NOTICE:
These drive patterns represent the fastest method of satisfying all conditions necessary to achieve complete status for each specific Readiness Monitor.
In the event of a drive pattern being interrupted (possibly due to factors such as traffic conditions), the drive pattern can be resumed. In most cases, the Readiness Monitor will still achieve complete status upon completion of the drive pattern.
To ensure completion of the Readiness Monitors, avoid sudden changes in vehicle load and speed (driving up and down hills and/or sudden acceleration).

Contents

Steps	Section Titles
2	Catalyst Monitor (Active Air-Fuel Ratio Control Type)

Steps	Section Titles
3	EVAP System Monitor (Key-Off Type)
4	Air-Fuel Ratio (A/F) and Heated Oxygen (HO2) Sensor Monitors (Active Air-Fuel Ratio Control Type)
5	Air-Fuel Ratio (A/F) and Heated Oxygen (HO2) Sensor Heater Monitors (Front A/F and Rear HO2 Sensor Type)

2. CATALYST MONITOR (ACTIVE AIR-FUEL RATIO CONTROL TYPE)

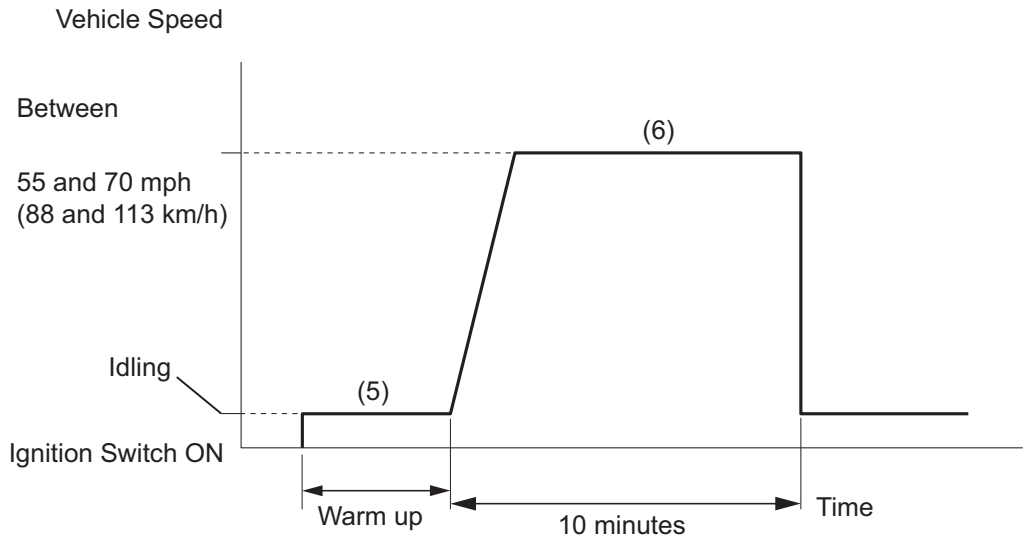

(a) Preconditions
The monitor will not run unless:
- The MIL is OFF

(b) Drive Pattern
(1) Connect a intelligent tester or OBD II scan tool to the DLC3.
(2) Turn the ignition switch to ON.
(3) Turn the tester or scan tool ON.
(4) Clear DTCs (where set) (see page ES-40).
(5) Start the engine and warm it up.
(6) Drive the vehicle at between 55 mph and 70 mph (88 km/h and 113 km/h) for at least 10 minutes.

(c) Monitor Status
(1) Check the Readiness Monitor status displayed on the tester or scan tool.
(2) If the status does not switch to COMPL (complete), extend the driving time.

3. EVAP SYSTEM MONITOR (KEY-OFF TYPE)

(a) Preconditions
The monitor will not run unless:
- The fuel tank is less than 90 % full.

- The altitude is less than 8,000 ft (2,450 m).
- The vehicle is at stationary.
- The engine coolant temperature is between 4.4°C and 35°C (40°F to 95°F).
- The intake air temperature is between 4.4°C and 35°C (40°F to 95°F).
- Vehicle was driven in the city area (or on free-way) for 10 minutes or more.

(b) Monitor Conditions

(1) Turn the ignition switch to OFF and wait for 6 hours.

HINT:

Do not start the engine until checking Readiness Monitor status. If the engine is started, the step described above must be repeated.

(c) Monitor Status

(1) Connect the intelligent tester to the DLC3.
(2) Turn the ignition switch to ON.
(3) Turn the tester or scan tool ON.
(4) Check the Readiness Monitor status displayed on the tester or scan tool.

If the status does not switch to COMPL (complete), restart the engine, make sure that the preconditions have been met, and then perform the Monitor Conditions again.

4. AIR-FUEL RATIO (A/F) AND HEATED OXYGEN (HO2) SENSOR MONITORS (ACTIVE AIR-FUEL RATIO CONTROL TYPE)

(a) Preconditions

The monitor will not run unless:

- 2 minutes or more have elapsed since the engine was started.
- The Engine Coolant Temperature (ECT) is 75°C (167°F) or more.
- Cumulative driving time at a vehicle speed of 30 mph (48 km/h) or more exceeds 6 minutes.
- Air-fuel ratio feedback control is performed.
- Fuel-cut control is performed for 8 seconds or more (for the Rear HO2 Sensor Monitor)

(b) Drive Pattern for front A/F sensor and HO2 sensor

(1) Connect a intelligent tester to the DLC3.
(2) Turn the ignition switch to ON.
(3) Turn the tester ON.
(4) Clear DTCs (see page ES-40).
(5) Start the engine, and warm it up until the ECT reaches 75°C (167°F) or higher.
(6) Drive the vehicle at between 38 mph (60 km/h) and 75 mph (120 km/h) for at least 10 minutes.
(7) Change the transmission to 2nd gear.
(8) Accelerate the vehicle to 40 mph (64 km/h) or more by depressing the accelerator pedal for at least 10 seconds.

(9) Soon after performing step (8) above, release the accelerator pedal for at least 4 seconds without depressing the brake pedal, in order to execute fuel-cut control.
(10) Allow the vehicle to decelerate until the vehicle speed declines to less than 6 mph (10 km/h).
(11) Repeat steps from (8) through (10) above at least 3 times in one driving cycle.

(c) Monitor Status
(1) Check the Readiness Monitor status displayed on the tester.
(2) If the status does not switch to COMPL (complete), make sure that the preconditions have been met, and then perform steps from (5) through (11) in Drive Pattern above.

ES

Monitor Drive Pattern

ETC: 75°C (167°F) or higher

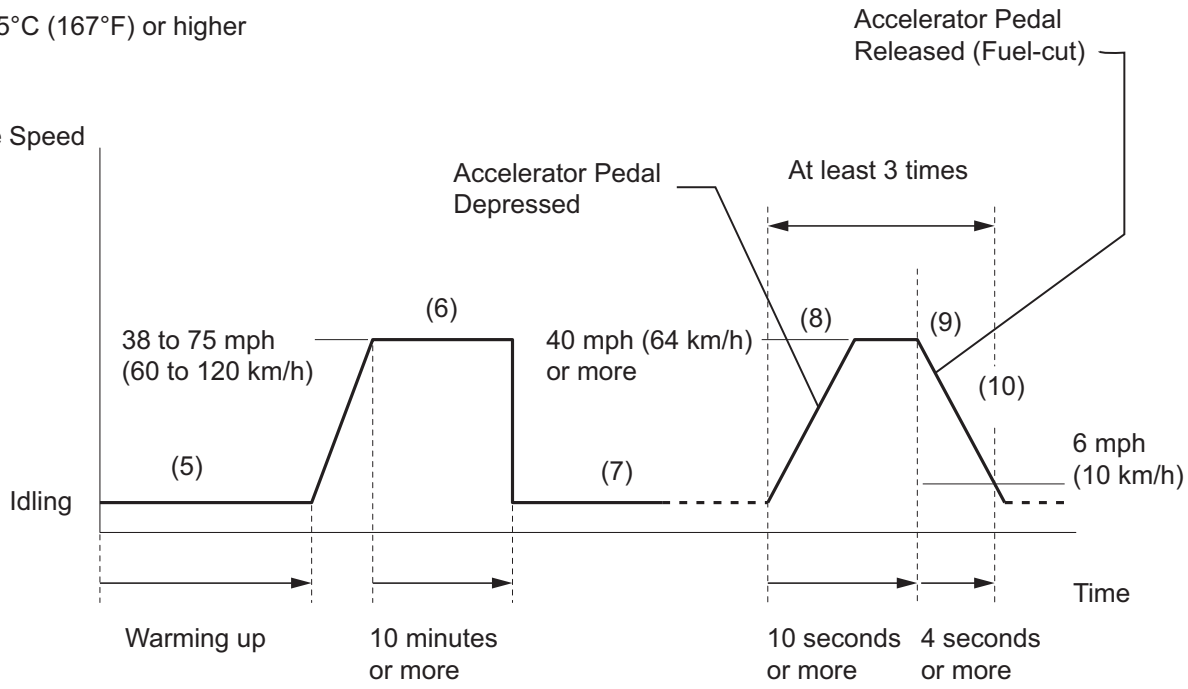

P

A115374E02

5. AIR-FUEL RATIO (A/F) AND HEATED OXYGEN (HO2) SENSOR HEATER MONITORS (FRONT A/F AND REAR HO2 SENSOR TYPE)

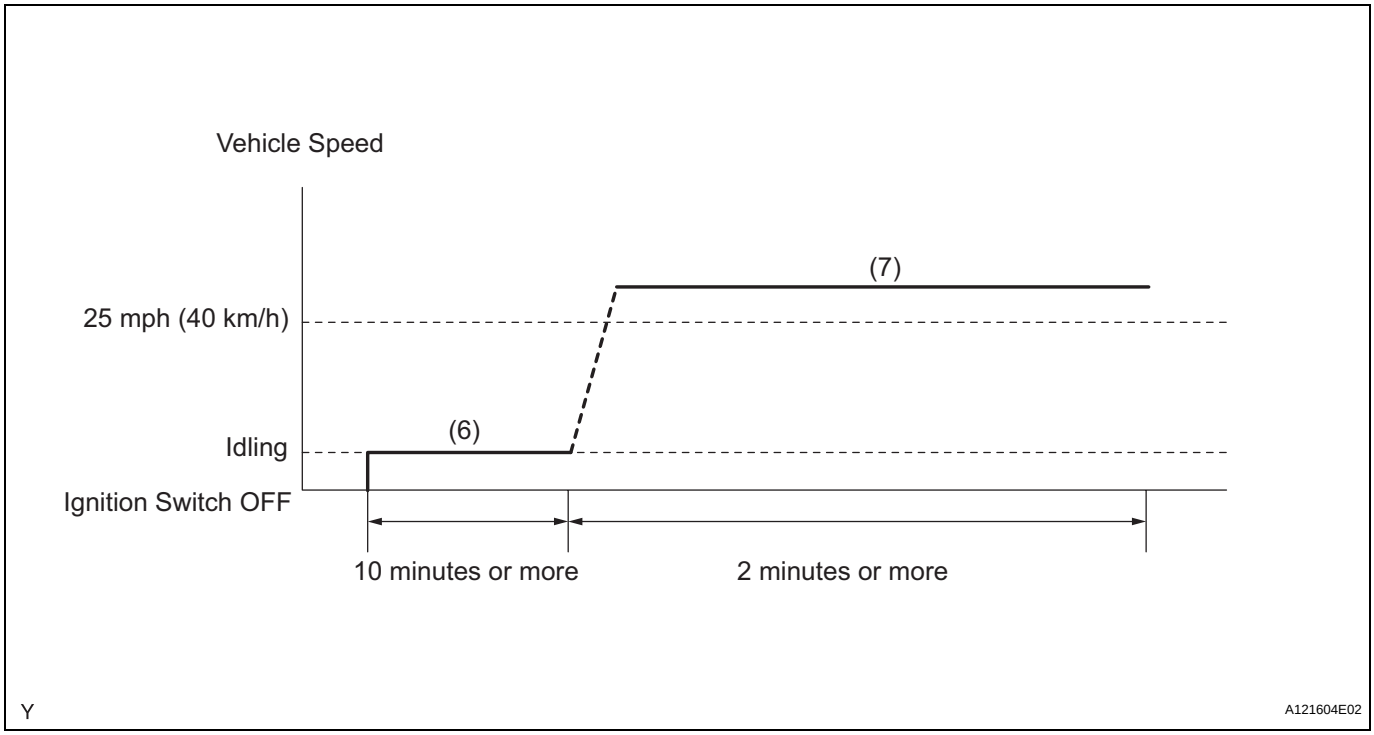

(a) Preconditions
The monitor will not run unless:
- The MIL is OFF

(b) Drive Pattern
(1) Connect a intelligent tester or the OBD II scan tool to the DLC3.
(2) Turn the ignition switch to ON.
(3) Turn the tester or scan tool ON.
(4) Clear DTCs (where set) (see page ES-40).
(5) Start the engine.
(6) Allow the engine to idle for 10 minutes or more.
(7) Drive the vehicle at 25 mph (40 km/h) or more for at least 2 minutes.

(c) Monitor Status
(1) Check the Readiness Monitor status displayed on the tester or scan tool.

If the status does not switch to COMPL (complete), make sure that the preconditions have been met, and repeat steps through (5) to (7) described in the Drive Pattern above.

PROBLEM SYMPTOMS TABLE

HINT:
Use the table below to help determine the cause of the problem symptom. The potential cases of the symptoms are listed in order of probability in the "Suspected Area" column of the table. Check each symptom by checking the suspected areas in the order they are listed. Replace parts as necessary.

Symptom	Suspected area	See page
Engine does not crank (Does not start)	1. Immobilizer system	EI-3
	2. Starter	ST-6
	3. STARTER relay	ST-12
No initial combustion (Does not start)	1. ECM power source circuit	ES-425
	2. Fuel pump control circuit	ES-433
	3. VC output circuit	ES-430
	4. ECM	ES-467
Engine cranks normally but difficult to start	1. Fuel pump control circuit	ES-433
	2. Compression	EM-3
Difficult to start with cold engine	1. Starter signal circuit	ES-262
	2. Fuel pump control circuit	ES-433
	3. Spark plug	IG-4
	4. Ignition system	IG-3
	5. Injector	FU-13
Difficult to start with warm engine	1. Starter signal circuit	ES-262
	2. Fuel pump control circuit	ES-433
	3. Spark plug	IG-4
	4. Ignition system	IG-3
	5. Injector	FU-13
High engine idling speed (Poor idling)	1. A/C signal circuit (compressor circuit)	AC-5
	2. ECM power source circuit	ES-425
	3. Electronic throttle control system	ES-452
	4. Air induction system	IT-3
	5. PCV hose	EC-23
Low engine idling speed (Poor idling)	1. A/C signal circuit (compressor circuit)	AC-5
	2. Fuel pump control circuit	ES-433
	3. Electronic throttle control system	ES-452
	4. Air induction system	IT-3
	5. PCV hose	EC-23
Rough idling (Poor idling)	1. Compression	EM-3
	2. Fuel pump control circuit	ES-433
	3. Electronic throttle control system	ES-452
	4. Air induction system	IT-3
	5. PCV hose	EC-23
	6. Mass air flow meter	ES-442

Symptom	Suspected area	See page
Hunting (Poor idling)	1. ECM power source circuit	ES-425
	2. Fuel pump control circuit	ES-433
	3. Spark plug	IG-4
	4. Ignition system	IG-3
	5. Injector	FU-13
	6. Electronic throttle control system	ES-452
	7. Air induction system	IT-3
	8. PCV hose	EC-23
Hesitation/Poor acceleration (Poor driveability)	1. Fuel pump control circuit	ES-433
	2. A/T faulty*	AT-8
	3. Spark plug	IG-4
	4. Ignition system	IG-3
	5. Injector	FU-13
	6. Mass air flow meter	ES-442
Surging (Poor driveability)	1. Fuel pump control circuit	ES-433
	2. Spark plug	IG-4
	3. Ignition system	IG-3
	4. Injector	FU-13
	5. Mass air flow meter	ES-442
Engine stalls soon after starting	1. Fuel pump control circuit	ES-433
	2. Spark plug	IG-4
	3. Ignition system	IG-3
	4. Injector	FU-13
Engine stalls during A/C operation	1. A/C signal circuit (Compressor circuit)	AC-5
	2. ECM	ES-467
Unable/difficult to refuel	1. Refueling valve (canister)	EC-20

*: Automatic Transmission models only

TERMINALS OF ECM

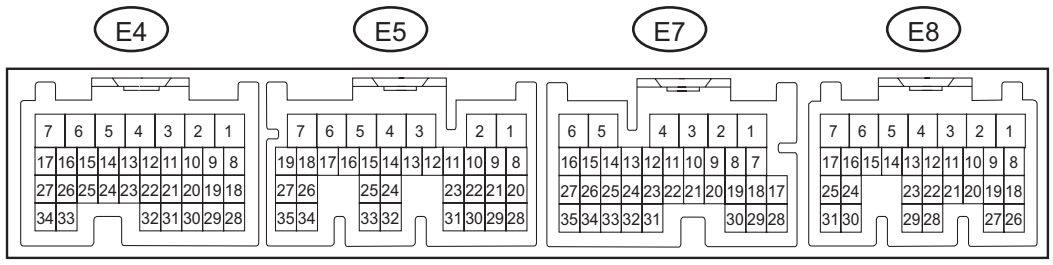

Y

C121776E01

HINT:
The standard normal voltage between each pair of ECM terminals is shown in the table below. The appropriate conditions for checking each pair of terminals are also indicated. The result of checks should be compared with the standard normal voltage for that pair of terminals, displayed in the STD Voltage column. The illustration above can be used as a reference to identify the ECM terminal locations.

Symbols (Terminals No.)	Wiring Colors	Terminal Descriptions	Conditions	STD Voltages
BATT (E8-3) - E1 (E4-3)	L - BR	Battery (for measuring battery voltage and for ECM memory)	Always	9 to 14 V
+BM (E8-7) - E1 (E4-3)	LG - BR	Power source of throttle motor	Always	9 to 14 V
IGSW (E8-9) - E1 (E4-3)	O - BR	Ignition switch	Ignition switch ON	9 to 14 V
+B (E8-1) - E1 (E4-3)	B - BR	Power source of ECM	Ignition switch ON	9 to 14 V
MREL (E8-8) - E1 (E4-3)	G-W - BR	EFI relay	Ignition switch ON	9 to 14 V
VC (E4-18) - E2 (E4-28)	L - BR	Power source of sensor (specific voltage)	Ignition switch ON	4.5 to 5.0 V
VTA1 (E4-20) - E2 (E4-28)	G-B - BR	Throttle position sensor (for engine control)	Ignition switch ON, Accelerator pedal fully released	0.5 to 1.1 V
VTA1 (E4-20) - E2 (E4-28)	G-B - BR	Throttle position sensor (for engine control)	Ignition switch ON, Accelerator pedal fully depressed	3.3 to 4.9 V
VTA2 (E4-19) - E2 (E4-28)	G-W - BR	Throttle position sensor (for sensor malfunction detection)	Ignition switch ON, Accelerator pedal fully released	2.1 to 3.1 V
VTA2 (E4-19) - E2 (E4-28)	G-W - BR	Throttle position sensor (for sensor malfunction detection)	Ignition switch ON, Accelerator pedal fully depressed	4.5 to 5.0 V
VPA (E8-18) - EPA (E8-20)	R-Y - LG-B	Accelerator pedal position sensor (for engine control)	Ignition switch ON, Accelerator pedal fully released	0.5 to 1.1 V
VPA (E8-18) - EPA (E8-20)	R-Y - LG-B	Accelerator pedal position sensor (for engine control)	Ignition switch ON, Accelerator pedal fully depressed	2.6 to 4.5 V
VPA2 (E8-19) - EPA2 (E8-21)	GR-B - R-B	Accelerator pedal position sensor (for sensor malfunction detection)	Ignition switch ON, Accelerator pedal fully released	1.2 to 2.0 V
VPA2 (E8-19) - EPA2 (E8-21)	GR-B - R-B	Accelerator pedal position sensor (for sensor malfunction detection)	Ignition switch ON, Accelerator pedal fully depressed	3.4 to 5.0 V
VCPA (E8-26) - EPA (E8-20)	R - LG-B	Power source of accelerator pedal position sensor (for VPA)	Ignition switch ON	4.5 to 5.0 V
VCP2 (E8-27) - EPA2 (E8-21)	L-W - R-B	Power source of accelerator pedal position sensor (for VPA2)	Ignition switch ON	4.5 to 5.0 V

Symbols (Terminals No.)	Wiring Colors	Terminal Descriptions	Conditions	STD Voltages
VG (E5-28) - E2G (E5-30)	R-Y - R-W	Mass air flow meter	Idling, Shift position P or N, A/C switch OFF	0.5 to 3.0 V
THA (E5-29) - E2 (E4-28)	R-L - BR	Intake air temperature sensor	Idling, Intake air temperature 20°C (68°F)	0.5 to 3.4 V
THW (E4-32) - E2 (E4-28)	Y-B - BR	Engine coolant temperature sensor	Idling, Engine coolant temperature 80°C (176°F)	0.2 to 1.0 V
#10 (E5-6) - E01 (E4-7) #20 (E5-5) - E01 (E4-7) #30 (E5-2) - E01 (E4-7) #40 (E5-1) - E01 (E4-7)	R-L - W-B B - W-B R - W-B G - W-B	Injector	Ignition switch ON	9 to 14 V
#10 (E5-6) - E01 (E4-7) #20 (E5-5) - E01 (E4-7) #30 (E5-2) - E01 (E4-7) #40 (E5-1) - E01 (E4-7)	R-L - W-B B - W-B R - W-B G - W-B	Injector	Idling	Pulse generation (see waveform 1)
IGT1 (E4-17) - E1 (E4-3) IGT2 (E4-16) - E1 (E4-3) IGT3 (E4-15) - E1 (E4-3) IGT4 (E4-14) - E1 (E4-3)	P - BR P-L - BR LG - BR LG-B - BR	Ignition coil with igniter (ignition signal)	Idling	Pulse generation (see waveform 2)
IGF1 (E4-23) - E1 (E4-3)	W-R - BR	Ignition coil with igniter (ignition confirmation signal)	Ignition switch ON	4.5 to 5.0 V
IGF1 (E4-23) - E1 (E4-3)	W-R - BR	Ignition coil with igniter (ignition confirmation signal)	Idling	Pulse generation (see waveform 2)
G2 (E4-26) - NE- (E4-34)	L - G	Camshaft position sensor	Idling	Pulse generation (see waveform 3)
NE+ (E4-27) - NE- (E4-34)	R - G	Crankshaft position sensor	Idling	Pulse generation (see waveform 3)
FC (E8-25) - E1 (E4-3)	L-B - BR	Fuel pump control	Ignition switch ON	9 to 14 V
FC (E8-25) - E1 (E4-3)	L-B - BR	Fuel pump control	Idling	Below 1.5 V
M+ (E4-5) - ME01 (E5-3)	P - W-B	Throttle actuator	Idling with warm engine	Pulse generation (see waveform 4)
M- (E4-4) - ME01 (E5-3)	L - W-B	Throttle actuator	Idling with warm engine	Pulse generation (see waveform 5)
A1A+ (E4-21) - E1 (E4-3)	P - BR	A/F sensor	Always (Ignition switch ON)	3.3 V*1
A1A- (E4-31) - E1 (E4-3)	L - BR	A/F sensor	Always (Ignition switch ON)	3.0 V*1
OX1B (E4-25) - E2 (E4-28)	W - BR	Heated oxygen sensor	Engine speed maintained 2,500 rpm for 2 minutes after warming up sensor	Pulse generation (see waveform 6)
HA1A (E4-1) - E04 (E5-7)	R - W-B	A/F sensor heater	Idling	Below 3.0 V
HA1A (E4-1) - E04 (E5-7)	R - W-B	A/F sensor heater	Ignition switch ON	9 to 14 V
HT1B (E4-2) - E03 (E5-4)	G - W-B	Heated oxygen sensor heater	Idling	Below 3.0 V
HT1B (E4-2) - E03 (E5-4)	G - W-B	Heated oxygen sensor heater	Ignition switch ON	9 to 14 V
KNK1 (E4-29) - EKNK (E4-30)	B - W	Knock sensor	Maintain engine speed 4,000 rpm after warming up engine	Pulse generation (see waveform 7)
OC1+ (E4-13) - OC1- (E4-12)	L-W - W	Camshaft timing oil control valve (OCV)	Idling	Pulse generation (see waveform 8)
PRG (E5-23) - E01 (E4-7)	Y - W-B	Purge VSV	Ignition switch ON	9 to 14 V
PRG (E5-23) - E01 (E4-7)	Y - W-B	Purge VSV	Idling	Pulse generation (see waveform 9)
VPMP (E8-5) - E1 (E4-3)	V-W - BR	Vent valve (built into canister pump module)	Ignition switch ON	9 to 14 V

Symbols (Terminals No.)	Wiring Colors	Terminal Descriptions	Conditions	STD Voltages
MPMP (E8-6) - E1 (E4-3)	G - BR	Leak detection pump (built into canister pump module)	• Leak detection pump OFF	0 to 3 V
MPMP (E8-6) - E1 (E4-3)	G - BR	Leak detection pump (built into canister pump module)	• Leak detection pump ON	9 to 14 V
PPMP (E8-31) - E2 (E4-28)	GR - BR	Canister pressure sensor (built into canister pump module)	Ignition switch ON	3 to 3.6 V
STA (E8-12) - E1 (E4-3)	B-Y - BR	Starter signal	Shift position N, Ignition switch START	5.5 V or more
STP (E7-4) - E1 (E4-3)	L - BR	Stop light switch	Brake pedal depressed	7.5 to 14 V
STP (E7-4) - E1 (E4-3)	L - BR	Stop light switch	Brake pedal released	Below 1.5 V
ST1- (E8-16) - E1 (E4-3)	V-W - BR	Stop light switch	Ignition switch ON, Brake pedal depressed	Below 1.5 V
ST1- (E8-16) - E1 (E4-3)	V-W - BR	Stop light switch	Ignition switch ON, Brake pedal released	7.5 to 14 V
W (E7-30) - E01 (E4-7)	BR - W-B	MIL	Idling	9 to 14 V
W (E7-30) - E01 (E4-7)	BR - W-B	MIL	Ignition switch ON	Below 3.5 V
ELS (E8-15) - E1 (E4-3)	G - BR	Electric load	Tail light switch ON	7.5 to 14 V
ELS (E8-15) - E1 (E4-3)	G - BR	Electric load	Tail light switch OFF	0 to 1.5 V
ELS2 (E7-20) - E1 (E4-3)	B-W - BR	Electric load	Vehicle stationary, Voltage inverter outputs more than 100 W	9 to 14 V
ELS2 (E7-20) - E1 (E4-3)	B-W - BR	Electric load	Vehicle stationary, Voltage inverter outputs 100 W or less	0 to 1.5 V
TACH (E7-1) - E1 (E4-3)	B-W - BR	Engine speed	Idling	Pulse generation (see waveform 10)
SPD (E7-8) - E1 (E4-3)	V-W - BR	Speed signal from combination meter	Driving at 12 mph (20 km/h)	Pulse generation (see waveform 11)
TC (E7-17) - E1 (E4-3)	P-B - BR	Terminal TC of DLC 3	Ignition switch ON	9 to 14 V
PSW (E5-32) - E1 (E4-3)	G-W - BR	Power steering oil pressure switch	While turning steering wheel	Below 1.5 V
F/PS (E7-32) - E1 (E4-3)	R - BR	Airbag sensor assembly	Idling with warm engine	Pulse generation (see waveform 12)
NSW (E8-30) - E1 (E4-3)	V - BR	Park/Neutral switch signal	IG switch ON and shift lever P or N position	Below 1 V
NSW (E8-30) - E1 (E4-3)	V - BR	Park/Neutral switch signal	IG switch ON and shift lever except P and N	9 to 14 V
*2 CANH (E7-33) - E1 (E4-3)	B - BR	Communication signal with other components	Ignition switch ON	Pulse generation (see waveform 13)
*2 CANL (E7-34) - E1 (E4-3)	W - BR	Communication signal with other components	Ignition switch ON	Pulse generation (see waveform 14)
AIRV (E4-24) - E1 (E4-3)	R-W - BR	Air switching valve for secondary air injection system	Idling	9 to 14 V
AIRP (E4-11) - E1 (E4-3)	Y-R - BR	Air pump control	Idling	9 to 14 V
AIDI (E5-20) - E1 (E4-3)	G-R - BR	Diagnostic information signal for air injection system	Air injection system operates	Pulse generation (see waveform 15)
AIP (E5-22) - E2 (E4-28)	GR - BR	Secondary air injection system pressure signal	Ignition switch ON	4.5 to 5.0 V

*1: The ECM terminal voltage is constant regardless of the output voltage from the sensor.

*2: Only for the vehicle equipped with VSC (see page CA-22).

ES

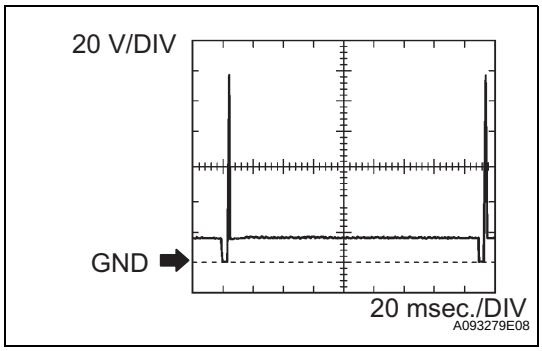

1. WAVEFORM 1

Fuel injector

ECM Terminal Names	Between #10 (to 40) and E01
Tester Ranges	20 V/DIV, 20 msec./DIV
Conditions	Idling

HINT:
The wavelength becomes shorter as the engine rpm increases.

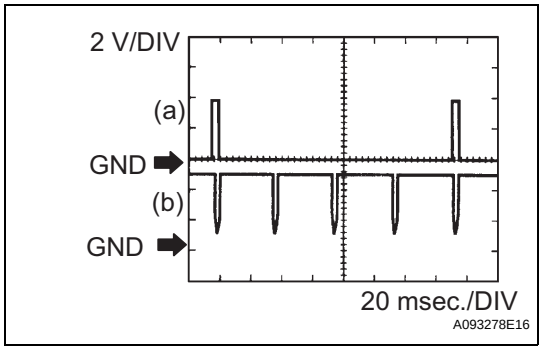

2. WAVEFORM 2

(a) Igniter IGT signal (from ECM to igniter)
(b) Igniter IGF signal (from igniter to ECM)

ECM Terminal Names	(a) Between IGT (1 to 4) and E1 (b) Between IGF1 and E1
Tester Ranges	2 V/DIV, 20 msec./DIV
Conditions	Idling

HINT:
The wavelength becomes shorter as the engine rpm increases.

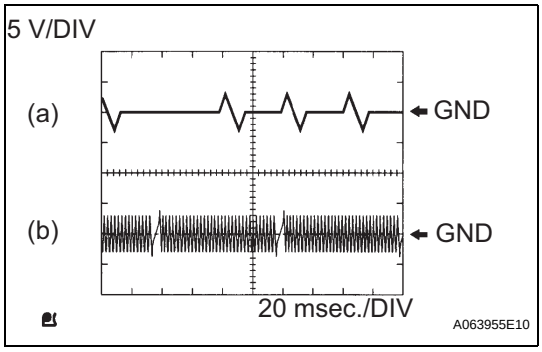

3. WAVEFORM 3

(a) Camshaft position sensor
(b) Crankshaft position sensor

ECM Terminal Names	(a) Between G2+ and NE- (b) Between NE+ and NE-
Tester Ranges	5 V/DIV, 20 msec./DIV
Conditions	Idling

HINT:
The wavelength becomes shorter as the engine rpm increases.

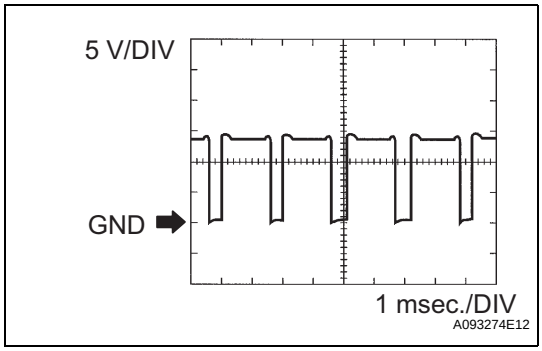

4. WAVEFORM 4

Throttle actuator positive terminal

ECM Terminal Names	Between M+ and ME01
Tester Ranges	5 V/DIV, 1 msec./DIV
Conditions	Idling with warm engine

HINT:
The duty ratio varies depending on the throttle actuator operation.

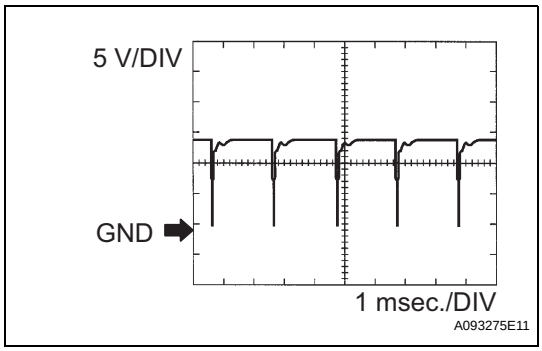

5. WAVEFORM 5

Throttle actuator negative terminal

ECM Terminal Names	Between M- and ME01
Tester Ranges	5 V/DIV, 1 msec./DIV
Conditions	Idling with warm engine

HINT:
The duty ratio varies depending on the throttle actuator operation.

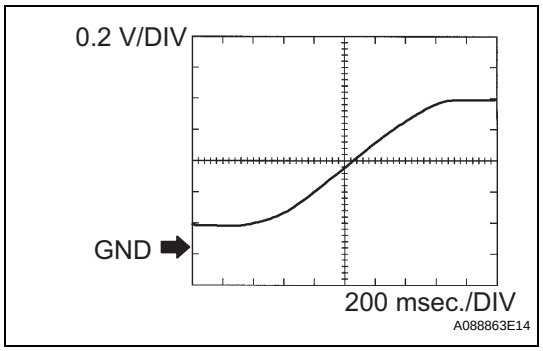

6. WAVEFORM 6

Heated oxygen sensor

ECM Terminal Names	Between OX1B and E2
Tester Ranges	0.2 V/DIV, 200 msec./DIV
Conditions	Engine speed maintained 2,500 rpm for 2 minutes after warming up engine

HINT:
In the DATA LIST, item O2S B1S2 shows the ECM input values from the heated oxygen sensor.

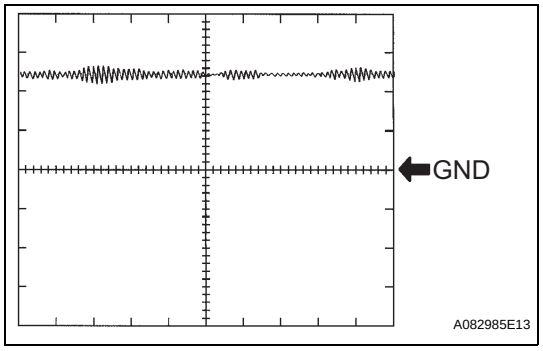

7. WAVEFORM 7

Knock sensor

ECM Terminal Names	Between KNK1 and EKNK
Tester Ranges	0.01 to 10 V/DIV, 0.01 to 10 msec./DIV
Conditions	Engine speed maintained 4,000 rpm after warming up engine

HINT:
- The wavelength becomes shorter as the engine rpm increases.
- The waveforms and amplitudes displayed differ slightly depending on the vehicle.

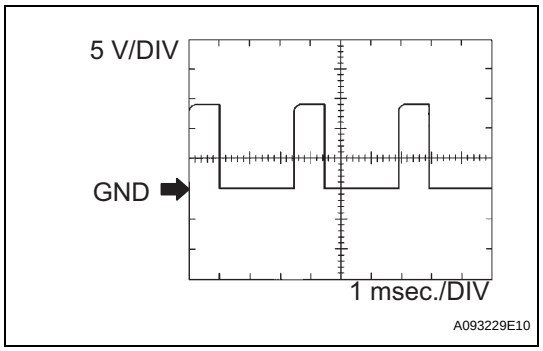

8. WAVEFORM 8

Camshaft timing oil control valve (OCV)

ECM Terminal Names	Between OC1+ and OC1-
Tester Ranges	5 V/DIV, 1 msec./DIV
Conditions	Idling

HINT:
The wavelength becomes shorter as the engine rpm increases.

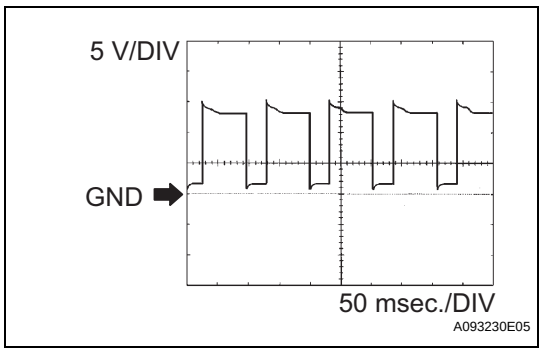

9. WAVEFORM 9

EVAP VSV

ECM Terminal Names	Between PRG and E01
Tester Ranges	5 V/DIV, 50 msec./DIV
Conditions	Idling

HINT:
If the waveform is not similar to the illustration, check the waveform again after idling for 10 minutes or more.

ES

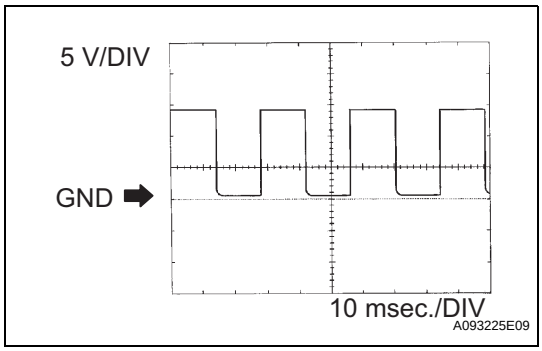

10. WAVEFORM 10

Engine speed signal

ECM Terminal Names	Between TACH and E1
Tester Ranges	5 V/DIV, 10 msec./DIV
Conditions	Idling

HINT:
The wavelength becomes shorter as the engine rpm increases.

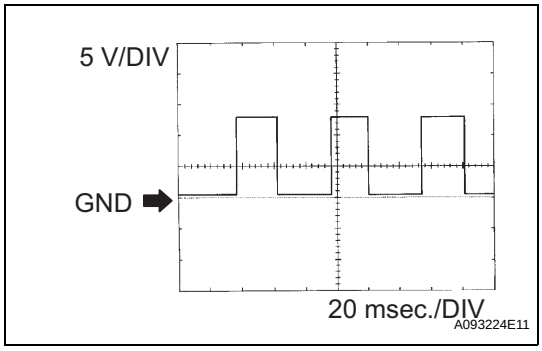

11. WAVEFORM 11

Vehicle speed signal

ECM Terminal Names	Between SPD and E1
Tester Ranges	5 V/DIV, 20 msec./DIV
Conditions	Driving at 12 mph (20 km/h)

HINT:
The wavelength becomes shorter as the vehicle speed increases.

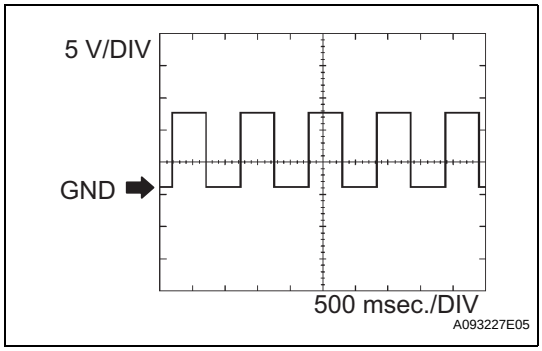

12. WAVEFORM 12

Airbag sensor assembly

ECM Terminal Names	Between F/PS and E1
Tester Ranges	5 V/DIV, 500 msec./DIV
Conditions	Idling with warm engine

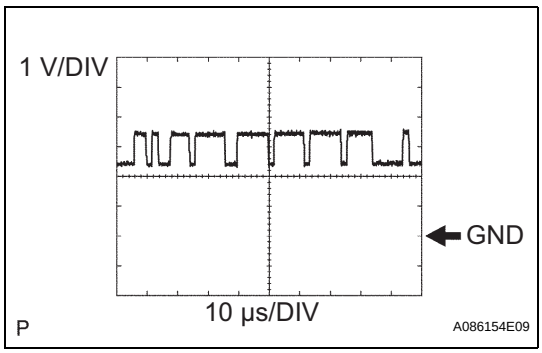

13. WAVEFORM 13

CAN communication signal (reference)

ECM Terminal Names	Between CANH and E1
Tester Ranges	1 V/DIV, 10 µs/DIV
Conditions	Ignition switch ON

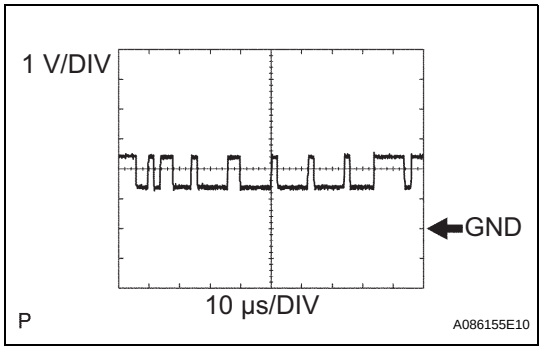

14. WAVEFORM 14

CAN communication signal (reference)

ECM Terminal Names	Between CANL and E1
Tester Ranges	1 V/DIV, 10 µs/DIV
Conditions	Ignition switch ON

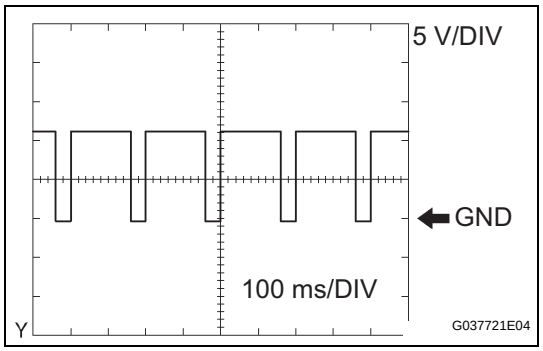

15. WAVEFORM 15

Terminal DI of air injection control driver

ECM Terminal Names	Between AIDI and E1
Tester Ranges	5 V/DIV, 100 ms/DIV
Conditions	Performing ACTIVE TEST using intelligent tester (air injection system)

HINT:

The wavelength changes when the air injection control driver detects malfunctions in the air injection system (see page ES-193).

ES

ES

DIAGNOSIS SYSTEM

1. DESCRIPTION

When troubleshooting OBD II (On-Board Diagnostics) vehicles, a intelligent tester (complying with SAE J1987) must be connected to the DLC3 (Data Link Connector 3) of the vehicle. Various data in the vehicle's ECM (Engine Control Module) can be then read.

OBD II regulations require that the vehicle's on-board computer illuminates the MIL (Malfunction Indicator Lamp) on the instrument panel when the computer detects a malfunction in:

(a) The emission control systems and components

(b) The power train control components (which affect vehicle emissions)

(c) The computer itself

In addition, the applicable DTCs (Diagnostic Trouble Codes) prescribed by SAE J2012 are recorded on 3 consecutive trips, the MIL turns off automatically but the DTCs remain recorded in the ECM memory.

To check DTCs, connect a intelligent tester to the DLC3. The tester displays DTCs, freeze frame data, and a variety of engine data. The DTCs and freeze frame data can be erased with the tester (see page ES-40).

In order to enhance OBD function on vehicles and develop the Off-Board diagnosis system, CAN communication is introduced in this system (CAN: Controller Area Network). It minimizes a gap between technician skills and vehicle technology. CAN is a network, which uses a pair of data transmission lines, spanning multiple computers and sensors. It allows high speed communication between the systems and to simplify the wire harness connection.

Since this system is equipped with the CAN communication, connecting the CAN VIM (VIM: Vehicle Interface Module) with intelligent tester is necessary to display any information from the ECM. (Also the communication between the intelligent tester and the ECM uses CAN communication signal.) When confirming the DTCs and any data of the ECM, connect the CAN VIM between the DLC3 and the intelligent tester.

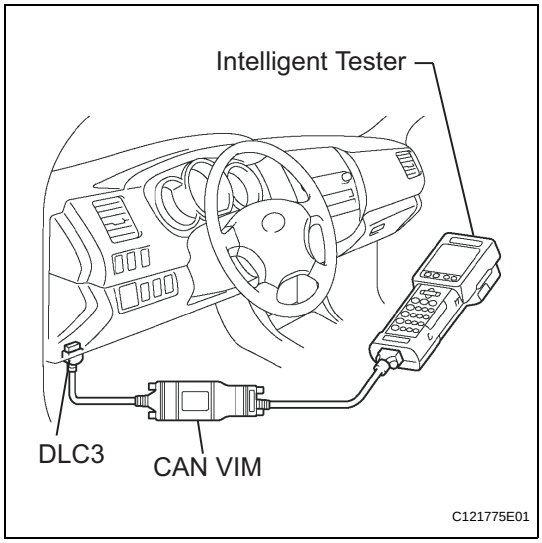

2. NORMAL MODE AND CHECK MODE

The diagnosis system operates in normal mode during normal vehicle use. In normal mode, 2 trip detection logic is used to ensure accurate detection of malfunctions. Check mode is also available as an option for technicians. In check mode, 1 trip detection logic is used for simulating malfunction symptoms and increasing the system's ability to detect malfunctions, including intermittent problems (intelligent tester only) (see page ES-43).

3. 2 TRIP DETECTION LOGIC

When a malfunction is first detected, the malfunction is temporarily stored in the ECM memory (1st trip). If the same malfunction is detected during the next subsequent drive cycle, the MIL is illuminated (2nd trip).

4. FREEZE FRAME DATA

Freeze frame data record the engine conditions (fuel system, calculated load, engine coolant temperature, fuel trim, engine speed, vehicle speed, etc.) when a malfunction is detected. When troubleshooting, freeze frame data can help determine if the vehicle was running or stopped, if the engine was warmed up or not, if the air-fuel ratio was lean or rich, and other data from the time the malfunction occurred.

5. DLC3 (Data Link Connector 3)

The vehicle's ECM uses the ISO 15765-4 for communication protocol. The terminal arrangement of the DLC3 complies with SAE J1962 and matches the ISO 15765-4 format.

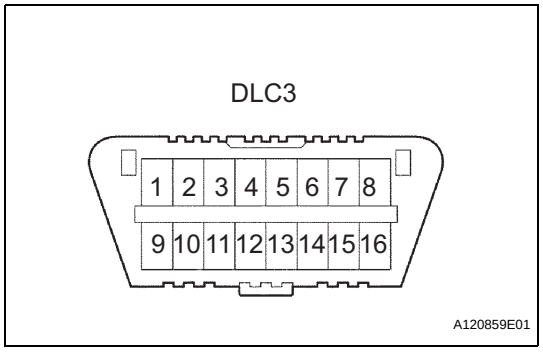

Symbols	Terminal No.	Name	Reference terminal	Result	Condition
SIL	7	Bus "+" line	5 - Signal ground	Pulse generation	During transmission
CG	4	Chassis ground	Body ground	1 Ω or less	Always
SG	5	Signal ground	Body ground	1 Ω or less	Always
BAT	16	Battery positive	Body ground	9 to 14 V	Always
CANH	6	CAN "High" line	CANL	54 to 69 Ω	Ignition switch OFF
CANH	6	CAN "High" line	Battery positive	1 MΩ or higher	Ignition switch OFF
CANH	6	CAN "High" line	CG	1 kΩ or higher	Ignition switch OFF
CANL	4	CAN "Low" line	Battery positive	1 MΩ or higher	Ignition switch OFF
CANL	4	CAN "Low" line	CG	1 kΩ or higher	Ignition switch OFF

HINT:

The DLC3 is the interface prepared for reading various data from the vehicle's ECM. After connecting the cable of a intelligent tester, turn the ignition switch to ON and turn the tester ON. If a communication failure message is displayed on the tester screen (on the tester: UNABLE TO CONNECT TO VEHICLE), a problem exists in either the vehicle or tester. In order to identify the location of the problem, connect the tester to another vehicle.

If communication is normal: Inspect the DLC3 on the original vehicle.

If communication is impossible: The problem is probably with the tester itself. Consult the Service Department listed in the instruction manual.

6. BATTERY VOLTAGE

Battery Voltage:

11 to 14 V

If the voltage is below 11 V, recharge the battery before proceeding.

7. MIL (Malfunction Indicator Lamp)

(a) The MIL is illuminated when the ignition switch is first turned to ON (the engine is not running).

(b) The MIL should turn off when the engine is started. If the MIL remains illuminated, the diagnosis system has detected a malfunction or abnormality in the system.

HINT:

If the MIL is not illuminated when the ignition switch is first turned to ON, check the MIL circuit (see page ES-439).

DTC CHECK / CLEAR

NOTICE:
When the diagnosis system is changed from normal mode to check mode or vice versa, all DTCs and freeze frame data recorded in normal mode are erased. Before changing modes, always check and make a note of DTCs and freeze frame data.
HINT:

- DTCs which are stored in the ECM can be displayed on a intelligent tester. A intelligent tester can display current and pending DTCs.
- Some DTCs are not set if the ECM does not detect the same malfunction again during a second consecutive driving cycle. However, such malfunctions, detected on only one occasion, are stored as pending DTCs.
- The pending DTCs are set when the malfunction is detected once.

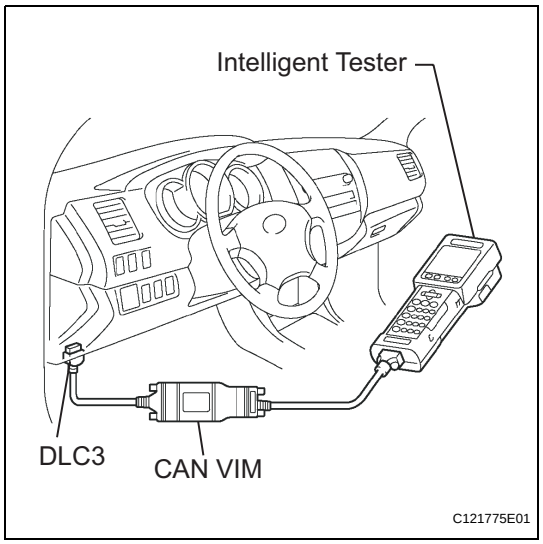

1. CHECK DTC (Using a intelligent tester)
(a) Connect a intelligent tester to the DLC3.
(b) Turn the ignition switch to ON.
(c) Turn the tester ON.
(d) Select the following menu items: DIAGNOSIS / ENHANCED OBD II / DTC INFO / CURRENT CODES or PENDING CODES.
(e) Check DTCs and freeze frame data, and then write them down.
(f) Proceed to Diagnosis Trouble Code Chart to check the details of the DTCs (See page ES-54).

2. CLEAR DTC (Using the intelligent tester)
(a) Connect the intelligent tester to the DLC3.
(b) Turn the ignition switch to ON.
(c) Turn the tester ON.
(d) Select the following menu items: DIAGNOSIS / ENHANCED OBD II / DTC INFO / CLEAR CODES.
(e) Press the YES button.

3. CLEAR DTC (Without using the intelligent tester)
(a) Perform either one of the following operations.
(1) Disconnect the negative battery cable for more than 1 minute.
(2) Remove the EFI and ETCS fuses from the Relay Block (R/B) located inside the engine compartment for more than 1 minute.

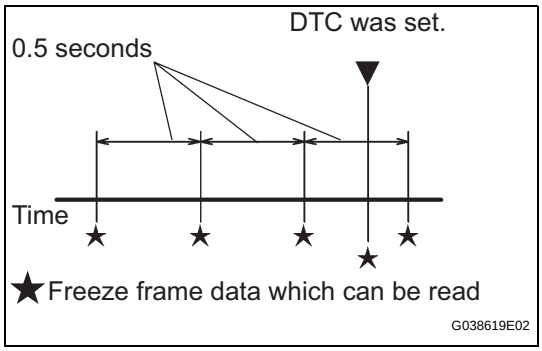

FREEZE FRAME DATA

1. DESCRIPTION

Freeze frame data record the engine conditions (fuel system, calculated load, engine coolant temperature, fuel trim, engine speed, vehicle speed, etc.) when a malfunction is detected. When troubleshooting, it can help determine if the vehicle was running or stopped, the engine was warmed up or not, the air-fuel ratio was LEAN or RICH, and other data, from the time the malfunction occurred.

HINT:

If it is impossible to replicate the problem even though a DTC is detected, confirm the freeze frame data.

The ECM records engine conditions in the form of freeze frame data every 0.5 seconds. Using the intelligent tester, five separate sets of freeze frame data, including the data values at the time when the DTC was set, can be checked.

- 3 data sets before the DTC was set
- 1 data set when the DTC was set
- 1 data set after the DTC was set

These data sets can be used to simulate the condition of the vehicle around the time of the occurrence of the malfunction. The data may assist in identifying of the cause of the malfunction, and in judging whether it was temporary or not.

2. LIST OF FREEZE FRAME DATA

LABEL (Intelligent Tester Display)	Measurement Item/Range	Diagnostic Note
INJECTOR	Injector	-
IGN ADVANCE	Ignition advance	-
CALC LOAD	Calculate load	Calculated load by ECM
VEHICLE LOAD	Vehicle load	-
MAF	Mass air flow volume	If value approximately 0.0 g/sec: • Mass air flow meter power source circuit open or short • VG circuit open or short If value 160.0 g/sec or more: • E2G circuit open
ENGINE SPD	Engine speed	-
VEHICLE SPD	Vehicle speed	Speed indicated on speedometer
COOLANT TEMP	Engine coolant temperature	If value -40°C, sensor circuit open If value 140°C, sensor circuit shorted
INTAKE AIR	Intake air temperature	If value -40°C, sensor circuit open If value 140°C, sensor circuit shorted
AIR-FUEL RATIO	Air-fuel ratio	-
PURGE DENSITY	Learning value of purge density	-
PURGE FLOW	Purge flow	-
EVAP PURGE VSV	EVAP purge VSV duty ratio	-
EVAP VAPOR PRES	EVAP vapor pressure	-
KNOCK CRRT VAL	Correction learning value of knocking	-
KNOCK FB VAL	Feedback value of knocking	-
ACCEL POS #1	Absolute No. 1 Accelerator Pedal Position (APP)	-

LABEL (Intelligent Tester Display)	Measurement Item/Range	Diagnostic Note
ACCEL POS #2	Absolute No. 2 APP	-
THROTTLE POS	Throttle position	Read value with ignition switch ON (Do not start engine)
THROTTLE POS	Throttle sensor position	Read value with ignition switch ON (Do not start engine)
THROTTLE POS #2	Throttle sensor position #2	-
THROTTLE MOT	Throttle motor	-
O2S B1 S2	Heated oxygen sensor output	Performing INJ VOL or A/F CONTROL function of ACTIVE TEST enables technician to check voltage output of sensor
AFS B1 S1	A/F sensor output	Performing INJ VOL or A/F CONTROL function of ACTIVE TEST enables technician to check voltage output of sensor
TOTAL FT #1	Total fuel trim	-
SHORT FT #1	Short-term fuel trim	Short-term fuel compensation used to maintain air-fuel ratio at stoichiometric air-fuel ratio
LONG FT #1	Long-term fuel trim	Overall fuel compensation carried out in long-term to compensate a continual deviation of short-term fuel trim from central value
FUEL SYS #1	Fuel system status (Bank1)	• OL (Open Loop): Has not yet satisfied conditions to go closed loop • CL (Closed Loop): Using heated oxygen sensor as feedback for fuel control. • OL DRIVE: Open loop due to driving conditions (fuel enrichment) • OL FAULT: Open loop due to detected system fault • CL FAULT: Closed loop but heated oxygen sensor, which used for fuel control, malfunctioning
O2FT B1 S2	Fuel trim at heated oxygen sensor	-
AF FT B1 S1	Fuel trim at A/F sensor	-
CAT TEMP B1 S1	Catalyst temperature	-
CAT TEMP B1 S2	Catalyst temperature	-
INI COOL TEMP	Initial engine coolant temperature	-
INI INTAKE TEMP	Initial intake air temperature	-
INJ VOL	Injection volume	-
AIR PMP PRS	Air pump pressure	(See page ES-354)
AIR PMP PLS PRS	Air pump pulsation pressure	(See page ES-354)
STARTER SIG	Starter signal	-
PS SW	Power steering signal	-
PS SIGNAL	Power steering signal (history)	This signal status usually ON until battery terminals disconnected
CTP SW	Closed throttle position switch	-
A/C SIG	A/C signal	-
ELECT LOAD SIG	Electrical load signal	-
STOP LIGHT SW	Stop light switch	-
BATTERY VOLTAGE	Battery voltage	-
ATM PRESSURE	Atmospheric pressure	-
SECOND AIR VSV	Secondary air injection system status	-
ACT VSV	A/C cut status for Active Test	-
EVAP VSV	EVAP purge VSV	VSV for EVAP controlled by ECM (ground side duty control)
FUEL PUMP / SPD	Fuel pump speed status	-

LABEL (Intelligent Tester Display)	Measurement Item/Range	Diagnostic Note
VVT CTRL B1	VVT control status	-
VACUUM PUMP	Key-off EVAP system pump status	(See page ES-390)
EVAP VENT VAL	Key-off EVAP system vent valve status	-
TC/TE1	TC and TE1 terminal of DLC3	-
AI STATUS	Secondary air injection system operation prohibit	(See page ES-354)
VVTL AIM ANGL #1	VVT aim angle	-
VVT CHNG ANGL #1	VVT change angle	-
VVT OCV DUTY B1	VVT OCV operation duty	-
FC IDL	Idle fuel cut	ON: when throttle valve fully closed and engine speed over 1,500 rpm
FC TAU	FC TAU	Fuel cut being performed under very light load to prevent engine combustion from becoming incomplete
IGNITION	Ignition	-
CYL #1	Cylinder #1 misfire rate	Displayed in only idling
CYL #2	Cylinder #2 misfire rate	Displayed in only idling
CYL #3	Cylinder #3 misfire rate	Displayed in only idling
CYL #4	Cylinder #4 misfire rate	Displayed in only idling
CYL ALL	All cylinder misfire rate	Displayed in only idling
MISFIRE RPM	Misfire RPM	-
MISFIRE LOAD	Misfire load	-
MISFIRE MARGIN	Misfire monitoring	-
ENG RUN TIME	Accumulated engine running time	-
TIME DTC CLEAR	Cumulative time after DTC cleared	-
DIST DTC CLEAR	Accumulated distance from DTC cleared	-
WU CYC DTC CLEAR	Warm-up cycle after DTC cleared	-
MODEL CODE	Identifying model code	TRN2###
FAN MOTOR	Electric fan motor	-
VAPOR PRESS	Vapor pressure	EVAP system pressure as read by canister pressure sensor
ENG OIL PRES SW	Engine oil pressure switch signal	Always ON while engine running
ENGINE TYPE	Identifying engine type	2TR
CYLINDER NUMBER	Identifying cylinder number	4 or 6
DESTINATION	Identifying destination	A (America)
MODEL YEAR	Identifying model year	200#
SYSTEM	Identifying engine system	GASOLINE (gasoline engine)

CHECK MODE PROCEDURE

HINT:
Intelligent tester only:
Compared to normal mode, check mode is more sensitive to malfunctions. Therefore, check mode can detect the malfunctions that cannot be detected by normal mode.
NOTICE:
All the stored DTCs and freeze frame data are erased if: 1) the ECM is changed from normal mode to check mode or vice versa; or 2) the ignition switch is turned from ON to ACC or OFF while in check mode.
Before changing modes, always check and make a note of any DTCs and freeze frame data.

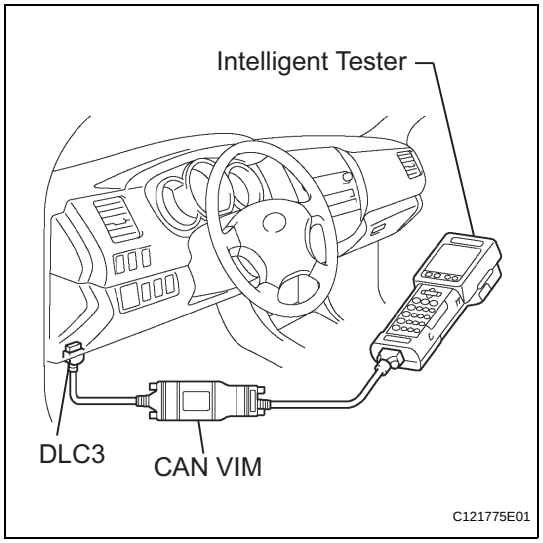

1. CHECK MODE PROCEDURE (Using the intelligent tester)

(a) Check and ensure the following conditions:
  (1) Battery voltage 11 V or more
  (2) Throttle valve fully closed
  (3) Transmission in the P or N positions
  (4) A/C switched OFF
(b) Turn the ignition switch to OFF.
(c) Connect a intelligent tester to the DLC3.
(d) Turn the ignition switch to ON.
(e) Turn the tester ON.
(f) Select the following menu items: DIAGNOSIS / ENHANCED OBD II / CHECK MODE.
(g) Switch the ECM from normal mode to check mode.

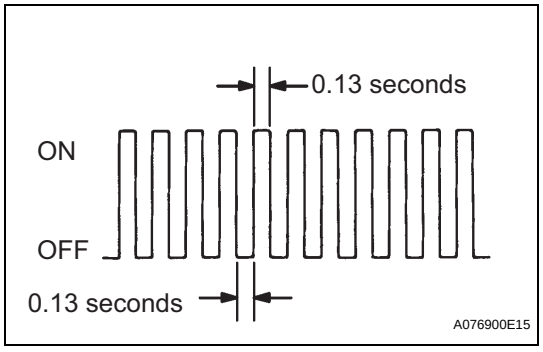

(h) Make sure the MIL flashes as shown in the illustration.
(i) Start the engine.
(j) Make sure the MIL turns off.
(k) Simulate the conditions of the malfunction described by the customer.
(l) Check DTCs and freeze frame data using the tester.

FAIL-SAFE CHART

If any of the following DTCs are set, the ECM enters fail-safe mode to allow the vehicle to be driven temporarily.

DTCs	Components	Fail-Safe Operations	Fail-Safe Deactivation Conditions
P0031 and P0032	Air-Fuel Ratio (A/F) Sensor Heater	ECM turns off A/F sensor heater.	Ignition switch OFF
P0037 and P0038	Heated Oxygen (HO2) Sensor Heater	ECM turns off HO2 sensor heater	Ignition switch OFF
P0100, P0102 and P0103	Mass Air Flow (MAF) Meter	ECM calculates ignition timing according to engine speed and throttle valve position.	Pass condition detected
P0110, P0112 and P0113	Intake Air Temperature (IAT) Sensor	ECM estimates IAT to be 20°C (68°F).	Pass condition detected
P0115, P0117 and P0118	Engine Coolant Temperature (ECT) Sensor	ECM estimates ECT to be 80°C (176°F).	Pass condition detected
P0120, P0121, P0122, P0123, P0220, P0222, P0223, P0604, P0606, P0607, P0657, P2102, P2103, P2111, P2112, P2118, P2119 and P2135	Electronic Throttle Control System (ETCS)	ECM cuts off throttle actuator current and throttle valve returned to 6.5° throttle position by return spring. ECM then adjusts engine output by controlling fuel injection (intermittent fuel-cut) and ignition timing in accordance with accelerator pedal opening angle, to allow vehicle to continue at minimal speed.*	Pass condition detected and then ignition switch turned OFF
P0327 and P0328	Knock Sensor	ECM sets ignition timing to maximum retard.	Ignition switch OFF
P0351 to P0354	Igniter	ECM cuts fuel.	Pass condition detected
P2120, P2121, P2122, P2123, P2125, P2127, P2128 and P2138	Accelerator Pedal Position (APP) Sensor	APP sensor has 2 sensor circuits: Main and Sub. If either of circuits malfunctions, ECM controls engine using other circuit. If both of circuits malfunction, ECM regards accelerator pedal as being released. As a result, throttle valve is closed and engine idles.	Pass condition detected and then ignition switch turned OFF

NOTE:

* The vehicle can be driven slowly when the accelerator pedal is depressed firmly and slowly. If the accelerator pedal is depressed quickly, the vehicle may speed up and slow down erratically.

REMOVAL

CAUTION:
Some of these service operations affect the SRS airbag system. Read the precautionary notices concerning the SRS airbag system before servicing (w/ Front Seat Side Airbag) (See page RS-1).

1. DISCONNECT CABLE FROM NEGATIVE BATTERY TERMINAL

Wait for at least 90 seconds after disconnecting the cable to prevent the airbag from working (w/ Front Seat Side Airbag).

2. REMOVE SEAT TRACK COVER

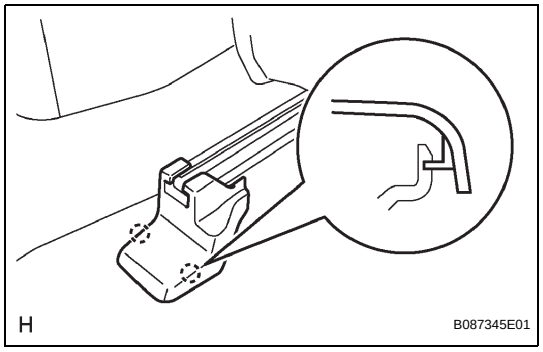

HINT:
Follow the same procedures as for the opposite side.

(a) Disengage the 2 claws and remove the seat track cover.

3. REMOVE FRONT SEAT ASSEMBLY

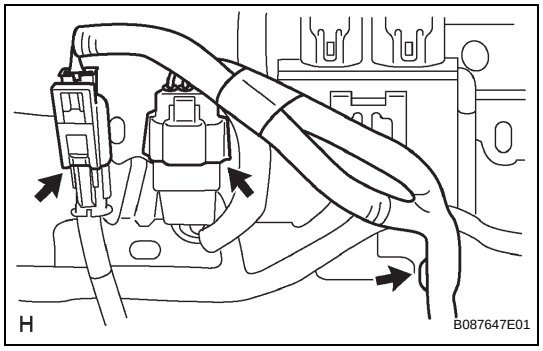

(a) Disconnect the connector.
(b) w/ Front Seat Side Airbag:
  (1) Disconnect the connector.
(c) Using a clip remover, remove the wire harness clamp.

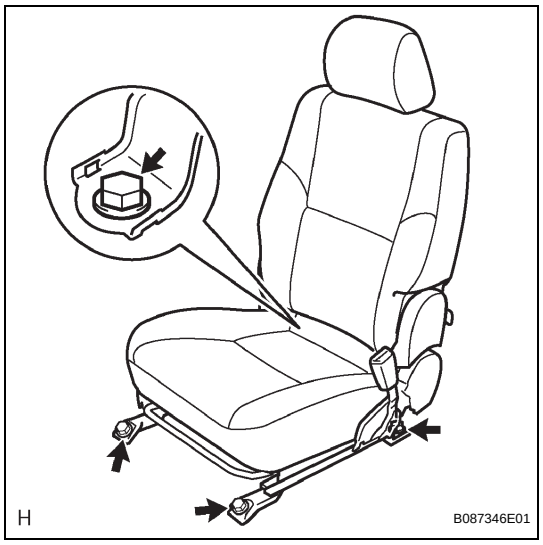

(d) Remove the 4 bolts and front seat.

SE

DISASSEMBLY

CAUTION:
Wear protective gloves. Sharp surfaces on the front seat back spring and front seat with adjuster frame could cause injuries to your hands.

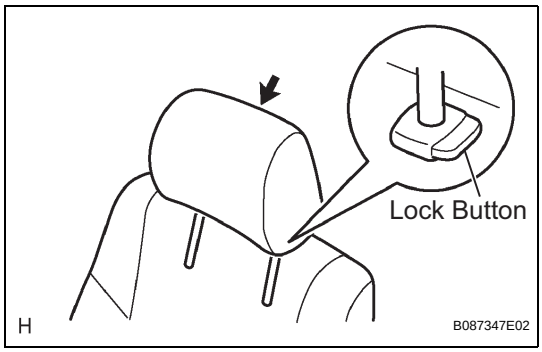

1. **REMOVE FRONT SEAT HEADREST ASSEMBLY**
   (a) Disengage the lock button of the front seat headrest support and remove the front seat headrest.

2. **REMOVE FRONT SEAT INNER BELT ASSEMBLY (See page SE-39)**

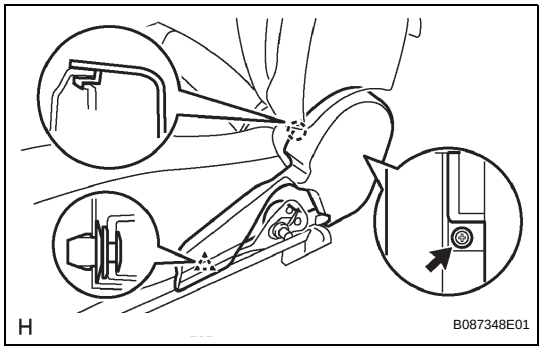

3. **REMOVE FRONT SEAT CUSHION INNER SHIELD**
   (a) Remove the screw.
   (b) Disengage the claw and clip, and remove the front seat cushion shield inner.

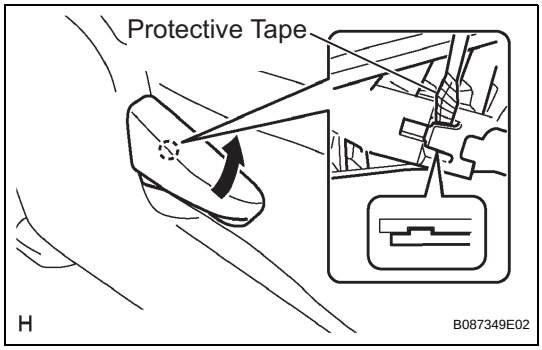

4. **REMOVE RECLINING ADJUSTER RELEASE HANDLE**
   (a) Using a screwdriver with its tip taped in protective tape, disengage the claw and remove the reclining adjuster release handle.

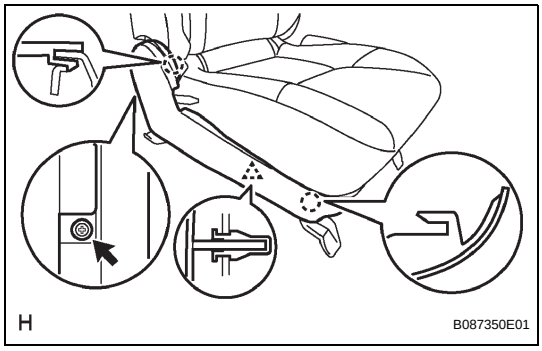

5. **REMOVE FRONT SEAT CUSHION SHIELD**
   (a) Remove the screw.
   (b) Disengage the 2 claws and clip, and remove the front seat cushion shield.

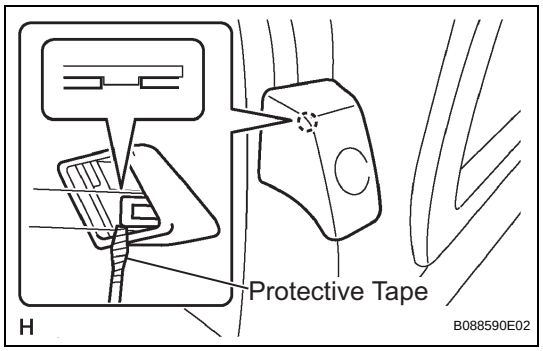

6. REMOVE RECLINING ADJUSTER RELEASE KNOB LH

(a) Using a screwdriver with its tip taped in protective tape, disengage the claw and remove the reclining adjuster release knob.

7. REMOVE RECLINING ADJUSTER RELEASE KNOB RH

HINT:

Follow the same procedures as for the reclining adjuster release handle LH.

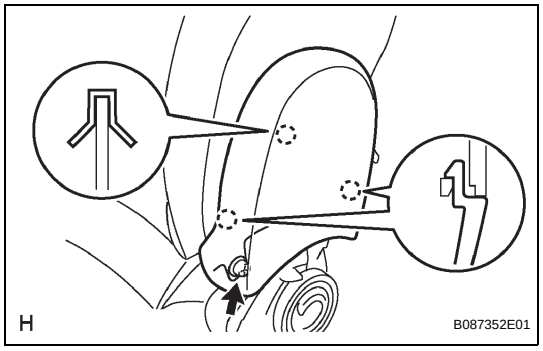

8. REMOVE FRONT SEAT BACK SHIELD LH

(a) Remove the screw.

(b) Disengage the 3 claws and remove the front seat back shield.

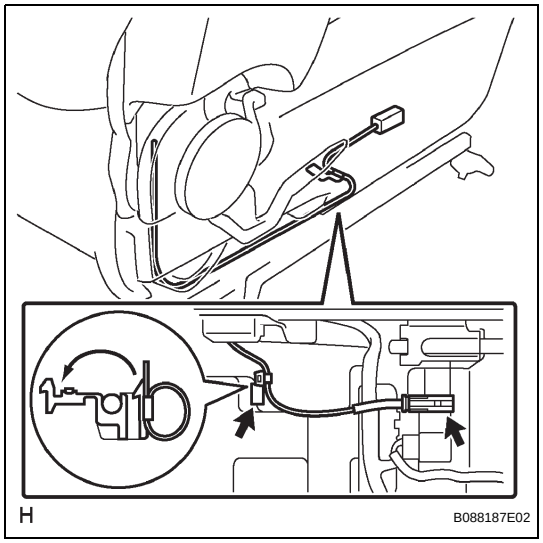

9. REMOVE FRONT SEAT BACK SHIELD RH

(a) w/ Front Seat Side Airbag:

(1) Using a clip remover, remove the connector clamp.

(2) Remove the wire harness clamp.

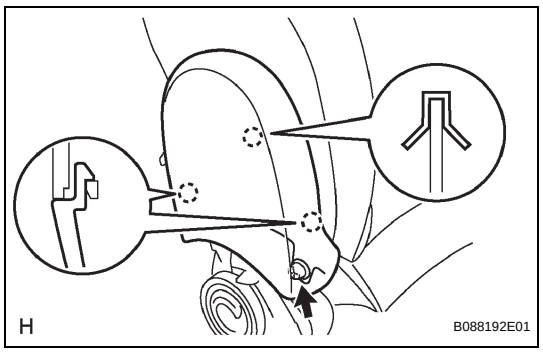

(3) Remove the screw.

(4) Disengage the 3 claws and remove the front seat back shield.

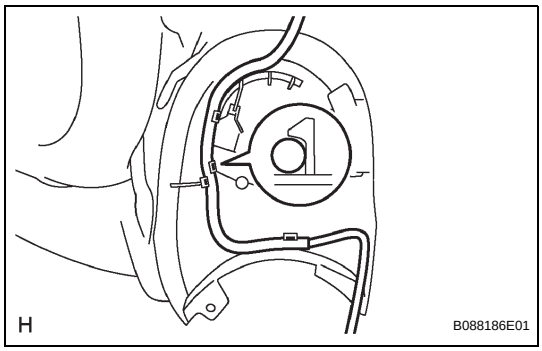

(5) Disengage the 4 claws and remove the front seat side air bag wire.

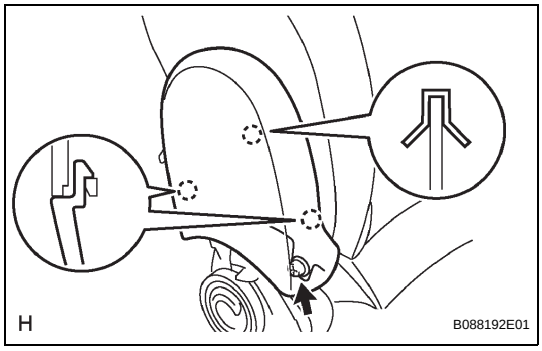

(b) w/o Front Seat Side Airbag:
(1) Remove the screw.
(2) Disengage the 3 claws and remove the front seat back shield.

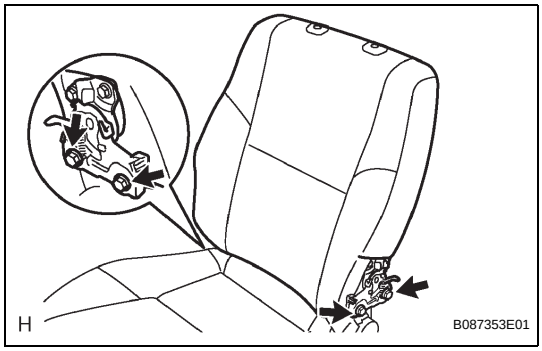

10. REMOVE FRONT SEAT BACK ASSEMBLY
(a) Remove the 4 bolts and front seat back.

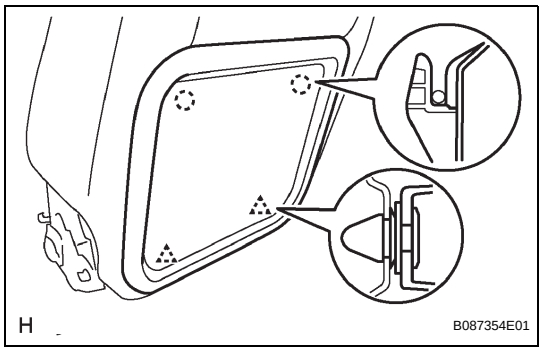

11. REMOVE FRONT SEAT BACK BOARD
(a) Disengage the 2 claws and 2 clips, and remove the front seat back board.

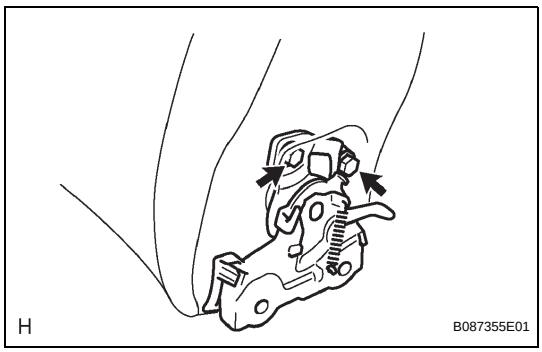

12. REMOVE FRONT SEAT BACK LOCK SUB-ASSEMBLY LH
(a) Remove the 2 bolts and front seat back lock.

13. REMOVE FRONT SEAT BACK LOCK SUB-ASSEMBLY RH
HINT:
Follow the same procedures as for the front seat back lock sub-assembly LH.

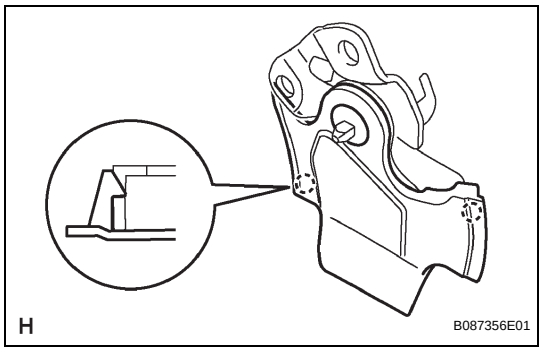

14. REMOVE FRONT SEAT HINGE COVER LH

(a) Remove the seat hinge cover.

15. REMOVE FRONT SEAT HINGE COVER RH

HINT:

Follow the same procedures as for the seat hinge cover LH.

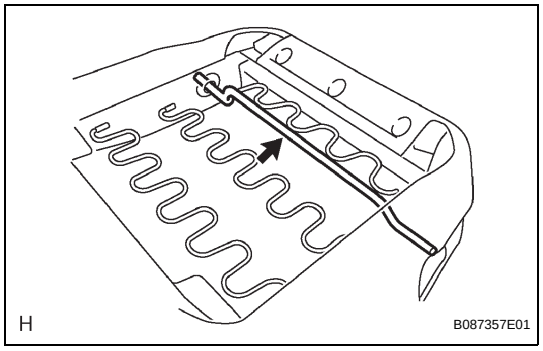

16. REMOVE FRONT SEAT BACK LOCK HANDLE ROD

(a) Remove the front seat back lock handle rod.

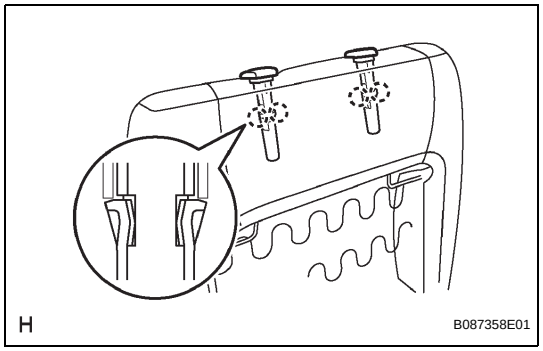

17. REMOVE FRONT SEAT HEADREST SUPPORT

HINT:

Follow the same procedures as for the opposite side.

(a) Disengage the 2 claws and remove the front seat headrest support.

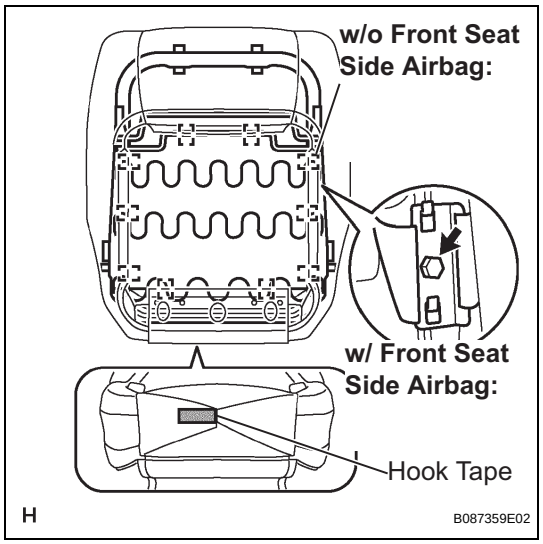

18. REMOVE FRONT SEAT BACK SPRING ASSEMBLY

(a) w/ Front Seat Side Airbag:
  (1) Remove the bolt and inner hook.
  (2) Remove the 9 hog rings.
  (3) Remove the hook tape.
  (4) Remove the front seat back spring from the front seat back pad.

(b) w/o Front Seat Side Airbag:
  (1) Remove the 10 hog rings.
  (2) Remove the hook tape.
  (3) Remove the front seat back spring from the front seat back pad.

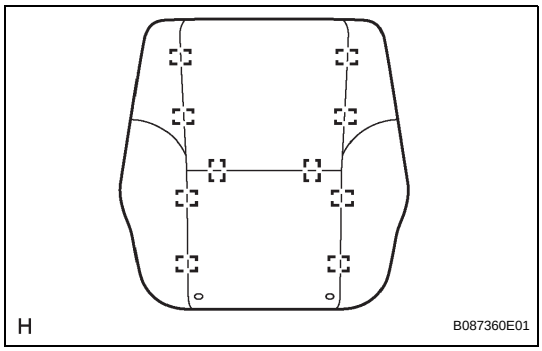

19. REMOVE FRONT SEAT BACK COVER

(a) Remove the 10 hog rings and front seat back cover.

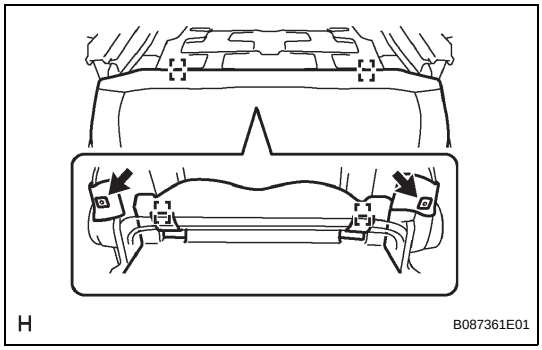

20. REMOVE FRONT SEAT CUSHION ASSEMBLY

(a) Remove the 4 hog rings.

(b) Remove the front seat cushion cover from the front seat frame adjuster.

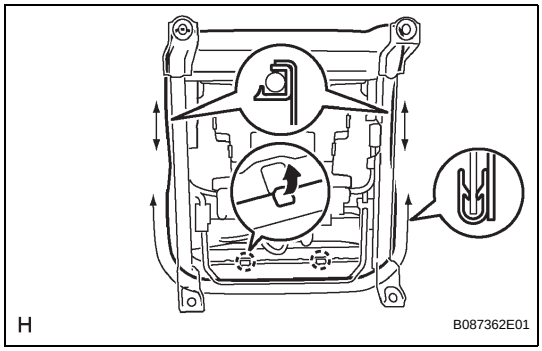

(c) Disengage the 2 claws and 3 hooks, and remove the front seat cushion pad together with the front seat cushion cover.

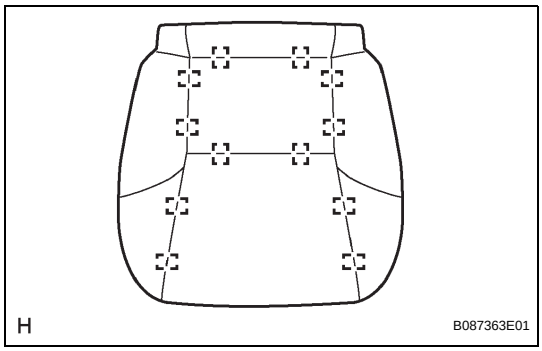

21. REMOVE FRONT SEAT CUSHION COVER

(a) Remove the 12 hog rings and front seat cushion cover.

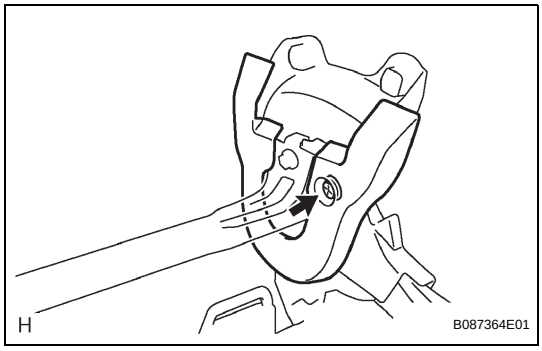

22. REMOVE RECLINING ADJUSTER INSIDE COVER LH

(a) Remove the screw and reclining adjuster inside cover.

23. REMOVE RECLINING ADJUSTER INSIDE COVER RH

HINT:

Follow the same procedures as for the reclining adjuster inside cover LH.

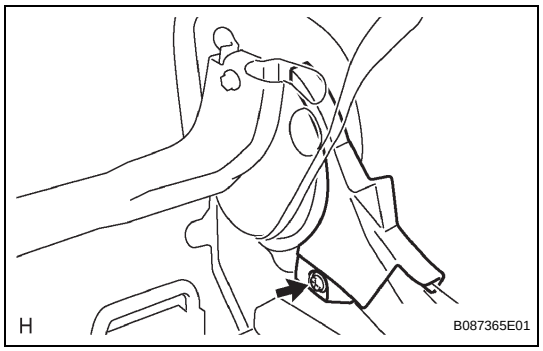

24. REMOVE RECLINING ADJUSTER OUTSIDE COVER LH

(a) Remove the screw and reclining adjuster outside cover.

25. REMOVE RECLINING ADJUSTER OUTSIDE COVER RH

HINT:
Follow the same procedures as for the reclining adjuster outside cover LH.

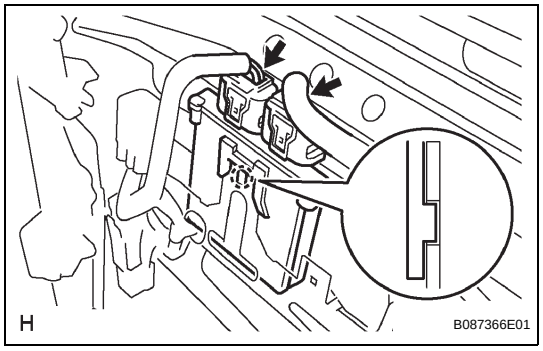

26. REMOVE OCCUPANT CLASSIFICATION ECU

(a) Disconnect the 2 connectors.
(b) Disengage the claw and remove the occupant classification ECU.

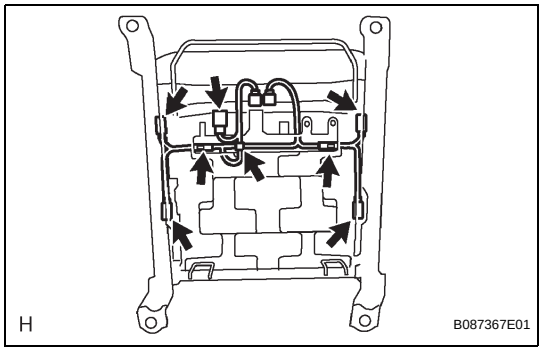

27. REMOVE SEAT WIRE

(a) Disconnect the 4 connectors.
(b) Using a clip remover, remove the 3 wire harness clamps and connector clamp.

SE

(b) Remove the hood lock control cable assembly referring to the illustration.

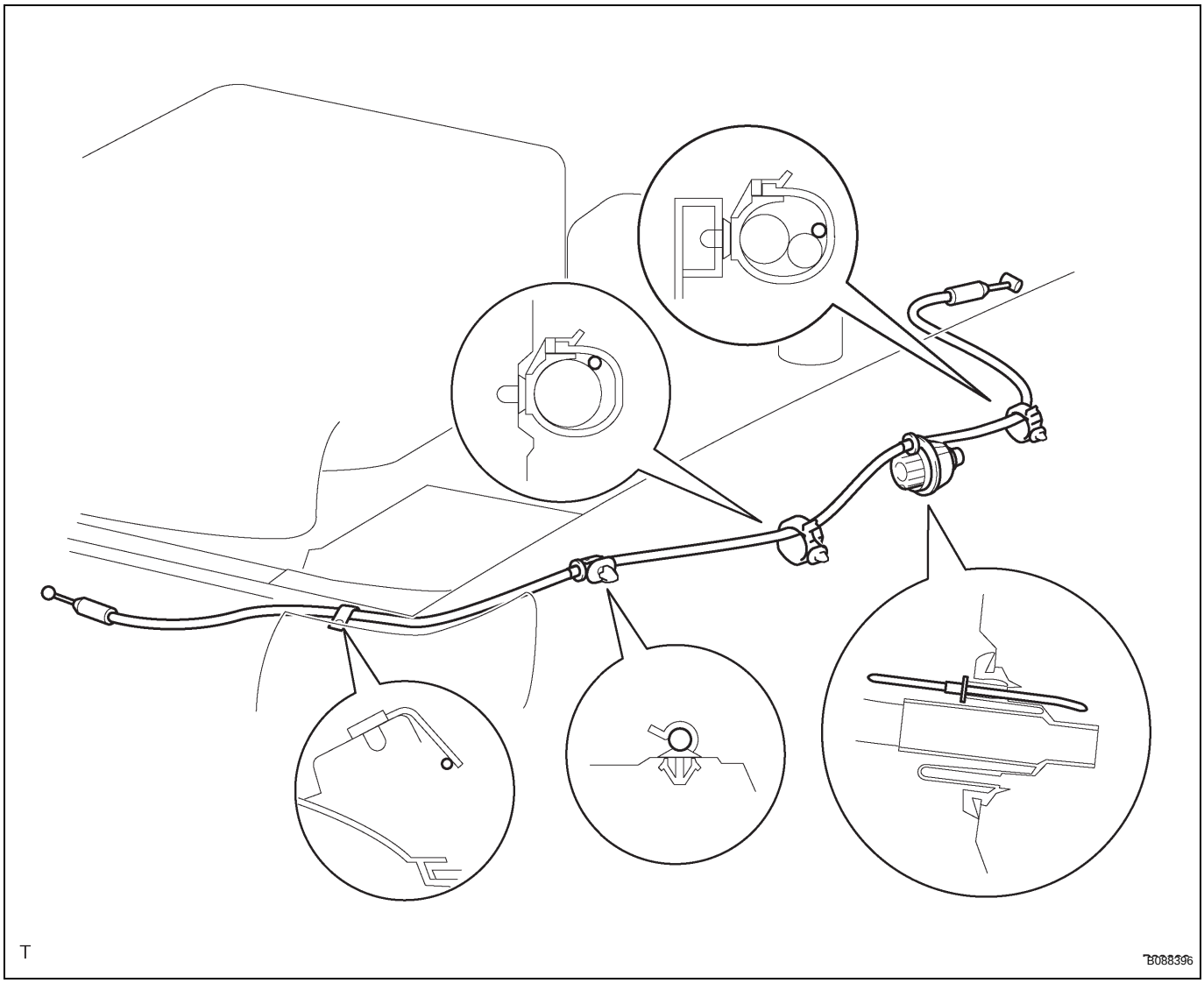

NOTICE:
Leave the string inside the wire harness grommet for the installation of the hood lock control cable assembly.

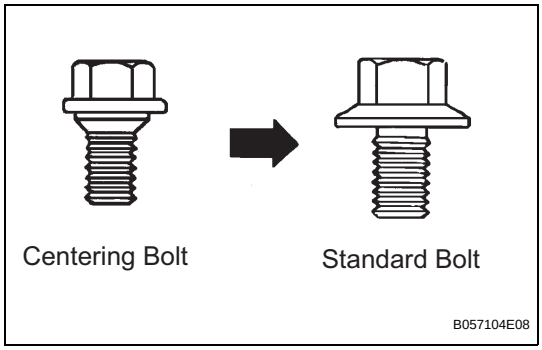

ADJUSTMENT

HINT:

- Centering bolts are used to mount the hood hinge and hood lock. The hood and hood lock cannot be adjusted with the centering bolts on. Substitute the standard bolts (with washers) for the centering bolts when making adjustments.
- For bolts without torque specifications, check the standard bolt chart (See page SS-2).

1. INSPECT HOOD SUB-ASSEMBLY

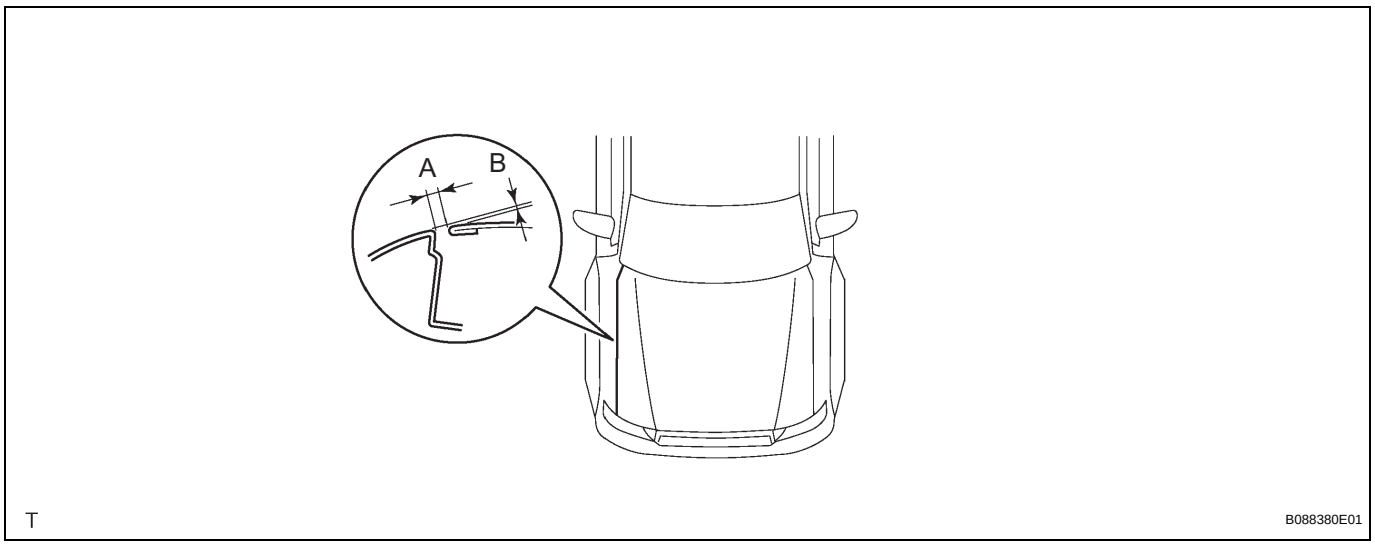

(a) Check that the clearance measurements of areas A and B are within the standard ranges.
Standard:

Area	Measurement
A	4.4 +- 1.5 mm (0.173 +- 0.059 in.)
B	0.3 +- 1.5 mm (0.012 +- 0.059 in.)

2. ADJUST HOOD SUB-ASSEMBLY

(a) Adjust the hood position.

(1) Loosen the 4 hinge bolts on the hood side.

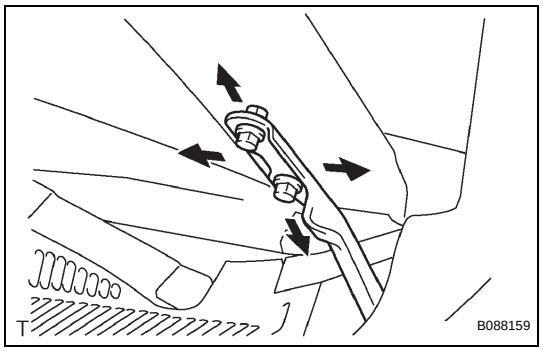

(2) Move the hood and adjust the clearance between the hood and front fender. Make sure that the clearance is within the standard range.
Standard(A):
4.4 +- 1.5 mm(0.173 +- 0.059 in.)

(3) Tighten the hood side hinge bolts after the adjustment.
Torque:
30N*m(306kgf*cm,22ft.*lbf)

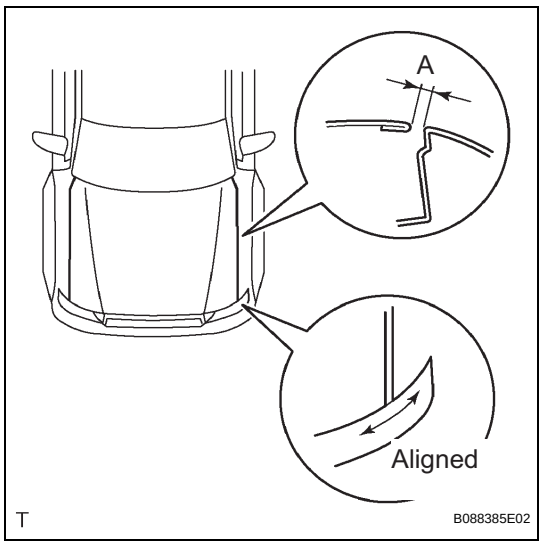

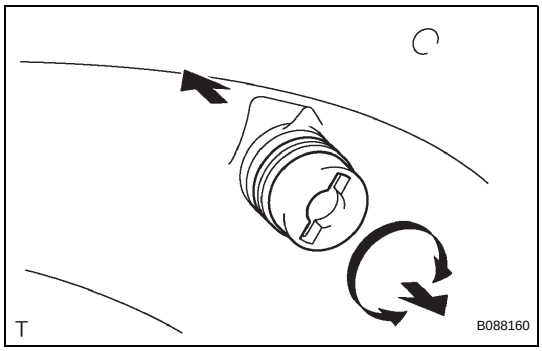

(b) Adjust the cushion rubber so that the heights of the hood and the fender are aligned.
(1) Raise or lower the hood front end by turning the cushion rubber. Make sure that the clearance is within the standard range.
HINT:
Raise or lower the cushion rubber by turning it.

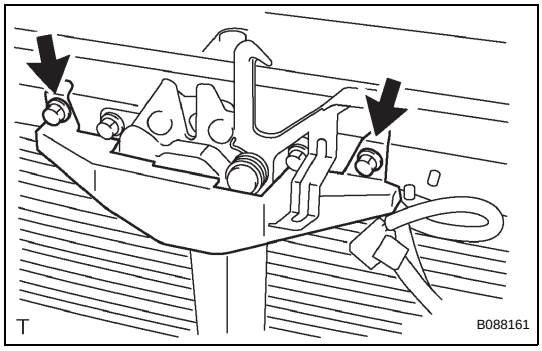

(c) Adjust the hood lock.
(1) Remove the 2 bolts and No. 2 hood lock release lever protector.

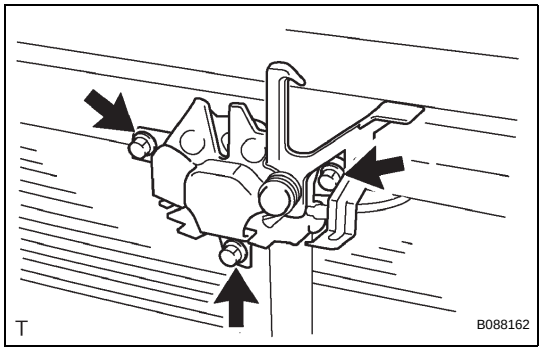

(2) Loosen the 3 bolts.

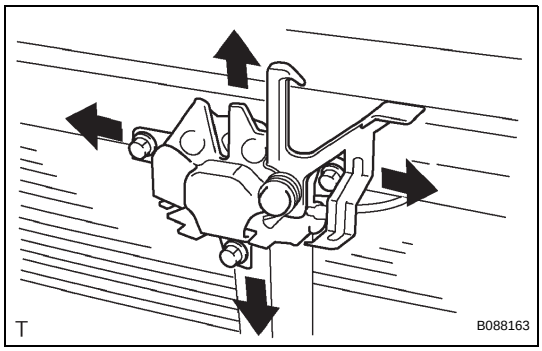

(3) Adjust the hood lock position so that the striker can enter it smoothly.

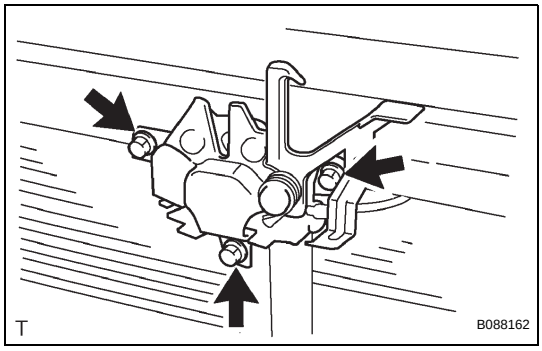

(4) Tighten the 3 bolts after the adjustment.
Torque: 12 N*m (122 kgf*cm, 9 ft.*lbf)

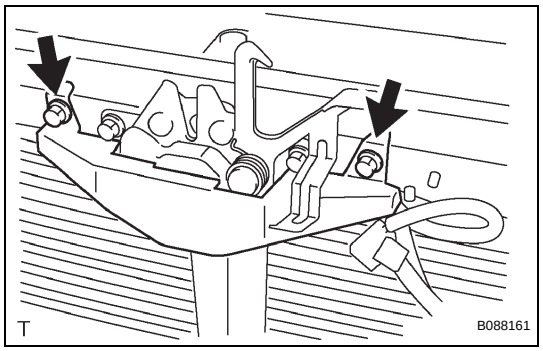

(5) Install the No. 2 hood lock release lever protector.
Torque: 12 N*m (122 kgf*cm, 9 ft.*lbf)

REMOVAL

1. DISCONNECT CABLE FROM NEGATIVE BATTERY TERMINAL

2. REMOVE RADIATOR GRILLE

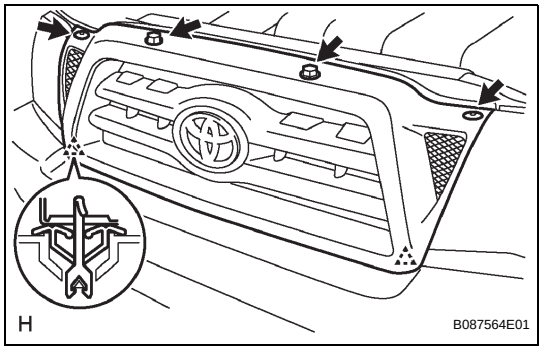

(a) Remove the 2 screws.
(b) Using a clip remover, remove the 2 clips.
(c) Disengage the 2 clips and remove the radiator grille.

3. REMOVE FRONT BUMPER COVER

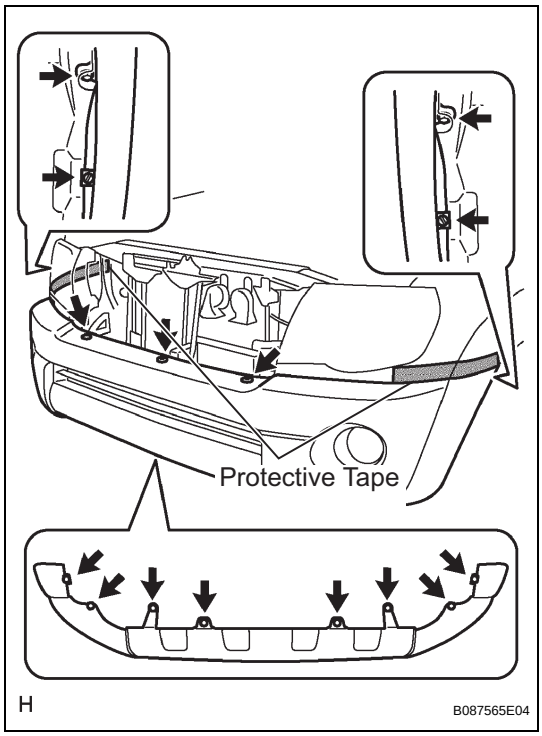

(a) Apply protective tape to the outer circumference of the front bumper cover, as shown in the illustration.
(b) Remove the 6 screws.
(c) Using a clip remover, remove the 7 clips.
(d) Remove the 2 clips.

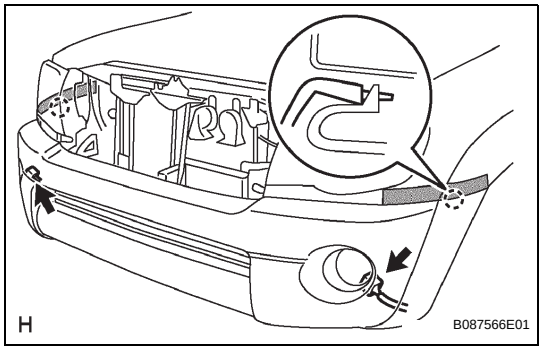

(e) w/ Fog Light:
  (1) Disconnect the 2 fog light connectors.
(f) Disengage the 2 claws and remove the front bumper cover.

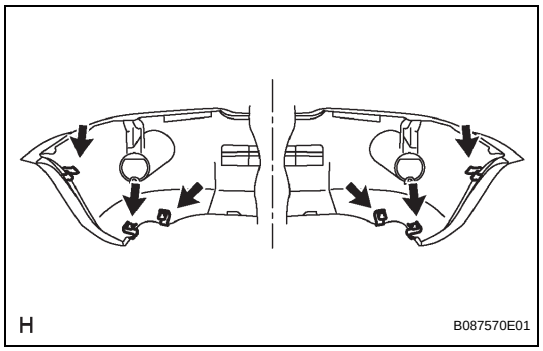

(g) Remove the 6 clips.

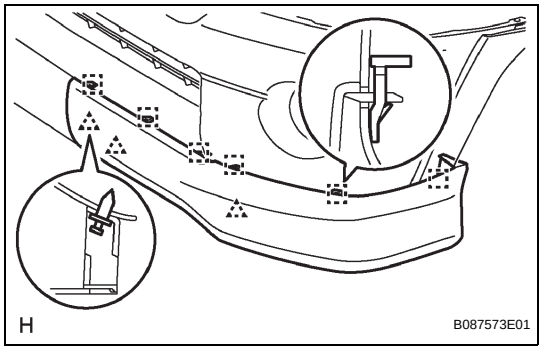

4. REMOVE FRONT SPOILER COVER LH (for X-Runner)

(a) Using a clip remover, remove the 3 clips.
(b) Remove the 6 retainers and front spoiler cover.

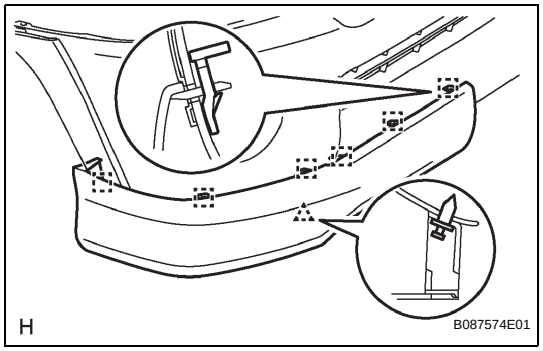

5. REMOVE FRONT SPOILER COVER RH (for X-Runner)

(a) Using a clip remover, remove the clip.
(b) Remove the 6 retainers and front spoiler cover.

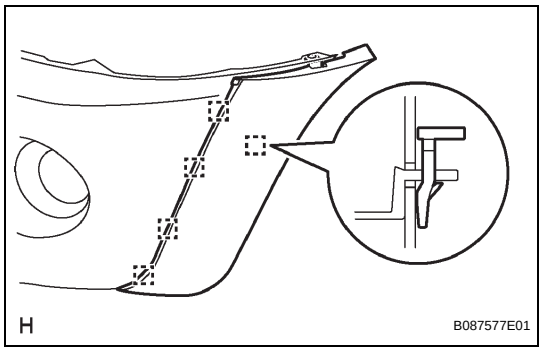

6. REMOVE FRONT BUMPER EXTENSION LH

(a) for 4WD and Pre Runner:
  (1) Remove the 5 retainers and front bumper extension.

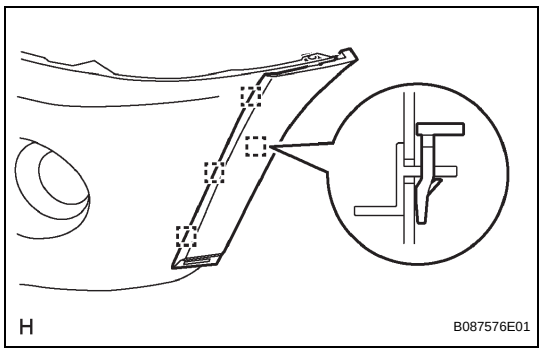

(b) for X-Runner:
  (1) Remove the 4 retainers and front bumper extension.

7. REMOVE FRONT BUMPER EXTENSION RH

HINT:
Follow the same procedures as for the front bumper extension LH.

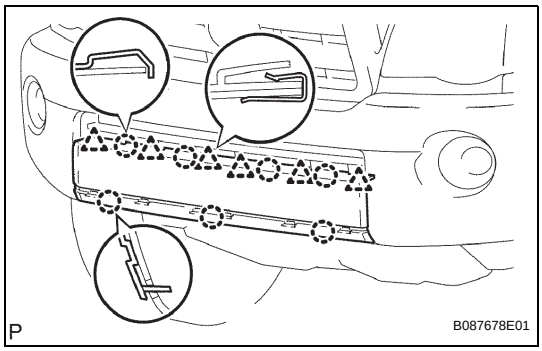

8. REMOVE FRONT SPOILER CENTER COVER (for X-Runner)
(a) Remove the 6 retainers.
(b) Disengage the 7 claws and remove the front spoiler center cover.

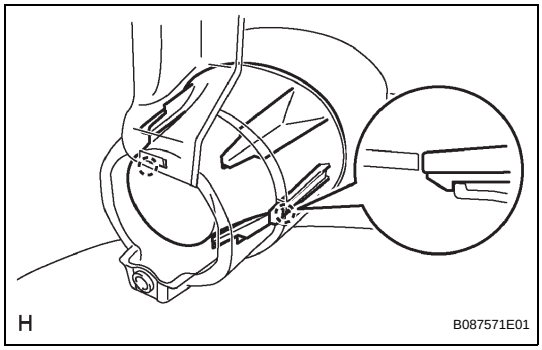

9. REMOVE FRONT BUMPER HOLE COVER LH (w/o Fog Light)
(a) Disengage the 2 claws and remove the front bumper hole cover.

10. REMOVE FRONT BUMPER HOLE COVER RH (w/o Fog Light)
HINT:
Follow the same procedures as for the front bumper hole cover LH.

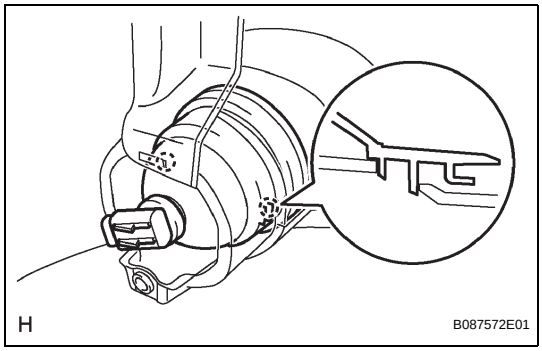

11. REMOVE FOG LIGHT ASSEMBLY LH (w/ Fog Light)
(a) Disengage the 2 claws and remove the fog light.

12. REMOVE FOG LIGHT ASSEMBLY RH (w/ Fog Light)
HINT:
Follow the same procedures as for the fog light LH.

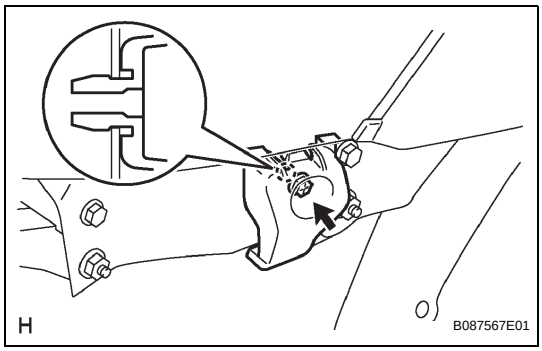

13. REMOVE FRONT BUMPER SIDE SUPPORT
HINT:
Follow the same procedures as for the opposite side.
(a) Remove the screw.
(b) Disengage the claw and remove the front bumper side support.

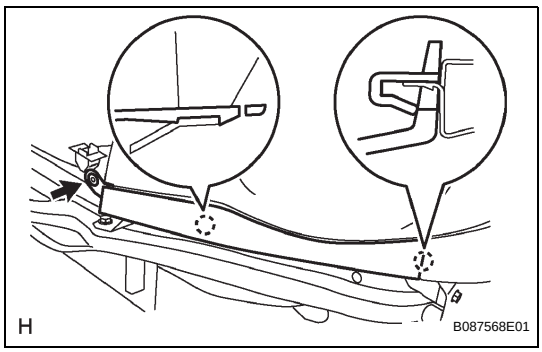

14. REMOVE FRONT BUMPER FILLER LH
(a) Using a clip remover, remove the clip
(b) Disengage the 2 claws and remove the front bumper filler.

15. REMOVE FRONT BUMPER FILLER RH
HINT:
Follow the same procedures as for the front bumper filler LH.

16. REMOVE HEADLIGHT ASSEMBLY LH (See page LI-4)

ET

17. REMOVE HEADLIGHT ASSEMBLY RH

HINT:

Follow the same procedures as for the headlight LH.

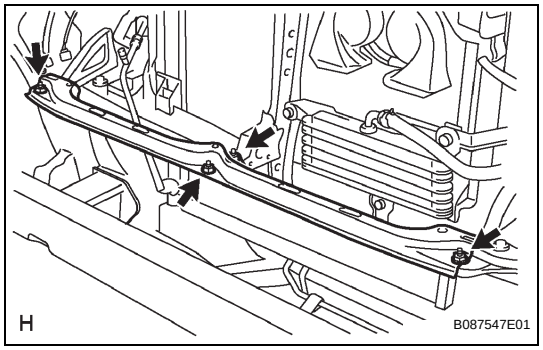

18. REMOVE FRONT BUMPER UPPER CENTER RETAINER

(a) Remove the 4 nuts and front bumper upper center retainer.

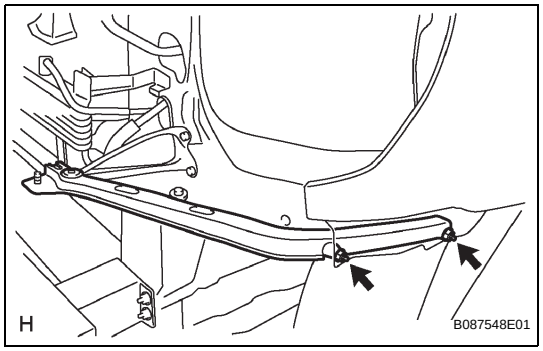

19. REMOVE FRONT BUMPER REINFORCEMENT EXTENSION LH

(a) Remove the 2 nuts and front bumper reinforcement extension.

20. REMOVE FRONT BUMPER REINFORCEMENT EXTENSION RH

HINT:

Follow the same procedures as for the front bumper reinforcement extension LH.

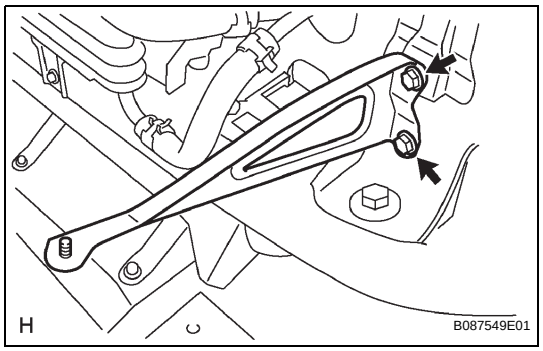

21. REMOVE FRONT BUMPER ARM MOUNTING BRACKET LH

(a) Remove the 2 bolts and front bumper arm mounting bracket.

22. REMOVE FRONT BUMPER ARM MOUNTING BRACKET RH

HINT:

Follow the same procedures as for the front bumper arm mounting bracket LH.

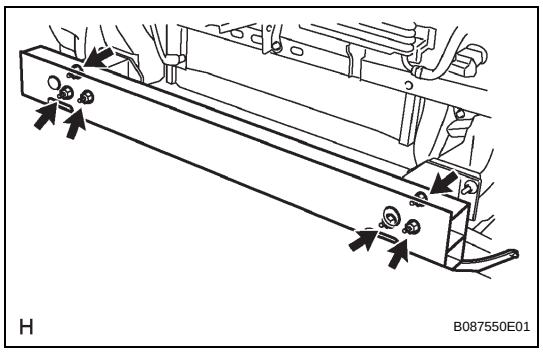

23. REMOVE FRONT BUMPER REINFORCEMENT SUB-ASSEMBLY

(a) Remove the 6 nuts and front bumper reinforcement.

ET

REMOVAL

CAUTION:
Some of these service operations affect the SRS airbag system. Read the precautionary notices concerning the SRS airbag system before servicing (See page RS-1).

1. **DISCONNECT CABLE FROM NEGATIVE BATTERY TERMINAL**
   Wait for at least 90 seconds after disconnecting the cable to prevent the airbag from working.

2. **REMOVE INNER REAR VIEW MIRROR ASSEMBLY (w/ EC Mirror)**
   (a) Disconnect the EC mirror connector.
   (b) Slide the inner rear view mirror cover.

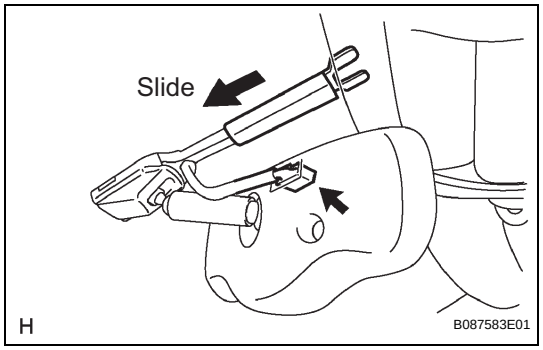

   (c) Slide the inner rear view mirror.

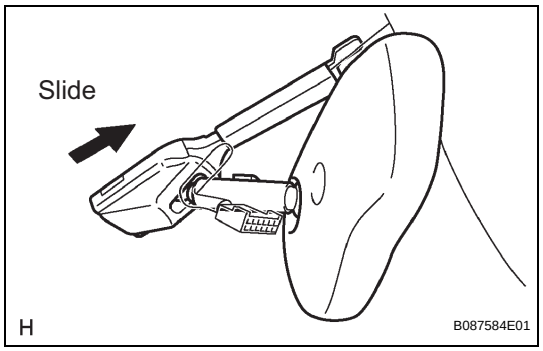

   (d) Disengage the 2 claws and remove the inner rear view mirror cover.

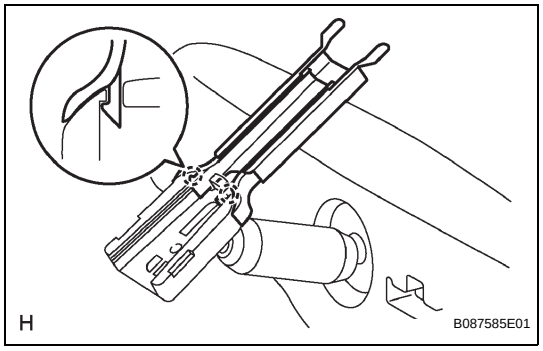

3. **REMOVE SEAT TRACK COVER LH (See page SE-23)**

4. **REMOVE SEAT TRACK COVER RH**
   (a) for Separate Folding Seat Type:
      (1) Remove the seat track cover RH (See page SE-5).
   (b) for Separate Seat Type Front Passenger Side:
      (1) Remove the seat track cover RH (See page SE-38).

5. **REMOVE FRONT SEAT ASSEMBLY LH (See page SE-23)**

6. **REMOVE FRONT SEAT ASSEMBLY RH**
   (a) for Separate Folding Seat Type:
      (1) Remove the front seat assembly RH (See page SE-5).
   (b) for Separate Seat Type Front Passenger Side:
      (1) Remove the front seat assembly RH (See page SE-38).

7. **REMOVE REAR SEAT CUSHION ASSEMBLY LH (See page SE-71)**

8. **REMOVE REAR SEAT CUSHION ASSEMBLY RH (See page SE-82)**

9. **REMOVE REAR SEAT BACK HINGE COVER**
   (a) for LH Side:
      (1) Remove the rear seat back hinge cover (See page SE-71).
   (b) for RH Side:
      (1) Remove the rear seat back hinge cover (See page SE-82).

10. **REMOVE REAR SEAT BACK ASSEMBLY LH (See page SE-71)**

11. **REMOVE REAR SEAT BACK ASSEMBLY RH (See page SE-82)**

12. **REMOVE REAR SEAT BACK HINGE SUB-ASSEMBLY LH (See page SE-71)**

13. **REMOVE REAR SEAT BACK HINGE SUB-ASSEMBLY RH**
    HINT:
    Follow the same procedures as for the rear seat back hinge sub-assembly LH.

14. **REMOVE FRONT FLOOR FOOTREST (See page IR-1)**

15. **REMOVE FRONT DOOR SCUFF PLATE LH**
    (a) Disengage the 9 claws and remove the front door scuff plate.

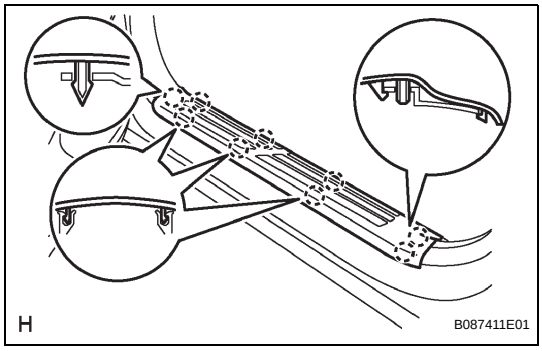

16. **REMOVE FRONT DOOR SCUFF PLATE RH**
    HINT:
    Follow the same procedures as for the front door scuff plate LH.

17. **REMOVE COWL SIDE TRIM BOARD LH**
    (a) Remove the clip.
    (b) Disengage the 2 clips and remove the cowl side trim board.

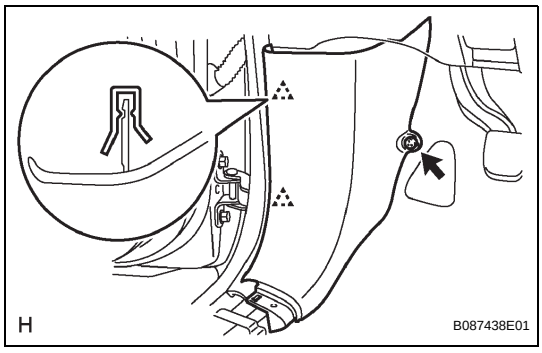

18. **REMOVE COWL SIDE TRIM BOARD RH**
    HINT:
    Follow the same procedures as for the cowl side trim board LH.

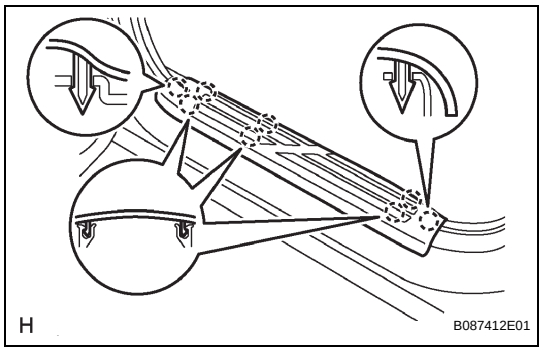

19. REMOVE REAR DOOR SCUFF PLATE LH

(a) Disengage the 8 claws and remove the rear door scuff plate.

20. REMOVE REAR DOOR SCUFF PLATE RH

HINT:
Follow the same procedures as for the rear door scuff plate LH.

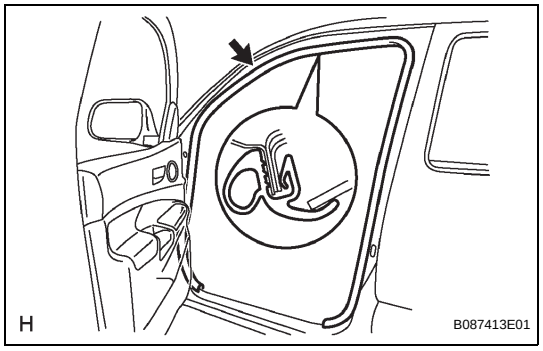

21. REMOVE FRONT DOOR OPENING TRIM WEATHERSTRIP LH

(a) Remove the front door opening trim weatherstrip.

22. REMOVE FRONT DOOR OPENING TRIM WEATHERSTRIP RH

HINT:
Follow the same procedures as for the front door opening trim weatherstrip LH.

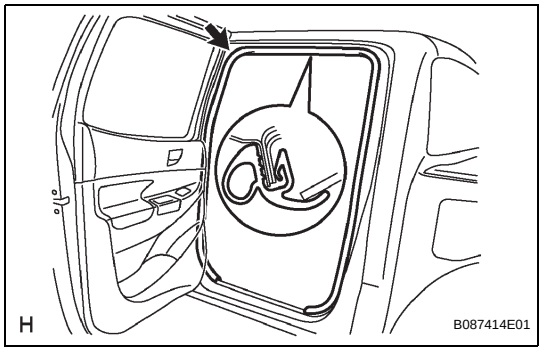

23. REMOVE REAR DOOR OPENING TRIM WEATHERSTRIP LH

(a) Remove the rear door opening trim weatherstrip.

24. REMOVE REAR DOOR OPENING TRIM WEATHERSTRIP RH

HINT:
Follow the same procedures as for the rear door opening trim weatherstrip LH.

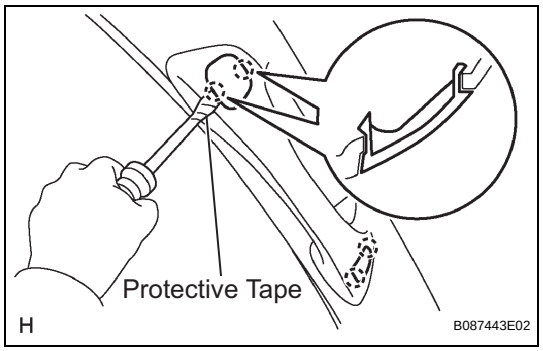

25. REMOVE FRONT PILLAR GARNISH LH

(a) Using a screwdriver with its tip taped in protective tape, disengage the 2 claws and remove the assist grip plug.
HINT:
Follow the same procedures as for the opposite side.

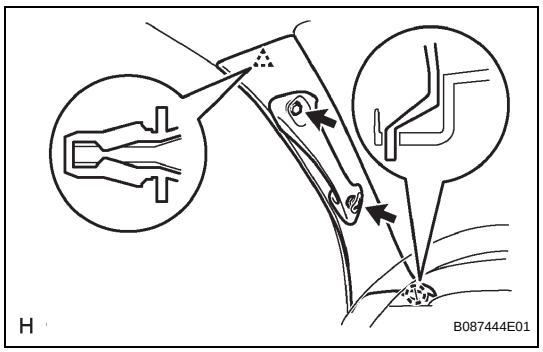

(b) Remove the 2 screws.
(c) Disengage the clip and claw and remove the front pillar garnish.

IR

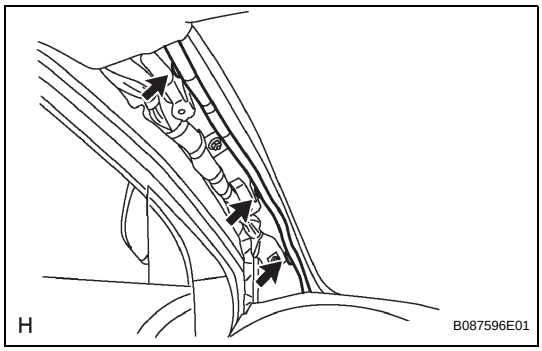

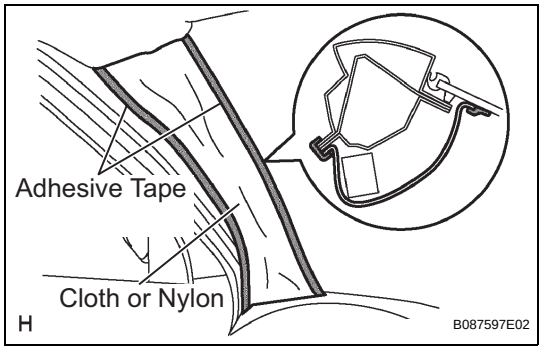

(d) for LH side:
(1) Using a clip remover, remove the 3 wire harness clamps.

(e) w/ Curtain Shield Airbag:
NOTICE:
Cover the curtain shield airbag with the protective cover as soon as the front pillar garnish is removed.
(1) Thoroughly cover the air bag with cloth or nylon of 700 mm (27.56 in.) x 120 mm (4.72 in.) and fix the ends of the cover with adhesive tape, as shown in the illustration.

26. REMOVE FRONT PILLAR GARNISH RH
HINT:
Follow the same procedures as for the front pillar garnish LH.

27. REMOVE INSTRUMENT PANEL UNDER TRAY (for Pedal Type Parking Brake) (See page IP-9)

28. REMOVE INSTRUMENT PANEL HOLE COVER (for Lever Type Parking Brake) (See page IP-9)

29. REMOVE REAR CONSOLE UPPER PANEL SUB-ASSEMBLY
(a) for Automatic Transmission:
(1) Remove the rear console upper panel sub-assembly (See page IP-9).
(b) for Manual Transmission:
(1) Remove the rear console upper panel sub-assembly (See page IP-9).

30. REMOVE REAR CONSOLE BOX ASSEMBLY (See page IP-10)

31. REMOVE INSTRUMENT PANEL CUP HOLDER TRAY (for Automatic Transmission) (See page IP-10)

32. REMOVE FRONT CONSOLE BOX
(a) for Automatic Transmission:
(1) Remove the front console box (See page IP-10).
(b) for Manual Transmission:
(1) Remove the front console box (See page IP-11).

33. REMOVE AIR CONDITIONING CONTROL ASSEMBLY (See page IP-12)

34. **REMOVE RADIO RECEIVER ASSEMBLY (See page AV-69)**

35. **DISCONNECT HOOD LOCK CONTROL LEVER SUB-ASSEMBLY (See page ED-3)**

36. **REMOVE INSTRUMENT LOWER PANEL FINISH PANEL (See page IP-12)**

37. **REMOVE INSTRUMENT CLUSTER FINISH PANEL SUB-ASSEMBLY (See page IP-12)**

38. **REMOVE COMBINATION METER ASSEMBLY (See page IP-13)**

39. **REMOVE INSTRUMENT CENTER CLUSTER FINISH PANEL SUB-ASSEMBLY (See page IP-13)**

40. **REMOVE GLOVE COMPARTMENT DOOR ASSEMBLY (See page IP-13)**

41. **REMOVE INSTRUMENT LOWER PANEL FINISH PANEL SUB-ASSEMBLY (See page IP-14)**

42. **REMOVE INSTRUMENT LOWER PANEL (See page IP-14)**

43. **REMOVE INSTRUMENT LOWER COVER SUB-ASSEMBLY (See page IP-14)**

44. **REMOVE INSTRUMENT SIDE PANEL (See page IP-14)**

45. **DISCONNECT PASSENGER AIRBAG CONNECTOR (See page RS-576)**

46. **REMOVE INSTRUMENT PANEL SUB-ASSEMBLY (See page IP-14)**

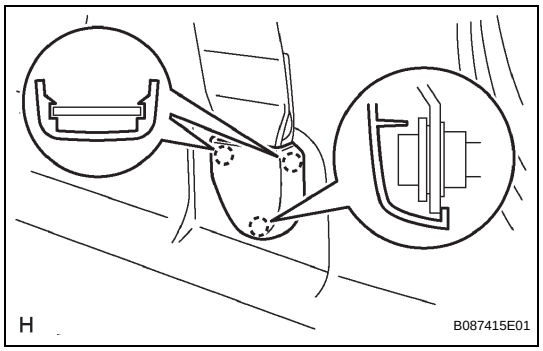

47. **REMOVE LAP BELT OUTER ANCHOR COVER**

HINT:

Follow the same procedures as for the opposite side.

(a) Disengage the 3 claws and remove the lap belt outer anchor cover.

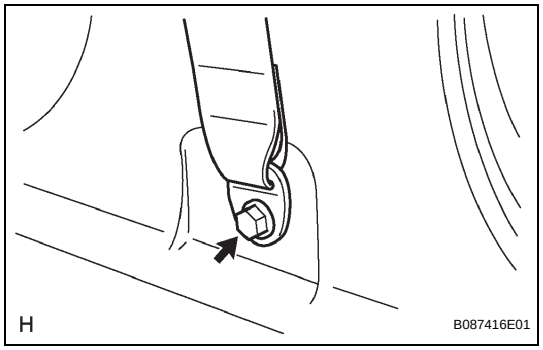

48. **REMOVE CENTER PILLAR LOWER GARNISH LH**

(a) Remove the bolt and floor anchor of the front seat outer belt.

IR

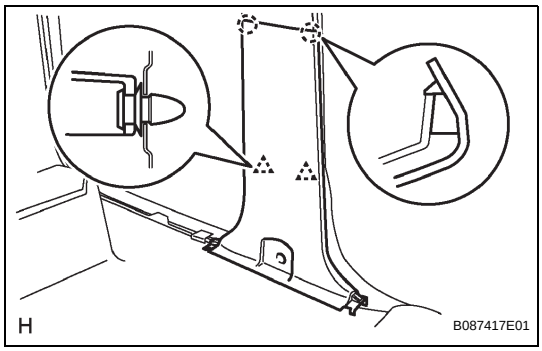

(b) Disengage the 2 claws and 2 clips, and remove the center pillar lower garnish.

49. REMOVE CENTER PILLAR LOWER GARNISH RH

HINT:
Follow the same procedures as for the center pillar lower garnish LH.

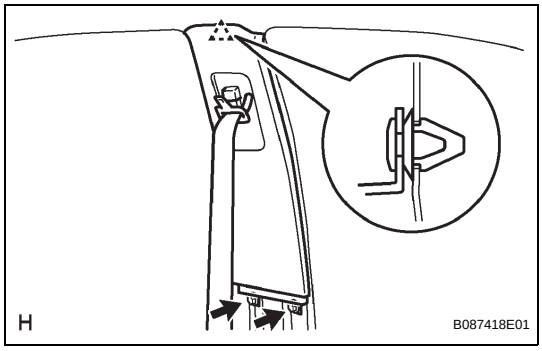

50. REMOVE CENTER PILLAR UPPER GARNISH LH

(a) Remove the 2 screws.
(b) Disengage the clip and remove the center pillar upper garnish.

51. REMOVE CENTER PILLAR UPPER GARNISH RH

HINT:
Follow the same procedures as for the center pillar upper garnish LH.

IR

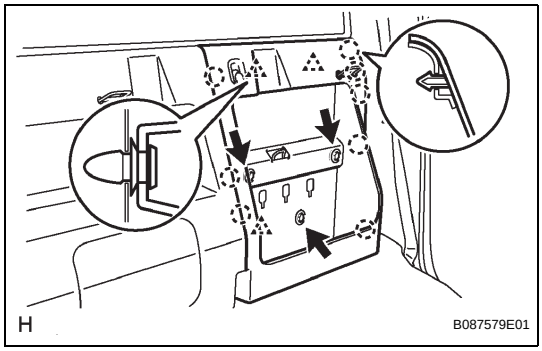

52. REMOVE LUGGAGE COMPARTMENT SIDE TRAY LH

(a) Remove the 3 bolts.
(b) Disengage the 8 claws and 3 clips, and remove the luggage compartment side tray.

53. REMOVE REAR SEAT BACK CENTER HINGE SUB-ASSEMBLY (See page SE-71)

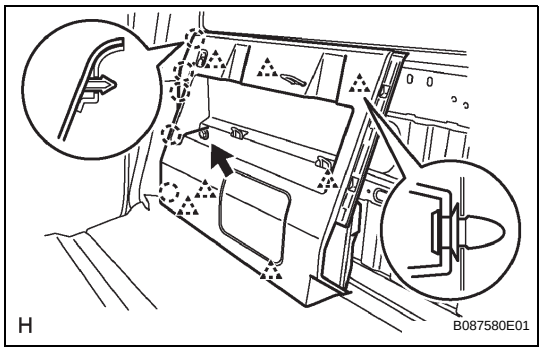

54. REMOVE LUGGAGE COMPARTMENT SIDE TRAY RH

(a) w/ Woofer:
(1) Remove the bolt.
(2) Disengage the 5 claws and 7 clips, and remove the luggage compartment side tray.

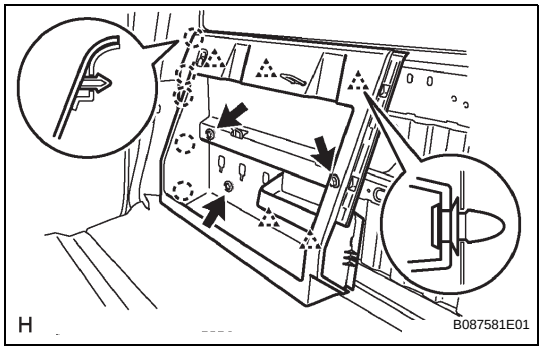

(b) w/o Woofer:
(1) Remove the 3 bolts.
(2) Disengage the 5 claws and 5 clips, and remove the luggage compartment side tray.

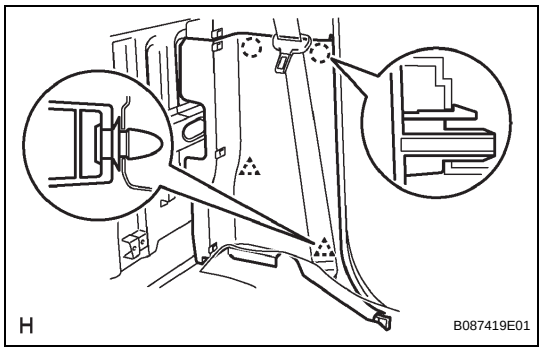

55. REMOVE QUARTER TRIM LOWER PANEL LH

(a) Disengage the 2 claws and 2 clips, and remove the quarter trim lower panel.

56. REMOVE QUARTER TRIM LOWER PANEL RH

HINT:

Follow the same procedures as for the quarter trim lower panel LH.

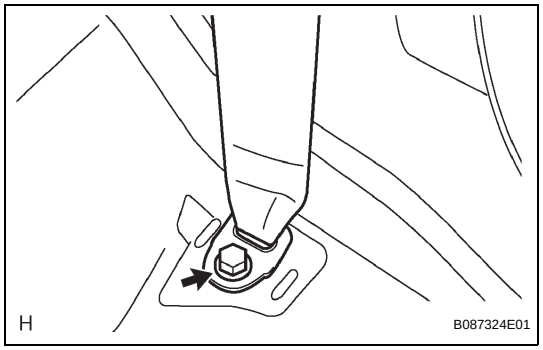

57. REMOVE QUARTER INSIDE TRIM BOARD LH

(a) Remove the bolt and remove the floor anchor of the rear seat belt outer.

HINT:

Follow the same procedures as for the opposite side.

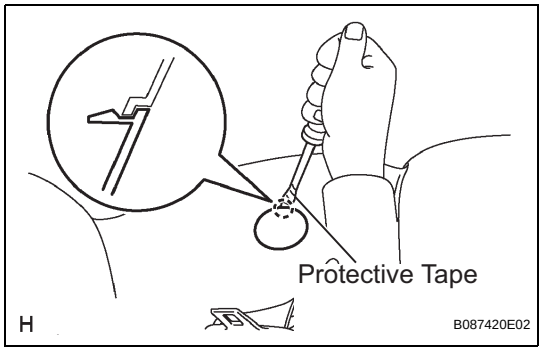

(b) Using a screwdriver with its tip taped in protective tape, disengage the claw and open the cover.

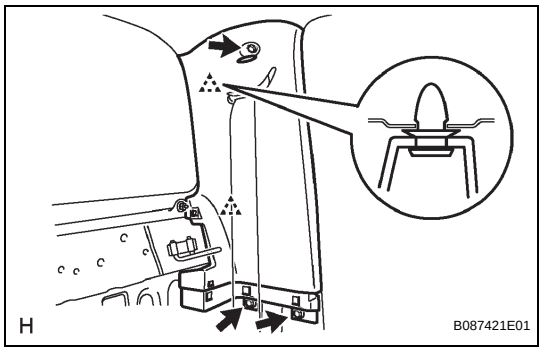

(c) Remove the 3 screws.

(d) Disengage the 2 clips and remove the quarter inside trim board.

58. REMOVE QUARTER INSIDE TRIM BOARD RH

HINT:

Follow the same procedures as for the quarter inside trim board LH.

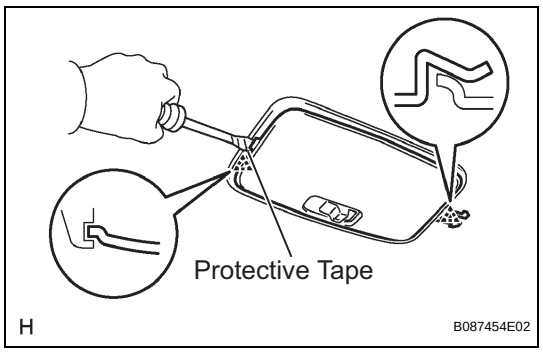

59. REMOVE ROOM LIGHT ASSEMBLY

(a) Using a screwdriver with its tip taped in protective tape, disengage the 2 claws and remove the room light lens.

IR

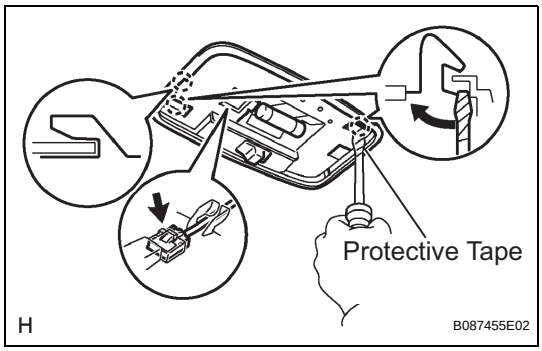

(b) Using a screwdriver with its tip taped in protective tape, disengage the 3 claws.
(c) Disconnect the room light connector and remove the room light.

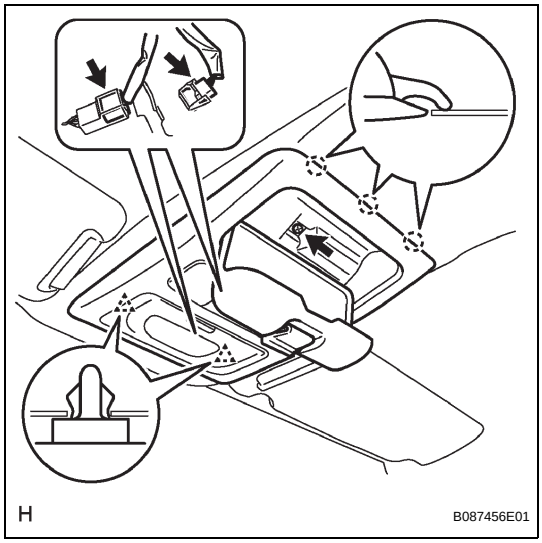

60. REMOVE ROOF CONSOLE BOX ASSEMBLY
(a) Remove the screw.
(b) Disengage the 2 clips and 3 claws.
(c) Disconnect the accessory meter connector and map lamp connector and remove the map lamp.

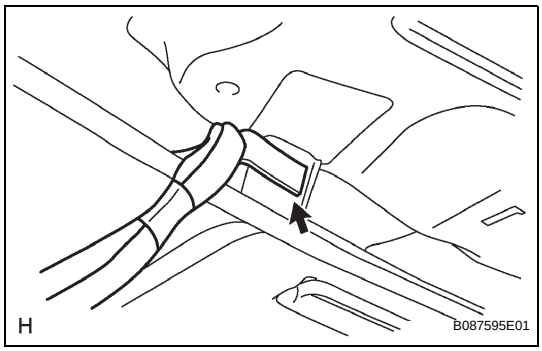

(d) Using a clip remover, remove the wire harness clamp.

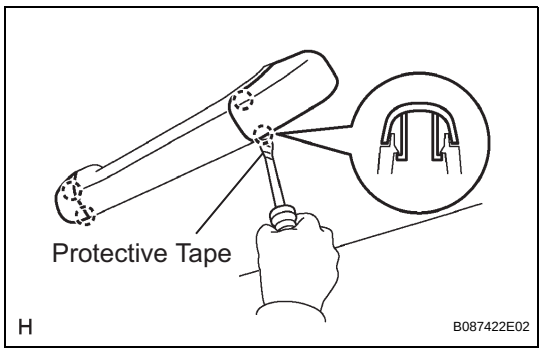

61. REMOVE ASSIST GRIP SUB-ASSEMBLY
HINT:
Follow the same procedures as for the opposite side.
(a) Using a screwdriver with its tip taped in protective tape, disengage the 2 claws and open the cover.

IR

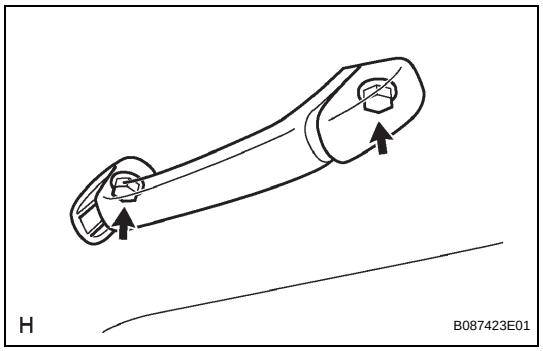

(b) Remove the 2 screws and assist grip.

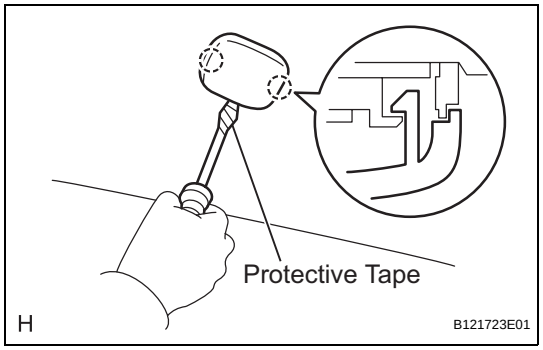

62. REMOVE ASSIST GRIP PLUG (w/ Curtain Shield Airbag)

HINT:
Follow the same procedures as for the opposite side.

(a) Using a screwdriver with its tip taped in protective tape, disengage the 2 claws and open the cover.

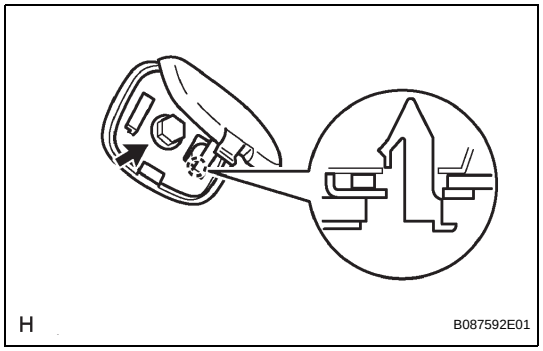

(b) Remove the screw.
(c) Disengage the claw and remove the assist grip plug.

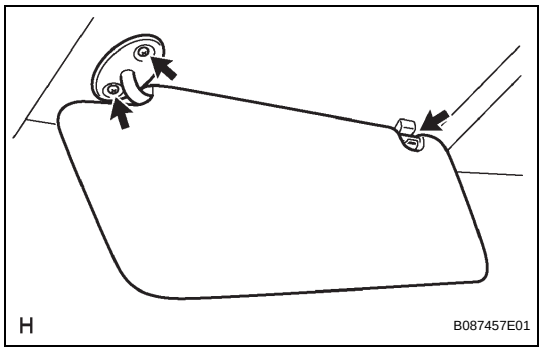

63. REMOVE VISOR ASSEMBLY LH

(a) Remove the 2 screws.
(b) Remove the visor from the visor hol

64. REMOVE VISOR ASSEMBLY RH

HINT:
Follow the same procedures as for the visor assembly LH.

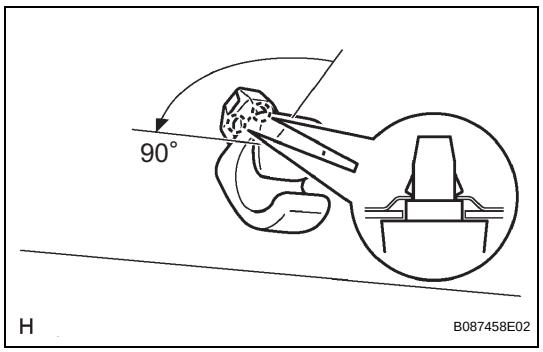

65. REMOVE VISOR HOLDER

(a) Turn the visor holder 90° counterclockwise and remove it.
HINT:
Follow the same procedures as for the opposite side.

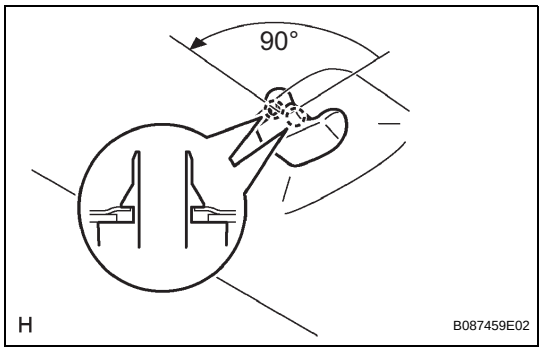

66. REMOVE COAT HOOK

HINT:

Follow the same procedures as for the opposite side.

(a) Turn the coat hook 90° counterclockwise and remove it.

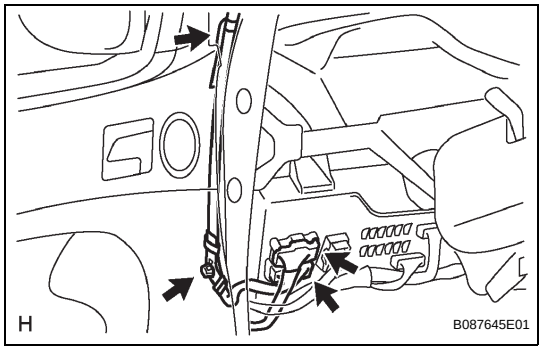

67. REMOVE ROOF HEADLINING ASSEMBLY

(a) Disconnect the frame wire connector.

(b) Disconnect the roof wire connector.

(c) Using a clip remover, remove the 2 wire harness clamps.

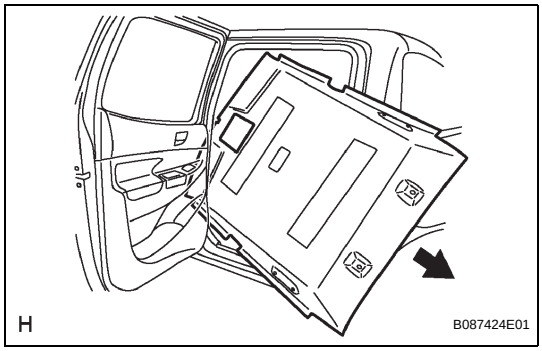

(d) Remove the roof headlining from the vehicle.

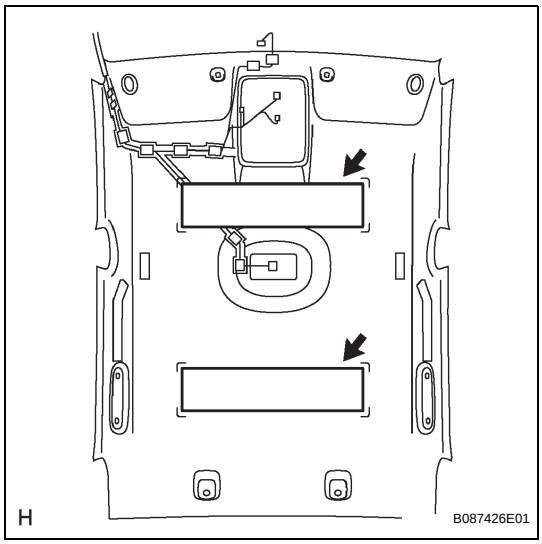

68. REMOVE ROOF HEADLINING PAD

(a) Remove the 2 roof headlining pads from the roof headlining.

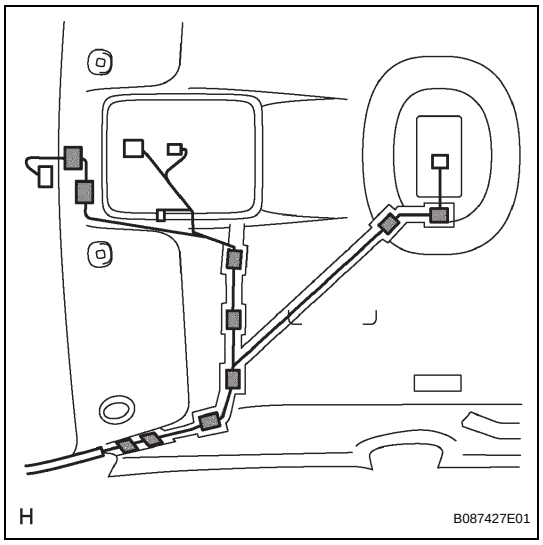

69. REMOVE ROOF WIRE

(a) w/ EC Mirror:
  (1) Remove the 10 tapes and roof wire.

(b) w/o EC Mirror:
  (1) Remove the 8 tapes and roof wire.

PARTS LOCATION

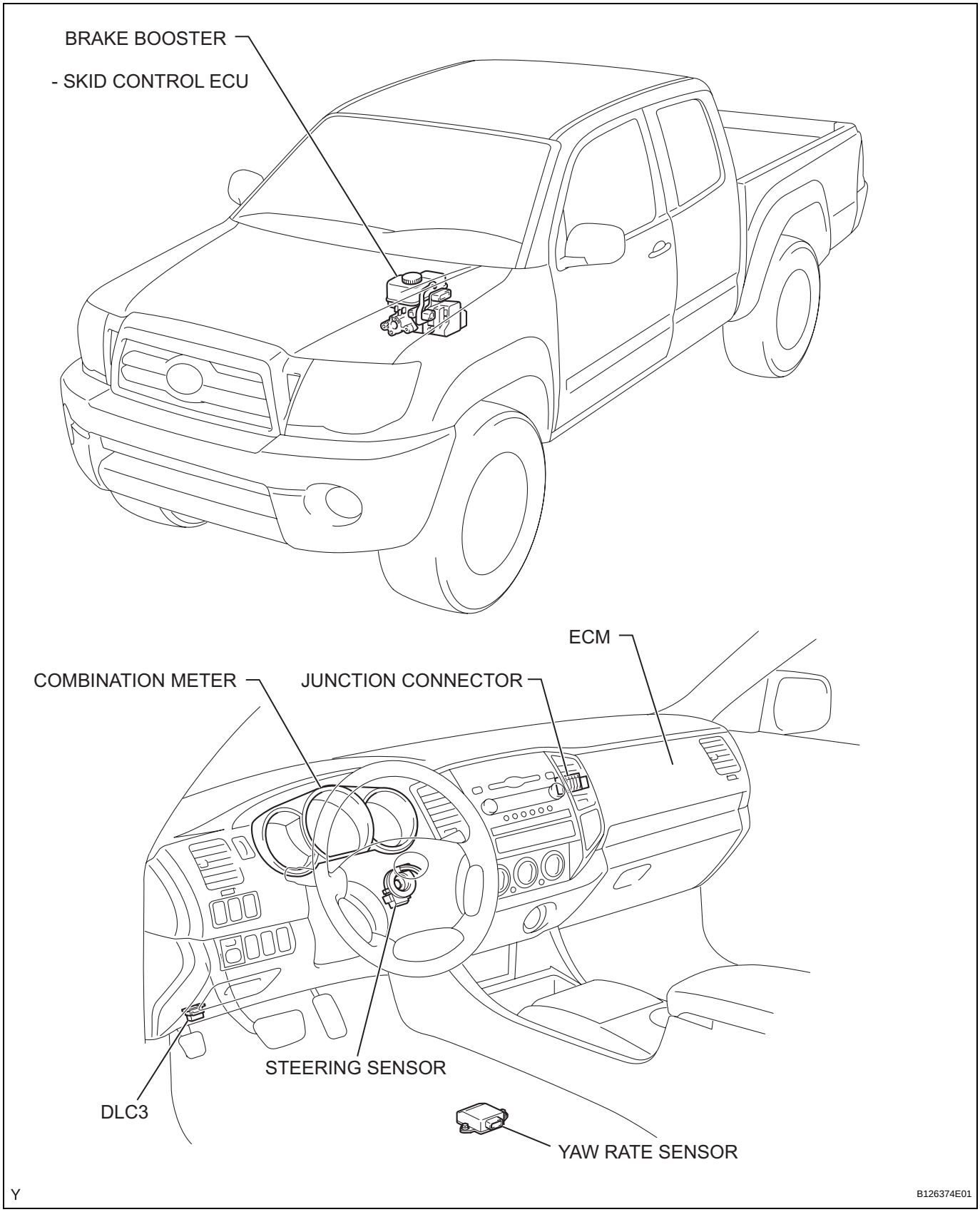

SYSTEM DIAGRAM

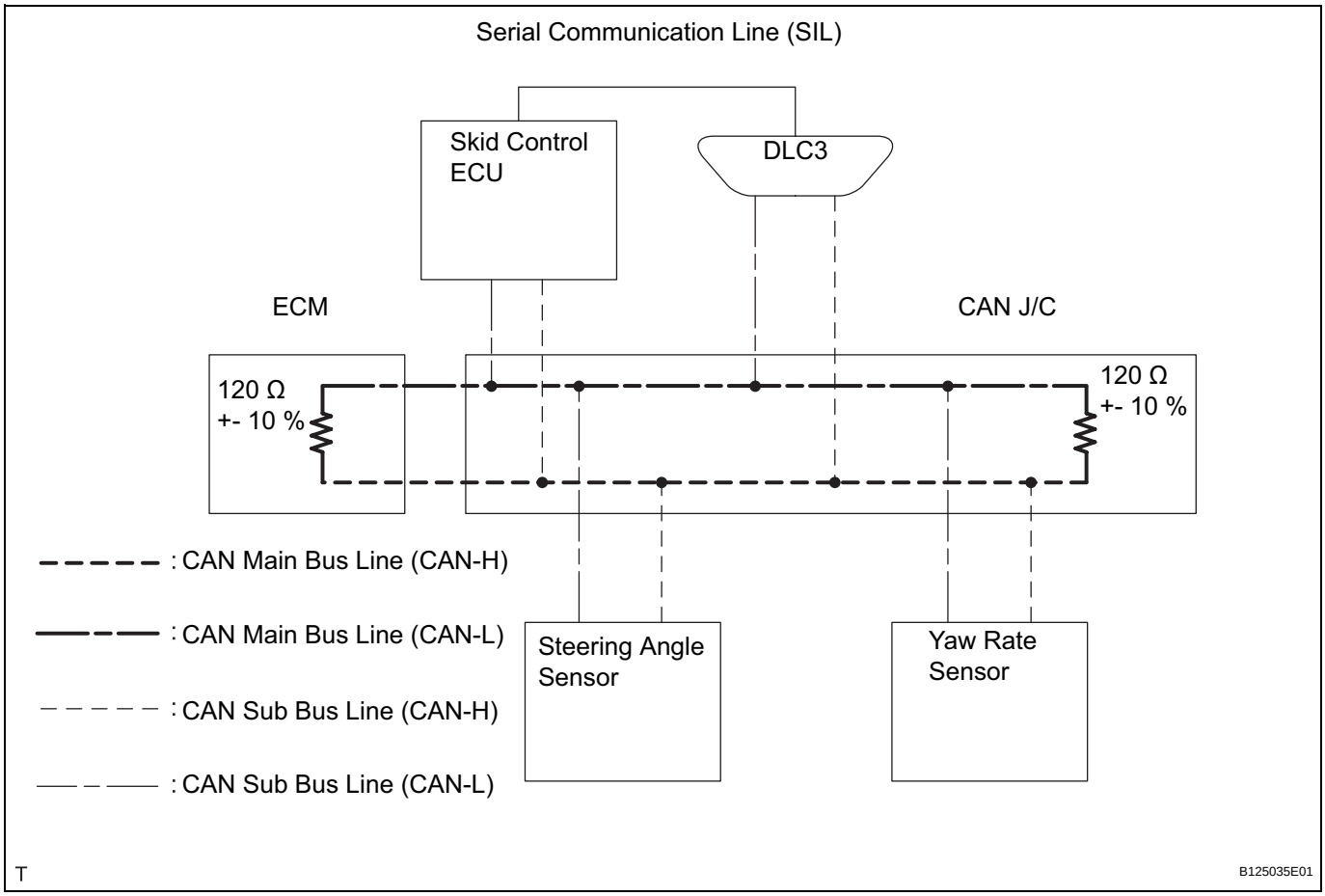

HINT:

- The skid control ECU stores DTCs and performs DTC communication by receiving information from the steering angle sensor and yaw rate sensor. These sensors cannot store DTCs or perform DTC communication.
- The ECM uses the CAN communication system to perform DTC communication instead of the conventional serial communication line (SIL).

CA

REMOVAL

1. **DISCHARGE FUEL SYSTEM PRESSURE**
   (See page FU-1)
2. **REMOVE BATTERY**
3. **DRAIN ENGINE COOLANT (See page CO-3)**
4. **DRAIN ENGINE OIL (See page LU-4)**
5. **REMOVE ENGINE ASSEMBLY**
   (See page EM-186)
6. **REMOVE OIL LEVEL GAGE GUIDE**
   (a) Remove the oil level gauge.
   (b) Remove the bolt and pull out the oil level gauge guide.
   (c) Remove the O-ring from the oil level gauge guide.
7. **REMOVE WATER INLET (See page CO-9)**
8. **REMOVE V-RIBBED BELT TENSIONER ASSEMBLY (See page EM-44)**
9. **REMOVE NO.2 IDLER PULLEY SUB-ASSEMBLY**
   (a) Remove the 2 bolts, then remove the idler pulley No. 2.
10. **REMOVE NO.1 IDLER PULLEY SUB-ASSEMBLY**
    (a) Remove the bolt, then remove the idler pulley No. 1.
11. **REMOVE CRANKSHAFT PULLEY (See page EM-45)**
12. **REMOVE NO.2 OIL PAN SUB-ASSEMBLY**
    (a) Remove the 15 bolts and 2 nuts.

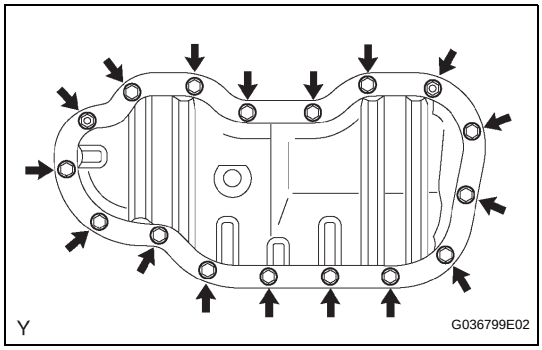

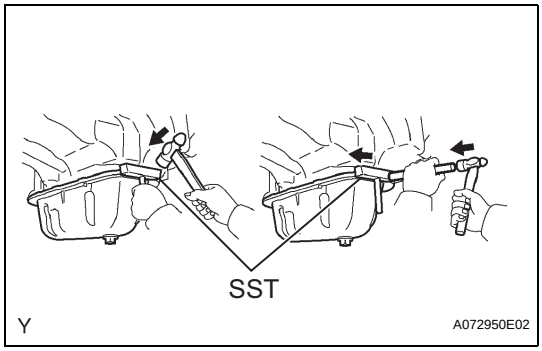

(b) Insert the blade of SST between the oil pan and oil pan No. 2, cut off applied sealer and remove the oil pan No. 2.
SST 09032-00100
NOTICE:
- **Be careful not to damage the contact surfaces of the oil pan and oil pan No. 2**

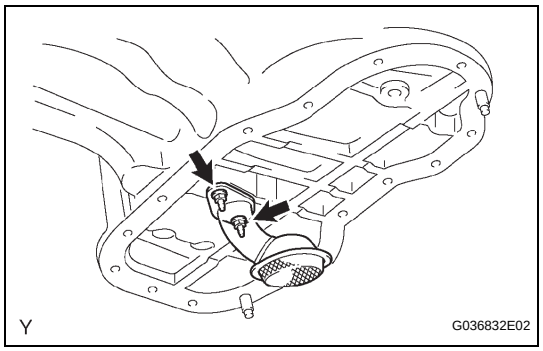

13. **REMOVE OIL STRAINER SUB-ASSEMBLY**
    (a) Remove the 2 nuts, then remove the oil strainer and gasket.

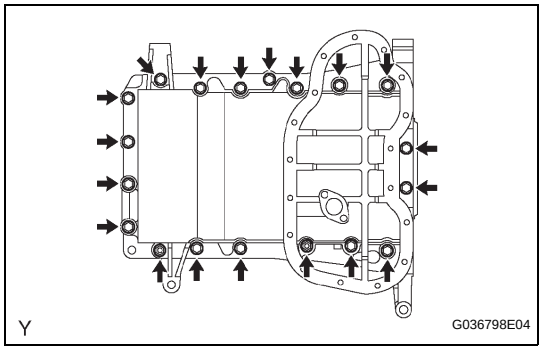

14. **REMOVE OIL PAN SUB-ASSEMBLY**
    (a) Remove the 17 bolts and 2 nuts.

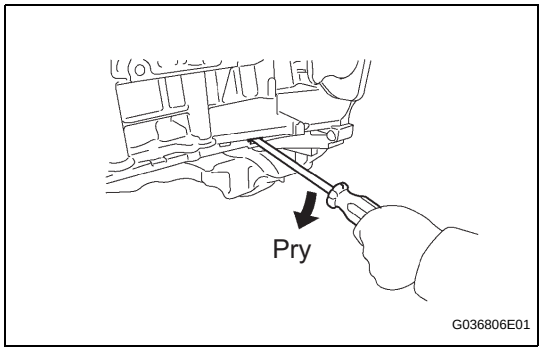

    (b) Using a screwdriver, remove the oil pan by prying between the oil pan and cylinder block.
    NOTICE:
    Be careful not to damage the contact surfaces of the cylinder block and oil pan.

15. **REMOVE INTAKE AIR SURGE TANK (See page EM-57)**
16. **REMOVE IGNITION COIL ASSEMBLY (See page IG-7)**
17. **REMOVE CYLINDER HEAD COVER SUB-ASSEMBLY (See page EM-59)**
18. **REMOVE CYLINDER HEAD COVER SUB-ASSEMBLY LH (See page EM-59)**
19. **REMOVE CAMSHAFT TIMING OIL CONTROL VALVE ASSEMBLY (See page ES-407)**
20. **REMOVE VVT SENSOR (See page IG-8)**
21. **REMOVE TIMING CHAIN OR BELT COVER SUB-ASSEMBLY (See page LU-17)**
22. **REMOVE TIMING GEAR CASE OR TIMING CHAIN CASE OIL SEAL (See page EM-236)**

EM

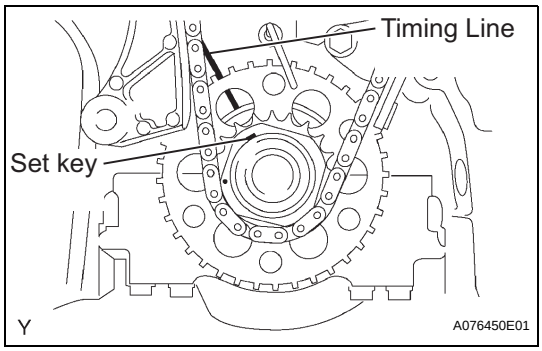

23. SET NO.1 CYLINDER TO TDC/COMPRESSION

(a) Using the crankshaft pulley set bolt, turn the crankshaft to align the crankshaft set key with the timing line of the cylinder block.

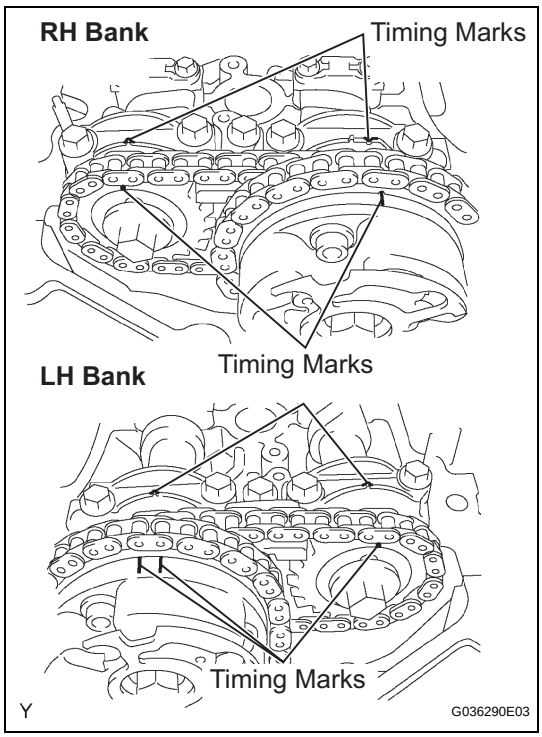

(b) Check that the timing marks of the camshaft timing gears are aligned with the timing marks of the bearing cap as shown in the illustration.
If not, turn the crankshaft 1 complete revolution (360°) and align the timing marks as above.

24. REMOVE NO.1 CHAIN TENSIONER ASSEMBLY

NOTICE:

- **Never rotate the crankshaft with the chain tensioner removed.**
- **When rotating the camshaft with the timing chain removed, rotate the crankshaft counterclockwise 40° from the TDC first.**

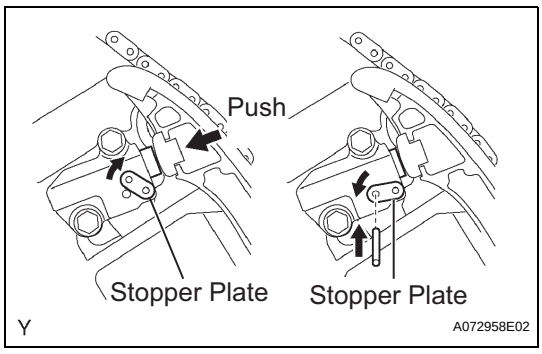

(a) While turning the stopper plate of the tensioner upward, push in the plunger of the chain tensioner as shown in the illustration.

(b) While turning the stopper plate of the tensioner down ward, insert a bar of ϕ 3.5 mm (0.138) into the holes in the stopper plate and tensioner to fix the stopper plate.

(c) Remove the 2 bolts, then remove the chain tensioner.

25. REMOVE CHAIN TENSIONER SLIPPER

26. REMOVE IDLE SPROCKET ASSEMBLY

(a) Using a 10 mm hexagon wrench, remove the idle gear shaft No. 2, idle gear No. 1 and idle gear shaft No. 1.

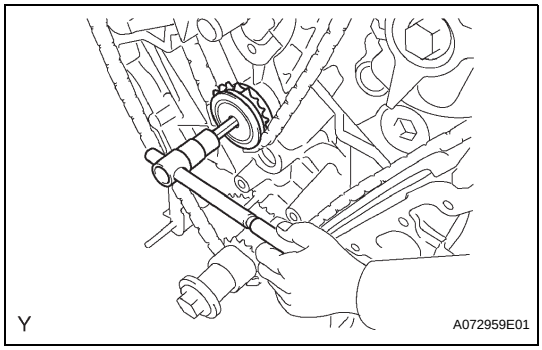

27. REMOVE NO.2 CHAIN VIBRATION DAMPER

(a) Remove the 2 chain vibration dampers No. 2.

28. REMOVE CHAIN SUB-ASSEMBLY

INSTALLATION

1. INSTALL CHAIN TENSIONER SLIPPER

2. INSTALL NO.1 CHAIN TENSIONER ASSEMBLY

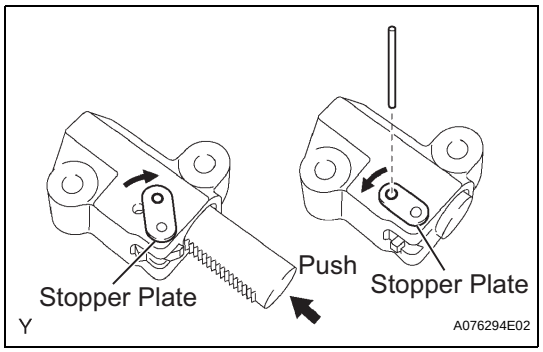

(a) While turning the stopper plate of the tensioner clockwise, push in the plunger of the tensioner as shown in the illustration.

(b) While turning the stopper plate of the tensioner counterclockwise, insert a bar of ϕ 35 mm (0.138 in.) into the holes in the stopper plate and tensioner to fix the stopper plate.

(c) Install the chain tensioner with the 2 bolts.
Torque: 10 N*m (102 kgf*cm, 7.4 ft.*lbf)

3. INSTALL CHAIN SUB-ASSEMBLY

(a) Set the No. 1 cylinder to TDC/ compression.

(1) Align the timing marks of the camshaft timing gears and bearing caps.

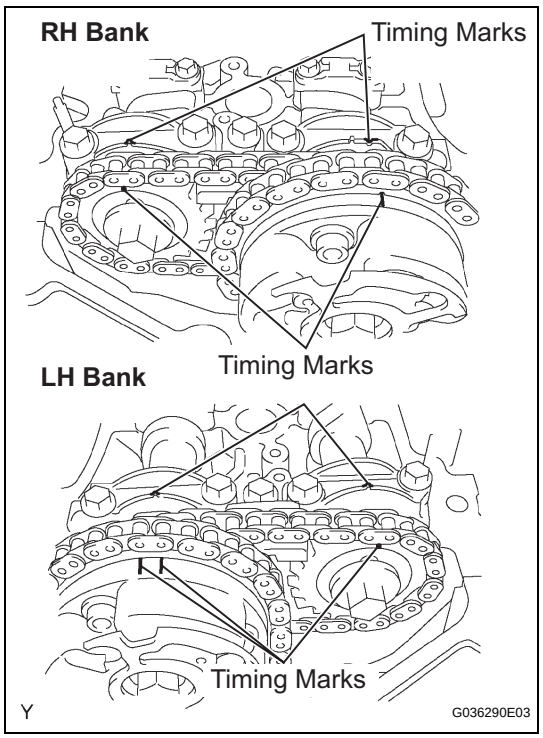

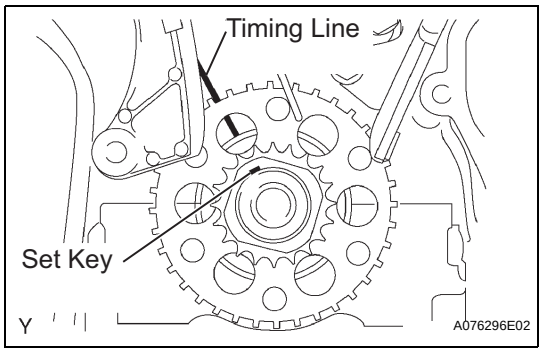

(2) Using the crankshaft pulley set bolt, turn the crankshaft to align the crankshaft set key with the timing line of the cylinder block.

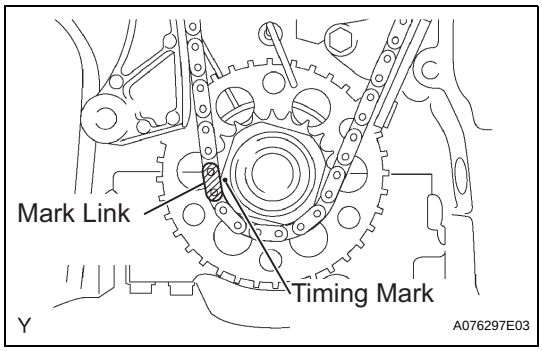

(b) Align the yellow mark link with the timing mark of the crankshaft timing link.

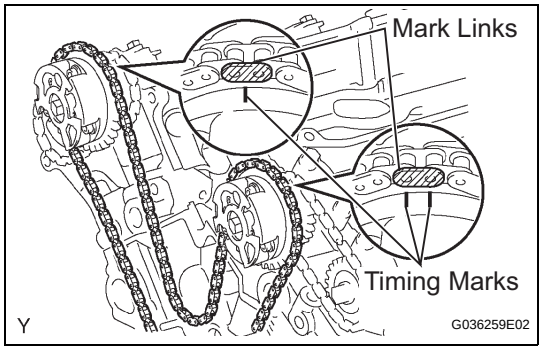

(c) Align the orange mark links with the timing marks of the camshaft timing gears, and install the chain.

4. INSTALL NO.2 CHAIN VIBRATION DAMPER

(a) Install the 2 chain vibration dampers No. 2.

5. INSTALL IDLE SPROCKET ASSEMBLY

(a) Apply a light coat of engine oil to rotating surface of the idle gear shaft No. 1.

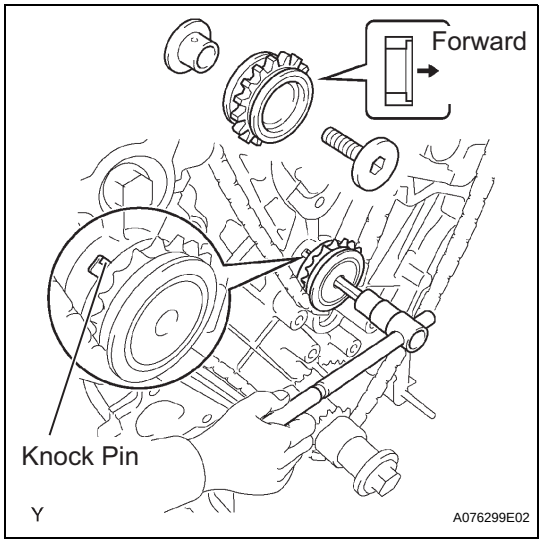

(b) Temporarily install the idle gear shaft No. 1 together with idle gear shaft No. 2 while aligning the knock pin of the idle gear shaft No. 1 with the knock pin groove of the cylinder block.
NOTICE:
Be careful of the idle gear direction.

(c) Using 10 mm hexagon wrench, tighten the idle gear shaft No. 2.
Torque: 60 N*m (612 kgf*cm, 44 ft.*lbf)

(d) Remove the bar from the chain tensioner.

6. INSTALL TIMING GEAR CASE OR TIMING CHAIN CASE OIL SEAL (See page EM-236)

7. INSTALL TIMING CHAIN OR BELT COVER SUB-ASSEMBLY (See page LU-20)

8. INSTALL VVT SENSOR (See page IG-8)

9. INSTALL CAMSHAFT TIMING OIL CONTROL VALVE ASSEMBLY (See page ES-408)

10. INSTALL CYLINDER HEAD COVER SUB-ASSEMBLY LH (See page EM-68)

11. INSTALL CYLINDER HEAD COVER SUB-ASSEMBLY (See page EM-68)

12. INSTALL IGNITION COIL ASSEMBLY (See page IG-7)

13. INSTALL INTAKE AIR SURGE TANK (See page EM-69)

14. INSTALL OIL PAN SUB-ASSEMBLY

(a) Remove any old packing (FIPG) material and be careful not to drop any oil on the contact surfaces of the cylinder block, rear oil seal retainer and oil pan.

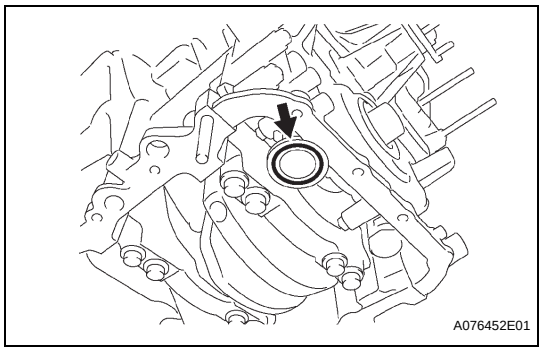

(b) Install a new O-ring onto the oil pump.

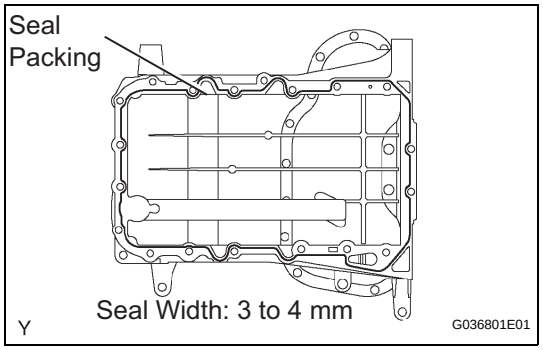

(c) Apply a continuous bead of the seal packing (diameter 3 to 4 mm (0.12 to 0.16 in.)) to the oil pan as shown in the illustration.
Seal packing:
Part No. 08826-00080 or equivalent
NOTICE:
Install the oil pan within 3 minutes of applying the seal packing. Tighten the oil pan bolts and nuts within 15 minutes of installing the oil pan. Otherwise, the seal packing must be removed and reapplied.

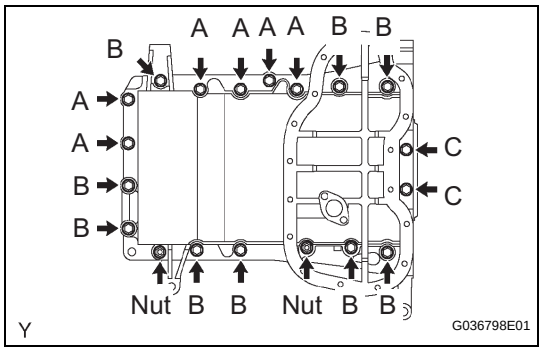

(d) Install the oil pan with the 17 bolts and 2 nuts, and tighten the bolts and nuts uniformly in several steps.
Torque: 10 N*m (102 kgf*cm, 7.4 ft.*lbf) for 10 mm (0.39 in.) head
21 N*m (214 kgf*cm, 16 ft.*lbf) for 12 mm (0.47 in.) head
HINT:
Each bolt length is as follows:

Bolt	Length
A	25 mm (0.98 in.)
B	45 mm (1.77 in.)
C	14 mm (0.55 in.)

15. INSTALL OIL STRAINER SUB-ASSEMBLY

(a) Install a new gasket and the oil strainer with the 2 nuts.
Torque: 9.0 N*m (92 kgf*cm, 80 in.*lbf)

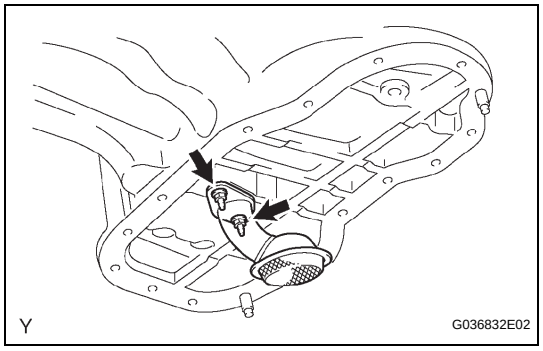

16. INSTALL NO.2 OIL PAN SUB-ASSEMBLY

(a) Remove any old packing (FIPG) material and be careful not to drop any oil on the contact surfaces of the oil pan and oil pan No. 2.

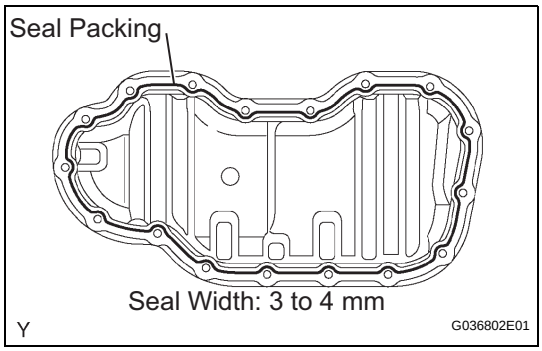

(b) Apply a continuous bead of seal packing (diameter 3 to 4 mm (0.12 to 0.16 in.)) as shown in the illustration.
Seal packing:
Part No. 08826-00080 or equivalent
NOTICE:
Install the oil pan No. 2 within 3 minutes of applying the seal packing. Tighten the oil pan No. 2 bolts and nut within 15 minutes of installing the oil pan. Otherwise, the seal packing must be removed and reapplied.

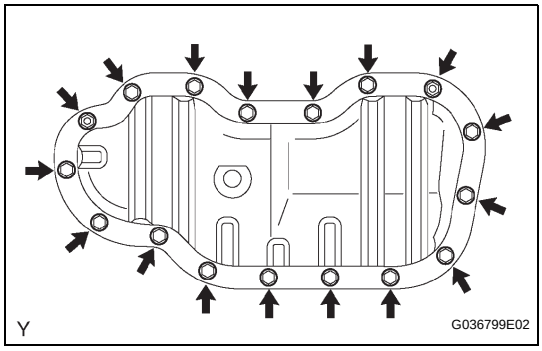

(c) Install the oil pan No. 2 with the 15 bolts and 2 nuts. Tighten the bolts and nuts uniformly in several steps.
Torque: 9.0 N*m (92 kgf*cm, 80 in.*lbf) for bolts
10 N*m (102 kgf*cm, 7.4 ft.*lbf) for nuts

EM

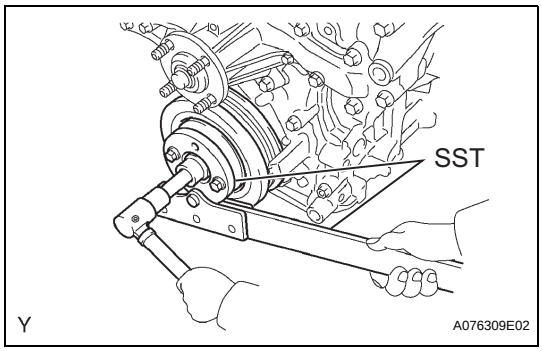

17. INSTALL CRANKSHAFT PULLEY
(a) Using SST, install the pulley set bolt.
SST 09213-54015 (91651-60855), 09330-00021
Torque: 250 N*m (2,549 kgf*cm, 184 ft.*lbf)

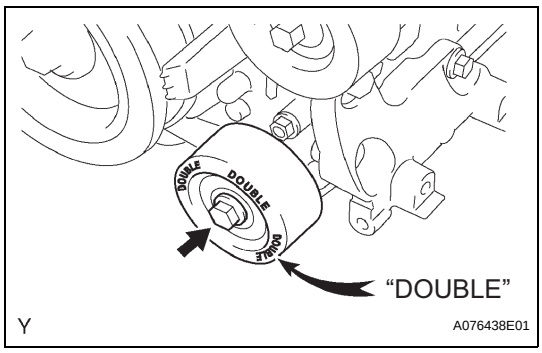

18. INSTALL NO.1 IDLER PULLEY SUB-ASSEMBLY
(a) Install the idler pulley with the bolt.
Torque: 54 N*m (551 kgf*cm, 40 ft.*lbf)
HINT:
DOUBLE is marked on the idler pulley No. 1 to distinguish it from the idler pulley No. 2.

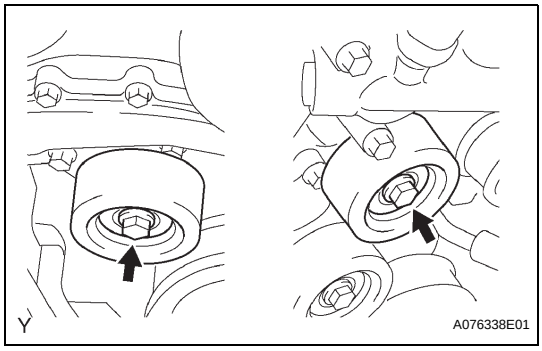

19. INSTALL NO.2 IDLER PULLEY SUB-ASSEMBLY
(a) Install the 2 idler pulleys with the 2 bolts.
Torque: 39 N*m (398 kgf*cm, 29 ft.*lbf)

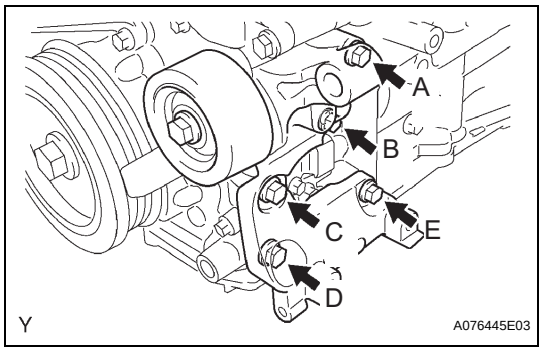

20. INSTALL V-RIBBED BELT TENSIONER ASSEMBLY

NOTICE:

A bolt in position A is not reusable.

HINT:

Each bolt length is as follows:

Position	Length
A	70 mm (2.76 in.)
B, C, D and E	33 mm (1.30 in.)

(a) Use a new bolt in position A.

(b) Finger-tighten the bolts in positions A and E and install the bracket.

(c) Tighten the bolts in positions A and E.
Torque: 36 N*m (267 kgf*cm, 27 ft.*lbf)

(d) Tighten the bolts in positions B, C and D.
Torque: 36 N*m (267 kgf*cm, 27 ft.*lbf)

21. INSTALL WATER INLET (See page CO-10)

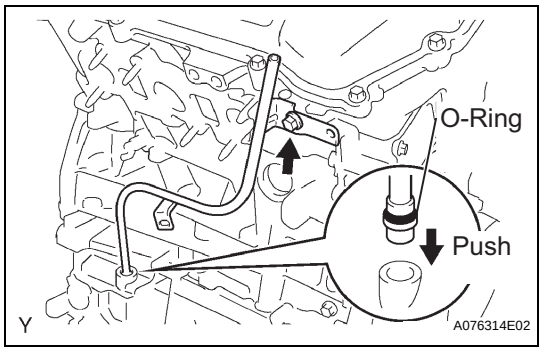

22. INSTALL OIL LEVEL GAGE GUIDE

(a) Install a new O-ring onto the oil level gauge guide.

(b) Apply a light coat of engine oil to the O-ring.

(c) Push the oil level gauge guide end into the guide hole of the oil pan.

(d) Install the oil level gauge guide with the bolt.
Torque: 9.0 N*m (92 kgf*cm, 80 in.*lbf)

(e) Install the oil level gauge guide.

23. INSTALL ENGINE ASSEMBLY
(See page EM-190)

24. INSTALL BATTERY

25. ADD ENGINE COOLANT (See page CO-3)

26. ADD ENGINE OIL (See page LU-5)

27. CHECK FOR ENGINE COOLANT LEAKAGE (See page CO-4)

28. CHECK FOR ENGINE OIL LEAKAGE

29. CHECK FOR FUEL LEAKAGE

30. CHECK FOR EXHAUST GAS LEAKAGE

31. INSPECT IGNITION TIMING (See page EM-1)

32. INSPECT ENGINE IDLING SPEED (See page EM-2)

33. INSPECT CO/HC (See page EM-3)

REMOVAL

1. **REMOVE BATTERY**
2. **DRAIN ENGINE COOLANT (See page CO-3)**
3. **DRAIN ENGINE OIL (See page LU-5)**
4. **REMOVE POWER STEERING LINK ASSEMBLY** (See page PS-53)
5. **REMOVE FRONT DIFFERENTIAL CARRIER ASSEMBLY (for 4WD)** (See page DF-19)
6. **REMOVE V-BANK COVER (See page ES-414)**
7. **REMOVE RADIATOR SUPPORT TO FRAME SEAL LH (See page CO-15)**
8. **REMOVE FAN SHROUD (See page CO-15)**
9. **REMOVE AIR CLEANER ASSEMBLY (See page ES-415)**
10. **REMOVE OIL LEVEL GAGE GUIDE**
    (a) Remove the oil level gauge.
    (b) Remove the bolt and pull out the oil level gauge guide.
    (c) Remove the O-ring from the oil level gauge guide.
11. **REMOVE WATER INLET (See page CO-9)**
12. **SEPARATE VANE PUMP ASSEMBLY**
    (a) Disconnect the power steering pressure switch connector.
    (b) Remove the 2 bolts, then separate the vane pump.
    NOTICE:
    Do not hit the pulley with other parts when separating the vane pump.
    HINT:
    The vane pump is suspended securely.

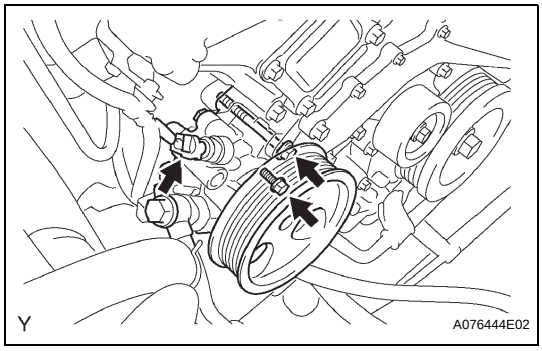

13. **REMOVE GENERATOR ASSEMBLY (See page CH-7)**
14. **SEPARATE COOLER COMPRESSOR ASSEMBLY (See page ES-409)**
15. **REMOVE V-RIBBED BELT TENSIONER ASSEMBLY**
    (a) Remove the 5 bolts, then remove the V-ribbed belt tensioner.
16. **REMOVE NO.2 IDLER PULLEY SUB-ASSEMBLY**
    (a) Remove the 2 bolts, then remove the idler pulley No. 2.
17. **REMOVE NO.1 IDLER PULLEY SUB-ASSEMBLY**
    (a) Remove the bolt, then remove the idler pulley No. 1.

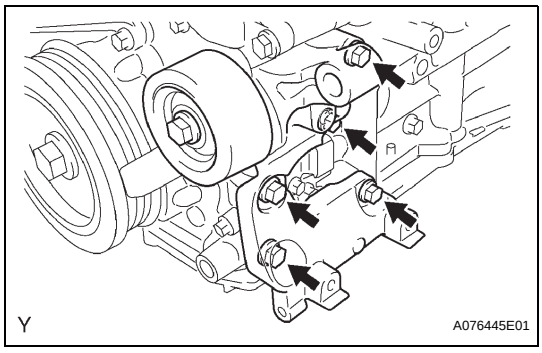

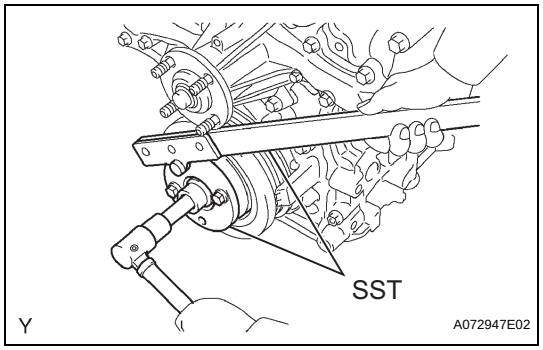

18. REMOVE CRANKSHAFT PULLEY

(a) Using SST, hold the crankshaft pulley and loosen the pulley set bolt.
SST 09213-54015 (91651-60855), 09330-00021

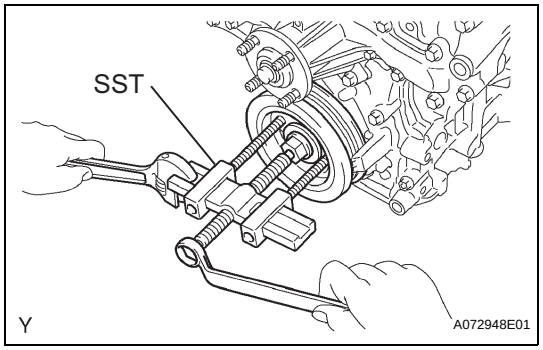

(b) Using the pulley set bolt and SST, remove the crankshaft pulley.
SST 09950-50013 (09951-05010, 09952-05010, 09953-05020, 09954-05030)

EM

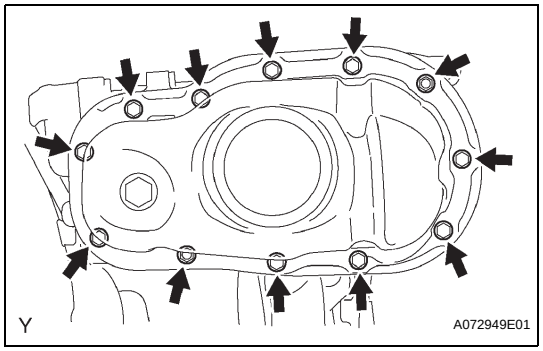

19. REMOVE NO.2 OIL PAN SUB-ASSEMBLY

(a) Remove the 10 bolts and 2 nuts.

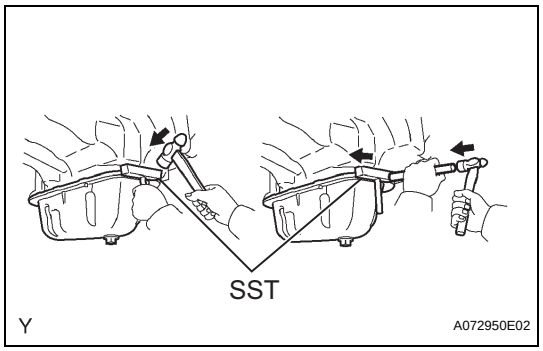

(b) Insert the blade of SST between the oil pan and oil pan No. 2, cut off applied sealer and remove the oil pan No. 2.
SST 09032-00100
NOTICE:
- **Be careful not to damage the contact surfaces of the oil pan and oil pan No. 2.**
- **Be careful not to damage the oil pan No. 2 flange.**

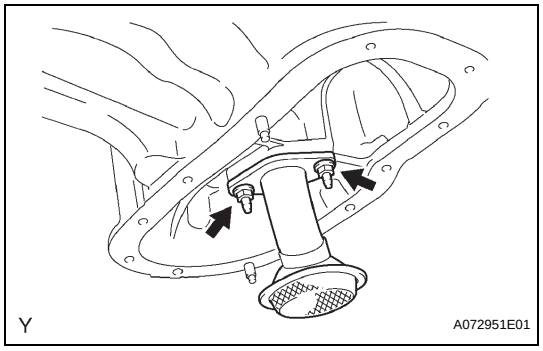

20. REMOVE OIL STRAINER SUB-ASSEMBLY

(a) Remove the 2 nuts, then remove the oil strainer and gasket.

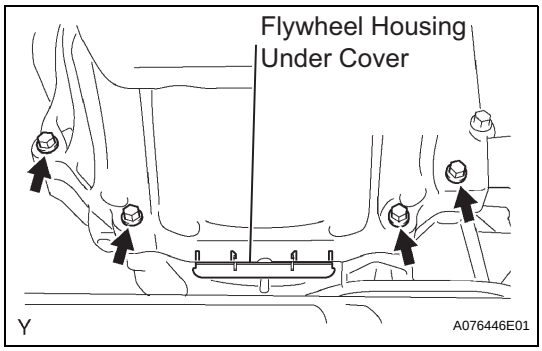

21. REMOVE OIL PAN SUB-ASSEMBLY

(a) Remove the 4 housing bolts.

(b) Remove the flywheel housing under cover.

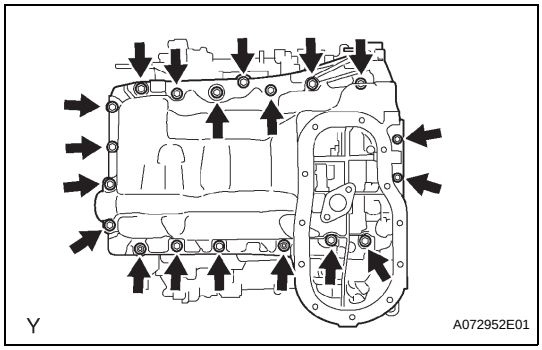

(c) Remove the 17 bolts and 2 nuts.

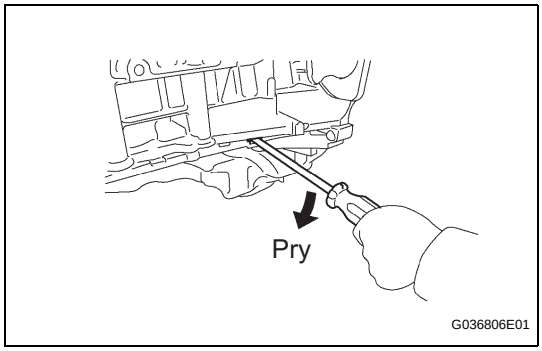

(d) Using a screwdriver, remove the oil pan by prying between the oil pan and cylinder block.

NOTICE:

Be careful not to damage the contact surfaces of the cylinder block and oil pan.

(e) Remove the O-ring from the oil pump.

22. REMOVE INTAKE AIR SURGE TANK (See page EM-57)

23. REMOVE IGNITION COIL ASSEMBLY (See page IG-7)

24. REMOVE CYLINDER HEAD COVER SUB-ASSEMBLY (See page EM-59)

25. REMOVE CYLINDER HEAD COVER SUB-ASSEMBLY LH (See page EM-59)

26. REMOVE CAMSHAFT TIMING OIL CONTROL VALVE ASSEMBLY (See page ES-407)

27. REMOVE VVT SENSOR (See page IG-8)

28. REMOVE TIMING CHAIN OR BELT COVER SUB-ASSEMBLY (See page LU-17)

29. REMOVE TIMING GEAR CASE OR TIMING CHAIN CASE OIL SEAL (See page EM-236)

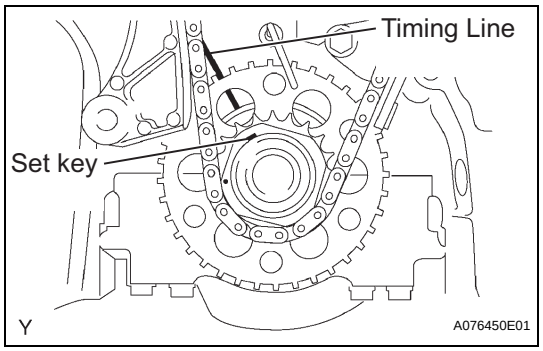

30. SET NO.1 COMPRESSION TO TDC/COMPRESSION

(a) Using the crankshaft pulley set bolt, turn the crankshaft to align the crankshaft set key with the timing line of the cylinder block.

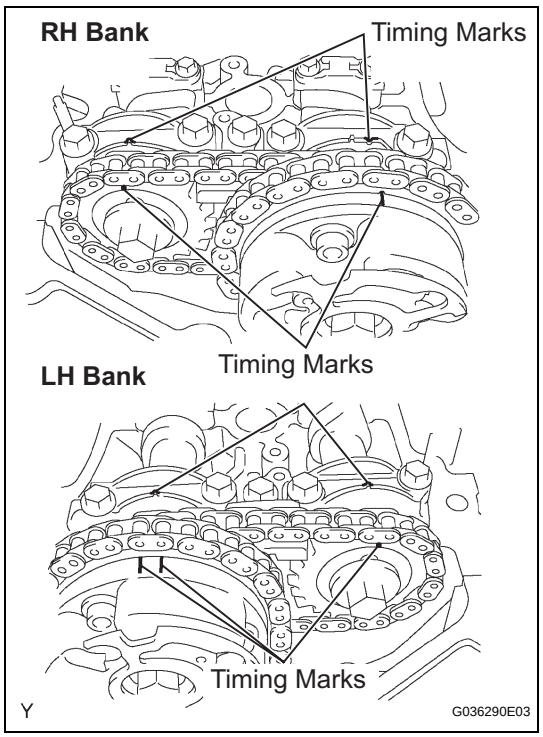

(b) Check that the timing marks of the camshaft timing gears are aligned with the timing marks of the bearing cap as shown in the illustration.
If not, turn the crankshaft 1 complete revolution (360°) and align the timing marks as above.

31. REMOVE NO.1 CHAIN TENSIONER ASSEMBLY

NOTICE:

- **Never rotate the crankshaft with the chain tensioner removed.**
- **When rotating the camshaft with the timing chain removed, rotate the crankshaft counterclockwise 40° from the TDC first.**

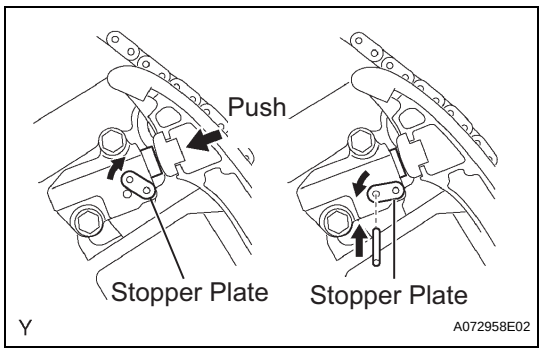

(a) While turning the stopper plate of the tensioner upward, push in the plunger of the chain tensioner as shown in the illustration.

(b) While turning the stopper plate of the tensioner down ward, insert a bar of ϕ 3.5 mm (0.138) into the holes in the stopper plate and tensioner to fix the stopper plate.

(c) Remove the 2 bolts, then remove the chain tensioner.

32. REMOVE CHAIN TENSIONER SLIPPER

33. REMOVE IDLE SPROCKET ASSEMBLY

(a) Using a 10 mm hexagon wrench, remove the idle gear shaft No. 2, idle gear No. 1 and idle gear shaft No. 1.

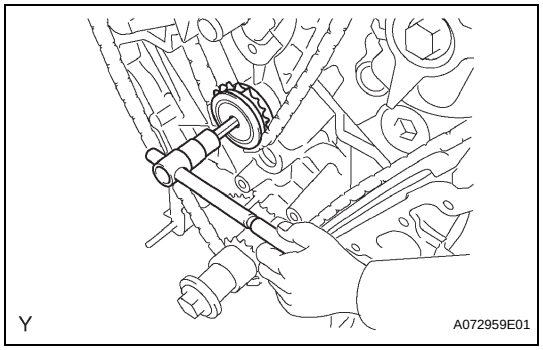

34. REMOVE NO.2 CHAIN VIBRATION DAMPER

(a) Remove the 2 chain vibration dampers No. 2.

35. REMOVE CHAIN SUB-ASSEMBLY

INSTALLATION

1. INSTALL CHAIN TENSIONER SLIPPER

2. INSTALL NO.1 CHAIN TENSIONER ASSEMBLY

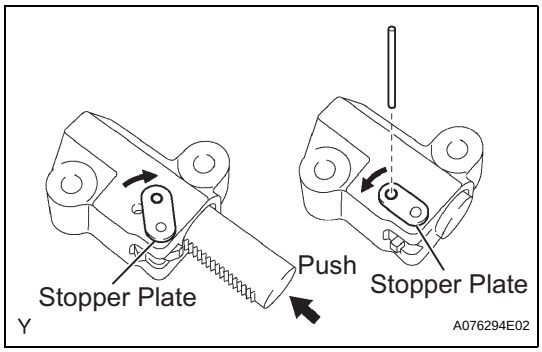

(a) While turning the stopper plate of the tensioner clockwise, push in the plunger of the tensioner as shown in the illustration.

(b) While turning the stopper plate of the tensioner counterclockwise, insert a bar of ϕ 35 mm (0.138 in.) into the holes in the stopper plate and tensioner to fix the stopper plate.

(c) Install the chain tensioner with the 2 bolts.
Torque: 10 N*m (102 kgf*cm, 7.4 ft.*lbf)

3. INSTALL CHAIN SUB-ASSEMBLY

(a) Set the No. 1 cylinder to TDC/ compression.

(1) Align the timing marks of the camshaft timing gears and bearing caps.

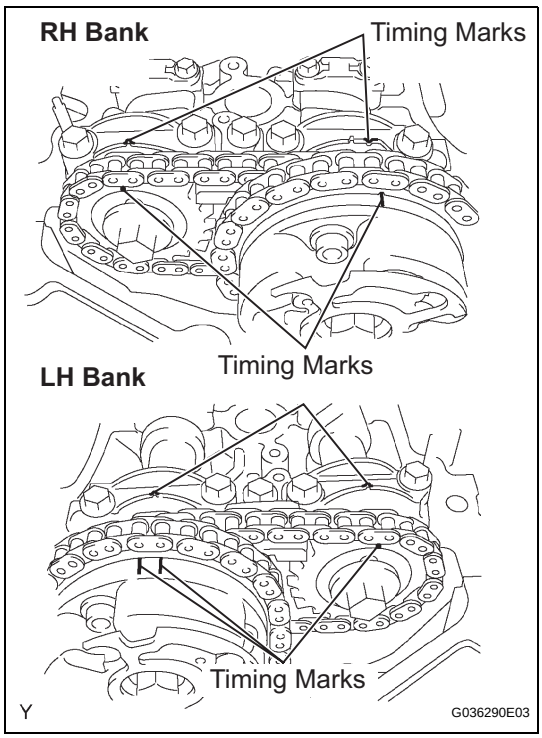

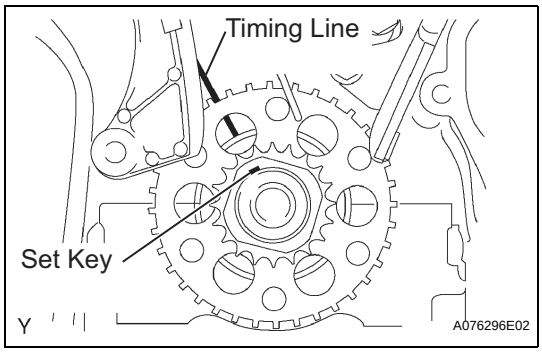

(2) Using the crankshaft pulley set bolt, turn the crankshaft to align the crankshaft set key with the timing line of the cylinder block.

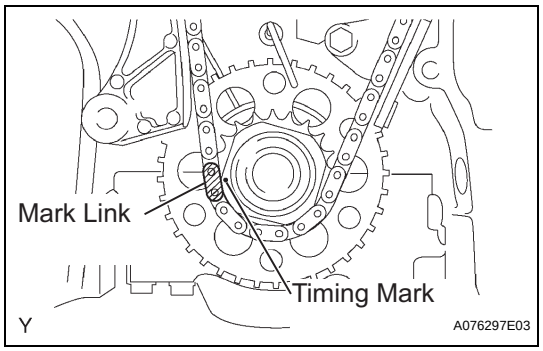

(b) Align the yellow mark link with the timing mark of the crankshaft timing link.

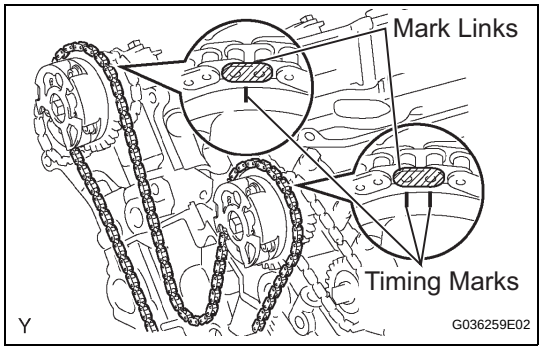

(c) Align the orange mark links with the timing marks of the camshaft timing gears, and install the chain.

4. INSTALL NO.2 CHAIN VIBRATION DAMPER

(a) Install the 2 chain vibration dampers No. 2.

5. INSTALL IDLE SPROCKET ASSEMBLY

(a) Apply a light coat of engine oil to rotating surface of the idle gear shaft No. 1.

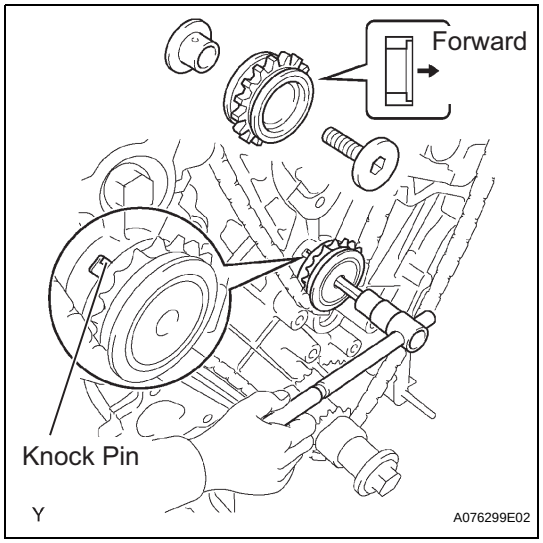

(b) Temporarily install the idle gear shaft No. 1 together with the idle gear shaft No. 2 while aligning the knock pin of the idle gear shaft No. 1 with the knock pin groove of the cylinder block.
NOTICE:
Be careful of the idle gear direction.

(c) Using 10 mm hexagon wrench, tighten the idle gear shaft No. 2.
Torque: 60 N*m (612 kgf*cm, 44 ft.*lbf)

(d) Remove the bar from the chain tensioner.

6. INSTALL TIMING GEAR CASE OR TIMING CHAIN CASE OIL SEAL (See page EM-236)

7. INSTALL TIMING CHAIN OR BELT COVER SUB-ASSEMBLY (See page LU-20)

8. INSTALL VVT SENSOR (See page IG-8)

9. INSTALL CAMSHAFT TIMING OIL CONTROL VALVE ASSEMBLY (See page ES-408)

10. INSTALL CYLINDER HEAD COVER SUB-ASSEMBLY LH (See page EM-68)

11. INSTALL CYLINDER HEAD COVER SUB-ASSEMBLY (See page EM-68)

12. INSTALL IGNITION COIL ASSEMBLY (See page IG-7)

13. INSTALL INTAKE AIR SURGE TANK (See page EM-69)

14. INSTALL OIL PAN SUB-ASSEMBLY

(a) Remove any old packing (FIPG) material and be careful not to drop any oil on the contact surfaces of the cylinder block, rear oil seal retainer and oil pan.

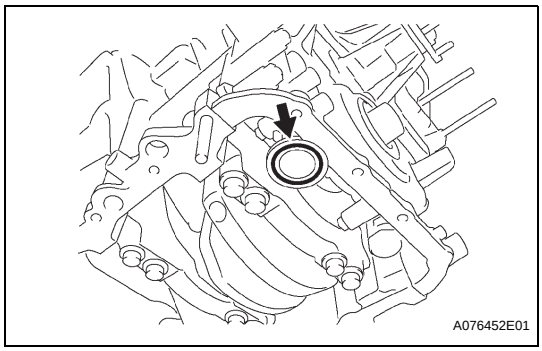

(b) Install a new O-ring onto the oil pump.

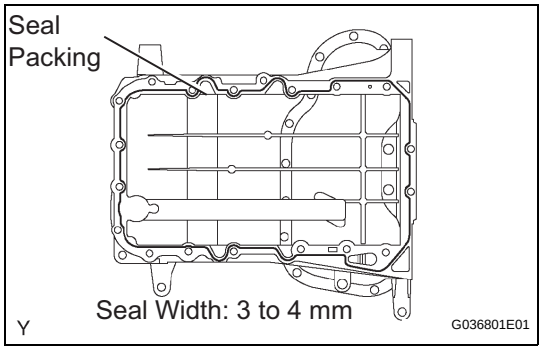

(c) Apply a continuous bead of seal packing (diameter 3 to 4 mm (0.12 to 0.16 in.)) to the oil pan as shown in the illustration.
Seal packing:
Part No. 08826-00080 or equivalent
NOTICE:
Install the oil pan within 3 minutes of applying the seal packing. Tighten the oil pan bolts and nuts within 15 minutes of installing the oil pan. Otherwise, the seal packing must be removed and reapplied.

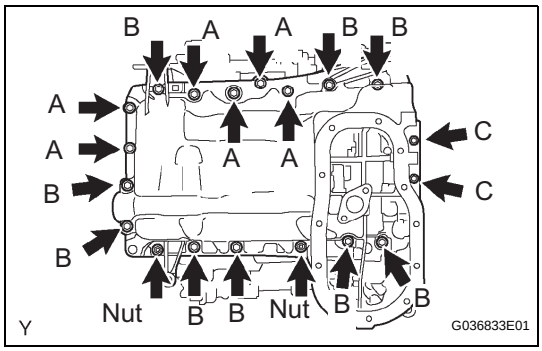

(d) Install the oil pan with the 17 bolts and 2 nuts, and tighten the bolts and nuts uniformly in several steps.
Torque: 10 N*m (102 kgf*cm, 7.4 ft.*lbf) for 10 mm (0.39 in.) head
21 N*m (214 kgf*cm, 16 ft.*lbf) for 12 mm (0.47 in.) head
HINT:
Each bolt length is as follows:

Bolt	Length
A	25 mm (0.98 in.)
B	45 mm (1.77 in.)
C	14 mm (0.55 in.)

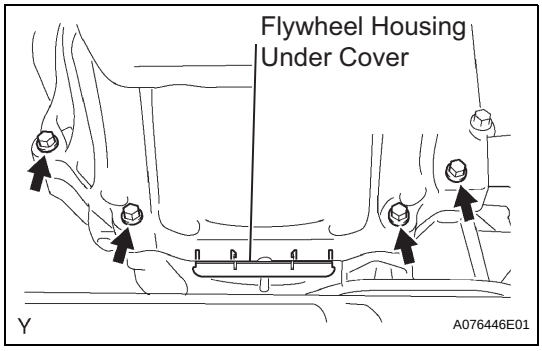

(e) Install the 4 housing bolts.
Torque: 37 N*m (377 kgf*cm, 27 ft.*lbf)

(f) Install the flywheel housing under cover.

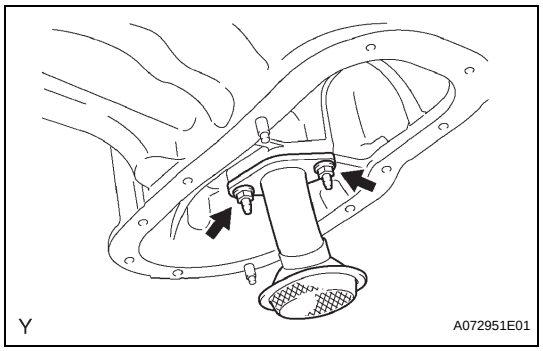

15. INSTALL OIL STRAINER SUB-ASSEMBLY

(a) Install a new gasket and the oil strainer with the 2 nuts.
Torque: 9.0 N*m (92 kgf*cm, 80 in.*lbf)

16. INSTALL NO.2 OIL PAN SUB-ASSEMBLY

(a) Remove any old packing (FIPG) material and be careful not to drop any oil on the contact surfaces of the oil pan and oil pan No. 2.

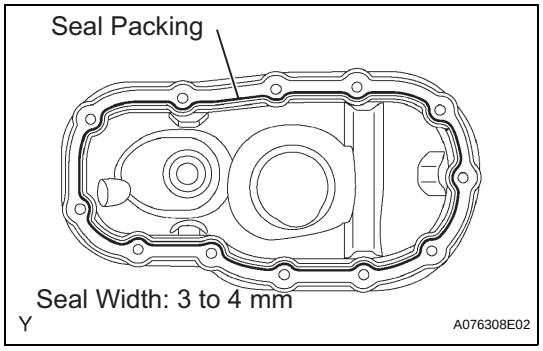

(b) Apply a continuous bead of seal packing (diameter 3 to 4 mm (0.12 to 0.16 in.)) as shown in the illustration.
Seal packing:
Part No. 08826-00080 or equivalent
NOTICE:
Install the oil pan No. 2 within 3 minutes of applying the seal packing. Tighten the oil pan No. 2 bolts and nuts within 15 minutes of installing the oil pan No. 2. Otherwise, the seal packing must be removed and reapplied.

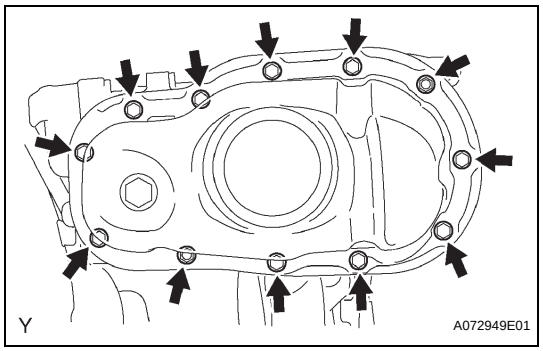

(c) Install the oil pan No. 2 with the 10 bolts and 2 nuts. Tighten the bolts and nuts uniformly in several steps.
Torque: 9.0 N*m (92 kgf*cm, 80 in.*lbf) for bolts
10 N*m (102 kgf*cm, 7.4 in.*lbf) for nut

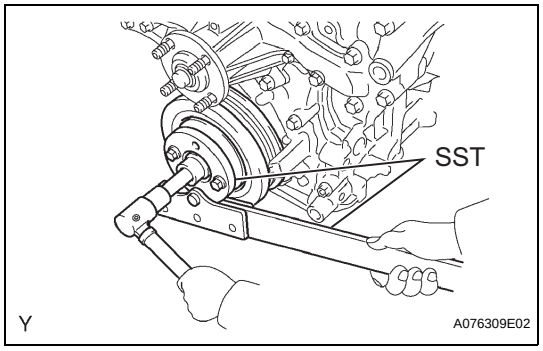

17. INSTALL CRANKSHAFT PULLEY

(a) Using SST, install the pulley set bolt.
SST 09213-54015 (91651-60855), 09330-00021
Torque: 250 N*m (2,549 kgf*cm, 184 ft.*lbf)

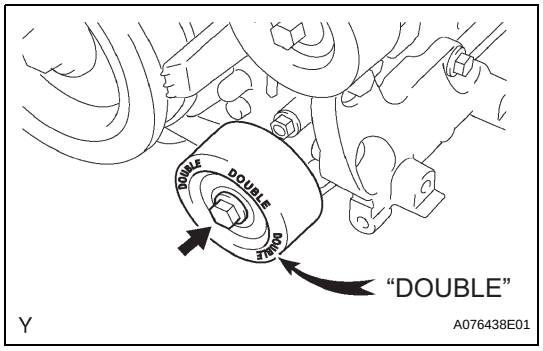

18. INSTALL NO.1 IDLER PULLEY SUB-ASSEMBLY

(a) Install the idler pulley with the bolt.
Torque: 54 N*m (551 kgf*cm, 40 ft.*lbf)
HINT:
DOUBLE is marked on the idler pulley No. 1 to distinguish it from the idler pulley No. 2.

EM

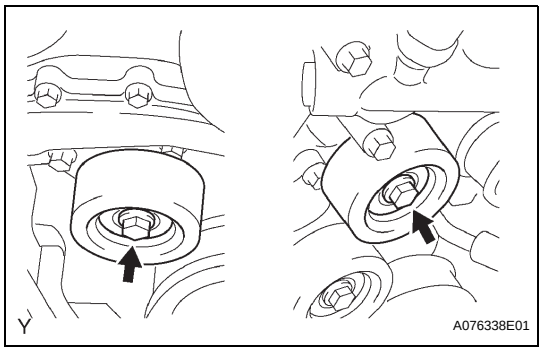

19. INSTALL NO.2 IDLER PULLEY SUB-ASSEMBLY

(a) Install the 2 idler pulleys with the 2 bolts.
Torque: 39 N*m (398 kgf*cm, 29 ft.*lbf)

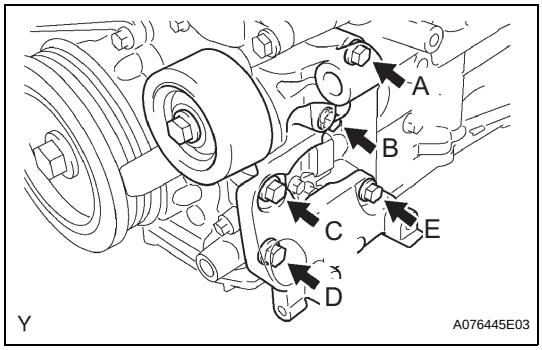

20. INSTALL V-RIBBED BELT TENSIONER ASSEMBLY
NOTICE:
A bolt in position A is not reusable.
HINT:
Each bolt length is as follows:

Position	Length
A	70 mm (2.76 in.)
B, C, D and E	33 mm (1.30 in.)

(a) Use a new bolt in position A.
(b) Finger-tighten the bolts in positions A and E and install the bracket.
(c) Tighten the bolts in positions A and E.
Torque: 36 N*m (267 kgf*cm, 27 ft.*lbf)
(d) Tighten the bolts in positions B, C and D.
Torque: 36 N*m (267 kgf*cm, 27 ft.*lbf)

21. INSTALL COOLER COMPRESSOR ASSEMBLY (See page ES-410)

22. INSTALL GENERATOR ASSEMBLY (See page CH-13)

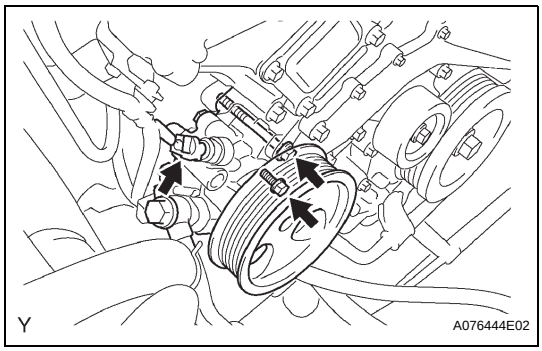

23. INSTALL VANE PUMP ASSEMBLY

(a) Install the vane pump with the 2 bolts.
(b) Connect the power steering pressure switch connector.
Torque: 43 N*m (438 kgf*cm, 32 ft.*lbf)
NOTICE:
Do not hit the pulley with other parts when installing the vane pump.
(c) Connect the power steering pressure switch connector.

24. INSTALL WATER INLET (See page CO-10)

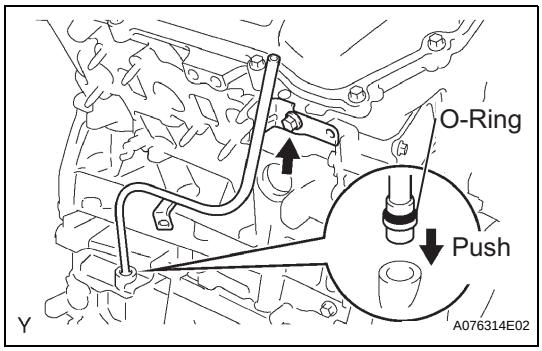

25. INSTALL OIL LEVEL GAGE GUIDE

(a) Install a new O-ring onto the oil level gauge guide.
(b) Apply a light coat of engine oil to the O-ring.
(c) Push the oil level gauge guide end into the guide hole of the oil pan.
(d) Install the oil level gauge guide with the bolt.
Torque: 9.0 N*m (92 kgf*cm, 80 in.*lbf)
(e) Install the oil level gauge guide.

26. INSTALL AIR CLEANER ASSEMBLY (See page ES-416)

27. **INSTALL FAN SHROUD (See page CO-20)**
28. **INSTALL RADIATOR SUPPORT TO FRAME SEAL LH**
29. **INSTALL FRONT DIFFERENTIAL CARRIER ASSEMBLY (for 4WD)**
(See page DF-38)
30. **INSTALL POWER STEERING LINK ASSEMBLY**
(See page PS-67)
31. **INSTALL BATTERY**
32. **ADD ENGINE OIL (See page LU-5)**
33. **ADD ENGINE COOLANT (See page CO-3)**
34. **ADD DIFFERENTIAL OIL (for 4WD)**
35. **INSPECT DIFFERENTIAL OIL (for 4WD) (See page DF-8)**
36. **ADD POWER STEERING FLUID**
37. **BLEED POWER STEERING FLUID (See page PS-2)**
38. **CHECK FOR ENGINE OIL LEAKAGE**
39. **CHECK FOR ENGINE COOLANT LEAKAGE (See page CO-4)**
40. **CHECK FOR POWER STEERING FLUID LEAKAGE**
41. **INSPECT AND ADJUST FRONT WHEEL ALIGNMENT**
(See page SP-7)
42. **INSTALL V-BANK COVER (See page ES-416)**
43. **INSPECT IGNITION TIMING (See page EM-1)**

REMOVAL

1. **DISCONNECT CABLE FROM NEGATIVE BATTERY TERMINAL**
2. **DRAIN ENGINE COOLANT (See page CO-3)**
3. **REMOVE V-BANK COVER (See page ES-414)**
4. **REMOVE AIR CLEANER ASSEMBLY (See page ES-415)**
5. **REMOVE INTAKE AIR SURGE TANK**

(a) Disconnect the 2 water by-pass hoses.

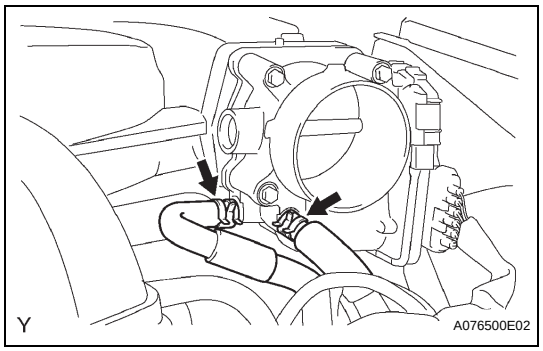

(b) Disconnect the fuel vapor feed hose.

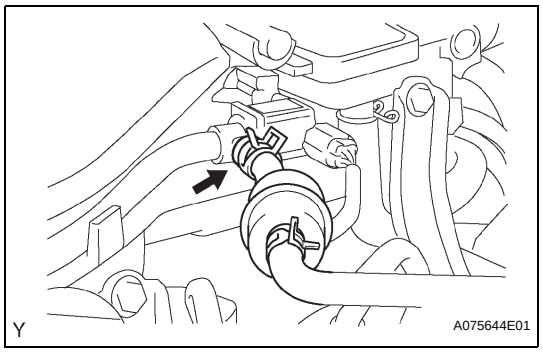

(c) Disconnect the ventilation hose.

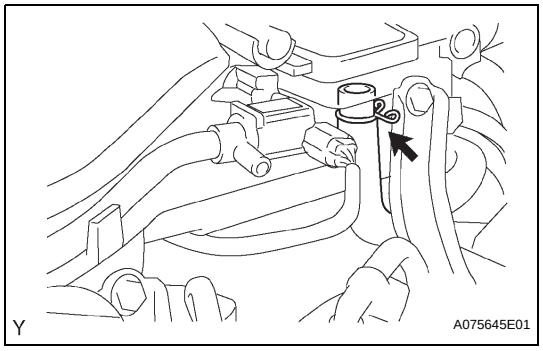

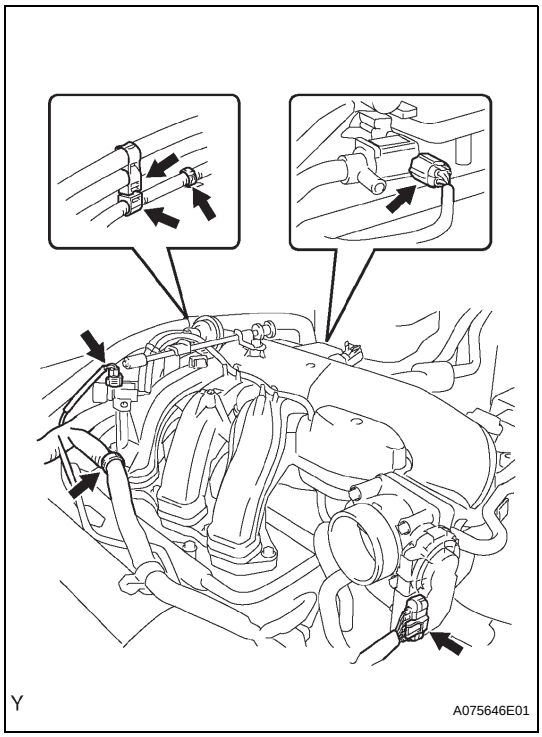

(d) Disconnect the 2 VSV connectors.
(e) Disconnect the throttle body with motor connector.
(f) Separate the 3 wire harness clamps and hose clamp.

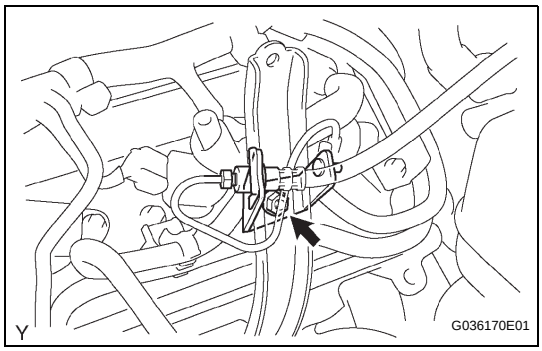

(g) Remove the nut, then separate the clutch flexible hose bracket from the surge tank stay (with Manual Transmission).

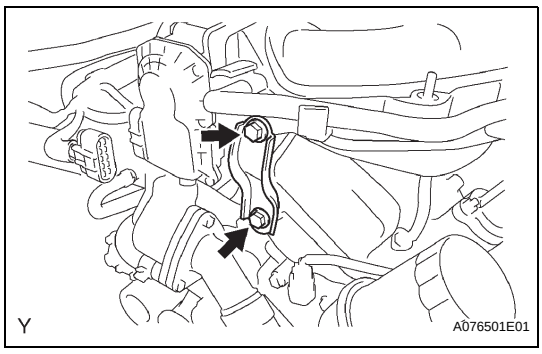

(h) Remove the 2 bolts and throttle body bracket.

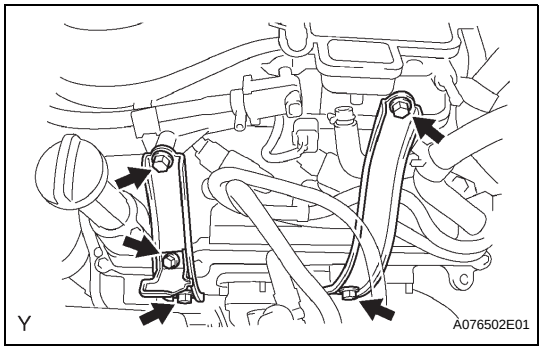

(i) Remove the bolt and oil baffle plate.
(j) Remove the 4 bolts and 2 surge tank stays.

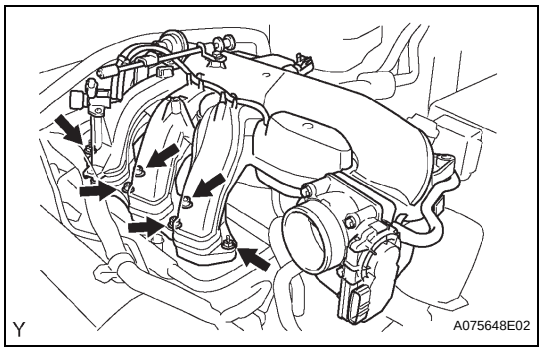

(k) Remove the 2 nuts.
(l) Using a socket hexagon wrench 8, remove the 4 bolts, intake air surge tank and gasket.

6. REMOVE IGNITION COIL ASSEMBLY

(a) Disconnect the 3 connectors.
(b) Remove the 3 bolts, then remove the 3 ignition coils.

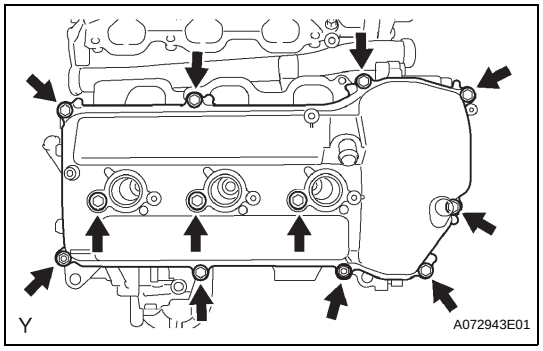

7. REMOVE CYLINDER HEAD COVER SUB-ASSEMBLY

(a) Remove the 10 bolts, 3 seal washers, 2 nuts, cylinder head cover and gasket.

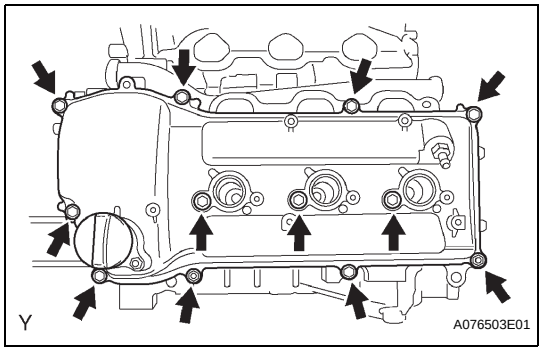

8. REMOVE CYLINDER HEAD COVER SUB-ASSEMBLY LH

(a) Remove the 10 bolts, 3 seal washers, 2 nuts, cylinder head cover and gasket.

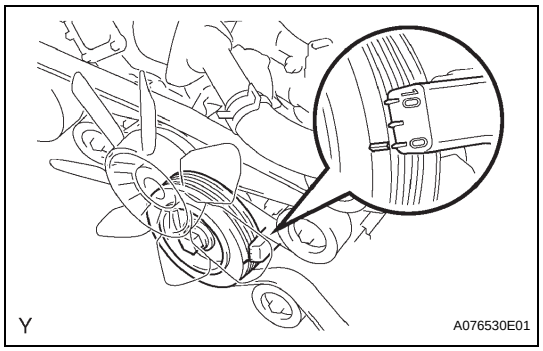

9. SET NO.1 CYLINDER TO TDC/COMPRESSION

(a) Turn the crankshaft pulley until its groove and the timing mark "0" of the timing chain cover are aligned.

EM

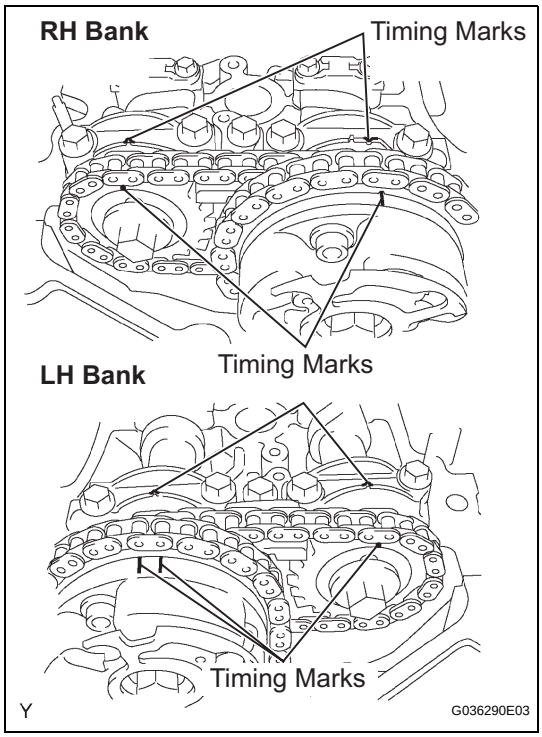

(b) Check that the timing marks of the camshaft timing gears are aligned with the timing marks of the bearing cap as shown in the illustration.
If not, turn the crankshaft 1 complete revolution (360°) and align the timing marks above.

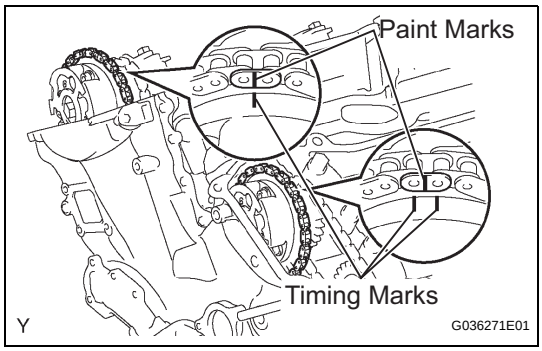

(c) Place paint marks on the No. 1 chain links corresponding to the timing marks of the camshaft timing gears.

10. REMOVE NO.1 CHAIN TENSIONER ASSEMBLY

NOTICE:

- **Never rotate the crankshaft with the chain tensioner removed.**
- **When rotating the camshaft with the timing chain removed, rotate the crankshaft counterclockwise 40° from the TDC first.**

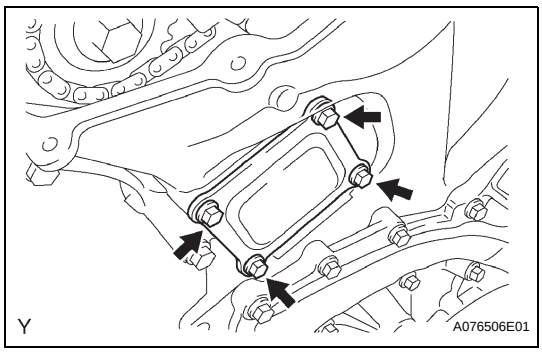

(a) Remove the 4 bolts, then remove the timing chain cover plate and gasket.

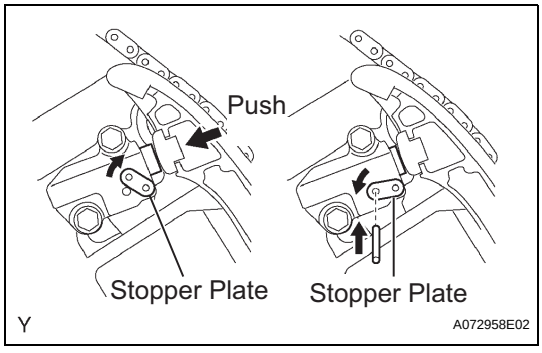

(b) While turning the stopper plate of the tensioner upward, push in the plunger of the chain tensioner as shown in the illustration.

(c) While turning the stopper plate of the tensioner downward, insert a bar of ϕ3.5 mm (0.138 in.) into the holes in the stopper plate and tensioner to fix the stopper plate.

(d) Remove the 2 bolts, then remove the chain tensioner.

11. REMOVE NO.2 CAMSHAFT

NOTICE:

Keep the camshaft level while it is being removed. The camshaft thrust clearance is very small and failing to keep it level could crack or damage the cylinder head journal surface, which receives the thrust. This could subsequently lead the camshaft to seize or break. Perform the following steps to avoid such problems.

(a) While raising the chain tensioner No. 2, insert a pin of ϕ1.0 mm (0.039 in.) into the hole to fix it.

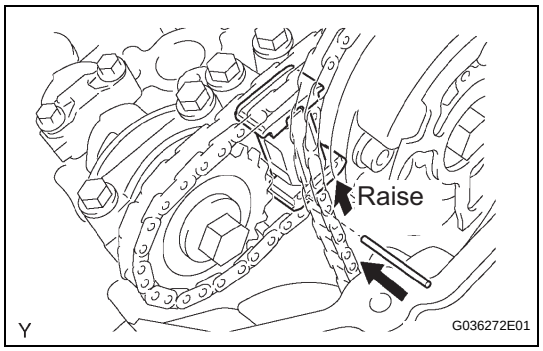

(b) Hold the hexagonal portion of the No. 2 camshaft with a wrench, and remove the camshaft timing gear set bolt.

NOTICE:

Be careful not to damage the cylinder head and valve lifter with the wrench.

(c) Separate the camshaft timing gear from the No. 2 camshaft.

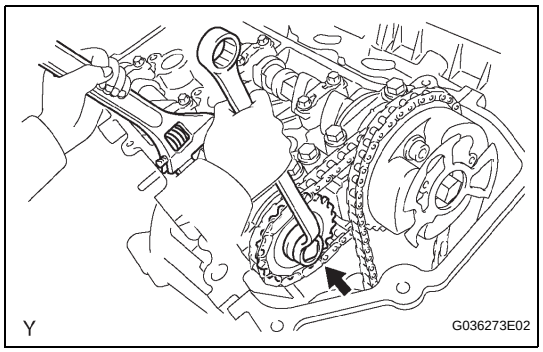

(d) 3Rotate the camshaft counterclockwise using the wrench so that the cam lobes of No. 1 cylinder face upward as shown in the illustration.

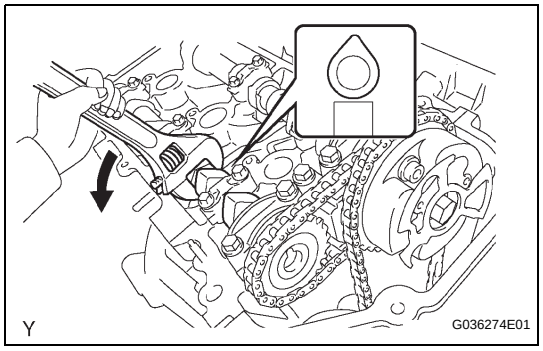

(e) Using several steps, uniformly loosen and remove the 8 bearing cap bolts in the sequence shown in the illustration.

(f) Remove the 4 bearing caps and No. 2 camshaft.

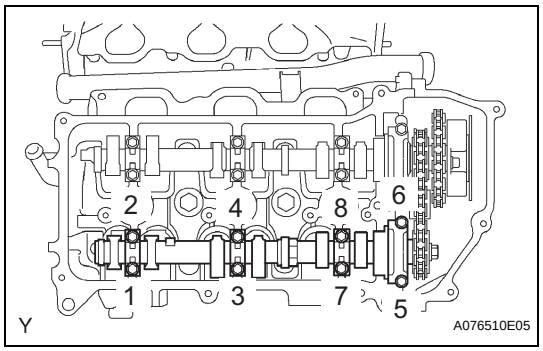

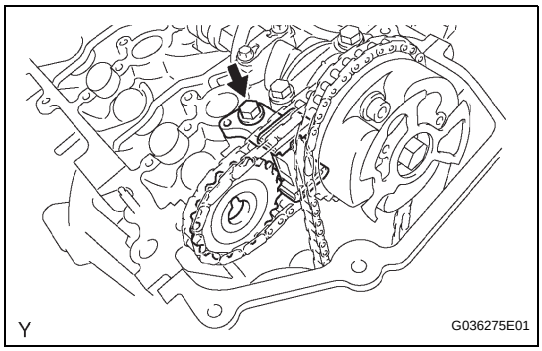

12. REMOVE NO.2 CHAIN TENSIONER ASSEMBLY

(a) Remove the chain tensioner No. 2 bolt, then remove the chain tensioner No. 2 and camshaft timing gear.

13. REMOVE CAMSHAFT

NOTICE:

Keep the camshaft level while it is being removed. The camshaft thrust clearance is very small and failing to keep it level could crack or damage the cylinder head journal surface, which receives the thrust. This could subsequently lead the camshaft to seize or break. Perform the following steps to avoid such problems.

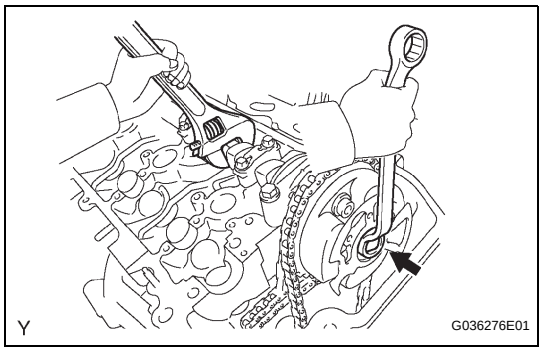

(a) Hold the hexagonal portion of the No. 1 camshaft with a wrench, and loosen the camshaft timing gear set bolt.

NOTICE:

- **Be careful not to damage the cylinder head and valve lifter with the wrench.**
- **Do not disassemble the camshaft timing gear assembly.**

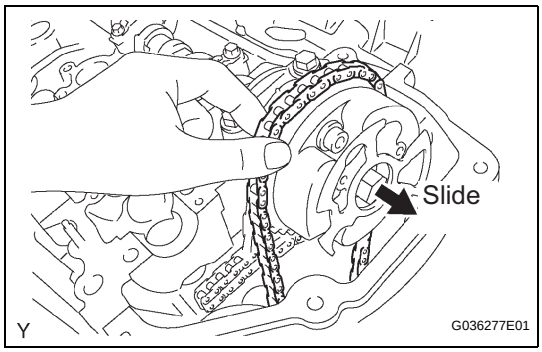

(b) Slide the camshaft timing gear and separate the No. 1 chain from the camshaft timing gear.

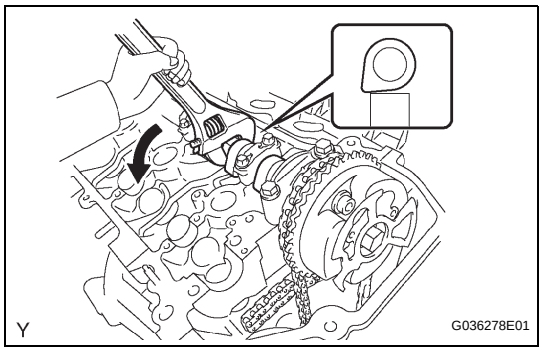

(c) Rotate the No. 1 camshaft counterclockwise using the wrench so that the cam lobes of No. 1 cylinder face downward as shown in the illustration.

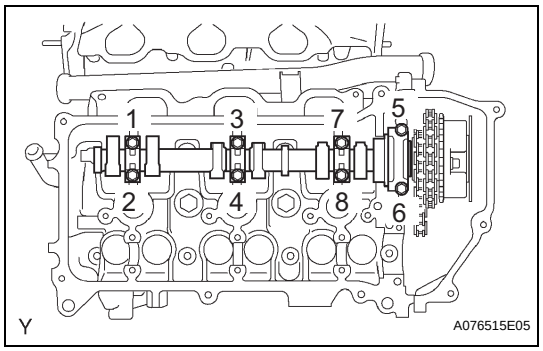

(d) Using several steps, loosen and remove the 8 bearing cap bolts in the sequence shown in the illustration.

(e) Remove the 4 bearing caps.

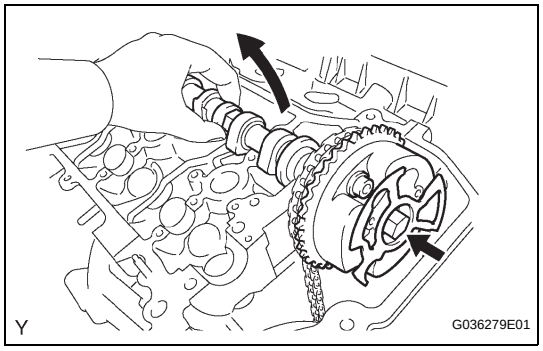

(f) Remove the camshaft timing gear set bolt with the No. 1 camshaft lifted up, then remove the No. 1 camshaft and camshaft timing gear with No. 2 chain.

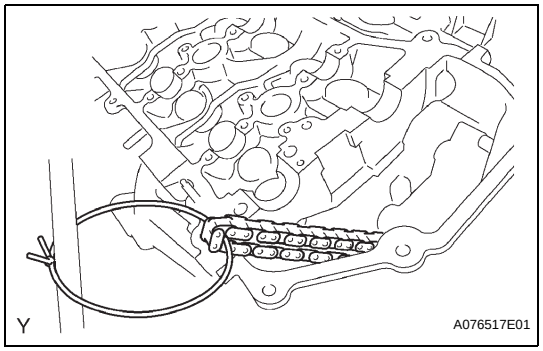

(g) Tie the No. 1 chain with a string as shown in the illustration.

NOTICE:

Be careful not to drop anything inside the timing chain cover.

EM

INSTALLATION

1. INSTALL CAMSHAFT

NOTICE:

Keep the camshaft level while it is being removed. The camshaft thrust clearance is very small and failing to keep it level could crack or damage the cylinder head journal surface, which receives the thrust. This could subsequently lead the camshaft to seize or break. Perform the following steps to avoid such problems.

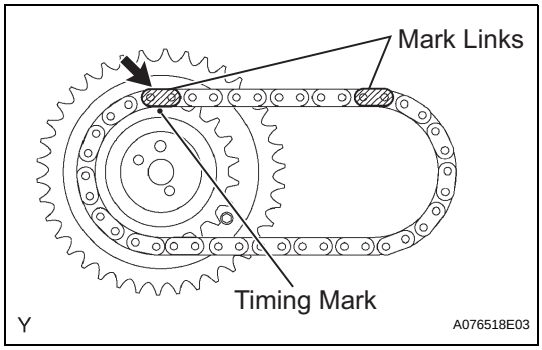

(a) Align the yellow mark link with the timing mark (1 dot mark) of the camshaft timing gear as shown in the illustration.

(b) Apply new engine oil to the thrust portion and journal of the camshafts.

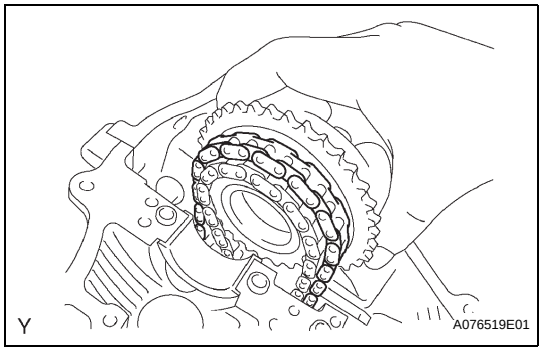

(c) Temporarily install the No. 1 chain onto the No. 2 chain of the camshaft timing gear.

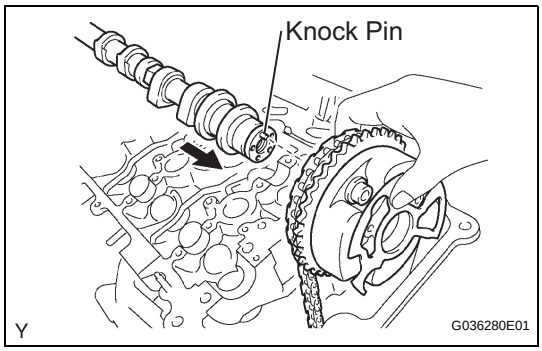

(d) Align the knock pin hole of the camshaft timing gear with the knock pin of the No. 1 camshaft, and insert the No. 1 camshaft into the camshaft timing gear.

(e) Temporarily install the camshaft timing gear set bolt.

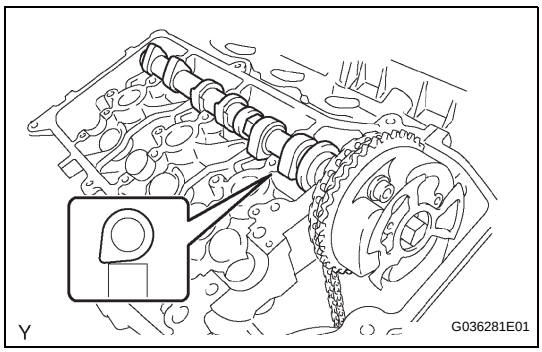

(f) Install the No. 1 camshaft onto the RH cylinder head with the cam lobes of the No. 1 cylinder facing downward as shown in the illustration.

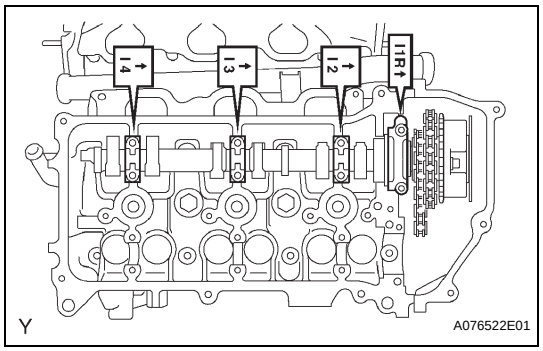

(g) Install the 4 bearing caps in the proper locations as shown.

(h) Apply a light coat of engine oil to the threads and under the heads of the bearing cap bolts.

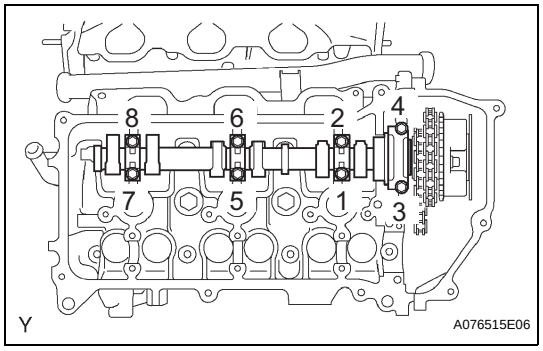

(i) Using several steps, uniformly install and tighten the 8 bearing cap bolts in the sequence shown in the illustration.

Torque: 9.0 N*m (92 kgf*cm, 80 in.*lbf) for 10 mm (0.39 in.) head
24 N*m (245 kgf*cm, 18 ft.*lbf) for 12 mm (0.47 in.) head

EM

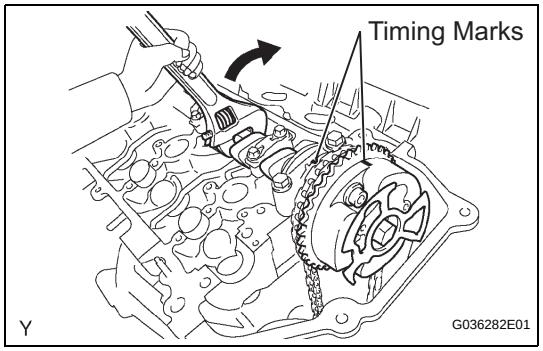

(j) Rotate the No. 1 camshaft clockwise using a wrench so that the timing mark of the camshaft timing gear is aligned with the timing mark of the camshaft bearing cap.

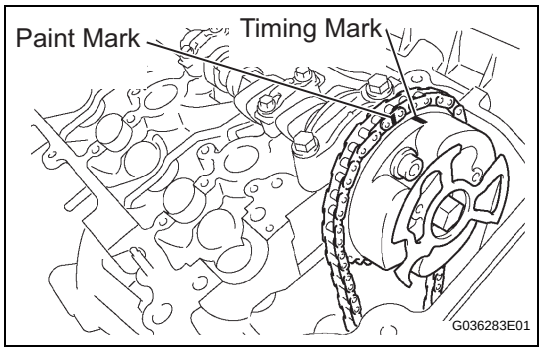

(k) Align the paint mark of the No. 1 chain with the timing mark of the camshaft timing gear.

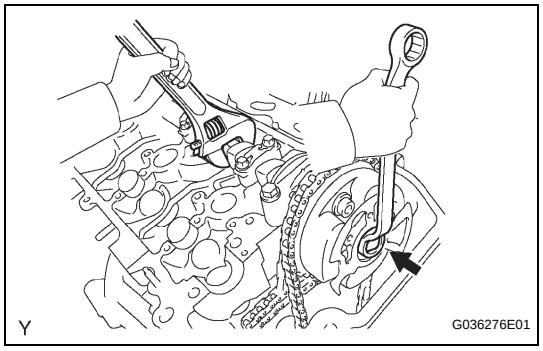

(l) Hold the hexagonal portion of the No. 1 camshaft with a wrench, and tighten the camshaft timing gear set bolt.

Torque: 100 N*m (1,020 kgf*cm, 74 ft.*lbf)

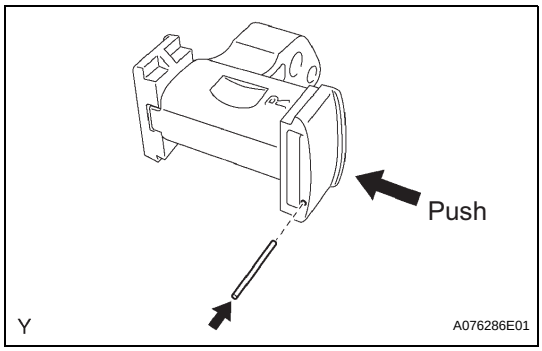

2. INSTALL NO.2 CHAIN TENSIONER ASSEMBLY

(a) While pushing in the tensioner, insert a pin of ϕ 1.0 mm (0.039 in.) into the hole to fix it.

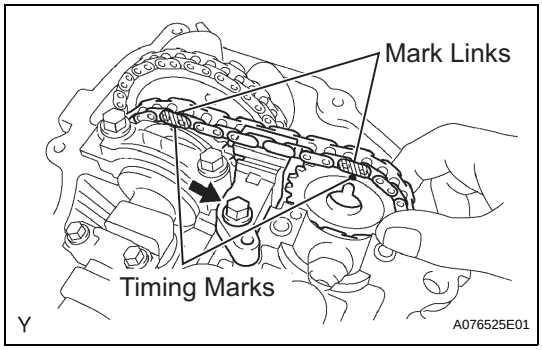

(b) Temporarily install the camshaft timing gear and chain tensioner No. 2 and align the yellow mark links with the timing marks (1 dot mark) of the camshaft timing gears.

(c) Tighten the chain tensioner No. 2 bolt.
Torque: 19 N*m (194 kgf*cm, 14 ft.*lbf)

EM

3. INSTALL NO.2 CAMSHAFT

NOTICE:
Keep the camshaft level while it is being removed. The camshaft thrust clearance is very small and failing to keep it level could crack or damage the cylinder head journal surface, which receives the thrust. This could subsequently lead the camshaft to seize or break. Perform the following steps to avoid such problems.

(a) Install the No. 2 camshaft onto the RH cylinder head with the cam lobes of No. 1 cylinder facing upward as shown in the illustration.

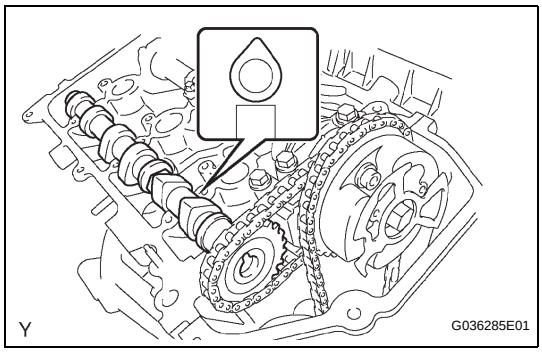

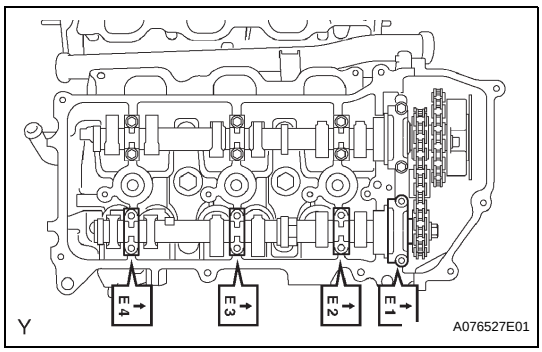

(b) Install the 4 bearing caps in the proper locations as shown.

(c) Apply a light coat of engine oil to the threads and under the heads of the bearing cap bolts.

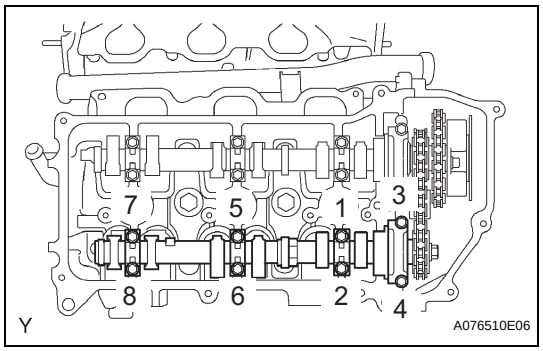

(d) Using several steps, uniformly install and tighten the 8 bearing cap bolts in the sequence shown in the illustration.
Torque: 9.0 N*m (92 kgf*cm, 80 in.*lbf) for 10 mm (0.39 in.) head
24 N*m (245 kgf*cm, 18 ft.*lbf) for 12 mm (0.47 in.) head

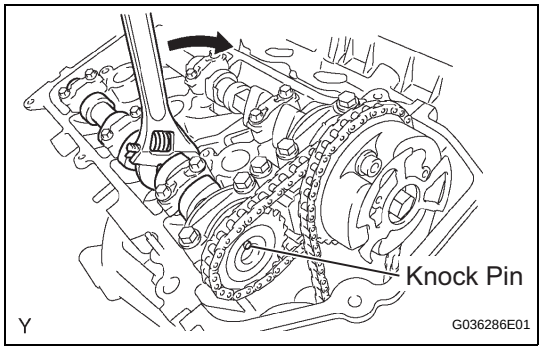

(e) Rotate the No. 2 camshaft clockwise using a wrench so that the knock pin of the No. 2 camshaft is aligned with the knock pin hole of the camshaft timing gear.

EM

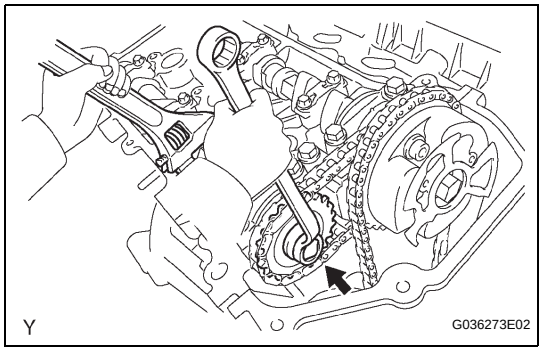

(f) Hold the hexagonal portion of the No. 2 camshaft with a wrench, and install the camshaft timing gear set bolt.
Torque: 100 N*m (1,020 kgf*cm, 74 ft.*lbf)
(g) Remove the pin from the chain tensioner No. 2.

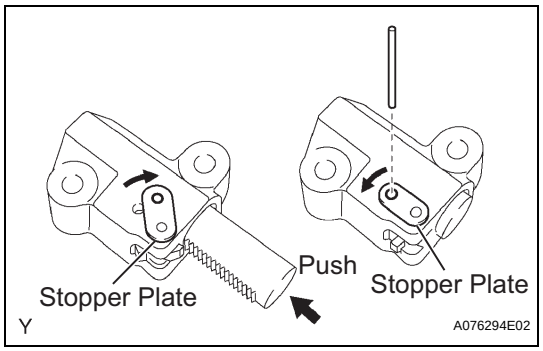

4. INSTALL NO.1 CHAIN TENSIONER ASSEMBLY
(a) While turning the stopper plate of the tensioner clockwise, push in the plunger of the tensioner as shown in the illustration.
(b) While turning the stopper plate of the tensioner counterclockwise, insert a bar of ϕ 3.5 mm (0.138 in.) into the holes in the stopper plate and tensioner to fix the stopper plate.
(c) Install the chain tensioner with the 2 bolts.
Torque: 10 N*m (102 kgf*cm, 7.4 ft.*lbf)
(d) Remove the bar from the chain tensioner.
(e) Install a new gasket and the timing chain cover plate with the 4 bolts.
Torque: 9.0 N*m (92 kgf*cm, 80 in.*lbf)

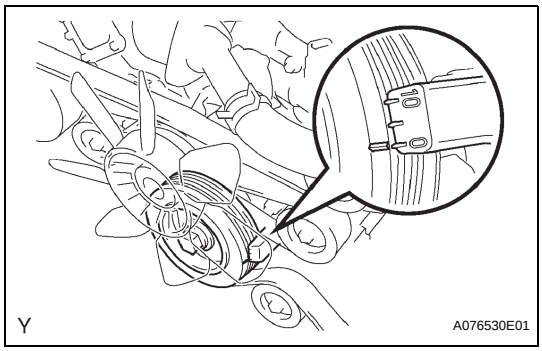

(f) Turn the crankshaft pulley 2 complete revolutions slowly until its groove and the timing mark "0" of the timing chain cover are aligned.

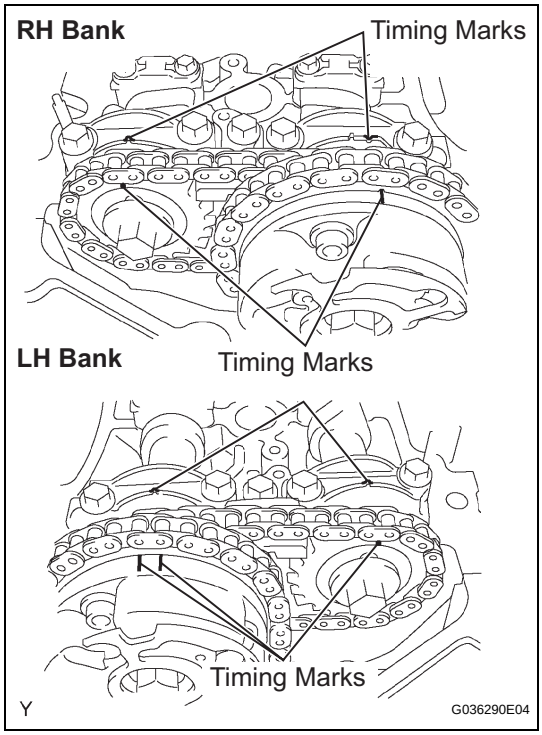

(g) Check that the timing marks of the camshaft timing gears are aligned with the timing marks of the bearing cap as shown in the illustration.

5. SET CYLINDER TO TDC/COMPRESSION (See page EM-7)

6. INSPECT VALVE CLEARANCE (See page EM-8)

7. ADJUST VALVE CLEARANCE (See page EM-9)

8. INSTALL CYLINDER HEAD COVER SUB-ASSEMBLY LH

(a) Remove any old packing (FIPG) material and be careful not to drop any oil on the contact surfaces of the cylinder head, timing chain cover and cylinder head cover.

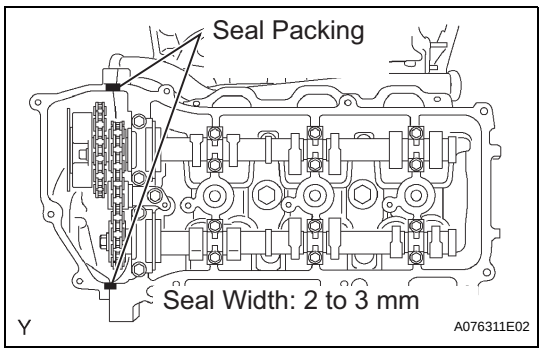

(b) Install the cylinder head cover within 3 minutes of applying seal packing. Tighten the cylinder head cover bolts and nuts within 15 minutes of installing the cylinder head cover. Otherwise, the seal packing mush be removed and reapplied.

Seal packing:
Part No. 08826-00080 or equivalent

NOTICE:
Install the cylinder head cover within 3 minutes after applying the seal packing. After installing it, cylinder head cover bolts and nuts must be tightened within 15 minutes. Otherwise the seal packing must be removed and reapplied.

(c) Install the seal washers onto the bolts.

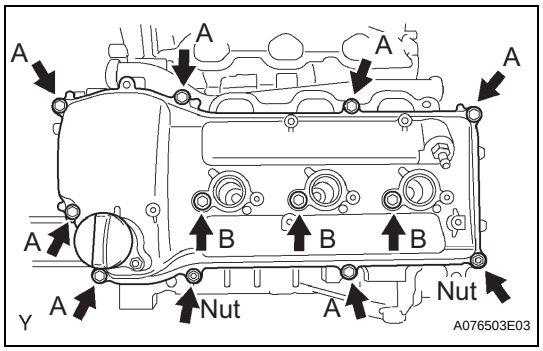

(d) Install the cylinder head cover with the 10 bolts and 2 nuts. Tighten the bolts and nuts uniformly in several steps.

Torque: 10 N*m (102 kgf*cm, 7.4 ft.*lbf) for bolt A
9.0 N*m (92 kgf*cm, 80 in.*lbf) for bolt B
9.0 N*m (92 kgf*cm, 80 in.*lbf) for nut

HINT:
Each bolt length is as follows.

Bolt	Length
A	25 mm (0.98 in.)
B	60 mm (2.36 in.)

9. INSTALL CYLINDER HEAD COVER SUB-ASSEMBLY

(a) Remove any old packing (FIPG) material and be careful not to drop any oil on the contact surfaces of the cylinder head, timing chain cover and cylinder head cover.

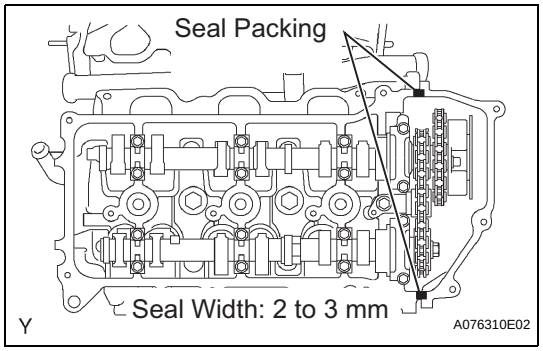

(b) Apply a continuous bead of seal packing (diameter 2 to 3 mm (0.08 to 0.12 in.)) to the cylinder head and timing chain cover as shown in the illustration.

Seal packing:
Part No. 08826-00080 or equivalent
NOTICE:
Install the cylinder head cover within 3 minutes of applying the seal packing. Tighten the cylinder head cover bolts and nuts within 15 minutes of installing the cylinder head cover. Otherwise, the seal packing must be removed and reapplied.

(c) Install the seal washers onto the bolts.

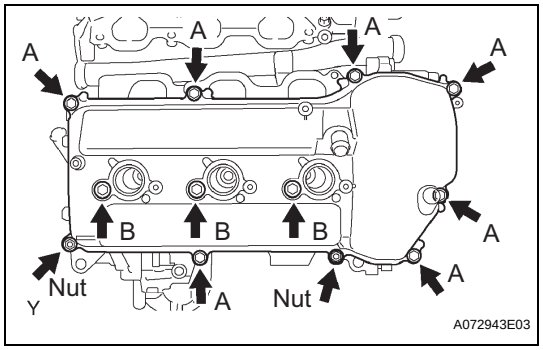

(d) Install the cylinder head cover with the 10 bolts and 2 nuts. Tighten the bolts and nuts uniformly in several steps.

Torque: 10 N*m (102 kgf*cm, 7.4 ft.*lbf) for bolt A
9.0 N*m (92 kgf*cm, 80 in.*lbf) for bolt B
9.0 N*m (92 kgf*cm, 80 in.*lbf) for nut

HINT:
Each bolt length is as follows.

Bolt	Length
A	25 mm (0.98 in.)
B	60 mm (2.36 in.)

10. INSTALL IGNITION COIL ASSEMBLY

(a) Install the 3 ignition coils with the 3 bolts.

Torque: 10 N*m (102 kgf*cm, 7.4 ft.*lbf) for bolt A

(b) Connect the 3 connectors.

11. INSTALL INTAKE AIR SURGE TANK

(a) Install a new gasket onto the intake air surge tank.

(b) Using the socket hexagon wrench 8, install the intake air surge tank with the 4 bolts.
Torque: 28 N*m (286 kgf*cm, 21 ft.*lbf)
(c) Install the 2 intake air surge tank nuts.
Torque: 28 N*m (286 kgf*cm, 21 ft.*lbf)
(d) Install the 2 surge tank stays with the 4 bolts.
Torque: 21 N*m (214 kgf*cm, 15 ft.*lbf)
(e) Install the oil baffle plate with the bolt.
Torque: 9.0 N*m (92 kgf*cm, 80 in.*lbf)
(f) Install the throttle body bracket with the 2 bolts.
Torque: 21 N*m (214 kgf*cm, 15 ft.*lbf)
(g) Install the clutch flexible hose bracket with the nut (w/ Manual Transmission).
Torque: 24 N*m (245 kgf*cm, 18 ft.*lbf)
(h) Install the 3 wire harness clamps and hose clamp.
(i) Connect the throttle body w/ motor connector.
(j) Connect the 2 VSV connectors.
(k) Connect the ventilation hose.
(l) Connect the fuel vapor feed hose.
(m) Connect the 2 water by-pass hoses.

12. INSTALL AIR CLEANER ASSEMBLY (See page ES-416)

13. CONNECT CABLE TO NEGATIVE BATTERY TERMINAL
Torque: 3.9 N*m (40 kgf*cm, 35 in.*lbf)

14. ADD ENGINE COOLANT (See page CO-3)

15. CHECK FOR ENGINE COOLANT LEAKAGE (See page CO-4)

16. INSTALL V-BANK COVER
(a) Install the V-bank cover with the 2 nuts.
Torque: 7.5 N*m (76 kgf*cm, 66 in.*lbf)

17. INSPECT IGNITION TIMING (See page EM-1)

EM

REMOVAL

1. **DISCONNECT CABLE FROM NEGATIVE BATTERY TERMINAL**
2. **DRAIN ENGINE COOLANT (See page CO-3)**
3. **REMOVE V-BANK COVER (See page ES-414)**
4. **REMOVE AIR CLEANER ASSEMBLY (See page ES-415)**
5. **REMOVE INTAKE AIR SURGE TANK (See page EM-57)**
6. **REMOVE IGNITION COIL ASSEMBLY (See page IG-7)**
7. **REMOVE CYLINDER HEAD COVER SUB-ASSEMBLY (See page EM-59)**
8. **REMOVE CYLINDER HEAD COVER SUB-ASSEMBLY LH (See page EM-59)**
9. **SET NO.1 CYLINDER TO TDC/COMPRESSION (See page EM-59)**
10. **REMOVE NO.1 CHAIN TENSIONER ASSEMBLY (See page EM-26)**
11. **REMOVE NO.4 CAMSHAFT SUB-ASSEMBLY**

NOTICE:
Keep the camshaft level while it is being removed. The camshaft thrust clearance is very small and failing to keep it level could crack or damage the cylinder head journal surface, which receives the thrust. This could subsequently lead the camshaft to seize or break. Perform the following steps to avoid such problems.

(a) While pushing down the chain tensioner No. 3, insert a pin of ϕ 1.0 mm (0.039 in.) into the hole to fix it.

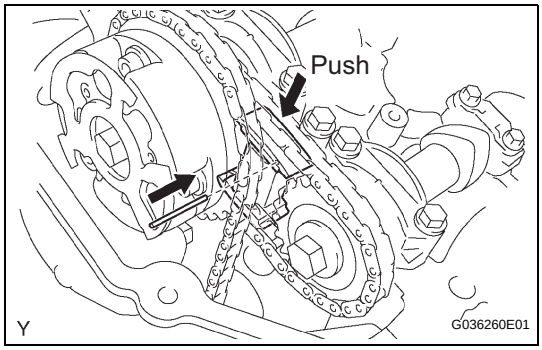

(b) Hold the hexagonal portion of the No. 4 camshaft with a wrench, and remove the camshaft timing gear set bolt.

NOTICE:
Be careful not to damage the cylinder head and valve lifter with the wrench.

(c) Separate the camshaft timing gear from the No. 4 camshaft.

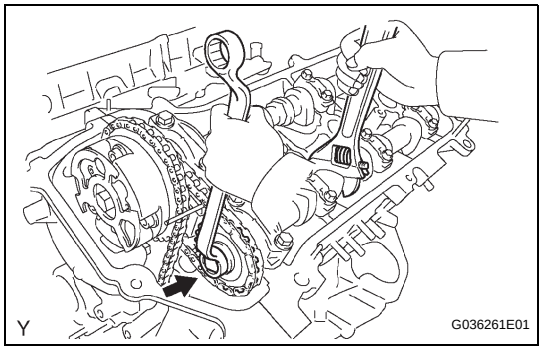

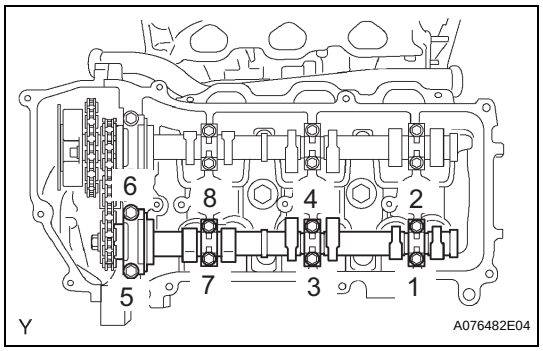

(d) Using several steps, uniformly loosen and remove the 8 bearing cap bolts in the sequence shown in the illustration.

(e) Remove the 4 bearing caps and No. 4 camshaft.

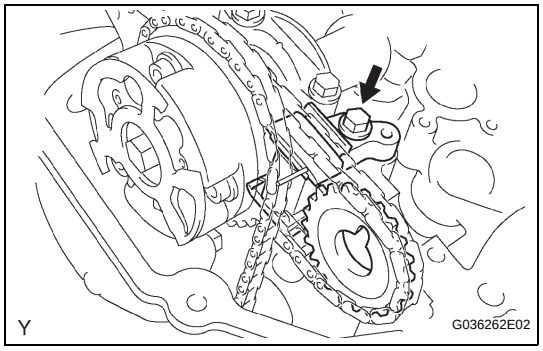

12. REMOVE NO.3 CHAIN TENSIONER ASSEMBLY

(a) Remove the chain tensioner No. 3 bolt, then remove the chain tensioner No. 3 and camshaft timing gear.

13. REMOVE NO.3 CAMSHAFT SUB-ASSEMBLY

NOTICE:

Keep the camshaft level while it is being removed. The camshaft thrust clearance is very small and failing to keep it level could crack or damage the cylinder head journal surface, which receives the thrust. This could subsequently lead the camshaft to seize or break. Perform the following steps to avoid such problems.

EM

(a) Release the chain tension between the camshaft timing gear (LH bank) and crankshaft timing gear by turning the crankshaft pulley counterclockwise slightly.

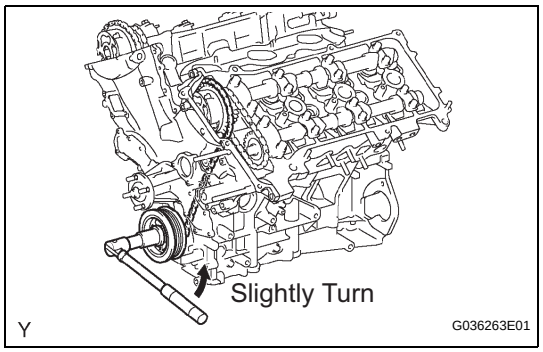

(b) Hold the hexagonal portion of the No. 3 camshaft with a wrench, then loosen the camshaft timing gear set bolt.

NOTICE:

- **Be careful not to damage the cylinder head and valve lifter with the wrench.**
- **Do not disassemble the camshaft timing gear assembly.**

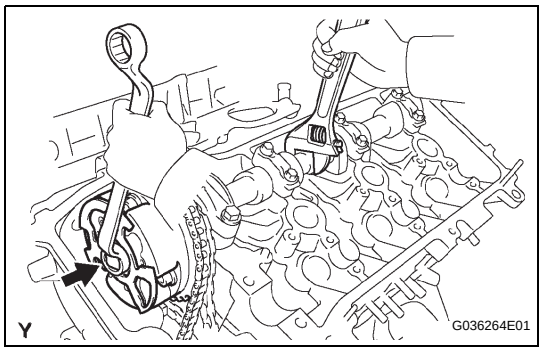

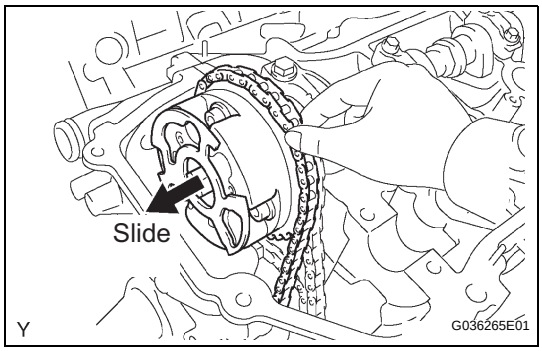

(c) Slide the camshaft timing gear and separate the No. 1 chain from the camshaft timing gear.

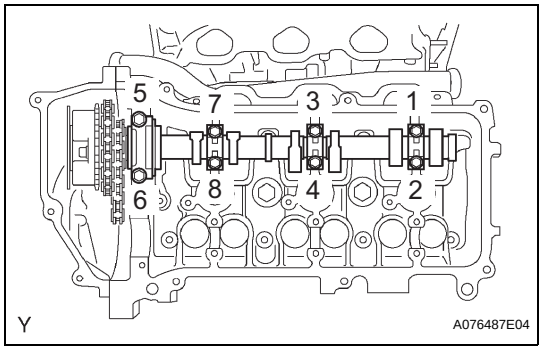

(d) Using several steps, uniformly loosen and remove the 8 bearing cap bolts in the sequence shown in the illustration.
(e) Remove the 4 bearing caps.

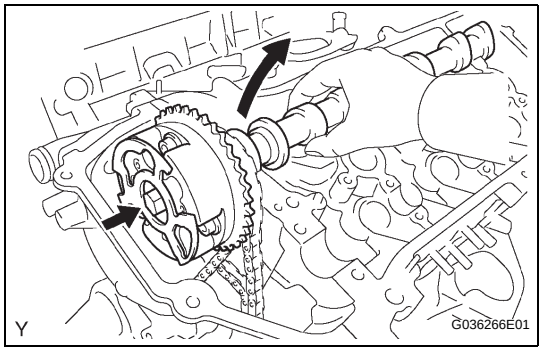

(f) Remove the camshaft timing gear set bolt with the No. 3 camshaft lifted up, then remove the No. 3 camshaft and camshaft timing gear w/ No. 2 chain.

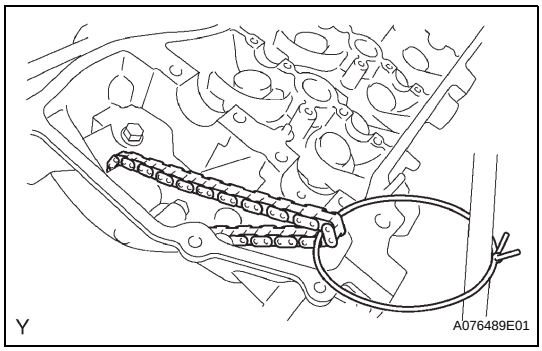

(g) Tie the No. 1 chain with a string as shown in the illustration.
NOTICE:
Be careful not to drop anything inside the timing chain cover.

INSTALLATION

1. INSTALL NO.3 CAMSHAFT SUB-ASSEMBLY

NOTICE:

Keep the camshaft level while it is being removed. The camshaft thrust clearance is very small and failing to keep it level could crack or damage the cylinder head journal surface, which receives the thrust. This could subsequently lead the camshaft to seize or break. Perform the following steps to avoid such problems.

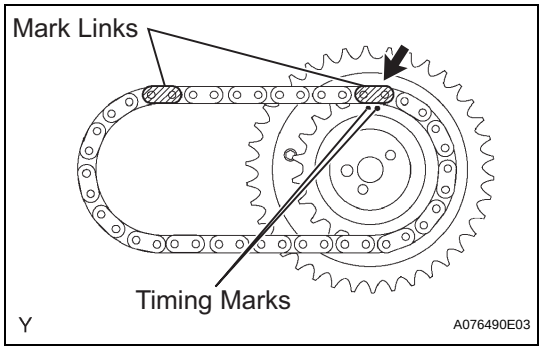

(a) Align the yellow mark link with the timing mark (2 dot marks) of the camshaft timing gear as shown in the illustration.

(b) Apply new engine oil to the thrust portion and journal of the camshafts.

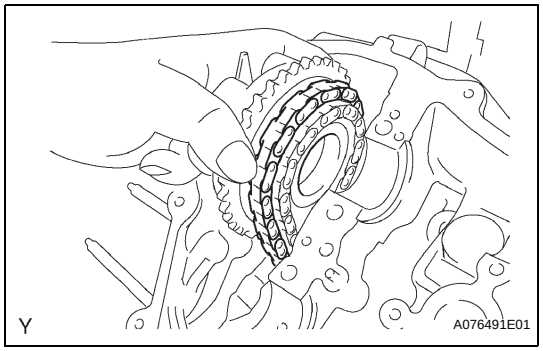

(c) Temporarily put the No. 1 chain on the No. 2 chain of the camshaft timing gear.

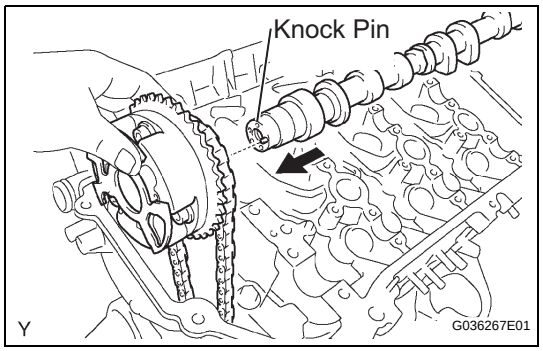

(d) Align the knock pin hole in the camshaft timing gear with the knock pin of the No. 3 camshaft, and insert the No. 3 camshaft into the camshaft timing gear.

(e) Temporarily install the camshaft timing gear set bolt.

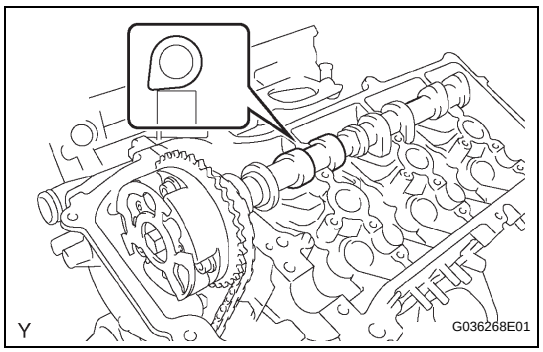

(f) Set the No. 3 camshaft onto the LH cylinder head with the cam lobes of the No. 2 cylinder facing downward as shown in the illustration.

EM

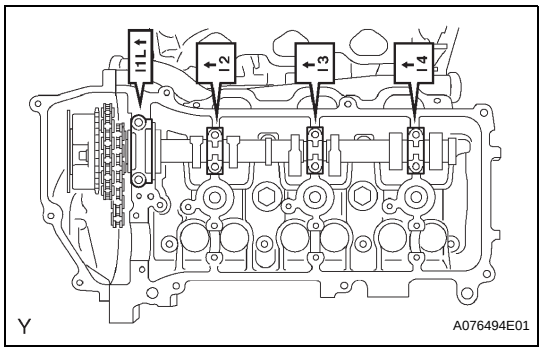

(g) Install the 4 bearing caps in the proper locations as shown.
(h) Apply a light coat of engine oil to the threads and under the heads of the bearing cap bolts.

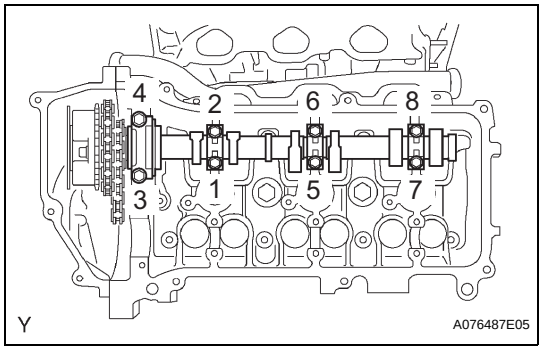

(i) Using several steps, uniformly install and tighten the 8 bearing cap bolts in the sequence shown in the illustration.
Torque: 9.0 N*m (92 kgf*cm, 80 in.*lbf) for 10 mm (0.39 in.) head
24 N*m (245 kgf*cm, 18 ft.*lbf) for 12 mm (0.47 in.) head

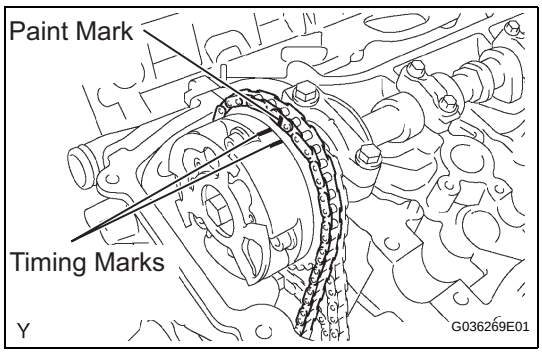

(j) Align the paint mark of the No. 1 chain with the timing marks of the camshaft timing gear.

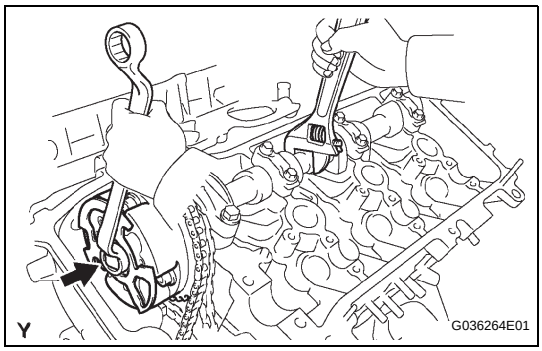

(k) Hold the hexagonal portion of the No. 3 camshaft with a wrench, and tighten the camshaft timing gear set bolt.
Torque: 100 N*m (1,020 kgf*cm, 74 ft.*lbf)

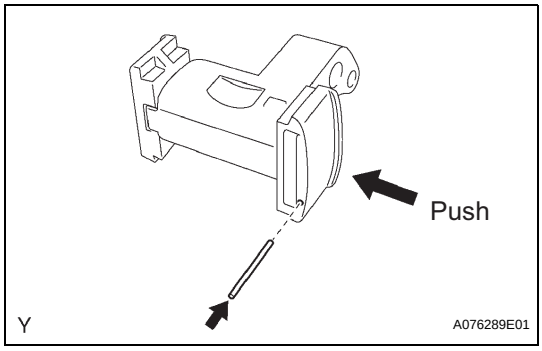

2. INSTALL NO.3 CHAIN TENSIONER ASSEMBLY
(a) While pushing in the tensioner, insert a pin of ϕ 1.0 mm (0.039 in.) into the hole to hold it.

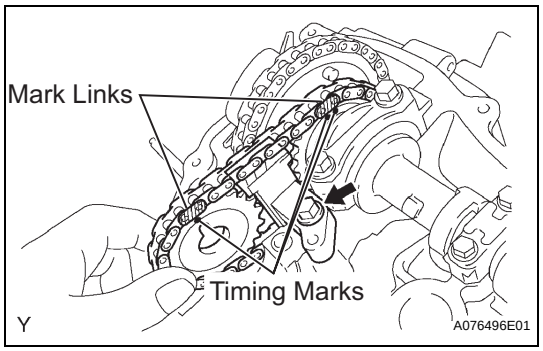

(b) Temporarily install the camshaft timing gear and chain tensioner No. 3 and align the yellow mark links with the timing marks (1 dot mark and 2 dot marks) of the camshaft timing gears.
(c) Tighten the chain tensioner No. 3 bolt.
Torque: 19 N*m (194 kgf*cm, 14 ft.*lbf)

3. INSTALL NO.4 CAMSHAFT SUB-ASSEMBLY
NOTICE:
Keep the camshaft level while it is being removed. The camshaft thrust clearance is very small and failing to keep it level could crack or damage the cylinder head journal surface, which receives the thrust. This could subsequently lead the camshaft to seize or break. Perform the following steps to avoid such problems.

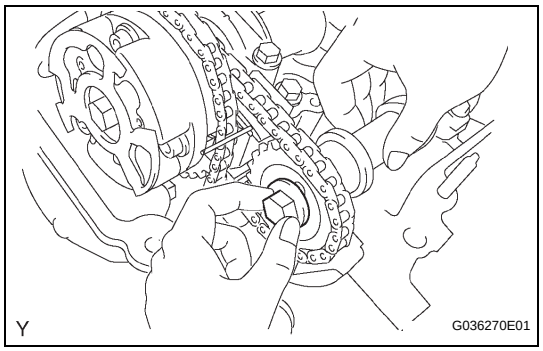

(a) Align the knock pin hole in the camshaft timing gear with the knock pin of he No. 4 camshaft, and insert the No. 4 camshaft into the camshaft timing gear.
(b) Temporarily install the camshaft timing gear set bolt.

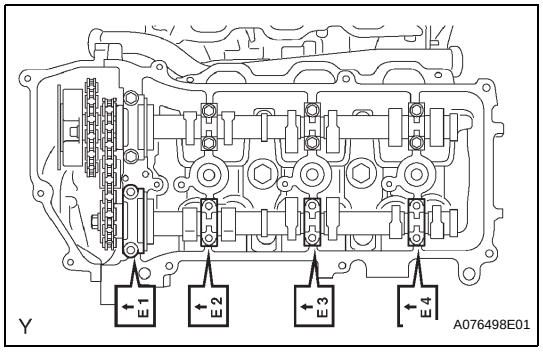

(c) Install the 4 bearing caps in the proper locations as shown.
(d) Apply a light coat of engine oil to the threads of the bearing cap bolts.

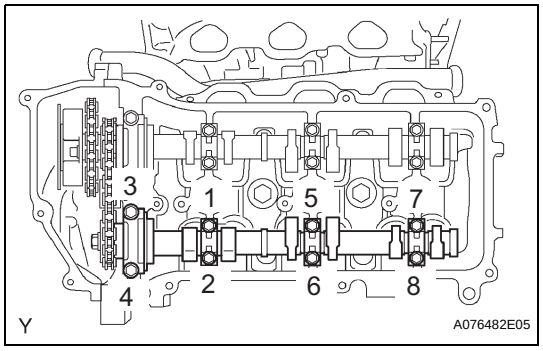

(e) Using several steps, uniformly install and tighten the 8 bearing cap bolts in the sequence shown in the illustration.
Torque: 9.0 N*m (92 kgf*cm, 80 in.*lbf) for 10 mm (0.39 in.) head
24 N*m (245 kgf*cm, 18 ft.*lbf) for 12 mm (0.47 in.) head

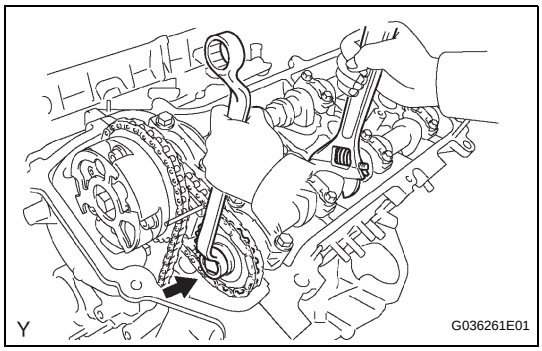

(f) Hold the hexagonal portion of the No. 4 camshaft with a wrench, and tighten the camshaft timing gear set bolt.
Torque: 100 N*m (1,020 kgf*cm, 74 ft.*lbf)

(g) Remove the pin from the chain tensioner No. 3.

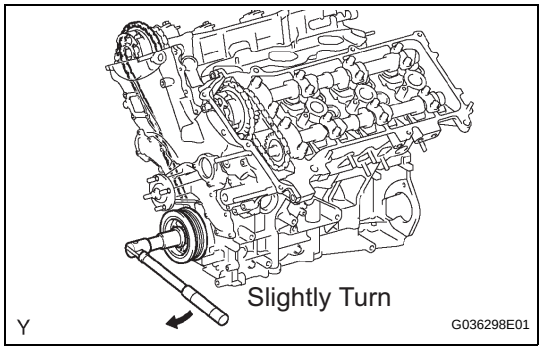

(h) Release the chain tension between the camshaft timing gear (RH bank) and crankshaft timing gear by turning the crankshaft pulley clockwise slightly.

4. **INSTALL NO.1 CHAIN TENSIONER ASSEMBLY (See page EM-27)**
5. **SET NO.1 CYLINDER TO TDC/COMPRESSION (See page EM-25)**
6. **INSPECT VALVE CLEARANCE (See page EM-8)**
7. **ADJUST VALVE CLEARANCE (See page EM-9)**
8. **INSTALL CYLINDER HEAD COVER SUB-ASSEMBLY LH (See page EM-68)**
9. **INSTALL CYLINDER HEAD COVER SUB-ASSEMBLY (See page EM-68)**
10. **INSTALL IGNITION COIL ASSEMBLY**
    Torque: 10 N*m (102 kgf*cm, 7.4 ft.*lbf)
11. **INSTALL INTAKE AIR SURGE TANK (See page EM-69)**
12. **INSTALL AIR CLEANER ASSEMBLY (See page ES-416)**
13. **CONNECT CABLE TO NEGATIVE BATTERY TERMINAL**
    Torque: 3.9 N*m (40 kgf*cm, 35 in.*lbf)
14. **ADD ENGINE COOLANT (See page CO-3)**
15. **CHECK FOR ENGINE COOLANT LEAKAGE (See page CO-4)**
16. **INSTALL V-BANK COVER**
    (a) Install the V-bank cover with the 2 nuts.
    Torque: 7.5 N*m (76 kgf*cm, 66 in.*lbf)
17. **INSPECT IGNITION TIMING (See page EM-1)**

REMOVAL

1. **DISCHARGE FUEL SYSTEM PRESSURE**
   (See page FU-1)
2. **REMOVE BATTERY**
3. **DRAIN ENGINE COOLANT (See page CO-3)**
4. **DRAIN ENGINE OIL (See page LU-4)**
5. **REMOVE ENGINE ASSEMBLY**
   (See page EM-186)
6. **REMOVE TIMING CHAIN OR BELT COVER SUB-ASSEMBLY**
   (See page LU-34)
7. **REMOVE CHAIN SUB-ASSEMBLY**
   (See page EM-44)
8. **REMOVE NO.1 COOL AIR INLET**
   (a) Remove the 2 bolts, then remove the cool air inlet.
9. **REMOVE FRONT EXHAUST PIPE ASSEMBLY**
   (See page EX-3)
10. **REMOVE MANIFOLD STAY**
    (a) Remove the 3 bolts, then remove the exhaust manifold stay.
11. **REMOVE EXHAUST MANIFOLD SUB-ASSEMBLY RH**
    (a) Disconnect the air fuel ratio sensor connector.
    (b) Remove the 6 nuts, then remove the exhaust manifold and gasket.
12. **DISCONNECT NO.1 FUEL PIPE SUB-ASSEMBLY (See page FU-13)**
13. **DISCONNECT NO.2 FUEL PIPE SUB-ASSEMBLY (See page FU-13)**
14. **REMOVE INTAKE MANIFOLD**
    (a) Disconnect the 6 fuel injector connectors.
    (b) Remove the 10 bolts, then remove the intake manifold and gasket.
15. **REMOVE WATER BY-PASS JOINT RR**
    (a) Disconnect the engine coolant temperature sensor connector.
    (b) Disconnect the heater hose.

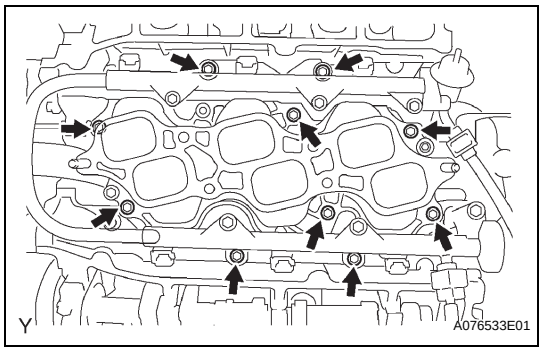

EM

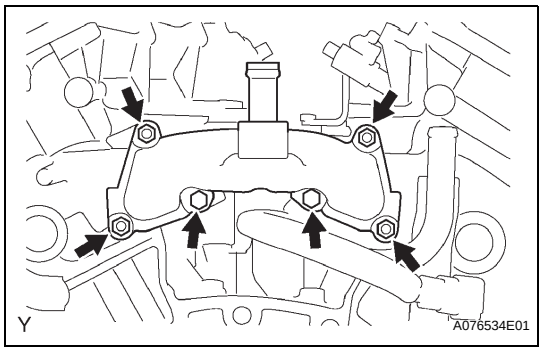

(c) Remove the 2 bolts and 4 nuts, then remove the water by-pass joint RR and 2 gaskets.
(d) Remove the O-ring from the water outlet hose.

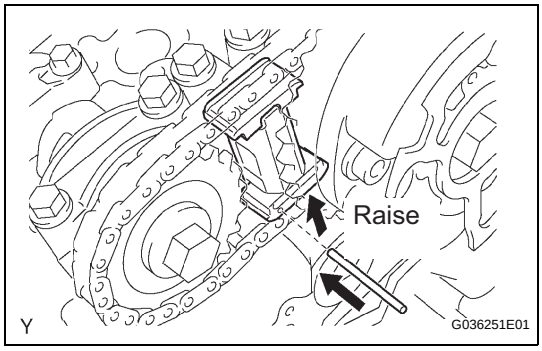

16. REMOVE CAMSHAFT TIMING GEARS AND NO.2 CHAIN (for Bank 1)

(a) While raising the chain tensioner No. 2, insert a pin of ϕ 1.0 mm (0.039 in.) into the hole to fix it.

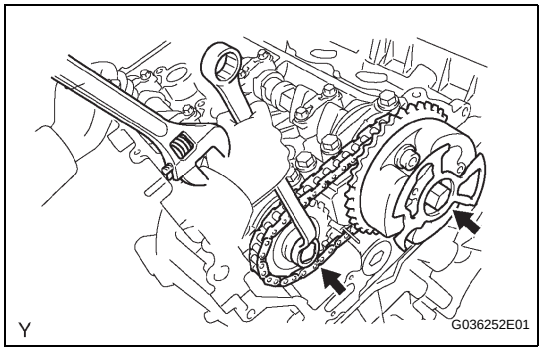

(b) Hold the hexagonal portion of the camshaft with a wrench.
NOTICE:
Be careful not to damage the cylinder head and valve lifter with the wrench.
(c) Remove the 2 bolts, then remove the camshaft timing gear, camshaft timing gear assembly and timing chain No. 2.
NOTICE:
Do not disassemble the camshaft timing gear assembly.

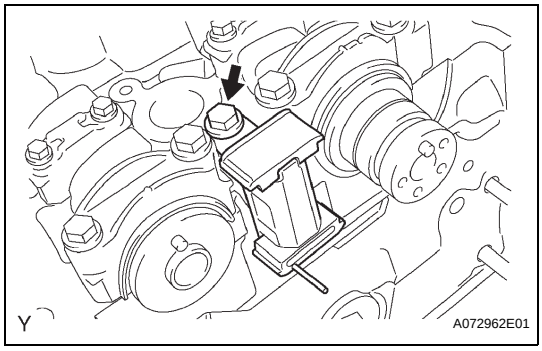

17. REMOVE NO.2 CHAIN TENSIONER ASSEMBLY

(a) Remove the bolt, then remove the chain tensioner No. 2.

18. REMOVE CAMSHAFTS
NOTICE:
Keep the camshaft level while it is being removed. The camshaft thrust clearance is very small and failing to keep it level could crack or damage the cylinder head journal surface, which receives the thrust. This could subsequently lead the camshaft to seize or break. Perform the following steps to avoid such problems.

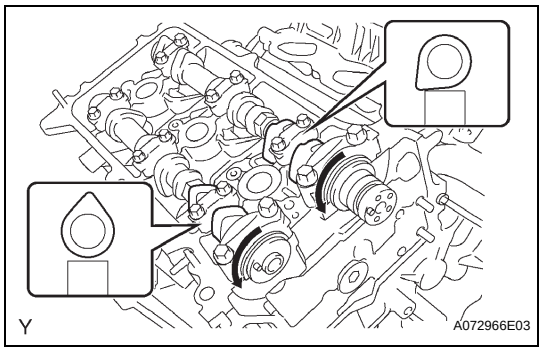

(a) Rotate the camshafts counterclockwise using a wrench so that the cam lobes of No. 1 cylinder face in the directions shown in the illustration.

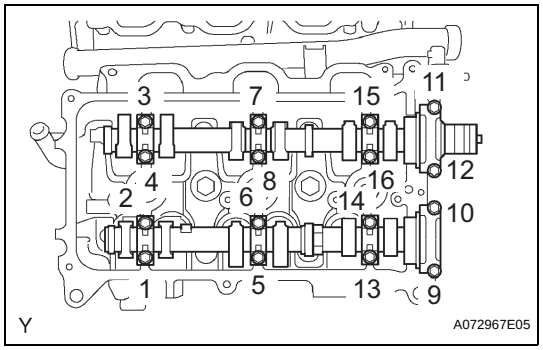

(b) Using several steps, loosen and remove the 16 bearing cap bolts uniformly in the sequence shown in the illustration.

(c) Remove the 8 bearing caps and 2 camshafts.

19. REMOVE NO.2 CAMSHAFT BEARING

20. REMOVE CYLINDER HEAD SUB-ASSEMBLY

(a) Remove the 2 bolts and separate the 2 ground cables.

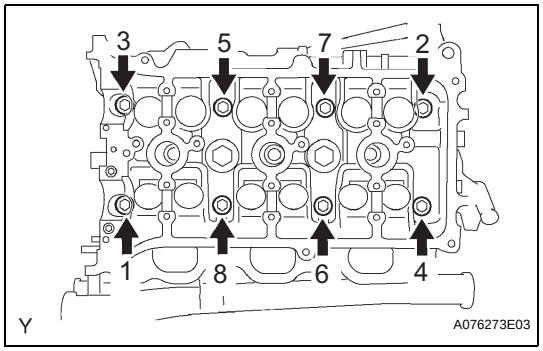

(b) Using several steps, uniformly loosen the 8 cylinder head bolts on the cylinder head with a 10 mm bi-hexagon wrench in the sequence shown in the illustration. Remove the 8 cylinder head bolts and 8 plate washers.

NOTICE:

- **Be careful not to drop the plate washers into the cylinder head.**
- **Cylinder head warpage or cracking could result from removing the bolts in the wrong order.**

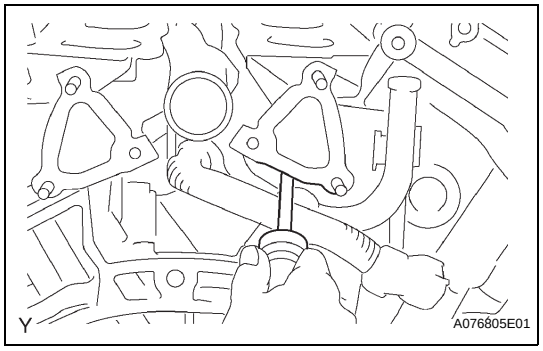

(c) Lift the cylinder head from the dowels on the cylinder block, and place the cylinder head on wooden blocks on a bench.

NOTICE:

Be careful not to drop the plate washers into the cylinder head.

If the cylinder head is difficult to remove, pry between the cylinder head and cylinder block with a screwdriver.

21. REMOVE CYLINDER HEAD GASKET

INSPECTION

1. INSPECT CYLINDER HEAD SET BOLT

(a) Using vernier calipers, measure the outside diameter of the bolt thread.

Standard outside diameter:
10.85 to 11.00 mm (0.4272 to 0.4331 in.)

Minimum outside diameter:
10.7 mm (0.421 in.)

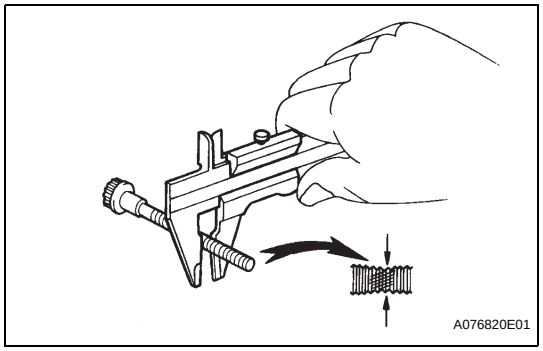

INSTALLATION

1. INSTALL CYLINDER HEAD GASKET

(a) Remove any old packing (FIPG) material and be careful not to drop any oil on the contact surfaces of the cylinder head and cylinder block.

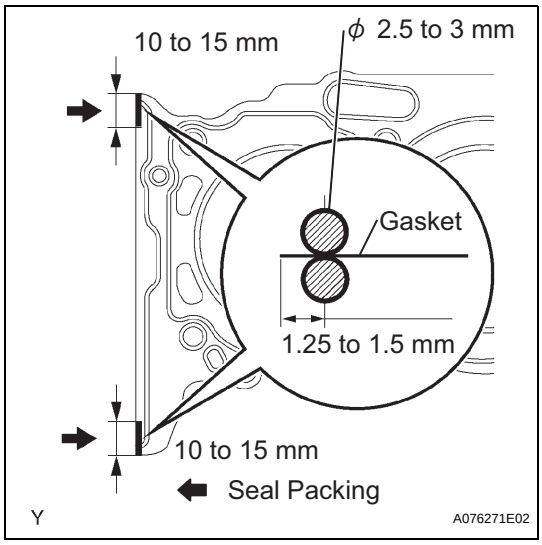

(b) Apply a continuous bead of seal packing (diameter 2.5 to 3 mm (0.098 to 0.118 in.)) to a new cylinder head gasket as shown in the illustration.
Seal packing:
Part No. 08826-00080 or equivalent
NOTICE:
Install the cylinder head within 3 minutes of applying the seal packing. Tighten the cylinder head bolts within 15 minutes of installing the cylinder head. Otherwise, the seal packing must be removed and reapplied.

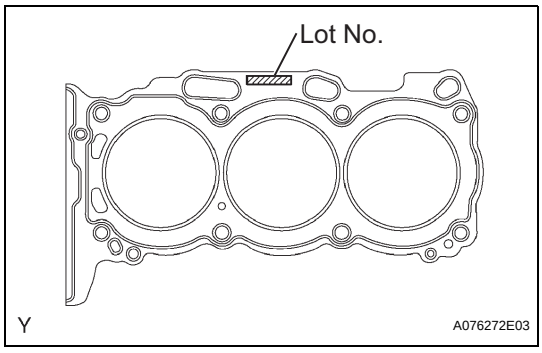

(c) Place the cylinder head gasket on the cylinder block surface with the Lot No. stamp upward.
NOTICE:
- **Be careful of the installation direction.**
- **Place the cylinder head carefully in order not to damage the gasket with the bottom part of the head.**

2. INSTALL CYLINDER HEAD SUB-ASSEMBLY

(a) Place the cylinder head on the cylinder head gasket.

(b) Install the 8 cylinder head bolts.
HINT:
- The cylinder head bolts are tightened in 2 successive steps (steps (3) and (5)).
- If any cylinder head bolts are broken or deformed, replace them.

(1) Apply a light coat of engine oil to the threads of the cylinder head bolts.

(2) Install the plate washer onto the cylinder head bolt.

(3) Using several steps, tighten each bolt uniformly with a 10 mm bi-hexagon wrench in the sequence shown in the illustration.
Torque: 36 N*m (367 kgf*cm, 27 ft.*lbf)
If any cylinder head bolts do not meet the torque specification, replace them.
NOTICE:
Do not drop the washers into the cylinder head.

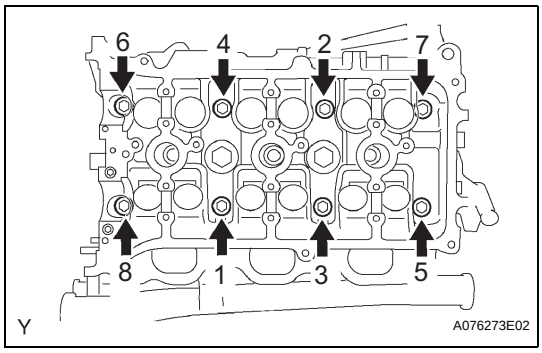

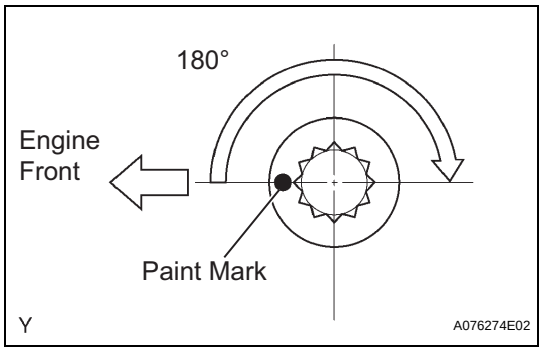

(4) Mark the front side of each cylinder head bolt with paint.
(5) Retighten the cylinder head bolts 180° as shown.
(6) Check that the painted marks are now at 180° from the engine front.

(c) Install the ground cables with the 2 bolts.
Torque: 8.0 N*m (82 kgf*cm, 71 in.*lbf)

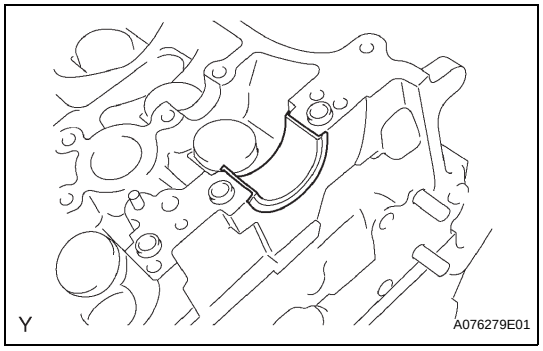

3. INSTALL NO.2 CAMSHAFT BEARING

(a) Install the camshaft bearing No. 2 onto the cylinder head.
NOTICE:
Clean the installation planes of the back side of the bearing and cylinder head and keep them free of oils and fats.

4. INSTALL CAMSHAFTS
NOTICE:
Keep the camshaft level while it is being removed. The camshaft thrust clearance is very small and failing to keep it level could crack or damage the cylinder head journal surface, which receives the thrust. This could subsequently lead the camshaft to seize or break. Perform the following steps to avoid such problems.

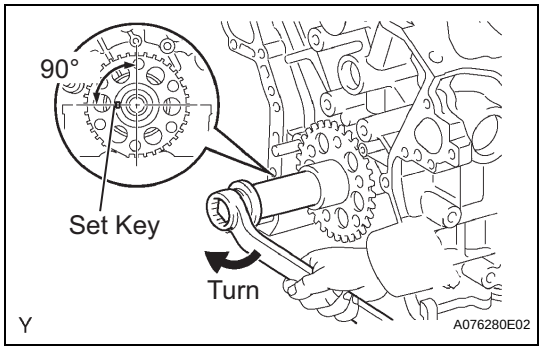

(a) Set the crankshaft position.
(1) Using the crankshaft pulley set bolt, turn the crankshaft, and set the crankshaft set key in the left horizontal position.
NOTICE:
Installing the crankshaft at the wrong angle could cause the piston head and valve head to come into contact with each other when installing the camshaft. This could cause damage, so always set the crankshaft at the correct angle.

(b) Apply new engine oil to the thrust portion and journal of the camshafts.

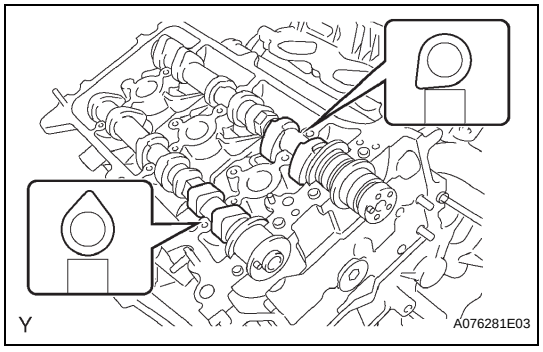

(c) Place the 2 camshafts onto the cylinder head with the cam lobes of No. 1 cylinder facing in the directions shown in the illustration.

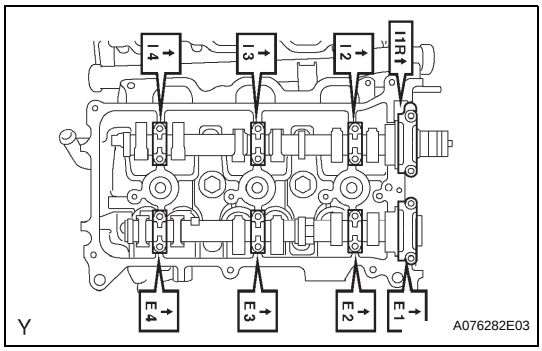

(d) Install the 8 bearing caps in the proper locations as shown.

(e) Apply a light coat of engine oil to the threads and under the heads of the bearing cap bolts.

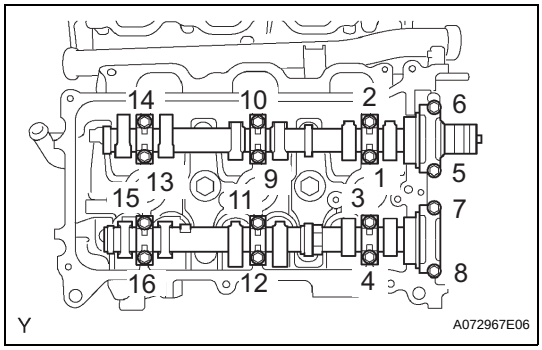

(f) Using several steps, uniformly install and tighten the 16 bearing cap bolts in the sequence shown in the illustration.

Torque: 9.0 N*m (92 kgf*cm, 80 in.*lbf) for 10 mm (0.39 in.) head
24 N*m (245 kgf*cm, 18 ft.*lbf) for 12 mm (0.47 in.) head

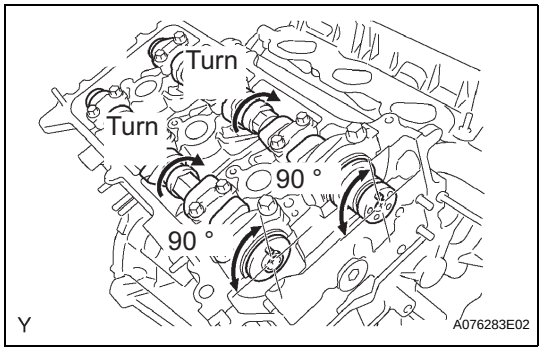

(g) Turn the camshafts clockwise until each camshaft knock pin comes to a position 90° to the cylinder head.

5. INSTALL NO.2 CHAIN TENSIONER ASSEMBLY

(a) While pushing in the tensioner, insert a pin of ϕ 1.0 mm (0.039 in.) into the hole to fix it.

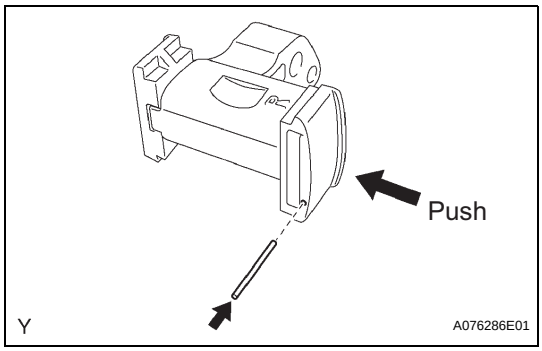

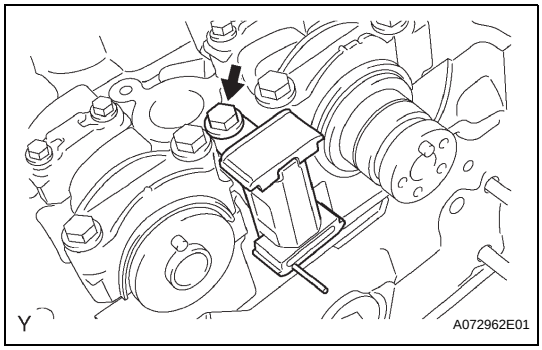

(b) Install the chain tensioner No. 2 with the bolt.
Torque: 19 N*m (194 kgf*cm, 14 ft.*lbf)

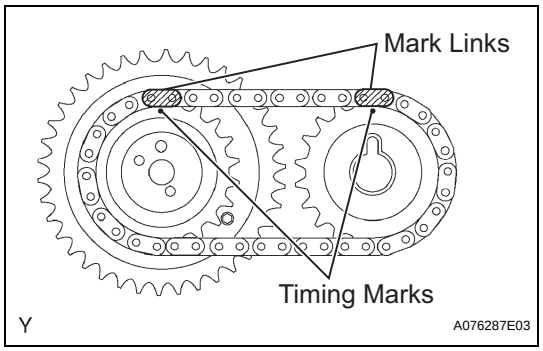

6. INSTALL CAMSHAFT TIMING GEARS AND NO.2 CHAIN (for Bank 1)

(a) Align the yellow mark links with the timing marks (1 dot mark) of camshaft timing gears as shown in the illustration.

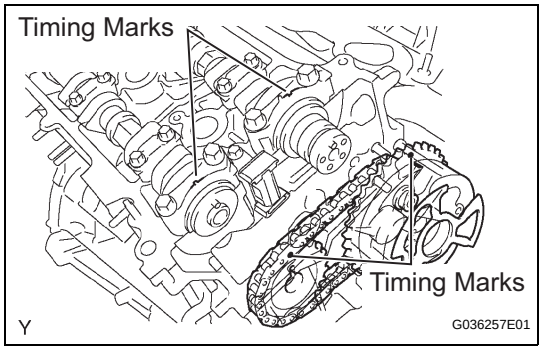

(b) Align the timing marks on the camshaft timing gears with the timing marks on the bearing caps, and install the camshaft timing gears with the chain onto the RH camshafts.

(c) Temporarily install the 2 camshaft timing gear bolts.

NOTICE:

Do not push camshaft timing gear assembly onto the camshaft forcibly when installing it.

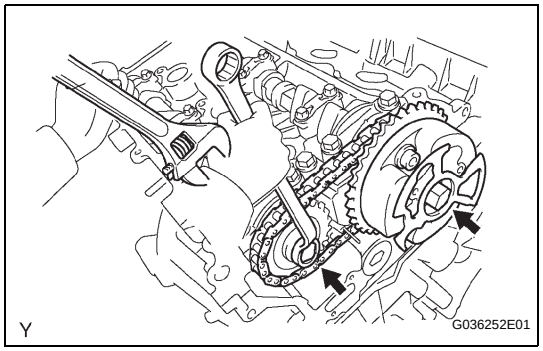

(d) Hold the hexagonal portion of the camshaft with a wrench, and tighten the 2 bolts.

Torque: 100 N*m (1,020 kgf*cm, 74 ft.*lbf)

(e) Remove the pin from the tensioner No. 2.

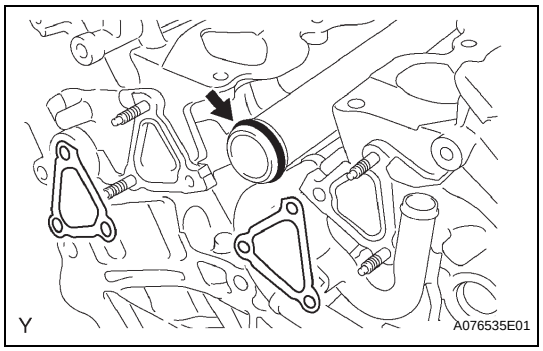

7. INSTALL WATER BY-PASS JOINT RR

(a) Install a new O-ring onto the water outlet pipe.

(b) Apply soapy water to the O-ring.

(c) Install 2 new gaskets and water by-pass joint rear with the 2 bolts and 4 nuts.

Torque: 9.0 N*m (92 kgf*cm, 80 in.*lbf)

(d) Connect the heater hose.

(e) Connect the engine coolant temperature sensor connector.

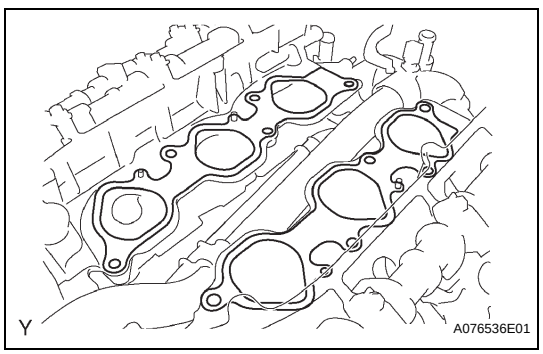

8. INSTALL INTAKE MANIFOLD

(a) Set a new gasket on each cylinder head.

NOTICE:

- **Align the port holes of the gasket and cylinder head.**
- **Be careful of the installation direction.**

(b) Set the intake manifold on the cylinder heads.

(c) Install and tighten the 10 bolts uniformly in several steps.

Torque: 26 N*m (265 kgf*cm, 19 ft.*lbf)

(d) Connect the 6 fuel injector connectors.

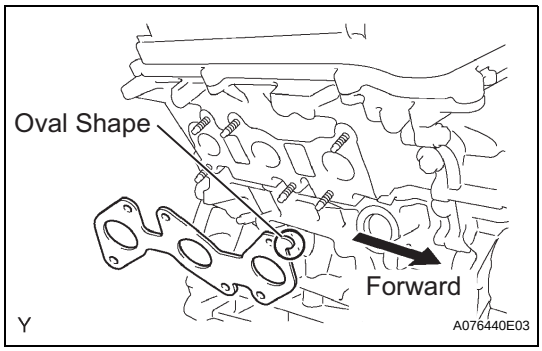

9. INSTALL EXHAUST MANIFOLD SUB-ASSEMBLY RH

(a) Set a new gasket to the RH cylinder head with the oval shape facing forward.
NOTICE:
Be careful of the installation direction.

(b) Install the exhaust manifold with the 6 nuts. Tighten the nuts uniformly in several steps.
Torque: 21 N*m (214 kgf*cm, 16 ft.*lbf)

(c) Connect the air fuel ratio sensor connector.

10. INSTALL MANIFOLD STAY

(a) Install the manifold stay with the 3 bolts.
Torque: 40 N*m (408 kgf*cm, 30 ft.*lbf)

11. INSTALL FRONT EXHAUST PIPE ASSEMBLY
(See page EX-3)

12. INSTALL NO.1 COOL AIR INLET

(a) Install the cool air inlet with the 2 bolts.
Torque: 12 N*m (122 kgf*cm, 9.0 ft.*lbf)

13. INSTALL CHAIN TENSIONER SLIPPER

14. INSTALL NO.1 CHAIN TENSIONER ASSEMBLY (See page EM-27)

15. INSTALL CHAIN SUB-ASSEMBLY
(See page EM-48)

16. INSTALL TIMING CHAIN OR BELT COVER SUB-ASSEMBLY
(See page LU-38)

17. INSTALL ENGINE ASSEMBLY
(See page EM-190)

18. INSTALL BATTERY

19. ADD ENGINE COOLANT (See page CO-3)

20. ADD ENGINE OIL (See page LU-5)

21. CHECK FOR ENGINE COOLANT LEAKAGE (See page CO-4)

22. CHECK FOR ENGINE OIL LEAKAGE

23. CHECK FOR FUEL LEAKAGE

24. CHECK FOR EXHAUST GAS LEAKAGE

25. INSPECT IGNITION TIMING (See page EM-1)

26. INSPECT ENGINE IDLING SPEED (See page EM-2)

27. INSPECT CO/HC (See page EM-3)

EM

INSTALLATION

1. INSTALL NO.2 CYLINDER HEAD GASKET

(a) Remove any old packing (FIPG) material and be careful not to drop any oil on the contact surface of the cylinder head and cylinder block.

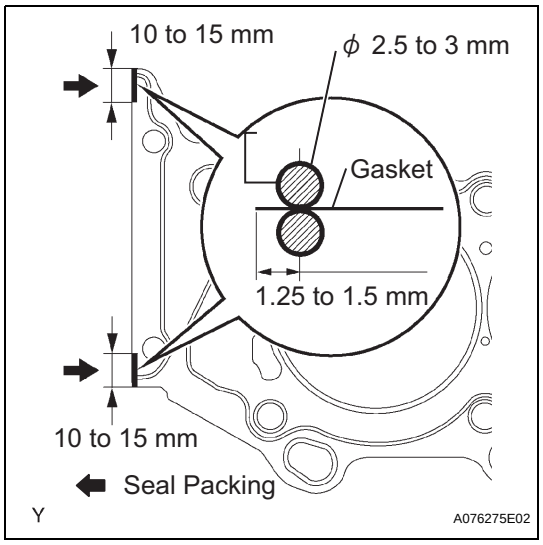

(b) Apply a continuous bead of seal packing (diameter 2.5 to 3.0 mm (0.098 to 0.118 in.)) to a new cylinder head gasket as shown in the illustration.
Seal packing:
Part No. 08826-00080 or equivalent
NOTICE:
Install the cylinder head within 3 minutes of applying the seal packing. Tighten the cylinder head bolts within 15 minutes of installing the cylinder head. Otherwise, the seal packing must be removed and reapplied.

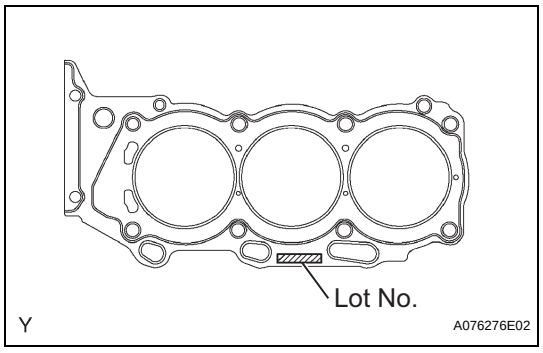

(c) Place the cylinder head gasket on the cylinder block surface with the Lot No. stamp upward.
NOTICE:
- **Be careful of the installation direction.**
- **Place the cylinder head carefully in order not to damage the gasket with the bottom part of the head.**

2. INSTALL CYLINDER HEAD LH

(a) Place the cylinder head on the cylinder head gasket.

(b) Install the 8 cylinder head bolts.
HINT:
- The cylinder head bolts are tightened in 2 successive steps (steps (3) and (5)).
- If any cylinder head bolts are broken or deformed, replace them.

(1) Apply a light coat of engine oil to the threads of the cylinder head bolts.

(2) Install the plate washer onto the cylinder head bolt.

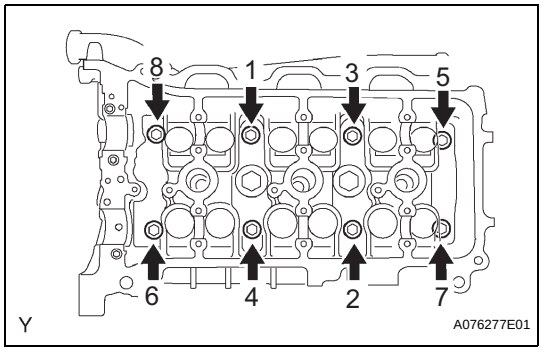

(3) Using several steps, tighten each bolt uniformly with a 10 mm bi-hexagon wrench in the sequence shown in the illustration.
Torque: 36 N*m (367 kgf*cm, 27 ft.*lbf)
If any cylinder head bolts do not meet the torque specification, replace them.
NOTICE:
Do not drop the washers into the cylinder head.

EM

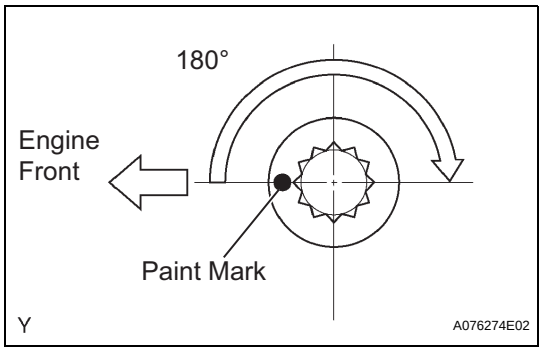

(4) Mark the front side of each cylinder head bolt with paint.
(5) Retighten the cylinder head bolts 180° as shown.
(6) Check that the painted marks are now at 180° from the engine front.

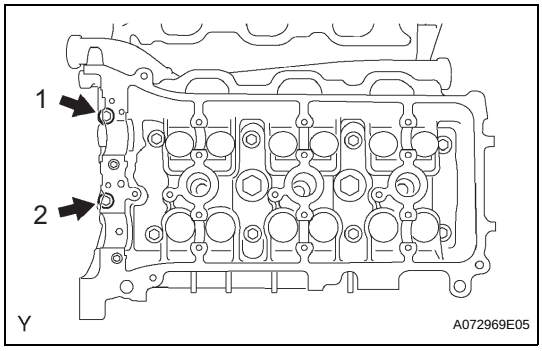

(c) Install the 2 cylinder head bolts.
(1) Apply a light coat of engine oil to the threads of the cylinder head bolts.
(2) Using several steps, uniformly install and tighten the 2 cylinder head bolts in the sequence shown in the illustration.
Torque: 30 N*m (306 kgf*cm, 22 ft.*lbf)
(d) Install the ground cables with the 2 bolts.
Torque: 8.0 N*m (82 kgf*cm, 71 in.*lbf)

3. INSTALL CAMSHAFTS

NOTICE:
Keep the camshaft level while it is being removed. The camshaft thrust clearance is very small and failing to keep it level could crack or damage the cylinder head journal surface, which receives the thrust. This could subsequently lead the camshaft to seize or break. Perform the following steps to avoid such problems.

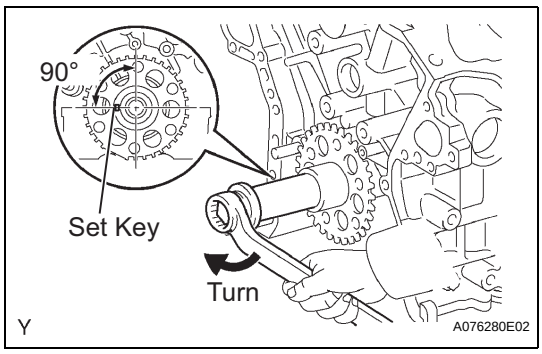

(a) Set the crankshaft position.
(1) Using the crankshaft pulley set bolt, turn the crankshaft, and set the crankshaft set key in the left horizontal position.
NOTICE:
Installing the crankshaft at the wrong angle could cause the piston head and valve head to come into contact with each other when installing the camshaft. This could cause damage, so always set the crankshaft at the correct angle.
(b) Apply new engine oil to the thrust portion and journal of the camshafts.

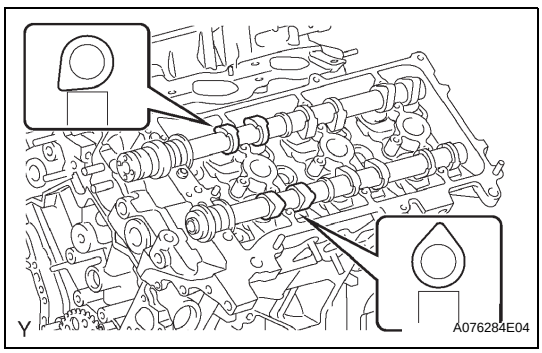

(c) Place the 2 camshafts onto the cylinder head with the cam lobes of No. 1 cylinder facing in the directions as shown in the illustration.

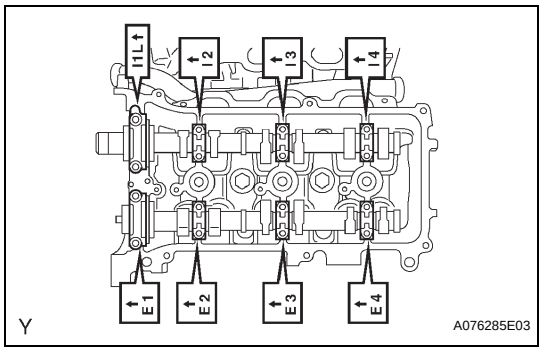

(d) Install the 8 bearing caps in the proper locations as shown.

(e) Apply a light coat of engine oil to the threads and under the heads of the bearing cap bolts.

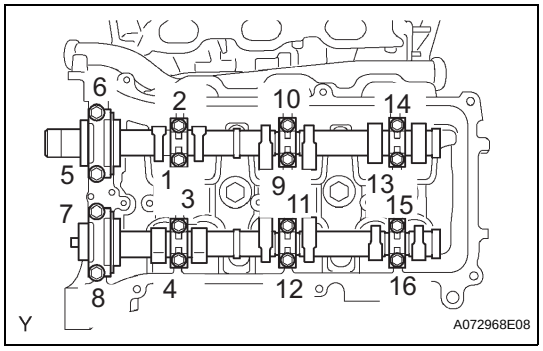

(f) Using several steps, uniformly install and tighten the 16 bearing cap bolts in the sequence shown in the illustration.

Torque: 9.0 N*m (92 kgf*cm, 80 in.*lbf) for 10 mm (0.39 in.) head
24 N*m (245 kgf*cm, 18 ft.*lbf) for 12 mm (0.47 in.) head

EM

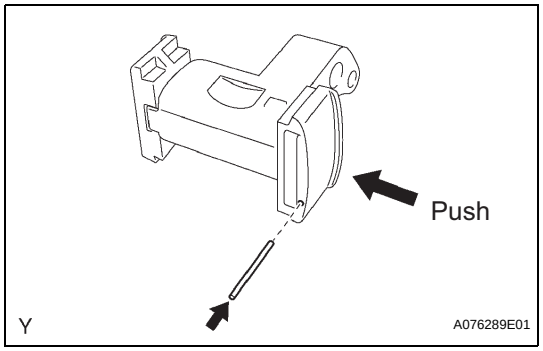

4. INSTALL NO.2 CHAIN TENSIONER ASSEMBLY

(a) While pushing in the tensioner, insert a pin of ϕ 1.0 mm (0.039 in.) into the hole to fix it.

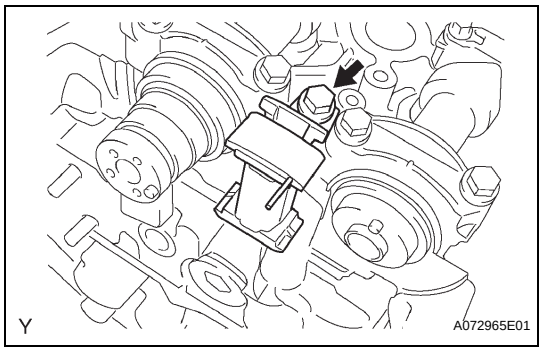

(b) Install the chain tensioner No. 2 with the bolt.
Torque: 19 N*m (194 kgf*cm, 14 ft.*lbf)

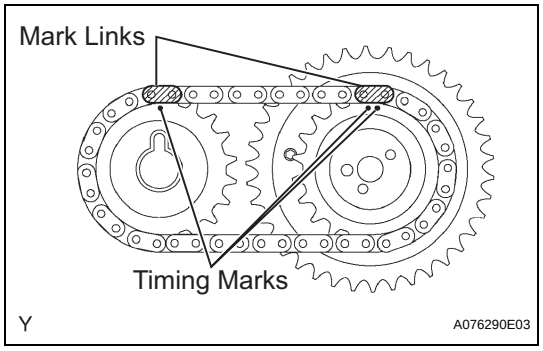

5. INSTALL CAMSHAFT TIMING GEARS AND NO.2 CHAIN (for Bank 2)

(a) Align the yellow mark links with the timing marks (1 dot mark and 2 dot marks) of camshaft timing gears as shown in the illustration.

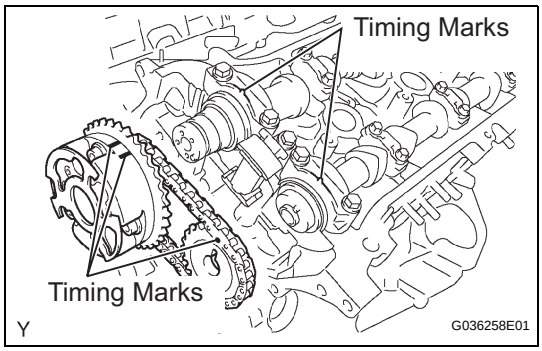

(b) Align the timing marks on the camshaft timing gears with the timing marks on the bearing caps, and install the camshaft timing gears with the chain onto the LH camshafts.

(c) Temporarily install the 2 camshaft timing gear bolts.

NOTICE:

Do not push camshaft timing gear assembly onto the camshaft forcibly when installing it.

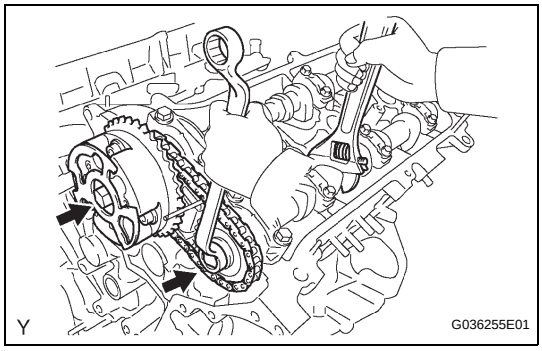

(d) Hold the hexagonal portion of the camshaft with a wrench, and tighten the 2 bolts.

Torque: 100 N*m (1,020 kgf*cm, 74 ft.*lbf)

(e) Remove the pin from the tensioner No. 2.

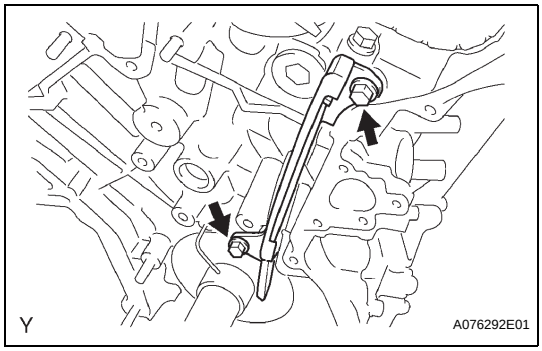

6. INSTALL NO.1 CHAIN VIBRATION DAMPER

(a) Install the chain vibration damper with the 2 bolts.

Torque: 19 N*m (194 kgf*cm, 14 ft.*lbf)

7. INSTALL WATER BY-PASS JOINT RR (See page EM-99)

8. INSTALL INTAKE MANIFOLD (See page EM-99)

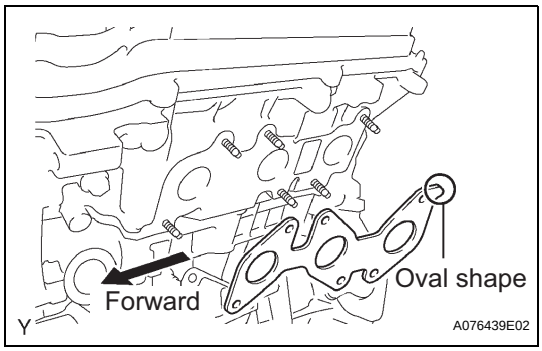

9. INSTALL EXHAUST MANIFOLD SUB-ASSEMBLY LH

(a) Set a new gasket to the LH cylinder head with the oval shape facing forward.

NOTICE:

Be careful of the installation direction.

(b) Install the exhaust manifold with the 6 nuts. Tighten the nuts uniformly in several steps.

Torque: 21 N*m (214 kgf*cm, 16 ft.*lbf)

(c) Connect the air fuel ratio sensor connector.

10. INSTALL MANIFOLD STAY

(a) Install the manifold stay with the 3 bolts.

Torque: 40 N*m (408 kgf*cm, 30 ft.*lbf)

11. INSTALL NO.2 EXHAUST FRONT PIPE ASSEMBLY (See page EX-3)

12. INSTALL NO.1 COOL AIR INLET

(a) Install the cool air inlet with the 2 bolts.

Torque: 12 N*m (122 kgf*cm, 9.0 ft.*lbf)

13. INSTALL CHAIN TENSIONER SLIPPER

14. **INSTALL NO.1 CHAIN TENSIONER ASSEMBLY (See page EM-27)**
15. **INSTALL CHAIN SUB-ASSEMBLY**
(See page EM-48)
16. **INSTALL TIMING CHAIN OR BELT COVER SUB-ASSEMBLY**
(See page LU-38)
17. **INSTALL ENGINE ASSEMBLY**
(See page EM-190)
18. **INSTALL BATTERY**
19. **ADD ENGINE COOLANT (See page CO-3)**
20. **ADD ENGINE OIL (See page LU-5)**
21. **CHECK FOR ENGINE COOLANT LEAKAGE (See page CO-4)**
22. **CHECK FOR ENGINE OIL LEAKAGE**
23. **CHECK FOR FUEL LEAKAGE**
24. **CHECK FOR EXHAUST GAS LEAKAGE**
25. **INSPECT IGNITION TIMING (See page EM-1)**
26. **INSPECT ENGINE IDLING SPEED (See page EM-2)**
27. **INSPECT CO/HC (See page EM-3)**
28. **INSPECT COMPRESSION (See page EM-2)**

REMOVAL

1. **DISCHARGE FUEL SYSTEM PRESSURE**
   (See page FU-1)
2. **REMOVE BATTERY**
3. **DRAIN ENGINE COOLANT (See page CO-3)**
4. **DRAIN ENGINE OIL (See page LU-4)**
5. **REMOVE POWER STEERING LINK ASSEMBLY**
   (See page PS-53)
6. **REMOVE FRONT DIFFERENTIAL CARRIER ASSEMBLY (for 4WD)**
   (See page DF-19)
7. **REMOVE TIMING CHAIN OR BELT COVER SUB-ASSEMBLY**
   (See page LU-34)
8. **REMOVE CHAIN SUB-ASSEMBLY**
   (See page EM-44)
9. **REMOVE NO.1 COOL AIR INLET**
   (a) Remove the 2 bolts, then remove the cool air inlet.
10. **REMOVE FRONT NO.2 EXHAUST PIPE ASSEMBLY**
    (See page EX-3)
11. **REMOVE MANIFOLD STAY**
    (a) Remove the 3 bolts, then remove the exhaust manifold stay.
12. **REMOVE EXHAUST MANIFOLD SUB-ASSEMBLY LH**
    (a) Disconnect the air fuel ratio sensor connector.
    (b) Remove the 6 nuts, then remove the exhaust manifold and gasket.
13. **DISCONNECT NO.1 FUEL PIPE SUB-ASSEMBLY (See page FU-13)**
14. **DISCONNECT NO.2 FUEL PIPE SUB-ASSEMBLY (See page FU-13)**
15. **REMOVE INTAKE MANIFOLD (See page EM-93)**
16. **REMOVE WATER BY-PASS JOINT RR (See page EM-93)**
17. **REMOVE NO.1 CHAIN VIBRATION DAMPER**
    (a) Remove the 2 bolts, then remove the chain vibration damper No. 1.

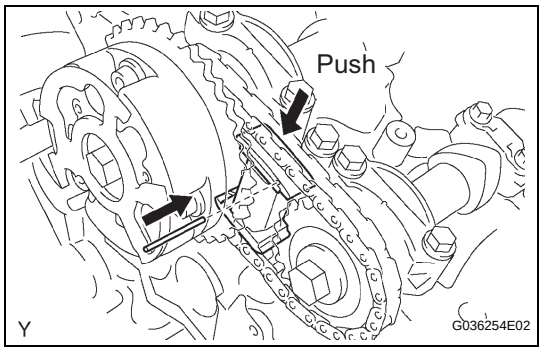

18. REMOVE CAMSHAFT TIMING GEARS AND NO.2 CHAIN (for Bank 2)

(a) While pushing down the chain tensioner No. 2, insert a pin of ϕ 10 mm (0.039 in.) into the hole to fix it.

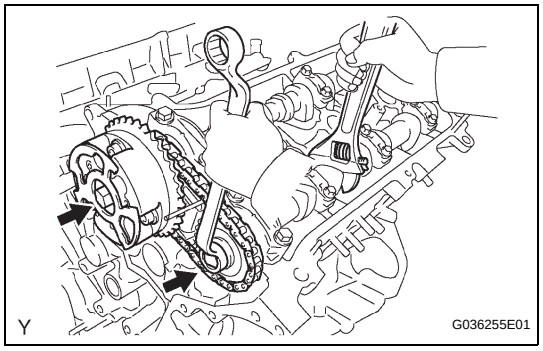

(b) Hold the hexagonal portion of the camshaft with a wrench.

NOTICE:

Be careful not to damage the cylinder head and valve lifter with the wrench.

(c) Remove the 2 bolts, then remove the camshaft timing gear, camshaft timing gear assembly and timing chain No. 2.

NOTICE:

Do not disassemble the camshaft timing gear assembly.

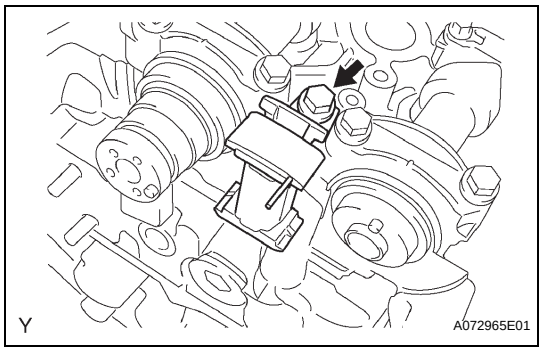

19. REMOVE NO.2 CHAIN TENSIONER ASSEMBLY

(a) Remove the bolt, then remove the chain tensioner No. 3.

20. REMOVE CAMSHAFTS

NOTICE:

Keep the camshaft level while it is being removed. The camshaft thrust clearance is very small and failing to keep it level could crack or damage the cylinder head journal surface, which receives the thrust. This could subsequently lead the camshaft to seize or break. Perform the following steps to avoid such problems.

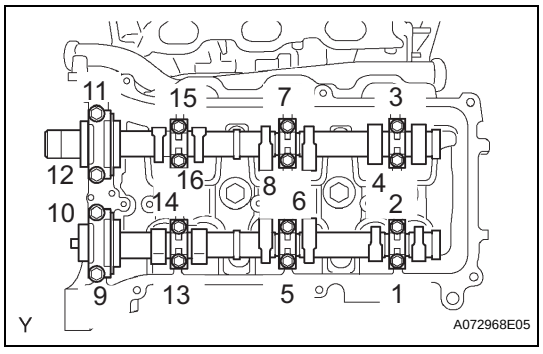

(a) Using several steps, loosen and remove the 16 bearing cap bolts uniformly in the sequence shown in the illustration.

(b) Remove the 8 bearing caps and 2 camshafts.

21. REMOVE CYLINDER HEAD LH

(a) Remove the bolt, then separate the ground cable.

EM

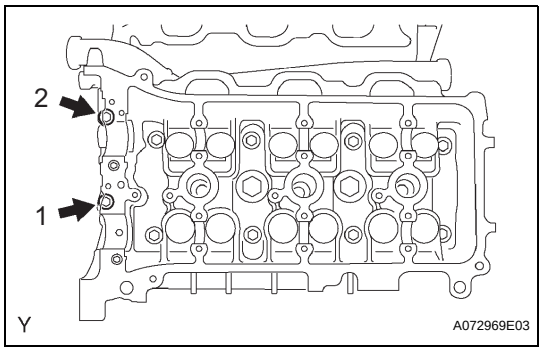

(b) Using several steps, remove the 2 cylinder head bolts on the cylinder head in the sequence shown in the illustration.

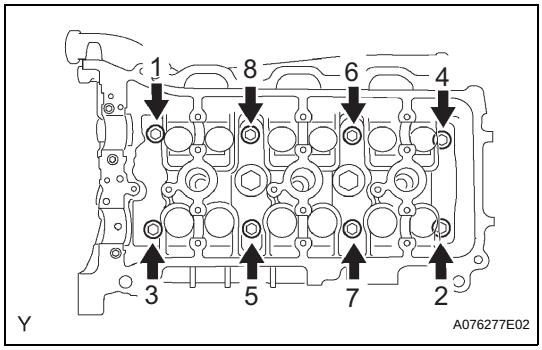

(c) Using several steps,uniformly loosen the 8 cylinder head bolts on the cylinder head with a 10 mm bi-hexagon wrench in the sequence shown in the illustration. Remove the 8 cylinder head bolts and 8 plate washers.

NOTICE:

- **Be careful not to drop the plate washers into the cylinder head.**
- **Cylinder head warpage or cracking could result form removing the bolts in the wrong order.**

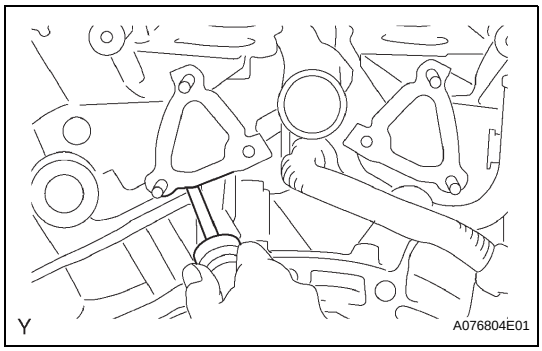

(d) Lift the cylinder head from the dowels on the cylinder block, and place the cylinder head on wooden blocks on a bench.

NOTICE:

Be careful not to drop the plate washers into the cylinder head.

If the cylinder head is difficult to remove, pry between the cylinder head and cylinder block with a screwdriver.

22. REMOVE NO.2 CYLINDER HEAD GASKET

INSPECTION

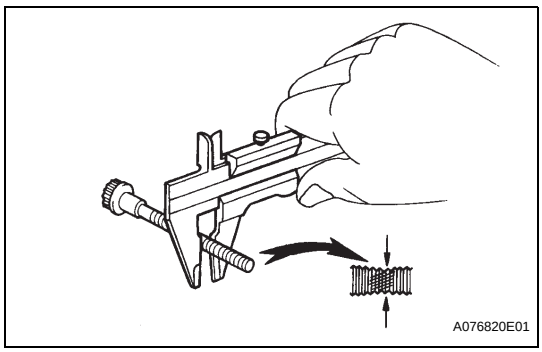

1. INSPECT CYLINDER HEAD SET BOLT

(a) Using vernier calipers, measure the outside diameter of the bolt thread.

Standard outside diameter:

10.85 to 11.00 mm (0.4272 to 0.4331 in.)

Minimum outside diameter:

10.7 mm (0.421 in.)

INSTALLATION

1. INSTALL NO.2 CYLINDER HEAD GASKET

(a) Remove any old packing (FIPG) material and be careful not to drop any oil on the contact surface of the cylinder head and cylinder block.

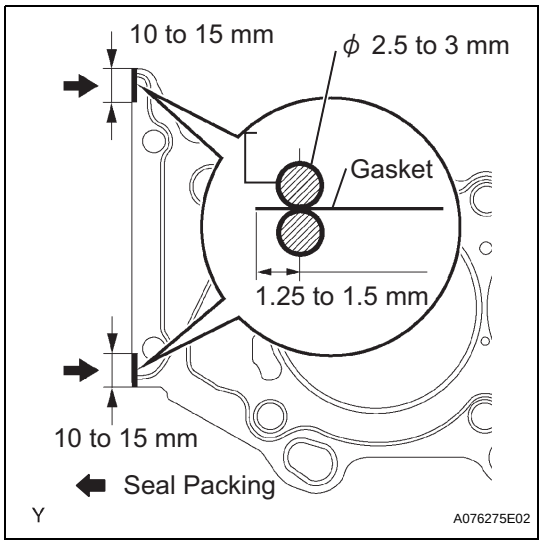

(b) Apply a continuous bead of seal packing (diameter 2.5 to 3.0 mm (0.098 to 0.118 in.)) to a new cylinder head gasket as shown in the illustration.
Seal packing:
Part No. 08826-00080 or equivalent
NOTICE:
Install the cylinder head within 3 minutes of applying the seal packing. Tighten the cylinder head bolts within 15 minutes of installing the cylinder head. Otherwise, the seal packing must be removed and reapplied.

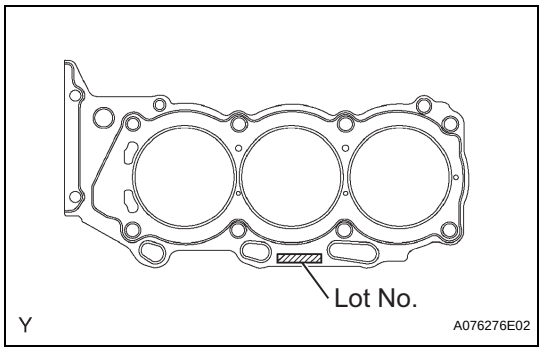

(c) Place the cylinder head gasket on the cylinder block surface with the Lot No. stamp upward.
NOTICE:
- **Be careful of the installation direction.**
- **Place the cylinder head carefully in order not to damage the gasket with the bottom part of the head.**

2. INSTALL CYLINDER HEAD LH

(a) Place the cylinder head on the cylinder head gasket.

(b) Install the 8 cylinder head bolts.
HINT:
- The cylinder head bolts are tightened in 2 successive steps (steps (3) and (5)).
- If any cylinder head bolts are broken or deformed, replace it.

(1) Apply a light coat of engine oil to the threads of the cylinder head bolts.

(2) Install the plate washer onto the cylinder head bolt.

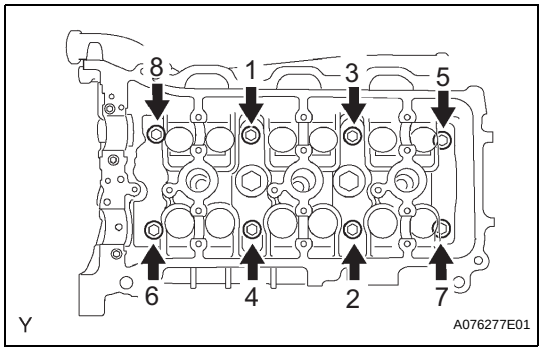

(3) Using several steps, uniformly tighten each bolt with a 10 mm bi-hexagon wrench in the sequence shown in the illustration.
Torque: 36 N*m (367 kgf*cm, 27 ft.*lbf)
If any cylinder head bolts do not meet the torque specification, replace them.
NOTICE:
Do not drop the washers into the cylinder head.

EM

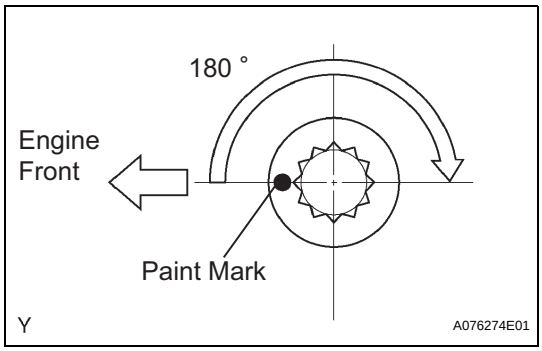

(4) Mark the front side of each cylinder head bolt with paint.
(5) Retighten the cylinder head bolts 180° as shown.
(6) Check that the painted marks are now at 180° from the engine front.

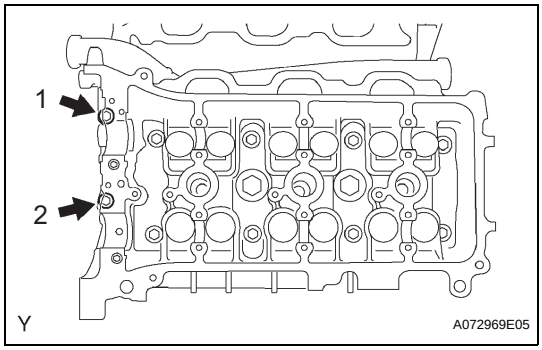

(c) Install the 2 cylinder head bolts.
(1) Apply a light coat of engine oil to the threads of the cylinder head bolts.
(2) Using several steps, uniformly install and tighten the 2 cylinder head bolts in the sequence as shown in the illustration.
Torque: 30 N*m (306 kgf*cm, 22 ft.*lbf)
(d) Install the ground cables with the 2 bolts.
Torque: 8.0 N*m (82 kgf*cm, 71 in.*lbf)

3. INSTALL CAMSHAFTS

NOTICE:
Keep the camshaft level while it is being removed. The camshaft thrust clearance is very small and failing to keep it level could crack or damage the cylinder head journal surface, which receives the thrust. This could subsequently lead the camshaft to seize or break. Perform the following steps to avoid such problems.

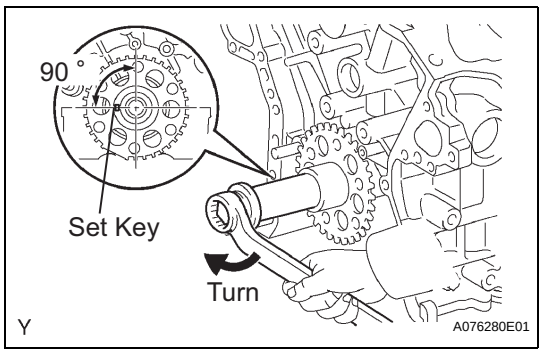

(a) Set the crankshaft position.
(1) Using the crankshaft pulley set bolt, turn the crankshaft, and set the crankshaft set key in the left horizontal position.
NOTICE:
Installing the crankshaft at the wrong angle could cause the piston head and valve head to come into contact with each other when installing the camshaft. This could cause damage, so always set the crankshaft at the correct angle.
(b) Apply new engine oil to the thrust portion and journal of the camshafts.

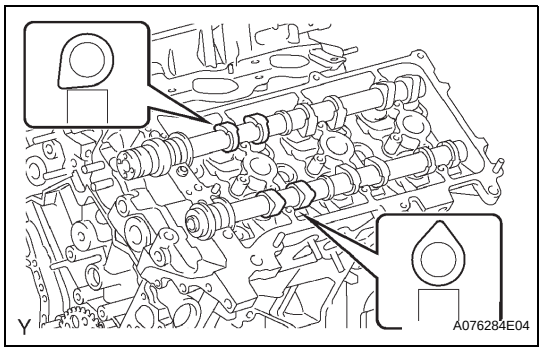

(c) Place the 2 camshafts onto the cylinder head with the cam lobes of No. 1 cylinder facing in the directions shown in the illustration.

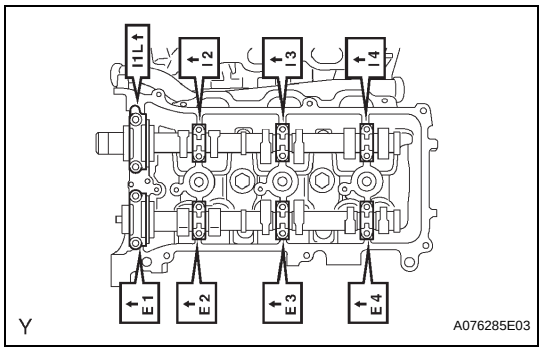

(d) Install the 8 bearing caps in the proper locations as shown.

(e) Apply a light coat of engine oil to the threads and under the leads of the bearing cap bolts.

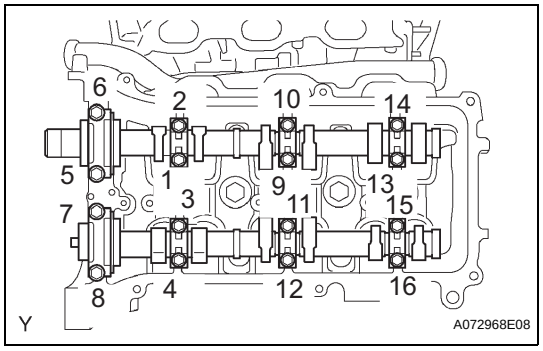

(f) Using several steps, uniformly install and tighten the 16 bearing cap bolts in the sequence as shown in the illustration.

Torque: 9.0 N*m (92 kgf*cm, 80 in.*lbf) for 10 mm (0.39 in.) head
24 N*m (245 kgf*cm, 18 ft.*lbf) for 12 mm (0.47 in.) head

EM

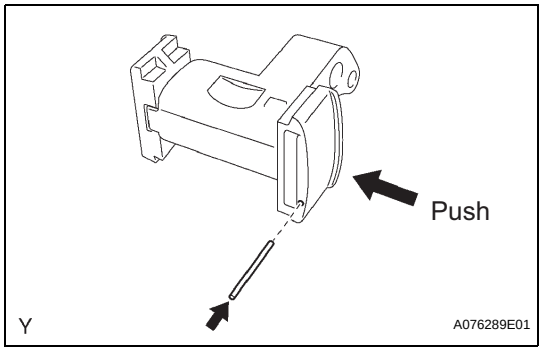

4. INSTALL NO.2 CHAIN TENSIONER ASSEMBLY

(a) While pushing in the tensioner, insert a pin of ϕ 1.0 mm (0.039 in.) into the hole to fix it.

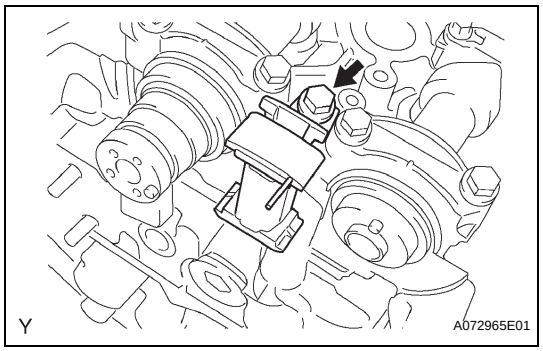

(b) Install the chain tensioner No. 2 with the bolt.
Torque: 19 N*m (194 kgf*cm, 14 ft.*lbf)

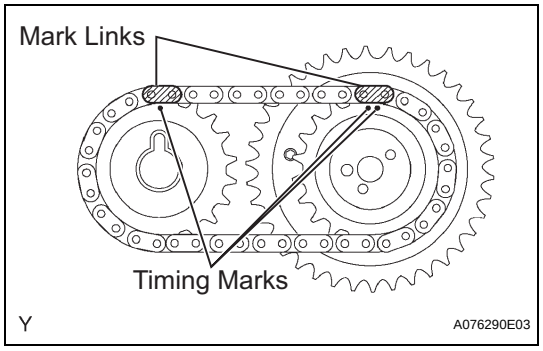

5. INSTALL CAMSHAFT TIMING GEARS AND NO.2 CHAIN (for Bank 2)

(a) Align the yellow mark links with the timing marks (1 dot mark and 2 dot marks) of camshaft timing gears as shown in the illustration.

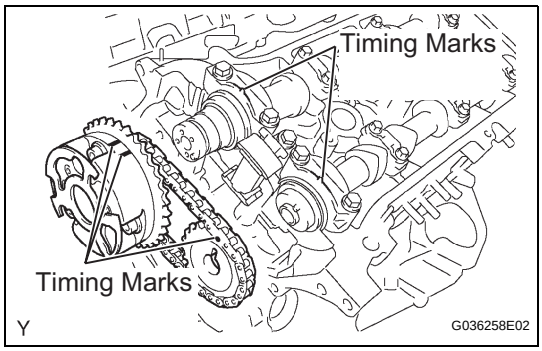

(b) Align the timing marks on the camshaft timing gears with the timing marks on the bearing caps, and install the camshaft timing gears with the chain onto the LH camshafts.

(c) Temporarily install the 2 camshaft timing gear bolts.

NOTICE:

Do not push camshaft timing gear assembly onto the camshaft forcibly when installing it.

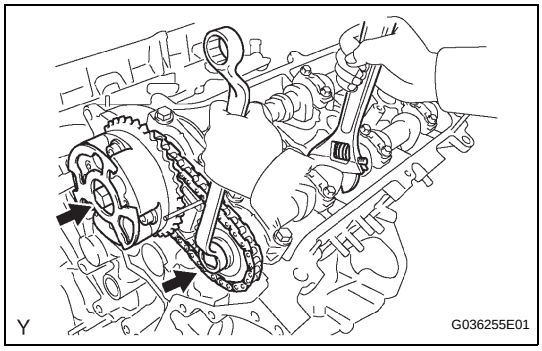

(d) Hold the hexagonal portion of the camshaft with a wrench, and tighten the 2 bolts.

Torque: 100 N*m (1,020 kgf*cm, 74 ft.*lbf)

(e) Remove the pin from the tensioner No. 2.

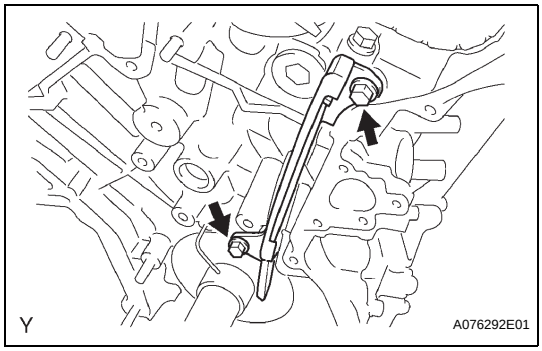

6. INSTALL NO.1 CHAIN VIBRATION DAMPER

(a) Install the chain vibration damper with the 2 bolts.

Torque: 19 N*m (194 kgf*cm, 14 ft.*lbf)

7. INSTALL WATER BY-PASS JOINT RR (See page EM-121)

8. INSTALL INTAKE MANIFOLD (See page EM-121)

9. CONNECT NO.2 FUEL PIPE SUB-ASSEMBLY

10. CONNECT NO.1 FUEL PIPE SUB-ASSEMBLY (See page FU-17)

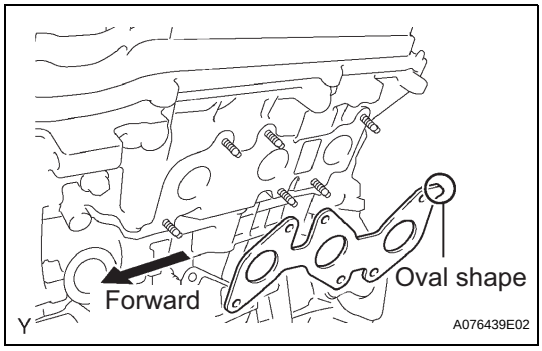

11. INSTALL EXHAUST MANIFOLD SUB-ASSEMBLY LH

(a) Set a new gasket to the LH cylinder head with the oval shape facing forward.

NOTICE:

Be careful of the installation direction.

(b) Install the exhaust manifold with the 6 nuts. Tighten the nuts uniformly in several steps.

Torque: 21 N*m (214 kgf*cm, 16 ft.*lbf)

(c) Connect the air fuel ratio sensor connector.

12. INSTALL MANIFOLD STAY

(a) Install the manifold stay with the 3 bolts.

Torque: 40 N*m (408 kgf*cm, 30 ft.*lbf)

13. INSTALL NO.2 EXHAUST PIPE ASSEMBLY

(See page EX-3)

14. INSTALL NO.1 COOL AIR INLET

(a) Install the cool air inlet with the 2 bolts.

Torque: 12 N*m (122 kgf*cm, 9.0 ft.*lbf)

15. INSTALL CHAIN TENSIONER SLIPPER

16. **INSTALL NO.1 CHAIN TENSIONER ASSEMBLY (See page EM-27)**
17. **INSTALL CHAIN SUB-ASSEMBLY**
(See page EM-48)
18. **INSTALL TIMING CHAIN OR BELT COVER SUB-ASSEMBLY**
(See page LU-38)
19. **INSTALL DIFFERENTIAL CARRIER ASSEMBLY FRONT (for 4WD)**
(See page DF-38)
20. **INSTALL POWER STEERING LINK ASSEMBLY**
(See page PS-67)
21. **INSTALL BATTERY**
22. **ADD ENGINE OIL (See page LU-5)**
23. **ADD ENGINE COOLANT (See page CO-3)**
24. **ADD DIFFERENTIAL OIL (for 4WD)**
25. **INSPECT DIFFERENTIAL OIL (for 4WD) (See page DF-8)**
26. **ADD POWER STEERING FLUID**
27. **BLEED POWER STEERING FLUID (See page PS-2)**
28. **CHECK FOR ENGINE OIL LEAKAGE**
29. **CHECK FOR ENGINE COOLANT LEAKAGE (See page CO-4)**
30. **CHECK FOR FUEL LEAKAGE**
31. **CHECK FOR EXHAUST GAS LEAKAGE**
32. **CHECK FOR POWER STEERING FLUID LEAKAGE**
33. **INSPECT AND ADJUST FRONT WHEEL ALIGNMENT**
(See page SP-7)
34. **INSPECT IGNITION TIMING (See page EM-1)**
35. **INSPECT ENGINE IDLING SPEED (See page EM-2)**
36. **INSPECT CO/HC (See page EM-3)**
37. **INSPECT COMPRESSION (See page EM-2)**

REMOVAL

1. **DISCHARGE FUEL SYSTEM PRESSURE**
   (See page FU-1)
2. **REMOVE BATTERY**
3. **DRAIN ENGINE COOLANT (See page CO-3)**
4. **DRAIN ENGINE OIL (See page LU-4)**
5. **REMOVE HOOD SUB-ASSEMBLY**
   (a) Disconnect the windshield washer hose.
   (b) Separate the 2 hood supports.
   (c) Remove the 4 bolts, then remove the hood.
6. **REMOVE RADIATOR SUPPORT TO FRAME SEAL LH (See page CO-15)**
7. **REMOVE FAN SHROUD (See page CO-15)**
8. **REMOVE RADIATOR ASSEMBLY (See page CO-15)**
9. **REMOVE V-BANK COVER (See page ES-414)**
10. **REMOVE TRANSMISSION ASSEMBLY**
    HINT:
    Refer to the table below when removing transmission.

Transmission	Drive Type	See Page
Manual Transmission	2WD	MT-7
Manual Transmission	4WD	MT-6
Automatic Transmission	2WD	AT-159
Automatic Transmission	4WD	AT-162

11. **REMOVE CLUTCH COVER ASSEMBLY (for Manual Transmission)**

Transmission	See page
RA60	CL-40
RA60F	CL-44

12. **REMOVE CLUTCH DISC ASSEMBLY (for Manual Transmission)**

Transmission	See page
RA60	CL-40
RA60F	CL-44

13. **REMOVE FAN PULLEY**
14. **REMOVE VANE PUMP ASSEMBLY (See page EM-44)**
15. **REMOVE GENERATOR ASSEMBLY (See page CH-7)**
16. **SEPARATE COOLER COMPRESSOR ASSEMBLY (See page ES-409)**
17. **DISCONNECT NO.1 FUEL PIPE SUB-ASSEMBLY (See page FU-13)**
18. **DISCONNECT NO.2 FUEL PIPE SUB-ASSEMBLY (See page FU-13)**
19. **DISCONNECT HEATER WATER INLET HOSE**

20. DISCONNECT HEATER WATER OUTLET HOSE

21. REMOVE INTAKE AIR SURGE TANK (See page EM-57)

22. SEPARATE ENGINE WIRE

(a) Remove the glove compartment door.
(b) Remove the instrument panel finish panel sub-assembly lower RH.
(c) Disconnect the 5 connectors from the ECM.
(d) Disconnect the 2 connectors from four wheel drive ECU (4WD only).
(e) Pull the wire harness into the engine room.
(f) Disconnect the front differential connector (4WD only).

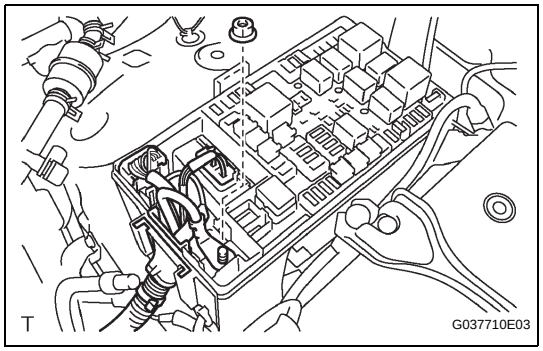

(g) Disconnect the 3 connectors from the engine room relay block.
(h) Remove the nut, then separate the engine wire from the engine room relay block.

23. SEPARATE NO.2 ENGINE WIRE

(a) Disconnect the ground cable from the cylinder block.

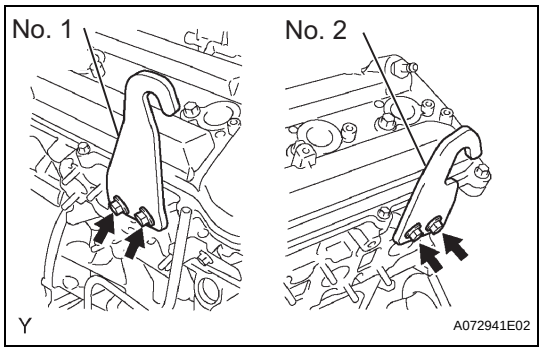

24. REMOVE ENGINE ASSEMBLY

(a) Install the 2 engine hangers with the 4 bolts as shown in the illustration.
Part No:
Engine hanger No. 1 12281-31070
Engine hanger No. 2 12282-31050
Bolt 90119-08177
Torque: 33 N*m (336 kgf*cm, 24 ft.*lbf)
(b) Attach the engine sling device and hang the engine with the chain block.

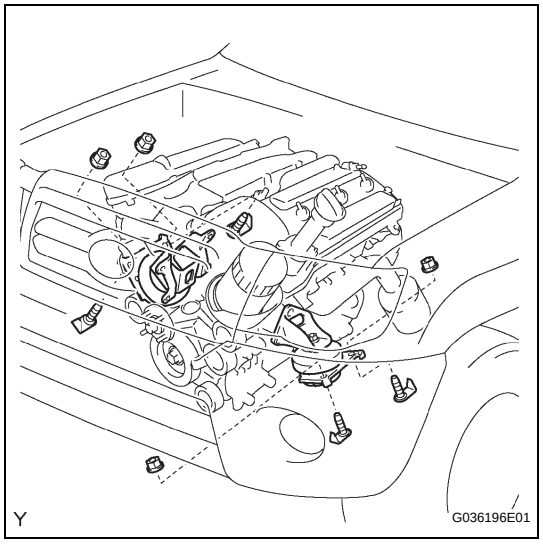

(c) Remove the 4 bolts and 4 nuts, and separate the engine mounting brackets from the frame brackets.
(d) Lift the engine out of the vehicle carefully.
NOTICE:
Make sure that the engine is clear of all wiring and hoses.
(e) Place the engine onto a working bench.

25. REMOVE FLYWHEEL SUB-ASSEMBLY (for Manual Transmission) (See page EM-167)

26. REMOVE DRIVE PLATE & RING GEAR SUB-ASSEMBLY (for Automatic Transmission) (See page EM-167)

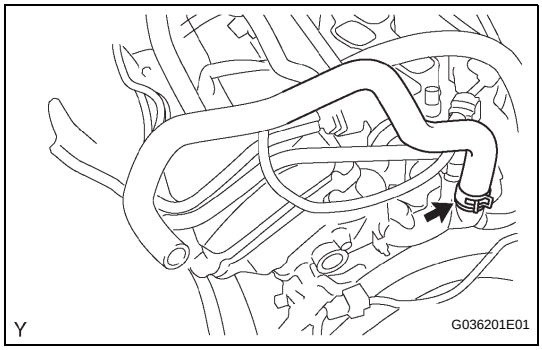

27. REMOVE HEATER WATER INLET HOSE

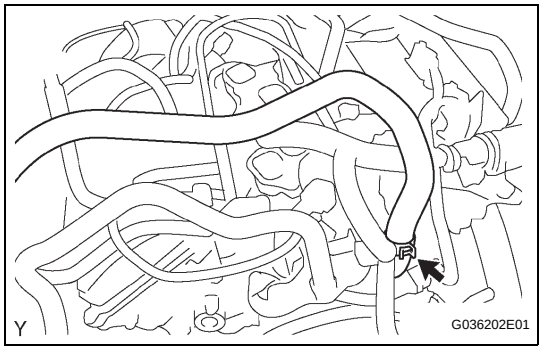

28. REMOVE HEATER WATER OUTLET HOSE

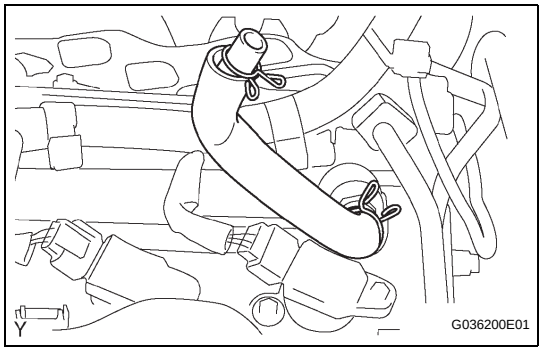

29. REMOVE VENTILATION HOSE

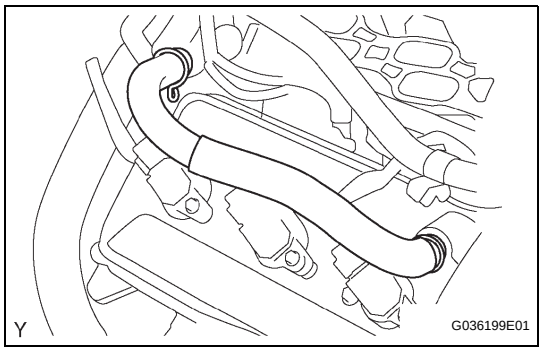

30. REMOVE NO.2 VENTILATION HOSE

31. REMOVE EXHAUST MANIFOLD SUB-ASSEMBLY RH

(a) Remove the 6 nuts, exhaust manifold and gasket.

32. REMOVE EXHAUST MANIFOLD SUB-ASSEMBLY LH

(a) Remove the 6 nuts, exhaust manifold and gasket.

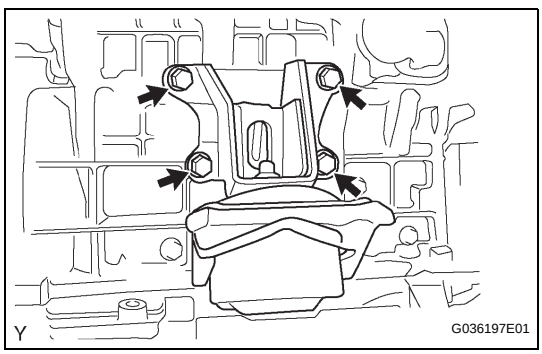

33. REMOVE FRONT NO.1 ENGINE MOUNTING BRACKET RH

(a) Remove the 4 bolts, then remove the engine mounting bracket RH.

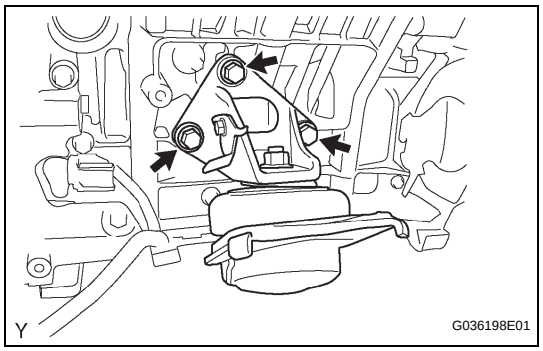

34. **REMOVE FRONT NO.1 ENGINE MOUNTING BRACKET LH**
    (a) Remove the 3 bolts, then remove the engine mounting bracket LH.
35. **REMOVE NO.2 IDLER PULLEY SUB-ASSEMBLY**
    (a) Remove the 2 bolts, then remove the 2 idler pulleys.
36. **REMOVE NO.1 IDLER PULLEY SUB-ASSEMBLY**
    (a) Remove the bolt, then remove the idler pulley.
37. **REMOVE V-RIBBED BELT TENSIONER ASSEMBLY (See page EM-44)**
38. **REMOVE WATER INLET (See page CO-9)**
39. **REMOVE OIL FILTER BRACKET SUB-ASSEMBLY**
    (a) Remove the 3 bolts and 2 nuts, then remove the oil filter bracket and gasket.
40. **REMOVE INTAKE MANIFOLD (See page EM-93)**
41. **REMOVE CAMSHAFT TIMING OIL CONTROL VALVE ASSEMBLY (See page ES-407)**
42. **REMOVE WATER BY-PASS JOINT RR (See page EM-93)**
43. **REMOVE OIL FILTER CAP SUB-ASSEMBLY**
44. **REMOVE OIL FILLER CAP HOUSING**
    (a) Remove the 2 nuts, oil filler cap housing and gasket.
45. **REMOVE IGNITION COIL ASSEMBLY (See page IG-7)**
46. **REMOVE SPARK PLUG**
47. **REMOVE OIL LEVEL GAGE SUB-ASSEMBLY**

EM

INSPECTION

1. **INSPECT INTAKE MANIFOLD FOR WARPAGE**
   (a) Using a precision straight edge and feeler gauge, measure the warpage of the contact surfaces of the cylinder head and intake air surge tank.
   Maximum warpage:
   0.8 mm (0.031 in.) for Intake air surge tank side
   0.2 mm (0.008 in.) for Cylinder head side
   If warpage is greater than the maximum, replace the intake manifold.

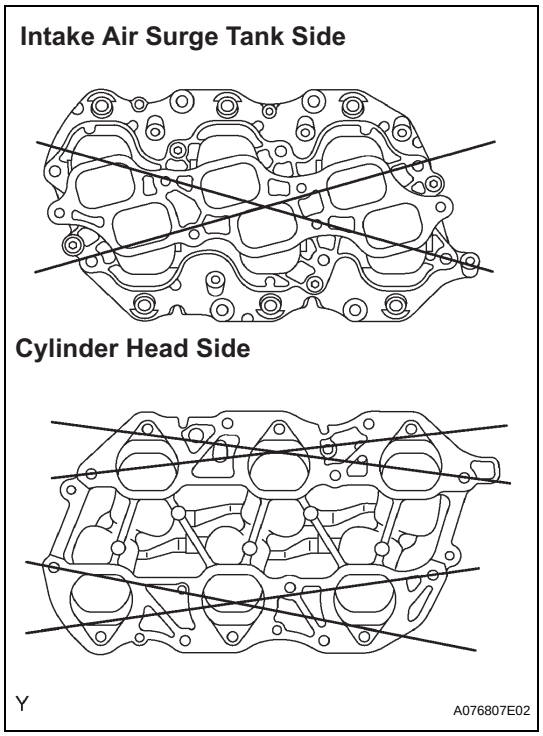

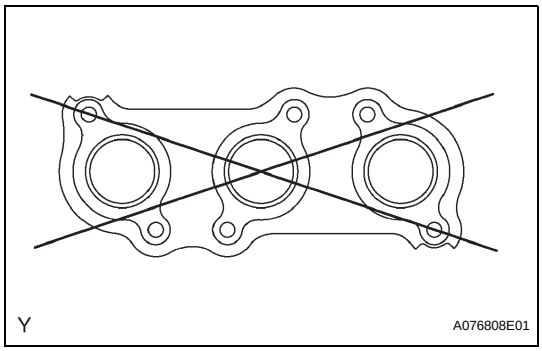

2. INSPECT EXHAUST MANIFOLD FOR WARPAGE

(a) Using a precision straight edge and feeler gauge, measure the warpage of the top surface of the cylinder head.

Maximum warpage:

0.7 mm (0.028 in.)

If warpage is greater than maximum, replace the exhaust manifold.

HINT:

Maximum warpage of each installation surface:
0.3 mm (0.012 in.)

INSTALLATION

1. **INSTALL OIL LEVEL GAGE SUB-ASSEMBLY**
2. **INSTALL SPARK PLUG**
   Torque: 20 N*m (204 kgf*cm, 15 ft.*lbf)
3. **INSTALL IGNITION COIL ASSEMBLY (See page IG-7)**
4. **INSTALL OIL FILLER CAP HOUSING**
   (a) Install a new gasket and oil filler cap housing with the 2 nuts.
   Torque: 9.0 N*m (92 kgf*cm, 80 in.*lbf)
5. **INSTALL OIL FILLER CAP SUB-ASSEMBLY**
6. **INSTALL WATER BY-PASS JOINT RR (See page EM-99)**
7. **INSTALL CAMSHAFT TIMING OIL CONTROL VALVE ASSEMBLY (See page ES-408)**
8. **INSTALL INTAKE MANIFOLD (See page EM-99)**
9. **INSTALL OIL FILTER BRACKET SUB-ASSEMBLY**
   (a) Install a new gasket and oil filler bracket with the 3 bolts and 2 nuts.
10. **INSTALL WATER INLET (See page CO-10)**
11. **INSTALL V-RIBBED BELT TENSIONER ASSEMBLY (See page EM-52)**
12. **INSTALL NO.1 IDLER PULLEY SUB-ASSEMBLY (See page EM-30)**
13. **INSTALL NO.2 IDLER PULLEY SUB-ASSEMBLY (See page EM-30)**
14. **INSTALL FRONT NO.1 ENGINE MOUNTING BRACKET LH**
    (a) Install the engine mounting bracket w/ engine mounting insulator with the 3 bolts.
    Torque: 43 N*m (435 kgf*cm, 31 ft.*lbf)
15. **INSTALL FRONT NO.1 ENGINE MOUNTING BRACKET RH**
    (a) Install the engine mounting bracket w/ engine mounting insulator with the 4 bolts.
    Torque: 43 N*m (435 kgf*cm, 31 ft.*lbf)
16. **INSTALL EXHAUST MANIFOLD SUB-ASSEMBLY LH (See page EM-142)**
17. **INSTALL EXHAUST MANIFOLD SUB-ASSEMBLY RH (See page EM-100)**
18. **INSTALL NO.2 VENTILATION HOSE**
19. **INSTALL VENTILATION HOSE**
20. **INSTALL HEATER WATER INLET HOSE**
21. **INSTALL HEATER WATER OUTLET HOSE**

22. **INSTALL FLYWHEEL SUB-ASSEMBLY (for Manual Transmission) (See page EM-168)**

23. **INSTALL DRIVE PLATE & RING GEAR SUB-ASSEMBLY (for Automatic Transmission) (See page EM-169)**

24. **INSTALL ENGINE ASSEMBLY**
    (a) Attach the engine sling device and hang the engine with the chain block.
    (b) Lower the engine into the engine compartment carefully.
    (c) Attach the engine mounting brackets to the frame brackets.
    (d) Install the engine mounting brackets onto the frame brackets with the 4 bolts and 4 nuts.
    Torque: 38 N*m (387 kgf*cm, 28 ft.*lbf)
    (e) Remove the 4 bolts and 2 engine hangers.

25. **INSTALL NO.2 ENGINE WIRE**
    (a) Install the ground cable to the cylinder block.
    Torque: 13 N*m (133 kgf*cm, 9 ft.*lbf)

26. **INSTALL ENGINE WIRE**
    (a) Connect the 3 connectors to the engine room relay box.
    (b) Install the nut, then install the engine wire into the engine room relay block.
    (c) Connect the front differential connector (4WD only).
    (d) Insert the engine wire into the vehicle room, and install the grommet.
    (e) Connect the 2 connectors to the four wheel ECU (4WD only).
    (f) Connect the 5 connectors to the ECM.
    (g) Install the instrument panel finish panel sub-assembly lower RH.
    (h) Install the glove compartment door.

27. **INSTALL INTAKE AIR SURGE TANK (See page EM-69)**

28. **CONNECT HEATER WATER INLET HOSE**

29. **CONNECT HEATER WATER OUTLET HOSE**

30. **CONNECT NO.2 FUEL PIPE SUB-ASSEMBLY**

31. **CONNECT NO.1 FUEL PIPE SUB-ASSEMBLY (See page FU-17)**

32. **INSTALL COOLER COMPRESSOR ASSEMBLY (See page ES-410)**

33. **INSTALL GENERATOR ASSEMBLY (See page CH-13)**

34. **INSTALL VANE PUMP ASSEMBLY (See page EM-52)**

35. **INSTALL FAN PULLEY**

36. INSTALL CLUTCH DISC ASSEMBLY (for Manual Transmission)

Transmission	See page
RA60	CL-42
RA60F	CL-46

37. INSTALL CLUTCH COVER ASSEMBLY (for Manual Transmission)

Transmission	See page
RA60	CL-42
RA60F	CL-46

38. INSTALL TRANSMISSION ASSEMBLY

HINT:

Refer to the table below when installing transmission.

Transmission	Drive Type	See Page
Manual Transmission	2WD	MT-9
Manual Transmission	4WD	MT-8
Automatic Transmission	2WD	AT-162
Automatic Transmission	4WD	AT-165

39. INSTALL RADIATOR ASSEMBLY (See page CO-19)

40. INSTALL FAN SHROUD (See page CO-20)

41. INSTALL RADIATOR SUPPORT TO FRAME SEAL LH

42. INSTALL HOOD SUB-ASSEMBLY

(See page ED-7)

43. INSTALL BATTERY

44. ADD ENGINE COOLANT (See page CO-3)

45. ADD ENGINE OIL (See page LU-5)

46. PERFORM INITIALIZATION

47. CHECK FOR ENGINE COOLANT LEAKAGE (See page CO-4)

48. CHECK FOR ENGINE OIL LEAKAGE

49. CHECK FOR FUEL LEAKAGE

50. CHECK FOR EXHAUST GAS LEAKAGE

51. INSTALL V-BANK COVER (See page ES-416)

52. INSPECT IGNITION TIMING (See page EM-1)

53. INSPECT ENGINE IDLING SPEED (See page EM-2)

54. INSPECT CO/HC (See page EM-3)

DISASSEMBLY

HINT:
- Thoroughly clean all parts to be assembled.
- Before installing the parts, apply new engine oil to all sliding and rotating surfaces.
- Replace all gaskets, O-rings and oil seals with new parts.

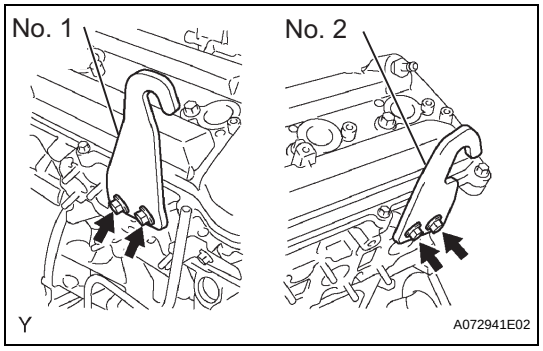

1. REMOVE ENGINE HANGERS
(a) Remove the 2 bolts and engine hanger No. 1.
(b) Remove the 2 bolts and engine hanger No. 2.

2. REMOVE OIL LEVEL GAGE GUIDE
(a) Remove the bolt, then pull out the oil level gauge guide.
(b) Remove the O-ring from the oil level gauge guide.

3. REMOVE CYLINDER BLOCK WATER DRAIN COCK SUB-ASSEMBLY
(a) Remove the 2 water drain cocks.

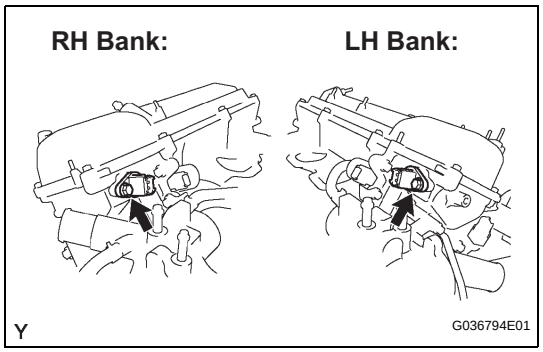

4. REMOVE VVT SENSOR
(a) Remove the 2 bolts, then remove the 2 VVT sensors.

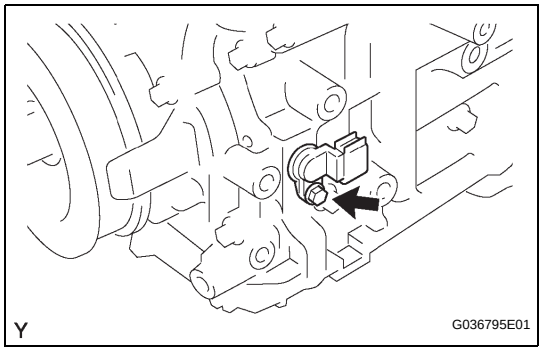

5. REMOVE CRANKSHAFT POSITION SENSOR
(a) Remove the bolt, then remove the crankshaft position sensor.

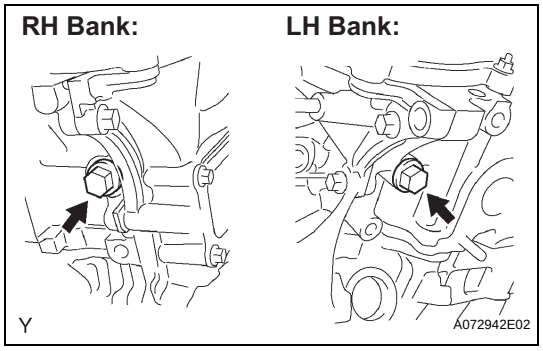

6. REMOVE OIL CONTROL VALVE FILTER
(a) Remove the plug and filter, then remove the gasket from each cylinder head.

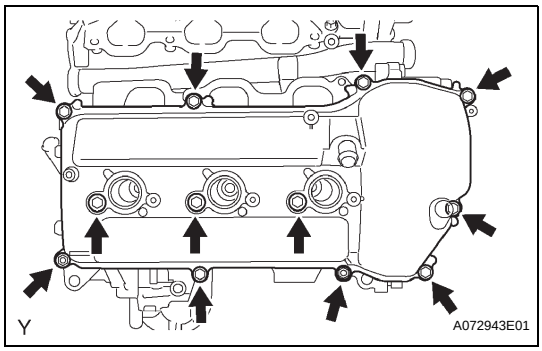

7. REMOVE CYLINDER HEAD COVER SUB-ASSEMBLY

(a) Remove the 10 bolts, 3 seal washers and 2 nuts, then remove the cylinder head cover.

(b) Remove the gasket from the cylinder head cover.

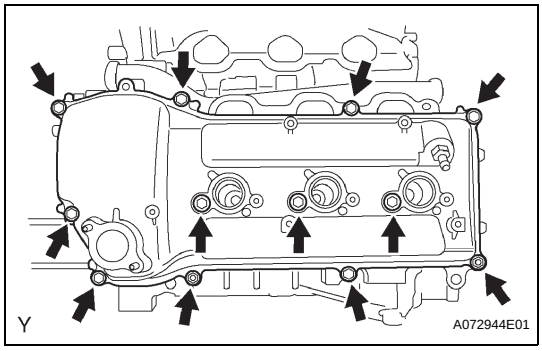

8. REMOVE CYLINDER HEAD COVER SUB-ASSEMBLY LH

(a) Remove the 10 bolts, 3 seal washers and 2 nuts, then remove the cylinder head cover.

(b) Remove the gasket from the cylinder head cover.

(c) Remove the ventilation valve from the cylinder head cover.

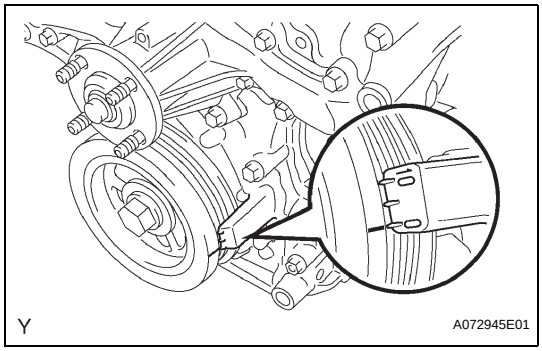

9. REMOVE CRANKSHAFT PULLEY

(a) Turn the crankshaft pulley until its groove and the timing mark "0" of the timing chain cover are aligned.

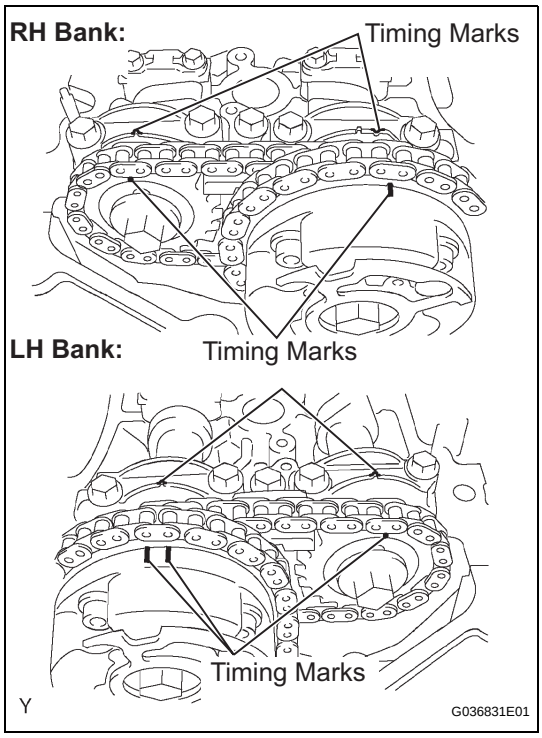

(b) Check that each timing mark of the camshaft timing gears is aligned with each timing mark located on the No. 1 and No. 2 bearing caps as shown in the illustration.
If not, turn the crankshaft 1 complete revolution (360°) and align the timing marks as above.

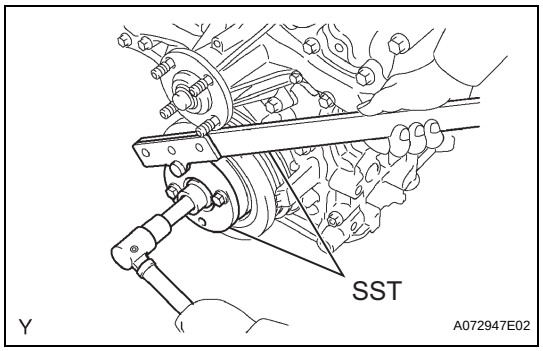

(c) Using SST, fix the pulley and loosen the pulley bolt.
SST 09213-54015 (91651-60855), 09330-00021

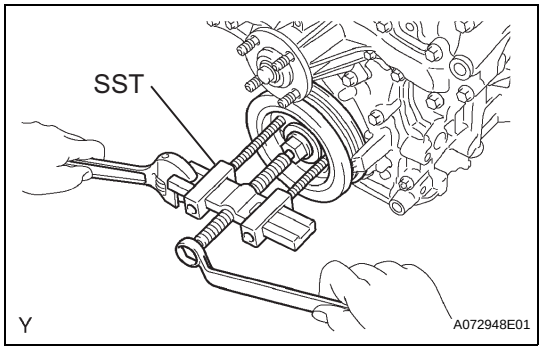

(d) Using the pulley set bolt and SST, remove the crankshaft pulley.
SST 09950-50013 (09951-05010, 09952-05010, 09953-05020, 09954-05030)

10. REMOVE OIL PAN DRAIN PLUG

(a) Remove the drain plug and gasket.

EM

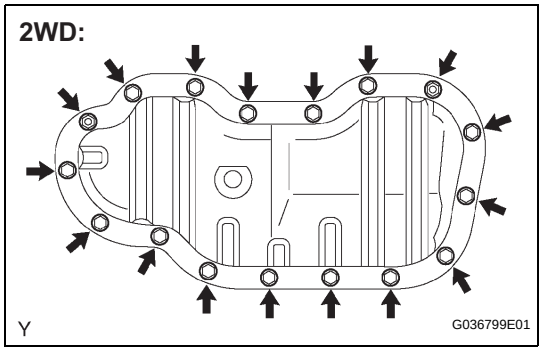

11. REMOVE NO.2 OIL PAN SUB-ASSEMBLY

(a) Remove the 15 bolts and 2 nuts (for 2WD).

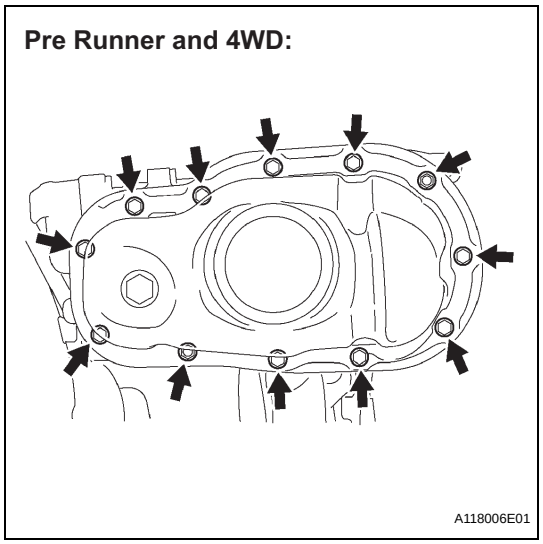

(b) Remove the 10 bolts and 2 nuts (for Pre Runner and 4WD).

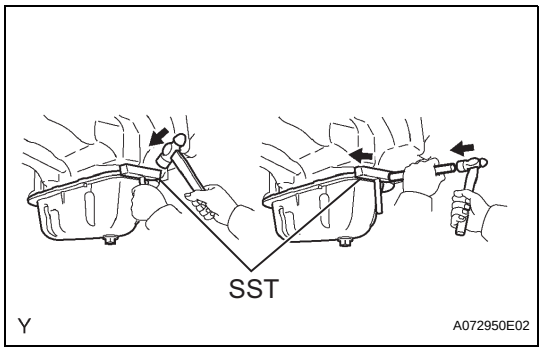

(c) Insert the blade of SST between the oil pan and oil pan No. 2, then cut off applied sealer and remove the oil pan No. 2.
SST 09032-00100
NOTICE:
- **Be careful not to damage the contact surface of the oil pan and oil pan No. 2.**
- **Be careful not to damage the oil pan No. 2 flange.**

12. REMOVE OIL STRAINER SUB-ASSEMBLY

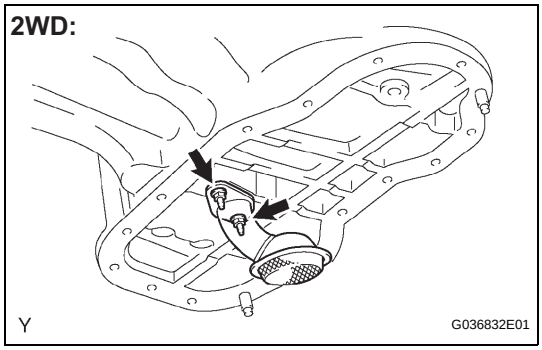

(a) Remove the 2 nuts, then remove the oil strainer and gasket (for 2WD).

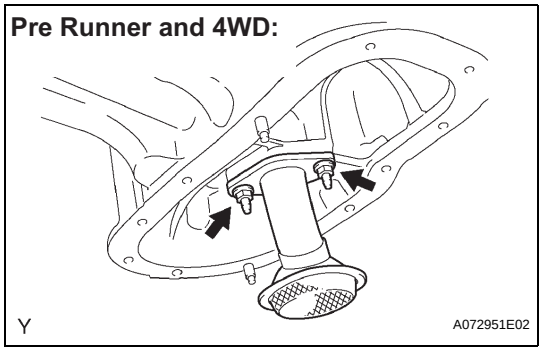

(b) Remove the 2 nuts, then remove the oil strainer and gasket (for Pre Runner and 4WD).

13. REMOVE OIL PAN SUB-ASSEMBLY

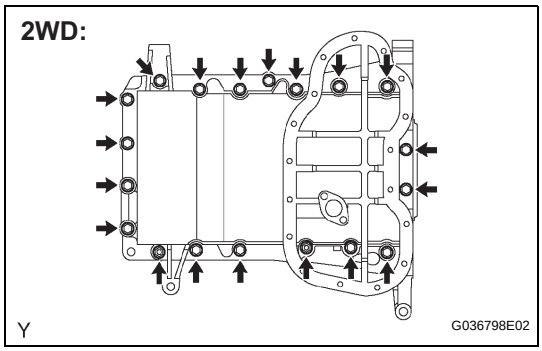

(a) Remove the 17 bolts and 2 nuts (for 2WD).

Pre Runner and 4WD:

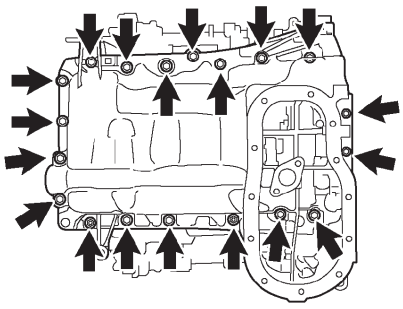

A122289E01

(b) Remove the 17 bolts and 2 nuts (for Pre Runner and 4WD).

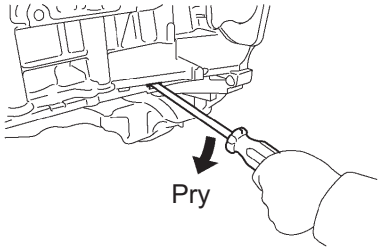

G036806E01

(c) Using a screwdriver, remove the oil pan by prying between the oil pan and cylinder block in the sequence shown.
NOTICE:
Be careful not to damage the contact surfaces of the cylinder block and oil pan.

(d) Remove the O-ring from the oil pump.

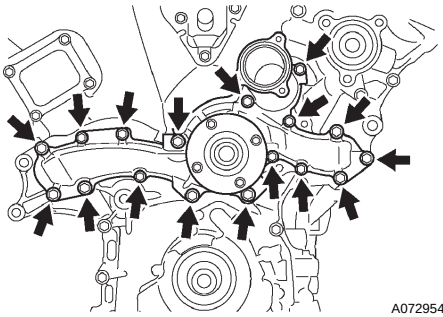

A072954E01

14. REMOVE WATER PUMP ASSEMBLY

(a) Remove the 17 bolts, then remove the water pump and gasket.

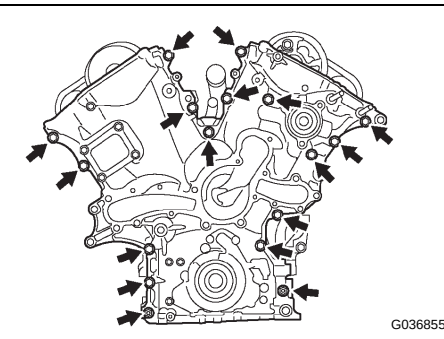

G036855E03

15. REMOVE TIMING CHAIN OR BELT COVER SUB-ASSEMBLY

(a) Remove the 15 bolts and 2 nuts.

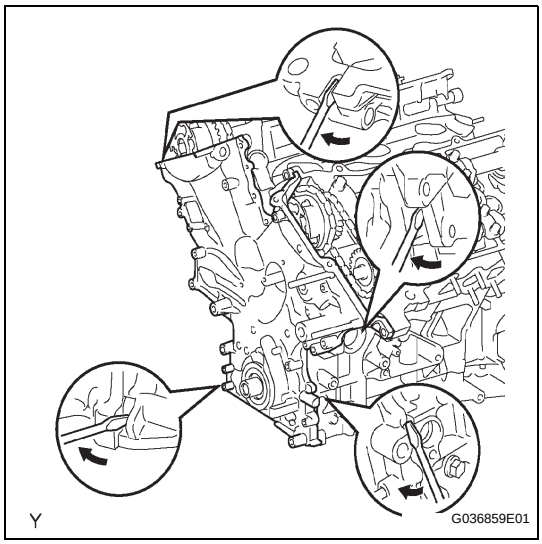

(b) Remove the timing chain cover by prying between the timing chain cover, cylinder head and cylinder block with a screwdriver.
NOTICE:
Be careful not to damage the contact surfaces of the timing chain cover, cylinder block and cylinder head.
(c) Remove the O-ring from the LH cylinder head.

16. REMOVE NO.1 CHAIN TENSIONER ASSEMBLY
NOTICE:
- **Never rotate the crankshaft with the chain tensioner removed.**
- **When rotating the camshaft with the timing chain removed, rotate the crankshaft counterclockwise 40° from the TDC first.**

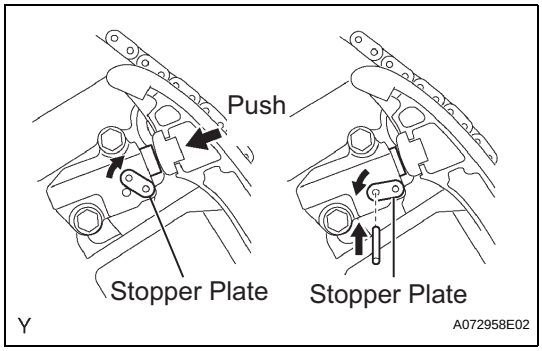

(a) While turning the stopper plate of the tensioner upward, push in the plunger of the chain tensioner as shown in the illustration.
(b) While turning the stopper plate of the tensioner downward, insert a bar of ϕ 3.5 mm (0.138 in.) into the holes in the stopper plate and tensioner to fix the stopper plate.
(c) Remove the 2 bolts, then remove the chain tensioner.

17. REMOVE CHAIN TENSIONER SLIPPER

18. REMOVE IDLE SPROCKET ASSEMBLY
(a) Using a 10 mm hexagon wrench, remove the idle gear shaft No. 2, idle gear No. 1 and idle gear shaft No. 1.

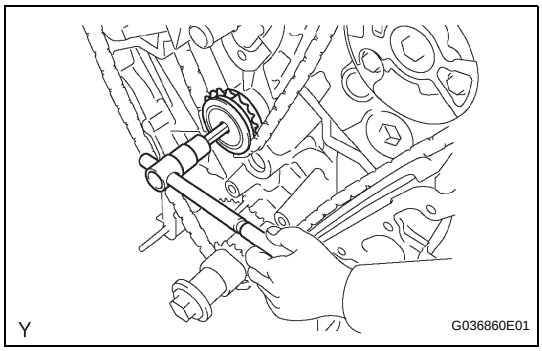

19. REMOVE NO.2 CHAIN VIBRATION DAMPER
(a) Remove the 2 chain vibration dampers No. 2.

20. REMOVE CHAIN SUB-ASSEMBLY

21. REMOVE CRANKSHAFT TIMING GEAR OR SPROCKET

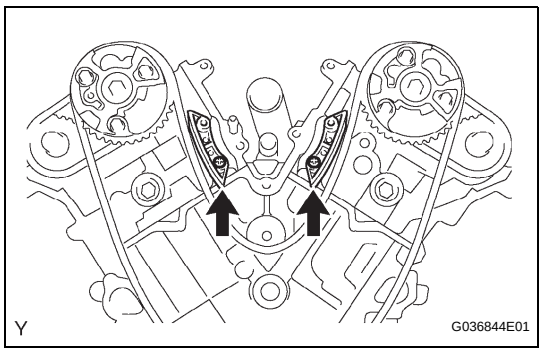

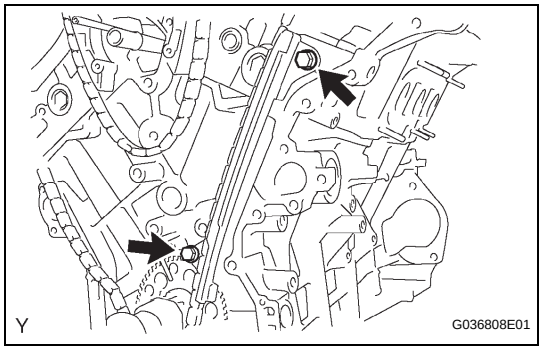

22. REMOVE NO.1 CHAIN VIBRATION DAMPER

(a) Remove the 2 bolts, then remove the chain vibration damper No. 1.

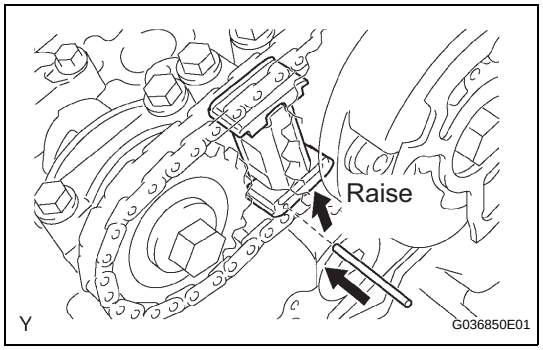

23. REMOVE CAMSHAFT TIMING GEARS AND NO.2 CHAIN (for Bank 1)

(a) While raising the chain tensioner No. 2 upward, insert a pin of ϕ 1.0 mm (0.039 in.) into the hole to fix it.

EM

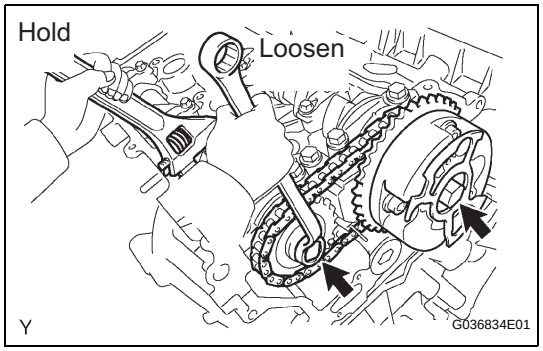

(b) Hold the hexagonal portion of the camshaft with a wrench, and remove the 2 bolts, camshaft timing gear, camshaft timing gear assembly and timing chain No. 2.

NOTICE:

- **Be careful not to damage the cylinder head and valve lifter with the wrench.**
- **Do not disassemble the camshaft timing gear assembly.**

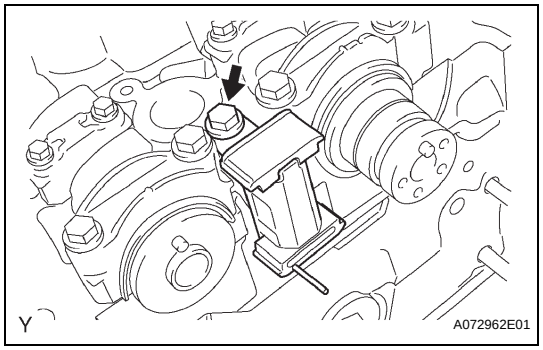

24. REMOVE NO.2 CHAIN TENSIONER ASSEMBLY

(a) Remove the bolt, then remove the chain tensioner No. 2.

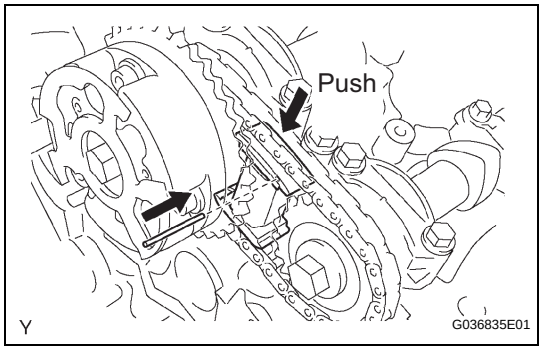

25. REMOVE CAMSHAFT TIMING GEARS AND NO.2 CHAIN (for Bank 2)

(a) While pushing down the chain tensioner No. 3, insert a pin of ϕ 1.0 mm (0.039 in.) into the hole to fix it.

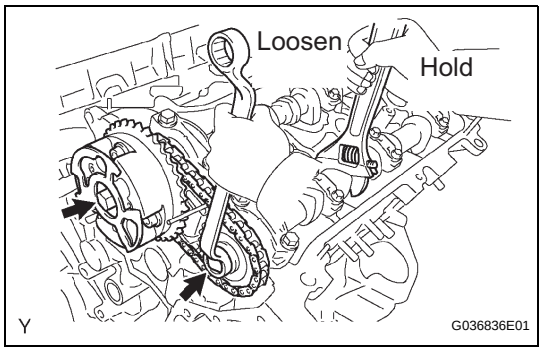

(b) Hold the hexagonal portion of the camshaft with a wrench, and remove the 2 bolts, camshaft timing gear, camshaft timing gear assembly and timing chain No. 2.

NOTICE:

- **Be careful not to damage the cylinder head and valve lifter with the wrench.**
- **Do not disassemble the camshaft timing gear assembly.**

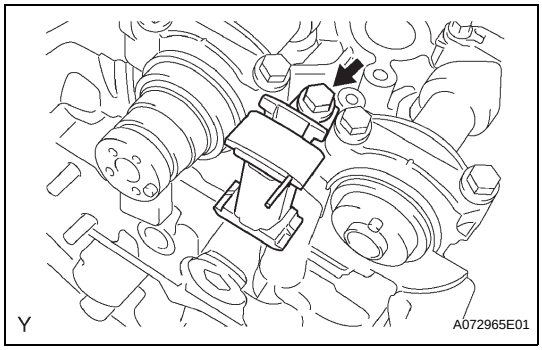

26. REMOVE NO.3 CHAIN TENSIONER ASSEMBLY

(a) Remove the bolt, then remove the chain tensioner No. 3.

27. REMOVE CAMSHAFTS

NOTICE:

Keep the camshaft level while it is being removed. The camshaft thrust clearance is very small and failing to keep it level could crack or damage the cylinder head journal surface, which receives the thrust. This could subsequently lead the camshaft to seize or break. Perform the following steps to avoid such problems.

(a) Remove the camshafts of the RH bank.

(1) Rotate the camshafts counterclockwise using a wrench so that cam lobes of No. 1 cylinder face in the directions as shown in the illustration.

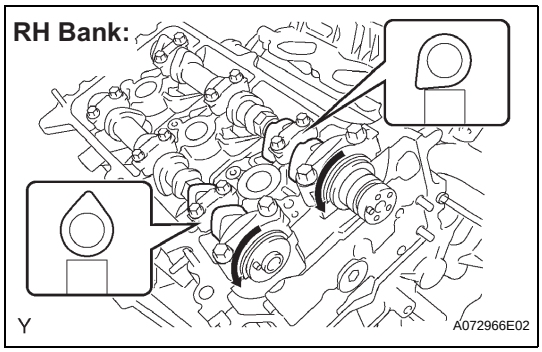

(2) Using several steps, uniformly loosen and remove the 16 bearing cap bolts in the sequence shown in the illustration.

(3) Remove the 8 bearing caps, then remove the 2 camshafts.

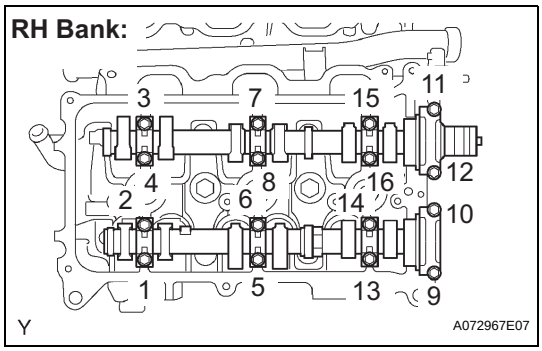

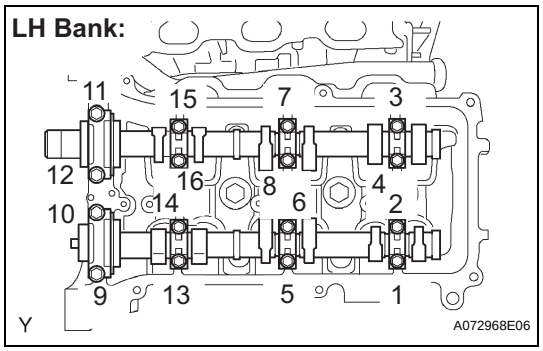

(b) Remove the camshafts of the LH bank.
(1) Using several steps, uniformly loosen and remove the 16 bearing cap bolts in the sequence shown in the illustration.
(2) Remove the 8 bearing caps, then remove the 2 camshafts.

28. REMOVE NO.1 CAMSHAFT BEARING

29. REMOVE NO.2 CAMSHAFT BEARING

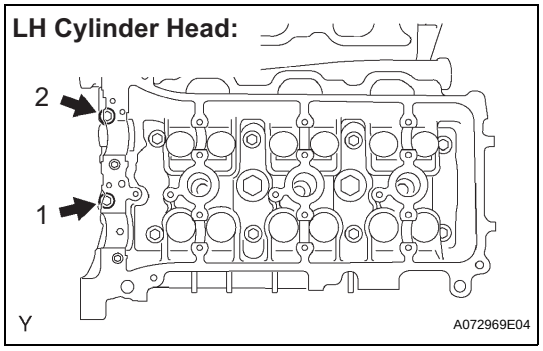

30. REMOVE CYLINDER HEADS

(a) Using several steps, remove the 2 cylinder head bolts on the LH cylinder head in the sequence shown in the illustration.

EM

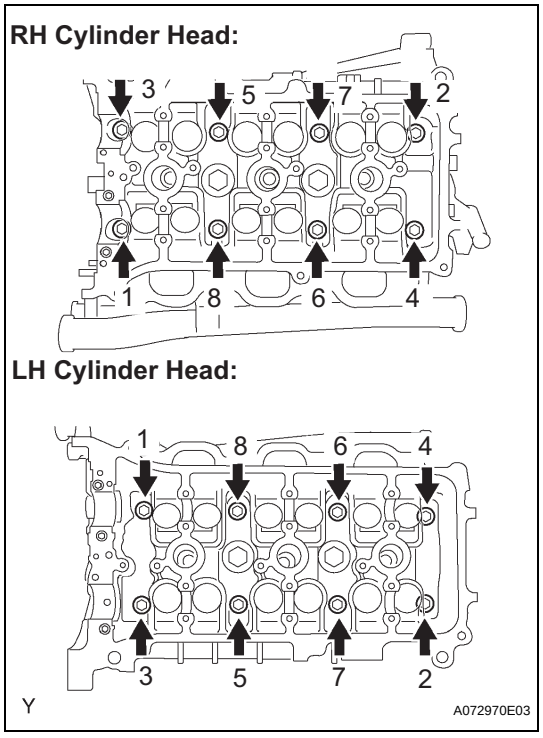

(b) Using several steps, loosen the 8 cylinder head bolts on each cylinder head with a 10 mm bi-hexagon wrench in the sequence shown in the illustration. Remove the 16 cylinder head bolts, then remove the plate washers.
NOTICE:
- **Be careful not to drop the plate washers into the cylinder head.**
- **Cylinder head warpage or cracking could result from removing the bolts in the wrong order.**

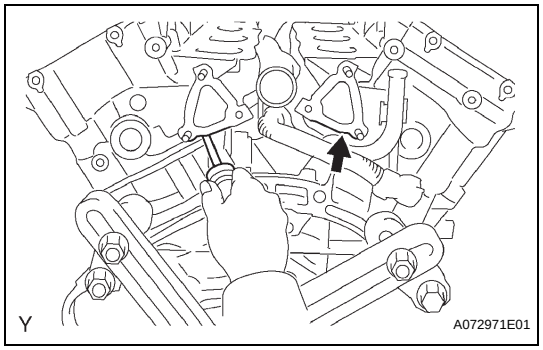

(c) Lift the cylinder head from the dowels on the cylinder block, and place the 2 cylinder heads on wooden blocks on a bench.
NOTICE:
Be careful not to damage the contact surfaces of the cylinder head and cylinder block.
HINT:
If the cylinder head is difficult to remove, pry between the cylinder head and cylinder block with a screwdriver.

(d) Remove the RH and LH cylinder head gaskets.

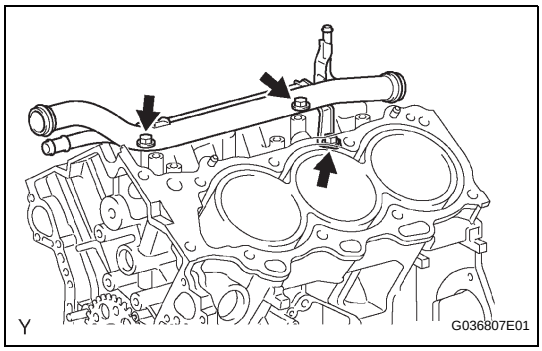

31. REMOVE NO.1 WATER OUTLET PIPE

(a) Separate the knock sensor wire.
(b) Remove the 3 bolts, then remove the water outlet pipe.

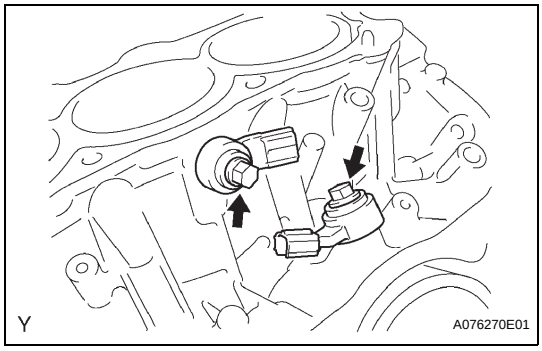

32. REMOVE KNOCK CONTROL SENSOR

(a) Disconnect the knock sensor connectors.
(b) Remove the 2 bolts, then remove the 2 knock sensors.

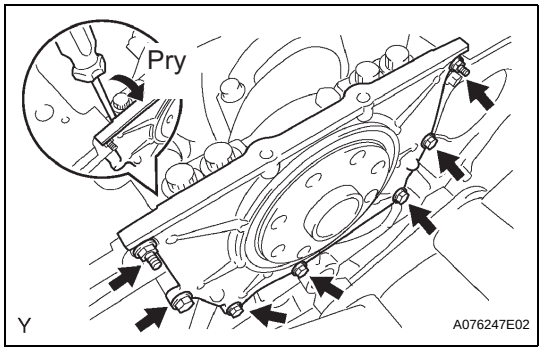

33. REMOVE REAR ENGINE OIL SEAL RETAINER

(a) Remove the 5 bolts and 2 nuts.
(b) Using a screwdriver, remove the oil seal retainer by prying between the oil seal retainer and crankshaft bearing cap.

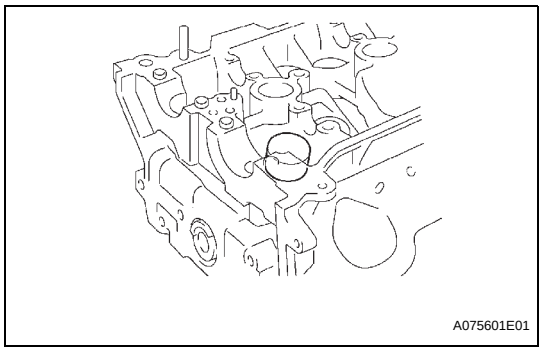

34. REMOVE VALVE LIFTER

HINT:
Arrange the valve lifter in the correct order.

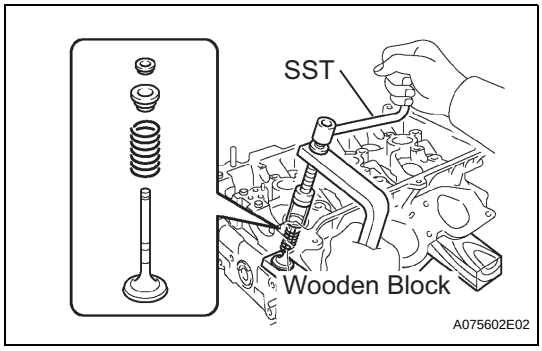

35. REMOVE VALVE

HINT:
Arrange the valves, inner compression springs, valve spring retainers and valve spring retainer rocks in the correct order.

(a) Place the cylinder head on a wooden block.
(b) Using SST, compress the inner compression spring and remove the 2 valve spring retainer rocks.
SST 09202-70020 (09202-00010)
(c) Remove the valve, inner compression spring and valve spring retainer.

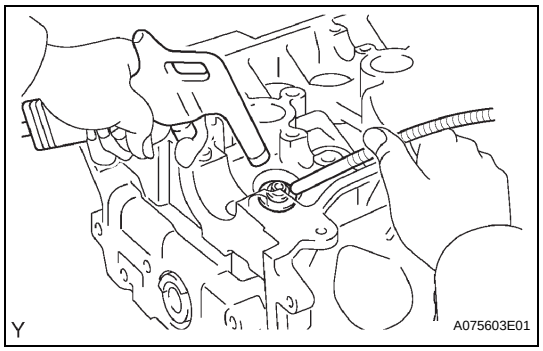

36. REMOVE VALVE SPRING SEAT

(a) Using compressed air and a magnetic finger, remove the valve spring seat by blowing air.

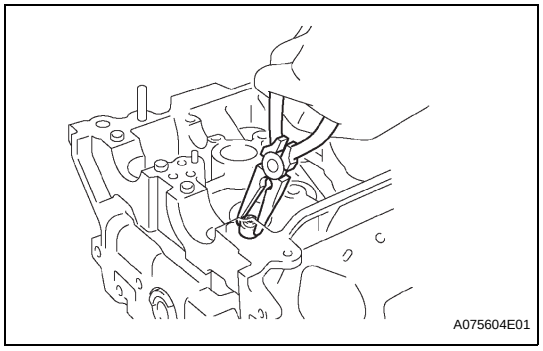

37. REMOVE VALVE STEM OIL O SEAL OR RING

(a) Using needle-nose pliers, remove the valve stem oil seal.

EM

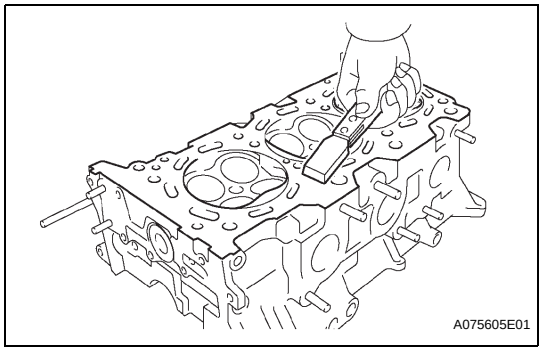

38. CLEAN CYLINDER HEAD SUB-ASSEMBLY

(a) Using a gasket scraper, remove all the gasket material from the cylinder block contact surface.
NOTICE:
Be careful not to scratch the cylinder block contact surface.

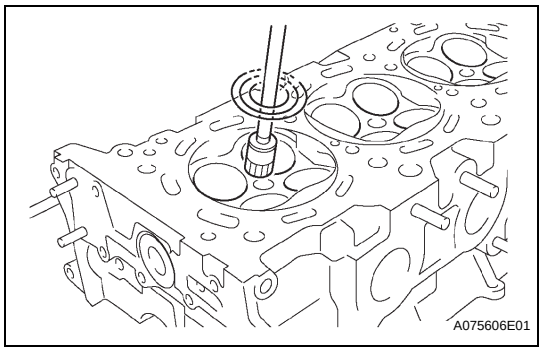

(b) Using a wire brush, remove all the carbon from the combustion chambers.
NOTICE:
Be careful not to scratch the combustion chambers.

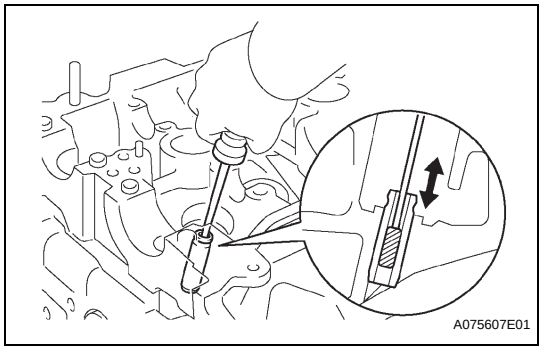

(c) Using a valve guide bushing brush and solvent, clean all the valve guide bushes.

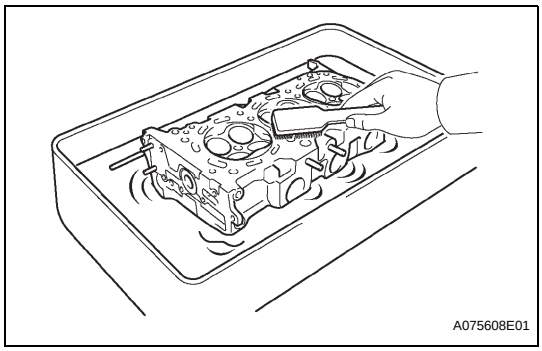

(d) Using a soft brush and solvent, thoroughly clean the cylinder head.

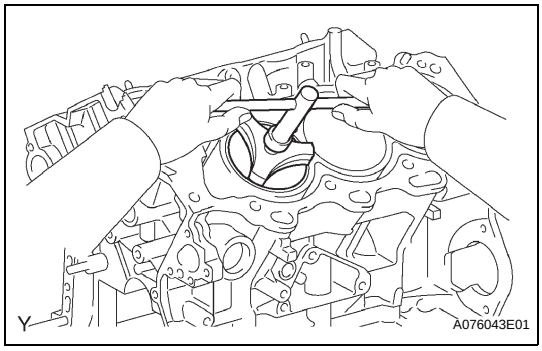

39. REMOVE WITH PISTON SUB-ASSEMBLY WITH CONNECTING ROD

(a) Using a ridge reamer, remove all the carbon from the top of the cylinder.

(b) Push in the piston, connecting rod assembly and upper bearing through the top of the cylinder block.
HINT:
- Keep the bearings, connecting rod and cap together.
- Arrange the piston and connecting rod in the correct order.

40. REMOVE CONNECTING ROD BEARING

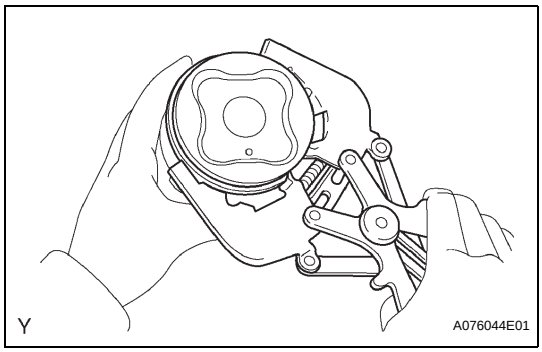

41. REMOVE PISTON RING SET

(a) Using a piston ring expander, remove the 2 compression rings.

(b) Remove the 2 side rails and oil ring by hand.

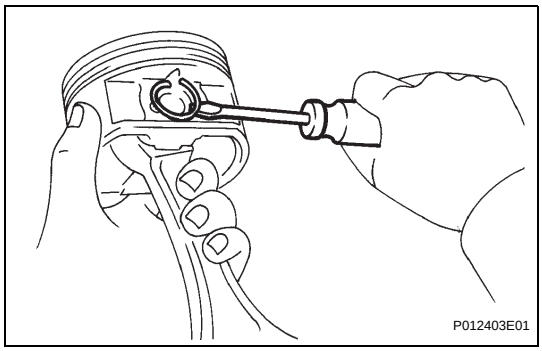

42. REMOVE HOLE SNAP RING

(a) Using a small screwdriver, pry out the 2 snap rings.

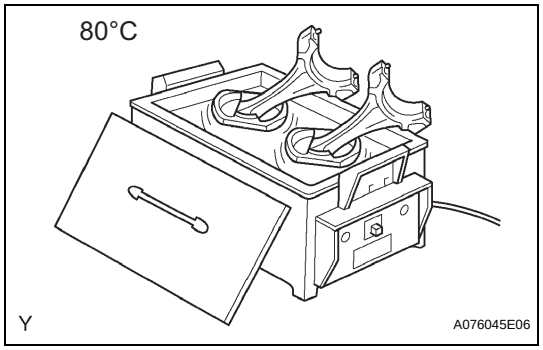

43. REMOVE WITH PISTON SUB-ASSEMBLY

(a) Gradually heat the piston to approximately 80°C (176°F).

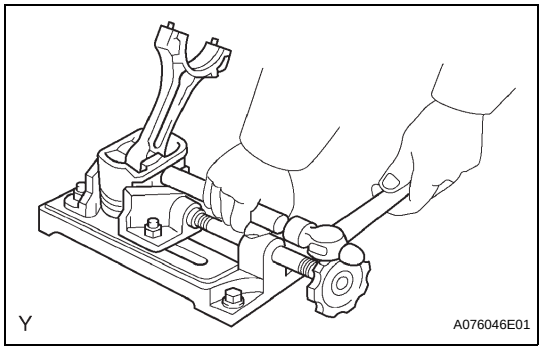

(b) Using a plastic-faced hammer and brass bar, lightly tap out the piston pin and remove the connecting rod.

HINT:

- The piston and pin are a matched set.
- Arrange the pistons, pins, rings, connecting rods and bearings in the correct order.

EM

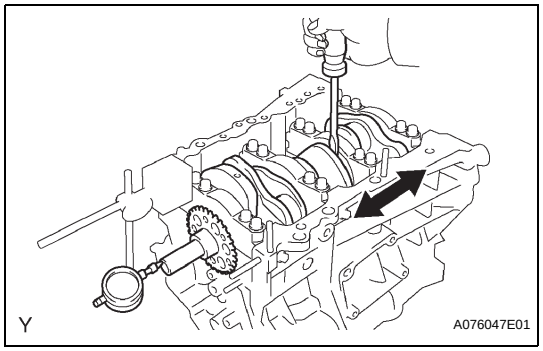

44. INSPECT CRANKSHAFT THRUST CLEARANCE

(a) Using a dial indicator, measure the thrust clearance while prying the crankshaft back and forth with a screwdriver.

Standard thrust clearance:
0.04 to 0.24 mm (0.0016 to 0.0094 in.)
Maximum thrust clearance:
0.30 mm (0.0118 in.)

If the thrust clearance is greater than the maximum, replace the pair of the thrust washers or crankshaft.

HINT:

Thrust washer thickness:
1.93 to 1.98 mm (0.0760 to 0.0780 in.)

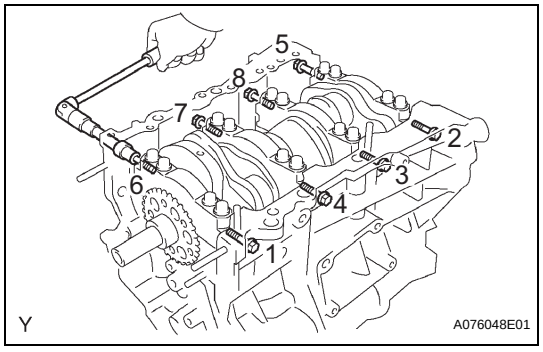

45. REMOVE CRANKSHAFT

(a) Using several steps, uniformly loosen and remove the 8 main bearing cap bolts and seal washers in the sequence shown in the illustration.

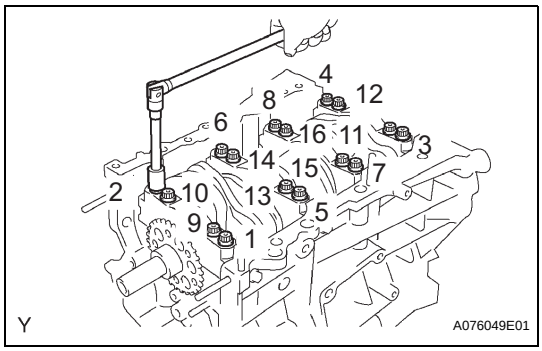

(b) Using several steps, uniformly loosen and remove the 16 main bearing cap bolts in the sequence shown in the illustration.

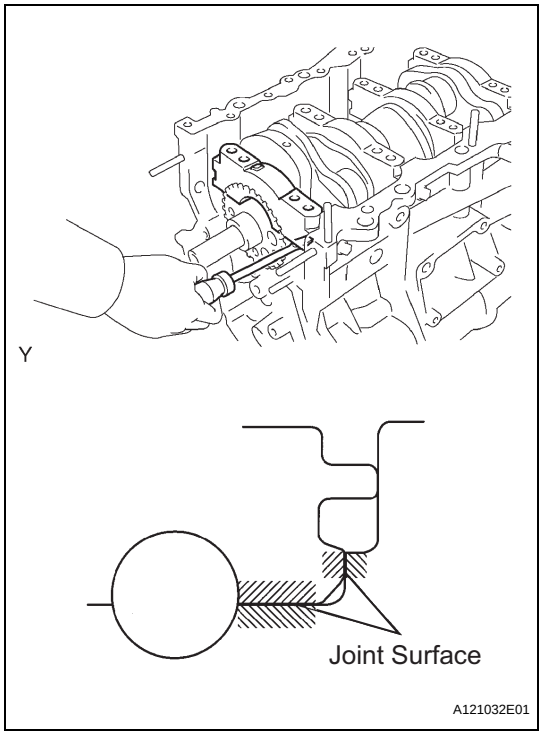

(c) Using a screwdriver, pry out the main bearing caps. Remove the 4 main bearing caps and lower bearings.

NOTICE:

- **Pull up the main bearing cap by turning it to the right and left little by little.**
- **Be careful not to damage the joint surfaces of the cylinder block and the main bearing cap.**

46. REMOVE CRANKSHAFT THRUST WASHER SET

47. REMOVE CRANKSHAFT BEARING

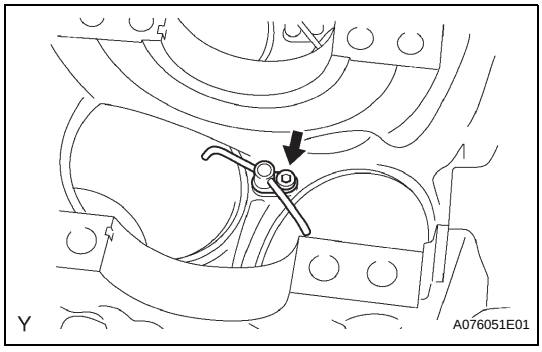

48. REMOVE NO.1 SUB-ASSEMBLY OIL NOZZLE

(a) Using a 5 mm socket hexagon wrench, remove the 3 oil nozzles.

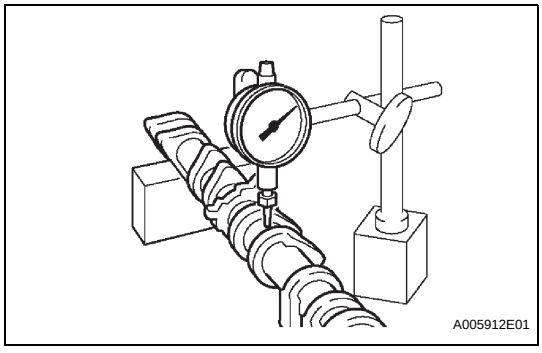

INSPECTION

1. INSPECT CAMSHAFTS

(a) Inspect the camshaft for runout.

(1) Place the camshaft on V-blocks.

(2) Using a dial indicator, measure the circle runout at the center journal.

Maximum runout:

0.06 mm (0.0024 in.)

If the circle runout is greater than the maximum, replace the camshaft.

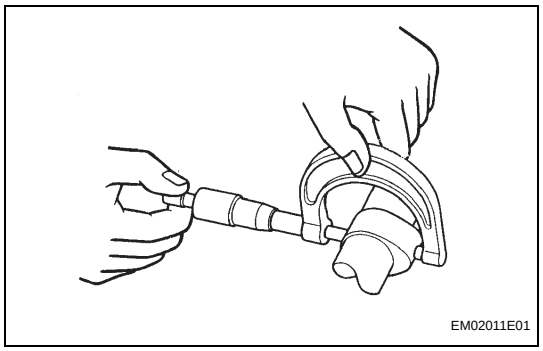

(b) Inspect the cam lobes.
(1) Using a micrometer, measure the cam lobe height.
Standard cam lobe height:
Intake 44.168 to 44.268 mm (1.7389 to 1.7428 in.)
Exhaust 44.580 to 44.680 mm (1.7551 to 1.7591 in.)
Minimum cam lobe height:
Intake 44.018 mm (1.7330 in.)
Exhaust 44.430 mm (1.7492 in.)
If the cam lobe height is less than the minimum, replace the camshaft.

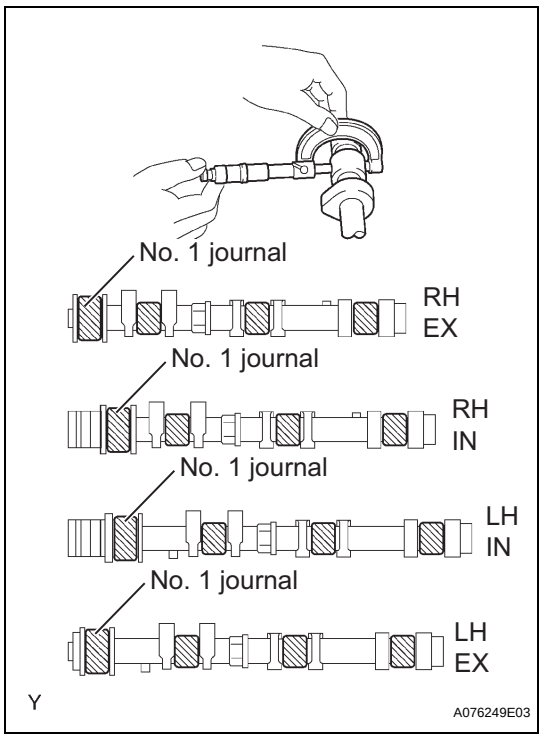

(c) Inspect the camshaft journals.
(1) Using a micrometer, measure the journal diameter.
No. 1 journal diameter:
35.971 to 35.985 mm (1.4162 to 1.4167 in.)
Other journal diameter:
22.959 to 22.975 mm (0.9039 to 0.9045 in.)
If the journal diameter is not as specified, check the oil clearance.

EM

2. INSPECT CAMSHAFT TIMING GEAR ASSEMBLY

(a) Fix the intake camshaft in a vise.
NOTICE:
Be careful not to damage the camshaft.

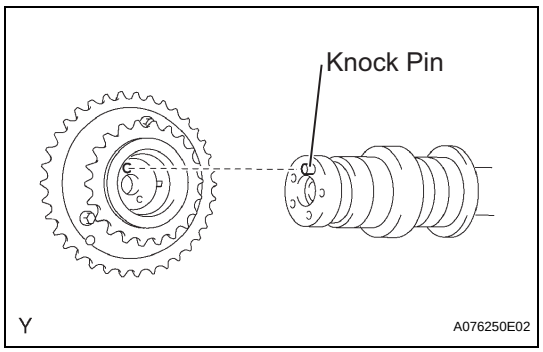

(b) Align the knock pin hole in the camshaft timing gear assembly with the knock pin of the camshaft, and install the camshaft timing gear assembly with the bolt.
Torque: 100 N*m (1,020 kgf*cm, 74 ft.*lbf)

(c) Confirm that the camshaft timing gear assembly is locked.

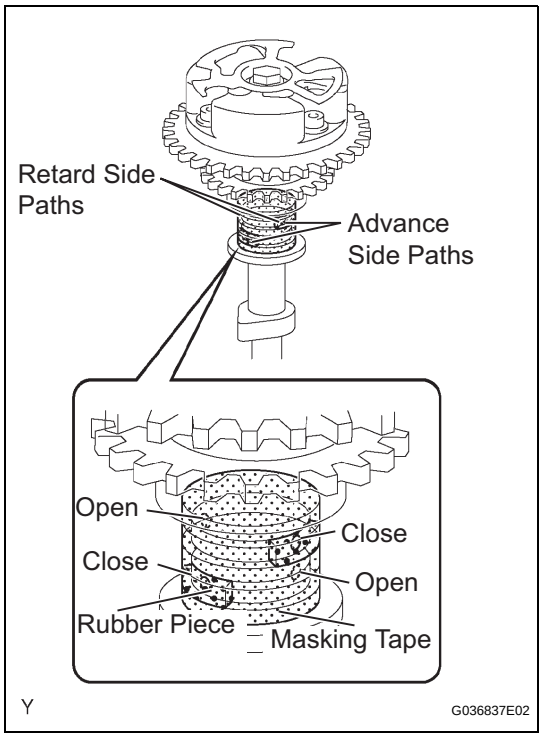

(d) Release that lock pin.
(1) Cover 4 oil paths of cam journal with masking tape as shown in the illustration.
HINT:
One of the 2 grooves on the cam journal is for the retard side path (upper) and the other is for the advance side path (lower). Each groove has 2 oil paths. Plug one of the oil paths for each groove with a piece of rubber before wrapping the cam journal with tape.
(2) Puncture the tape covering the advance oil path and retard oil path on the opposite side of the groove as shown in the illustration.

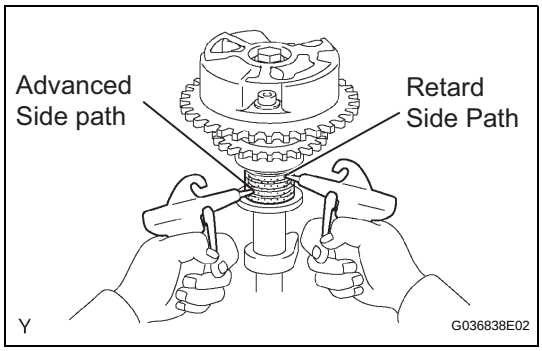

(3) Apply air pressure into two broken paths (the advance side path and the retard side path) of about 200 kPa (2.0 kgf/cm^2).
NOTICE:
Cover the paths with a shop rag to avoid oil splashes.

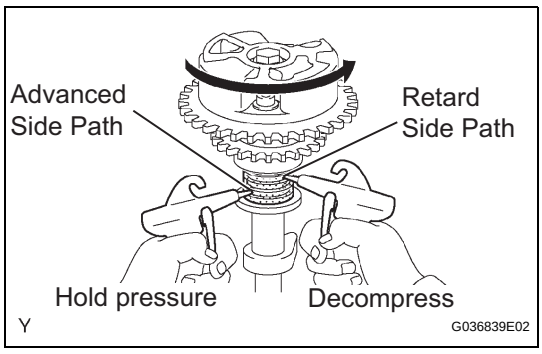

(4) Confirm that the camshaft timing gear assembly rotates in the timing advance direction when reducing the air pressure on the timing retard path.
HINT:
When the lock pin is released, the camshaft timing gear rotates in the advance direction.
(5) When the camshaft timing gear comes to the most advanced position, release the air pressure on the timing retard side path, and release that of the timing advance side path.
NOTICE:
Camshaft timing assembly gear occasionally shifts to the retard side abruptly if the air compression on the advanced side path is released first. This often causes the breakage of the lock pin.

(e) Check the smooth revolution.
  (1) Rotate the camshaft timing gear several times within the movable range except for the most retarded position and check it rotates smoothly.
  Standard:
  Move smoothly in the range about 31°
  NOTICE:
  Be sure to perform this check by hand, instead of using air pressure.

(f) Check that the lock is in the most retarded position.
  (1) Confirm that the camshaft timing gear assembly is locked in the most retarded position.

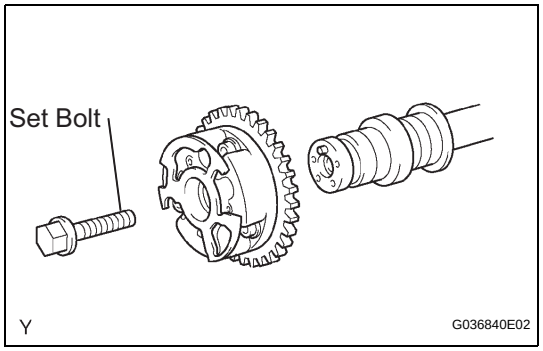

(g) Remove the set bolt, then remove the camshaft timing gear assembly.
  NOTICE:
  Be sure not to remove the other 3 bolts.

EM

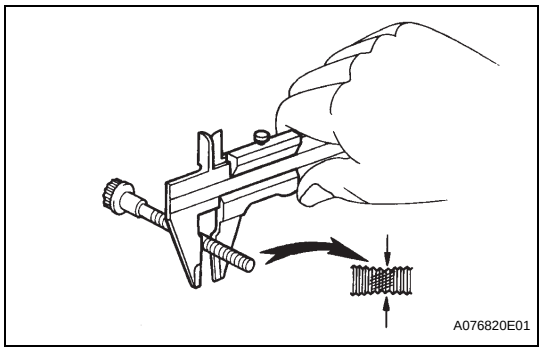

3. INSPECT CYLINDER HEAD SET BOLT

(a) Using vernier calipers, measure the outer diameter of the bolt thread.
  Standard outer diameter:
  10.85 to 11.00 mm (0.4272 to 0.4331 in.)
  Minimum outer diameter:
  10.7 mm (0.421 in.)
  If the cylinder head set bolt is less than the minimum, replace the bolt.

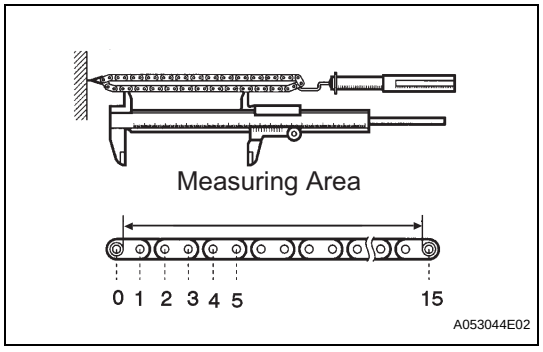

4. INSPECT CHAIN SUB-ASSEMBLY

(a) Using a spring scale, apply 147 N (15.0 kgf, 33.1 lbf) to the chain and measure the length.
  Maximum chain length:
  146.8 mm (5.780 in.)
  NOTICE:
  Measure the length at least 3 places and calculate the average length.
  If the chain length is greater than the maximum, replace the chain.

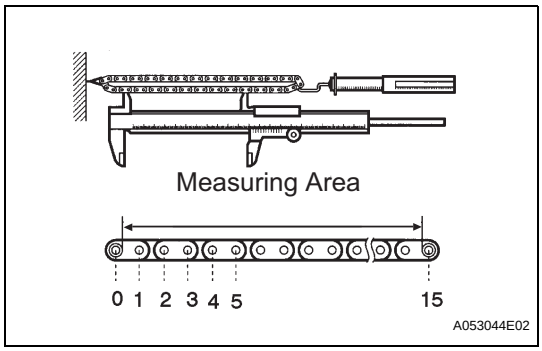

5. INSPECT NO.2 CHAIN SUB-ASSEMBLY

(a) Using a spring scale, apply 147 N (15.0 kgf, 33.1 lbf) to the chain and measure the length.

Maximum chain length:
146.8 mm (5.780 in.)
NOTICE:
Measure the length at least 3 places and calculate the average length.
If the chain length is greater than the maximum, replace the chain.

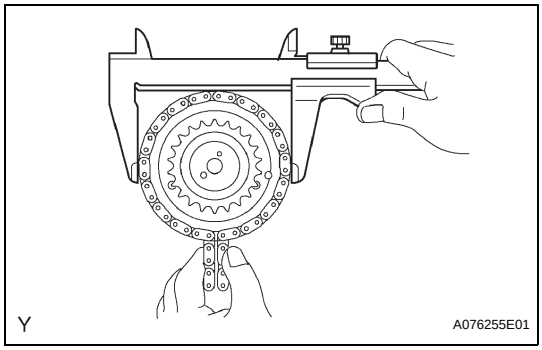

6. INSPECT CAMSHAFT TIMING GEAR ASSEMBLY

(a) Wrap the No. 1 chain around the larger gear of timing gear assembly.

(b) Using vernier caliper, measure the timing gear with the chain wrapped.

Minimum gear diameter (with chain):
115.5 mm (4.547 in.)
NOTICE:
Vernier caliper must be in contact with the chain rollers when measuring.
If the gear diameter is less than the minimum, replace the No. 1 chain and the camshaft timing gear assembly.

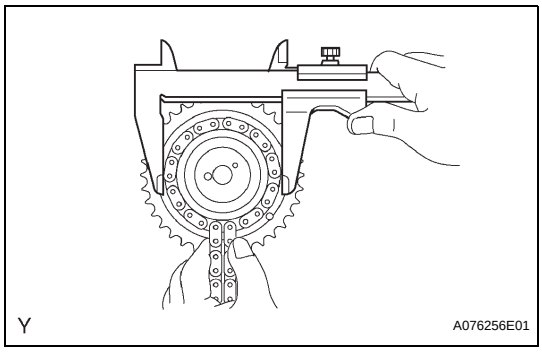

(c) Wrap the No. 2 chain around the smaller gear of timing gear assembly.

(d) Using vernier calipers, measure the timing gear with the chain wrapped.

Minimum gear diameter (with chain):
73.1 mm (2.878 in.)
NOTICE:
The vernier calipers must be in contact the chain rollers when measuring.
If the gear diameter is less than the minimum, replace the No. 2 chain and the camshaft timing gear assembly.

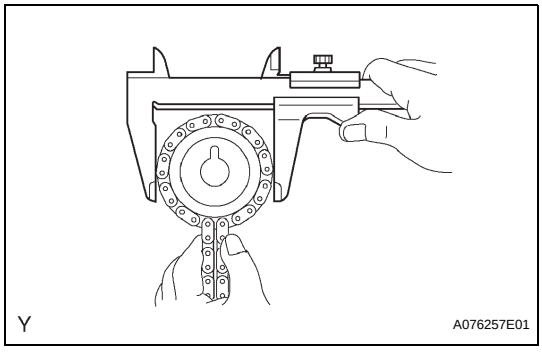

7. INSPECT CAMSHAFT TIMING GEAR OR SPROCKET

(a) Wrap the No. 2 chain around the timing gear.

(b) Using vernier calipers, measure the camshaft timing gear diameter with the chain wrapped.

Minimum gear diameter (with chain):
73.1 mm (2.878 in.)
NOTICE:
The vernier calipers must be in contact the chain rollers when measuring.
If the gear diameter is less than the minimum, replace the No. 2 chain and camshaft timing gear.

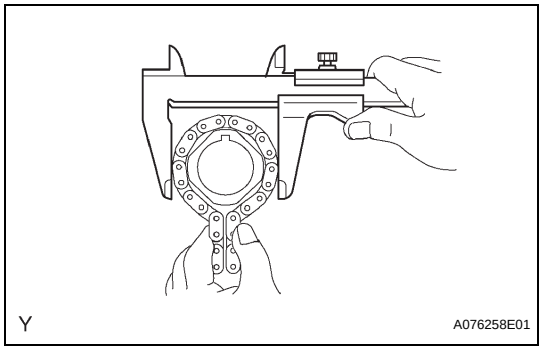

8. INSPECT CRANKSHAFT TIMING GEAR OR SPROCKET

(a) Wrap the No. 1 chain around the timing gear.

(b) Using vernier calipers, measure the timing gear diameter with the chain wrapped.

Minimum gear diameter (with chain):
61.0 mm (2.402 in.)

NOTICE:
The vernier calipers must be in contact with the chain rollers when measuring.

If the gear diameter is less than the minimum, replace the No. 1 chain and the crankshaft timing gear.

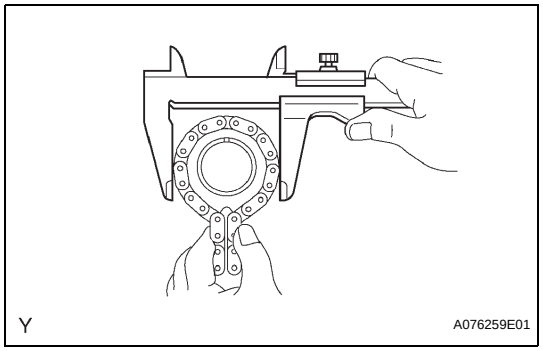

9. INSPECT IDLE SPROCKET ASSEMBLY

(a) Wrap the No. 1 chain around the idle sprocket.

(b) Using vernier caliper, measure the idle sprocket with the chain wrapped.

Minimum gear diameter (with chain):
61.0 mm (2.402 in.)

NOTICE:
The vernier caliper must be in contact with the chain rollers when measuring.

If the gear diameter is less than the minimum, replace the No. 1 chain and idle sprocket.

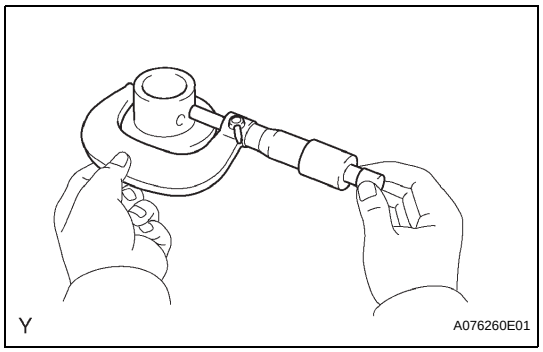

10. INSPECT NO.1 IDLE GEAR SHAFT

(a) Using a micrometer, measure the idle gear shaft diameter.

Idle gear shaft diameter:
22.987 to 23.000 mm (0.9050 to 0.9055 in.)

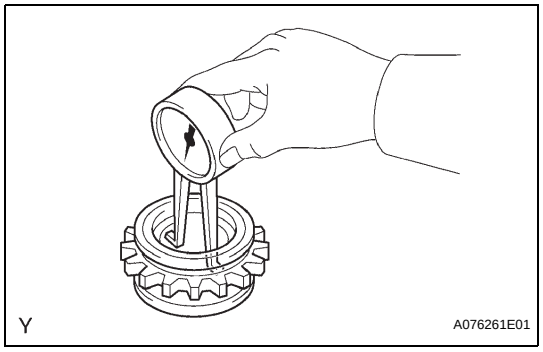

(b) Using a caliper gauge, measure the internal diameter of the idle gear.

Idle gear internal diameter:
23.02 to 23.03 mm (0.9063 to 0.9067 in.)

(c) Subtract the idle gear shaft diameter measurement from the idle gear internal diameter measurement.

Standard oil clearance:
0.020 to 0.043 mm (0.0008 to 0.0017 in.)

Maximum oil clearance:
0.093 mm (0.0037 in.)

EM

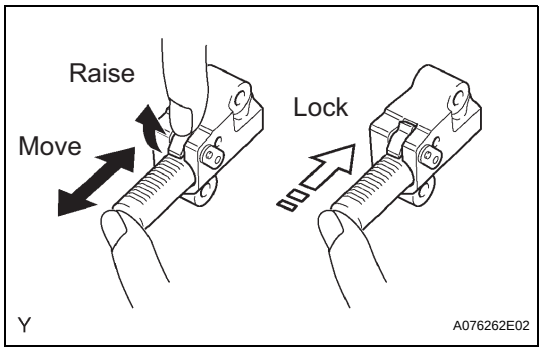

11. INSPECT NO.1 CHAIN TENSIONER ASSEMBLY

(a) Check that the plunger moves smoothly when the ratchet pawl is raised with finger.

(b) Release the ratchet pawl, then check that the plunger is locked in place by the ratchet pawl and does not move when pushing it with finger.

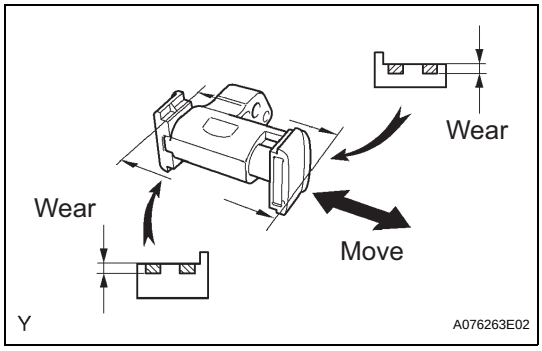

12. INSPECT NO.2 CHAIN TENSIONER ASSEMBLY

(a) Check that the plunger moves smoothly.

(b) Measure the wear of the chain tensioner slipper.

Maximum wear:

1.0 mm (0.039 in.)

If the wear is greater than the maximum, replace the chain tensioner No. 2.

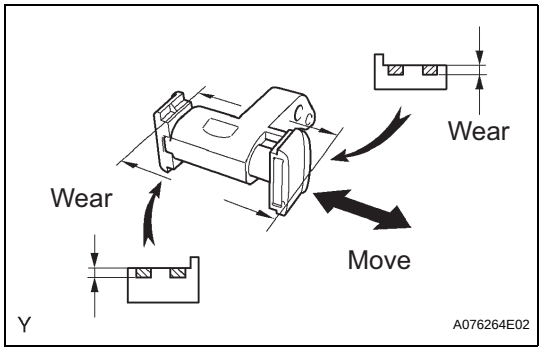

13. INSPECT NO.3 CHAIN TENSIONER ASSEMBLY

(a) Check that the plunger moves smoothly.

(b) Measure the wear of the chain tensioner slipper.

Maximum wear:

1.0 mm (0.039 in.)

If the wear is greater than the maximum, replace the chain tensioner No. 3.

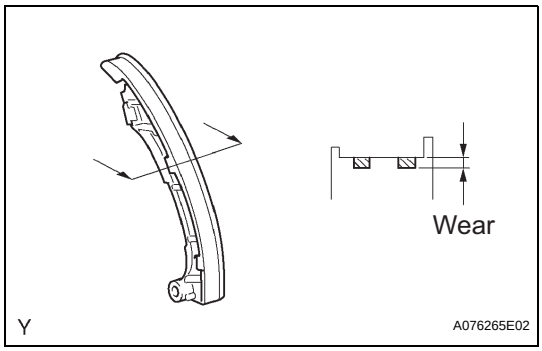

14. INSPECT CHAIN TENSIONER SLIPPER

(a) Measure the wear of the tensioner slipper.

Maximum wear:

1.0 mm (0.039 in.)

If the thickness is greater than the maximum, replace the tensioner slipper.

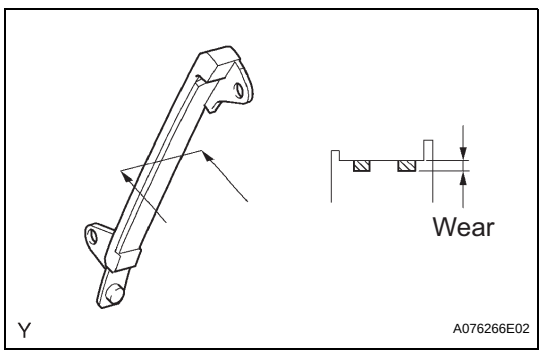

15. INSPECT NO.1 CHAIN VIBRATION DAMPER

(a) Measure the wear of the vibration damper No. 1.

Maximum wear:

1.0 mm (0.039 in.)

If the thickness is greater than the maximum, replace the vibration damper No. 1.

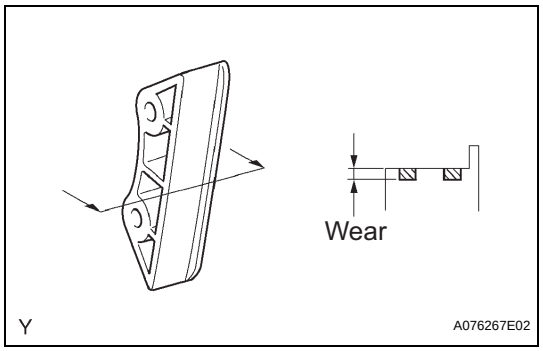

16. INSPECT NO.2 CHAIN VIBRATION DAMPER

(a) Measure the wear of the vibration damper No. 2 .
Maximum wear:
1.0 mm (0.039 in.)
If the thickness is greater than the maximum, replace the vibration damper No. 2.

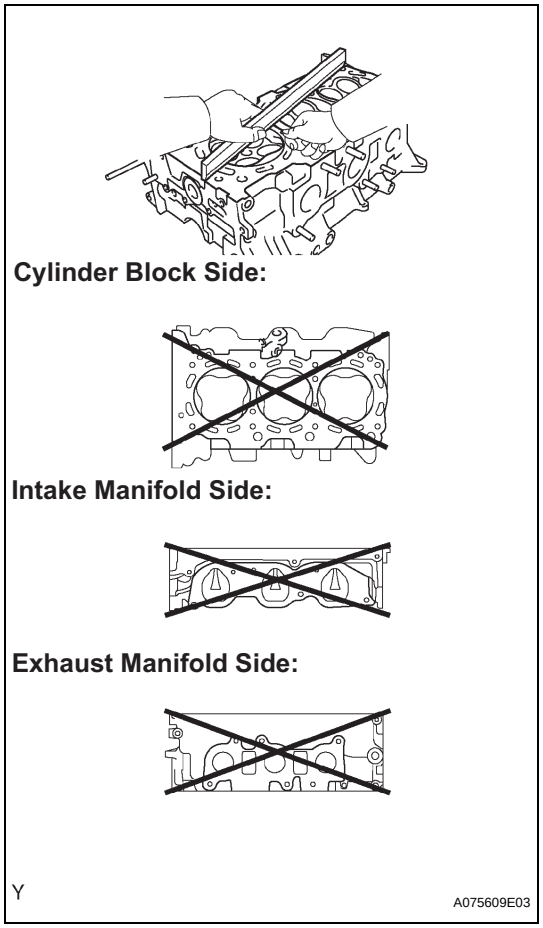

17. INSPECT CYLINDER HEAD SUB-ASSEMBLY

(a) Inspect the cylinder head for warpage.
(1) Using a precision straight edge and feeler gauge, measure the warpage on the cylinder block side and the intake and exhaust sides.
Maximum warpage:
0.10 mm (0.0039 in.)
If the warpage is greater than the maximum, replace the cylinder head.

EM

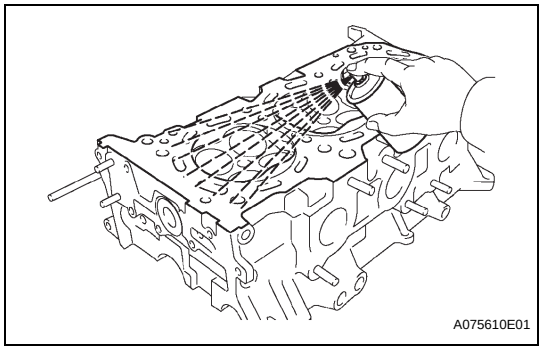

(b) Inspect the cylinder head for crack.
(1) Using a dye penetrant, check the combustion chamber, intake ports, exhaust ports and cylinder block surface for cracks.
If cracked, replace the cylinder head.

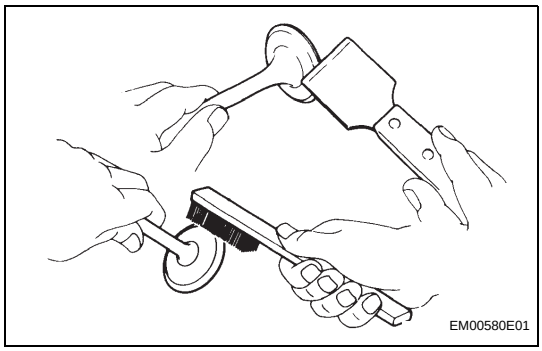
EM00580E01

18. CLEAN VALVE

(a) Using a gasket scraper, chip off any carbon from the valve head.

(b) Using a wire brush, thoroughly clean the valve.

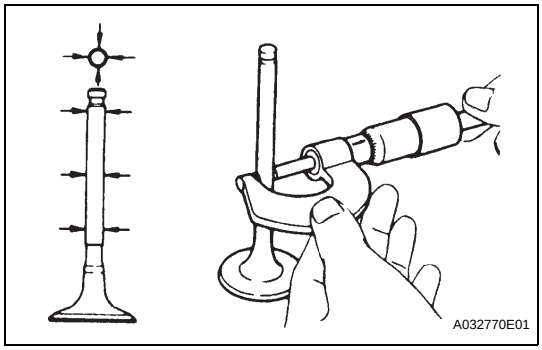
A032770E01

19. INSPECT VALVE

(a) Inspect valve stem diameter.

(1) Using a micrometer, measure the diameter of the valve stem.

Valve stem diameter

Intake	**5.470 to 5.485 mm (0.2154 to 0.2159 in.)**
Exhaust	**5.465 to 5.480 mm (0.2152 to 0.2158 in.)**

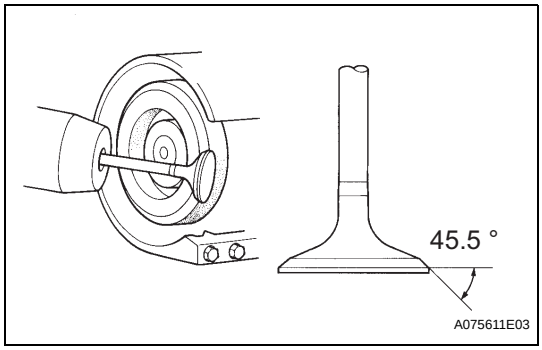

A075611E03

(b) Inspect valve face angle.

(1) Grind the valve enough to remove any pits and carbon.

(2) Check that the valve is ground to the correct valve face angle.

Valve face angle:
45.5°

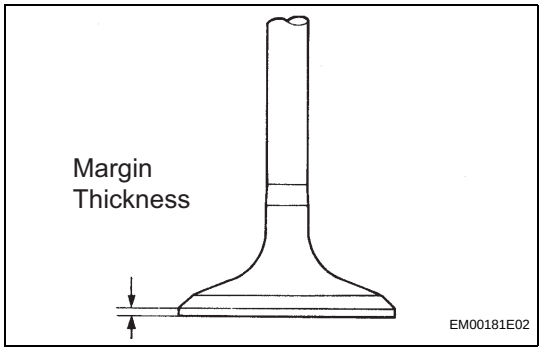

EM00181E02

(c) Inspect valve head margin thickness.

(1) Using vernier calipers, check the valve head margin thickness.

Standard margin thickness:
1.0 mm (0.039 in.)
Minimum margin thickness:
0.5 mm (0.020 in.)
If the margin thickness is less than the minimum, replace the valve.

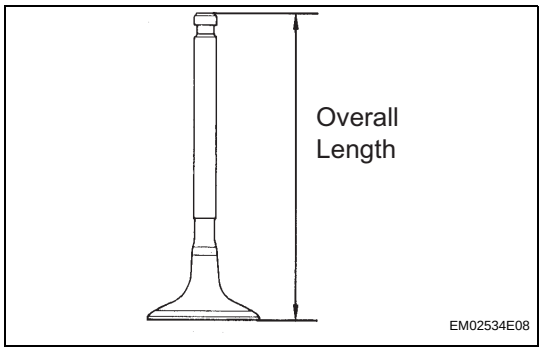

EM02534E08

(d) Inspect overall length.

(1) Using vernier calipers, check the overall length.

Standard overall length

Intake	**106.95 mm (4.2106 in.)**
Exhaust	**105.80 mm (4.1654 in.)**

Minimum overall length

Intake	**106.70 mm (4.2008 in.)**
Exhaust	**105.55 mm (4.1555 in.)**

If the overall length is less than the minimum, replace the valve.

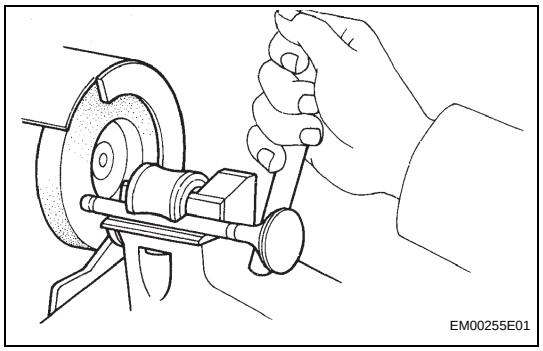
EM00255E01

(e) Inspect valve stem tip.
(1) Check the surface of the valve stem tip for wear.
NOTICE:
Do not grind to less than the minimum length.
If the valve stem tip is worn, resurface the tip with a grinder or replace the valve.

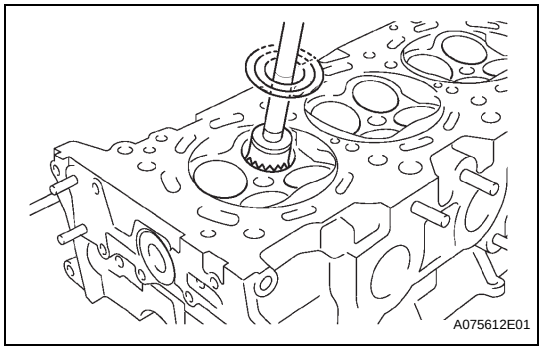
A075612E01

20. CLEAN VALVE SEAT
(a) Using a 45° carbide cutter, resurface the valve seats.
(b) Clean the valve seats.

EM

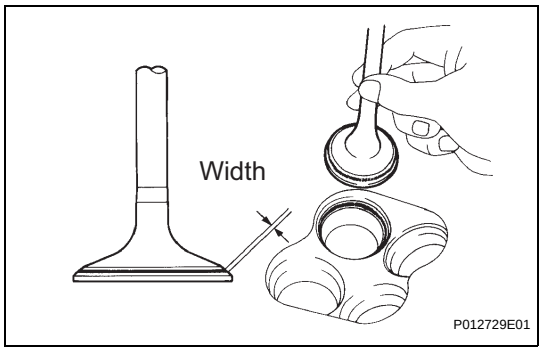

P012729E01

21. INSPECT VALVE SEAT
(a) Apply a light coat of prussian blue (or white lead) to the valve face.
(b) Lightly press the valve against the valve seat.
NOTICE:
Do not rotate the valve.
(c) Check the valve face and seat according to the following procedure.
(1) If blue appears 360° around the face, the valve is concentric.
If not, replace the valve.
(2) If the blue appears 360° around the valve seat, the guide and face are concentric.
If not, resurface the valve seat.
(3) Check that the seat is in contact with the middle of the valve face with the following width.
Standard width:
1.0 to 1.4 mm (0.039 to 0.055 in.)

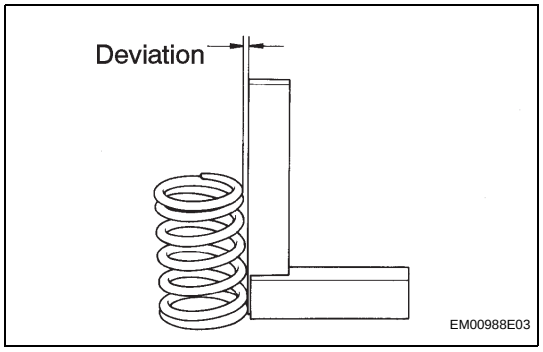

EM00988E03

22. INSPECT INNER COMPRESSION SPRING
(a) Inspect the deviation.
(1) Using steel squares, measure the deviation of the inner compression spring.
Maximum deviation:
2.0 mm (0.079 in.)
If the deviation is greater than the maximum, replace the inner compression spring.

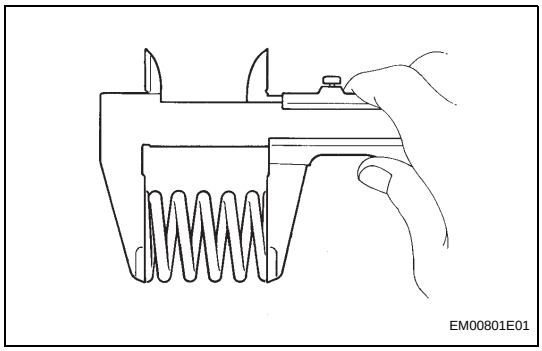
EM00801E01

(b) Inspect the free length.
(1) Using vernier calipers, measure the free length of the inner compression spring.
Free length:
47.80 mm (1.8819 in.)
If the free length is not as specified, replace the inner compression spring.

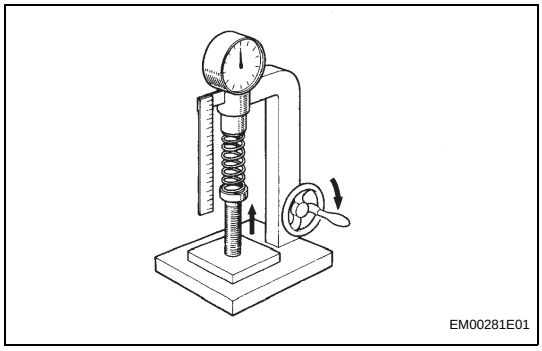
EM00281E01

(c) Inspect the tension.
(1) Using a spring tester, measure the tension of the inner compression spring at the specified installed length.
Installed tension:
186.2 to 205.8 N (19.0 to 21.0 kgf, 41.9 to 46.3 lbf) at 33.3 mm (1.311 in.)
If the installed tension is not as specified, replace the inner compression spring.

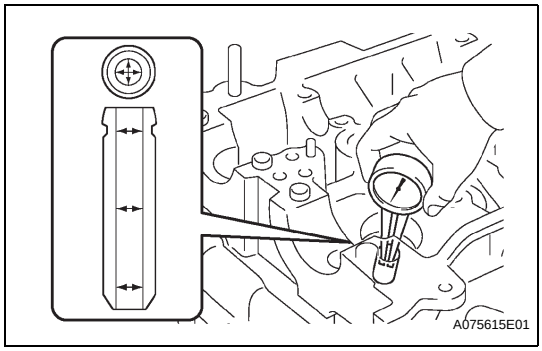
A075615E01

23. INSPECT VALVE GUIDE BUSH OIL CLEARANCE
(a) Using a caliper gauge, measure the internal diameter of the valve guide bush.
Inside diameter:
5.51 to 5.53 mm (0.2169 to 0.2177 in.)
(b) Subtract the valve stem diameter measurement (Step 8) from the valve guide bush internal diameter measurement.
Standard oil clearance

Intake	**0.025 to 0.060 mm (0.0010 to 0.0024 in.)**
Exhaust	**0.030 to 0.065 mm (0.0012 to 0.0026 in.)**

Maximum oil clearance

Intake	**0.08 mm (0.0031 in.)**
Exhaust	**0.10 mm (0.0039 in..)**

If the oil clearance is greater than the maximum, replace the valve and valve guide bush.

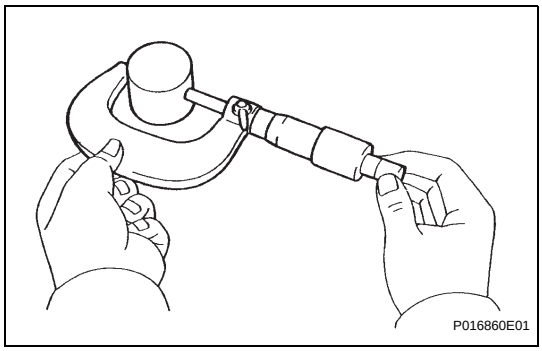
P016860E01

24. INSPECT VALVE LIFTER
(a) Using a micrometer, measure the valve lifter diameter.
Valve lifter diameter:
30.966 to 30.976 mm (1.2191 to 1.2195 in.)

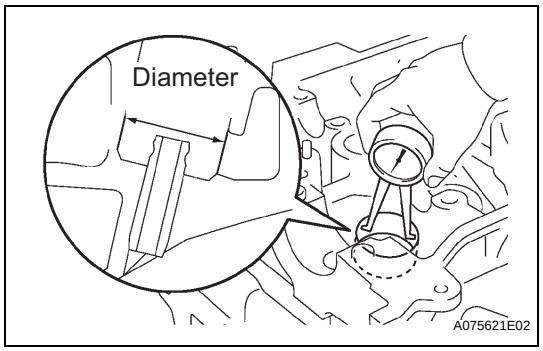

25. INSPECT VALVE LIFTER OIL CLEARANCE

(a) Using a caliper gauge, measure the lifter bore diameter of the cylinder head.

Lifter bore diameter:
31.009 to 31.025 mm (1.2208 to 1.2215 in.)

(b) Subtract the valve lifter diameter measurement (Step 16) from the lifter bore diameter measurement.

Standard oil clearance:
0.033 to 0.059 mm (0.0013 to 0.0023 in.)

Maximum oil clearance:
0.08 mm (0.0031 in.)

If the oil clearance is greater than the maximum, replace the valve lifter.

If necessary, replace the cylinder head.

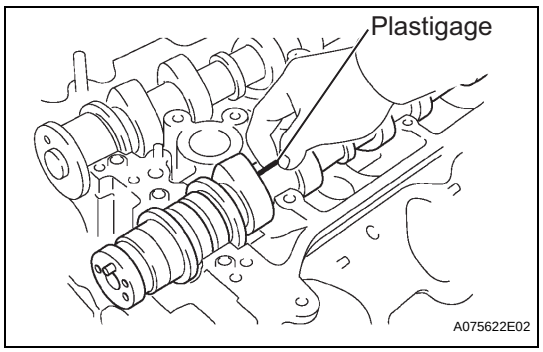

26. INSPECT CAMSHAFT OIL CLEARANCE

(a) Clean the camshaft bearing caps, camshaft bearings and camshaft journals.

(b) Install the camshaft bearing (see page EM-57 or EM-74).

(c) Place the camshaft on the cylinder head.

(d) Lay a strip of Plastigage across each camshaft journal.

(e) Install the camshaft bearing caps (see page EM-54 or EM-74).

NOTICE:
Do not turn the camshafts.

(f) Remove the camshaft bearing caps (see page EM-57 or EM-74).

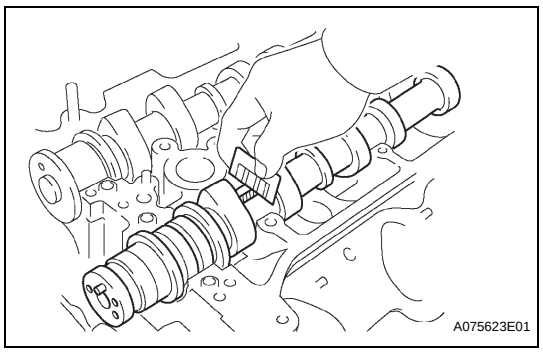

(g) Measure the Plastigage at its widest point.

Standard oil clearance (Cylinder head RH)

No. 1 (Intake)	0.008 to 0.038 mm (0.0003 to 0.0015 in.)
No. 1 (Exhaust)	0.040 to 0.079 mm (0.0016 to 0.0031 in.)
Others	0.025 to 0.062 mm (0.0010 to 0.0024 in.)

Standard oil clearance (Cylinder head LH)

No. 1	0.040 to 0.079 mm (0.0016 to 0.0031 in.)
Others	0.025 to 0.062 mm (0.0010 to 0.0024 in.)

Maximum oil clearance (Cylinder head RH)

No. 1 (Intake)	0.07 mm (0.0028 in.)
Others	0.10 mm (0.0039 in.)

Maximum oil clearance (Cylinder head LH):
0.10 mm (0.0039 in.)

If the oil clearance is greater than the maximum, replace the camshaft bearings and/or camshafts.

If necessary, replace the camshaft bearing caps and cylinder head together.

Reference

Cylinder head journal bore diameter	40.009 to 40.017 mm (1.5752 to 1.5755 in.)
Camshaft bearing center wall thickness (Mark "2")	2.004 to 2.008 mm (0.0789 to 0.0791 in.)

EM

Cylinder head journal bore diameter	40.009 to 40.017 mm (1.5752 to 1.5755 in.)
Camshaft journal diameter	35.971 to 35.985 mm (1.4165 to 1.4167 in.)

(h) Remove the Plastigage completely.
(i) Remove the camshafts.
(j) Remove the camshaft bearing.

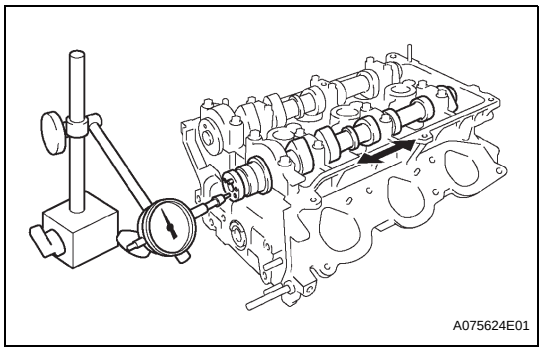

27. INSPECT CAMSHAFT THRUST CLEARANCE

(a) Install the camshafts. (See page EM-57 or EM-74).
(b) Using a dial indicator, measure the thrust clearance while moving the camshaft back and forth.
Standard thrust clearance:
0.04 to 0.09 mm (0.016 to 0.035 in.)
Maximum thrust clearance:
0.11 mm (0.0043 in.)
If the thrust clearance is greater than the maximum, replace the camshafts.
If necessary, replace the camshaft bearing caps and cylinder head as a set.

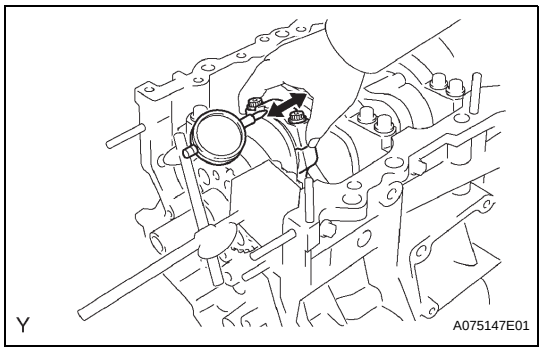

28. INSPECT CONNECTING ROD THRUST CLEARANCE

(a) Using a dial indicator, measure the thrust clearance while moving the connecting rod back and forth.
Standard thrust clearance:
0.15 to 0.30 mm (0.0059 to 0.0118 in.)
Maximum thrust clearance:
0.35 mm (0.0138 in.)

29. INSPECT CONNECTING ROD OIL CLEARANCE

(a) Check the matchmarks on the connecting rod and cap are aligned to ensure correct assembly.
(b) Using SST, remove the 2 connecting rod cap bolts.
SST 09011-38121
(c) Clean the crank pin, bearing and connecting rod.
(d) Check the crank pin and bearing for any pits and scratches.
(e) Lay a strip of plastigage across the crank pin.

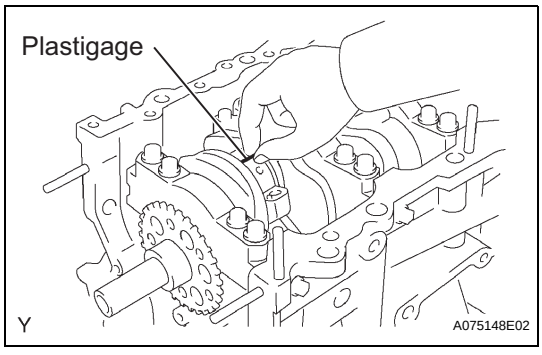

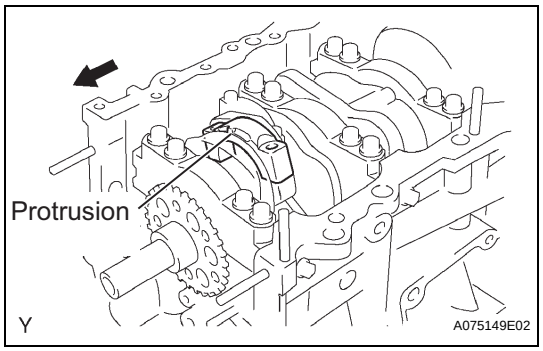

(f) Check that the protrusion of the connecting rod cap is facing in the correct direction.
(g) Apply a light coat of engine oil to the threads of the connecting rod cap bolts.

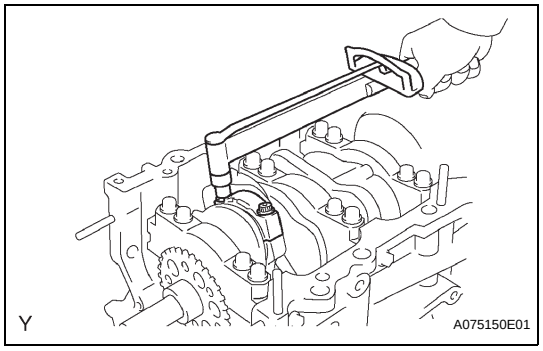

(h) Using SST, tighten the bolts alternately to the specified torque.
SST 09011-38121
Torque: 25 N*m (250 kgf*cm, 18 ft.*lbf)

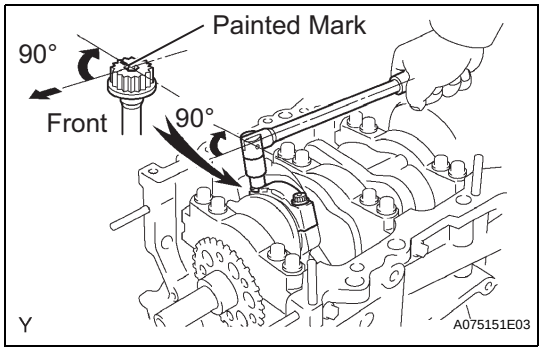

(i) Mark the front side of the each connecting cap bolt with paint.
(j) Retighten the cap bolts 90° as shown in the illustration.
NOTICE:
Do not turn the crankshaft.
(k) Remove the 2 bolts, connecting rod cap and lower bearing.

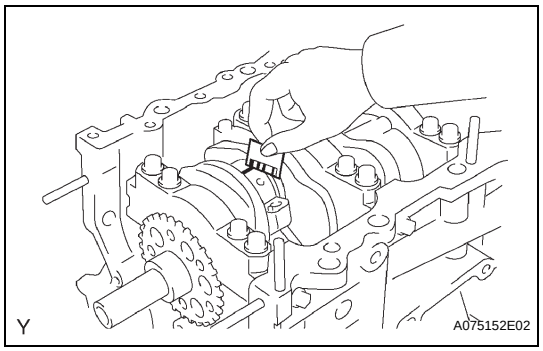

(l) Measure the plastigage at its widest point.
Standard oil clearance:
0.026 to 0.046 mm (0.0010 to 0.0018 in.)
Maximum oil clearance:
0.066 mm (0.0025 in.)
NOTICE:
Completely remove the plastigage.

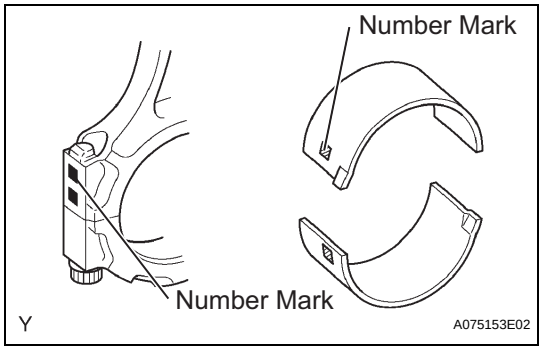

(m) When replacing the bearing, replace it with one with the same number as marked on the connecting rod. There are 4 sizes of standard bearings, marked "1 ", "2", "3" and "4" accordingly.
HINT:
Standard bearing center wall thickness

Mark	mm (in.)
"1"	1.484 to 1.487 (0.0584 to 0.0585)
"2"	1.487 to 1.490 (0.0585 to 0.0587)
"3"	1.490 to 1.493 (0.0587 to 0.0588)

Mark	mm (in.)
"4"	1.493 to 1.496 (0.0588 to 0.0589)

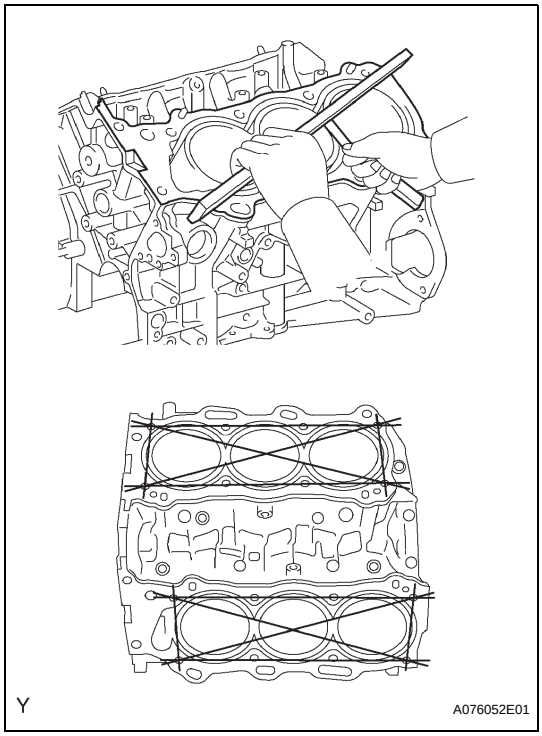

30. CHECK CYLINDER BLOCK FOR WARPAGE

(a) Using a precision straight edge and feeler gauge, measure the warpage of the contact surface of the cylinder head gasket.

Maximum warpage:

0.05 mm (0.0020 in.)

If the warpage is greater than the maximum, replace the cylinder block.

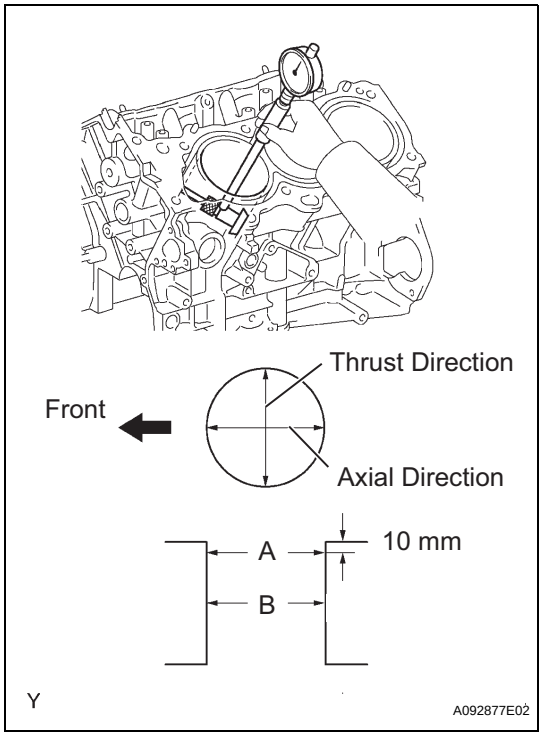

31. INSPECT CYLINDER BORE

(a) Using a cylinder gauge, measure the cylinder bore diameter at positions A and B in the thrust and axial directions.

Standard diameter:

94.000 to 94.012 mm (3.7008 to 3.7013 in.)

Maximum diameter:

94.132mm (3.7060 in.)

If the average diameter of 4 positions is greater than the maximum, replace the cylinder block.

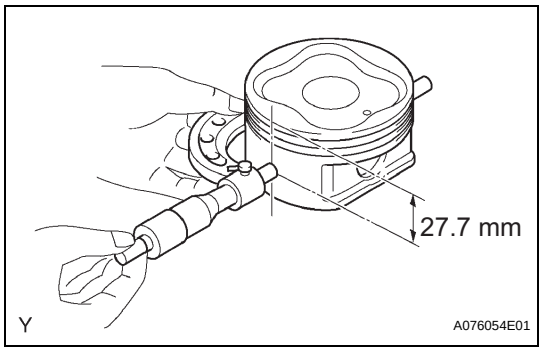

32. INSPECT WITH PISTON SUB-ASSEMBLY

(a) Using a micrometer, measure the piston diameter at right angles to the piston pin center line, 27.7 mm (1.091 in.) from the piston head.

Piston diameter:

93.910 to 93.940 mm (3.6972 to 3.6984 in.)

33. INSPECT PISTON OIL CLEARANCE

(a) Subtract the piston diameter measurement from the cylinder bore diameter measurement.

Standard oil clearance:

0.060 to 0.102 mm (0.0031 to 0.0040 in.)

Maximum oil clearance:

0.13 mm (0.0051 in.)

If the oil clearance is greater than the maximum, replace all the 6 pistons. If necessary, replace the cylinder block.

EM

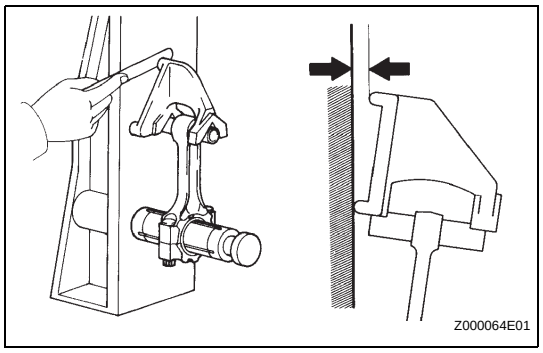

34. INSPECT CONNECTING ROD SUB-ASSEMBLY

(a) Using a rod aligner and feeler gauge, check the connecting rod alignment.

(1) Check for misalignment.

Maximum misalignment:

0.05 mm (0.0020 in.) per 100 mm (3.94 in.)

If misalignment is greater than the maximum, replace the connecting rod assembly.

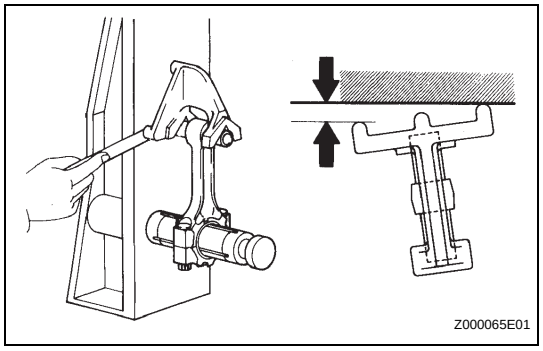

(2) Check the twist.

Maximum twist:

0.15 mm (0.0059 in.) per 100 mm (3.94 in.)

If the twist is greater than the maximum, replace the connecting rod assembly.

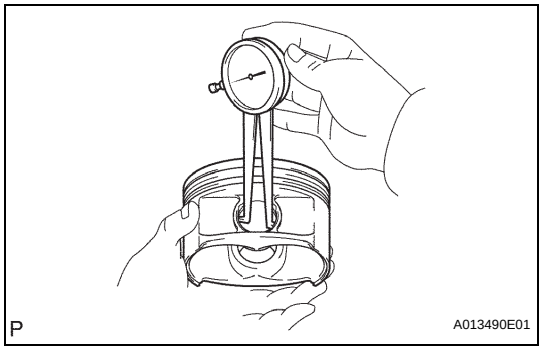

35. INSPECT PISTON PIN OIL CLEARANCE

(a) Using a caliper gauge, measure the internal diameter of the piston pin hole.

Piston pin hole internal diameter:

22.001 to 22.010 mm (0.8662 to 0.8665 in.)

Piston pin hole inside diameter

Mark	mm (in.)
A	22.001 to 22.004 (0.8662 to 0.8663)
B	22.005 to 22.007 (0.8663 to 0.8664)
C	22.008 to 22.010 (0.8665 to 0.8665)

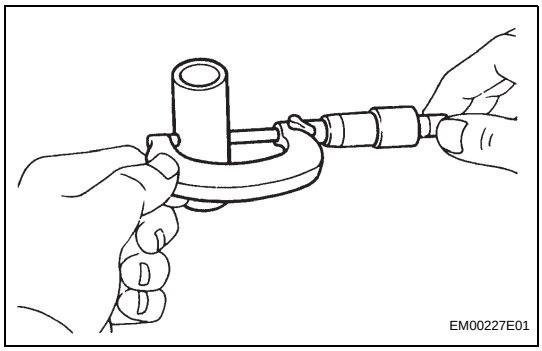

(b) Using a micrometer, measure the piston pin diameter.
Piston pin diameter:
21.997 to 22.006 mm (0.8660 to 0.8664 in.)
Piston pin diameter

Mark	mm (in.)
A	21.997 to 22.000 (0.8660 to 0.8661)
B	22.001 to 22.003 (0.8661 to 0.8663)
C	22.004 to 22.006 (0.8663 to 0.8664)

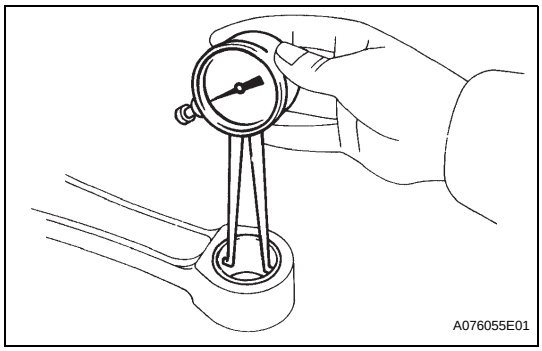

(c) Using a caliper gauge, measure the internal diameter of the connecting rod bushing.
Bushing internal diameter:
22.005 to 22.014 mm (0.8663 to 0.8667 in.)
Bushing internal diameter

Mark	mm (in.)
A	22.005 to 22.008 (0.8663 to 0.8665)
B	22.009 to 22.011 (0.8665 to 0.8666)
C	22.012 to 22.014 (0.8666 to 0.8667)

(d) Subtract the piston pin diameter measurement from the piton pin hole diameter measurement.
Standard oil clearance:
0.001 to 0.007 mm (0.00004 to 0.00028 in.)
Maximum oil clearance:
0.040 mm (0.0016 in.)

(e) If the oil clearance is greater than the maximum, replace the bushing. If necessary, replace the piston and piston pin together.

(f) Subtract the piston pin diameter measurement from the bushing inside diameter measurement.
Standard oil clearance:
0.005 to 0.011 mm (0.0002 to 0.0004 in.)
Maximum oil clearance:
0.050 mm (0.0020 in.)

(g) If the oil clearance is greater than the maximum, replace the bushing. If necessary, replace the connecting rod and piston pin together.

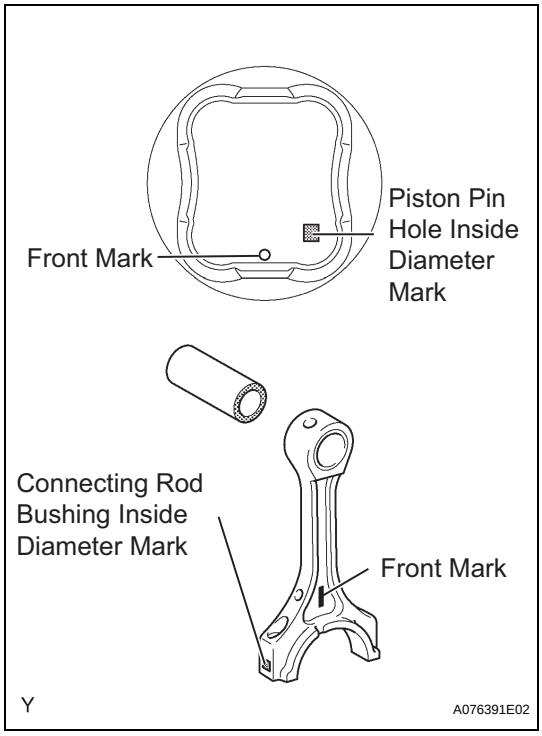

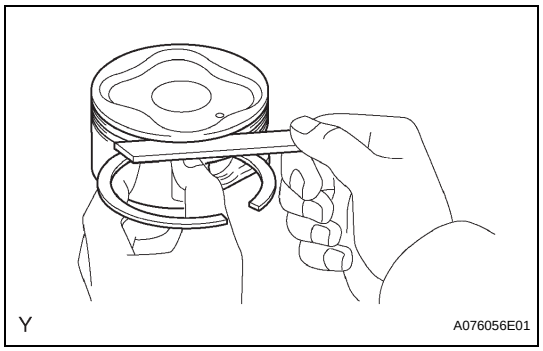

36. INSPECT RING GROOVE CLEARANCE

(a) Using a feeler gauge, measure the clearance between a new piston ring and the wall of the ring groove.

Ring groove clearance:

No.1 0.02 to 0.07 mm (0.0008 to 0.0028 in.)
No.2 0.02 to 0.06 mm (0.0008 to 0.0024 in.)
Oil 0.07 to 0.15 mm (0.0028 to 0.0060 in.)

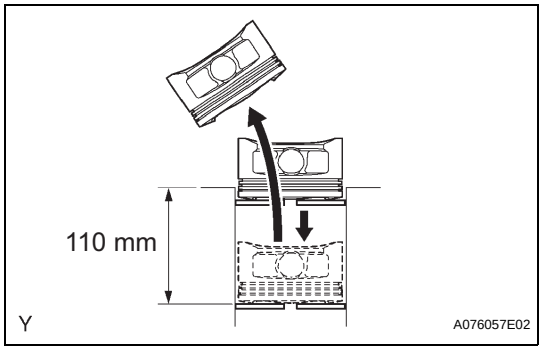

37. INSPECT PISTON RING END GAP

(a) Using a piston, push the piston ring a little beyond the bottom of the ring travel, 110 mm (4.33 in.) from the top of the cylinder block.

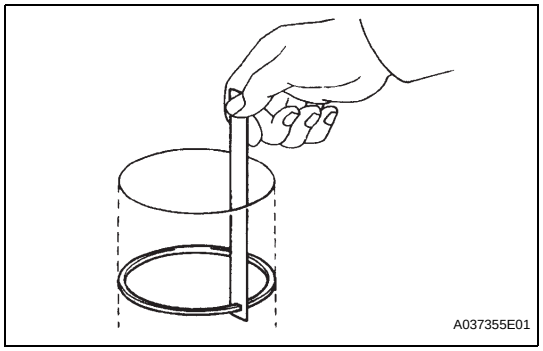

(b) Using a feeler gauge, measure the end gap.

Standard end gap:

No. 1 0.30 to 0.40 mm (0.0118 to 0.0157 in.)
No. 2 0.40 to 0.50 mm (0.0157 to 0.0197 in.)
Oil (Side rail) 0.10 to 0.40 mm (0.0039 to 0.0157 in.)

Maximum end gap:

No. 1 1.0 mm (0.039 in.)
No. 2 1.1 mm (0.043 in.)
Oil (Side rail) 1.0 mm (0.039 in.)

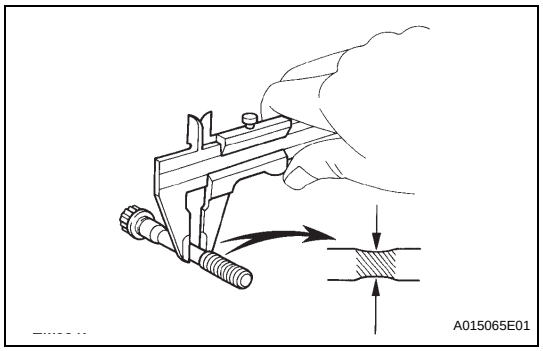

38. INSPECT CONNECTING ROD BOLT

(a) Using vernier calipers, measure the tension portion diameter of the bolt.

Standard diameter:

7.2 to 7.3 mm (0.283 to 0.287 in.)

Minimum diameter:

7.0 mm (0.276 in.)

If the diameter is less than the minimum, replace the bolt.

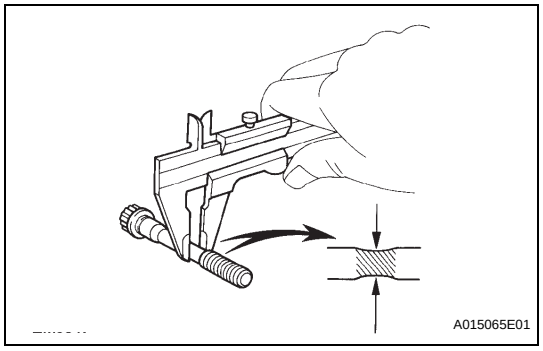

39. INSPECT CRANKSHAFT BEARING CAP SET BOLT

(a) Using vernier calipers, measure the tension portion diameter of the bolt.

Standard diameter:

10.0 to 10.2 mm (0.393 to 0.402 in.)

If the diameter is less than the minimum, replace the bolt.

EM

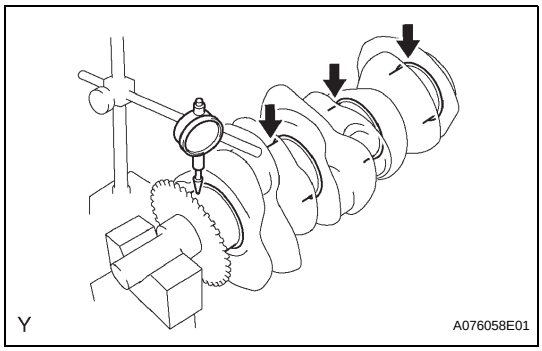

40. INSPECT CRANKSHAFT

(a) Using a dial indicator and V-blocks, measure the runout as shown in the illustration.
Maximum circle runout:
0.06 mm (0.0024 in.)

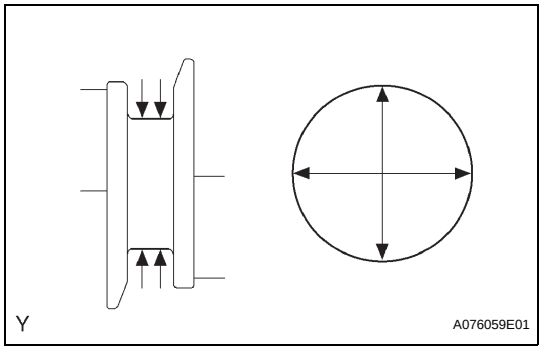

(b) Using a micrometer, measure the diameter of each main journal.
Diameter:
71.988 to 72.000 mm (2.8342 to 2.8346 in.)

(c) Check each main journal for taper and out-of-roundness as shown.
Maximum taper and out-of-roundness:
0.02 mm (0.0008 in.)

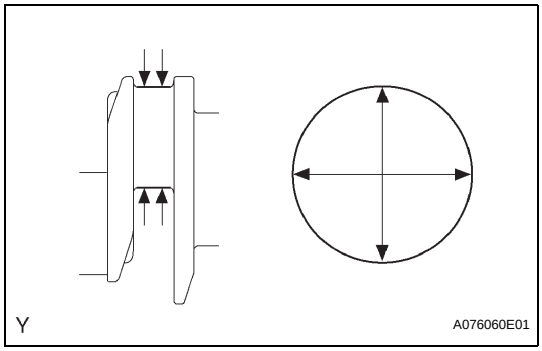

(d) Using a micrometer, measure the diameter of each crank pin.
Diameter:
55.992 to 56.000 mm (2.2044 to 2.2047 in.)

(e) Check each crank pin for taper and out-of-roundness as shown.
Maximum taper and out-of-roundness:
0.02 mm (0.0008 in.)

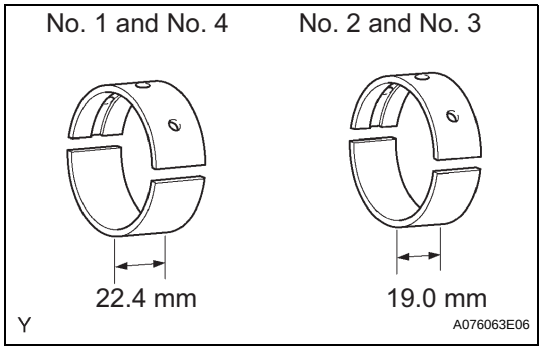

41. INSPECT CRANKSHAFT OIL CLEARANCE

HINT:
There are 2 types of main bearings with different widths (19.0 mm (0.748 in.) and 22.4 mm (0.882 in.)) for use in the inspection. Install the 22.4mm (0.882 in.) bearings in the No. 1 and No. 4 cylinder block journal positions with the main bearing cap. Install the 19.0 mm (0.748 in.) bearings in the No. 2 and No. 3 positions.

(a) Clean each main journal and bearing.

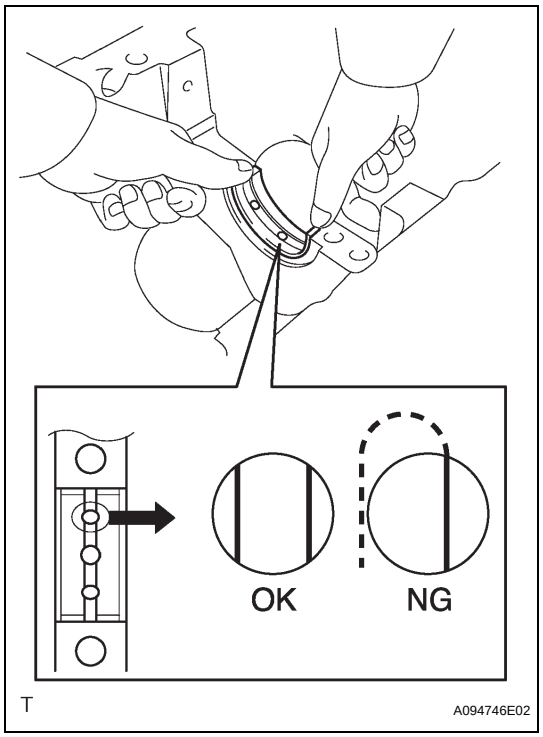

(b) Install the 4 upper bearings.
(1) Install the upper bearing near the center of the cylinder block.
NOTICE:
- **The width of the No. 1 and No. 4 journal bearings is different from that of the No. 2 and No. 3 journal bearings. Therefore, confirm whether it is the correct journal bearing prior to installation.**
- **Do not apply engine oil to the bearing installation surfaces of the cylinder block and the back side of the bearings.**
- **Check that the oil groove on the cylinder block can be seen through the oil supply holes of the upper bearing.**

EM

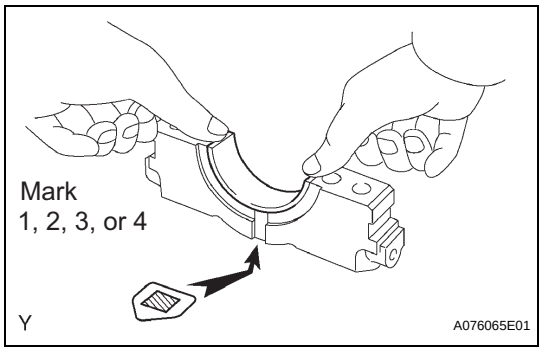

(c) Install the 4 lower bearings.
(1) Install the lower bearing near the center of the cylinder block.
NOTICE:
Do not apply engine oil to the bearing and its contact surface.
HINT:
A number marked on each main bearing cap indicates the installation position.

(d) Place the crankshaft on the cylinder block.

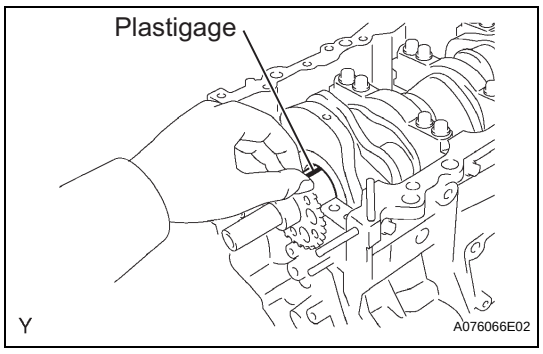

(e) Lay a strip of plastigage across each journal.

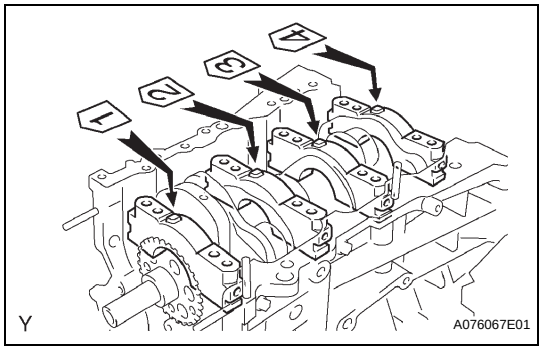

(f) Examine the front marks and numbers, check the sequence order is as shown and install the bearing caps onto the cylinder block.
(g) Apply a light coat of engine oil to the threads of bearing cap bolts.
(h) Temporarily install the 8 main bearing cap bolts in the inside positions.

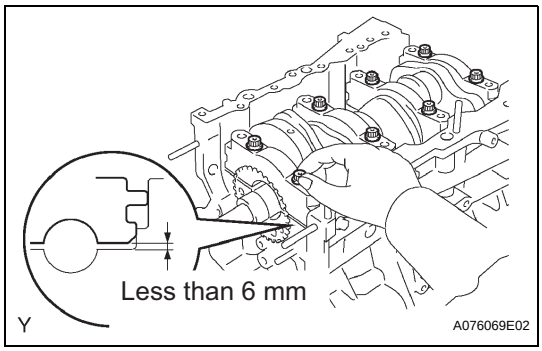

(i) Install the main bearing caps. Tighten the 2 bolts for each bearing cap until the clearance between the bearing cap and the cylinder block is under 6 mm (0.23 in.).

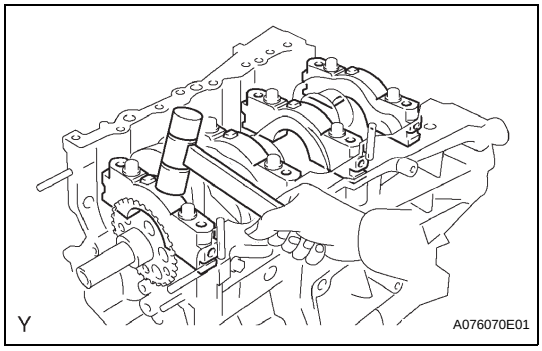

(j) Using a plastic-faced hammer, lightly tap the bearing cap to ensure a proper fit.
(k) Apply a light coat of engine oil to the threads of main bearing cap bolts.

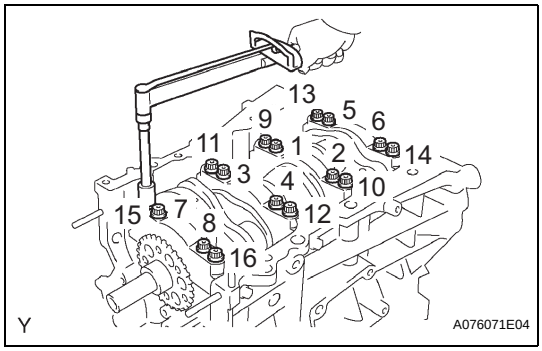

(l) Install the 16 main bearing cap bolts. Using several steps, tighten the bolts uniformly in the sequence shown in the illustration.
Torque: 61 N*m (622 kgf*cm, 45 ft.*lbf)

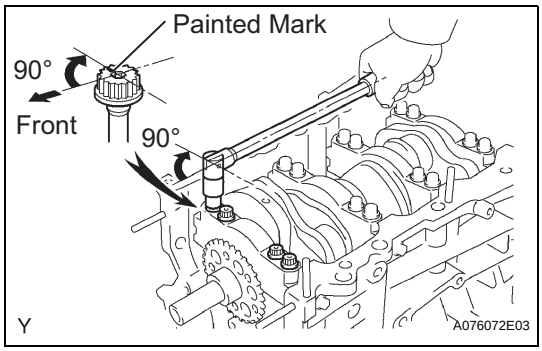

(m) Mark the front side of the bearing cap bolts with paint.
(n) Retighten the bearing cap bolts 90° in the sequence as shown.
(o) Check that the painted mark is now at a 90° angle from the front.
NOTICE:
Do not turn the crankshaft.

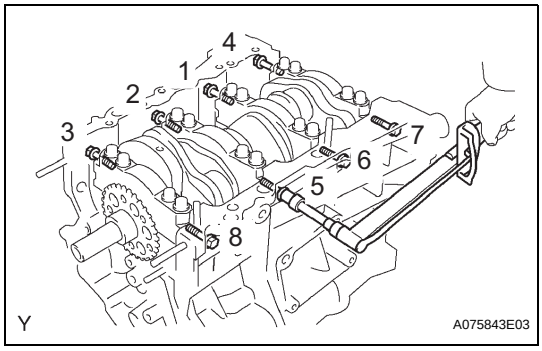

(p) Install the 8 main bearing cap bolts. Using several steps, tighten the bolts uniformly in the sequence shown in the illustration.
Torque: 25 N*m (255 kgf*cm, 18 ft.*lbf)
(q) Remove the main bearing caps.

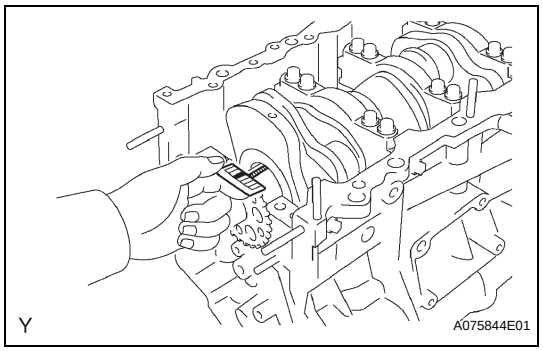

(r) Measure the Plastigage at its widest point.
Standard oil clearance:
0.018 to 0.030 mm (0.0007 to 0.0012 in.)
Maximum clearance:
0.046 mm (0.0018 in.)
If the oil clearance is greater than the maximum, replace the bearings. If necessary, replace the crankshaft.
NOTICE:
Completely remove the plastigage.

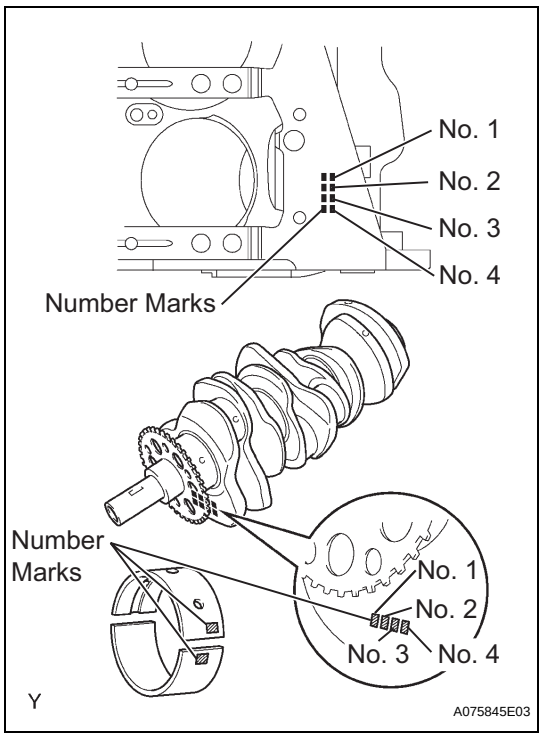

(s) Replace the bearing with the same number. If the number of the bearing cannot be determined, select the correct bearing by adding together the numbers imprinted on the cylinder block and crankshaft, then refer to the table below for the appropriate bearing number. There are 5 size of standard bearings, marked "1", "2", "3", "4" and "5" accordingly.
Journal bearing

Cylinder block (A) + Crankshaft	0 -5	6 -11	12 -17	18 - 23	24 - 28
Use Bearing	"1"	"2"	"3"	"4"	"5"

HINT:
EXAMPLE
Cylinder block "11" (A) + Crankshaft "06" (B)
=Total number 17 (Use bearing "3")

Item	Mark	mm (in.)
Cylinder block main journal bore diameter (A)	"00"	77.000 (3.0315)
	"01"	77.001 (3.0315)
	"02"	77.002 (3.0316)
	"03"	77.003 (3.0316)
	"04"	77.004 (3.0317)
	"05"	77.005 (3.0317)
	"06"	77.006 (3.0317)
	"07"	77.007 (3.0318)
	"08"	77.008 (3.0318)
	"09"	77.009 (3.0319)
	"10"	77.010 (3.0319)
	"11"	77.011 (3.0319)
	"12"	77.012 (3.0320)
	"13"	77.013 (3.0320)
	"14"	77.014 (3.0320)
	"15"	77.015 (3.0321)
	"16"	77.016 (3.0321)

Item	Mark	mm (in.)
Crankshaft main journal diameter (B)	"00"	71.999 to 72.000 (2.8346 to 2.8346)
	"01"	71.998 to 71.999 (2.8346 to 2.8346)
	"02"	71.997 to 71.998 (2.8345 to 2.8346)
	"03"	71.996 to 71.997 (2.8345 to 2.8346)
	"04"	71.995 to 71.996 (2.8344 to 2.8345)
	"05"	71.994 to 71.995 (2.8344 to 2.8344)
	"06"	71.993 to 71.994 (2.8343 to 2.8344)
	"07"	71.992 to 71.993 (2.8343 to 2.8343)
	"08"	71.991 to 71.992 (2.8343 to 2.8343)
	"09"	71.990 to 71.991 (2.8343 to 2.8343)
	"10"	71.989 to 71.990 (2.8342 to 2.8343)
	"11"	71.988 to 71.989 (2.8342 to 2.8342)
Standard bearing center wall thickness	"1"	2.488 to 2.491 (0.0980 to 0.0981)
	"2"	2.491 to 2.494 (0.0981 to 0.0982)
	"3"	2.494 to 2.497 (0.0982 to 0.0983)
	"4"	2.497 to 2.500 (0.0982 to 0.0984)
	"5"	2.500 to 2.503 (0.0984 to 0.0985)

EM

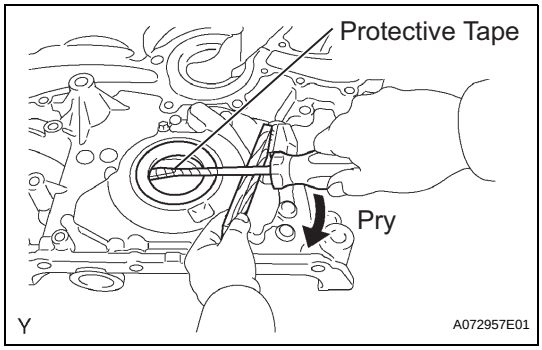

REPLACEMENT

1. REMOVE TIMING GEAR CASE OR TIMING CHAIN CASE OIL SEAL

(a) Using a screwdriver, pry out the oil seal.
NOTICE:
Be careful not to damage the oil pump assembly. Wrap a tip of the screwdriver with tape.

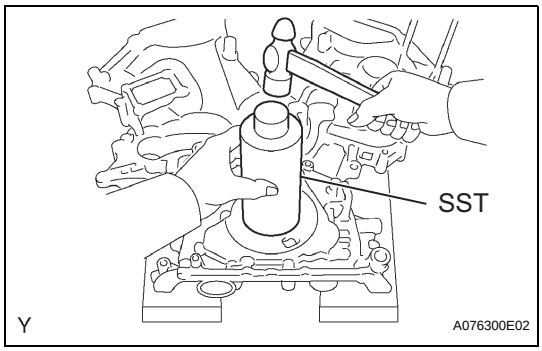

2. INSTALL TIMING GEAR CASE OR TIMING CHAIN CASE OIL SEAL

(a) Using SST and a hammer, tap in a new oil seal until its surface is flush with the timing chain cover edge.
SST 09226-10010

(b) Apply MP grease to the oil seal lip.

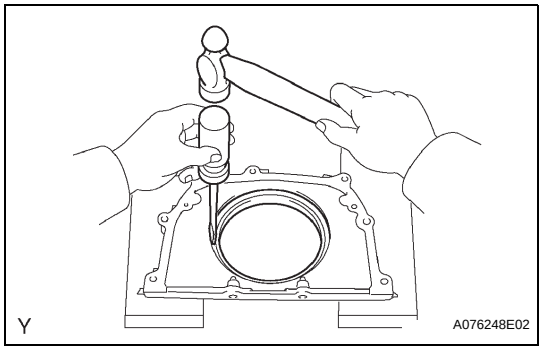

3. REMOVE REAR ENGINE OIL SEAL

(a) Using a screwdriver and hammer, tap the oil seal out.

Item	Mark	mm (in.)
Crankshaft main journal diameter (B)	"00"	71.999 to 72.000 (2.8346 to 2.8346)
	"01"	71.998 to 71.999 (2.8346 to 2.8346)
	"02"	71.997 to 71.998 (2.8345 to 2.8346)
	"03"	71.996 to 71.997 (2.8345 to 2.8346)
	"04"	71.995 to 71.996 (2.8344 to 2.8345)
	"05"	71.994 to 71.995 (2.8344 to 2.8344)
	"06"	71.993 to 71.994 (2.8343 to 2.8344)
	"07"	71.992 to 71.993 (2.8343 to 2.8343)
	"08"	71.991 to 71.992 (2.8343 to 2.8343)
	"09"	71.990 to 71.991 (2.8343 to 2.8343)
	"10"	71.989 to 71.990 (2.8342 to 2.8343)
	"11"	71.988 to 71.989 (2.8342 to 2.8342)
Standard bearing center wall thickness	"1"	2.488 to 2.491 (0.0980 to 0.0981)
	"2"	2.491 to 2.494 (0.0981 to 0.0982)
	"3"	2.494 to 2.497 (0.0982 to 0.0983)
	"4"	2.497 to 2.500 (0.0982 to 0.0984)
	"5"	2.500 to 2.503 (0.0984 to 0.0985)

EM

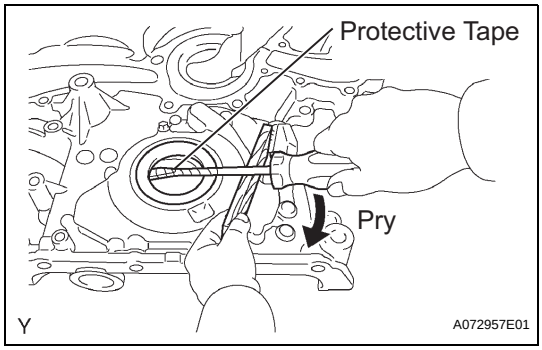

REPLACEMENT

1. REMOVE TIMING GEAR CASE OR TIMING CHAIN CASE OIL SEAL

(a) Using a screwdriver, pry out the oil seal.
NOTICE:
Be careful not to damage the oil pump assembly. Wrap a tip of the screwdriver with tape.

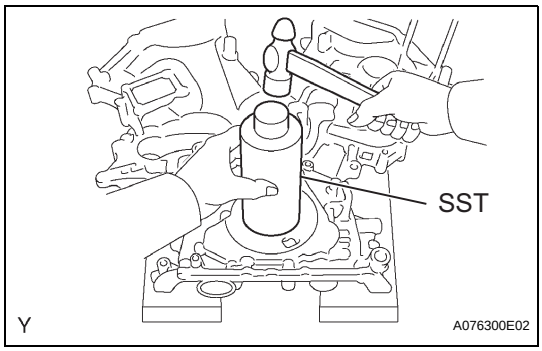

2. INSTALL TIMING GEAR CASE OR TIMING CHAIN CASE OIL SEAL

(a) Using SST and a hammer, tap in a new oil seal until its surface is flush with the timing chain cover edge.
SST 09226-10010

(b) Apply MP grease to the oil seal lip.

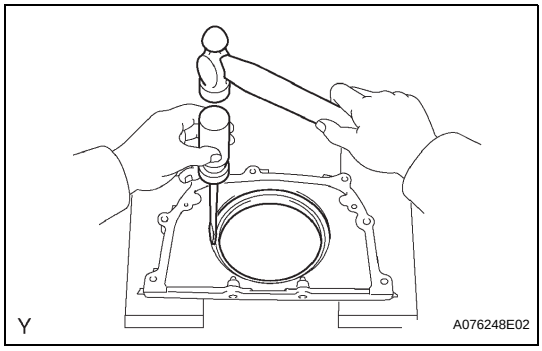

3. REMOVE REAR ENGINE OIL SEAL

(a) Using a screwdriver and hammer, tap the oil seal out.

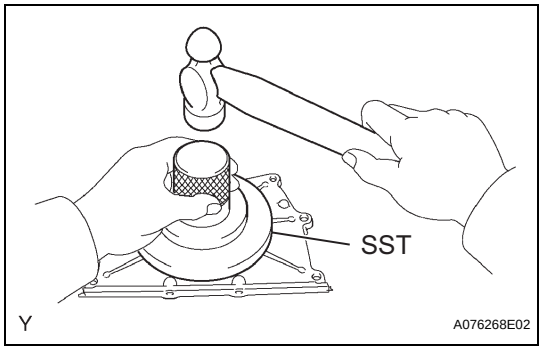

4. INSTALL REAR ENGINE OIL SEAL

(a) Using SST and a hammer, tap in a new oil seal until its surface is flush with the rear oil seal retainer edge.
SST 09223-78010

(b) Apply MP grease to the oil seal lip.

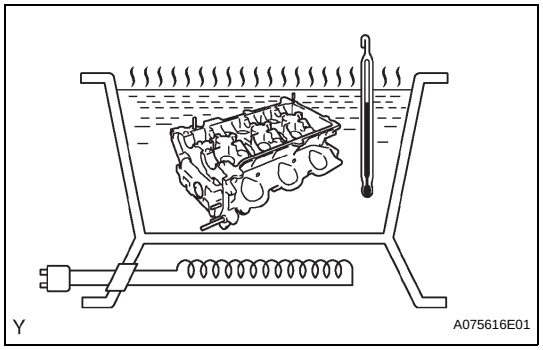

5. REMOVE VALVE GUIDE BUSH

(a) Gradually heat the cylinder head to 80 to 100°C (176 to 212°F).

EM

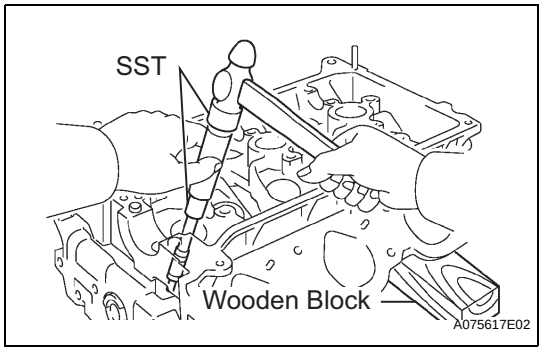

(b) Place the cylinder head on a wooden block.

(c) Using SST, tap out the valve guide bush.
SST 09201-10000, 09201-01055, 09950-70010 (09951-07100)

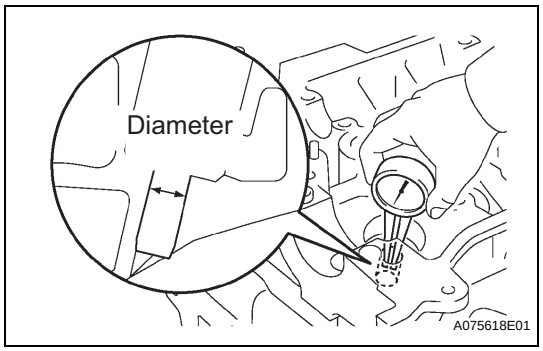

6. INSTALL VALVE GUIDE BUSH

(a) Using a caliper gauge, measure the bush bore diameter of the cylinder head.
Bush bore diameter:
10.295 to 10.315 mm (0.4053 to 0.4061 in.)
If the bush bore diameter of the cylinder head is greater than 10.315 mm (0.4061 in.), machine the bush bore to the dimension of 10.345 to 10.365 mm (0.4073 to 0.4081 in.).
Valve guide bush diameter

STD	**10.333 to 10.344 mm (0.4068 to 0.4072 in.)**
O/S 0.05	**10.383 to 10.394 mm (0.4088 to 0.4092 in.)**

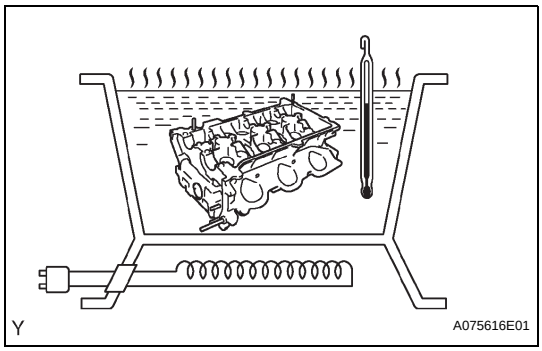

(b) Gradually heat the cylinder head to 80 to 100°C (176 to 212°F).

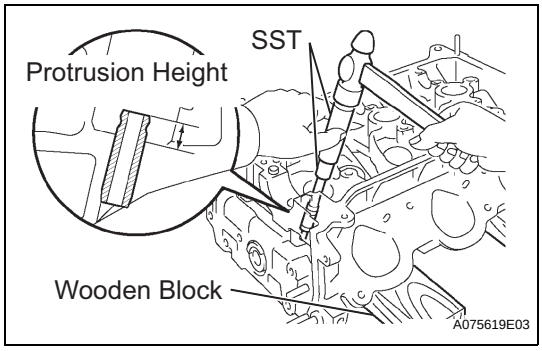

(c) Place the cylinder head on a wooden block.
(d) Using SST, tap in a new valve guide bush to the specified protrusion height.
SST 09201-10000, 09201-01055, 09950-70010 (09951-07100)
Protrusion height:
9.3 to 9.7 mm (0.366 to 0.382 in.)

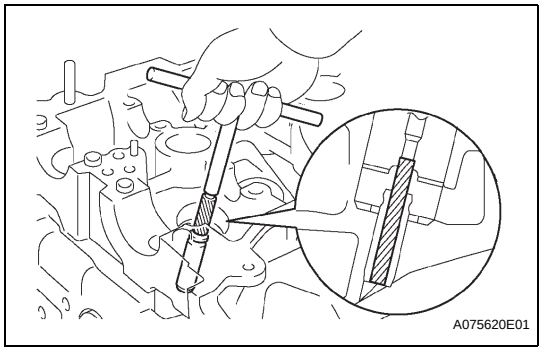

(e) Using a sharp 5.5 mm reamer, ream the valve guide bush to the standard specified clearance between the valve guide bush and valve stem.
Standard oil clearance:

Intake	**0.025 to 0.060 mm (0.0010 to 0.0024 in.)**
Exhaust	**0.030 to 0.065 mm (0.0012 to 0.0026 in.)**

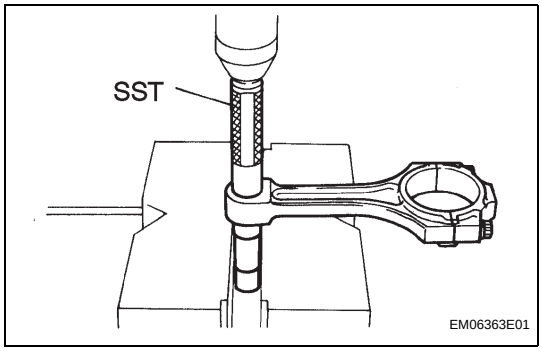

7. REMOVE CONNECTING ROD SMALL END BUSH
(a) Using SST and a press, press out the bushing.
SST 09222-30010

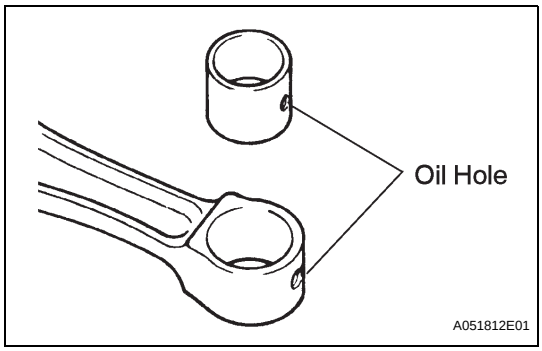

8. INSTALL CONNECTING ROD SMALL END BUSH
(a) Align the oil holes of a new bushing and the connecting rod.

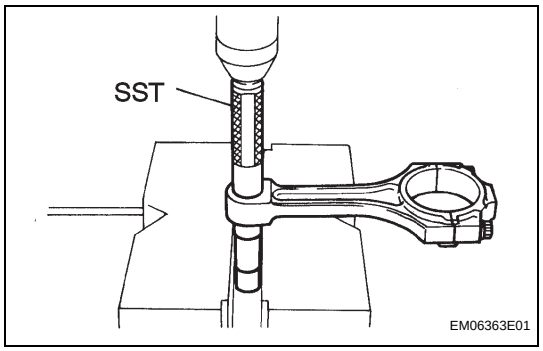

(b) Using SST and a press, press in the bushing.
SST 09222-30010

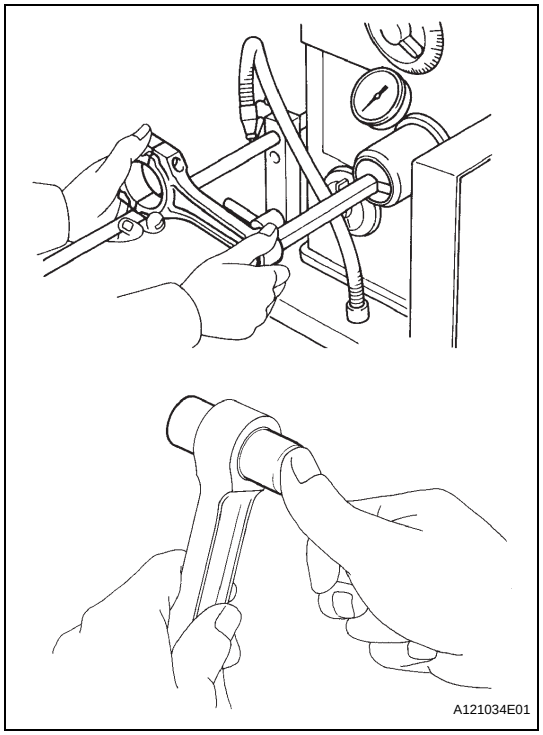

(c) Using a pin hole grinder, hone the bushing to the standard specified clearance between the bushing and piston pin.
Standard oil clearance:
0.005 to 0.011 mm (0.0002 to 0.0004 in.)
HINT:
Check the measurement at room temperature. Coat the piston pin with engine oil, and push it into the connecting rod with a thumb.

EM

REASSEMBLY

1. INSTALL STUD BOLT

(a) Install the stud bolts as shown in the illustration.

Torque: 11 N*m (112 kgf*cm, 8.1 ft.*lbf) for stud bolt A
4.5 N*m (46 kgf*cm, 40 in.*lbf) for stud bolt B

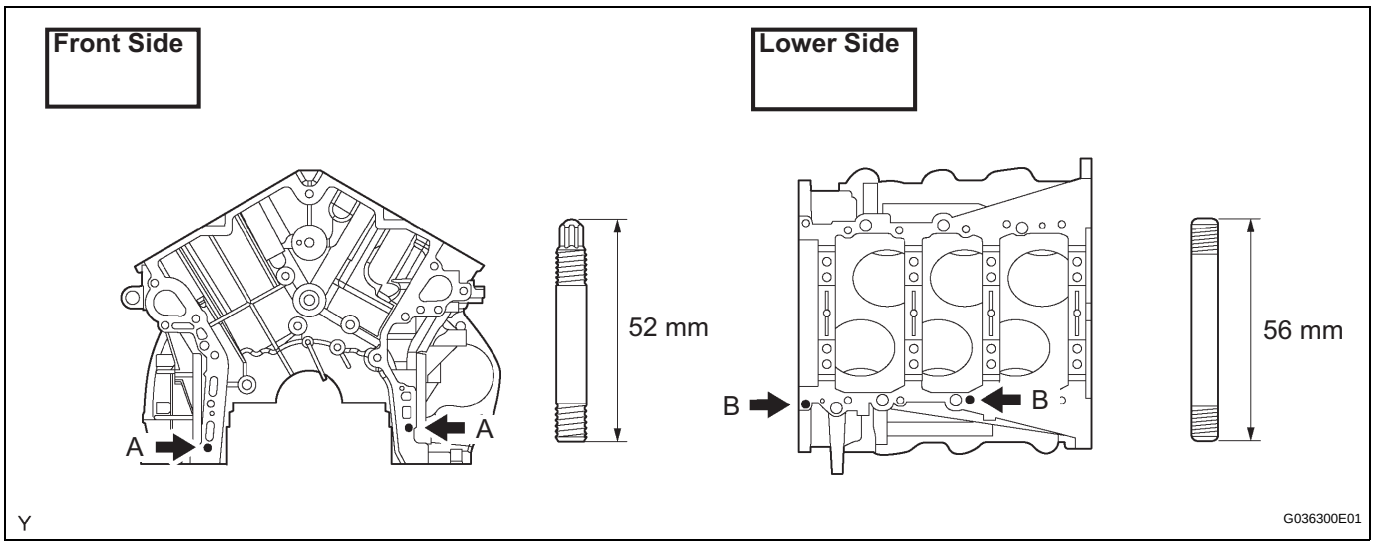

2. INSTALL STRAIGHT PIN

(a) Using a plastic-faced hammer, tap into the new straight pin.

Standard protrusion:
Pin A 22.5 to 23.5 mm (0.886 to 0.925 in.)
Pin B 10.5 to 11.5 mm (0.413 to 0.453 in.)
Pin C 8.5 to 9.5 mm (0.335 to 0.374 in.)
Pin D 5.5 to 6.5 mm (0.217 to 0.256 in.)

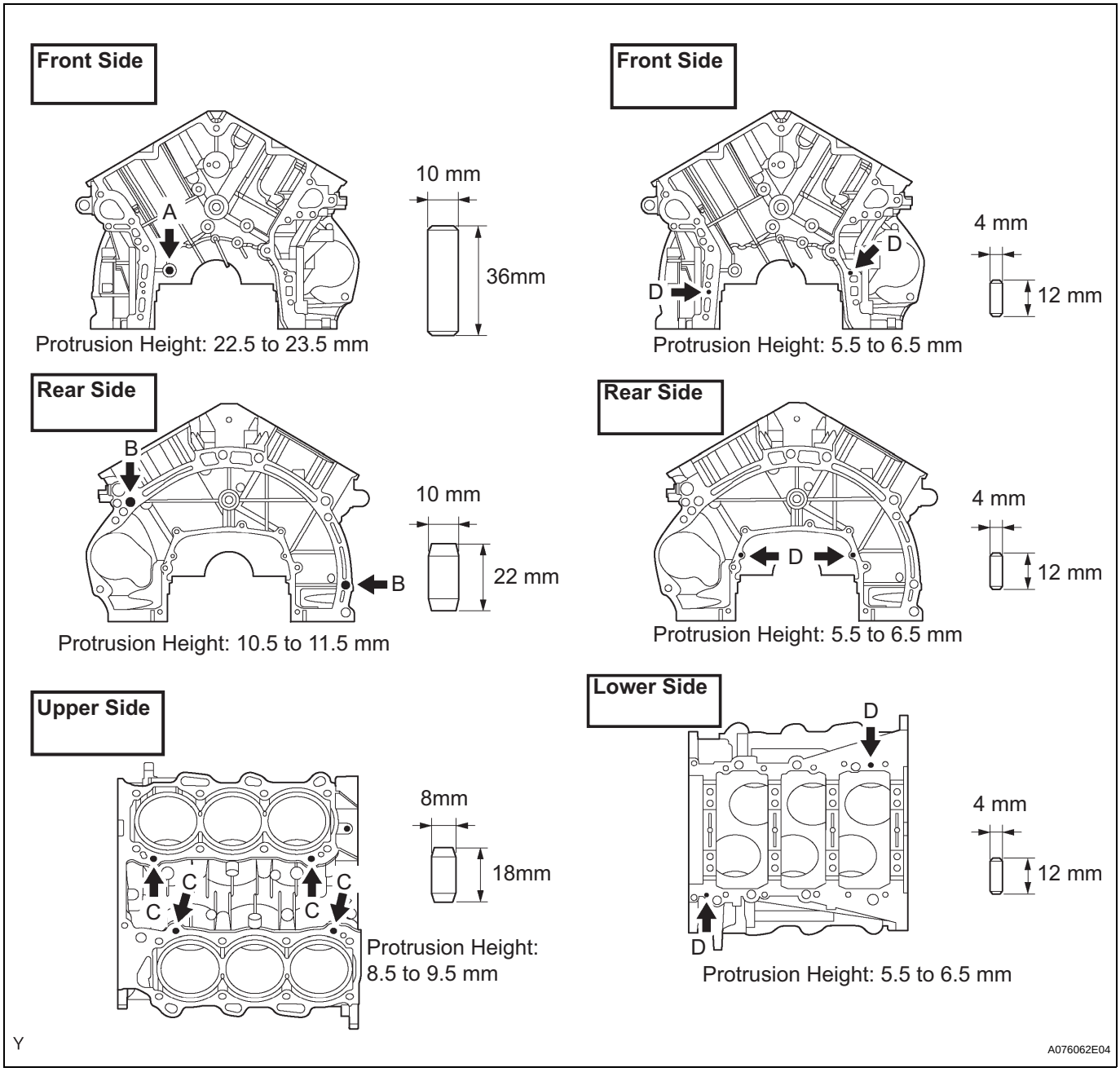

3. INSTALL TIGHT PLUG

(a) Apply adhesive around tight plugs.

Adhesive:

part No. 08833-00070, THREE BOND 1324 or equivalent.

(b) Using SST, install the tight plugs as shown in the illustration.

SST 09550-60010 (09951-00350), 09950-70010 (09951-07150)

Standard depth:

0.2 to 1.2 mm (0.008 to 0.047 in.)

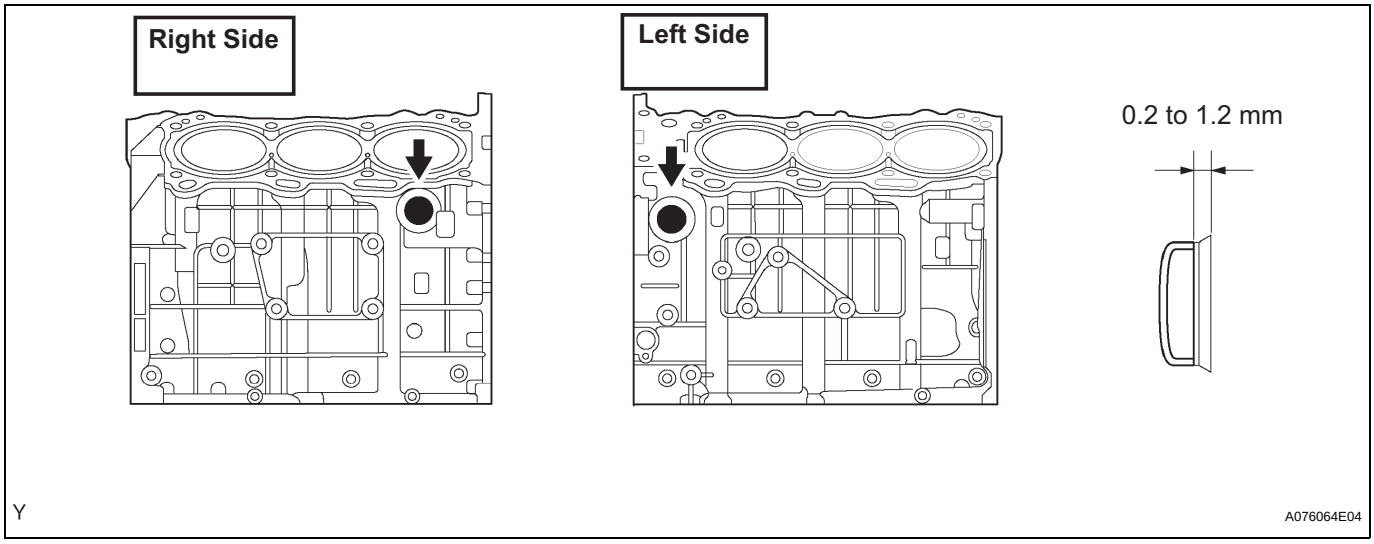

EM

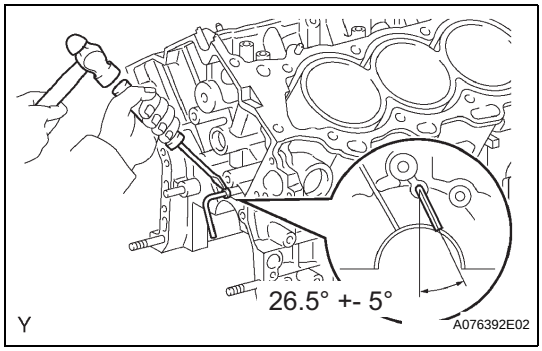

4. INSTALL OIL JET

(a) Using a screw driver and hammer, tap in a oil jet.

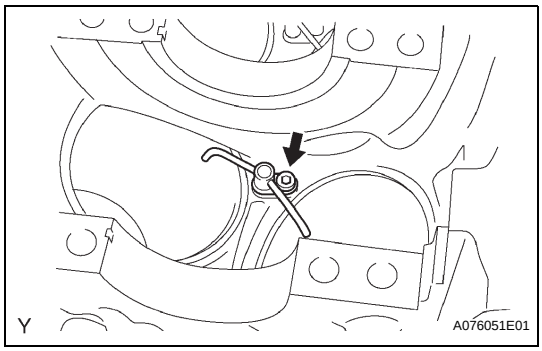

5. INSTALL NO.1 SUB-ASSEMBLY OIL NOZZLE

(a) Using a 5 mm socket hexagon wrench, install the 3 oil nozzles.
Torque: 9.0 N*m (92 kgf*cm, 80 in.*lbf)

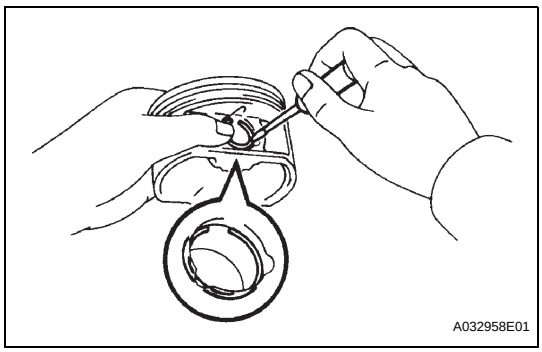

6. INSTALL HOLE SNAP RING

(a) Using a small screwdriver, install a new snap ring onto one side of the piston pin hole.
HINT:
Check that an end gap of the snap ring is not overlapped with the pin hole cutout portion of the piston.

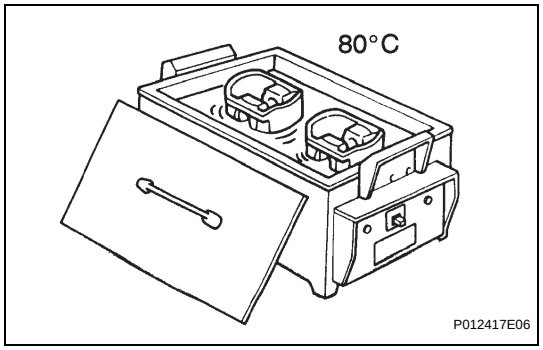

7. INSTALL WITH PIN PISTON SUB-ASSEMBLY

(a) Gradually heat the piston to about 80°C (176°F).

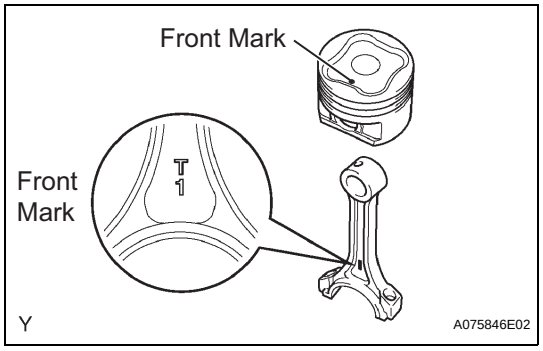

(b) Coat the piston pin with engine oil.

(c) Align the front marks of the piston and connecting rod, and push in the piston pin with thumb.

EM

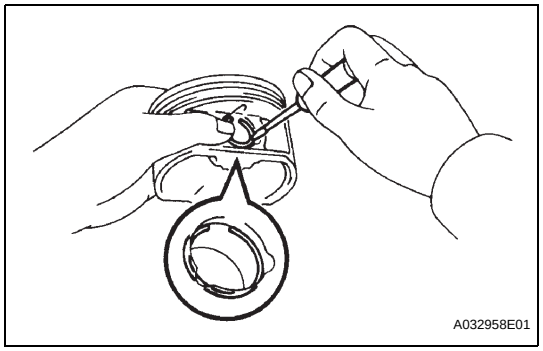

8. INSTALL HOLE SNAP RING

(a) Using a small screwdriver, install a new snap ring onto the other side of the piston pin hole.
HINT:
Make sure that the gap in the snap ring does not overlap with the pin hole cutout portion of the piston.

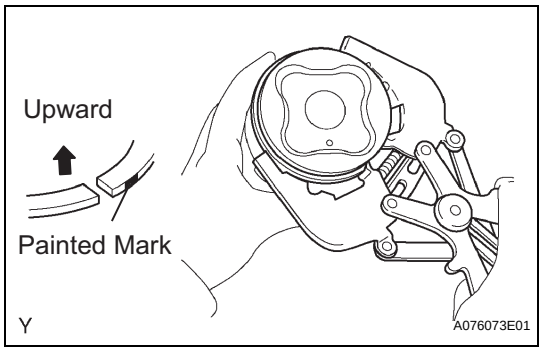

9. INSTALL PISTON RING SET

(a) Install the oil ring expander and 2 side rails by hand.

(b) Using a piston ring expander, install the 2 compression rings.
NOTICE:
Mark Install the compression ring No. 2 with the painted mark facing upward.

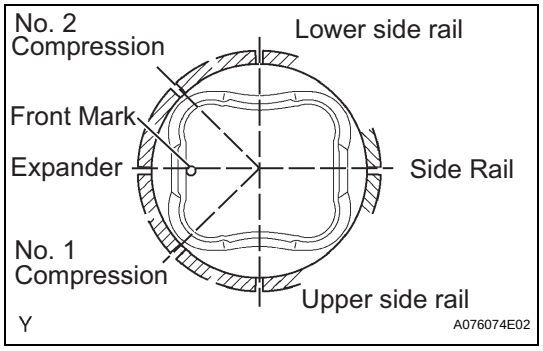

(c) Position the piston rings so that the ring ends are as shown.

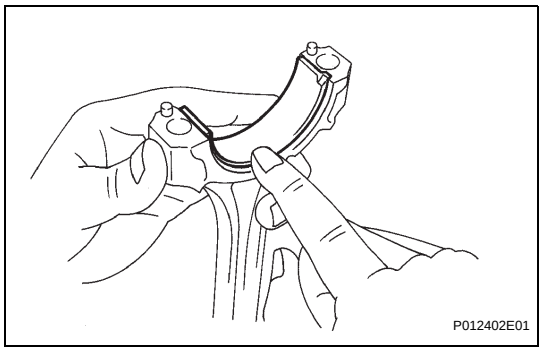

10. INSTALL CONNECTING ROD BEARING

(a) Align the bearing claw with the groove of the connecting rod or connecting cap.

NOTICE:

Clean the back side of the bearing and the bearing surface of the connecting rod and keep them free of oils and fats.

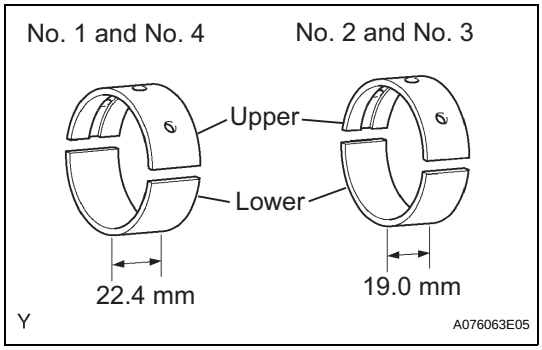

11. INSTALL CRANKSHAFT BEARING

HINT:

There are 2 types of main bearings with different widths (19.0 mm (0.748 in.) and 22.4 mm (0.882 in.)) for use in the inspection. Install the 22.4mm (0.882 in.) bearings in the No. 1 and No. 4 cylinder block journal positions with the main bearing cap. Install the 19.0 mm (0.748 in.) bearings in the No. 2 and No. 3 positions.

(a) Clean each main journal and bearing.

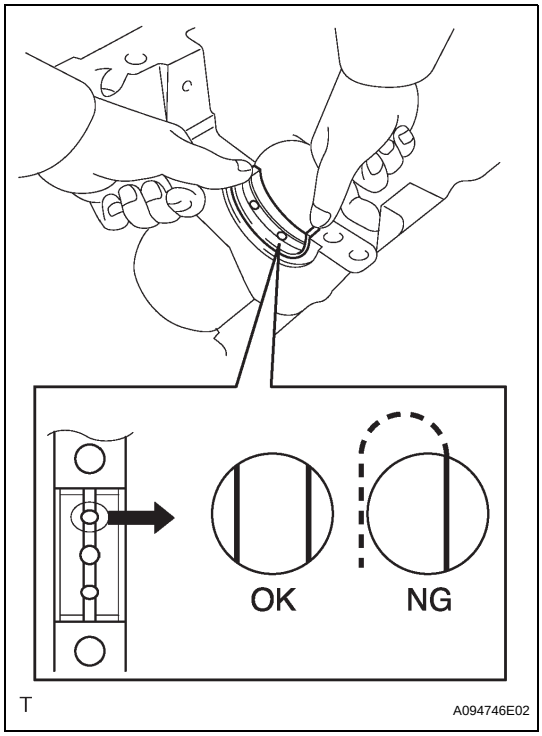

(b) Install the 4 upper bearings.

(1) Install the upper bearings near the center of the cylinder block.

NOTICE:

- **The width of the No. 1 and No. 4 journal bearings is different from that of the No. 2 and No. 3 journal bearings. Therefore, confirm whether it is the correct journal bearing prior to installation.**
- **Do not apply engine oil to the bearing installation surfaces of the cylinder block and the back side of the bearings.**
- **Check that the oil groove on the cylinder block can be seen through the oil supply holes of the upper bearing.**

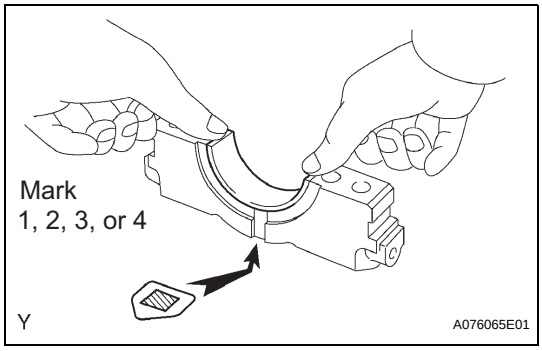

(c) Install the 4 lower bearings.

(1) Install the lower bearings near the center of the cylinder block.

NOTICE:

Do not apply engine oil to the bearing and its contact surface.

HINT:

A number marked on each main bearing cap indicates the installation position.

12. INSTALL CRANKSHAFT

(a) Apply engine oil to the upper bearing and install the crankshaft onto the cylinder block.

(b) Install the 2 upper thrust washers onto the No. 2 journal position of the cylinder block.
   (1) Push the crankshaft toward the front (rear) side.
   (2) Install the 2 upper thrust washers with the oil grooves facing outward.

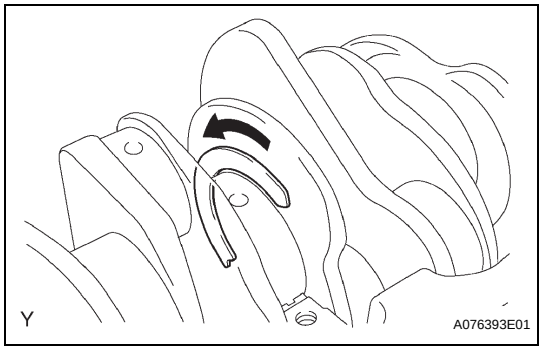

(c) Install the 2 lower thrust washers onto the No. 2 bearing cap with the grooves facing outward.

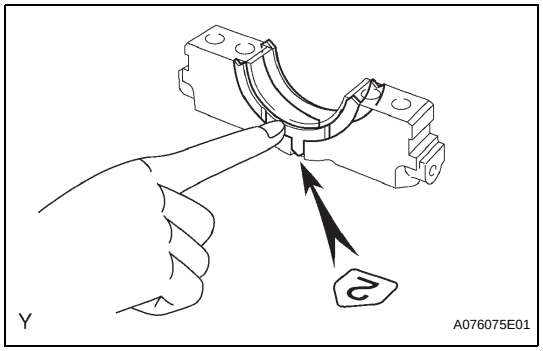

(d) Examine the front marks and numbers, check the sequence number is as shown in the illustration and install the bearing caps on the cylinder block.

(e) Apply a light coat of engine oil to the threads of bearing cap bolts.

(f) Temporarily install the 8 main bearing cap bolts in the inside positions.

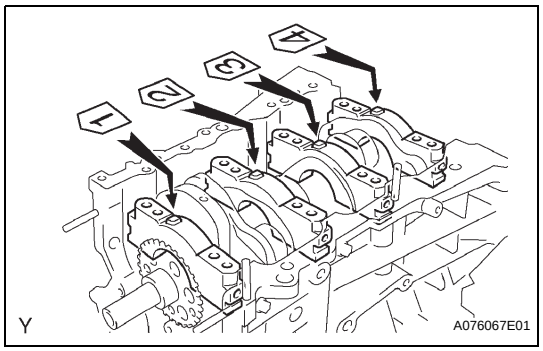

(g) Install the main bearing caps. Tighten the 2 bolts for each bearing cap until the clearance between the bearing cap and the cylinder block is under 6 mm (0.23 in.).

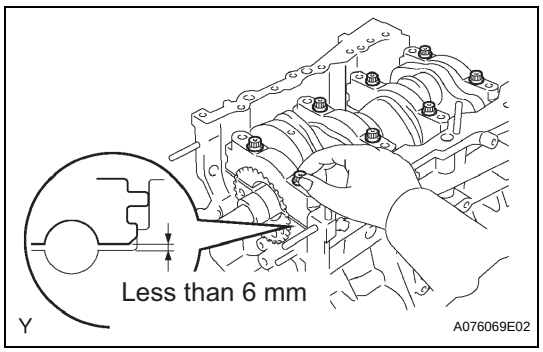

EM

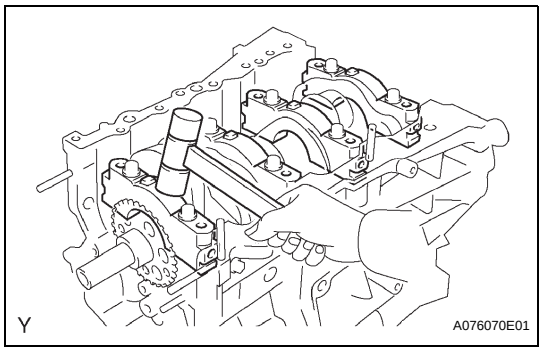

(h) Using a plastic-faced hammer, lightly tap the bearing cap to ensure a proper fit.
(i) Apply a light coat of engine oil to the threads of main bearing cap bolts.

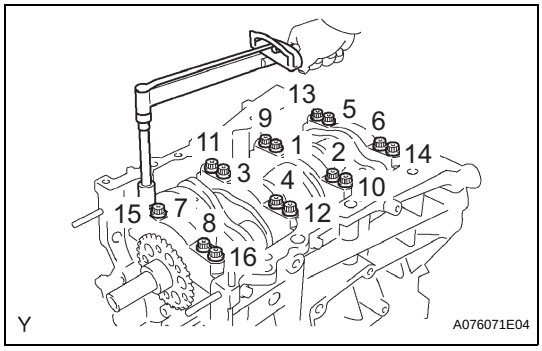

(j) Install the 16 main bearing cap bolts. Using several steps, tighten the bolts uniformly in the sequence shown in the illustration.
Torque: 61 N*m (622 kgf*cm, 45 ft.*lbf)

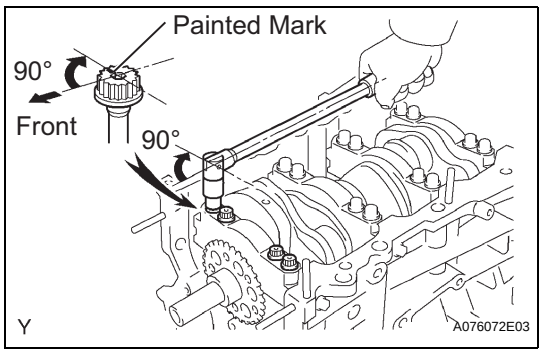

(k) Mark the front side of the bearing cap bolts with paint.
(l) Retighten the bearing cap bolts 90° in the sequence as shown.
(m) Check that the painted mark is now at a 90° angle from the front.
(n) Check that the crankshaft turns smoothly.

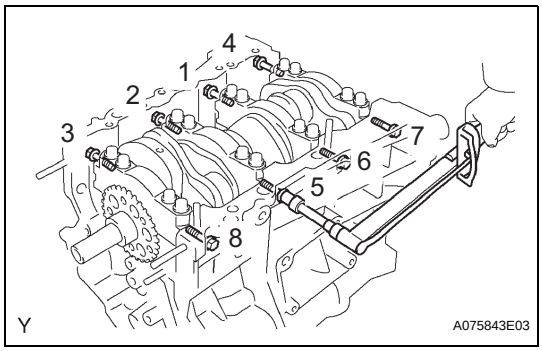

(o) Using several steps, tighten the 8 main bearing cap bolts uniformly in the sequence shown in the illustration.
Torque: 25 N*m (255 kgf*cm, 18 ft.*lbf)

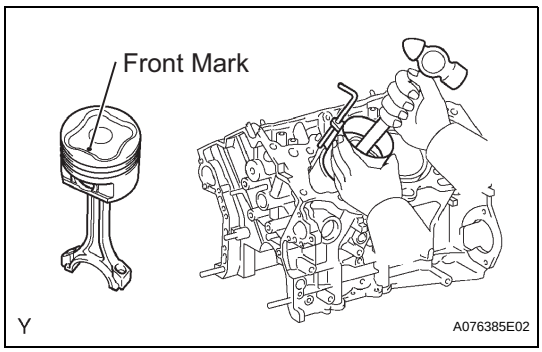

13. INSTALL PISTON SUB-ASSEMBLY WITH CONNECTIONG ROD

(a) Apply engine oil to the cylinder walls, pistons, and surfaces of connecting rod bearings.
(b) Check the position of the piston ring ends.

(c) Using a piston ring compressor, push the correct number piston and connecting rod into each cylinder with the front mark of the piston facing forward.
NOTICE:
- **Clean the back side of the bearing and the bearing surface of the connecting rod cap and keep them free of oils and fats.**
- **Match the numbered connecting rod cap with the connecting rod.**

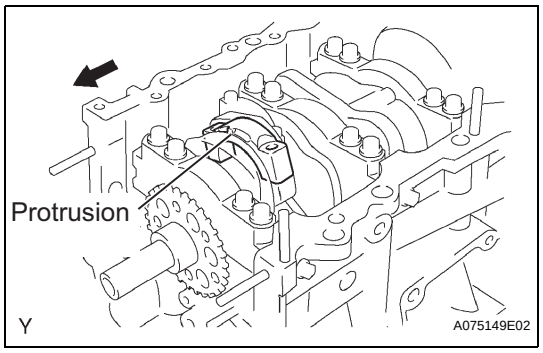

(d) Check that the protrusion of the connecting rod cap is facing in the correct direction.
(e) Apply a light coat of engine oil to the threads of the connecting rod cap bolts.

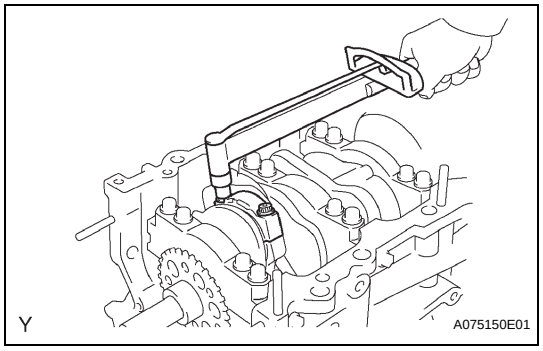

(f) Using SST, tighten the bolts alternately to the specified torque.
Torque: 25 N*m (250 kgf*cm, 18 ft.*lbf)

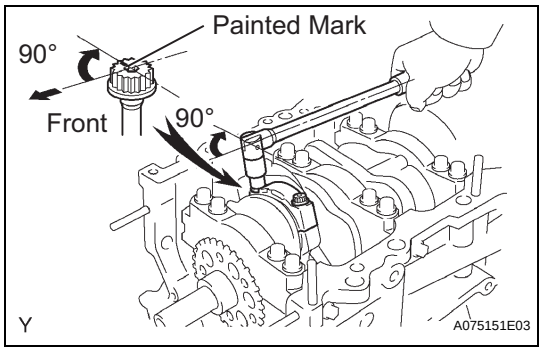

(g) Mark the front side of the each connecting cap bolt with paint.
(h) Retighten the cap bolts 90° as shown.
(i) Check that the crankshaft turns smoothly.

14. INSTALL RING PIN

(a) Using a plastic-faced hammer, tap in the new ring pins to the specified protrusion height.
Specified protrusion height:
2.7 to 3.3 mm (0.106 to 0.130 in.)

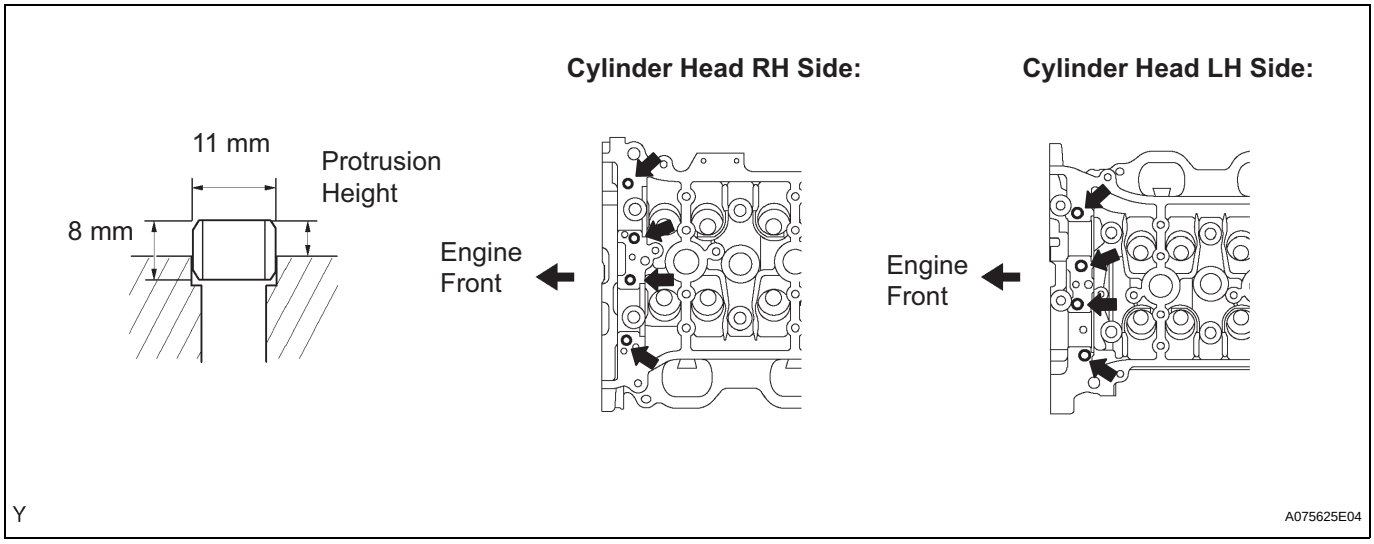

EM

15. INSTALL STRAIGHT PIN

(a) Using a plastic-faced hammer, tap in the new straight pins to the specified protrusion height.
Specified protrusion height

A	**17.5 to 19.5 mm (0.689 to 0.768 in.)**
B	**7.5 to 8.5 mm (0.295 to 0.335 in.)**
C	**7.0 to 9.0 mm (0.276 to 0.354 in.)**

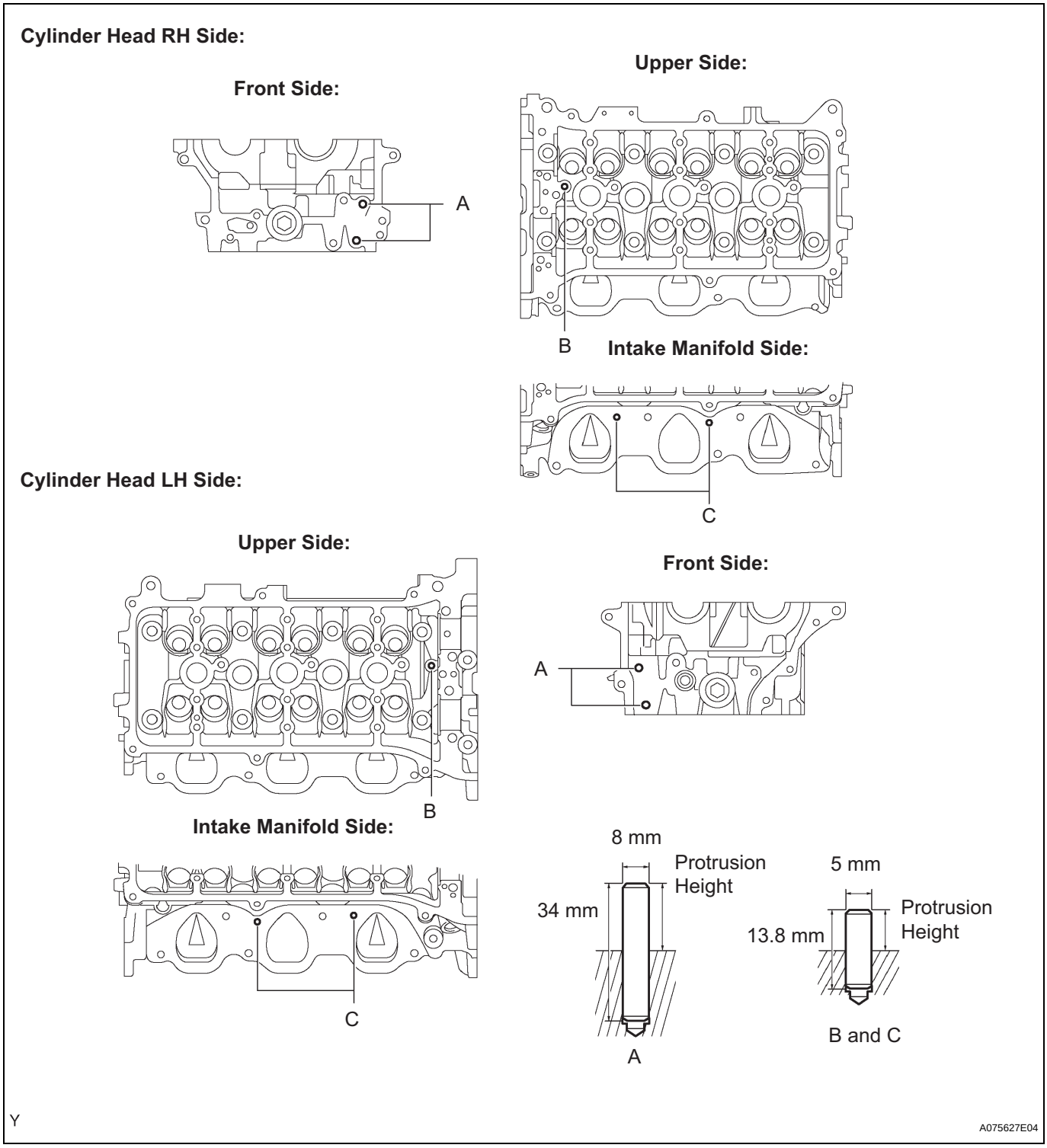

EM

16. INSTALL STUD BOLT

(a) Using the torx socket wrenchs E5 and E7, install the stud bolts.

Torque: 4.0 N*m (41 kgf*cm, 35 in.*lbf) for stud bolt A
9.0 N*m (92 kgf*cm, 80 in.*lbf) for stud bolt B
4.0 N*m (41 kgf*cm, 35 in.*lbf) for stud bolt C

Cylinder Head RH Side:

Rear Side:

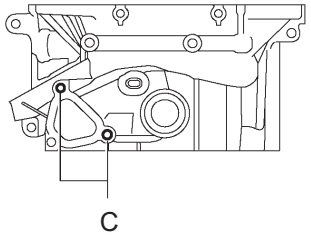

Upper Side:

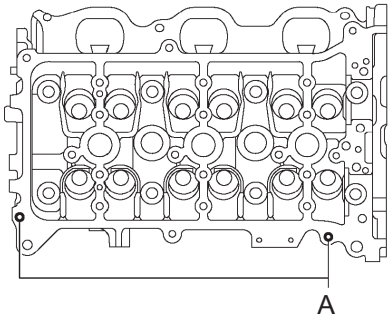

Exhaust Manifold Side:

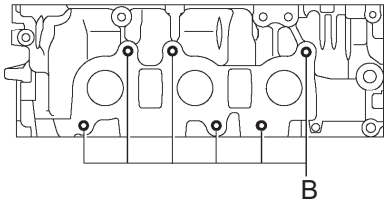

Cylinder Head LH Side:

Upper Side:

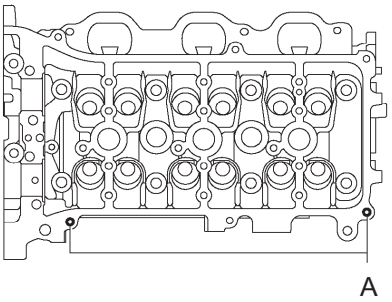

Rear Side:

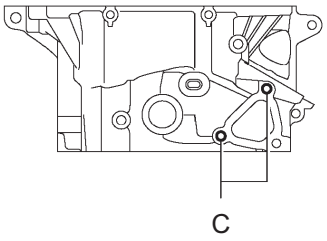

Exhaust Manifold Side:

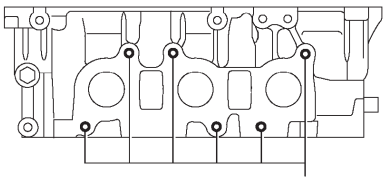

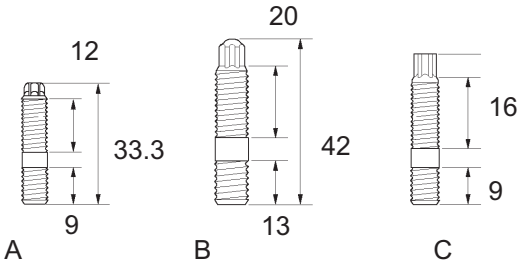

Y

G036299E01

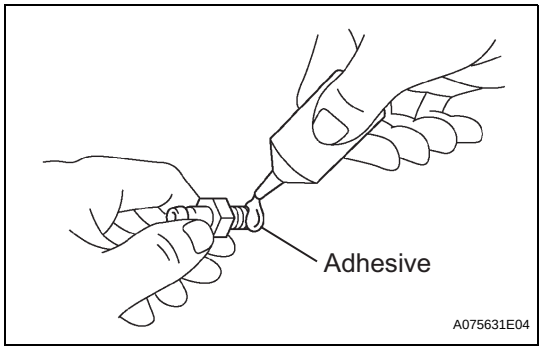

17. INSTALL UNION

(a) Apply adhesive to 2 or 3 threads of the bolt end.
Adhesive:
Part No. 08833-00070, THREE BOND 1324 or equivalent

(b) Using a deep socket wrench 12, install the unions.
Torque: 15 N*m (150 kgf*cm, 11 ft.*lbf)

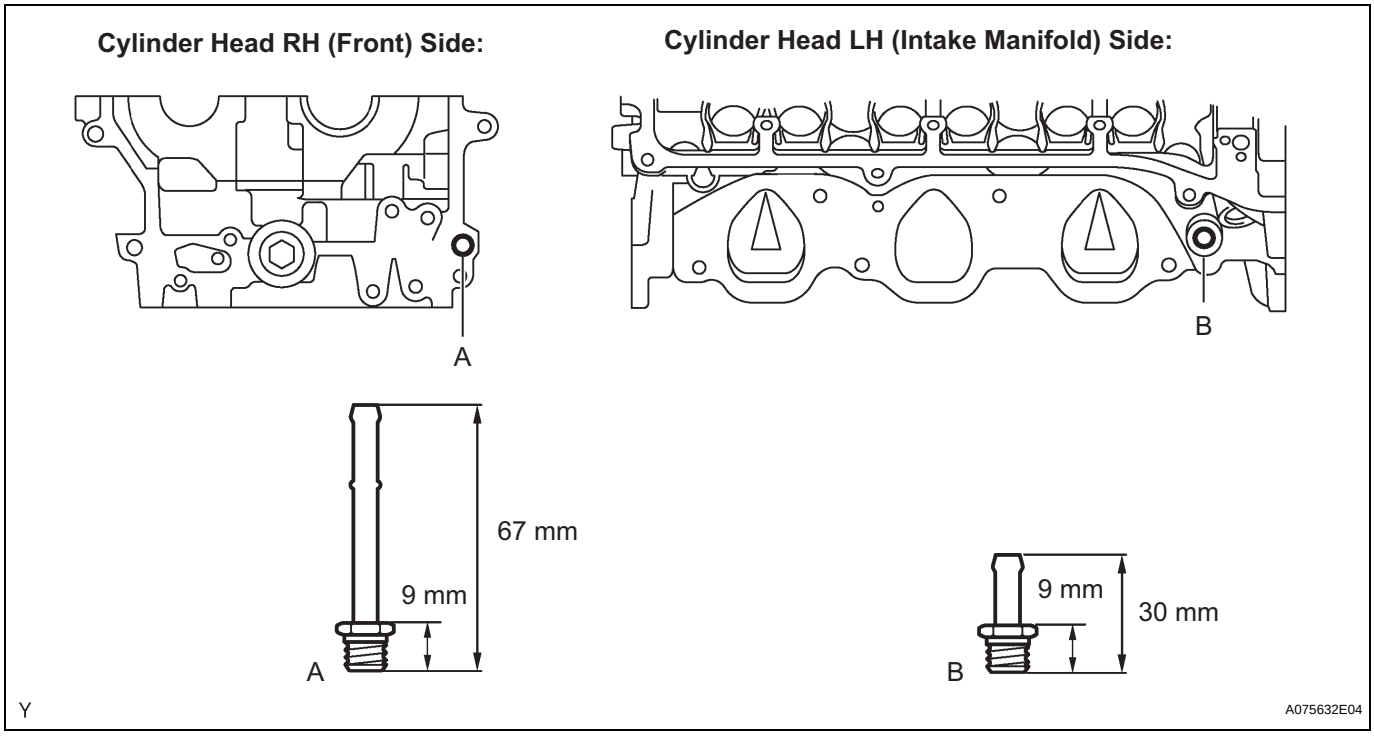

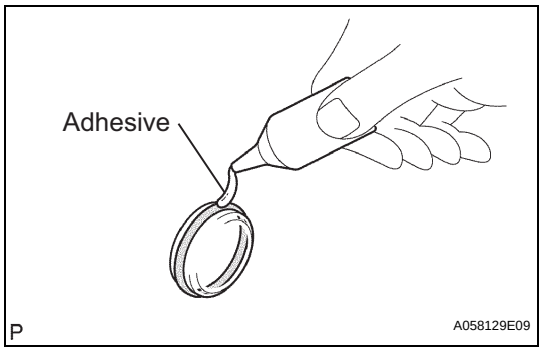

18. INSTALL TIGHT PLUG

(a) Apply adhesive around the tight plug.

(b) Using SST, tap in the tight plugs to the specified depth.

SST 09950-60010 (09951-00250), 09950-70010 (09951-07150)

Specified depth:

1.5 mm (0.059 in.)

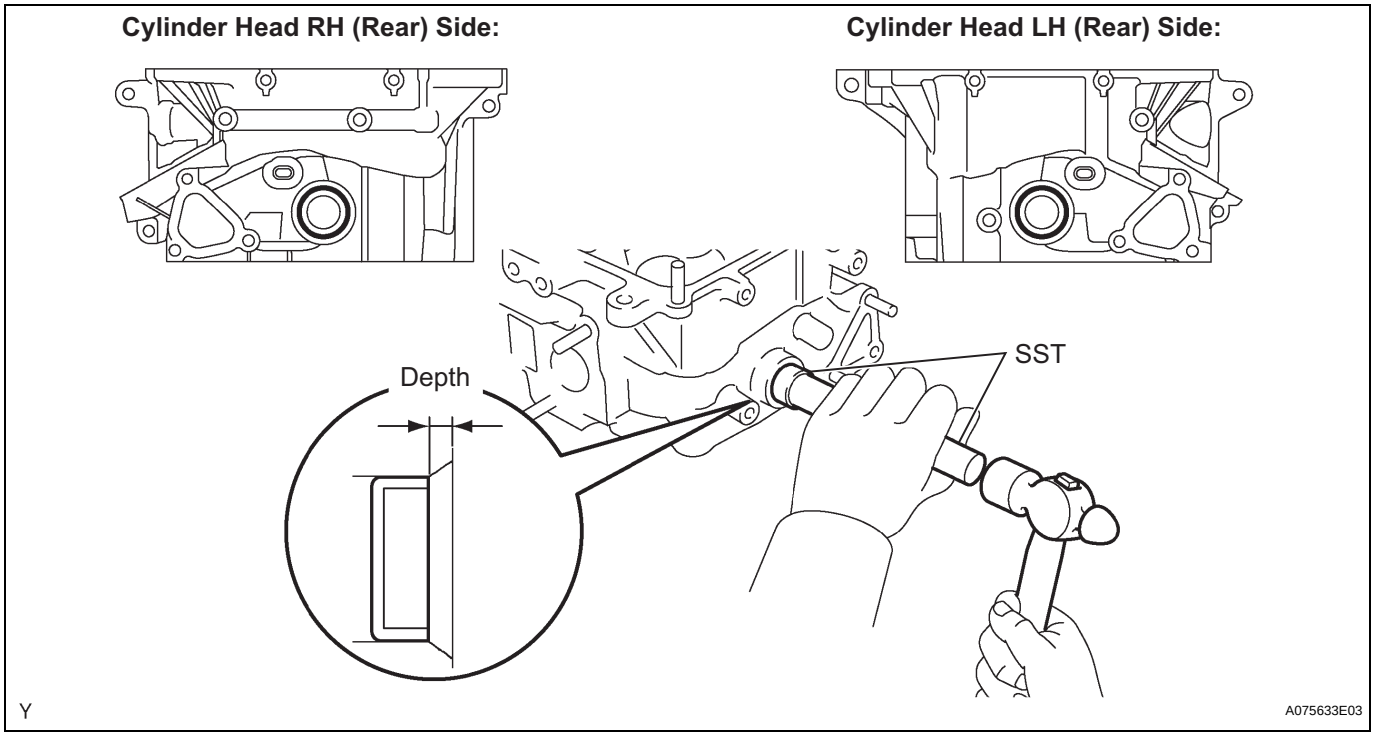

19. INSTALL WITH HEAD STRAIGHT SCREW PLUG

(a) Using a straight hexagon wrench 14, install a new gasket and straight screw plug.
Torque: 80 N*m (816 kgf*cm, 59 ft.*lbf)

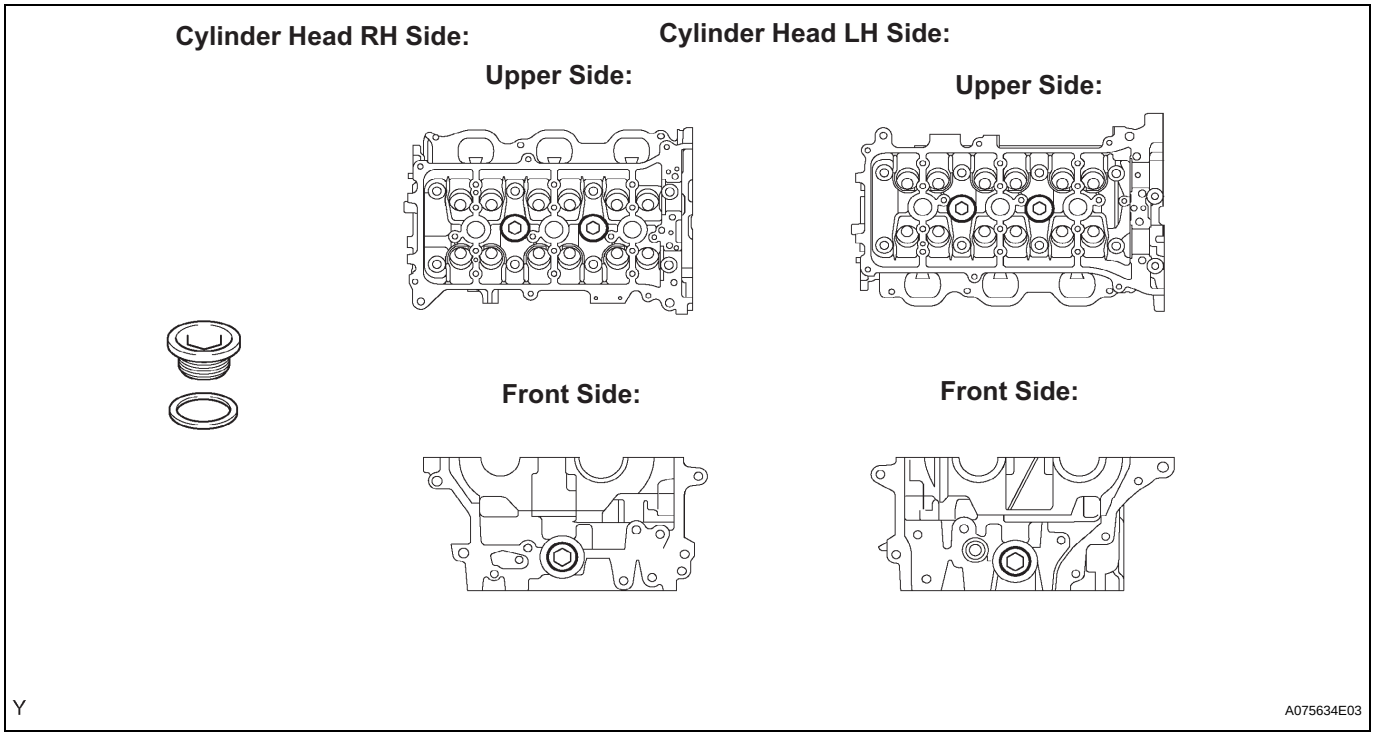

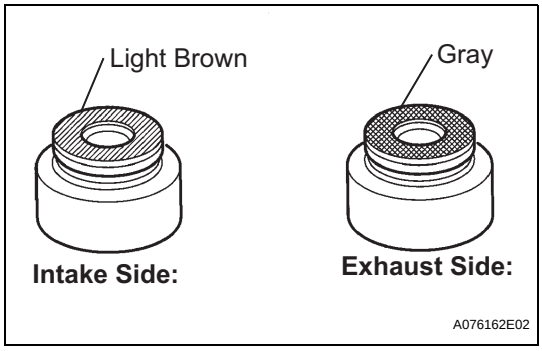

20. INSTALL VALVE STEM OIL O SEAL OR RING

HINT:
The intake valve stem oil seal is light brown and the exhaust valve stem oil seal is gray.

(a) Apply a light coat of engine oil to the valve guide bush.

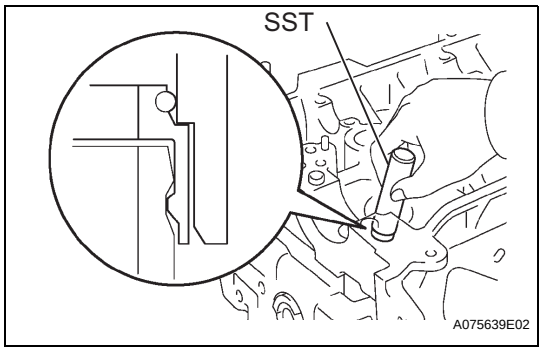

(b) Using SST, push in a new valve stem oil seal.
SST 09201-41020

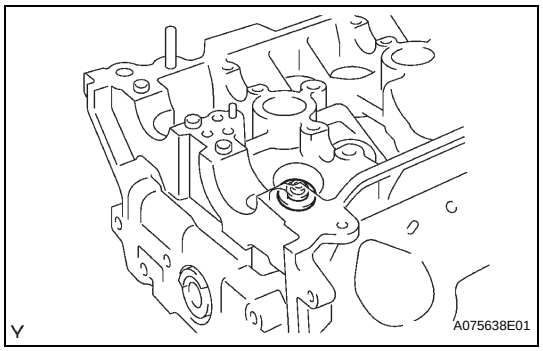

21. INSTALL VALVE SPRING SEAT

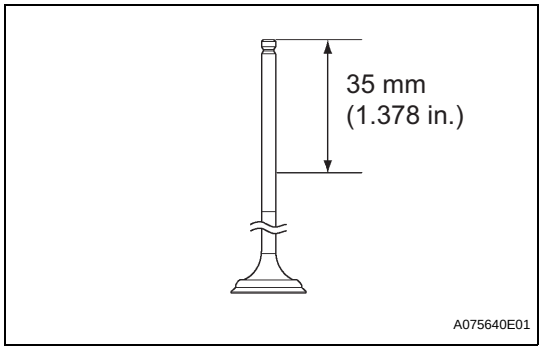

22. INSTALL VALVE

(a) Apply the engine oil to the valve as shown in the illustration.

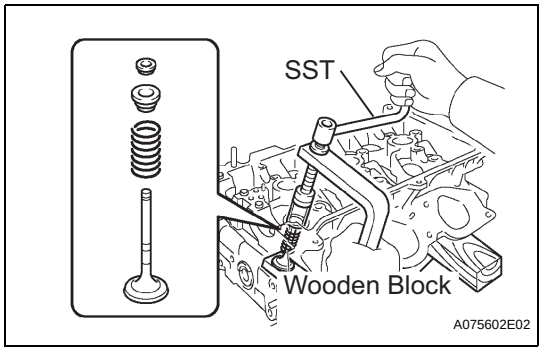

(b) Place the cylinder head on a wooden block.
(c) Install the valve, inner compression spring and valve spring retainer.
(d) Using SST, compress the inner compression spring and place the 2 valve spring retainer rocks around the valve stem.
SST 09202-70020 (09202-00010)

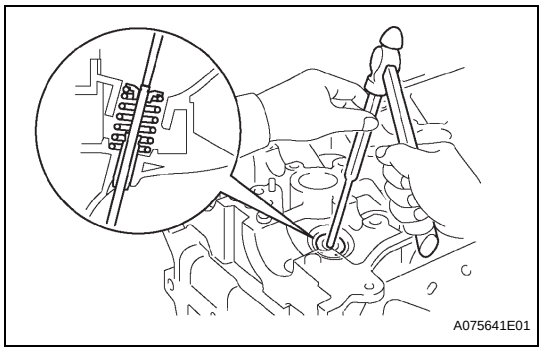

(e) Using a pin punch 5, lightly tap the valve stem tip to ensure a proper fit.
NOTICE:
Be careful not to damage the valve stem tip.

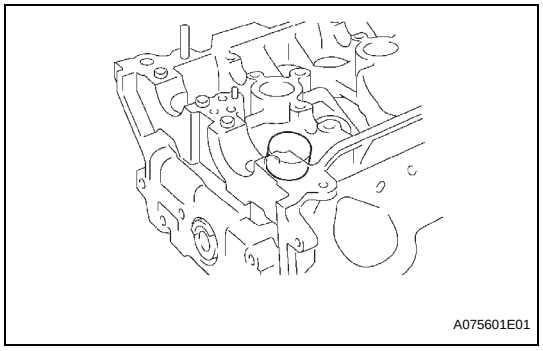

23. INSTALL VALVE LIFTER

(a) Apply the engine oil to the valve stem end and valve lifter, and install the valve lifter onto the valve stem.
(b) Check that the valve lifter rotates smoothly by hand.

24. INSTALL REAR ENGINE OIL SEAL RETAINER

(a) Remove any old packing material and be careful not to drop any oil on the contact surfaces of the oil seal retainer and cylinder block.

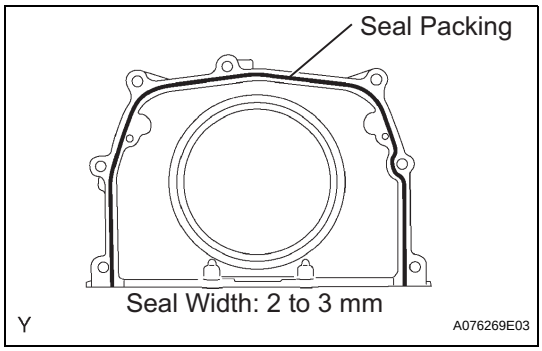

(b) Apply a continuous bead of seal packing (diameter 2 to 3 mm (0.08 to 0.12 in.)) to the oil seal retainer as shown in the illustration.
Seal packing:
Part No. 08826-00080 or equivalent
NOTICE:
Parts must be assembled within 3 minutes of application. Otherwise, the seal packing must be removed and reapplied.

(c) Install the oil seal retainer with the 5 bolts and 2 nuts.
Torque: 9.0 N*m (92 kgf*cm, 80 in.*lbf)
10 N*m (102 kgf*cm, 7.4 ft.*lbf)

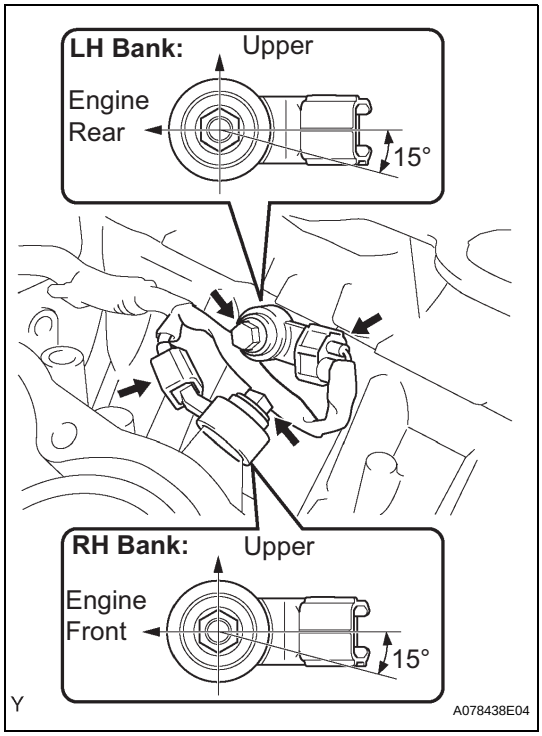

25. INSTALL KNOCK CONTROL SENSOR

(a) Install the 2 knock sensors with the 2 bolts as shown in the illustration.
Torque: 20 N*m (204 kgf*cm, 15 ft.*lbf)

(b) Connect the knock sensor connectors.

(c) Connect the knock sensor wire.

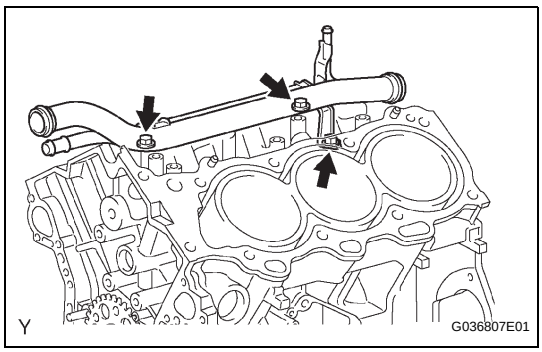

26. INSTALL NO.1 WATER OUTLET PIPE

(a) Install the water outlet pipe with the 3 bolts.
Torque: 10 N*m (102 kgf*cm, 7.4 ft.*lbf)

27. INSTALL CYLINDER HEAD GASKET

(a) Remove any old packing material and be careful not to drop any oil on the contact surfaces of the cylinder head and cylinder block.

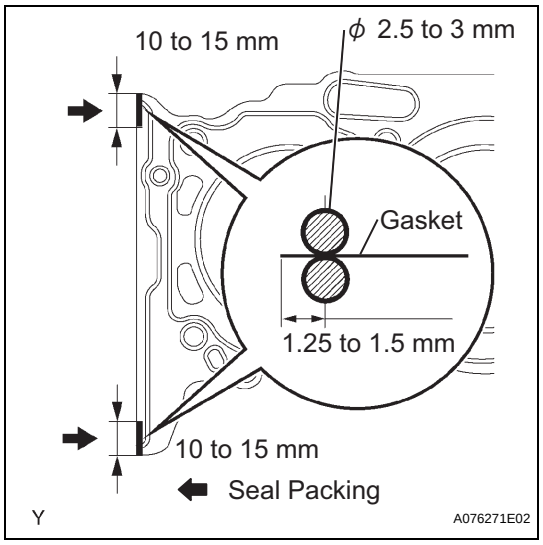

(b) Apply a continuous bead of seal packing (diameter 2.5 to 3 mm (0.098 to 0.118 in.)) to a new cylinder head gasket as shown in the illustration.
Seal packing:
Part No. 08826-00080 or equivalent
NOTICE:
Install the cylinder head within 3 minutes of applying the seal packing. After installation, cylinder head bolts must be tightened within 15 minutes. Otherwise, the seal packing must be removed and reapplied.

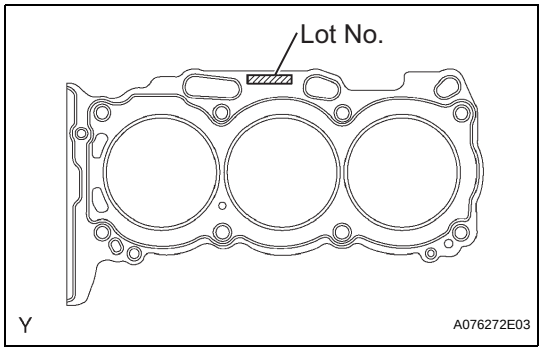

(c) Place the cylinder head gasket on the cylinder block surface with the Lot No. stamp upward.
NOTICE:
- **Be careful of the installation direction.**
- **Place the cylinder head carefully in order not to damage the gasket with the bottom part of the head.**

EM

28. INSTALL CYLINDER HEAD SUB-ASSEMBLY

(a) Place the RH cylinder head on the cylinder head gasket.

(b) Install the 8 cylinder head bolts.
HINT:
- The cylinder head bolts are tightened in 2 successive steps (steps (3) and (5)).
- If any cylinder head bolts are broken or deformed, replace them.

(1) Apply a light coat of engine oil to the threads and under the heads of the cylinder head bolts.

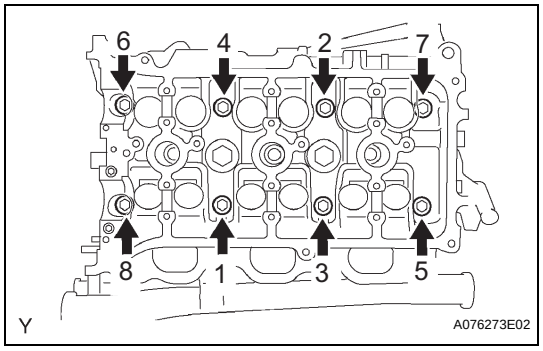

(2) Using several steps, uniformly install and tighten the 10 cylinder head bolts and plate washers with a bi-hexagon wrench 10 mm in the sequence shown in the illustration.
Torque: 36 N*m (367 kgf*cm, 27 ft.*lbf)
If any cylinder head bolts do not meet the torque specification, replace them.
NOTICE:
Do not drop the washers into the cylinder head.

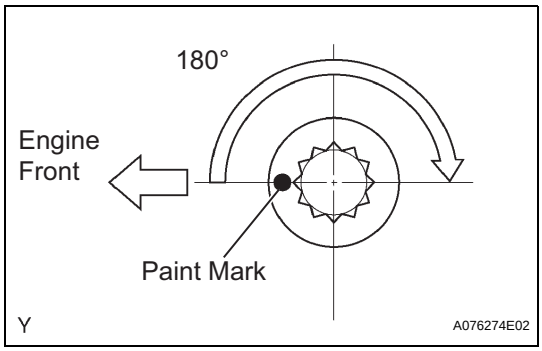

(3) Mark the front of the cylinder head bolt with paint.
(4) Retighten the cylinder head bolts by 180° as shown.
(5) Check that the painted marks are now at 180° from the engine front.

29. INSTALL NO.2 CYLINDER HEAD GASKET

(a) Remove any old packing material and be careful not to drop any oil on the contact surfaces of the cylinder head and cylinder block.

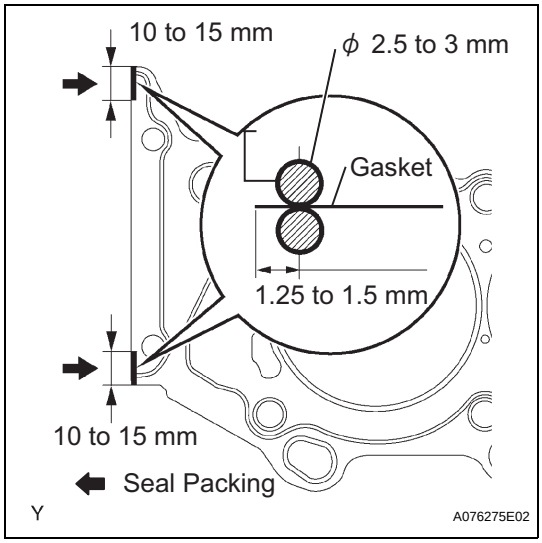

(b) Apply a continuous bead of seal packing (Diameter 2.5 to 3 mm (0.098 to 0.118 in.)) to a new cylinder head gasket as shown in the illustration.
Seal packing:
Part No. 08826-00080 or equivalent
NOTICE:
Install the cylinder head within 3 minutes of applying the seal packing. After installation, cylinder head bolts must be tightened within 15 minutes. Otherwise, the seal packing must be removed and reapplied.

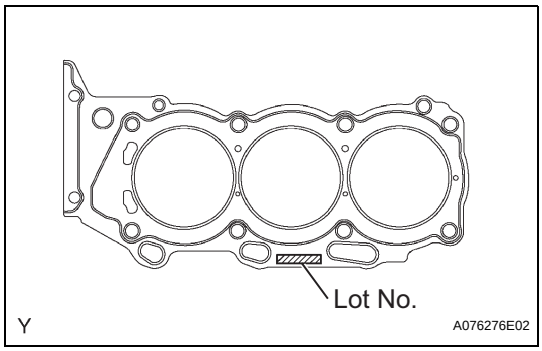

(c) Place the cylinder head gasket on the cylinder block surface with the Lot No. stamp upward.
NOTICE:
- **Be careful of the installation direction.**
- **Place the cylinder head carefully in order not to damage the gasket with the bottom part of the head.**

30. INSTALL CYLINDER HEAD LH

(a) Place the LH cylinder head on the cylinder head gasket.
(b) Install the 8 cylinder head bolts.
HINT:
- The cylinder head bolts are tightened in 2 successive steps (steps (3) and (5)).
- If any cylinder head bolts are broken or deformed, replace them.

(1) Apply a light coat of engine oil to the threads and under the heads of the cylinder head bolts.

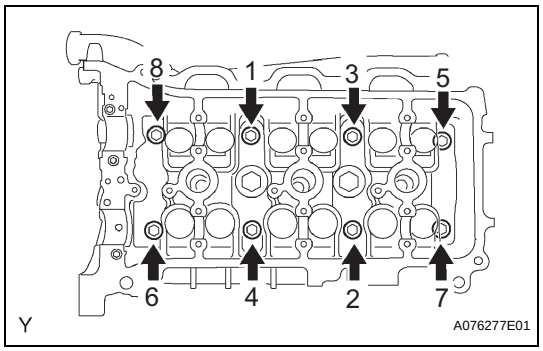

(2) Using several steps, uniformly install and tighten the 8 cylinder head bolts and plate washers with a bi-hexagon wrench 10 mm in the sequence shown in the illustration.
Torque: 36 N*m (367 kgf*cm, 27 ft.*lbf)
If any cylinder head bolts do not meet the torque specification, replace them.
NOTICE:
Do not drop the washers into the cylinder head.

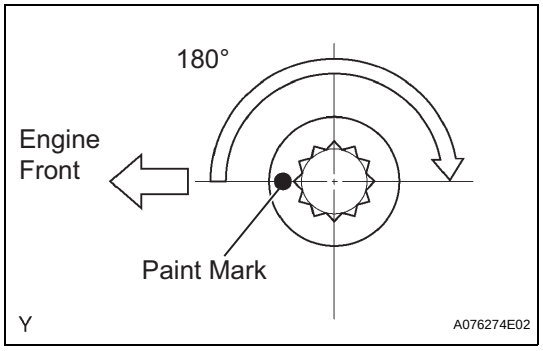

(3) Mark the front of the cylinder head bolt with paint.
(4) Retighten the cylinder head bolts by 180° as shown.
(5) Check that the painted marks are now at 180° from the engine front.

EM

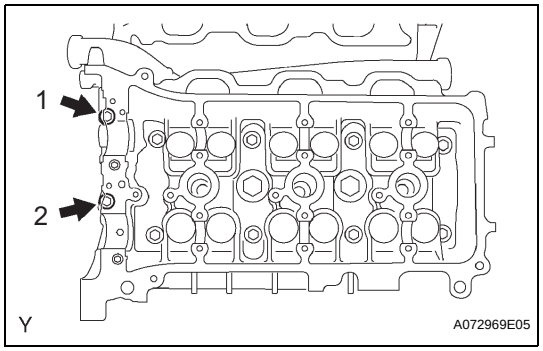

(c) Install the 2 cylinder head bolts.
(1) Apply a light coat of engine oil to the threads of the cylinder head bolts.
(2) Using several steps, uniformly install and tighten the 10 cylinder head bolts and plate washers with a bi-hexagon wrench 10 mm in the sequence shown in the illustration.
Torque: 30 N*m (306 kgf*cm, 22 ft.*lbf)

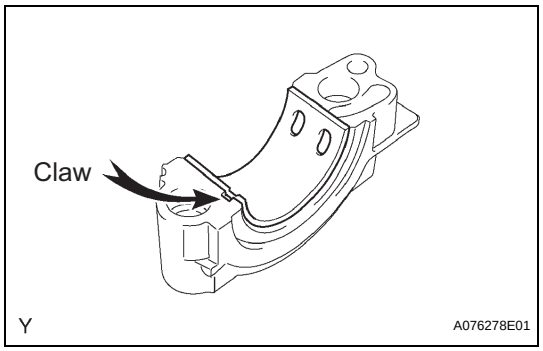

31. INSTALL NO.1 CAMSHAFT BEARING
(a) Align the bearing claw with the claw groove of the bearing cap, and push in the camshaft bearing.
NOTICE:
- **Install the bearing while aligning it with the oil hole in the bearing cap.**
- **Clean the back side of the bearing and the surface of the bearing cap and keep them free of oils and fats.**

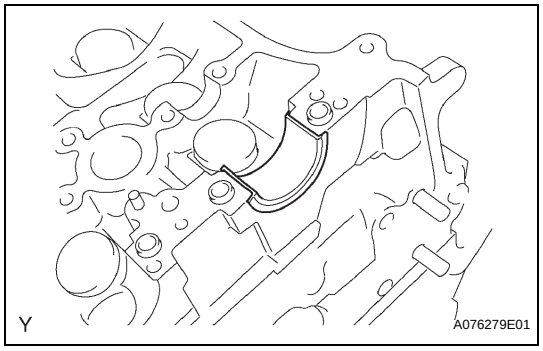

32. INSTALL NO.2 CAMSHAFT BEARING
(a) Install camshaft bearing No. 2 onto the cylinder head.
NOTICE:
Clean the back side of the bearing and the bearing surface of the cylinder head and keep them free of oils and fats.

33. INSTALL CAMSHAFTS

NOTICE:

Keep the camshaft level while it is being removed. The camshaft thrust clearance is very small and failing to keep it level could crack or damage the cylinder head journal surface, which receives the thrust. This could subsequently lead the camshaft to seize or break. Perform the following steps to avoid such problems.

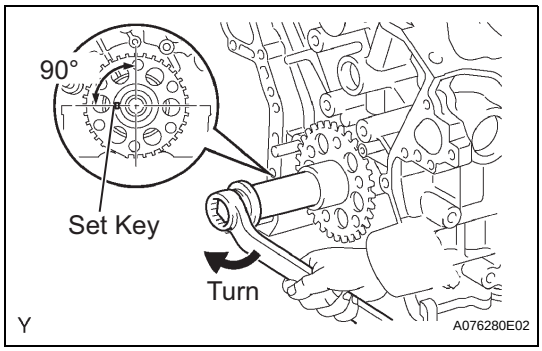

(a) Set the crankshaft position.

(1) Using the crankshaft pulley set bolt, turn the crankshaft, and set the crankshaft set key in the left horizontal position as indicated.

NOTICE:

Setting the crankshaft at the wrong angle could cause the piston head and valve head to come into contact with each other when the camshaft is installed. This could cause damage, so always set the camshaft at the correct angle.

(b) Apply new engine oil to the thrust portion and journal of the camshafts.

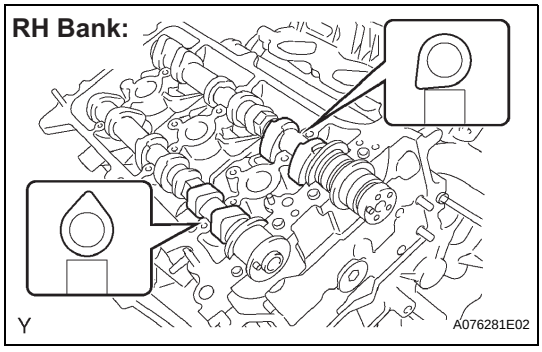

(c) Install the camshaft of the RH bank.

(1) Place the 2 camshafts on the RH cylinder head with the No. 1 cam lobes facing as shown the illustration.

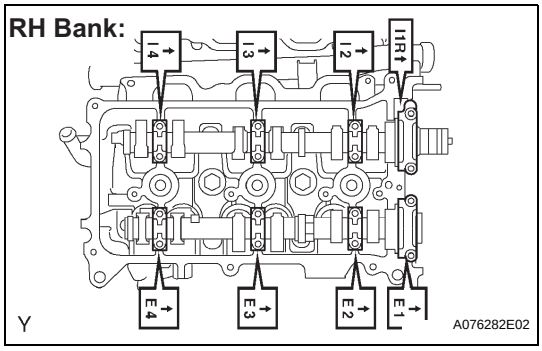

(2) Install the 8 bearing caps in their correct locations.

(3) Apply a light coat of engine oil to the threads of the bearing cap bolts.

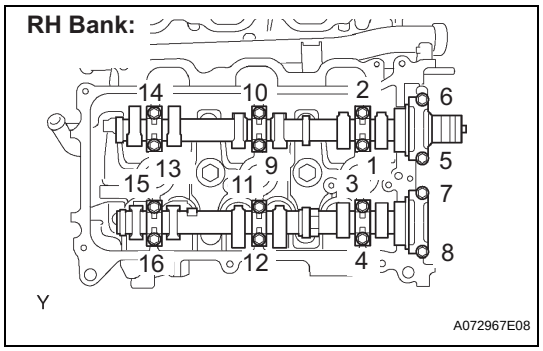

(4) Using several steps, uniformly tighten the 16 bearing cap bolts in the sequence shown in the illustration.

Torque: 9.0 N*m (92 kgf*cm, 80 in.*lbf) for 10 mm (0.39 in.) head
24 N*m (245 kgf*cm, 18 ft.*lbf) for 12 mm (0.47 in.) head

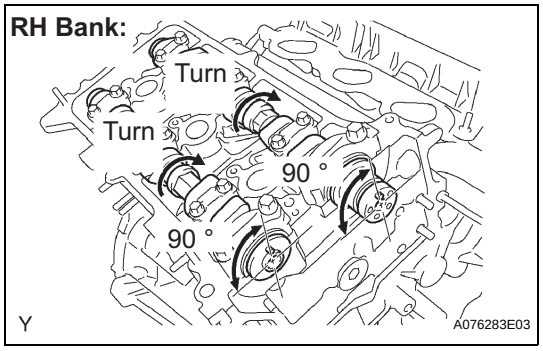

(5) Using a wrench, turn the camshafts clockwise until each camshaft knock pin comes to a position 90° to the cylindercylinder head.

EM

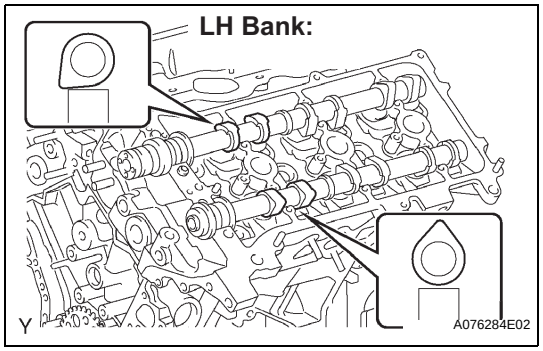

(d) Install the camshafts of the LH bank.

(1) Place the 2 camshafts on the LH cylinder head with the No.1 cam lobes facing as shown the illustration.

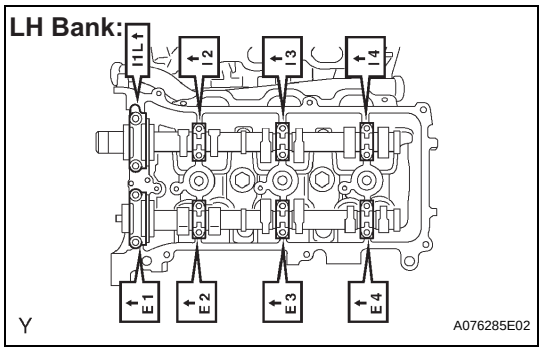

(2) Install the 8 bearing caps in the correct locations as shown.

(3) Apply a light coat of engine oil to the threads and under the heads of the bearing cap bolts.

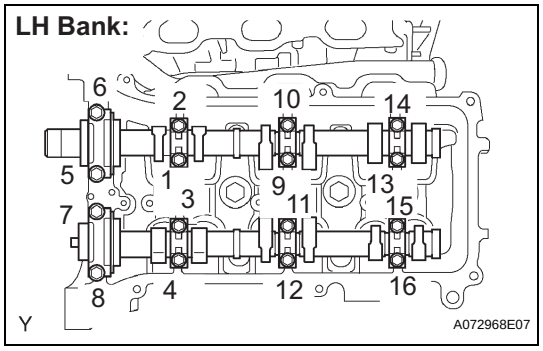

(4) Using several steps, uniformly tighten the 16 bearing cap bolts in the sequence shown in the illustration.

Torque: 9.0 N*m (92 kgf*cm, 80 in.*lbf) for 10 mm (0.39 in.) head
24 N*m (245 kgf*cm, 18 ft.*lbf) for 12 mm (0.47 in.) head

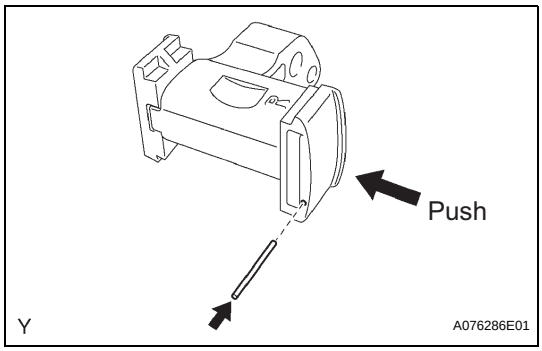

34. INSTALL NO.2 CHAIN TENSIONER ASSEMBLY

(a) While pushing in the tensioner, insert a pin of ϕ 1.0 mm (0.039 in.) into the hole to fix it.

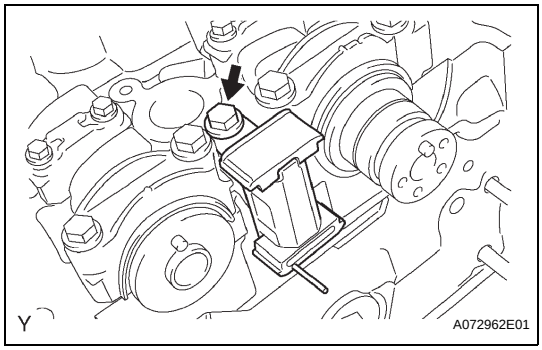

(b) Install the chain tensioner No. 2 with the bolt.
Torque: 19 N*m (194 kgf*cm, 14 ft.*lbf)

EM

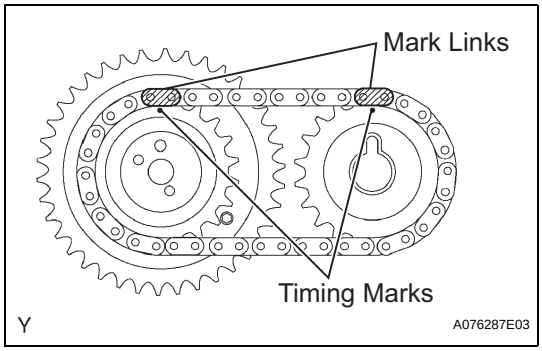

35. INSTALL CAMSHAFT TIMING GEARS AND NO.2 CHAIN (for Bank 1)

(a) Align the yellow mark links with the timing marks (1 dot mark) of camshaft timing gears as shown in the illustration.

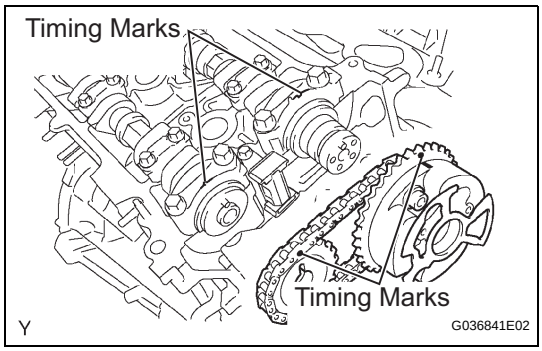

(b) Align the timing marks on the camshaft timing gears with the timing marks on the bearing caps, and install the camshaft timing gears with the chain onto the RH camshafts.

(c) Temporarily install the 2 camshaft timing gear bolts.
NOTICE:
Do not push the camshaft timing gear assembly onto the camshaft forcibly when installing it.

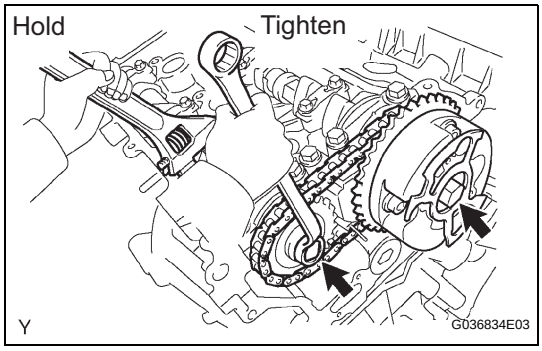

(d) Hold the hexagonal portion of the camshaft with a wrench, and tighten the 2 bolts.
Torque: 100 N*m (1,020 kgf*cm, 74 ft.*lbf)

(e) Remove the pin from the chain tensioner No. 2.

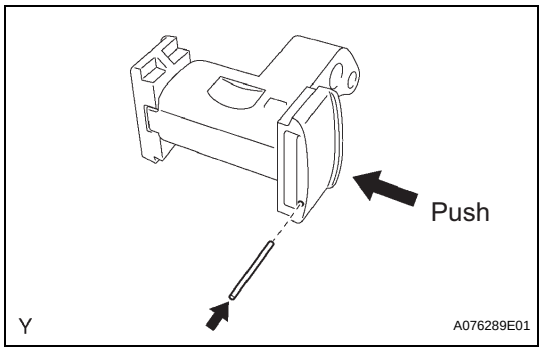

36. INSTALL NO.3 CHAIN TENSIONER ASSEMBLY

(a) While pushing in the tensioner, insert a pin of ϕ 1.0 mm (0.039 in.) into the hole to hold it.

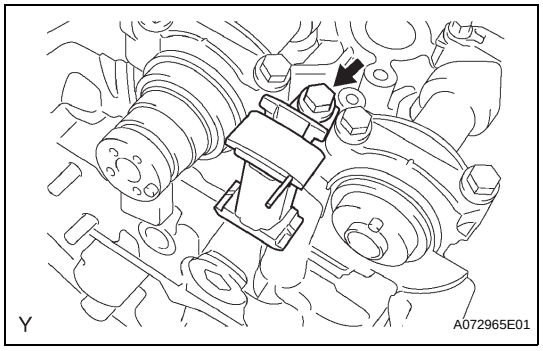

(b) Install the chain tensioner No. 3 with the bolt.
Torque: 19 N*m (194 kgf*cm, 14 ft.*lbf)

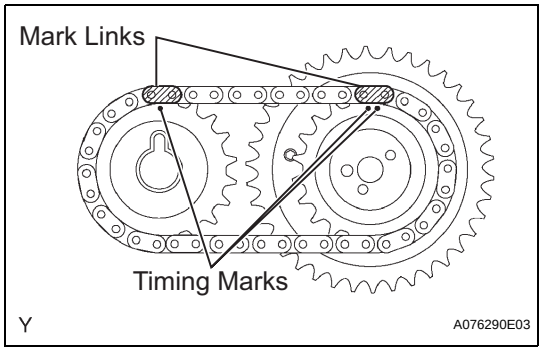

37. INSTALL CAMSHAFT TIMING GEARS AND NO.2 CHAIN (for Bank 2)

(a) Align the yellow mark links with the timing marks (1 dot mark and 2 dot marks) on camshaft timing gears as shown in the illustration.

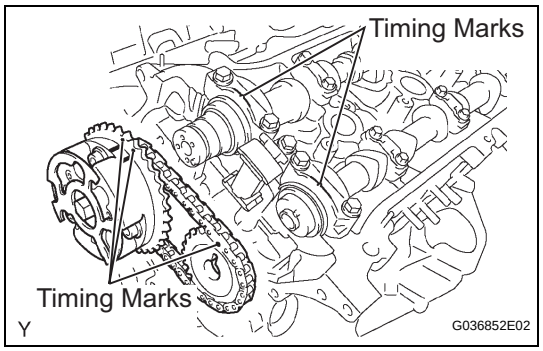

(b) Align the timing marks on the camshaft timing gears with the timing marks on the bearing caps, and install the camshaft timing gears with the chain onto the LH camshafts.

(c) Temporarily install the 2 camshaft timing gear bolts.
NOTICE:
Do not push camshaft timing gear assembly onto the camshaft forcibly when installing it.

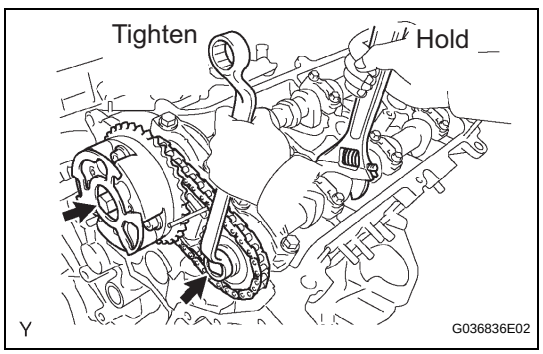

(d) Hold the hexagonal portion of the camshaft with a wrench, and tighten the 2 bolts.
Torque: 100 N*m (1,020 kgf*cm, 74 ft.*lbf)

(e) Remove the pin from the chain tensioner No. 3.

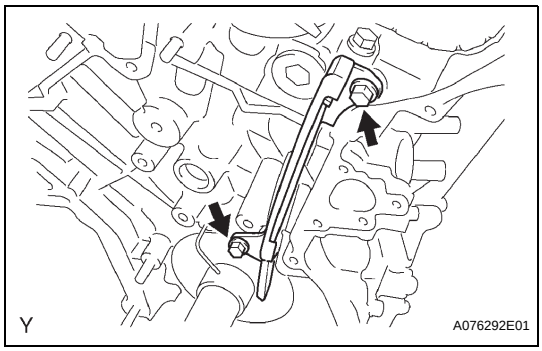

38. INSTALL NO.1 CHAIN VIBRATION DAMPER

(a) Install the chain vibration damper No. 1 with the 2 bolts.
Torque: 19 N*m (194 kgf*cm, 14 ft.*lbf)

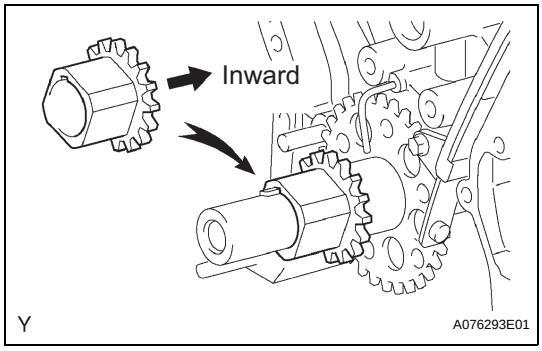

39. INSTALL CRANKSHAFT TIMING GEAR OR SPROCKET

(a) Align the timing gear set key with the key groove of the timing gear.
(b) Install the timing gear onto the crankshaft with the gear side facing inward.

40. INSTALL CHAIN TENSIONER SLIPPER

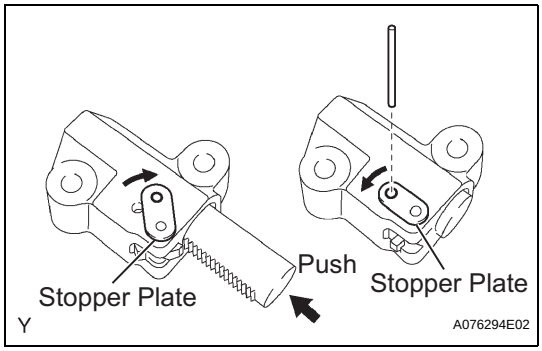

41. INSTALL NO.1 CHAIN TENSIONER ASSEMBLY

(a) While turning the stopper plate of the tensioner clockwise, push in the plunger of the tensioner as shown in the illustration.
(b) While turning the stopper plate of the tensioner counterclockwise, insert a bar of ϕ 3.5 mm (0.138 in.) into the holes in the stopper plate and tensioner to fix the stopper plate.
(c) Install the chain tensioner with the 2 bolts.
Torque: 10 N*m (102 kgf*cm, 7.4 ft.*lbf)

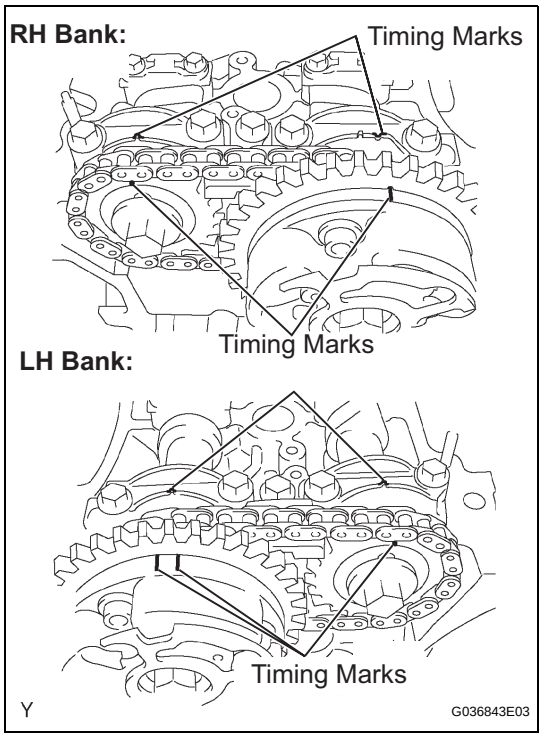

42. INSTALL CHAIN SUB-ASSEMBLY

(a) Set the No. 1 cylinder to TDC/ compression.
(1) Align the timing marks of the camshaft timing gears and bearing caps.

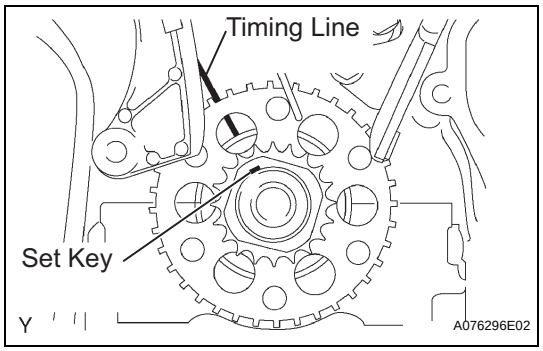

(2) Using the crankshaft pulley set bolt, turn the crankshaft to align the crankshaft set key with the timing line of the cylinder block.

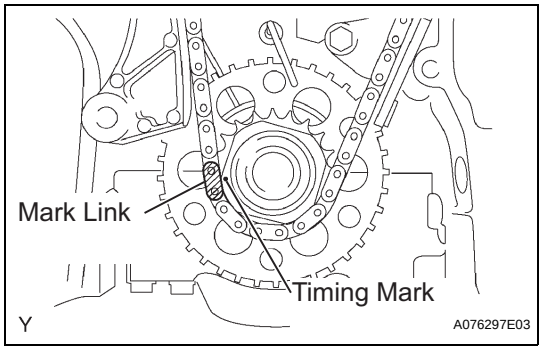

(b) Align the yellow mark link with the timing mark of the crankshaft timing gear.

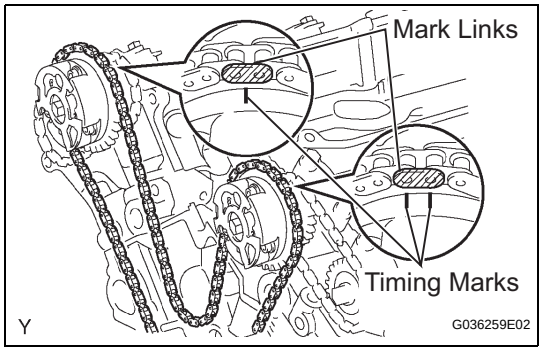

(c) Align the orange mark links with the timing marks of the camshaft timing gears, and install the chain.

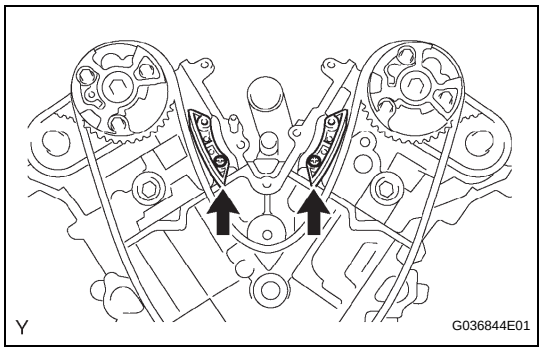

43. INSTALL NO.2 CHAIN VIBRATION DAMPER

(a) Instal the 2 chain vibration dampers No. 2.

44. INSTALL IDLE SPROCKET ASSEMBLY

(a) Apply a light coat of engine oil to rotating surface of the idle gear shaft No. 1.

EM

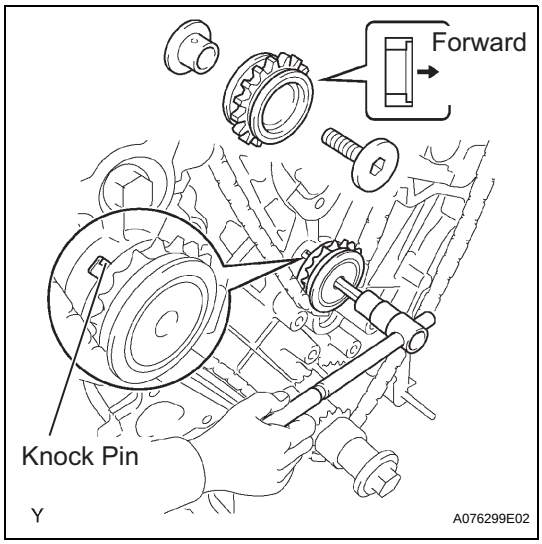

(b) Temporarily install the idle gear shaft No. 1 together with the idle gear shaft No. 2 while aligning the knock pin of the idle gear shaft No. 1 with the knock pin groove of the cylinder block.
NOTICE:
Be careful of the idle gear direction.

(c) Using a 10 mm hexagon wrench, tighten the idle gear shaft No. 2.
Torque: 60 N*m (612 kgf*cm, 44 ft.*lbf)

(d) Remove the bar from the chain tensioner.

45. INSTALL TIMING CHAIN OR BELT COVER SUB-ASSEMBLY

(a) Remove any old packing material and be careful not to drop any oil on the contact surfaces of the timing chain cover, cylinder head and cylinder block.

EM

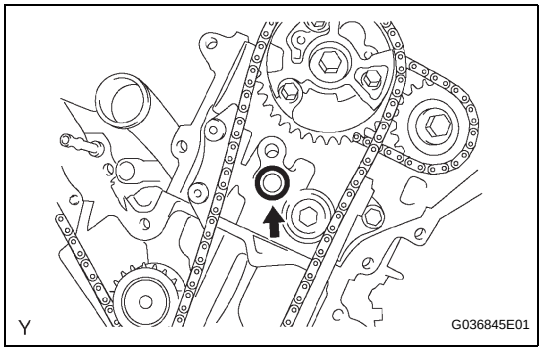

(b) Install a new O-ring onto the LH cylinder head as shown in the illustration.

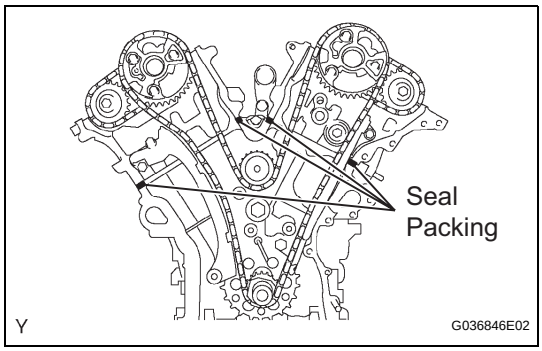

(c) Apply a continuous bead of seal packing (diameter 3 to 4 mm (0.12 to 0.16 in.)) to 4 locations as shown in the illustration.
Seal packing:
Part No. 08826-00080 or equivalent

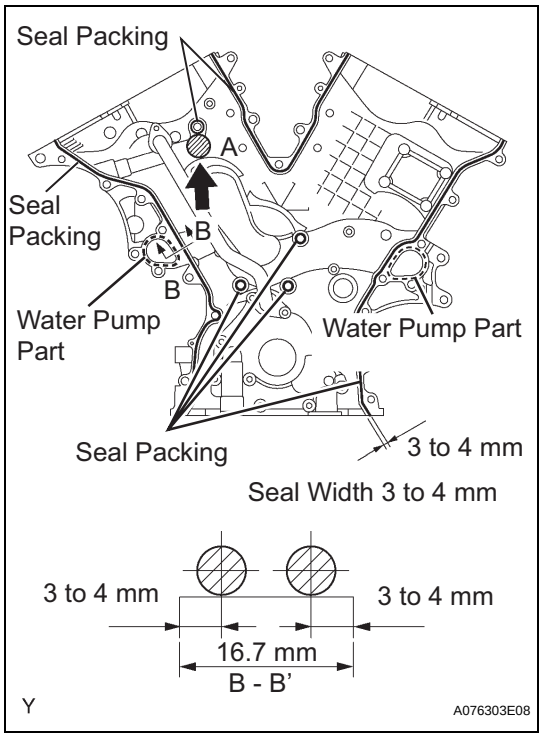

(d) Apply a continuous bead of seal packing (diameter 3 to 4 mm (0.12 to 0.16 in.)) to the timing chain cover as shown in the illustration.

Seal packing:

Water pump part: Part No. 08826-00100 or equivalent

Other part: Part No. 08826-00080 or equivalent

NOTICE:

- **Install the timing chain cover within 3 minutes of applying the seal packing. After installation, the timing chain cover bolts and nuts must be tightened within 15 minutes. Otherwise, the seal packing must be removed and reapplied.**
- **Do not apply seal packing to A as shown in the illustration.**

EM

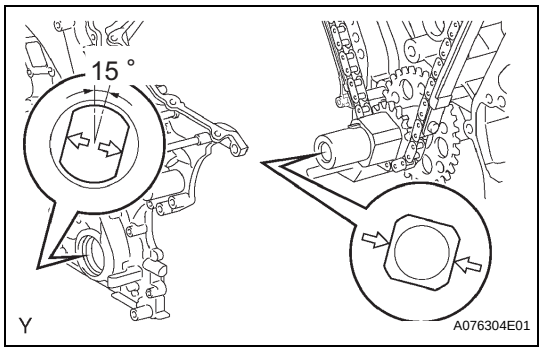

(e) Align the key way of the oil pump drive rotor with the rectangular portion of the crankshaft timing gear, and slide the timing chain cover into place.

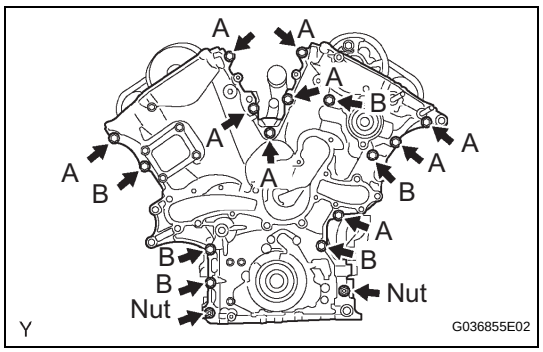

(f) Install the timing chain cover with the 15 bolts and 2 nuts. Tighten the bolts and nuts uniformly in several steps.

Torque: 23 N*m (235 kgf*cm, 17 ft.*lbf)

NOTICE:

- **Take care not to wrap the chain and slipper beyond the timing chain cover seal line.**
- **After installing the timing chain cover, install the water pump within 15 minutes.**

HINT:

Each bolt length is as follows:

Bolt	length
A	25 mm (0.98 in.)
B	55 mm (2.17 in.)

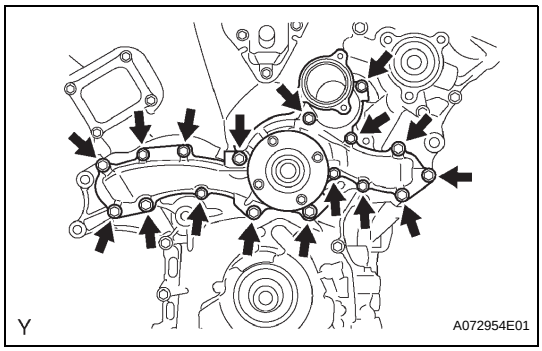

46. INSTALL WATER PUMP ASSEMBLY

(a) Install a new gasket and the water pump with the 17 bolts.

Torque: 9.0 N*m (92 kgf*cm, 80 in.*lbf) for 10 mm (0.39 in.) head
23 N*m (235 kgf*cm, 17 ft.*lbf) for 12 mm (0.47 in.) head

47. INSTALL OIL PAN SUB-ASSEMBLY

(a) Remove any old packing material and be careful not to drop any oil on the contact surfaces of the cylinder block, rear oil seal retainer and oil pan.

(b) Install the 4 stud bolts (for 2WD).
Torque: 4.0 N*m (41 kgf*cm, 35 in.*lbf)

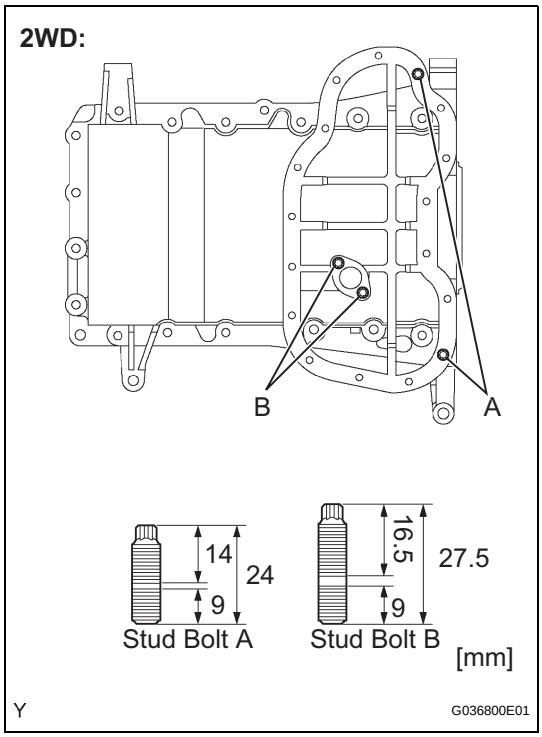

EM

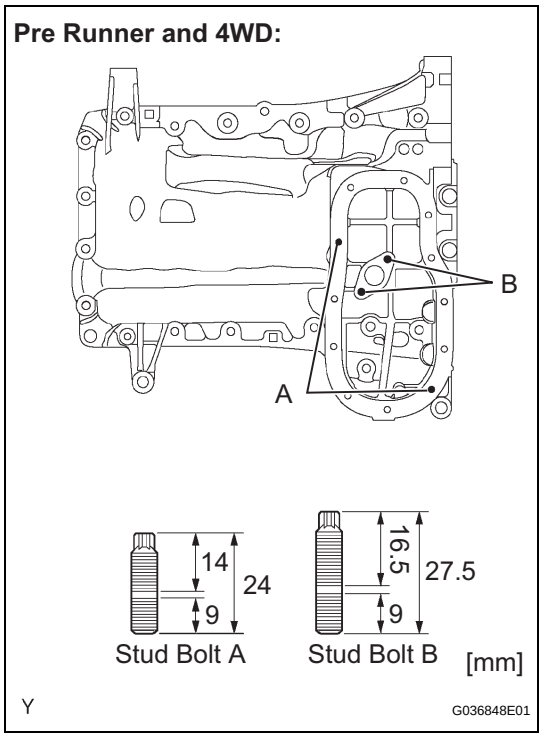

(c) Install the 4 stud bolts (for Pre Runner and 4WD).
Torque: 4.0 N*m (41 kgf*cm, 35 in.*lbf)

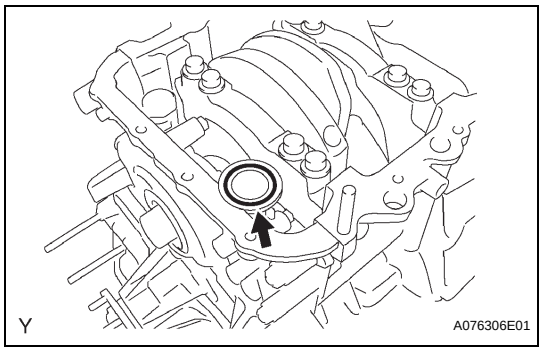

(d) Install a new O-ring onto the oil pump.

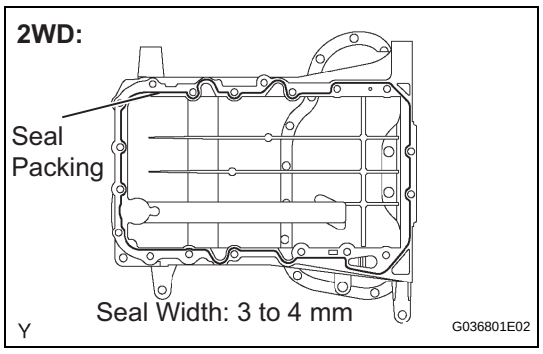

(e) Apply a continuous bead of seal packing (diameter 3 to 4 mm (0.12 to 1.16 in.)) to the oil pan as shown in the illustration (for 2WD).
Seal packing:
Part No. 08826-00080 or equivalent
NOTICE:
Install the oil pan within 3 minutes of applying the seal packing. After installation, the oil pan bolts and nuts must be tightened within 15 minutes. Otherwise, the seal packing must be removed and reapplied.

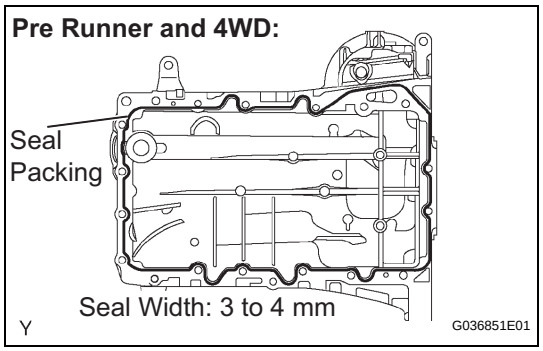

(f) Apply a continuous bead of the seal packing (diameter 3 to 4 mm (0.12 to 0.16 in.)) to the oil pan as shown in the illustration (for Pre Runner and 4WD).
Seal packing:
Part No. 08826-00080 or equivalent

NOTICE:
Install the oil pan within 3 minutes of applying the seal packing. After installation, the oil pan bolts and nuts must be tightened within 15 minutes. Otherwise, the seal packing must be removed and reapplied.

(g) Install the oil pan with the 17 bolts and 2 nuts. Tighten the bolts and nuts uniformly in several steps (for 2WD).
Torque: 10 N*m (102 kgf*cm, 7.4 ft.*lbf) for 10 mm (0.39 in.) head
Torque: 21 N*m (214 kgf*cm, 16 ft.*lbf) for 12 mm (0.47 in.) head
HINT:
Each bolt length is as follows:

Bolt	length
A	25 mm (0.98 in.)
B	45 mm (1.77 in.)
C	14 mm (0.55 in.)

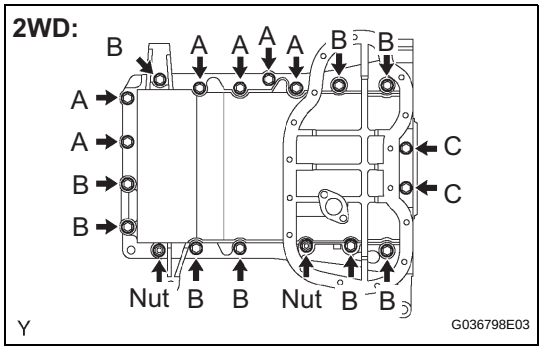

(h) Install the oil pan with the 17 bolts and 2 nuts. Tighten the bolts and nuts uniformly in several steps (for Pre Runner and 4WD).
Torque: 10 N*m (102 kgf*cm, 7 ft.*lbf) for 10 mm (0.39 in.) head
21 N*m (214 kgf*cm, 16 ft.*lbf) for 12 mm (0.47 in.) head
HINT:
Each bolt length is as follows:

Bolt	length
A	25 mm (0.98 in.)
B	45 mm (1.77 in.)
C	14 mm (0.55 in.)

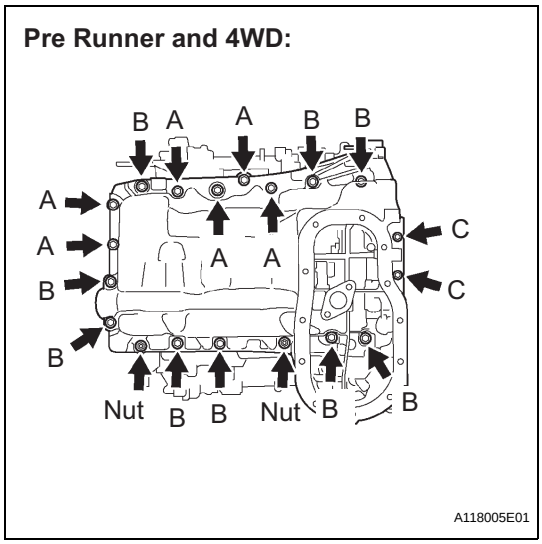

48. INSTALL OIL STRAINER SUB-ASSEMBLY

(a) Install a new gasket, then install the oil strainer with the 2 nuts (for 2WD).
Torque: 9.0 N*m (92 kgf*cm, 80 in.*lbf)

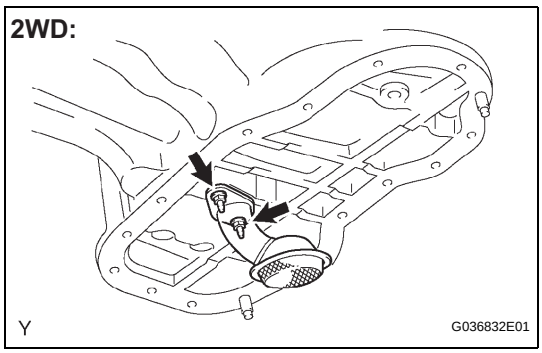

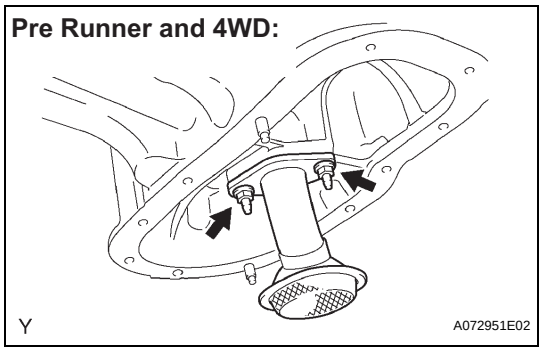

(b) Install a new gasket, then install the oil strainer with the 2 nuts (for Pre Runner and 4WD).
Torque: 9.0 N*m (92 kgf*cm, 80 in.*lbf)

49. INSTALL NO.2 OIL PAN SUB-ASSEMBLY

(a) Remove any old packing material and be careful not to drop any oil on the contact surfaces of the oil pan and oil pan No. 2.

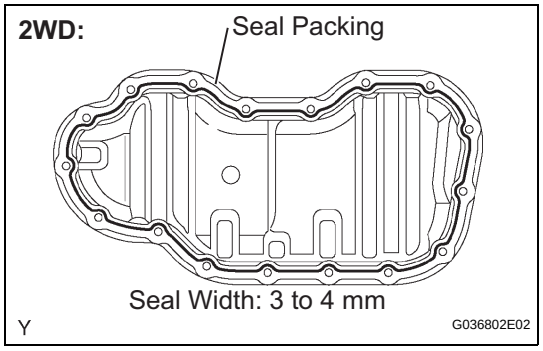

(b) Apply a continuous bead of the seal packing (diameter 3 to 4 mm (0.12 to 0.16 in.)) as shown in the illustration (for 2WD).
Seal packing:
Part No. 08826-00080 or equivalent
NOTICE:
Install the oil pan No. 2 within 3 minutes of applying the seal packing. After installation, oil pan No. 2 bolts and nuts must be tightened within 15 minutes. Otherwise, the seal packing must be removed and reapplied.

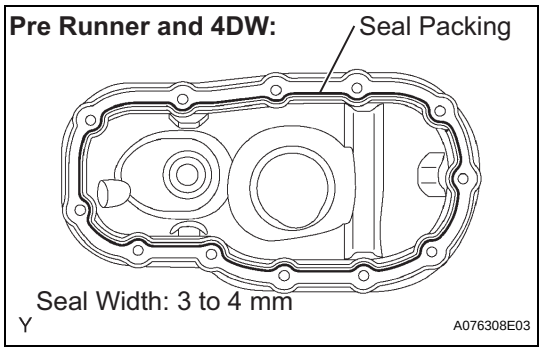

(c) Apply a continuous bead of seal packing (diameter 3 to 4mm(0.12 to 0.16 in.)) as shown in the illustration (for Pre Runner and 4WD).
Seal packing:
Part No. 08826-00080 or equivalent
NOTICE:
Install the oil pan No. 2 within 3 minutes of applying the seal packing. After installation, the oil pan No. 2 bolts and nuts must be tightened within 15 minutes. Otherwise, the seal packing must be removed and reapplied.

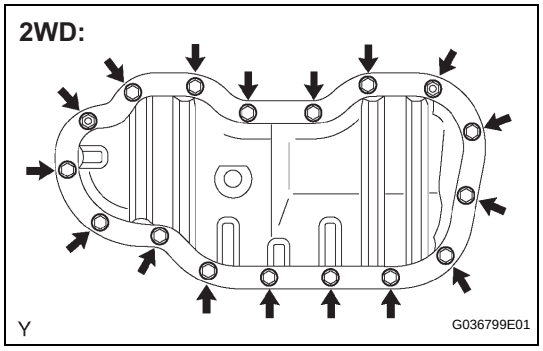

(d) Install the oil pan No. 2 with the 15 bolts and 2 nuts. Tighten the bolts and nuts uniformly in several steps (for 2WD).
Torque: 9.0 N*m (92 kgf*cm, 80 in.*lbf) for bolts
10 N*m (102 kgf*cm, 7.4 ft.*lbf) for nut

EM

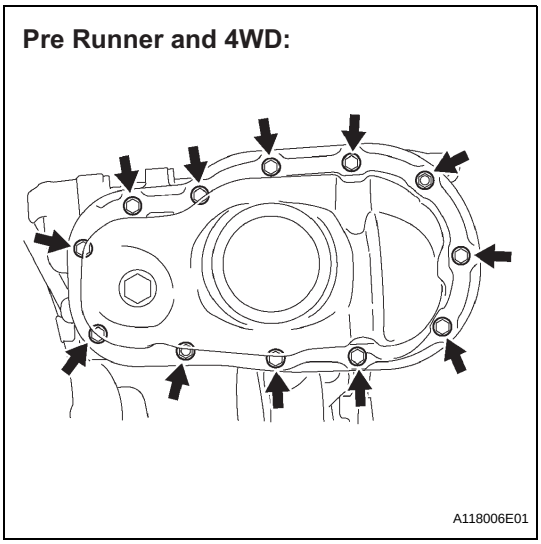

(e) Install the oil pan No. 2 with the 10 bolts and 2 nuts. Tighten the bolts and nuts uniformly in several steps (for Pre Runner and 4WD).
Torque: 9.0 N*m (92 kgf*cm, 80 in.*lbf) for bolts
10 N*m (102 kgf*cm, 7.4 ft.*lbf)

50. INSTALL OIL PAN DRAIN PLUG

(a) Install the drain plug with a new gasket.
Torque: 40 N*m (408 kgf*cm, 30 ft.*lbf)

EM

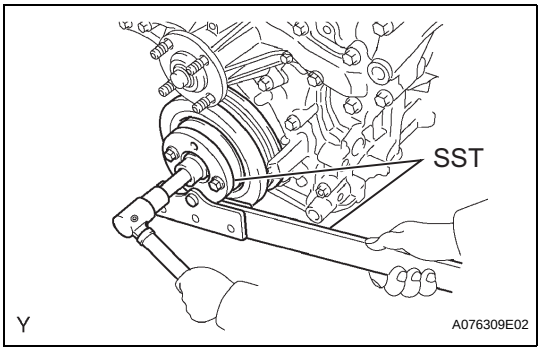

51. INSTALL CRANKSHAFT PULLEY

(a) Using SST, fix the pulley and tighten the bolt.
SST 09213-54015 (91651-60855), 09330-00021
Torque: 250 N*m (2,549 kgf*cm, 185 ft.*lbf)

52. SET NO.1 CYLINDER TO TDC/COMPRESSION

53. INSPECT VALVE CLEARANCE

54. ADJUST VALVE CLEARANCE

55. INSTALL CYLINDER HEAD COVER SUB-ASSEMBLY

(a) Remove any old packing material and be careful not to drop any oil on the contact surfaces of the cylinder head, timing chain cover and cylinder head cover.

(b) Install the gasket onto the cylinder head cover.

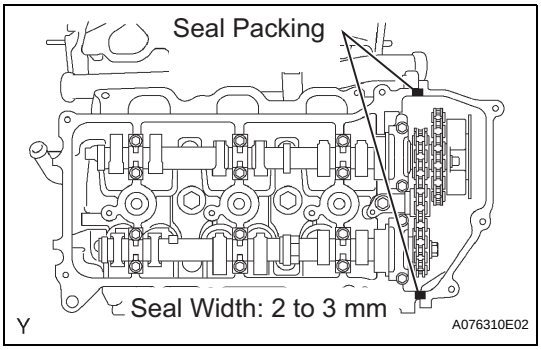

(c) Apply a continuous bead of seal packing (diameter 2 to 3 mm (0.08 to 0.12 in.)) to the cylinder head and timing chain cover as shown in the illustration.
Seal packing:
Part No. 08826-00080 or equivalent
NOTICE:
Install the cylinder head cover within 3 minutes of applying the seal packing. After installation, the cylinder head cover bolts and nuts must be tightened within 15 minutes. Otherwise the seal packing must be removed and reapplied.

(d) Install the seal washers onto the bolts.

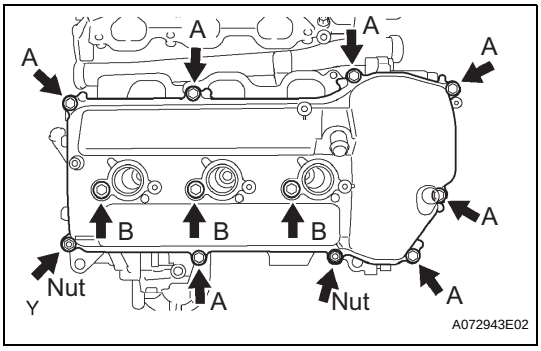

(e) Install the cylinder head cover with the 10 bolts and 2 nuts. Tighten the bolts and nuts uniformly in several steps.
Torque: 10 N*m (102 kgf*cm, 7.4 ft.*lbf) for bolts A
9.0 N*m (92 kgf*cm, 80 in.*lbf) for bolts B
9.0 N*m (92 kgf*cm, 80 in.*lbf) for nuts
HINT:
Each bolt length is as follows:

Bolt	length
A	25 mm
B	60 mm (2.36 in.)

56. INSTALL CYLINDER HEAD COVER SUB-ASSEMBLY LH

(a) Remove any old packing material and be careful not to drop any oil on the contact surfaces of the cylinder head, timing chain cover and cylinder head cover.

(b) Apply adhesive to the threads of the ventilation valve.
Adhesive:
Part No. 08833-00070, THREE BOND 1324 or equivalent

(c) Install the ventilation valve onto the cylinder head cover.
Torque: 27 N*m (275 kgf*cm, 20 ft.*lbf)

(d) Install the gasket onto the cylinder head cover.

(e) Apply a continuous bead of seal packing (diameter 2 to 3 mm (0.08 to 0.12 in.)) to the cylinder head and timing chain cover as shown in the illustration.
Seal packing:
Part No. 08826-00080 or equivalent
NOTICE:
Install the cylinder head cover of 3 minutes of applying the seal packing. After installation, the cylinder head cover bolts and nuts must be tightened within 15 minutes. Otherwise, the seal packing must be removed and reapplied.

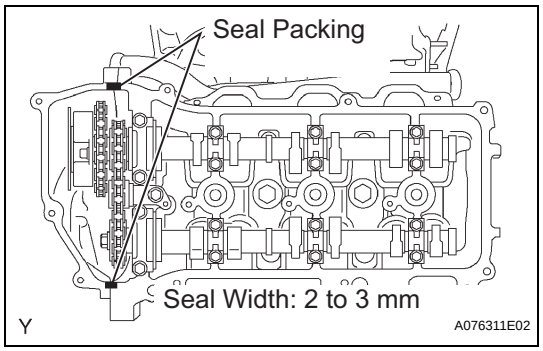

(f) Install the seal washers onto the bolts.

(g) Install the cylinder head cover with the 10 bolts and 2 nuts. Tighten the bolts and nuts uniformly in several steps.
Torque: 10 N*m (102 kgf*cm, 7.4 ft.*lbf) for bolts A
9.0 N*m (92 kgf*cm, 80 in.*lbf) for bolts B
9.0 N*m (92 kgf*cm, 80 in.*lbf) for nuts
HINT:
Each bolt length is as follows:

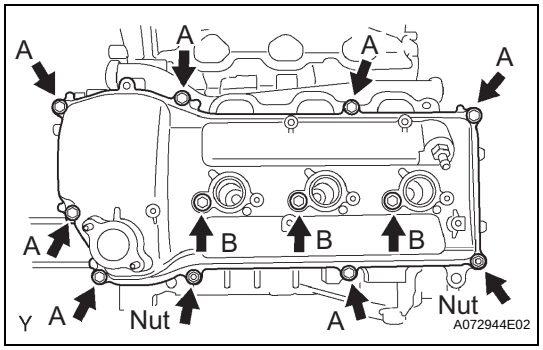

Bolt	length
A	25 mm (0.98 in.)
B	60 mm (2.36 in.)

EM

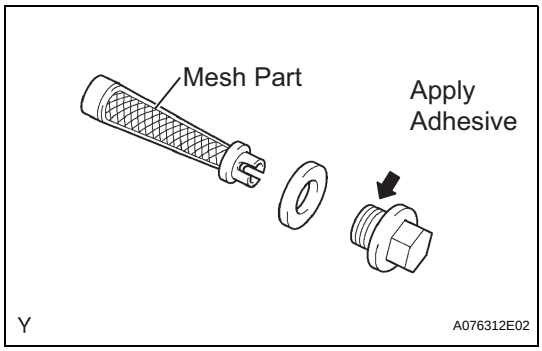

57. INSTALL OIL CONTROL VALVE FILTER

(a) Check that no foreign objects on the mesh part of the 2 filters.
(b) Install 2 new gaskets onto each new plug.
(c) Insert the filters into the plugs.
(d) Apply adhesive to 2 or 3 threads of the plugs.
Adhesive:
Part No. 08833-00080, THREE BOND 1344 LOCTITE 242 or equivalent
(e) Install the plugs onto each cylinder head.
Torque: 62 N*m (632 kgf*cm, 46 ft.*lbf)

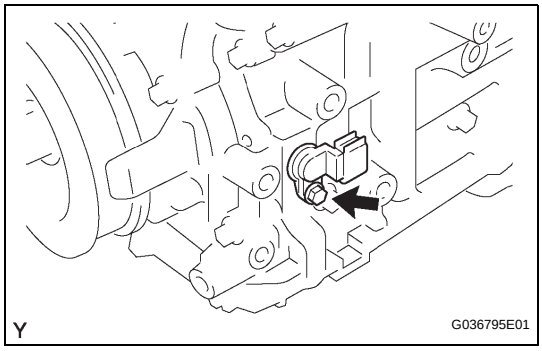

58. INSTALL CRANKSHAFT POSITION SENSOR

(a) Install the crankshaft position sensor with the bolt.
Torque: 10 N*m (102 kgf*cm, 7.4 ft.*lbf)

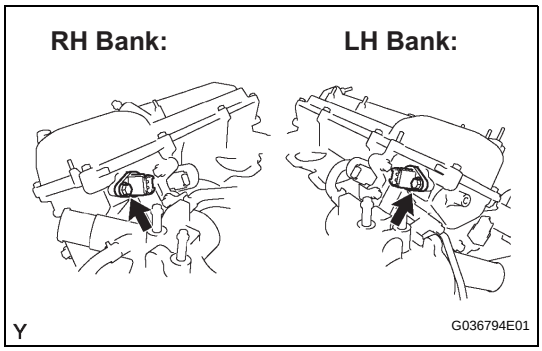

59. INSTALL VVT SENSOR

(a) Apply a light coat of engine oil to the O-ring of each VVT sensor.
(b) Install the 2 VVT sensors with the 2 bolts.
Torque: 8.0 N*m (82 kgf*cm, 71 in.*lbf)

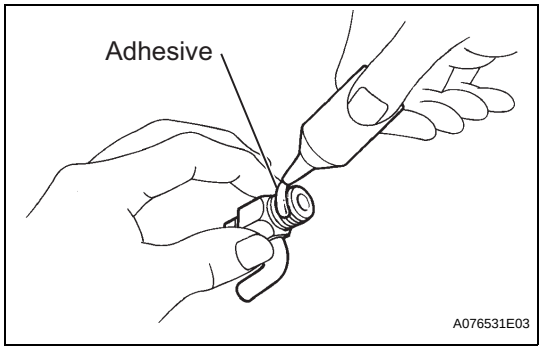

60. INSTALL CYLINDER BLOCK WATER DRAIN COCK SUB-ASSEMBLY

(a) Apply adhesive to 2 or 3 threads of the drain cocks end.
Adhesive:
Part No. 08833-00070, THREE BOND 1324 or equivalent

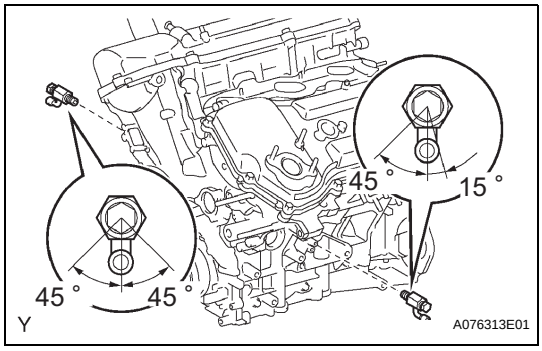

(b) Tighten the drain cocks to the specified torque, and rotate them clockwise as shown in the illustration.
Torque: 25 N*m (255 kgf*cm, 18 ft.*lbf)
NOTICE:
- **Do not rotate the drain cocks more than 1 complete revolution (360°) after tightening the drain cocks to the specified torque.**
- **Do not loosen the drain cocks after setting it correctly.**

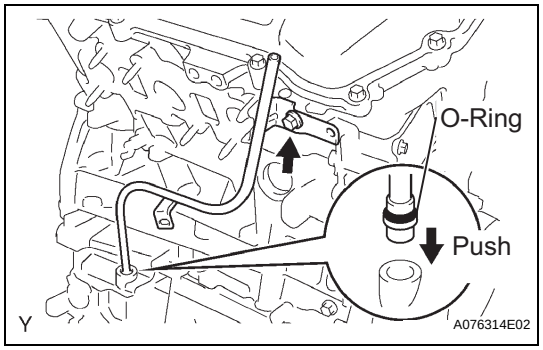

61. INSTALL OIL LEVEL GAGE GUIDE

(a) Install a new O-ring onto the oil level gauge guide.
(b) Apply a light coat of engine oil to the O-ring.
(c) Push the oil level gauge guide end into the guide hole of the oil pan.
(d) Install the oil level gauge guide with the bolt.
Torque: 9.0 N*m (92 kgf*cm, 80 in.*lbf)

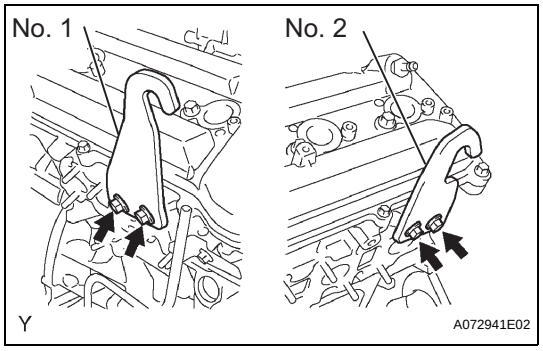

62. INSTALL ENGINE HANGERS

(a) Install the engine hanger with the 2 bolts.
Torque: 33 N*m (336 kgf*cm, 24 ft.*lbf)
(b) Install the engine hanger with the 2 bolts.
Torque: 33 N*m (336 kgf*cm, 24 ft.*lbf)

EM

REPAIR

1. REPAIR VALVE SEAT

NOTICE:
Use a cutter to gradually make the intake valve seat smoother.

(a) If the seating is too high on the valve face, use 30° and 45° cutters to correct the seat.

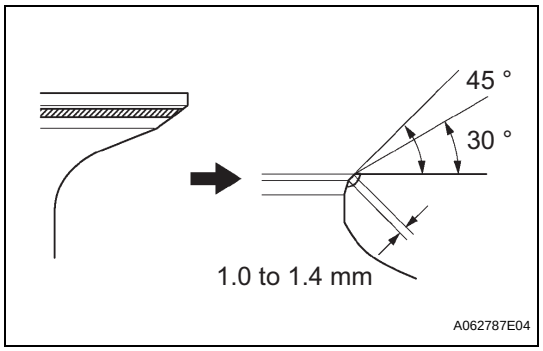

(b) Intake side:
If the seating is too low on the valve face, use 60° and 45° cutters to correct the seat.

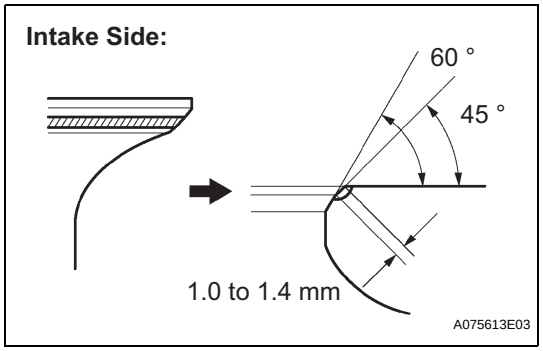

(c) Exhaust side:
If the seating is too low on the valve face, use 75° and 45° cutters to correct the seat.

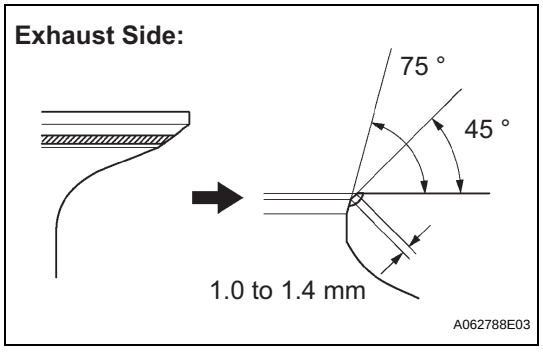

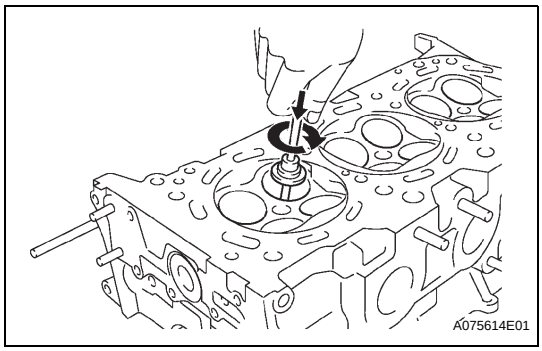

(d) Lap the valve and valve seat with an abrasive compound by hand.
(e) After lapping, clean the valve and valve seat.

REMOVAL

1. **DISCONNECT CABLE FROM NEGATIVE BATTERY TERMINAL**
2. **REMOVE NO. 1 ENGINE UNDER COVER SUB-ASSEMBLY (for 4WD)**
   (a) Remove the 4 bolts, then remove the No. 1 engine under cover.
3. **DRAIN ENGINE COOLANT (See page CO-3)**
4. **REMOVE RADIATOR SUPPORT TO FRAME SEAL LH (See page CO-12)**
5. **REMOVE FAN SHROUD (See page CO-13)**
6. **REMOVE AIR CLEANER CAP SUB-ASSEMBLY (See page EC-14)**
7. **REMOVE INTAKE AIR CONNECTOR (See page ES-452)**
8. **REMOVE CYLINDER HEAD COVER SUB-ASSEMBLY**
   (a) Disconnect the ignition coil connectors.
   (b) Disconnect the throttle with motor body connector.
   (c) Disconnect the VSV connector.
   (d) Disconnect the camshaft position sensor connector.
   (e) Disconnect the engine wire harness clamps.

EM

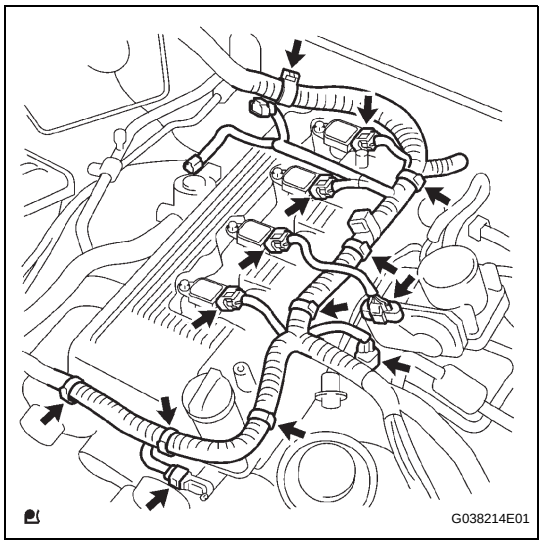

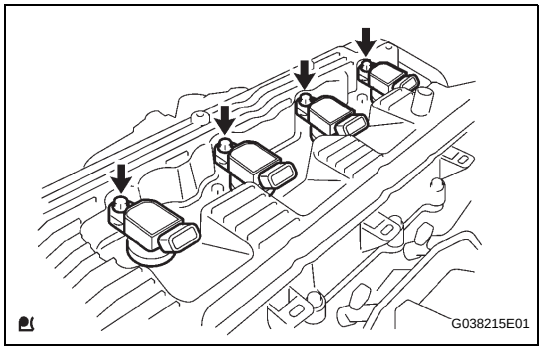

   (f) Remove the bolts, then remove the ignition coils.

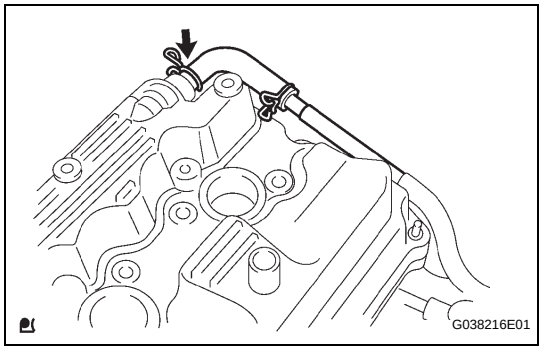

(g) Disconnect the ventilation hose.

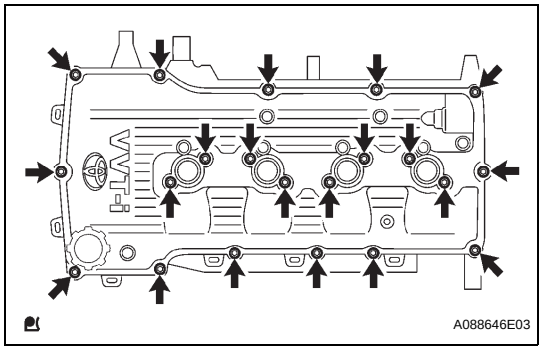

(h) Remove the 19 bolts and 2 nuts, then remove the cylinder head cover.

9. REMOVE TIMING CHAIN GUIDE

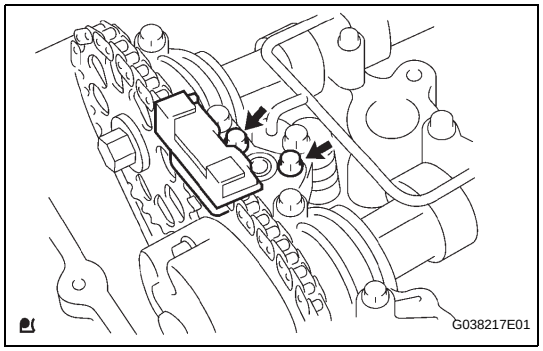

(a) Remove the 2 bolts, then remove the timing chain guide.

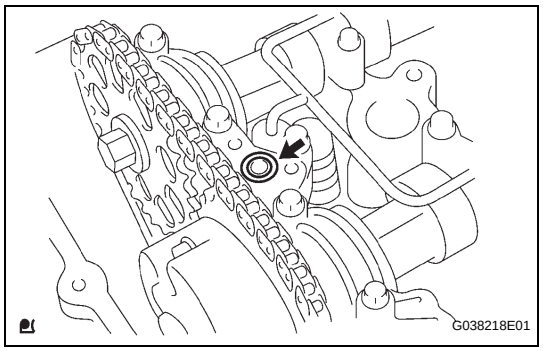

(b) Remove the O-ring.

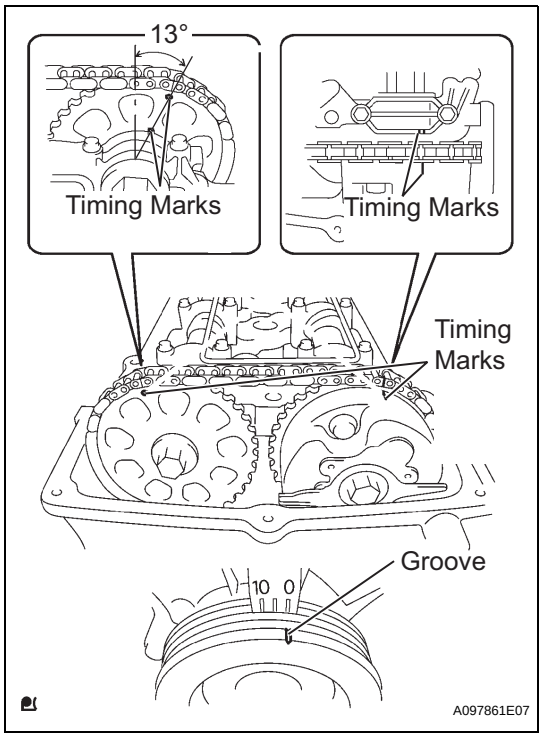

10. REMOVE CAMSHAFT

(a) Set the No. 1 cylinder to the TDC/compression.
  (1) Turn the crankshaft pulley clockwise and align its timing mark notch with the timing mark "0".
  (2) Check that the timing marks of the camshaft timing gear are located as illustrated.
  HINT:
  If not, turn the crankshaft to align the marks.

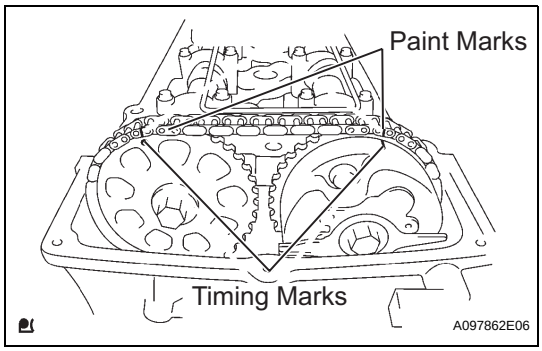

(b) Place paint marks on the timing chain plates that align with timing marks of the camshaft timing gear.

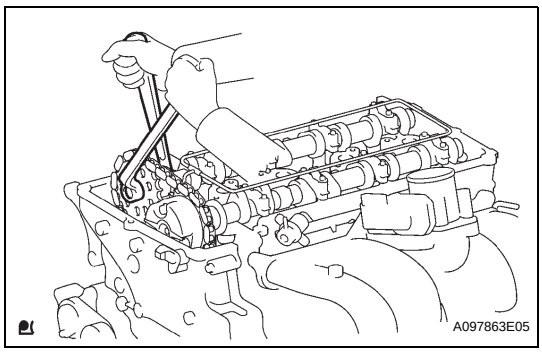

(c) Hold the hexagonal lobe of the No. 2 camshaft with an adjustable wrench.
  NOTICE:
  Be careful not to damage the camshaft oil delivery pipe.

(d) Loosen the bolt.

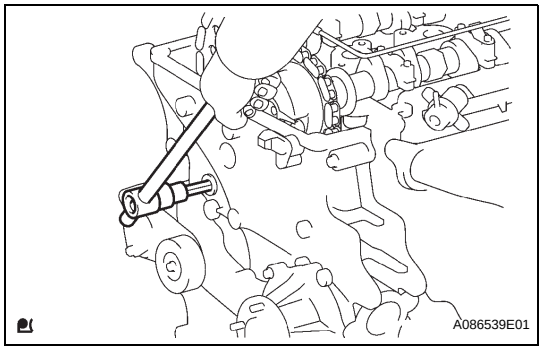

(e) Using 10 mm socket hexagon wrench, remove the head straight screw plug.

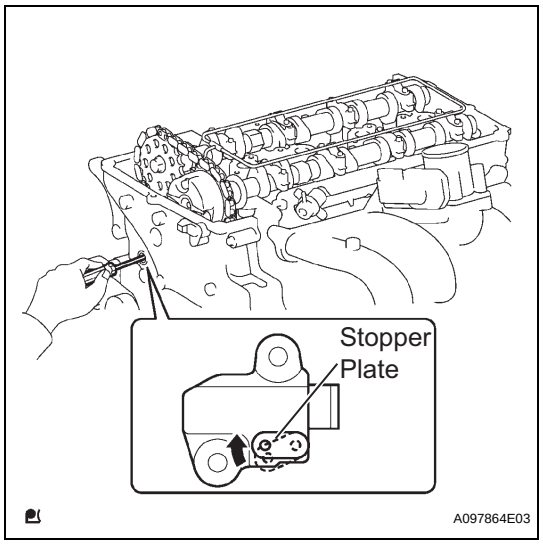

(f) Insert a screwdriver into the service hole of the chain tensioner to hold the stopper plate of the chain tensioner lifted up.
HINT:
Lifting up the stopper plate of the chain tensioner unlocks the plunger.

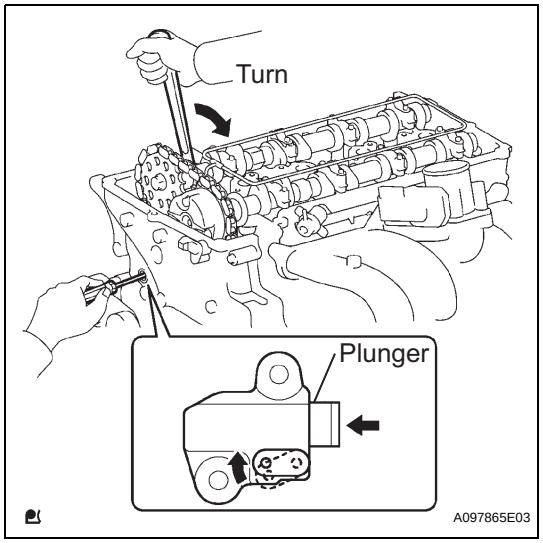

(g) While keeping the stopper plate of the chain tensioner lifted up, slightly rotate the hexagonal lobe of the No. 2 camshaft clockwise with an adjustable wrench so the plunger of the chain tensioner is pushed.
HINT:
When the No. 2 camshaft is slightly rotated clockwise, the plunger is pushed.
NOTICE:
Be careful not to damage the camshaft oil delivery pipe.

(h) Keeping the adjustable wrench installed, remove the screwdriver with the plunger pushed in.
NOTICE:
Do not move the adjustable wrench.
HINT:
Removing the screwdriver lifts down the stopper plate and locks the plunger.

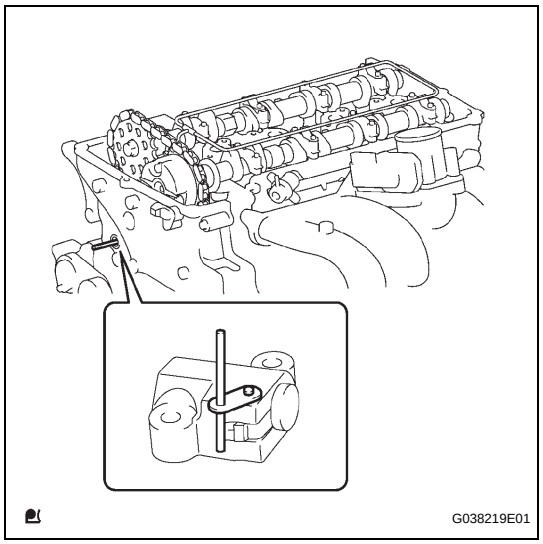

(i) Insert a 3.0 mm (0.118 in.) diameter bar into the hole of the stopper plate with the stopper plate of the chain tensioner lifted down and locked.
HINT:
If a 3.0 mm (0.118 in.) diameter bar cannot be inserted into the hole of the stopper plate, rotate the No. 2 camshaft slightly to the left and right. Then a 3.0 mm (0.118 in.) diameter bar can be inserted easily.

(j) Secure the 3.0 mm (0.118 in.) diameter bar with tape.

EM

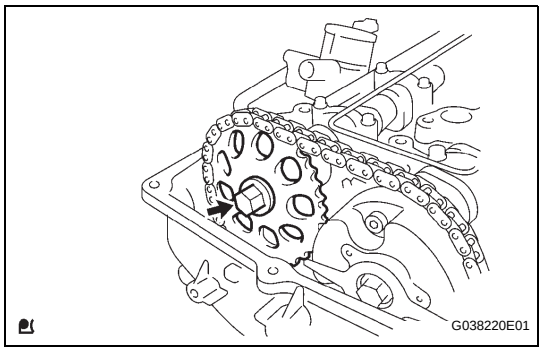

(k) Remove the bolt, then remove the camshaft timing gear.

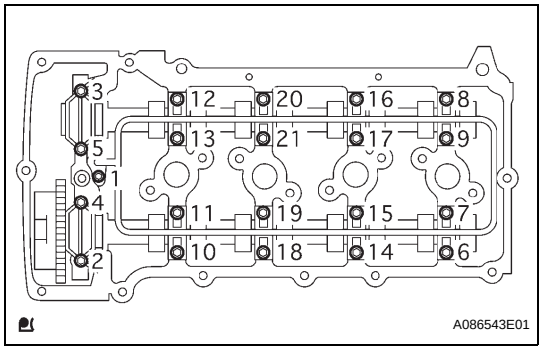

(l) Using several steps, uniformly loosen and remove the 21 bearing cap bolts in the sequence shown in the illustration.
NOTICE:
Place the camshaft on a flat surface and loosen the bolts uniformly.

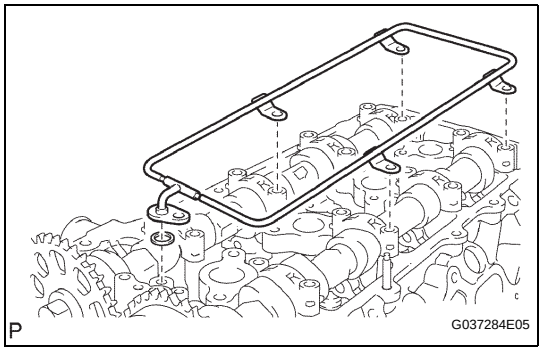

(m) Remove the camshaft oil delivery pipe and O-ring.

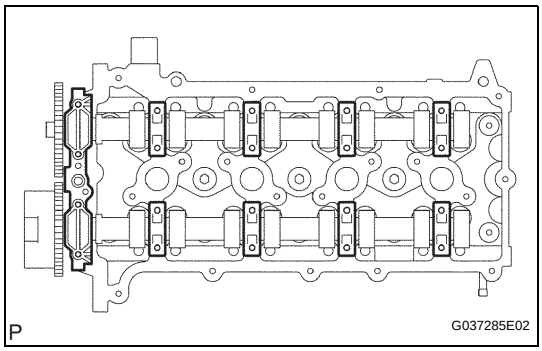

(n) Remove the camshaft bearing cap No. 1 and 8 camshaft bearing caps No. 2.

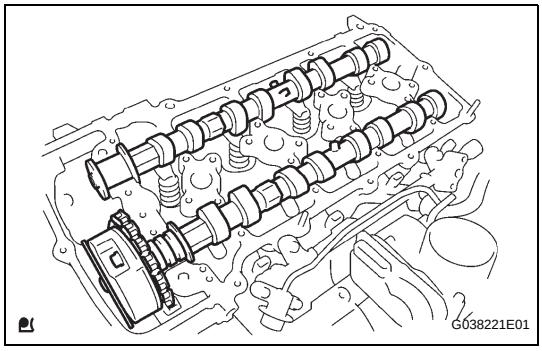

(o) Remove the camshaft and No. 2 camshaft.
NOTICE:
- **Do not pry the camshaft with a tool by applying excessive force to it.**
- **Do not damage the cylinder head when removing the camshafts.**

EM

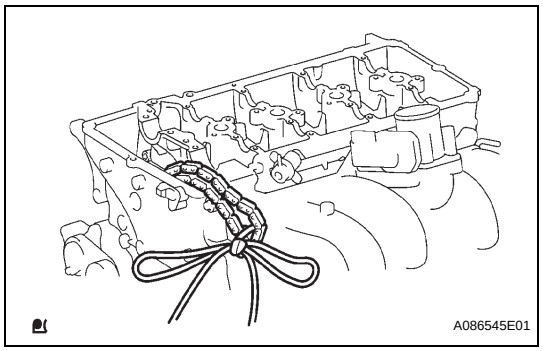

(p) Tie the chain with a piece of string or wire.
NOTICE:
Prevent foreign objects from getting into the engine compartment with a shop rag.

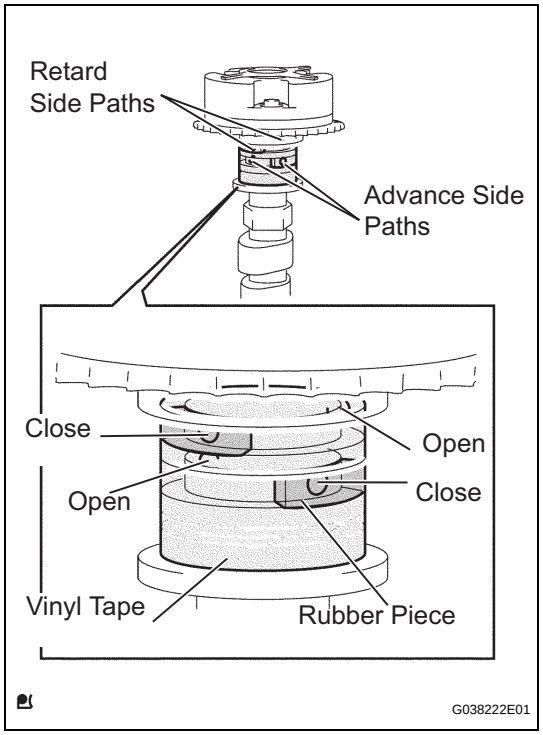

11. REMOVE CAMSHAFT TIMING GEAR ASSEMBLY

(a) Clamp the camshaft in a vise, then check that the camshaft timing gear does not rotate.
NOTICE:
Do not damage the camshaft by clamping it in a vise too tightly.

(b) Cover the 4 oil paths of the cam journal with vinyl tape as shown in the illustration.
HINT:
One of the 2 grooves located on the cam journal is for retarding cam timing (upper) and the other is for advancing cam timing (lower). Each groove has 2 oil paths. Plug one of the 2 oil paths for each groove with a piece of rubber before wrapping the cam journal with the tape.

(c) Puncture the tape covering the advance side path and retard side path on the opposite side.

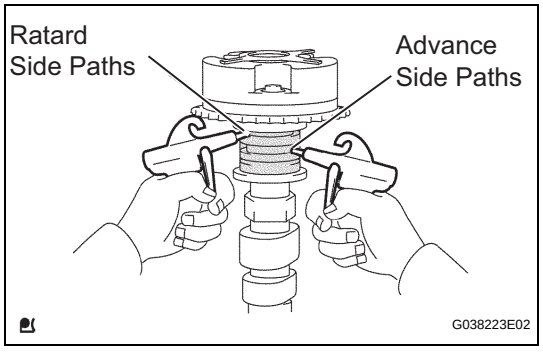

(d) Apply air pressure at approximately 200 kPa (2.0 kgf/cm^2, 29 psi) into the 2 paths (the advance side path and retard side path) from the 2 punctures.
NOTICE:
When applying air pressure, cover the paths with a shop rag to prevent oil splashes.

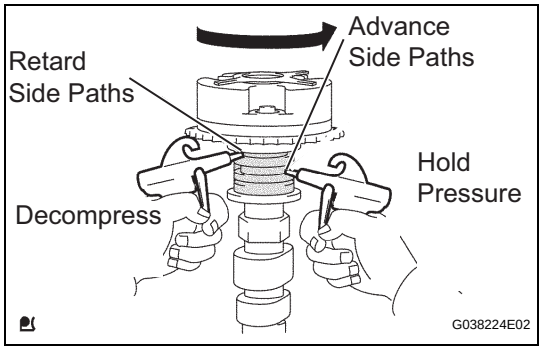

(e) Confirm that the camshaft timing gear revolves in the advance direction when reducing the air pressure on the retard side path.
HINT:
The lock pin is released and the camshaft timing gear revolves in the advance direction.

(f) When the camshaft timing gear reaches the most advanced position, release the air pressure on the retard side path, then release the air pressure on the advance side path.
NOTICE:
If the air pressure on the advance side path is released first, the camshaft timing gear assembly occasionally shifts in the retard direction abruptly. This may damage the lock pin. Be sure to release the air pressure on the retard side path first.

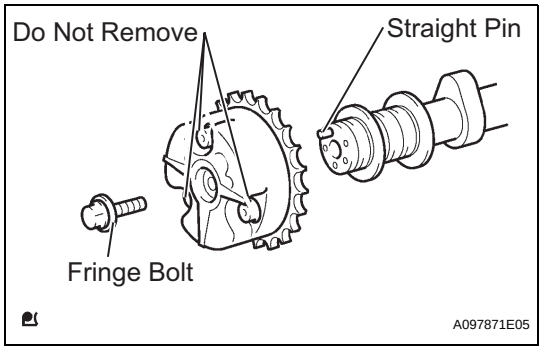

(g) Remove the fringe bolt of the camshaft timing gear.
NOTICE:
Be sure not to remove the other 3 bolts.

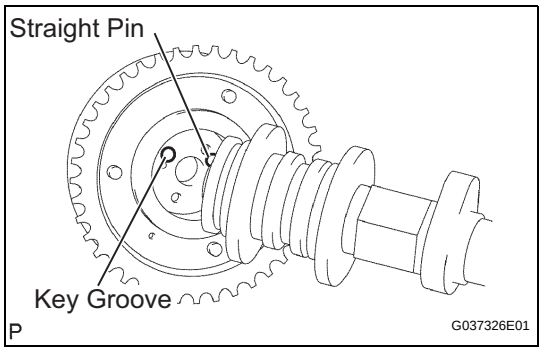

INSTALLATION

1. INSTALL CAMSHAFT TIMING GEAR ASSEMBLY

(a) Put the camshaft timing gear and camshaft together by aligning the key groove and straight pin.

(b) Gently press the gear against the camshaft, and turn the gear. Push further at the position where the pin fits into the groove.
CAUTION:
Be sure not to turn the camshaft timing gear to the retard angle side (to the right angle).

(c) Check that there is no clearance between the gear's fringe and the camshaft.

(d) Tighten the fringe bolt with the camshaft timing gear fixed.
Torque: 78 N*m (795 kgf*cm, 58 ft.*lbf)

(e) Check that the camshaft timing gear can move to the retard angle side (the right angle), and is locked in the extreme retard position.

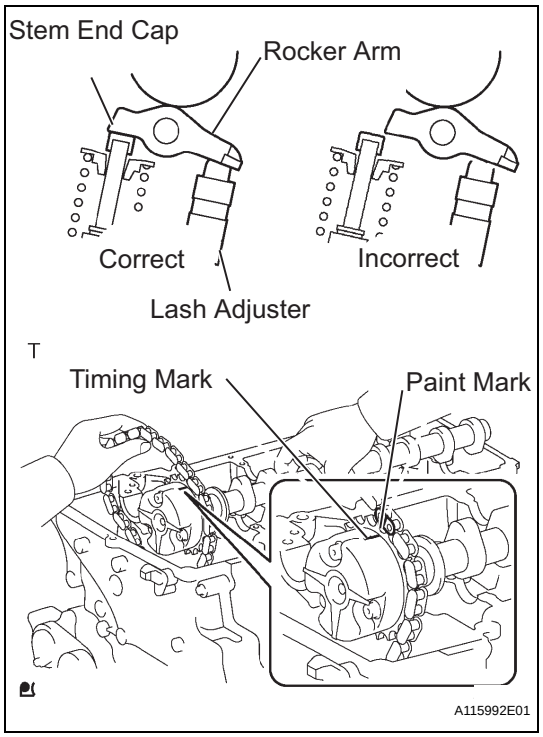

2. INSTALL CAMSHAFT

NOTICE:

Check that the valve rocker arm is correctly set as shown in the illustration.

(a) Apply clean engine oil to the camshaft's cam portion and the cylinder head journals.

(b) Install the chain onto the camshaft timing gear, with the painted mark of the link aligned with the timing mark of the camshaft timing gear.

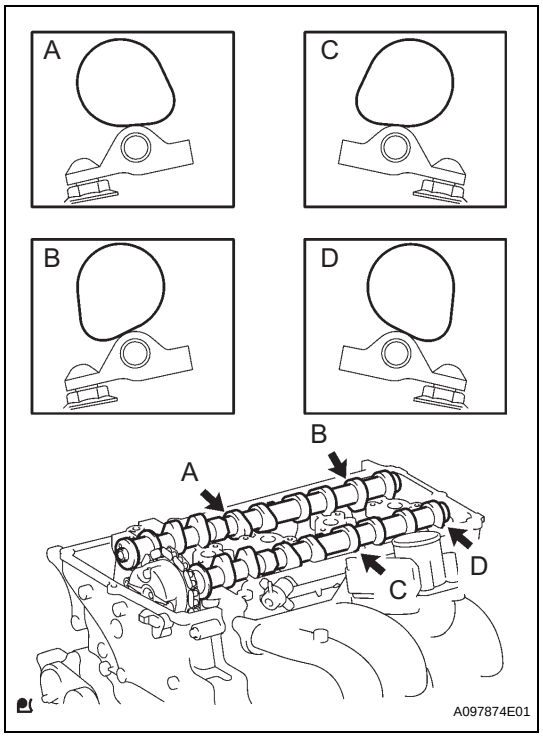

(c) Set the 2 camshafts as shown in the illustration.

NOTICE:

Align the paint mark with the timing mark before setting the camshaft.

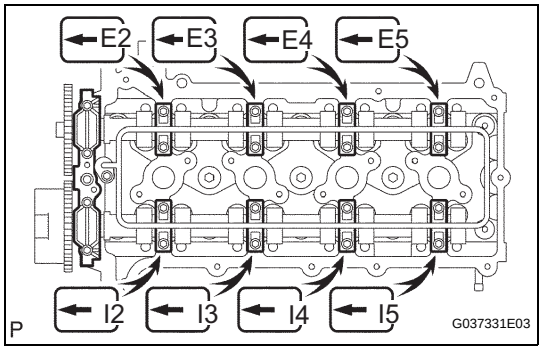

(d) Provisionally install the No. 1 camshaft bearing cap.

(e) Check the proper location of each No. 2 camshaft bearing cap and install each one.

EM

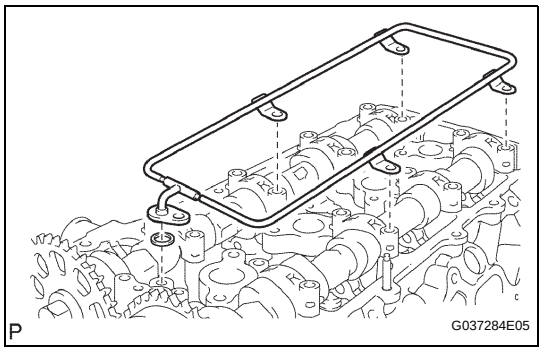

(f) Install a new O-ring onto the No. 1 camshaft bearing cap.
(g) Provisionally install the camshaft oil delivery pipe.

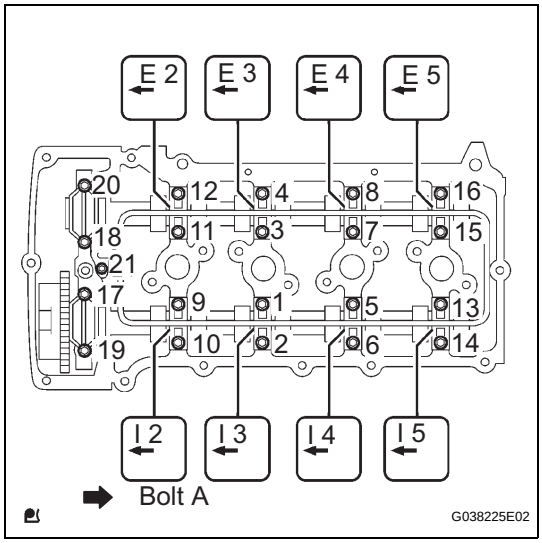

(h) Tighten the bolts in the order shown in the illustration.
Torque: 12 N*m (122 kgf*cm, 9 ft.*lbf) for bolt A
16 N*m (158 kgf*cm, 11 ft.*lbf) for bolts except bolt A

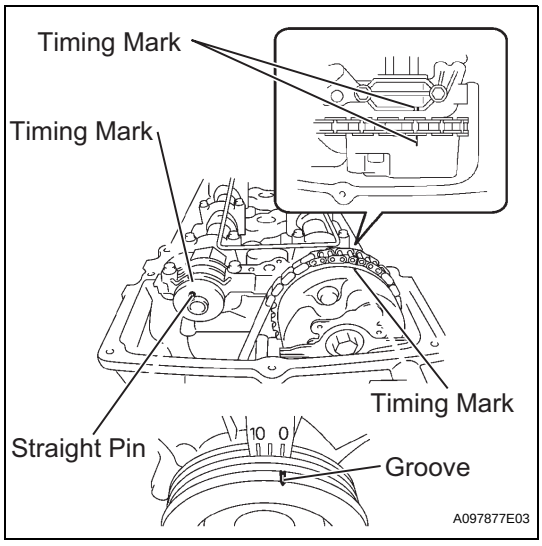

(i) Check that each timing mark is set in the position shown in the illustration.

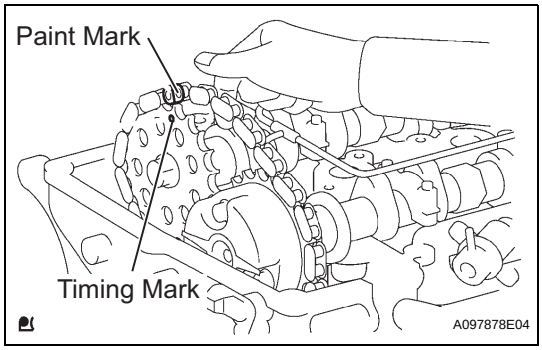

(j) Install the timing chain onto the camshaft timing gear, with the paint mark aligned with the timing mark on the camshaft timing gear.

(k) Align the No. 2 camshaft straight pin and camshaft timing gear straight pin hole. Then install the camshaft timing gear onto the No. 2 camshaft.
NOTICE:
If the straight pin and straight pin hole are difficult to align, slightly rotate the No. 2 camshaft to the left and right using the hexagonal lobe of the camshaft. Then attempt to align them again.

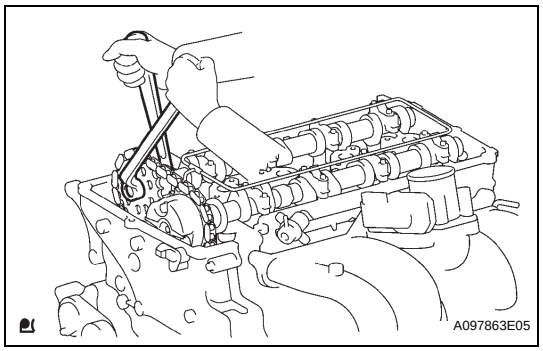

(l) Hold the hexagonal lobe of the No. 2 camshaft with the adjustable wrench.
(m) Tighten the bolt.
Torque: 78 N*m (795 kgf*cm, 58 ft.*lbf)
(n) Remove the 3.0 mm (0.118 in.) diameter bar from the chain tensioner.
(o) Apply adhesive to 2 or 3 threads of the timing gear case with head straight screw plug.
Adhesive:
Part No. 08833-00070, THREE BOND 1324 or equivalent

EM

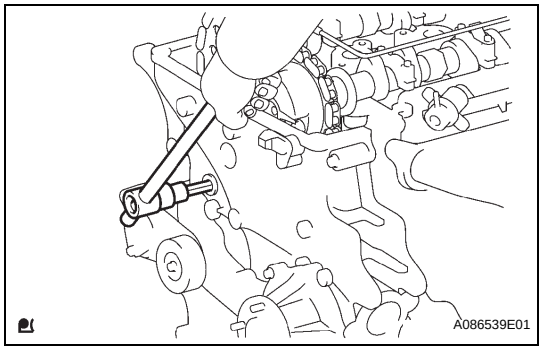

(p) Using a 10 mm socket hexagon wrench, install the timing gear case with head straight screw plug.
Torque: 17 N*m (170 kgf*cm, 12 ft.*lbf)

3. INSTALL TIMING CHAIN GUIDE

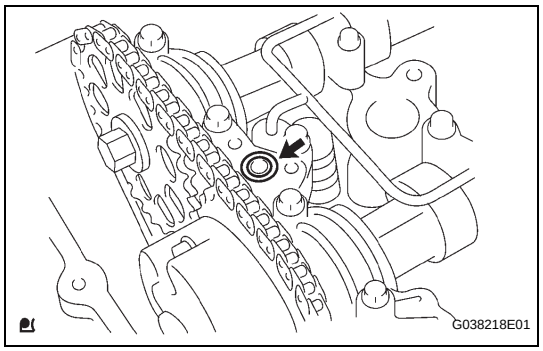

(a) Install a new O-ring onto the camshaft bearing cap.

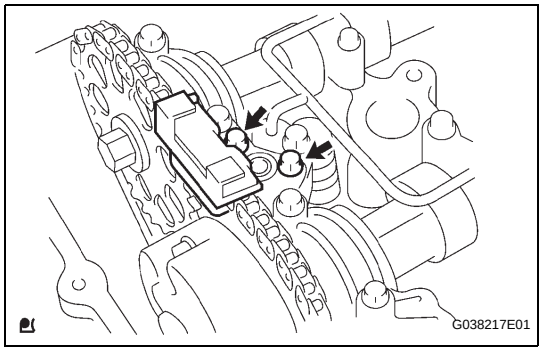

(b) Install the timing chain guide with the 2 bolts.
Torque: 10 N*m (102 kgf*cm, 7 ft.*lbf)

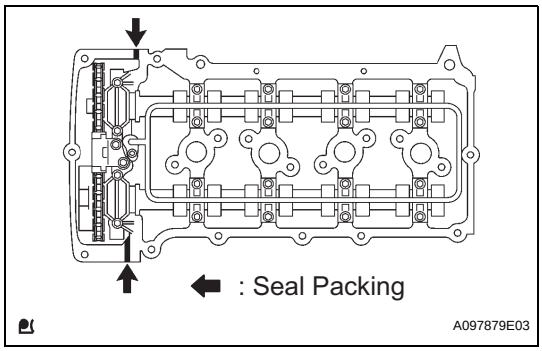

4. INSTALL CYLINDER HEAD COVER SUB-ASSEMBLY

(a) Apply seal packing to the 2 locations shown in the illustration.
Seal packing:
Part No. 08826-00080 or equivalent
NOTICE:
- **Remove any oil from the contact surface.**
- **Install the cylinder head cover within 3 minutes of applying the seal packing.**
- **Do not apply engine oil for at least 2 hours of installation.**

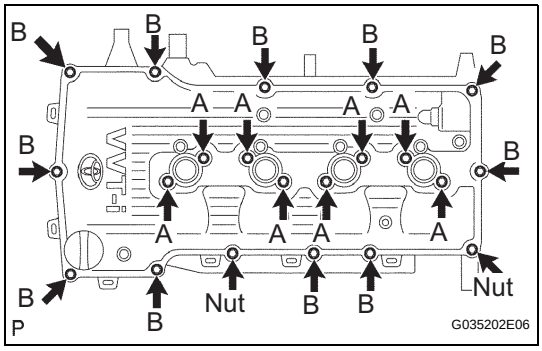

(b) Provisionally install the cylinder head cover with the 19 bolts and 2 nuts.
(c) Tighten bolts A shown in the illustration.
Torque: 9.0 N*m (92 kgf*cm, 80 in.*lbf)
(d) Tighten bolts B and nuts shown in the illustration.
Torque: 9.0 N*m (92 kgf*cm, 80 in.*lbf)
(e) Tighten bolts A again.
Torque: 9.0 N*m (92 kgf*cm, 80 in.*lbf)

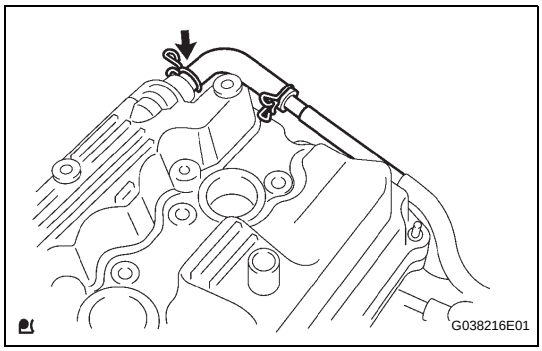

(f) Connect the ventilation hose.

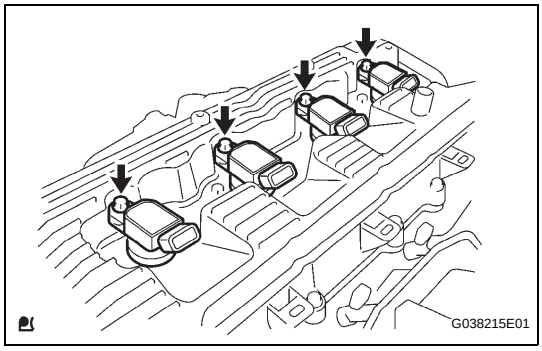

(g) Install the ignition coils with the bolts.
Torque: 9.0 N*m (92 kgf*cm, 80 in.*lbf)

EM

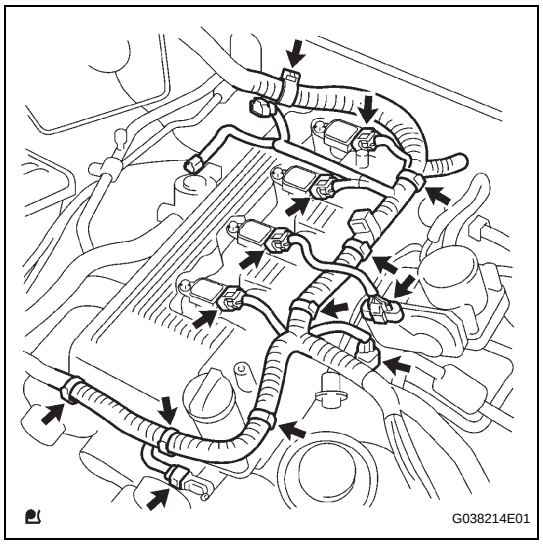

(h) Install the engine wire harness clamps.
(i) Connect the camshaft position sensor connector.
(j) Connect the VSV connector.
(k) Connect the throttle with motor body connector.
(l) Connect the ignition coil connectors.

5. **INSTALL INTAKE AIR CONNECTOR (See page ES-455)**
6. **INSTALL AIR CLEANER CAP SUB-ASSEMBLY (See page EC-17)**
7. **INSTALL FAN SHROUD (See page CO-18)**
8. **INSTALL RADIATOR SUPPORT TO FRAME SEAL LH (See page CO-19)**
9. **CONNECT CABLE TO NEGATIVE BATTERY TERMINAL**
   Torque: 3.9 N*m (40 kgf*cm, 35 in.*lbf)
10. **ADD ENGINE COOLANT (See page CO-3)**
11. **CHECK FOR ENGINE COOLANT LEAKAGE (See page CO-2)**
12. **CHECK FOR ENGINE OIL LEAKAGE**
13. **INSTALL NO. 1 ENGINE UNDER COVER SUB-ASSEMBLY (for Pre Runner and 4WD Type)**
    (a) Install the No. 1 engine under cover with the 4 bolts.
    Torque: 30 N*m (306 kgf*cm, 22 ft.*lbf)

REMOVAL

1. **REMOVE HOOD SUB-ASSEMBLY**
2. **DISCHARGE FUEL SYSTEM PRESSURE**
   (See page FU-1)
3. **REMOVE NO. 1 ENGINE UNDER COVER SUB-ASSEMBLY (for Pre Runner and 4WD Type)**
   (a) Remove the 4 bolts, then remove the No. 1 engine under cover.
4. **REMOVE NO. 2 ENGINE UNDER COVER SUB-ASSEMBLY (for Pre Runner and 4WD Type, Regular Cab)**
   (a) Remove the 4 bolts, then remove the No. 2 engine under cover.
5. **DRAIN ENGINE OIL (See page LU-3)**
6. **DRAIN ENGINE COOLANT (See page CO-3)**
7. **REMOVE BATTERY**
8. **REMOVE BATTERY TRAY**
9. **REMOVE RADIATOR SUPPORT TO FRAME SEAL LH (See page CO-12)**
10. **REMOVE FAN SHROUD (See page CO-13)**
11. **REMOVE AIR CLEANER CAP SUB-ASSEMBLY (See page EC-14)**
12. **REMOVE AIR CLEANER FILTER ELEMENT SUB-ASSEMBLY**
13. **REMOVE AIR CLEANER CASE**
    (a) Remove the 3 bolts, then remove the air cleaner case.
14. **SEPARATE VANE PUMP ASSEMBLY (See page EM-21)**
15. **REMOVE NO. 2 RADIATOR HOSE**
16. **SEPARATE COMPRESSOR AND MAGNETIC CLUTCH (w/ Air Conditioning) (See page EM-21)**
17. **REMOVE RADIATOR HOSE INLET**
18. **SEPARATE WATER HOSE SUB-ASSEMBLY (See page EM-92)**
19. **DISCONNECT FUEL HOSE (See page FU-11)**
20. **DISCONNECT NO. 2 FUEL HOSE (See page FU-11)**
21. **SEPARATE FUEL VAPOR FEED HOSE ASSEMBLY (See page EM-93)**
22. **DISCONNECT NO. 1 AIR INJECTION HOSE (See page EM-93)**
23. **DISCONNECT ENGINE WIRE (See page EM-93)**

24. REMOVE EXHAUST PIPE ASSEMBLY TAIL (See page EX-2)

25. REMOVE EXHAUST PIPE ASSEMBLY FRONT (See page EX-2)

26. REMOVE MANUAL TRANSMISSION UNIT ASSEMBLY

Transmission	See page
R155	MT-6
R155F	MT-8

27. REMOVE AUTOMATIC TRANSMISSION ASSEMBLY (See page AT-113)

28. REMOVE ENGINE ASSEMBLY (See page EM-98)

29. REMOVE CLUTCH COVER ASSEMBLY (for Manual Transmission)

Transmission	See page
R155	CL-30
R155F	CL-35

30. REMOVE CLUTCH DISC ASSEMBLY (for Manual Transmission)

Transmission	See page
R155	CL-30
R155F	CL-35

31. REMOVE FLYWHEEL SUB-ASSEMBLY (for Automatic Transmission) (See page EM-77)

32. REMOVE DRIVE PLATE AND RING GEAR SUB-ASSEMBLY (for Manual Transmission) (See page EM-78)

33. REMOVE REAR END PLATE

(a) Remove the 2 bolts, then remove the rear end plate.

34. REMOVE INTAKE AIR CONNECTOR (See page ES-452)

35. REMOVE GENERATOR ASSEMBLY (See page CH-7)

36. REMOVE NO. 1 EXHAUST MANIFOLD HEAT INSULATOR (See page EC-14)

37. REMOVE INTAKE PIPE INSULATOR (See page EC-14)

38. REMOVE AIR SWITCHING VALVE ASSEMBLY (See page EC-15)

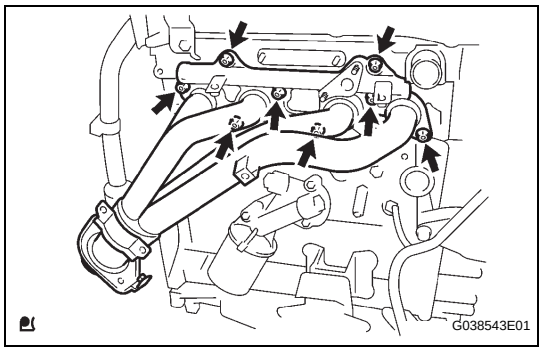

39. **REMOVE EXHAUST MANIFOLD**
    (a) Remove the 8 nuts, then remove the exhaust manifold.
40. **REMOVE V-RIBBED BELT TENSIONER ASSEMBLY (See page CO-5)**
41. **REMOVE NO. 1 IDLER PULLEY SUB-ASSEMBLY (See page EM-23)**
42. **REMOVE IDLE PULLEY ASSEMBLY WITH BRACKET (w/ Air Conditioning System) (See page ES-446)**
43. **REMOVE CRANKSHAFT POSITION SENSOR (See page ES-444)**
44. **REMOVE CAMSHAFT POSITION SENSOR (See page ES-444)**
45. **REMOVE NO. 1 INTAKE MANIFOLD HEAD GASKET (See page ES-460)**
46. **REMOVE CYLINDER HEAD COVER SUB-ASSEMBLY (See page EM-38)**
47. **REMOVE CRANKSHAFT PULLEY (See page EM-74)**
48. **REMOVE OIL LEVEL GAGE SUB-ASSEMBLY**
49. **REMOVE NO. 2 OIL PAN SUB-ASSEMBLY (See page EM-24)**
50. **REMOVE OIL STRAINER SUB-ASSEMBLY (See page EM-24)**
51. **REMOVE OIL PAN SUB-ASSEMBLY (See page EM-25)**
52. **REMOVE TIMING CHAIN COVER (See page LU-21)**
53. **REMOVE TIMING CHAIN GUIDE (See page EM-25)**
54. **REMOVE NO. 1 CHAIN TENSIONER ASSEMBLY (See page EM-26)**
55. **REMOVE CHAIN TENSIONER SLIPPER (See page EM-26)**
56. **REMOVE NO. 1 CHAIN VIBRATION DAMPER (See page EM-27)**
57. **REMOVE CHAIN SUB-ASSEMBLY**
58. **REMOVE CAMSHAFT (See page EM-40)**
59. **REMOVE NO. 1 VALVE ROCKER ARM SUB-ASSEMBLY**
    (a) Remove the 16 valve rocker arms.

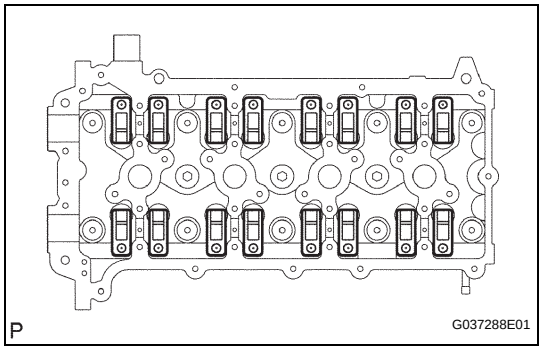

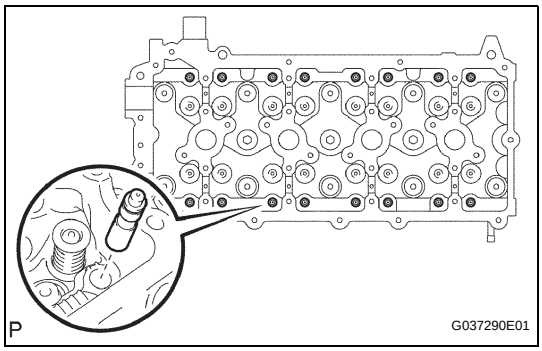

60. REMOVE VALVE LASH ADJUSTER ASSEMBLY

(a) Remove the valve lash adjuster.

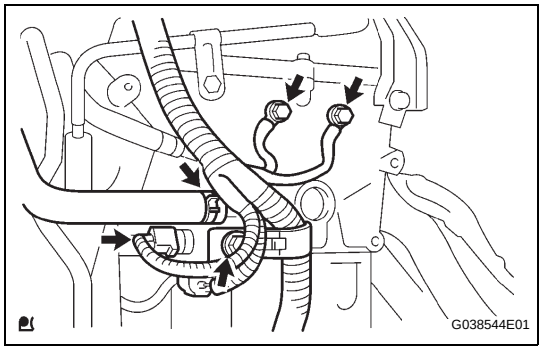

61. REMOVE CYLINDER HEAD SUB-ASSEMBLY

(a) Disconnect the water hose shown in the illustration.

(b) Disconnect the engine coolant temperature sensor connector.

(c) Remove the bolts, then separate the wire harnesses.

(d) Remove the bolt, then separate the wire harness bracket.

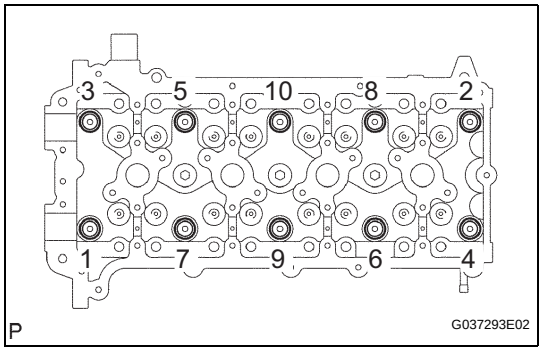

(e) Using a 10 mm bi-hexagon wrench, uniformly loosen the 10 bolts in the sequence shown in the illustration. Remove the 10 cylinder head bolts and plate washers.

NOTICE:

- **Be careful not to drop the washers into the cylinder head.**
- **Head warpage or cracking could result from removing the bolts in the wrong order.**

62. REMOVE CYLINDER HEAD GASKET

INSPECTION

1. INSPECT CYLINDER HEAD SET BOLT

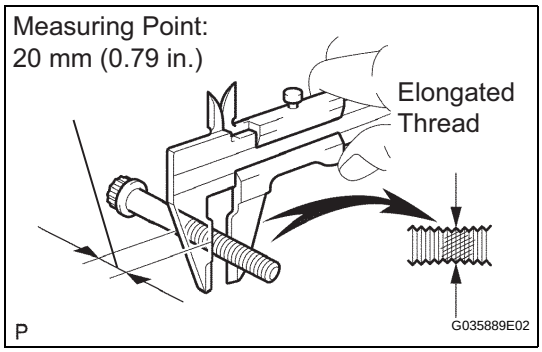

(a) Using vernier calipers, measure the minimum diameter of the elongated thread at the measuring point.

Standard outside diameter:
10.76 to 10.97 mm (0.4236 to 0.4319 in.)

Minimum outside diameter:
10.40 mm (0.4094 in.)

HINT:

If a visual check reveals no excessively thin areas, check the center of the bolt (see illustration) and find the area that has the smallest diameter.

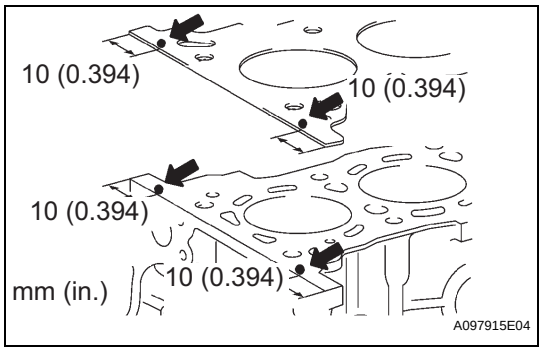

INSTALLATION

1. INSTALL CYLINDER HEAD GASKET

(a) Apply continuous beads of seal packing to the cylinder block upper side and cylinder head gasket upper side as shown in the illustration.

Seal packing:
Part No. 08826-00080 or equivalent
Seal width:
4 to 7 mm (0.15 to 0.28 in.)
NOTICE:
- **Remove any oil from the contact surface.**
- **Install the cylinder head gasket within 3 minutes of applying the seal packing.**
- **Install the cylinder head bolt within 15 minutes of applying the seal packing.**
- **Do not pour in engine oil for at least 4 hours after installation.**

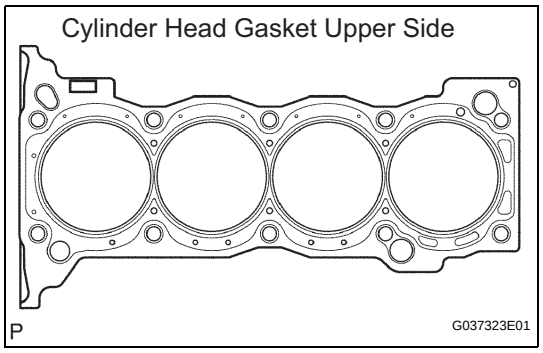

(b) Place a new cylinder head gasket on the cylinder block surface with the Lot No. stamp facing upward.
NOTICE:
- **Make sure that the cylinder head gasket is installed in the correct direction.**
- **Place the cylinder head gently in order to avoid damaging the gasket with the bottom part of the head.**

2. INSTALL CYLINDER HEAD SUB-ASSEMBLY

HINT:
The cylinder head bolts are tightened in 2 successive steps.

(a) Place the cylinder head on the cylinder block.

(b) Apply a light coat of engine oil to the threads and under the heads of the cylinder head bolts.

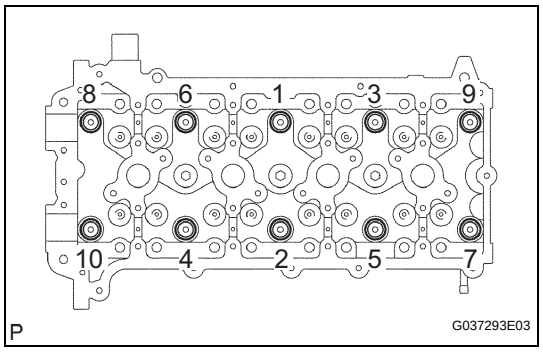

(c) Using several steps, uniformly install and tighten the 10 cylinder head bolts with plate washers with a 10 mm bi- hexagon wrench in the sequence shown in the illustration.
Torque: 39 N*m (398 kgf*cm, 29 ft.*lbf)

EM

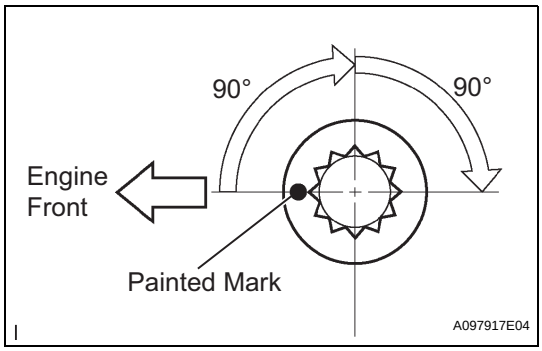

(d) Mark the front of the cylinder head bolt head with paint.
(e) Retighten the cylinder head bolts by 90° in the same order as in step (c).
(f) Retighten the cylinder head bolts by an additional 90°.
(g) Check that the painted mark is at a 180° from the original position.

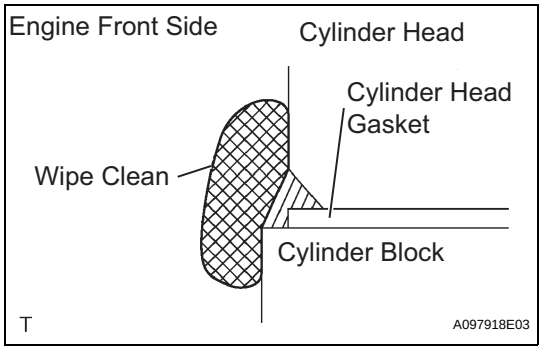

(h) Seal packing will seep out on the engine's front side. Thoroughly wipe clean any seal packing.
(i) Install the wire harness bracket with the bolt.
(j) Install the wire harness with the bolts.
(k) Connect the engine coolant temperature sensor connector.
(l) Install the water hose.

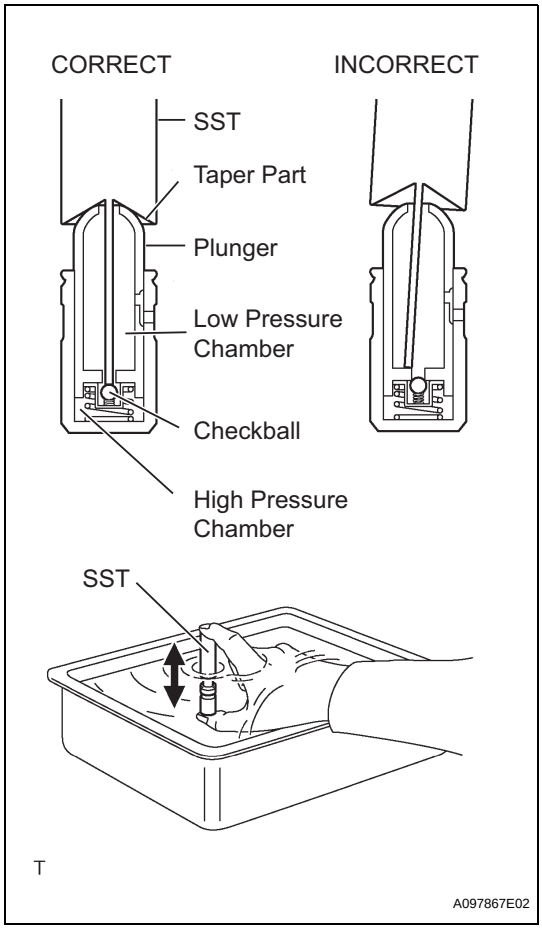

3. INSPECT VALVE LASH ADJUSTER ASSEMBLY

NOTICE:

- **Keep the lash adjuster free from dirt and foreign objects.**
- **Only use clean engine oil.**

(a) Place the lash adjuster into a container full of engine oil.
(b) Insert the tip of SST into the lash adjuster's plunger and press down the checkball inside the plunger.
SST 09276-75010
(c) Firmly hold SST and lash adjuster together and move the plunger up and down 5 to 6 times.
(d) Check the movement of the plunger and bleed air.
OK:
Plunger moves up and down.
NOTICE:
When bleeding high-pressure air from the compression chamber, make sure that the tip of the SST is actually pressing the checkball as shown in the illustration. If the checkball is not pressed, the air will not bleed.
(e) After bleeding the air, remove SST. Then quickly and firmly press the plunger with a finger.
OK:
Plunger is very difficult to move.
If the result is not as specified, replace the lash adjuster.

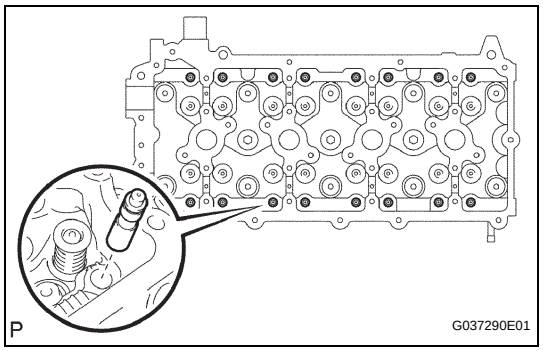

4. **INSTALL VALVE LASH ADJUSTER ASSEMBLY**
   (a) Install the valve lash adjuster.

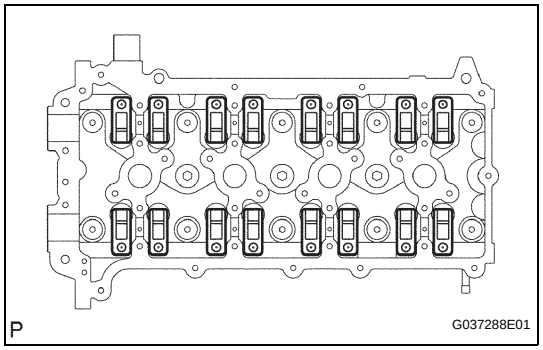

5. **INSTALL NO. 1 VALVE ROCKER ARM SUB-ASSEMBLY**
   (a) Install the 16 valve rocker arms.
6. **INSTALL CAMSHAFT (See page EM-45)**
7. **INSTALL NO. 1 CHAIN VIBRATION DAMPER (See page EM-30)**
8. **INSTALL CHAIN SUB-ASSEMBLY (See page EM-30)**
9. **INSTALL CHAIN TENSIONER SLIPPER (See page EM-31)**
10. **INSTALL NO. 1 CHAIN TENSIONER ASSEMBLY (See page EM-31)**
11. **INSTALL TIMING CHAIN GUIDE (See page EM-31)**
12. **INSTALL TIMING CHAIN COVER (See page LU-24)**
13. **INSTALL OIL PAN SUB-ASSEMBLY (See page EM-31)**
14. **INSTALL OIL STRAINER SUB-ASSEMBLY (See page EM-32)**
15. **INSTALL NO. 2 OIL PAN SUB-ASSEMBLY (See page EM-32)**
16. **INSTALL OIL LEVEL GAGE SUB-ASSEMBLY**
17. **INSTALL CRANKSHAFT PULLEY (See page EM-75)**
18. **INSTALL CYLINDER HEAD COVER SUB-ASSEMBLY (See page EM-48)**
19. **INSTALL NO. 1 INTAKE MANIFOLD TO HEAD GASKET (See page ES-463)**
20. **INSTALL CAMSHAFT POSITION SENSOR (See page ES-444)**
21. **INSTALL CRANKSHAFT POSITION SENSOR (See page ES-444)**
22. **INSTALL IDLE PULLEY ASSEMBLY WITH BRACKET (w/ Air Conditioning System) (See page ES-448)**
23. **INSTALL NO. 1 IDLER PULLEY SUB-ASSEMBLY (See page EM-33)**
24. **INSTALL V-RIBBED BELT TENSIONER ASSEMBLY (See page CO-6)**

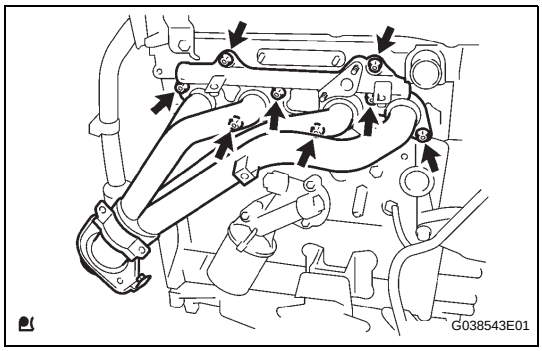

25. **INSTALL EXHAUST MANIFOLD**
    (a) Install a new gasket and the exhaust manifold with 8 new nuts.
    Torque: 36 N*m (367 kgf*cm, 27 ft.*lbf)
26. **INSTALL AIR SWITCHING VALVE ASSEMBLY (See page EC-16)**
27. **INSTALL INTAKE PIPE INSULATOR (See page EC-16)**
28. **INSTALL NO. 1 EXHAUST MANIFOLD HEAT INSULATOR (See page EC-16)**
29. **INSTALL GENERATOR ASSEMBLY (See page CH-13)**
30. **INSTALL INTAKE AIR CONNECTOR (See page ES-455)**
31. **INSTALL REAR END PLATE**
    (a) Install the rear end plate with the 2 bolts.
    Torque: 18 N*m (178 kgf*cm, 13 ft.*lbf)
32. **INSTALL DRIVE PLATE AND RING GEAR SUB-ASSEMBLY (for Automatic Transmission) (See page EM-79)**
33. **INSTALL FLYWHEEL SUB-ASSEMBLY (for Manual Transmission) (See page EM-79)**
34. **INSTALL CLUTCH DISC ASSEMBLY (for Manual Transmission)**

Transmission	See page
R155	CL-32
R155F	CL-37

35. **INSTALL CLUTCH COVER ASSEMBLY (for Manual Transmission)**

Transmission	See page
R155	CL-32
R155F	CL-37

36. **INSTALL ENGINE ASSEMBLY (See page EM-98)**
37. **INSTALL AUTOMATIC TRANSMISSION ASSEMBLY** (See page ED-7)
38. **INSTALL MANUAL TRANSMISSION UNIT ASSEMBLY**

Transmission	See page
R155	MT-9
R155F	MT-11

39. **INSTALL EXHAUST PIPE ASSEMBLY FRONT (See page CH-13)**
40. **INSTALL EXHAUST PIPE ASSEMBLY TAIL (See page EX-2)**
41. **CONNECT ENGINE WIRE**
42. **CONNECT NO. 1 AIR INJECTION HOSE (See page EM-99)**

EM

43. **CONNECT FUEL VAPOR FEED HOSE ASSEMBLY**
44. **CONNECT NO. 2 FUEL HOSE (See page FU-17)**
45. **CONNECT FUEL HOSE (See page FU-17)**
46. **INSTALL WATER HOSE SUB-ASSEMBLY (See page EM-99)**
47. **INSTALL RADIATOR HOSE INLET**
48. **INSTALL COMPRESSOR AND MAGNETIC CLUTCH (With Air Conditioning) (See page EM-34)**
49. **INSTALL NO. 2 RADIATOR HOSE**
50. **INSTALL VANE PUMP ASSEMBLY (See page EM-34)**
51. **INSTALL AIR CLEANER CASE**
    (a) Install the air cleaner case with the 3 bolts.
    Torque: 12 N*m (122 kgf*cm, 9 ft.*lbf)
52. **INSTALL AIR CLEANER FILTER ELEMENT SUB-ASSEMBLY**
53. **INSTALL AIR CLEANER CAP SUB-ASSEMBLY (See page EC-17)**
54. **INSTALL FAN SHROUD (See page CO-18)**
55. **INSTALL RADIATOR SUPPORT TO FRAME SEAL LH (See page CO-19)**
56. **INSTALL BATTERY TRAY**
57. **INSTALL BATTERY**
58. **ADD ENGINE OIL (See page LU-4)**
59. **ADD ENGINE COOLANT (See page CO-3)**
60. **CHECK ENGINE OIL LEVEL**
61. **CHECK FOR FUEL LEAKAGE**
62. **CHECK FOR ENGINE COOLANT LEAKAGE (See page CO-2)**
63. **CHECK FOR OIL LEAKAGE**
64. **CHECK FOR EXHAUST GAS LEAKAGE**
65. **INSTALL NO. 1 ENGINE UNDER COVER SUB-ASSEMBLY (for Pre Runner and 4WD Type)**
    (a) Install the No. 1 engine under cover with the 4 bolts.
    Torque: 30 N*m (306 kgf*cm, 22 ft.*lbf)
66. **INSTALL NO. 2 ENGINE UNDER COVER SUB-ASSEMBLY (for Pre Runner and 4WD Type, Regular Cab)**
    (a) Install the No. 2 engine under cover with the 4 bolts.
    Torque: 30 N*m (306 kgf*cm, 22 ft.*lbf)
67. **INSTALL HOOD SUB-ASSEMBLY**
    (See page ED-7)

EM

REMOVAL

1. **REMOVE HOOD SUB-ASSEMBLY**
2. **DISCHARGE FUEL SYSTEM PRESSURE**
   (See page FU-1)
3. **REMOVE NO. 1 ENGINE UNDER COVER SUB-ASSEMBLY (for Pre Runner and 4WD Type)**
   (a) Remove the 4bolts, then remove the engine under cover No.1.
4. **REMOVE NO. 2 ENGINE UNDER COVER SUB-ASSEMBLY (for Pre Runner and 4WD Type, Regular Cab)**
   (a) Remove the 4 bolts, then remove engine cover No.2.
5. **DRAIN ENGINE COOLANT (See page CO-3)**
6. **REMOVE BATTERY**
7. **REMOVE BATTERY TRAY**
8. **REMOVE RADIATOR SUPPORT TO FRAME SEAL LH (See page CO-12)**
9. **REMOVE FAN SHROUD (See page CO-13)**
10. **REMOVE AIR CLEANER CAP SUB-ASSEMBLY (See page EC-14)**
11. **REMOVE AIR CLEANER FILTER ELEMENT SUB-ASSEMBLY**
12. **REMOVE AIR CLEANER CASE**
    (a) Remove the 3 bolts, then remove the air cleaner case.
13. **SEPARATE VANE PUMP (See page EM-21)**
14. **REMOVE NO. 2 RADIATOR HOSE**
15. **SEPARATE COMPRESSOR AND MAGNETIC CLUTCH (w/ Air Conditioning System) (See page EM-21)**
16. **REMOVE RADIATOR HOSE INLET**
17. **SEPARATE WATER HOSE SUB-ASSEMBLY**
    (a) Separate the water hoses.
18. **DISCONNECT FUEL HOSE (See page FU-11)**
19. **DISCONNECT NO. 2 FUEL HOSE (See page FU-11)**

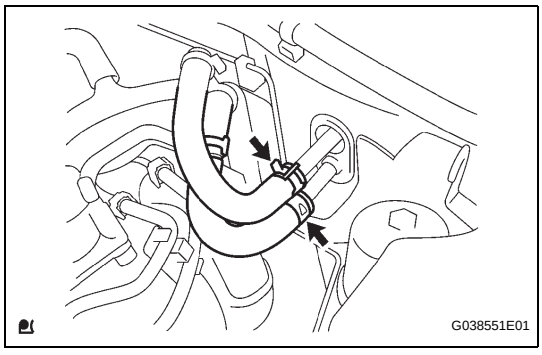

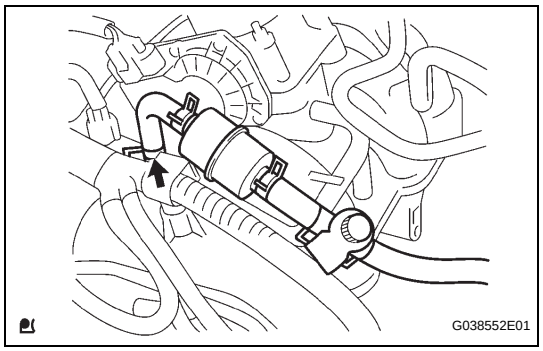

20. SEPARATE FUEL VAPOR FEED HOSE ASSEMBLY

(a) Disconnect the fuel vapor feed hose.

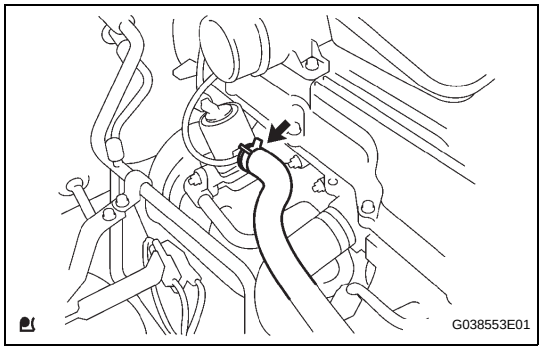

21. DISCONNECT NO. 1 AIR INJECTION HOSE

(a) Disconnect the No.1 air injection hose.

22. DISCONNECT ENGINE WIRE

(a) Disconnect the connector from the ECM, then pull the engine wire harness to the compartment side.
NOTICE:
Do not forcibly pull the wire harness to the engine compartment side.

(b) Disconnect all wire harnesses and connectors in the engine room.

23. REMOVE EXHAUST PIPE ASSEMBLY TAIL (See page EX-2)

24. REMOVE EXHAUST PIPE ASSEMBLY FRONT (See page EX-2)

25. REMOVE MANUAL TRANSMISSION UNIT ASSEMBLY

Transmission	See page
R155	MT-6
R155F	MT-8

26. REMOVE AUTOMATIC TRANSMISSION ASSEMBLY
(See page AT-113)

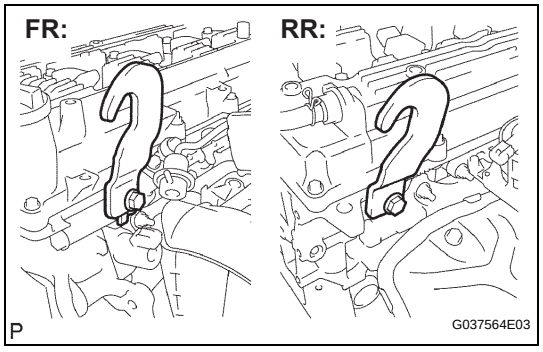

27. REMOVE ENGINE ASSEMBLY

(a) Install the engine hanger with the bolt.
Torque: 42 N*m (420 kgf*cm, 30 ft.*lbf)
Part No

Part Name	Part No.
Engine hanger	12281-75040
Bolt	91552-A1020

NOTICE:
Be sure to use the bolts when installing the engine hanger.

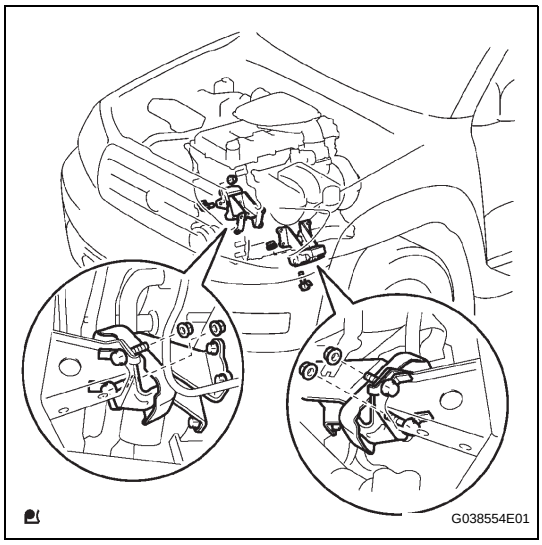

(b) Attach the engine sling device and chain block to the engine hangers.
(c) Remove the 4 bolts and 4 nuts.
(d) Lift the engine out of the vehicle slowly and carefully by operating the engine sling device and chain block.

NOTICE:
Make sure that no wires, hoses or cables are connected to the engine.

28. REMOVE CLUTCH COVER ASSEMBLY (for Manual Transmission)

Transmission	See page
R155	CL-30
R155F	CL-35

29. REMOVE CLUTCH DISC ASSEMBLY (for Manual Transmission)

Transmission	See page
R155	CL-30
R155F	CL-35

30. REMOVE FLYWHEEL SUB-ASSEMBLY (for Manual Transmission) (See page EM-77)

31. REMOVE DRIVE PLATE AND RING GEAR SUB-ASSEMBLY (for Automatic Transmission) (See page EM-78)

32. REMOVE REAR END PLATE (See page EM-66)

33. REMOVE INTAKE AIR CONNECTOR (See page ES-452)

34. REMOVE FUEL HOSE (See page FU-11)

35. REMOVE NO. 2 FUEL HOSE (See page FU-11)

36. REMOVE THROTTLE WITH MOTOR BODY ASSEMBLY (See page ES-453)

37. REMOVE NO. 1 INTAKE MANIFOLD TO HEAD GASKET (See page ES-460)

38. REMOVE IDLE PULLEY ASSEMBLY WITH BRACKET (w/ Air Conditioning System) (See page ES-446)

39. REMOVE ENGINE WIRE

40. REMOVE OIL LEVEL GAGE SUB-ASSEMBLY

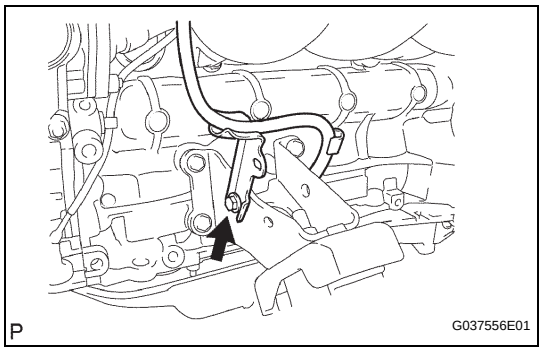

41. **REMOVE OIL LEVEL GAGE GUIDE**
    (a) Remove the bolts, then remove the oil level gage guide.

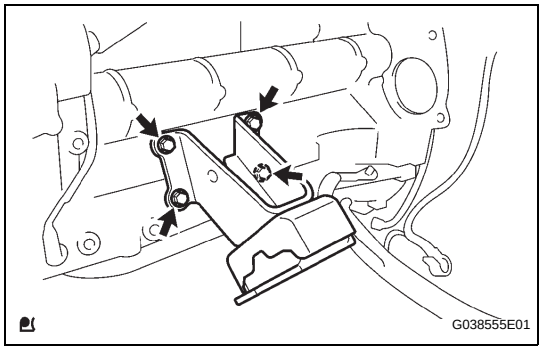

42. **REMOVE FRONT NO. 1 ENGINE MOUNTING BRACKET**
    (a) Remove the 4 bolts, then remove the engine mounting bracket front No. 1 LH with engine mounting insulator front.

43. **REMOVE THERMOSTAT (See page CO-7)**

44. **REMOVE FUEL INJECTOR ASSEMBLY (See page FU-13)**

45. **REMOVE KNOCK SENSOR (See page ES-462)**

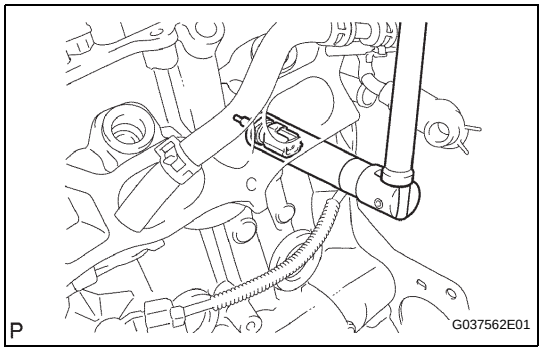

46. **REMOVE ENGINE COOLANT TEMPERATURE SENSOR**
    (a) Using a 19 mm deep socket wrench, remove the engine coolant temperature sensor.

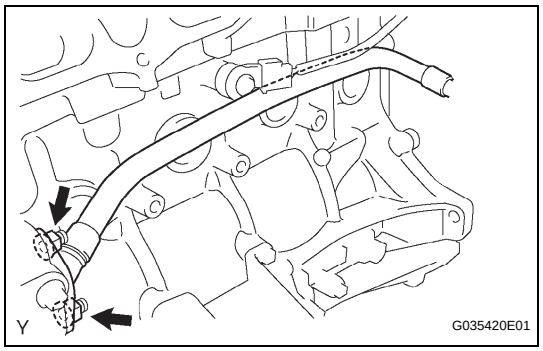

47. **REMOVE NO. 1 WATER BY-PASS PIPE**
    (a) Remove the 2 nuts, then remove the water by-pass pipe No. 1.

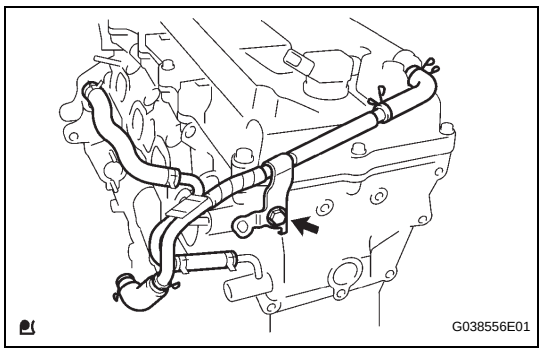

48. **REMOVE VENTILATION PIPE**
    (a) Remove the bolts, then remove the ventilation pipe.

49. **REMOVE IGNITION COIL ASSEMBLY**
    (See page EM-38)

50. **REMOVE SPARK PLUG**

51. **REMOVE GENERATOR ASSEMBLY (See page CH-7)**

52. **REMOVE NO. 1 IDLER PULLEY SUB-ASSEMBLY (See page EM-23)**

EM

53. REMOVE V-RIBBED BELT TENSIONER ASSEMBLY (See page CO-5)

54. REMOVE NO. 1 EXHAUST MANIFOLD HEAT INSULATOR (See page EC-14)

55. REMOVE AIR SWITCHING VALVE ASSEMBLY (See page EC-15)

56. REMOVE EXHAUST MANIFOLD (See page EM-67)

57. REMOVE FRONT NO. 1 ENGINE MOUNTING BRACKET RH

(a) Remove the 4 bolts, then remove the engine mounting bracket front No. 1 together with the engine mounting insulator front.

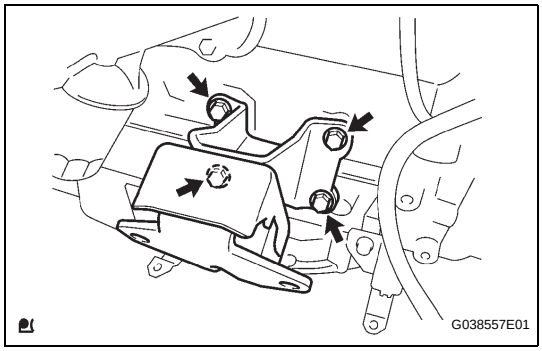

58. REMOVE ENGINE OIL PRESSURE SWITCH ASSEMBLY

(See page LU-1)

INSTALLATION

1. **INSTALL ENGINE OIL PRESSURE SWITCH ASSEMBLY**
   (See page LU-1)

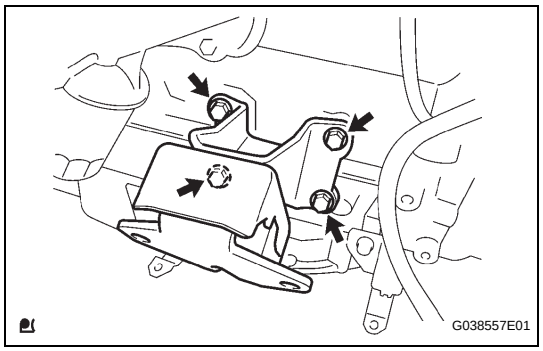

2. **INSTALL FRONT NO. 1 ENGINE MOUNTING BRACKET RH**
   (a) Install the engine mounting bracket front No. 1 RH with the 4 bolts.
   Torque: 51 N*m (520 kgf*cm, 38 ft.*lbf)
3. **INSTALL EXHAUST MANIFOLD (See page EM-72)**
4. **INSTALL AIR SWITCHING VALVE ASSEMBLY (See page EC-16)**
5. **INSTALL NO. 1 EXHAUST MANIFOLD HEAT INSULATOR (See page EC-16)**
6. **INSTALL V-RIBBED BELT TENSIONER ASSEMBLY (See page CO-6)**
7. **INSTALL NO. 1 IDLER PULLEY SUB-ASSEMBLY (See page EM-33)**
8. **INSTALL GENERATOR ASSEMBLY (See page CH-13)**
9. **INSTALL SPARK PLUG**
   Torque: 18 N*m (184 kgf*cm, 13 ft.*lbf)
10. **INSTALL IGNITION COIL ASSEMBLY**
    (See page EM-69)

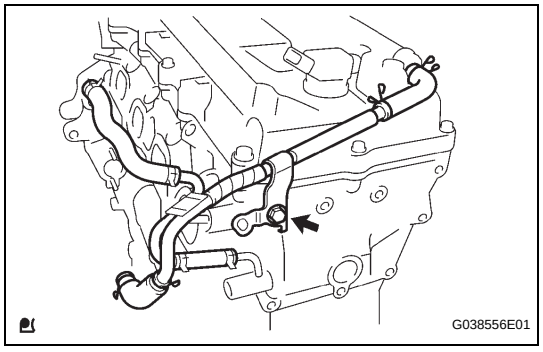

11. **INSTALL VENTILATION PIPE**
    (a) Install the ventilation pipe with the bolt.
    Torque: 18 N*m (184 kgf*cm, 13 ft.*lbf)

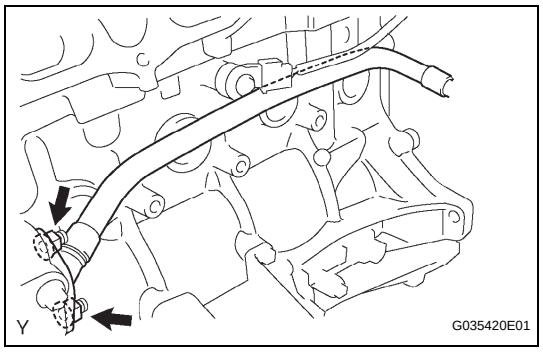

12. **INSTALL NO. 1 WATER BY-PASS PIPE**
    (a) Install a new gasket, then install the water by-pass pipe No. 1.
    Torque: 18 N*m (178 kgf*cm, 13 ft.*lbf)

EM

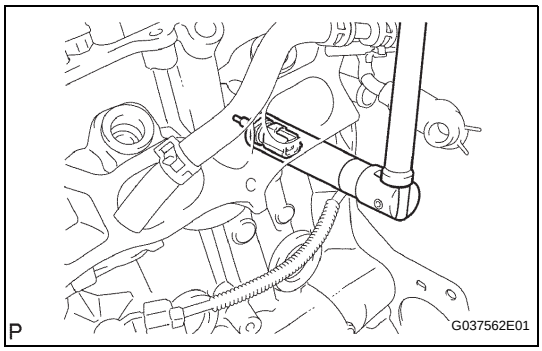

13. **INSTALL ENGINE COOLANT TEMPERATURE SENSOR**
    (a) Install a new gasket onto the engine coolant temperature sensor.
    (b) Using a 19 mm deep socket wrench, install the engine coolant temperature sensor.
    Torque: 20 N*m (204 kgf*cm, 15 ft.*lbf)
14. **INSTALL KNOCK SENSOR (See page ES-462)**
15. **INSTALL FUEL INJECTOR ASSEMBLY (See page FU-15)**
16. **INSTALL THERMOSTAT (See page CO-8)**

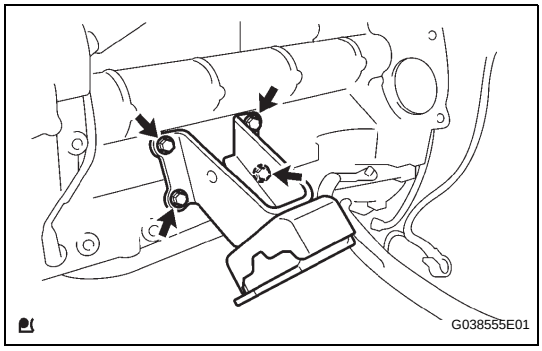

17. **INSTALL FRONT NO. 1 ENGINE MOUNTING BRACKET LH**
    (a) Install engine mounting bracket front No. 1 LH with the 4 bolts.
    Torque: 51 N*m (520 kgf*cm, 38 ft.*lbf)

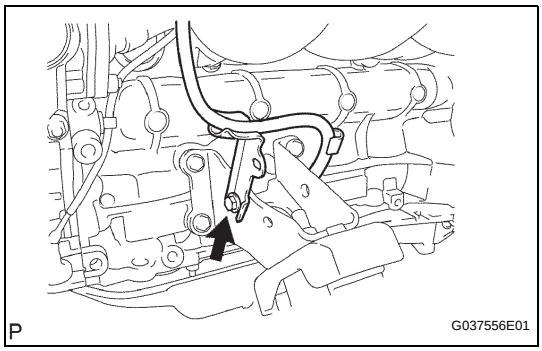

18. **INSTALL OIL LEVEL GAGE GUIDE**
    (a) Install the oil level gage guide with the bolt.
    Torque: 20 N*m (204 kgf*cm, 15 ft.*lbf)
19. **INSTALL OIL LEVEL GAGE SUB-ASSEMBLY**
20. **INSTALL ENGINE WIRE**
21. **INSTALL IDLE PULLEY ASSEMBLY WITH BRACKET (w/ Air Conditioning System) (See page ES-448)**
22. **INSTALL NO. 1 INTAKE MANIFOLD TO HEAD GASKET (See page ES-463)**
23. **INSTALL THROTTLE WITH MOTOR BODY ASSEMBLY (See page ES-454)**
24. **INSTALL NO. 2 FUEL HOSE (See page FU-17)**
25. **INSTALL FUEL HOSE (See page FU-17)**
26. **INSTALL INTAKE AIR CONNECTOR (See page ES-455)**
27. **INSTALL REAR END PLATE (See page EM-72)**
28. **INSTALL DRIVE PLATE AND RING GEAR SUB-ASSEMBLY (for Automatic Transmission) (See page EM-79)**
29. **INSTALL FLYWHEEL SUB-ASSEMBLY (for Manual Transmission) (See page EM-79)**
30. **INSTALL CLUTCH DISC ASSEMBLY (for Manual Transmission)**

Transmission	See page
R155	CL-32

Transmission	See page
R155F	CL-37

31. INSTALL CLUTCH COVER ASSEMBLY (for Manual Transmission)

Transmission	See page
R155	CL-32
R155F	CL-37

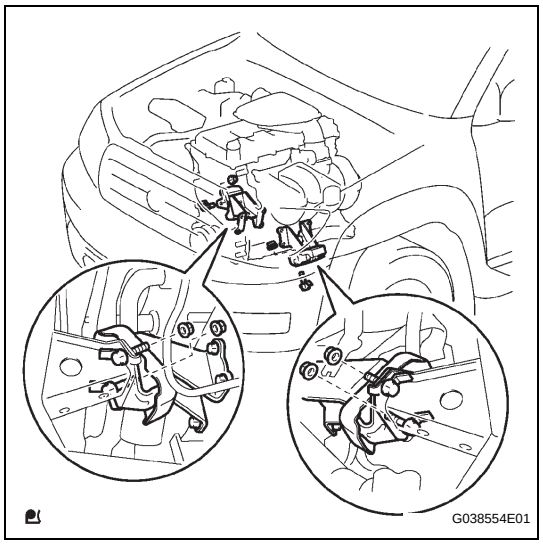

32. INSTALL ENGINE ASSEMBLY

(a) Attach the engine sling device and chain block to the engine hangers.

(b) Keep the engine level, and align the engine mounting bracket front No. 1 RH w/ engine mounting insulator front and LH with the body mountings.

(c) Attach the engine mounting bracket front No. 1 RH w/ engine mounting insulator front and LH, and install the 4 bolts and nuts.

Torque: 38 N*m (387 kgf*cm, 28 ft.*lbf)

(d) Remove the bolts, then remove the engine hangers.

33. INSTALL AUTOMATIC TRANSMISSION ASSEMBLY
(See page ED-7)

34. INSTALL MANUAL TRANSMISSION UNIT ASSEMBLY

Transmission	See page
R155	MT-9
R155F	MT-11

35. INSTALL FRONT EXHAUST PIPE ASSEMBLY (See page EX-2)

36. INSTALL EXHAUST PIPE ASSEMBLY TAIL (See page EX-2)

37. INSTALL ENGINE WIRE

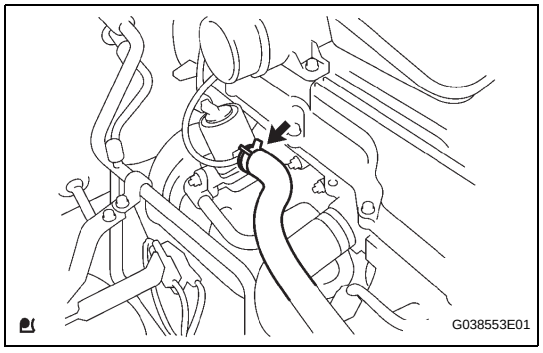

38. CONNECT NO. 1 AIR INJECTION HOSE

(a) Connect the fuel vapor feed hose.

EM

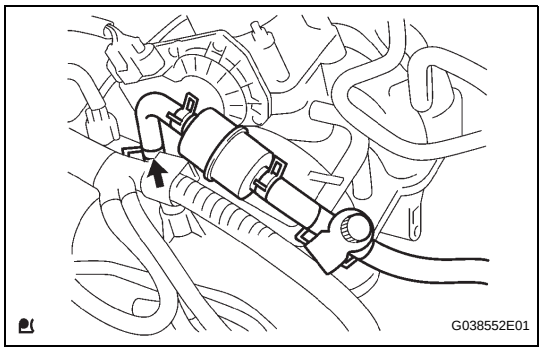

39. **CONNECT FUEL VAPOR FEED HOSE ASSEMBLY**
    (a) Connect the fuel feed hose.
40. **CONNECT NO. 2 FUEL HOSE (See page FU-17)**
41. **CONNECT FUEL HOSE (See page FU-17)**

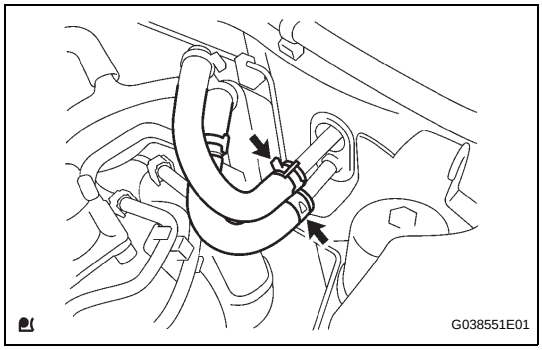

42. **INSTALL WATER HOSE SUB-ASSEMBLY**
    (a) Install the water hose.
43. **INSTALL RADIATOR HOSE INLET**
44. **INSTALL COMPRESSOR AND MAGNETIC CLUTCH (w/ Air Conditioning System) (See page EM-34)**
45. **INSTALL NO. 2 RADIATOR HOSE**
46. **INSTALL VANE PUMP ASSEMBLY (See page EM-34)**
47. **INSTALL AIR CLEANER CASE**
    (a) Install the air cleaner case with the 3 bolts.
    Torque: 12 N*m (122 kgf*cm, 9 ft.*lbf)
48. **INSTALL AIR CLEANER FILTER ELEMENT SUB-ASSEMBLY**
49. **INSTALL AIR CLEANER CAP SUB-ASSEMBLY (See page EC-17)**
50. **INSTALL FAN SHROUD (See page CO-18)**
51. **INSTALL RADIATOR SUPPORT TO FRAME SEAL LH (See page CO-19)**
52. **INSTALL BATTERY TRAY**
53. **INSTALL BATTERY**
54. **ADD ENGINE COOLANT (See page CO-3)**
55. **ADD ENGINE OIL (See page LU-4)**
56. **CHECK FOR ENGINE OIL LEVEL**
57. **CHECK FOR FUEL LEAKAGE**
58. **CHECK FOR ENGINE COOLANT LEAKAGE (See page CO-2)**
59. **CHECK FOR OIL LEAKAGE**
60. **CHECK FOR EXHAUST GAS LEAKAGE**
61. **INSPECT IGNITION TIMING (See page EM-1)**
62. **INSPECT ENGINE IDLE SPEED (See page EM-2)**
63. **INSPECT CO/HC (See page EM-3)**

64. **INSTALL NO. 1 ENGINE UNDER COVER SUB-ASSEMBLY (for Pre Runner and 4WD Type)**
    (a) Install the engine under cover No. 1 with the 4 bolts.
    Torque: 30 N*m (306 kgf*cm, 22 ft.*lbf)

65. **INSTALL NO. 2 ENGINE UNDER COVER SUB-ASSEMBLY (for Pre Runner and 4WD Type, Regular Cab)**
    (a) Install the engine under cover No. 2 with the 4 bolts.
    Torque: 30 N*m (306 kgf*cm, 22 ft.*lbf)

66. **INSTALL HOOD SUB-ASSEMBLY**
    (See page ED-7)

REPAIR

1. REPAIR INTAKE VALVE SEAT

NOTICE:

Keep the lip free from foreign matter.

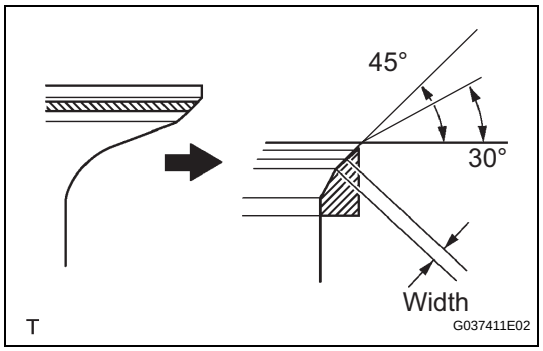

(a) If the seating is too high on the valve face, use 30° and 45° cutters to correct the seat.

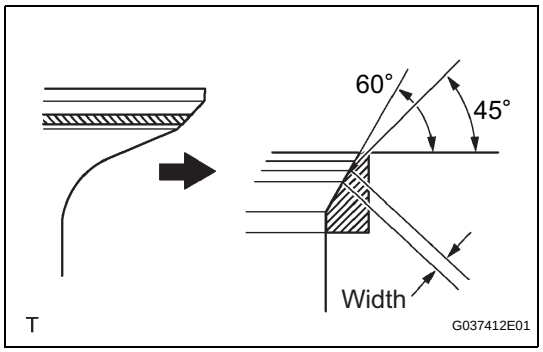

(b) If the seating is too low on the valve face, use 60° and 45° cutters to correct the seat.

(c) Handrub the valve and valve seat with an abrasive compound.

(d) Check the valve seating position.

2. REPAIR EXHAUST VALVE SEAT

NOTICE:

Keep the lip free from foreign matter.

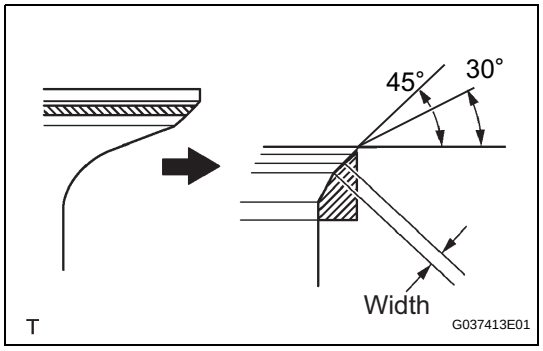

(a) If the seating is too high on the valve face, use 30° and 45° cutters to correct the seat.

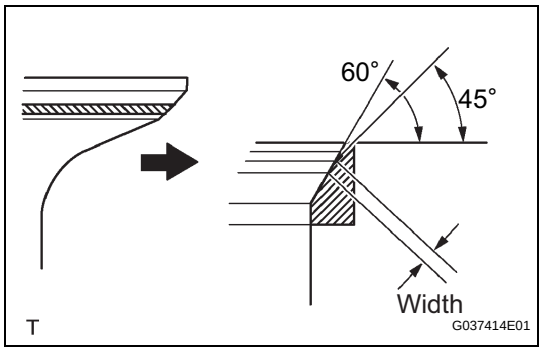

(b) If the seating is too low on the valve face, use 60° and 45° cutters to correct the seat.

(c) Handrub the valve and valve seat with an abrasive compound.

(d) Check the valve seating position.

EM

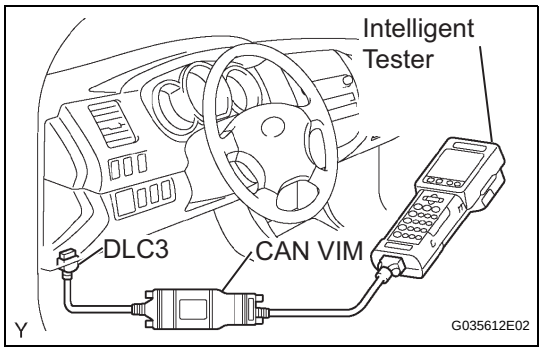

ON-VEHICLE INSPECTION

1. CHECK FUEL PUMP

(a) Connect the intelligent tester to the DLC3.
(b) Turn the ignition switch to ON.
NOTICE:
Do not start the engine.
(c) Turn the intelligent tester ON.
(d) Select the following menu items: DIAGNOSIS / ENHANCED OBD II / ACTIVE TEST / FUEL PUMP / SPD.
(e) Check the fuel operation by operating it with the intelligent tester.
If the fuel pump does not operate, replace the fuel pump.

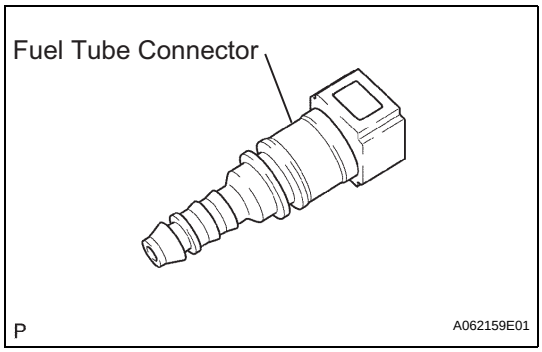

2. CHECK FUEL PRESSURE

(a) Prepare for the inspection.
(1) Prepare a new fuel tube.
HINT:
Part No. 23801-0P010
(2) Using a cutter knife, cut the fuel tube protector. Tear the protector by hand, then remove the fuel tube connector.
NOTICE:
If the protector is cut too deeply with the cutter, the O-ring of the fuel tube connector will be damaged.
(b) Discharge the fuel pressure system (see page FU-1).
(c) Using a voltmeter, measure the battery voltage.
Standard:
9.0 to 14 V
(d) Disconnect the battery negative terminal.
(e) Disengage the fuel pipe clamp (see page FU-1).
(f) Disconnect the fuel pipe No. 1.

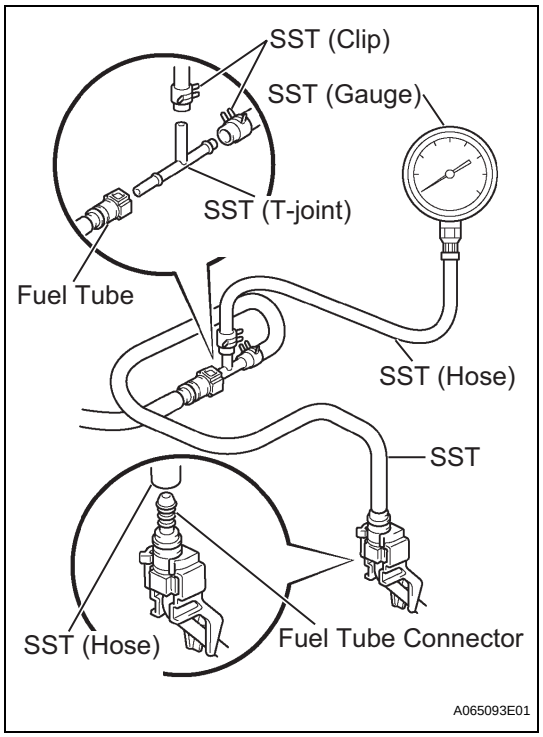

(g) Install SST and the fuel tube connector onto the vehicle.
SST 09268-41048 (90467-13001, 95336-08070, 09268-41500), 09268-45014 (09268-41200, 09268-41220, 09268-41250)

(h) Wipe off any spilt gasoline.

(i) Connect the cable to the battery negative terminal.
Torque: 3.9 N*m (40 kgf*cm, 35 in.*lbf)

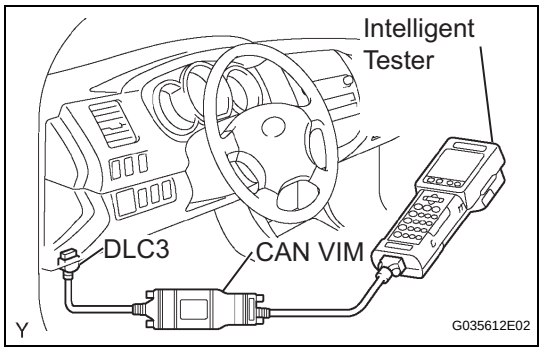

(j) Connect the intelligent tester to the DLC3.

(k) Turn the ignition switch to ON.

(l) Turn the intelligent tester ON.

(m) Select the following menu items: DIAGNOSIS / ENHANCED OBD ll / ACTIVE TEST / FUEL PUMP / SPD / ON.

(n) Measure the fuel pressure.
Standard:

281 to 287 kPa (2.87 to 2.93 kgf/cm^2, 40.8 to 41.7 psi)

- If the fuel pressure is greater than the standard value, replace the fuel pump.
- If the fuel pressure is less than the standard value, check the connection between the fuel hose and fuel pump.

(o) Select the following menu items: DIAGNOSIS / ENHANCED OBD ll / ACTIVE TEST / FUEL PUMP / SPD / OFF.

(p) Check that the fuel pressure does not change for 5 minutes.
Standard:

147 kPa (1.5 kgf/cm^2, 21 psi)

If the result is not as specified, check the fuel pump and fuel injector.

(q) Disconnect the intelligent tester from the DLC3.

(r) Disconnect the cable from the battery negative terminal.

(s) Remove SST and the fuel tube connector while being careful to prevent gasoline splashes.

(t) Connect the fuel tube.

FU

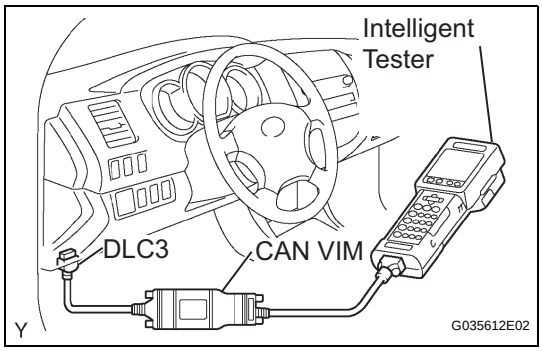

3. CHECK FOR FUEL LEAKAGE

(a) Connect the intelligent tester to the DLC3.
(b) Turn the ignition switch to ON.
NOTICE:
Do not start the engine.
(c) Turn the intelligent tester ON.
(d) Select the following menu items: DIAGNOSIS / ENHANCED OBD II / ACTIVE TEST / FUEL PUMP / SPD / ON.
(e) Check that there are no leakage in the fuel system.

REMOVAL

1. **DISCHARGE FUEL SYSTEM PRESSURE**
   (See page FU-1)
2. **DISCONNECT CABLE FROM NEGATIVE BATTERY TERMINAL**
3. **DRAIN ENGINE COOLANT (See page CO-3)**
4. **REMOVE V-BANK COVER (See page ES-414)**
5. **REMOVE AIR CLEANER ASSEMBLY (See page ES-415)**
6. **REMOVE INTAKE AIR SURGE TANK**
   (a) Disconnect the water by-pass hose No. 5.

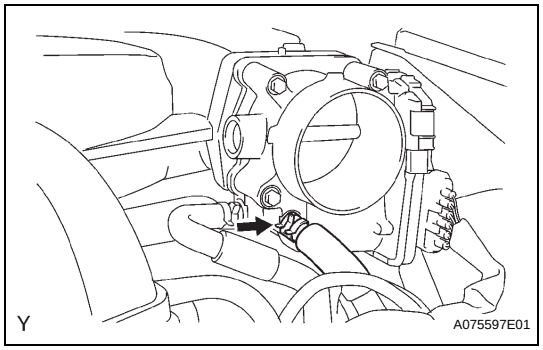

(b) Disconnect the water by-pass hose No. 4.

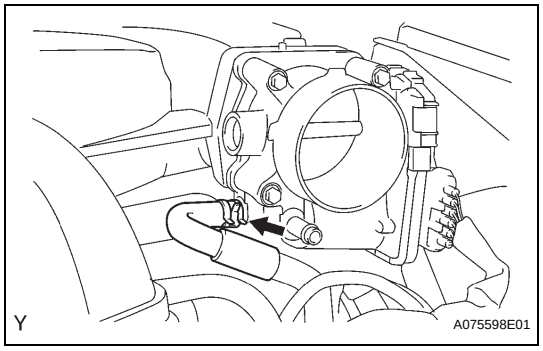

(c) Disconnect the fuel vapor feed hose.

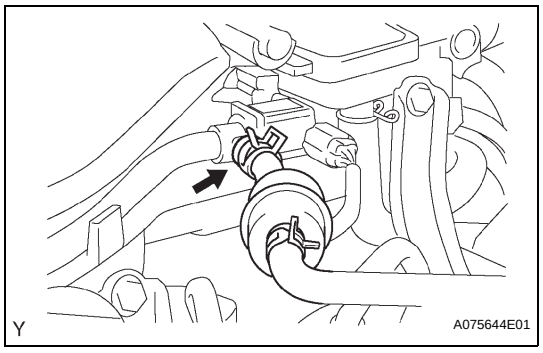

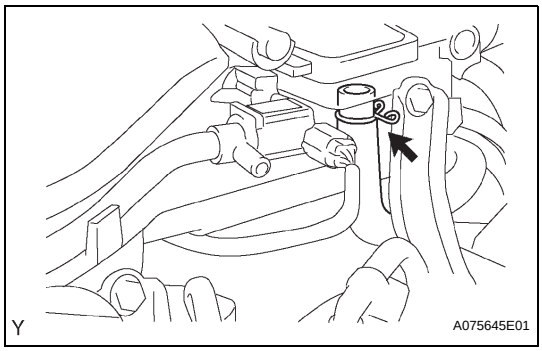

(d) Disconnect the ventilation hose.

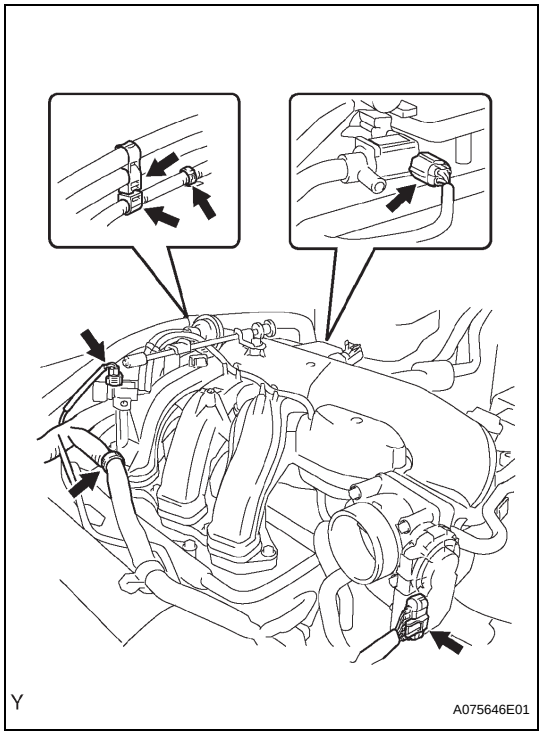

(e) Disconnect the 2 VSV connectors.
(f) Disconnect the throttle motor connector.
(g) Remove the 3 wire harness clamps and hose clamp.

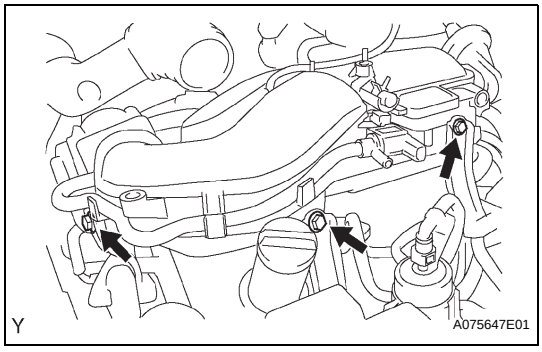

(h) Remove the 3 upper bolts which are used to secure the 2 surge tank stays and throttle body bracket.

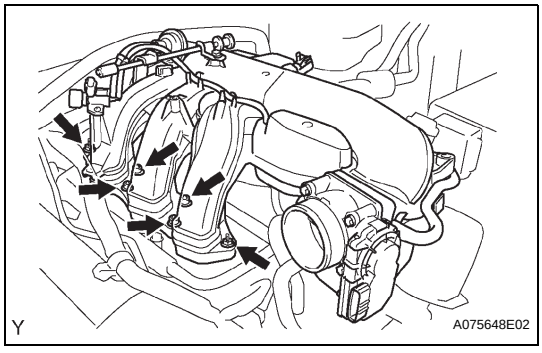

(i) Using an 8 mm socket hexagon wrench, remove the 4 bolts.
(j) Remove the 2 nuts, then remove the intake air surge tank and gasket.

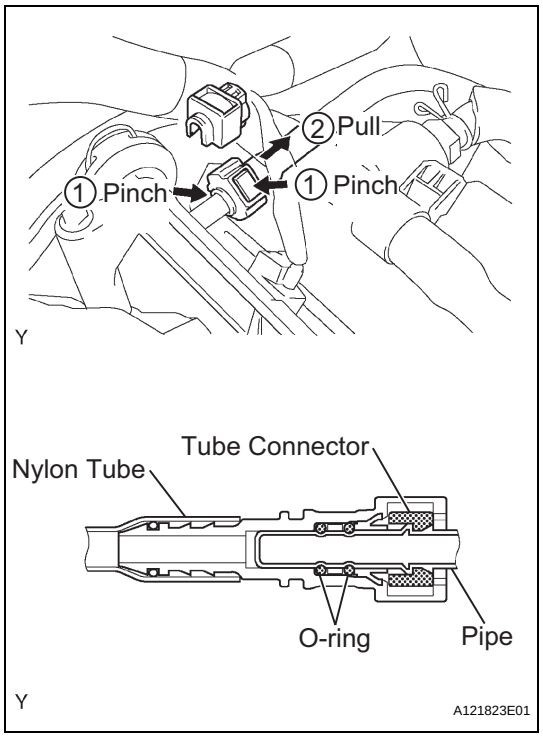

7. DISCONNECT NO.1 FUEL PIPE SUB-ASSEMBLY

(a) Remove the fuel pipe clamp.

(b) Pinch the tube connector, and then pull the fuel pipe out of the pipe as shown in the illustration.

NOTICE:

- **Remove any dirt and foreign objects from the fuel tube connector before performing this work.**
- **Do not allow any scratches or foreign objects on the parts when disconnecting, as the fuel tube connector has the O-ring that seals the pipe.**
- **Perform this work by hand. Do not use any tools.**
- **Do not forcibly bend, twist or turn the nylon tube.**
- **Protect the disconnected part by covering it with a vinyl bag after disconnecting the fuel tube.**
- **If the fuel tube connector and pipe are stuck, push and pull to release them.**

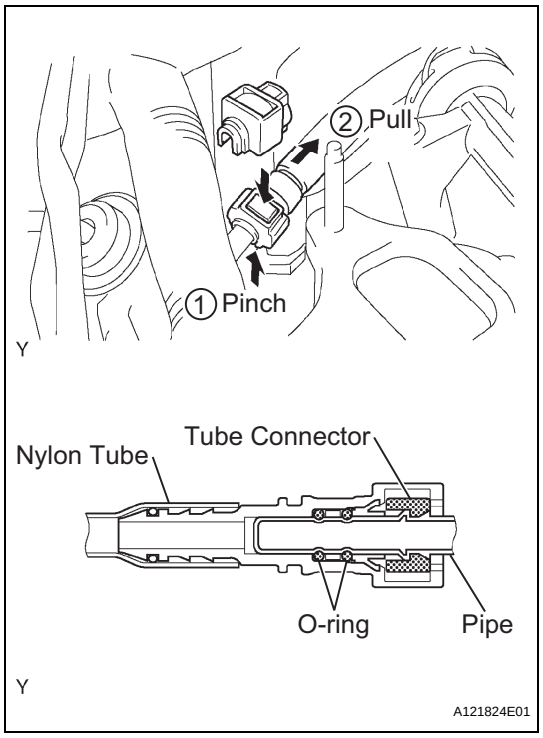

8. DISCONNECT NO.2 FUEL PIPE SUB-ASSEMBLY

(a) Remove the fuel pipe clamp.

(b) Pinch the tube connector, and then pull the fuel pipe out of the pipe as shown in the illustration.

NOTICE:

- **Remove any dirt and foreign objects from the fuel tube connector before performing this work.**
- **Do not allow any scratches or foreign objects on the parts when disconnecting, as the fuel tube connector has the O-ring that seals the pipe.**
- **Perform this work by hand. Do not use any tools.**
- **Do not forcibly bend, twist or turn the nylon tube.**
- **Protect the disconnected part by covering it with a vinyl bag after disconnecting the fuel tube.**
- **If the fuel tube connector and pipe are stuck, push and pull to release them.**

FU

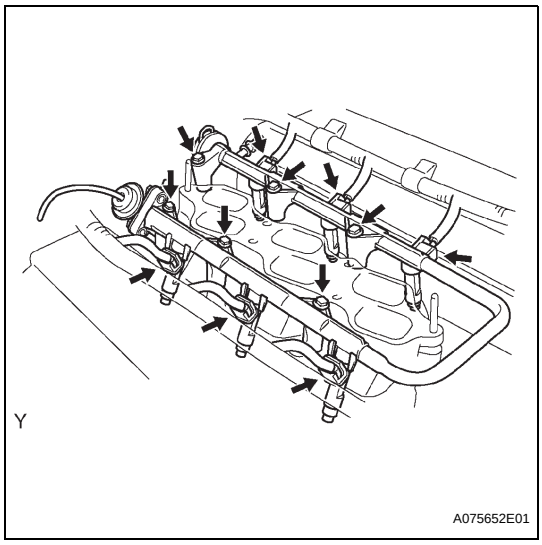

9. REMOVE FUEL DELIVERY PIPE SUB-ASSEMBLY

(a) Disconnect the 6 fuel injector connectors.

(b) Remove the 6 bolts and fuel delivery pipe together with the 6 fuel injectors.

NOTICE:

Be careful not to drop the injectors when removing the fuel delivery pipe.

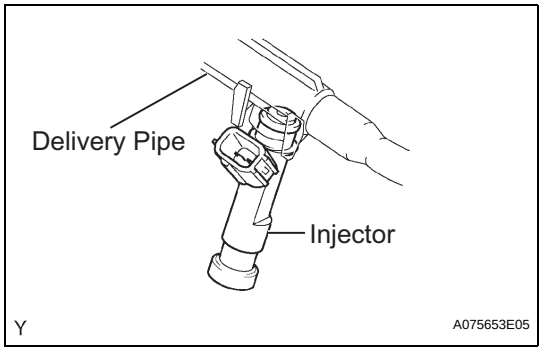

10. REMOVE FUEL INJECTOR

(a) Pull the 6 injectors out of the delivery pipe.

INSPECTION

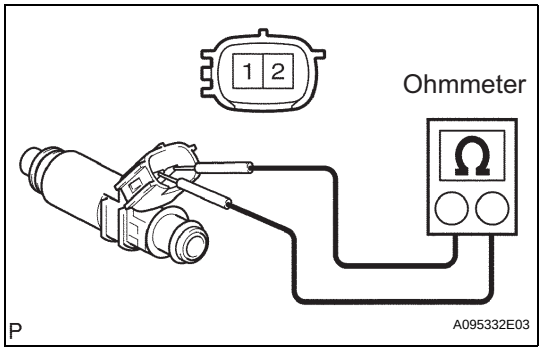

1. INSPECT FUEL INJECTOR ASSEMBLY

(a) Check the resistance.

(1) Using an ohmmeter, measure the resistance between the terminals.

Standard

Tester Connection	Specified Condition
1 -2	11.6 to 12.4 Ωat 20°C (68°F)

If the result is not as specified, replace the fuel injector.

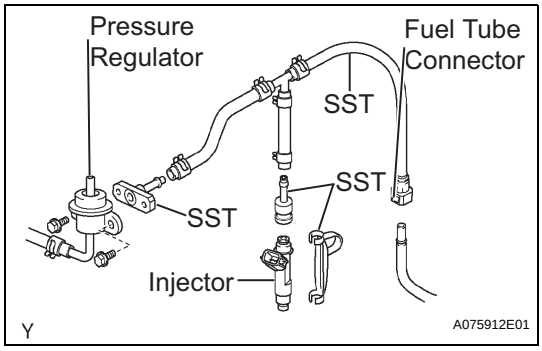

(b) Check the injection volume.

NOTICE:

- **Perform the test in a well-ventilated area and watch out for flames.**
- **Handle the fuel tube connector carefully.**

(1) Prepare a new fuel tube.

HINT:

Part No. 23801-0P010

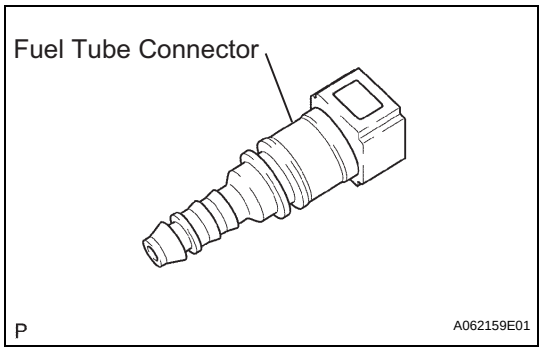

(2) Using a cutter knife, cut the fuel tube protector. Tear the protector by hand, then remove the fuel tube connector.
NOTICE:
If the protector is cut too deeply with the cutter, the O-ring of the fuel tube connector will be damaged.

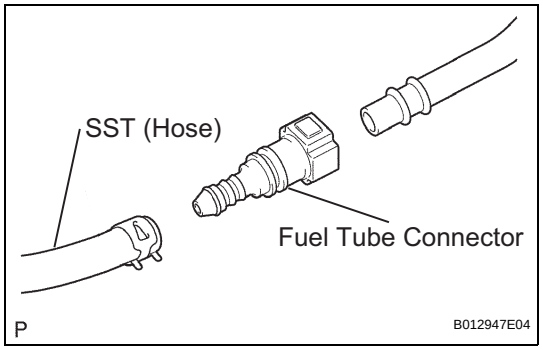

(3) Install the fuel tube connector into SST (hose), then connect the tube connector to the fuel pipe.
SST 09268-41047 (95336-08070)
CAUTION:
Connect the fuel tube connector (quick type) after observing the precautions.
(4) Remove the pressure regulator(see page 11-40).
(5) Install the O-ring onto the fuel inlet of the pressure regulator.

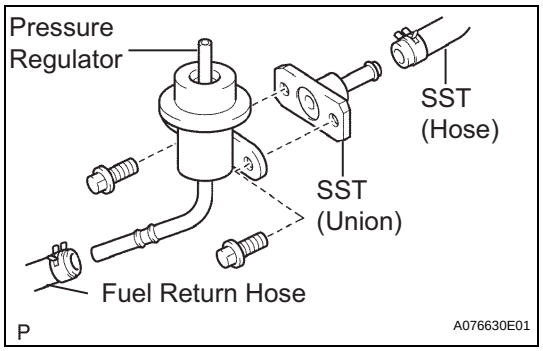

(6) Connect SST (hose) to the fuel inlet of the pressure regulator with another SST (union) and the 2 bolts.
SST 09268-41047 (95336-08070, 09268-41091)
Torque: 9.0 N*m (92 kgf*cm, 80 in.*lbf)
(7) Connect the fuel return hose to the fuel outlet of the pressure regulator.

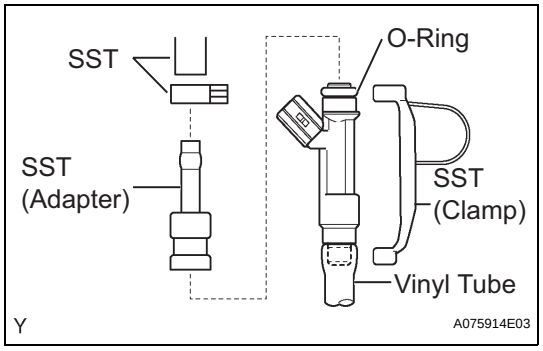

(8) Install a new O-ring onto the injector.
(9) Connect SST (adaptor and hose) to the injector and hold the injector and union with SST (clamp).
SST 09268-41047 (95336-08070), 09268-41140, 09268-41400
(10) Set the injector in a graduated cylinder.
CAUTION:
Install a suitable vinyl tube onto the injector to prevent gasoline splashes.

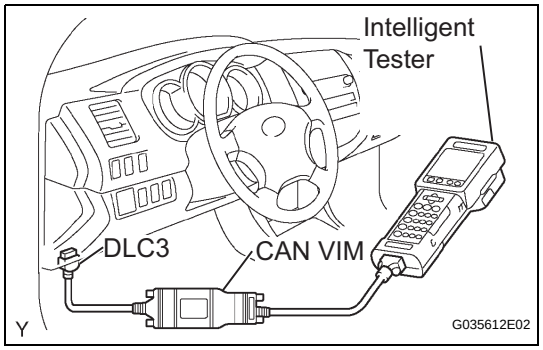

(11) Connect the intelligent tester to the DLC3.
(12) Turn the ignition switch to ON.
(13) Turn the intelligent tester ON.
(14) Select the following menu items: DIAGNOSIS / ENHANCED OBD ll / ACTIVE TEST / FUEL PUMP / SPD / ON.
(15) Install SST onto the fuel injector.
SST 09842-30080

FU

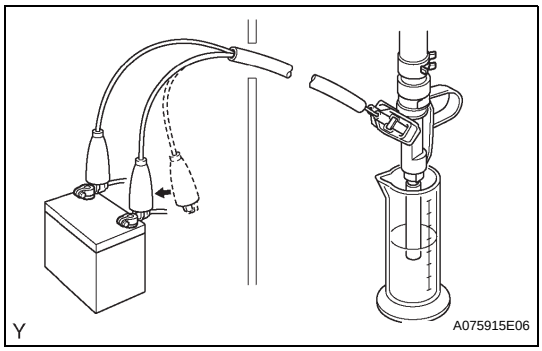

(16) Connect SST to the battery, then measure the injection volume for 15 seconds. Perform the inspection 2 or 3 times, then calculate the average.

Standard:

Injection Volume	Difference Between Each Fuel Injector
76 to 91 cm^3 (4.6 to 5.5 cu in.) per 15 seconds	15 cm^3 (0.9 cu in.) or less

NOTICE:

Always do the switching at the battery side.

If the result is not as specified, replace the fuel injector.

(c) Check the fuel leakage.

(1) When checking the injection volume, remove SST from the battery. Inspect the fuel leakage from the fuel injector.

Standard:

1 drop or less every 12 minutes.

If the result is not as specified, replace the fuel injector.

FU

INSTALLATION

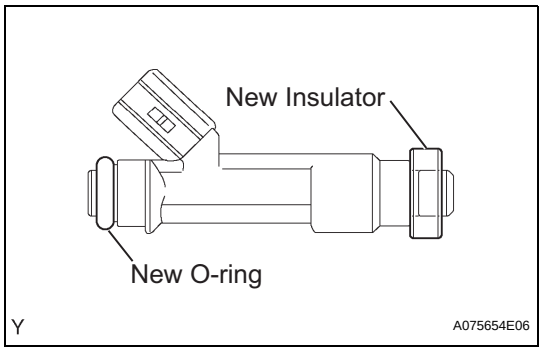

1. INSTALL FUEL INJECTOR

(a) Install a new insulator onto each fuel injector.

(b) Apply a light coat of spindle oil or gasoline to a new O-ring and install it onto each fuel injector.

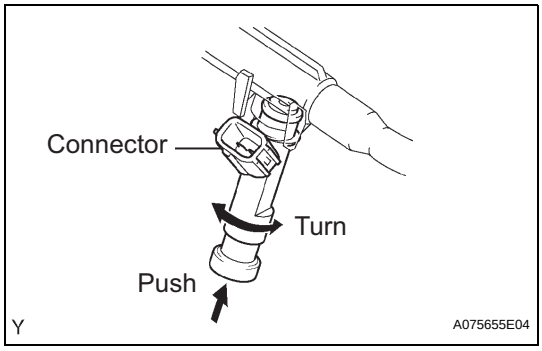

(c) While turning the fuel injector left and right, install it onto the fuel delivery pipe.

(d) Position the fuel injector connector facing outward.

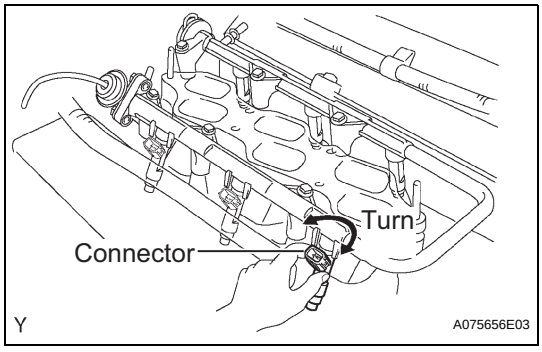

2. INSTALL FUEL DELIVERY PIPE SUB-ASSEMBLY

(a) Place the fuel delivery pipe together with the 6 fuel injectors on the intake manifold.

(b) Provisionally install the 6 bolts, which are used to hold the fuel delivery pipe, onto the intake manifold.

(c) Check that the fuel injectors rotate smoothly.

HINT:

If the fuel injectors do not rotate smoothly, replace the O-ring.

(d) Position the fuel injector connector facing outward.

(e) Tighten the 6 bolts, which are used to hold the fuel delivery pipe, to the intake manifold.
Torque: 15 N*m (153 kgf*cm, 11 ft.*lbf)
(f) Connect the 6 fuel injector connectors.

3. **CONNECT FUEL PIPE SUB-ASSEMBLY**
(a) Push the tube connector into the pipe until the tube connector makes a "click" sound.
NOTICE:
- **Check if there is any damage or foreign objects on the connected part of the fuel pipe.**
- **After connecting, check that the pipe and connector are securely connected by pulling them.**

(b) Install the fuel pipe clamp.

4. **CONNECT NO.1 FUEL PIPE SUB-ASSEMBLY**
(a) Push the tube connector into the pipe until the tube connector makes a "click" sound.
NOTICE:
- **Check if there is any damage or foreign objects on the connected part of the fuel pipe.**
- **After connecting, check that the pipe and connector are securely connected by pulling them.**

(b) Install the fuel pipe clamp.

5. **INSTALL INTAKE AIR SURGE TANK**
(a) Install a new gasket and the intake air surge tank with the 2 nuts.
Torque: 28 N*m (286 kgf*cm, 21 ft.*lbf)
(b) Using an 8 mm socket hexagon wrench, install the 4 bolts.
Torque: 28 N*m (286 kgf*cm, 21 ft.*lbf)
(c) Install the 3 upper bolts which are used to secure the 2 surge tank stays and throttle body bracket.
Torque: 21 N*m (214 kgf*cm, 16 ft.*lbf)
(d) Install the 3 wire harness clamps and hose clamp.
(e) Connect the throttle motor connector.
(f) Connect the 2 VSV connectors.
(g) Connect the ventilation hose.
(h) Connect the fuel vapor feed hose.
(i) Connect the water by-pass hose No. 4.
(j) Connect the water by-pass hose No. 5.

6. **INSTALL AIR CLEANER ASSEMBLY (See page ES-416)**

7. **INSTALL V-BANK COVER (See page ES-416)**

8. **CONNECT CONNECT BATTERY NEGATIVE TERMINAL**
Torque: 3.9 N*m (40 kgf*cm, 35 in.*lbf)

9. **ADD ENGINE COOLANT (See page CO-3)**

10. **CHECK FOR ENGINE COOLANT LEAKAGE (See page CO-4)**

FU

11. CHECK FOR FUEL LEAKAGE

REMOVAL

1. **DISCHARGE FUEL SYSTEM PRESSURE**
   (See page FU-1)
2. **DISCONNECT CABLE FROM NEGATIVE BATTERY TERMINAL**
3. **REMOVE NO.1 FUEL TANK PROTECTOR SUB-ASSEMBLY (OFF ROAD PACKAGE)**
4. **DISCONNECT FUEL TANK MAIN TUBE AND FUEL TANK RETURN TUBE (See page FU-30)**
5. **REMOVE FUEL TANK ASSEMBLY (See page FU-30)**
6. **REMOVE FUEL TANK MAIN TUBE AND FUEL TANK RETURN TUBE (See page FU-32)**
7. **REMOVE FUEL SUCTION WITH PUMP & GAUGE TUBE ASSEMBLY (See page FU-33)**
8. **DRAIN FUEL**

DISASSEMBLY

1. **REMOVE FUEL SENDER GAUGE ASSEMBLY**
   (a) Disconnect the connector.

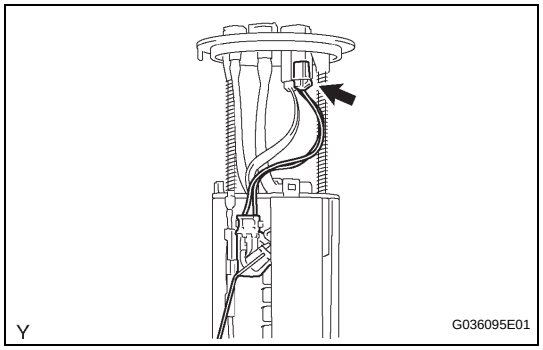

   (b) Disengage the claw fitting and remove the sender gauge by sliding it in the direction as shown in the illustration.

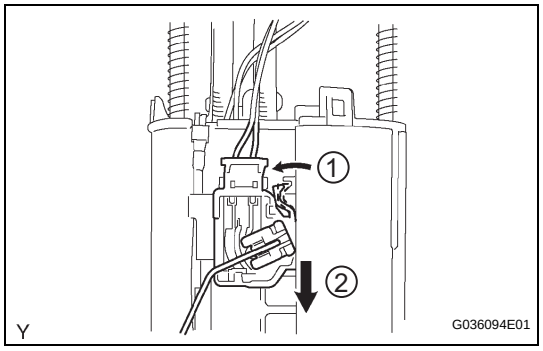

2. **REMOVE NO. 1 FUEL SUB-TANK**
   (a) Disengage the 5 claw fittings and remove the fuel pump tank.

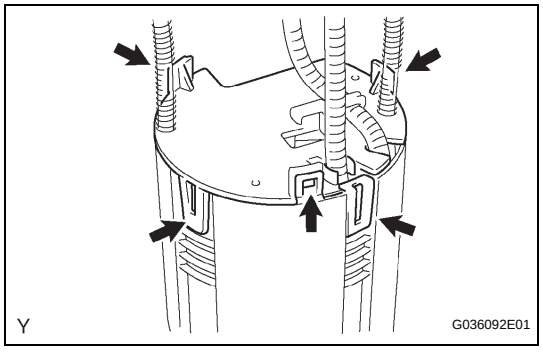

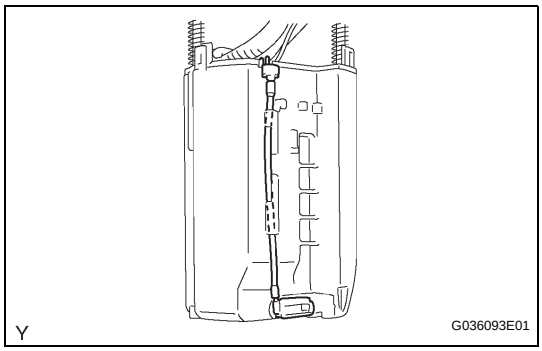

(b) Separate the connector and disengage the clamp.

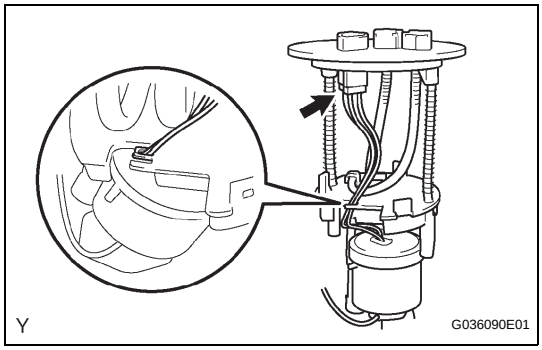

3. REMOVE FUEL PUMP ASSEMBLY

(a) Disengage the clamp, then disconnect the connector.

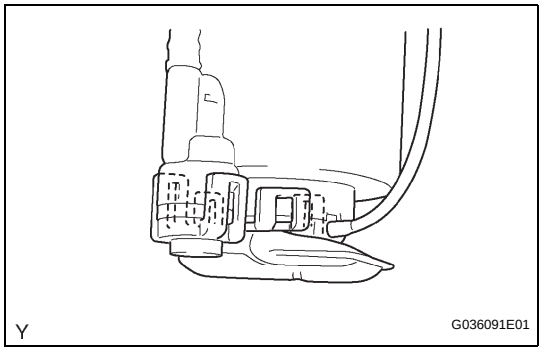

(b) Disengage the 5 claw fittings and separate the fuel pump from the fuel pump case.

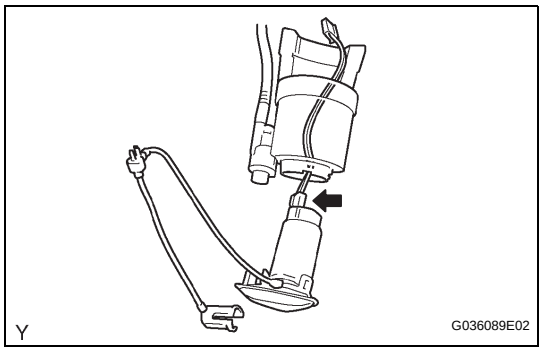

(c) Disconnect the connector from the fuel pump.

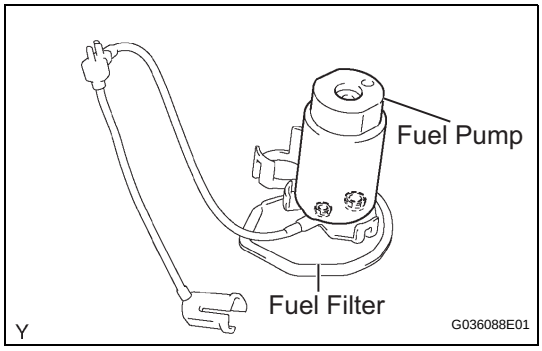

4. REMOVE FUEL PUMP FILTER

(a) Remove the fuel filter from the fuel pump.

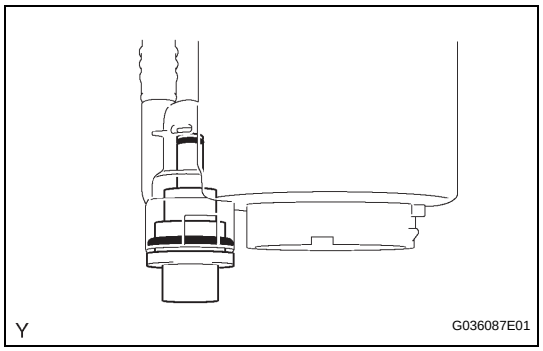

5. REMOVE FUEL PRESSURE REGULATOR ASSEMBLY

(a) Remove the fuel pressure regulator and the 2 O-rings.

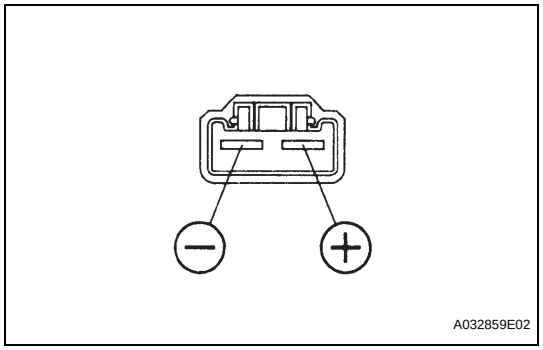

INSPECTION

1. INSPECT FUEL PUMP ASSEMBLY

(a) Check the resistance.

(1) Using an ohmmeter, measure the resistance between the terminals.

Resistance:

0.2 to 3.0 Ωat 20°C (68°F)

(b) Check the operation.

(1) Apply battery voltage to both terminals. Check that the pump operates.

NOTICE:

- **These tests must be performed quickly (within 10 seconds) to prevent damage to the pump.**
- **Keep the fuel pump as far away from the battery as possible.**
- **Always do the switching at the battery side.**

FU

REASSEMBLY

1. **INSTALL FUEL PRESSURE REGULATOR**
   (a) Install the new O-ring into the fuel pump case.
   (b) Install the new O-ring onto the fuel pressure regulator.
2. **INSTALL FUEL PUMP FILTER**
3. **INSTALL FUEL PUMP ASSEMBLY**
4. **INSTALL NO.1 FUEL SUB-TANK**
5. **INSTALL FUEL SENDER GAGE ASSEMBLY**

INSTALLATION

1. **INSTALL FUEL SUCTION WITH PUMP & GAGE TUBE ASSEMBLY (See page FU-34)**
2. **INSTALL FUEL TANK MAIN TUBE AND FUEL TANK RETURN TUBE (See page FU-35)**
3. **INSTALL FUEL TANK ASSEMBLY (See page FU-35)**
4. **CONNECT FUEL TANK MAIN TUBE AND FUEL TANK RETURN TUBE (See page FU-36)**
5. **INSTALL NO.1 FUEL TANK PROTECTOR SUB-ASSEMBLY (See page FU-36)**
6. **ADD FUEL**
7. **CONNECT CABLE TO NEGATIVE BATTERY TERMINAL**
   Torque: 3.9 N*m (40 kgf*cm, 35 in.*lbf)
8. **CHECK FOR FUEL LEAKAGE**

REMOVAL

1. **DISCHARGE FUEL SYSTEM PRESSURE**
   (See page FU-1)
2. **DISCONNECT CABLE FROM NEGATIVE BATTERY TERMINAL**
3. **REMOVE NO.1 FUEL TANK PROTECTOR SUB-ASSEMBLY (WITH OFF ROAD PACKAGE)**
4. **DISCONNECT FUEL TANK MAIN TUBE AND FUEL TANK RETURN TUBE**
   (a) Remove the fuel pipe clamp.

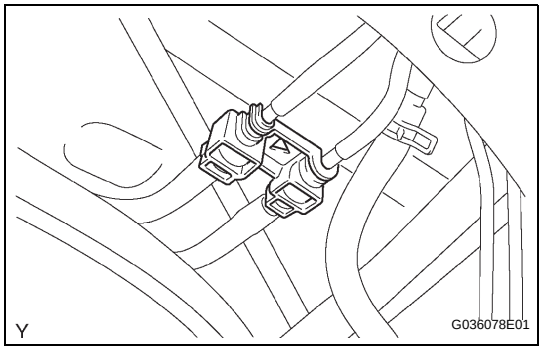

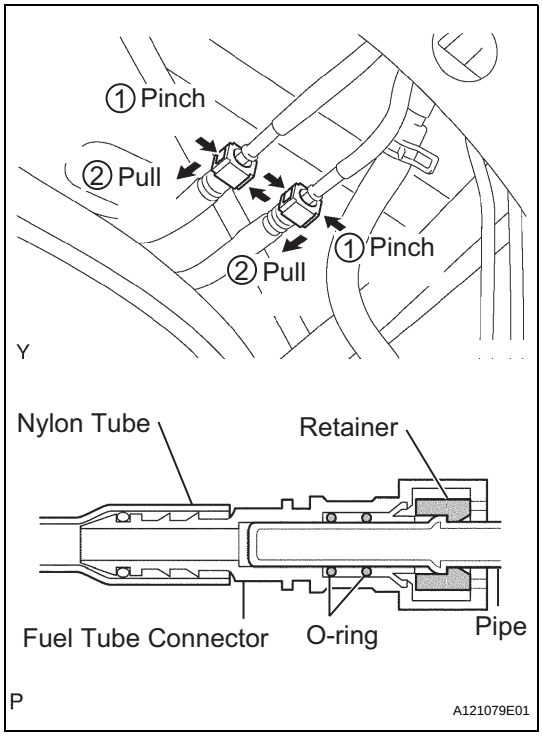

   (b) Disconnect the fuel tank main tube and fuel tank return tube.
      (1) Pinch the retainer as illustrated, then pull the fuel tube connectors out of the pipes.
      NOTICE:
      - **Remove any dirt and foreign objects from the fuel tube connector before performing this work.**
      - **Do not allow any scratches or foreign objects on the parts when disconnecting, as the fuel tube connector has the O-ring that seals the pipe.**
      - **Perform this work by hand. Do not use any tools.**
      - **Do not forcibly bend, twist or turn the nylon tube.**
      - **Protect the disconnected part by covering it with a vinyl bag after disconnecting the fuel tube.**
      - **If the fuel tube connector and pipe are stuck, push and pull to release them.**

5. **REMOVE FUEL TANK ASSEMBLY**
   (a) Loosen the clamp bolt.
   (b) Disconnect the fuel breather tube.
      (1) Remove the checker of the fuel tube connector from the pipe.

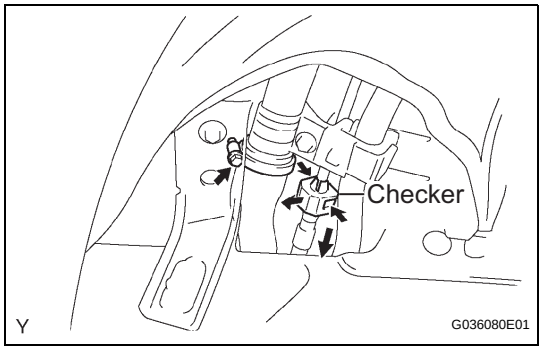

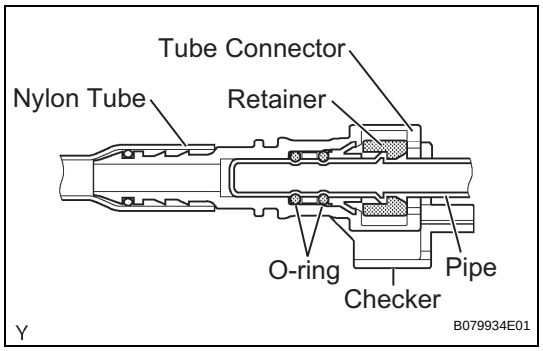

(2) Pinch the retainer of the fuel tube connector, then pull the tube connector out of the pipe.
NOTICE:
- **Remove any dirt and foreign objects from the fuel tube connector before performing this work.**
- **Do not allow any scratches or foreign objects on the parts when disconnecting, as the fuel tube connector has the O-ring that seals the pipe.**
- **Perform this work by hand. Do not use any tools.**
- **Do not forcibly bend, twist or turn the nylon tube.**
- **Protect the disconnected part by covering it with a vinyl bag after disconnecting the fuel tube.**
- **If the fuel tube connector and pipe are stuck, push and pull to release them.**

(c) Hold the fuel tank using the mission jack.

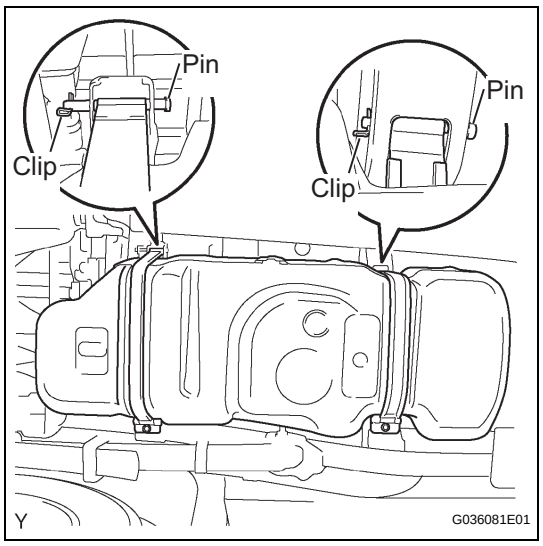

(d) Remove the 2 fuel tank bands.
(1) Remove the 2 bolts.
(2) Remove the 2 clips and 2 pins, then remove the 2 fuel tank bands.

(e) Slightly jack the fuel tank down and separate the fuel tank to filler pipe hose from the inlet pipe.
NOTICE:
Slowly jack down the fuel tank so as not to tear the wire harness and hose.

(f) Remove the fuel pump cover.

(g) Disconnect the fuel pump connector.

(h) Disconnect the fuel tank vent hose.
(1) Pinch the retainer and pull the fuel tank vent hose connector out of the charcoal canister to disconnect the fuel tank vent hose from the charcoal canister.
NOTICE:
- **Remove any dirt and foreign objects from the fuel tank vent hose connector before performing this work.**
- **Do not allow any scratches of foreign objects on the parts when disconnecting, as the fuel tank vent hose connector has the O-ring that seals the pipe.**
- **Perform this work by hand. Do not use any tools.**
- **Do not forcibly bend, twist or turn the nylon tube.**
- **Protect the disconnected part by covering it with a vinyl bag after disconnecting the fuel tank vent hose.**
- **If the fuel tank vent connector and pipe are stuck, push and pull to release them.**

FU

(i) Remove the fuel tank assy.

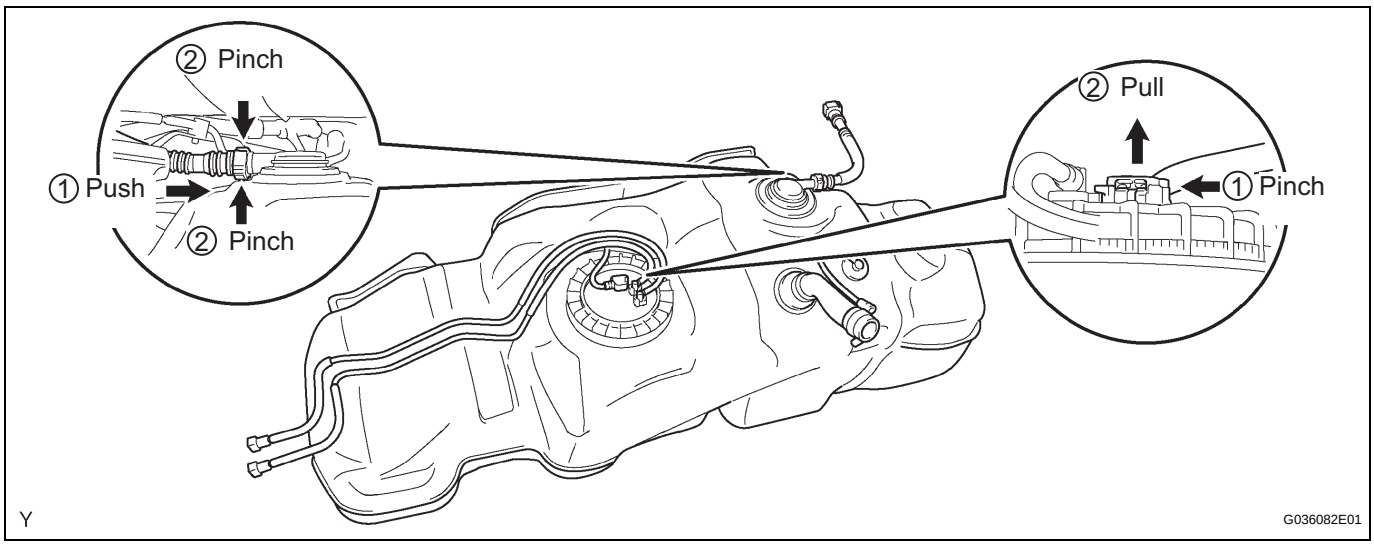

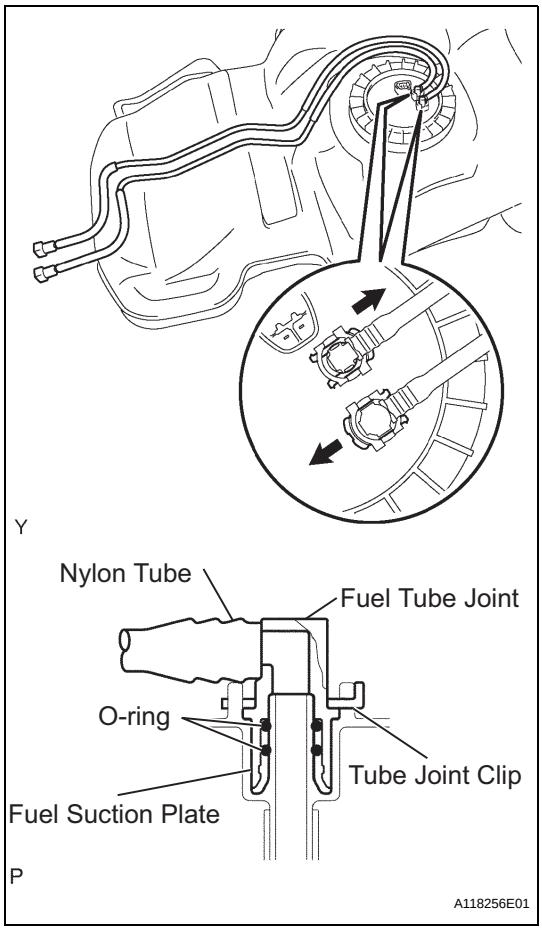

6. REMOVE FUEL TANK MAIN TUBE AND FUEL TANK RETURN TUBE

(a) Remove the 2 joint clips, then remove the fuel tank main tube and fuel tank return tube.

NOTICE:

- **Remove any dirt and foreign objects from the fuel tube connector before performing this work.**
- **Do not allow any scratches or foreign objects on the parts when disconnecting, as the fuel tube connector has the O-ring that seals the pipe.**
- **Perform this work by hand. Do not use any tools.**
- **Do not forcibly bend, twist or turn the nylon tube.**
- **Protect the disconnected part by covering it with a vinyl bag after disconnecting the fuel tube.**
- **If the fuel tube connector and pipe are stuck, push and pull to release them.**

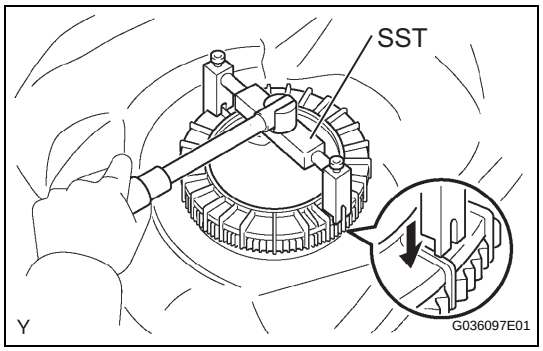

7. REMOVE FUEL SUCTION WITH PUMP & GAUGE TUBE ASSEMBLY

NOTICE:

Protect the connector and tube joint with masking tape or equivalent to prevent any foreign objects from sticking to them. Clean any dirt and foreign objects from the fuel suction tube assy before removing.

(a) Using a SST, loosen the retainer.

SST 09808-14020 (09808-01410, 09808-01420, 09808-01430)

HINT:

The ribs on the retainer can be fitted into a tip of the SST.

(b) Remove the retainer.

(c) Pull the fuel pump assy out of the fuel tank.

NOTICE:

Be careful not to bend the arm of the sender gauge.

(d) Remove the gasket from the fuel tank.

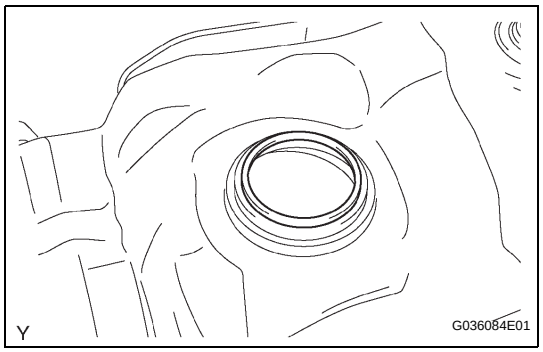

8. DRAIN FUEL

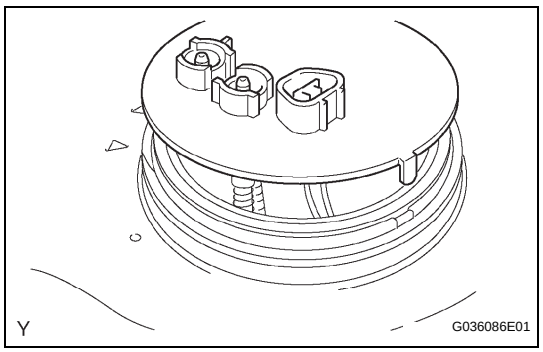

9. REMOVE FUEL TANK TO FILLER PIPE HOSE

(a) Loosen the clamp bolt, then remove the fuel tank to filler pipe hose.

10. REMOVE NO.1 FUEL TANK PROTECTOR

(a) Remove the 4 clips, then remove the fuel tank protector.

FU

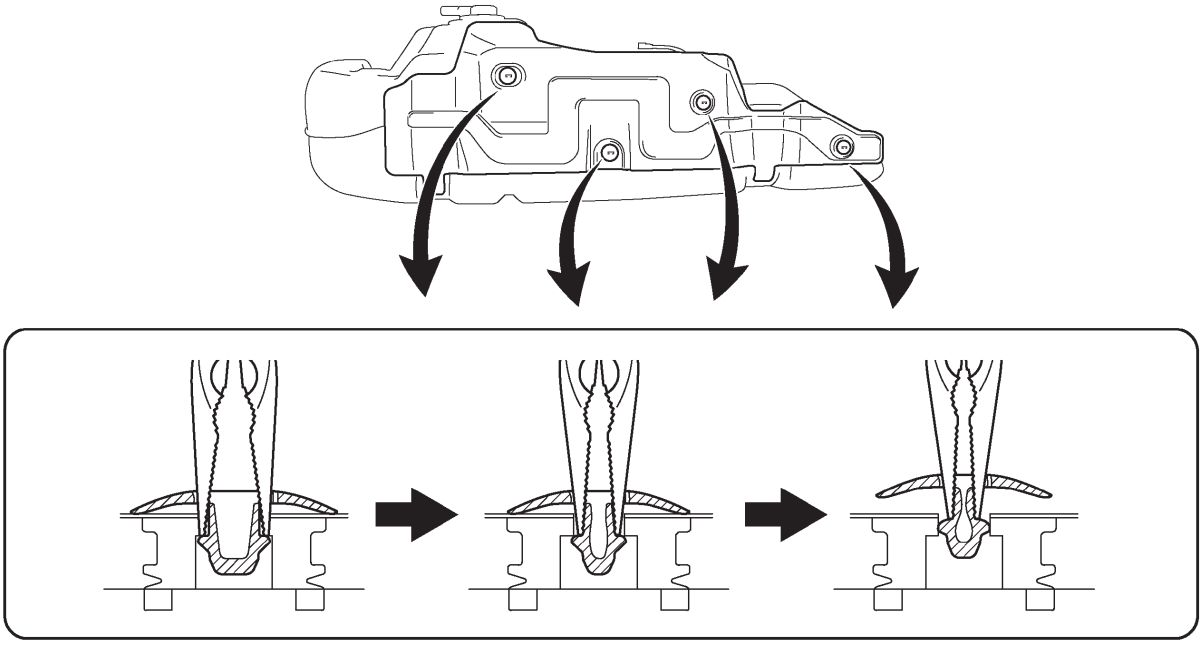

Y

G036085E01

INSTALLATION

1. INSTALL NO.1 FUEL TANK PROTECTOR

(a) Install the fuel tank protector with the 4 clips.

2. INSTALL FUEL TANK TO FILLER PIPE HOSE

(a) Install the fuel tank onto the filler pipe hose, then tighten the pipe clamp bolt.

3. INSTALL FUEL SUCTION WITH PUMP & GAUGE TUBE ASSEMBLY

(a) Install a new gasket onto the fuel tank.

(b) Set the fuel pump assembly in the fuel tank.

NOTICE:

Be careful not to bend the arm of the sender gauge.

(c) Fit a spline of the fuel suction tube assembly into a keyway of the fuel tank.

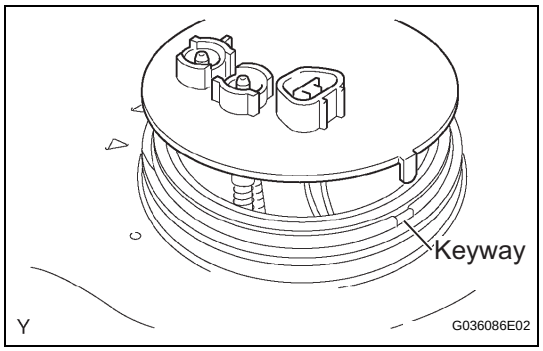

(d) Install a new retainer.

(1) Align the mark on a new retainer with the rib on the fuel tank as shown in the illustration.

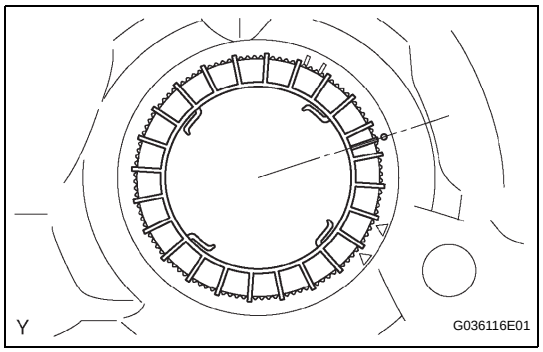

(2) Using SST, turn the retainer 740° to 780° clockwise (more than 2 turns), and position the mark on the retainer within range A to install it.

SST 09808-14020 (09808-01410, 09808-01420, 09808-01430)

HINT:

The ribs on the retainer can be fitted into the tip of the SST.

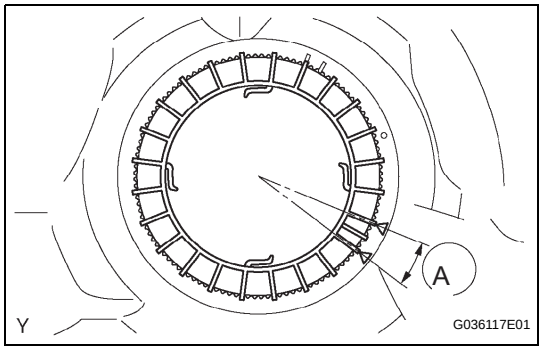

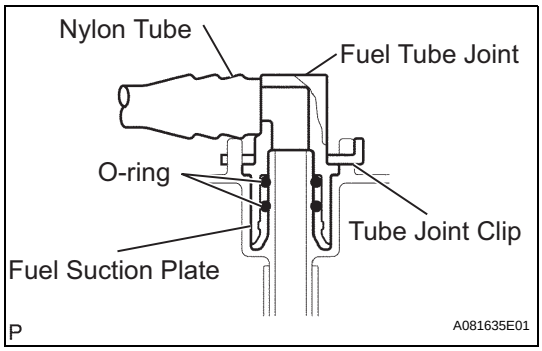

4. INSTALL FUEL TANK MAIN TUBE AND FUEL TANK RETURN TUBE

(a) Install the fuel tank main tube and return tube with the 2 joint clips.

NOTICE:

- **Check that there are no scratches or foreign objects around the connected part of the fuel tube joint and plug before performing this work.**
- **Check that the fuel tube joint is securely inserted to the end.**
- **Check that the tube joint clips are on the collar of the fuel tube joint.**
- **After installing the tube joint clip, check that the fuel tank main tube and return tube can be pulled out.**

5. INSTALL FUEL TANK ASSEMBLY

(a) Set the fuel tank assembly onto the mission jack.

(b) Connect the fuel tank vent hose.

(1) Align the fuel tank vent connector with the pipe, then push in the fuel tank vent connector until the retainer makes a "click" sound to connect the fuel tank vent hose to the fuel suction plate.

NOTICE:

- **Check that there are no scratches or foreign objects around the connected part of the fuel tank vent connector and plug before performing this work.**
- **After connecting the fuel tank vent hose, check that the fuel tank vent hose is securely connected by pulling the quick connector.**

(c) Connect the fuel pump connector.

(d) Install the fuel pump cover.

(e) Connect the fuel tank to filler pipe hose.

(f) Install the 2 fuel tank bands.

(1) Install the 2 fuel tank bands with the 2 pins and 2 clips.

(2) Install the 2 fuel tank bands with the 2 bolts.

Torque: 62 N*m (632 kgf*cm, 46 ft.*lbf)

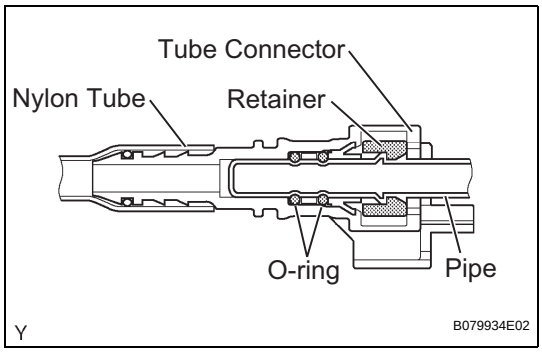

(g) Connect the fuel tank breather tube.

(1) Align the fuel tube connector with the pipe, then push the fuel tube connector in until the retainer makes a "click" sound to connect the fuel tank vent breather tube.

NOTICE:

- **Check that there are no scratches or foreign objects around the connected part of the fuel tube connector and pipe before performing this work.**
- **After connecting the fuel tank breather tube, check that the fuel pump tube is securely connected by pulling the fuel tube connector and pipe.**

FU

(2) Install the checker onto the pipe.

(h) Tighten the clamp bolt.

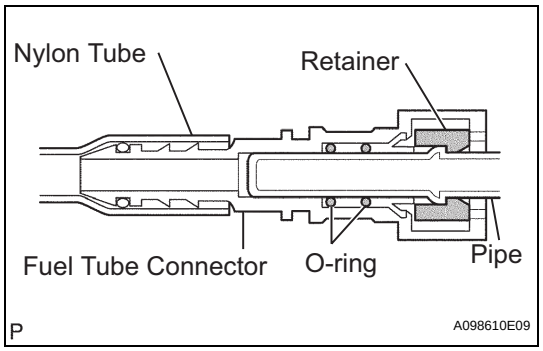

6. CONNECT FUEL TANK MAIN TUBE AND FUEL TANK RETURN TUBE

(a) Connect the fuel tank main tube and return tube.

(1) Align the fuel tube connector with the pipe, then push the fuel tube connector in until the retainer makes a "click" sound to connect the fuel tank main tube and return tube.

NOTICE:

- **Check that there are no scratches or foreign objects around the connected part of the fuel tube connector and pipe before performing this work.**
- **After connecting the fuel tube connector, check that the fuel tube connector and pipe are securely connected by pulling them.**

(2) Install the fuel pipe clamp.

7. INSTALL NO.1 FUEL TANK PROTECTOR SUB-ASSEMBLY (with Off Road Package)

(a) Install the fuel tank protector LWR with the 4 nuts.
Torque: 20 N*m (204 kgf*cm, 15 ft.*lbf)

8. ADD FUEL

9. CONNECT CONNECT BATTERY NEGATIVE TERMINAL
Torque: 3.9 N*m (40 kgf*cm, 35 in.*lbf)

10. CHECK FOR FUEL LEAKAGE

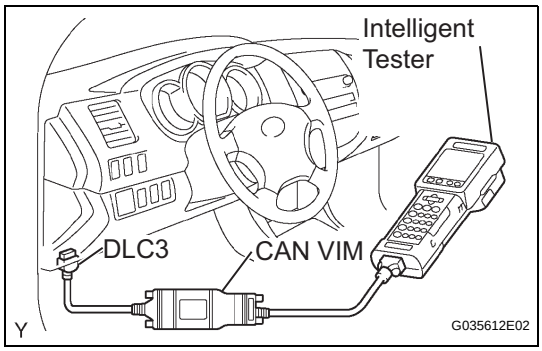

ON-VEHICLE INSPECTION

1. CHECK FUEL PUMP

(a) Connect the intelligent tester to the DLC3.
(b) Turn the ignition switch to ON.
NOTICE:
Do not start the engine.
(c) Turn the intelligent tester ON.
(d) Select the following menu items: DIAGNOSIS / ENHANCED OBD II / ACTIVE TEST / FUEL PUMP / SPD.
(e) Check the fuel operation by operating it with the intelligent tester.
If the fuel pump does not operate, replace the fuel pump.

2. CHECK FUEL PRESSURE

(a) Discharge the fuel system pressure.
(b) Using a voltmeter, measure the battery voltage.
Standard:
9.0 to 14 V
(c) Disconnect the cable from the negative battery terminal.
(d) Remove the fuel pipe clamp.
(e) Disconnect the fuel hose.
(f) Install SST into the vehicle.
SST 09268-41048 (09268-41500, 90467-13001, 95336-08070), 09268-45014 (09268-41200, 09268-41220, 09268-41250)
(g) Wipe off any spilt gasoline.
(h) Connect the cable to the negative battery terminal.
Torque: 3.9 N*m (40 kgf*cm, 35 in.*lbf)

FU

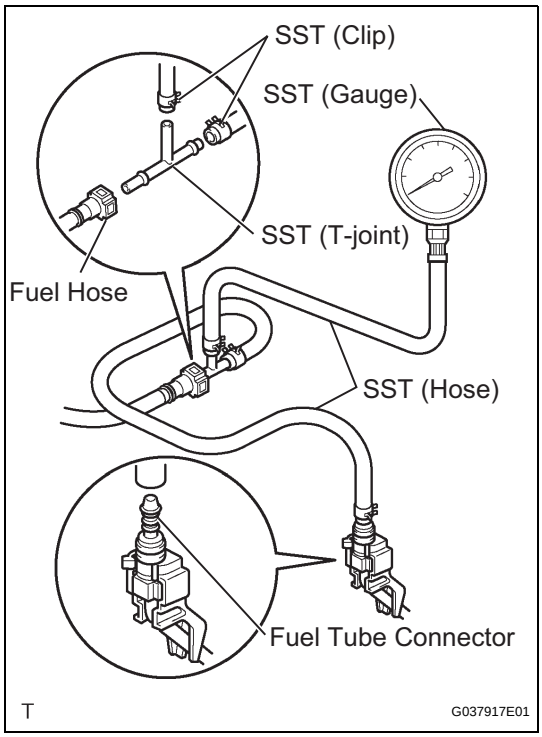

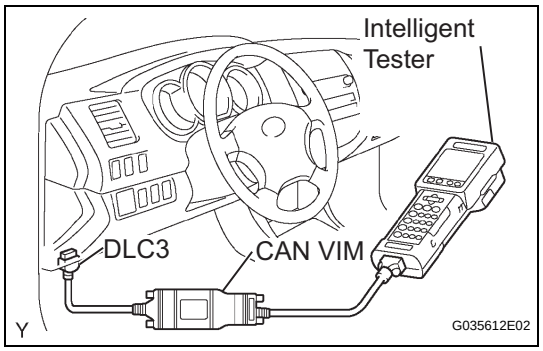

(i) Connect the intelligent tester to the DLC3.
(j) Turn the ignition switch to ON.
(k) Turn the intelligent tester ON.
(l) Select the following menu items: DIAGNOSIS / ENHANCED OBD II / ACTIVE TEST / FUEL PUMP / SPD /ON.
(m) Measure the fuel pressure.
Standard:

281 to 287 kPa (2.87 to 2.93 kgf/cm^2, 40.8 to 41.7 psi)

- If the pressure is too high, replace the fuel pressure regulator.
- If the pressure is too low, check the connection between the fuel hose and fuel pump.

(n) Disconnect the intelligent tester from the DLC3.
(o) Start the engine.
(p) Measure the fuel pressure while the engine idles.
Standard:

281 to 287 kPa (2.87 to 2.93 kgf/cm^2, 40.8 to 41.7 psi)

(q) Stop the engine.
(r) Check that the fuel pressure does not change for 5 minutes.
Standard:

147 kPa (1.5 kgf/cm^2, 21 psi)

If the pressure is not as specified, check the fuel pump, pressure regulator and/or injector.
(s) Discharge the fuel system pressure.
(t) Disconnect the cable from the negative battery terminal.
(u) Remove SST while being careful to prevent gasoline splashes.
(v) Connect the fuel hose.
(w) Install the fuel pipe clamp.
(x) Connect the cable to the negative battery terminal.
Torque: 3.9 N*m (40 kgf*cm, 35 in.*lbf)

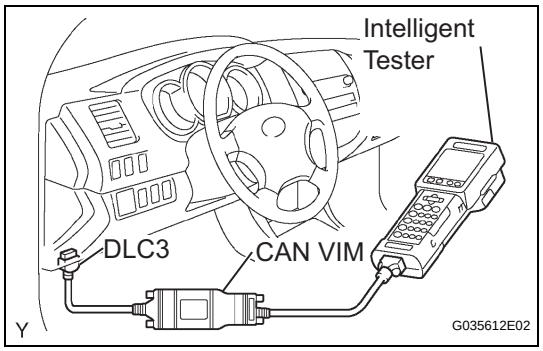

3. CHECK FOR FUEL LEAKAGE

(a) Connect the intelligent tester to the DLC3.
(b) Turn the ignition switch to ON.
NOTICE:
Do not start the engine.
(c) Turn the intelligent tester ON.
(d) Select the following menu items: DIAGNOSIS / ENHANCED OBD II / ACTIVE TEST / FUEL PUMP / SPD / ON.
(e) Check that there are no leakage in the fuel system.

FU

REMOVAL

1. **DISCHARGE FUEL SYSTEM PRESSURE**
(See page FU-1)

2. **DISCONNECT CABLE FROM NEGATIVE BATTERY TERMINAL**

3. **REMOVE ENGINE UNDER COVER SUB-ASSEMBLY NO.1**

4. **DRAIN ENGINE COOLANT (See page CO-3)**

5. **REMOVE INTAKE AIR CONNECTOR (See page ES-452)**

6. **REMOVE THROTTLE WITH MOTOR BODY ASSEMBLY (See page ES-453)**

7. **DISCONNECT FUEL HOSE**
(a) Pull the checker of the fuel hose upward.
(b) Pinch the detaching switch of the fuel hose connector and pull out the fuel hose.
NOTICE:
- **Remove any dirt and foreign objects on the fuel tube connector before performing this work.**
- **Do not allow any scratches or foreign objects on the parts when disconnecting, as the fuel tube connector has the O-ring that seals the pipe.**
- **Perform this work by hand. Do not use any tools.**
- **Do not forcibly bend, twist or turn the nylon tube.**
- **Protect the disconnected part by covering it with a vinyl bag after disconnecting the fuel hose.**
- **If the fuel tube connector and pipe are stuck, push and pull to release them.**

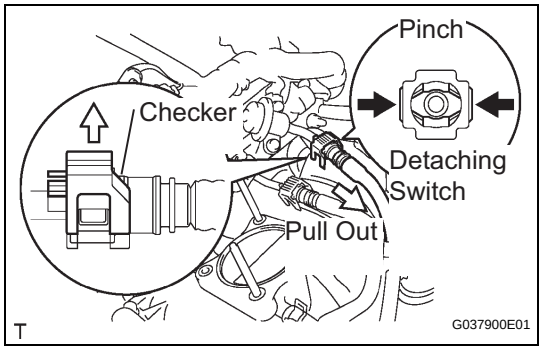

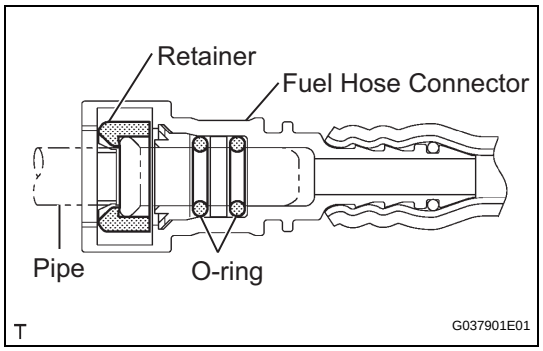

8. **DISCONNECT NO. 2 FUEL HOSE**
(a) Pull the checker of the fuel hose upward.
(b) Pinch the detaching switch of the fuel hose connector and pull out the fuel hose.
NOTICE:
- **Remove any dirt and foreign objects on the fuel tube connector before performing this work.**
- **Do not allow any scratches or foreign objects on the parts when disconnecting, as the fuel tube connector has the O-ring that seals the pipe.**

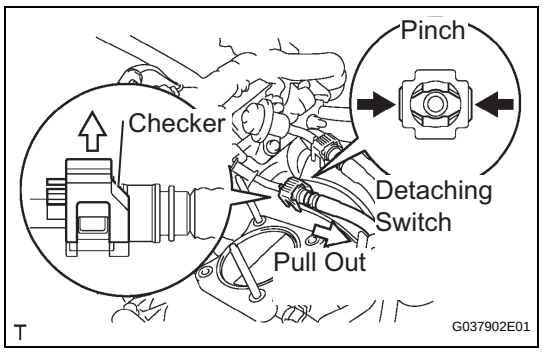

FU

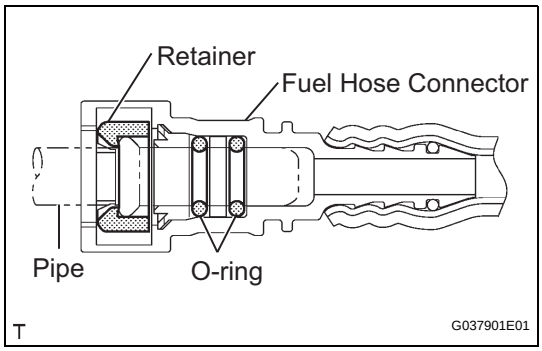

- **Perform this work by hand. Do not use any tools.**
- **Do not forcibly bend, twist or turn the nylon tube.**
- **Protect the disconnected part by covering it with a vinyl bag after disconnecting the fuel hose.**
- **If the fuel tube connector and pipe are stuck, push and pull to release them.**

9. REMOVE FUEL PRESSURE PULSATION DAMPER ASSEMBLY (See page FU-21)

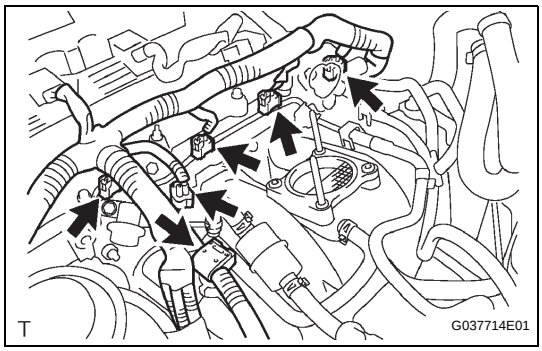

10. REMOVE FUEL DELIVERY PIPE WITH INJECTOR

(a) Disconnect the 4 injector connectors.
(b) Disconnect the VSV connector.
(c) Disconnect the engine wire harness clamp.

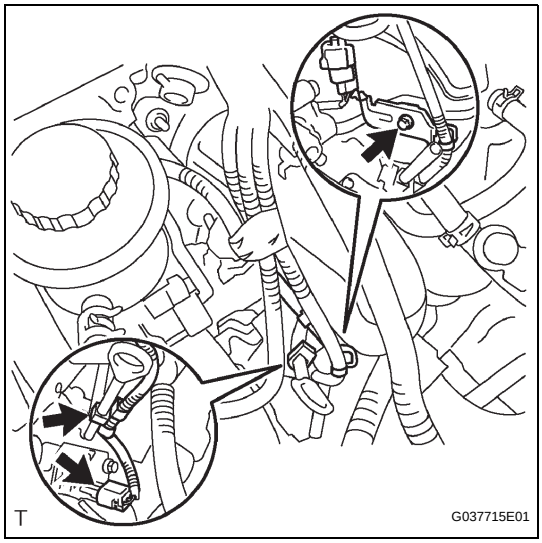

(d) Disconnect the compressor magnetic clutch connector. (with AIR CONDITIONING)
(e) Disconnect the wire harness clamp.
(f) Remove the bolt, then remove the harness clamp bracket.

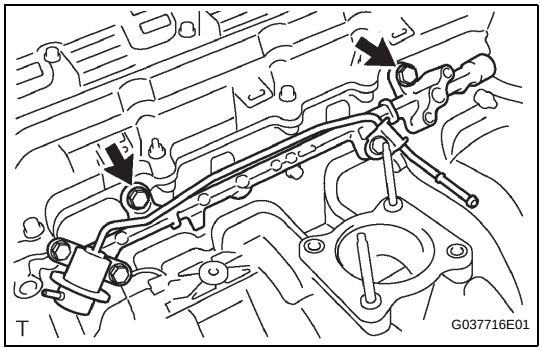

(g) Remove the 2 bolts, then remove the fuel delivery pipe together with the fuel injectors.
NOTICE:
Be careful not to drop the fuel injectors when removing the fuel delivery pipe.

FU

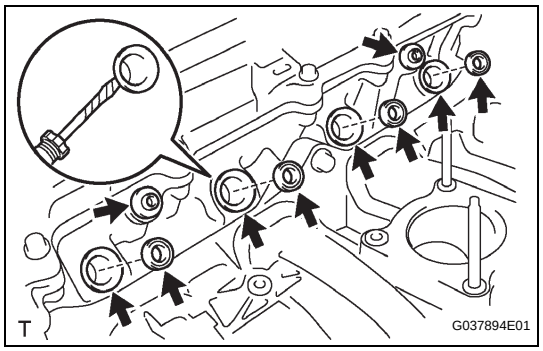

(h) Remove the 2 delivery pipe No. 1 spacers.
(i) Remove the 4 injector vibration insulators.
(j) Using a screwdriver, remove the 4 spacers.

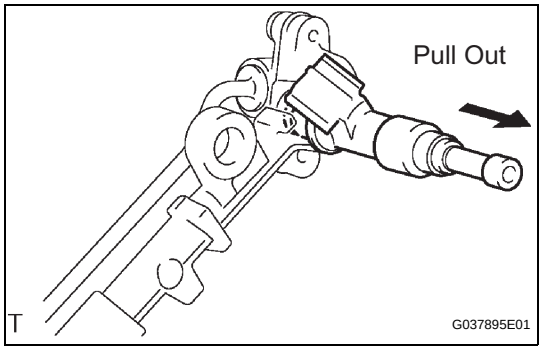

11. REMOVE FUEL INJECTOR ASSEMBLY

(a) Pull the 4 fuel injectors out of the fuel delivery pipe.

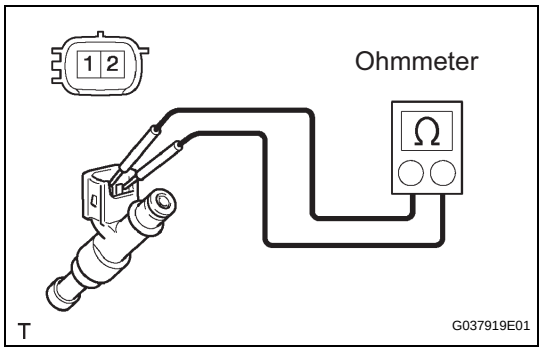

INSPECTION

1. INSPECT FUEL INJECTOR ASSEMBLY

(a) Check the resistance.
(1) Using an ohmmeter, measure the resistance between the terminals.
Resistance:
11.6 to 12.4 Ω at 20°C (68°F)
If the result is not as specified, replace the fuel injector.

(b) Check the injection volume.
CAUTION:
This test involves high-pressure fuel and electricity, therefore, safety precautions should be taken. Perform this test in a safe area and avoid any sparks and flames. Do not smoke.
(1) Discharge the fuel system pressure (see page FU-1).
(2) Remove the fuel hose from the fuel pressure pulsation damper (see page FU-21).
(3) Remove the fuel hose from the fuel pipe (see page FU-1).
(4) Separate the pressure regulator (see page FU-19).
NOTICE:
Do not separate the fuel hose No.2.

FU

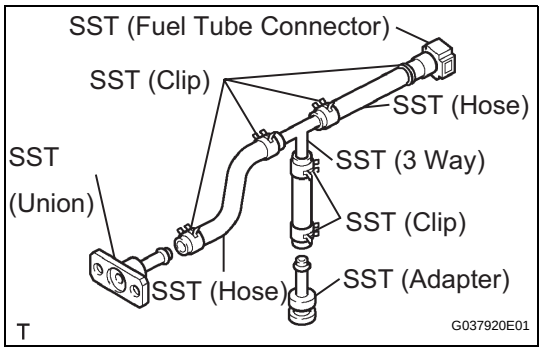

(5) Assemble SST as shown in the illustration.
SST 09268-41048 (09268-41091, 09268-41110, 09268-41120, 09268-41500, 95336-08070, 90467-13001)

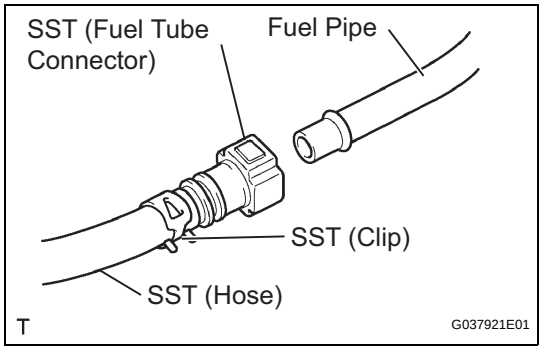

(6) Connect SST to the fuel pipe.
SST 09268-41048 (09268-41500, 90467-13001)

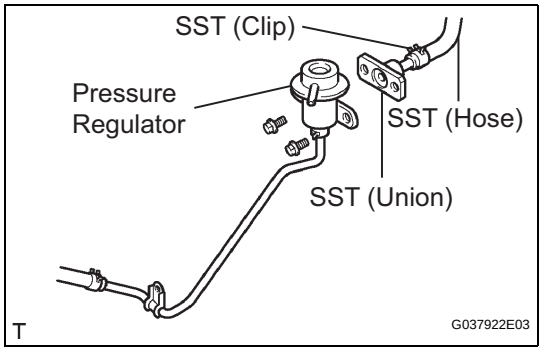

(7) Install the pressure regulator onto SST (union) with the 2 bolts.
Torque: 8.5 N*m (87 kgf*cm, 75 in.*lbf)
SST 09268-41048 (09268-41091)
NOTICE:
Make sure that the O-ring is installed onto the pressure regulator.

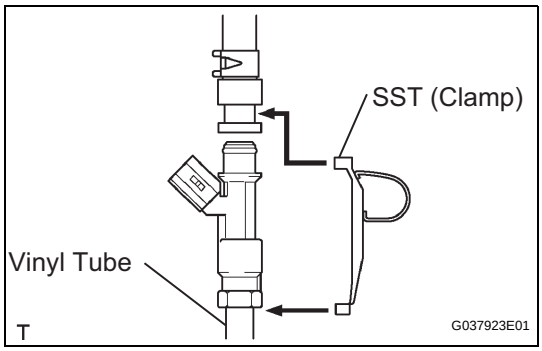

(8) Install the O-ring onto the injector.
(9) Assemble SST as shown in the illustration.
SST 09268-41048 (09268-41110, 09268-41310)
(10) Put the injector into a graduated cylinder.
CAUTION:
Install a suitable vinyl tube onto the injector to contain any gasoline spray.

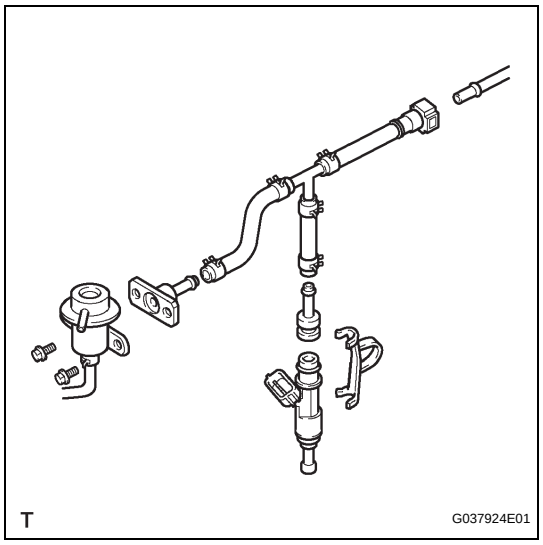

(11) Make sure that SST is installed as shown in the illustration.
(12) Operate the fuel pump (see page FU-6).

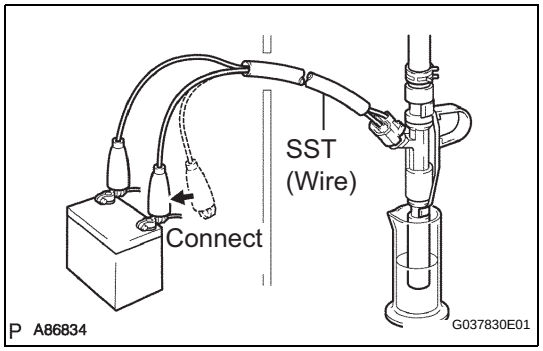

(13) Connect SST (wire) to the injector and the battery for 15 seconds, and measure the injection volume with a graduated cylinder. Test each injector 2 or 3 times.
SST 09842-30080
Volume:
71 to 86 cm^3 (4.3 to 5.2 cu in.) per 15 seconds
Difference between each injector:
15 cm^3 (0.9 cu in.) or less
If the injection volume is not as specified, replace the injector.

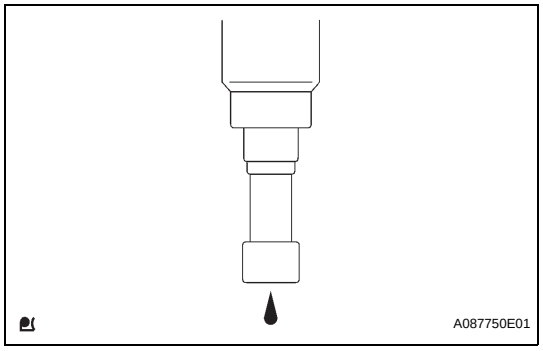

(c) Check the leakage.
(1) In the condition above, disconnect the tester probes of SST (wire) from the battery and check the fuel leakage from the injector.
Fuel drop:
1 drop or less in 12 minutes

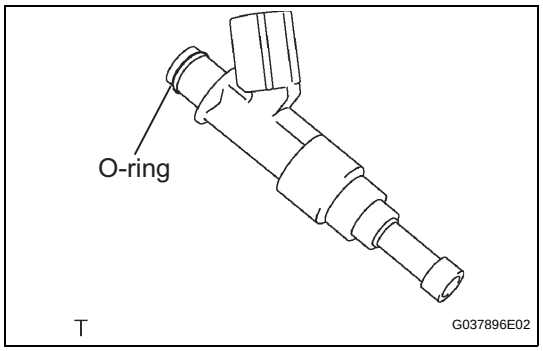

INSTALLATION

1. INSTALL FUEL INJECTOR ASSEMBLY

(a) Apply a light coat of gasoline or spindle oil to new O-rings, then install one onto each fuel injector.

FU

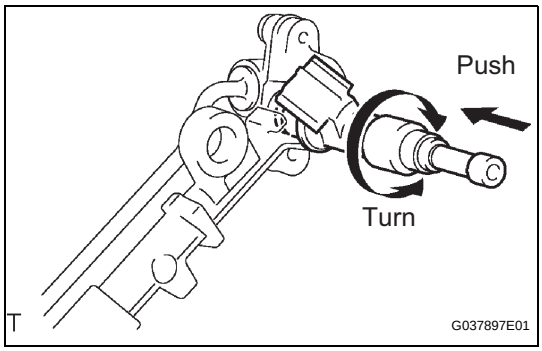

(b) Apply a light coat of gasoline or spindle oil to the contact surfaces of the fuel delivery pipe and the O-ring of the fuel injector.
(c) Apply a light coat of gasoline or spindle oil to the O-ring again, then install the fuel injector into the fuel delivery pipe by turning it right and left.
NOTICE:
Make sure that the O-ring is not cracked or jammed when installing.
(d) Check that the fuel injector rotates smoothly.
If the fuel injector does not rotate, replace the O-ring.

2. INSTALL FUEL DELIVERY PIPE W/ INJECTOR

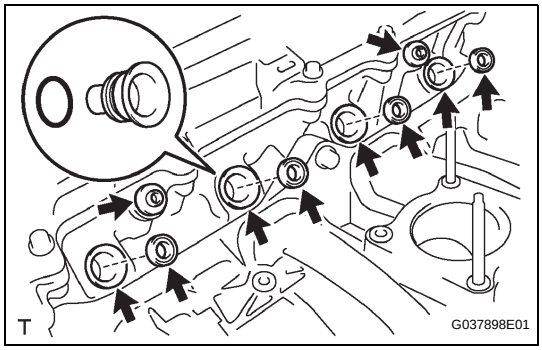

(a) Apply a light coat of gasoline or spindle oil to new O-rings, then install one onto each spacer.
(b) Install the 4 spacers onto the cylinder head.
(c) Install 4 new injector vibration insulators onto the cylinder head.
(d) Install the 2 delivery pipe No. 1 spacers onto the cylinder head.

FU

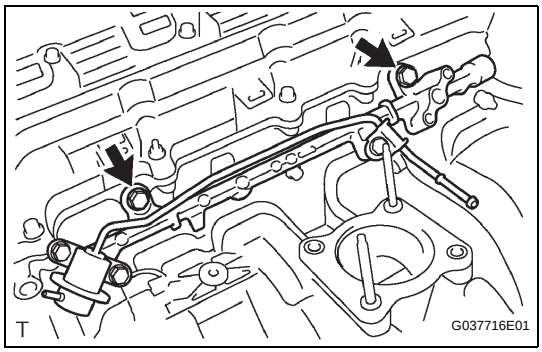

(e) Install the fuel delivery pipe together with the 4 fuel injectors, then provisionally tighten the fuel delivery pipe with the 2 bolts.
NOTICE:
Do not drop the fuel injectors when installing the fuel delivery pipe.
(f) Check that the fuel injector rotates smoothly.
If the fuel injector does not rotate, replace the O-ring.
(g) Retighten the 2 bolts to the specified torque.
Torque: 12 N*m (122 kgf*cm, 9 ft.*lbf)

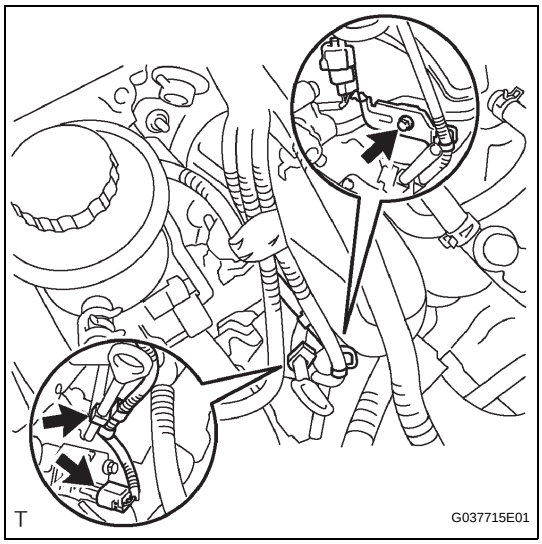

(h) Install the harness clamp bracket with the bolt.
Torque: 8.2 N*m (84 kgf*cm, 73 in.*lbf)
(i) Connect the wire harness clamp.
(j) Connect the compressor magnetic clutch connector. (with AIR CONDITIONING)

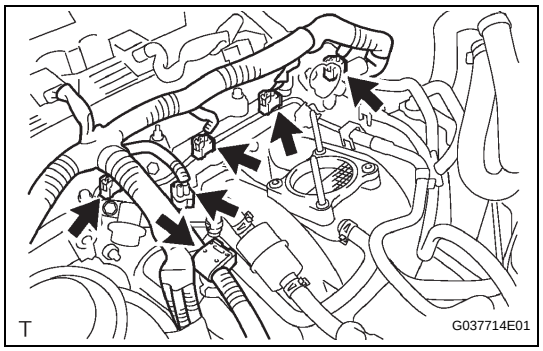

(k) Connect the engine wire harness clamp.
(l) Connect the VSV connector.
(m) Connect the 4 injector connectors.

3. **INSTALL FUEL PRESSURE PULSATION DAMPER ASSEMBLY (See page FU-21)**

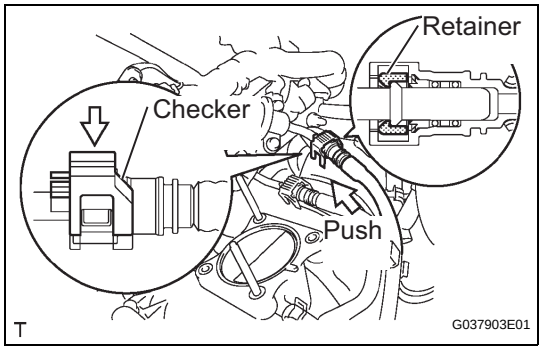

4. **CONNECT FUEL HOSE**
(a) Align the fuel hose connector with the pipe stem, and insert the fuel hose until the retainer makes a "click" sound.
(b) Push down the checker of the fuel hose.
NOTICE:
- **Check that there are no scratches or foreign objects around the disconnected parts of the fuel hose connector and pipe before performing this work.**
- **After connecting the fuel hose, check that the fuel hose is securely connected by pulling the fuel hose connector and pipe.**

(c) Push the fuel hose down until the checker of the fuel hose makes a "click" sound.

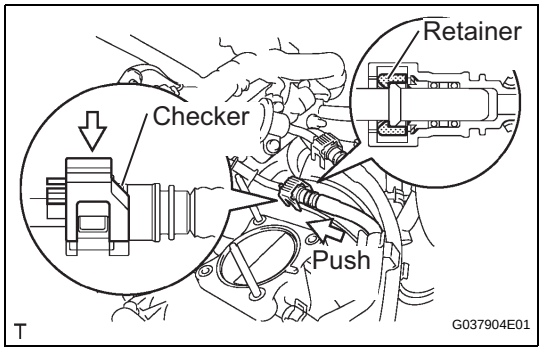

5. **CONNECT FUEL HOSE NO.2**
(a) Align the fuel hose connector with the pipe stem, and insert the fuel hose until the retainer makes a "click" sound.
(b) Push down the checker of the fuel hose.
NOTICE:
- **Check that there are no scratches or foreign objects around the disconnected parts of the fuel hose connector and pipe before performing this work.**
- **After connecting the fuel hose, check that the fuel hose is securely connected by pulling the fuel hose connector and pipe.**

(c) Push the fuel hose down until the checker of the fuel hose makes a "click" sound.

6. **INSTALL THROTTLE WITH MOTOR BODY ASSEMBLY (See page ES-454)**

7. **INSTALL INTAKE AIR CONNECTOR (See page ES-455)**

8. **CONNECT CABLE TO NEGATIVE BATTERY TERMINAL**
Torque: 3.9 N*m (40 kgf*cm, 35 in.*lbf)

9. **ADD ENGINE COOLANT (See page CO-3)**

10. **CHECK FOR ENGINE COOLANT LEAKAGE (See page CO-2)**

FU

11. **CHECK FOR FUEL LEAKAGE (See page FU-7)**
12. **INSTALL ENGINE UNDER COVER SUB-ASSEMBLY NO.1**

REMOVAL

1. **DISCHARGE FUEL SYSTEM PRESSURE**
   (See page FU-1)
2. **DISCONNECT CABLE FROM NEGATIVE BATTERY TERMINAL**
3. **DISCONNECT FUEL TANK MAIN TUBE AND FUEL TANK RETURN TUBE (See page FU-30)**
4. **REMOVE FUEL TANK ASSEMBLY (See page FU-31)**
5. **REMOVE FUEL TANK MAIN TUBE AND FUEL TANK RETURN TUBE (See page FU-32)**
6. **REMOVE FUEL SUCTION WITH PUMP & GAUGE TUBE ASSEMBLY (See page FU-33)**
7. **DRAIN FUEL**

DISASSEMBLY

1. **REMOVE FUEL SENDER GAGE ASSEMBLY**
   (a) Disconnect the connector.

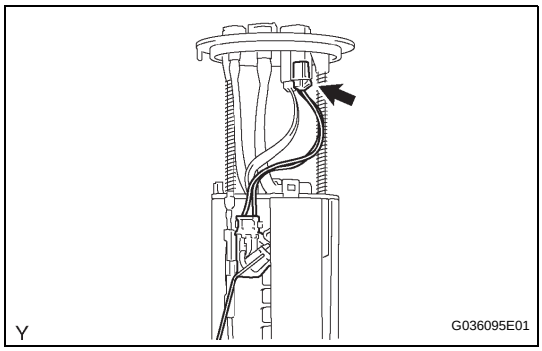

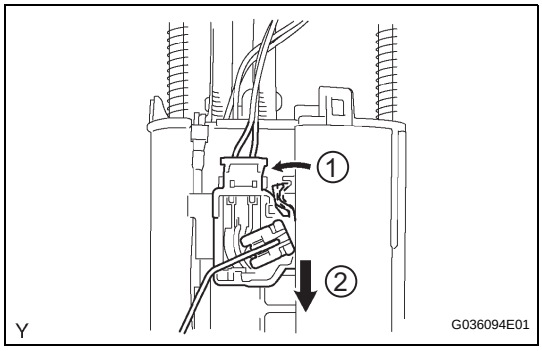

   (b) Disengage the claw fitting and remove the sender gauge by sliding it in the direction as shown in the illustration.

2. **REMOVE NO. 1 FUEL SUB-TANK**
   (a) Disengage the 5 claw fittings and remove the fuel pump tank.

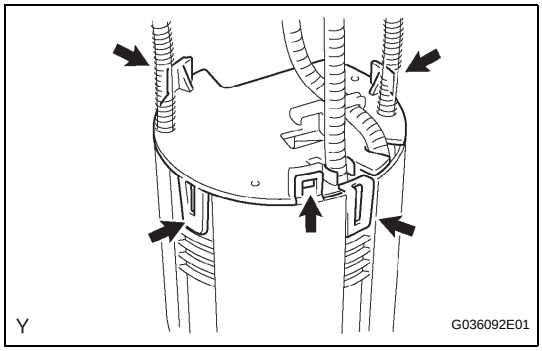

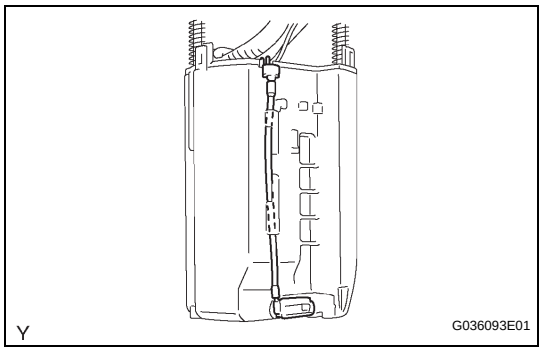

(b) Separate the connector and disengage the clamp.

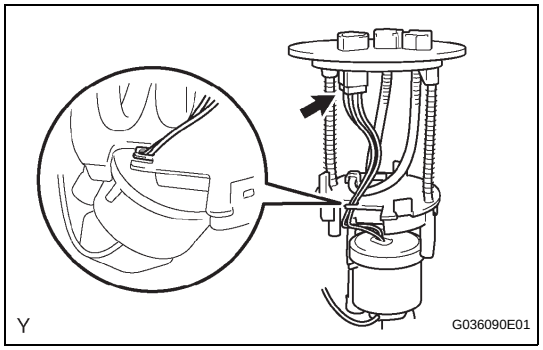

3. REMOVE FUEL PUMP ASSEMBLY

(a) Disengage the clamp, then disconnect the connector.

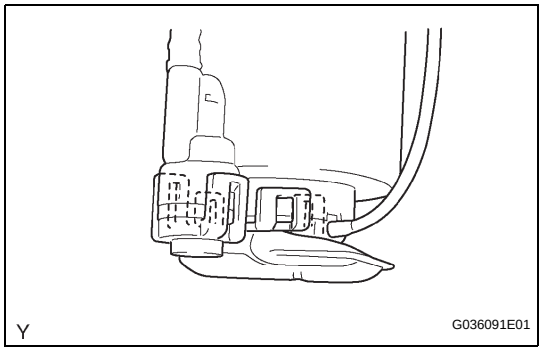

(b) Disengage the 5 claw fittings and separate the fuel pump from the fuel pump case.

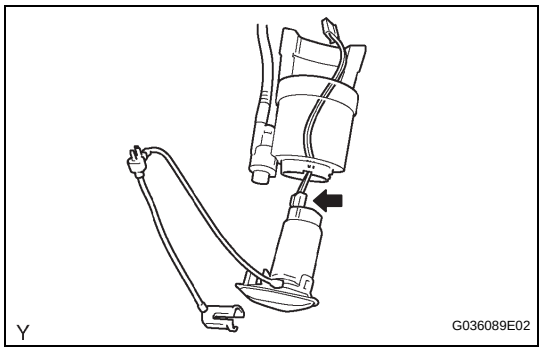

(c) Disconnect the connector from the fuel pump.

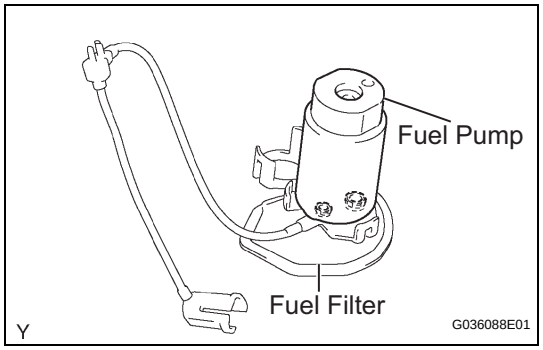

4. REMOVE FUEL PUMP FILTER

(a) Remove the fuel filter from the fuel pump.

FU

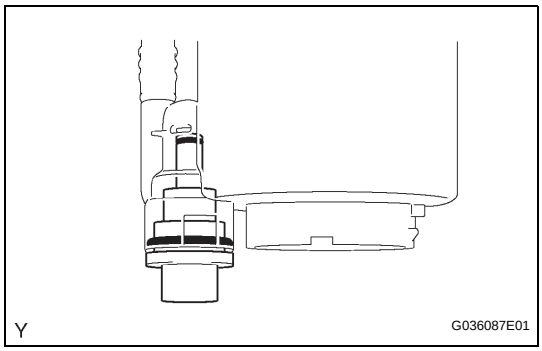

5. REMOVE FUEL PRESSURE REGULATOR ASSEMBLY

(a) Remove the fuel pressure regulator and the 2 O-rings.

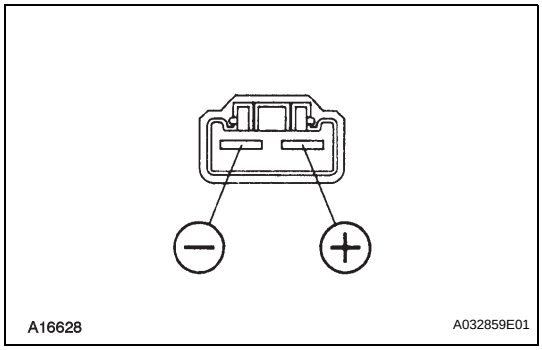

INSPECTION

1. INSPECT FUEL PUMP

(a) Check the resistance.

(1) Using an ohmmeter, measure the resistance between the terminals.

Resistance:

0.2 to 3.0 Ω at 20°C (68°F)

(b) Check the operation.

(1) Apply battery voltage to both terminals. Check that the pump operates.

NOTICE:

- **These tests must be performed quickly (within 10 seconds) to prevent damage to the pump.**
- **Keep the fuel pump as far away from the battery as possible.**
- **Always do the switching at the battery side.**

REASSEMBLY

1. **INSTALL FUEL PRESSURE REGULATOR ASSEMBLY**
   (a) Install the new O-ring into the fuel pump case.
   (b) Install the new O-ring onto the fuel pressure regulator.
2. **INSTALL FUEL PUMP FILTER**
3. **INSTALL FUEL PUMP ASSEMBLY**
4. **INSTALL NO. 1 FUEL SUB-TANK**
5. **INSTALL FUEL SENDER GAGE ASSEMBLY**

INSTALLATION

1. **INSTALL FUEL SUCTION WITH PUMP & GAGE TUBE ASSEMBLY (See page FU-34)**
2. **INSTALL FUEL TANK MAIN TUBE AND FUEL TANK RETURN TUBE (See page FU-35)**
3. **INSTALL FUEL TANK ASSEMBLY (See page FU-35)**
4. **CONNECT FUEL TANK MAIN TUBE AND FUEL TANK RETURN TUBE (See page FU-36)**
5. **ADD FUEL**
6. **CONNECT CABLE TO NEGATIVE BATTERY TERMINAL**
   Torque: 3.9 N*m (40 kgf*cm, 35 in.*lbf)
7. **CHECK FOR FUEL LEAKAGE (See page FU-7)**

REMOVAL

1. **DISCHARGE FUEL SYSTEM PRESSURE**
   (See page FU-1)

2. **DISCONNECT CABLE FROM NEGATIVE BATTERY TERMINAL**

3. **DISCONNECT FUEL TANK MAIN TUBE AND FUEL TANK RETURN TUBE**
   (a) Remove the fuel pipe clamp.

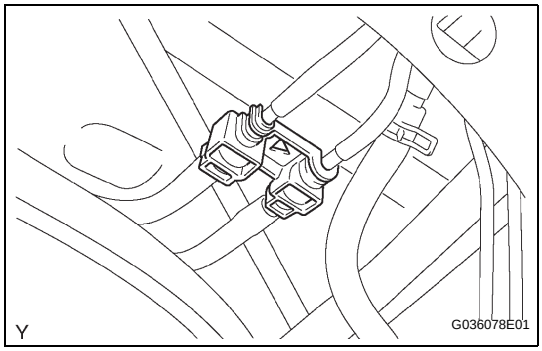

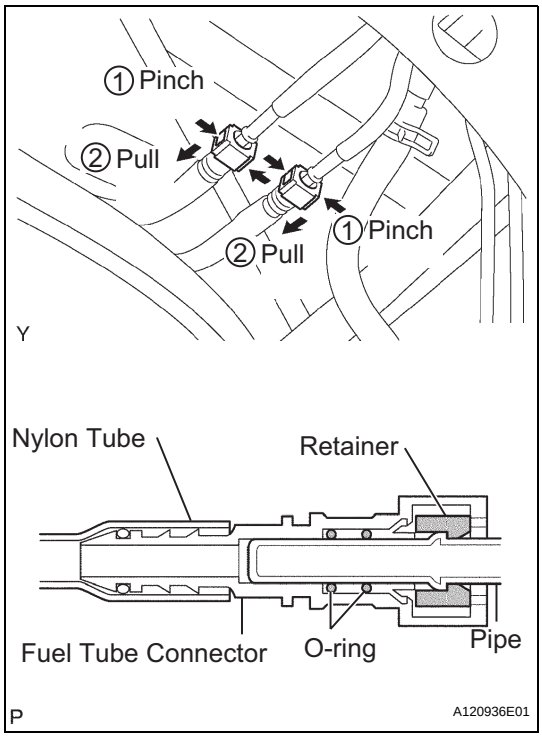

   (b) Disconnect the fuel tank main tube and fuel tank return tube.
      (1) Pinch the retainer as illustrated, then pull the fuel tube connectors out of the pipes.
      NOTICE:
      - **Remove any dirt and foreign objects from the fuel tube connector before performing this work.**
      - **Do not allow any scratches or foreign objects on the parts when disconnecting, as the fuel tube connector has the O-ring that seals the pipe.**
      - **Perform this work by hand. Do not use any tools.**
      - **Do not forcibly bend, twist or turn the nylon tube.**
      - **Protect the disconnected part by covering it with a vinyl bag after disconnecting the fuel tube.**
      - **If the fuel tube connector and pipe are stuck, push and pull to release them.**

FU

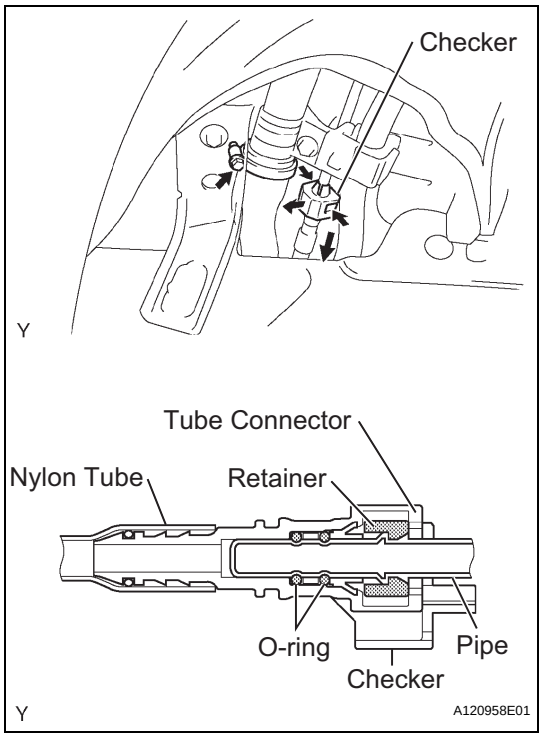

4. REMOVE FUEL TANK ASSEMBLY

(a) Loosen the clamp bolt.

(b) Disconnect the fuel breather tube.

(1) Remove the checker of the fuel tube connector from the pipe.

(2) Pinch the retainer of the fuel tube connector, then pull the tube connector out of the pipe.

NOTICE:

- **Remove any dirt and foreign objects from the fuel tube connector before performing this work.**
- **Do not allow any scratches or foreign objects on the parts when disconnecting, as the fuel tube connector has the O-ring that seals the pipe.**
- **Perform this work by hand. Do not use any tools.**
- **Do not forcibly bend, twist or turn the nylon tube.**
- **Protect the disconnected part by covering it with a vinyl bag after disconnecting the fuel tube.**
- **If the fuel tube connector and pipe are stuck, push and pull to release them.**

(c) Hold the fuel tank using the mission jack.

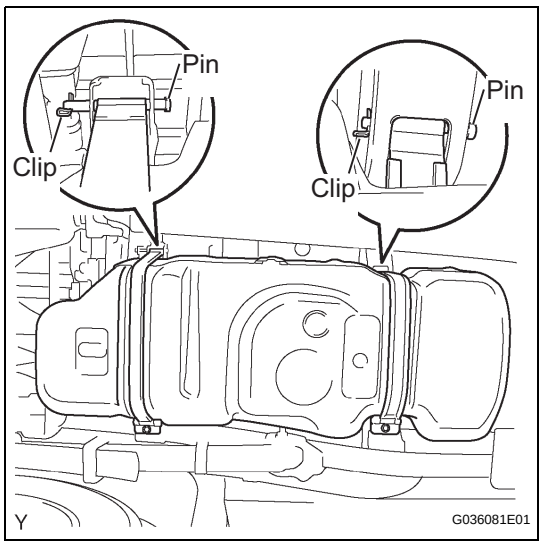

(d) Remove the 2 fuel tank bands.

(1) Remove the 2 bolts.

(2) Remove the 2 clips and 2 pins, then remove the 2 fuel tank bands.

(e) Remove the fuel pump cover.

(f) Slightly jack the fuel tank down and separate the fuel tank to filler pipe hose from the inlet pipe.

NOTICE:

Slowly jack down the fuel tank so as not to tear the wire harness and hose.

(g) Disconnect the fuel pump connector.

(h) Disconnect the fuel tank vent hose.

(1) Pinch the retainer and pull the fuel tank vent hose connector out of the charcoal canister to disconnect the fuel tank vent hose from the charcoal canister.

NOTICE:

- **Remove any dirt and foreign objects from the fuel tank vent hose connector before performing this work.**
- **Do not allow any scratches of foreign objects on the parts when disconnecting, as the fuel tank vent hose connector has the O-ring that seals the pipe.**
- **Perform this work by hand. Do not use any tools.**
- **Do not forcibly bend, twist or turn the nylon tube.**

- **Protect the disconnected part by covering it with a vinyl bag after disconnecting the fuel tank vent hose.**
- **If the fuel tank vent connector and pipe are stuck, push and pull to release them.**

(i) Remove the fuel tank assembly.

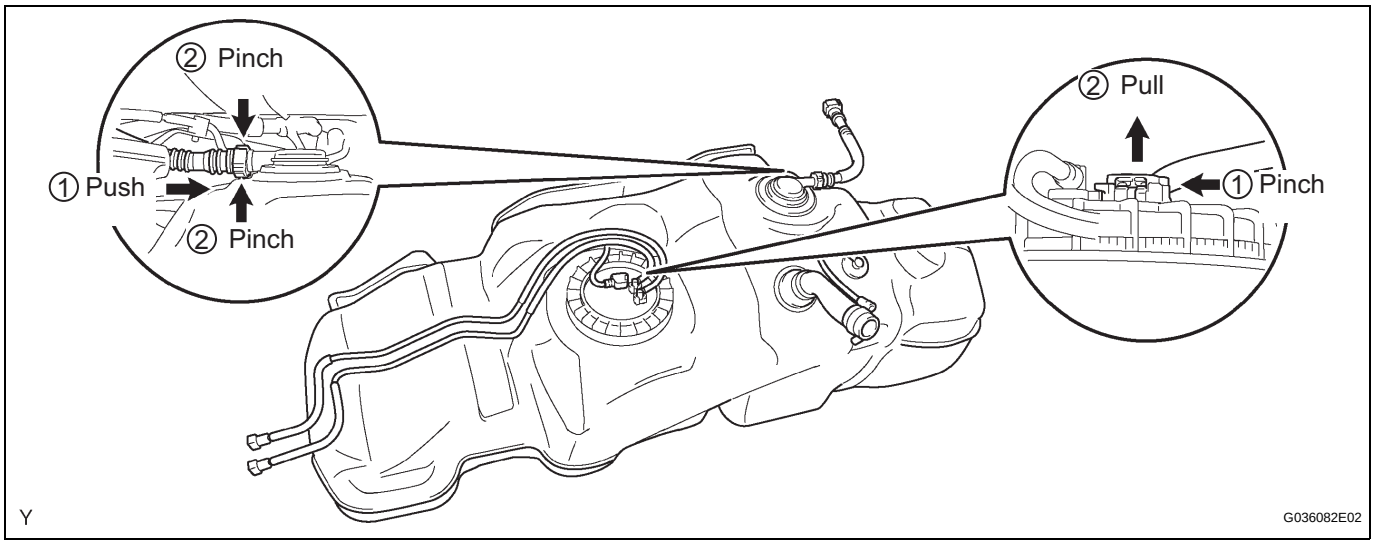

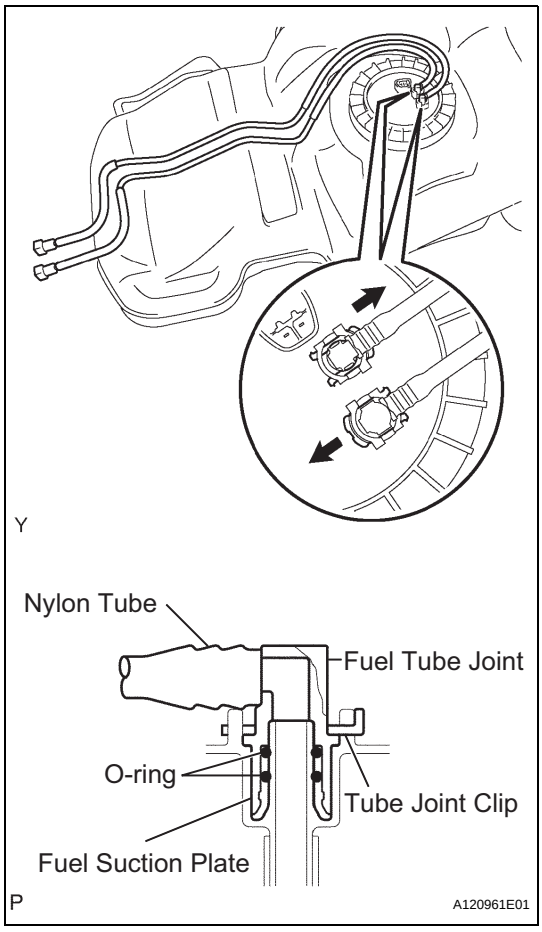

5. REMOVE FUEL TANK MAIN TUBE AND FUEL TANK RETURN TUBE

(a) Remove the 2 joint clips, then remove the fuel tank main tube and fuel tank return tube.

NOTICE:

- **Remove any dirt and foreign objects from the fuel tube connector before performing this work.**
- **Do not allow any scratches or foreign objects on the parts when disconnecting, as the fuel tube connector has the O-ring that seals the pipe.**
- **Perform this work by hand. Do not use any tools.**
- **Do not forcibly bend, twist or turn the nylon tube.**
- **Protect the disconnected part by covering it with a vinyl bag after disconnecting the fuel tube.**
- **If the fuel tube connector and pipe are stuck, push and pull to release them.**

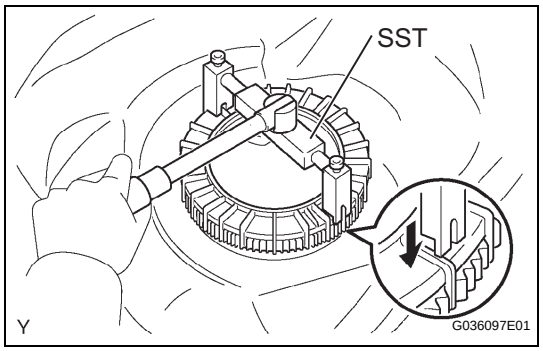

6. REMOVE FUEL SUCTION WITH PUMP & GAGE TUBE ASSEMBLY

NOTICE:

Protect the connector and tube joint with masking tape or equivalent to prevent any foreign objects from sticking to them. Clean any dirt and foreign objects from the fuel suction tube assembly before removing.

(a) Using a SST, loosen the retainer.

SST 09808-14020 (09808-01410, 09808-01420, 09808-01430)

HINT:

The ribs on the retainer can be fitted into a tip of the SST.

(b) Remove the retainer.

(c) Pull the fuel pump assembly out of the fuel tank.

NOTICE:

Be careful not to bend the arm of the sender gauge.

(d) Remove the gasket from the fuel tank.

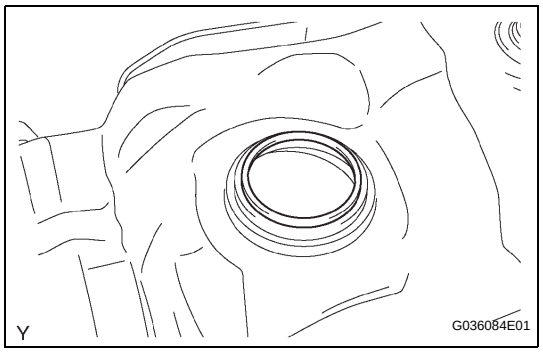

7. DRAIN FUEL

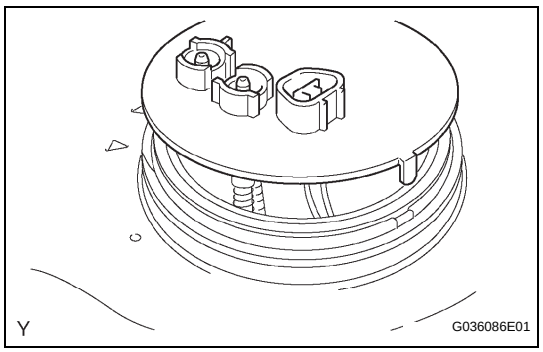

8. REMOVE FUEL TANK TO FILLER PIPE HOSE

(a) Loosen the clamp bolt, then remove the fuel tank to filler pipe hose.

9. REMOVE NO. 1 FUEL TANK PROTECTOR

(a) Remove the 4 clips, then remove the fuel tank protector.

FU

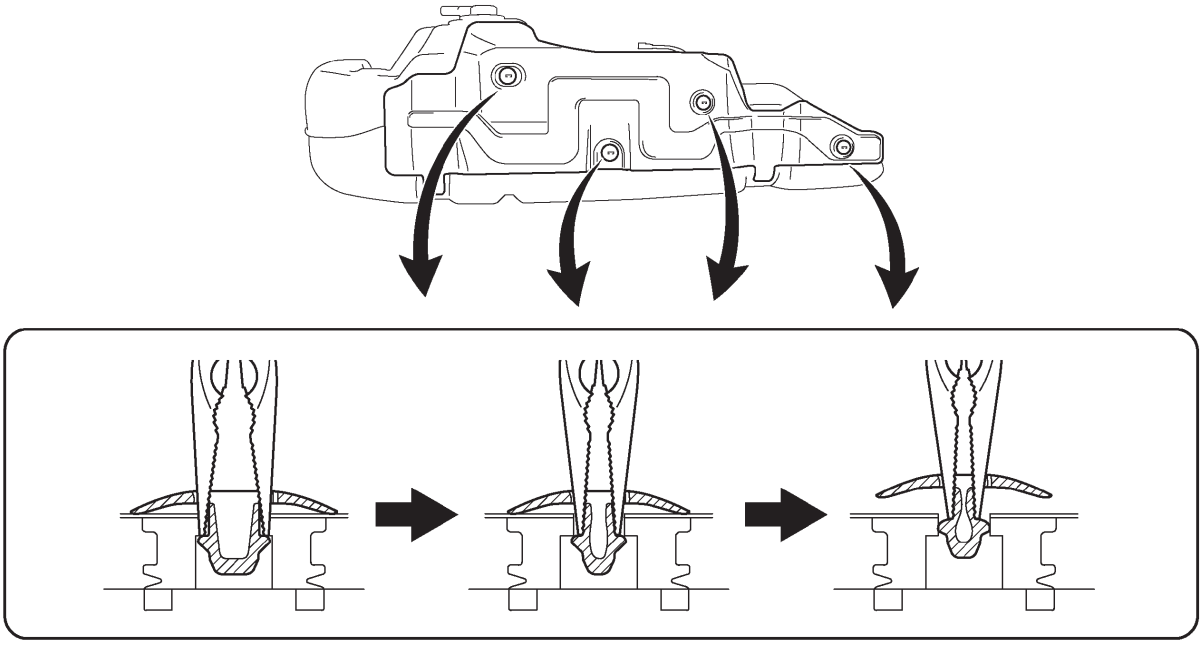
Y
G036085E01

INSTALLATION

1. INSTALL NO. 1 FUEL TANK PROTECTOR

(a) Install the fuel tank protector with the 4 clips.

2. INSTALL FUEL TANK TO FILLER PIPE HOSE

(a) Install the fuel tank onto the filler pipe hose, then tighten the pipe clamp bolt.

3. INSTALL FUEL SUCTION WITH PUMP & GAGE TUBE ASSEMBLY

(a) Install a new gasket onto the fuel tank.

(b) Set the fuel pump assembly in the fuel tank.

NOTICE:

Be careful not to bend the arm of the sender gauge.

(c) Fit a spline of the fuel suction tube assembly into a keyway of the fuel tank.

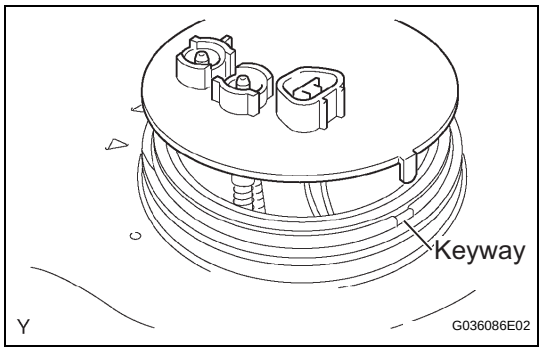

(d) Install a new retainer.

(1) Align the mark on a new retainer with the rib on the fuel tank as shown in the illustration.

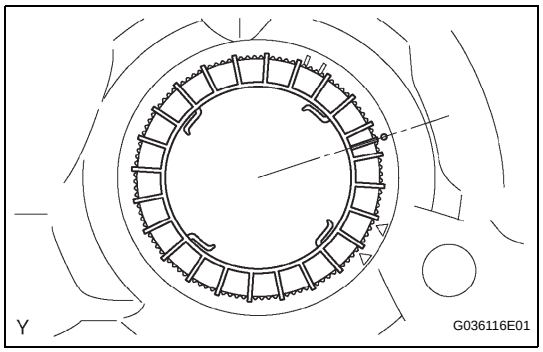

(2) Using SST, turn the retainer 740°to 780°clockwise (more than 2 turns), and position the mark on the retainer within range A to install it.

SST 09808-14020 (09808-01410, 09808-01420, 09808-01430)

HINT:

The ribs on the retainer can be fitted into the tip of the SST.

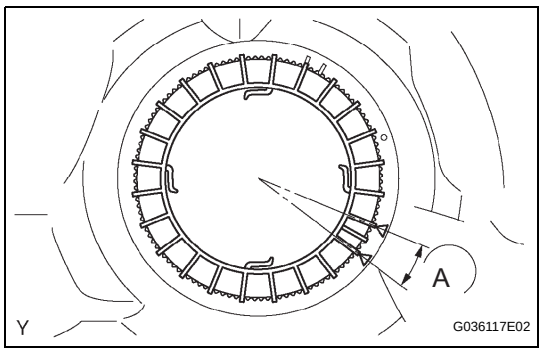

FU

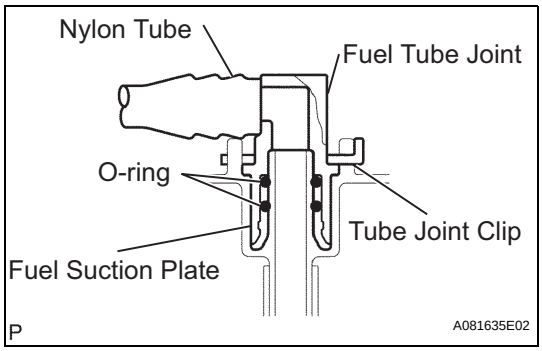

4. INSTALL FUEL TANK MAIN TUBE AND FUEL TANK RETURN TUBE

(a) Install the fuel tank main tube and return tube with the 2 joint clips.

NOTICE:

- **Check that there are no scratches or foreign objects around the connected part of the fuel tube joint and plug before performing this work.**
- **Check that the fuel tube joint is securely inserted to the end.**
- **Check that the tube joint clips are on the collar of the fuel tube joint.**
- **After installing the tube joint clip, check that the fuel tank main tube and return tube can be pulled out.**

5. INSTALL FUEL TANK ASSEMBLY

(a) Set the fuel tank assembly onto the mission jack.

(b) Connect the fuel tank vent hose.

(1) Align the fuel tank vent connector with the pipe, then push in the fuel tank vent connector until the retainer makes a "click" sound to connect the fuel tank vent hose to the fuel suction plate.

NOTICE:

- **Check that there are no scratches or foreign objects around the connected part of the fuel tank vent connector and plug before performing this work.**
- **After connecting the fuel tank vent hose, check that the fuel tank vent hose is securely connected by pulling the quick connector.**

(c) Connect the fuel pump connector.

(d) Connect the fuel tank to filler pipe hose.

(e) Install the fuel pump cover.

(f) Install the 2 fuel tank bands.

(1) Install the 2 fuel tank bands with the 2 pins and 2 clips.

(2) Install the 2 fuel tank bands with the 2 bolts.

Torque: 62 N*m (632 kgf*cm, 46 ft.*lbf)

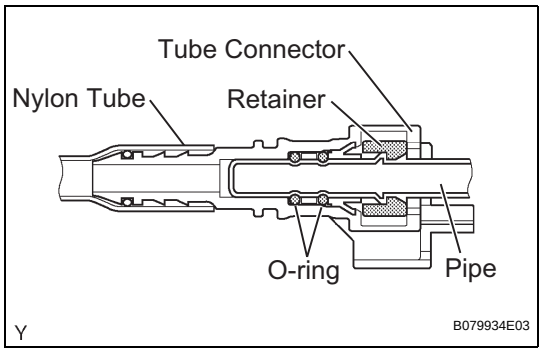

(g) Connect the fuel tank breather tube.

(1) Align the fuel tube connector with the pipe, then push the fuel tube connector in until the retainer makes a "click" sound to connect the fuel tank vent breather tube.

NOTICE:

- **Check that there are no scratches or foreign objects around the connected part of the fuel tube connector and pipe before performing this work.**
- **After connecting the fuel tank breather tube, check that the fuel pump tube is securely connected by pulling the fuel tube connector and pipe.**

FU

(2) Install the checker onto the pipe.

(h) Tighten the clamp bolt.

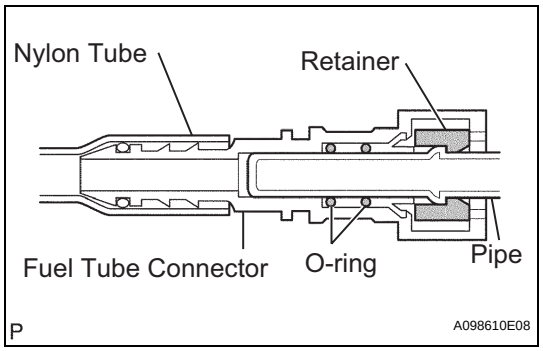

6. CONNECT FUEL TANK MAIN TUBE AND FUEL TANK RETURN TUBE

(a) Connect the fuel tank main tube and return tube.

(1) Align the fuel tube connector with the pipe, then push the fuel tube connector in until the retainer makes a "click" sound to connect the fuel tank main tube and return tube.

NOTICE:

- **Check that there are no scratches or foreign objects around the connected part of the fuel tube connector and pipe before performing this work.**
- **After connecting the fuel tube connector, check that the fuel tube connector and pipe are securely connected by pulling them.**

(b) Install the fuel pipe clamp.

7. ADD FUEL

8. CONNECT CABLE TO NEGATIVE BATTERY TERMINAL

Torque: 3.9 N*m (40 kgf*cm, 35 in.*lbf)

9. CHECK FOR FUEL LEAKAGE (See page FU-7)

ON-VEHICLE INSPECTION

1. INSPECT AIR-FUEL RATIO COMPENSATION SYSTEM

(a) Measure the voltage between the terminals of the ECM connectors.

Standard

Tester Connection	Condition	Specified Condition
B22 (A1A+) - A28 (E2)	Ignition switch ON	3.3 V
B23 (A2A+) - A28 (E2)	Ignition switch ON	3.3 V
B30 (A1A-) - A28 (E2)	Ignition switch ON	2.9 V
B31 (A2A-) - A28 (E2)	Ignition switch ON	2.9 V

NOTICE:

Connect test leads from the back side of the connector. Do not disconnect the connectors from the ECM.

HINT:

Voltage between the terminals of the ECM is kept constant regardless of the voltage of the A/F sensor.

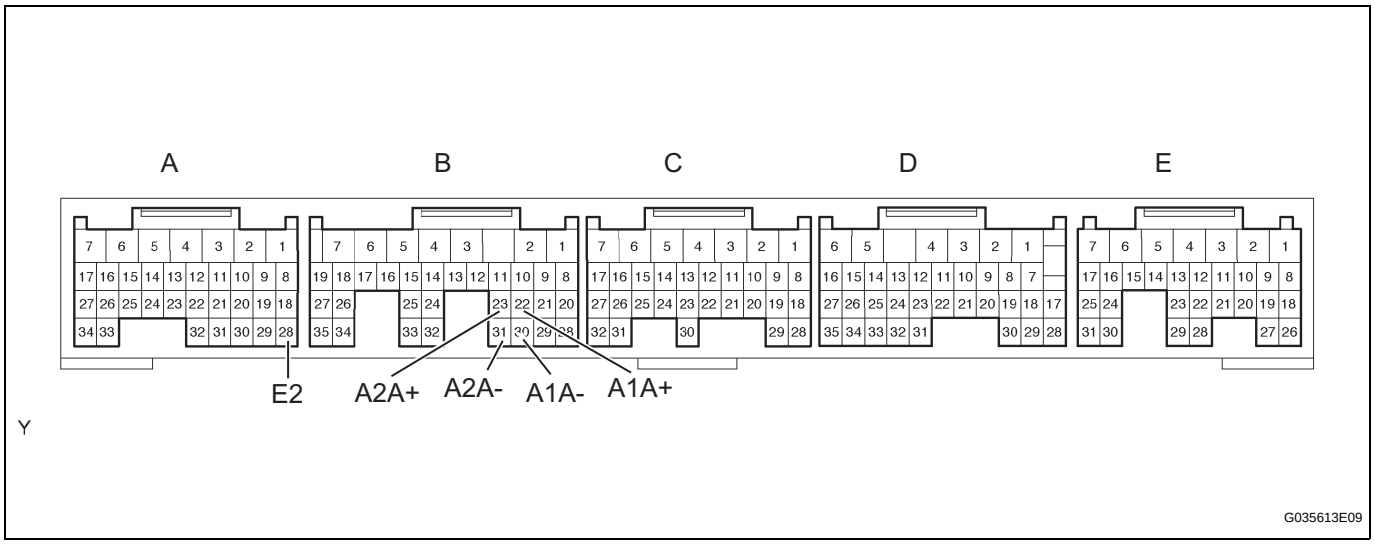

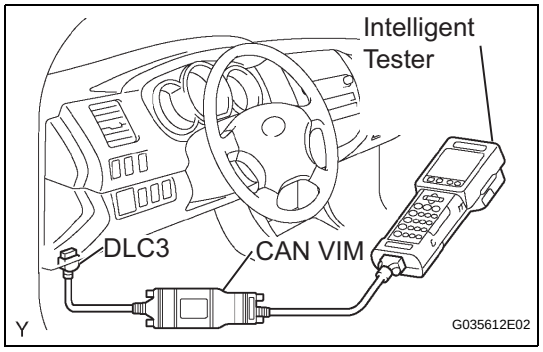

(b) Connect the intelligent tester to the DLC3.

(c) Turn the ignition switch to ON.

(d) Select the following menu items: DIAGNOSIS / ENHANCED OBD II / DATA LIST / A/FS B1 S1 and O2S B1 S2.

(e) Warm up the A/F sensor with the engine speed at 2,500 rpm for approximately 2 minutes.

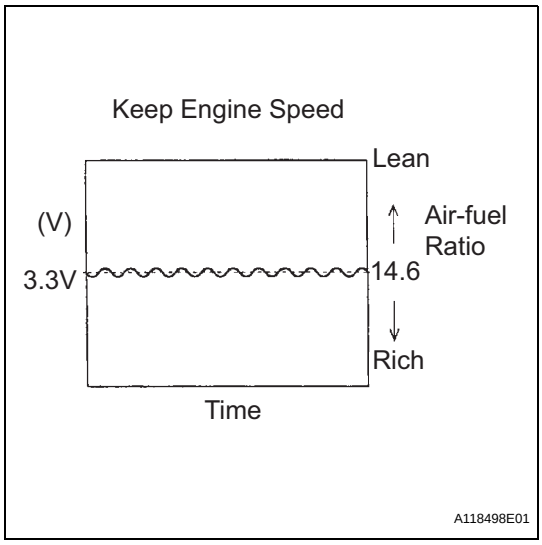

(f) Maintain the engine speed at 2,500 rpm and confirm that the display on the intelligent tester, when A/FS B1 S1 is selected, is as shown in the illustration.
HINT:
- The illustration may slightly differ from the display on the intelligent tester.
- Only the intelligent tester displays the waveform of the A/F sensor.

(g) Confirm that the waveform displayed on the intelligent tester, when O2S B1 S2 is selected, changes between 0 V and 1 V with the engine speed at 2,500 rpm.
OK:
The voltage output oscillates more than 8 times in 10 seconds.
CAUTION:
- **Perform the check immediately after warming up the engine.**
- **If the voltage variation could not be verified, warm up the heated oxygen sensor again. If it could not be verified even after warming up the sensor again, check the DTC No. (see page 05-498).**

EC

2. INSPECT FUEL CUT OFF RPM

(a) Increase the engine speed to at least 3,500 rpm.
(b) Use a sound scope to check for injector operating sounds.
(c) Check that injector operating sounds stop momentarily and then resume when the accelerator pedal is released.
Fuel cut off rpm:
2,500 rpm
Fuel return rpm:
1,400 rpm

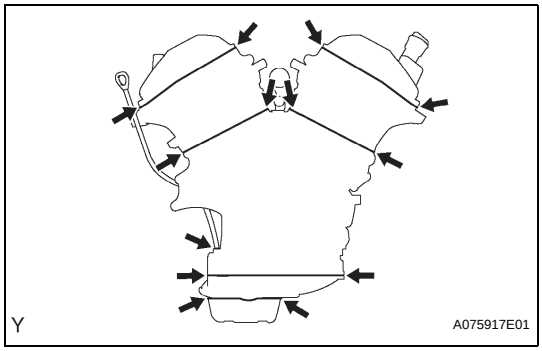

3. VISUALLY INSPECT HOSES, CONNECTIONS AND GASKETS

(a) Check the appearance.
(1) Check if the indicated portions of the engine assembly are cracked, leaking or damaged.
HINT:
Disconnection of the engine oil level gauge, oil filler cap, PCV hose, etc. may cause the engine to run improperly. Disconnected, loose or cracked parts in the air induction system between the throttle body and cylinder head will allow air suction and cause the engine to run improperly.
If necessary, repair the engine assembly.

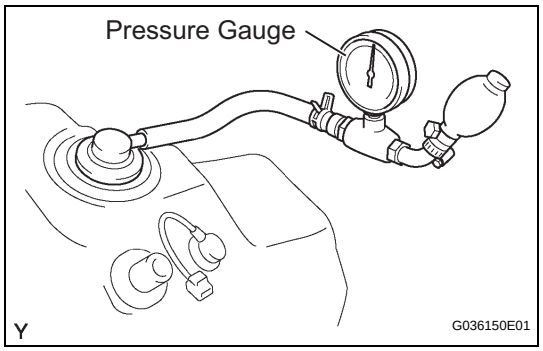

4. INSPECT FUEL CUTOFF VALVE AND FILL CHECK VALVE

(a) Remove the fuel tank (see page FU-30).
(b) Connect the pressure gauge to the vent hose port.
(c) Install the fuel tank with the vent hose disconnected.
(d) Fill the fuel tank with fuel.
(e) Apply pressure at 4 kPa (41 gf/cm2, 0.58 psi) to the vent port of the fuel tank.
HINT:
Check the amount of fuel left in the fuel tank.

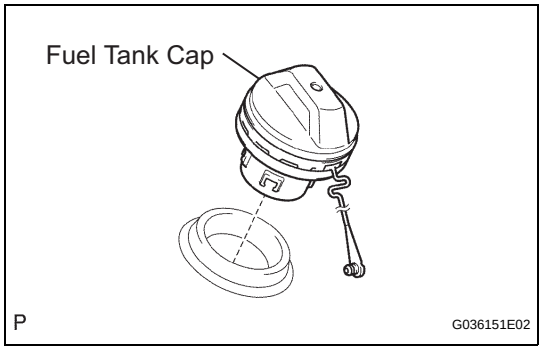

(f) Remove the fuel tank cap, and check that the pressure decreases.
If the pressure does not decrease, replace the fuel tank assembly.
(g) Reconnect the vent line hose to the fuel tank.

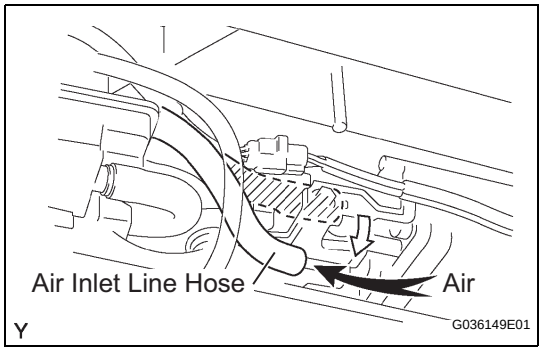

5. CHECK AIR INLET LINE

(a) Disconnect the air inlet line hose from the charcoal canister.
(b) Check that air flows freely into the air inlet line.
If air does not flow freely into the air inlet line, repair or replace the air inlet line.
(c) Reconnect the air inlet line hose to the charcoal canister.

EC

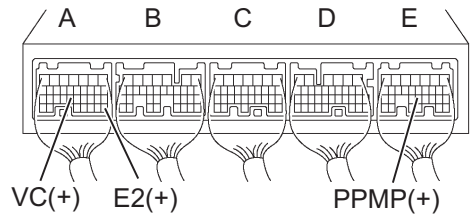

Y **Pressure Sensor Specification**

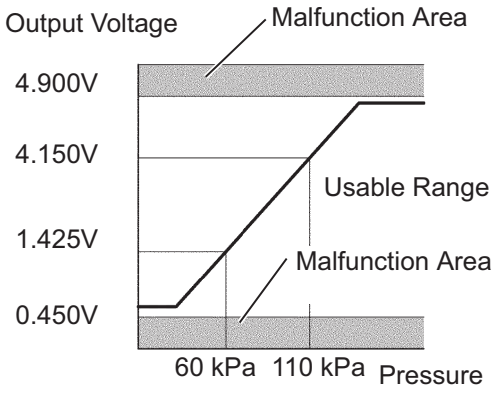

HINT:
Standard Atmospheric Pressure:101.3 kPa

P G036145E01

EC

6. INSPECT LEAK DETECTION PUMP (Pressure Sensor)

(a) Measure the power source voltage of the ECM connectors.

Standard

Tester Connection	Condition	Specified Condition
A23 (VC) - A28 (E2)	Ignition switch ON	4.5 to 5.5 V

If the voltage is not as specified, check the ECM, leak detection pump and wire harness.

(b) Measure the power output of the ECM connectors.

(1) Remove the fuel tank cap.

Standard

Tester Connection	Condition	Specified Condition
E22 (PPMP) - A28 (E2)	Ignition switch ON	1.425 to 4.150 V

If the voltage is not as specified, check the ECM, leak detection pump and wire harness.

(2) Install the fuel tank cap.

INSPECTION

1. INSPECT CHARCOAL CANISTER ASSEMBLY

(a) Visually check the charcoal canister for cracks and damage.
If there is any cracks or damage, replace the charcoal canister assembly.

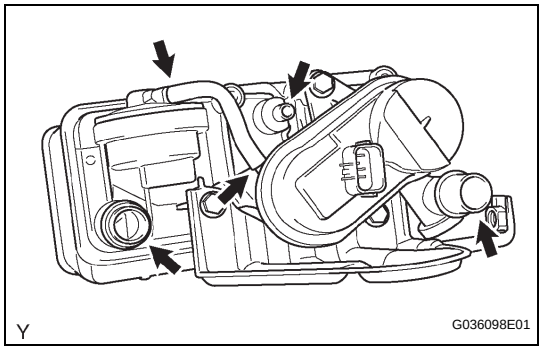

(b) Check the charcoal canister operation.

(1) While holding the purge port closed, blow air at 1.67 kPa (17.0 gf/cm2, 0.24 psi) into the vent port, and check that the air flows from the air inlet port.
If the result is not as specified, replace the charcoal canister assembly

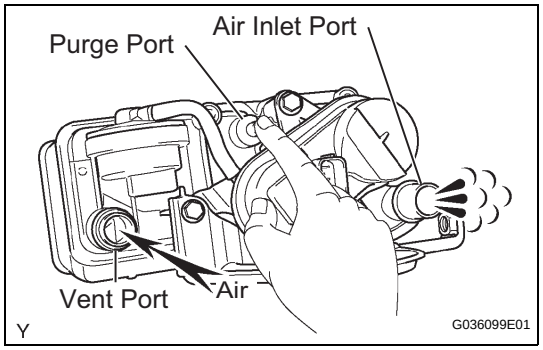

(2) While holding the vent port closed, apply a vacuum of 1.10 kPa (8.3 mmHg, 0.32 in.Hg) into the purge port, and check that the air flows from the air inlet port.
If the result is not as specified, replace the charcoal canister assembly

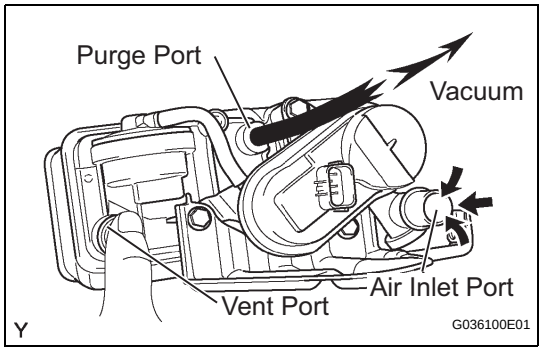

(c) Check for air leakage.

(1) Remove the air hose between ports A and B.

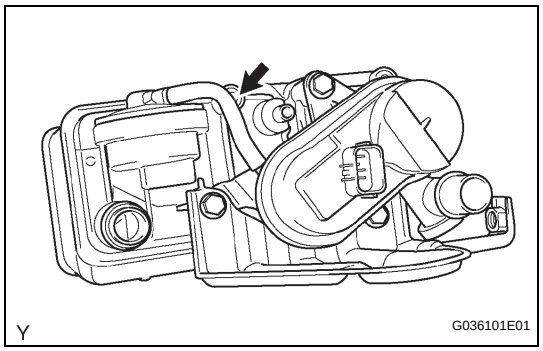

EC

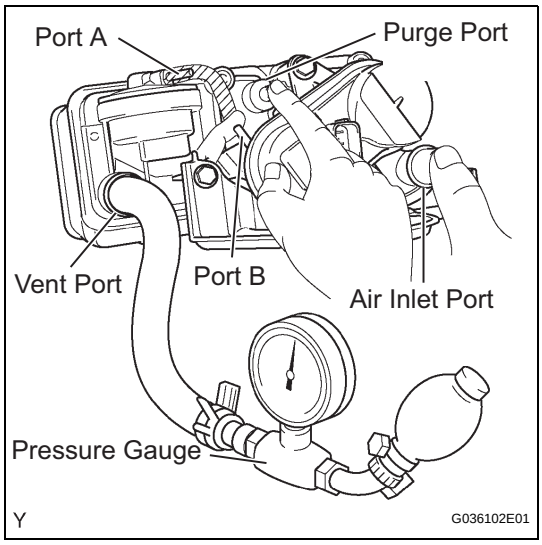

(2) Connect the pressure gauge to the vent port of the charcoal canister.
SST 09992-00242

(3) While holding port B, the purge port and air inlet port closed with your fingers, leave port A open and apply pressurized air at 19.6 kPa (0.2 kgf/cm2, 2.81 psi) into the vent port. Check that the pressure is retained.
If the result is not as specified, replace the charcoal canister assembly

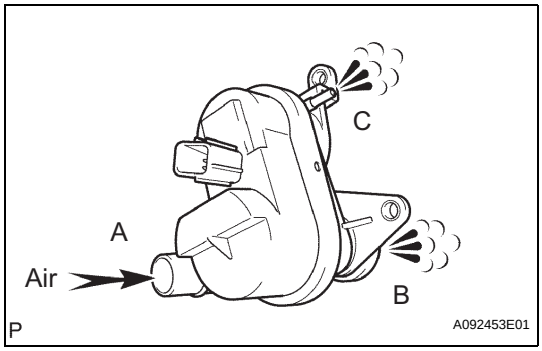

(d) Check the leak detection pump.

(1) Check that air flows from port A to ports B and C.
If the result is not as specified, replace the pump module.

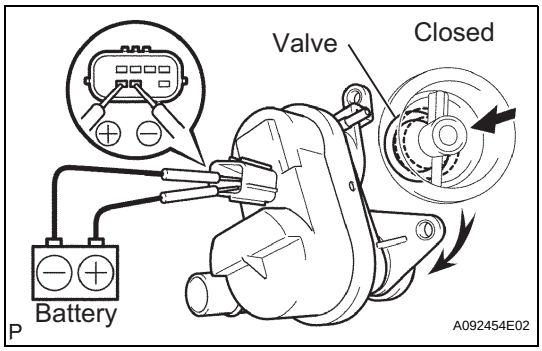

(2) Apply battery positive voltage across the terminals.

(3) Check that the valve is closed.
If the result is not as specified, replace the pump module.

EC

INSTALLATION

1. INSTALL CHARCOAL CANISTER ASSEMBLY

(a) Connect the fuel tank vent hose.

(1) Align the fuel tank vent hose connector with the pipe, then push in the fuel tank vent connector until the retainer makes a "click" sound to connect the fuel tank vent hose to the charcoal canister.

NOTICE:

- **Check that there are no scratches or foreign objects on the disconnected parts of the fuel tank vent connector and pipe before performing the work.**
- **After connecting the fuel tank vent hose, check that the fuel tank vent hose is securely connected by pulling the quick connector.**

(b) Install the charcoal canister with the bolt and 2 nuts.
Torque: 20 N*m (204 kgf*cm, 15 ft.*lbf)

(c) Connect the EVAP tube.

(d) Connect the connector.

2. INSTALL CHARCOAL CANISTER FILTER NO.2

(a) Install the charcoal canister filter No. 2 with the nut.
Torque: 20 N*m (204 kgf*cm, 15 ft.*lbf)

(b) Connect the breather hose to the charcoal canister.

(c) Engage the clamp.

(d) Connect the breather hose to the pipe.

(e) Connect the EVAP pipe to the clamp.

(f) Install the ABS wire harness clamp with the bolt.
Torque: 14 N*m (142 kgf*cm, 10 ft.*lbf)

3. INSTALL FUEL TANK ASSEMBLY (See page FU-35)

4. CONNECT FUEL TANK MAIN TUBE AND FUEL TANK RETURN TUBE (See page FU-36)

5. INSTALL FUEL TANK PROTECTOR SUB-ASSEMBLY NO.1 (for Off Road Package) (See page FU-36)

6. CONNECT CABLE TO NEGATIVE BAATTERY TERMINAL
Torque: 3.9 N*m (40 kgf*cm, 35 in.*lbf)

7. CHECK FOR FUEL LEAKAGE

INSTALLATION

1. **INSTALL DUTY VACUUM SWITCHING VALVE**
   (a) Connect the hose to the vacuum switching valve.
   (b) Install the vacuum switching valve with the bolt.
   Torque: 9.0 N*m (92 kgf*cm, 80 in.*lbf)
   (c) Connect the vapor feed hose.
   (d) Connect the connector.
2. **INSTALL V-BANK COVER (See page ES-416)**
3. **CONNECT CABLE TO NEGATIVE BATTERY TERMINAL**
   Torque: 3.9 N*m (40 kgf*cm, 35 in.*lbf)

ON-VEHICLE INSPECTION

1. INSPECT AIR-FUEL RATIO COMPENSATION SYSTEM

(a) Measure the voltage between the terminals of the ECM connectors.

Standard

Tester Connection	Condition	Specified Condition
A21 (A1A+) -A28 (E2)	Ignition switch ON	3.3 V
A31 (A1A-) -A28 (E2)	Ignition switch ON	2.9 V

NOTICE:
Connect test leads from the back side of the connector. The connectors should not be disconnected from the ECM.

HINT:
Voltage between the terminals of the ECM is kept constant regardless of the voltage of the A/F sensor.

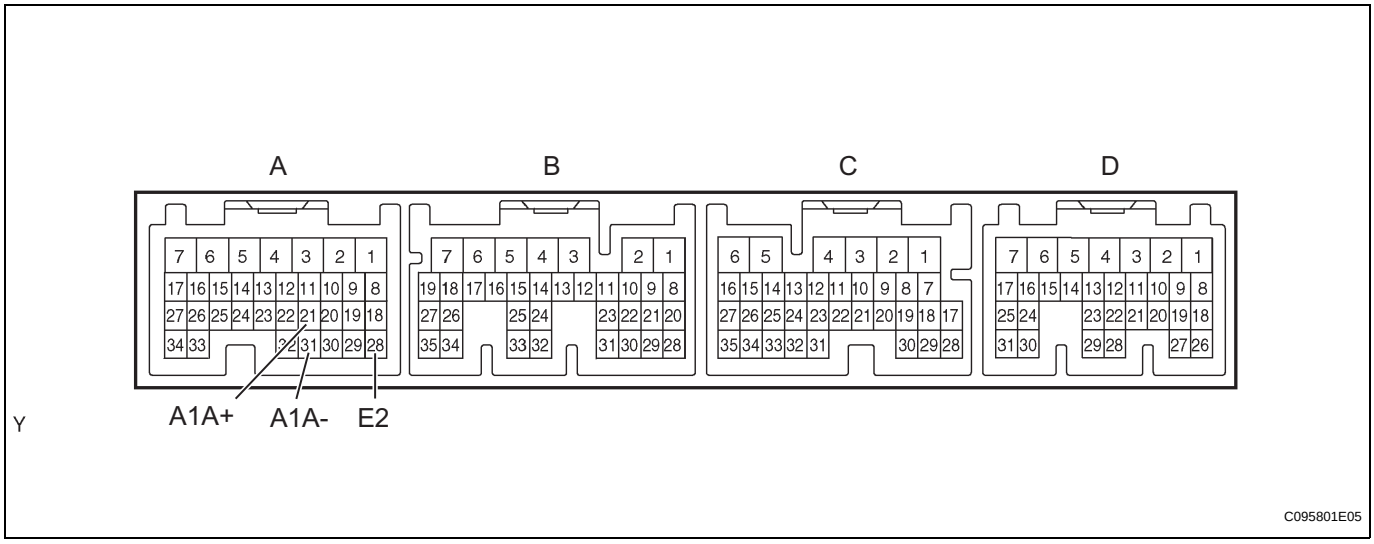

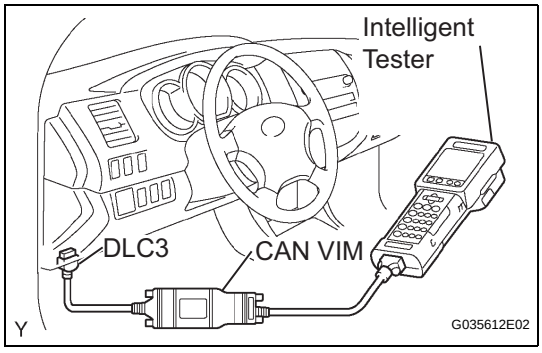

(b) Connect the intelligent tester to the DLC3.
(c) Turn the ignition switch to ON.
(d) Select the following menu items: DIAGNOSIS / ENHANCED OBD II / DATA LIST / A/FS B1 S1 and O2S B1 S2.
(e) Warm up the A/F sensor with the engine speed at 2,500 rpm for approximately 2 minutes.

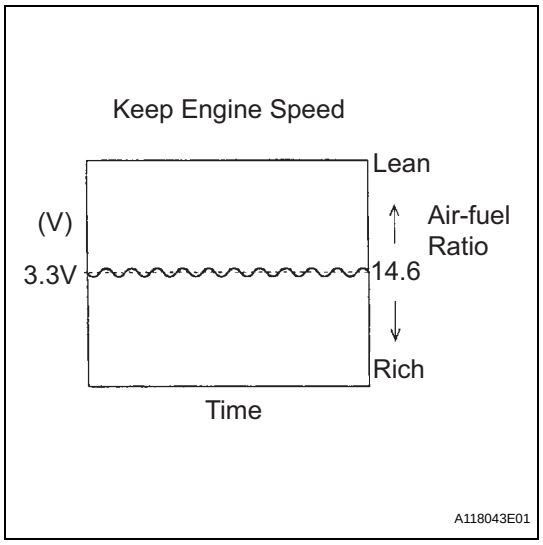

(f) Keep the engine speed at 2,500 rpm and confirm that the display, when A/FS B1 S1 is selected, is as shown in the illustration.
HINT:
- The illustration may slightly differ from the display on the intelligent tester.
- Only the intelligent tester displays the waveform of the A/F sensor.

(g) Confirm that the display, when O2S B1 S2 is selected, changes between 0 V and 1 V with the engine speed at 2,500 rpm.
OK:
The voltage output oscillates more than 8 times in 10 seconds.
CAUTION:
- **Perform the check immediately after warming up the engine.**
- **If the voltage variation could not be verified, warm up the heated oxygen sensor again. If it could not be verified even after warming up the sensor again, check the DTC No. (see page 05-61).**

2. INSPECT FUEL CUT OFF RPM

(a) Increase the engine speed to at least 3,500 rpm.
(b) Use a sound scope to check for injector operating sounds.
(c) Check that injector operating sounds stop momentarily and then resume when the accelerator pedal is released.
Fuel cut off rpm:
2,500 rpm
Fuel return rpm:
1,200 rpm

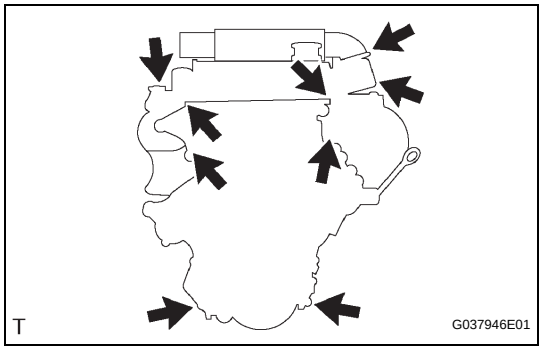

3. VISUALLY INSPECT HOSES, CONNECTIONS AND GASKETS

(a) Check the appearance.
(1) Check if the indicated portions of the engine assembly are cracked, leaking or damaged.
HINT:
Disconnection of the engine oil level gauge, oil filler cap, PCV hose, etc. may cause the engine to run improperly. Disconnection, slack or cracks in the air induction system parts between the throttle body and cylinder head will allow air suction and cause the engine to run improperly.
If necessary, repair the engine assembly.

EC

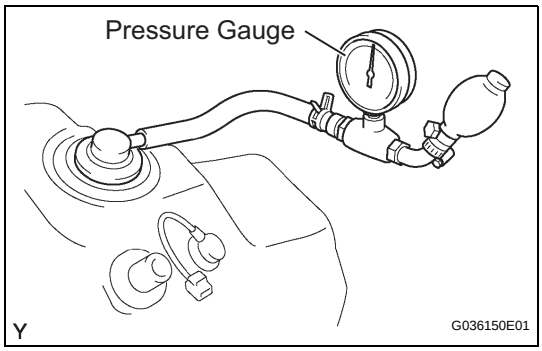

4. INSPECT FUEL CUTOFF VALVE AND FILL CHECK

(a) Remove the fuel tank (see page FU-30).
(b) Connect the pressure gauge to the vent hose port.
(c) Install the fuel tank with the vent hose disconnected.
(d) Fill the fuel tank with fuel.
(e) Apply pressure of 4 kPa (41 gf/cm^2, 0.58 psi) to the vent port of the fuel tank.
HINT:
It is necessary to check the amount of fuel in the fuel tank.

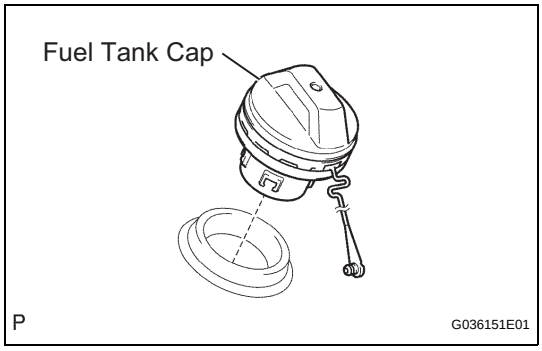

(f) Remove the fuel tank cap, and check that the pressure drops.
If the pressure does not drop, replace the fuel tank assembly.
(g) Reconnect the vent line hose to the fuel tank.

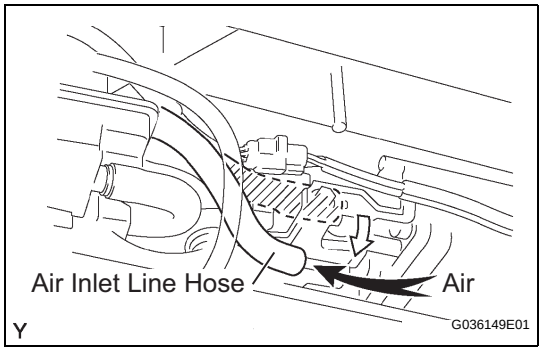

5. CHECK AIR INLET LINE

(a) Disconnect the air inlet line hose from the charcoal canister.
(b) Check that air can flow freely into the air inlet line.
If air cannot flow freely into the air inlet line, repair or replace it.
(c) Reconnect the air inlet line hose to the charcoal canister.

EC

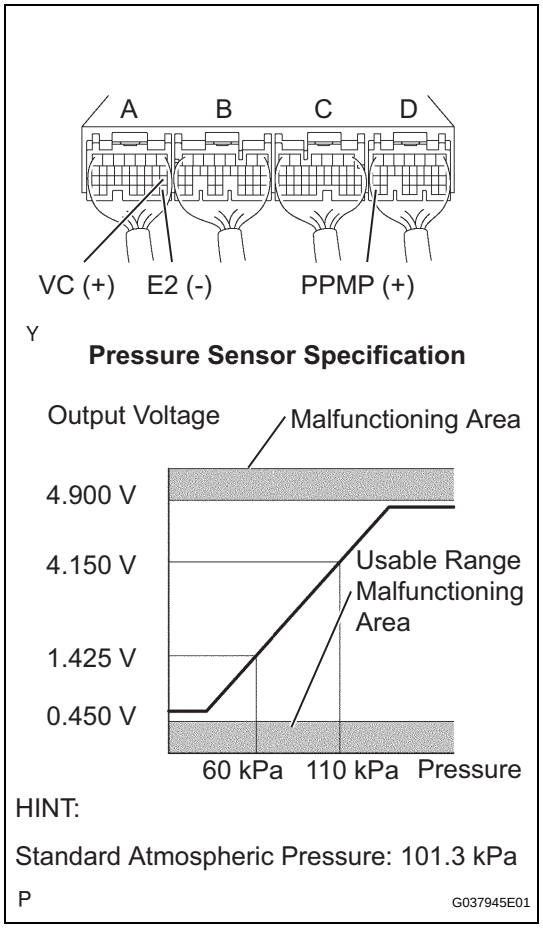

6. INSPECT LEAK DETECTION PUMP (Pressure Sensor)

(a) Measure the power source voltage of the ECM connectors.

Standard

Tester Connection	Condition	Specified Condition
A18 (VC) - A28 (E2)	Ignition switch ON	4.5 to 5.5 V

If the voltage is not as specified, check the ECM, leak detection pump and wire harness.

(b) Measure the power output of the ECM connectors.

(1) Remove the fuel tank cap.

Tester Connection	Condition	Specified Condition
D31 (PPMP) - A28 (E2)	Ignition switch ON	1.425 to 4.150 V

If the voltage is not as specified, check the ECM, leak detection pump and wire harness.

(2) Install the fuel tank cap.

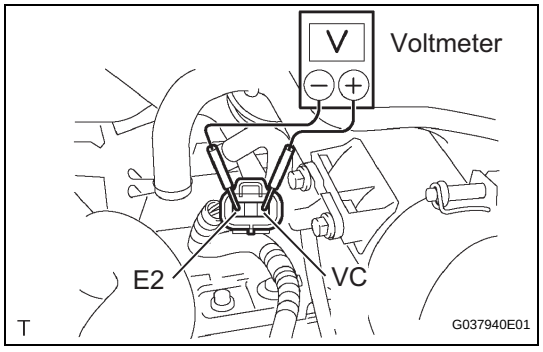

7. INSPECT PRESSURE SENSOR

(a) Check the power source voltage.

(1) Disconnect the pressure sensor connector.

(2) Turn the ignition switch to ON.

(3) Using a voltmeter, measure the voltage between terminals VC and E2.

Voltage:

4.5 to 5.5 V

EC

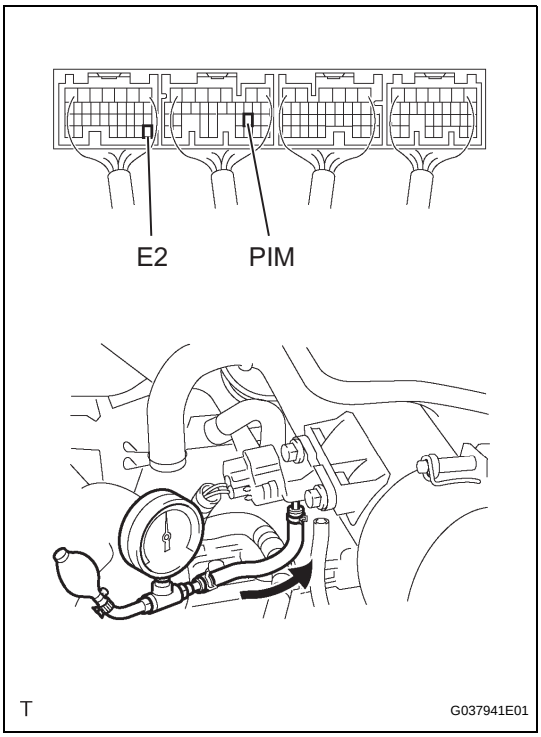

(b) Check the supply power.
(1) Using SST (turbocharger pressure gauge), apply air to the turbo pressure sensor at the pressures shown in the table below.
SST 09992-00242
(2) Connect a voltmeter to terminals PIM and E2 of the ECM and measure the output voltage under ambient atmospheric pressure.
Voltage Increase

Applied Pressure [kPa (kgf/cm2, psi)]	Voltage Increase [V]
19.6 (0.20, 2.84)	0.1 to 0.4
39.2 (0.40, 5.69)	0.4 to 0.7
58.8 (0.60, 8.53)	0.7 to 1.0
78.5 (0.80, 11.4)	1.0 to 1.3
98.0 (1.00, 14.2)	1.3 to 1.6

8. INSPECT AIR PUMP ASSEMBLY
(a) Check the operation (see page 05-372).

EC

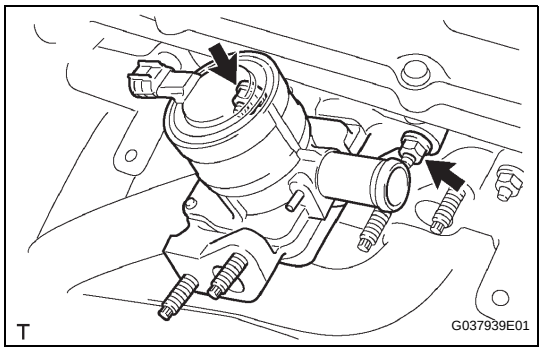

INSTALLATION

1. INSTALL AIR SWITCHING VALVE ASSEMBLY

(a) Install a new gasket onto the cylinder head.

(b) Install the air switching valve with the 2 nuts.
Torque: 20 N*m (204 kgf*cm, 15 ft.*lbf)

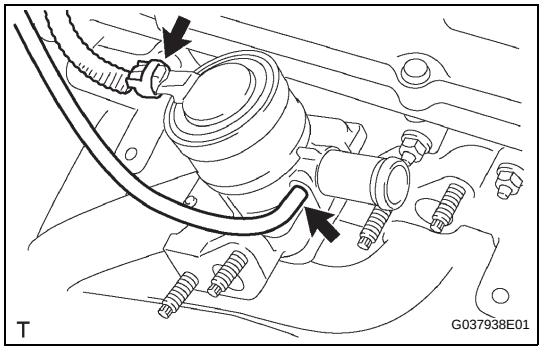

(c) Connect the air switching valve connector.

(d) Connect the vacuum hose.

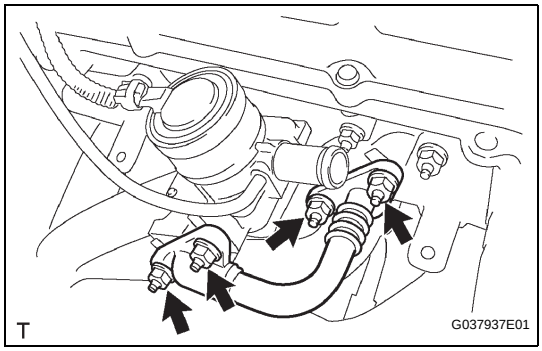

2. INSTALL INTAKE PIPE INSULATOR

(a) Install 2 new gaskets onto the cylinder head and air switching valve.

(b) Install the intake pipe insulator with the 4 nuts.
Torque: 20 N*m (204 kgf*cm, 15 ft.*lbf)

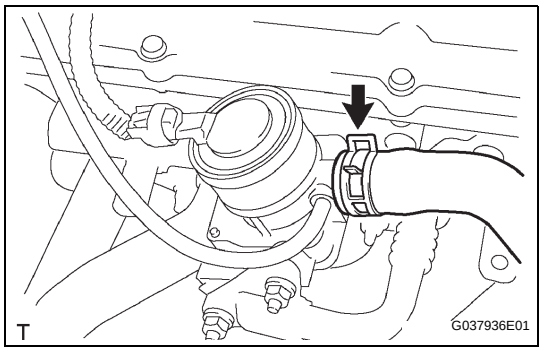

3. CONNECT AIR INJECTION SYSTEM NO.1 HOSE

(a) Connect the air injection system No. 1 hose to the air switching valve.

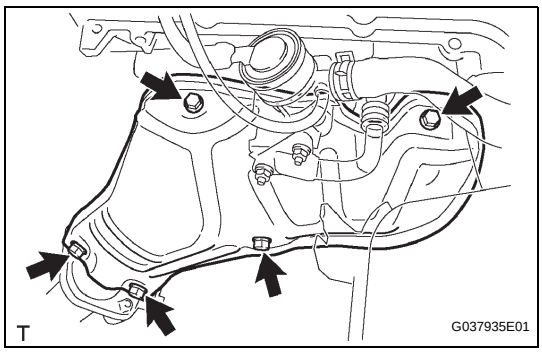

4. INSTALL EXHAUST MANIFOLD HEAT INSULATOR NO.1

(a) Install the exhaust manifold heat insulator No. 1 with the 5 bolts.
Torque: 12 N*m (122 kgf*cm, 9 ft.*lbf)

EC

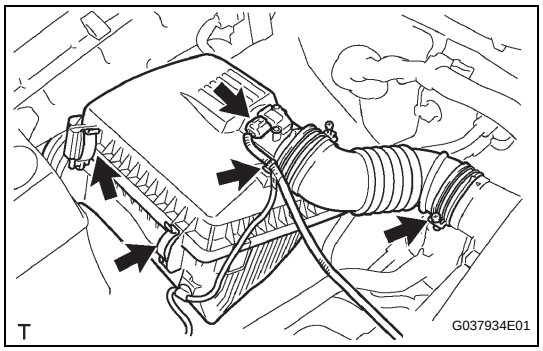

5. **INSTALL AIR CLEANER CAP SUB-ASSEMBLY**
   (a) Install the air cleaner cap together with the air cleaner hose No. 1.
   (b) Connect the 2 air cleaner clamps.
   (c) Tighten the hose clamp bolt, then connect the air cleaner hose No. 1.
   (d) Connect the wire harness clamp.
   (e) Connect the mass air flow meter connector.

6. **INSTALL INTAKE AIR CONNECTOR (See page ES-455)**

7. **CONNECT CABLE TO NEGATIVE BATTERY TERMINAL**
   Torque: 3.9 N*m (40 kgf*cm, 35 in.*lbf)

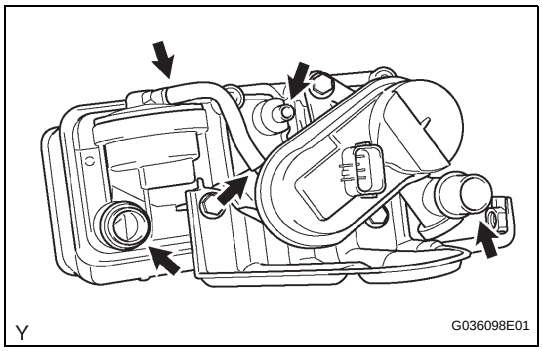

INSPECTION

1. INSPECT CHARCOAL CANISTER ASSEMBLY

(a) Visually check the charcoal canister for cracks and damage.
If cracks and damage are found, replace the charcoal canister assy.

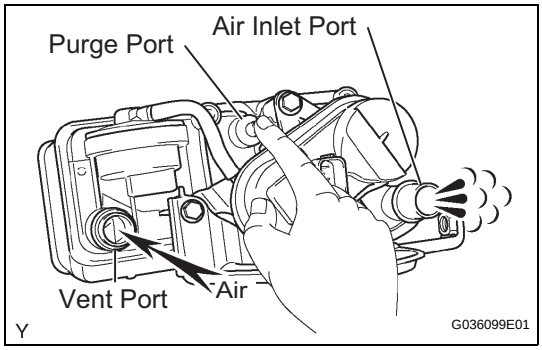

(b) Check the charcoal canister operation.
(1) While holding the purge port closed, blow air of 1.67 kPa (17.0 gf/cm^2, 0.24 psi) into the vent port, and check that the air flows from the air inlet port.
If the result is not as specified, replace the charcoal canister assy.

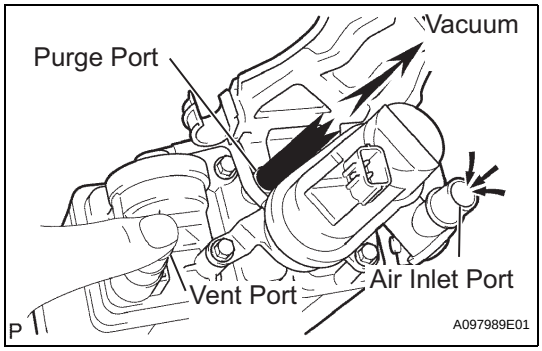

(2) While holding the vent port closed, apply a vacuum of 1.10 kPa (8.3 mmHg, 0.32 in.Hg) into the purge port, and check that the air flows from the air inlet port.
If the result is not as specified, replace the charcoal canister assy.

EC

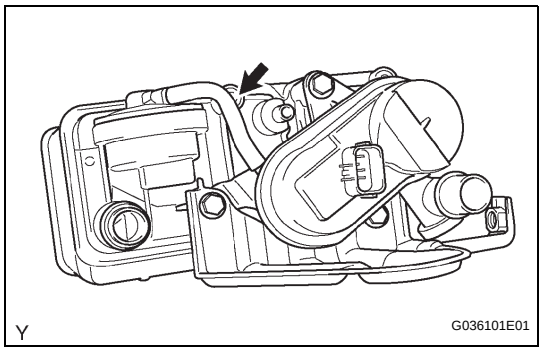

(c) Check for air leakage.
(1) Remove the air hose between ports A and B.

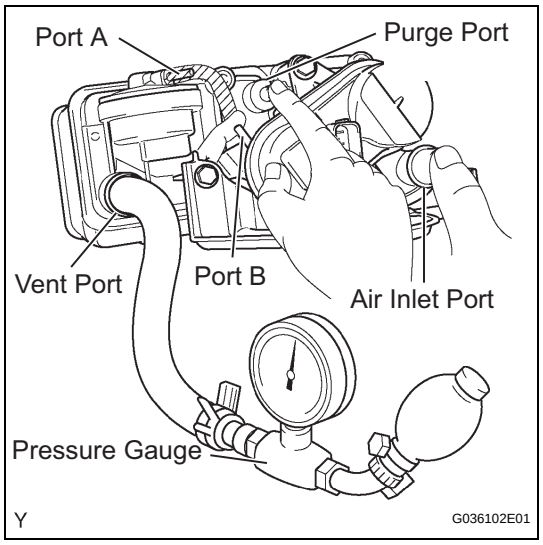

(2) Connect the pressure gauge to the vent port of the charcoal canister.
SST 09992-00242

(3) While holding port B, the purge port and air inlet port closed and port A open, apply pressurized air of 19.6 kPa (0.2 kgf/cm^2, 2.81 psi) into the vent port. Then confirm that the pressure is retained.
If the result is not as specified, replace the charcoal canister assy.

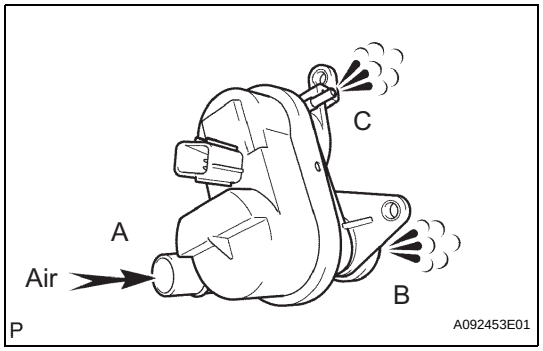

(d) Check the leak detection pump.

(1) Check that air flows from port A to ports B and C.
If the result is not as specified, replace the charcoal canister (pump module).

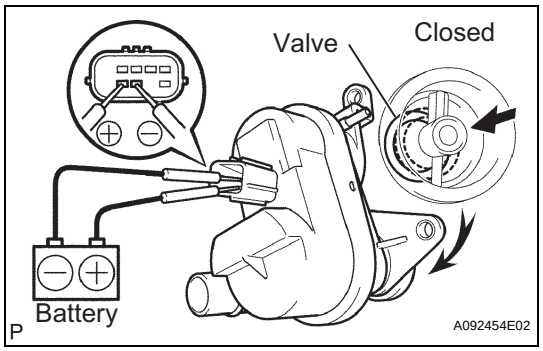

(2) Apply battery positive voltage across the terminals.

(3) Check that the valve is closed.
If the result is not as specified, replace the charcoal canister (pump module).

EC

INSTALLATION

1. **INSTALL CHARCOAL CANISTER ASSEMBLY**
   (a) Connect the fuel tank vent hose.
      (1) Align the fuel tank vent hose connector with the pipe, then push in the fuel tank vent connector until the retainer makes a "click" sound to connect the fuel tank vent hose to the charcoal canister.
      NOTICE:
      - **Check that there are no scratches or foreign objects on the disconnected parts of the fuel tank vent connector and pipe before performing the work.**
      - **After connecting the fuel tank vent hose, check that the fuel tank vent hose is securely connected by pulling the quick connector.**
   (b) Install the charcoal canister with the bolt and 2 nuts.
   Torque: 20 N*m (204 kgf*cm, 15 ft.*lbf)
   (c) Connect the EVAP tube.
   (d) Connect the connector.

2. **INSTALL CHARCOAL CANISTER FILTER NO.2**
   (a) Install the charcoal canister filter No. 2 with the nut.
   Torque: 20 N*m (204 kgf*cm, 15 ft.*lbf)
   (b) Connect the breather hose to the charcoal canister.
   (c) Engage the clamp.
   (d) Connect the breather hose to the pipe.
   (e) Connect the EVAP pipe to the clamp.
   (f) Install the ABS wire harness clamp with the bolt.
   Torque: 14 N*m (142 kgf*cm, 10 ft.*lbf)

3. **INSTALL FUEL TANK ASSEMBLY (See page FU-35)**

4. **CONNECT FUEL TANK MAIN TUBE AND FUEL TANK RETURN TUBE (See page FU-36)**

5. **CONNECT CABLE TO NEGATIVE BATTERY TERMINAL**
   Torque: 3.9 N*m (40 kgf*cm, 35 in.*lbf)

6. **CHECK FOR FUEL LEAKAGE (See page FU-7)**

EC

INSTALLATION

1. **INSTALL WATER INLET**
   (a) Install a new gasket onto the water inlet with thermostat.
   (b) Install the water inlet with thermostat with the 3 nuts.
   Torque: 9.0 N*m (92 kgf*cm, 80 in.*lbf)
2. **CONNECT NO.2 RADIATOR HOSE**
3. **CONNECT BATTERY NEGATIVE TERMINAL**
   Torque: 3.9 N*m (40 kgf*cm, 35 in.*lbf)
4. **ADD ENGINE COOLANT (See page CO-3)**
5. **CHECK FOR ENGINE COOLANT LEAKAGE (See page CO-4)**
6. **INSTALL V-BANK COVER**
   (a) Install the V-bank cover with the 2 nuts.
   Torque: 7.5 N*m (76 kgf*cm, 66 in.*lbf)

ON-VEHICLE INSPECTION

1. INSPECT RADIATOR CAP SUB-ASSEMBLY

NOTICE:

- **If the radiator cap is contaminated, rinse it with water.**
- **Before using a radiator cap tester, wet the relief valve and pressure valve with engine coolant or water.**
- **When performing the following steps (a) and (b), keep the tester at an angle of 30° or more above the horizontal.**

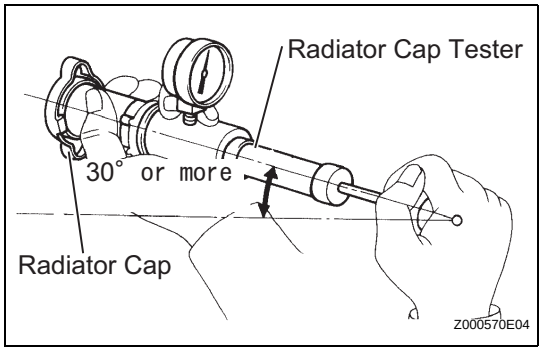

(a) Using a radiator cap tester, slowly pump and check that air comes from the vacuum valve.

Pumping speed:

1 push every 3 seconds or more

NOTICE:

Push the pump at a constant speed.

If air does not come from the vacuum valve, replace the radiator cap.

(b) Pump the tester, then measure the relief valve opening pressure.

Pumping speed:

1 push every second

NOTICE:

The above pumping speed is for the first pumping only (in order to close the vacuum valve). After the first pumping, the pumping speed can be reduced.

HINT:

Use the tester's maximum reading as the opening pressure.

Standard opening pressure:

93 to 123 kPa (0.95 to 1.25 kgf*cm^2, 13.5 to 17.8 psi)

Minimum opening pressure:

78 kPa (0.8 kgf*cm^2, 11.4 psi)

If the opening pressure is less than the minimum, replace the radiator cap.

CO

ON-VEHICLE CLEANING

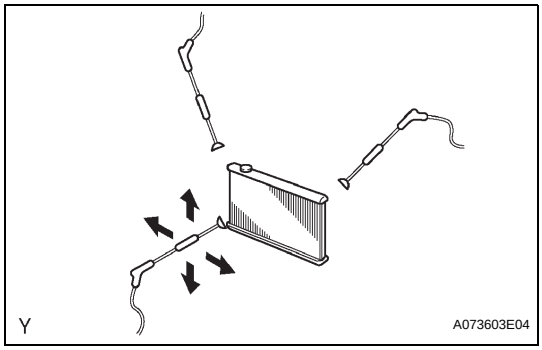

1. CHECK FINS FOR BLOCKAGE

(a) If the fins are clogged, wash them with water or a steam cleaner, then dry them with compressed air.

NOTICE:

- **If the distance between the steam cleaner and core is too small, there is a possibility of damaging the fins, so keep to the following injection distances.**

Injection Pressure kPa (kg/cm^2, psi)	Injection Distance mm (in.)
2,942 to 4,903 (30 to 50, 427 to 711)	300 (11.811)
4,903 to 7,845 (50 to 80, 711 to 1,138)	500 (19.685)

- **If the fins are bent, straighten them with a screwdriver or pliers.**
- **Be careful not to expose electronic components to water.**

REMOVAL

1. **DISCONNECT CABLE FROM NEGATIVE BATTERY TERMINAL**
2. **DRAIN ENGINE COOLANT (See page CO-3)**
3. **REMOVE RADIATOR SUPPORT TO FRAME SEAL LH**
   (a) Disengage the 9 clips, then remove the radiator support to frame seal.

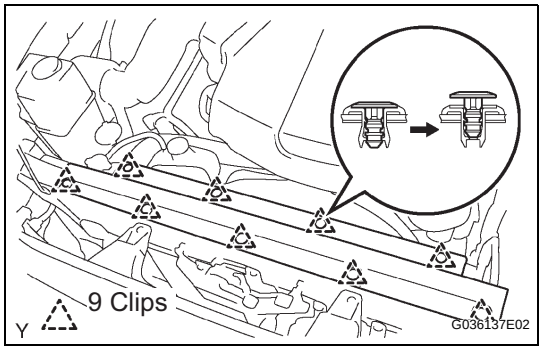

4. **REMOVE FAN SHROUD**
   (a) Disconnect the hose from the radiator reserve tank.

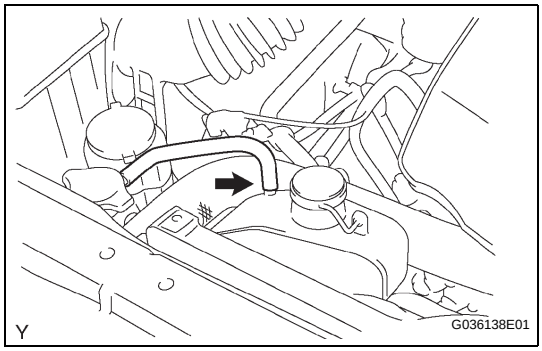

   (b) Remove the 2 cooler hoses from the clamp (with automatic transmission).
   (c) Remove the 4 nuts from the fan pulley.
   (d) Remove the fan and generator V belt (see page EM-5).
   (e) Remove the 2 bolts from the fan shroud.
   (f) Remove the fan pulley and fan shroud.

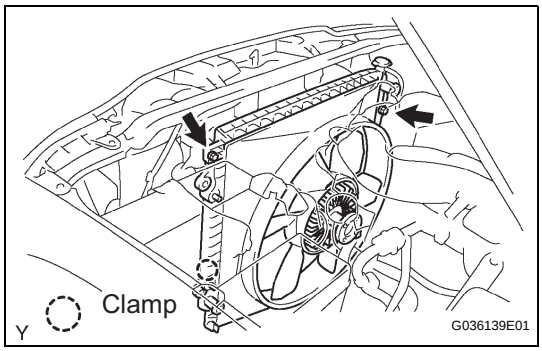

5. **REMOVE RADIATOR ASSEMBLY**
   (a) Disconnect the 2 radiator hoses.
   (b) Remove the 4 bolts, then remove the radiator.

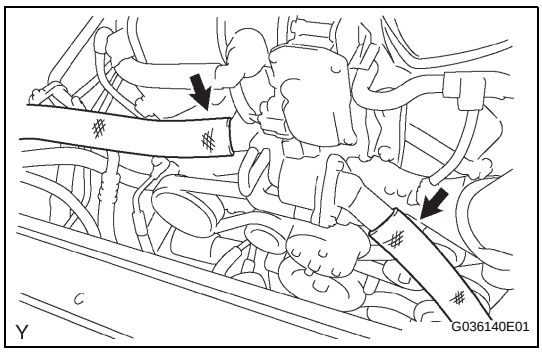

CO

(c) Disconnect the 2 oil cooler hoses (with automatic transmission).

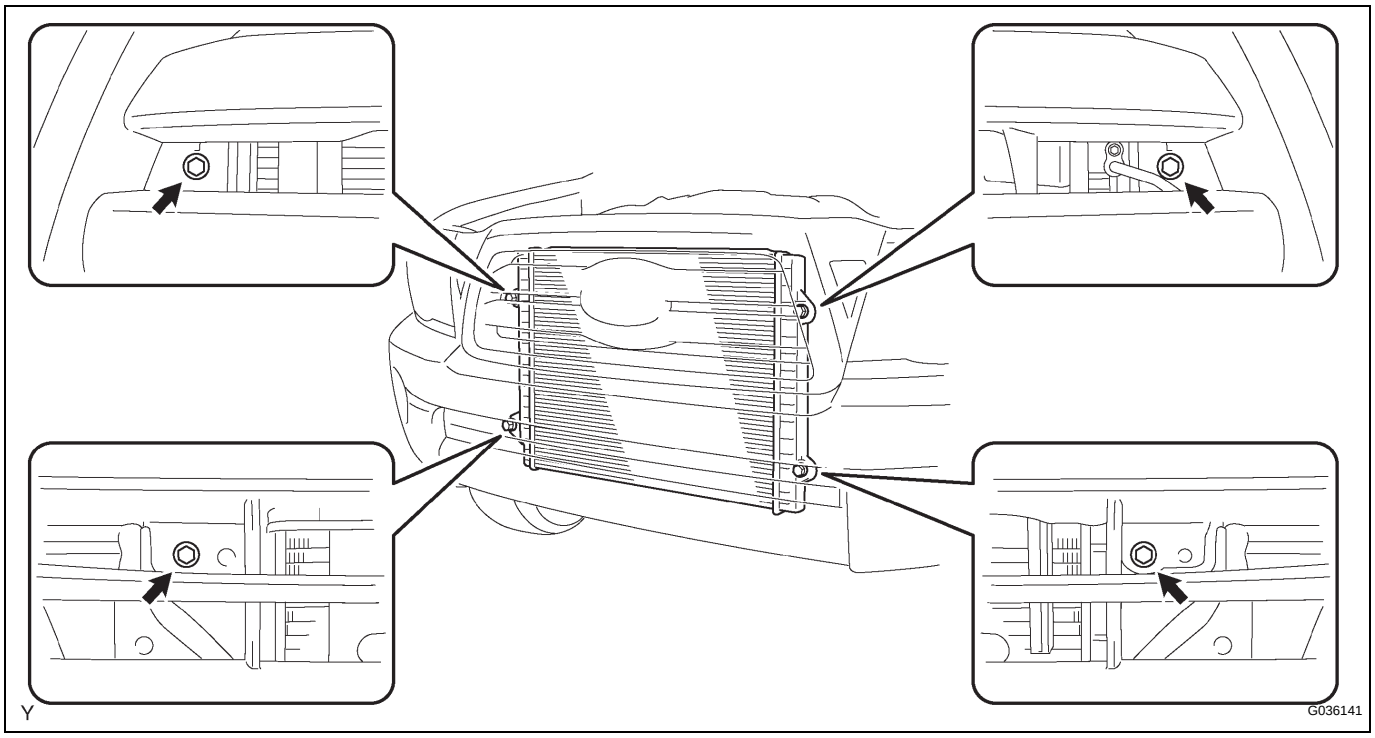

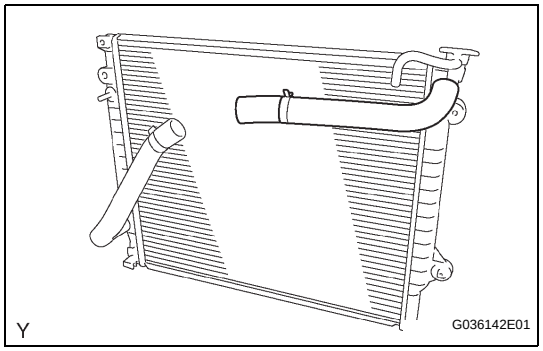

6. REMOVE RADIATOR HOSE INLET

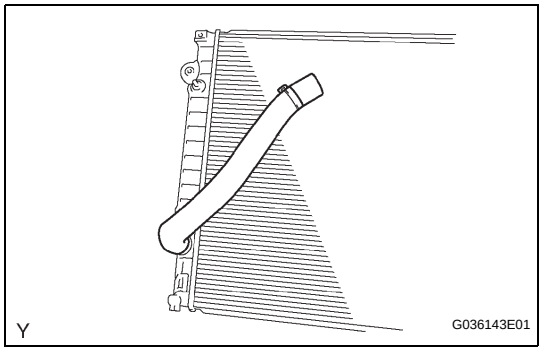

7. REMOVE NO.2 RADIATOR HOSE

DISASSEMBLY

1. REMOVE RADIATOR DRAIN COCK

(a) Remove the drain cock plug.

(b) Remove the O-ring from the drain cock plug.

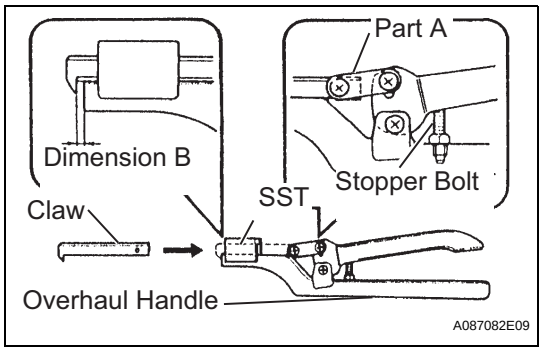

2. ASSEMBLE SST

SST 09230-01010 (09231-01010, 09231-01030)

(a) Engage the claw with the overhaul handle by inserting it into the hole in part A as shown in the illustration.

(b) While gripping the handle, adjust dimension B to between 0.2 and 0.3 mm, using the stopper bolt.

Dimension B:

0.2 to 0.3 mm (0.008 to 0.012 in)

NOTICE:

If the stopper bolt can not be adjusted, the claw may be damaged.

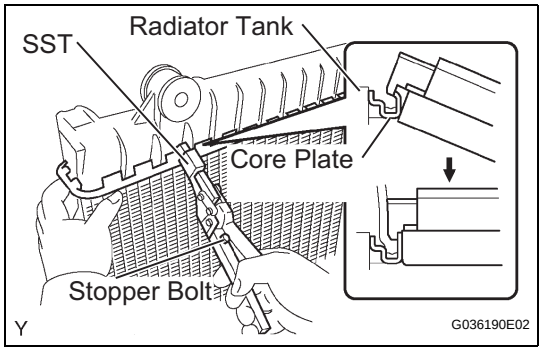

3. UNCAULK CORE PLATE

(a) Straighten the core plate by gripping it with SST until stopped by the stopper bolt.

SST 09230-01010 (09231-01010, 09231-01030)

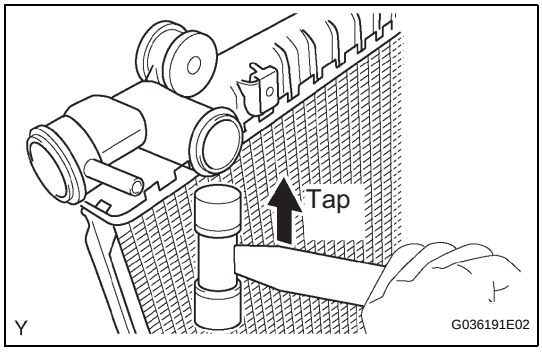

4. REMOVE RADIATOR TANK UPPER

(a) Lightly tap the radiator tank bracket (or radiator tank pipe) with a soft-faced hammer to remove the radiator tank.

5. REMOVE RADIATOR TANK LOWER

HINT:

Perform the same procedures as for the radiator tank upper.

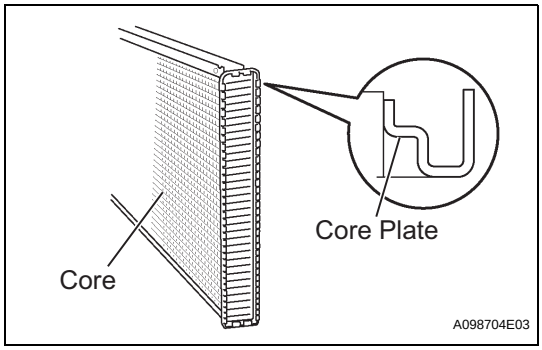

INSPECTION

1. INSPECT RADIATOR CORE SUB-ASSEMBLY

Check the core plate for damage.

HINT:

- If the sides of the core plate groove are deformed, it is impossible to reassemble the radiator tank. Therefore, first correct any deformation using pliers or a similar tool.
- Water leakage will occur if the bottom of the core plate groove is damaged or dented. Repair or replace the core plate if necessary.

NOTICE:

The radiator can only be recaulked twice. After being recaulked twice, the radiator assembly must be replaced.

CO

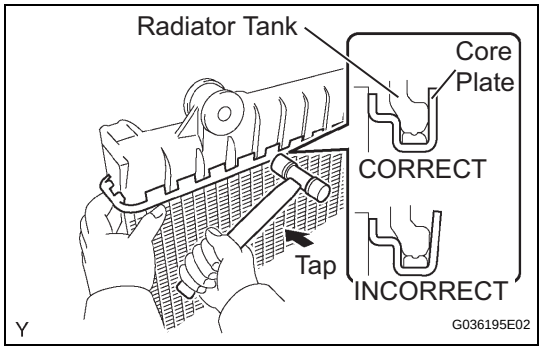

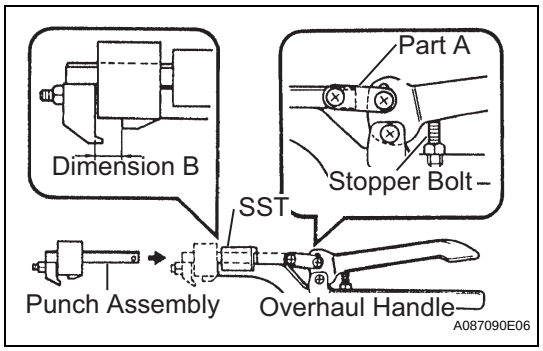

REASSEMBLY

1. INSTALL RADIATOR TANK UPPER

(a) Install the new radiator tank.

(b) Tap the core plate with a soft-faced hammer until there is no gap between the core plate and radiator tank.

2. INSTALL RADIATOR TANK LOWER

HINT:

Perform the same procedures as for the radiator tank upper.

3. ASSEMBLE SST

SST 09230-01010 (09231-01010, 09231-01020)

(a) Install the punch assembly into the overhaul handle by inserting it into the hole in part A as shown in the illustration.

(b) While gripping the handle, adjust the stopper bolt so that dimension B is as shown in the illustration.

Dimension B:

8.4 mm (0.331 in.)

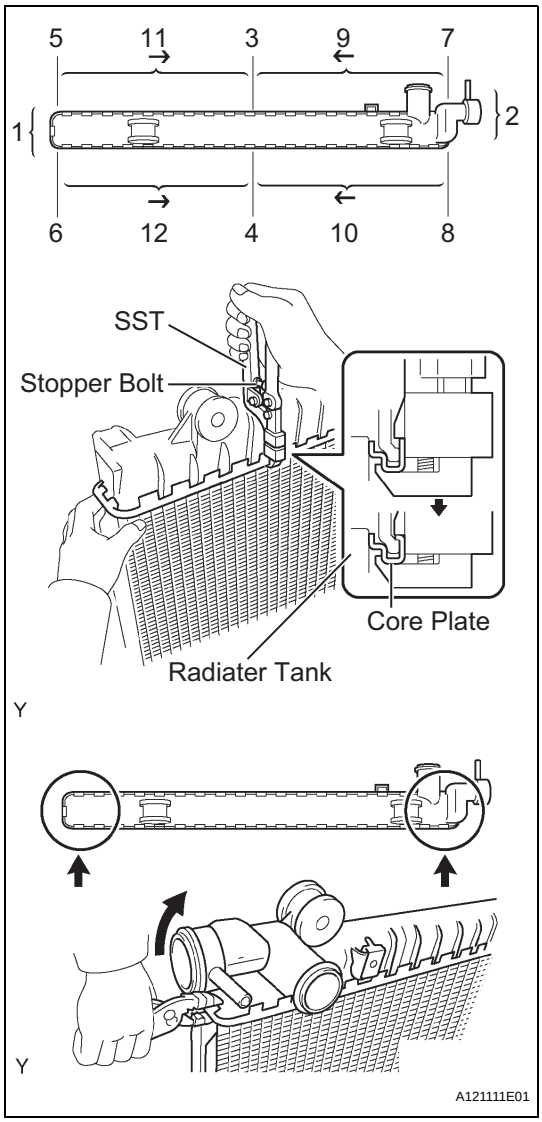

4. CAULK CORE PLATE

(a) Lightly press SST against the core plate in the order shown in the illustration. After repeating this a few times, fully caulk the core plate by gripping the handle until stopped by the stopper bolt.
SST 09230-01010 (09231-01010, 09231-01020)
HINT:
Do not tap the portions indicated in the illustration or the oil coller using SST. Use pliers or a similar tool. Be careful not to damage the core plate.

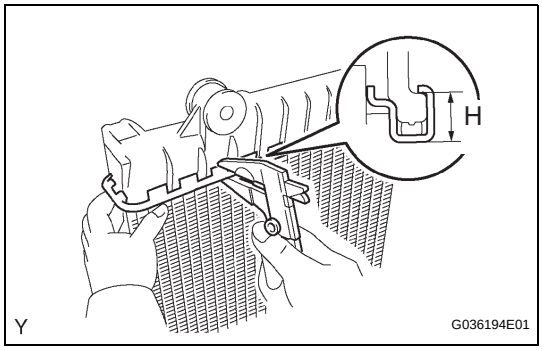

(b) Check the core plate height (H) after completing the caulking.
Plate height (H):
8.7 to 9.1 mm (0.343 to 0.358 in.)
If the height is not as specified, readjust the stopper bolt of the handle, then caulk it again.

5. INSTALL RADIATOR DRAIN COCK

(a) Install a new O-ring onto the drain cock plug.
(b) Install the drain cock plug.

CO

INSTALLATION

1. **INSTALL NO.2 RADIATOR HOSE**
2. **INSTALL RADIATOR HOSE INLET**
3. **INSTALL RADIATOR ASSEMBLY**
   (a) Install the radiator with the 4 bolts.
   Torque: 18 N*m (184 kgf*cm, 13 ft.*lbf)
   (b) Connect the 2 oil cooler hoses (with automatic transmission).
4. **INSTALL FAN SHROUD**
   (a) Provisionally install the fan shroud together with the fan pulley.
   (b) Install the fan and generator V belt (see page EM-5).
   (c) Install the fan pulley with the 4 nuts.
   Torque: 21 N*m (214 kgf*cm, 16 ft.*lbf)
   (d) Install the fan shroud with the 2 bolts.
   Torque: 5.0 N*m (51 kgf*cm, 44 in.*lbf)
   (e) Install the 2 cooler hoses into the clamp (with automatic transmission).
   (f) Connect the hose to the radiator reserve tank.
5. **INSTALL RADIATOR SUPPORT TO FRAME SEAL LH**
6. **CONNECT CABLE TO NEGATIVE BATTERY TERMINAL**
   Torque: 3.9 N*m (40 kgf*cm, 35 in.*lbf)
7. **ADD ENGINE COOLANT (See page CO-3)**
8. **CHECK FOR ENGINE COOLANT LEAKAGE (See page CO-4)**

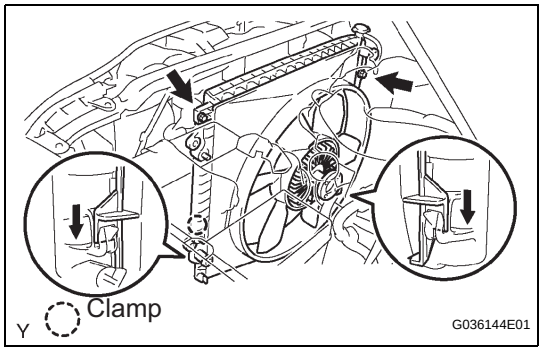

CO

DISASSEMBLY

1. REMOVE RADIATOR DRAIN COCK

(a) Remove the drain cock plug.

(b) Remove the O-ring from the drain cock plug.

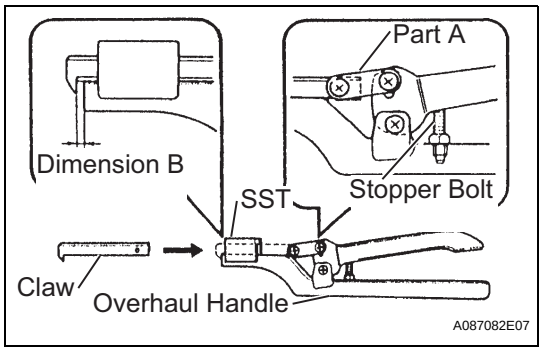

2. ASSEMBLE SST

SST 09230-01010 (09231-01010, 09231-01030)

(a) Engage the claw with the overhaul handle by inserting it into the hole in part A as shown in the illustration.

(b) While gripping the handle, adjust dimension B to between 0.2 and 0.3 mm, using the stopper bolt.

Dimension B:

0.2 to 0.3 mm (0.008 to 0.012 in)

NOTICE:

If the stopper bolt can not be adjusted, the claw may be damaged.

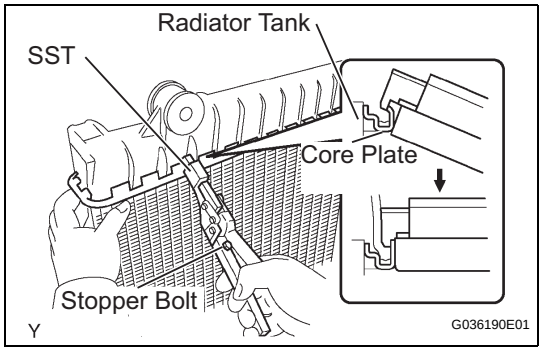

3. UNCAULK CORE PLATE

(a) Straighten the core plate by gripping it with SST until stopped by the stopper bolt.

SST 09230-01010 (09231-01010, 09231-01030)

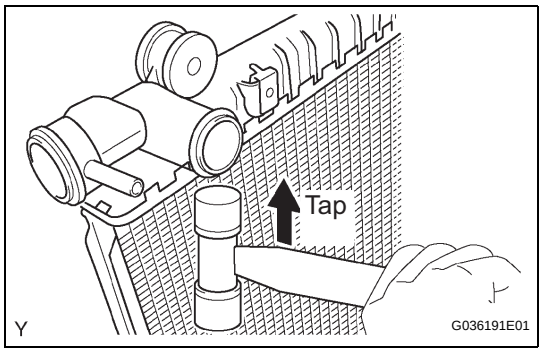

4. REMOVE RADIATOR TANK UPPER

(a) Lightly tap the radiator tank bracket (or radiator tank pipe) with a soft-faced hammer to remove the radiator tank.

5. REMOVE RADIATOR TANK LOWER

HINT:

Perform the same procedures as for the radiator tank upper.

CO

INSPECTION

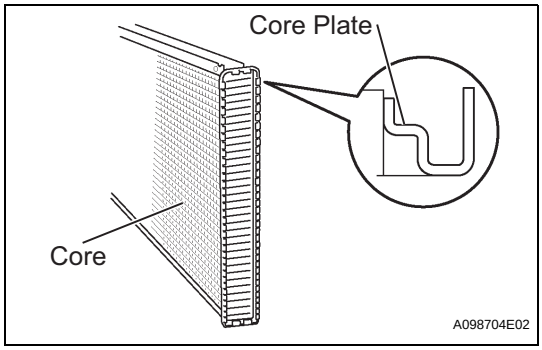

1. INSPECT RADIATOR CORE SUB-ASSEMBLY

Check the core plate for damage.

HINT:

- If the sides of the core plate groove are deformed, it is impossible to reassemble the radiator tank. Therefore, first correct any deformation using pliers or a similar tool.
- Water leakage will occur if the bottom of the core plate groove is damaged or dented. Repair or replace the core plate if necessary.

NOTICE:

The radiator can only be caulked twice. After being caulked twice, the radiator assembly must be replaced.

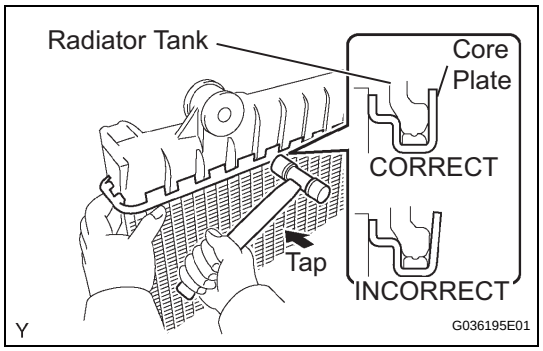

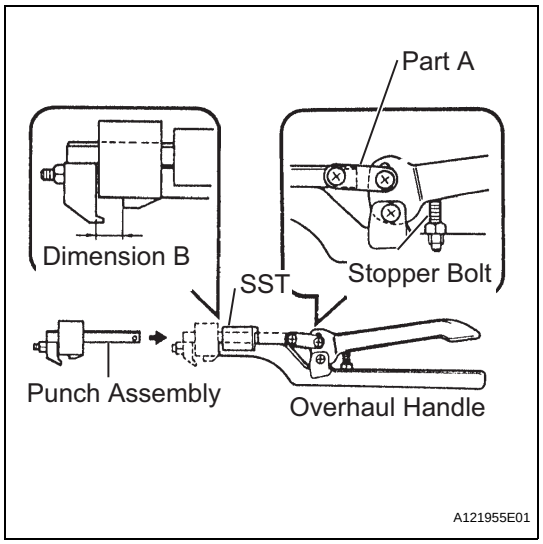

REASSEMBLY

1. INSTALL RADIATOR TANK UPPER

(a) Install the new radiator tank.

(b) Tap the core plate with a soft-faced hammer until there is no gap between the core plate and radiator tank.

2. INSTALL RADIATOR TANK LOWER

HINT:

Perform the same procedures as for the radiator tank upper.

3. ASSEMBLE SST

SST 09230-01010 (09231-01010, 09231-01020)

(a) Install the punch assembly into the overhaul handle by inserting it into the hole in part A as shown in the illustration.

(b) While gripping the handle, adjust the stopper bolt so that dimension B is as shown in the illustration.

Dimension B:

8.4 mm (0.331 in.)

CO

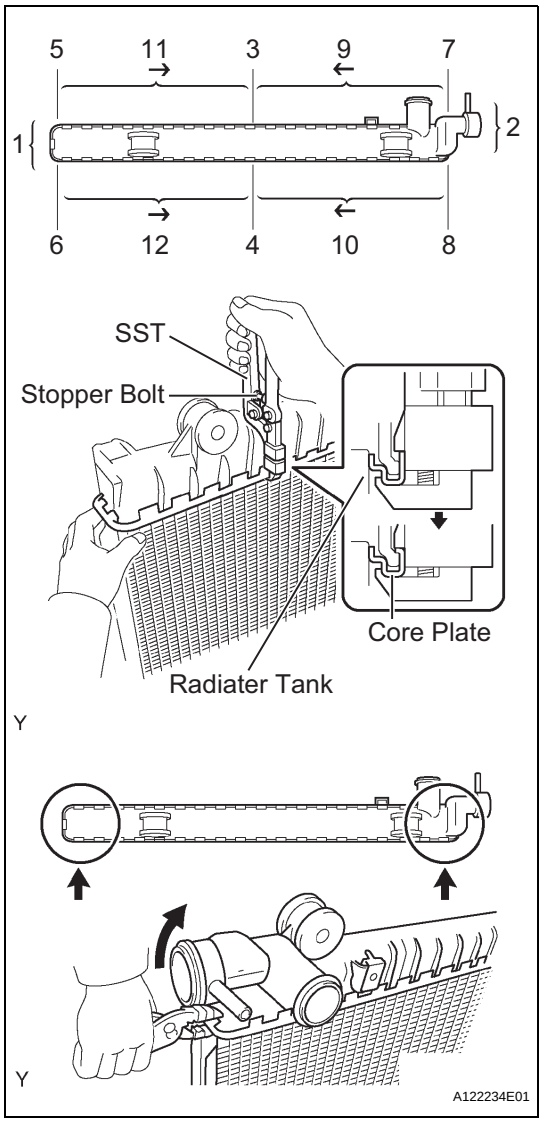

4. CAULK CORE PLATE

(a) Gently press SST against the core plate in the order shown in the illustration. After repeating this a few times, fully caulk the core plate by gripping the handle until stopped by the stopper bolt.
SST 09230-01010 (09231-01010, 09231-01020)
HINT:
Do not tap the portions indicated in the illustration or the oil cooler using SST. Use pliers or a similar tool. Be careful not to damage the core plate.

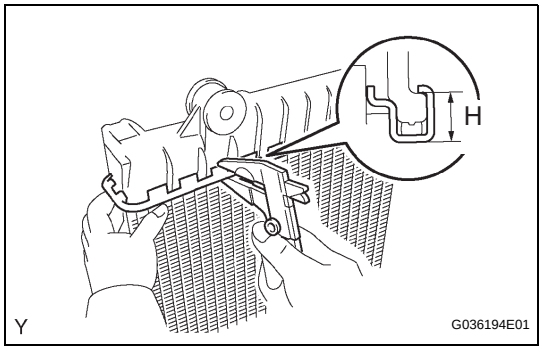

(b) Check the core plate height (H) after completing the caulking.
Plate height (H):
8.7 to 9.1 mm (0.343 to 0.358 in.)
If the height is not as specified, readjust the stopper bolt of the handle, then caulk it again.

5. INSTALL RADIATOR DRAIN COCK

(a) Install a new O-ring onto the drain cock plug.
(b) Install the drain cock plug.

INSTALLATION

1. INSTALL RADIATOR ASSEMBLY

(a) Install the radiator with the 4 bolts.
Torque: 18 N*m (184 kgf*cm, 13 ft.*lbf)
(b) Connect the oil cooler inlet and outlet hoses. (for Automatic Transmission)

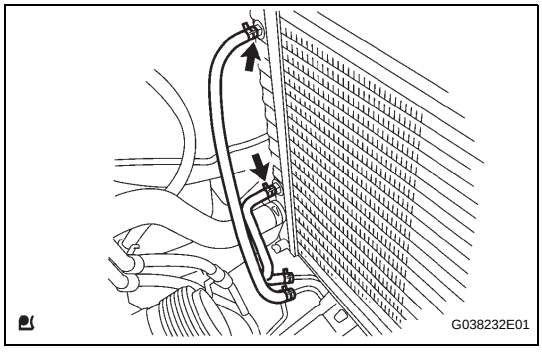

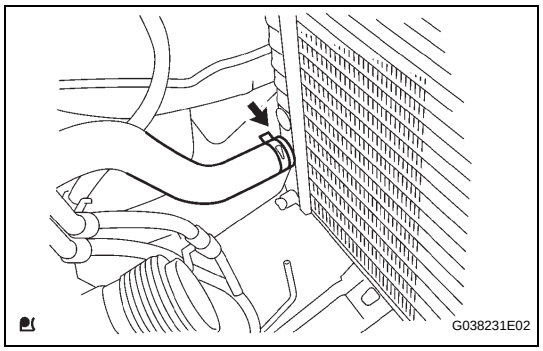

(c) Connect the radiator hose NO. 2.

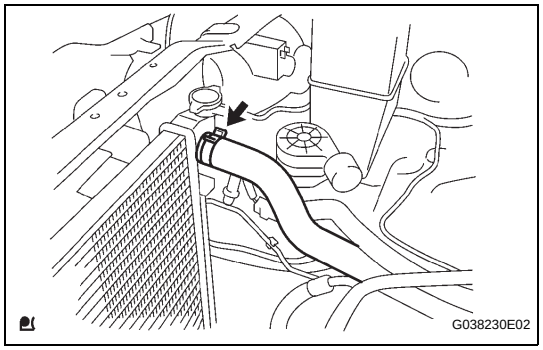

(d) Connect the radiator hose inlet.

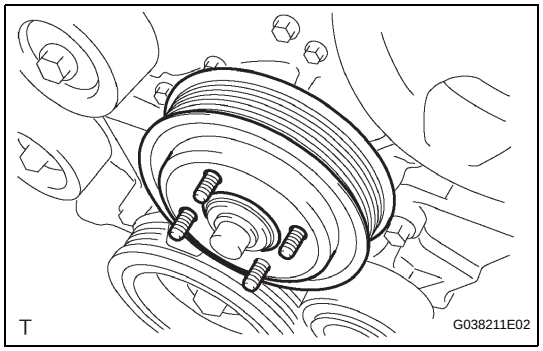

2. INSTALL FAN SHROUD

(a) Install the fan pulley.

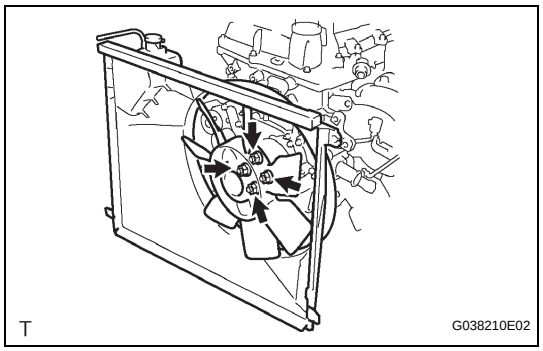

(b) Install the fan shroud and fan with fluid coupling together.
NOTICE:
Make sure that the fan shroud and fan with fluid coupling do not make any contact with the radiator when they are installed.

(c) Provisionally install the fan with fluid coupling with the 4 nuts.

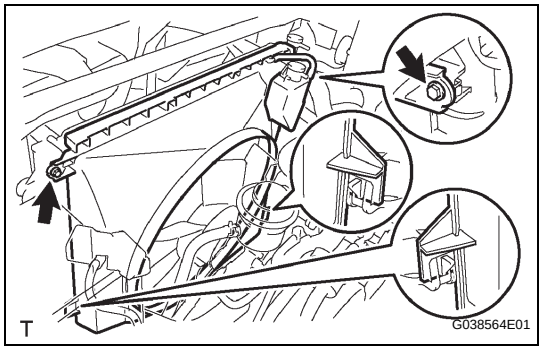

(d) Install the 2 bolts shown in the illustration.
Torque: 5.0 N*m (51 kgf*cm, 44 in.*lbf)

CO

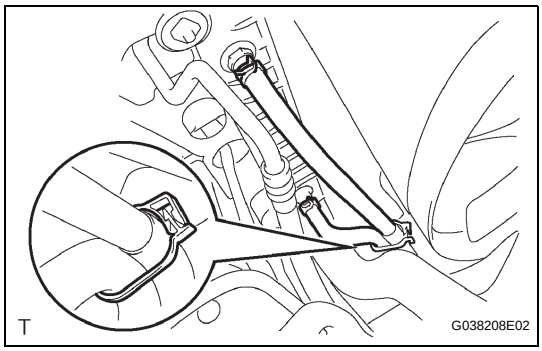

(e) Connect the oil cooler inlet and outlet hoses to the fan shroud. (for Automatic Transmission)

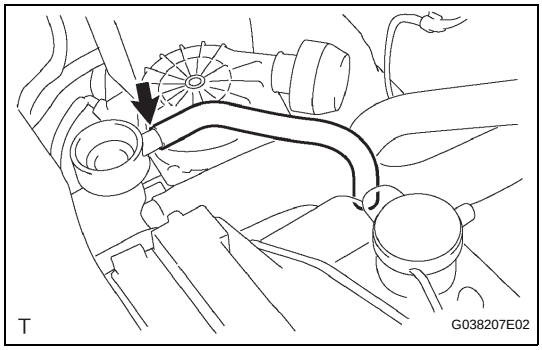

(f) Connect the radiator reserve tank hose to the radiator.
(g) Install the fan generator V belt.

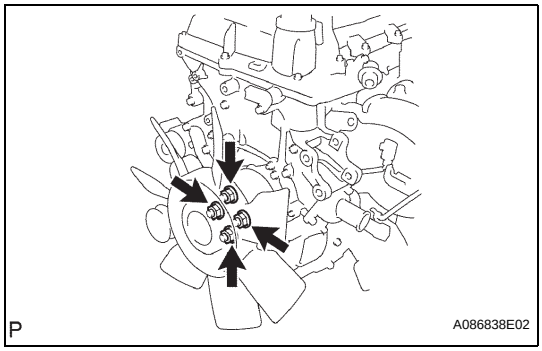

(h) Tighten the 4 nuts shown in the illustration.
Torque: 25 N*m (255 kgf*cm, 18 ft.*lbf)

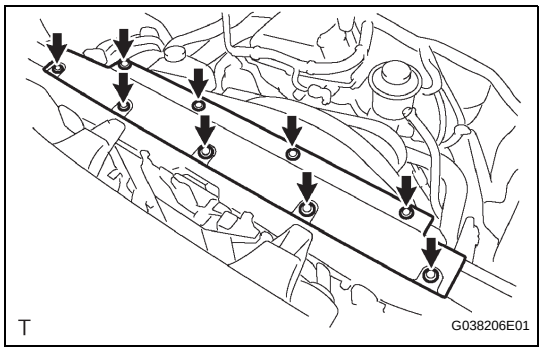

3. INSTALL RADIATOR SUPPORT TO FRAME SEAL LH
(a) Install the radiator support frame seal LH with the 9 clips.

4. CONNECT CABLE TO NEGATIVE BATTERY TERMINAL
Torque: 3.9 N*m (40 kgf*cm, 35 in.*lbf)

5. ADD ENGINE COOLANT (See page CO-3)

6. CHECK FOR ENGINE COOLANT LEAKAGE (See page CO-2)

7. INSTALL ENGINE UNDER COVER SUB-ASSEMBLY NO.1 (for Pre Runner and 4WD Type)
Torque: 30 N*m (306 kgf*cm, 22 ft.*lbf)

CO

REMOVAL

1. **DISCHARGE FUEL SYSTEM PRESSURE**
   (See page FU-1)
2. **REMOVE BATTERY**
3. **DRAIN ENGINE COOLANT (See page CO-3)**
4. **DRAIN ENGINE OIL (See page LU-4)**
5. **REMOVE ENGINE ASSEMBLY**
   (See page EM-186)
6. **REMOVE OIL LEVEL GAUGE GUIDE**
7. **REMOVE WATER INLET (See page CO-9)**
8. **REMOVE V-RIBBED BELT TENSIONER ASSEMBLY (See page EM-44)**
9. **REMOVE NO.2 IDLER PULLEY SUB-ASSEMBLY (See page EM-24)**
10. **REMOVE NO.1 IDLER PULLEY SUB-ASSEMBLY (See page EM-24)**
11. **REMOVE CRANKSHAFT PULLEY (See page EM-45)**
12. **REMOVE NO.2 OIL PAN SUB-ASSEMBLY (See page EM-24)**
13. **REMOVE OIL STRAINER SUB-ASSEMBLY (See page EM-24)**
14. **REMOVE OIL PAN SUB-ASSEMBLY (See page EM-25)**
15. **REMOVE IGNITION COIL ASSEMBLY (See page IG-7)**
16. **REMOVE CYLINDER HEAD COVER SUB-ASSEMBLY (See page EM-59)**
17. **REMOVE CYLINDER HEAD COVER SUB-ASSEMBLY LH (See page EM-59)**
18. **REMOVE CAMSHAFT TIMING OIL CONTROL VALVE ASSEMBLY (See page ES-407)**
19. **REMOVE VVT SENSOR (See page IG-8)**
20. **REMOVE OIL FILTER BRACKET SUB-ASSEMBLY**
    (a) Remove the 3 bolts, 2 nuts, oil filter bracket and gasket.
21. **REMOVE TIMING CHAIN OR BELT COVER SUB-ASSEMBLY**
    (a) Remove the 24 bolts and 2 nuts.

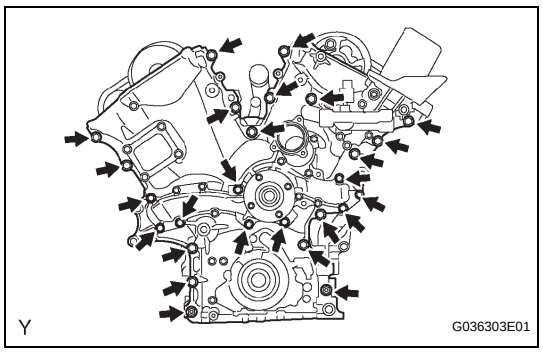

LU

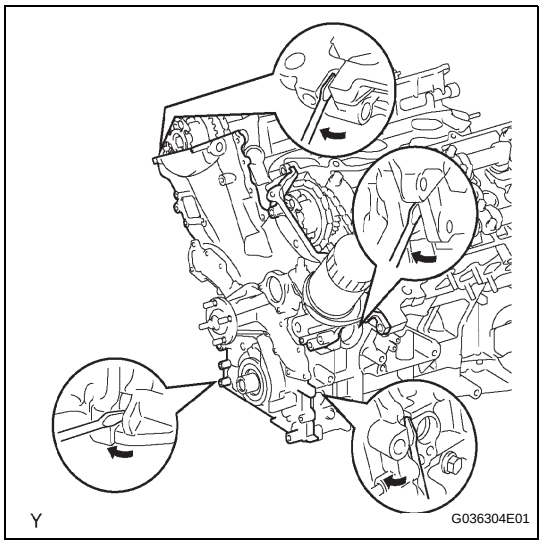

(b) Remove the timing chain cover by prying between the timing chain cover and cylinder head or cylinder block with a screwdriver.
NOTICE:
Be careful not to damage the contact surfaces of the timing chain cover, cylinder block and cylinder head.
(c) Remove the O-ring from the LH cylinder head.

22. REMOVE TIMING GEAR CASE OR TIMING CHAIN CASE OIL SEAL (See page EM-236)

DISASSEMBLY

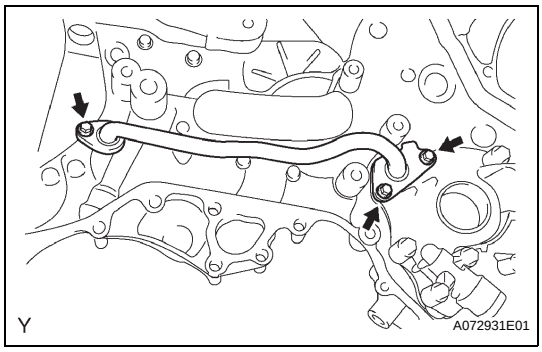

1. REMOVE OIL PUMP COVER
(a) Remove the 3 bolts, then remove the oil pipe.
(b) Remove the 2 O-rings.

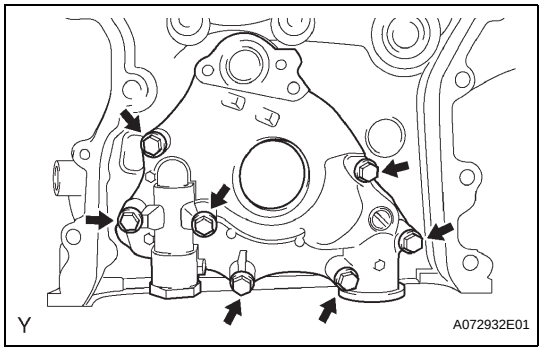

(c) Remove the 7 bolts, then remove the oil pump cover, drive rotor and driven rotor.

2. REMOVE OIL PUMP RELIEF VALVE
(a) Remove the relief valve plug.
(b) Remove the relief valve spring and relief valve.

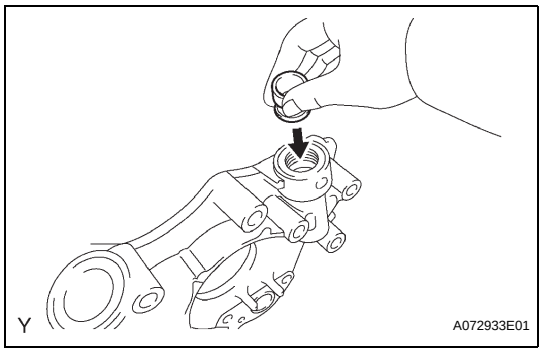

INSPECTION

1. INSPECT OIL PUMP RELIEF VALVE
(a) Coat the valve with engine oil, then check that it falls smoothly into the valve hole by its own weight.
If not, replace the relief valve. If necessary, replace the oil pump assembly.

LU

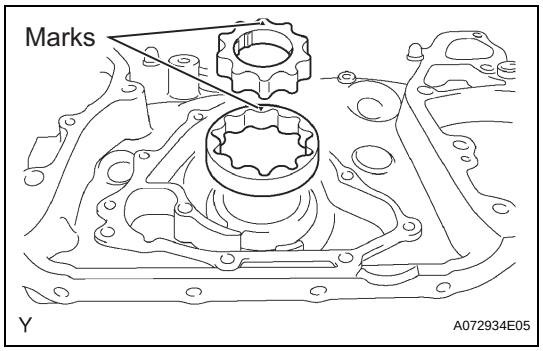

2. INSPECT OIL PUMP ROTOR SET

(a) Place the drive and driven rotors into the timing chain cover with the marks facing upward.

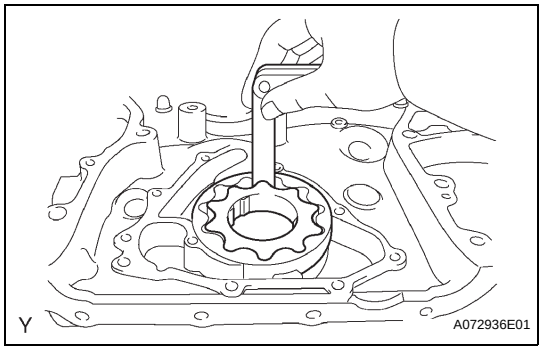

(b) Check the rotor tip clearance.

(1) Using a feeler gauge, measure the clearance between the drive and driven rotor tips.

Standard clearance:

0.06 to 0.16 mm (0.0024 to 0.0063 in.)

Maximum tip clearance: 0.16 mm (0.0063 in.)

If the clearance is greater than the maximum, replace the drive and driven rotors together.

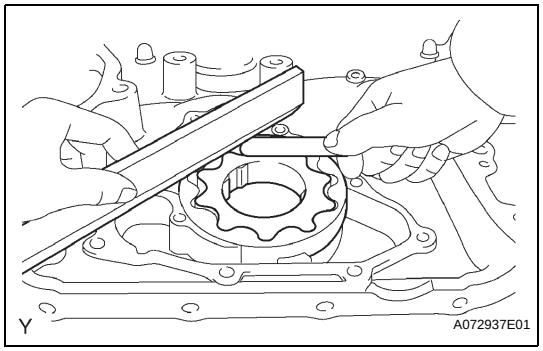

(c) Check the rotor side clearance.

(1) Using a feeler gauge and precision straight edge, measure the clearance between the rotors and precision straight edge.

Standard clearance:

0.03 to 0.09 mm (0.0012 to 0.0035 in.)

Maximum side clearance: 0.09 mm (0.0035 in.)

If the clearance is greater than the maximum, replace the drive and driven rotors. If necessary, replace the timing chain cover assembly.

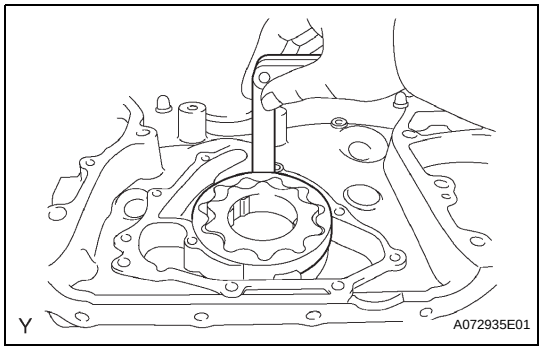

(d) Check the rotor body clearance.

(1) Using a feeler gauge, measure the clearance between the driven rotor and body.

Standard clearance:

0.250 to 0.325 mm (0.0098 to 0.0128 in.)

Maximum body clearance: 0.325 mm (0.0128 in.)

If the clearance is greater than the maximum, replace the drive and driven rotors. If necessary, replace the timing chain cover assembly.

REASSEMBLY

1. INSTALL OIL PUMP RELIEF VALVE

(a) Coat the relief valve with engine oil and insert the relief valve and spring into the valve hole.

(b) Install the relief valve plug.
Torque: 49 N*m (500 kgf*cm, 36 ft.*lbf)

2. INSTALL OIL PUMP COVER

(a) Apply fresh engine oil to the drive and driven rotors.

(b) Place the drive and driven rotors into the timing chain cover with the marks facing the oil pump cover side.

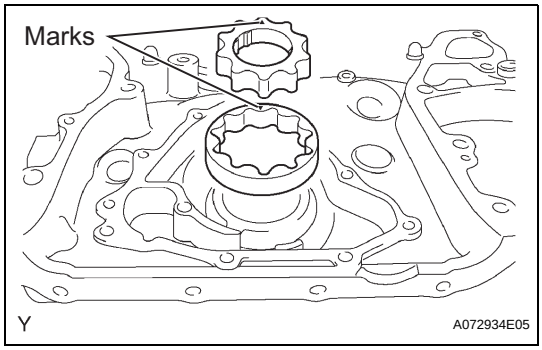

(c) Install the oil pump cover with the 7 bolts.
Torque: 9.0 N*m (92 kgf*cm, 80 in.*lbf)

(d) Install a new O-ring onto the oil pump cover.

(e) Install a new O-ring onto the oil pipe.

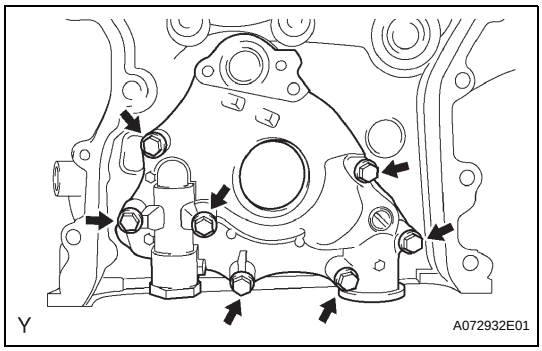

(f) Install the oil pipe with the 3 bolts.
Torque: 9.0 N*m (92 kgf*cm, 80 in.*lbf)

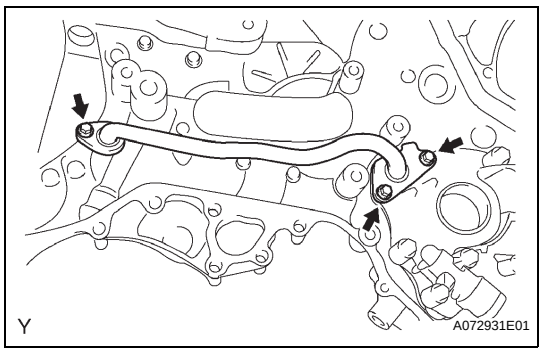

INSTALLATION

1. INSTALL TIMING GEAR CASE OR TIMING CHAIN CASE OIL SEAL (See page EM-236)

2. INSTALL TIMING CHAIN OR BELT COVER SUB-ASSEMBLY

(a) Remove any old packing (FIPG) material. Be careful not to drop any oil on the contact surfaces of the timing chain cover, cylinder head and cylinder block.

(b) Install a new O-ring onto the LH cylinder head as shown in the illustration.

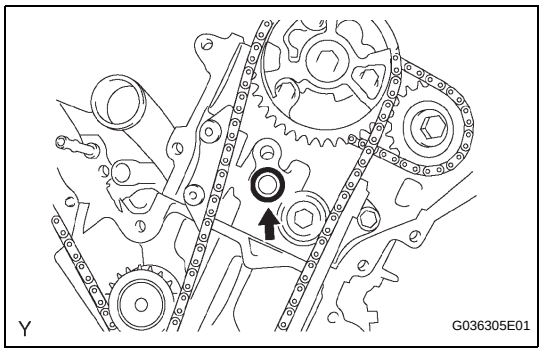

(c) Apply continuous beads of seal packing (diameter 3 to 4 mm (0.12 to 0.16 in.)) to the 4 locations shown in the illustration.

Seal packing:
Part No. 08826-00080 or equivalent

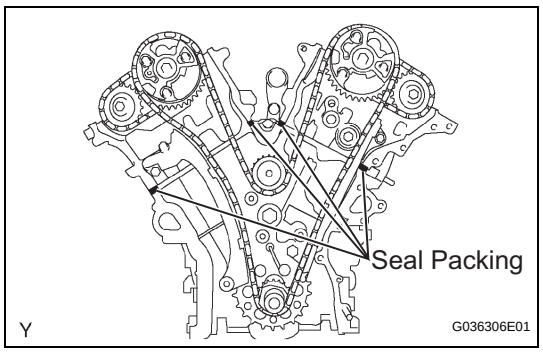

(d) Apply continuous beads of seal packing (diameter 3 to 4 mm (0.12 to 0.16 in.)) to the timing chain cover as shown in the illustration.

Seal packing:
Water pump part:
Part No. 08826-00100 or equivalent
Other parts:
Part No. 08826-00080 or equivalent

NOTICE:
- **Install the timing chain cover within 3 minutes of applying the seal packing. Timing chain cover bolts and nuts must be tightened within 15 minutes of installation. Otherwise, the seal packing must be removed and reapplied.**
- **Do not apply seal packing to portion A shown in the illustration.**

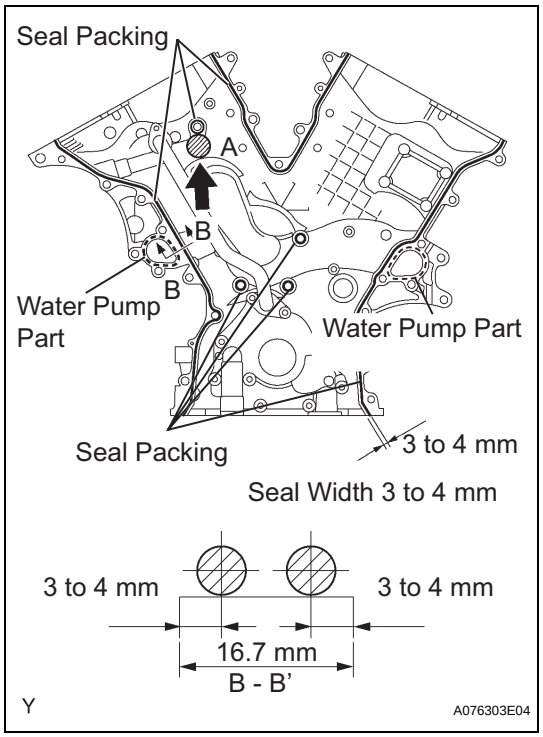

LU

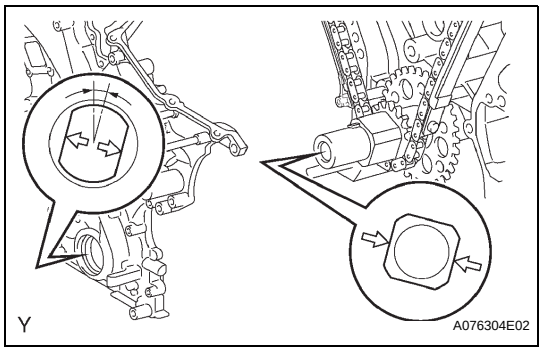

(e) Align the key way of the oil pump drive rotor with the rectangular portion of the crankshaft timing gear, and slide the timing chain cover into place.

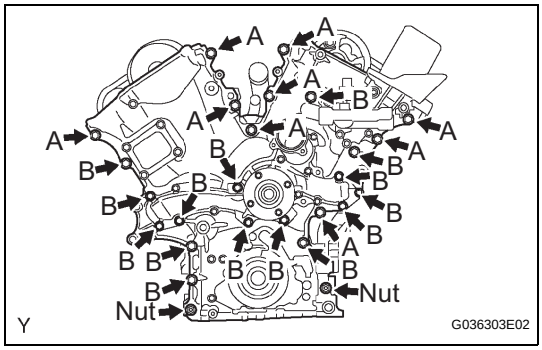

(f) Install the timing chain cover with the 24 bolts and 2 nuts. Tighten the bolts and nuts uniformly in several steps.
Torque: 23 N*m (235 kgf*cm, 17 ft.*lbf)
NOTICE:
Pay attention not to wrap the chain and slipper over the timing chain cover seal line.
Each bolt length is as follows

Bolt	Length
A	25 mm (0.98 in.)
B	55 mm (2.17 in.)

3. **INSTALL OIL FILTER BRACKET SUB-ASSEMBLY**
   (a) Install a new gasket and the oil filter bracket with the 3 bolts and 2 nuts.
   Torque: 19 N*m (194 kgf*cm, 14 ft.*lbf)
4. **INSTALL VVT SENSOR (See page IG-8)**
5. **INSTALL CAMSHAFT TIMING OIL CONTROL VALVE ASSEMBLY (See page ES-408)**
6. **INSTALL CYLINDER HEAD COVER SUB-ASSEMBLY LH (See page EM-68)**
7. **INSTALL CYLINDER HEAD COVER SUB-ASSEMBLY (See page EM-68)**
8. **INSTALL IGNITION COIL ASSEMBLY (See page IG-8)**
9. **INSTALL OIL PAN SUB-ASSEMBLY (See page EM-31)**
10. **INSTALL OIL STRAINER SUB-ASSEMBLY (See page EM-29)**
11. **INSTALL NO.2 OIL PAN SUB-ASSEMBLY (See page EM-29)**
12. **INSTALL CRANKSHAFT PULLEY (See page EM-30)**
13. **INSTALL NO.1 IDLER PULLEY SUB-ASSEMBLY (See page EM-30)**
14. **INSTALL NO.2 IDLER PULLEY SUB-ASSEMBLY (See page EM-30)**
15. **INSTALL V-RIBBED BELT TENSIONER ASSEMBLY (See page EM-30)**
16. **INSTALL WATER INLET (See page CO-10)**

17. **INSTALL OIL LEVEL GAUGE GUIDE**
18. **INSTALL ENGINE ASSEMBLY**
    (See page EM-190)
19. **INSTALL BATTERY**
20. **ADD ENGINE COOLANT (See page CO-3)**
21. **ADD ENGINE OIL (See page LU-5)**
22. **CHECK FOR ENGINE COOLANT LEAKAGE (See page CO-4)**
23. **CHECK FOR ENGINE OIL LEAKAGE**
24. **CHECK FOR FUEL LEAKAGE**
25. **CHECK FOR EXHAUST GAS LEAKAGE**
26. **INSPECT IGNITION TIMING (See page EM-1)**
27. **INSPECT ENGINE IDLING SPEED (See page EM-2)**
28. **INSPECT CO/HC (See page EM-3)**

REMOVAL

1. **DISCHARGE FUEL SYSTEM PRESSURE** (See page FU-1)
2. **REMOVE BATTERY**
3. **DRAIN ENGINE COOLANT (See page CO-3)**
4. **DRAIN ENGINE OIL (See page LU-4)**
5. **REMOVE POWER STEERING LINK ASSEMBLY** (See page PS-53)
6. **REMOVE FRONT DIFFERENTIAL CARRIER ASSEMBLY (for 4WD)** (See page DF-19)
7. **REMOVE V-BANK COVER (See page ES-414)**
8. **REMOVE RADIATOR SUPPORT TO FRAME SEAL LH (See page CO-15)**
9. **REMOVE FAN SHROUD (See page CO-15)**
10. **REMOVE AIR CLEANER ASSEMBLY (See page ES-415)**
11. **REMOVE OIL LEVEL GAUGE GUIDE**
12. **REMOVE WATER INLET (See page CO-9)**
13. **SEPARATE PUMP ASSEMBLY, VANE (See page EM-44)**
14. **REMOVE GENERATOR ASSEMBLY (See page CH-7)**
15. **SEPARATE COOLER COMPRESSOR ASSEMBLY (See page ES-409)**
16. **REMOVE V-RIBBED BELT TENSIONER ASSEMBLY (See page EM-44)**
17. **REMOVE NO.2 IDLER PULLEY SUB-ASSEMBLY (See page EM-44)**
18. **REMOVE NO.1 IDLER PULLEY SUB-ASSEMBLY (See page EM-44)**
19. **REMOVE CRANKSHAFT PULLEY (See page EM-45)**
20. **REMOVE NO.2 OIL PAN SUB-ASSEMBLY (See page EM-45)**
21. **REMOVE OIL STRAINER SUB-ASSEMBLY (See page EM-45)**
22. **REMOVE OIL PAN SUB-ASSEMBLY (See page EM-46)**
23. **REMOVE INTAKE AIR SURGE TANK (See page FU-11)**
24. **REMOVE IGNITION COIL ASSEMBLY (See page IG-7)**
25. **REMOVE CYLINDER HEAD COVER SUB-ASSEMBLY (See page EM-59)**

26. REMOVE CYLINDER HEAD COVER SUB-ASSEMBLY LH (See page EM-59)

27. REMOVE CAMSHAFT TIMING OIL CONTROL VALVE ASSEMBLY (See page ES-407)

28. REMOVE VVT SENSOR (See page IG-8)

29. REMOVE OIL FILTER BRACKET SUB-ASSEMBLY

(a) Remove the 3 bolts, 2 nuts, oil filter bracket and gasket.

30. REMOVE TIMING CHAIN OR BELT COVER SUB-ASSEMBLY

(a) Remove the 24 bolts and 2 nuts.

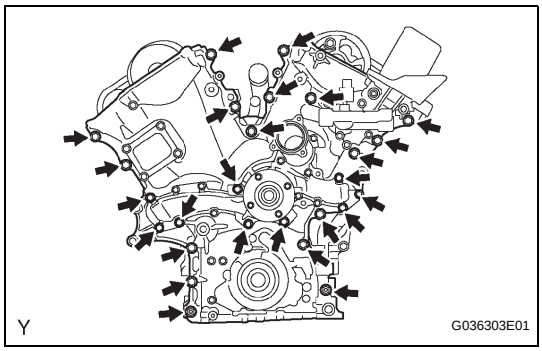

(b) Remove the timing chain cover by prying between the timing chain cover and cylinder head or cylinder block with a screwdriver.

NOTICE:

Be careful not to damage the contact surfaces of the timing chain cover, cylinder block and cylinder head.

(c) Remove the O-ring from the LH cylinder head.

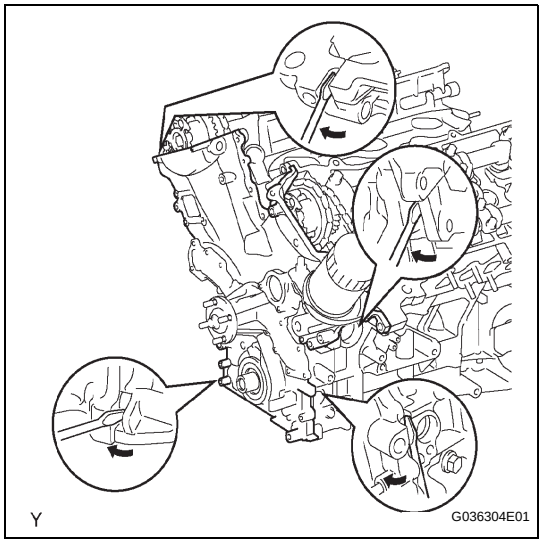

31. REMOVE TIMING GEAR CASE OR TIMING CHAIN CASE OIL SEAL (See page EM-236)

LU

DISASSEMBLY

1. REMOVE OIL PUMP COVER

(a) Remove the 3 bolts, then remove the oil pipe.

(b) Remove the 2 O-rings.

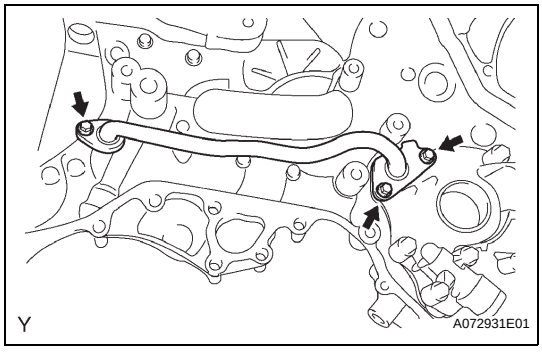

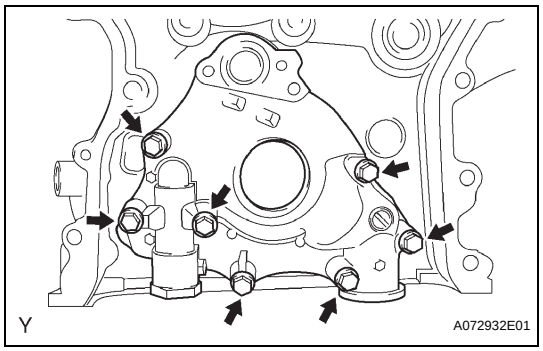

(c) Remove the 7 bolts, then remove the oil pump cover, drive rotor and driven rotor.

2. REMOVE OIL PUMP RELIEF VALVE

(a) Remove the relief valve plug.

(b) Remove the relief valve spring and relief valve.

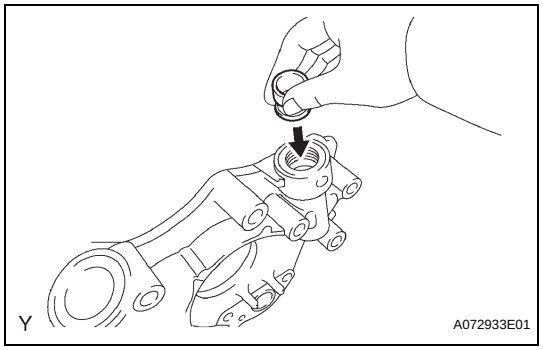

INSPECTION

1. INSPECT OIL PUMP RELIEF VALVE

(a) Coat the valve with engine oil, then check that it falls smoothly into the valve hole by its own weight.
If not, replace the relief valve. If necessary, replace the oil pump assembly.

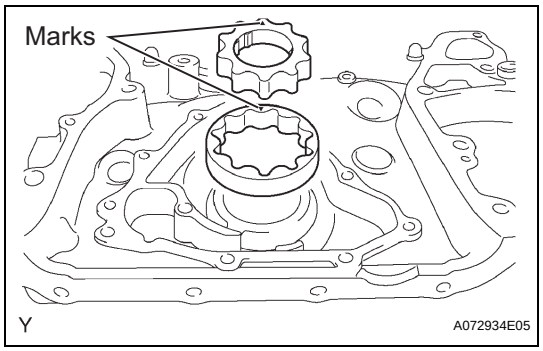

2. INSPECT OIL PUMP ROTOR SET

(a) Place the drive and driven rotors into the timing chain cover with the marks facing upward.

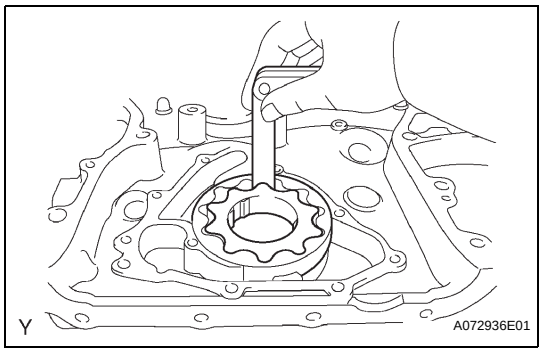

(b) Check the rotor tip clearance.

(1) Using a feeler gauge, measure the clearance between the drive and driven rotor tips.
Standard clearance:
0.06 to 0.16 mm (0.0024 to 0.0063 in.)
Maximum tip clearance:
0.16 mm (0.0063 in.)
If the clearance is greater than the maximum, replace the drive and driven rotors together.

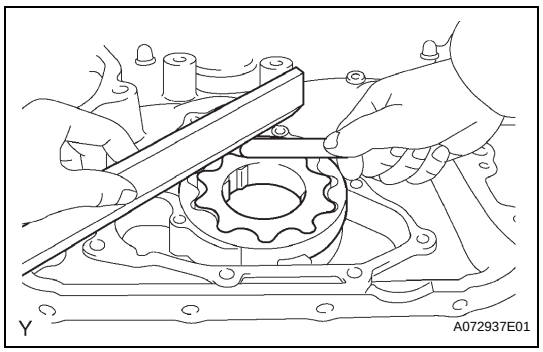

(c) Check the rotor side clearance.

(1) Using a feeler gauge and precision straight edge, measure the clearance between the rotors and precision straight edge.
Standard clearance:
0.03 to 0.09 mm (0.0012 to 0.0035 in.)
Maximum side clearance:
0.09 mm (0.0035 in.)

LU

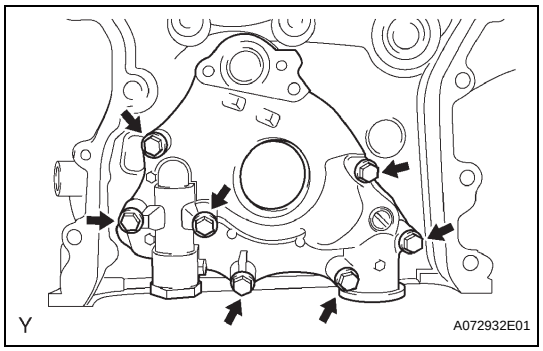

(c) Remove the 7 bolts, then remove the oil pump cover, drive rotor and driven rotor.

2. REMOVE OIL PUMP RELIEF VALVE

(a) Remove the relief valve plug.

(b) Remove the relief valve spring and relief valve.

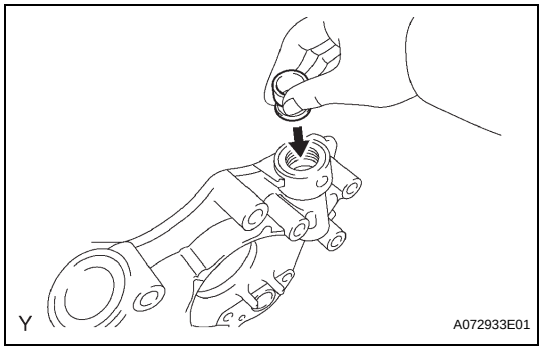

INSPECTION

1. INSPECT OIL PUMP RELIEF VALVE

(a) Coat the valve with engine oil, then check that it falls smoothly into the valve hole by its own weight.
If not, replace the relief valve. If necessary, replace the oil pump assembly.

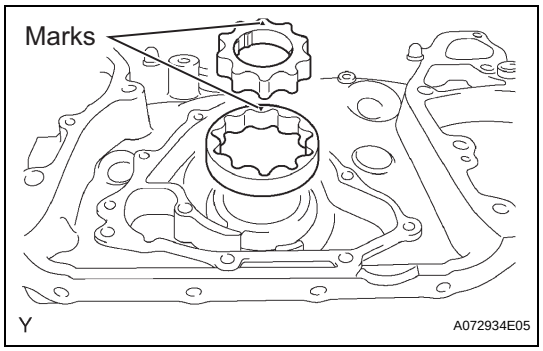

2. INSPECT OIL PUMP ROTOR SET

(a) Place the drive and driven rotors into the timing chain cover with the marks facing upward.

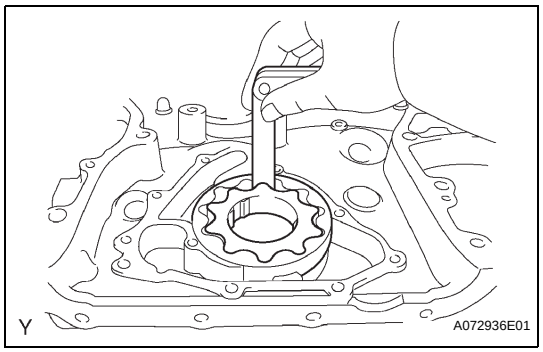

(b) Check the rotor tip clearance.

(1) Using a feeler gauge, measure the clearance between the drive and driven rotor tips.
Standard clearance:
0.06 to 0.16 mm (0.0024 to 0.0063 in.)
Maximum tip clearance:
0.16 mm (0.0063 in.)
If the clearance is greater than the maximum, replace the drive and driven rotors together.

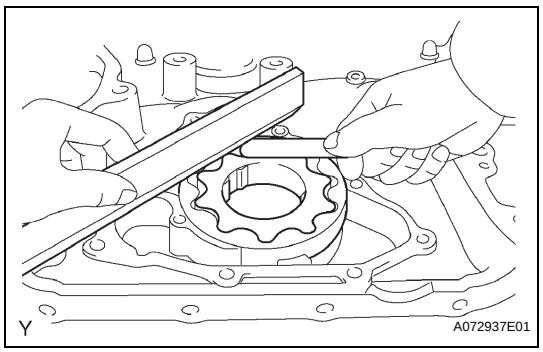

(c) Check the rotor side clearance.

(1) Using a feeler gauge and precision straight edge, measure the clearance between the rotors and precision straight edge.
Standard clearance:
0.03 to 0.09 mm (0.0012 to 0.0035 in.)
Maximum side clearance:
0.09 mm (0.0035 in.)

LU

If the clearance is greater than the maximum, replace the drive and driven rotors. If necessary, replace the timing chain cover assembly.

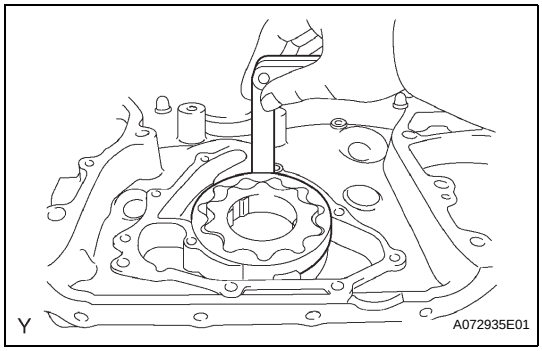

(d) Check the rotor body clearance.
(1) Using a feeler gauge, measure the clearance between the driven rotor and body.
Standard clearance:
0.250 to 0.325 mm (0.0098 to 0.0128 in.)
Maximum body clearance:
0.325 mm (0.0128 in.)
If the clearance is greater than the maximum, replace the drive and driven rotors. If necessary, replace the timing chain cover assembly.

REASSEMBLY

1. INSTALL OIL PUMP RELIEF VALVE

(a) Coat the relief valve with engine oil and insert the relief valve and spring into the valve hole.

(b) Install the relief valve plug.
Torque: 49 N*m (500 kgf*cm, 36 ft.*lbf)

2. INSTALL OIL PUMP COVER

(a) Apply fresh engine oil to the drive and driven rotors.

(b) Place the drive and driven rotors into the timing chain cover with the marks facing the oil pump cover side.

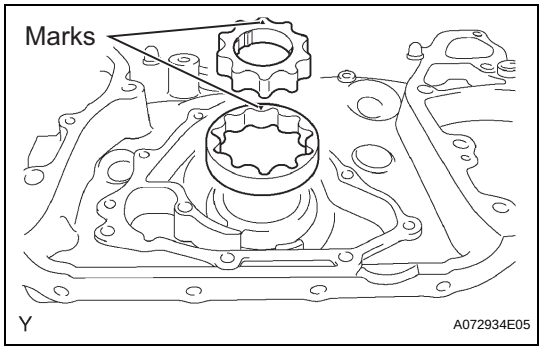

(c) Install the oil pump cover with the 7 bolts.
Torque: 9.0 N*m (92 kgf*cm, 80 in.*lbf)

(d) Install a new O-ring onto the oil pump cover.

(e) Install a new O-ring onto the oil pipe.

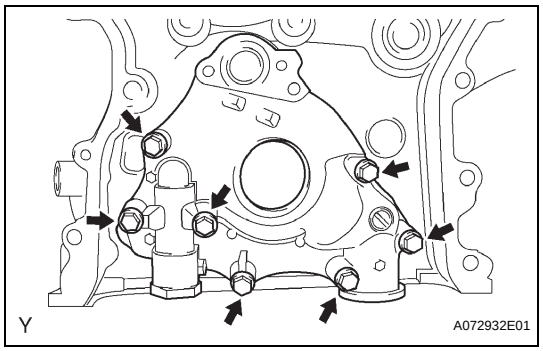

(f) Install the oil pipe with the 3 bolts.
Torque: 9.0 N*m (92 kgf*cm, 80 in.*lbf)

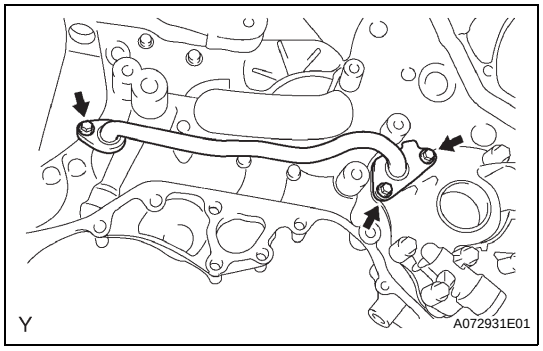

INSTALLATION

1. **INSTALL TIMING GEAR CASE OR TIMING CHAIN CASE OIL SEAL (See page EM-236)**

2. **INSTALL TIMING CHAIN OR BELT COVER SUB-ASSEMBLY**

(a) Remove any old packing (FIPG) material and be careful not to drop any oil on the contact surfaces of the timing chain cover, cylinder head and cylinder block.

(b) Install a new O-ring onto the LH cylinder head as shown in the illustration.

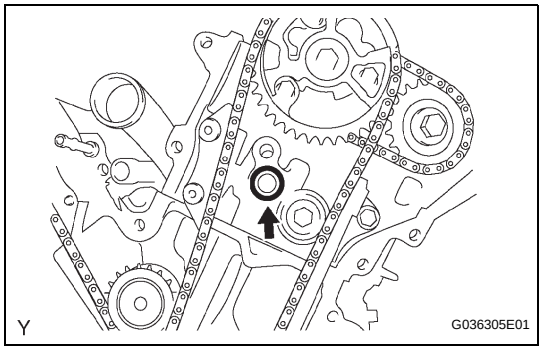

(c) Apply continuous beads of seal packing (diameter 3 to 4 mm (0.12 to 0.16 in.)) to the 4 locations shown in the illustration.
Seal packing:
Part No. 08826-00080 or equivalent

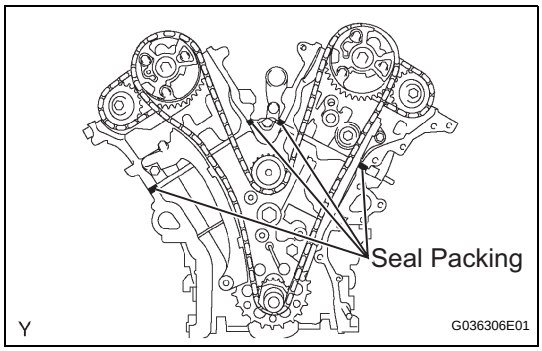

(d) Apply continuous beads of seal packing (diameter 3 to 4 mm (0.12 to 0.16 in.)) to the timing chain cover as shown in the illustration.
Seal packing:
Water pump part:
Part No. 08826-00100 or equivalent
Other parts:
Part No. 08826-00080 or equivalent
NOTICE:
- **Install the timing chain cover within 3 minutes after applying seal packing. Timing chain cover bolts and nuts must be tightened within 15 minutes of installation. Otherwise the seal packing must be removed and reapplied.**
- **Do not apply seal packing to portion A shown in the illustration.**

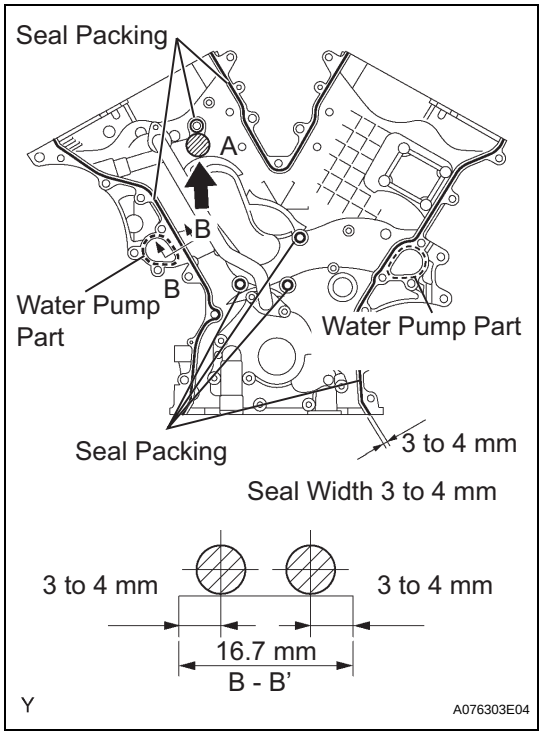

LU

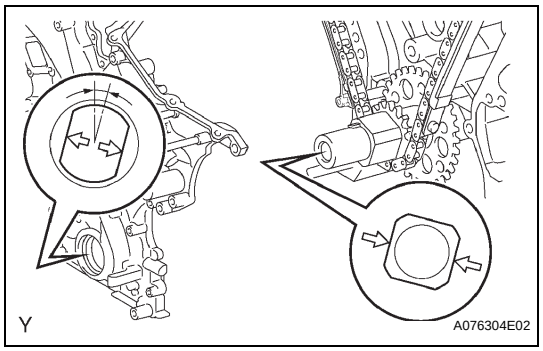

(e) Align the key way of the oil pump drive rotor with the rectangular portion of the crankshaft timing gear, and slide the timing chain cover into place.

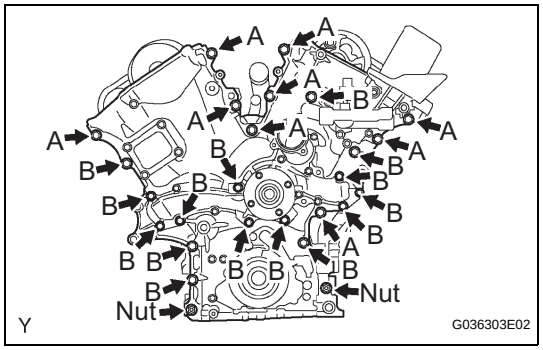

(f) Install the timing chain cover with the 24 bolts and 2 nuts. Tighten the bolts and nuts uniformly in several steps.
Torque: 23 N*m (235 kgf*cm, 17 ft.*lbf)
NOTICE:
Pay attention not to wrap the chain and slipper over the timing chain cover seal line.
Each bolt length is as follows

Bolt	Length
A	25 mm (0.98 in.)
B	55 mm (2.17 in.)

3. **INSTALL OIL FILTER BRACKET SUB-ASSEMBLY**
   (a) Install a new gasket and oil filter bracket with the 3 bolts and 2 nuts.
   Torque: 19 N*m (194 kgf*cm, 14 ft.*lbf)
4. **INSTALL VVT SENSOR (See page IG-8)**
5. **INSTALL CAMSHAFT TIMING OIL CONTROL VALVE ASSEMBLY (See page ES-408)**
6. **INSTALL CYLINDER HEAD COVER SUB-ASSEMBLY LH (See page EM-68)**
7. **INSTALL CYLINDER HEAD COVER SUB-ASSEMBLY (See page EM-68)**
8. **INSTALL IGNITION COIL ASSEMBLY (See page IG-7)**
9. **INSTALL INTAKE AIR SURGE TANK (See page FU-17)**
10. **INSTALL OIL PAN SUB-ASSEMBLY (See page EM-49)**
11. **INSTALL OIL STRAINER SUB-ASSEMBLY (See page EM-51)**
12. **INSTALL NO.2 OIL PAN SUB-ASSEMBLY (See page EM-51)**
13. **INSTALL CRANKSHAFT PULLEY (See page EM-51)**
14. **INSTALL NO.1 IDLER PULLEY SUB-ASSEMBLY (See page EM-51)**
15. **INSTALL NO.2 IDLER PULLEY DUB-ASSEMBLY (See page EM-52)**

16. **INSTALL V-RIBBED BELT TENSIONER ASSEMBLY (See page EM-52)**
17. **INSTALL COOLER COMPRESSOR ASSEMBLY (See page ES-410)**
18. **INSTALL GENERATOR ASSEMBLY (See page CH-13)**
19. **INSTALL VANE PUMP ASSEMBLY (See page EM-52)**
20. **INSTALL WATER INLET (See page CO-10)**
21. **INSTALL OIL LEVEL GAUGE GUIDE**
22. **INSTALL AIR CLEANER ASSEMBLY (See page ES-416)**
23. **INSTALL FAN SHROUD (See page CO-20)**
24. **INSTALL RADIATOR SUPPORT TO FRAME SEAL LH**
25. **INSTALL FRONT DIFFERENTIAL CARRIER ASSEMBLY**
    (See page DF-38)
26. **INSTALL POWER STEERING LINK ASSEMBLY**
    (See page PS-67)
27. **INSTALL BATTERY**
28. **ADD ENGINE OIL (See page LU-5)**
29. **ADD ENGINE COOLANT (See page CO-3)**
30. **ADD DIFFERENTIAL OIL (for 4WD)**
31. **INSPECT DIFFERENTIAL OIL (for 4WD) (See page DF-8)**
32. **ADD POWER STEERING FLUID (See page PS-3)**
33. **BLEED POWER STEERING FLUID (See page PS-2)**
34. **CHECK FOR ENGINE OIL LEAKAGE**
35. **CHECK FOR ENGINE COOLANT LEAKAGE (See page CO-4)**
36. **CHECK FOR FUEL LEAKAGE**
37. **CHECK FOR EXHAUST GAS LEAKAGE**
38. **CHECK POWER STEERING FLUID LEAKAGE**
39. **INSPECT AND ADJUST FRONT WHEEL ALIGNMENT**
    (See page SP-7)
40. **INSTALL V-BANK COVER (See page ES-416)**
41. **INSPECT IGNITION TIMING (See page EM-1)**
42. **INSPECT ENGINE IDLING SPEED (See page EM-2)**
43. **INSPECT COMPRESSION (See page EM-2)**
44. **INSPECT CO/HC (See page EM-3)**

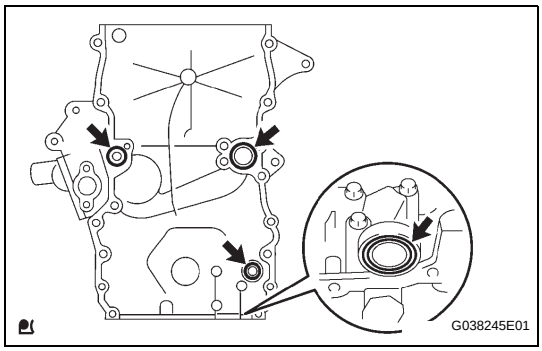

(d) Remove the 4 O-rings.

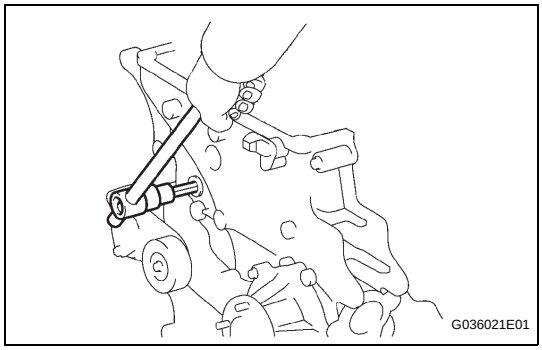

(e) Using a 10 mm socket hexagon wrench, remove the head straight screw plug.

49. REMOVE WATER INLET (See page CO-7)

50. REMOVE THERMOSTAT (See page CO-7)

51. REMOVE TIMING GEAR CASE OR TIMING CHAIN CASE OIL SEAL (See page EM-149)

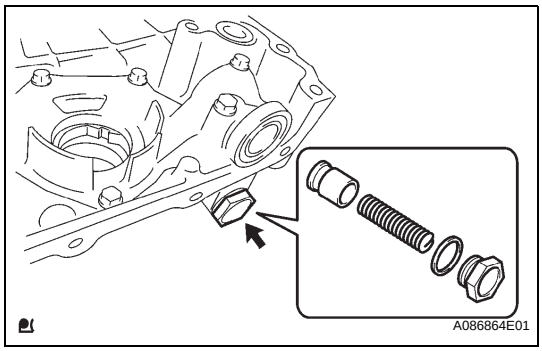

DISASSEMBLY

1. REMOVE OIL PUMP RELIEF VALVE

(a) Using a 27 mm socket wrench, remove the relief valve plug and gasket.

(b) Remove the valve spring and oil pump relief valve.

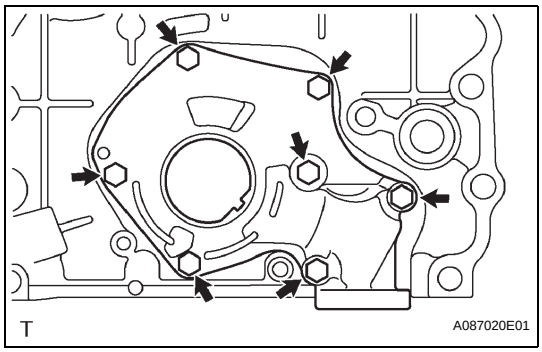

2. REMOVE OIL PUMP COVER

(a) Remove the 7 bolts and oil pump cover.

3. REMOVE OIL PUMP ROTOR SET

(a) Remove the oil pump rotor set from the timing chain cover.

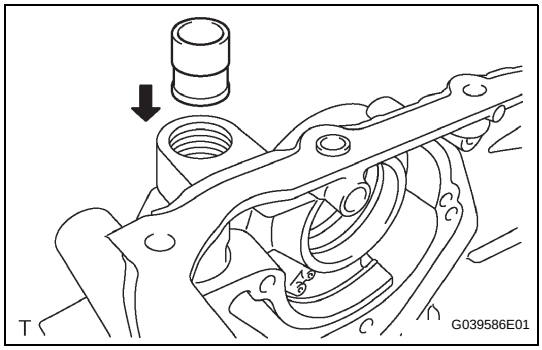

INSPECTION

1. REMOVE OIL PUMP RELIEF VALVE

(a) Coat the relief valve with engine oil and drop it into the relief valve hole.

(b) Check that the relief valve falls in smoothly by its own weight.
If it does not, replace the relief valve. If necessary, replace the timing chain cover.

LU

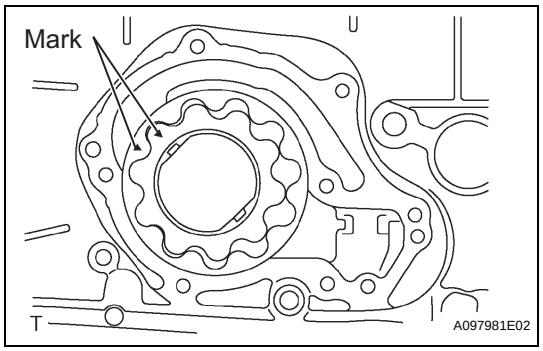

2. INSPECT OIL PUMP ROTOR SET

(a) Install the rotors to the timing chain cover with the rotors' marks facing outward. Check that the rotors revolves smoothly.

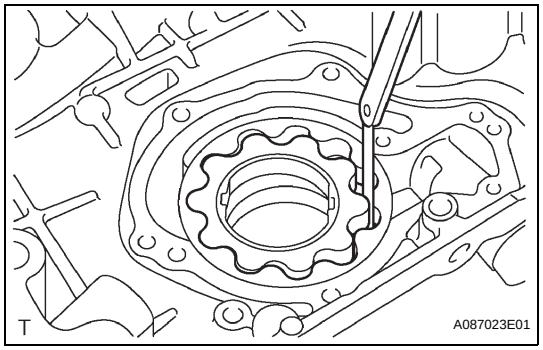

3. INSPECT ROTOR TIP CLEARANCE

(a) Check the tip clearance.

(1) Using a feeler gauge, measure the clearance between the drive and driven rotor tips, as shown in the illustration.

Tip clearance

Standard	**0.040 to 0.160 mm (0.0016 to 0.0063 in.)**
Maximum	**0.26 mm (0.0102 in.)**

If the tip clearance is greater than the maximum, replace the timing chain cover.

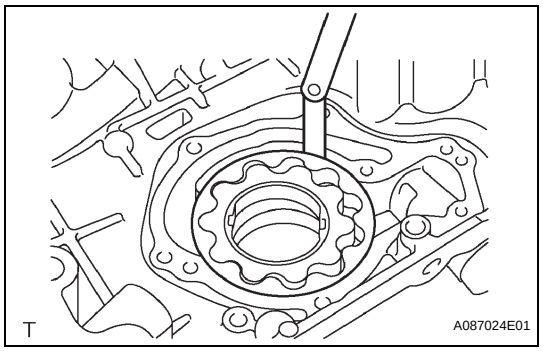

4. INSPECT ROTOR BODY CLEARANCE

(a) Check the body clearance.

(1) Using a feeler gauge, measure the clearance between the timing chain cover and driven rotor, as shown in the illustration.

Body clearance

Standard	**0.250 to 0.325 mm (0.0098 to 0.0128 in.)**
Maximum	**0.425 mm (0.0167 in.)**

If the body clearance is greater than the maximum, replace the timing chain cover.

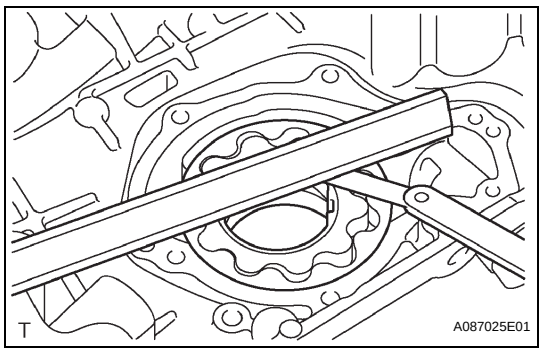

5. INSPECT ROTOR SIDE CLEARANCE

(a) Check the side clearance.

(1) Using a feeler gauge and precision straight edge, measure the clearance between the rotors and precision straight edge, as shown in the illustration.

Side clearance

Standard	**0.025 to 0.075 mm (0.0010 to 0.0030 in.)**
Maximum	**0.130 mm (0.0051 in.)**

If the side clearance is greater than the maximum, replace the timing chain cover.

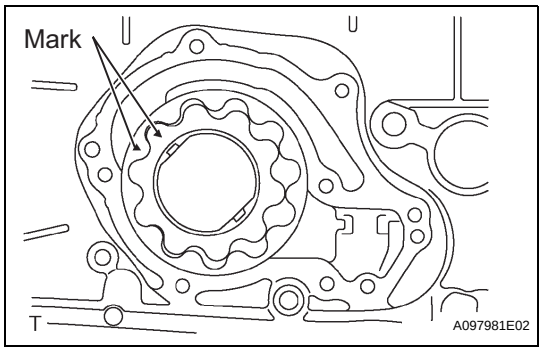

6. INSTALL OIL PUMP ROTOR SET

(a) Coat the oil pump gear set with engine oil and place it into timing chain cover with the marks facing outward (oil pump cover side). Check that the rotors revolve smoothly.

REASSEMBLY

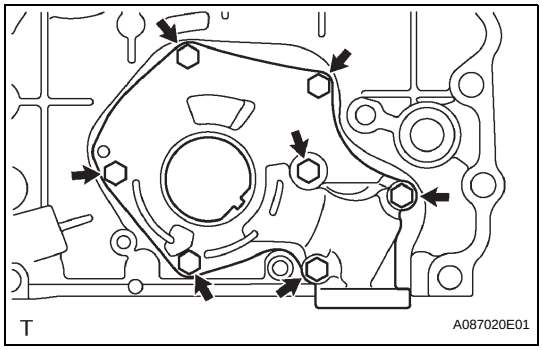

1. INSTALL OIL PUMP COVER

(a) Install the oil pump cover with the 7 bolts.
Torque: 9.0 N*m (92 kgf*cm, 80 in.*lbf)

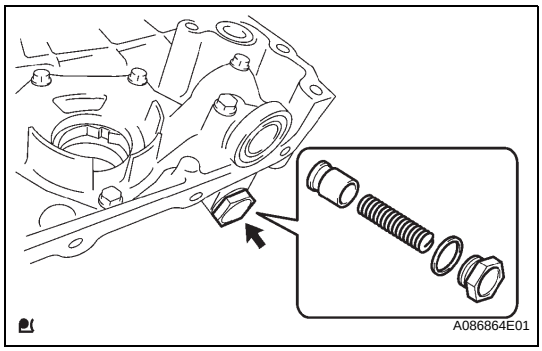

2. INSTALL OIL PUMP RELIEF VALVE

(a) Coat the oil pump relief valve with engine oil.
(b) Insert the relief valve and relief valve spring into the timing chain cover hole.
(c) Install a new gasket to the relief valve plug.
(d) Using a 27 mm socket wrench, install the plug.
Torque: 49 N*m (500 kgf*cm, 36 ft.*lbf)

INSTALLATION

1. **INSTALL TIMING GEAR CASE OR TIMING CHAIN CASE OIL SEAL (See page EM-149)**
2. **INSTALL THERMOSTAT (See page CO-8)**
3. **INSTALL WATER INLET (See page CO-8)**
4. **INSTALL OIL PUMP**

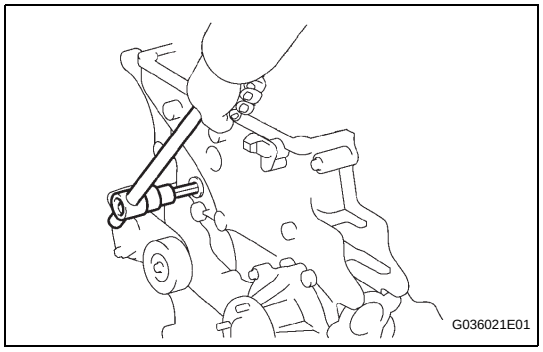

(a) Apply adhesive to the head straight screw plug.
Adhesive:
Part No. 08833-00070, THREE BOND 1324 or equivalent

(b) Using a 10 mm socket hexagon wrench, install the head straight screw plug.
Torque: 17 N*m (170 kgf*cm, 12 ft.*lbf)

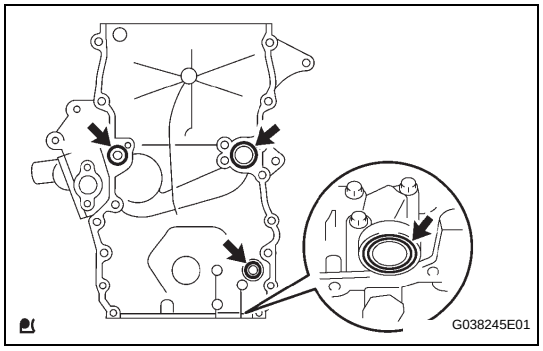

(c) Install 4 new O-rings onto the oil pump as shown in the illustration.

(d) Apply continuous beads of seal packing to the places shown in the illustration.
Seal packing:
Part No. 08826-00080 or equivalent
Seal width:

Position	Specified Condition
A - A'	2.5 to 3.0 mm (0.098 to 0.118 in.)
B - B', C - C'	4.0 to 4.5 mm (0.157 to 0.177 in.)
D - D'	2.5 to 3.0 mm (0.098 to 0.118 in.)
E	2.5 to 3.5 mm (0.098 to 0.138 in.)

NOTICE:
- **Remove any oil from the contact surface.**
- **Install the chain cover within 3 minutes and tighten the bolts within 15 minutes of applying seal packing.**
- **Do not start the engine for at least 4 hours after installation.**

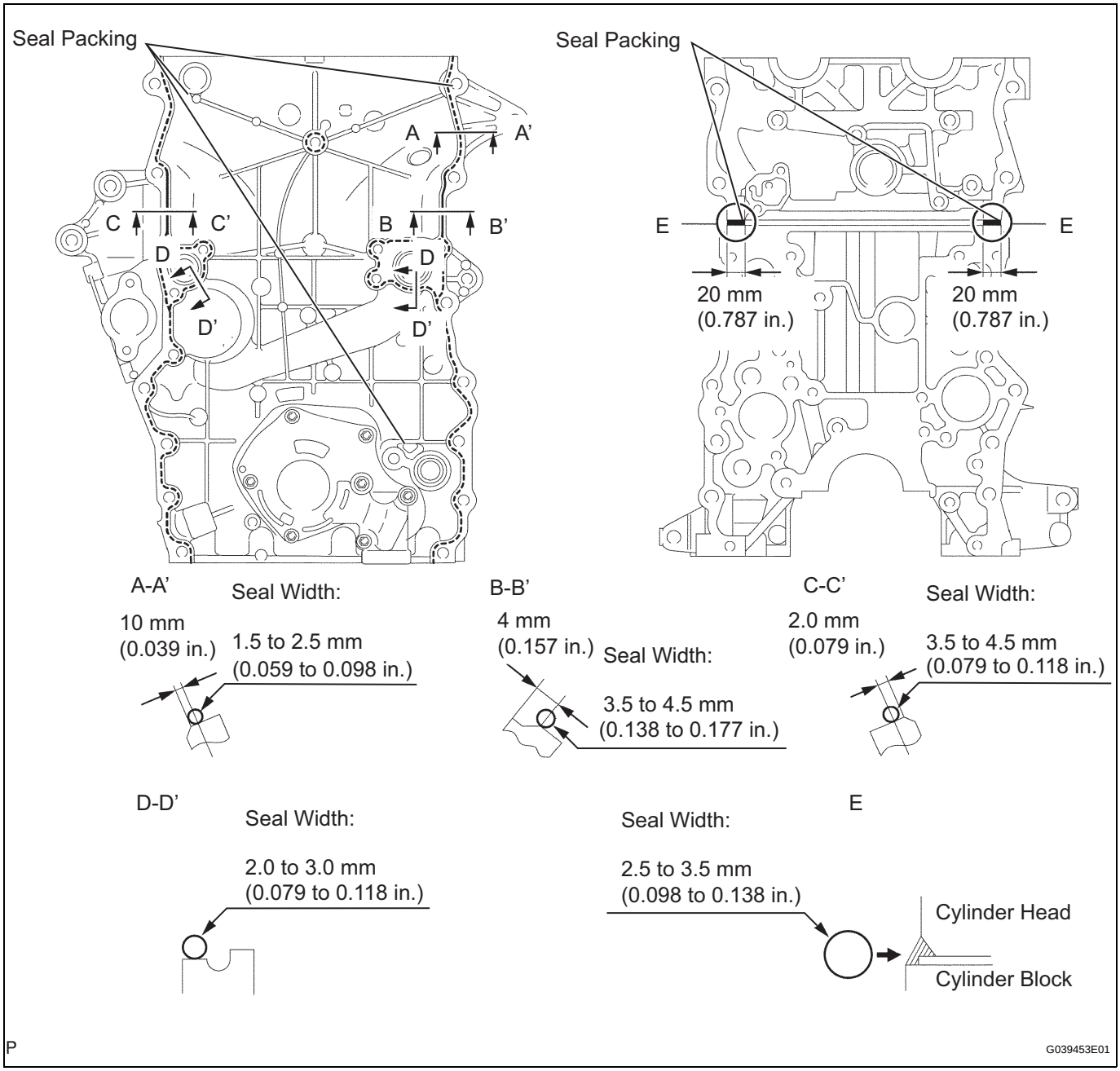

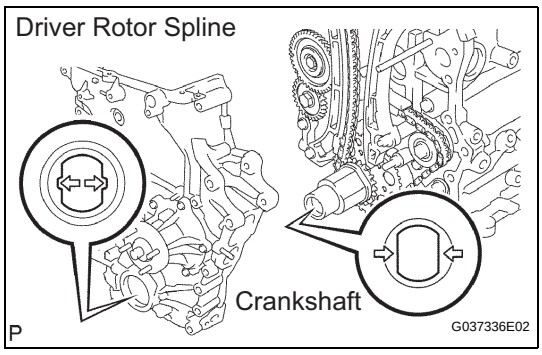

(e) Align the oil pump's drive rotor spline and the crankshaft as shown in the illustration. Install the spline and chain cover onto the crankshaft.

(f) Loosely install the oil pump with the 19 bolts and 2 nuts, but do not tighten the bolts and nuts yet.

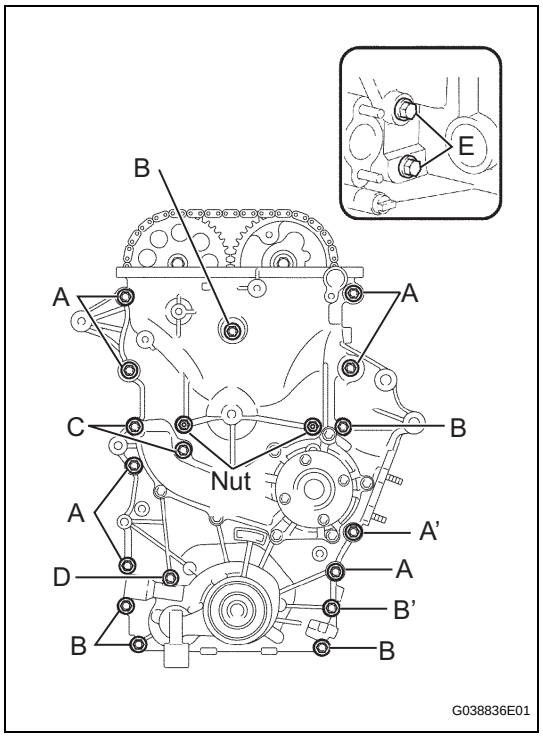

(g) Provisionally install the oil pump with the 19 bolts and 2 nuts.
NOTICE:
If the vehicle is equipped with air conditioning, install bolts A' and B' when installing the idle pulley with bracket since they are for this purpose.
HINT:
Bolt length:
75 mm (2.95 in.) for bolt A, B
87 mm (3.43 in.) for bolt C
95 mm (3.74 in.) for bolt D
35 mm (1.37 in.) for bolt E

(h) Fully tighten the bolts and nuts, except bolts A, in the following order: Area 1, Area 3 and then Area 2.
Torque: 21 N*m (214 kgf*cm, 15 ft.*lbf)

(i) Fully tighten the bolts A in the following order: Area 2 and then Area 3.
Torque: 46 N*m (469 kgf*cm, 34 ft.*lbf)

(j) Fully tighten the bolts E in Area 4.
Torque: 21 N*m (214 kgf*cm, 15 ft.*lbf)

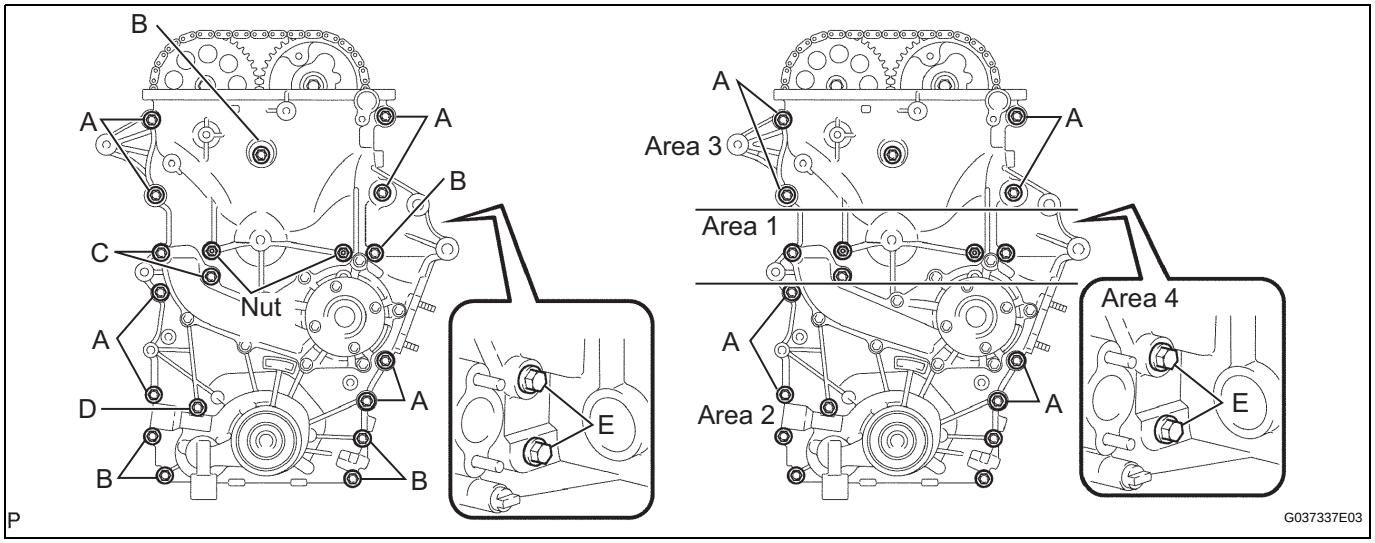

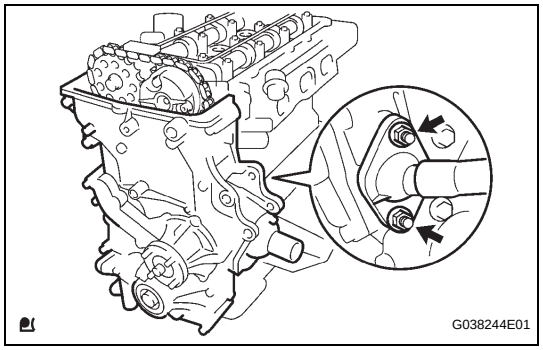

(k) Install a new gasket, then install the water by-pass pipe No. 1 with the 2 nuts.
Torque: 18 N*m (178 kgf*cm, 13 ft.*lbf)

5. **INSTALL OIL PAN SUB-ASSEMBLY (See page LU-24)**
6. **INSTALL OIL STRAINER SUB-ASSEMBLY (See page EM-32)**
7. **INSTALL OIL PAN SUB-ASSEMBLY NO.2 (See page EM-32)**
8. **INSTALL OIL LEVEL GAGE SUB-ASSEMBLY**
9. **INSTALL CRANKSHAFT PULLEY (See page EM-75)**
10. **INSTALL CYLINDER HEAD COVER SUB-ASSEMBLY (See page EM-48)**

11. **INSTALL INTAKE MANIFOLD TO HEAD GASKET NO. 1 (See page ES-463)**
12. **INSTALL CAMSHAFT POSITION SENSOR (See page ES-444)**
13. **INSTALL CRANKSHAFT POSITION SENSOR (See page ES-447)**
14. **INSTALL IDLE PULLEY ASSEMBLY W/BRACKET (w/ Air Conditioning System) (See page ES-448)**
15. **INSTALL IDLER PULLEY SUB-ASSEMBLY NO.1 (See page EM-33)**
16. **INSTALL V-RIBBED BELT TENSIONER ASSEMBLY (See page CO-6)**
17. **INSTALL GENERATOR ASSEMBLY (See page CH-13)**
18. **INSTALL INTAKE AIR CONNECTOR (See page ES-455)**
19. **INSTALL REAR END PLATE (See page EM-72)**
20. **INSTALL DRIVE PLATE & RING GEAR SUB-ASSEMBLY (for Automatic Transmission) (See page EM-79)**
21. **INSTALL FLYWHEEL SUB-ASSEMBLY (for Manual Transmission) (See page EM-79)**
22. **INSTALL CLUTCH DISC ASSEMBLY (for Manual Transmission)**

Transmission	See page
R155	CL-32
R155F	CL-37

23. **INSTALL CLUTCH COVER ASSEMBLY (for Manual Transmission)**

Transmission	See page
R155	CL-32
R155F	CL-37

24. **INSTALL ENGINE ASSEMBLY (See page EM-98)**
25. **INSTALL AUTOMATIC TRANSMISSION ASSEMBLY** (See page AT-113)
26. **INSTALL MANUAL TRANSMISSION UNIT ASSEMBLY**

Transmission	See page
R155	MT-9
R155F	MT-11

27. **INSTALL EXHAUST PIPE ASSEMBLY FRONT (See page EX-2)**
28. **INSTALL EXHAUST PIPE ASSEMBLY TAIL (See page EX-2)**
29. **CONNECT ENGINE WIRE**

30. **CONNECT AIR INJECTION SYSTEM NO.1 HOSE (See page EM-99)**
31. **CONNECT FUEL VAPOR FEED HOSE ASSEMBLY (See page EM-99)**
32. **CONNECT FUEL HOSE NO.2 (See page FU-17)**
33. **CONNECT FUEL HOSE (See page FU-17)**
34. **INSTALL WATER HOSE SUB-ASSEMBLY (See page EM-99)**
35. **INSTALL RADIATOR HOSE INLET**
36. **INSTALL COMPRESSOR AND MAGNETIC CLUTCH (w/ Air Conditioning System) (See page EM-34)**
37. **INSTALL RADIATOR HOSE NO.2**
38. **INSTALL VANE PUMP ASSEMBLY (See page EM-34)**
39. **INSTALL AIR CLEANER CASE**
    (a) Install the air cleaner case with the 3 bolts.
    Torque: 12 N*m (122 kgf*cm, 9 ft.*lbf)
40. **INSTALL AIR CLEANER FILTER ELEMENT SUB-ASSEMBLY**
41. **INSTALL AIR CLEANER CAP SUB-ASSEMBLY (See page EC-17)**
42. **INSTALL FAN SHROUD (See page CO-18)**
43. **INSTALL RADIATOR SUPPORT TO FRAME SEAL LH (See page CO-19)**
44. **INSTALL BATTERY TRAY**
45. **INSTALL BATTERY**
46. **ADD ENGINE OIL (See page LU-4)**
47. **ADD ENGINE COOLANT (See page CO-3)**
48. **CHECK ENGINE OIL LEVEL**
49. **CHECK FUEL LEAKAGE**
50. **CHECK ENGINE COOLANT LEAKAGE (See page CO-2)**
51. **CHECK OIL LEAKAGE**
52. **CHECK EXHAUST GAS LEAKAGE**
53. **INSTALL ENGINE UNDER COVER SUB-ASSEMBLY NO.1 (for Pre Runner and 4WD Type)**
    (a) Install the engine under cover No. 1 with the 4 bolts.
    Torque: 30 N*m (306 kgf*cm, 22 ft.*lbf)
54. **INSTALL ENGINE UNDER COVER SUB-ASSEMBLY NO.2 (for Pre Runner and 4WD Type, Regular Cab)**
    (a) Install the engine under cover No. 2 with the 4 bolts.
    Torque: 30 N*m (306 kgf*cm, 22 ft.*lbf)
55. **INSTALL HOOD SUB-ASSEMBLY**
    (See page ED-7)

RECOMMENDED TOOLS

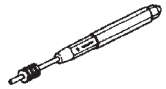	09031-00040	Pin Punch .	
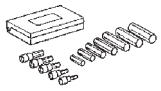	09040-00011	Hexagon Wrench Set	
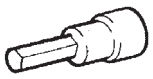	(09043-20100)	Socket Hexagon Wrench 10	
	(09043-30240)	Straight Hexagon Wrench 24	
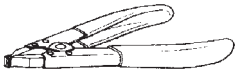	09905-00012	Snap Ring No.1 Expander	
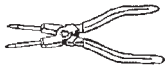	09905-00013	Snap Ring Pliers	

EQUIPMENT

Cylinder gauge	
Dial indicator	
Feller gauge	
Micrometer	
Torque wrench	
Vernier calipers	
Press	
V-block	

LUBRICANT

Item	Capacity	Classification
Manual transmission oil	1.8 liters (1.9 US qts, 1.6 lmp. qts)	API GL-4 or GL-5 SAE 75W-90

SSM

	08826-00090	Seal Packing 1281, THREE BOND 1281 or equivalent (FIPG)	

RECOMMENDED TOOLS

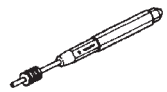	09031-00040	Pin Punch .	
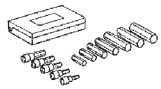	09040-00011	Hexagon Wrench Set	
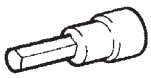	(09043-20100)	Socket Hexagon Wrench 10	
	(09043-30240)	Straight Hexagon Wrench 24	
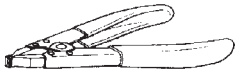	09905-00012	Snap Ring No.1 Expander	
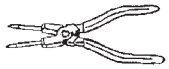	09905-00013	Snap Ring Pliers	

EQUIPMENT

Cylinder gauge	
Dial indicator	
Feller gauge	
Micrometer	
Torque wrench	
Vernier calipers	
Press	
V-block	

LUBRICANT

Item	Capacity	Classification
Manual transmission oil	1.8 liters (1.9 US qts, 1.6 lmp. qts)	API GL-4 or GL-5 SAE 75W-90

SSM

	08826-00090	Seal Packing 1281, THREE BOND 1281 or equivalent (FIPG)	

INSTALLATION

1. **INSTALL STARTER ASSEMBLY**
   (a) Install the starter assembly with the 2 bolts.
   Torque:
   37 N*m (377 kgf*cm, 27 ft.*lbf)
   (b) Install the wire harness with the nut to terminal 30.
   Torque: 9.8 N*m (100 kgf*cm, 7 ft.*lbf)
   (c) Connect terminal 50 to the starter assy.

2. **INSTALL WIRE HARNESS**
   (a) Install the earth wire harness onto the cylinder block with the bolt.
   Torque: 13 N*m (133 kgf*cm, 10 ft.*lbf)

3. **INSTALL NO.2 MANIFOLD STAY**
   (a) Install the manifold stay No. 2 with the 3 bolts.
   Torque: 40 N*m (408 kgf*cm, 30 ft.*lbf)

4. **INSTALL NO.1 ENGINE UNDER COVER SUB-ASSEMBLY (for Off Road Package)**
   (a) Install the engine under cover with the 4 bolts.
   Torque: 30 N*m (306 kgf*cm, 22 ft.*lbf)

5. **CONNECT CABLE TO NEGATIVE BATTERY TERMINAL**
   Torque: 3.9 N*m (40 kgf*cm, 35 in.*lbf)

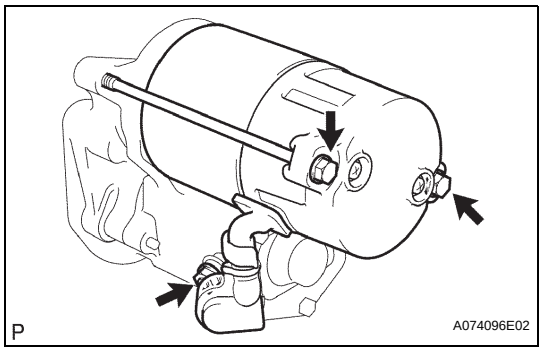

DISASSEMBLY

1. REMOVE STARTER YOKE ASSEMBLY

(a) Remove the nut, then disconnect the lead wire from terminal C.
(b) Remove the 2 through bolts.
(c) Pull the starter yoke and the armature out together.
(d) Remove the O-ring from the starter yoke.

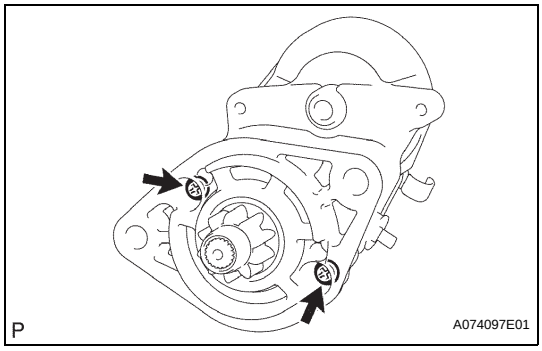

2. REMOVE MAGNET STARTER SWITCH ASSEMBLY

(a) Remove the 2 screws, then remove the magnet starter switch.

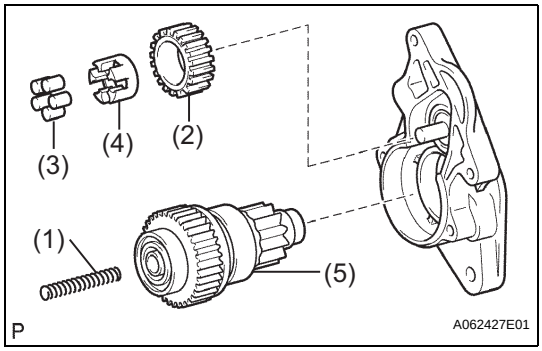

(b) Remove these parts from the starter drive housing.

(1)	Starter magnet switch return spring
(2)	Starter idle gear pinion
(3)	Starter idle gear clutch roller
(4)	Starter idle gear retainer
(5)	Starter clutch

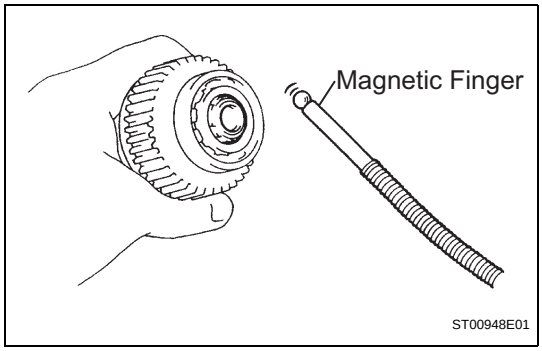

(c) Using a magnetic finger, remove the steel ball from the clutch shaft hole.

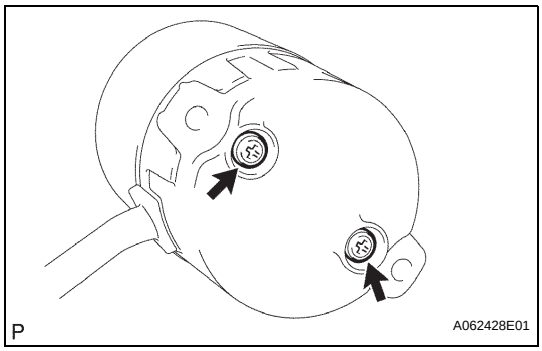

3. REMOVE STARTER BRUSH HOLDER ASSEMBLY

(a) Remove the 2 screws, then remove the end frame from the starter yoke.
(b) Remove the O-ring from the starter yoke.

ST

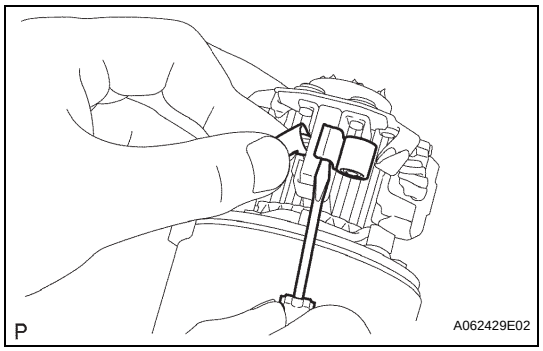

(c) Using a screwdriver, hold the spring back and disconnect the 4 brushes from the brush holder.
(d) Remove the brush holder from the armature.

4. REMOVE STARTER ARMATURE ASSEMBLY

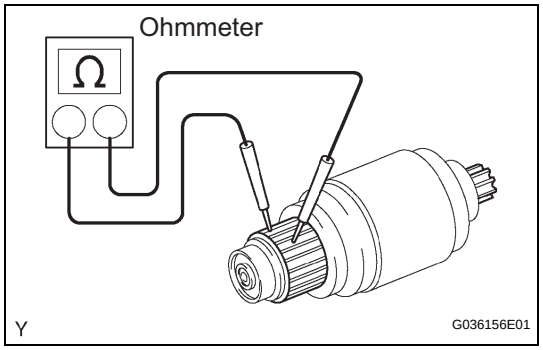

INSPECTION

1. INSPECT STARTER ARMATURE ASSEMBLY

(a) Check the commutator for an open circuit.
(1) Using an ohmmeter, measure the resistance between the segments of the commutator.
Standard:
1Ω or lower
If the result is not as specified, replace the starter armature.

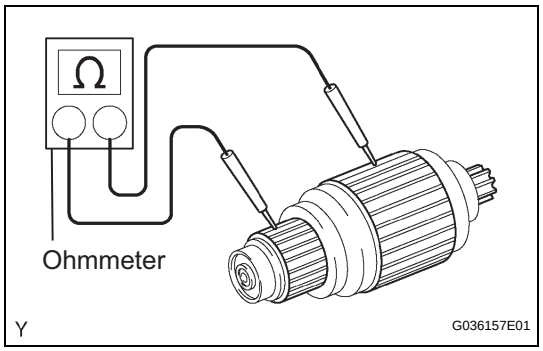

(b) Check the commutator for ground.
(1) Using an ohmmeter, measure the resistance between the commutator and armature coil core.
Standard:
10 kΩ or higher
If the result is not as specified, replace the starter armature.

(c) Check whether the commutator surface is dirty or burnt.
If necessary, clean it with sandpaper (No. 400) or a lathe.

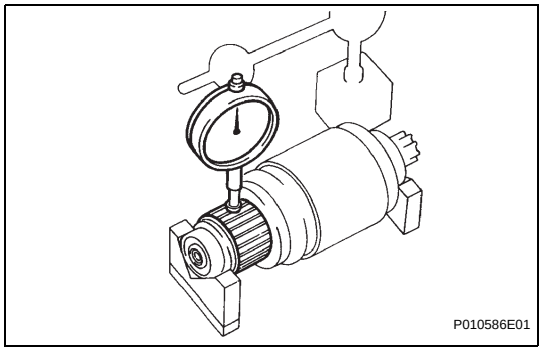

(d) Check the commutator for runout.
(1) Place the commutator on V-blocks.
(2) Using a dial gauge, measure the runout.
Maximum runout:
0.05 mm (0.0020 in.)
If the runout is greater than the maximum, correct it on a lathe.

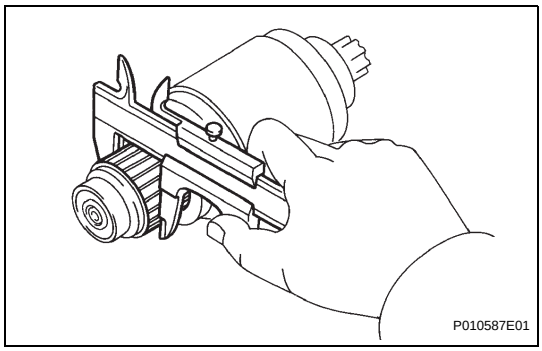

(e) Using vernier calipers, measure the commutator diameter.
Standard diameter:
35.0 mm (1.378 in.)
Minimum diameter:
34.0 mm (1.339 in.)
If the diameter is less than the minimum, replace the armature.

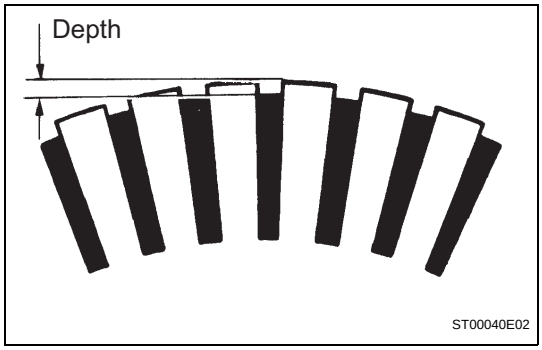

(f) Check that the undercut portion between the segments is free of foreign objects. Measure its depth.
Standard undercut depth:
0.7 mm (0.028 in.)
Minimum undercut depth:
0.2 mm (0.008 in.)
If the undercut depth is less than the minimum, correct it with a hacksaw blade.

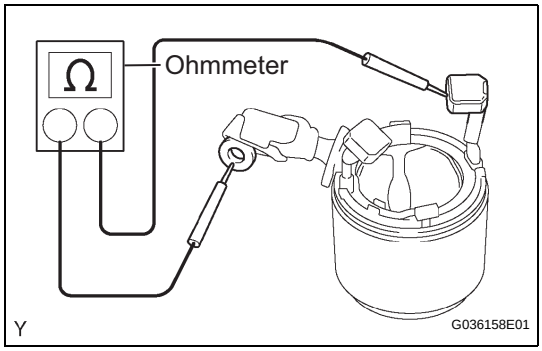

2. INSPECT STARTER YOKE ASSEMBLY

(a) Check the starter yoke for an open circuit.
(1) Using an ohmmeter, measure the resistance between the lead wire and brushes.
Standard:
1 Ω or lower
If the result is not as specified, replace the starter yoke.

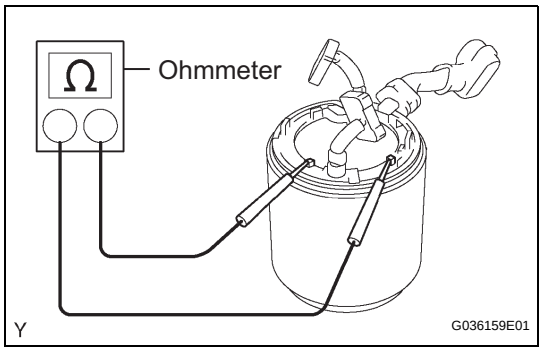

(b) Check the shunt coil for an open circuit.
(1) Using an ohmmeter, measure the resistance between shunt coil terminals A and B.
Standard:
1.5 to 1.9 Ω at 20°C (68°F)
If the result is not as specified, replace the starter yoke.

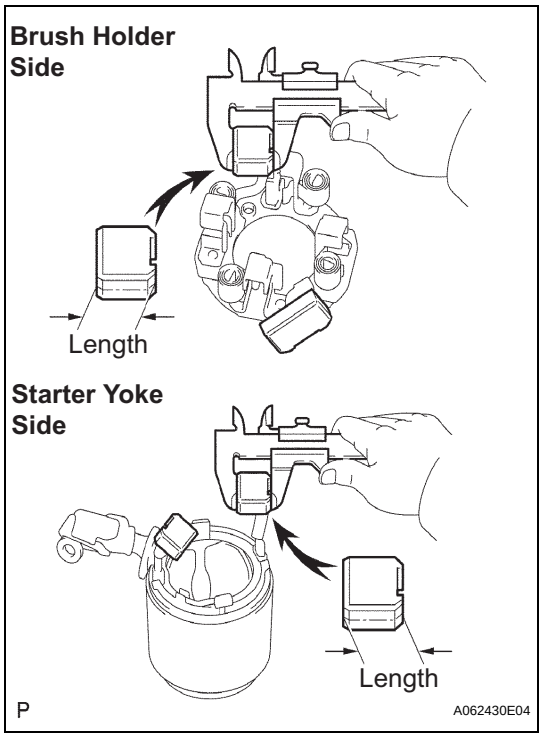

3. INSPECT BRUSH

(a) Check the brush length.

(1) Using vernier calipers, measure the brush length.

Standard length:
15.0 mm (0.591 in.)
Minimum length:
9.0 mm (0.354 in.)

If the length is less than the minimum, replace the brush holder and starter yoke.

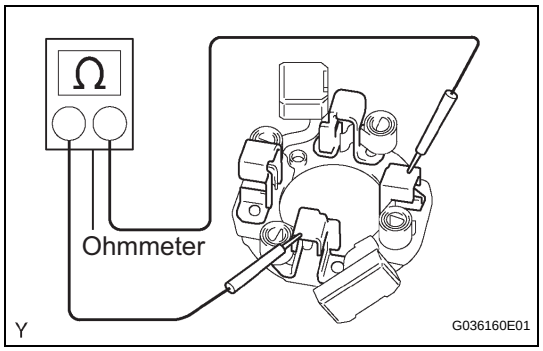

4. INSPECT STARTER BRUSH HOLDER ASSEMBLY

(a) Check the blush holder insulation.

(1) Using an ohmmeter, measure the resistance between the positive (+) and negative (-) brush holders.

Standard:
10 kΩ or higher

If the result is not as specified, replace the brush holder.

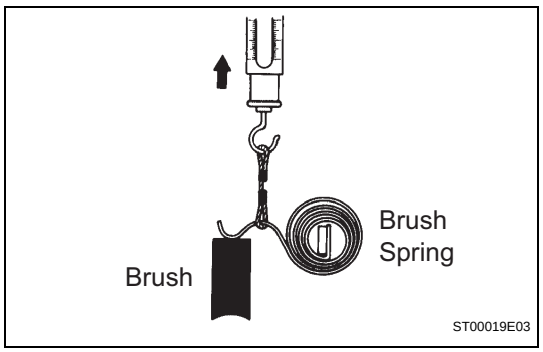

(b) Check the brush spring load.

(1) Take the pull scale reading as soon as the brush spring separates from the brush.

Standard spring load:
21.5 to 27.5 N (2.2 to 2.8 kgf, 4.8 to 6.2 lbf)
Minimum spring load:
12.7 N (1.3 kgf, 2.9 lbf)

If the spring load is less than the minimum, replace the brush holder.

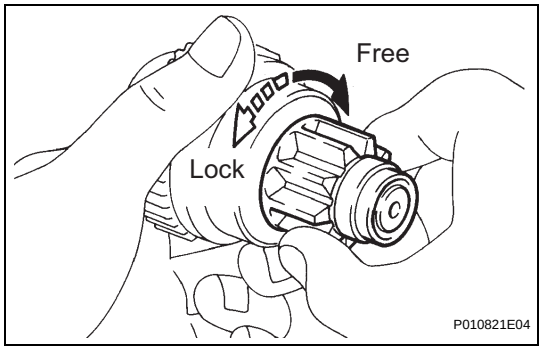

5. INSPECT STARTER CLUTCH SUB-ASSEMBLY

(a) Check the clutch pinion gear.

(1) Hold the starter clutch, rotate the pinion gear clockwise and check that it turns freely.

(2) Try to rotate the pinion gear counterclockwise and check that it locks.

If necessary, replace the starter clutch.

ST

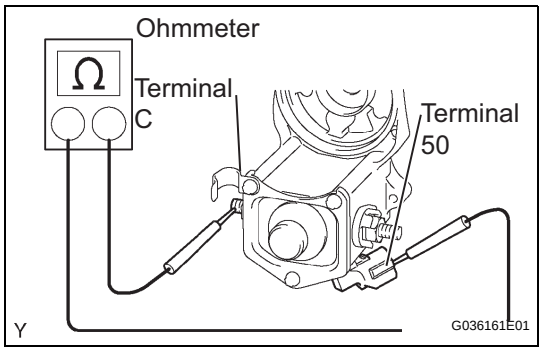

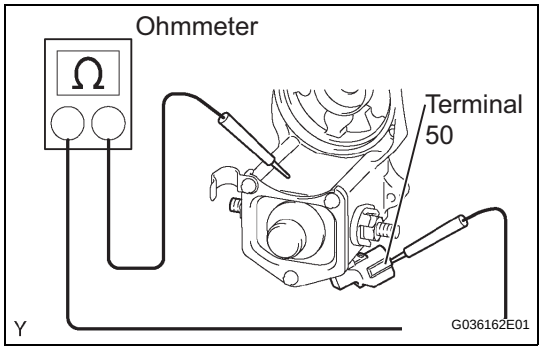

6. INSPECT MAGNET STARTER SWITCH ASSEMBLY

(a) Check the pull-in coil for an open circuit.

(1) Using an ohmmeter, measure the resistance between terminals 50 and C.

Standard:

1 Ω or lower

If the result is not as specified, replace the magnet starter switch.

(b) Check the holding coil for an open circuit.

(1) Using an ohmmeter, measure the resistance between terminal 50 and the switch body.

Standard:

2 Ω or lower

If the result is not as specified, replace the magnet starter switch.

REASSEMBLY

1. INSTALL STARTER ARMATURE ASSEMBLY

(a) Apply grease to the bearings, and install it onto the starter yoke.

2. INSTALL STARTER BRUSH HOLDER ASSEMBLY

(a) Place the brush holder on the armature.

(b) Using a screwdriver, install the 4 brushes.

(c) Install a new O-ring onto the groove of the field frame.

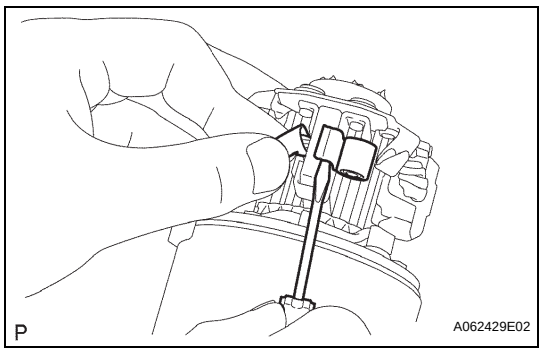

(d) Install the end frame with the 2 screws.
Torque: 3.8 N*m (39 kgf*cm, 34 in.*lbf)

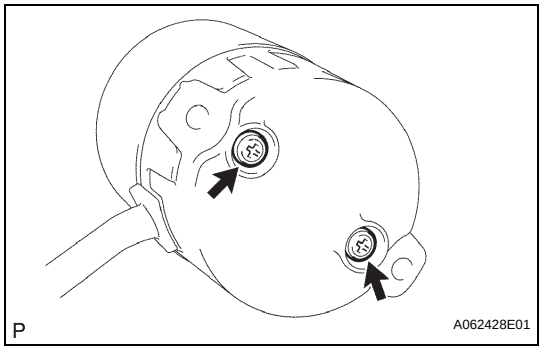

3. INSTALL MAGNET STARTER SWITCH ASSEMBLY

(a) Apply grease to the steel ball, and install it onto the clutch shaft hole.

(b) Apply grease to parts (2)- (5), and install all the parts below onto the starter drive housing.

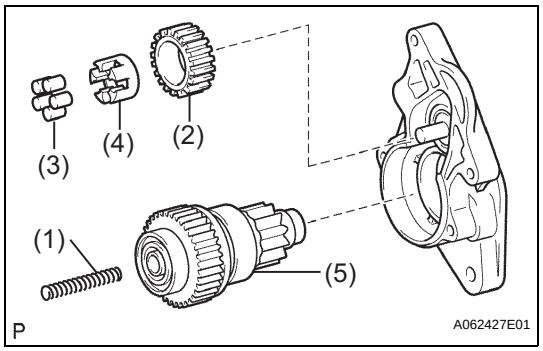

(1)	Starter magnet switch return spring
(2)	Starter idle gear pinion
(3)	Starter idle gear clutch roller
(4)	Starter idle gear retainer
(5)	Starter clutch

(c) Install the magnet starter switch with the 2 screws.
Torque: 9.3 N*m (95 kgf*cm, 82 in.*lbf)

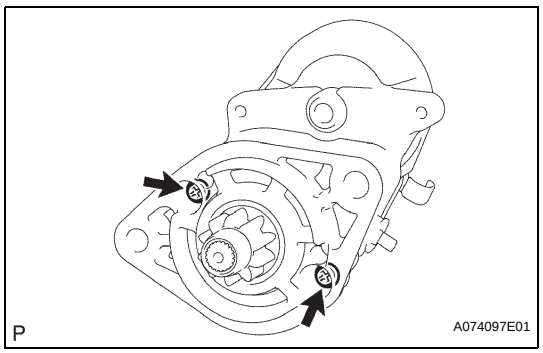

4. INSTALL STARTER YOKE ASSEMBLY

(a) Install a new O-ring onto the groove of the starter yoke.

ST

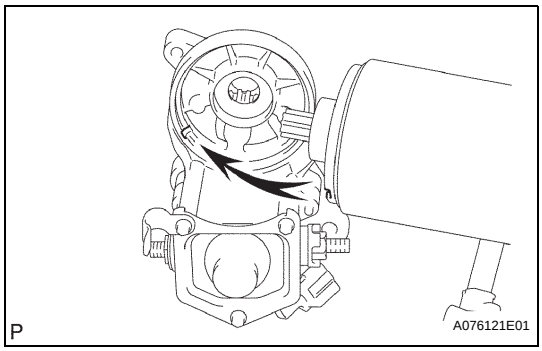

(b) Align the key of the starter yoke with the groove of the magnet starter switch.

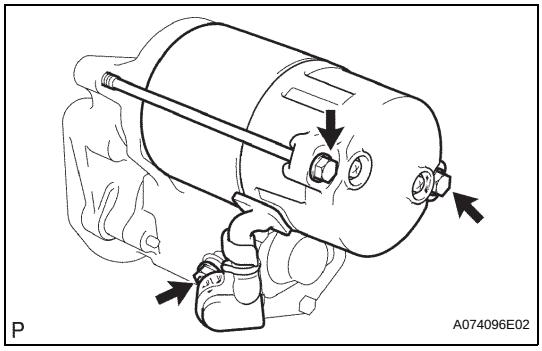

(c) Install the starter yoke and armature with the 2 through bolts.
Torque: 9.3 N*m (95 kgf*cm, 82 in.*lbf)

(d) Connect the lead wire to terminal C with the nut.
Torque: 5.9 N*m (60 kgf*cm, 52 in.*lbf)

INSTALLATION

1. INSTALL STARTER ASSEMBLY

(a) Install the starter assembly with the 2 bolts.
Torque: 37 N*m (377 kgf*cm, 27 ft.*lbf)

(b) Install the wire harness to terminal 30 with the nut.
Torque: 9.8 N*m (100 kgf*cm, 7 ft.*lbf)

(c) Connect the terminal 50 connector to the starter assembly.

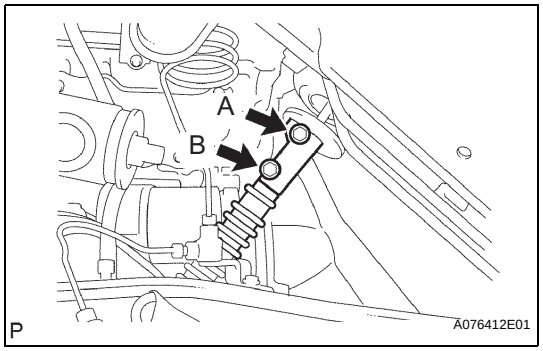

2. INSTALL NO.2 STEERING INTERMEDIATE SHAFT

(a) Install the steering sliding yoke onto steering intermediate shaft No. 2.

(b) Install bolt B and then tighten bolt B and A.
Torque: 36 N*m (370 kgf*cm, 27 ft.*lbf)

3. INSTALL FRONT FENDER SEAL LH

(a) Install the front fender splash shield rear LH with the 5 clips.

4. INSTALL NO.2 EXHAUST FRONT PIPE ASSEMBLY
(See page EX-3)

5. CONNECT CABLE TO NEGATIVE BATTERY TERMINAL
Torque: 3.9 N*m (40 kgf*cm, 35 in.*lbf)

6. CHECK FOR EXHAUST GAS LEAKAGE

7. INSTALL NO.1 ENGINE UNDER COVER SUB-ASSEMBLY

(a) Install the engine under cover with the 4 bolts.
Torque: 29 N*m (296 kgf*cm, 21 ft.*lbf)

INSTALLATION

1. **INSTALL GENERATOR ASSEMBLY**
   (a) Install the generator assembly with the 2 bolts.
   Torque: 43 N*m (438 kgf*cm, 32 ft.*lbf)
   (b) Install the wire harness clamp bracket with the 2 bolts.
   Torque: 8.0 N*m (82 kgf*cm, 71 in.*lbf)
   (c) Connect the wire harness.
      (1) Connect the wire harness to terminal B and install the nut.
      Torque: 9.8 N*m (100 kgf*cm, 7.0 ft.*lbf)
      (2) Connect the connector to the generator assembly.
      (3) Install the wire harness stay with the bolt.
      Torque: 8.0 N*m (82 kgf*cm, 71 in.*lbf)
2. **INSTALL FAN SHROUD (See page CO-20)**
3. **INSTALL RADIATOR SUPPORT TO FRAME SEAL LH**
4. **INSTALL V-BANK COVER (See page ES-416)**
5. **CONNECT CABLE TO NEGATIVE TERMINAL**
   Torque: 3.9 N*m (40 kgf*cm, 35 in.*lbf)

INSTALLATION

1. **INSTALL GENERATOR ASSEMBLY**
   (a) Install the generator assembly with the 2 bolts.
   Torque: 43 N*m (438 kgf*cm, 32 ft.*lbf)
   (b) Install the wire harness clamp bracket with the 2 bolts.
   Torque: 8.0 N*m (82 kgf*cm, 71 in.*lbf)
   (c) Connect the wire harness.
      (1) Connect the wire harness to terminal B and install the nut.
      Torque: 9.8 N*m (100 kgf*cm, 7.0 ft.*lbf)
      (2) Connect the connector to the generator assembly.
      (3) Install the wire harness stay with the bolt.
      Torque: 8.0 N*m (82 kgf*cm, 71 in.*lbf)
2. **INSTALL FAN SHROUD (See page CO-20)**
3. **INSTALL RADIATOR SUPPORT TO FRAME SEAL LH**
4. **INSTALL V-BANK COVER (See page ES-416)**
5. **CONNECT CABLE TO NEGATIVE BATTERY TERMINAL**
   Torque: 3.9 N*m (40 kgf*cm, 35 in.*lbf)

REASSEMBLY

1. INSTALL GENERATOR ROTOR ASSEMBLY

(a) Place the drive end frame on the generator rotor assembly.
NOTICE:
Do not drop the generator rotor assembly.

(b) Install the generator rotor assembly and plate retainer.

(c) Using a 17 mm socket wrench and press, slowly press in the rectifier end frame.

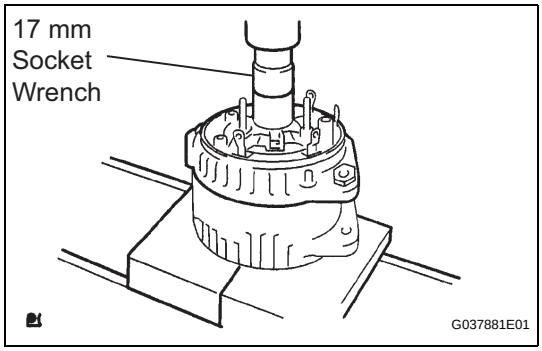

(d) Install the 4 nuts.
Torque: 4.5 N*m (46 kgf*cm, 40 in.*lbf)

(e) Install the 3 terminal insulators to the rectifier end frame.

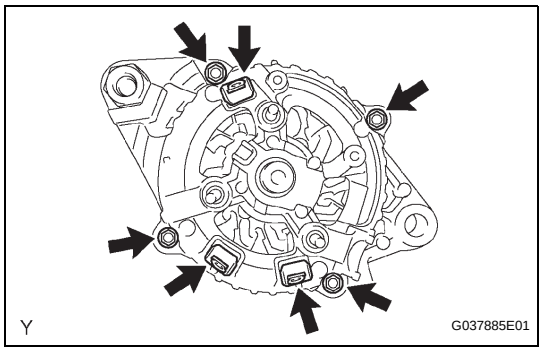

2. INSTALL GENERATOR HOLDER WITH RECTIFIER

(a) Install the generator rectifier holder with the 3 screws.
Torque: 2.0 N*m (20 kgf*cm, 17 in.*lbf)

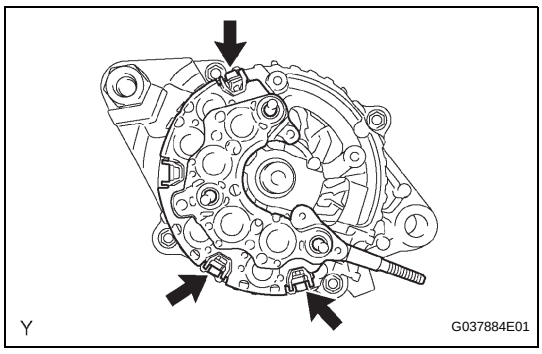

3. INSTALL GENERATOR REGULATOR ASSEMBLY

(a) Install the generator regulator assembly with the 2 screws.
Torque: 2.0 N*m (20 kgf*cm, 17 in.*lbf)

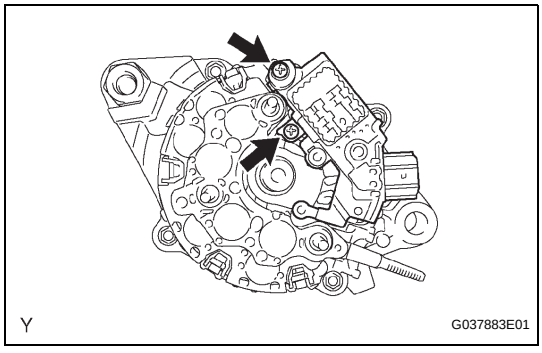

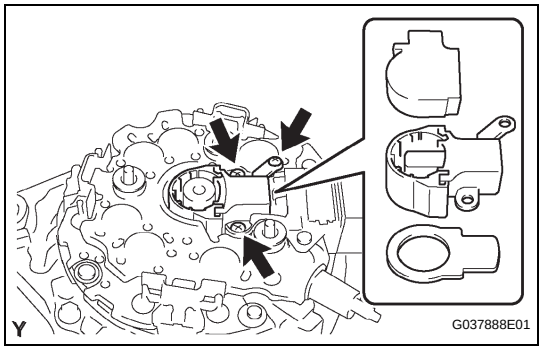

4. INSTALL GENERATOR BRUSH HOLDER ASSEMBLY

(a) Install the plate seal.

(b) Install the generator brush holder assembly with the 3 screws.
Torque: 2.0 N*m (20 kgf*cm, 17 in.*lbf)

(c) Install the brush cover on the generator brush holder assembly.

(d) Install the rear end cover with the 2 nuts.
Torque: 4.4 N*m (45 kgf*cm, 39 in.*lbf)

(e) Install the rectifier plate with the nut and screw.
Torque: 4.4 N*m (45 kgf*cm, 39 in.*lbf) for nut
Torque: 3.9 N*m (40 kgf*cm, 34 in.*lbf) for bolt

(f) Install the terminal insulator with the nut.
Torque: 4.1 N*m (42 kgf*cm, 36 in.*lbf)

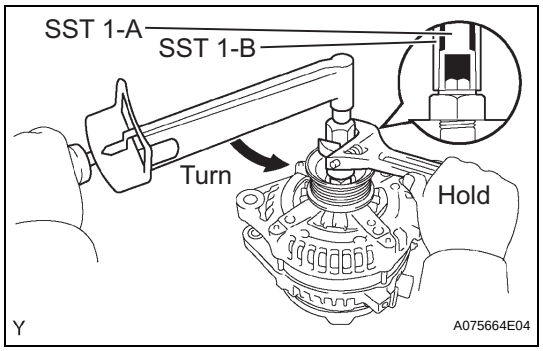

5. INSTALL GENERATOR PULLEY

SST 09820-63010 (09820-06010, 09820-06020)

HINT:

SST 1-A and B	09820-06010
SST 2	09820-06020

(a) Install the generator pulley to the generator rotor shaft by tightening the generator pulley nut by hand.

(b) Hold SST 1-A with a torque wrench, and tighten SST 1-B clockwise with the specified torque.
Torque:
39 N*m (398 kgf*cm, 29 ft.*lbf)
NOTICE:
Check that the SST is secured to the generator rotor shaft.

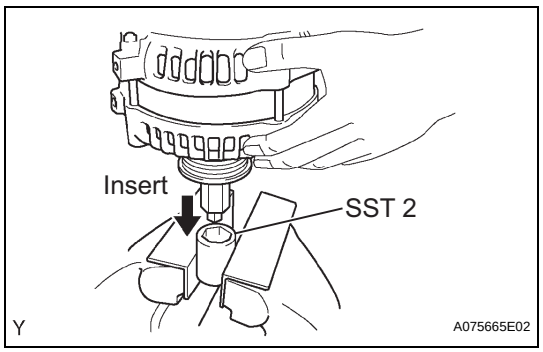

(c) Mount SST 2 in a vise.

(d) Insert SST 1-A and B into SST 2, and attach the generator pulley nut to SST 2.

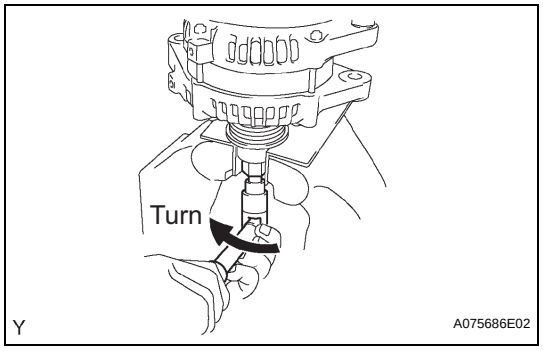

(e) Tighten the generator pulley nut by turning SST 1-A in the direction shown in the illustration.
Torque: 137 N*m (1,397 kgf*cm, 101 ft.*lbf)

(f) Remove the generator from SST 2.

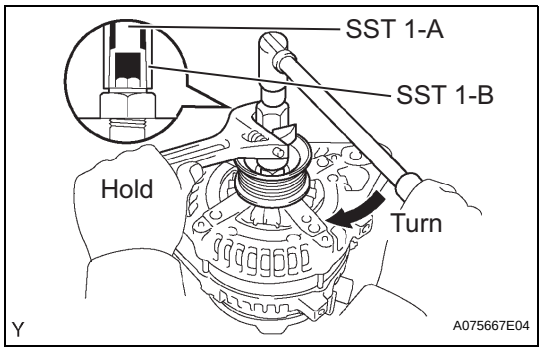

(g) Turn SST 1-B, and remove SST 1-A and B.
(h) Turn the generator pulley, and check that the generator pulley moves smoothly.

INSTALLATION

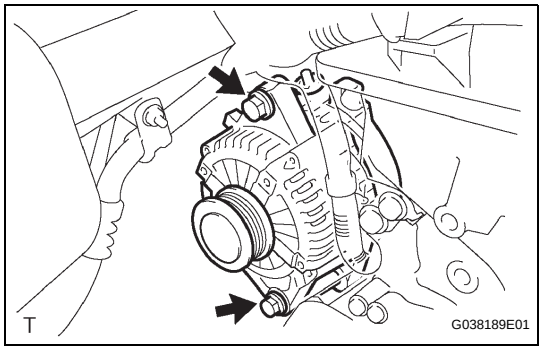

1. INSTALL GENERATOR ASSEMBLY
(a) Install the generator with the 2 bolts.
Torque: 43 N*m (438 kgf*cm, 32 ft.*lbf)

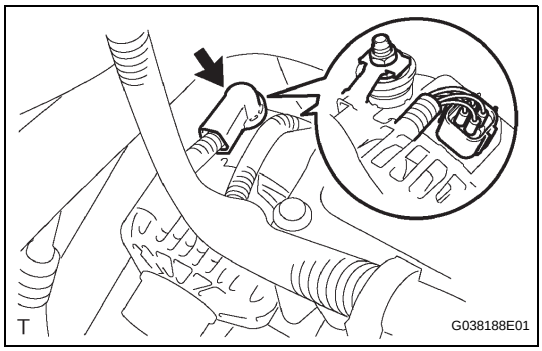

(b) Connect the generator connector.
(c) Install the generator wire with the nut.
Torque: 9.8 N*m (100 kgf*cm, 7 ft.*lbf)
(d) Install the terminal cap.

2. INSTALL FAN AND GENERATOR V BELT (See page EM-6)

3. CONNECT CABLE TO NEGATIVE BATTERY TERMINAL
Torque: 3.9 N*m (40 kgf*cm, 35 in.*lbf)

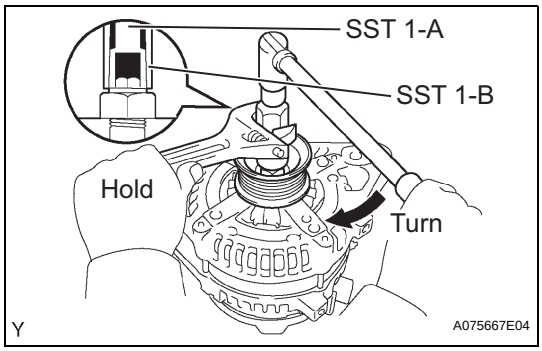

(g) Turn SST 1-B, and remove SST 1-A and B.
(h) Turn the generator pulley, and check that the generator pulley moves smoothly.

INSTALLATION

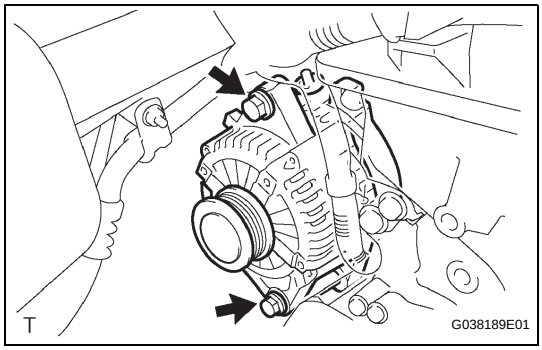

1. INSTALL GENERATOR ASSEMBLY
(a) Install the generator with the 2 bolts.
Torque: 43 N*m (438 kgf*cm, 32 ft.*lbf)

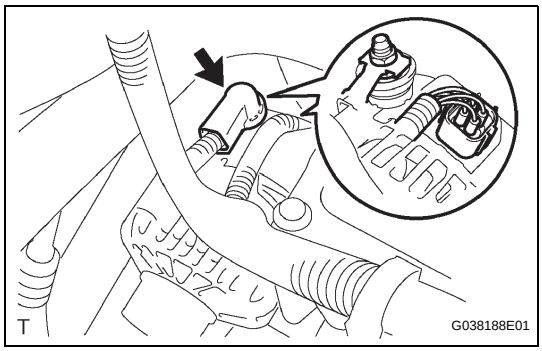

(b) Connect the generator connector.
(c) Install the generator wire with the nut.
Torque: 9.8 N*m (100 kgf*cm, 7 ft.*lbf)
(d) Install the terminal cap.

2. INSTALL FAN AND GENERATOR V BELT (See page EM-6)

3. CONNECT CABLE TO NEGATIVE BATTERY TERMINAL
Torque: 3.9 N*m (40 kgf*cm, 35 in.*lbf)

SYSTEM DIAGRAM

The configuration of the electronic control system in the A340E automatic transmission is as shown in the following chart.

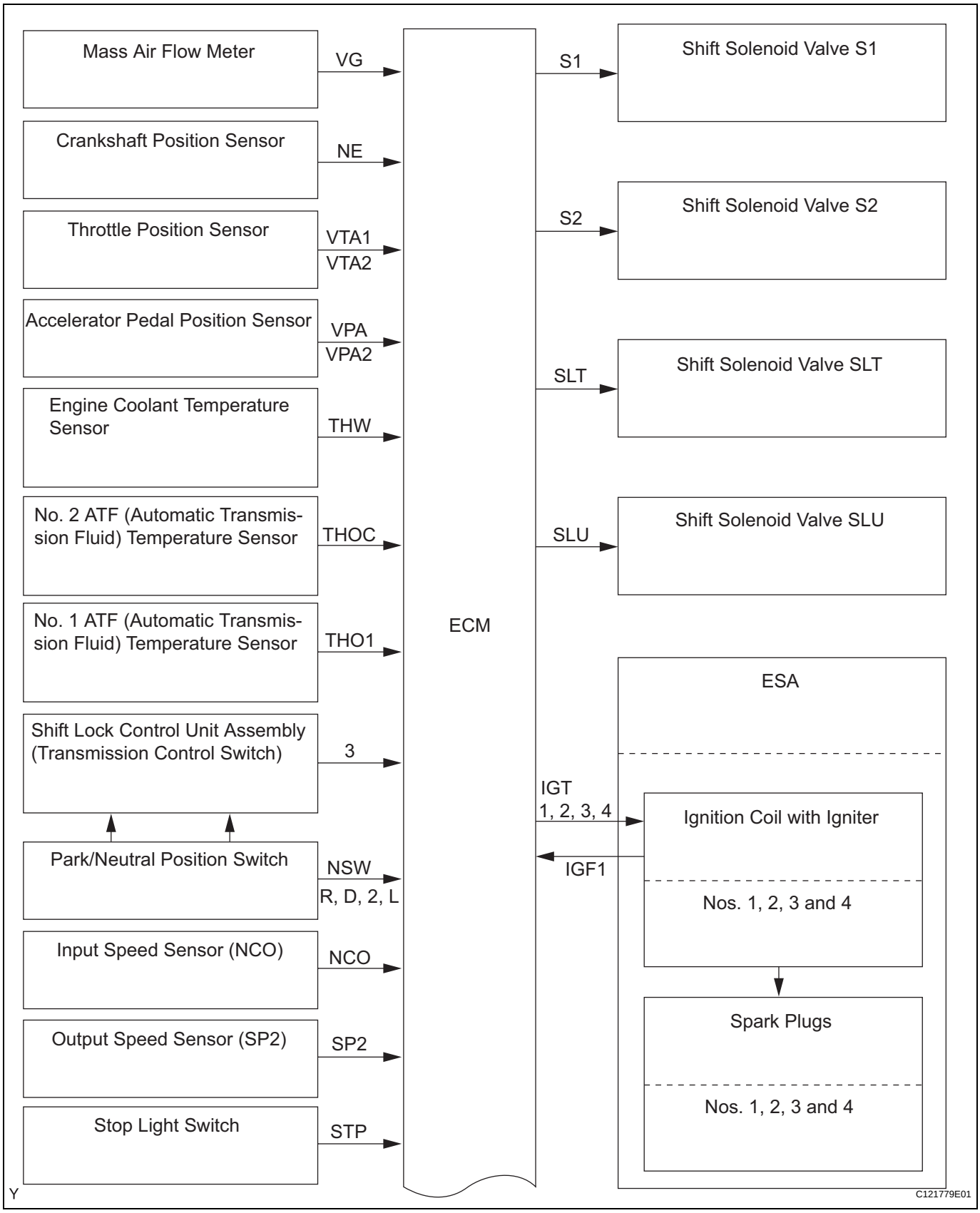

AT

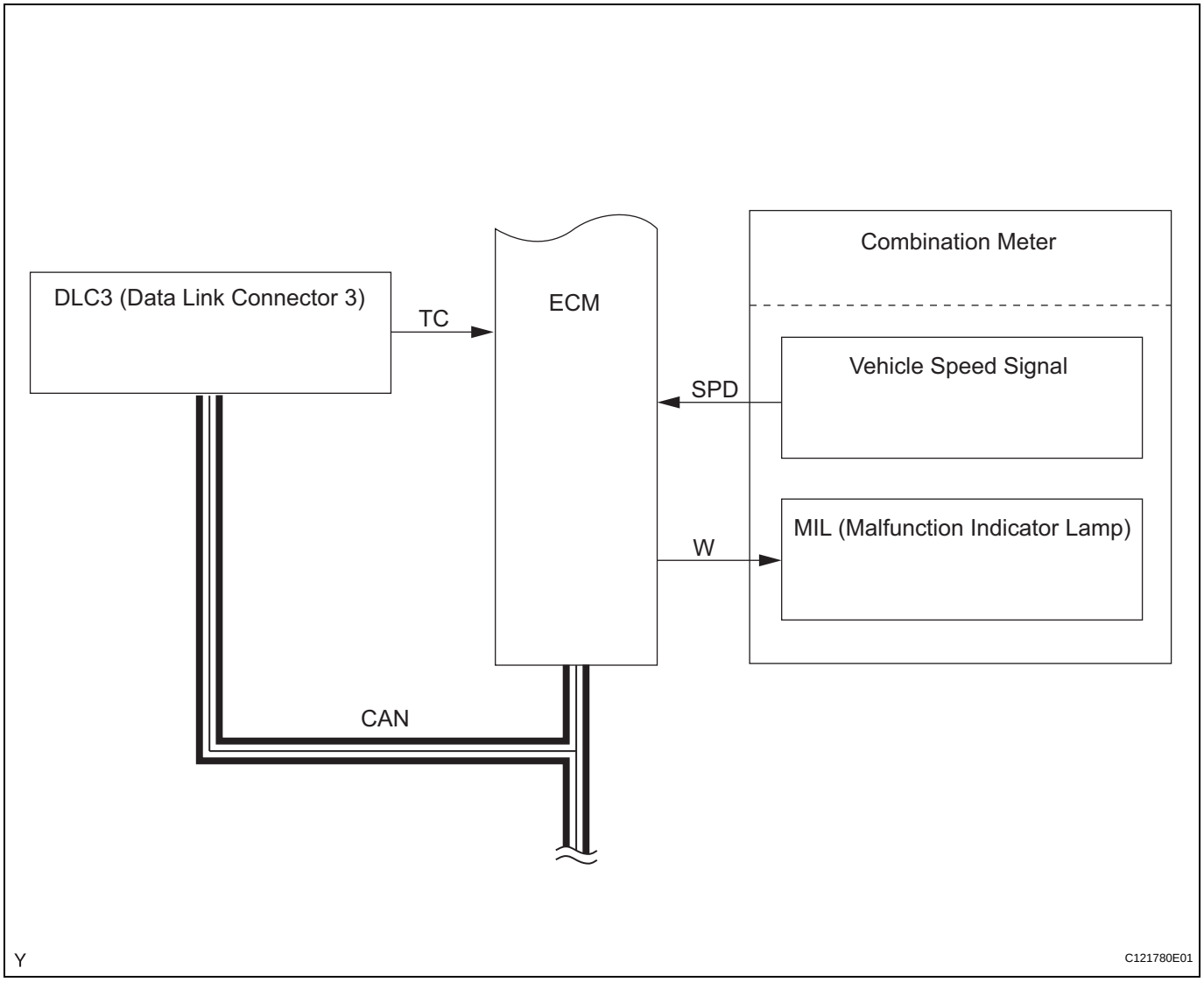
Combination Meter
DLC3 (Data Link Connector 3)
TC
ECM
SPD
Vehicle Speed Signal
MIL (Malfunction Indicator Lamp)
W
CAN
Y
C121780E01

SYSTEM DESCRIPTION

1. SYSTEM DESCRIPTION

(a) The ECT (Electronic Controlled automatic Transmission) is an automatic transmission that electronically controls shift timing using the ECM. The ECM detects electrical signals that indicate engine and driving conditions, and controls the shift point, based on driver habits and road conditions. As a result, fuel efficiency and power transmission performance are improved.
Shift shock has been reduced by controlling the engine and transmission simultaneously. In addition, the ECT has features such as follows:

- Diagnostic function.
- Fail-safe function when a malfunction occurs.

HOW TO PROCEED WITH TROUBLESHOOTING

HINT:

- The ECM of this system is connected to the CAN and multiplex communication system. Therefore, before starting troubleshooting, make sure that there is no trouble in the CAN and multiplex communication system.
- The intelligent tester can be used at steps 3, 4, 6, and 9.

1 **Vehicle Brought to Workshop**

NEXT

2 **Customer Problem Analysis**

NEXT

3 **Connect the intelligent tester to DLC3**

NEXT

4 **Check and Clear DTC and Freeze Frame Data (See page AT-25)**

NEXT

5 **Visual Inspection**

NEXT

6 **Setting the Check Mode Diagnosis (See page AT-26)**

NEXT

7 **Problem Symptom Confirmation (See page AT-9)**

Result	Proceed To
Symptom does not occur	A
Symptom occurs	B

B → **Go to step 9**

A

8	Symptom Simulation (See page IN-26)

NEXT

9	DTC Check (See page AT-25)

Result	Proceed To
DTC is not output	A
DTC is output	B

B → Go to step 17

A

10	Basic Inspection (See page AT-85, AT-92 and AT-105)

NG → Go to step 19

OK

11	Mechanical System Test (See page AT-12)

NG → Go to step 16

OK

12	Hydraulic Test (See page AT-14)

NG → Go to step 16

OK

13	Manual Shifting Test (See page AT-15)

NG → Go to step 15

OK

14	Problem Symptoms Table Chapter 1 (See page AT-17)

NG → Go to step 18

OK

15	Problem Symptoms Table Chapter 2 (See page AT-17)

NEXT

16	Part Inspection

NEXT

17	DTC Chart (See page AT-30)

NEXT

18	Circuit Inspection

NEXT

19	Repair or Replace

NEXT

20	Confirmation Test

NEXT

End

ROAD TEST

1. PROBLEM SYMPTOM CONFIRMATION

(a) Based on the result of the customer problem analysis, try to reproduce the symptoms. If the problem is that the transmission does not shift up, shift down, or the shift point is too high or too low, conduct the following road test while referring to the automatic shift schedule and simulate the problem symptoms.

2. ROAD TEST

NOTICE:

Perform the test at the normal operating ATF (Automatic Transmission Fluid) temperature: 50° to 80°C (122° to 176°F).

(a) D position test:

Shift into the D position, fully depress the accelerator pedal and check the following points:

(1) Check up-shift operation.

Check that 1 →2, 2 → 3 and 3 → 4 up-shifts take place, and that the shift points conform to the automatic shift schedule. (See page SS-37)

HINT:

4th Gear Up-shift Prohibition Control

- Engine coolant temperature is 55 °C (131 °F) or less and vehicle speed is 49.7 mph (80 km/h) or less.

4th Gear Lock-up Prohibition Control

- Brake pedal is depressed.
- Accelerator pedal is released.
- Engine coolant temperature is 55°C(131 °F) or less.

(2) Check for shift shock and slippage.

Check for shock and slippage at the 1 → 2, 2 → 3 and 3 → 4 up-shifts.

(3) Check for abnormal noise and vibration.

Check for abnormal noise and vibration when up-shifting from 1 → 2, 2 → 3 and 3 → 4 while driving with the shift lever in the D position, and check while driving in the lock-up condition.

HINT:

The check for the cause of abnormal noise and vibration must be done thoroughly as it could also be due to loss of balance in the differential, torque converter clutch, etc..

(4) Check kick-down operation.

While running in the D position, 2nd, 3rd and 4th gears, check that the possible kick-down vehicle speed limits for 2 → 1, 3 → 2 and 4 → 3 kick-downs conform to those indicated on the automatic shift schedule. (See page SS-37)

(5) Check for abnormal shock and slippage at kick-down.

(6) Check the lock-up mechanism.
- Drive in the D position (4th gear), at a steady speed (lock-up ON).
- Lightly depress the accelerator pedal and check that the engine speed does not change abruptly.

HINT:
- There is no lock-up function in the 1st and 2nd gears.
- If there is a sudden increase in engine speed, there is no lock-up.

(b) 3 position test:
Shift into the 3 position, fully depress the accelerator pedal and check the following points:
(1) Check up-shift operation.
Check that 1 → 2, 2 → 3 up-shifts take place and that the shift point conforms to the automatic shift schedule (See page SS-37).
HINT:
There is no 4th up-shift and lock-up in the 3 position. 3rd Gear Lock-up Prohibition Control
- Brake pedal is depressed.
- Accelerator pedal is released.
- Engine coolant temperature is 55 °C (131 °F) or less.

(2) Check engine braking.
While running in the 3 position and 3rd gear, release the accelerator pedal and check the engine braking effect.
(3) Check for abnormal noise during acceleration and deceleration, and for shock at up-shift and down-shift.
(4) Check the lock-up mechanism.
- Drive in the 3 position (3rd gear), at a steady speed (lock-up ON).
- Lightly depress the accelerator pedal and check that the engine speed does not change abruptly.

HINT:
- There is no lock-up function in the 1st and 2nd gears.
- If there is a sudden increase in engine speed, there is no lock-up.

(c) 2 position test:
Shift into the 2 position, fully depress the accelerator pedal and check the following points:
(1) Check up-shift operation.
Check that 1 → 2 up-shift takes place and that the shift point conforms to the automatic shift schedule. (See page SS-37).
(2) Check engine braking.
While running in the 2 position and 2nd gear, release the accelerator pedal and check the engine braking effect.

(3) Check for abnormal noise during acceleration and deceleration, and for shock at up-shift and down-shift.

(d) L position test:
Shift into the L position, fully depress the accelerator pedal and check the following points:
(1) Check no up-shift.
While running in the L position, check that there is no up-shift to the 2nd gear.
(2) Check engine braking.
While running in the L position, release the accelerator pedal and check the engine braking effect.
(3) Check for abnormal noises during acceleration and deceleration.

(e) R position test:
Shift into the R position, lightly depress the accelerator pedal, and check that the vehicle moves backward without any abnormal noise or vibration.
CAUTION:
Before conducting this test, ensure that the test area is free from people and obstructions.

(f) P position test:
Stop the vehicle on a grade (more than 5°) and after shifting into the P position, release the parking brake. Then, check that the parking lock pawl holds the vehicle in place.

MECHANICAL SYSTEM TESTS

1. STALL SPEED TEST

HINT:

This test is to check the overall performance of the engine and transmission.

NOTICE:

- **Do not perform the stall speed test longer than 5 seconds.**
- **To ensure safety, perform this test in an open and level area that provides good traction.**
- **The stall speed test should always be performed with at least 2 people. One person should observe the condition of the wheels and wheel chocks while the other is performing the test.**

(a) Connect the intelligent tester to the CAN VIM. Then connect the CAN VIM to the DLC3.

(b) Run the vehicle until the transmission fluid temperature has reached 50 to 80°C (122 to 176°F).

(c) Allow the engine to idle with the air conditioning OFF.

(d) Chock all 4 wheels.

(e) Set the parking brake and keep the brake pedal depressed firmly with your left foot.

(f) Shift the shift lever into the D position.

(g) Depress the accelerator pedal as much as possible with your right foot.

(h) Read the engine rpm (stall speed) and release the accelerator pedal immediately.

Standard value:

1,850 to 2,150 rpm

Evaluation:

Test Result	Possible Cause
Stall speed is lower than standard value	• Stator one-way clutch is not operating properly • Torque converter is faulty (stall speed is less than standard value by 600 rpm or more) • Engine power may be insufficient
Stall speed is higher than standard value	• Line pressure is low • Forward clutch slipping • No. 2 one-way clutch is not operating properly • O/D one-way clutch is not operating properly • Improper fluid level

2. SHIFT TIME LAG TEST

HINT:

This test is to check the condition of the direct clutch, forward clutch, 1st brake and reverse brake.

(a) Connect the intelligent tester to the CAN VIM. Then connect the CAN VIM to the DLC3.

(b) Run the vehicle until the transmission fluid temperature has reached 50 to 80°C (122 to 176°F).

(c) Allow the engine to idle with the air conditioning OFF.

(d) Set the parking brake and keep the brake pedal depressed firmly.

(e) Check the D range time lag.
(1) Shift the shift lever into the N position and wait for 1 minute.
(2) Shift the shift lever into the D position and measure the time until the shock is felt.
(3) Repeat the 2 procedures above 3 times, and calculate the average time of the 3 tests.

(f) Check the R range time lag.
(1) Shift the shift lever into the N position and wait for 1 minute.
(2) Shift the shift lever into the R position and measure the time until the shock is felt.
(3) Repeat the 2 procedures above 3 times, and calculate the average time of the 3 tests.

Standard value:

D range time lag is less than 1.2 seconds
R range time lag is less than 1.5 seconds

Evaluation:

Test Result	Possible Cause
D range time lag exceeds standard value	• Line pressure is low • Forward clutch is worn • O/D one-way clutch is not operating properly
R range time lag exceeds standard value	• Line pressure is low • Direct clutch is worn • 1st brake and reverse brake is worn • O/D one-way clutch is not operating properly

HYDRAULIC TEST

1. PERFORM HYDRAULIC TEST

(a) Measure the line pressure.

NOTICE:

- **Perform the test at the normal operating ATF (Automatic Transmission Fluid) temperature of 50° to 80°C (122° to 176°F).**
- **The line pressure test should always be carried out in pairs. One technician should observe the condition of the wheels or wheel stoppers outside the vehicle while the other is doing the test.**
- **Be careful to prevent the SST hose from interfering with the exhaust pipe.**
- **This check must be conducted after checking and adjusting the engine.**
- **Perform the test with A/C OFF.**
- **Do not conduct stall tests for longer than 5 seconds continuously.**

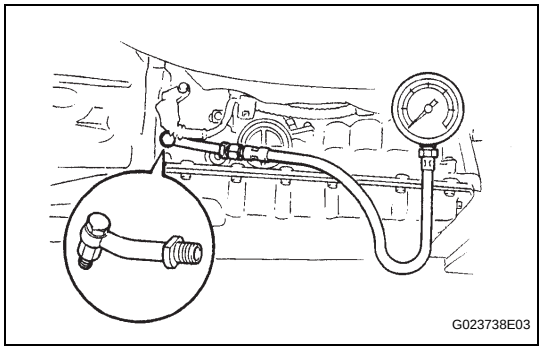

(1) Warm up the ATF.
(2) Lift the vehicle up.
(3) Remove the test plug on the transmission case center right side and connect SST.
SST 09992-00095 (09992-00231, 09992-00271)
(4) Fully apply the parking brake and chock the 4 wheels.
(5) Start the engine and check the idling speed.
(6) Keep your left foot pressing firmly on the brake pedal and shift into the D position.
(7) Measure the line pressure while the engine is idling.
(8) Depress the accelerator pedal all the way down. Quickly read the highest line pressure when the engine speed reaches the stall speed.
(9) In the same manner, do the test in the R position.

Specified line pressure

Condition	D position: kPa (kgf / cm^2, psi)	R position: kPa (kgf / cm^2, psi)
Idling	363 to 422 (3.7 to 4.3, 52.6 to 61.2)	608 to 706 (6.2 to 7.2, 88.2 to 102.4)
Stall test	932 to 1,177 (9.5 to 12.0, 135.2 to 170.7)	1,569 to 1,912 (16.0 to 19.5, 227.6 to 277.3)

Evaluation

Problem	Possible cause
If the measured values at all positions are too high	• Shift solenoid valve (SLT) defective • Regulator valve detective
If the measured values at all positions are too low	• Shift solenoid valve (SLT) defective • Regulator valve detective • Oil pump defective • O/D direct clutch defect
If pressure is low in the D position only	• D position circuit fluid leakage • Forward clutch defective

Problem	Possible cause
If pressure is low in the R position only	• **R position circuit fluid leakage** • **Direct clutch defective** • **1st & reverse brake defective**

MANUAL SHIFTING TEST

1. MANUAL SHIFTING TEST

HINT:

- Through this test, it can be determined whether the trouble occurs in the electrical circuit or if it is a mechanical problem in the transmission.
- If any abnormalities are found in the following test, the problem is in the transmission itself.

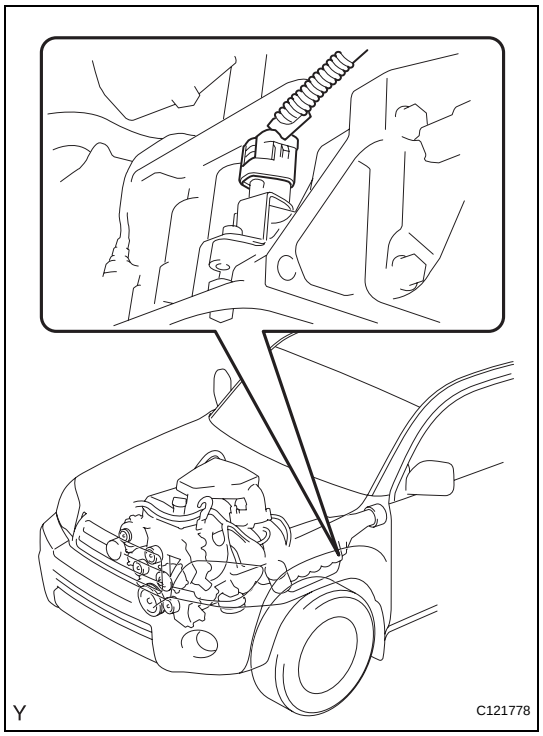

(a) Disconnect the connector of the transmission wire.
HINT:
It is possible to deactivate the electrical shift control by disconnecting the transmission wire. The gear positions can then be changed mechanically with the shift lever.

(b) Drive with the transmission wire disconnected. Move the shift lever to each position to check whether the gear position changes as shown in the table below.

Shift Lever Position	Gear Position
D	4th
3	4th
2	3rd
L	1st
R	R
P	P

(c) Connect the connector of the transmission wire.

(d) Clear the DTC. (See pageAT-25)

MONITOR DRIVE PATTERN

1. MONITOR DRIVE PATTERN FOR ECT TEST

(a) Perform this drive pattern as one method to simulate the detection conditions of the ECT (Electronic Controlled automatic Transmission) malfunctions.
(The DTCs may not be detected due to the actual driving conditions. And some DTCs may not be detected through this drive pattern.)
HINT:
Preparation for driving

- Warm up the engine sufficiently. (Engine coolant temperature should be 60 °C (140 °F) or higher)
- Drive the vehicle when the atmospheric temperature is -10 °C(14 °F) or higher. (Malfunction is not detected when the atmospheric temperature is less than -10 °C (14 °F))

Notice in driving

- Drive the vehicle through all gears.
  Stop → 1st → 2nd → 3rd → 4th → 4th (lock-up ON).
- Repeat the above driving pattern three times or more.

NOTICE:

- **The monitor status can be checked using the intelligent tester. When using the intelligent tester, monitor status can be found in the "ENHANCED OBD II/ DATA LIST" or under "CARB OBD II".**
- **In the event that the drive pattern must be interrupted (possibly due to traffic conditions or other factors) the drive pattern can be resumed and, in most cases, the monitor can be completed.**

CAUTION:
Perform this drive pattern on as level a road as possible and strictly observe the posted speed limits and traffic laws while driving.

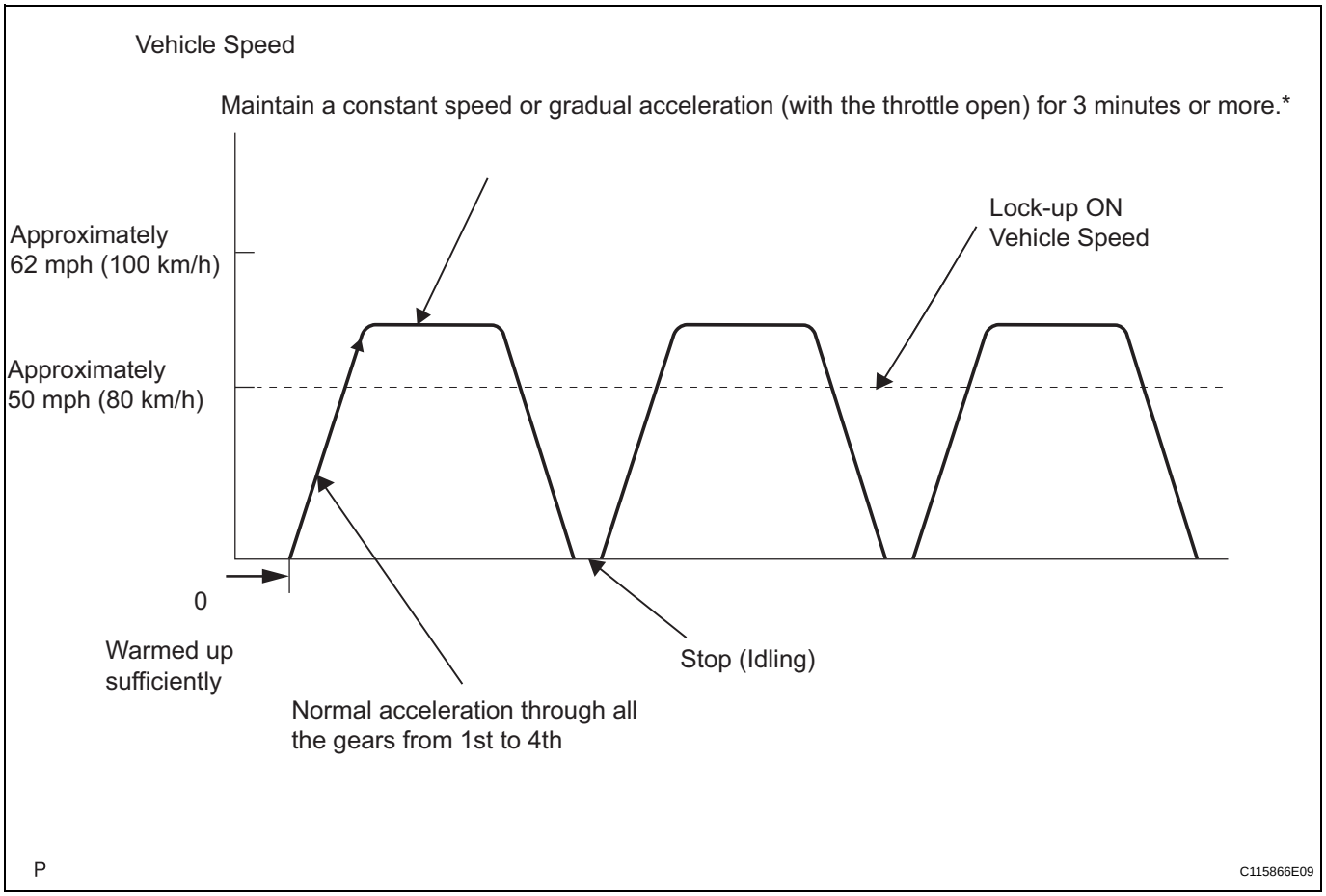

HINT:
*1: Drive at such a speed in the uppermost gear, so as to engage lock-up. The vehicle can be driven at a speed lower than that in the above diagram under the lock-up condition.

PROBLEM SYMPTOMS TABLE

HINT:

- If a normal code is displayed during the DTC check although the trouble still occurs, check the electrical circuits for each symptom in the order given in the charts on the following pages and proceed to the page given for troubleshooting.
- The Matrix Chart is divided into 2 chapters.
- When the circuit on which mark *1 is attached is a malfunction, DTC could be output.

Chapter 1: Electronic Circuit Matrix Chart

Refer to the table below when the trouble cause is considered to be electrical. The instruction "Proceed to next circuit inspection shown on matrix chart" is given in the flow chart for each circuit, proceed to the circuit with the next highest number in the table to continue the check. If the trouble still occurs even though there are no abnormalities in any of the other circuits, then check and replace the ECM.

Symptom	Suspected area	See page
No up-shift (1st to 2nd)	1. Shift solenoid valve (S2) circuit *1	AT-64
	2. Speed sensor SP2 circuit *1	AT-48
	3. ECM	IN-34
No up-shift (2nd to 3rd)	1. Shift solenoid valve (S1) circuit *1	AT-64
	2. ECM	IN-34
No up-shift (3rd to 4th)	1. Park/neutral position switch circuit *1	AT-34
	2. Engine coolant temperature sensor circuit *1	ES-54
	3. Shift solenoid valve (S2) circuit *1	AT-64
	4. ECM	IN-34
No down-shift (4th to 3rd)	1. Park/neutral position switch circuit *1	AT-34
	2. Shift solenoid valve (S2) circuit *1	AT-64
	3. ECM	IN-34
No down-shift (3rd to 2nd)	1. Shift solenoid valve (S1) circuit *1	AT-64
	2. ECM	IN-34
No down-shift (2nd to 1st)	1. Shift solenoid valve (S2) circuit *1	AT-64
	2. ECM	IN-34
No lock-up or no lock-up off	1. Shift solenoid valve (SLU) circuit *1	AT-81
	2. Stop light switch circuit *1	AT-52
	3. ECM	IN-34
No lock-up	1. Shift solenoid valve (SLU) circuit *1	AT-81
	2. Engine coolant temperature sensor circuit *1	ES-54
	3. Stop light switch circuit *1	AT-52
	4. Speed sensor NCO circuit *1	AT-44
	5. ECM	IN-34
No lock-up off	1. Shift solenoid valve (SLU) circuit *1	AT-81
	2. ECM	IN-34
Shift point too high or too low	1. Shift solenoid valve (SLT) circuit *1	AT-68
	2. Speed sensor NCO circuit *1	AT-44
	3. Speed sensor SP2 circuit *1	AT-48
	4. Throttle position sensor circuit *1	ES-54
	5. ATF temperature sensor THOC circuit *1	AT-40
	6. ATF temperature sensor THO1 circuit *1	AT-72
	7. ECM	IN-34
Up-shift to 2nd while in L position	1. Park/neutral position sensor circuit *1	AT-34
	2. ECM	IN-34

Symptom	Suspected area	See page
Up-shift to 3rd while in 2 position	1. Park/neutral position sensor circuit *1	AT-34
	2. ECM	IN-34
Up-shift from 3rd to 4th while engine is cold	1. Engine coolant temperature sensor circuit *1	ES-54
	2. ECM	IN-34
Harsh engagement (N to D)	1. Shift solenoid valve (SLT) circuit *1	AT-68
	2. Speed sensor NCO circuit *1	AT-44
	3. ECM	IN-34
Harsh engagement (Lock-up)	1. Speed sensor NCO circuit *1	AT-44
	2. Speed sensor SP2 circuit *1	AT-48
	3. Shift solenoid valve (SLU) circuit *1	AT-81
	4. ECM	IN-34
Harsh engagement (Any driving position)	1. Throttle position sensor circuit *1	ES-54
	2. Shift solenoid valve (SLU) circuit *1	AT-81
	3. Shift solenoid valve (SLT) circuit *1	AT-68
	4. Speed sensor NCO circuit *1	AT-44
	5. ECM	IN-34
Poor acceleration	1. Shift solenoid valve (SLT) circuit *1	AT-68
	2. ECM	IN-34
No engine braking	ECM	IN-34
No kick-down	ECM	IN-34
Engine stalls when starting off or stopping	1. Shift solenoid valve (SLU) circuit *1	AT-81
	2. ECM	IN-34

Chapter 2: On-Vehicle Repair and Off-Vehicle Repair

(▲: A340E AUTOMATIC TRANSMISSION Repair Manual Pub. No. RM998U)

Symptom	Suspected area	See page
Vehicle does not move in any forward position or reverse position	1. Shift solenoid valve SLT	AT-68
	2. Transmission control cable	AT-105
	3. Manual valve	▲
	4. Parking lock pawl	▲
	5. O/D one-way clutch (F0)	▲
	6. O/D direct clutch (C0)	▲
	7. O/D brake (B0)	▲
	8. O/D planetary gear unit	▲
	9. Torque converter clutch	AT-117
Vehicle does not move in R position	1. 2nd coast brake (B1)	▲
	2. Front and rear planetary gear unit	▲
	3. Direct clutch (C2)	▲
	4. 1st and reverse brake (B3)	▲
	5. O/D direct clutch (C0)	▲
No up-shift (1st to 2nd)	1. 1-2 shift valve	▲
	2. 2nd brake (B2)	▲
	3. No. 1 one-way clutch (F1)	▲
No up-shift (2nd to 3rd)	1. 2-3 shift valve	▲
	2. Direct clutch (C2)	▲
No up-shift (3rd to 4th)	1. 3-4 shift valve	▲
	2. O/D brake (B0)	▲

Symptom	Suspected area	See page
No down-shift (4th to 3rd)	3-4 shift valve	▲
No down-shift (3rd to 2nd)	2-3 shift valve	▲
No down-shift (2nd to 1st)	1. 1-2 shift valve	▲
	2. 2nd coast brake (B1)	▲
	3. 2nd brake (B2)	▲
No lock-up or no lock-up off	1. Lock-up control valve	▲
	2. Lock-up relay valve	▲
	3. Torque converter clutch	AT-117
Harsh engagement (N to D)	1. Accumulator control valve	▲
	2. Forward clutch (C1)	▲
Harsh engagement (Lock-up)	1. Lock-up control valve	▲
	2. Lock-up relay valve	▲
	3. Torque converter clutch	AT-117
Harsh engagement (N to R)	1. Accumulator control valve	▲
	2. C2 accumulator	▲
	3. Direct clutch (C2)	▲
	4. 1st and reverse brake (B3)	▲
Harsh engagement (N to L)	Low coast modulator valve	▲
Harsh engagement (1st to 2nd, 2nd to 3rd and 3rd to 4th)	1. Accumulator control valve	▲
	2. Throttle valve	▲
Harsh engagement (2nd to 3rd)	1. Accumulator control valve	▲
	2. C2 accumulator	▲
	3. 2nd coast brake (B1)	▲
Harsh engagement (3rd to 4th)	1. Accumulator control valve	▲
	2. Solenoid modulator valve	▲
	3. O/D direct clutch (C0)	▲
	4. O/D brake (B0)	▲
	5. O/D planetary gear unit	▲
Harsh engagement (4th to 3rd)	1. Accumulator control valve	▲
	2. C0 accumulator	▲
	3. O/D brake (B0)	▲
Slippage or shuddering (Forward and reverse: After warm-up)	1. Shift solenoid valve SLT	AT-68
	2. Transmission control cable	AT-105
	3. Oil strainer	▲
	4. Pressure relief valve	▲
	5. Torque converter clutch	▲
	6. O/D one-way clutch (F0)	▲
	7. O/D direct clutch (C0)	▲
Slippage or shuddering (Particular position: Just after engine starts)	1. Shift solenoid valve SLT	AT-68
	2. Transmission control cable	AT-105
	3. Torque converter clutch	AT-117
Slippage or shuddering (R position)	1. Direct clutch (C2)	▲
	2. 1st and reverse brake (B3)	▲

Symptom	Suspected area	See page
Slippage or shuddering (1st position)	1. Forward clutch (C1)	▲
	2. No. 2 one-way clutch (F2)	▲
Slippage or shuddering (2nd position)	1. 2nd brake (B2)	▲
	2. 2nd coast brake (B1)	▲
	3. No. 1 one-way clutch (F1)	▲
Slippage or shuddering (3rd position)	Direct clutch (C2)	▲
Slippage or shuddering (4th position)	O/D brake (B0)	▲
Engine brake does not work only in 1st gear at L position	1. Low coast modulator valve	▲
	2. 1st and reverse brake (B3)	▲
Engine brake does not work only in 2nd gear at 2 position	1. 2nd coast modulator valve	▲
	2. 2nd coast brake (B1)	▲
Engine brake does not work only in 3rd gear at 3 position	O/D direct clutch (C0)	▲
Engine brake does not work only in 1st to 4th gear at D position	O/D direct clutch (C0)	▲
No kick-down	1. 1-2 shift valve	▲
	2. 2-3 shift valve	▲
	3. 3-4 shift valve	▲
Poor acceleration (All position)	Torque converter clutch	AT-117
Poor acceleration (4th)	1. O/D direct clutch (C0)	▲
	2. O/D planetary gear unit	▲
Poor acceleration (other than 4th)	O/D brake (B0)	▲
Poor acceleration (other than 2nd)	1. 2nd coast brake (B1)	▲
	2. 2nd brake (B2)	▲
Poor acceleration (1st and 2nd)	Direct clutch (C2)	▲
Poor acceleration (L and R positions)	1st and reverse brake (B3)	▲
Poor acceleration (R position)	Forward clutch (C1)	▲
Engine stalls when starting off or stopping	Torque converter clutch	AT-117

TERMINALS OF ECM

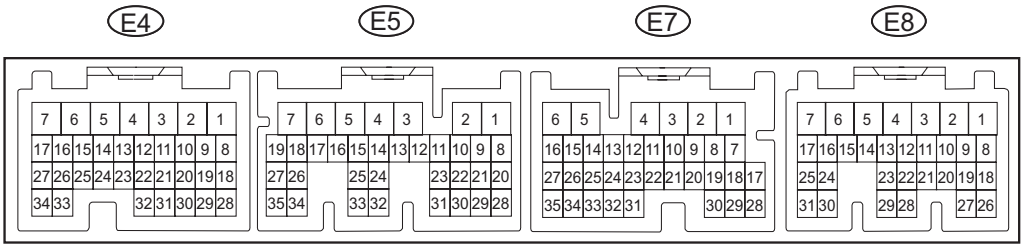

HINT:
The standard voltage of each ECM terminal is shown in the table below.
In the table, first follow the information under "Condition". Look under "Symbols (Terminal No.)" for the terminals to be inspected. The standard voltage between the terminals is shown under "Specified Condition". Use the illustration above as a reference for the ECM terminals.

Standard voltage:

Symbols (Terminals No.)	Wiring Color	Terminal Description	Condition	Specified Condition
NSW (E8-30) - E1 (E4-3)	V - BR	Park/neutral switch signal	IG switch ON and shift lever P and N positions	Below 1 V
NSW (E8-30) - E1 (E4-3)	V - BR	Park/neutral switch signal	IG switch ON and shift lever other than P and N positions	10 to 14 V
STP (E7-4) - E1 (E4-3)	L - BR	Stop light switch signal	Brake pedal is depressed	7.5 to 14 V
STP (E7-4) - E1 (E4-3)	L - BR	Stop light switch signal	Brake pedal is released	Below 1.5 V
L (E7-9) - E1 (E4-3)	G-Y - BR	L shift position switch signal	IG switch ON and shift lever L position	10 to 14 V
L (E7-9) - E1 (E4-3)	G-Y - BR	L shift position switch signal	IG switch ON and shift lever other than L position	Below 1 V
2 (E7-10) - E1 (E4-3)	R-Y - BR	2 shift position switch signal	IG switch ON and shift lever 2 position	10 to 14 V
2 (E7-10) - E1 (E4-3)	R-Y - BR	2 shift position switch signal	IG switch ON and shift lever other than 2 position	Below 1 V
R (E7-11) - E1 (E4-3)	R-W - BR	R shift position switch signal	IG switch ON and shift lever R position	10 to 14 V
R (E7-11) - E1 (E4-3)	R-W - BR	R shift position switch signal	IG switch ON and shift lever other than R position	Below 1 V
3 (E7-19) - E1 (E4-3)	Y - BR	3 shift position switch signal	IG switch ON and shift lever 3 position	10 to 14 V
3 (E7-19) - E1 (E4-3)	Y - BR	3 shift position switch signal	IG switch ON and shift lever other than 3 position	Below 1 V
D (E7-21) - E1 (E4-3)	L-B - BR	D shift position switch signal	IG switch ON and shift lever D position	10 to 14 V
D (E7-21) - E1 (E4-3)	L-B - BR	D shift position switch signal	IG switch ON and shift lever other than D position	Below 1 V
S2 (E5-8) - E1 (E4-3)	L-W - BR	S2 solenoid signal	2nd or 3rd gear	10 to 14 V
S2 (E5-8) - E1 (E4-3)	L-W - BR	S2 solenoid signal	1st or 4th gear	Below 1 V
S1 (E5-9) - E1 (E4-3)	W-G - BR	S1 solenoid signal	1st or 2nd gear	10 to 14 V
S1 (E5-9) - E1 (E4-3)	W-G - BR	S1 solenoid signal	3rd and 4th gears	Below 1 V
SLU+ (E5-11) - SLU- (E5-10)	V - LG	SLU solenoid signal	3rd (lock-up) or 4th (lock-up) gear	Pulse generation (See waveform 2)
SLT+ (E5-12) - SLT- (E5-13)	G-B - R-B	SLT solenoid signal	Engine idling speed	Pulse generation (See waveform 1)

Symbols (Terminals No.)	Wiring Color	Terminal Description	Condition	Specified Condition
THO1 (E5-24) - E2 (E4-28)	Y-B - BR	ATF temperature sensor signal	ATF temperature: 115 °C (239 °F) or more	Below 1.5 V
NCO+ (E5-34) - NCO- (E5-26)	Y - L	Speed sensor (NCO) signal	Engine idling speed	Pulse generation (See waveform 3)
SP2+ (E5-35) - SP2- (E5-27)	G - R	Speed sensor (SP2) signal	Vehicle speed 12 mph (20 km/h)	Pulse generation (See waveform 4)
THOC (E4-22) - E2 (E4-28)	GR - BR	ATF temperature sensor signal	ATF temperature: 115 °C (239 °F) or more	Below 1.5 V

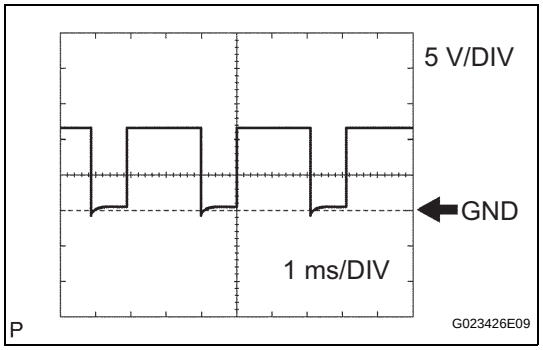

1. Waveform 1

Item	Content
Terminal	SLT+ (E5-12) - SLT- (E5-13)
Tool setting	5V/DIV, 1ms/DIV
Vehicle condition	Engine idling speed

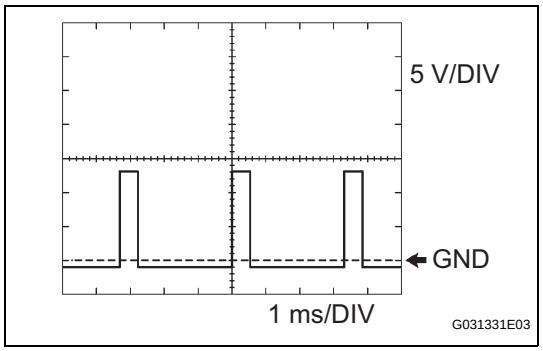

2. Waveform 2

Item	Content
Terminal	SLU+ (E5-11) - SLU- (E5-10)
Tool setting	5V/DIV, 1ms/DIV
Vehicle condition	3rd (lock-up) or 4th (lock-up) gear

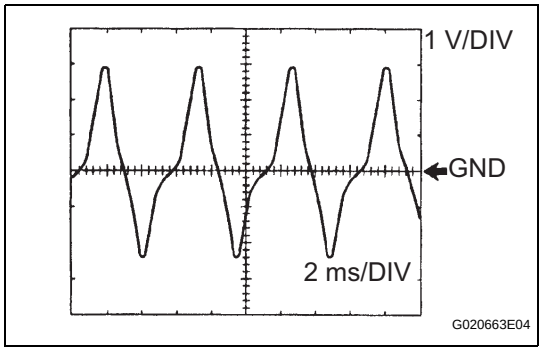

3. Waveform 3

Item	Content
Terminal	NCO+ (E5-34) - NCO- (E5-26)
Tool setting	1V/DIV, 2ms/DIV
Vehicle condition	Engine idling speed (P or N position)

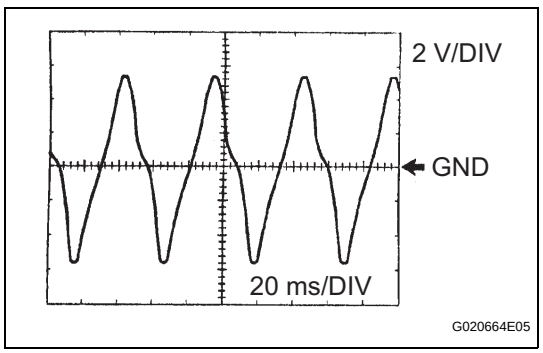

4. Waveform 4

Item	Content
Terminal	SP2+ (E5-35) - SP2- (E5-27)
Tool setting	2V/DIV, 20ms/DIV
Vehicle condition	Vehicle speed 12 mph (20 km/h)

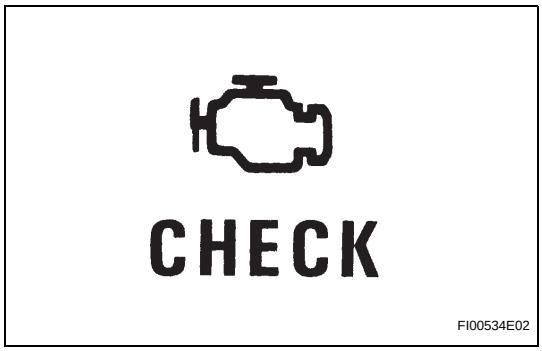

DIAGNOSIS SYSTEM

1. DESCRIPTION

When troubleshooting On-Board Diagnostic (OBD II) vehicles, the vehicle must be connected to the intelligent tester (complying with SAE J1987). Various data output from the vehicle's ECM can then be read.

OBD II regulations require that the vehicle's on-board computer illuminates the Malfunction Indicator Lamp (MIL) on the instrument panel when the computer detects a malfunction in:

1. The emission control system/components
2. The powertrain control components (which affect vehicle emissions)
3. The computers.

In addition, the applicable Diagnostic Trouble Codes (DTCs) prescribed by SAE J2012 are recorded in the ECM memory. If the malfunction does not reoccur in 3 consecutive trips, the MIL turns off automatically but the DTCs remain recorded in the ECM memory.

To check DTCs, connect the intelligent tester to the Data Link Connector 3 (DLC3) of the vehicle. The intelligent tester displays DTCs, the freeze frame data and a variety of the engine data.

The DTCs and freeze frame data can be erased with the intelligent tester. (See page AT-25)

In order to enhance OBD functions on vehicles and develop the Off-Board diagnosis system, CAN communication has been introduced in this system (CAN: Controller Area Network). It minimizes the gap between technician skills and vehicle technology. CAN is a network, which uses a pair of data transmission lines, spanning multiple computers and sensors. It allows high speed communication between the systems and simplification of the wire harness connection.

Since this system is equipped with CAN communication, CAN VIM (VIM: Vehicle Interface Module) connecting with an intelligent tester is necessary to display any information from the ECM on the tester. (Also communication between the intelligent tester and the ECM uses a CAN communication signal.) When confirming DTCs and any data of the ECM, connect the CAN VIM between the DLC3 and the intelligent tester.

2. NORMAL MODE AND CHECK MODE

The diagnosis system operates in "normal mode" during normal vehicle use. In normal mode, "2-trip detection logic" is used to ensure accurate detection of malfunctions. "Check mode" is also available to technicians as an option. In check mode, "1-trip detection logic" is used for simulating malfunction symptoms and increasing the system's ability to detect malfunctions, including intermittent malfunctions.

3. 2-TRIP DETECTION LOGIC

When a malfunction is first detected, the malfunction is temporarily stored in the ECM memory (1st trip). If the ignition switch is turned OFF and then ON again, and the same malfunction is detected again, the MIL will illuminate.

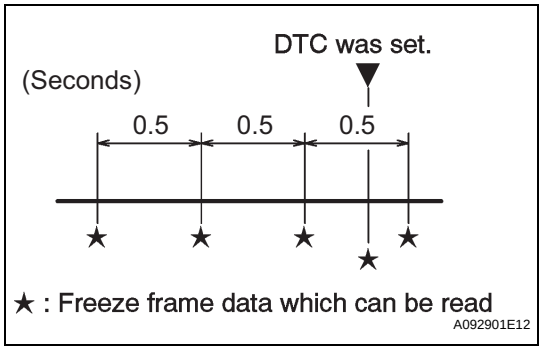

4. FREEZE FRAME DATA

Freeze frame data records the engine conditions (fuel system, calculated load, engine coolant temperature, fuel trim, engine speed, vehicle speed, etc.) when a malfunction is detected. When troubleshooting, freeze frame data can help determine if the vehicle was running or stopped, if the engine was warmed up or not, if the air-fuel ratio was lean or rich, and other data from the time the malfunction occurred.

The ECM records engine conditions in the form of freeze frame data every 0.5 seconds. Using the intelligent tester, five separate sets of freeze frame data, including the data values at the time when the DTC was set, can be checked.

- 3 data sets before the DTC was set
- 1 data set when the DTC was set
- 1 data set after the DTC was set

These data sets can be used to simulate the condition of the vehicle around the time the occurrence of the malfunction. The data may assist in identifying of the cause of the malfunction, and in judging whether it was temporary or not.

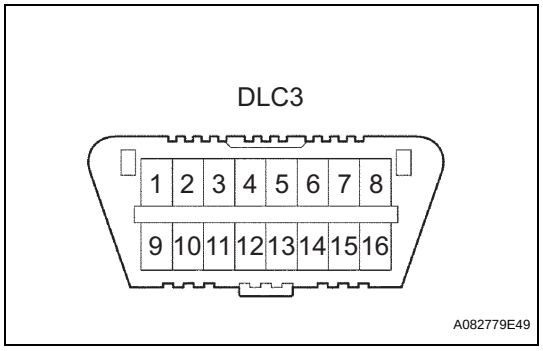

5. DLC3 (Data Link Connector 3)

The vehicle's ECM uses the ISO 15765-4 communication protocol. The terminal arrangement of the DLC3 complies with SAE J1962 and matches the ISO 15765-4 format.

HINT:

Connect the cable of the intelligent tester to the DLC3, turn the ignition switch ON and attempt to use the intelligent tester. If the screen displays UNABLE TO CONNECT TO VEHICLE, a problem exists in the vehicle side or the tester side.

If the communication is normal when the tester is connected to another vehicle, inspect the DLC3 on the original vehicle.

If the communication is still impossible when the tester is connected to another vehicle, the problem is probably in the tester itself. Consult the Service Department listed in the tester's instruction manual.

Symbol	Terminal No.	Name	Reference terminal	Result	Condition
SIL	7	Bus "+" line	5 - Signal ground	Pulse generation	During transmission
CG	4	Chassis ground	Body ground	Below 1 Ω	Always
SG	5	Signal ground	Body ground	Below 1 Ω	Always
BAT	16	Battery positive	Body ground	11 to 14 V	Always
CANH	6	HIGH-level CAN bus line	CANL	54 to 69 Ω	Ignition switch OFF

Symbol	Terminal No.	Name	Reference terminal	Result	Condition
CANH	6	HIGH-level CAN bus line	Battery positive	1 MΩ or higher	Ignition switch OFF
CANH	6	HIGH-level CAN bus line	CG	1 kΩ or higher	Ignition switch OFF
CANL	14	HIGH-level CAN bus line	Battery positive	1 MΩ or higher	Ignition switch OFF
CANL	14	HIGH-level CAN bus line	CG	1 kΩ or higher	Ignition switch OFF

6. CHECK BATTERY VOLTAGE

Standard battery voltage:

11 to 14 V

If the voltage is below 11 V, replace the battery before proceeding.

7. CHECK MIL

(a) Check that the MIL illuminates when turning the ignition switch ON.
If the MIL does not illuminate, there is a problem in the MIL circuit (refer to MIL CIRCUIT on page ES-439).

(b) When the engine is started, the MIL should turn off.

8. ALL READINESS

For this vehicle, using the intelligent tester allows readiness codes corresponding to all DTCs to be read. When diagnosis (normal or malfunctioning) has been completed, readiness codes are set. Enter the following menus: ENHANCED OBD II/ MONITOR STATUS on the intelligent tester.

DTC CHECK / CLEAR

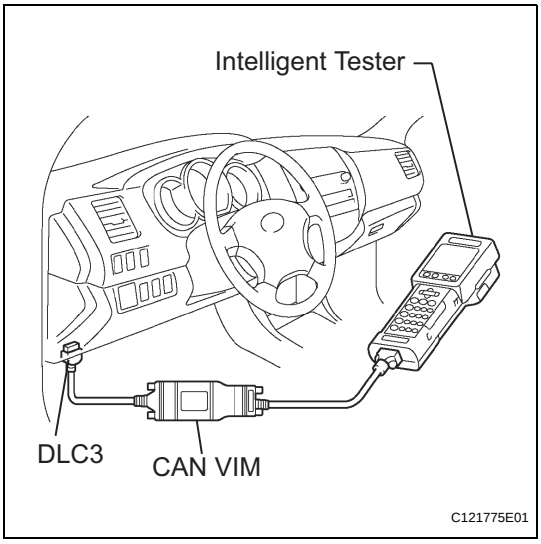

1. CHECK DTC

DTCs which are stored in the ECM can be displayed with the intelligent tester.
The intelligent tester can display pending DTCs and current DTCs.
Some DTC aren't stored if the ECM doesn't detect a malfunction during consecutive driving cycles. However, malfunctions detected during a single driving cycle are stored as pending DTCs.

(a) Connect the intelligent tester to the Controller Area Network Vehicle Interface Module (CAN VIM). Then connect the CAN VIM to the Data Link Connector 3 (DLC3).

(b) Turn the ignition switch to the ON position.

(c) Enter the following menus: DIAGNOSIS/ ENHANCED OBD II/ DTC INFO/ CURRENT CODES (or PENDING CODE).

(d) Confirm the DTCs and freeze frame data and then write them down.

(e) See page AT-30 to confirm the details of the DTCs.

2. CLEAR DTC

(a) Connect the intelligent tester to the CAN VIM. Then connect the CAN VIM to the DLC3.

(b) Turn the ignition switch to the ON position.

Symbol	Terminal No.	Name	Reference terminal	Result	Condition
CANH	6	HIGH-level CAN bus line	Battery positive	1 MΩ or higher	Ignition switch OFF
CANH	6	HIGH-level CAN bus line	CG	1 kΩ or higher	Ignition switch OFF
CANL	14	HIGH-level CAN bus line	Battery positive	1 MΩ or higher	Ignition switch OFF
CANL	14	HIGH-level CAN bus line	CG	1 kΩ or higher	Ignition switch OFF

6. CHECK BATTERY VOLTAGE

Standard battery voltage:

11 to 14 V

If the voltage is below 11 V, replace the battery before proceeding.

7. CHECK MIL

(a) Check that the MIL illuminates when turning the ignition switch ON.
If the MIL does not illuminate, there is a problem in the MIL circuit (refer to MIL CIRCUIT on page ES-439).

(b) When the engine is started, the MIL should turn off.

8. ALL READINESS

For this vehicle, using the intelligent tester allows readiness codes corresponding to all DTCs to be read. When diagnosis (normal or malfunctioning) has been completed, readiness codes are set. Enter the following menus: ENHANCED OBD II/ MONITOR STATUS on the intelligent tester.

DTC CHECK / CLEAR

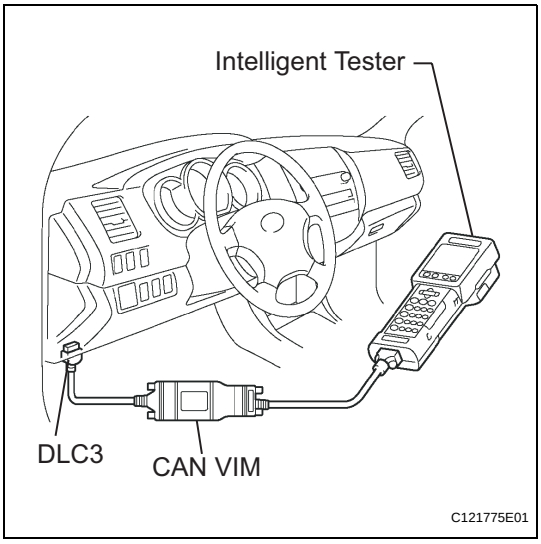

1. CHECK DTC

DTCs which are stored in the ECM can be displayed with the intelligent tester.
The intelligent tester can display pending DTCs and current DTCs.
Some DTC aren't stored if the ECM doesn't detect a malfunction during consecutive driving cycles. However, malfunctions detected during a single driving cycle are stored as pending DTCs.

(a) Connect the intelligent tester to the Controller Area Network Vehicle Interface Module (CAN VIM). Then connect the CAN VIM to the Data Link Connector 3 (DLC3).

(b) Turn the ignition switch to the ON position.

(c) Enter the following menus: DIAGNOSIS/ ENHANCED OBD II/ DTC INFO/ CURRENT CODES (or PENDING CODE).

(d) Confirm the DTCs and freeze frame data and then write them down.

(e) See page AT-30 to confirm the details of the DTCs.

2. CLEAR DTC

(a) Connect the intelligent tester to the CAN VIM. Then connect the CAN VIM to the DLC3.

(b) Turn the ignition switch to the ON position.

(c) Enter the following menus: DIAGNOSIS/ ENHANCED OBD II/ DTC INFO/ CLEAR CODES and press YES.

ADJUSTMENT

1. INSPECT SHIFT LEVER POSITION

(a) Check that the shift lever moves smoothly and appropriately from the P to R position, only when the ignition switch is turned to ON and the brake pedal is depressed.

(b) When starting the engine, make sure that the vehicle moves forward when shifting the lever from the N to D position and moves rearward when shifting the lever to the R position.

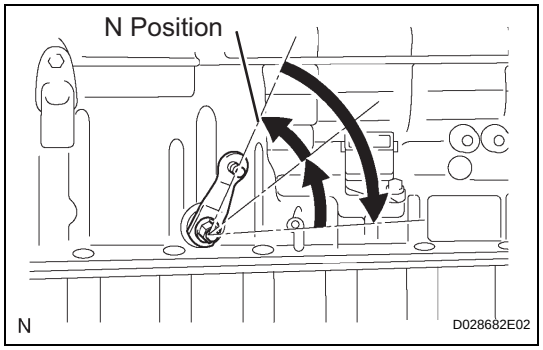

2. ADJUST SHIFT LEVER POSITION

(a) Push the control shaft fully rearward.

(b) Turn the control shaft lever 2 notches counterclockwise to the N position.

(c) Set the shift lever to the N position.

REASSEMBLY

1. INSTALL SHIFT LOCK CONTROL ECU SUB-ASSEMBLY

(a) Install the shift lock control ECU with the 2 screws.

(b) Install the spring and shift lock release link.

(c) Install the shift lever guide housing .

(d) Install the lever lock and new shift lever nut.

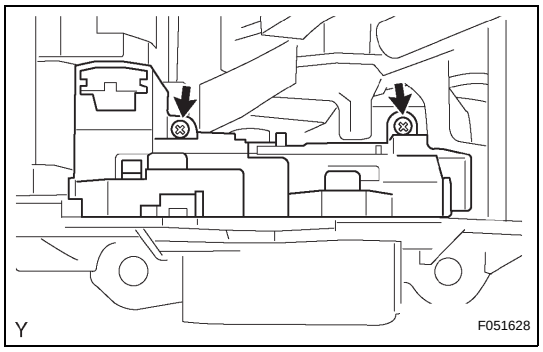

2. INSTALL LOWER POSITION INDICATOR HOUSING

(a) CABLE TYPE:

(1) Install the position indicator housing lower.

HINT:

Firmly make the claws fit.

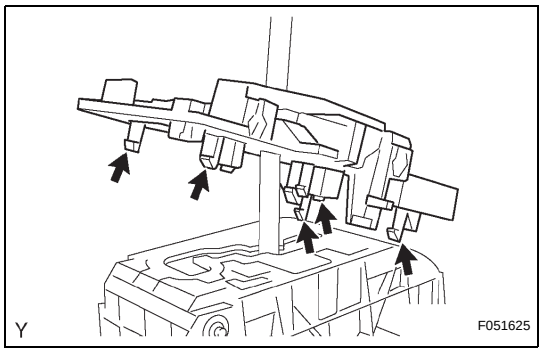

(b) ROD TYPE:

(1) Install the position indicator housing lower.

HINT:

Firmly make the claws fit.

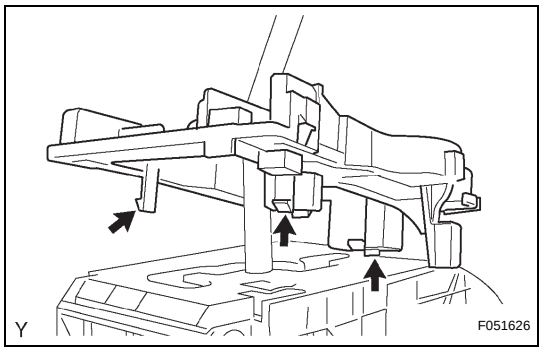

3. INSTALL SHIFT LOCK RELEASE BUTTON

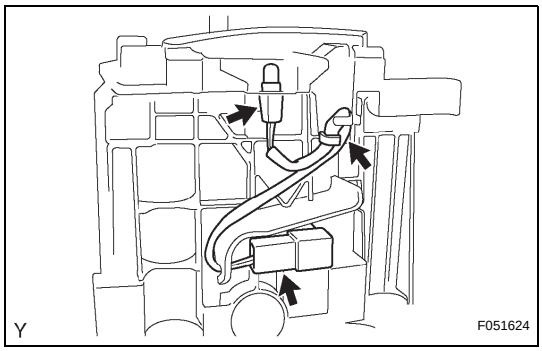

4. INSTALL INDICATOR LAMP WIRE SUB-ASSEMBLY

(a) Install the bulb into the indicator lamp wire sub-assembly.

(b) Install the indicator lamp wire sub-assembly.

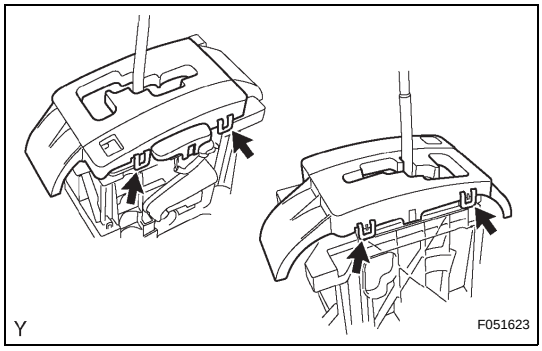

5. INSTALL UPPER POSITION INDICATOR HOUSING

(a) Install the slide cover and position indicator housing sub-assembly onto the shift lever guide housing.
HINT:
Firmly make the claws fit.

INSTALLATION

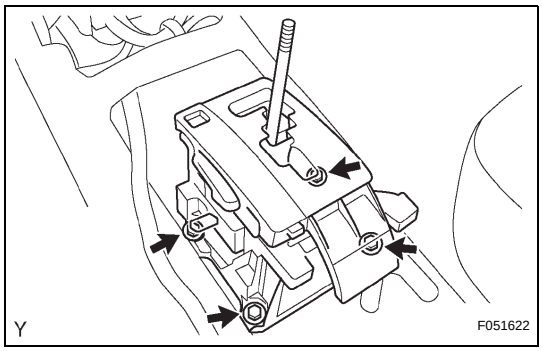

1. INSTALL FLOOR SHIFT ASSEMBLY

(a) Install the floor shift with the 4 bolts.
Torque: 14 N*m (143 kgf*cm, 10 ft.*lbf)

(b) Connect the 2 clamps and 2 connectors.

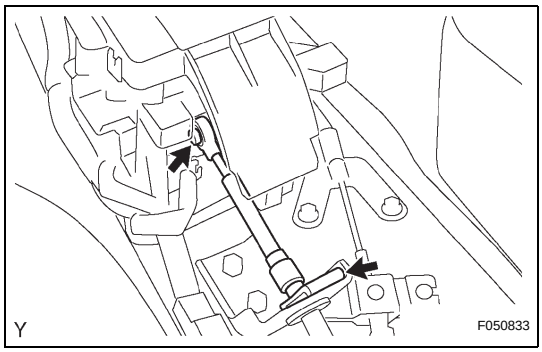

2. CONNECT TRANSMISSION CONTROL CABLE ASSEMBLY

(a) CABLE TYPE:

(1) Connect the transmission control cable with the clip to floor shift assembly.

(2) Install the transmission control cable onto the floor shift assembly.

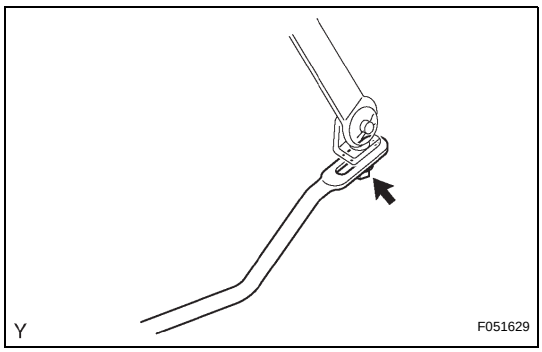

3. INSTALL FLOOR SHIFT GEAR SHIFTING ROD SUB-ASSEMBLY

(a) ROD TYPE:

(1) Install the floor shift gear shifting rod with nut.
Torque: 5.5 N*m (56 kgf*cm, 49 in.*lbf)

4. INSTALL FRONT CONSOLE BOX (for Bench Seat Type) (See page IP-23)

5. INSTALL FRONT CONSOLE BOX (for Separate Seat Type) (See page IP-24)

6. **INSTALL INSTRUMENT PANEL CUP HOLDER TRAY (for Separate Seat Type) (See page IP-24)**
7. **INSTALL REAR CONSOLE BOX ASSEMBLY (for Separate Seat Type) (See page IP-24)**
8. **INSTALL CONSOLE UPPER REAR PANEL SUB-ASSEMBLY (for Separate Seat Type) (See page IP-25)**
9. **ADJUST SHIFT LEVER POSITION (See page AT-105)**
10. **INSPECT SHIFT LEVER POSITION (See page AT-105)**

REMOVAL

1. **DISCONNECT CABLE FROM NEGATIVE BATTERY TERMINAL**
2. **REMOVE PROPELLER SHAFT ASSEMBLY (for Regular Cab) (See page PR-3)**
3. **REMOVE PROPELLER WITH CENTER BEARING SHAFT ASSEMBLY (for Except Regular Cab) (See page PR-27)**
4. **DRAIN AUTOMATIC TRANSMISSION FLUID**
   (a) Remove the drain plug, gasket and drain ATF.
   (b) Install a new gasket and drain plug.
   Torque: 20 N*m (204 kgf*cm, 15 ft.*lbf)
5. **REMOVE TRANSMISSION OIL LEVEL GAGE SUB-ASSEMBLY**
6. **REMOVE TRANSMISSION OIL FILLER TUBE SUB-ASSEMBLY**
   (a) Remove the 2 bolts and oil filler tube.

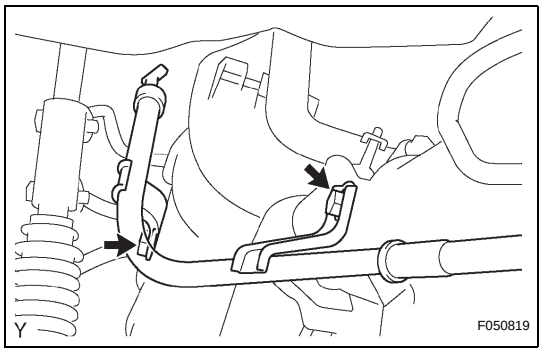

7. **REMOVE NO.1 OIL COOLER OUTLET TUBE**
   (a) Remove the 3 bolts and 3 clamps.

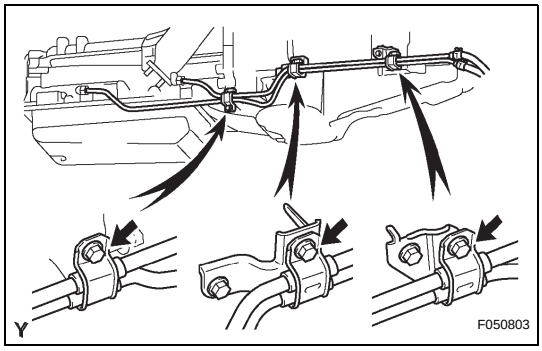

   (b) Using SST, disconnect the oil cooler outlet tube No. 1.
   SST 09023-12701
8. **REMOVE NO.1 OIL COOLER INLET TUBE**
   (a) Using SST, disconnect the oil cooler inlet tube No. 1.
   SST 09023-12701

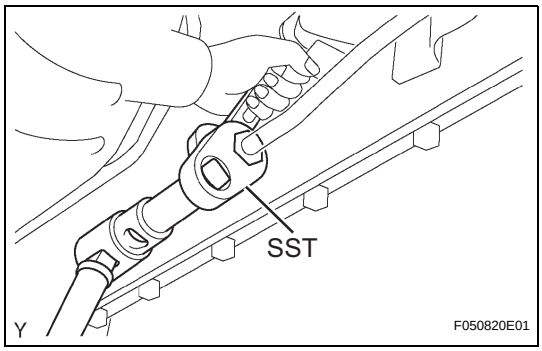

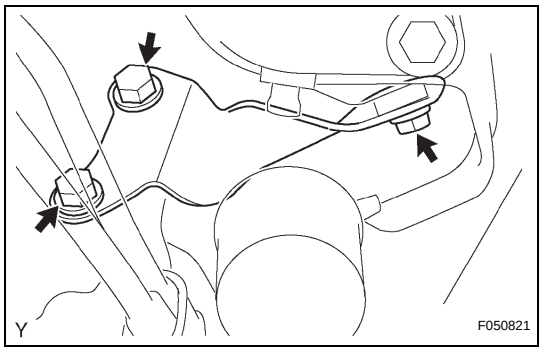

9. REMOVE MANIFOLD STAY

(a) Remove the 3 bolts and manifold stay.

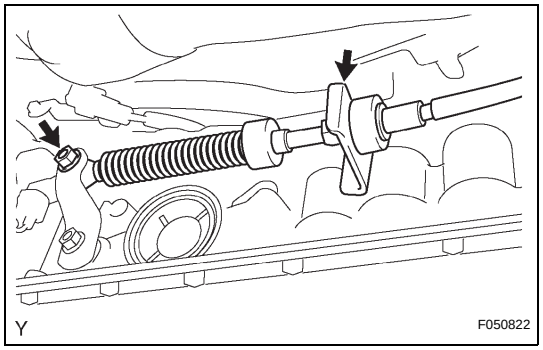

10. DISCONNECT TRANSMISSION CONTROL CABLE ASSEMBLY

(a) CABLE TYPE:
  (1) Remove the nut and disconnect the transmission control cable.
  (2) Remove the clip and disconnect the transmission control cable.

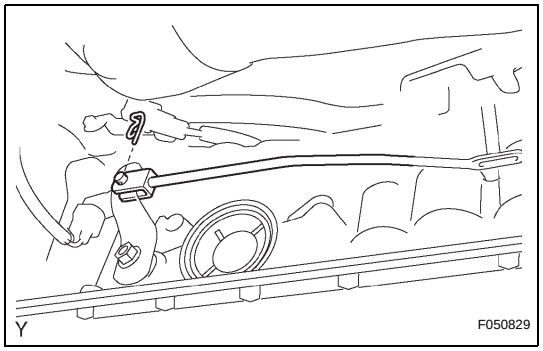

11. SEPARATE FLOOR SHIFT GEAR SHIFTING ROD SUB-ASSEMBLY

(a) ROD TYPE:
  (1) Remove the clip and separate the floor shift gear shifting rod from the automatic transmission.

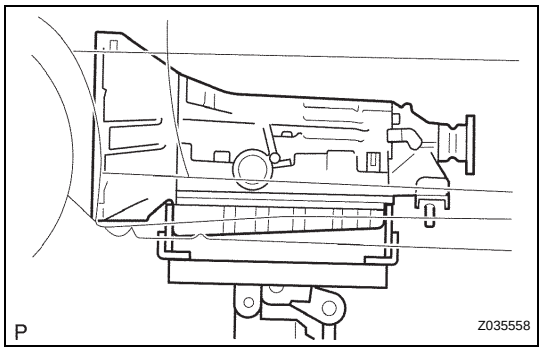

12. SUPPORT AUTOMATIC TRANSMISSION ASSEMBLY

(a) Support the automatic transmission assembly with a transmission jack.

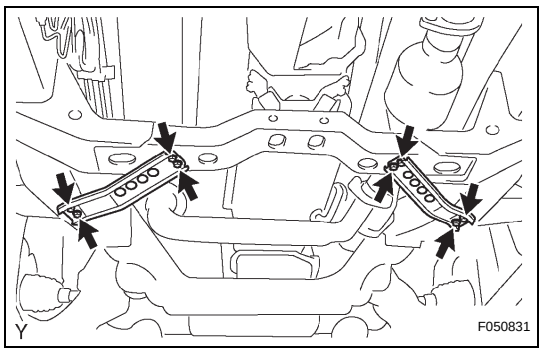

13. REMOVE FRONT SUSPENSION MEMBER BRACKET

(a) Remove the 8 bolts and 2 front suspension member brackets.

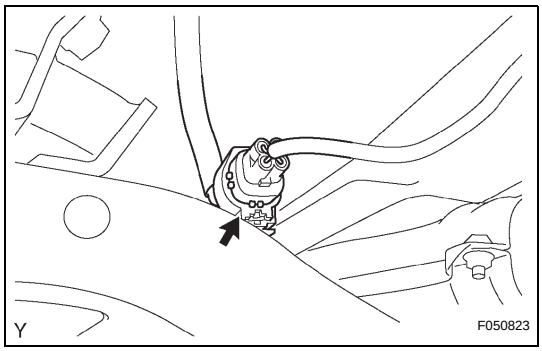

14. REMOVE NO.3 FRAME CROSSMEMBER SUB-ASSEMBLY

(a) Disconnect the heated oxygen sensor connector.

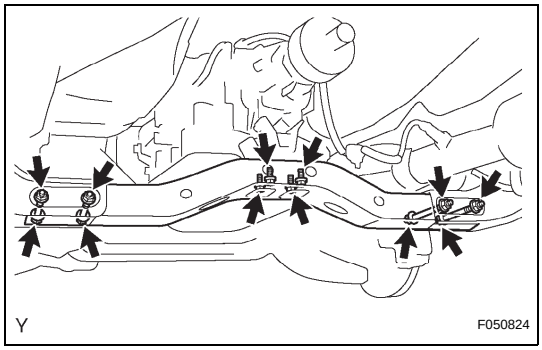

(b) Remove the 4 bolts from the frame crossmember sub-assembly No. 3.

(c) Remove the 4 nuts, 4 bolts and frame crossmember sub-assembly No. 3.

15. REMOVE STARTER ASSEMBLY (See page ST-5)

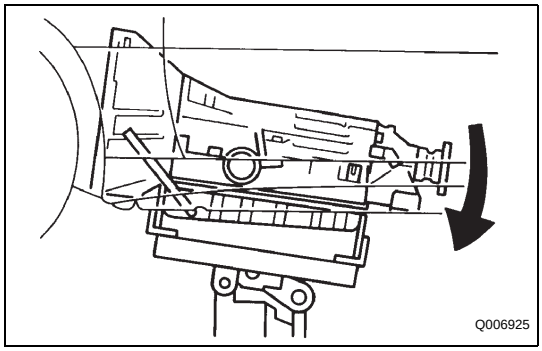

16. DISCONNECT CONNECTOR

(a) Tilt down the transmission.
NOTICE:
Take care so that the cooling fan does not come in contact with the fan shroud.

(b) Disconnect the park/neutral position switch connector.

(c) Disconnect the transmission wire connector.

(d) Disconnect the 2 speed sensor connectors.

(e) Disconnect the temperature sensor connector.

17. DISCONNECT WIRE HARNESS

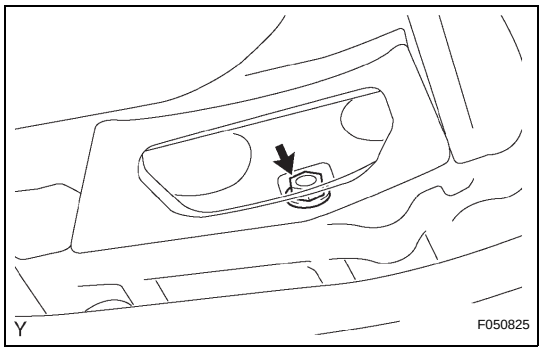

18. REMOVE AUTOMATIC TRANSMISSION ASSEMBLY

(a) Remove flywheel housing dust seal.

(b) Turn the crankshaft to gain access to each bolt.

(c) Hold the crankshaft pulley bolt with a wrench and remove the 6 bolts.

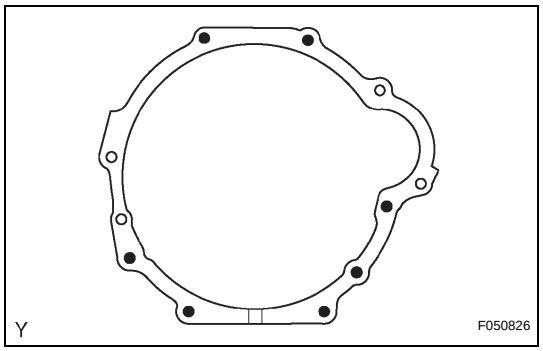

(d) Remove the 7 bolts.
(e) Separate and remove the automatic transmission.

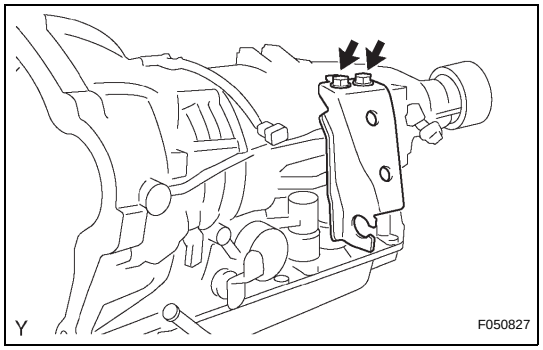

19. REMOVE NO.1 TRANSMISSION CONTROL CABLE BRACKET

(a) Remove the 2 bolts and transmission control cable bracket No. 1.

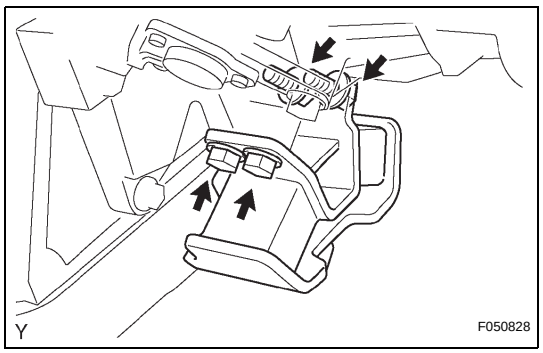

20. REMOVE REAR NO.1 ENGINE MOUNTING INSULATOR

(a) Remove the 4 bolts and engine mounting insulator rear No. 1.

21. REMOVE TORQUE CONVERTER CLUTCH ASSEMBLY

INSTALLATION

1. INSPECT TORQUE CONVERTER CLUTCH ASSEMBLY (See page AT-117)

2. INSTALL TORQUE CONVERTER CLUTCH ASSEMBLY

(a) Install the torque converter clutch onto the automatic transmission.

(b) Using calipers and a straight edge, measure dimension A, between the transmission and the end surface of the drive plate, as shown in the illustration.

Standard:

A: 22.28 mm (0.8772 in.)

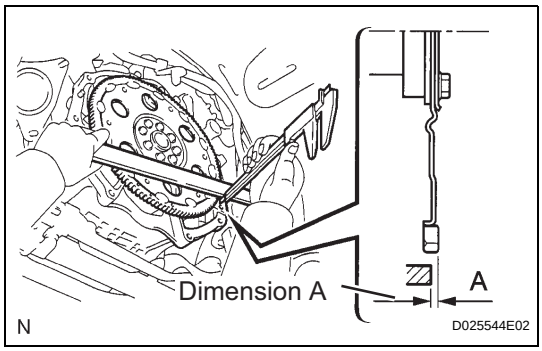

(c) Using calipers and a straight edge, measure the dimension B shown in the illustration and check that B is greater than A measured in (b).

Standard:

23.28 mm (0.9165 in.) or more

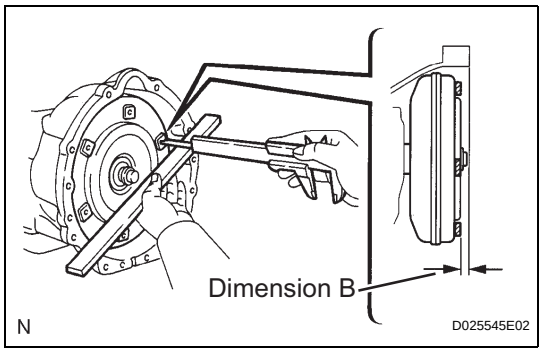

3. INSTALL REAR NO.1 ENGINE MOUNTING INSULATOR

(a) Install the engine mounting insulator with the 4 bolts.

Torque: 65 N*m (663 kgf*cm, 48 ft.*lbf)

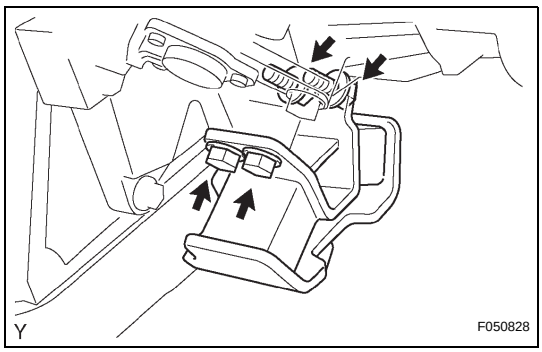

4. INSTALL NO.1 TRANSMISSION CONTROL CABLE BRACKET

(a) Install the transmission control cable bracket No. 1 with the 2 bolts.

Torque: 28 N*m (286 kgf*cm, 21 ft.*lbf)

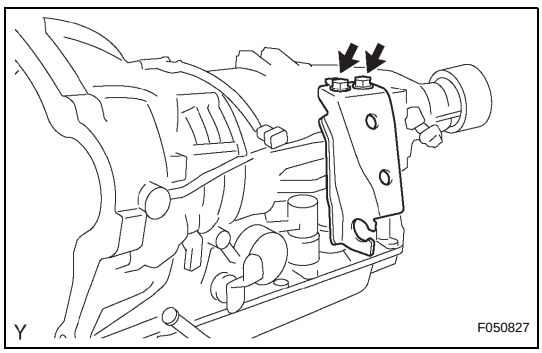

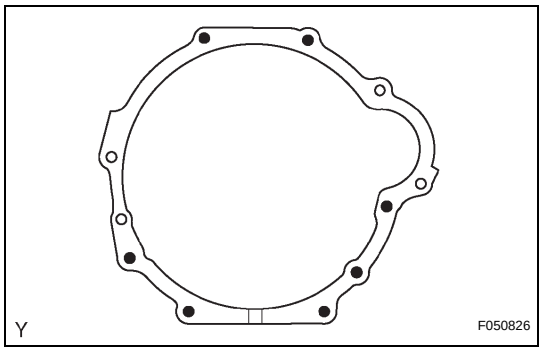

5. INSTALL AUTOMATIC TRANSMISSION ASSEMBLY

(a) Install the automatic transmission with the 7 bolts.
Torque: 71 N*m (724 kgf*cm, 52 ft.*lbf) for bolt A
37 N*m (377 kgf*cm, 27 ft.*lbf) for bolt B

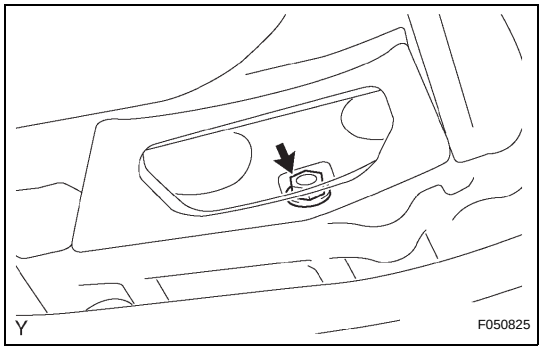

(b) Install the 6 torque converter clutch mounting bolts.
Torque: 48 N*m (489 kgf*cm, 35 ft.*lbf)
HINT:
First install the black bolt and then the other 5 bolts.

(c) Install the flywheel housing under cover.

6. INSTALL WIRE HARNESS

7. INSTALL STARTER ASSEMBLY (See page ST-10)

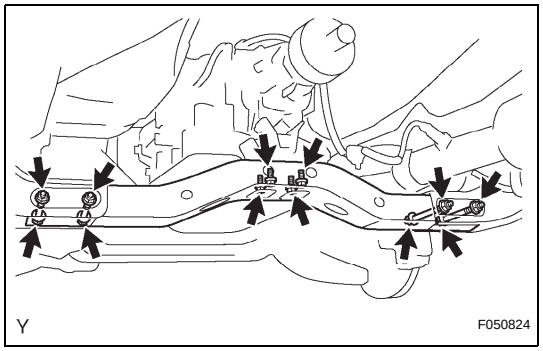

8. INSTALL NO.3 FRAME CROSSMEMBER SUB-ASSEMBLY

(a) Install the frame crossmember sub-assembly No. 3 with the 4 bolts and 4 nuts.
Torque: 40 N*m (408 kgf*cm, 30 ft.*lbf)

(b) Install the frame crossmember sub-assembly No. 3 with the 4 bolts.
Torque: 19 N*m (189 kgf*cm, 14 ft.*lbf)

(c) Connect the heated oxygen sensor connector.

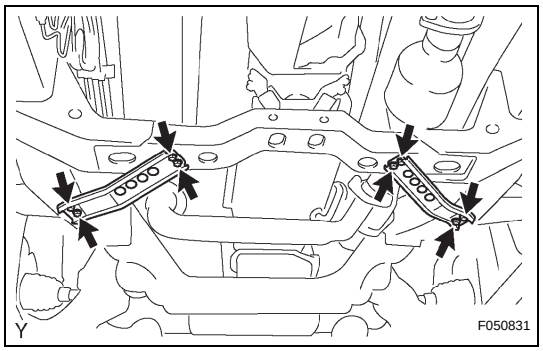

9. INSTALL FRONT SUSPENSION MEMBER BRACKET

(a) Install the 2 front suspension member brackets with the 8 bolts.
Torque: 33 N*m (336 kgf*cm, 24 ft.*lbf)

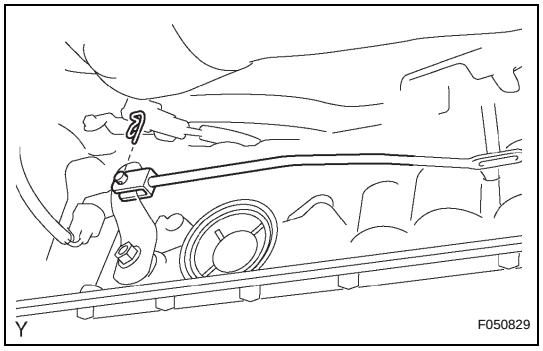

10. INSTALL FLOOR SHIFT GEAR SHIFTING ROD SUB-ASSEMBLY

(a) ROD TYPE:

(1) Install the floor shift gear shifting rod, then install the clip.

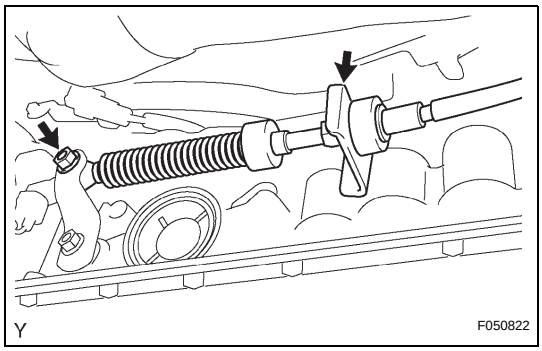

11. CONNECT TRANSMISSION CONTROL CABLE ASSEMBLY

(a) CABLE TYPE:

(1) Connect the transmission control cable with the clip.

(2) Connect the transmission control cable with the nut.

Torque: 14 N*m (143 kgf*cm, 10 ft.*lbf)

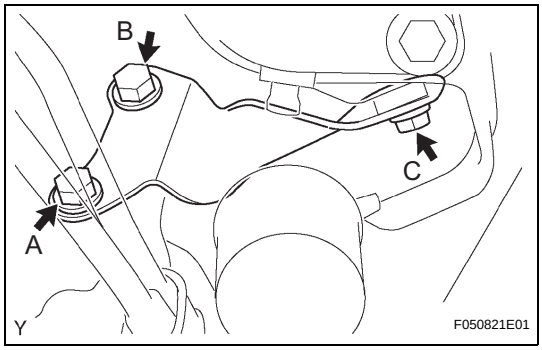

12. INSTALL MANIFOLD STAY

(a) Install the manifold stay with the 3 bolts.

Torque: 71 N*m (724 kgf*cm, 52 ft.*lbf) for bolt A
44 N*m (449 kgf*cm, 33 ft.*lbf) for bolt B
30 N*m (306 kgf*cm, 22 ft.*lbf) for bolt C

13. INSTALL NO.1 OIL COOLER INLET TUBE

(a) Provisionally install the oil cooler inlet tube No. 1.

(b) Provisionally install the oil cooler outlet tube No. 1.

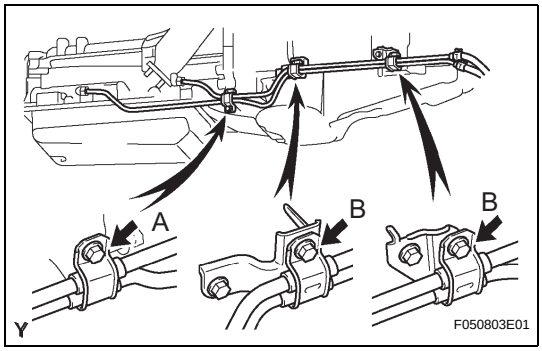

(c) Install the 3 clamps and 3 bolts.

Torque: 12 N*m (122 kgf*cm, 8.9 ft.*lbf) for bolt A
5.0 N*m (51 kgf*cm, 44 in.*lbf) for bolt B

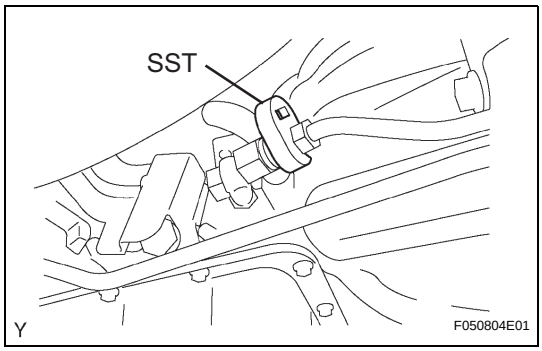

(d) Using SST, tighten the oil cooler inlet tube No. 1.

SST 09023-12701
Torque: 34 N*m (350 kgf*cm, 25 ft.*lbf)

14. INSTALL NO.1 OIL COOLER OUTLET TUBE

(a) Using SST, tighten the oil cooler outlet tube No. 1.

SST 09023-12701
Torque: 34 N*m (350 kgf*cm, 25 ft.*lbf)

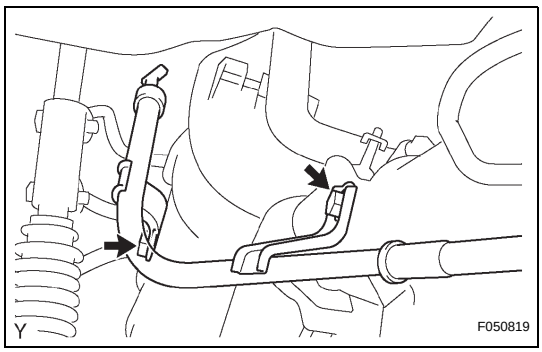

15. INSTALL TRANSMISSION OIL FILLER TUBE SUB-ASSEMBLY

(a) Coat new O-ring with ATF and install it onto the oil filler tube.

(b) Install the oil filler tube with the 2 bolts.

Torque: 12 N*m (122 kgf*cm, 8.9 ft.*lbf)

16. INSTALL TRANSMISSION OIL LEVEL GAGE SUB-ASSEMBLY

17. **INSTALL PROPELLER WITH CENTER BEARING SHAFT ASSEMBLY (for Except Regular Cab) (See page PR-32)**
18. **INSTALL PROPELLER SHAFT ASSEMBLY (for Regular Cab) (See page PR-6)**
19. **ADJUST SHIFT LEVER POSITION (See page AT-105)**
20. **CONNECT CABLE TO NEGATIVE BATTERY TERMINAL**
    Torque: 3.9 N*m (40 kgf*cm, 35 in.*lbf)
21. **ADD AUTOMATIC TRANSMISSION FLUID**
22. **INSPECT AUTOMATIC TRANSMISSION FLUID (See page AT-85)**
23. **INSPECT SHIFT LEVER POSITION (See page AT-105)**

SYSTEM DIAGRAM

The configuration of the electronic control system in the A750E automatic transmission is as shown in the following chart.

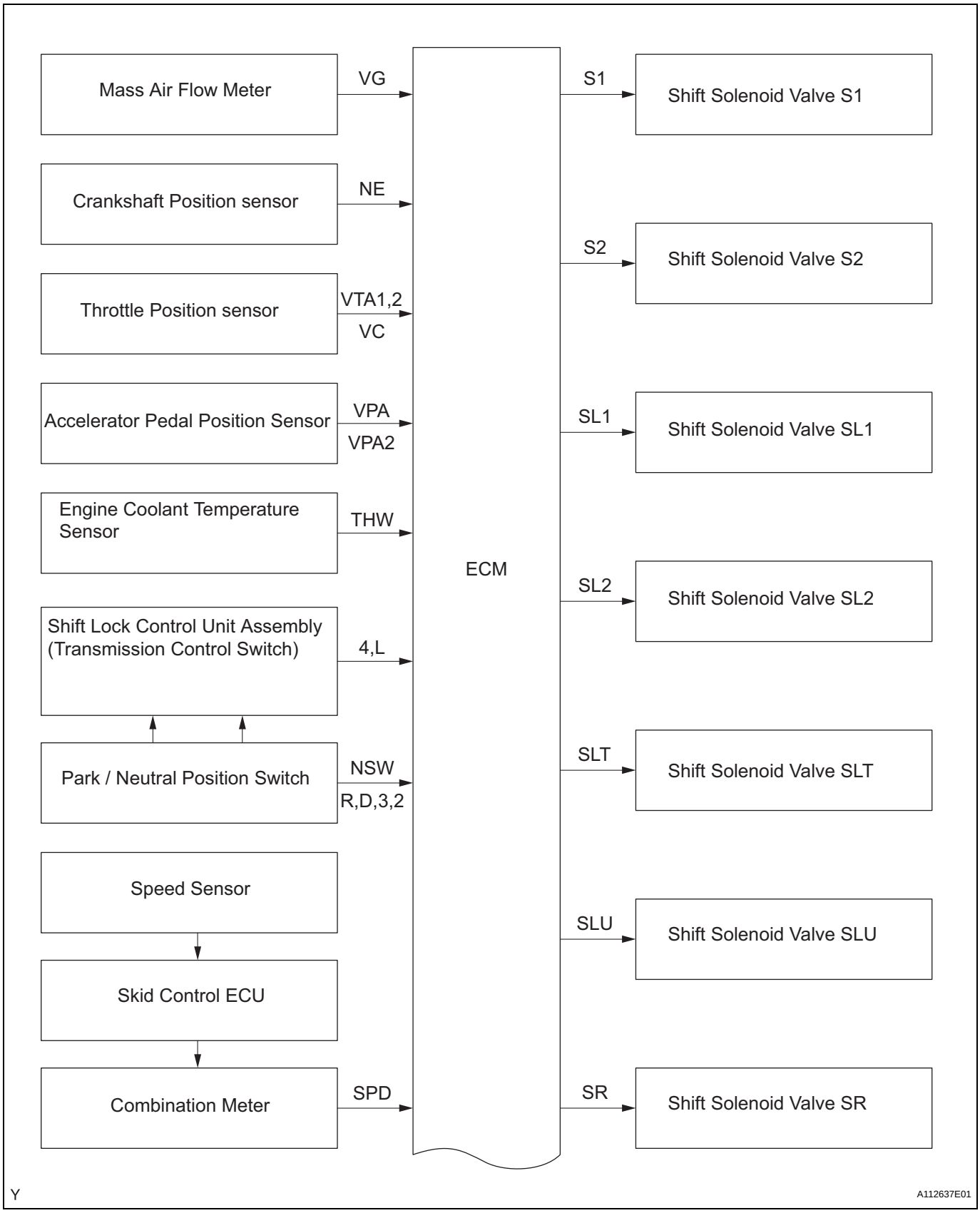

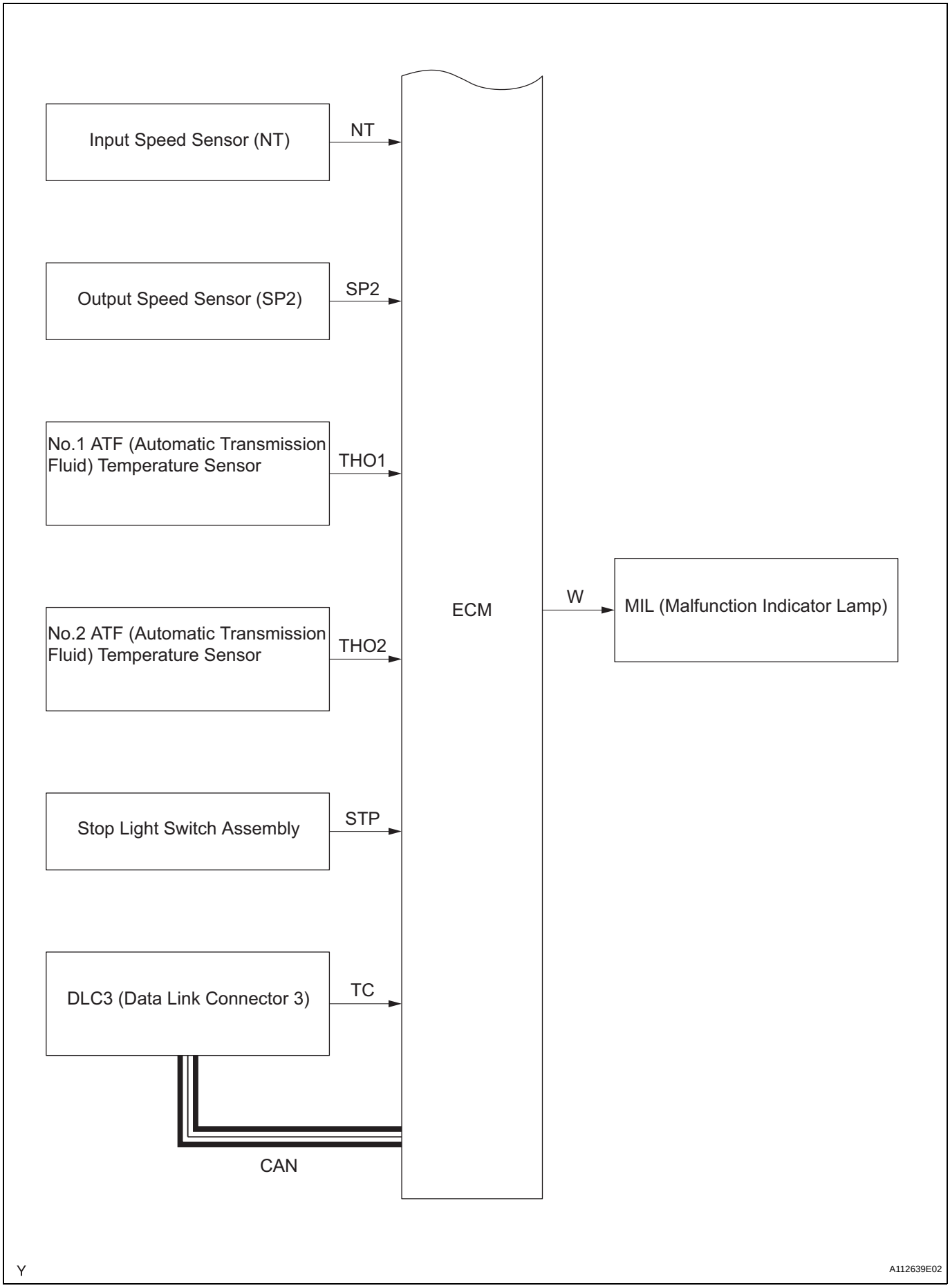
Input Speed Sensor (NT)
NT
Output Speed Sensor (SP2)
SP2
No.1 ATF (Automatic Transmission Fluid) Temperature Sensor
THO1
No.2 ATF (Automatic Transmission Fluid) Temperature Sensor
THO2
Stop Light Switch Assembly
STP
DLC3 (Data Link Connector 3)
TC
CAN
ECM
W
MIL (Malfunction Indicator Lamp)
Y
A112639E02

SYSTEM DESCRIPTION

1. SYSTEM DESCRIPTION

(a) The ECT (Electronic controlled automatic transmission) is an automatic transmission that electronically controls shift timing using the ECM. The ECM detects electrical signals that indicate engine and driving conditions, and controls the shift point, based on driver habits and road conditions. As a result, fuel efficiency and power transmission performance are improved.
Shift shock has been reduced by controlling the engine and transmission simultaneously.
In addition, the ECT has features such as follows:
- Diagnostic function.
- Fail-safe function when a malfunction occurs.

HOW TO PROCEED WITH TROUBLESHOOTING

HINT:

- The ECM of this system is connected to the CAN communication system. Therefore, before starting troubleshooting, make sure that there is no trouble in the CAN communication system.
- *: Use the intelligent tester.

1	VEHICLE BROUGHT TO WORKSHOP

NEXT

2	CUSTOMER PROBLEM ANALYSIS

NEXT

3	CONNECT INTELLIGENT TESTER TO DLC3 *

NEXT

4	CHECK AND CLEAR DTCS AND FREEZE FRAME DATA *

Refer to the DTC CHECK / CLEAR (See page AT-30).

NEXT

5	VISUAL INSPECTION

NEXT

6	SETTING CHECK MODE DIAGNOSIS *

Refer to the CHECK MODE PROCEDURE (See page AT-31).

NEXT

7	PROBLEM SYMPTOM CONFIRMATION

Refer to the ROAD TEST (See page AT-11).

Result

Result	Proceed to
Symptom does not occur	A
Symptom occurs	B

B → GO TO STEP 9

A

8	SYMPTOM SIMULATION

Refer to the ELECTRONIC CIRCUIT INSPECTION PROCEDURE (See page IN-34).

NEXT

9	DTC CHECK *

Refer to the DTC CHECK / CLEAR (See page AT-30).

Result

Result	Proceed to
DTC is not output	A
DTC is output	B

B → GO TO STEP 17

A

10	BASIC INSPECTION

Refer to the AUTOMATIC TRANSMISSION FLUID (See page AT-135).
Refer to the PARK/NEUTRAL POSITION SWITCH (See page AT-142).
Refer to the FLOOR SHIFT ASSEMBLY (See page AT-155).

NG → GO TO STEP 19

OK

11	MECHANICAL SYSTEM TEST

Refer to the MECHANICAL SYSTEM TEST (See page AT-14).

NG → GO TO STEP 16

OK

12	HYDRAULIC TEST

Refer to the HYDRAULIC TEST (See page AT-16).

NG → GO TO STEP 16

OK

13	MANUAL SHIFTING TEST

Refer to the MANUAL SHIFTING TEST (See page AT-17).

NG → GO TO STEP 15

OK

14	PROBLEM SYMPTOMS TABLE CHAPTER 1

Refer to the PROBLEM SYMPTOMS TABLE (See page AT-20).

NG → GO TO STEP 18

OK

15	PROBLEM SYMPTOMS TABLE CHAPTER 2

Refer to the PROBLEM SYMPTOMS TABLE (See page AT-20).

NEXT

16	PART INSPECTION

NEXT → GO TO STEP 19

17	DTC CHART

Refer to the DIAGNOSTIC TROUBLE CODE CHART (See page AT-38).

NEXT

18	CIRCUIT INSPECTION

NEXT

19	REPAIR OR REPLACE

NEXT

20	**CONFIRMATION TEST**

NEXT

END

ROAD TEST

1. PROBLEM SYMPTOM CONFIRMATION

(a) Based on the result of the customer problem analysis, try to reproduce the symptoms. If the problem is that the transaxle does not shift up, shift down, or the shift point is too high or too low, conduct the following road test while referring to the automatic shift schedule and simulate the problem symptoms.

2. ROAD TEST

NOTICE:

Perform the test at the normal operating ATF (Automatic Transmission Fluid) temperature: 50° to 80°C (122° to 176°F).

(a) D position test:

Shift into the D position, fully depress the accelerator pedal and check the following points.

(1) Check up-shift operation.

Check that 1 → 2, 2 → 3, 3 → 4 and 4 → 5th up-shifts take place, and that the shift points conform to the automatic shift schedule (see page SS-39).

HINT:

5th Gear Up-shift Prohibition Control

- Engine coolant temperature is 55°C (131°F) or less and vehicle speed is 32 mph (51 km/h) or less.

4th Gear Up-shift Prohibition Control

- Engine coolant temperature is 47°C (116.6°F) or less and vehicle speed is 30.4 mph (49 km/h) or less.

5th Gear Lock-up Prohibition Control

- Brake pedal is depressed.
- Accelerator pedal is released.
- Engine coolant temperature is 60°C (140°F) or less.

(2) Check for shift shock and slippage

Check for shock and slippage at the 1 → 2, 2 → 3, 3 → 4 and 4 → 5th up-shifts.

(3) Check for abnormal noise and vibration.

Check for abnormal noise and vibration when up-shifting from 1 → 2, 2 → 3, 3 → 4 and 4 → 5 while driving with the shift lever in the D position, and check while driving in the lock-up condition.

HINT:

The check for the cause of abnormal noise and vibration must be done thoroughly as it could also be due to loss of balance in the differential, torque converter clutch, etc.

(4) Check kick-down operation.
Check vehicle speeds when the 2 → 1, 3 → 2, 4 → 3, and 5 → 4 kick-downs take place while driving with the shift lever in the D position. Confirm that each speed is within the applicable vehicle speed range indicated in the automatic shift schedule (see page SS-39).

(5) Check for abnormal shock and slippage at kick-down.

(6) Check the lock-up mechanism.
- Drive in the D position (5th gear), at a steady speed (lock-up ON).
- Lightly depress the accelerator pedal and check that the engine speed does not change abruptly.

HINT:
If there is a sudden increase in engine speed, there is no lock-up.

(b) 4 position test:
Shift into the 4 position, fully depress the accelerator pedal and check the following points.

(1) Check up-shift operation.
Check that the 1 → 2, 2 → 3 and 3 → 4 up-shifts take place and that the shift points conform to the automatic shift schedule (see page SS-39).
HINT:
- There is no 5th up-shift in the 4 position.
- 4th Gear Lock-up Prohibition Control
- Brake pedal is depressed.
- Accelerator pedal is released.
- Engine coolant temperature is 60°C (140°F) or less.

(2) Check engine braking.
While driving in the 4 position and 4th gear, release the accelerator pedal and check the engine braking effect.

(3) Check for abnormal noises during acceleration and deceleration, and for shock at up-shift and down-shift.

(4) Check the lock-up mechanism.
- Drive in the 4 position and 4th gear, at a steady speed (lock-up ON).
- Lightly depress the accelerator pedal and check that the engine speed does not change abruptly.

HINT:
If there is a sudden increase in engine speed, there is no lock-up.

(c) 3 position test:
Shift into the 3 position, fully depress the accelerator pedal and check the following points.
(1) Check up-shift operation.
Check that the 1 → 2 and 2 → 3 up-shifts take place and that the shift points conform to the automatic shift schedule (see page SS-39).
HINT:
There is no 4th up-shift and lock-up in the 3 position.
(2) Check engine braking.
While running in the 3 position and 3rd gear, release the accelerator pedal and check the engine braking effect.
(3) Check for abnormal noises during acceleration and deceleration, and for shock at up-shift and down-shift.

(d) 2 position test:
Shift into the 2 position, fully depress the accelerator pedal and check the following points.
(1) Check up-shift operation.
Check that the 1 → 2 up-shift takes place and that the shift point conforms to the automatic shift schedule (see page SS-39).
HINT:
There is no 3rd up-shift and lock-up in the 2 position.
(2) Check engine braking.
While running in the 2 position and 2nd gear, release the accelerator pedal and check the engine braking effect.
(3) Check for abnormal noises during acceleration and deceleration, and for shock at up-shift and down-shift.

(e) L position test:
Shift into the L position and fully depress the accelerator pedal and check the following points.
(1) Check no up-shift.
While running in the L position, check that there is no up-shift to 2nd gear.
(2) Check engine braking.
While running in the L position, release the accelerator pedal and check the engine braking effect.
(3) Check for abnormal noises during acceleration and deceleration.

(f) R position test:
Shift into the R position, lightly depress the accelerator pedal, and check that the vehicle moves backward without any abnormal noise or vibration.
CAUTION:
Before conducting this test, ensure that the test area is free from people and obstructions.

(g) P position test:
Stop the vehicle on a grade (more than 5°) and after shifting into the P position, release the parking brake. Then, check that the parking lock pawl holds the vehicle in place.

MECHANICAL SYSTEM TESTS

1. STALL SPEED TEST

HINT:

This test is to check the overall performance of the engine and transmission.

NOTICE:

- **Do not perform the stall speed test longer than 5 seconds.**
- **To ensure safety, perform this test in an open and level area that provides good traction.**
- **The stall speed test should always be performed with at least 2 people. One person should observe the condition of the wheels and wheel chocks while the other is performing the test.**

(a) Connect the intelligent tester to the CAN VIM. Then connect the CAN VIM to the DLC3.

(b) Run the vehicle until the transmission fluid temperature has reached 50 to 80°C (122 to 176°F).

(c) Allow the engine to idle with the air conditioning OFF.

(d) Chock all 4 wheels.

(e) Set the parking brake and keep the brake pedal depressed firmly with your left foot.

(f) Shift the shift lever into the drive position.

(g) Depress the accelerator pedal as much as possible with your right foot.

(h) Read the engine rpm (stall speed) and release the accelerator pedal immediately.

Standard value:

2,250 to 2,550 rpm

Evaluation:

Test Result	Possible Cause
Stall speed is lower than standard value	• Stator one-way clutch is not operating properly • Torque converter is faulty (stall speed is less than standard value by 600 rpm or more) • Engine power may be insufficient
Stall speed is higher than standard value	• Line pressure is low • No. 1 clutch (C1) slipping • No. 3 one-way clutch (F3) is not operating properly • Improper fluid level

2. SHIFT TIME LAG TEST

HINT:

This test is to check the condition of the direct clutch, forward clutch, 1st brake and reverse brake.

(a) Connect the intelligent tester to the CAN VIM. Then connect the CAN VIM to the DLC3.

(b) Run the vehicle until the transmission fluid temperature has reached 50 to 80°C (122 to 176°F).

(c) Allow the engine to idle with the air conditioning OFF.

(d) Set the parking brake and keep the brake pedal depressed firmly.

(e) Check the D range time lag.
(1) Shift the shift lever into the N position and wait for 1 minute.
(2) Shift the shift lever into the D position and measure the time until the shock is felt.
(3) Repeat the 2 procedures above 3 times, and calculate the average time of the 3 tests.

(f) Check the R range time lag.
(1) Shift the shift lever into the N position and wait for 1 minute.
(2) Shift the shift lever into the R position and measure the time until the shock is felt.
(3) Repeat the 2 procedures above 3 times, and calculate the average time of the 3 tests.

Standard value:
D range time lag is less than 1.2 seconds
R range time lag is less than 1.5 seconds

Evaluation:

Test Result	Possible Cause
D range time lag exceeds standard value	• Line pressure is low • No. 1 clutch (C1) is worn • No. 3 one-way clutch (F3) is not operating properly
R range time lag exceeds standard value	• Line pressure is low • No. 3 clutch (C3) is worn • No. 4 brake (B4) is worn • No. 1 one-way clutch (F1) is not operating properly

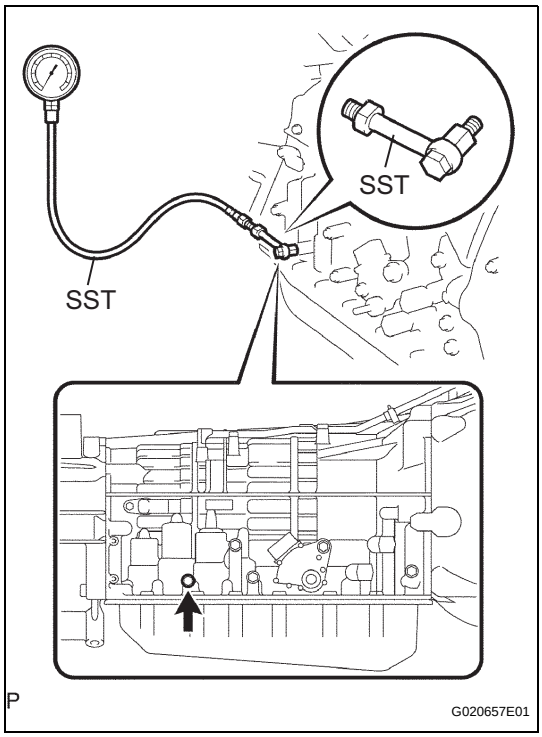

HYDRAULIC TEST

1. PERFORM HYDRAULIC TEST

(a) Measure the line pressure.

NOTICE:
- **Perform the test at the normal operating ATF (Automatic Transmission Fluid) temperature of 50° to 80°C (122° to 176°F).**
- **The line pressure test should always be carried out in pairs. One technician should observe the condition of the wheels or wheel stoppers outside the vehicle while the other is doing the test.**
- **Be careful to prevent the SST hose from interfering with the exhaust pipe.**
- **This check must be conducted after checking and adjusting the engine.**
- **Perform with the A/C OFF.**
- **Do not conduct stall tests for longer than 10 seconds continuously.**

(1) Warm up the ATF.
(2) Lift the vehicle up.
(3) Remove the test plug on the transmission case center right side and connect SST.
SST 09992-00095 (09992-00151, 09992-00271)
(4) Fully apply the parking brake and chock the 4 wheels.
(5) Start the engine and check the idling speed.

(6) Keep your left foot pressing firmly on the brake pedal and shift into the D position.
(7) Measure the line pressure while the engine is idling.
(8) Depress the accelerator pedal all the way down. Quickly read the highest line pressure when the engine speed reaches the stall speed.
(9) In the same manner, do the test in the R position.

Specified line pressure

Condition	D position	R position
Idling	**363 to 423 kPa (3.7 to 4.3 kgf/cm^2 , 53 to 61 psi)**	**484 to 564 kPa (4.9 to 5.8 kgf/cm^2, 70 to 82 psi)**
Stall test	**1,282 to 1,381 kPa (13.1 to 14.1 kgf/cm^2, 186 to 200 psi)**	**1,218 to 1,338 kPa (12.4 to 13.6 kgf/cm^2, 177 to 194 psi)**

Evaluation:

Problem	Possible cause
Measured value are higher than specified in all positions	• Shift solenoid valve SLT defective • Regulator valve defective
Measured value are lower than specified in all positions	• Shift solenoid valve SLT defective • Regulator valve defective • Oil pump defective
Pressure is low in D position only	• D position circuit fluid leakage • No. 1 clutch (C_1) defective
Pressure is low in R position only	• R position circuit fluid leakage • No. 3 clutch (C_3) defective • No. 4 brake (B_4) defective

MANUAL SHIFTING TEST

1. MANUAL SHIFTING TEST

HINT:

- Through this test, it can be determined whether the trouble occurs in the electrical circuit or if it is a mechanical problem in the transmission.
- If any abnormalities are found in the following test, the problem is in the transmission itself.

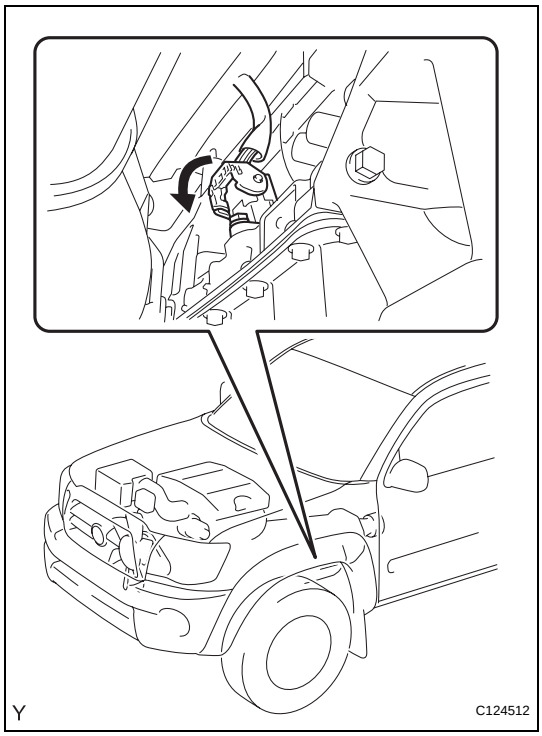

(a) Disconnect the connector of the transmission wire.
HINT:
It is possible to deactivate the electrical shift control by disconnecting the transmission wire. The gear positions can then be changed mechanically with the shift lever.

(b) Drive with the transmission wire disconnected. Shift the shift lever to each position to check whether the gear position changes as shown in the table below.

Shift Lever Position	Gear Position
D	4th
4	4th
3	3rd
2	1st
L	1st
R	R
P	P

(c) Connect the connector of the transmission wire.

(d) Clear the DTC (See page AT-30).

INITIALIZATION

1. RESET MEMORY

CAUTION:

Perform the RESET MEMORY (AT initialization) when replacing the automatic transmission assembly, engine assembly or ECM.

NOTICE:

Intelligent tester only

HINT:

The ECM stores the condition under which the ECT (Electronic Controlled Automatic Transmission) controls the automatic transmission and engine assemblies according to their characteristics. Therefore, when the automatic transmission assembly, engine assembly, or ECM has been replaced, it is necessary to reset the memory so that the ECM can store the new information. Reset procedure is as follows.

(a) Turn the ignition switch off.

(b) Connect the intelligent tester together with the CAN VIN (controller area network vehicle interface module) to the DLC3.

(c) Turn the ignition switch to the ON position and push the intelligent tester main switch on.

(d) Select the items "DIAGNOSIS/ ENHANCED OBD II".

(e) Perform the reset memory procedure from the ENGINE menu.

CAUTION:

After performing the RESET MEMORY, be sure to perform the ROAD TEST (see page AT-11) described earlier.

HINT:

The ECM stores the new information during the ROAD TEST.

Tester Menu Flow:

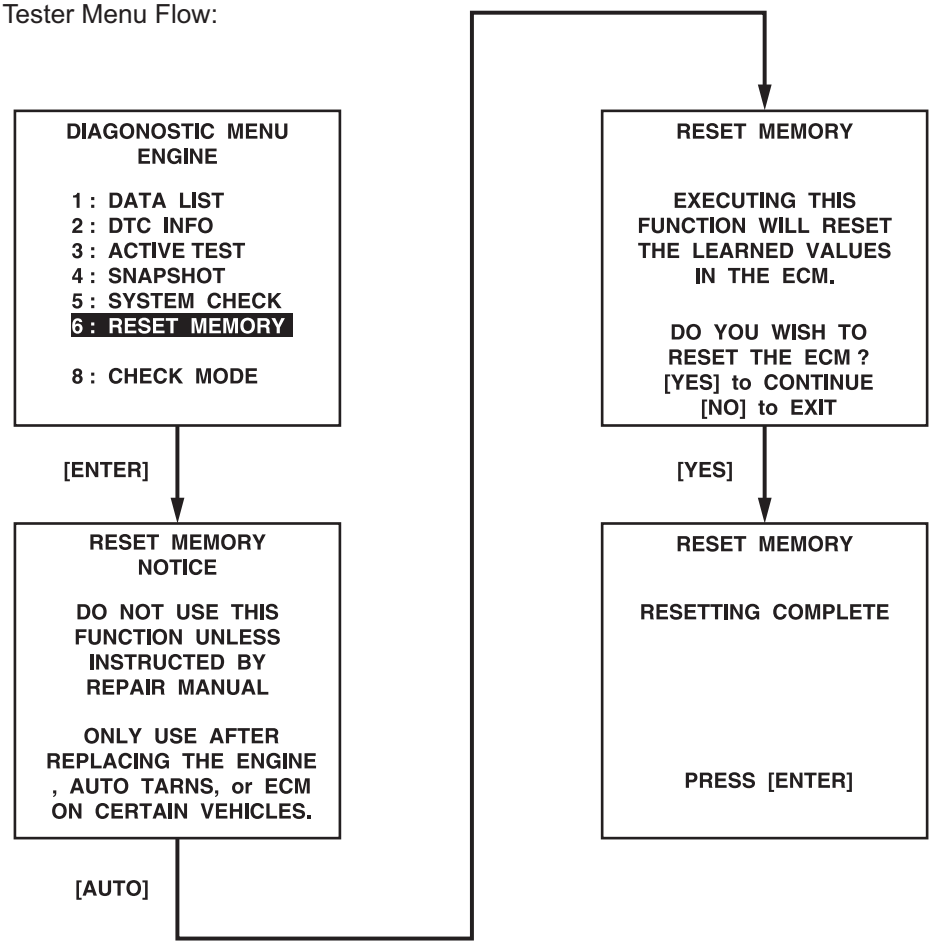

P C115865E01

MONITOR DRIVE PATTERN

1. MONITOR DRIVE PATTERN FOR ECT TEST

(a) Perform this drive pattern as one method to simulate the detection conditions of the ECT (Electronic Controlled Automatic Transmission) malfunctions.
(The DTCs may not be detected due to the actual driving conditions. And some DTCs may not be detected through this drive pattern.)
HINT:
Preparation for driving
- Warm up the engine sufficiently. (Engine coolant temperature should be 60°C (140°F) or higher)
- Drive the vehicle when the atmospheric temperature is -10°C (14°F) or higher. (Malfunction is not detected when the atmospheric temperature is less than -10°C (14°F))

Notice in driving
- Drive the vehicle through all gears. Stop → 1st → 2nd → 3rd → 4th → 5th → 5th (lock-up ON).
- Repeat the above driving pattern three times or more.

NOTICE:
- **The monitor status can be checked using the intelligent tester. When using the intelligent tester, monitor status can be found in the "ENHANCED OBD II/ DATA LIST" or under "CARB OBD II".**
- **In the event that the drive pattern must be interrupted (possibly due to traffic conditions or other factors), the drive pattern can be resumed and, in most cases, the monitor can be completed.**

CAUTION:
Perform this drive pattern on as level a road as possible and strictly observe the posted speed limits and traffic laws while driving.

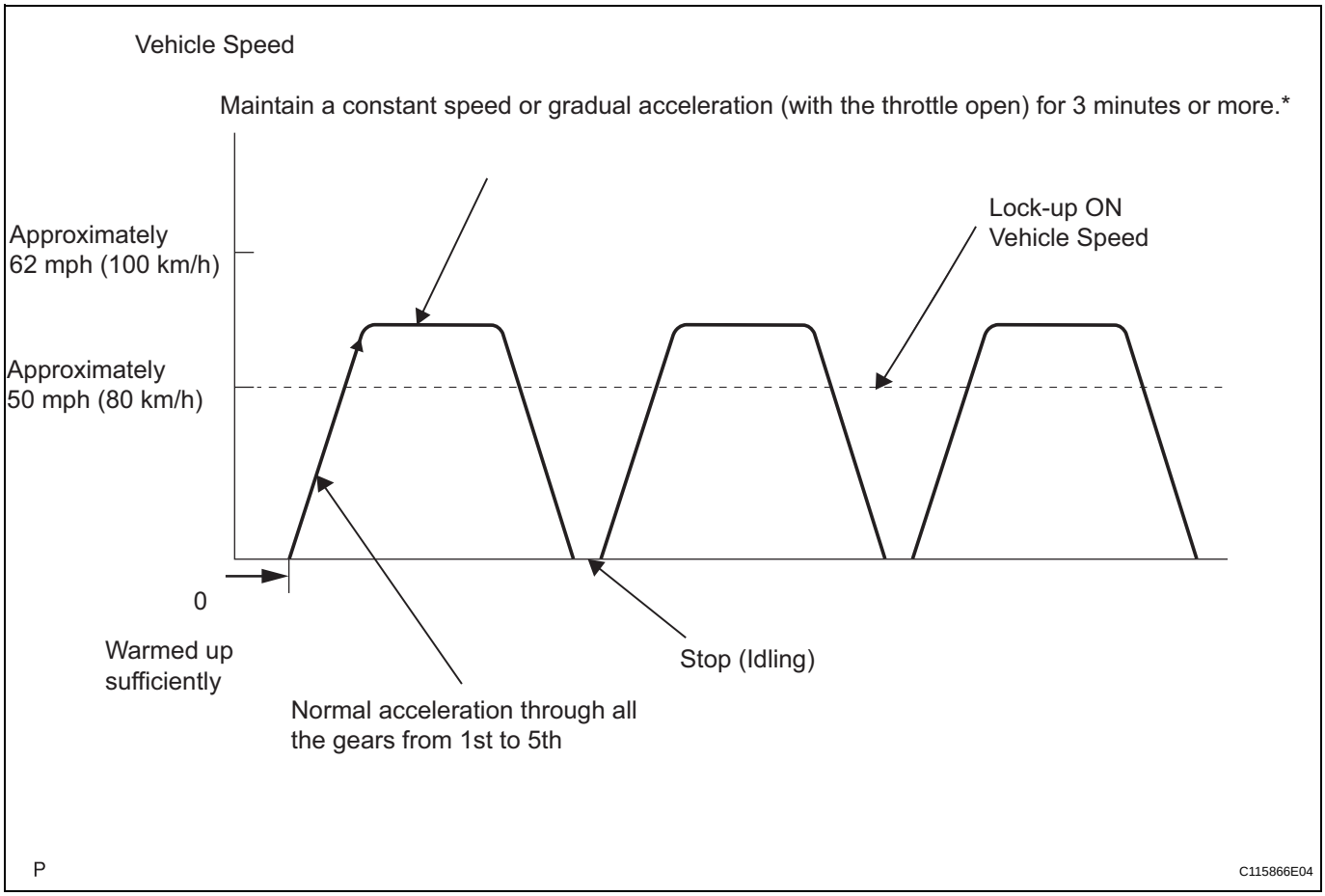

HINT:
*: Drive at such a speed in the uppermost gear, as to engage lock-up. The vehicle can be driven at a speed lower than that in the above diagram under the lock-up condition.

NOTICE:
It is necessary to drive the vehicle for approximately 30 minutes to detect DTC P0711 (ATF temperature sensor malfunction).

PROBLEM SYMPTOMS TABLE

HINT:
If no DTCs are displayed during the diagnostic trouble code check although the trouble still occurs, check the electrical circuits for each symptom in the order given in the charts on the following pages and proceed to the page given for troubleshooting.
The Matrix Chart is divided into 2 chapters.

1. **Chapter 1: Electronic Circuit Matrix Chart**
   - Refer to the table below when the cause of trouble is considered to be electrical.
   - If the trouble still occurs even though there are no abnormalities in any of the other circuits, check and replace the ECM.

   HINT:
   *1: Denotes that when there are malfunctions in the circuit, DTCs may be set.

Symptom	Suspected area	See page
No up-shift (A particular gear, from 1st to 4th gear, is not up-shifted)	1. Shift solenoid valve (S1) circuit *1	AT-100
	2. Shift solenoid valve (S2) circuit *1	AT-103
	3. ECM	IN-34
No up-shift (4th -> 5th)	1. Transmission control switch circuit (D - 4) *1	AT-43
	2. Engine coolant temperature sensor circuit *1	ES-104
	3. Speed sensor NT circuit *1	AT-57
	4. Shift solenoid valve (SL1) circuit *1	AT-66
	5. Shift solenoid valve (SL2) circuit *1	AT-91
	6. Shift solenoid valve (SR) circuit *1	AT-106
	7. ECM	IN-34
No up-shift (3rd -> 4th)	1. Engine coolant temperature sensor circuit *1	ES-104
	2. Shift solenoid valve (S2) circuit *1	AT-103
	3. ECM	IN-34
No up-shift (1st -> 2nd)	1. Transmission control switch circuit (2 - L) *1	AT-43
	2. Shift solenoid valve (S2) circuit *1	AT-103
	3. ECM	IN-34
No down-shift (5th -> 4th)	1. Transmission control switch circuit (D - 4) *1	AT-43
	2. Shift solenoid valve (SL1) circuit *1	AT-66
	3. Shift solenoid valve (SL2) circuit *1	AT-91
	4. Shift solenoid valve (SR) circuit *1	AT-106
	5. ECM	IN-34
No down-shift (2nd -> 1st)	1. Transmission control switch circuit (2 - L) *1	AT-43
	2. Shift solenoid valve (S2) circuit *1	AT-103
	3. ECM	IN-34
No down-shift (A particular gear, from 1st to 4th gear, is not down-shifted)	1. Shift solenoid valve (S1) circuit *1	AT-100
	2. Shift solenoid valve (S2) circuit *1	AT-103
	3. ECM	IN-34

Symptom	Suspected area	See page
No lock-up	1. ATF temperature sensor circuit *1	AT-49
	2. Stop light switch circuit *1	ES-272
	3. Speed sensor NT circuit *1	AT-57
	4. Shift solenoid valve (SLU) circuit *1	AT-131
	5. Engine coolant temperature sensor circuit *1	ES-104
	6. ECM	IN-34
No lock-up off	1. Shift solenoid valve (SLU) circuit *1	AT-131
	2. ECM	IN-34
Shift point too high or too low	1. Shift solenoid valve (SLT) circuit *1	AT-117
	2. Speed sensor NT circuit *1	AT-57
	3. Speed sensor SP2 circuit *1	AT-62
	4. Throttle position sensor circuit *1	ES-112
	5. ATF temperature sensor circuit *1	AT-49
	6. ECM	IN-34
Up-shift from 4th to 5th while shift lever is in 4 position	1. Transmission control switch circuit (D - 4) *1	AT-43
	2. ECM	IN-34
Up-shift from 4th to 5th while engine is cold	1. Engine coolant temperature sensor circuit *1	ES-104
	2. ECM	IN-34
Up-shift from 3rd to 4th while shift lever is in 3 position	1. Park/neutral position switch circuit *1	AT-43
	2. ECM	IN-34
Up-shift from 2nd to 3rd while shift lever is in 2 position	1. Park/neutral position switch circuit *1	AT-43
	2. ECM	IN-34
Up-shift from 1st to 2nd while shift lever is in L position	1. Transmission control switch circuit (2 - L) *1	AT-43
	2. ECM	IN-34
Harsh engagement (N -> D)	1. Speed sensor NT circuit *1	AT-57
	2. Shift solenoid valve (SL1) circuit *1	AT-66
	3. Shift solenoid valve (SLT) circuit *1	AT-117
	4. ECM	IN-34
Harsh engagement (Lock-up)	1. Speed sensor NT circuit *1	AT-57
	2. Speed sensor SP2 circuit *1	AT-62
	3. Shift solenoid valve (SLU) circuit *1	AT-131
	4. ECM	IN-34
Harsh engagement (Any driving position)	ECM	IN-34
Poor acceleration	1. No. 2 ATF temperature sensor circuit *1	AT-121
	2. Engine coolant temperature sensor circuit *1	ES-104
	3. Shift solenoid valve (SLT) circuit *1	AT-117
	4. ECM	IN-34
No engine braking	ECM	IN-34
No kick-down	ECM	IN-34
Engine stalls when starting off or stopping	1. Shift solenoid valve (SLU) circuit *1	AT-131
	2. ECM	IN-34
ATF temperature warning light remains on	1. No. 2 ATF temperature sensor circuit *1	AT-121
	2. Engine coolant temperature sensor circuit *1	ES-104
	3. ECM	IN-34
Lock-up at 3rd gear	1. No. 2 ATF temperature sensor circuit *1	AT-121
	2. Engine coolant temperature sensor circuit *1	ES-104
	3. ECM	IN-34

Symptom	Suspected area	See page
Shift point too high	1. No. 2 ATF temperature sensor circuit *1	AT-121
	2. Engine coolant temperature sensor circuit *1	ES-104
	3. ECM	IN-34

2. Chapter 2: On-Vehicle Repair and Off-Vehicle Repair
(▲: A750E, A750F AUTOMATIC TRANSMISSION Repair Manual Pub. No. RM999U)

Symptom	Suspected area	See page
Vehicle does not move in any forward positions or reverse position	1. Transmission control cable	AT-155
	2. Manual valve	▲
	3. Parking lock pawl	▲
	4. Rear planetary gear unit	▲
	5. Torque converter clutch	AT-166
Vehicle does not move in R position	1. Valve body assembly	AT-144
	2. No. 3 clutch (C3)	▲
	3. No. 4 brake (B4)	▲
	4. No. 1 one-way clutch (F1)	▲
No up-shift (1st -> 2nd)	1. Valve body assembly	AT-144
	2. No. 3 brake (B3)	▲
	3. No. 1 one-way clutch (F1)	▲
	4. No. 2 one-way clutch (F2)	▲
No up-shift (2nd -> 3rd)	1. Valve body assembly	AT-144
	2. No. 3 clutch (C3)	▲
No up-shift (3rd -> 4th)	1. Valve body assembly	AT-144
	2. No. 2 clutch (C2)	▲
No up-shift (4th -> 5th)	1. Valve body assembly	AT-144
	2. No. 1 brake (B1)	▲
	3. No. 1 clutch (C1)	▲
No down-shift (5th -> 4th)	Valve body assembly	AT-144
No down-shift (4th -> 3rd)	Valve body assembly	AT-144
No down-shift (3rd -> 2nd)	Valve body assembly	AT-144
No down-shift (2nd -> 1st)	Valve body assembly	AT-144
No lock-up or No lock-up off	1. Shift solenoid valve (SLU)	AT-126
	2. Valve body assembly	AT-144
	3. Torque converter clutch	AT-166
Harsh engagement (N -> D)	1. Shift solenoid valve (SL1)	AT-81
	2. Valve body assembly	AT-144
	3. C1 accumulator	▲
	4. No. 1 clutch (C1)	▲
	5. No. 3 one-way clutch (F3)	▲
Harsh engagement (Lock-up)	1. Shift solenoid valve (SLU)	AT-126
	2. Valve body assembly	AT-144
	3. Torque converter clutch	AT-166

Symptom	Suspected area	See page
Harsh engagement (N -> R)	1. Shift solenoid valve (SLT)	AT-110
	2. Shift solenoid valve (SLU)	AT-126
	3. Valve body assembly	AT-144
	4. C3 accumulator	▲
	5. No. 3 clutch (C3)	▲
	6. No. 4 brake (B4)	▲
	7. No. 1 one-way clutch (F1)	▲
Harsh engagement (1st -> 2nd -> 3rd -> 4th -> 5th)	1. Shift solenoid valve (SLT)	AT-110
	2. Shift solenoid valve (SL1)	AT-81
	3. Valve body assembly	AT-144
Harsh engagement (1st -> 2nd)	1. Valve body assembly	AT-144
	2. B3 accumulator	▲
	3. No. 3 brake (B3)	▲
	4. No. 1 one-way clutch (F1)	▲
	5. No. 2 one-way clutch (F2)	▲
Harsh engagement (2nd -> 3rd)	1. Valve body assembly	AT-144
	2. C3 accumulator	▲
	3. No. 3 clutch (C3)	▲
Harsh engagement (3rd -> 4th)	1. Valve body assembly	AT-144
	2. C2 accumulator	▲
	3. No. 2 clutch (C2)	▲
Harsh engagement (4th -> 5th)	1. Shift solenoid valve (SL1)	AT-81
	2. Shift solenoid valve (SL2)	AT-86
	3. Valve body assembly	AT-144
	4. No. 1 brake (B1)	▲
	5. No. 1 clutch (C1)	▲
Slippage or shuddering (Forward and reverse: After warm-up)	1. Valve body assembly	AT-144
	2. Oil strainer	AT-144
	3. No. 1 one-way clutch (F1)	▲
	4. No. 3 clutch (C3)	▲
	5. Torque converter clutch	AT-166
Slippage or shuddering (Particular position: Just after engine starts)	Torque converter clutch	AT-166
Slippage or shuddering (R position)	1. No. 4 brake (B4)	▲
	2. No. 1 one-way clutch (F1)	▲
	3. No. 3 clutch (C3)	▲
Slippage or shuddering (1st)	1. No. 1 clutch (C1)	▲
	2. No. 3 one-way clutch (F3)	▲
Slippage or shuddering (2nd)	1. No. 1 clutch (C1)	▲
	2. No. 3 brake (B3)	▲
	3. No. 1 one-way clutch (F1)	▲
	4. No. 2 one-way clutch (F2)	▲

Symptom	Suspected area	See page
Slippage or shuddering (3rd)	1. No. 1 clutch (C1)	▲
	2. No. 3 clutch (C3)	▲
	3. No. 1 one-way clutch (F1)	▲
Slippage or shuddering (4th)	1. No. 1 clutch (C1)	▲
	2. No. 2 clutch (C2)	▲
Slippage or shuddering (5th)	1. No. 2 clutch (C2)	▲
	2. No. 3 clutch (C3)	▲
	3. No. 1 brake (B1)	▲
Engine brake does not work only in 1st to 4th gear at D position	No. 1 clutch (C1)	▲
Engine brake does not work only in 1st gear at L position	1. Valve body assembly	AT-144
	2. No. 4 brake (B4)	▲
Engine brake does not work only in 2nd gear at 2 position	1. Valve body assembly	AT-144
	2. No. 2 brake (B2)	▲
Engine brake does not work only in 3rd gear at 3 position	1. Valve body assembly	AT-144
	2. No. 1 brake (B1)	▲
No kick-down	Valve body assembly	AT-144
Shift point too high or too low	1. Shift solenoid valve (SLT)	AT-110
	2. Shift solenoid valve (SL1)	AT-81
	3. Valve body assembly	AT-144
Poor acceleration (All positions)	1. Shift solenoid valve (SLT)	AT-110
	2. Valve body assembly	AT-144
	3. Torque converter clutch	AT-166
Poor acceleration (5th)	1. No. 1 clutch (C1)	▲
	2. No. 3 clutch (C3)	▲
	3. No. 1 brake (B1)	▲
	4. Front planetary gear unit	▲
Engine stalls when starting off or stopping	1. Shift solenoid valve (SLU)	AT-126
	2. Valve body assembly	AT-144
	3. Torque converter clutch	AT-166

TERMINALS OF ECM

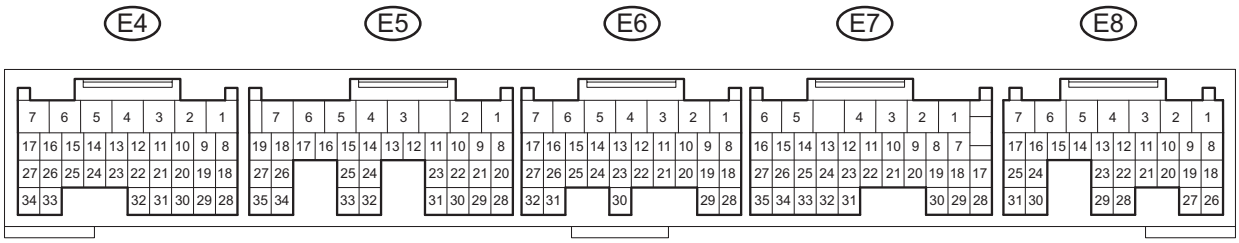

HINT:
The standard voltage of each ECM terminal is shown in the table below.
In the table, first follow the information under "Condition". Look under "Symbols (Terminal No.)" for the terminals to be inspected. The standard voltage between the terminals is shown under "Specified Condition".
Use the illustration above as a reference for the ECM terminals.

Symbols (Terminal No.)	Wiring Color	Terminal Description	Condition	Specified Condition
STP (E8-15) - E1 (E6-1)	L - BR	Stop light switch signal	Brake pedal is depressed	7.5 to 14 V
			Brake pedal is released	Below 1.5 V
L (E7-9) - E1 (E6-1)	G-Y - BR	L shift position switch signal	Ignition switch ON and shift lever L position	10 to 14 V
			Ignition switch ON and shift lever other than L position	Below 1 V
2 (E7-10) - E1 (E6-1)	R-Y - BR	2 shift position switch signal	Ignition switch ON and shift lever 2 and L positions	10 to 14 V
			Ignition switch ON and shift lever other than 2 and L positions	Below 1 V
R (E7-11) - E1 (E6-1)	R-W - BR	R shift position switch signal	Ignition switch ON and shift lever R position	10 to 14 V
			Ignition switch ON and shift lever other than R position	Below 1 V
3 (E7-19) - E1 (E6-1)	Y - BR	3 shift position switch signal	Ignition switch ON and shift lever 3 position	10 to 14 V
			Ignition switch ON and shift lever other than 3 position	Below 1 V
4 (E7-20) - E1 (E6-1)	B - BR	4 shift position switch signal	Ignition switch ON and shift lever 4 position	10 to 14 V
			Ignition switch ON and shift lever other than 4 position	Below 1 V
D (E7-21) - E1 (E6-1)	L-B - BR	D shift position switch signal	Ignition switch ON and shift lever D and 4 positions	10 to 14 V
			Ignition switch ON and shift lever other than D and 4 positions	Below 1 V
NSW (E5-8) - E1 (E6-1)	V - BR	Park or neutral shift position switch signal	Ignition switch ON and shift lever P and N positions	Below 2 V
			Ignition switch ON and shift lever other than P and N positions	10 to 14 V

Symbols (Terminal No.)	Wiring Color	Terminal Description	Condition	Specified Condition
SR (E5-9) - E1 (E6-1)	G - BR	SR solenoid signal	5th gear	10 to 14 V
			1st gear	Below 1 V
S2 (E5-10) - E1 (E6-1)	L-W - BR	S2 solenoid signal	2nd or 3rd gear	10 to 14 V
			1st, 4th or 5th gear	Below 1 V
S1 (E5-11) - E1 (E6-1)	W-G - BR	S1 solenoid signal	1st or 2nd gear	10 to 14 V
			3rd, 4th or 5th gear	Below 1 V
SLT+ (E5-13) - SLT- (E5-12)	G-B - R-B	SLT solenoid signal	Engine is idling	Pulse generation (See waveform 1)
SLU+ (E5-15) - SLU- (E5-14)	Y-B - LG	SLU solenoid signal	5th (lock-up) gear	Pulse generation (See waveform 2)
SL2+ (E5-17) - SL2- (E5-16)	W-L - G-R	SL2 solenoid signal	Engine idling speed	Pulse generation (See waveform 3)
SL1+ (E5-19) - SL1- (E5-18)	G-W - P-L	SL1 solenoid signal	Engine idling speed	Pulse generation (See waveform 4)
THO2 (E5-32) - E2 (E4-28)	GR - BR	No. 2 ATF temperature sensor signal	ATF temperature: 115°C (239°F) or more	Below 1.5 V
THO1 (E5-24) - E2 (E4-28)	Y-B - BR	No. 1 ATF temperature sensor signal	ATF temperature: 115°C (239°F) or more	Below 1.5 V
SP2+ (E5-34) - SP2- (E5-26)	L-R - R	Speed sensor (SP2) signal	Vehicle speed 12 mph (20 km/h)	Pulse generation (See waveform 5)
NT+ (E5-35) - NT- (E5-27)	W-R - Y-R	Speed sensor (NT) signal	Engine is idling	Pulse generation (See waveform 6)

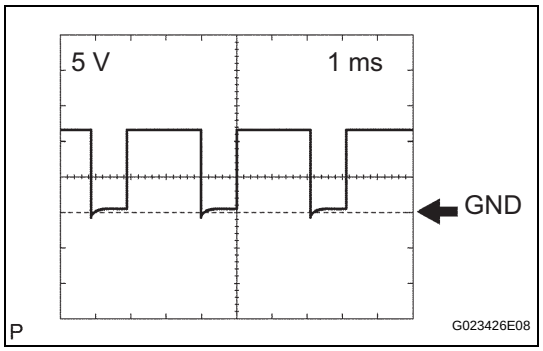

1. Waveform 1

Item	Condition
Terminal	SLT+ - SLT-
Tool setting	5 V/DIV, 1 ms/DIV
Vehicle condition	Engine idling speed

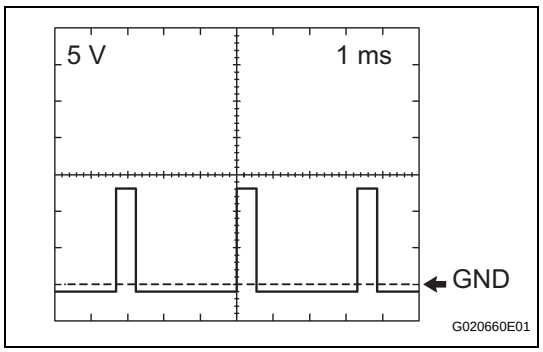

2. Waveform 2

Item	Condition
Terminal	SLU+ - SLU-
Tool setting	5 V/DIV, 1 ms/DIV
Vehicle condition	5th (lock-up) gear

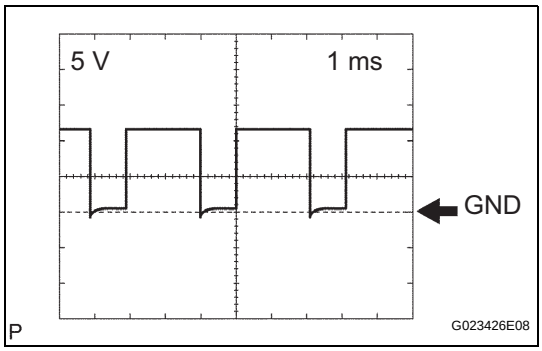

3. Waveform 3

Item	Condition
Terminal	SL2+ - SL2-
Tool setting	5 V/DIV, 1 ms/DIV
Vehicle condition	Engine idling speed

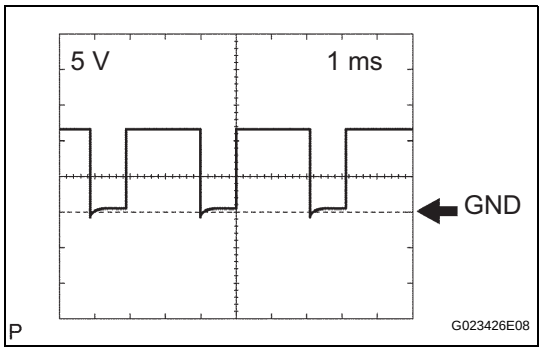

4. Waveform 4

Item	Condition
Terminal	SL1+ - SL1-
Tool setting	5 V/DIV, 1 ms/DIV
Vehicle condition	Engine idling speed

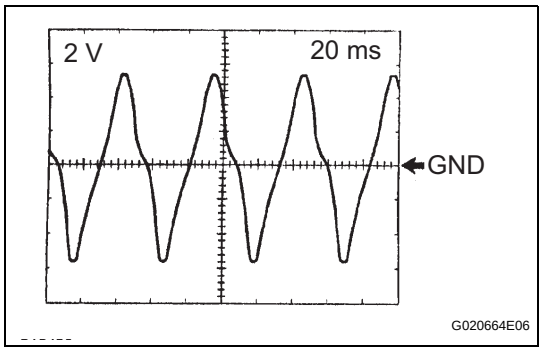

5. Waveform 5

Item	Condition
Terminal	SP2+ - SP2-
Tool setting	2 V/DIV, 20 ms/DIV
Vehicle condition	Vehicle speed 12 mph (20 km/h)

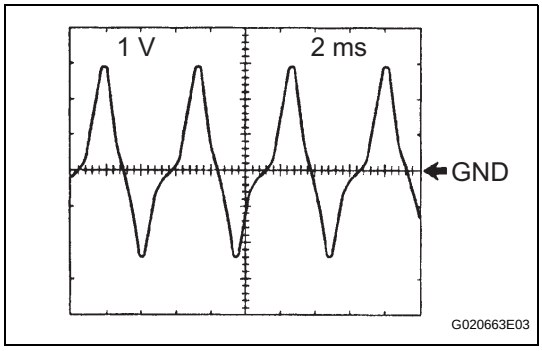

6. Waveform 6

Item	Condition
Terminal	NT+ - NT-
Tool setting	1 V/DIV, 2 ms/DIV
Vehicle condition	Engine idling speed

DIAGNOSIS SYSTEM

1. DESCRIPTION

(a) When troubleshooting on-Board Diagnostic (OBD II) vehicles, the vehicle must be connected to the intelligent tester (complying with SAE J1987). Various data output from the vehicle's ECM can then be read.

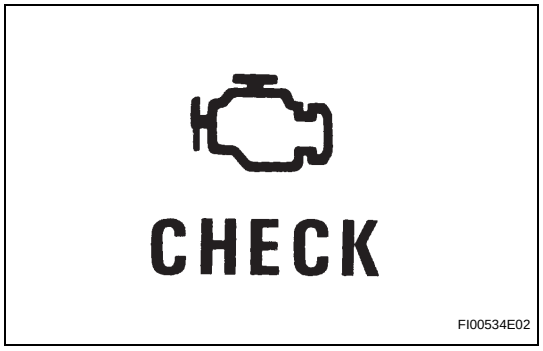

(b) OBD II regulations require that the vehicle's on-board computer illuminate the Malfunction Indicator Lamp (MIL) on the instrument panel when the computer detects a malfunction in:
1. The emission control system/components
2. The power train control components (which affect vehicle emissions)
3. The computer

In addition, the applicable Diagnostic Trouble Codes (DTCs) prescribed by SAE J2012 are recorded in the ECM memory.
If the malfunction does not reoccur in 3 consecutive trips, the MIL turns off automatically but the DTCs remain recorded in the ECM memory.

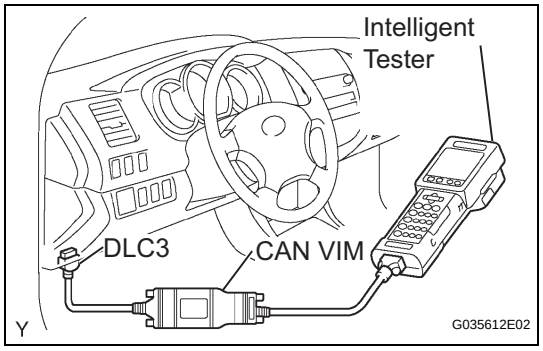

(c) To check DTCs, connect the intelligent tester to the Data Link Connector 3 (DLC3) of the vehicle. The intelligent tester displays DTCs, the freeze frame data and a variety of the engine data.
The DTCs and freeze frame data can be erased with the intelligent tester (See page AT-30).

(d) In order to enhance OBD function on vehicles and develop the Off-Board diagnosis system, CAN communication has been introduced in this system (CAN: Controller Area Network). It minimizes the gap between technician skills and vehicle technology. CAN is a network, which uses a pair of data transmission lines, spanning multiple computers and sensors. It allows high speed communication between the systems and simplification of the wire harness connection. Since this system is equipped with CAN communication, CAN VIM (VIM: Vehicle Interface Module) connecting with intelligent tester is necessary to display any information from the ECM on the tester. (Also communication between the intelligent tester and the ECM uses a CAN communication signal.) When confirming DTCs and any data of the ECM, connect the CAN VIM between the DLC3 and the intelligent tester.

2. NORMAL MODE AND CHECK MODE

(a) The diagnosis system operates in "normal mode" during normal vehicle use. In normal mode, "2 trip detection logic" is used to ensure accurate detection of malfunctions. "Check mode" is also available to technicians as an option. In check mode, "1 trip detection logic" is used for simulating malfunction symptoms and increasing the system's ability to detect malfunctions, including intermittent malfunctions.

3. 2 TRIP DETECTION LOGIC

(a) When a malfunction is first detected, the malfunction is temporarily stored in the ECM memory (1st trip). If the ignition switch is turned OFF and then ON again, and the same malfunction is detected again, the MIL will illuminate.

4. FREEZE FRAME DATA

(a) Freeze frame data records the engine conditions (fuel system, calculated load, engine coolant temperature, fuel trim, engine speed, vehicle speed, etc.) when a malfunction is detected. When troubleshooting, freeze frame data can help determine if the vehicle was running or stopped, if the engine was warmed up or not, if the air-fuel ratio was Lean or Rich, and other data from the time the malfunction occurred.

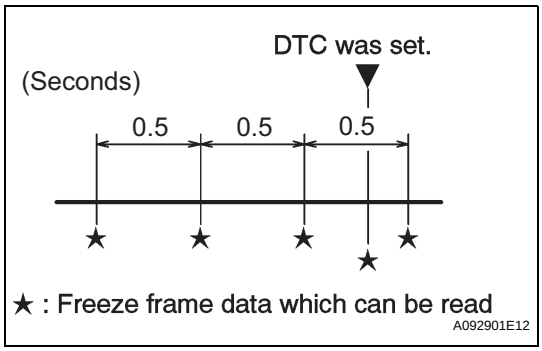

(b) The ECM records engine conditions in the form of freeze frame data every 0.5 seconds. Using the intelligent tester, five separate sets of freeze frame data, including the data values at the time when the DTC was set, can be checked.
- 3 data sets before the DTC was set
- 1 data set when the DTC was set
- 1 data set after the DTC was set

These data sets can be used to simulate the condition of the vehicle around the time the occurrence of the malfunction. The data may assist in identifying of the cause of the malfunction, and in judging whether it was temporary or not.

5. DATA LINK CONNECTOR 3 (DLC3)

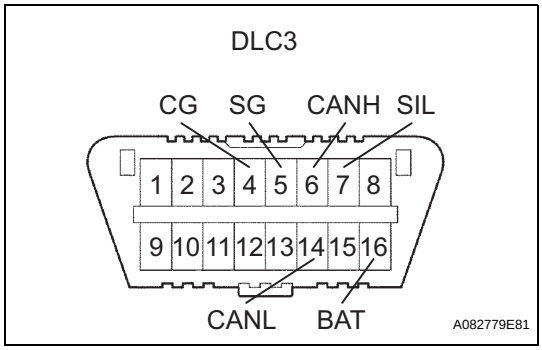

(a) The vehicle's ECM uses the ISO 15765-4 communication protocol. The terminal arrangement of the DLC3 complies with SAE J1962 and matches the ISO 15765-4 format.

HINT:

Connect the cable of the intelligent tester to the DLC3, turn the ignition switch ON and attempt to use the intelligent tester. If the screen displays UNABLE TO CONNECT TO VEHICLE, a problem exists in the vehicle side or the tester side.

If the communication is normal when the tester is connected to another vehicle, inspect the DLC3 on the original vehicle.
If the communication is still impossible when the tester is connected to another vehicle, the problem is probably in the tester itself. Consult the Service Department listed in the tester's instruction manual.

Symbol	Terminal No.	Name	Reference terminal	Result	Condition
SIL	7	Bus "+" line	5 - SG	Pulse generation	During transmission
CG	4	Chassis ground	Body ground	Below 1 Ω	Always
SG	5	Signal ground	Body ground	Below 1 Ω	Always
BAT	16	Battery positive	Body ground	11 to 14 V	Always
CANH	6	HIGH-level CAN bus line	14 - CANL	54 to 69 Ω	Ignition switch OFF
			Battery positive	1 MΩ or higher	Ignition switch OFF
			4 - CG	1 kΩ or higher	Ignition switch OFF
CANL	14	LOW-level CAN bus line	Battery positive	1 MΩ or higher	Ignition switch OFF
			4 - CG	1 kΩ or higher	Ignition switch OFF

6. CHECK BATTERY VOLTAGE

Battery voltage:

11 to 14 V

(a) If the voltage is below 11 V, replace the battery before proceeding.

7. CHECK MIL

(a) Check that the MIL illuminates when turning the ignition switch ON.
If the MIL does not illuminate, there is a problem in the MIL circuit (See page ES-402).

(b) When the engine is started, the MIL should turn off.

8. ALL READINESS

(a) For this vehicle, using the intelligent tester allows readiness codes corresponding to all DTCs to be read. When diagnosis (normal or malfunctioning) has been completed, readiness codes are set. Enter the following menus: ENHANCED OBD II / MONITOR STATUS on the intelligent tester.

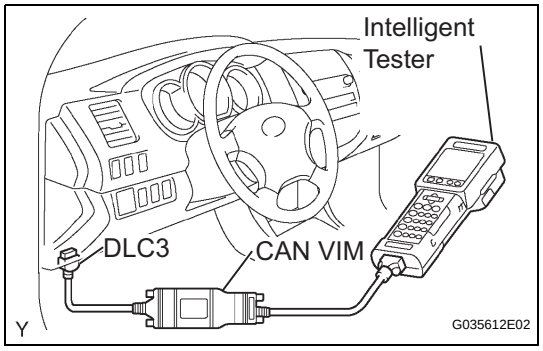

DTC CHECK / CLEAR

1. CHECK DTC

DTCs which are stored in the ECM can be displayed with the intelligent tester.
The tester can display pending DTCs and current DTCs. Some DTC aren't stored if the ECM doesn't detect a malfunction during consecutive driving cycles. However, malfunctions detected during a single driving cycle are stored as pending DTCs.

(a) Connect the intelligent tester to the Controller Area Network Vehicle Interface Module (CAN VIM). Then connect the CAN VIM to the Data Link Connector 3 (DLC3).

(b) Turn the ignition switch to the ON position.

(c) Enter the following menus: DIAGNOSIS/ ENHANCED OBD II/ DTC INFO/ CURRENT CODES (or PENDING CODE).

If the communication is normal when the tester is connected to another vehicle, inspect the DLC3 on the original vehicle.
If the communication is still impossible when the tester is connected to another vehicle, the problem is probably in the tester itself. Consult the Service Department listed in the tester's instruction manual.

Symbol	Terminal No.	Name	Reference terminal	Result	Condition
SIL	7	Bus "+" line	5 - SG	Pulse generation	During transmission
CG	4	Chassis ground	Body ground	Below 1 Ω	Always
SG	5	Signal ground	Body ground	Below 1 Ω	Always
BAT	16	Battery positive	Body ground	11 to 14 V	Always
CANH	6	HIGH-level CAN bus line	14 - CANL	54 to 69 Ω	Ignition switch OFF
			Battery positive	1 MΩ or higher	Ignition switch OFF
			4 - CG	1 kΩ or higher	Ignition switch OFF
CANL	14	LOW-level CAN bus line	Battery positive	1 MΩ or higher	Ignition switch OFF
			4 - CG	1 kΩ or higher	Ignition switch OFF

6. CHECK BATTERY VOLTAGE

Battery voltage:

11 to 14 V

(a) If the voltage is below 11 V, replace the battery before proceeding.

7. CHECK MIL

(a) Check that the MIL illuminates when turning the ignition switch ON.
If the MIL does not illuminate, there is a problem in the MIL circuit (See page ES-402).

(b) When the engine is started, the MIL should turn off.

8. ALL READINESS

(a) For this vehicle, using the intelligent tester allows readiness codes corresponding to all DTCs to be read. When diagnosis (normal or malfunctioning) has been completed, readiness codes are set. Enter the following menus: ENHANCED OBD II / MONITOR STATUS on the intelligent tester.

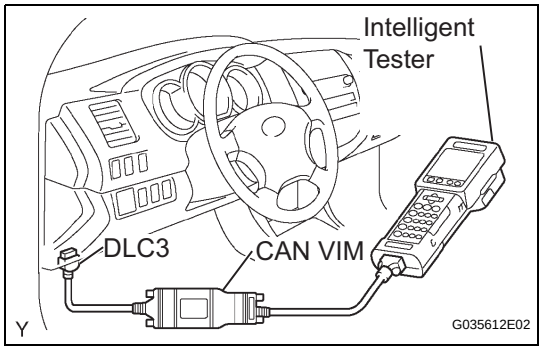

DTC CHECK / CLEAR

1. CHECK DTC

DTCs which are stored in the ECM can be displayed with the intelligent tester.
The tester can display pending DTCs and current DTCs. Some DTC aren't stored if the ECM doesn't detect a malfunction during consecutive driving cycles. However, malfunctions detected during a single driving cycle are stored as pending DTCs.

(a) Connect the intelligent tester to the Controller Area Network Vehicle Interface Module (CAN VIM). Then connect the CAN VIM to the Data Link Connector 3 (DLC3).

(b) Turn the ignition switch to the ON position.

(c) Enter the following menus: DIAGNOSIS/ ENHANCED OBD II/ DTC INFO/ CURRENT CODES (or PENDING CODE).

(d) Confirm the DTCs and freeze frame data and then write them down.
(e) Confirm the details of the DTCs (See page AT-38).

2. CLEAR DTC

(a) Connect the intelligent tester to the CAN VIM. Then connect the CAN VIM to the DLC3.
(b) Turn the ignition switch to the ON position.
(c) Enter the following menus: DIAGNOSIS/ ENHANCED OBD II/ DTC INFO/ CLEAR CODES and press YES.

ADJUSTMENT

1. INSPECT SHIFT LEVER POSITION

(a) Check that the shift lever moves smoothly and appropriately from the P to R position, only when the ignition switch is turned to ON and the brake pedal is depressed.

(b) When starting the engine, make sure that the vehicle moves forward when shifting the lever from the N to D position and moves rearward when shifting the lever to the R position.

2. ADJUST SHIFT LEVER POSITION

(a) Push the control shaft fully rearward.

(b) Turn the control shaft lever 2 notches counterclockwise to the N position.

(c) Set the shift lever to the N position.

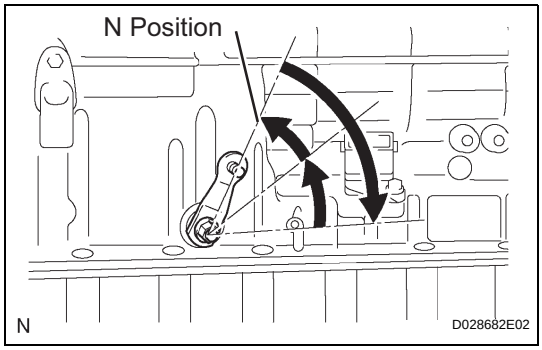

REASSEMBLY

1. INSTALL SHIFT LOCK CONTROL ECU SUB-ASSEMBLY

(a) Install the shift lock control ECU with the 2 screws.

(b) Install the spring and shift lock release link.

(c) Install the shift lever guide housing .

(d) Install the lever lock and new shift lever nut.

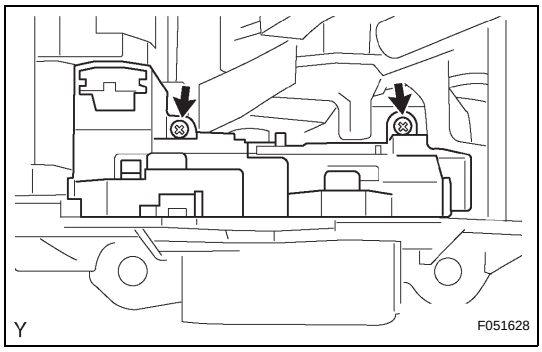

2. INSTALL LOWER POSITION INDICATOR HOUSING

(a) CABLE TYPE:

(1) Install the position indicator housing lower.
HINT:
Firmly make the claws fit.

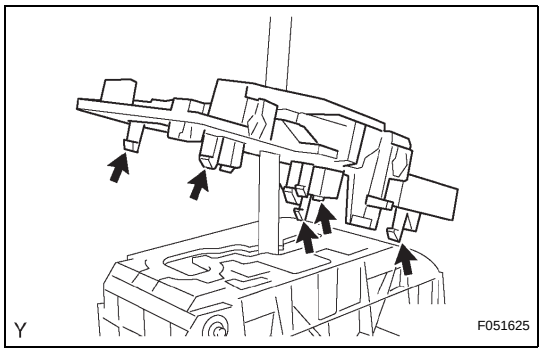

(b) ROD TYPE:

(1) Install the position indicator housing lower.
HINT:
Firmly make the claws fit.

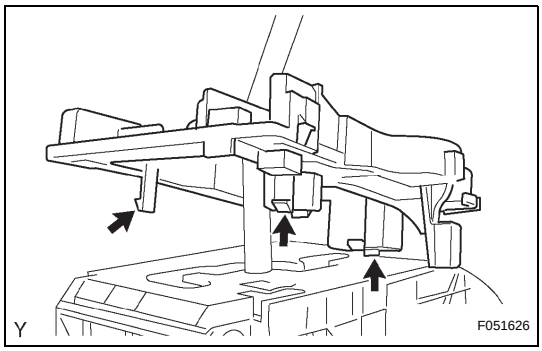

3. INSTALL SHIFT LOCK RELEASE BUTTON

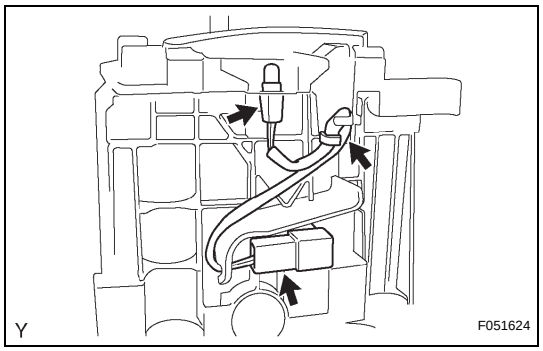

4. INSTALL INDICATOR LAMP WIRE SUB-ASSEMBLY

(a) Install the bulb into the indicator lamp wire sub-assembly.

(b) Install the indicator lamp wire sub-assembly.

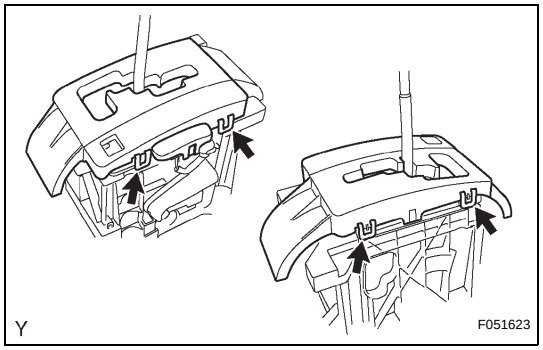

5. INSTALL UPPER POSITION INDICATOR HOUSING

(a) Install the slide cover and position indicator housing sub-assembly onto the shift lever guide housing.
HINT:
Firmly make the claws fit.

INSTALLATION

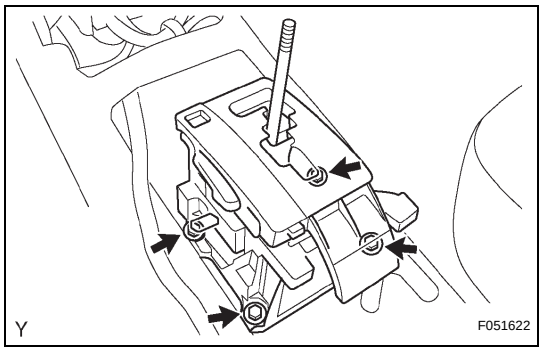

1. INSTALL FLOOR SHIFT ASSEMBLY

(a) Install the floor shift with the 4 bolts.
Torque: 14 N*m (143 kgf*cm, 10 ft.*lbf)

(b) Connect the 2 clamps and 2 connectors.

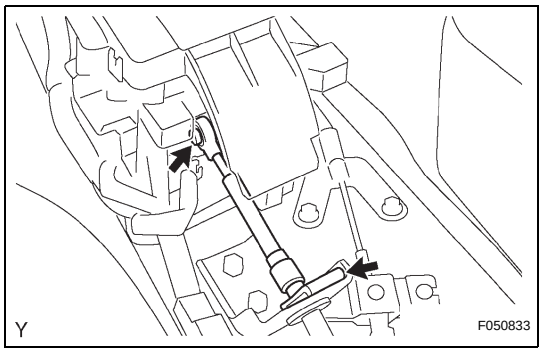

2. CONNECT TRANSMISSION CONTROL CABLE ASSEMBLY

(a) CABLE TYPE:

(1) Connect the transmission control cable with the clip to floor shift assembly.

(2) Install the transmission control cable onto the floor shift assembly.

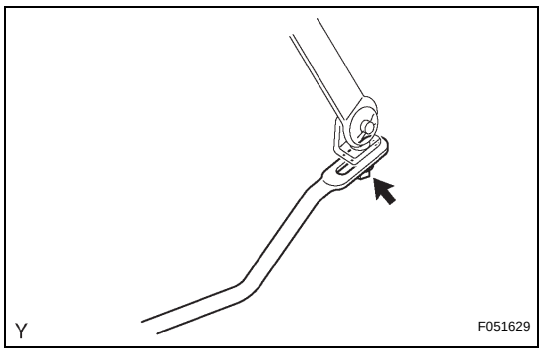

3. INSTALL FLOOR SHIFT GEAR SHIFTING ROD SUB-ASSEMBLY

(a) ROD TYPE:

(1) Install the floor shift gear shifting rod with nut.
Torque: 5.5 N*m (56 kgf*cm, 49 in.*lbf)

4. INSTALL FRONT CONSOLE BOX (for Bench Seat Type) (See page IP-23)

5. INSTALL FRONT CONSOLE BOX (for Separate Seat Type) (See page IP-24)

6. **INSTALL INSTRUMENT PANEL CUP HOLDER TRAY (for Separate Seat Type) (See page IP-24)**
7. **INSTALL REAR CONSOLE BOX ASSEMBLY (for Separate Seat Type) (See page IP-24)**
8. **INSTALL CONSOLE UPPER REAR PANEL SUB-ASSEMBLY (for Separate Seat Type) (See page IP-25)**
9. **ADJUST SHIFT LEVER POSITION (See page AT-155)**
10. **INSPECT SHIFT LEVER POSITION (See page AT-155)**

REMOVAL

1. **DISCONNECT CABLE FROM NEGATIVE BATTERY TERMINAL**
2. **REMOVE NO. 1 ENGINE UNDER COVER SUB-ASSEMBLY**
3. **REMOVE NO. 2 ENGINE UNDER COVER (w/ No. 2 Engine Under Cover)**
4. **DISCONNECT OXYGEN SENSOR**
5. **REMOVE EXHAUST PIPE ASSEMBLY**
   (See page EX-3)
6. **REMOVE PROPELLER WITH CENTER BEARING SHAFT ASSEMBLY (See page PR-27)**
7. **DRAIN AUTOMATIC TRANSMISSION FLUID**
   (a) Remove the drain plug and gasket, and drain ATF.
   (b) Install a new gasket and drain plug.
   Torque: 28 N*m (285 kgf*cm, 21 ft.*lbf)
8. **REMOVE MANIFOLD STAY**
   (a) Remove the 3 bolts and manifold stay.

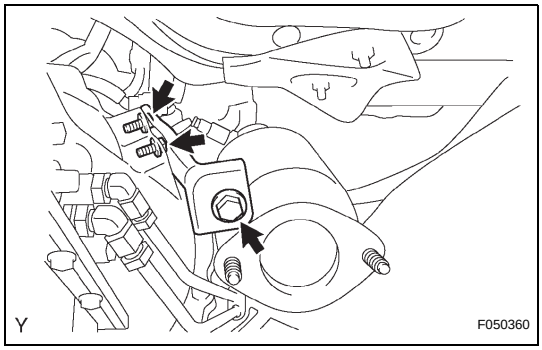

9. **REMOVE NO.2 MANIFOLD STAY**
   (a) Remove the 3 bolts and manifold stay No. 2.

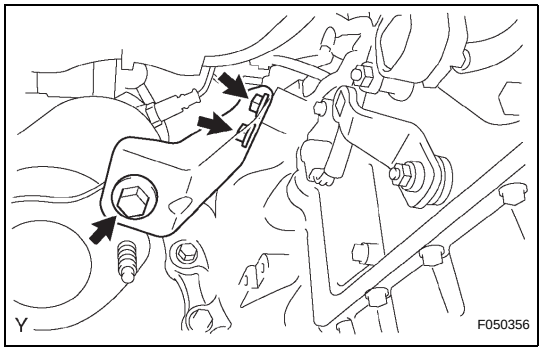

10. **DISCONNECT NO.1 OIL COOLER INLET TUBE**
    (a) Remove the 3 bolts and 2 clamps.

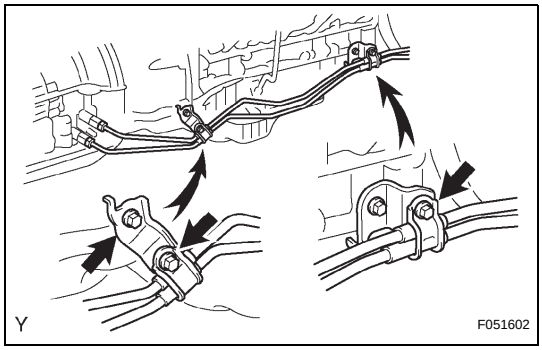

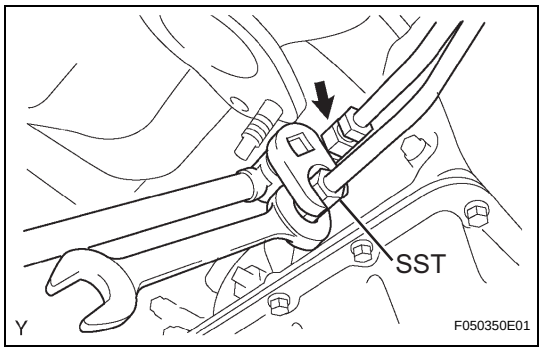

(b) Using SST, disconnect the oil cooler inlet tube No. 1.
SST 09023-12701

11. DISCONNECT NO.1 OIL COOLER OUTLET TUBE

(a) Using SST, disconnect the oil cooler outlet tube No. 1.
SST 09023-12701

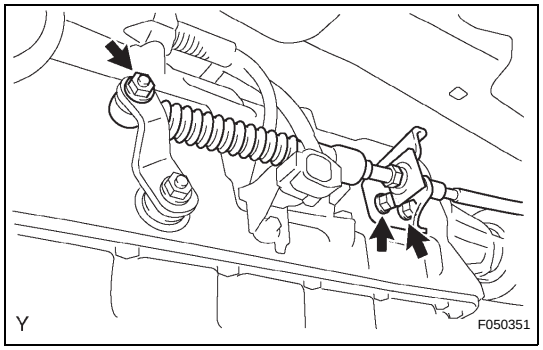

12. DISCONNECT TRANSMISSION CONTROL CABLE ASSEMBLY

(a) Remove the nut and disconnect the transmission control cable.
(b) Remove the 2 bolts and disconnect the transmission control cable.

13. DISCONNECT CONNECTOR

(a) Disconnect the park/neutral position switch connector.
(b) Disconnect the transmission wire connector.
(c) Disconnect the 2 speed sensor connectors.

14. DISCONNECT WIRE HARNESS

15. REMOVE STARTER ASSEMBLY (See page ST-5)

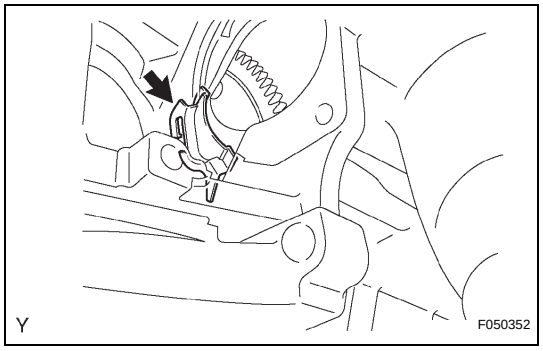

16. REMOVE FLYWHEEL HOUSING SIDE COVER

(a) Remove the flywheel housing side cover from the cylinder block.

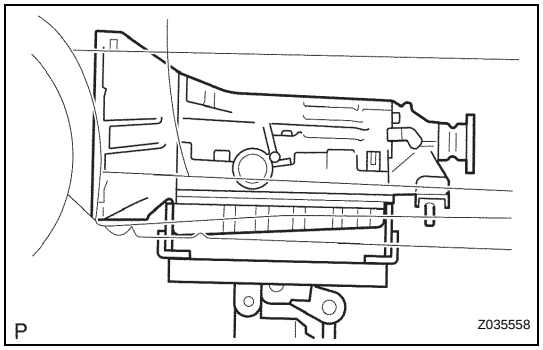

17. SUPPORT AUTOMATIC TRANSMISSION ASSEMBLY

(a) Support the automatic transmission assembly with a transmission jack.

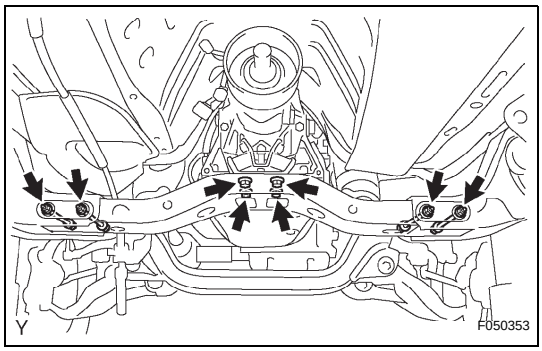

18. REMOVE NO.3 FRAME CROSSMEMBER SUB-ASSEMBLY

(a) Remove the 4 bolts on the frame crossmember sub-assembly No. 3.

(b) Remove the 4 nuts, 4 bolts and frame crossmember sub-assembly No. 3.

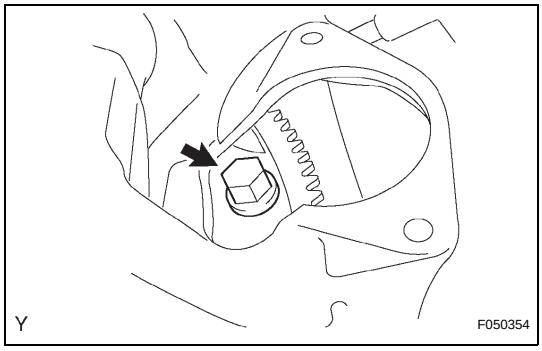

19. REMOVE AUTOMATIC TRANSMISSION ASSEMBLY

(a) Turn the crankshaft to gain access to each bolt.

(b) Hold the crankshaft pulley nut with a wrench and remove the 6 bolts.

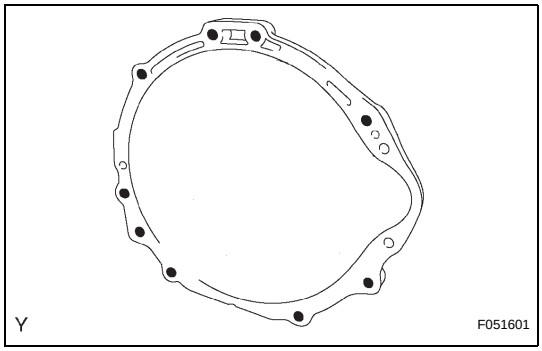

(c) Remove the 9 bolts.

(d) Separate and remove the automatic transmission.

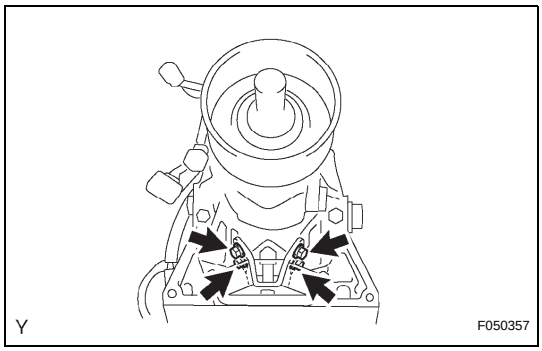

20. REMOVE REAR NO.1 ENGINE MOUNTING INSULATOR

(a) Remove the 4 bolts and engine mounting insulator rear from the automatic transmission.

21. REMOVE TORQUE CONVERTER CLUTCH ASSEMBLY

INSTALLATION

1. INSPECT TORQUE CONVERTER CLUTCH ASSEMBLY (See page AT-166)

2. INSTALL TORQUE CONVERTER CLUTCH ASSEMBLY

(a) Install the torque converter clutch onto the automatic transmission.

(b) Using calipers and a straight edge, measure dimension A, between the engine and the end surface of the drive plate, as shown in the illustration.

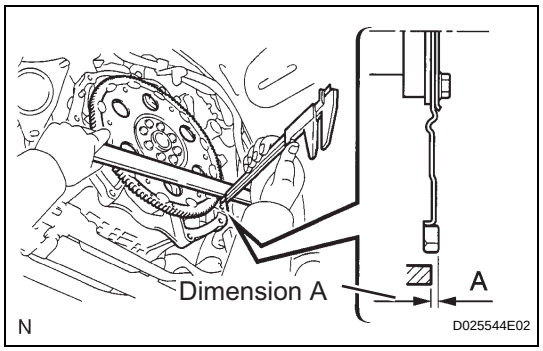

(c) Using calipers and a straight edge, measure dimension B shown in the illustration and check that B is greater than A measured in (b).

Standard:

A + 1 mm or more

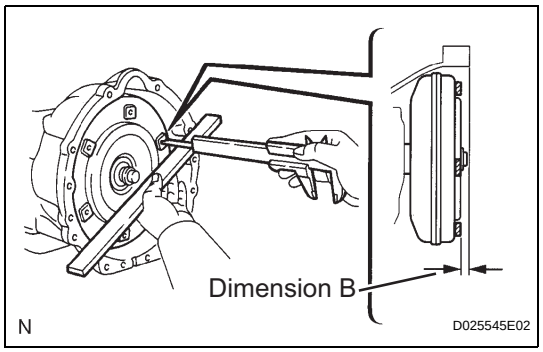

3. INSTALL REAR NO.1 ENGINE MOUNTING INSULATOR

(a) Install the engine mounting insulator rear onto the automatic transmission with the 4 bolts.

Torque: 65 N*m (663 kgf*cm, 48 ft.*lbf)

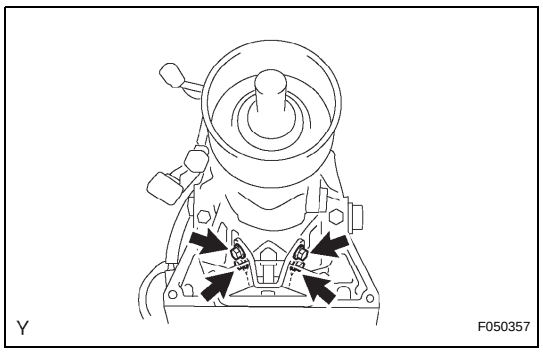

4. INSTALL AUTOMATIC TRANSMISSION ASSEMBLY

(a) Install the automatic transmission onto the engine with the 9 bolts.

Torque: 71 N*m (720 kgf*cm, 53 ft.*lbf) for bolt A
37 N*m (380 kgf*cm, 27 ft.*lbf) for bolt B

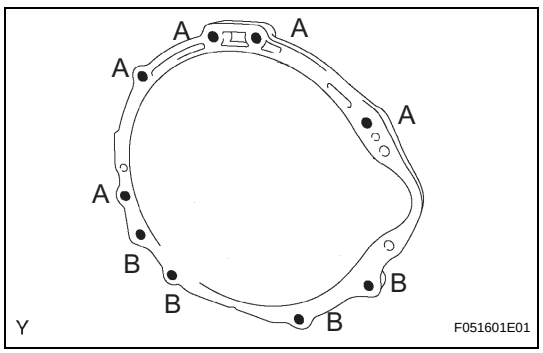

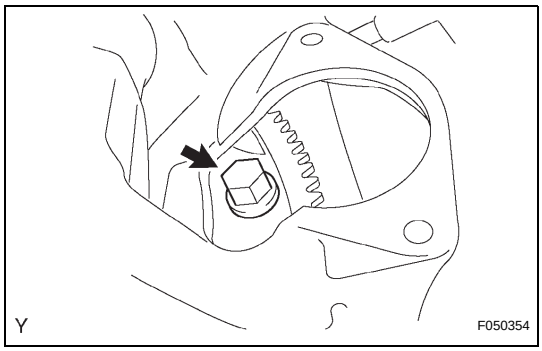

(b) Install the 6 torque converter clutch mounting bolts.
Torque: 48 N*m (489 kgf*cm, 35 ft.*lbf)
HINT:
First install the black bolt and then the other 5 bolts.

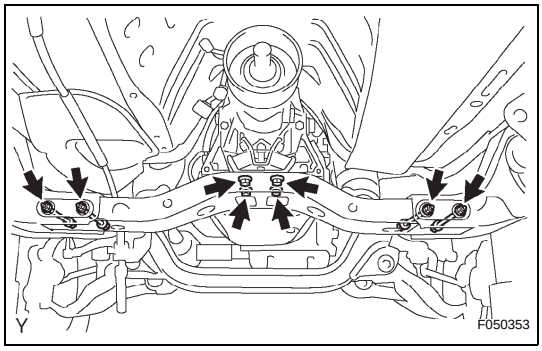

5. INSTALL NO.3 FRAME CROSSMEMBER SUB-ASSEMBLY

(a) Install the frame crossmember sub-assembly No. 3 with the 4 bolts and 4 nuts.
Torque: 40 N*m (408 kgf*cm, 30 ft.*lbf)

(b) Install the frame crossmember sub-assembly No. 3 with the 4 bolts.
Torque: 19 N*m (189 kgf*cm, 14 ft.*lbf)

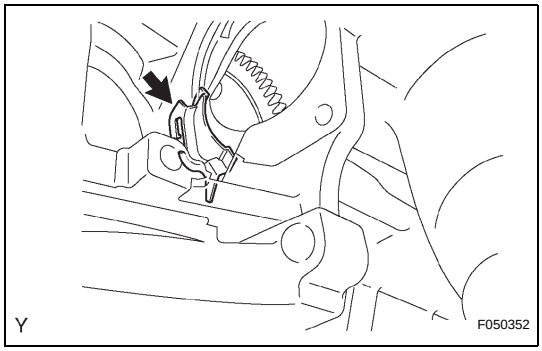

6. INSTALL FLYWHEEL HOUSING SIDE COVER

(a) Install the flywheel housing side cover onto the cylinder block.

7. INSTALL STARTER ASSEMBLY (See page ST-11)

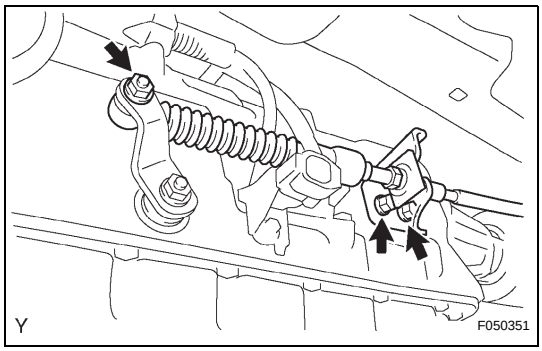

8. INSTALL TRANSMISSION CONTROL CABLE ASSEMBLY

(a) Install the transmission control cable bracket No. 1 with the 2 bolts.
Torque: 28 N*m (286 kgf*cm, 21 ft.*lbf)

(b) Connect the transmission control cable with the nut.
Torque: 14 N*m (143 kgf*cm, 10 ft.*lbf)

9. INSTALL NO.1 OIL COOLER OUTLET TUBE

(a) Provisionally install the oil cooler outlet tube No. 1.

(b) Provisionally install the oil cooler inlet tube No. 1.

(c) Install the 2 clamps and 3 bolts.
Torque: 12 N*m (122 kgf*cm, 9 ft.*lbf) for bolt A
5.0 N*m (50 kgf*cm, 43 in.*lbf) for bolt B

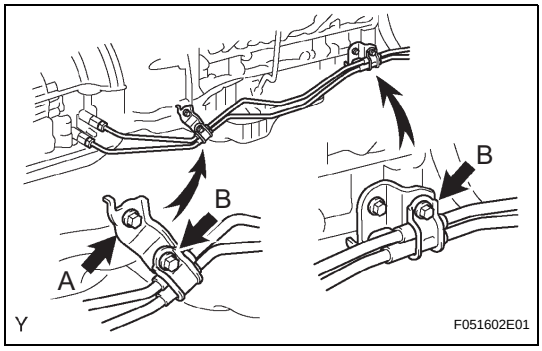

AT

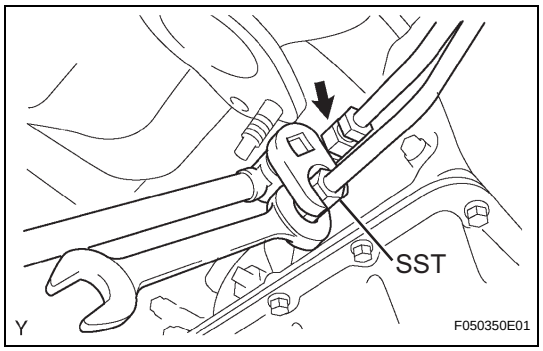

(d) Using SST, tighten the oil cooler outlet tube No. 1.
SST 09023-12701
Torque: 34 N*m (350 kgf*cm, 25 ft.*lbf)

10. INSTALL NO.1 OIL COOLER INLET TUBE

(a) Using SST, tighten the oil cooler inlet tube No. 1.
SST 09023-12701
Torque: 34 N*m (350 kgf*cm, 25 ft.*lbf)

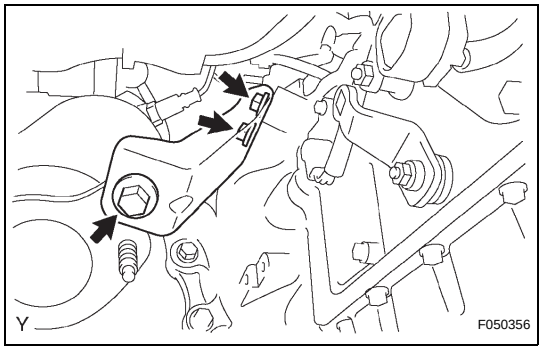

11. INSTALL NO.2 MANIFOLD STAY

(a) Install manifold stay No. 2 with the 3 bolts.
Torque: 40 N*m (408 kgf*cm, 30 ft.*lbf)

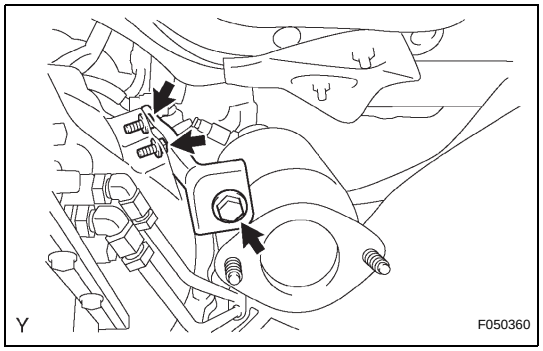

12. INSTALL MANIFOLD STAY

(a) Install the manifold stay with the 3 bolts.
Torque: 40 N*m (408 kgf*cm, 30 ft.*lbf)

13. INSTALL PROPELLER WITH CENTER BEARING SHAFT ASSEMBLY (See page PR-32)

14. INSTALL EXHAUST PIPE
(See page EX-3)

15. INSTALL OXYGEN SENSOR

16. CONNECT CABLE TO NEGATIVE BATTERY TERMINAL
Torque: 3.9 N*m (40 kgf*cm, 35 in.*lbf)

17. PERFORM INITIALIZATION
(See page AT-17)

18. ADD AUTOMATIC TRANSMISSION FLUID
(See page AT-135)

19. INSPECT SHIFT LEVER POSITION (See page AT-155)

20. CHECK FOR EXHAUST GAS LEAKAGE

21. INSTALL NO. 2 ENGINE UNDER COVER (w/ No. 2 Engine Under Cover)

22. INSTALL NO. 1 ENGINE UNDER COVER SUB-ASSEMBLY

SYSTEM DIAGRAM

The configuration of the electronic control system in the A750F automatic transmission is as shown in the following chart.

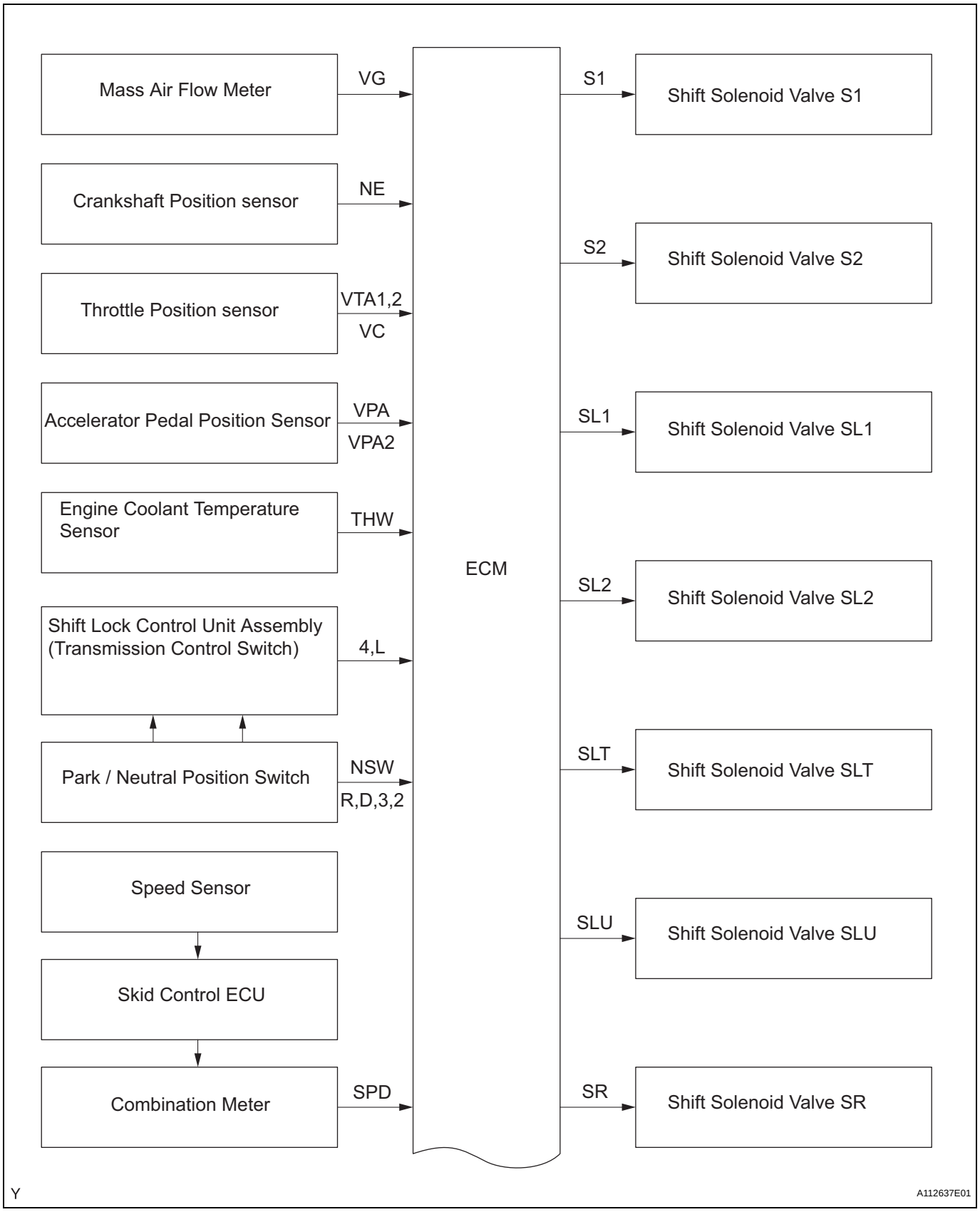

AT

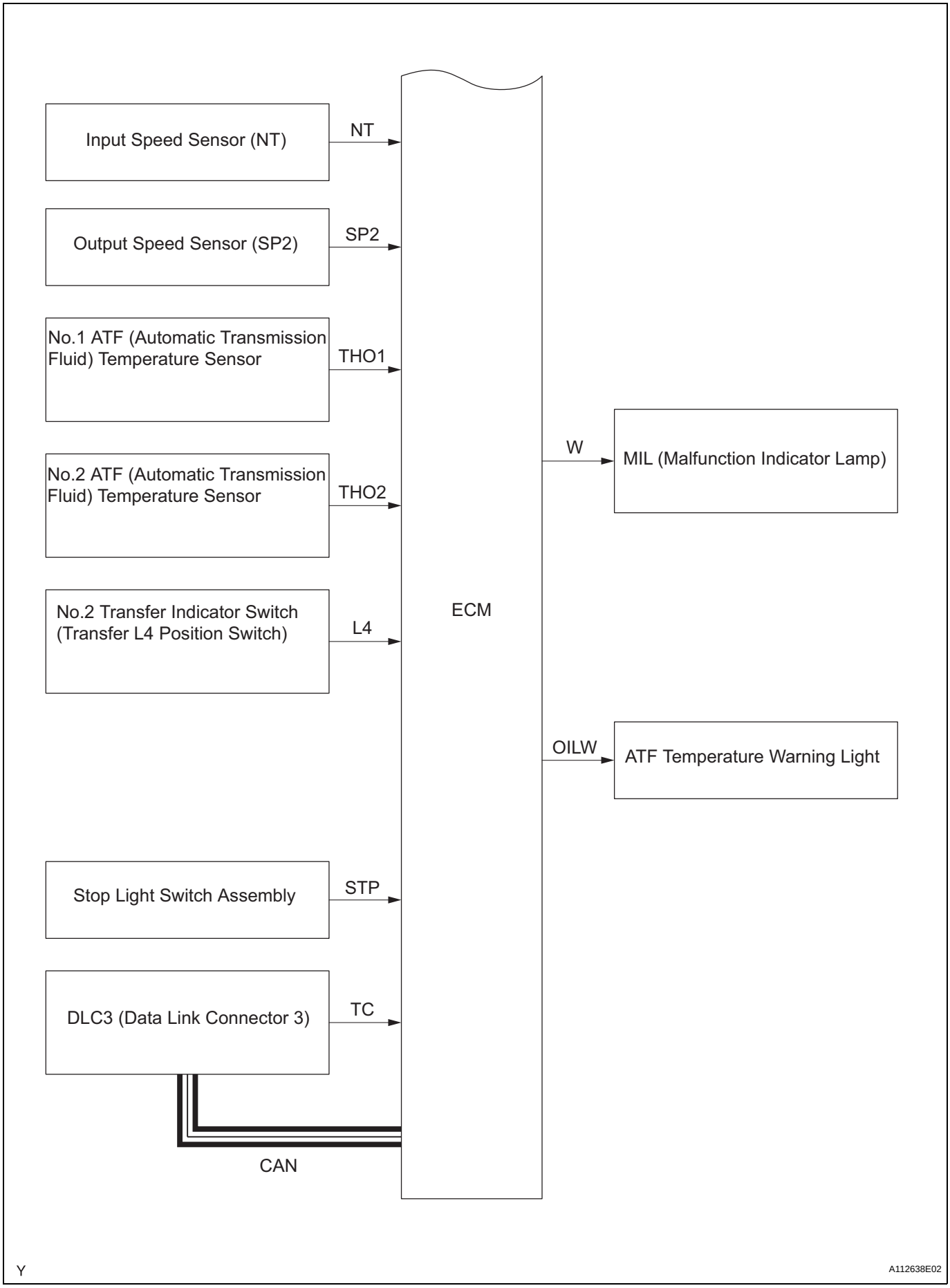
Input Speed Sensor (NT)
NT
Output Speed Sensor (SP2)
SP2
No.1 ATF (Automatic Transmission Fluid) Temperature Sensor
THO1
No.2 ATF (Automatic Transmission Fluid) Temperature Sensor
THO2
No.2 Transfer Indicator Switch (Transfer L4 Position Switch)
L4
Stop Light Switch Assembly
STP
DLC3 (Data Link Connector 3)
TC
CAN
ECM
W
MIL (Malfunction Indicator Lamp)
OILW
ATF Temperature Warning Light
Y
A112638E02

SYSTEM DESCRIPTION

1. SYSTEM DESCRIPTION

(a) The ECT (Electronic controlled automatic transmission) is an automatic transmission that electronically controls shift timing using the ECM. The ECM detects electrical signals that indicate engine and driving conditions, and controls the shift point, based on driver habits and road conditions. As a result, fuel efficiency and power transmission performance are improved.
Shift shock has been reduced by controlling the engine and transmission simultaneously.
In addition, the ECT has features such as follows:
- Diagnostic function.
- Fail-safe function when a malfunction occurs.

AT

HOW TO PROCEED WITH TROUBLESHOOTING

HINT:

- The ECM of this system is connected to the CAN communication system. Therefore, before starting troubleshooting, make sure that there is no trouble in the CAN communication system.
- *: Use the intelligent tester.

1	VEHICLE BROUGHT TO WORKSHOP

NEXT

2	CUSTOMER PROBLEM ANALYSIS

NEXT

3	CONNECT INTELLIGENT TESTER TO DLC3 *

NEXT

4	CHECK AND CLEAR DTCS AND FREEZE FRAME DATA *

Refer to the DTC CHECK / CLEAR (See page AT-31).

NEXT

5	VISUAL INSPECTION

NEXT

6	SETTING CHECK MODE DIAGNOSIS *

Refer to the CHECK MODE PROCEDURE (See page AT-31).

NEXT

7	PROBLEM SYMPTOM CONFIRMATION

Refer to the ROAD TEST (See page AT-11).

Result

Result	Proceed to
Symptom does not occur	A
Symptom occurs	B

B → GO TO STEP 9

A

8	SYMPTOM SIMULATION

AT

Refer to the ELECTRONIC CIRCUIT INSPECTION PROCEDURE (See page IN-34).

NEXT

9	DTC CHECK *

Refer to the DTC CHECK / CLEAR (See page AT-31).

Result

Result	Proceed to
DTC is not output	A
DTC is output	B

B → GO TO STEP 17

A

10	BASIC INSPECTION

Refer to the AUTOMATIC TRANSMISSION FLUID (See page AT-139).
Refer to the PARK/NEUTRAL POSITION SWITCH (See page AT-145).
Refer to the FLOOR SHIFT ASSEMBLY (See page AT-158).

NG → GO TO STEP 19

OK

11	MECHANICAL SYSTEM TEST

Refer to the MECHANICAL SYSTEM TEST (See page AT-14).

NG → GO TO STEP 16

OK

12	HYDRAULIC TEST

Refer to the HYDRAULIC TEST (See page AT-16).

NG → GO TO STEP 16

OK

AT

13	MANUAL SHIFTING TEST

Refer to the MANUAL SHIFTING TEST (See page AT-17).

NG → GO TO STEP 15

OK

14	PROBLEM SYMPTOMS TABLE CHAPTER 1

Refer to the PROBLEM SYMPTOMS TABLE (See page AT-21).

NG → GO TO STEP 18

OK

15	PROBLEM SYMPTOMS TABLE CHAPTER 2

Refer to the PROBLEM SYMPTOMS TABLE (See page AT-21).

NEXT

16	PART INSPECTION

NEXT → GO TO STEP 19

17	DTC CHART

Refer to the DIAGNOSTIC TROUBLE CODE CHART (See page AT-39).

NEXT

18	CIRCUIT INSPECTION

NEXT

19	REPAIR OR REPLACE

NEXT

20	CONFIRMATION TEST

NEXT

END

AT

ROAD TEST

1. PROBLEM SYMPTOM CONFIRMATION

(a) Based on the result of the customer problem analysis, try to reproduce the symptoms. If the problem is that the transaxle does not shift up, shift down, or the shift point is too high or too low, conduct the following road test while referring to the automatic shift schedule and simulate the problem symptoms.

2. ROAD TEST

NOTICE:

Perform the test at the normal operating ATF (Automatic Transmission Fluid) temperature: 50° to 80°C (122° to 176°F).

(a) D position test:

Shift into the D position, fully depress the accelerator pedal and check the following points.

(1) Check up-shift operation.

Check that 1 → 2, 2 → 3, 3 → 4 and 4 → 5th up-shifts take place, and that the shift points conform to the automatic shift schedule (see page SS-42).

HINT:

5th Gear Up-shift Prohibition Control

- Engine coolant temperature is 55°C (131°F) or less and vehicle speed is 32 mph (51 km/h) or less.

4th Gear Up-shift Prohibition Control

- Engine coolant temperature is 47°C (116.6°F) or less and vehicle speed is 30.4 mph (49 km/h) or less.

5th Gear Lock-up Prohibition Control

- Brake pedal is depressed.
- Accelerator pedal is released.
- Engine coolant temperature is 60°C (140°F) or less.

(2) Check for shift shock and slippage

Check for shock and slippage at the 1 → 2, 2 → 3, 3 → 4 and 4 → 5th up-shifts.

(3) Check for abnormal noise and vibration.

Check for abnormal noise and vibration when up-shifting from 1 → 2, 2 → 3, 3 → 4 and 4 → 5 while driving with the shift lever in the D position, and check while driving in the lock-up condition.

HINT:

The check for the cause of abnormal noise and vibration must be done thoroughly as it could also be due to loss of balance in the differential, torque converter clutch, etc.

(4) Check kick-down operation.
Check vehicle speeds when the 2 → 1, 3 → 2, 4 → 3, and 5 → 4 kick-downs take place while driving with the shift lever in the D position. Confirm that each speed is within the applicable vehicle speed range indicated in the automatic shift schedule (see page SS-42).

(5) Check for abnormal shock and slippage at kick-down.

(6) Check the lock-up mechanism.
- Drive in the D position (5th gear), at a steady speed (lock-up ON).
- Lightly depress the accelerator pedal and check that the engine speed does not change abruptly.

HINT:
If there is a sudden increase in engine speed, there is no lock-up.

(b) 4 position test:
Shift into the 4 position, fully depress the accelerator pedal and check the following points.

(1) Check up-shift operation.
Check that the 1 → 2, 2 → 3 and 3 → 4 up-shifts take place and that the shift points conform to the automatic shift schedule (see page SS-42).
HINT:
- There is no 5th up-shift in the 4 position.
- 4th Gear Lock-up Prohibition Control
- Brake pedal is depressed.
- Accelerator pedal is released.
- Engine coolant temperature is 60°C (140°F) or less.

(2) Check engine braking.
While driving in the 4 position and 4th gear, release the accelerator pedal and check the engine braking effect.

(3) Check for abnormal noises during acceleration and deceleration, and for shock at up-shift and down-shift.

(4) Check the lock-up mechanism.
- Drive in the 4 position and 4th gear, at a steady speed (lock-up ON).
- Lightly depress the accelerator pedal and check that the engine speed does not change abruptly.

HINT:
If there is a sudden increase in engine speed, there is no lock-up.

(c) 3 position test:
Shift into the 3 position, fully depress the accelerator pedal and check the following points.
(1) Check up-shift operation.
Check that the 1 → 2 and 2 → 3 up-shifts take place and that the shift points conform to the automatic shift schedule (see page SS-42).
HINT:
There is no 4th up-shift and lock-up in the 3 position.
(2) Check engine braking.
While running in the 3 position and 3rd gear, release the accelerator pedal and check the engine braking effect.
(3) Check for abnormal noises during acceleration and deceleration, and for shock at up-shift and down-shift.

(d) 2 position test:
Shift into the 2 position, fully depress the accelerator pedal and check the following points.
(1) Check up-shift operation.
Check that the 1 → 2 up-shift takes place and that the shift point conforms to the automatic shift schedule (see page SS-42).
HINT:
There is no 3rd up-shift and lock-up in the 2 position.
(2) Check engine braking.
While running in the 2 position and 2nd gear, release the accelerator pedal and check the engine braking effect.
(3) Check for abnormal noises during acceleration and deceleration, and for shock at up-shift and down-shift.

(e) L position test:
Shift into the L position and fully depress the accelerator pedal and check the following points.
(1) Check no up-shift.
While running in the L position, check that there is no up-shift to 2nd gear.
(2) Check engine braking.
While running in the L position, release the accelerator pedal and check the engine braking effect.
(3) Check for abnormal noises during acceleration and deceleration.

(f) R position test:
Shift into the R position, lightly depress the accelerator pedal, and check that the vehicle moves backward without any abnormal noise or vibration.
CAUTION:
Before conducting this test, ensure that the test area is free from people and obstructions.

(g) P position test:
Stop the vehicle on a grade (more than 5°) and after shifting into the P position, release the parking brake. Then, check that the parking lock pawl holds the vehicle in place.

AT

MECHANICAL SYSTEM TESTS

1. STALL SPEED TEST

HINT:

This test is to check the overall performance of the engine and transmission.

NOTICE:

- **Do not perform the stall speed test longer than 5 seconds.**
- **To ensure safety, perform this test in an open and level area that provides good traction.**
- **The stall speed test should always be performed with at least 2 people. One person should observe the condition of the wheels and wheel chocks while the other is performing the test.**

(a) Connect the intelligent tester to the CAN VIM. Then connect the CAN VIM to the DLC3.

(b) Run the vehicle until the transmission fluid temperature has reached 50 to 80°C (122 to 176°F).

(c) Allow the engine to idle with the air conditioning OFF.

(d) Chock all 4 wheels.

(e) Set the parking brake and keep the brake pedal depressed firmly with your left foot.

(f) Shift the shift lever into the drive position.

(g) Depress the accelerator pedal as much as possible with your right foot.

(h) Read the engine rpm (stall speed) and release the accelerator pedal immediately.

Standard value:

2,250 to 2,550 rpm

Evaluation:

Test Result	Possible Cause
Stall speed is lower than standard value	• Stator one-way clutch is not operating properly • Torque converter is faulty (stall speed is less than standard value by 600 rpm or more) • Engine power may be insufficient
Stall speed is higher than standard value	• Line pressure is low • No. 1 clutch (C1) slipping • No. 3 one-way clutch (F3) is not operating properly • Improper fluid level

2. SHIFT TIME LAG TEST

HINT:

This test is to check the condition of the direct clutch, forward clutch, 1st brake and reverse brake.

(a) Connect the intelligent tester to the CAN VIM. Then connect the CAN VIM to the DLC3.

(b) Run the vehicle until the transmission fluid temperature has reached 50 to 80°C (122 to 176°F).

(c) Allow the engine to idle with the air conditioning OFF.

(d) Set the parking brake and keep the brake pedal depressed firmly.

(e) Check the D range time lag.
(1) Shift the shift lever into the N position and wait for 1 minute.
(2) Shift the shift lever into the D position and measure the time until the shock is felt.
(3) Repeat the 2 procedures above 3 times, and calculate the average time of the 3 tests.

(f) Check the R range time lag.
(1) Shift the shift lever into the N position and wait for 1 minute.
(2) Shift the shift lever into the R position and measure the time until the shock is felt.
(3) Repeat the 2 procedures above 3 times, and calculate the average time of the 3 tests.
Standard value:
D range time lag is less than 1.2 seconds
R range time lag is less than 1.5 seconds

Evaluation:

Test Result	Possible Cause
D range time lag exceeds standard value	• Line pressure is low • No. 1 clutch (C1) is worn • No. 3 one-way clutch (F3) is not operating properly
R range time lag exceeds standard value	• Line pressure is low • No. 3 clutch (C3) is worn • No. 4 brake (B4) is worn • No. 1 one-way clutch (F1) is not operating properly

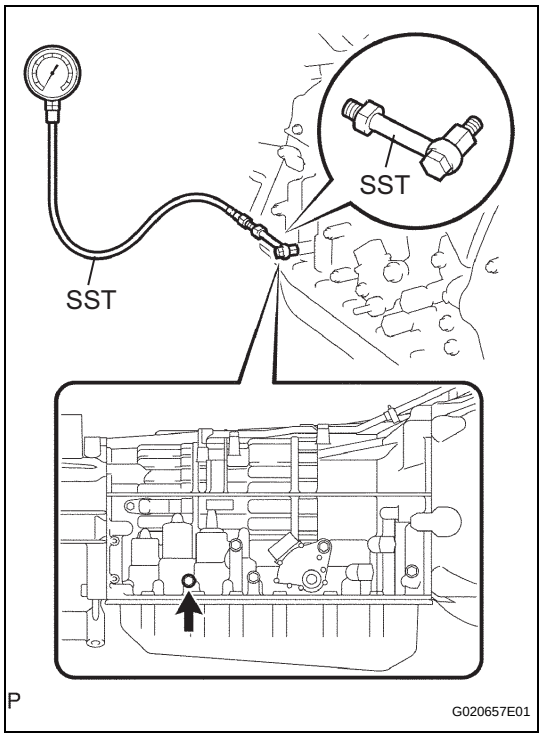

HYDRAULIC TEST

1. PERFORM HYDRAULIC TEST

(a) Measure the line pressure.
NOTICE:
- **Perform the test at the normal operating ATF (Automatic Transmission Fluid) temperature of 50° to 80°C (122° to 176°F).**
- **The line pressure test should always be carried out in pairs. One technician should observe the condition of the wheels or wheel stoppers outside the vehicle while the other is doing the test.**
- **Be careful to prevent the SST hose from interfering with the exhaust pipe.**
- **This check must be conducted after checking and adjusting the engine.**
- **Perform with the A/C OFF.**
- **Do not conduct stall tests for longer than 10 seconds continuously.**

(1) Warm up the ATF.
(2) Lift the vehicle up.
(3) Remove the test plug on the transmission case center right side and connect SST.
SST 09992-00095 (09992-00151, 09992-00271)
(4) Fully apply the parking brake and chock the 4 wheels.
(5) Start the engine and check the idling speed.

(6) Keep your left foot pressing firmly on the brake pedal and shift into the D position.
(7) Measure the line pressure while the engine is idling.
(8) Depress the accelerator pedal all the way down. Quickly read the highest line pressure when the engine speed reaches the stall speed.
(9) In the same manner, do the test in the R position.

Specified line pressure

Condition	D position	R position
Idling	**363 to 423 kPa (3.7 to 4.3 kgf/cm^2 , 53 to 61 psi)**	**484 to 564 kPa (4.9 to 5.8 kgf/cm^2, 70 to 82 psi)**
Stall test	**1,282 to 1,381 kPa (13.1 to 14.1 kgf/cm^2, 186 to 200 psi)**	**1,218 to 1,338 kPa (12.4 to 13.6 kgf/cm^2, 177 to 194 psi)**

Evaluation:

Problem	Possible cause
Measured value are higher than specified in all positions	• Shift solenoid valve SLT defective • Regulator valve defective
Measured value are lower than specified in all positions	• Shift solenoid valve SLT defective • Regulator valve defective • Oil pump defective
Pressure is low in D position only	• D position circuit fluid leakage • No. 1 clutch (C_1) defective
Pressure is low in R position only	• R position circuit fluid leakage • No. 3 clutch (C_3) defective • No. 4 brake (B_4) defective

MANUAL SHIFTING TEST

1. MANUAL SHIFTING TEST

HINT:

- Through this test, it can be determined whether the trouble occurs in the electrical circuit or if it is a mechanical problem in the transmission.
- If any abnormalities are found in the following test, the problem is in the transmission itself.

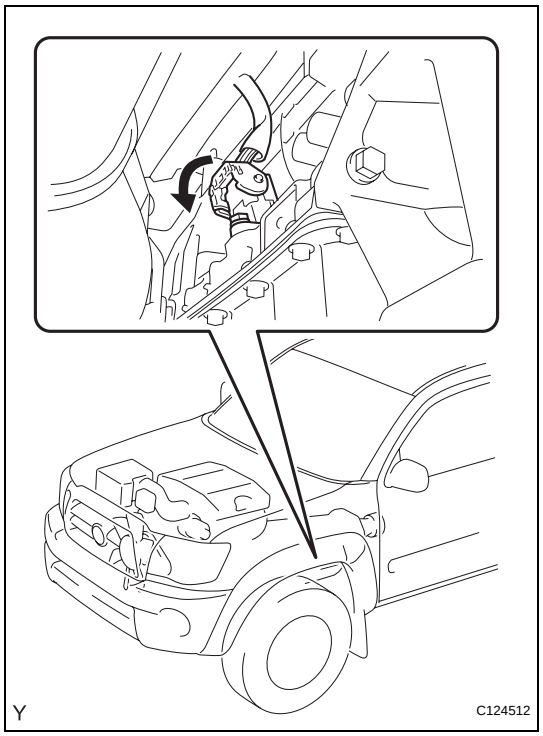

(a) Disconnect the connector of the transmission wire.
HINT:
It is possible to deactivate the electrical shift control by disconnecting the transmission wire. The gear positions can then be changed mechanically with the shift lever.

(b) Drive with the transmission wire disconnected. Shift the shift lever to each position to check whether the gear position changes as shown in the table below.

Shift Lever Position	Gear Position
D	4th
4	4th
3	3rd
2	1st
L	1st
R	R
P	P

(c) Connect the connector of the transmission wire.

(d) Clear the DTC (See page AT-31).

AT

INITIALIZATION

1. RESET MEMORY

CAUTION:

Perform the RESET MEMORY (AT initialization) when replacing the automatic transmission assembly, engine assembly or ECM.

NOTICE:

Intelligent tester only

HINT:

The ECM stores the condition under which the ECT (Electronic Controlled Automatic Transmission) controls the automatic transmission and engine assemblies according to their characteristics. Therefore, when the automatic transmission assembly, engine assembly, or ECM has been replaced, it is necessary to reset the memory so that the ECM can store the new information. Reset procedure is as follows.

(a) Turn the ignition switch off.

(b) Connect the intelligent tester together with the CAN VIN (controller area network vehicle interface module) to the DLC3.

(c) Turn the ignition switch to the ON position and push the intelligent tester main switch on.

(d) Select the items "DIAGNOSIS/ ENHANCED OBD II".

(e) Perform the reset memory procedure from the ENGINE menu.

CAUTION:

After performing the RESET MEMORY, be sure to perform the ROAD TEST (see page AT-11) described earlier.

HINT:

The ECM stores the new information during the ROAD TEST.

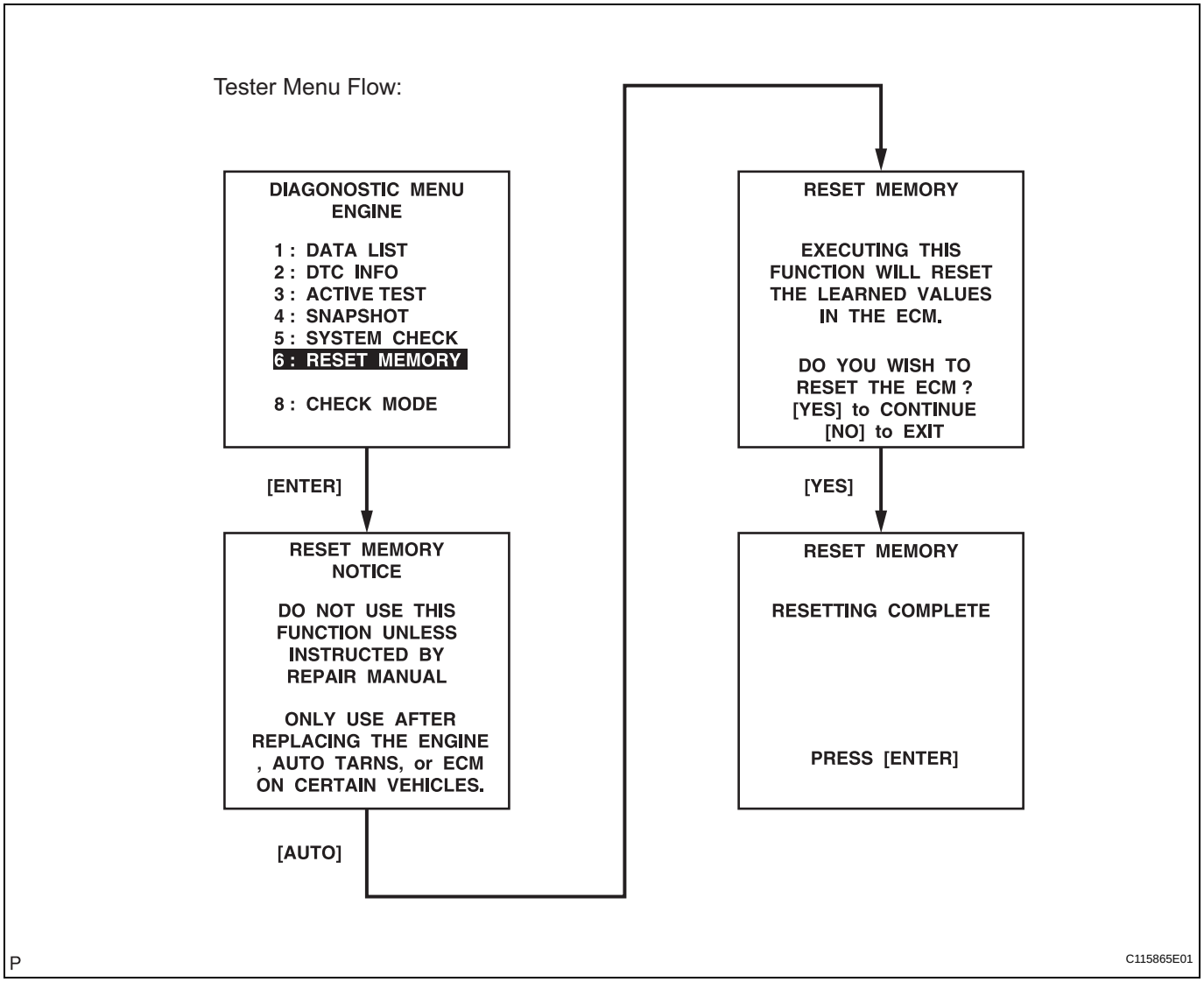

2. SET UP FUNCTION OF ATF TEMPERATURE WARNING LIGHT (ONLY 4WD VEHICLE)

CAUTION:

Re-set the function of the ATF (Automatic Transmission Fluid) temperature warning light, if the ECM has been replaced or RESET MEMORY (AT initialization) has been performed.

HINT:

- The ATF temperature warning light is built into the 4WD vehicles. When the ATF temperature is too high, the ATF temperature warning light illuminates to warn the driver. If the ECM has been replaced or RESET MEMORY has been performed, this function does not work unless the following procedure is performed.
- Once the ECM is set up, its memory will not be cleared by only disconnecting the negative cable from the battery.

(a) Start the engine.

(b) Shift the 4 wheel drive control switch to the 4WD position. Check that the 4WD indicator illuminates.

(c) Shift the 4 wheel drive control switch to the 2WD position.
(d) Drive the vehicle at a vehicle speed of 25 mph (40 km/h) or more.

NOTICE:
If the battery is disconnected before driving the vehicle at a vehicle speed of 25 mph (40 km/h) or more, the memory will be cleared. If the battery has been disconnected, perform steps (a) to (d) again.

MONITOR DRIVE PATTERN

1. MONITOR DRIVE PATTERN FOR ECT TEST

(a) Perform this drive pattern as one method to simulate the detection conditions of the ECT (Electronic Controlled Automatic Transmission) malfunctions.
(The DTCs may not be detected due to the actual driving conditions. And some DTCs may not be detected through this drive pattern.)
HINT:
Preparation for driving
- Warm up the engine sufficiently. (Engine coolant temperature should be 60°C (140°F) or higher)
- Drive the vehicle when the atmospheric temperature is -10°C (14°F) or higher. (Malfunction is not detected when the atmospheric temperature is less than -10°C (14°F))

Notice in driving
- Drive the vehicle through all gears. Stop → 1st → 2nd → 3rd → 4th → 5th → 5th (lock-up ON).
- Repeat the above driving pattern three times or more.

NOTICE:
- **The monitor status can be checked using the intelligent tester. When using the intelligent tester, monitor status can be found in the "ENHANCED OBD II/ DATA LIST" or under "CARB OBD II".**
- **In the event that the drive pattern must be interrupted (possibly due to traffic conditions or other factors), the drive pattern can be resumed and, in most cases, the monitor can be completed.**

CAUTION:
Perform this drive pattern on as level a road as possible and strictly observe the posted speed limits and traffic laws while driving.

AT

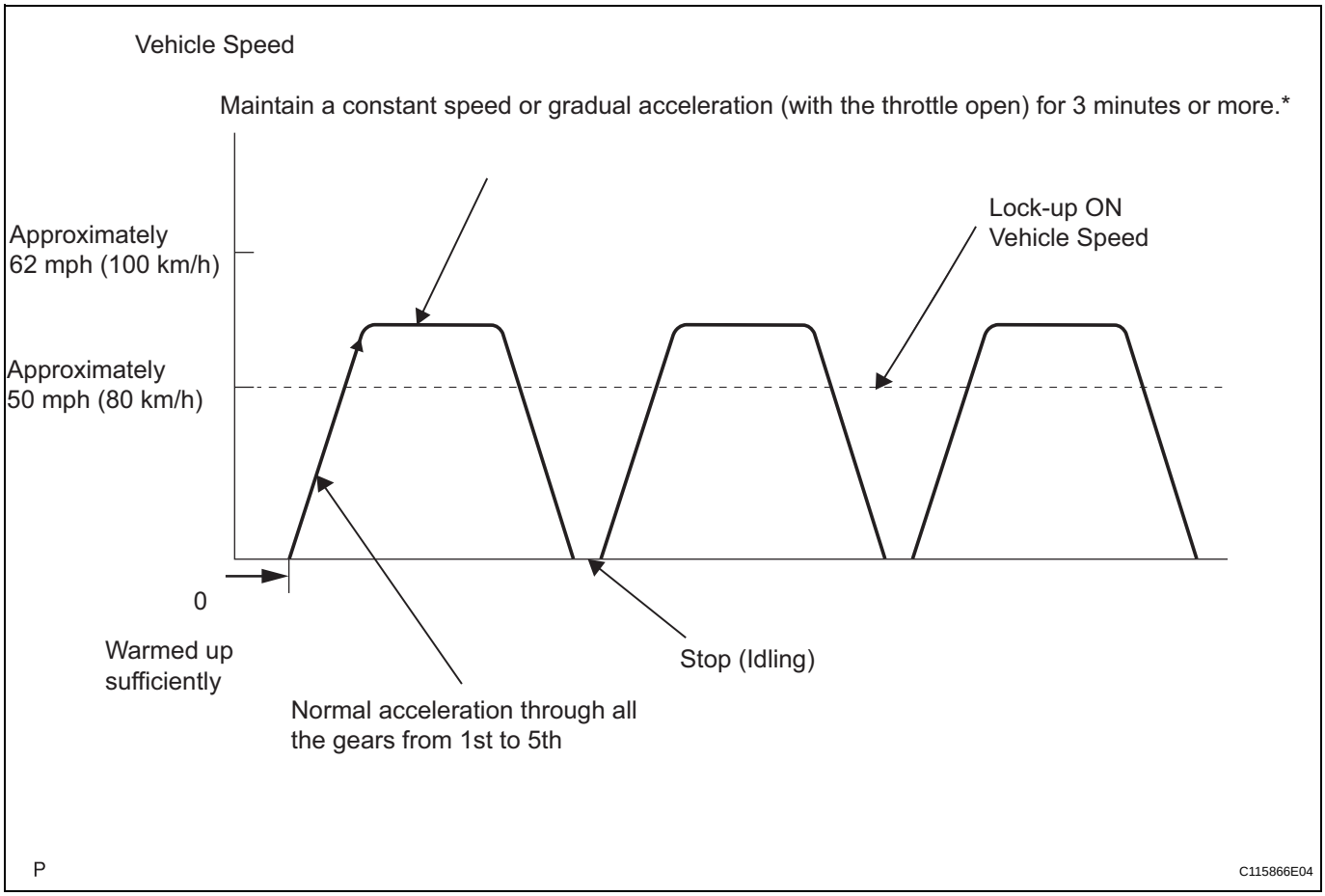

HINT:

*: Drive at such a speed in the uppermost gear, as to engage lock-up. The vehicle can be driven at a speed lower than that in the above diagram under the lock-up condition.

NOTICE:

It is necessary to drive the vehicle for approximately 30 minutes to detect DTC P0711 (ATF temperature sensor malfunction).

PROBLEM SYMPTOMS TABLE

HINT:
If no DTCs are displayed during the diagnostic trouble code check although the trouble still occurs, check the electrical circuits for each symptom in the order given in the charts on the following pages and proceed to the page given for troubleshooting.
The Matrix Chart is divided into 2 chapters.

1. **Chapter 1: Electronic Circuit Matrix Chart**
   - Refer to the table below when the cause of trouble is considered to be electrical.
   - If the trouble still occurs even though there are no abnormalities in any of the other circuits, check and replace the ECM.

   HINT:
   *1: Denotes that when there are malfunctions in the circuit, DTCs may be set.

Symptom	Suspected area	See page
No up-shift (A particular gear, from 1st to 4th gear, is not up-shifted)	1. Shift solenoid valve (S1) circuit *1	AT-101
	2. Shift solenoid valve (S2) circuit *1	AT-104
	3. ECM	IN-34
No up-shift (4th -> 5th)	1. Transmission control switch circuit (D - 4) *1	AT-43
	2. Engine coolant temperature sensor circuit *1	ES-104
	3. Speed sensor NT circuit *1	AT-57
	4. Shift solenoid valve (SL1) circuit *1	AT-67
	5. Shift solenoid valve (SL2) circuit *1	AT-92
	6. Shift solenoid valve (SR) circuit *1	AT-107
	7. ECM	IN-34
No up-shift (3rd -> 4th)	1. Engine coolant temperature sensor circuit *1	ES-104
	2. Shift solenoid valve (S2) circuit *1	AT-104
	3. ECM	IN-34
No up-shift (1st -> 2nd)	1. Transmission control switch circuit (2 - L) *1	AT-43
	2. Shift solenoid valve (S2) circuit *1	AT-104
	3. ECM	IN-34
No down-shift (5th -> 4th)	1. Transmission control switch circuit (D - 4) *1	AT-43
	2. Shift solenoid valve (SL1) circuit *1	AT-67
	3. Shift solenoid valve (SL2) circuit *1	AT-92
	4. Shift solenoid valve (SR) circuit *1	AT-107
	5. ECM	IN-34
No down-shift (2nd -> 1st)	1. Transmission control switch circuit (2 - L) *1	AT-43
	2. Shift solenoid valve (S2) circuit *1	AT-104
	3. ECM	IN-34
No down-shift (A particular gear, from 1st to 4th gear, is not down-shifted)	1. Shift solenoid valve (S1) circuit *1	AT-101
	2. Shift solenoid valve (S2) circuit *1	AT-104
	3. ECM	IN-34

Symptom	Suspected area	See page
No lock-up	1. ATF temperature sensor circuit *1	AT-49
	2. Transfer L4 position switch circuit *1	AT-136
	3. Stop light switch circuit *1	ES-272
	4. Speed sensor NT circuit *1	AT-57
	5. Shift solenoid valve (SLU) circuit *1	AT-132
	6. Engine coolant temperature sensor circuit *1	ES-104
	7. ECM	IN-34
No lock-up off	1. Shift solenoid valve (SLU) circuit *1	AT-132
	2. ECM	IN-34
Shift point too high or too low	1. Shift solenoid valve (SLT) circuit *1	AT-118
	2. Speed sensor NT circuit *1	AT-57
	3. Speed sensor SP2 circuit *1	AT-62
	4. Throttle position sensor circuit *1	ES-112
	5. ATF temperature sensor circuit *1	AT-49
	6. Transfer L4 position switch circuit *1	AT-136
	7. ECM	IN-34
Up-shift from 4th to 5th while shift lever is in 4 position	1. Transmission control switch circuit (D - 4) *1	AT-43
	2. ECM	IN-34
Up-shift from 4th to 5th while engine is cold	1. Engine coolant temperature sensor circuit *1	ES-104
	2. ECM	IN-34
Up-shift from 3rd to 4th while shift lever is in 3 position	1. Park/neutral position switch circuit *1	AT-43
	2. ECM	IN-34
Up-shift from 2nd to 3rd while shift lever is in 2 position	1. Park/neutral position switch circuit *1	AT-43
	2. ECM	IN-34
Up-shift from 1st to 2nd while shift lever is in L position	1. Transmission control switch circuit (2 - L) *1	AT-43
	2. ECM	IN-34
Harsh engagement (N -> D)	1. Speed sensor NT circuit *1	AT-57
	2. Shift solenoid valve (SL1) circuit *1	AT-67
	3. Shift solenoid valve (SLT) circuit *1	AT-118
	4. ECM	IN-34
Harsh engagement (Lock-up)	1. Speed sensor NT circuit *1	AT-57
	2. Speed sensor SP2 circuit *1	AT-62
	3. Shift solenoid valve (SLU) circuit *1	AT-132
	4. ECM	IN-34
Harsh engagement (Any driving position)	ECM	IN-34
Poor acceleration	1. No. 2 ATF temperature sensor circuit *1	AT-122
	2. Engine coolant temperature sensor circuit *1	ES-104
	3. Shift solenoid valve (SLT) circuit *1	AT-118
	4. ECM	IN-34
No engine braking	ECM	IN-34
No kick-down	ECM	IN-34
Engine stalls when starting off or stopping	1. Shift solenoid valve (SLU) circuit *1	AT-132
	2. ECM	IN-34
ATF temperature warning light remains on	1. No. 2 ATF temperature sensor circuit *1	AT-122
	2. Engine coolant temperature sensor circuit *1	ES-104
	3. ECM	IN-34
Lock-up at 3rd gear	1. No. 2 ATF temperature sensor circuit *1	AT-122
	2. Engine coolant temperature sensor circuit *1	ES-104
	3. ECM	IN-34

Symptom	Suspected area	See page
Shift point too high	1. No. 2 ATF temperature sensor circuit *1	AT-122
	2. Engine coolant temperature sensor circuit *1	ES-104
	3. ECM	IN-34

2. Chapter 2: On-Vehicle Repair and Off-Vehicle Repair
(▲: A750E, A750F AUTOMATIC TRANSMISSION Repair Manual Pub. No. RM999U)

Symptom	Suspected area	See page
Vehicle does not move in any forward positions or reverse position	1. Transmission control cable	AT-158
	2. Manual valve	▲
	3. Parking lock pawl	▲
	4. Rear planetary gear unit	▲
	5. Torque converter clutch	AT-169
Vehicle does not move in R position	1. Valve body assembly	AT-147
	2. No. 3 clutch (C3)	▲
	3. No. 4 brake (B4)	▲
	4. No. 1 one-way clutch (F1)	▲
No up-shift (1st -> 2nd)	1. Valve body assembly	AT-147
	2. No. 3 brake (B3)	▲
	3. No. 1 one-way clutch (F1)	▲
	4. No. 2 one-way clutch (F2)	▲
No up-shift (2nd -> 3rd)	1. Valve body assembly	AT-147
	2. No. 3 clutch (C3)	▲
No up-shift (3rd -> 4th)	1. Valve body assembly	AT-147
	2. No. 2 clutch (C2)	▲
No up-shift (4th -> 5th)	1. Valve body assembly	AT-147
	2. No. 1 brake (B1)	▲
	3. No. 1 clutch (C1)	▲
No down-shift (5th -> 4th)	Valve body assembly	AT-147
No down-shift (4th -> 3rd)	Valve body assembly	AT-147
No down-shift (3rd -> 2nd)	Valve body assembly	AT-147
No down-shift (2nd -> 1st)	Valve body assembly	AT-147
No lock-up or No lock-up off	1. Shift solenoid valve (SLU)	AT-127
	2. Valve body assembly	AT-147
	3. Torque converter clutch	AT-169
Harsh engagement (N -> D)	1. Shift solenoid valve (SL1)	AT-82
	2. Valve body assembly	AT-147
	3. C1 accumulator	▲
	4. No. 1 clutch (C1)	▲
	5. No. 3 one-way clutch (F3)	▲
Harsh engagement (Lock-up)	1. Shift solenoid valve (SLU)	AT-127
	2. Valve body assembly	AT-147
	3. Torque converter clutch	AT-169

Symptom	Suspected area	See page
Harsh engagement (N -> R)	1. Shift solenoid valve (SLT)	AT-111
	2. Shift solenoid valve (SLU)	AT-127
	3. Valve body assembly	AT-147
	4. C3 accumulator	▲
	5. No. 3 clutch (C3)	▲
	6. No. 4 brake (B4)	▲
	7. No. 1 one-way clutch (F1)	▲
Harsh engagement (1st -> 2nd -> 3rd -> 4th -> 5th)	1. Shift solenoid valve (SLT)	AT-111
	2. Shift solenoid valve (SL1)	AT-82
	3. Valve body assembly	AT-147
Harsh engagement (1st -> 2nd)	1. Valve body assembly	AT-147
	2. B3 accumulator	▲
	3. No. 3 brake (B3)	▲
	4. No. 1 one-way clutch (F1)	▲
	5. No. 2 one-way clutch (F2)	▲
Harsh engagement (2nd -> 3rd)	1. Valve body assembly	AT-147
	2. C3 accumulator	▲
	3. No. 3 clutch (C3)	▲
Harsh engagement (3rd -> 4th)	1. Valve body assembly	AT-147
	2. C2 accumulator	▲
	3. No. 2 clutch (C2)	▲
Harsh engagement (4th -> 5th)	1. Shift solenoid valve (SL1)	AT-82
	2. Shift solenoid valve (SL2)	AT-87
	3. Valve body assembly	AT-147
	4. No. 1 brake (B1)	▲
	5. No. 1 clutch (C1)	▲
Slippage or shuddering (Forward and reverse: After warm-up)	1. Valve body assembly	AT-147
	2. Oil strainer	AT-147
	3. No. 1 one-way clutch (F1)	▲
	4. No. 3 clutch (C3)	▲
	5. Torque converter clutch	AT-169
Slippage or shuddering (Particular position: Just after engine starts)	Torque converter clutch	AT-169
Slippage or shuddering (R position)	1. No. 4 brake (B4)	▲
	2. No. 1 one-way clutch (F1)	▲
	3. No. 3 clutch (C3)	▲
Slippage or shuddering (1st)	1. No. 1 clutch (C1)	▲
	2. No. 3 one-way clutch (F3)	▲
Slippage or shuddering (2nd)	1. No. 1 clutch (C1)	▲
	2. No. 3 brake (B3)	▲
	3. No. 1 one-way clutch (F1)	▲
	4. No. 2 one-way clutch (F2)	▲

Symptom	Suspected area	See page
Slippage or shuddering (3rd)	1. No. 1 clutch (C1)	▲
	2. No. 3 clutch (C3)	▲
	3. No. 1 one-way clutch (F1)	▲
Slippage or shuddering (4th)	1. No. 1 clutch (C1)	▲
	2. No. 2 clutch (C2)	▲
Slippage or shuddering (5th)	1. No. 2 clutch (C2)	▲
	2. No. 3 clutch (C3)	▲
	3. No. 1 brake (B1)	▲
Engine brake does not work only in 1st to 4th gear at D position	No. 1 clutch (C1)	▲
Engine brake does not work only in 1st gear at L position	1. Valve body assembly	AT-147
	2. No. 4 brake (B4)	▲
Engine brake does not work only in 2nd gear at 2 position	1. Valve body assembly	AT-147
	2. No. 2 brake (B2)	▲
Engine brake does not work only in 3rd gear at 3 position	1. Valve body assembly	AT-147
	2. No. 1 brake (B1)	▲
No kick-down	Valve body assembly	AT-147
Shift point too high or too low	1. Shift solenoid valve (SLT)	AT-111
	2. Shift solenoid valve (SL1)	AT-82
	3. Valve body assembly	AT-147
Poor acceleration (All positions)	1. Shift solenoid valve (SLT)	AT-111
	2. Valve body assembly	AT-147
	3. Torque converter clutch	AT-169
Poor acceleration (5th)	1. No. 1 clutch (C1)	▲
	2. No. 3 clutch (C3)	▲
	3. No. 1 brake (B1)	▲
	4. Front planetary gear unit	▲
Engine stalls when starting off or stopping	1. Shift solenoid valve (SLU)	AT-127
	2. Valve body assembly	AT-147
	3. Torque converter clutch	AT-169

TERMINALS OF ECM

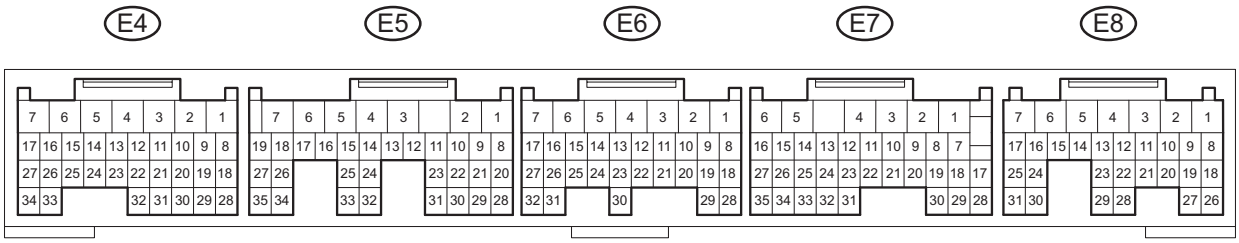

Y

C124513E01

HINT:
The standard voltage of each ECM terminal is shown in the table below.
In the table, first follow the information under "Condition". Look under "Symbols (Terminal No.)" for the terminals to be inspected. The standard voltage between the terminals is shown under "Specified Condition".
Use the illustration above as a reference for the ECM terminals.

Symbols (Terminal No.)	Wiring Color	Terminal Description	Condition	Specified Condition
STP (E8-15) - E1 (E6-1)	L - BR	Stop light switch signal	Brake pedal is depressed	7.5 to 14 V
			Brake pedal is released	Below 1.5 V
L (E7-9) - E1 (E6-1)	G-Y - BR	L shift position switch signal	Ignition switch ON and shift lever L position	10 to 14 V
			Ignition switch ON and shift lever other than L position	Below 1 V
2 (E7-10) - E1 (E6-1)	R-Y - BR	2 shift position switch signal	Ignition switch ON and shift lever 2 and L positions	10 to 14 V
			Ignition switch ON and shift lever other than 2 and L positions	Below 1 V
R (E7-11) - E1 (E6-1)	R-W - BR	R shift position switch signal	Ignition switch ON and shift lever R position	10 to 14 V
			Ignition switch ON and shift lever other than R position	Below 1 V
3 (E7-19) - E1 (E6-1)	Y - BR	3 shift position switch signal	Ignition switch ON and shift lever 3 position	10 to 14 V
			Ignition switch ON and shift lever other than 3 position	Below 1 V
4 (E7-20) - E1 (E6-1)	B - BR	4 shift position switch signal	Ignition switch ON and shift lever 4 position	10 to 14 V
			Ignition switch ON and shift lever other than 4 position	Below 1 V
D (E7-21) - E1 (E6-1)	L-B - BR	D shift position switch signal	Ignition switch ON and shift lever D and 4 positions	10 to 14 V
			Ignition switch ON and shift lever other than D and 4 positions	Below 1 V
L4 (E6-13) - E1 (E6-1)	Y-B - BR	Transfer L4 shift position switch signal	Ignition switch ON and transfer shift lever L position	Below 1 V
			Ignition switch ON and transfer shift lever other than L position	10 to 14 V

Symbols (Terminal No.)	Wiring Color	Terminal Description	Condition	Specified Condition
NSW (E5-8) - E1 (E6-1)	V - BR	Park or neutral shift position switch signal	Ignition switch ON and shift lever P and N positions	Below 2 V
			Ignition switch ON and shift lever other than P and N positions	10 to 14 V
SR (E5-9) - E1 (E6-1)	G - BR	SR solenoid signal	5th gear	10 to 14 V
			1st gear	Below 1 V
S2 (E5-10) - E1 (E6-1)	L-W - BR	S2 solenoid signal	2nd or 3rd gear	10 to 14 V
			1st, 4th or 5th gear	Below 1 V
S1 (E5-11) - E1 (E6-1)	W-G - BR	S1 solenoid signal	1st or 2nd gear	10 to 14 V
			3rd, 4th or 5th gear	Below 1 V
SLT+ (E5-13) - SLT- (E5-12)	G-B - R-B	SLT solenoid signal	Engine is idling	Pulse generation (See waveform 1)
SLU+ (E5-15) - SLU- (E5-14)	Y-B - LG	SLU solenoid signal	5th (lock-up) gear	Pulse generation (See waveform 2)
SL2+ (E5-17) - SL2- (E5-16)	W-L - G-R	SL2 solenoid signal	Engine idling speed	Pulse generation (See waveform 3)
SL1+ (E5-19) - SL1- (E5-18)	G-W - P-L	SL1 solenoid signal	Engine idling speed	Pulse generation (See waveform 4)
THO2 (E5-32) - E2 (E4-28)	GR - BR	No. 2 ATF temperature sensor signal	ATF temperature: 115°C (239°F) or more	Below 1.5 V
THO1 (E5-24) - E2 (E4-28)	Y-B - BR	No. 1 ATF temperature sensor signal	ATF temperature: 115°C (239°F) or more	Below 1.5 V
SP2+ (E5-34) - SP2- (E5-26)	L-R - R	Speed sensor (SP2) signal	Vehicle speed 12 mph (20 km/h)	Pulse generation (See waveform 5)
NT+ (E5-35) - NT- (E5-27)	W-R - Y-R	Speed sensor (NT) signal	Engine is idling	Pulse generation (See waveform 6)

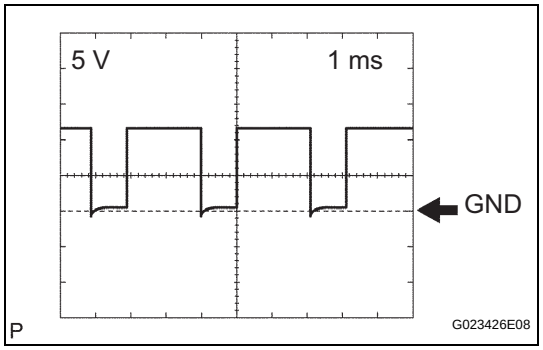

1. Waveform 1

Item	Condition
Terminal	SLT+ - SLT-
Tool setting	5 V/DIV, 1 ms/DIV
Vehicle condition	Engine idling speed

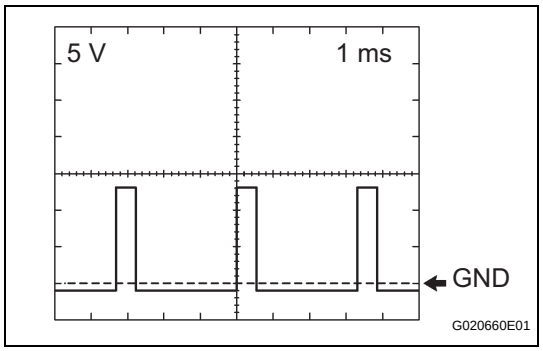

2. Waveform 2

Item	Condition
Terminal	SLU+ - SLU-
Tool setting	5 V/DIV, 1 ms/DIV
Vehicle condition	5th (lock-up) gear

AT

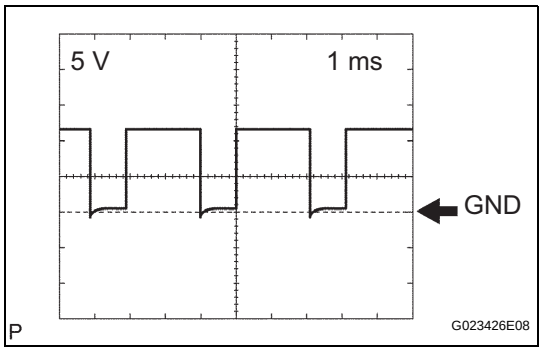

3. Waveform 3

Item	Condition
Terminal	SL2+ - SL2-
Tool setting	5 V/DIV, 1 ms/DIV
Vehicle condition	Engine idling speed

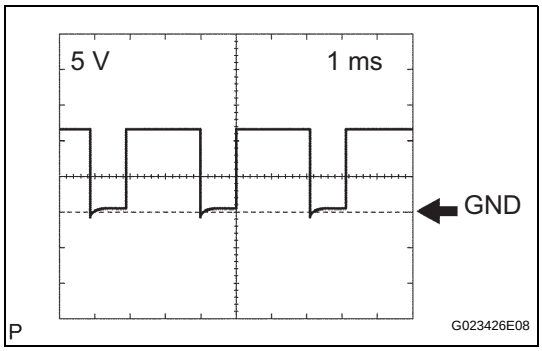

4. Waveform 4

Item	Condition
Terminal	SL1+ - SL1-
Tool setting	5 V/DIV, 1 ms/DIV
Vehicle condition	Engine idling speed

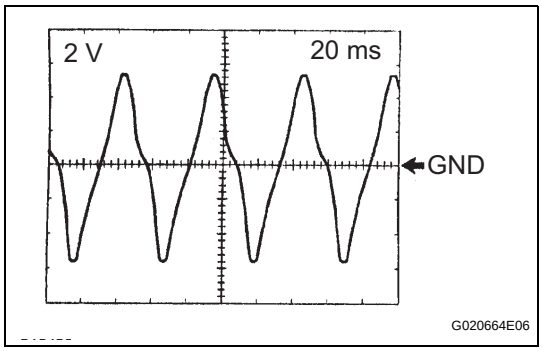

5. Waveform 5

Item	Condition
Terminal	SP2+ - SP2-
Tool setting	2 V/DIV, 20 ms/DIV
Vehicle condition	Vehicle speed 12 mph (20 km/h)

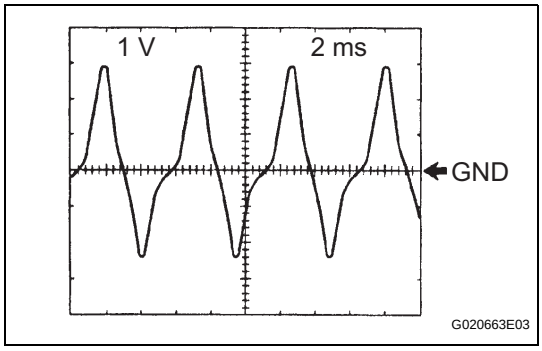

6. Waveform 6

Item	Condition
Terminal	NT+ - NT-
Tool setting	1 V/DIV, 2 ms/DIV
Vehicle condition	Engine idling speed

DIAGNOSIS SYSTEM

1. DESCRIPTION

(a) When troubleshooting on-Board Diagnostic (OBD II) vehicles, the vehicle must be connected to the intelligent tester (complying with SAE J1987). Various data output from the vehicle's ECM can then be read.

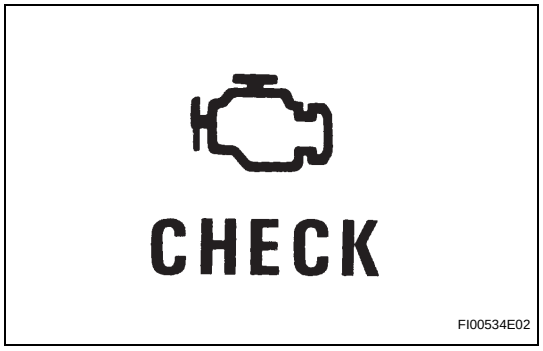

(b) OBD II regulations require that the vehicle's on-board computer illuminate the Malfunction Indicator Lamp (MIL) on the instrument panel when the computer detects a malfunction in:
1. The emission control system/components
2. The power train control components (which affect vehicle emissions)
3. The computer

In addition, the applicable Diagnostic Trouble Codes (DTCs) prescribed by SAE J2012 are recorded in the ECM memory.
If the malfunction does not reoccur in 3 consecutive trips, the MIL turns off automatically but the DTCs remain recorded in the ECM memory.

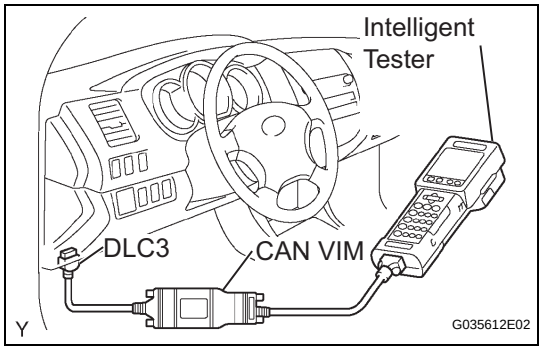

(c) To check DTCs, connect the intelligent tester to the Data Link Connector 3 (DLC3) of the vehicle. The intelligent tester displays DTCs, the freeze frame data and a variety of the engine data.
The DTCs and freeze frame data can be erased with the intelligent tester (See page AT-31).

(d) In order to enhance OBD function on vehicles and develop the Off-Board diagnosis system, CAN communication has been introduced in this system (CAN: Controller Area Network). It minimizes the gap between technician skills and vehicle technology. CAN is a network, which uses a pair of data transmission lines, spanning multiple computers and sensors. It allows high speed communication between the systems and simplification of the wire harness connection. Since this system is equipped with CAN communication, CAN VIM (VIM: Vehicle Interface Module) connecting with intelligent tester is necessary to display any information from the ECM on the tester. (Also communication between the intelligent tester and the ECM uses a CAN communication signal.) When confirming DTCs and any data of the ECM, connect the CAN VIM between the DLC3 and the intelligent tester.

AT

AT

2. NORMAL MODE AND CHECK MODE

(a) The diagnosis system operates in "normal mode" during normal vehicle use. In normal mode, "2 trip detection logic" is used to ensure accurate detection of malfunctions. "Check mode" is also available to technicians as an option. In check mode, "1 trip detection logic" is used for simulating malfunction symptoms and increasing the system's ability to detect malfunctions, including intermittent malfunctions.

3. 2 TRIP DETECTION LOGIC

(a) When a malfunction is first detected, the malfunction is temporarily stored in the ECM memory (1st trip). If the ignition switch is turned OFF and then ON again, and the same malfunction is detected again, the MIL will illuminate.

4. FREEZE FRAME DATA

(a) Freeze frame data records the engine conditions (fuel system, calculated load, engine coolant temperature, fuel trim, engine speed, vehicle speed, etc.) when a malfunction is detected. When troubleshooting, freeze frame data can help determine if the vehicle was running or stopped, if the engine was warmed up or not, if the air-fuel ratio was Lean or Rich, and other data from the time the malfunction occurred.

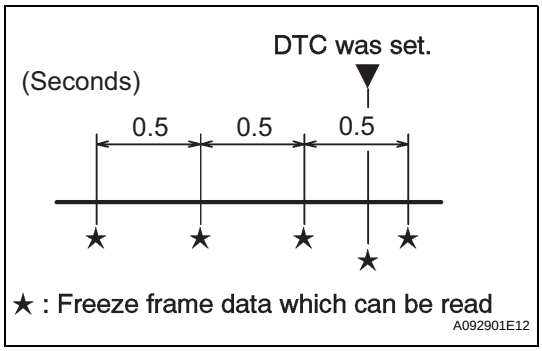

(b) The ECM records engine conditions in the form of freeze frame data every 0.5 seconds. Using the intelligent tester, five separate sets of freeze frame data, including the data values at the time when the DTC was set, can be checked.

- 3 data sets before the DTC was set
- 1 data set when the DTC was set
- 1 data set after the DTC was set

These data sets can be used to simulate the condition of the vehicle around the time the occurrence of the malfunction. The data may assist in identifying of the cause of the malfunction, and in judging whether it was temporary or not.

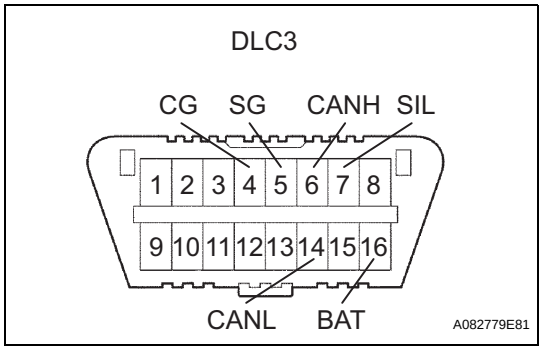

5. DATA LINK CONNECTOR 3 (DLC3)

(a) The vehicle's ECM uses the ISO 15765-4 communication protocol. The terminal arrangement of the DLC3 complies with SAE J1962 and matches the ISO 15765-4 format.

HINT:

Connect the cable of the intelligent tester to the DLC3, turn the ignition switch ON and attempt to use the intelligent tester. If the screen displays UNABLE TO CONNECT TO VEHICLE, a problem exists in the vehicle side or the tester side.

If the communication is normal when the tester is connected to another vehicle, inspect the DLC3 on the original vehicle.
If the communication is still impossible when the tester is connected to another vehicle, the problem is probably in the tester itself. Consult the Service Department listed in the tester's instruction manual.

Symbol	Terminal No.	Name	Reference terminal	Result	Condition
SIL	7	Bus "+" line	5 - SG	Pulse generation	During transmission
CG	4	Chassis ground	Body ground	Below 1 Ω	Always
SG	5	Signal ground	Body ground	Below 1 Ω	Always
BAT	16	Battery positive	Body ground	11 to 14 V	Always
CANH	6	HIGH-level CAN bus line	14 - CANL	54 to 69 Ω	Ignition switch OFF
			Battery positive	1 MΩ or higher	Ignition switch OFF
			4 - CG	1 kΩ or higher	Ignition switch OFF
CANL	14	LOW-level CAN bus line	Battery positive	1 MΩ or higher	Ignition switch OFF
			4 - CG	1 kΩ or higher	Ignition switch OFF

6. CHECK BATTERY VOLTAGE

Battery voltage:

11 to 14 V

(a) If the voltage is below 11 V, replace the battery before proceeding.

7. CHECK MIL

(a) Check that the MIL illuminates when turning the ignition switch ON.
If the MIL does not illuminate, there is a problem in the MIL circuit (See page ES-402).

(b) When the engine is started, the MIL should turn off.

8. ALL READINESS

(a) For this vehicle, using the intelligent tester allows readiness codes corresponding to all DTCs to be read. When diagnosis (normal or malfunctioning) has been completed, readiness codes are set. Enter the following menus: ENHANCED OBD II / MONITOR STATUS on the intelligent tester.

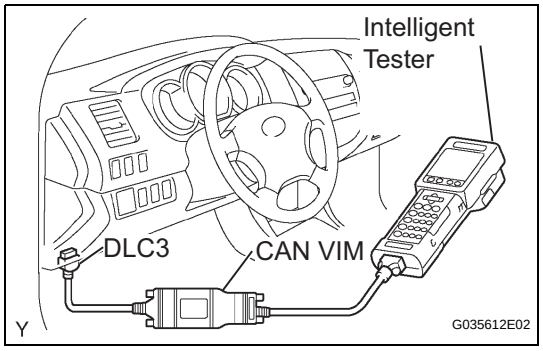

DTC CHECK / CLEAR

1. CHECK DTC

DTCs which are stored in the ECM can be displayed with the intelligent tester.
The tester can display pending DTCs and current DTCs. Some DTC aren't stored if the ECM doesn't detect a malfunction during consecutive driving cycles. However, malfunctions detected during a single driving cycle are stored as pending DTCs.

(a) Connect the intelligent tester to the Controller Area Network Vehicle Interface Module (CAN VIM). Then connect the CAN VIM to the Data Link Connector 3 (DLC3).

(b) Turn the ignition switch to the ON position.

(c) Enter the following menus: DIAGNOSIS/ ENHANCED OBD II/ DTC INFO/ CURRENT CODES (or PENDING CODE).

If the communication is normal when the tester is connected to another vehicle, inspect the DLC3 on the original vehicle.
If the communication is still impossible when the tester is connected to another vehicle, the problem is probably in the tester itself. Consult the Service Department listed in the tester's instruction manual.

Symbol	Terminal No.	Name	Reference terminal	Result	Condition
SIL	7	Bus "+" line	5 - SG	Pulse generation	During transmission
CG	4	Chassis ground	Body ground	Below 1 Ω	Always
SG	5	Signal ground	Body ground	Below 1 Ω	Always
BAT	16	Battery positive	Body ground	11 to 14 V	Always
CANH	6	HIGH-level CAN bus line	14 - CANL	54 to 69 Ω	Ignition switch OFF
			Battery positive	1 MΩ or higher	Ignition switch OFF
			4 - CG	1 kΩ or higher	Ignition switch OFF
CANL	14	LOW-level CAN bus line	Battery positive	1 MΩ or higher	Ignition switch OFF
			4 - CG	1 kΩ or higher	Ignition switch OFF

6. CHECK BATTERY VOLTAGE

Battery voltage:

11 to 14 V

(a) If the voltage is below 11 V, replace the battery before proceeding.

7. CHECK MIL

(a) Check that the MIL illuminates when turning the ignition switch ON.
If the MIL does not illuminate, there is a problem in the MIL circuit (See page ES-402).

(b) When the engine is started, the MIL should turn off.

8. ALL READINESS

(a) For this vehicle, using the intelligent tester allows readiness codes corresponding to all DTCs to be read. When diagnosis (normal or malfunctioning) has been completed, readiness codes are set. Enter the following menus: ENHANCED OBD II / MONITOR STATUS on the intelligent tester.

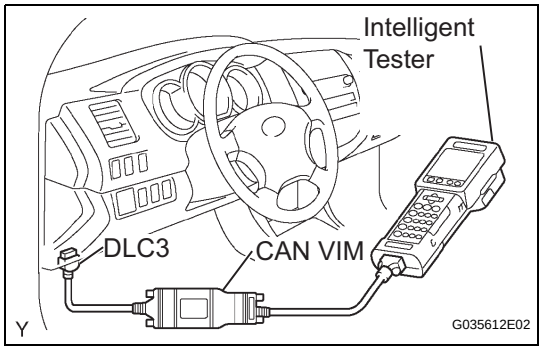

DTC CHECK / CLEAR

1. CHECK DTC

DTCs which are stored in the ECM can be displayed with the intelligent tester.
The tester can display pending DTCs and current DTCs. Some DTC aren't stored if the ECM doesn't detect a malfunction during consecutive driving cycles. However, malfunctions detected during a single driving cycle are stored as pending DTCs.

(a) Connect the intelligent tester to the Controller Area Network Vehicle Interface Module (CAN VIM). Then connect the CAN VIM to the Data Link Connector 3 (DLC3).

(b) Turn the ignition switch to the ON position.

(c) Enter the following menus: DIAGNOSIS/ ENHANCED OBD II/ DTC INFO/ CURRENT CODES (or PENDING CODE).

(d) Confirm the DTCs and freeze frame data and then write them down.
(e) Confirm the details of the DTCs (See page AT-39).

2. CLEAR DTC

(a) Connect the intelligent tester to the CAN VIM. Then connect the CAN VIM to the DLC3.
(b) Turn the ignition switch to the ON position.
(c) Enter the following menus: DIAGNOSIS/ ENHANCED OBD II/ DTC INFO/ CLEAR CODES and press YES.

CL

INSTALLATION

1. INSTALL CLUTCH PEDAL NO.1 CUSHION

(a) Install the No. 1 cushion onto the clutch pedal.

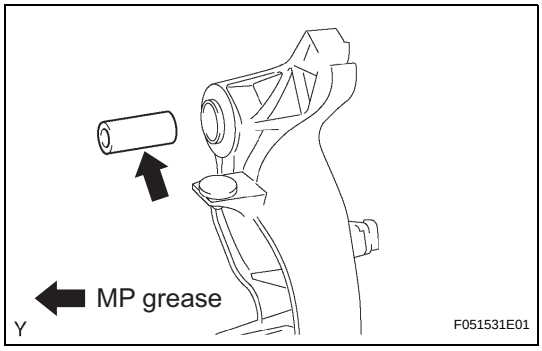

2. INSTALL CLUTCH PEDAL SHAFT COLLAR

(a) Apply MP grease to the clutch pedal shaft collar.

(b) Install the clutch pedal shaft collar onto the clutch pedal.

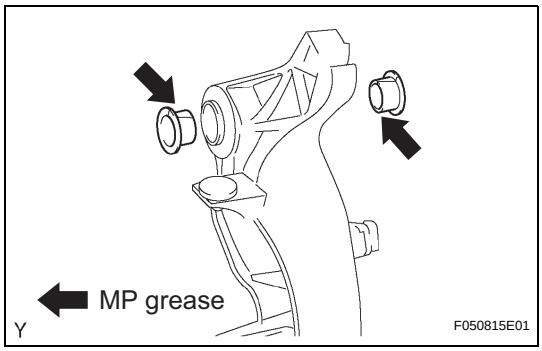

3. INSTALL CLUTCH PEDAL BUSH

(a) Apply MP grease to 2 new bushes.

(b) Install the 2 bushes onto the clutch pedal.

4. INSTALL CLUTCH PEDAL PAD

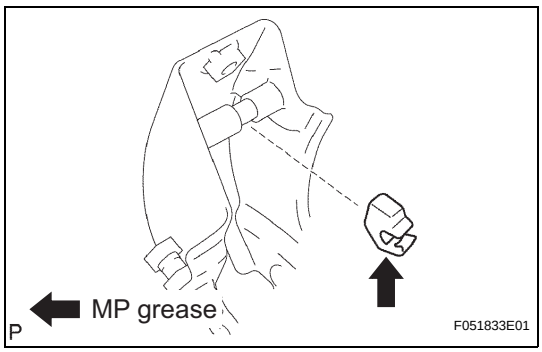

5. INSTALL CLUTCH PEDAL SPRING HOLDER

(a) Apply MP grease to the contact surface of the clutch pedal spring holder.

(b) Install the clutch pedal spring holder.

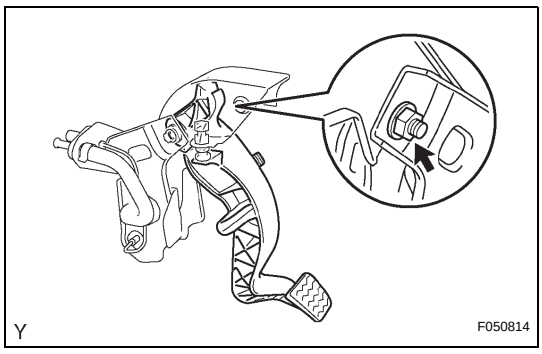

6. INSTALL CLUTCH PEDAL SUB-ASSEMBLY

(a) Install the clutch pedal onto the clutch pedal support with the bolt and nut.

Torque: 34 N*m (347 kgf*cm, 25 ft.*lbf)

HINT:

Install the bolt from the left side of the vehicle.

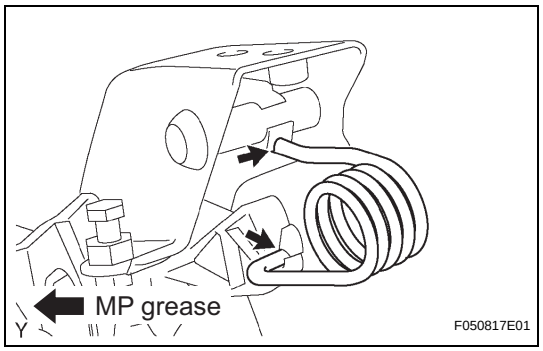

7. **INSTALL TURN OVER SPRING SEAT COMPRESSION SPRING**
   (a) Apply MP grease to the contact surfaces of the spring holder, clutch pedal and spring.
   (b) Install the spring onto the clutch pedal and spring holder.
8. **INSTALL CLUTCH MASTER CYLINDER ASSEMBLY** (See page CL-12)
9. **BLEED BRAKE LINE (w/o VSC)**
10. **BLEED CLUTCH PIPE LINE**
11. **INSPECT AND ADJUST CLUTCH PEDAL SUB-ASSEMBLY (See page CL-6)**
12. **CHECK BRAKE FLUID LEAKAGE (w/o VSC)**
13. **CHECK FOR CLUTCH FLUID LEAKAGE**
14. **CHECK FLUID LEVEL IN RESERVOIR**

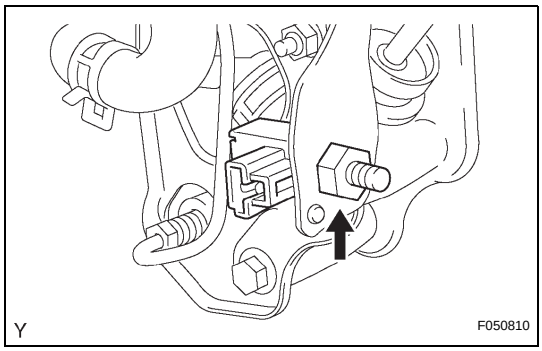

(c) Remove the nut and clutch start switch from the clutch pedal support.

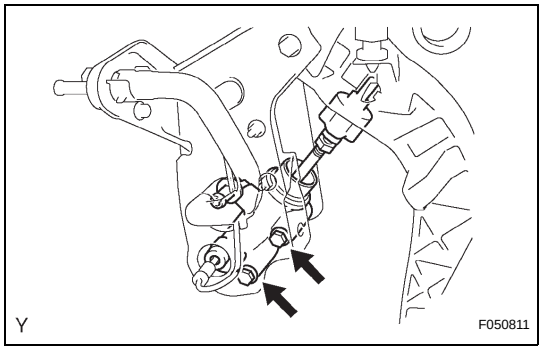

(d) Remove the 2 bolts, then remove the clutch master cylinder.

INSTALLATION

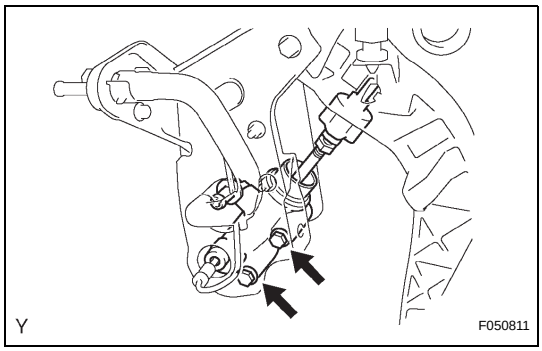

1. INSTALL CLUTCH MASTER CYLINDER ASSEMBLY

(a) Install the clutch master cylinder with the 2 bolts.
Torque: 16 N*m (158 kgf*cm, 11 ft.*lbf)

(b) Install the clutch start switch with the nut.
Torque: 16 N*m (160 kgf*cm, 12 ft.*lbf)

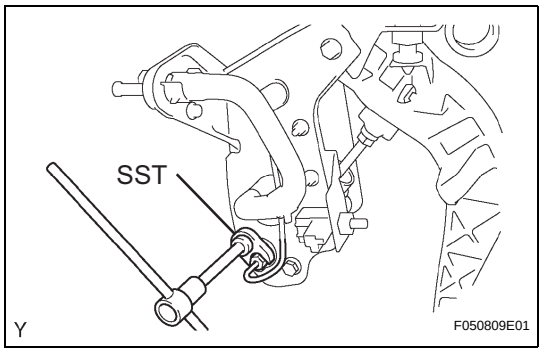

(c) Using SST, connect the clutch master cylinder to 2 way tube.
SST 09023-00101
Torque: 15 N*m (155 kgf*cm, 11 ft.*lbf)

(d) Connect the clutch reservoir tube.

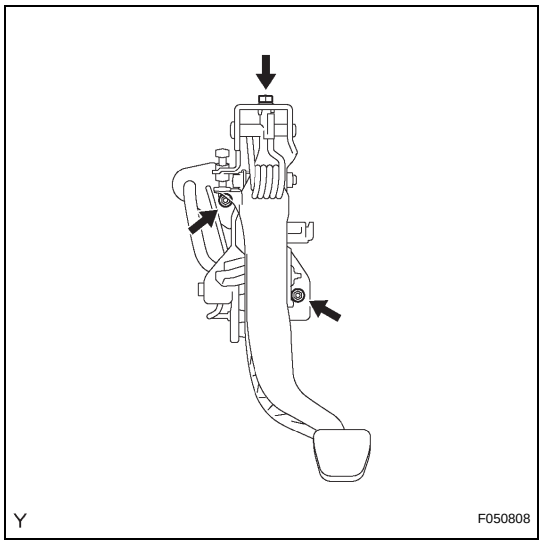

2. INSTALL CLUTCH PEDAL WITH CLUTCH MASTER CYLINDER

(a) Install the clutch pedal with clutch master cylinder onto the vehicle with the 2 nuts and bolt.
Torque: 14 N*m (145 kgf*cm, 10 ft.*lbf) for nut
24 N*m (245 kgf*cm, 18 ft.*lbf) for bolt

(b) Connect the clutch start switch connector.

3. CONNECT DRIVER SIDE JUNCTION BLOCK

4. INSTALL LOWER NO. 1 INSTRUMENT PANEL FINISH PANEL (See page IP-22)

5. INSTALL COWL SIDE TRIM BOARD LH

6. INSTALL FRONT DOOR SCUFF PLATE LH

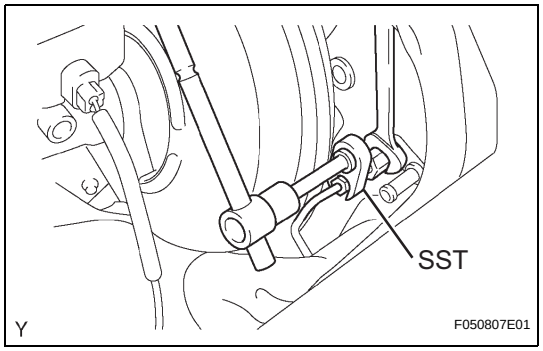

7. CONNECT CLUTCH MASTER CYLINDER TO FLEXIBLE HOSE TUBE

(a) Using SST, connect the flexible hose tube.
SST 09023-00101
Torque: 15 N*m (155 kgf*cm, 11 ft.*lbf)

8. CONNECT CLUTCH RESERVOIR TUBE

9. BLEED BRAKE LINE (w/o VSC)

10. BLEED CLUTCH PIPE LINE

11. INSPECT AND ADJUST CLUTCH PEDAL SUB-ASSEMBLY (See page CL-6)

12. CHECK BRAKE FLUID LEAKAGE (w/o VSC)

13. CHECK FOR CLUTCH FLUID LEAKAGE

14. CHECK FLUID LEVEL IN RESERVOIR

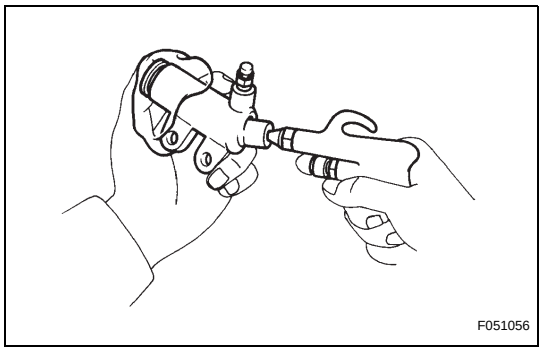

DISASSEMBLY

1. REMOVE CLUTCH RELEASE CYLINDER KIT

(a) Remove the boot from the cylinder body.

(b) Remove the push rod from the cylinder body.

(c) Using compressed air, remove the piston together with the spring from the cylinder.

NOTICE:
Be careful not to damage the inside of the cylinder body.

(d) Remove the bleeder plug cap from the bleeder plug.

2. REMOVE RELEASE CYLINDER BLEEDER PLUG

REASSEMBLY

1. INSTALL RELEASE CYLINDER BLEEDER PLUG
Torque: 11 N*m (110 kgf*cm, 8.0 ft.*lbf)

2. INSTALL CLUTCH RELEASE CYLINDER KIT
(a) Install the bleeder plug cap onto the bleeder plug.
(b) Install the spring onto the cylinder body.
(c) Apply lithium soap base glycol grease to the portions shown in the illustration.
(d) Install the piston onto the cylinder body.
NOTICE:
Be careful not to damage the inside of the cylinder body.
(e) Install the push rod into the cylinder body.
(f) Install the boot onto the cylinder body.

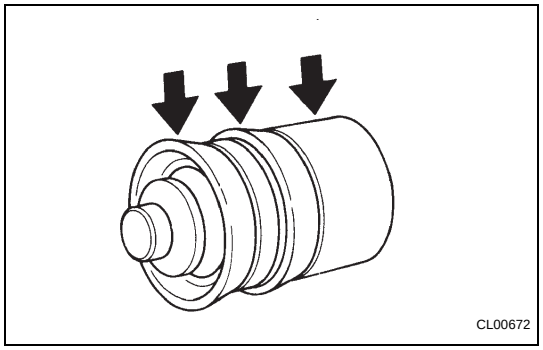
CL00672

INSTALLATION

1. INSTALL CLUTCH RELEASE CYLINDER ASSEMBLY
(a) Install the clutch release cylinder with the 2 bolts.
Torque: 12 N*m (120 kgf*cm, 8.7 ft.*lbf)

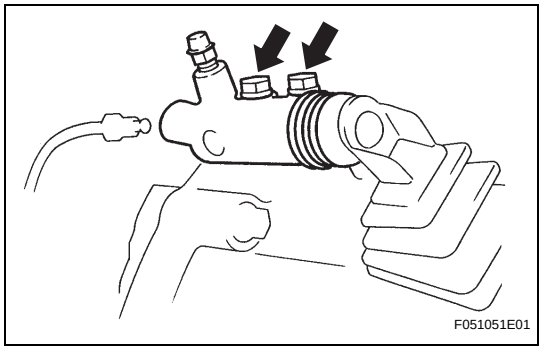
F051051E01

2. CONNECT CLUTCH RELEASE CYLINDER TO FLEXIBLE HOSE TUBE
(a) Using SST, connect the flexible hose tube.
SST 09023-00101
Torque: 15 N*m (155 kgf*cm, 11 ft.*lbf)

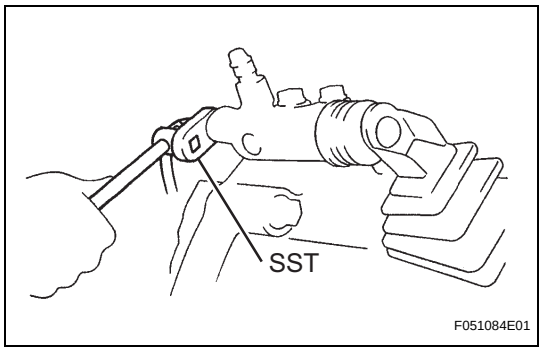

F051084E01

3. BLEED CLUTCH PIPE LINE
(a) Fill the brake reservoir tank with brake fluid and bleed the clutch system.
Torque: 11 N*m (110 kgf*cm, 8.0 ft.*lbf)

4. CHECK FOR CLUTCH FLUID LEAKAGE

DISASSEMBLY

1. REMOVE CLUTCH RELEASE CYLINDER KIT

(a) Remove the boot from the cylinder body.

(b) Remove the push rod from the cylinder body.

(c) Using compressed air, remove the piston together with the spring from the cylinder.

NOTICE:
Be careful not to damage the inside of the cylinder body.

(d) Remove the bleeder plug cap from the bleeder plug.

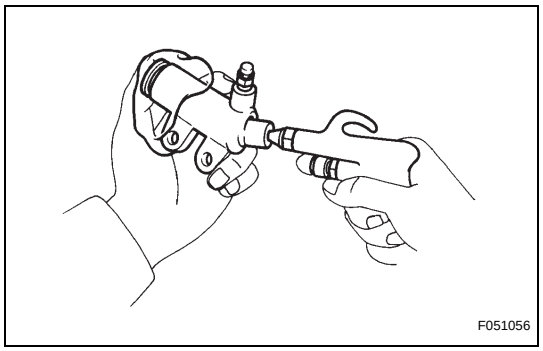

2. REMOVE RELEASE CYLINDER BLEEDER PLUG

CL

REASSEMBLY

1. INSTALL RELEASE CYLINDER BLEEDER PLUG
Torque: 11 N*m (110 kgf*cm, 8.0 ft.*lbf)

2. INSTALL CLUTCH RELEASE CYLINDER KIT
(a) Install the bleeder plug cap onto the bleeder plug.
(b) Install the spring onto the cylinder body.
(c) Apply lithium soap base glycol grease to the portions shown in the illustration.
(d) Install the piston onto the cylinder body.
NOTICE:
Be careful not to damage the inside of the cylinder body.
(e) Install the push rod into the cylinder body.
(f) Install the boot onto the cylinder body.

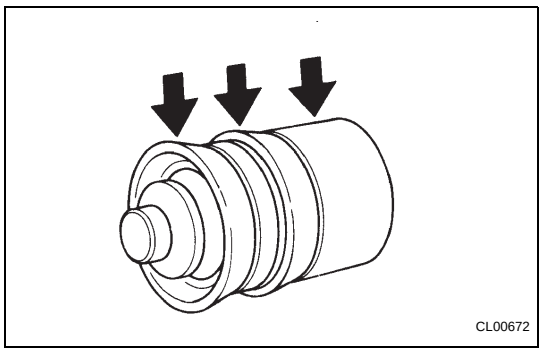
CL00672

INSTALLATION

1. INSTALL CLUTCH RELEASE CYLINDER ASSEMBLY
(a) Install the clutch release cylinder with the 2 bolts.
Torque: 12 N*m (120 kgf*cm, 8.7 ft.*lbf)

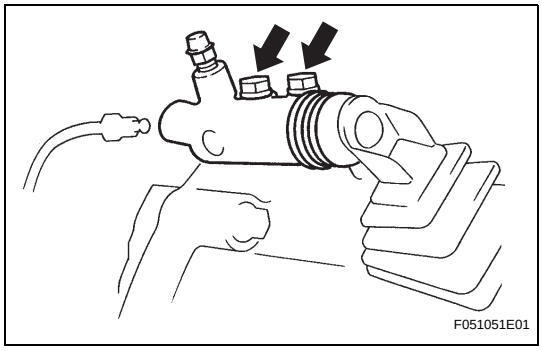
F051051E01

2. CONNECT CLUTCH RELEASE CYLINDER TO FLEXIBLE HOSE TUBE
(a) Using SST, connect the flexible hose tube.
SST 09023-00101

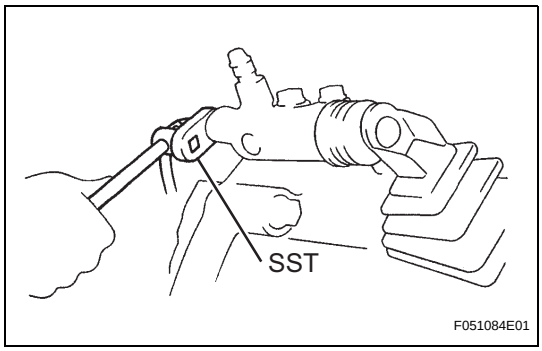

F051084E01

3. BLEED CLUTCH PIPE LINE
(a) Fill the brake reservoir tank with brake fluid and bleed the clutch system.
Torque: 11 N*m (110 kgf*cm, 8.0 ft.*lbf)

4. CHECK FOR CLUTCH FLUID LEAKAGE

DISASSEMBLY

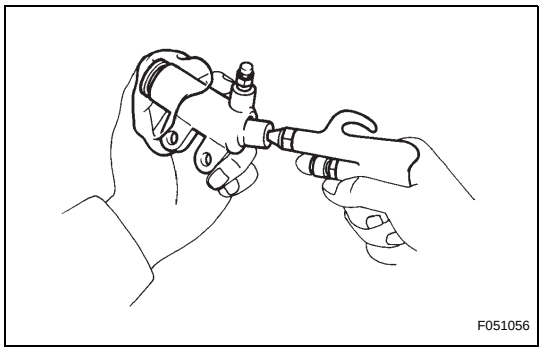

1. REMOVE CLUTCH RELEASE CYLINDER KIT

(a) Remove the boot from the cylinder body.

(b) Remove the push rod from the cylinder body.

(c) Using compressed air, remove the piston together with the spring from the cylinder.

NOTICE:
Be careful not to damage the inside of the cylinder body.

(d) Remove the bleeder plug cap from the bleeder plug.

2. REMOVE RELEASE CYLINDER BLEEDER PLUG

REASSEMBLY

1. INSTALL RELEASE CYLINDER BLEEDER PLUG
Torque: 11 N*m (110 kgf*cm, 8.0 ft.*lbf)

2. INSTALL CLUTCH RELEASE CYLINDER KIT
(a) Install the bleeder plug cap onto the bleeder plug.
(b) Install the spring onto the cylinder body.

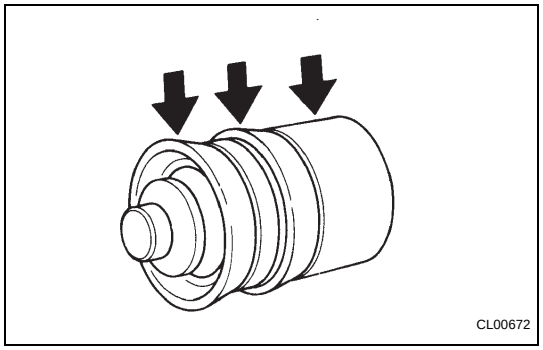

(c) Apply lithium soap base glycol grease to the portions shown in the illustration.
(d) Install the piston onto the cylinder body.
NOTICE:
Be careful not to damage the inside of the cylinder body.
(e) Install the push rod into the cylinder body.
(f) Install the boot onto the cylinder body.

INSTALLATION

1. INSTALL CLUTCH RELEASE CYLINDER ASSEMBLY
(a) Install the clutch release cylinder with the 2 bolts.
Torque: 12 N*m (120 kgf*cm, 8.7 ft.*lbf)

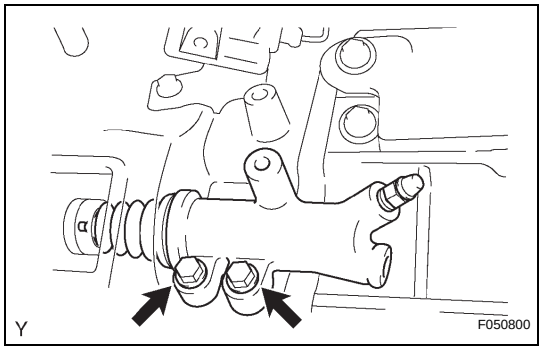

2. CONNECT CLUTCH RELEASE CYLINDER TO FLEXIBLE HOSE TUBE
(a) Using SST, connect the flexible hose tube.
SST 09023-00101
Torque: 15 N*m (155 kgf*cm, 11 ft.*lbf)
(b) Install the clutch line bracket.
Torque: 12 N*m (120 kgf*cm, 8.7 ft.*lbf)

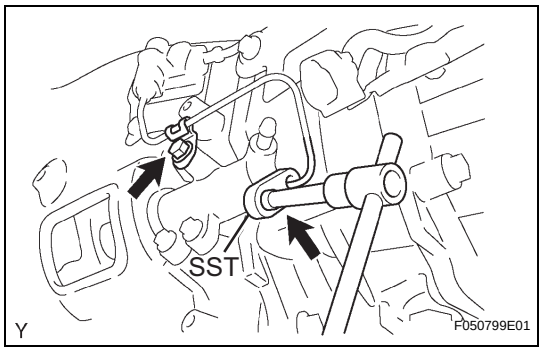

3. BLEED CLUTCH PIPE LINE
(a) Fill the brake reservoir tank with brake fluid and bleed the clutch system.
Torque: 11 N*m (110 kgf*cm, 8.0 ft.*lbf)

4. CHECK FOR CLUTCH FLUID LEAKAGE

5. INSTALL NO. 1 CLUTCH HOUSING COVER
(a) Install the clutch housing cover No. 1 with the 3 bolts.
Torque: 12 N*m (120 kgf*cm, 8.7 ft.*lbf)

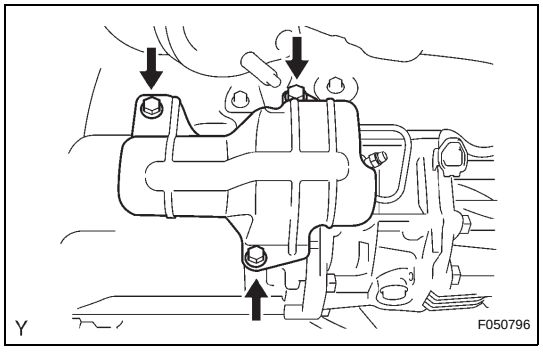

INSTALLATION

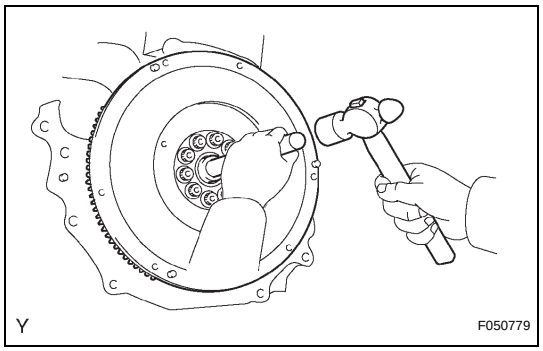

1. INSTALL INPUT SHAFT BEARING

(a) Using SST and a hammer, install the input shaft bearing.
SST 09304-30012
HINT:
After assembling the input shaft bearing to the hub, make sure that it rotates smoothly.

(b) Install 4 new bolts.
Torque: 27 N*m (270 kgf*cm, 20 ft.*lbf)

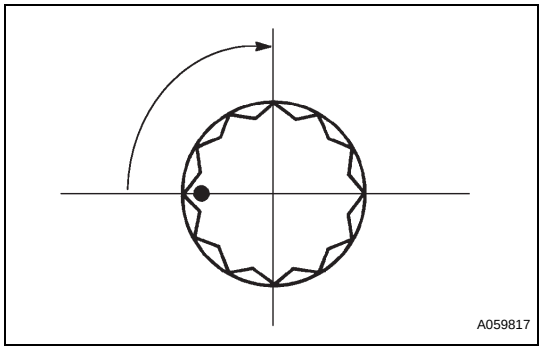

(c) Mark each bolt with paint as shown in the illustration.

(d) Retighten each bolt by 90°.

(e) Check that the mark on each bolt is at a 90° angle from its original position.

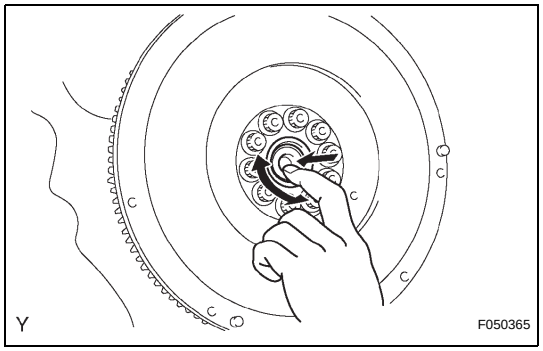

2. INSPECT INPUT SHAFT BEARING

(a) Turn the bearing by hand while applying force in the rotation direction.
If the bearing is stuck or difficult to turn, replace the input shaft bearing.
HINT:
The bearing is permanently lubricated and requires no cleaning or lubrication.

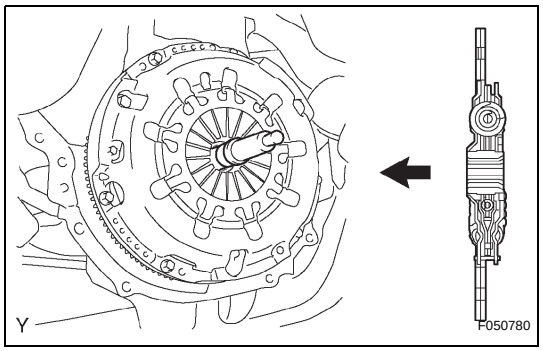

3. INSTALL CLUTCH DISC ASSEMBLY

(a) Insert SST into the clutch disc assembly, then insert them into the flywheel sub-assembly.
SST 09301-00210
NOTICE:
Take care not to insert clutch disc assembly in the wrong orientation.

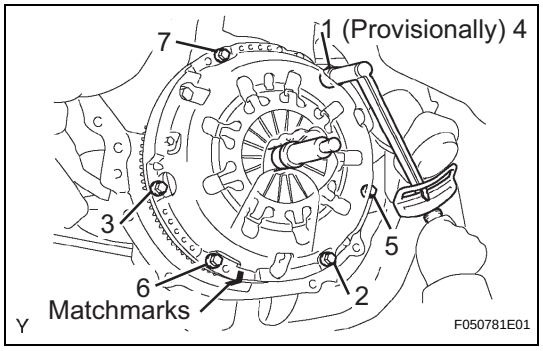

4. INSTALL CLUTCH COVER ASSEMBLY

(a) Align the matchmarks on the clutch cover assembly and flywheel sub-assembly.

(b) Tighten the 6 bolts, in the order shown in the illustration, starting with the bolt located near the knock pin on the top.
Torque: 19 N*m (195 kgf*cm, 14 ft.*lbf)
HINT:
- Following the order in the illustration, uniformly tighten the bolts.

- Move SST up and down, right and left gently after checking that the disc is in the center, and tighten the bolts.

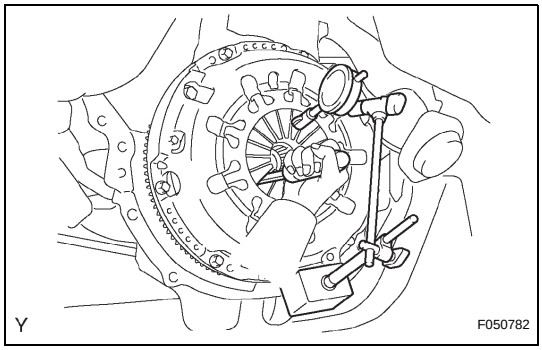

5. INSPECT AND ADJUST CLUTCH COVER ASSEMBLY

(a) Using a dial indicator with roller instrument, check the diaphragm spring tip alignment.
Maximum non-alignment:
0.5 mm (0.020 in.)
If the alignment is not as specified, adjust the diaphragm spring tip alignment using SST.
SST 09333-00013

6. INSTALL RELEASE FORK SUPPORT

(a) Install the release fork support onto the transaxle assembly.
Torque: 47 N*m (479 kgf*cm, 35 ft.*lbf)

7. INSTALL RELEASE BEARING HUB CLIP

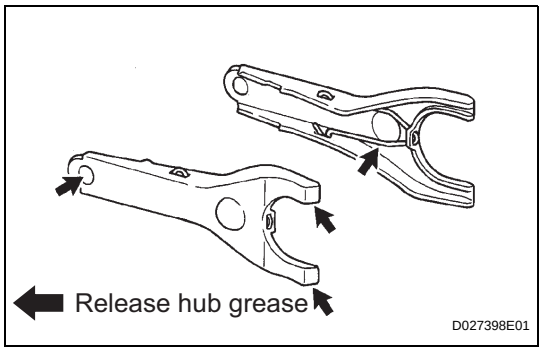

8. INSTALL CLUTCH RELEASE FORK SUB-ASSEMBLY

(a) Apply release hub grease to the release fork and release bearing assembly contact surfaces, release fork and push rod contact surface and release fork pivot point.
Sealant:
Part No. 08887-01806, RELEASE HUB GREASE or equivalent

(b) Install the release fork onto the release bearing assembly.

9. INSTALL CLUTCH RELEASE BEARING ASSEMBLY

(a) Apply clutch spline grease to the input shaft spline.
Sealant:
Part No. 08887-01706, CLUTCH SPLINE GREASE or equivalent

(b) Install the bearing onto the release fork, and then install them onto the transaxle assembly.
NOTICE:
After installation, move the fork forward and backward to check that the release bearing slides smoothly.

10. INSTALL CLUTCH RELEASE FORK BOOT

11. INSTALL MANUAL TRANSMISSION UNIT ASSEMBLY
(See page MT-9)

CL

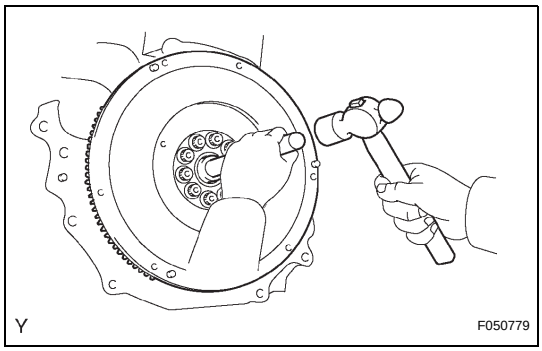

INSTALLATION

1. INSTALL INPUT SHAFT BEARING

(a) Using SST and a hammer, install the input shaft bearing.
SST 09304-30012
HINT:
After assembling the input shaft bearing to the hub, make sure that it rotates smoothly.

(b) Install 4 new bolts.
Torque: 27 N*m (270 kgf*cm, 20 ft.*lbf)

(c) Mark each bolt with paint as shown in the illustration.

(d) Retighten each bolt by 90°.

(e) Check that the mark on each bolt is at a 90° angle from its original position.

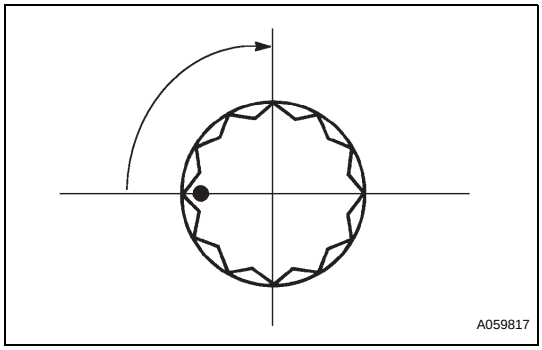

2. INSPECT INPUT SHAFT BEARING

(a) Turn the bearing by hand while applying force in the rotation direction.
If the bearing is stuck or difficult to turn, replace the input shaft bearing.
HINT:
The bearing is permanently lubricated and requires no cleaning or lubrication.

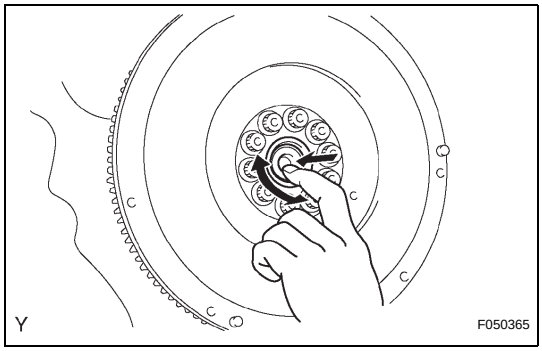

3. INSTALL CLUTCH DISC ASSEMBLY

(a) Insert SST into the clutch disc assembly, then insert them into the flywheel sub-assembly.
SST 09301-00210
NOTICE:
Take care not to insert clutch disc assembly in the wrong orientation.

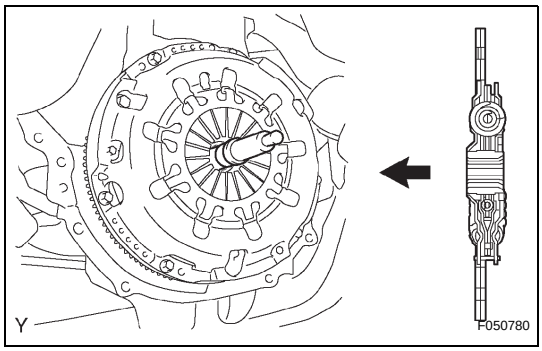

4. INSTALL CLUTCH COVER ASSEMBLY

(a) Align the matchmarks on the clutch cover assembly and flywheel sub-assembly.

(b) Tighten the 6 bolts, in the order shown in the illustration, starting with the bolt located near the knock pin on the top.
Torque: 19 N*m (195 kgf*cm, 14 ft.*lbf)
HINT:
- Following the order in the illustration, uniformly tighten the bolts.

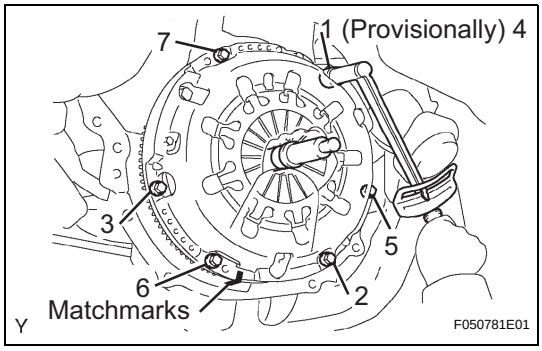

- Move SST up and down, right and left gently after checking that the disc is in the center, and tighten the bolts.

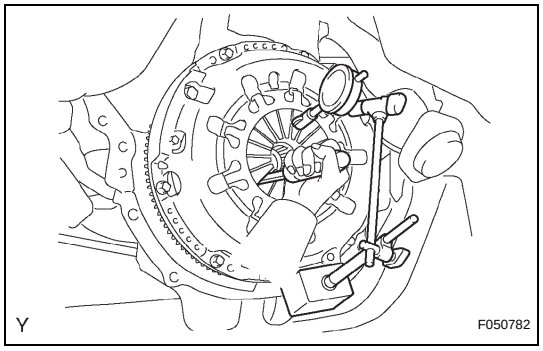

5. INSPECT AND ADJUST CLUTCH COVER ASSEMBLY

(a) Using a dial indicator with roller instrument, check the diaphragm spring tip alignment.
Maximum non-alignment:
0.5 mm (0.020 in.)
If the alignment is not as specified, adjust the diaphragm spring tip alignment using SST.
SST 09333-00013

6. INSTALL RELEASE FORK SUPPORT

(a) Install the release fork support onto the transaxle assembly.
Torque: 47 N*m (479 kgf*cm, 35 ft.*lbf)

7. INSTALL RELEASE BEARING HUB CLIP

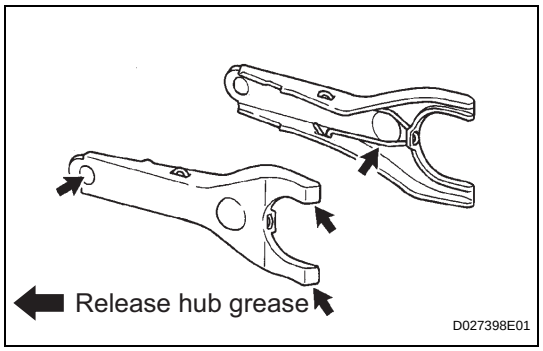

8. INSTALL CLUTCH RELEASE FORK SUB-ASSEMBLY

(a) Apply release hub grease to the release fork and release bearing assembly contact surfaces, release fork and push rod contact surface and release fork pivot point.
Sealant:
Part No. 08887-01806, RELEASE HUB GREASE or equivalent

(b) Install the release fork onto the release bearing assembly.

9. INSTALL CLUTCH RELEASE BEARING ASSEMBLY

(a) Apply clutch spline grease to the input shaft spline.
Sealant:
Part No. 08887-01706, CLUTCH SPLINE GREASE or equivalent

(b) Install the bearing onto the release fork, and then install them onto the transaxle assembly.
NOTICE:
After installation, move the fork forward and backward to check that the release bearing slides smoothly.

10. INSTALL CLUTCH RELEASE FORK BOOT

11. INSTALL MANUAL TRANSMISSION UNIT ASSEMBLY
(See page MT-11)

MT

INSTALLATION

1. **INSTALL TRANSFER ASSEMBLY (See page TF-38)**

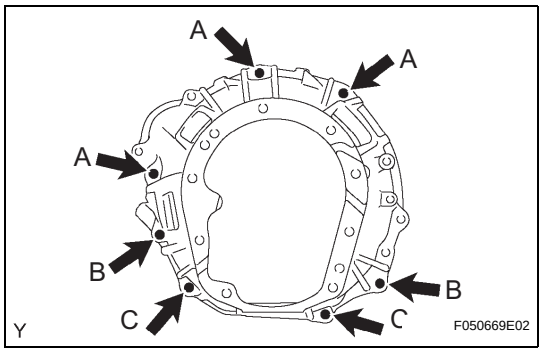

2. **INSTALL MANUAL TRANSMISSION WITH TRANSFER**
   (a) Align the input shaft with the clutch disc and install the transmission unit assembly onto the engine.
   (b) Install the 7 bolts.
   Torque: 72 N*m (730 kgf*cm, 53 ft.*lbf) for bolt A
   37 N*m (379 kgf*cm, 27 ft.*lbf) for bolt B and C
   HINT:
   Install bolt B from the front of the vehicle direction.

3. **CONNECT WIRE HARNESS**
   (a) Connect the wire harness clamp to the transmission w/ transfer assembly.
   (b) Connect the back-up lamp switch connector.
   (c) Connect the speed sensor connector.
   (d) Connect the 2 transfer indicator switch connectors.
   (e) Connect the transfer shift actuator motor connector.

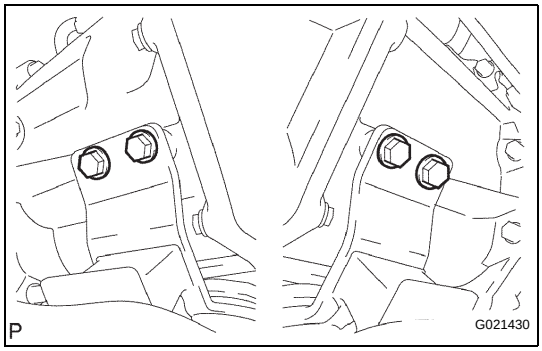

4. **INSTALL NO. 1 ENGINE MOUNTING INSULATOR REAR**
   (a) Install the engine mount insulator rear No. 1 with 4 bolts onto the transmission assembly.
   Torque: 65 N*m (663 kgf*cm, 48 ft.*lbf)

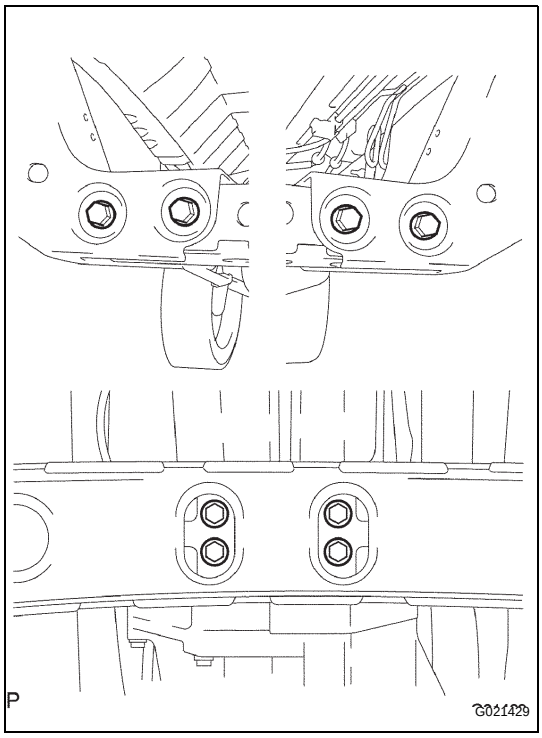

5. **INSTALL NO. 3 FRAME CROSSMEMBER SUB-ASSEMBLY**
   (a) Install the frame crossmember sub-assembly No. 3 with the 8 bolts and nuts.
   Torque: 40 N*m (408 kgf*cm, 30 ft.*lbf)
   (b) Install the 4 bolts onto the engine mounting insulator rear No. 1.
   Torque: 19 N*m (189 kgf*cm, 14 ft.*lbf)

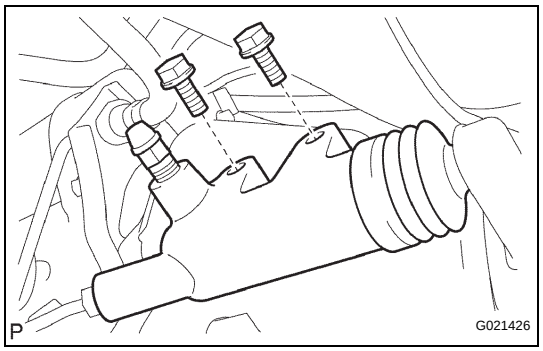

6. **INSTALL CLUTCH RELEASE CYLINDER ASSEMBLY**
   (a) Install the clutch release cylinder assembly with the 2 bolts.
   Torque: 12 N*m (122 kgf*cm, 9 ft.*lbf)

7. **INSTALL STARTER ASSEMBLY (See page ST-10)**

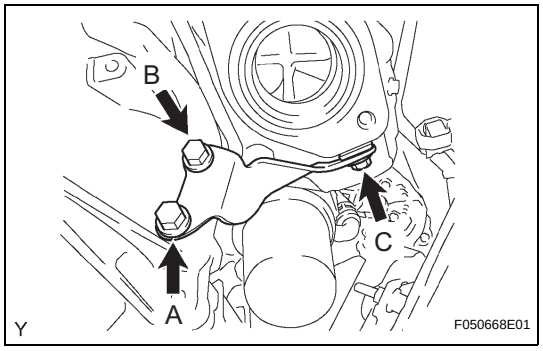

8. **INSTALL MANIFOLD STAY**
   (a) Install the manifold stay with the 3 bolts.
   Torque: 72 N*m (730 kgf*cm, 53 ft.*lbf) for bolt A
   44 N*m (449 kgf*cm, 33 ft.*lbf) for bolt B
   30 N*m (306 kgf*cm, 22 ft.*lbf) for bolt C

9. **INSTALL PROPELLER WITH CENTER BEARING SHAFT ASSEMBLY (for Access Cab) (See page PR-32)**

10. **INSTALL PROPELLER SHAFT ASSEMBLY (for Regular Cab) (See page PR-25)**

11. **INSTALL FRONT PROPELLER SHAFT ASSEMBLY (See page PR-19)**

12. **INSTALL FRONT EXHAUST PIPE ASSEMBLY (See page EX-2)**

13. **ADD MANUAL TRANSMISSION OIL**

14. **ADJUST MANUAL TRANSMISSION OIL (See page MT-2)**

15. **INSTALL NO. 2 ENGINE UNDER COVER SUB-ASSEMBLY**
   (a) Install the engine under cover No. 2 with the 4 bolts.
   Torque: 30 N*m (306 kgf*cm, 22 ft.*lbf)

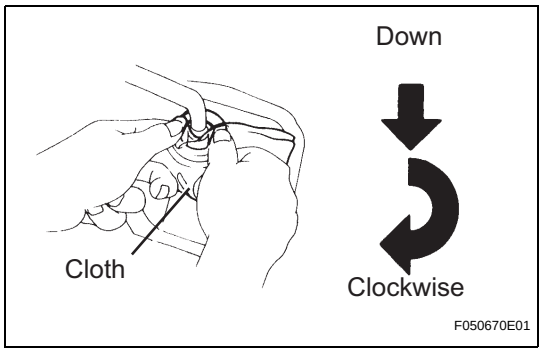

16. **INSTALL FLOOR SHIFT SHIFT LEVER ASSEMBLY**
   (a) Cover the shift lever cap with a cloth.
   (b) While pressing down on the shift lever, turn it clockwise to install.
   HINT:
   Apply MP grease to the tip of the shift lever.

MT

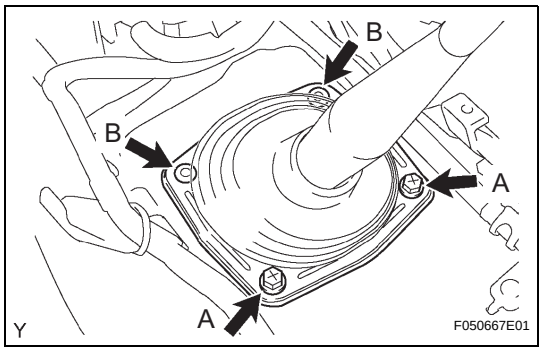

17. **INSTALL SHIFT LEVER BOOT ASSEMBLY**
    (a) Install the shift lever boot assembly with the 2 screws A and 2 clips B.
18. **INSTALL FRONT CONSOLE BOX (for Bench Seat Type) (See page IP-22)**
19. **INSTALL FRONT CONSOLE BOX (for Separate Seat Type) (See page IP-23)**
20. **INSTALL REAR CONSOLE BOX ASSEMBLY (for Separate Seat Type) (See page IP-24)**
21. **INSTALL CONSOLE UPPER REAR PANEL SUB-ASSEMBLY (for Separate Seat Type) (See page IP-25)**
22. **CONNECT CABLE TO NEGATIVE BATTERY TERMINAL**
    Torque: 3.9 N*m (40 kgf*cm, 35 in.*lbf)
23. **CHECK FOR MANUAL TRANSMISSION OIL LEAKAGE**

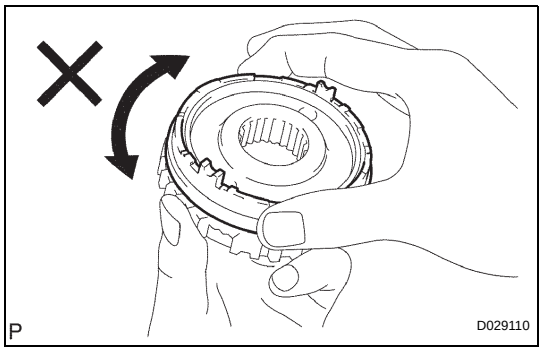

INSPECTION

1. INSPECT NO. 3 SYNCHRONIZER RING OUTER

(a) Apply gear oil to the cone part of gear spline piece No. 5, and check that it does not turn in both directions while pushing the synchronizer ring outer No. 3 to the gear spline piece No. 5.
If it turns, replace the synchronizer ring.

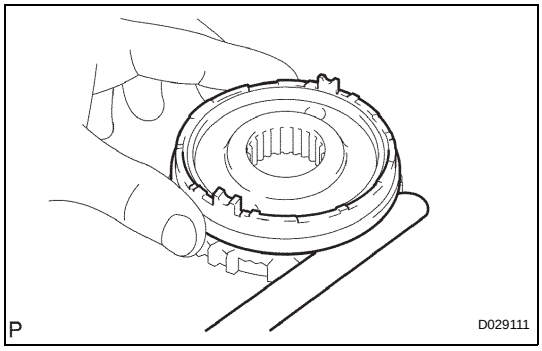

(b) Measure the clearance between the synchronizer ring outer No. 3 and gear spline piece No. 5 while pushing the synchronizer ring outer No. 3 to the cone part of the gear spline piece No. 5.
Standard clearance:
0.68 to 1.32 mm (0.0267 to 0.0610 in.)
If the clearance is not within the specified values, replace synchronizer ring outer No. 3 with a new one.

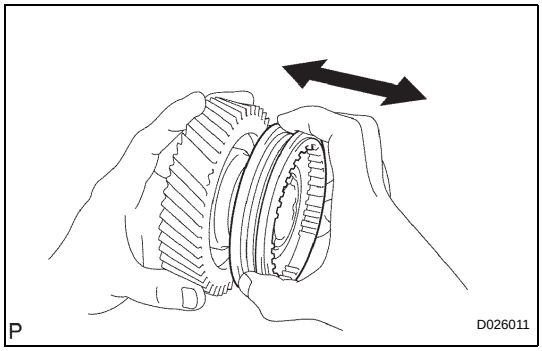

2. INSPECT NO. 3 TRANSMISSION HUB SLEEVE

(a) Check that the counter shaft 5th gear and transmission hub sleeve No. 3 slide smoothly each other.

(b) Check the tip of the spline gear of the transmission hub sleeve No. 3 for wear.
If there are any detects, replace the transmission hub sleeve No. 3.

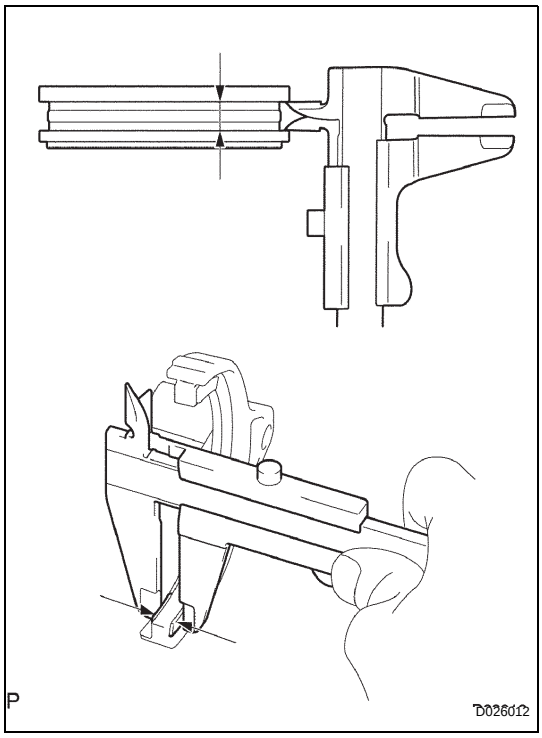

(c) Using vernier calipers, measure the transmission hub sleeve No. 3 groove and the thickness of the claw part of the shift fork No. 3 to calculate the clearance.
Standard clearance:
0.26 to 0.84 mm (0.0102 to 0.0331 in.)
If the clearance is not within the specified values, replace the transmission hub sleeve No. 3 and shift fork No. 3 with new ones.

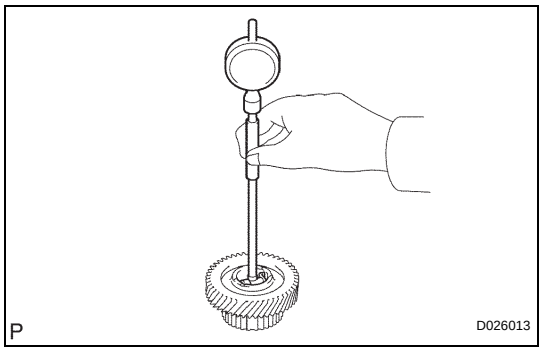

3. INSPECT COUNTERSHAFT 5TH GEAR

(a) Using a cylinder gauge, measure the inner diameter of the counter 5th gear.

Standard diameter:

38.015 to 38.040 mm (1.4967 to 1.4976 in.)

Maximum diameter:

38.040 mm (1.4976 in.)

If the diameter greater than the maximum, replace the counter shaft 5th gear with a new one.

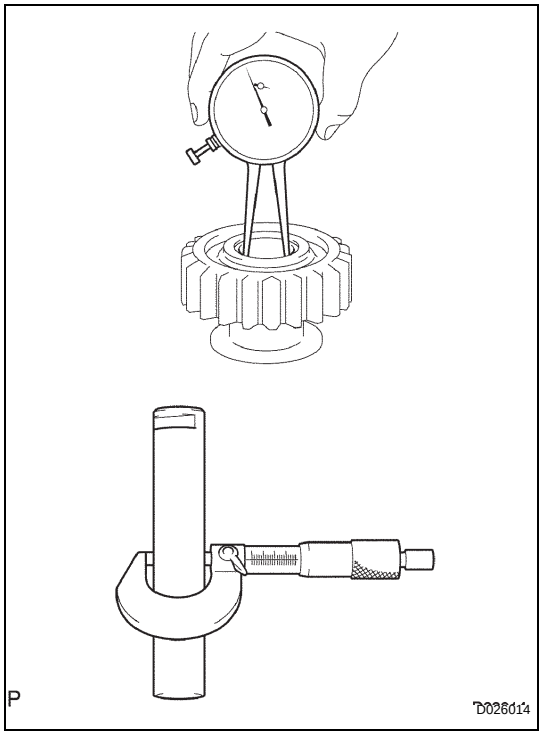

4. INSPECT REVERSE IDLER GEAR SUB-ASSY

(a) Using a caliper gauge, measure the inner diameter of the reverse idler gear.

Standard diameter:

24.040 to 24.061 mm (0.9465 to 0.9473 in.)

Maximum diameter:

24.061 mm (0.9473 in.)

If the clearance is greater than the maximum, replace the reverse idler gear with a new one.

(b) Using a micrometer, measure the outer diameter of the sliding part of the reverse idler gear on the reverse idler gear shaft.

Standard diameter:

23.979 to 24.000 mm (0.9441 to 0.9449 in.)

Minimum diameter:

23.979 mm (0.9441 in.)

If the diameter is outside the specification, replace the reverse idler gear shaft with a new one.

(c) Subtract the reverse idler gear shaft inside diameter measurement from the reverse idler gear diameter clearance.

Standard clearance:

0.040 to 0.082 mm (0.0016 to 0.0032 in.)

If the clearance is not as specified, replace the reverse idler gear or reverse idler gear shaft.

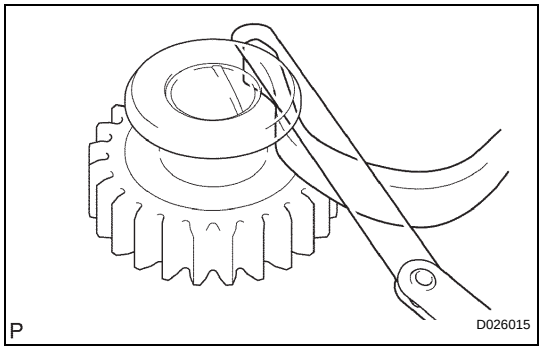

(d) Using a feeler gauge, measure the thrust clearance of the shoe part between the reverse idler gear and the reverse shift arm.

Standard clearance:

0.05 to 0.35 mm (0.0020 to 0.0138 in.)

If the clearance is outside the specification, replace the idler gear and reverse shift arm with new ones.

MT

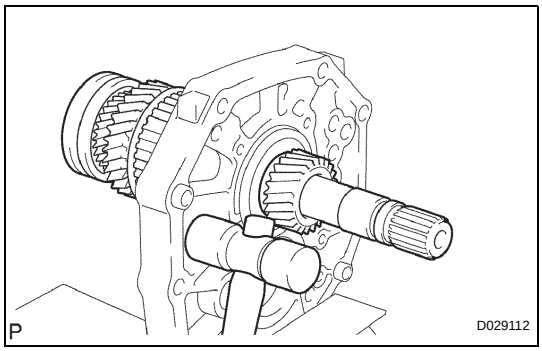

REASSEMBLY

1. INSTALL OUTPUT SHAFT ASSEMBLY

(a) Apply gear oil to the sliding part of the output assembly.

(b) Using a plastic hammer, install the output shaft assembly by tapping the intermediate plate.

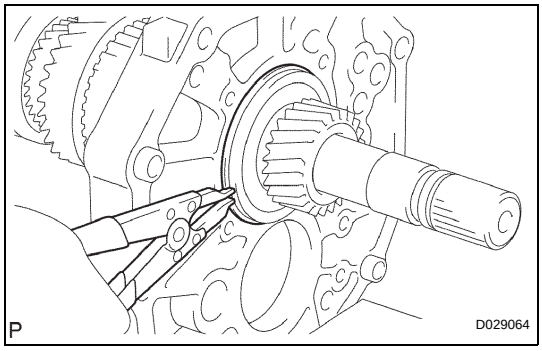

2. INSTALL OUTPUT SHAFT BEARING SHAFT SNAP RING

(a) Using a snap ring expander, install the output shaft bearing shaft snap ring onto the output shaft.

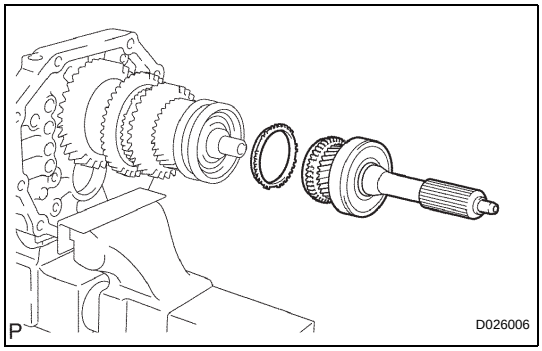

3. INSTALL INPUT SHAFT ASSEMBLY

(a) Apply gear oil to the input shaft assembly and synchronizer ring No. 2, and install them onto the output shaft.

NOTICE:

- **Install the synchronizer ring No. 2 so that its groove fits into the synchromesh shifting key No. 2.**
- **Check that the input shaft assembly rotates smoothly.**

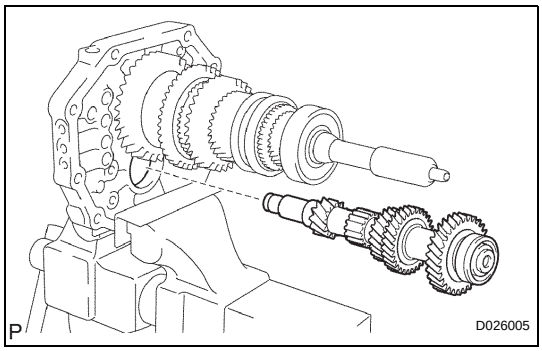

4. INSTALL COUNTER GEAR

(a) Provisionally install the counter gear assembly onto the intermediate plate.

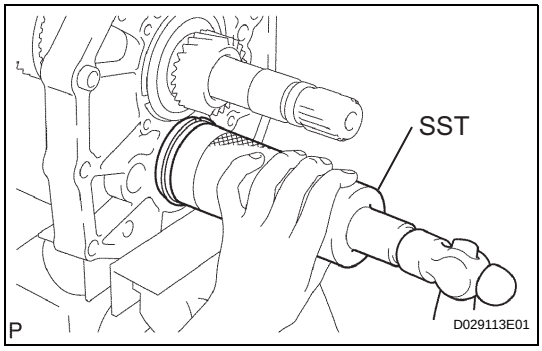

5. INSTALL COUNTER SHAFT CENTER BEARING

(a) Using SST and a hammer, install the new counter shaft center bearing onto the intermediate plate.

SST 09316-60011 (09316-00011)

HINT:

Remove the bearing while tapping the tip of the counter gear so that the counter gear assembly is not pushed forward into the side wall of the output shaft gear.

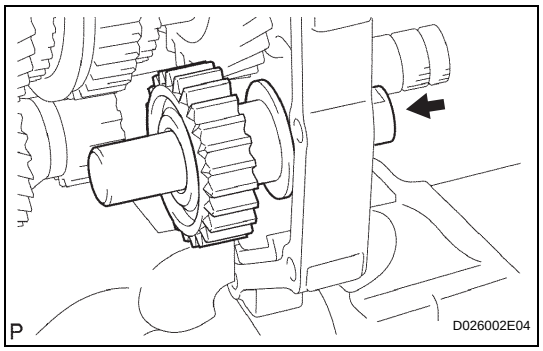

6. INSTALL REVERSE IDLER GEAR SUB-ASSEMBLY

(a) Apply gear oil to each sliding part of the reverse idler gear and the reverse idler gear shaft, and install them onto the intermediate plate.

NOTICE:

Orient the groove side of the reverse idler shaft to the rear side and install it from the rear side.

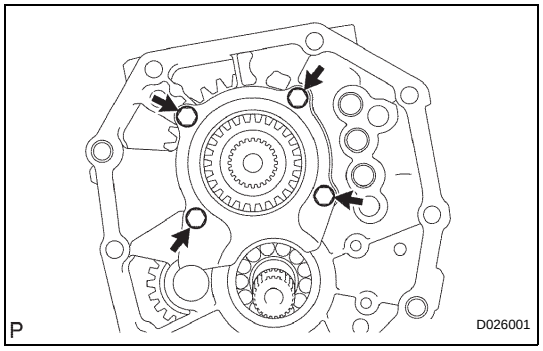

7. INSTALL OUTPUT SHAFT REAR BEARING RETAINER

(a) Install the output shaft rear bearing retainer into the groove of the reverse idler gear shaft with the 4 bolts.

Torque: 18 N*m (185 kgf*cm, 13 ft.*lbf)

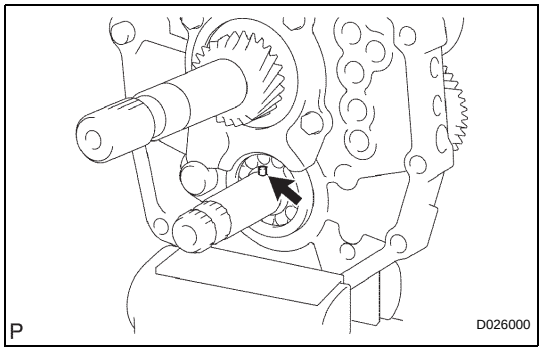

8. INSTALL 5TH GEAR THRUST WASHER PIN

(a) Apply MP grease to the 5th gear thrust washer pin, and install it onto the counter gear.

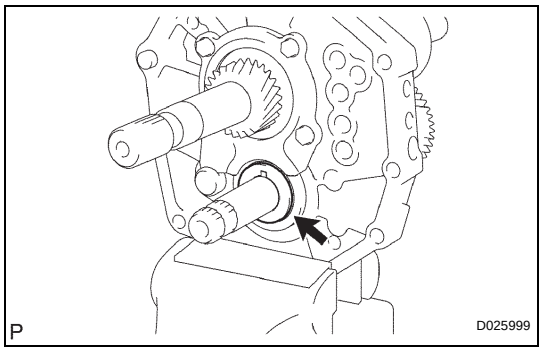

9. INSTALL 5TH GEAR THRUST WASHER

(a) Apply gear oil to the 5th gear thrust washer, and install it onto the counter gear.

NOTICE:

Install the thrust washer so that its chamfer side faces to the front side.

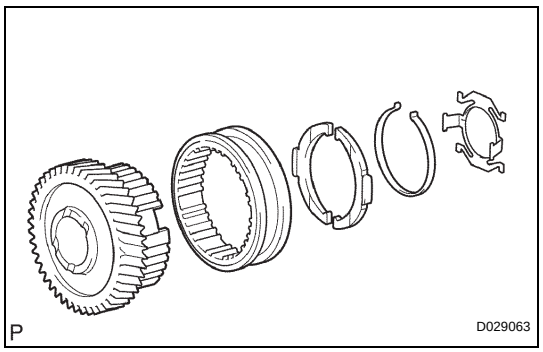

10. INSTALL NO. 3 TRANSMISSION HUB SLEEVE

(a) Apply gear oil to the sliding part of transmission hub sleeve No. 3, and install it onto the counter shaft 5th gear.

NOTICE:

Make sure that the transmission hub sleeve No. 3 and counter 5th gear are oriented in the correct direction.

(b) Install the 2 synchromesh shifting keys No. 3 and the 2 synchromesh shifting key springs onto the counter shaft 5th gear.

MT

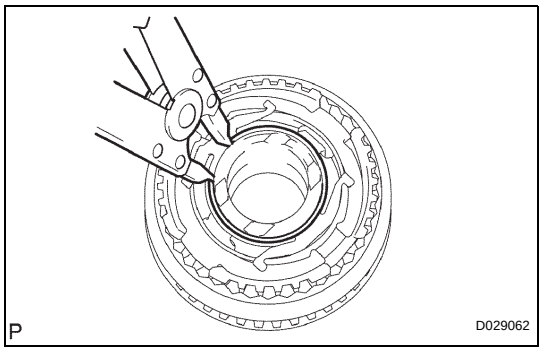

(c) Using a snap ring expander, install the bearing shaft snap ring onto the counter 5th gear.

MT

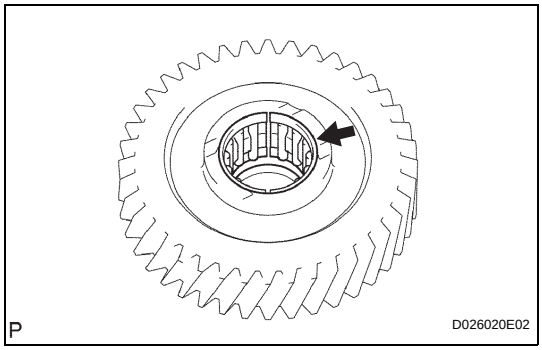

11. INSTALL COUNTER 5TH GEAR BEARING

(a) Apply gear oil to the counter 5th gear bearing and install it onto the counter 5th gear.

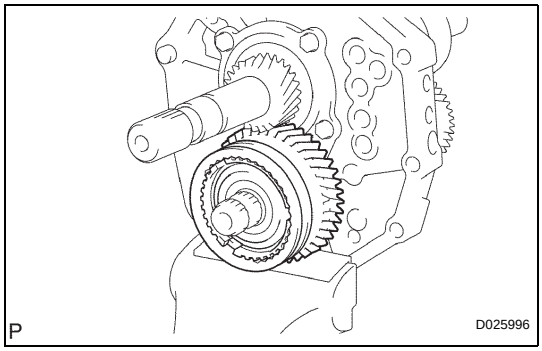

12. INSTALL COUNTER SHAFT 5TH GEAR

(a) Apply gear oil to the counter 5th gear and transmission hub sleeve No. 3 assembly, and install them onto the counter gear.

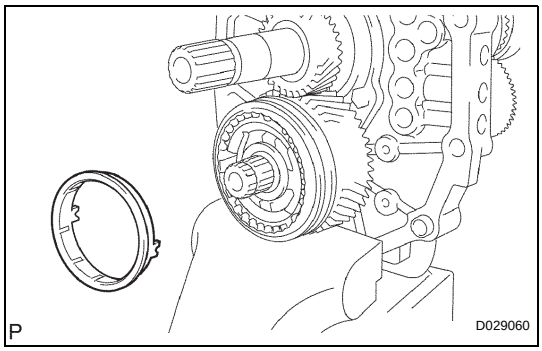

13. INSTALL NO. 3 SYNCHRONIZER RING OUTER

(a) Apply gear oil to the synchronizer ring outer No. 3, and install it onto the counter gear.

NOTICE:

Install the synchronizer ring outer No. 3 so that its groove fits into the synchromesh shifting key No. 3.

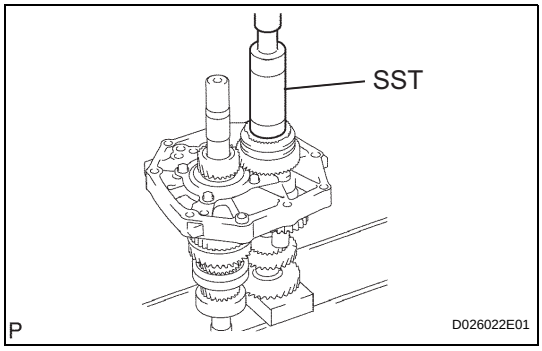

14. INSTALL NO. 5 GEAR SPLINE PIECE

(a) Using SST and a press, install the gear spline piece No. 5 onto the counter gear.

SST 09316-60011 (09316-00011)

NOTICE:

Check that the gear rotates smoothly.

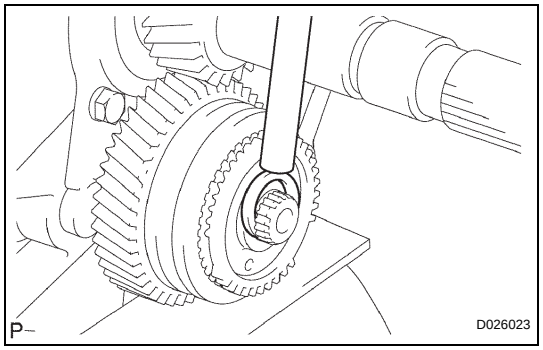

15. INSTALL COUNTER GEAR REAR SHAFT SNAP RING

(a) Select the counter gear rear shaft snap ring so that the thrust gap between gear spline piece No. 5 and counter gear rear shaft snap ring is within the specified values, and using a brass bar and a hammer, install it onto the counter gear.

Standard clearance:

0.1 mm (0.0039 in.) or less

Mark	Thickness mm (in.)
A	2.80 to 2.85 (0.1102 to 0.1122)
B	2.85 to 2.90 (0.1122 to 0.1141)
C	2.90 to 2.95 (0.1141 to 0.1160)
D	2.95 to 3.00 (0.1160 to 0.1181)
E	3.00 to 3.05 (0.1181 to 0.1200)
F	3.05 to 3.10 (0.1200 to 0.1220)
G	3.10 to 3.15 (0.1220 to 0.1240)

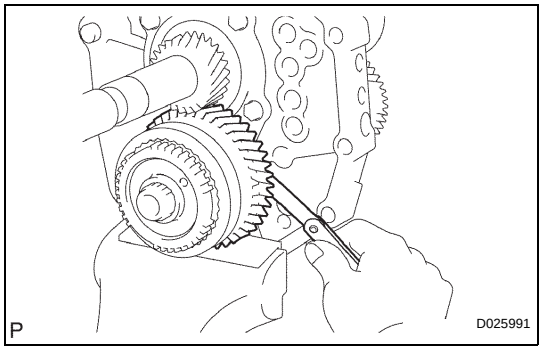

16. INSPECT COUNTER SHAFT 5TH GEAR THRUST CLEARANCE

(a) Using a feeler gauge, check the thrust clearance of the counter 5th gear.

Standard clearance:

0.10 to 0.35 mm (0.0039 to 0.0138 in.)

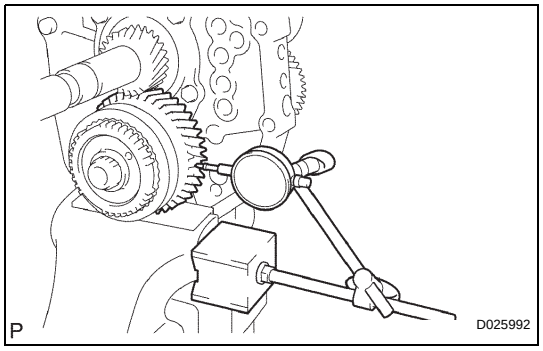

17. INSPECT COUNTER SHAFT 5TH GEAR RADIAL CLEARANCE

(a) Using a dial indicator, check the counter 5th gear radial clearance.

Standard clearance:

0.015 to 0.068 mm (0.0006 to 0.0027 in.)

If the clearance is out of specification the counter 5th gear bearing.

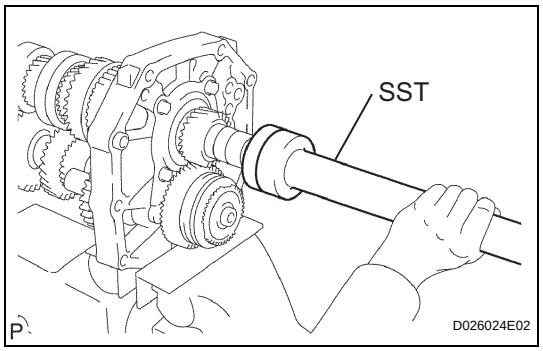

18. INSTALL OUTPUT SHAFT REAR BEARING

(a) Using SST and a press, install the new spacer and output shaft rear bearing onto the output shaft.

SST 09309-35010

MT

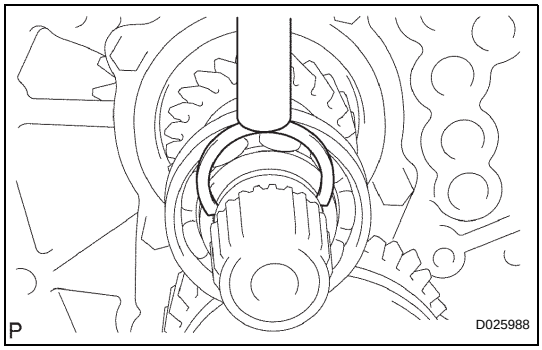

MT

19. INSTALL OUTPUT SHAFT BEARING SHAFT SNAP RING

(a) Select an output shaft bearing shaft snap ring so the thrust gap between the snap ring and the bearing is within the specified values. Use a brass bar and hammer to install it onto the output shaft.

Standard clearance:
0.1 mm (0.0039 in.) or less

Mark	Thickness mm (in.)
A	2.65 to 2.70 (0.1043 to 0.1063)
B	2.70 to 2.75 (0.1063 to 0.1083)
C	2.75 to 2.80 (0.1083 to 0.1102)
D	2.80 to 2.85 (0.1102 to 0.1122)
E	2.85 to 2.90 (0.1122 to 0.1141)
F	2.90 to 2.95 (0.1141 to 0.1160)
G	2.95 to 3.00 (0.1160 to 0.1181)
H	3.00 to 3.05 (0.1181 to 0.1200)
J	3.05 to 3.10 (0.1200 to 0.1220)
K	3.10 to 3.15 (0.1220 to 0.1240)
L	3.15 to 3.20 (0.1240 to 0.1260)
M	3.20 to 3.25 (0.1260 to 0.1280)
N	3.25 to 3.30 (0.1280 to 0.1299)
P	3.30 to 3.35 (0.1299 to 0.1319)
Q	3.35 to 3.40 (0.1319 to 0.1339)
R	3.40 to 3.45 (0.1339 to 0.1358)
S	3.45 to 3.50 (0.1358 to 0.1378)

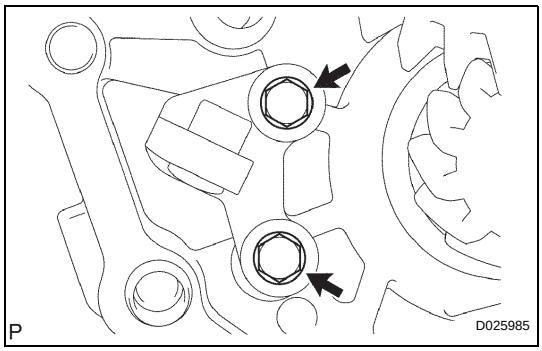

20. INSTALL REVERSE SHIFT ARM BRACKET

(a) Install the reverse shift arm bracket onto the intermediate plate with the 2 bolts.

Torque: 18 N*m (185 kgf*cm, 13 ft.*lbf)

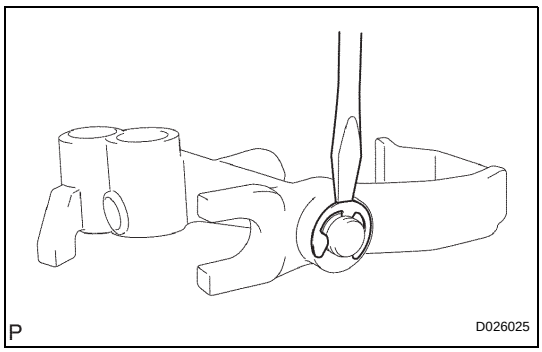

21. INSTALL REVERSE SHIFT FORK

(a) Install the reverse shift arm onto the reverse shift fork. Using a screwdriver and a hammer, install the new reverse shift arm end shaft ring.

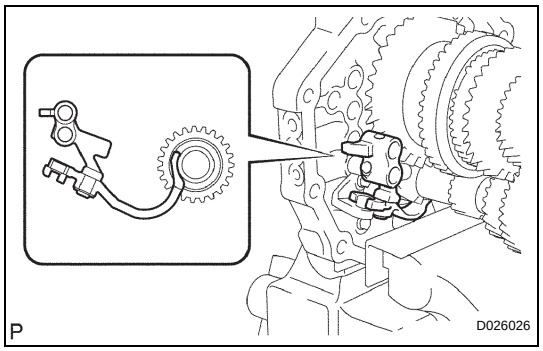

(b) Install the tip of the reverse shift arm onto the reverse idler gear. Align the cut end of the reverse shift arm with the reverse shift arm bracket pin, and install them.

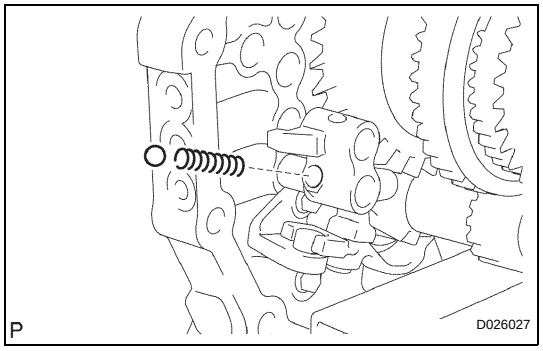

22. INSTALL 5TH SHIFT ARM SHAFT

(a) Install the reverse shift fork return compression spring and the reverse shift fork ball into the reverse shift fork.

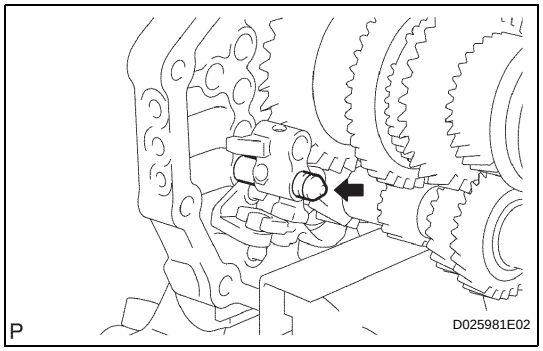

(b) Apply gear oil to the sliding part of the 5th shift arm shaft.

(c) Using a screwdriver, install the 5th shift arm shaft by pushing the reverse shift fork ball gently.

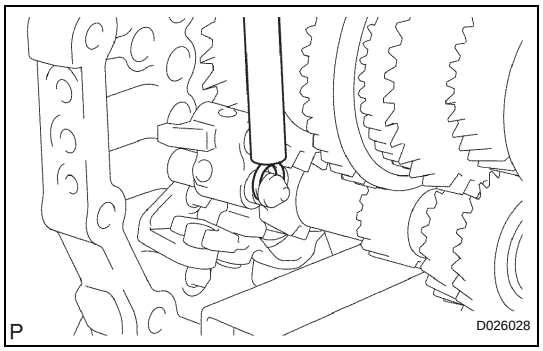

(d) Using a brass bar and a hammer, install the shift fork shaft snap ring onto the 5th shift arm shaft.

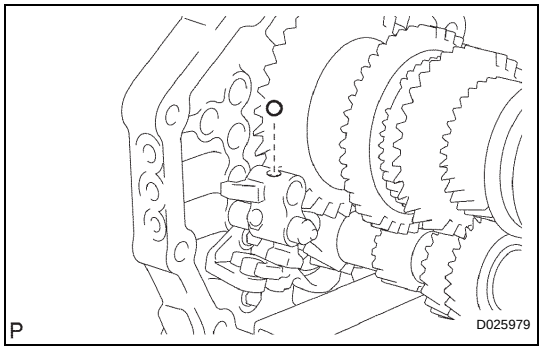

23. INSTALL REVERSE SHIFT FORK SHAFT

(a) Install the reverse shift fork ball into the reverse shift fork.

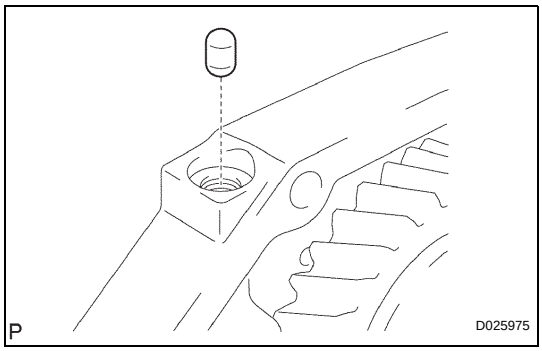

(b) Install the shift interlock No. 1 roller onto the intermediate plate.

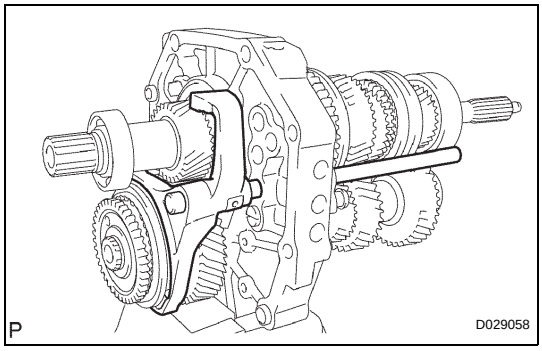

(c) Install the shift fork No. 3 onto the transmission hub sleeve No. 3 and the reverse shift fork shaft onto the intermediate plate from the front side.

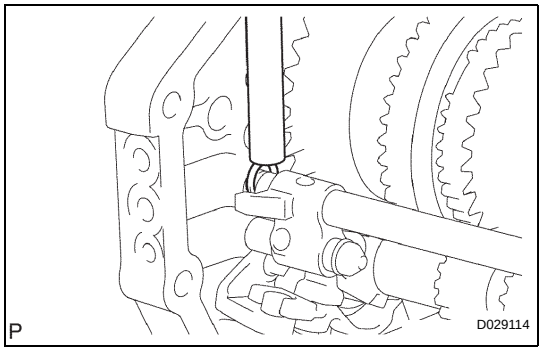

(d) Using a brass bar and a hammer, install the shift fork shaft snap ring onto the reverse shift fork shaft.

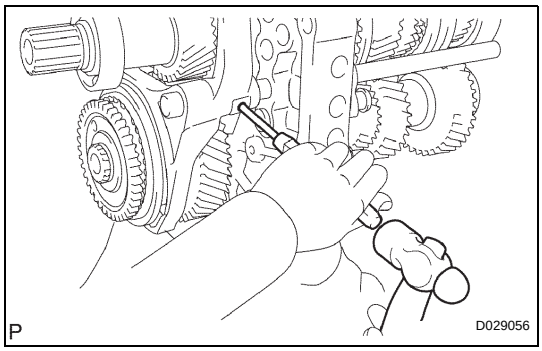

(e) Using a pin punch (5 mm) and a hammer, install the shift fork set slotted spring pin into the gear shift fork No. 3.

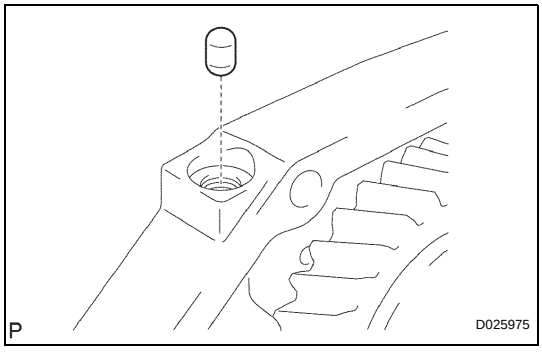

24. INSTALL NO. 1 GEAR SHIFT FORK SHAFT

(a) Install the shift interlock No. 1 roller onto the intermediate plate.

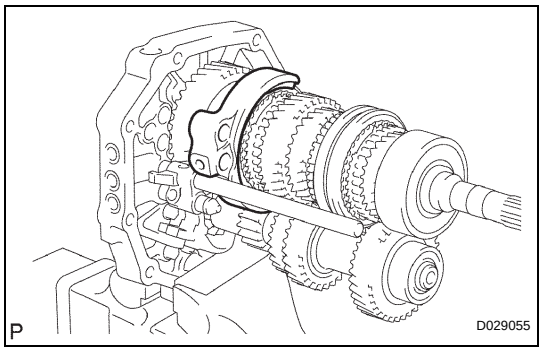

(b) Install the gear shift fork No. 1 onto the reverse gear.

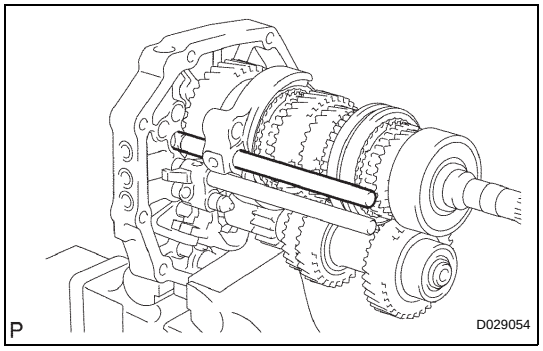

(c) Install the gear shift fork shaft No. 1 onto the intermediate plate from the rear side.

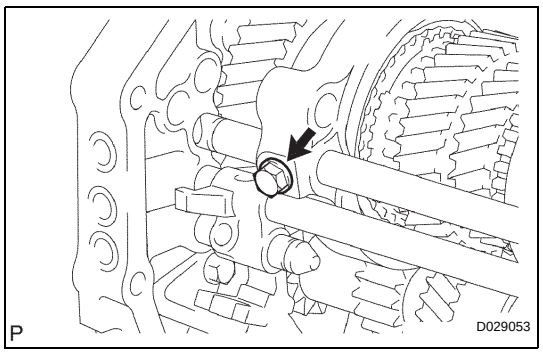

(d) Install the new shift fork set bolt onto the gear shift fork No. 1.
Torque: 19.5 N*m (199 kgf*cm, 14 ft.*lbf)

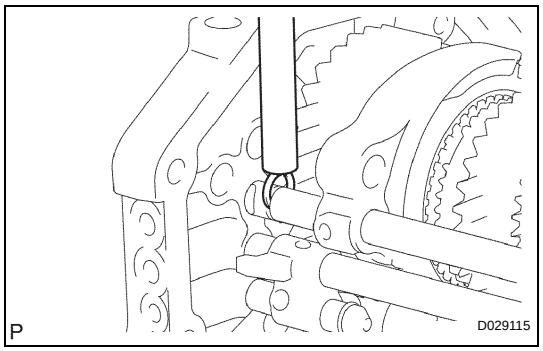

(e) Using a brass bar and a hammer, install the shift fork shaft snap ring onto the gear shift fork shaft No. 1.

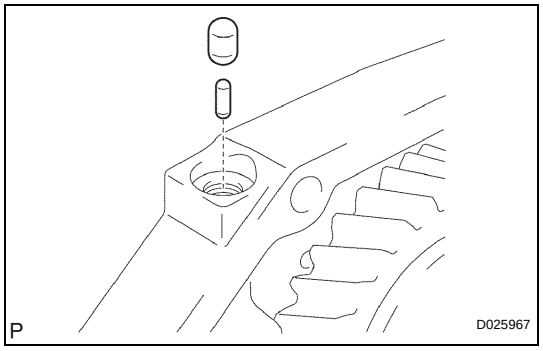

25. INSTALL NO. 2 GEAR SHIFT FORK SHAFT

(a) Install the shift interlock pin (ball) and shift interlock No. 1 roller into the intermediate plate.

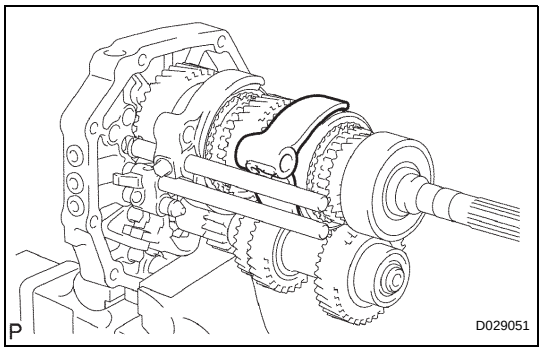

(b) Install the gear shift fork No. 2 onto the transmission hub sleeve No. 2.

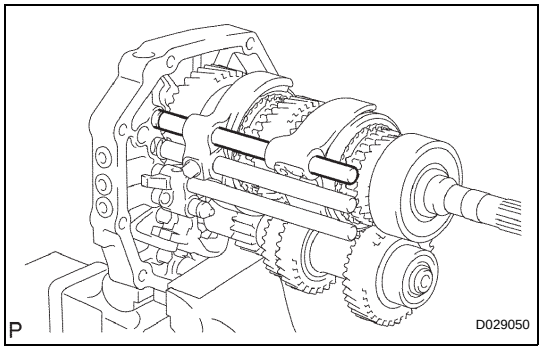

(c) Apply gear oil to the gear shift fork shaft No. 2, and install it onto the intermediate plate from the rear side.

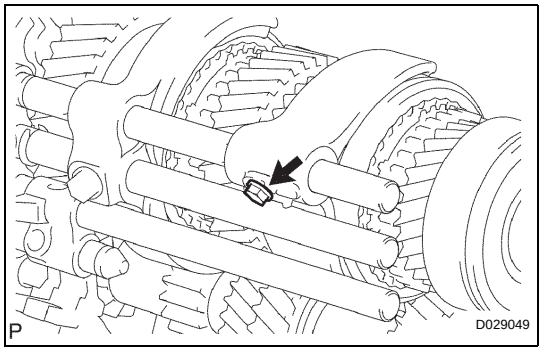

(d) Install the new shift fork set bolt onto the gear shift fork No. 2.
Torque: 19.5 N*m (199 kgf*cm, 14 ft.*lbf)

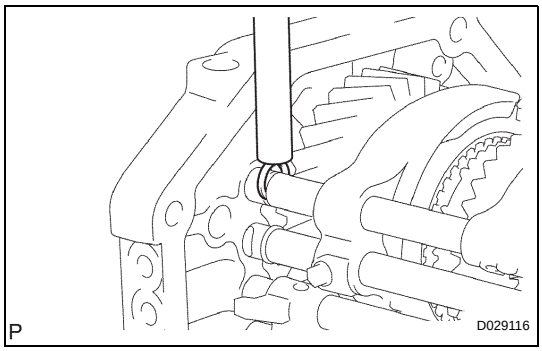

(e) Using a brass bar and a hammer, install the shift fork shaft snap ring onto the gear shift fork shaft No. 2.

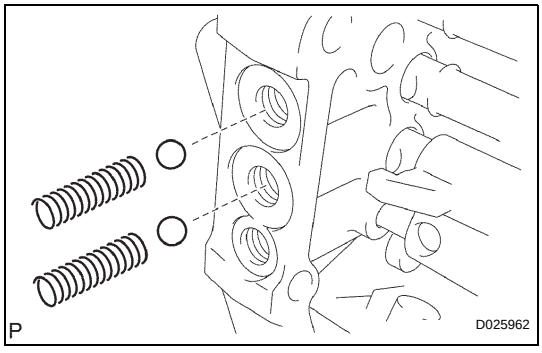

26. INSTALL NO. 1 SHIFT DETENT BALL SPRING SEAT

(a) Install the 2 shift detent ball low side compression springs and 2 shift detent balls into the intermediate plate.

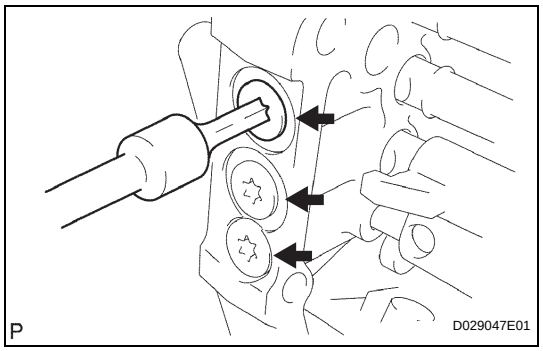

(b) Using a "Torx" socket wrench T40, install the 3 shift detent ball spring seats No. 1 onto the intermediate plate.
Torque: 18.5 N*m (189 kgf*cm, 14 ft.*lbf)

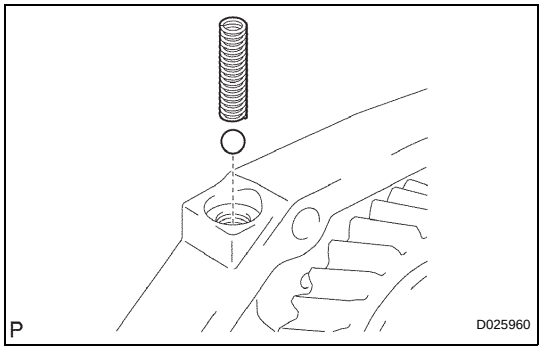

(c) Install the shift detent ball and the shift detent ball low side compression spring into the intermediate plate.

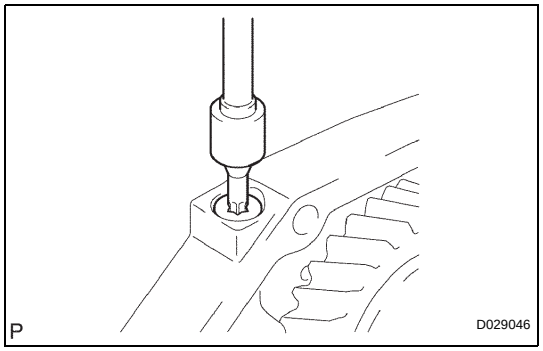

(d) Using a "Torx" socket wrench T40, install the shift detent ball spring seat No. 1 onto the intermediate plate.
Torque: 18.5 N*m (189 kgf*cm, 14 ft.*lbf)

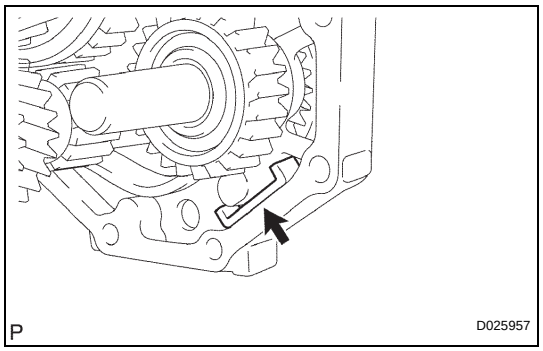

27. INSTALL TRANSMISSION MAGNET

(a) Clean the transmission magnet, and install it onto the intermediate plate.

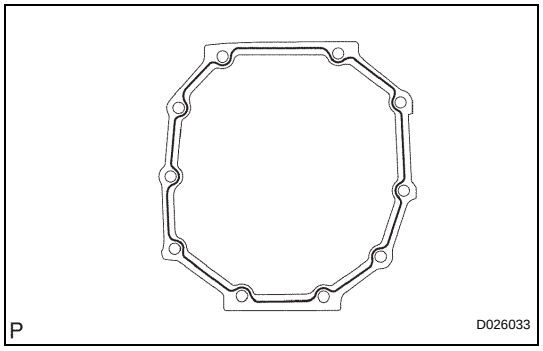

28. INSTALL MANUAL TRANSMISSION CASE

(a) Apply seal packing to the manual transmission case as shown in the illustration.
Seal packing:
Part No.08826-00090, THREE BOND 1281 or equivalent.

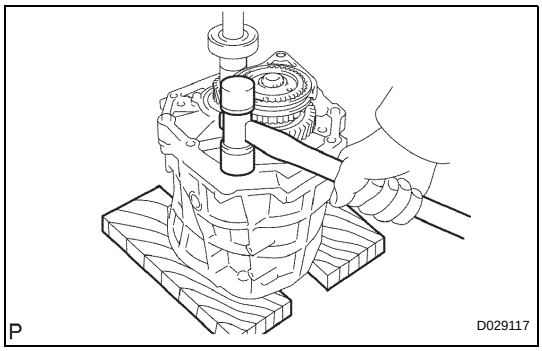

(b) Using a plastic hammer, tap the manual transmission case to attach it to the intermediate plate.

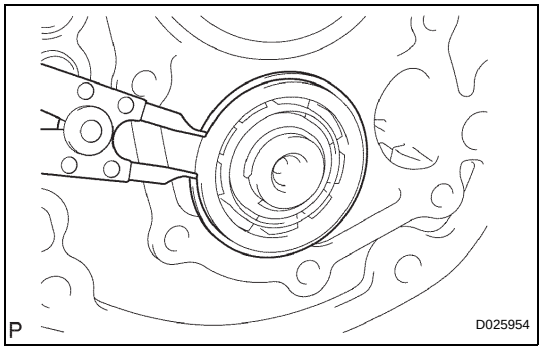

29. INSTALL NO. 1 COUNTER GEAR FRONT BEARING SNAP RING

(a) Using a snap ring expander, install the counter gear front bearing snap ring No. 1 onto the transmission case.

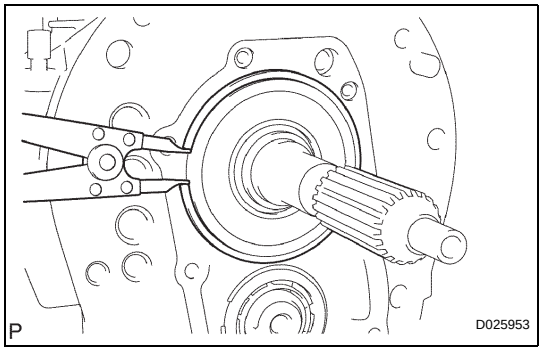

30. INSTALL FRONT BEARING SHAFT SNAP RING

(a) Using a snap ring expander, install the front bearing shaft snap ring onto the transmission case.

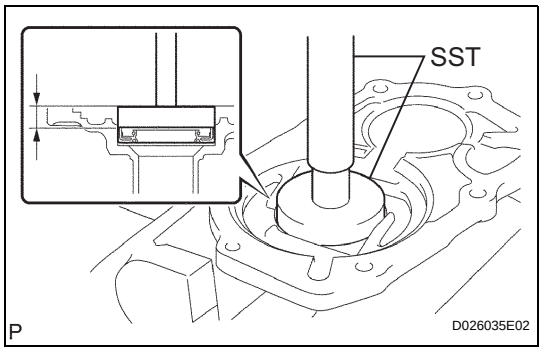

31. INSTALL TRANSMISSION FRONT BEARING RETAINER OIL SEAL

(a) Using SST and a hammer, install the new transmission front bearing retainer oil seal onto the transmission front bearing retainer.

SST 09950-60010 (09951-00300, 09951-00520, 09952-06010), 09950-70010 (09951-07100)

Drive in depth:

11.2 to 12.2 mm (0.4409 to 0.4803 in.)

(b) Coat the lip of the oil seal with MP grease.

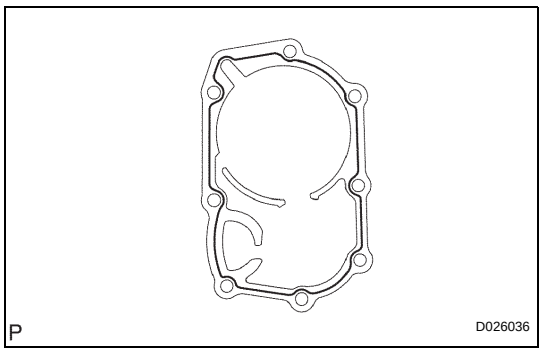

32. INSTALL FRONT BEARING RETAINER

(a) Apply seal packing to the bearing retainer front as shown in the illustration.

Seal packing:

Part No.08826-00090, THREE BOND 1281 or equivalent.

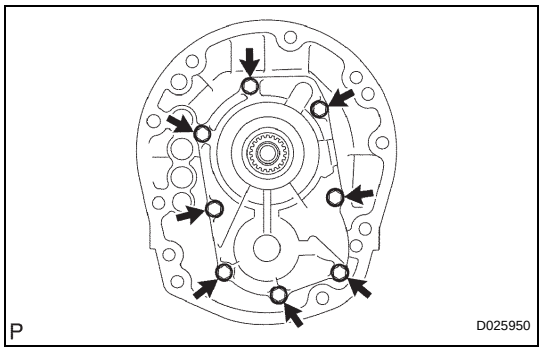

(b) Install the front bearing retainer onto the transmission case with the 8 bolts.
Torque: 16.5 N*m (168 kgf*cm, 12 ft.*lbf)
(c) Check that the input shaft and output shaft rotate smoothly.

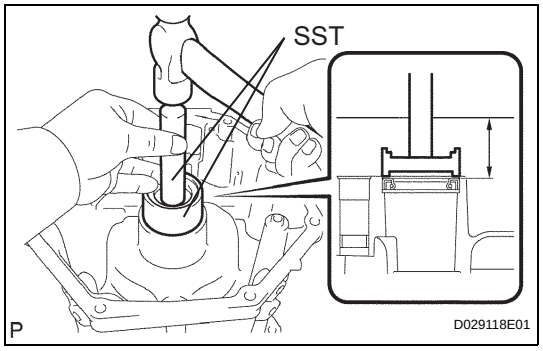

33. INSTALL TRANSFER ADAPTER OIL SEAL
(a) Using SST and a hammer, install the new transfer adapter oil seal onto the transfer adapter.
SST 09710-30050, 09950-70010 (09951-07100)
Drive in depth:
45.4 to 46.4 mm (1.7874 to 1.8268 in.)
(b) Lightly apply MP grease to the tip of the oil seal.
NOTICE:
Be careful not to damage the oil seal lip.

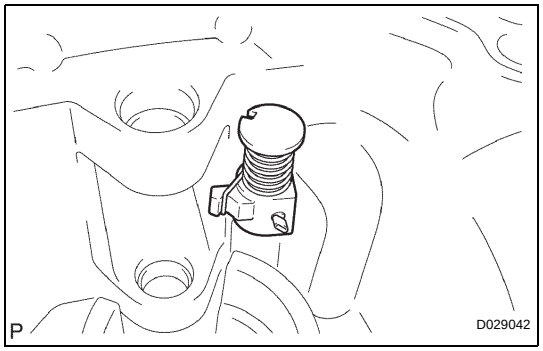

34. INSTALL REVERSE RESTRICT PIN ASSEMBLY
(a) Install the reverse restrict pin into the transfer adapter.

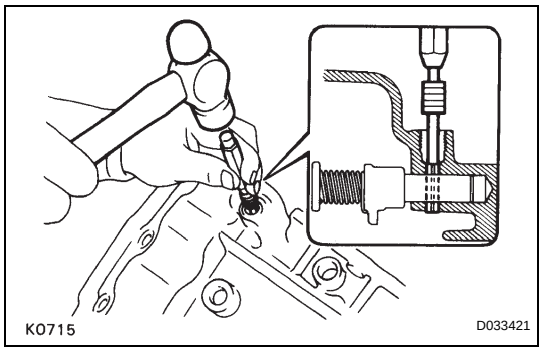

(b) Using a pin punch (5 mm) and a hammer, install the reverse restrict slotted pin into the transfer adapter.
(c) Using a "Torx" socket wrench T40, install the reverse restrict pin plug onto the transfer adapter.
Torque: 18.5 N*m (189 kgf*cm, 14 ft.*lbf)

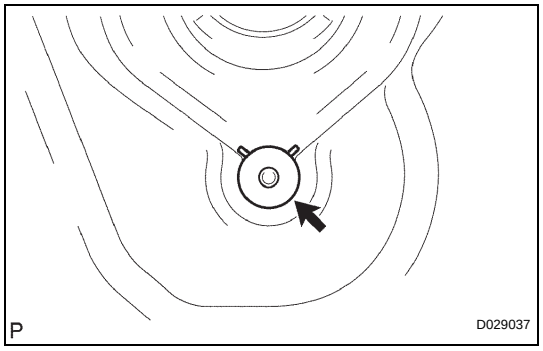

35. INSTALL OIL RECEIVER
(a) Install the oil receiver onto the transfer adapter.

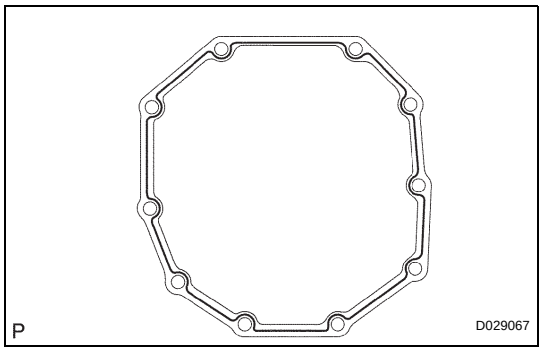

36. INSTALL TRANSFER ADAPTER

(a) Apply seal packing to the transfer adapter as shown in the illustration.
Seal packing:
Part No.08826-00090, THREE BOND 1281 or equivalent.

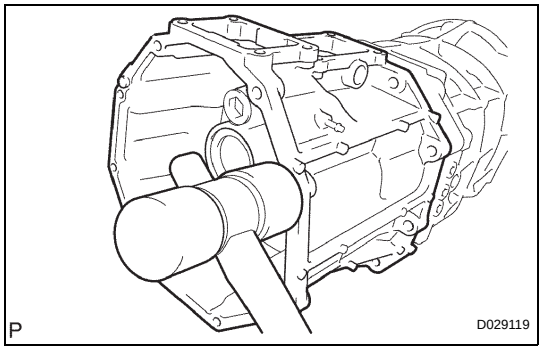

(b) Using a plastic hammer, tap the transfer adapter to attach it to the transmission case.

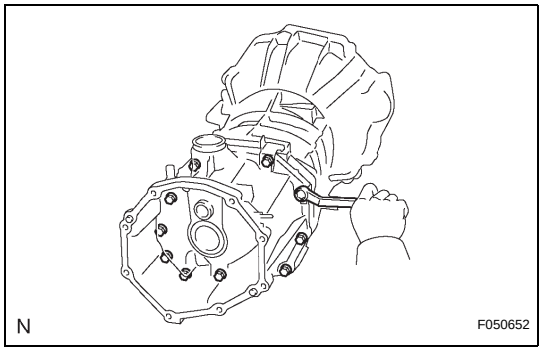

(c) Install the transfer adapter, onto the transmission case with the 10 bolts.
Torque: 37 N*m (380 kgf*cm, 27 ft.*lbf)

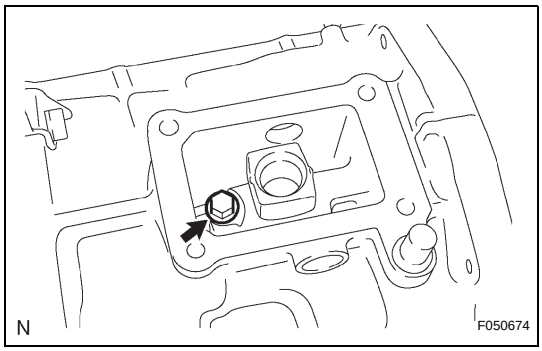

(d) Install the shift lever housing set bolt.
Torque: 33 N*m (340 kgf*cm, 25 ft.*lbf)

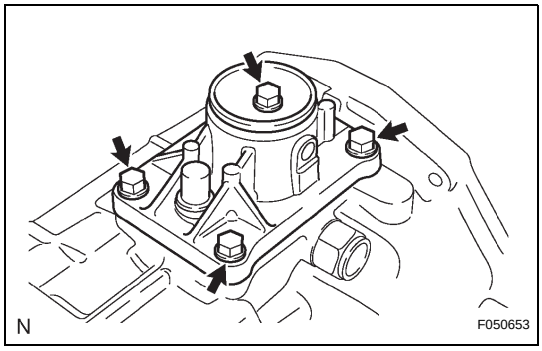

37. INSTALL FLOOR SHIFT CONTROL SHIFT LEVER RETAINER SUB-ASSEMBLY

(a) Install the control shift lever retainer and transfer oil deflector onto the transfer adapter with the 4 bolts.
Torque: 18 N*m (185 kgf*cm, 13 ft.*lbf)

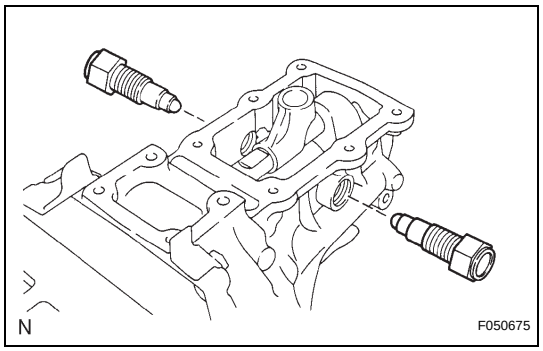

38. INSTALL REVERSE RESTRICT PIN ASSEMBLY

(a) Install the 2 reverse restrict pins into the extension housing or transfer adapter.
Torque: 37 N*m (380 kgf*cm, 27 ft.*lbf)

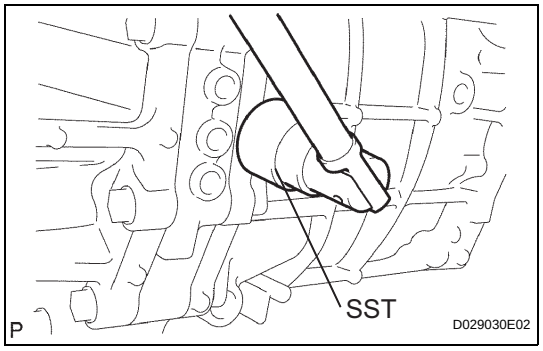

39. INSTALL BACK-UP LIGHT SWITCH ASSEMBLY

(a) Using SST, install the back-up light switch assembly and the gasket onto the transmission case.
SST 09817-16011
Torque: 44 N*m (450 kgf*cm, 32 ft.*lbf)

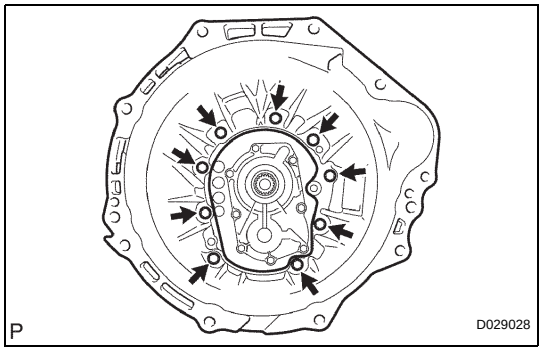

40. INSTALL CLUTCH HOUSING

(a) Install the clutch housing onto the transmission case with the 9 bolts.
Torque: 36 N*m (370 kgf*cm, 27 ft.*lbf)

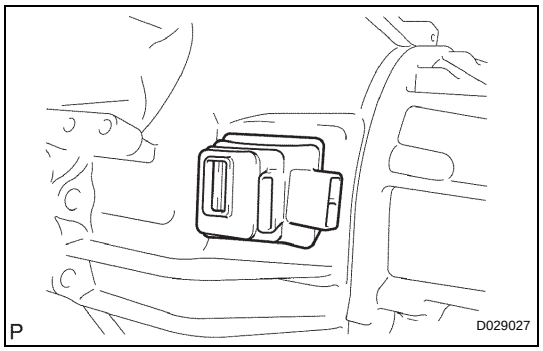

41. INSTALL CLUTCH RELEASE FORK BOOT

(a) Install the clutch release fork boot onto the clutch housing.

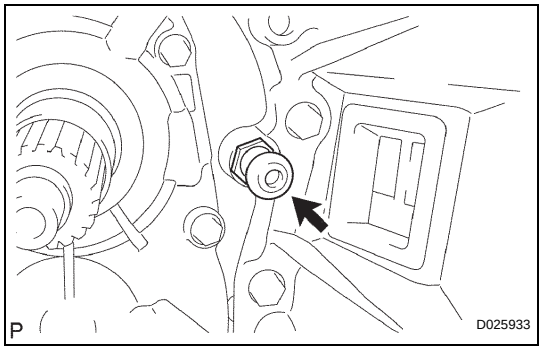

42. INSTALL RELEASE FORK SUPPORT

(a) Install the clutch release fork support onto the clutch housing.
Torque: 47 N*m (480 kgf*cm, 35 ft.*lbf)

MT

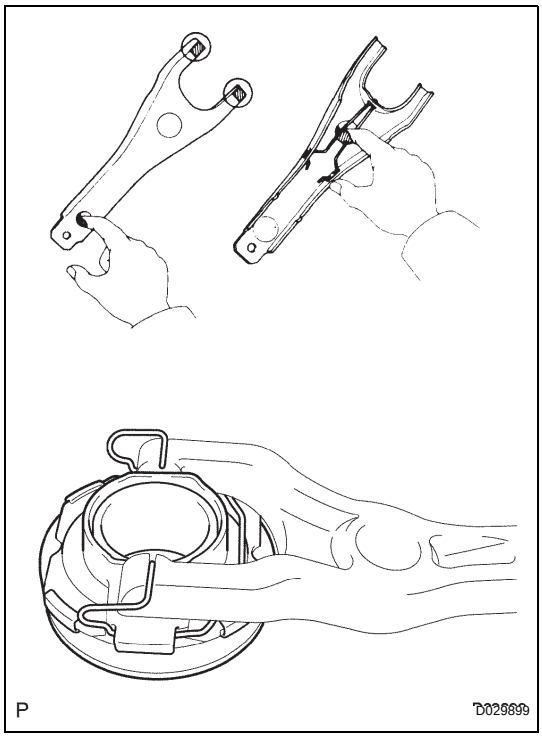

43. INSTALL CLUTCH RELEASE BEARING ASSEMBLY

(a) Apply clutch release hub grease to the clutch release bearing, and install it onto the clutch release fork.

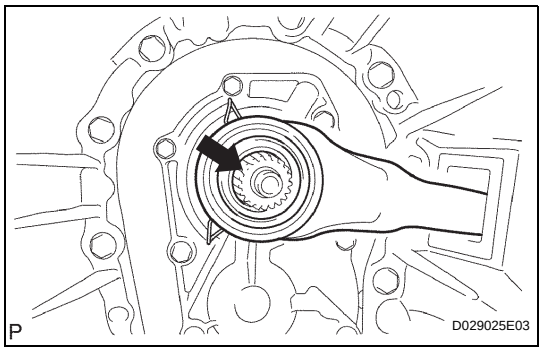

44. INSTALL CLUTCH RELEASE FORK SUB-ASSEMBLY

(a) Install the clutch release fork.

(b) Apply the clutch spline grease to the spline of the input shaft.

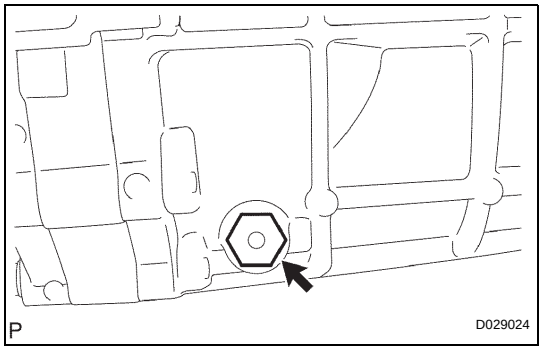

45. INSTALL DRAIN PLUG SUB-ASSEMBLY

(a) Install the drain plug onto the transmission case through a new gasket.
Torque: 37 N*m (380 kgf*cm, 27 ft.*lbf)

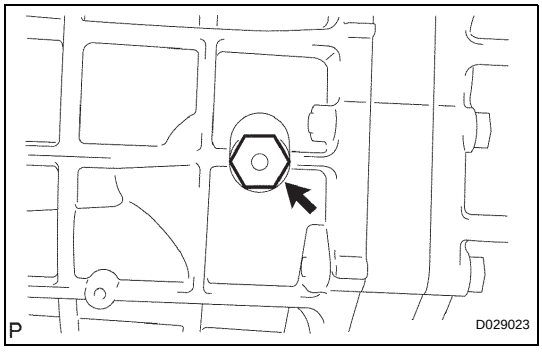

46. INSTALL MANUAL TRANSMISSION FILLER PLUG

(a) Install the filler plug onto the transmission case through a new gasket.
Torque: 37 N*m (380 kgf*cm, 27 ft.*lbf)

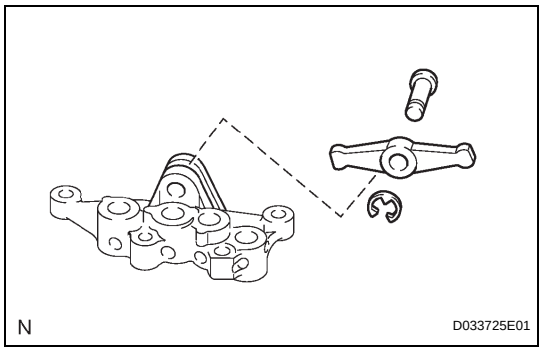

(b) Remove the shift arm pivot and shift arm.

REASSEMBLY

1. INSTALL 1ST AND REVERSE SHIFT ARM

(a) Install the shift arm and shift arm pivot onto the interlock bracket.

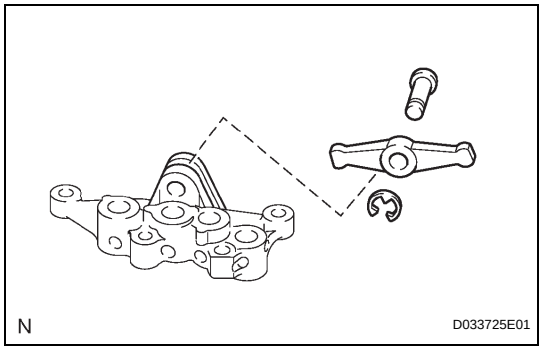

(b) Install a new E-ring onto the shift arm pivot.

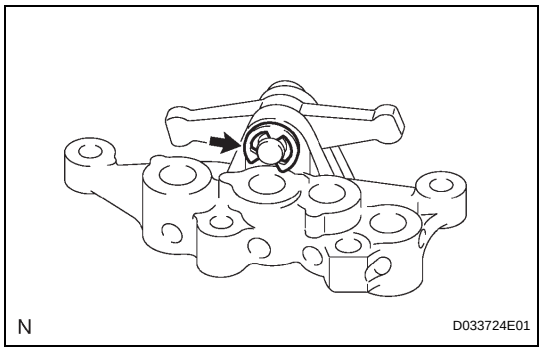

2. INSTALL NO. 4 GEAR SHIFT FORK SHAFT

(a) Install the spring and ball onto the interlock bracket.

(b) Install the shift fork shaft No. 4.

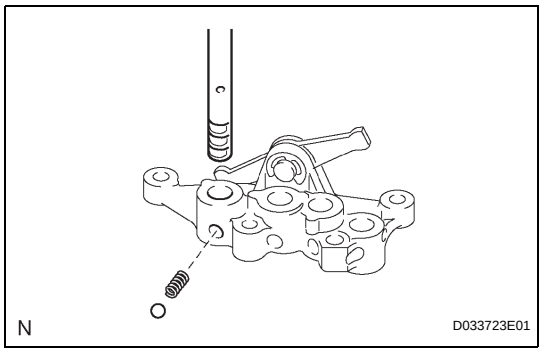

3. INSTALL NO. 4 GEAR SHIFT FORK

(a) Install the shift fork No. 4 onto the shift fork shaft No. 4.

(b) Using a pin punch (5 mm (0.20 in.)) and hammer, tap the new slotted pin into the shaft fork No. 4 and shift fork shaft No. 4.

Drive in depth:

0 to 0.5 mm (0 to 0.050 in.)

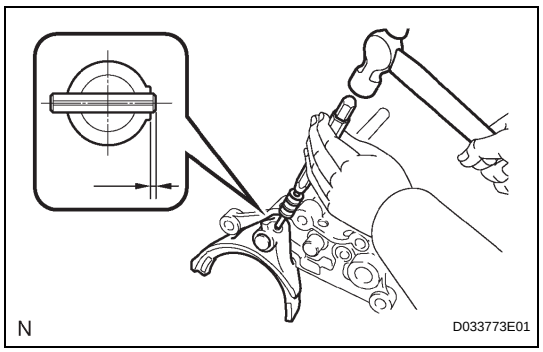

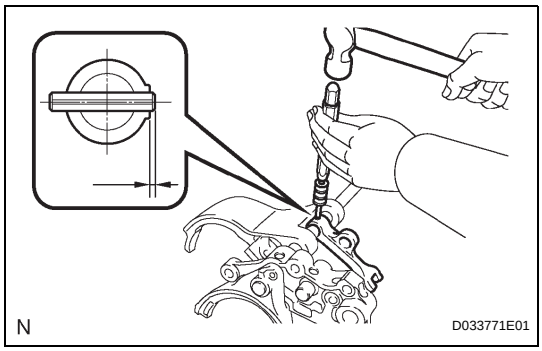

4. INSTALL NO. 1 GEAR SHIFT FORK

(a) Install the shift fork No. 1 and shift head No. 2 onto the shift fork shaft No. 4.

(b) Using a pin punch (5 mm (0.20 in.)) and hammer, tap the new slotted pin into the shaft head No. 2 and shift fork shaft No. 4.

Drive in depth:

0 to 0.5 mm (0 to 0.050 in.)

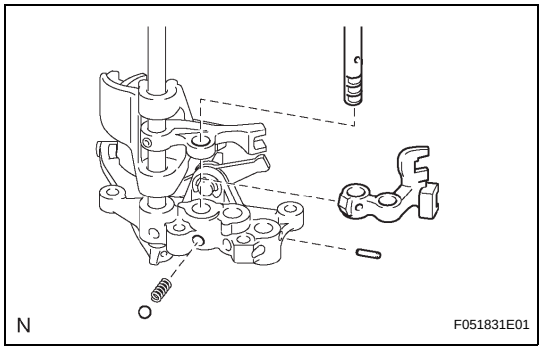

5. INSTALL NO. 1 GEAR SHIFT FORK SHAFT

(a) Apply MP grease to the interlock pin No. 1 and install it onto the interlock bracket.

(b) Install the spring and ball onto the interlock bracket.

(c) Install the shift fork shaft No. 1 onto the interlock bracket.

HINT:

Place the shift fork shaft No. 4 in the neutral position.

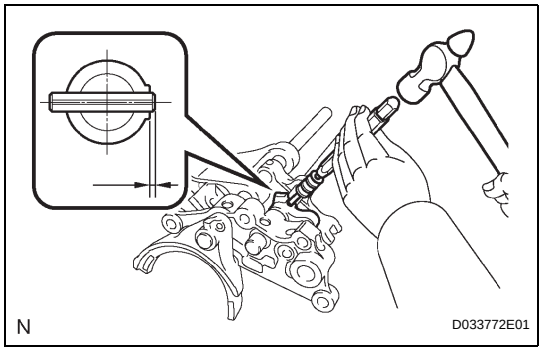

6. INSTALL NO. 1 GEAR SHIFT HEAD

(a) Install the shift head No. 1 into the shift fork shaft No. 1.

(b) Using a pin punch (5 mm (0.20 in.)) and hammer, tap the new slotted pin into the shaft head No. 1 and shift fork shaft No. 1.

Drive in depth:

0 to 0.5 mm (0 to 0.050 in.)

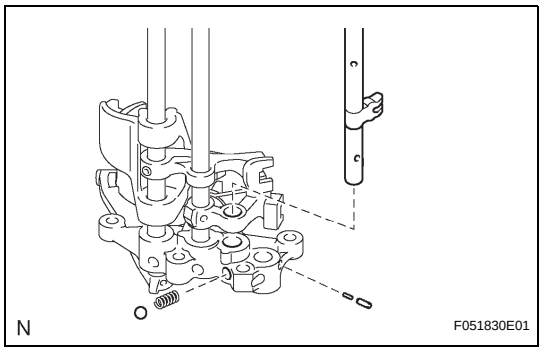

7. INSTALL NO. 2 GEAR SHIFT FORK SHAFT

(a) Apply MP grease to the interlock pins No. 2 and No. 3, then install them onto the interlock bracket.

(b) Install the spring and ball the interlock bracket.

(c) Install the shift fork shaft No. 2 onto the interlock bracket.

HINT:

Place the shift fork shafts No. 3 and No. 4 in the neutral position.

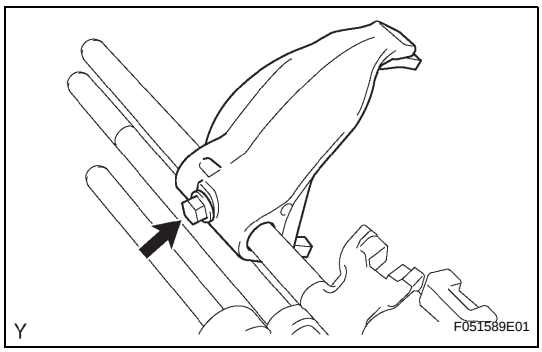

8. INSTALL NO. 2 GEAR SHIFT FORK

(a) Install the shift fork No. 2 with the bolt.

Torque: 20 N*m (199 kgf*cm, 14 ft.*lbf)

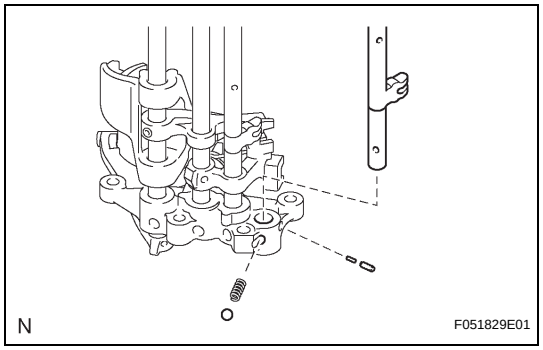

9. INSTALL NO. 3 GEAR SHIFT FORK SHAFT

(a) Apply MP grease to the interlock pins No. 2 and No. 3, then install them onto the interlock bracket.

(b) Install the spring and ball onto the interlock bracket.

(c) Install the shift fork shaft No. 3 onto the interlock bracket.

HINT:

Place the shift fork shafts No. 2, No. 1 and No. 4 in the neutral position.

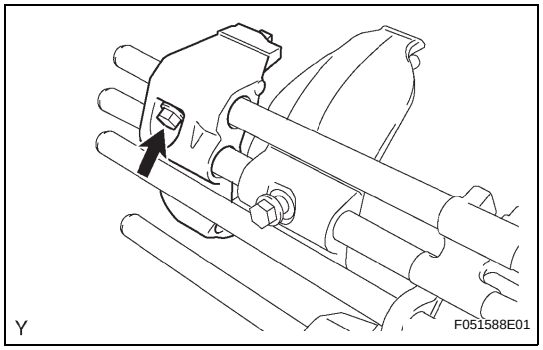

10. INSTALL NO. 3 GEAR SHIFT FORK

(a) Install the shift fork No. 3 with the bolt.

Torque: 20 N*m (199 kgf*cm, 14 ft.*lbf)

MT

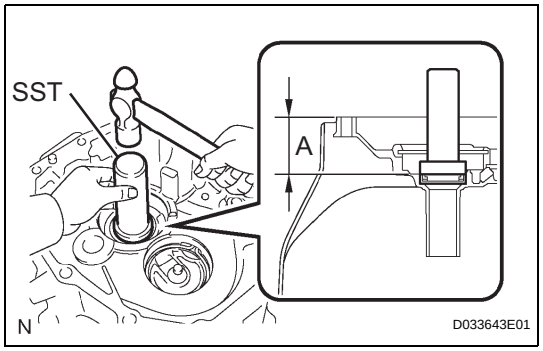

11. INSTALL TRANSMISSION CASE OIL SEAL

(a) Using SST and a hammer, tap a new oil seal into the front case in accordance with the dimension specified in the illustration.

SST 09950-70010 (09951-07100), 09950-60010 (09951-00470)

Dimension A:

60.0 to 60.8 mm (2.362 to 2.394 in.)

(b) Apply gear oil to the lip of the oil seal.

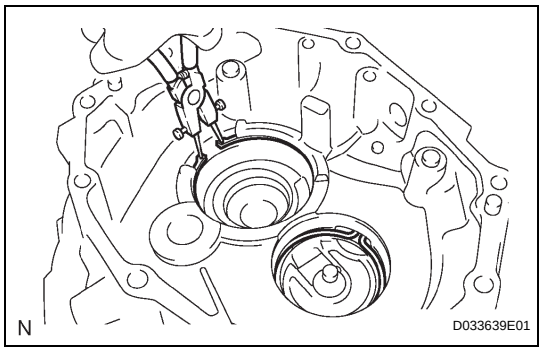

12. INSTALL FRONT BEARING SHAFT SNAP RING

(a) Using a snap ring plier, install the 2 snap rings.

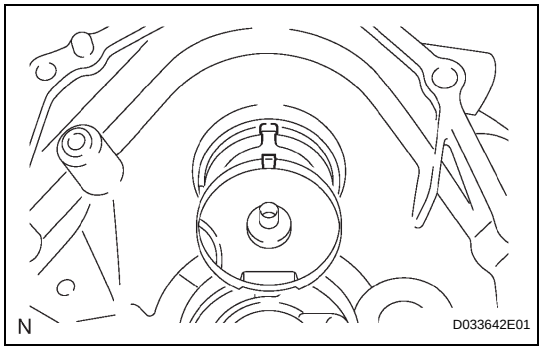

13. INSTALL NO. 1 OIL RECEIVER PIPE

(a) Install the oil receiver pipe No. 1 onto the transmission front case.

HINT:

Align the convex portion of the oil receiver pipe with the cutout of the front case and install the oil receiver pipe onto the clutch housing.

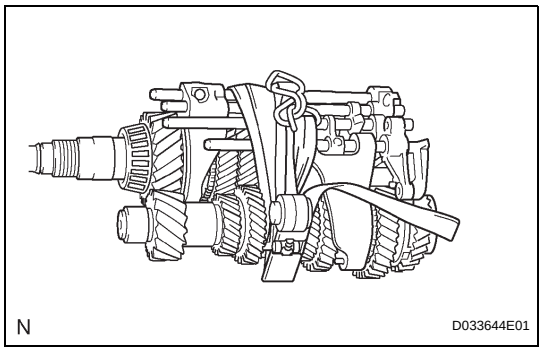

14. INSTALL TRANSMISSION FRONT CASE

(a) Apply gear oil to all sliding and rotating parts.

(b) Provisionally install the output shaft, input shaft, counter gear shaft and control assembly, and tie them with a rope or string.

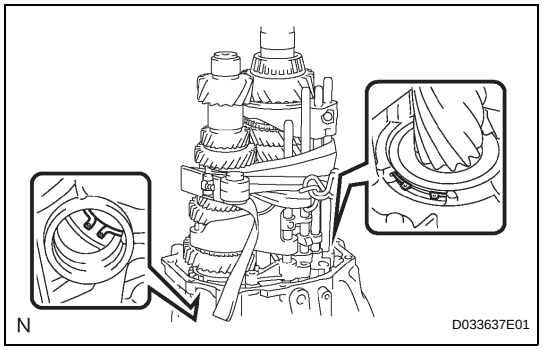

(c) Using a snap ring expander, extend the 2 snap rings and install the output shaft, input shaft, counter gear shaft and control assembly.
HINT:
Make sure that the snap ring is fitted into the grooves of the input shaft and front bearing of the counter gear shaft.

(d) Untie the output shaft, input shaft, counter gear shaft and control assembly.

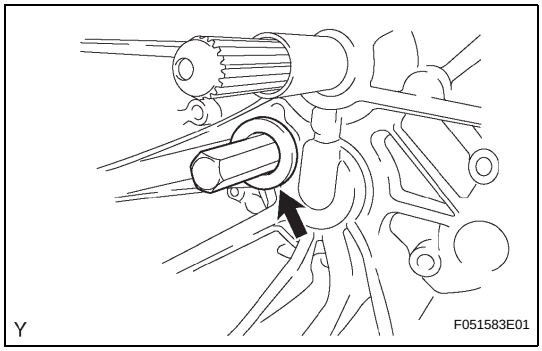

(e) Using a hexagonal wrench (24 mm), install the plug onto the front case.
Torque: 39 N*m (400 kgf*cm, 29 ft.*lbf)

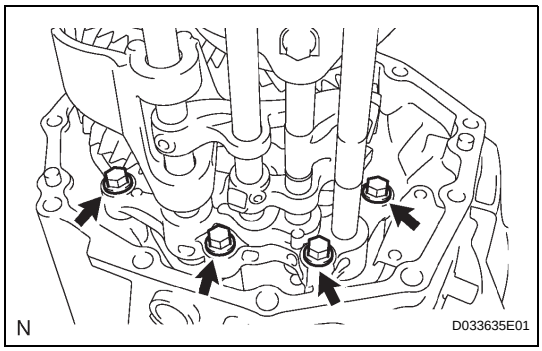

(f) Install the 4 bolts onto the interlock bracket.
Torque: 21 N*m (214 kgf*cm, 15 ft.*lbf)

MT

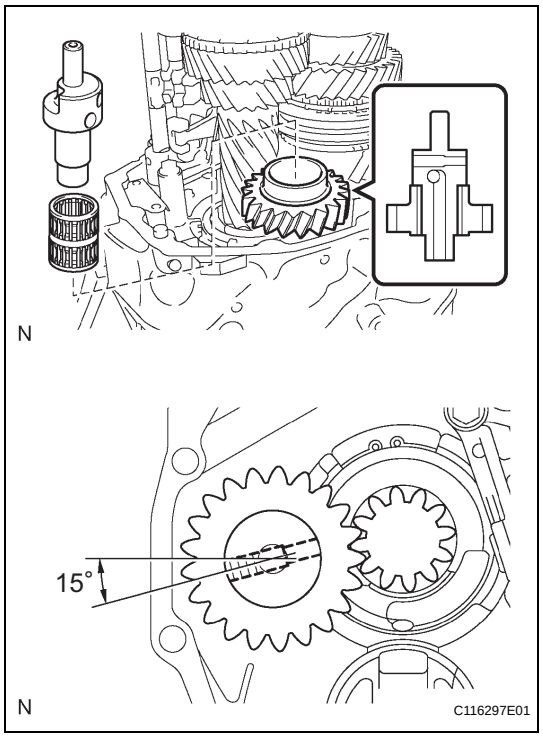

15. INSTALL REVERSE IDLER GEAR

(a) Install the reverse idler gear, reverse idler gear bearing and reverse idler gear shaft.
HINT:
Make sure that the reverse idler gear faces the correct direction as shown in the illustration.
NOTICE:
Make sure that the tapped hole portion of the reverse idler shaft is in the position shown in the illustration.

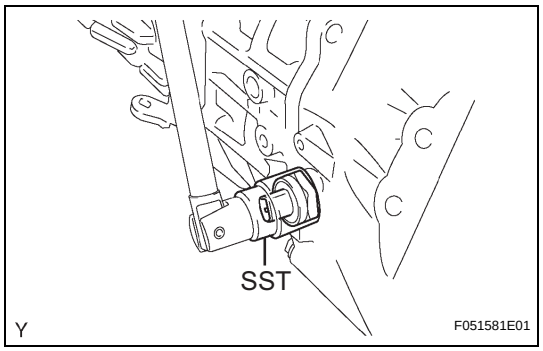

16. INSTALL BACK-UP LIGHT SWITCH ASSEMBLY

(a) Using SST, install the back-up light switch with a new gasket onto the transmission front case.
SST 09817-16011
Torque: 44 N*m (449 kgf*cm, 33 ft.*lbf)

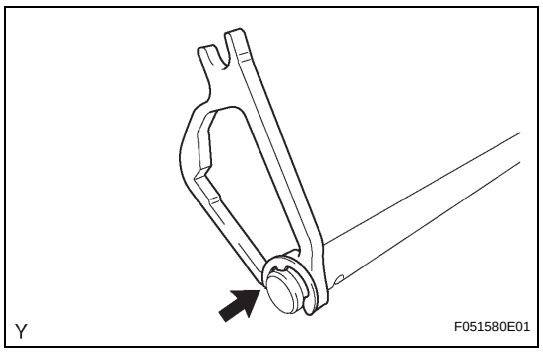

17. INSTALL SHIFT AND SELECT LEVER CAM

(a) Install the shift and select lever cam onto the shaft and install a new E-ring.

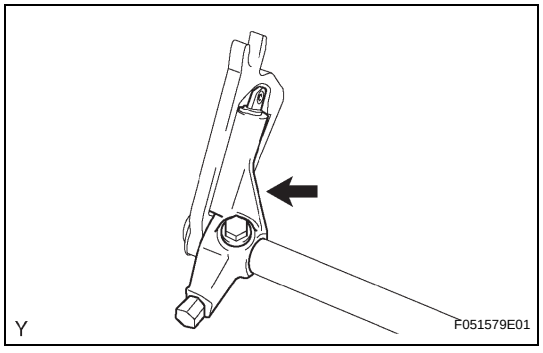

18. INSTALL SHIFT AND SELECT LEVER

(a) Install the lock ball pin and spring onto the shift and select lever.
(b) Install the shift and select lever onto the shift and select lever cam and shaft.
(c) Install the bolt onto the shift and select lever.
Torque: 33 N*m (340 kgf*cm, 25 ft.*lbf)

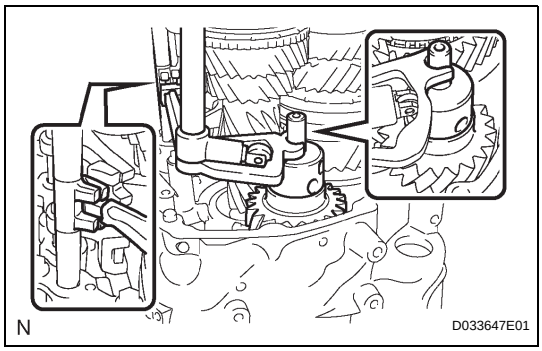

19. INSTALL SHIFT AND SELECT LEVER SHAFT

(a) Align the groove of the shift and select cam with the reverse idler shaft, and the claw with the groove of the control assembly, and install them.

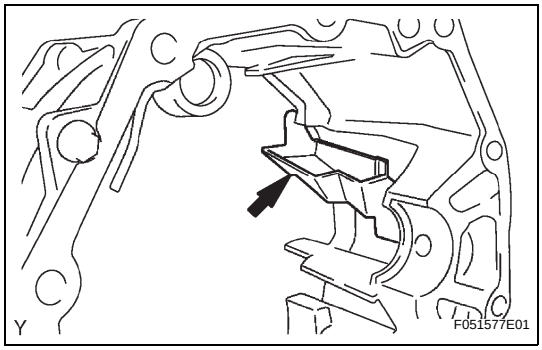

20. INSTALL NO. 2 OIL RECEIVER PIPE

(a) Install the oil receiver pipe No. 2 into the transmission middle case.

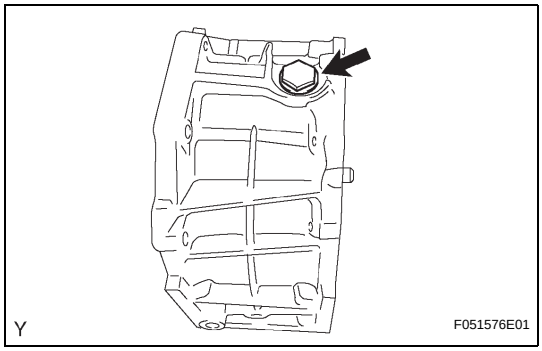

21. INSTALL DRAIN PLUG SUB-ASSEMBLY

(a) Install the drain plug with a new gasket onto the transmission middle case.
Torque: 37 N*m (377 kgf*cm, 27 ft.*lbf)

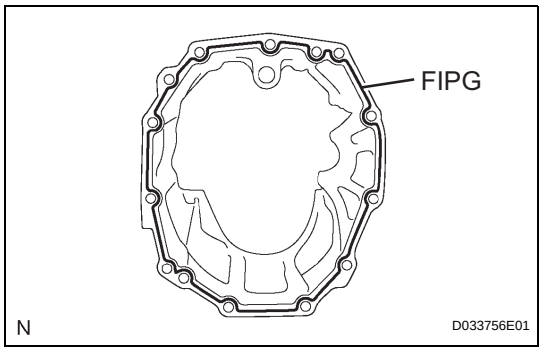

22. INSTALL TRANSMISSION MIDDLE CASE

(a) Apply FIPG to the transmission middle case, as shown in the illustration.
FIPG:
Part No. 08826-00090, THREE BOND 1281 or equivalent
NOTICE:
Parts must be assembled within 10 minutes of application. Otherwise, the packing (FIPG) material must be removed and reapplied.

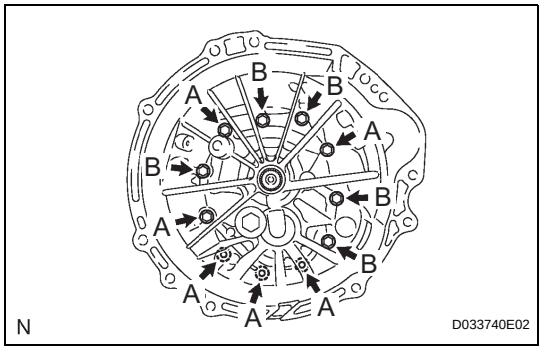

(b) Install the transmission middle case with the 11 bolts onto the transmission front case.
Torque: 40 N*m (408 kgf*cm, 30 ft.*lbf)
Bolt length:
Bolt A:
40 mm (1.57 in.)
Bolt B:
80 mm (3.15 in.)

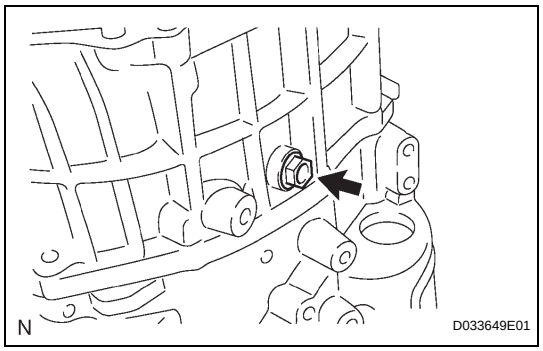

23. INSTALL REVERSE IDLER GEAR SHAFT BOLT

(a) Install a new gasket and the reverse idler gear shaft bolt onto the reverse idler gear shaft.
Torque: 28 N*m (286 kgf*cm, 21 ft.*lbf)

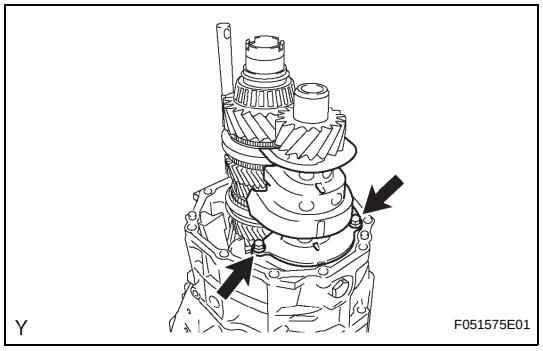

24. INSTALL TRANSMISSION OIL SEPARATOR

(a) Install the transmission oil separator with the 2 bolts.
Torque: 8.5 N*m (87 kgf*cm, 75 in.*lbf)

MT

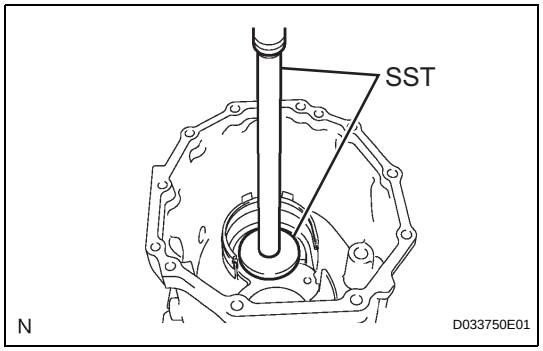

25. INSTALL COUNTER GEAR REAR RADIAL BALL BEARING

(a) Coat a new counter gear rear radial ball bearing with gear oil, and using SST and a press, install it into the transmission rear case.
SST 09950-70010 (09951-07360), 09950-60010 (09951-00650)

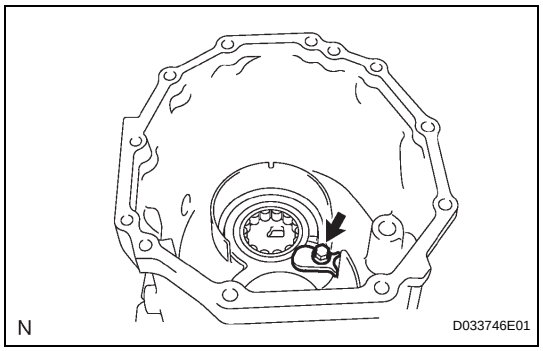

(b) Install the bearing lock plate with the bolt.
Torque: 11 N*m (115 kgf*cm, 8.3 ft.*lbf)

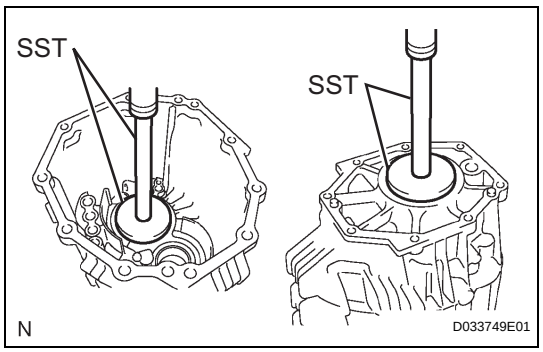

26. INSTALL OUTPUT SHAFT REAR BEARING OUTER RACE

(a) Using SST and a press, press in 2 new bearing outer races.
SST 09950-70010 (09951-07100, 09951-07360), 09950-60020 (09951-00790)

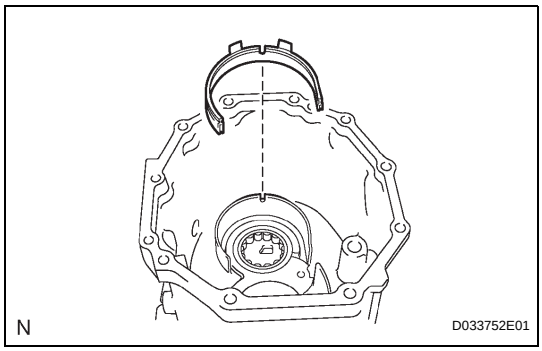

27. INSTALL OIL SEPARATOR PACKING SEAL

(a) Install the oil separator packing seal onto the transmission rear case.
HINT:
Insert the protruding part of the oil separator packing seal into the groove on the transmission rear case.

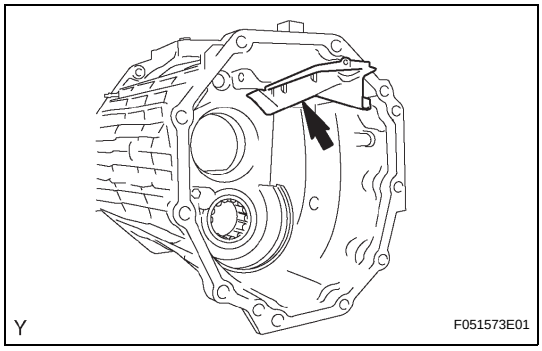

28. INSTALL EXTENSION HOUSING OIL RECEIVER PIPE

(a) Install the extension housing oil receiver pipe onto the transmission rear case.

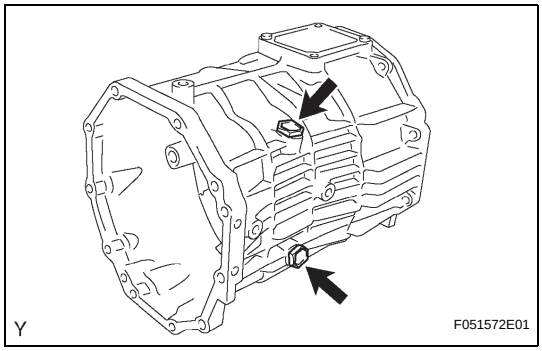

29. INSTALL MANUAL TRANSMISSION FILLER PLUG

(a) Install the 2 transmission filler plugs with 2 new gaskets onto the transmission rear case.
Torque: 37 N*m (377 kgf*cm, 27 ft.*lbf)

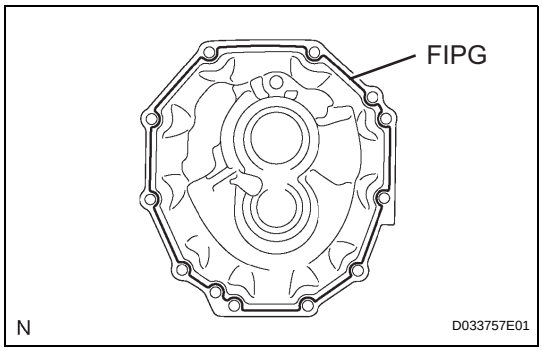

30. INSTALL TRANSMISSION REAR CASE

(a) Apply FIPG to the transmission rear case, as shown in the illustration.
FIPG:
Part No. 08826-00090, THREE BOND 1281 or equivalent
NOTICE:
Parts must be assembled within 10 minutes of application. Otherwise, the packing (FIPG) material must be removed and reapplied.

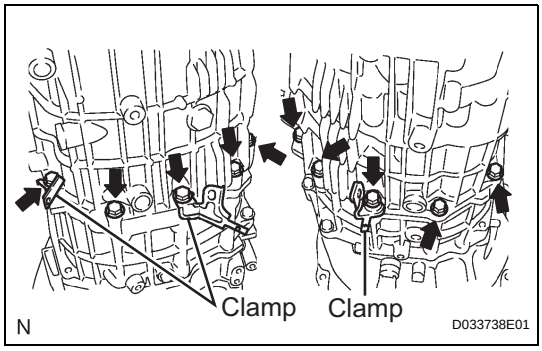

(b) Install the transmission rear case with the 10 bolts and 3 brackets onto the transmission middle case.
Torque: 40 N*m (408 kgf*cm, 30 ft.*lbf)

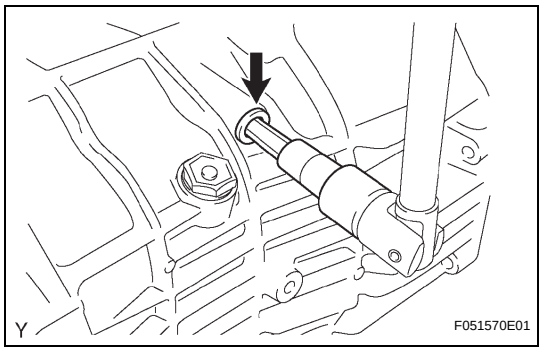

31. INSTALL SHIFT DETENT BALL PLUG

(a) Install the ball and compression spring onto the transmission rear case.

(b) Install a new shift detent ball plug, and install it onto the transmission rear case.
Torque: 25 N*m (250 kgf*cm, 18 ft.*lbf)

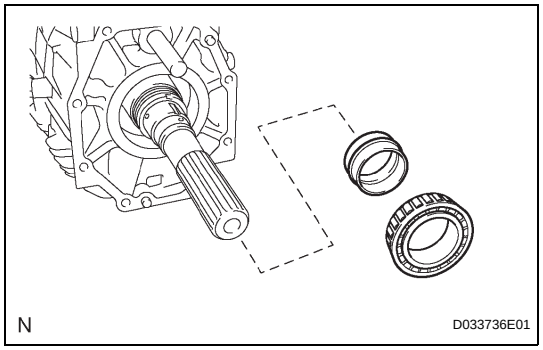

32. INSTALL OUTPUT SHAFT ADJUST NUT

(a) Using a belt and wooden block, fasten the transmission to the workbench.

(b) Install a new spacer and output shaft taper roller bearing No. 2.

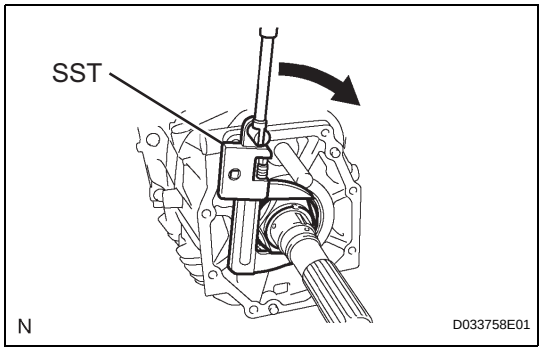

(c) Using SST, provisionally tighten a new nut until there is no slack in the output shaft.
SST 09922-10010
HINT:
No preload should be applied to the nut.

(d) Fit the bearing into the output shaft by turning the output shaft 15 times.

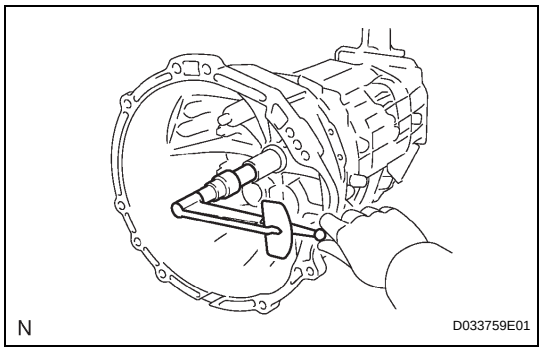

(e) Place the gearshift into 5th gear and check the initial torque of the input shaft.

(f) Using SST, tighten the nut.
SST 09922-10010

(g) Place the gearshift into 5th gear and check the initial torque of the input shaft.

(h) Confirm that the difference between (d) and (f) is within the specified values.
Preload (at starting):
0.45 to 1.35 N*m
(4.59 to 13.77 kgf*cm, 3.98 to 11.95 in.*lbf)
If the result is not as specified, tighten and adjust the output shaft adjusting nut.
NOTICE:
If the output shaft adjusting nut is loose or removed due to a large preload, always replace the spacer with a new one.

MT

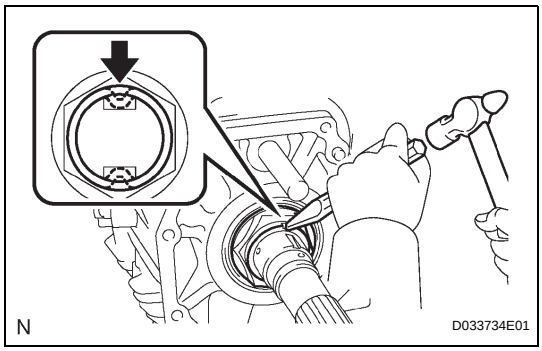

(i) Using a chisel and hammer, caulk the output shaft adjust nut.

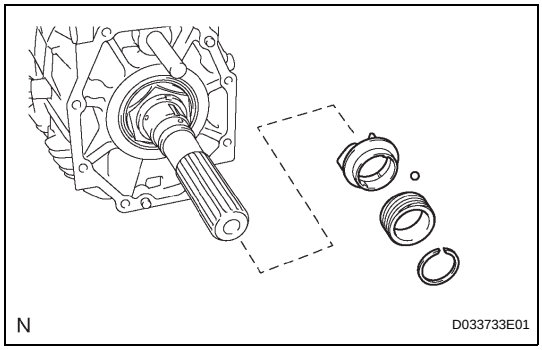

33. INSTALL SPEEDOMETER DRIVE GEAR

(a) Install the oil receiver pipe, ball and speedometer drive gear.

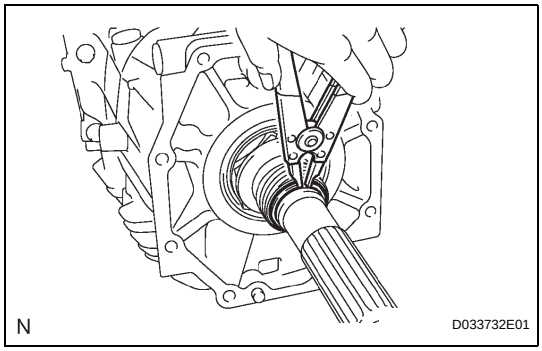

(b) Using a snap ring expander, install the snap ring.

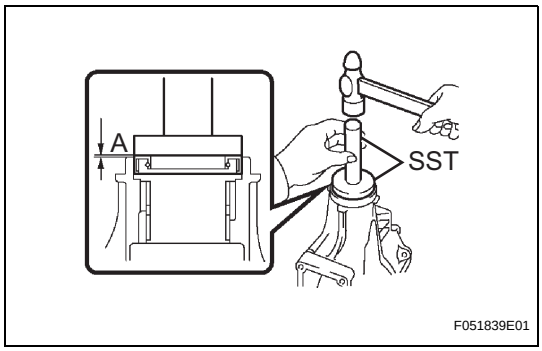

34. INSTALL MANUAL TRANSMISSION EXTENSION HOUSING OIL SEAL

(a) Using SST and a hammer, tap a new oil seal into the extension housing in accordance with the dimension specified in the illustration.

SST 09950-60020 (09951-00640), 09950-70010 (09951-07100)

Dimension A:

-0.5 to 0.5 mm (-0.197 to 0.197 in.)

(b) Apply gear oil to the lip of the oil seal.

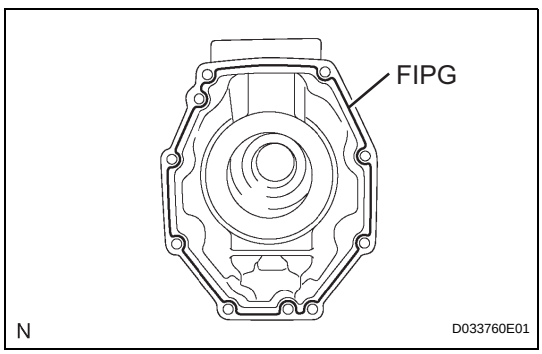

35. INSTALL EXTENSION HOUSING SUB-ASSEMBLY

(a) Apply FIPG to the extension housing, as shown in the illustration.

FIPG:

Part No. 08826-00090, THREE BOND 1281 or equivalent

NOTICE:

Parts must be assembled within 10 minutes of application. Otherwise, the packing (FIPG) material must be removed and reapplied.

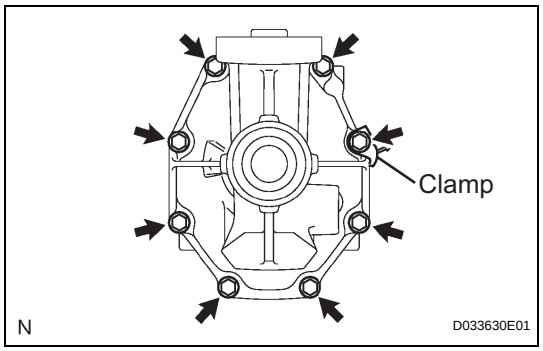

(b) Install the extension housing with the 8 bolts.
Torque: 29 N*m (296 kgf*cm, 21 ft.*lbf)

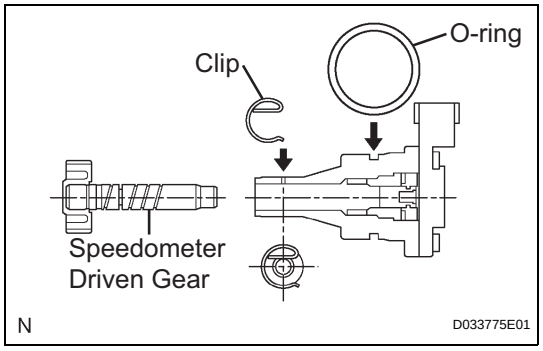

36. INSTALL SPEEDOMETER SENSOR

(a) Install a new O-ring onto the speedometer sensor.

(b) Install the speedometer driven gear into the speedometer sensor with the clip.
NOTICE:
Be sure to install the clip in the direction shown in the illustration.

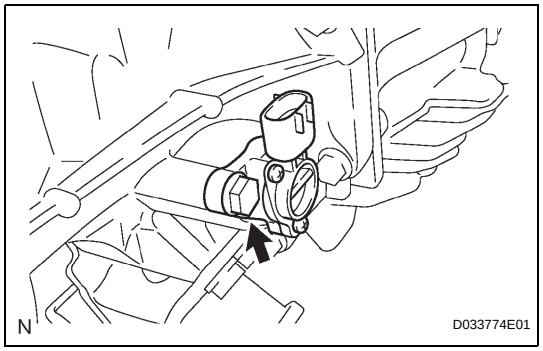

(c) Install the speedometer driven gear with the bolt.
Torque: 13 N*m (133 kgf*cm, 10 ft.*lbf)

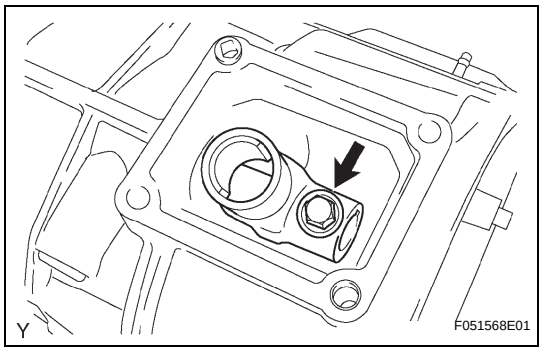

37. INSTALL SHIFT LEVER HOUSING

(a) Install the shift lever housing with the bolt.
Torque: 33 N*m (340 kgf*cm, 25 ft.*lbf)

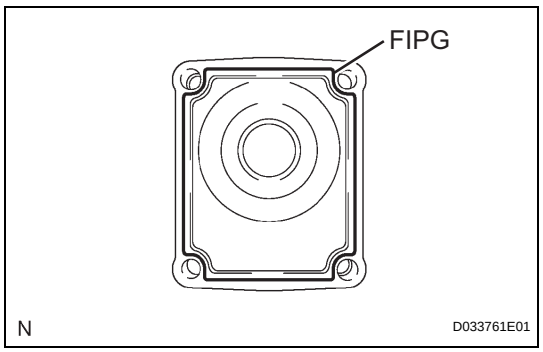

38. INSTALL FLOOR SHIFT CONTROL SHIFT LEVER RETAINER SUB-ASSEMBLY

(a) Apply FIPG to the floor shift control shift lever retainer, as shown in the illustration.
FIPG:
Part No. 08826-00090, THREE BOND 1281 or equivalent
NOTICE:
Parts must be assembled within 10 minutes of application. Otherwise, the packing (FIPG) material must be removed and reapplied.

MT

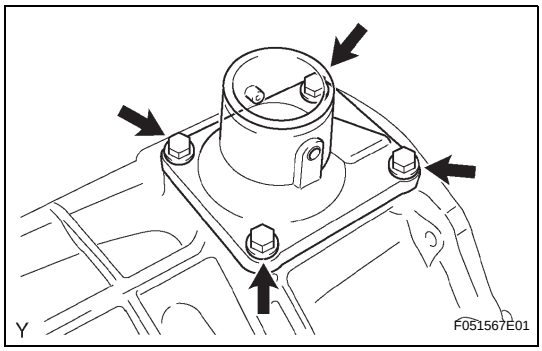

(b) Install the floor shift control shift lever retainer with the 4 bolts.
Torque: 20 N*m (204 kgf*cm, 15 ft.*lbf)

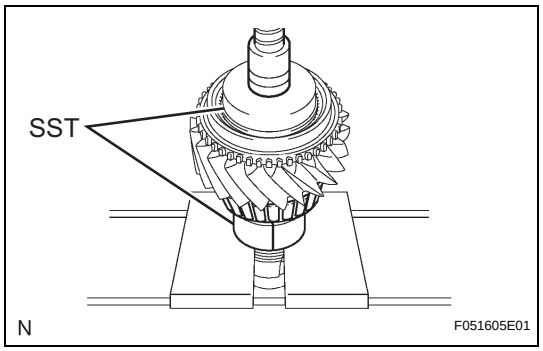

REASSEMBLY

1. INSTALL OUTPUT SHAFT REAR BEARING

(a) Using SST and a press, install a new output shaft bearing onto the output shaft.

SST 09710-20011 (09710-06061), 09950-60010 (09951-00650)

(b) Apply a light coat of grease to the bearing.

2. INSTALL OUTPUT SHAFT CENTER BEARING

(a) Apply gear grease to the output shaft center bearing to the output shaft, and install it onto the output shaft.

3. INSTALL NO. 3 SYNCHRONIZER RING

(a) Apply gear oil to synchronizer ring No. 3, and install it onto the output shaft.

INSTALLATION

1. **INSTALL TRANSFER ASSEMBLY (See page TF-38)**

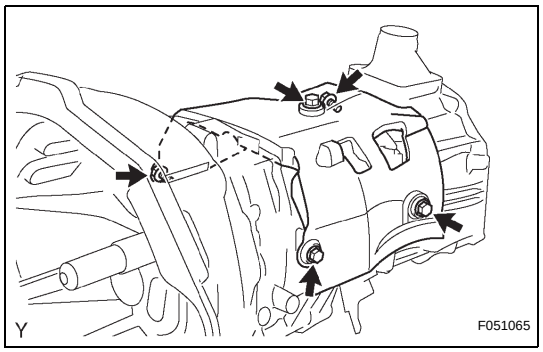

2. **INSTALL MANUAL TRANSMISSION CASE COVER SUB-ASSEMBLY**
   (a) Install the manual transmission case cover with the 5 bolts.
   Torque: 12 N*m (117 kgf*cm, 8.5 ft.*lbf)

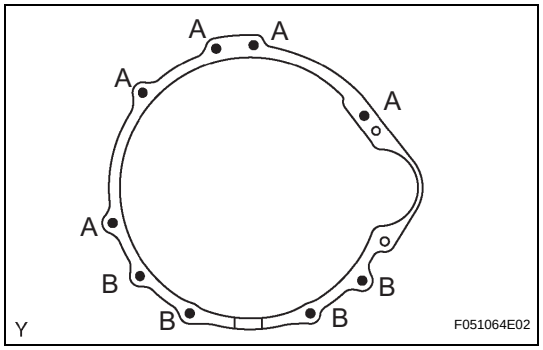

3. **INSTALL MANUAL TRANSMISSION WITH TRANSFER**
   (a) Install the manual transmission with transfer with the 9 bolts.
   Torque: 72 N*m (730 kgf*cm, 53 ft.*lbf) for bolt A
   37 N*m (380 kgf*cm, 28 ft.*lbf) for bolt B

4. **CONNECT WIRE HARNESS**

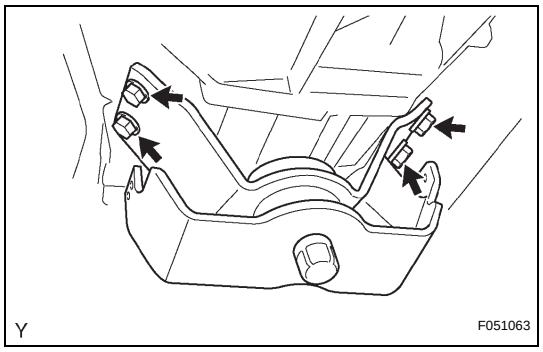

5. **INSTALL NO. 1 ENGINE MOUNTING INSULATOR REAR**
   (a) Install the engine mounting insulator rear No. 1 with the 4 bolts.
   Torque: 65 N*m (663 kgf*cm, 48 ft.*lbf)

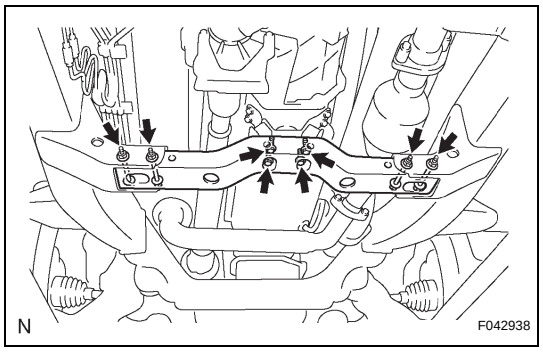

6. **INSTALL NO. 3 FRAME CROSSMEMBER SUB-ASSEMBLY**
   (a) Install the frame crossmember sub-assembly No. 3 with the 4 bolts and 4 nuts.
   Torque: 40 N*m (408 kgf*cm, 30 ft.*lbf)
   (b) Install the frame crossmember sub-assembly No. 3 with the 4 bolts.
   Torque: 19 N*m (189 kgf*cm, 14 ft.*lbf)

7. **INSTALL CLUTCH ACCUMULATOR ASSEMBLY (See page CL-28)**

8. **INSTALL CLUTCH RELEASE CYLINDER ASSEMBLY (See page CL-25)**

9. **INSTALL NO. 1 CLUTCH HOUSING COVER (See page CL-25)**

10. **INSTALL STARTER ASSEMBLY (See page ST-19)**

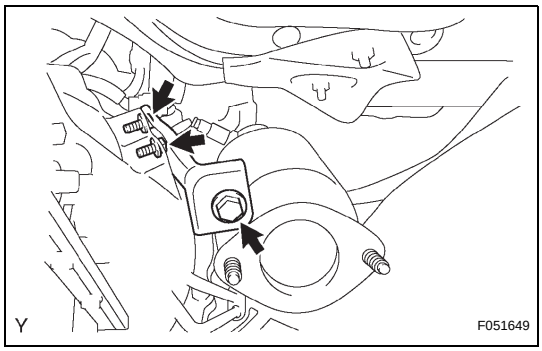

11. INSTALL MANIFOLD STAY

(a) Install the manifold stay with the 3 bolts.
Torque: 40 N*m (408 kgf*cm, 30 ft.*lbf)

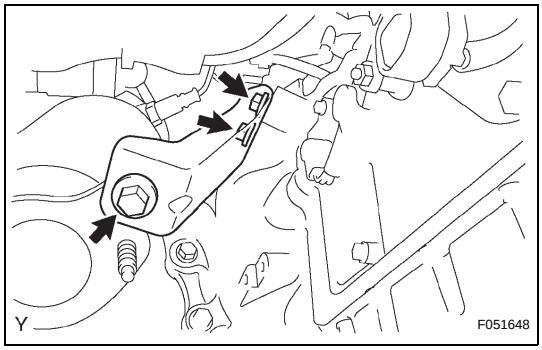

12. INSTALL NO. 2 MANIFOLD STAY

(a) Install the manifold stay No. 2 with the 3 bolts.
Torque: 40 N*m (408 kgf*cm, 30 ft.*lbf)

13. INSTALL PROPELLER WITH CENTER BEARING SHAFT ASSEMBLY (See page PR-32)

14. INSTALL FRONT PROPELLER SHAFT ASSEMBLY (See page PR-19)

15. INSTALL EXHAUST PIPE ASSEMBLY (See page EX-3)

16. ADD MANUAL TRANSMISSION OIL

17. ADJUST MANUAL TRANSMISSION OIL (See page MT-2)

18. INSTALL NO. 2 ENGINE UNDER COVER

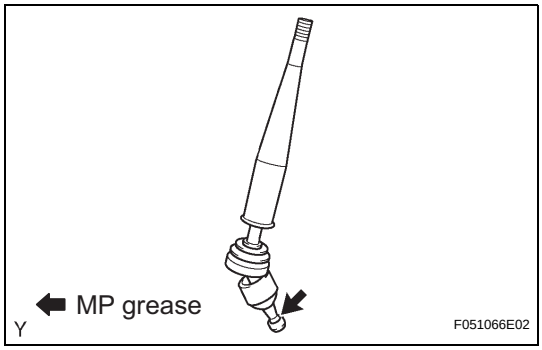

19. INSTALL FLOOR SHIFT SHIFT LEVER ASSEMBLY

(a) Apply MP grease to the tip of the shift lever.

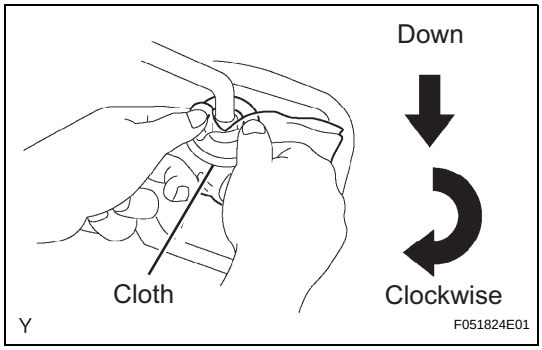

(b) Cover the shift lever cap with a cloth.
(c) Pressing down on the shift lever cap, turn it clockwise to install the shift lever.

20. INSTALL SHIFT LEVER BOOT ASSEMBLY

(a) Install the shift lever boot with the 2 screws and 2 clips.

21. INSTALL FRONT CONSOLE BOX (See page IP-23)

22. INSTALL SHIFT LEVER KNOB SUB-ASSEMBLY

23. INSTALL REAR CONSOLE BOX ASSEMBLY (See page IP-24)

24. INSTALL CONSOLE UPPER REAR PANEL SUB-ASSEMBLY (See page IP-25)

25. CONNECT CABLE TO NEGATIVE BATTERY TERMINAL
Torque: 3.9 N*m (40 kgf*cm, 35 in.*lbf)

REASSEMBLY

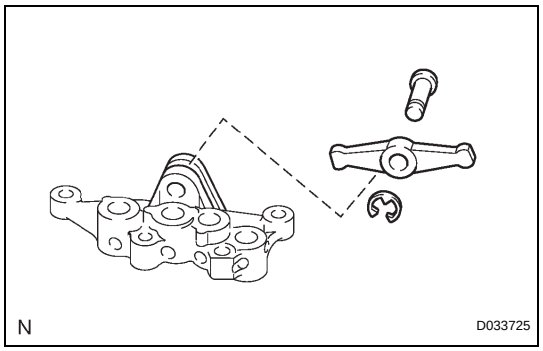

1. INSTALL 1ST AND REVERSE SHIFT ARM

(a) Install the shift arm and shift arm pivot onto the interlock bracket.

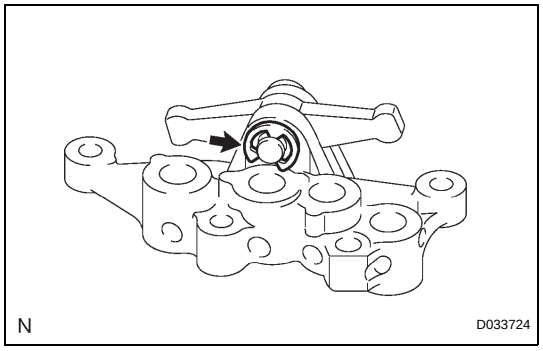

(b) Install a new E-ring onto the shift arm pivot.

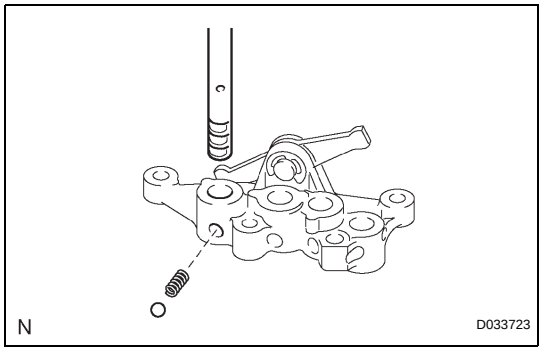

2. INSTALL NO. 4 GEAR SHIFT SHAFT

(a) Install the spring and ball onto the interlock bracket.

(b) Install the shift fork shaft No. 4.

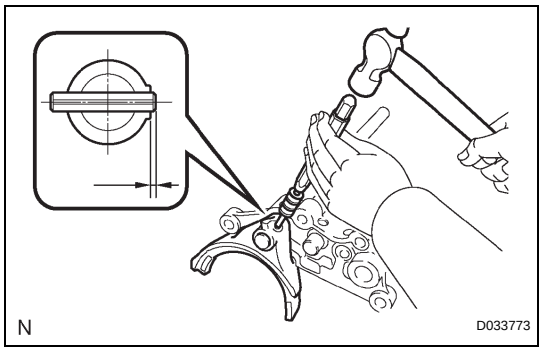

3. INSTALL NO. 4 GEAR SHIFT FORK

(a) Install the shift fork No. 4 onto the shift fork shaft No. 4.

(b) Using a pin punch (5 mm (0.20 in.)) and hammer, tap the new slotted pin into the shaft fork No. 4 and shift fork shaft No. 4.

Drive in depth:

0 to 0.5 mm (0 to 0.050 in.)

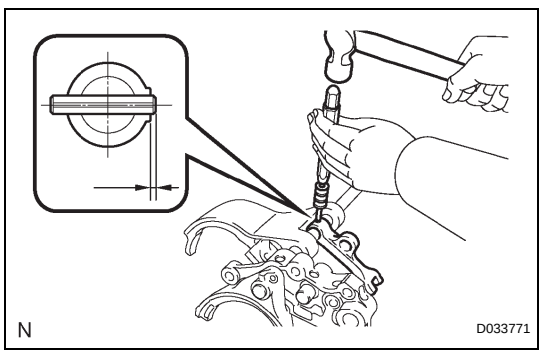

4. INSTALL NO. 1 GEAR SHIFT FORK

(a) Install the shift fork No. 1 and shift head No. 2 onto the shift fork shaft No. 4.

(b) Using a pin punch (5 mm (0.20 in.)) and hammer, tap the new slotted pin into the shaft head No. 2 and shift fork shaft No. 4.

Drive in depth:

0 to 0.5 mm (0 to 0.050 in.)

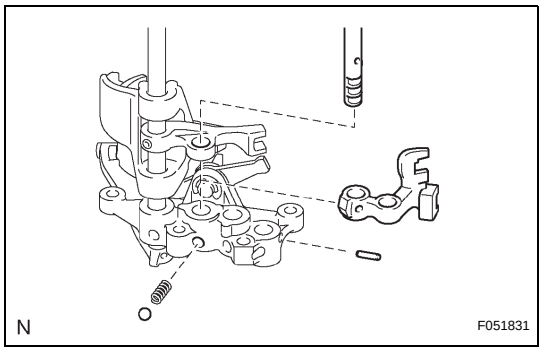

5. INSTALL NO. 1 GEAR SHIFT FORK SHAFT

(a) Apply MP grease to the interlock pin No. 1 and install it onto the interlock bracket.
(b) Install the spring and ball onto the interlock bracket.
(c) Install the shift fork shaft No. 1 onto the interlock bracket.
HINT:
Place the shift fork shaft No. 4 in the neutral position.

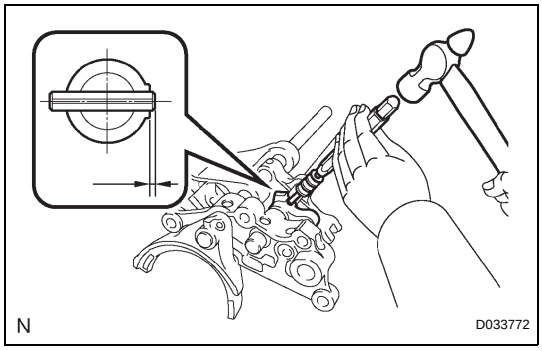

6. INSTALL NO. 1 GEAR SHIFT HEAD

(a) Install the shift head No. 1 into the shift fork shaft No. 1.
(b) Using a pin punch (5 mm (0.20 in.)) and hammer, tap the new slotted pin into the shaft head No. 1 and shift fork shaft No. 1.
Drive in depth:
0 to 0.5 mm (0 to 0.050 in.)

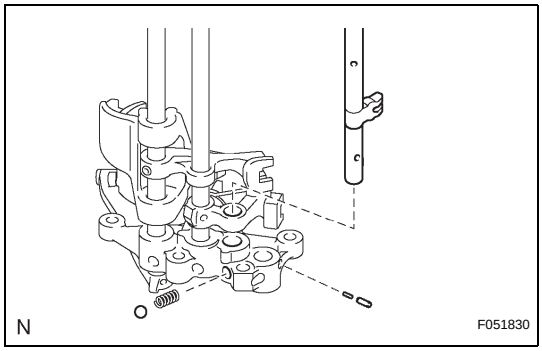

7. INSTALL NO. 2 GEAR SHIFT FORK SHAFT

(a) Apply MP grease to the interlock pins No. 2 and No. 3, then install them onto the interlock bracket.
(b) Install the spring and ball the interlock bracket.
(c) Install the shift fork shaft No. 2 onto the interlock bracket.
HINT:
Place the shift fork shafts No. 3 and No. 4 in the neutral position.

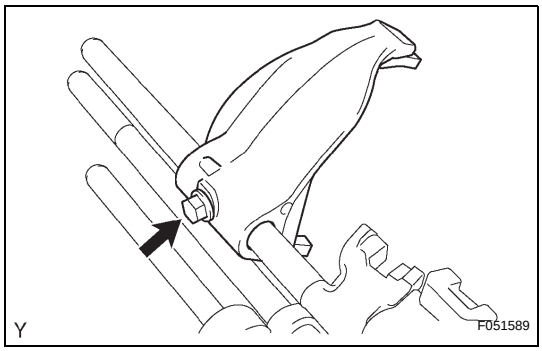

8. INSTALL NO. 2 GEAR SHIFT FORK

(a) Install the shift fork No. 2 with the bolt.
Torque: 20 N*m (199 kgf*cm, 14 ft.*lbf)

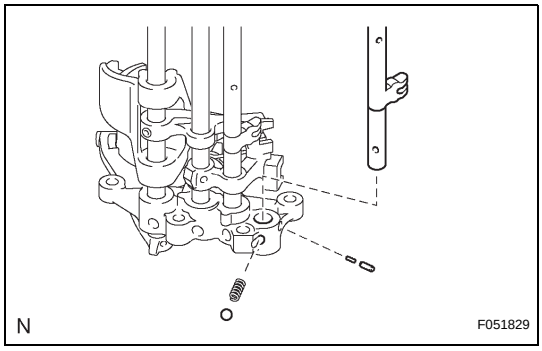

9. INSTALL NO. 3 GEAR SHIFT FORK SHAFT

(a) Apply MP grease to the interlock pins No. 2 and No. 3, then install them onto the interlock bracket.
(b) Install the spring and ball onto the interlock bracket.
(c) Install the shift fork shaft No. 3 onto the interlock bracket.
HINT:
Place the shift fork shafts No. 2, No. 1 and No. 4 in the neutral position.

MT

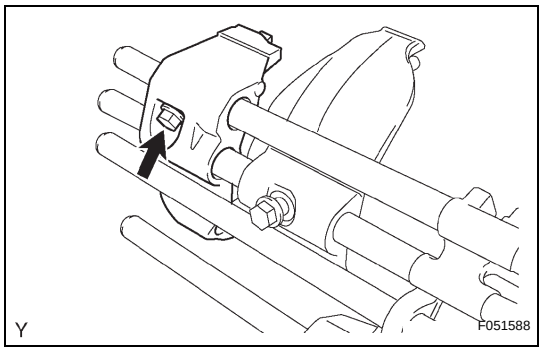

10. INSTALL NO. 3 GEAR SHIFT FORK

(a) Install the shift fork No. 3 with the bolt.
Torque: 20 N*m (199 kgf*cm, 14 ft.*lbf)

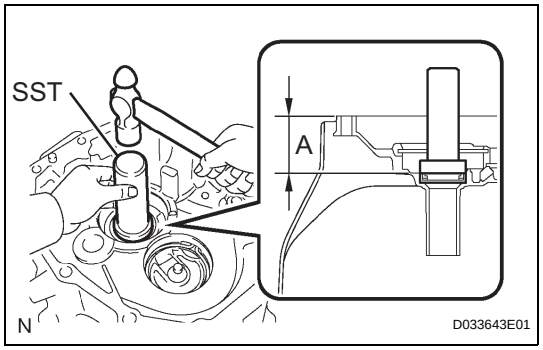

11. INSTALL TRANSMISSION CASE OIL SEAL

(a) Using SST and a hammer, tap a new oil seal into the front case in accordance with the dimension specified in the illustration.
SST 09950-70010 (09951-07100), 09950-60010 (09951-00470)
Dimension A:
60.0 to 60.8 mm (2.362 to 2.394 in.)

(b) Apply gear oil to the lip of the oil seal.

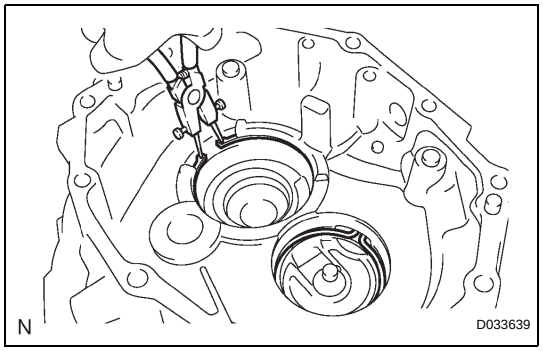

12. INSTALL FRONT BEARING SHAFT SNAP RING

(a) Using a snap ring plier, install the 2 snap rings.

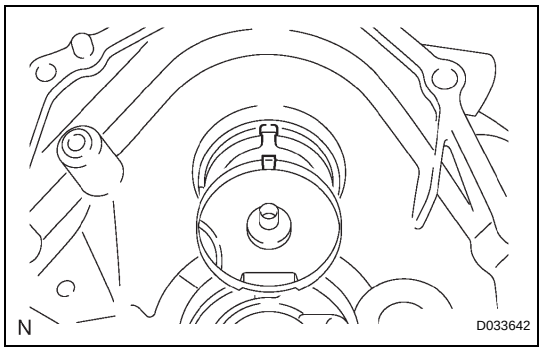

13. INSTALL NO. 1 OIL RECEIVER PIPE

(a) Install the oil receiver pipe No. 1 onto the transmission front case.
HINT:
Align the convex portion of the oil receiver pipe with the cutout of the front case and install the oil receiver pipe onto the clutch housing.

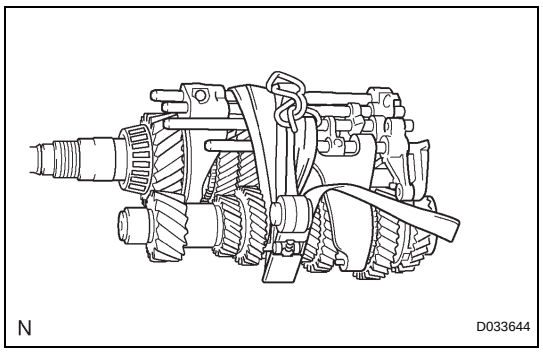

14. INSTALL TRANSMISSION FRONT CASE

(a) Apply gear oil to all sliding and rotating parts.
(b) Provisionally install the output shaft, input shaft, counter gear shaft and control assembly, and tie them with a rope or string.

MT

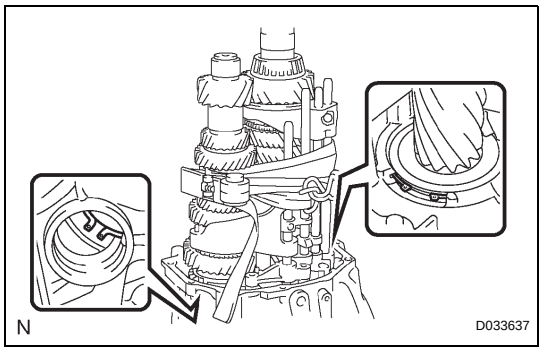

(c) Using a snap ring expander, extend the 2 snap rings and install the output shaft, input shaft, counter gear shaft and control assembly.
HINT:
Make sure that the snap ring is fitted into the grooves of the input shaft and front bearing of the counter gear shaft.

(d) Untie the output shaft, input shaft, counter gear shaft and control assembly.

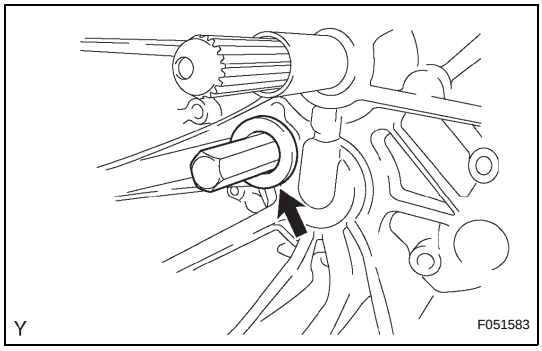

(e) Using a hexagonal wrench (24 mm), install the plug onto the front case.
Torque: 39 N*m (400 kgf*cm, 29 ft.*lbf)

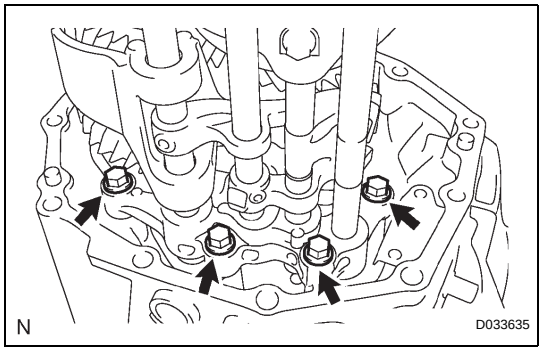

(f) Install the 4 bolts onto the interlock bracket.
Torque: 21 N*m (214 kgf*cm, 15 ft.*lbf)

15. INSTALL REVERSE IDLER GEAR

(a) Install the reverse idler gear, reverse idler gear bearing and reverse idler gear shaft.
HINT:
Make sure that the reverse idler gear faces the correct direction as shown in the illustration.
NOTICE:
Make sure that the tapped hole portion of the reverse idler shaft is in the position shown in the illustration.

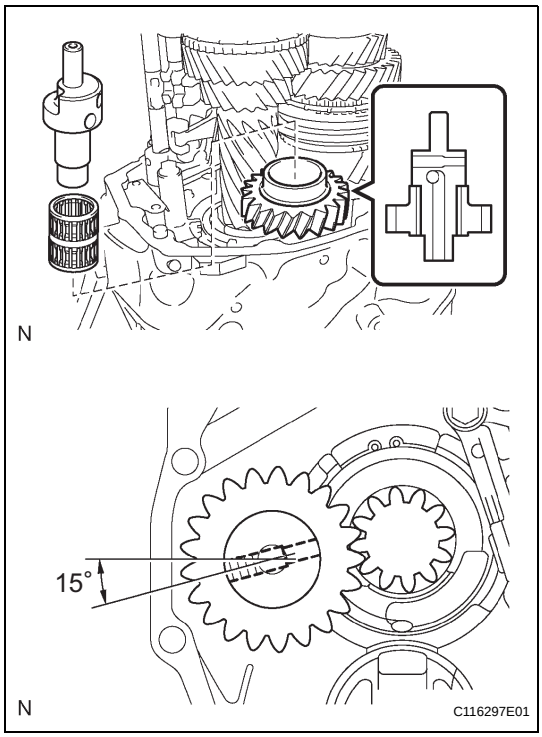

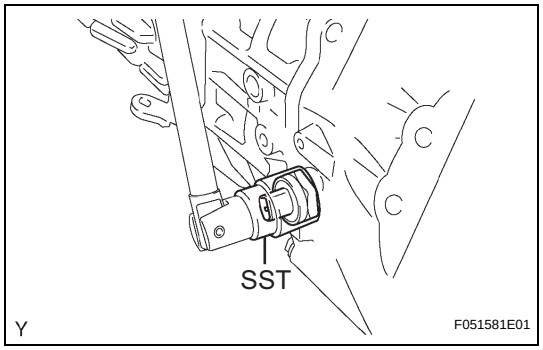

16. INSTALL BACK-UP LIGHT SWITCH ASSEMBLY

(a) Using SST, install the back-up light switch with a new gasket onto the transmission front case.
SST 09817-16011
Torque: 44 N*m (449 kgf*cm, 33 ft.*lbf)

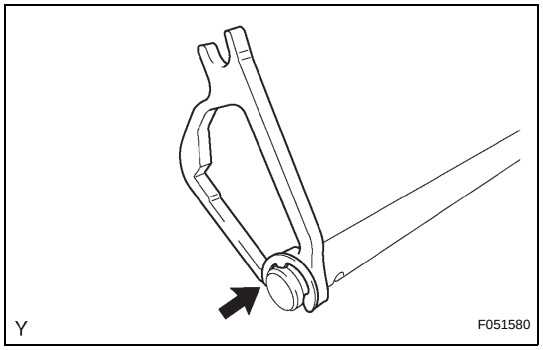

17. INSTALL SHIFT AND SELECT LEVER CAM

(a) Install the shift and select lever cam onto the shaft and install a new E-ring.

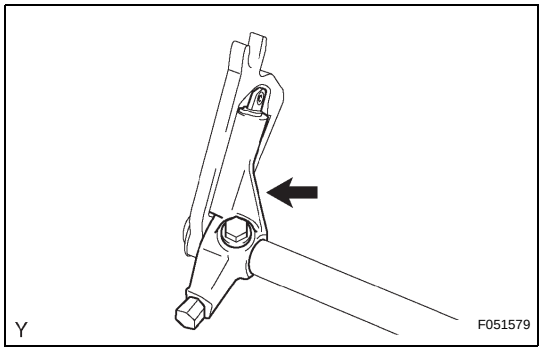

18. INSTALL SHIFT AND SELECT LEVER

(a) Install the lock ball pin and spring onto the shift and select lever.
(b) Install the shift and select lever onto the shift and select lever cam and shaft.
(c) Install the bolt onto the shift and select lever.
Torque: 33 N*m (340 kgf*cm, 25 ft.*lbf)

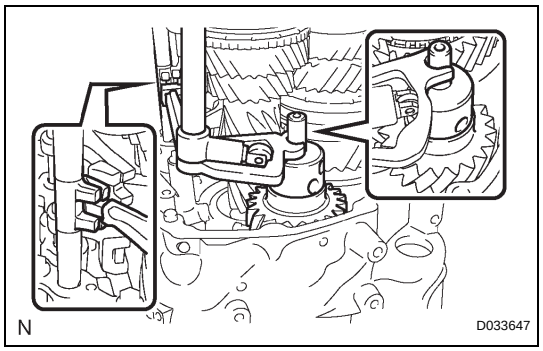

19. INSTALL SHIFT AND SELECT LEVER SHAFT

(a) Align the groove of the shift and select cam with the reverse idler shaft, and the claw with the groove of the control assembly, and install them.

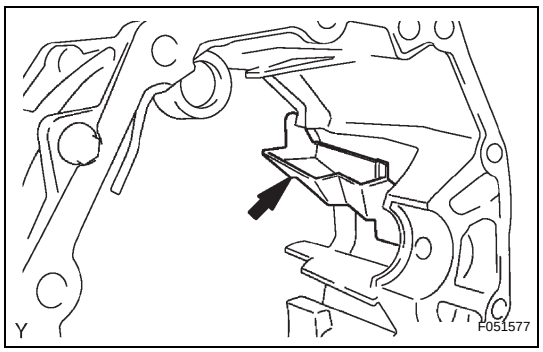

20. INSTALL NO. 2 OIL RECEIVER PIPE

(a) Install the oil receiver pipe No. 2 into the transmission middle case.

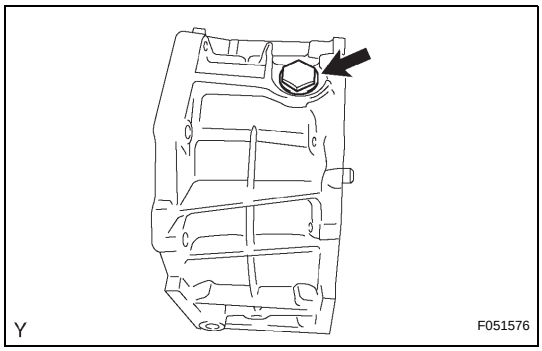

21. INSTALL DRAIN PLUG SUB-ASSEMBLY

(a) Install the drain plug with a new gasket onto the transmission middle case.
Torque: 37 N*m (377 kgf*cm, 27 ft.*lbf)

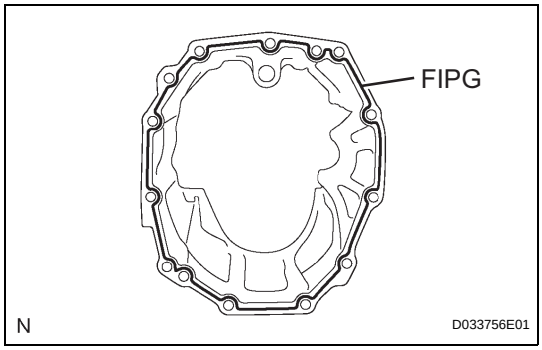

22. INSTALL TRANSMISSION MIDDLE CASE

(a) Apply FIPG to the transmission middle case, as shown in the illustration.
FIPG:
Part No. 08826-00090, THREE BOND 1281 or equivalent
NOTICE:
Parts must be assembled within 10 minutes of application. Otherwise, the packing (FIPG) material must be removed and reapplied.

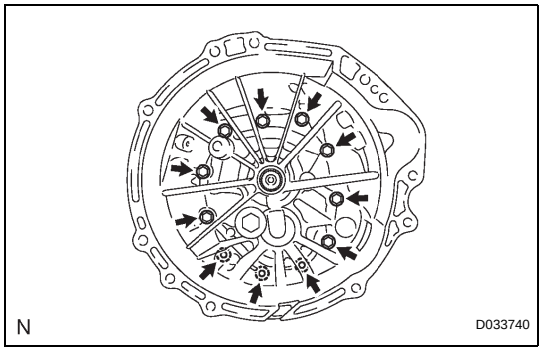

(b) Install the transmission middle case with the 11 bolts onto the transmission front case.
Torque: 40 N*m (408 kgf*cm, 30 ft.*lbf)
Bolt length:
Bolt A: 40 mm (1.57 in.)
Bolt B: 80 mm (3.15 in.)

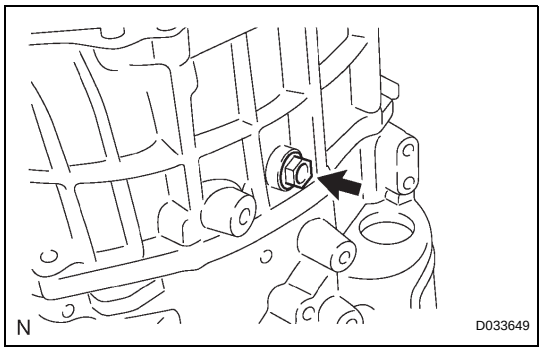

23. INSTALL REVERSE IDLER GEAR SHAFT BOLT

(a) Install a new gasket and the reverse idler gear shaft bolt onto the reverse idler gear shaft.
Torque: 28 N*m (286 kgf*cm, 21 ft.*lbf)

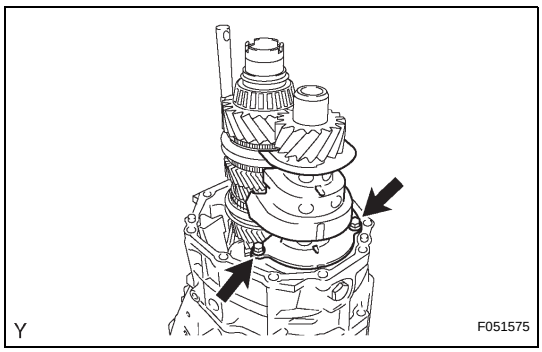

24. INSTALL TRANSMISSION OIL SEPARATOR

(a) Install the transmission oil separator with the 2 bolts.
Torque: 8.5 N*m (87 kgf*cm, 75 in.*lbf)

MT

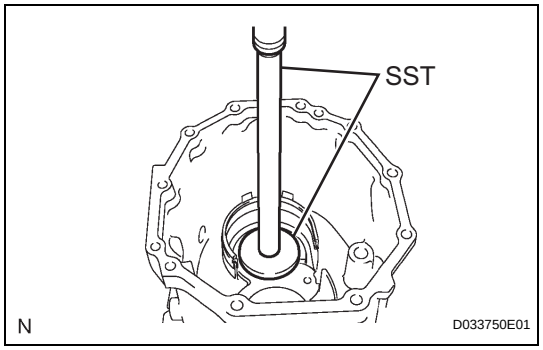

25. INSTALL COUNTER GEAR REAR RADIAL BALL BEARING

(a) Coat a new counter gear rear radial ball bearing with gear oil, and using SST and a press, install it into the transmission rear case.

SST 09950-70010 (09951-07360), 09950-60010 (09951-00650)

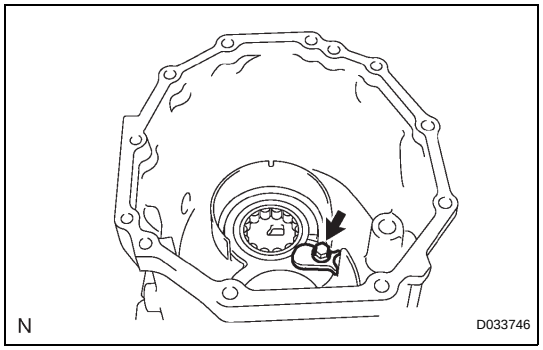

(b) Install the bearing lock plate with the bolt.

Torque: 11 N*m (115 kgf*cm, 8.3 ft.*lbf)

MT

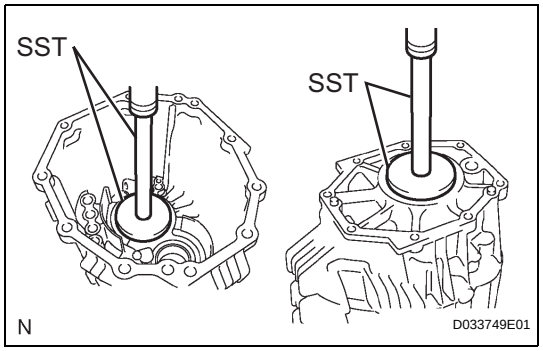

26. INSTALL OUTPUT SHAFT REAR BEARING OUTER RACE

(a) Using SST and a press, press in 2 new bearing outer races.

SST 09950-70010 (09951-07100, 09951-07360), 09950-60020 (09951-00790)

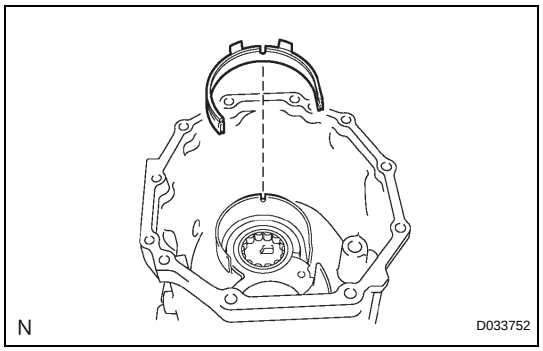

27. INSTALL OIL SEPARATOR PACKING SEAL

(a) Install the oil separator packing seal onto the transmission rear case.

HINT:

Insert the protruding part of the oil separator packing seal into the groove on the transmission rear case.

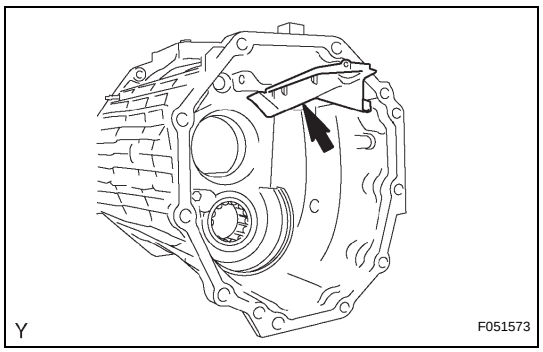

28. INSTALL EXTENSION HOUSING OIL RECEIVER PIPE

(a) Install the extension housing oil receiver pipe onto the transmission rear case.

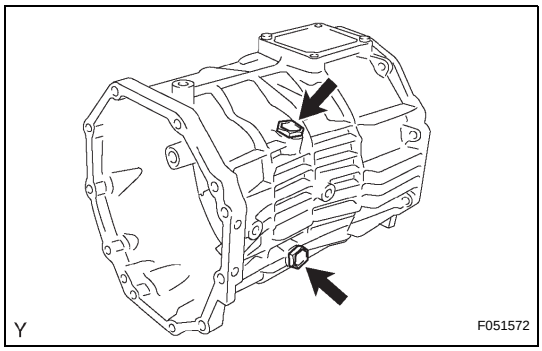

29. INSTALL MANUAL TRANSMISSION FILLER PLUG

(a) Install the 2 transmission filler plugs with 2 new gaskets onto the transmission rear case.
Torque: 37 N*m (377 kgf*cm, 27 ft.*lbf)

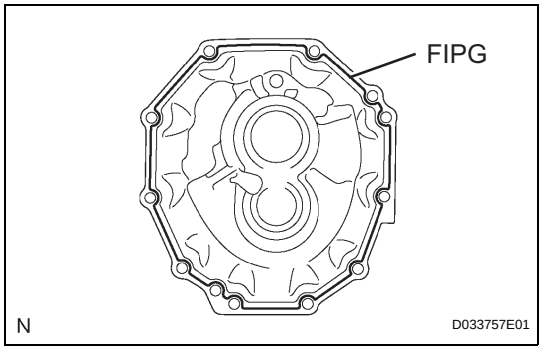

30. INSTALL TRANSMISSION REAR CASE

(a) Apply FIPG to the transmission rear case, as shown in the illustration.
FIPG:
Part No. 08826-00090, THREE BOND 1281 or equivalent
NOTICE:
Parts must be assembled within 10 minutes of application. Otherwise, the packing (FIPG) material must be removed and reapplied.

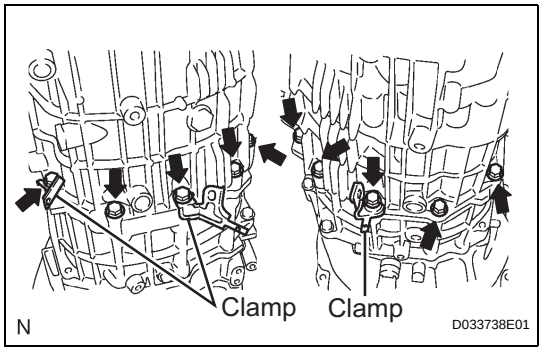

(b) Install the transmission rear case with the 10 bolts and 3 brackets onto the transmission middle case.
Torque: 40 N*m (408 kgf*cm, 30 ft.*lbf)

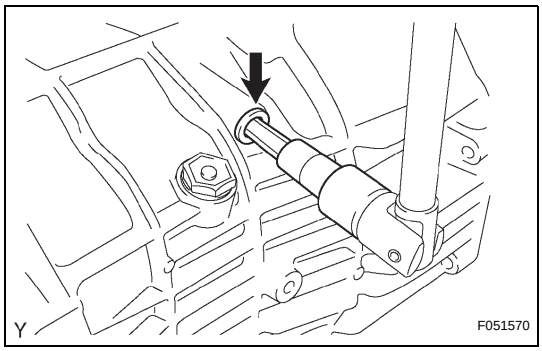

31. INSTALL SHIFT DETENT BALL PLUG

(a) Install the ball and compression spring onto the transmission rear case.
(b) Install a new shift detent ball plug, and install it onto the transmission rear case.
Torque: 25 N*m (250 kgf*cm, 18 ft.*lbf)

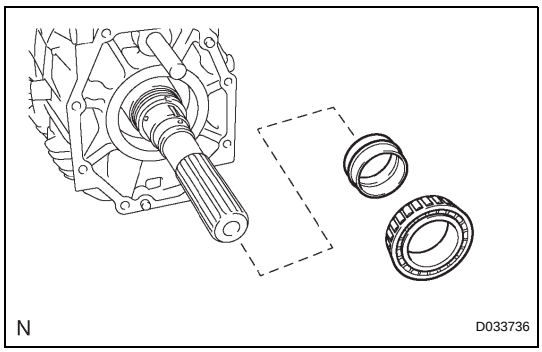

32. INSTALL OUTPUT SHAFT ADJUST NUT

(a) Using a belt and wooden block, fasten the transmission to the workbench.
(b) Install a new spacer and output shaft taper roller bearing No. 2.

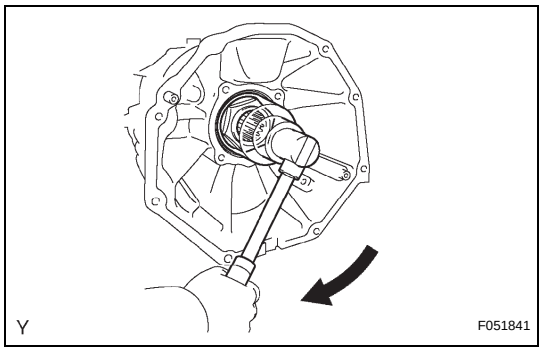

(c) Using a socket wrench (60 mm), provisionally tighten a new nut until there is no slack in the output shaft.
HINT:
No preload should be applied to the nut.
(d) Fit the bearing into the output shaft by turning the output shaft 15 times.

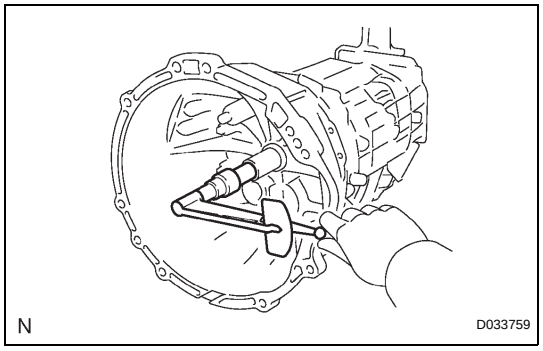

(e) Place the gearshift into 5th gear and check the initial torque of the input shaft.
(f) Using a socket wrench (60 mm), tighten the nut.
(g) Place the gearshift into 5th gear and check the initial torque of the input shaft.
(h) Confirm that the difference between (f) and (i) is within the specified values.
Preload (at starting):
0.45 to 1.35 N*m (4.59 to 13.77 kgf*cm, 3.98 to 11.95 in.*lbf)
If the result is not as specified, tighten and adjust the output shaft adjusting nut.
NOTICE:
If the output shaft adjusting nut is loose or removed due to a large preload, always replace the spacer with a new one.

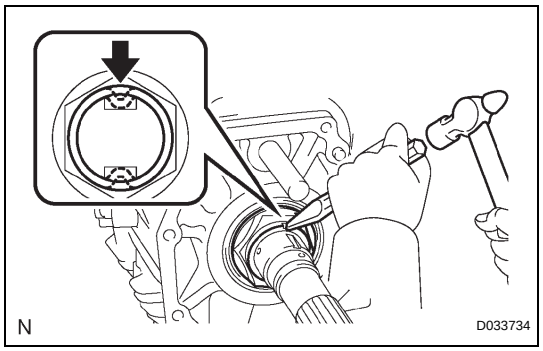

(i) Using a chisel and hammer, caulk the output shaft adjust nut.

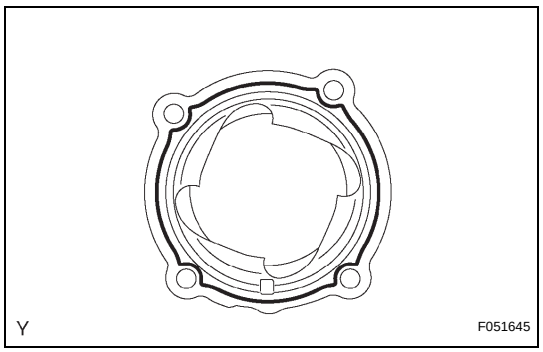

33. INSTALL MANUAL TRANSMISSION CASE COVER SUB-ASSEMBLY
(a) Apply FIPG to the transmission case cover, as shown in the illustration.
FIPG:
Part No. 08826-00090, THREE BOND 1281 or equivalent
NOTICE:
Parts must be assembled within 10 minutes of application. Otherwise, the packing (FIPG) material must be removed and reapplied.

MT

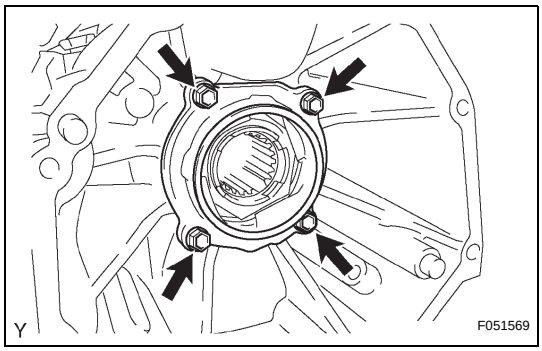

(b) Install the transmission case cover with the 4 bolts.
Torque: 18 N*m (184 kgf*cm, 13 ft.*lbf)

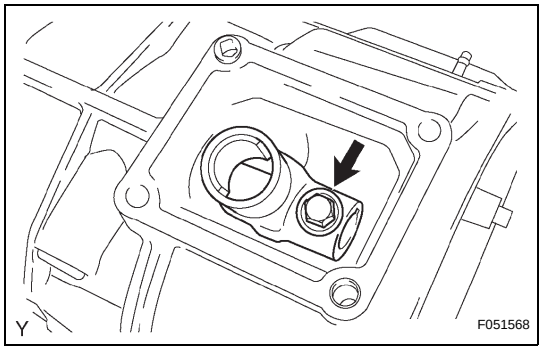

34. INSTALL SHIFT LEVER HOUSING

(a) Install the shift lever housing with the bolt.
Torque: 33 N*m (340 kgf*cm, 25 ft.*lbf)

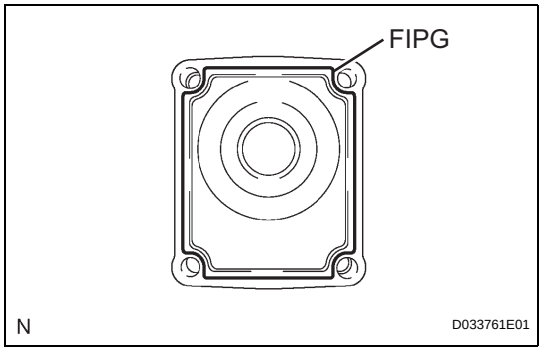

35. INSTALL FLOOR SHIFT CONTROL SHIFT LEVER RETAINER SUB-ASSEMBLY

(a) Apply FIPG to the floor shift control shift lever retainer, as shown in the illustration.
FIPG:
Part No. 08826-00090, THREE BOND 1281 or equivalent
NOTICE:
Parts must be assembled within 10 minutes of application. Otherwise, the packing (FIPG) material must be removed and reapplied.

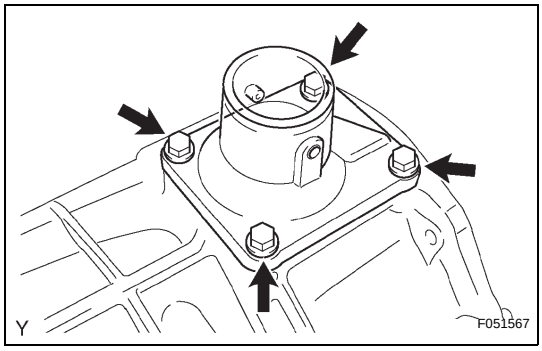

(b) Install the floor shift control shift lever retainer with the 4 bolts.
Torque: 20 N*m (204 kgf*cm, 15 ft.*lbf)

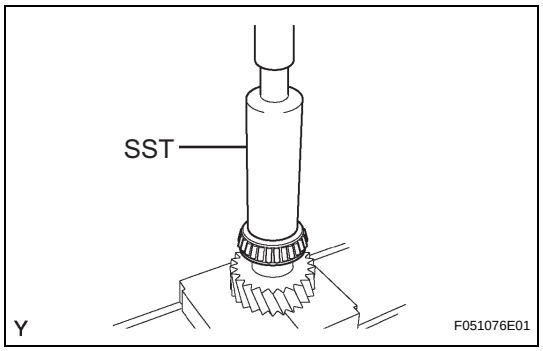

REASSEMBLY

1. INSTALL OUTPUT SHAFT REAR BEARING

(a) Using SST and a press, install a new output shaft rear bearing onto the output shaft.
SST 09316-60011 (09316-00011)

(b) Apply a light coat of grease to the bearing.

2. INSTALL OUTPUT SHAFT CENTER BEARING

(a) Apply gear grease to the output shaft center bearing to the output shaft, and install it onto the output shaft.

3. INSTALL NO. 3 SYNCHRONIZER RING

(a) Apply gear oil to synchronizer ring No. 3, and install it onto the output shaft.

INSPECTION

NOTICE:

- **A/T:**
  Switch the 4 wheel drive control switch when the A/T shift lever is in the N position and the vehicle speed is 5 km/h or less.
- **M/T:**
  Switch the 4 wheel drive control switch when the clutch start switch is turned ON and the vehicle speed is 3 km/h or less.
- **Do not change from H2 to H4 when the vehicle speed is 100 km/h or more.**

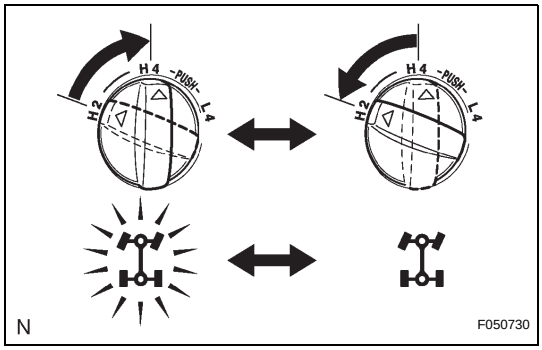

1. INSPECT H2 (2WD) - H4 (4WD) SHIFT

(a) Start the engine.
(b) Turn the 4 wheel drive control switch from the H2 to the H4 position.
(c) Check that the 4WD indicator light blinks and then stays on.
(d) Turn the 4 wheel drive control switch from the H4 to the H2 position
(e) Check that the 4WD indicator light blinks and then goes off.

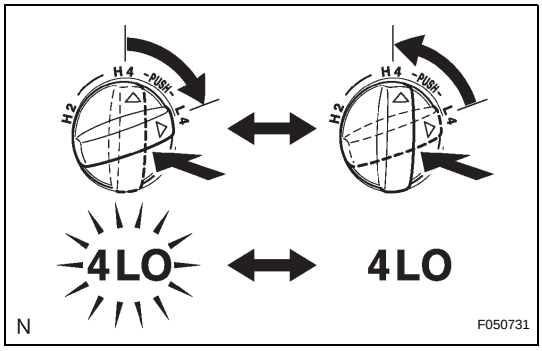

2. INSPECT H4 (4WD) - L4 (4WD) SHIFT

(a) Start the engine.
(b) Turn the 4 wheel drive control switch from the H4 to the L4 position while pressing it.
(c) Check that the 4LO indicator light blinks and then stays on.
(d) Turn the 4 wheel drive control switch from the L4 to the H4 position while pressing it.
(e) Check that the 4LO indicator light blinks and then goes off.

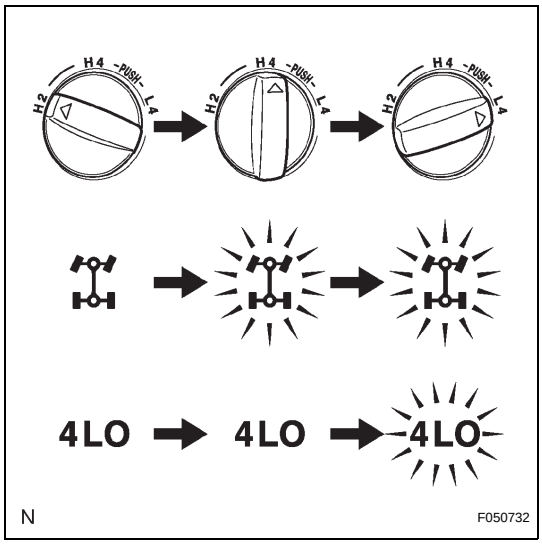

3. INSPECT H2 (2WD) - L4 (4WD) SHIFT

(a) Start the engine.
(b) Turn the 4 wheel drive control switch from the H2 to the H4 position.
(c) Check that the 4WD indicator light blinks and then stays on.
(d) Turn the 4 wheel drive control switch from the H4 to the L4 position while pressing it.
(e) Check that the 4LO indicator light blinks and then stays on.

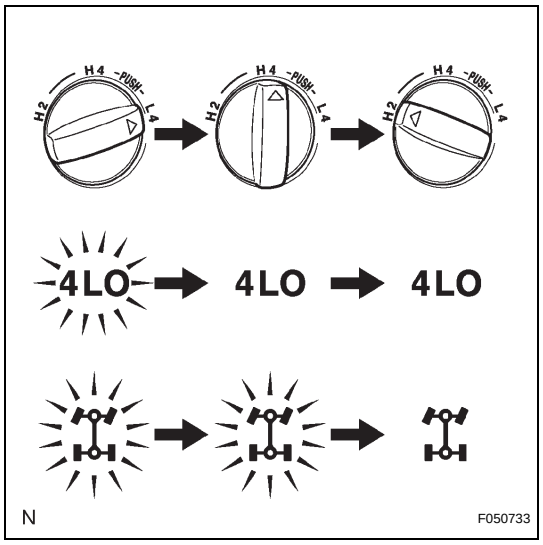

4. INSPECT L4 (4WD) - H2 (2WD) SHIFT

(a) Start the engine.

(b) Turn the 4 wheel drive control switch from the L4 to the H4 position while pressing it.

(c) Check that the 4LO indicator light blinks and then goes off.

(d) Turn the 4 wheel drive control switch from the H4 to the H2 position.

(e) Check that the 4WD indicator light blinks and then goes off.

5. INSPECT 4 WHEEL DRIVE CONTROL SWITCH

(a) Remove the center instrument cluster finish panel sub-assembly.

(b) Remove the 4 wheel drive control switch from the center instrument cluster finish panel sub-assembly.

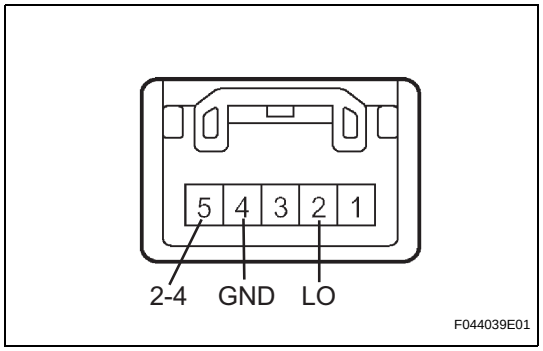

(c) Using an ohmmeter, measure the resistance between the terminals.

Switch position	Tester connection	Specified condition
H2	5 (2-4) - 4 (GND)	Below 1Ω
H4	5 (2-4) → 4 (GND)	Below 1Ω
	5 (2-4) ← 4 (GND)	100 kΩ or higher
	2 (LO) → 4 (GND)	Below 1Ω
	2 (LO) ← 4 (GND)	100 kΩ or higher
L4	2 (LO) - 4 (GND)	Below 1Ω

If the results are not as specified, replace the 4 wheel drive control switch or bulb.

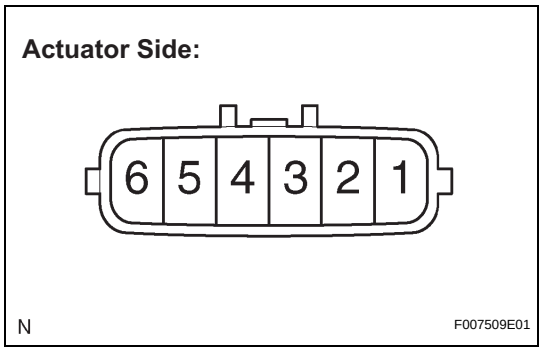

6. INSPECT ACTUATOR RESISTANCE

(a) Using an ohmmeter, measure the resistance between terminals 1 and 2.

Standard resistance:

0.3 to 100 Ω

(b) Using an ohmmeter, measure the resistance between terminals 1 or 2 and the body ground.

Standard resistance:

More than 0.5 MΩ

If the results are not as specified, replace the shift actuator assembly.

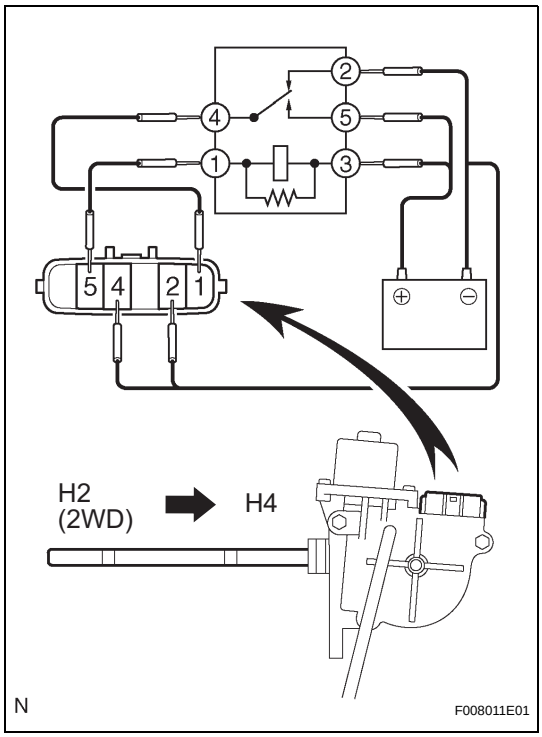

7. INSPECT ACTUATOR OPERATION

(a) H2 (2WD) → H4 shift:
Connect the lines via the relay as shown in the illustration, then check that the actuator fork shaft moves from the H2 (2WD) to the H4 positions.

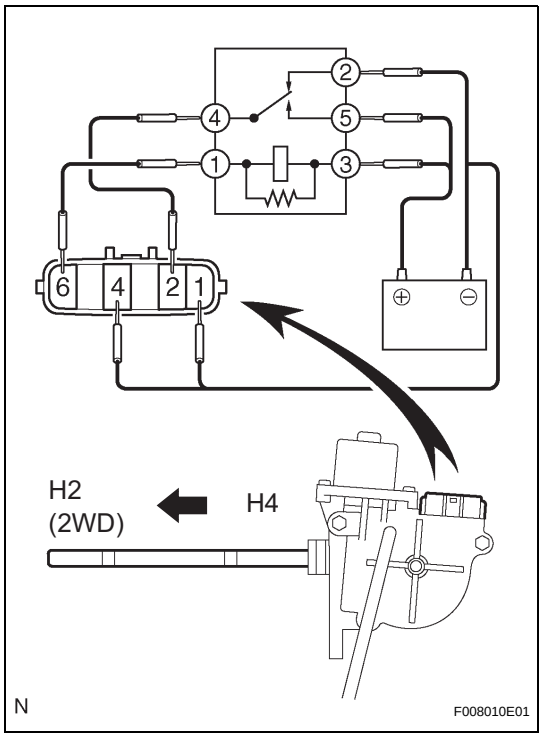

(b) H4 → H2 (2WD) shift:
Connect the lines via the relay as shown in the illustration, then check that the actuator fork shaft moves from the H4 to the H2 (2WD) positions.

TF

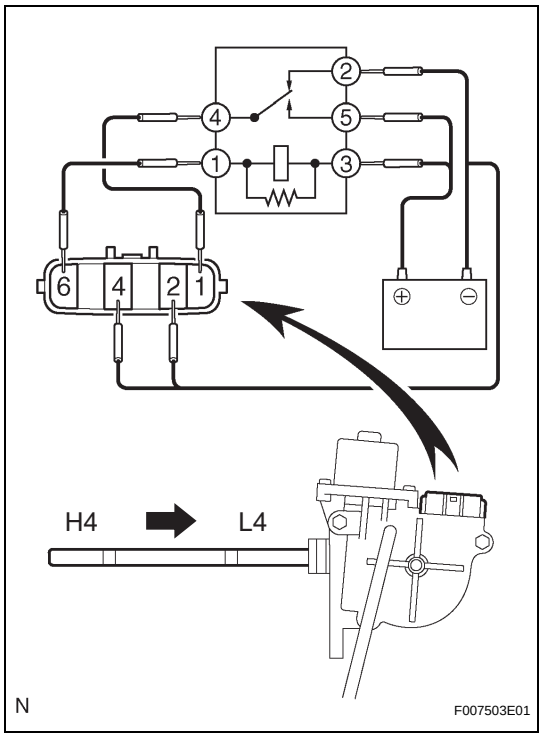

(c) H4 → L4 shift:
Connect the lines via the relay as shown in the illustration, then check that the actuator fork shaft moves from the H4 to the L4 positions.

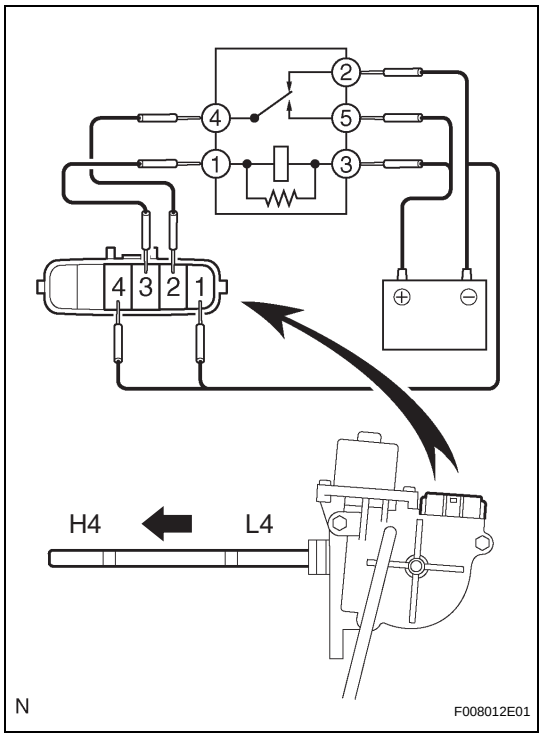

(d) L4 →H4 shift:
Connect the lines via the relay as shown in the illustration, then check that the actuator fork shaft moves from the L4 to the H4 positions.

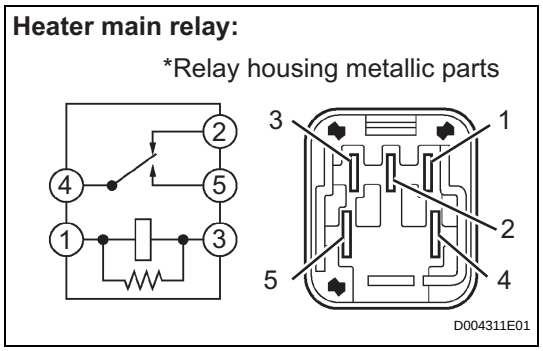

HINT:
When inspecting the operation described above, use a heater main relay.
NOTICE:
Connect the terminals, being careful not to touch the neighboring terminals or metallic parts of the relay housing.

TF

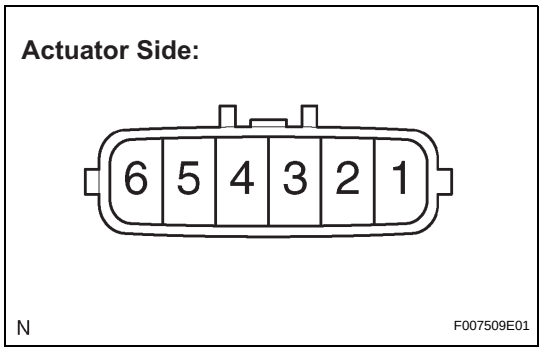

8. INSPECT LIMIT SWITCH CONTINUITY

(a) Start the engine and lift the vehicle up.

(b) With the actuator connector connected, after checking the operating sound, disconnect the connector and inspect the continuity between the terminals using an ohmmeter.

HINT:

When shifting the actuator fork shaft, connect the connectors.

Shift position	Tester connection	Specified condition
H2	3 - 4	100 kΩ or higher
	3 - 5	100 kΩ or higher
	3 - 6	100 kΩ or higher
	4 - 5	Below 1Ω
	4 - 6	100 kΩ or higher
	5 - 6	100 kΩ or higher
H4	3 - 4	100 kΩ or higher
	3 - 5	100 kΩ or higher
	3 - 6	100 kΩ or higher
	4 - 5	100 kΩ or higher
	4 - 6	Below 1Ω
	5 - 6	100 kΩ or higher
L4	3 - 4	Below 1Ω
	3 - 5	100 kΩ or higher
	3 - 6	100 kΩ or higher
	4 - 5	100 kΩ or higher
	4 - 6	100 kΩ or higher
	5 - 6	100 kΩ or higher

9. INSPECT 4 WHEEL DRIVE CONTROL ECU

(a) Connect the wire harness side connector to the 4 wheel drive control ECU and inspect the wire harness side connector from the back side, as shown.

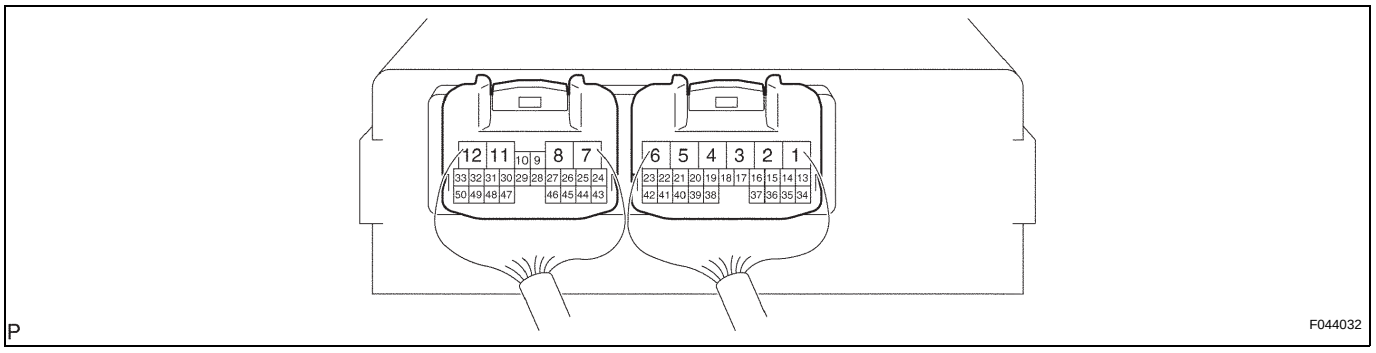

STANDARD VALUE OF ECU TERMINAL

Terminals (Symbols)	Condition	STD Voltage (V)
2 (TM1) - 1 (TM2)	• Ignition switch ON • Differential lock switch in OFF position • 4 wheel drive control switch H2 position → H4 position	10 to 14 or 0 to 14 pulse generation then less than 0.5
1 (TM2) - 2 (TM1)	• Ignition switch ON • Keep pressing the differential lock switch for approx. 2 seconds to turn it ON • 4 wheel drive control switch L4 position → H4 position	10 to 14 or 0 to 14 pulse generation then less than 0.5
3 (DM1) - 4 (DM2)	• Ignition switch ON • A.D.D. FREE →LOCK	10 to 14 or 0 to 14 pulse generation then less than 0.5
4 (DM2) - 3 (DM1)	• Ignition switch ON • A.D.D. LOCK → FREE	10 to 14 or 0 to 14 pulse generation then less than 0.5

12 (GND) - Body ground	Ignition switch OFF	Below 1Ω
11 (IG) - 12 (GND)	Ignition switch ON	10 to 14
18 (DL2) - 12 (GND)	• Ignition switch ON • A.D.D. LOCK → FREE	1.5 or less → 10 to 14
19 (DL1) - 12 (GND)	• Ignition switch ON • A.D.D. FREE → LOCK	1.5 or less → 10 to 14
25 (2-4) - 12 (GND)	• Ignition switch ON • 4 wheel drive control switch L4 position → H2 position or H4 position	10 to 14 → 2 or less
26 (SPD) - 12 (GND)	During driving	Pulse generation
28 (IND3) - 12 (GND)	• Ignition switch ON • 4 wheel drive control switch H4 position → L4 position	10 to 14 → 1.5 to 3.5
32 (LO) - 12 (GND)	• Ignition switch ON • 4 wheel drive control switch H4 position → L4 position	10 to 14 →1.5 or less
42 (ADD) - 12 (GND)	• Ignition switch ON • A.D.D. FREE → LOCK	10 to 14 →1.5 or less
23 (L4) - 12 (GND)	• Ignition switch ON • 4 wheel drive control switch H2 position or H4 position → L4 position	10 to 14 →1.5 or less
38 (4WD) - 12 (GND)	• Ignition switch ON • 4 wheel drive control switch H2 position →H4 position	10 to 14 →1.5 or less
39 (TL3) - 12 (GND)	• Ignition switch ON • 4 wheel drive control switch H2 position → L4 position	10 to 14 → 0.88 or less
40 (TL2) - 12 (GND)	• Ignition switch ON • 4 wheel drive control switch H2 position → H4 position	10 to 14 → 0.88 or less
41 (TL1) - 12 (GND)	• Ignition switch ON • 4 wheel drive control switch H2 position → H4 position or L4 position	0.88 or less → 10 to 14
45 (IND1) - 12 (GND)	• Ignition switch ON • 4 wheel drive control switch H2 position → H4 position or L4 position	10 to 14 → 0 to 3.5
48 (N) - 12 (GND)	• Ignition switch ON • Transmission shift lever other position → N position	1.5 or less → 10 to 14

TF

DISASSEMBLY

1. INSPECT PROPELLER SHAFT UNIVERSAL JOINT SPIDER BEARING

(a) Check the spider bearings for wear and damage.

(b) Check each spider bearings axial play by turning the yoke while holding the shaft tightly.

Maximum bearing axial play:

0 to 0.05 mm (0 to 0.002 in.)

If the bearing axial play is greater than the maximum, replace the spider bearing.

2. REMOVE PROPELLER SHAFT UNIVERSAL JOINT SPIDER BEARING

(a) Place matchmarks on the propeller shaft and universal joint yoke.

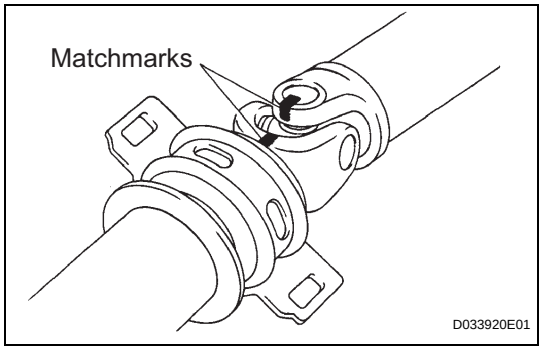

(b) Using a brass bar and hammer, slightly tap in the spider bearing.

(c) Using needle-nose pliers, remove the 4 snap rings from the grooves.

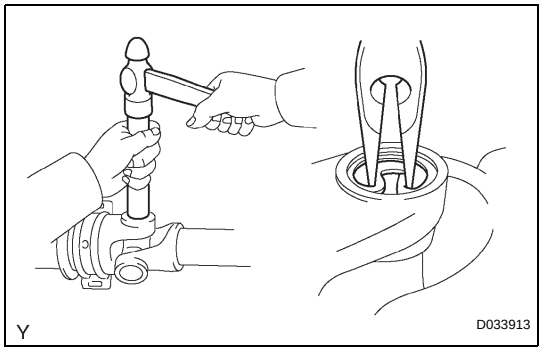

(d) Clamp the propeller shaft in a vise between aluminum plates.

(e) Using SST, push the spider bearing out of the propeller shaft.

SST 09332-25010

HINT:

Sufficiently raise the part indicated by (A) so that it does not come into contact with the spider bearing.

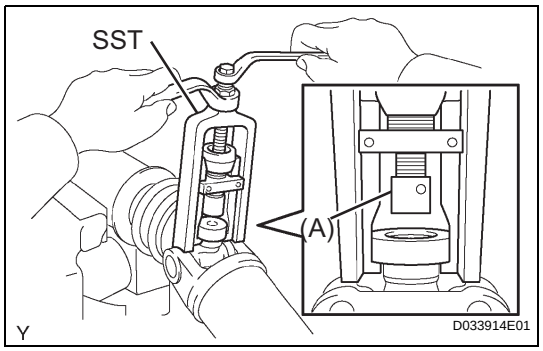

(f) Clamp the removed spider bearing outer race in a vise and tap the propeller shaft to remove the spider bearing.

NOTICE:

Do not tap the shaft tube.

HINT:

Remove the spider bearing from the opposite side of the spider using the same procedure.

(g) Separate the propeller with center bearing shaft assembly from the propeller shaft assembly.

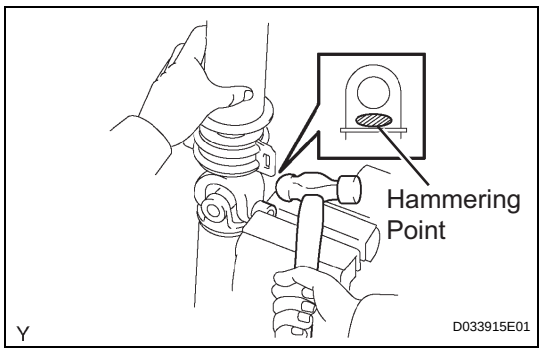

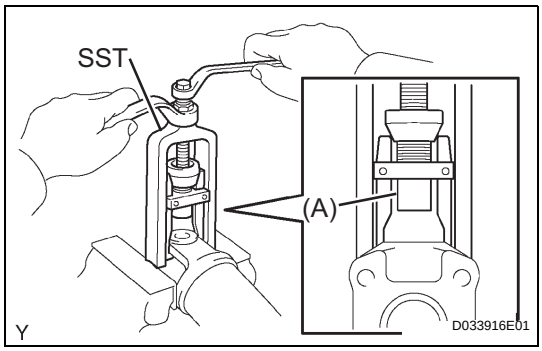

(h) Reinstall the 2 removed spider bearings onto the spider and clamp the spider bearings in a vise.
(i) Using SST, push the bearing out of the yoke.
SST 09332-25010
HINT:
Sufficiently raise the part indicated by (A) so that it does not come into contact with the bearing.

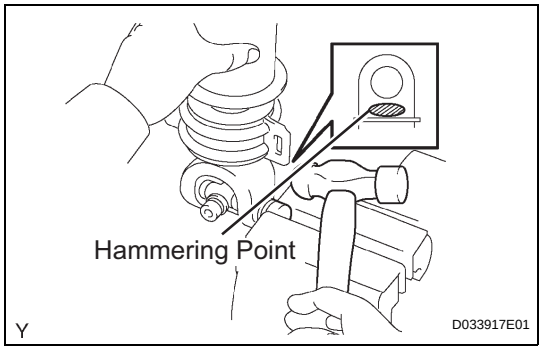

(j) Clamp the outer bearing race in a vise and tap off the yoke with a hammer.
(k) Remove the spider.

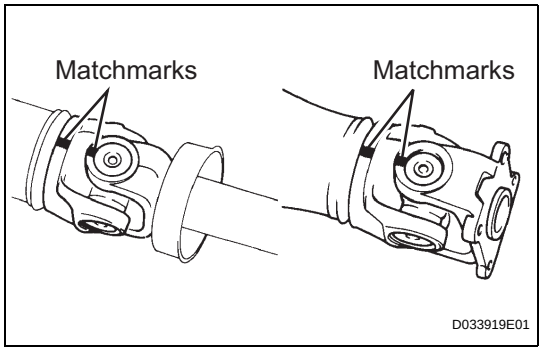

3. REMOVE PROPELLER SHAFT UNIVERSAL JOINT SPIDER BEARING

(a) Place matchmarks on the flange yoke and sleeve yoke.

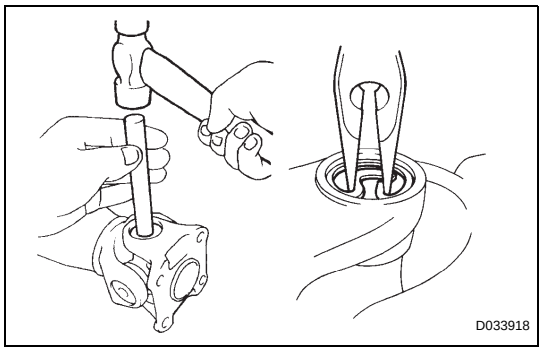

(b) Using a brass bar and hammer, slightly tap in the spider bearing.
(c) Using 2 needle-nose pliers, remove the 4 snap rings from the grooves.

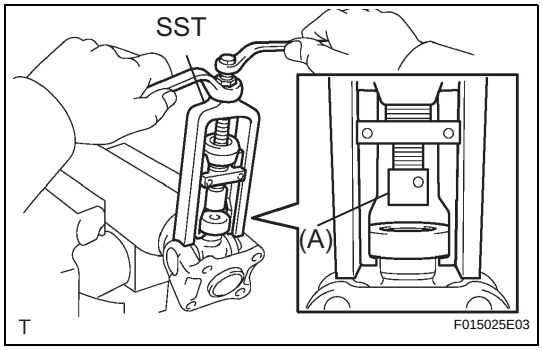

(d) Clamp the propeller shaft in a vise between the aluminum plates.
(e) Using SST, push the spider bearing out of the propeller shaft.
SST 09332-25010
HINT:
Sufficiently raise the part indicated by (A) so that it does not come into contact with the bearing.

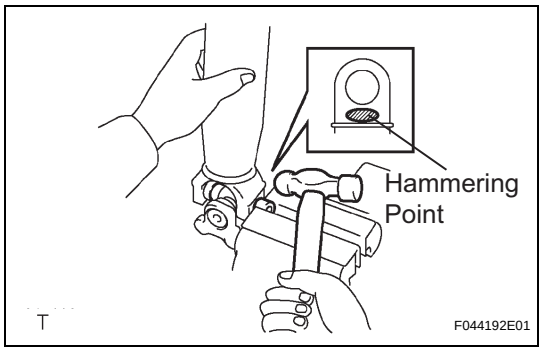

(f) Clamp the removed spider bearing outer race in a vise and tap the propeller shaft to remove the spider bearing.
NOTICE:
Do not tap the shaft tube.
HINT:
Remove the spider bearing from the opposite side of the spider using the same procedure.
(g) Separate the flange yoke and spider from the propeller shaft.

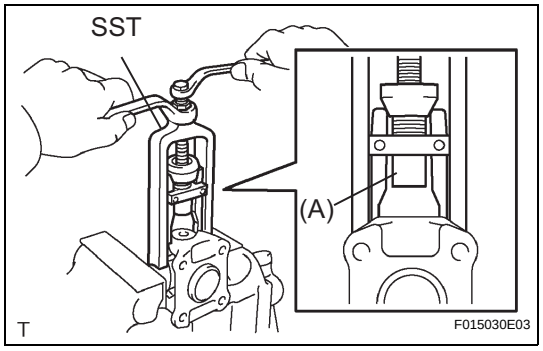

(h) Reinstall the 2 removed spider bearings onto the spider and clamp the spider bearings in a vise.
(i) Using SST, push the bearing out of the yoke.
SST 09332-25010
HINT:
Sufficiently raise the part indicated by (A) so that it does not come into contact with the bearing.

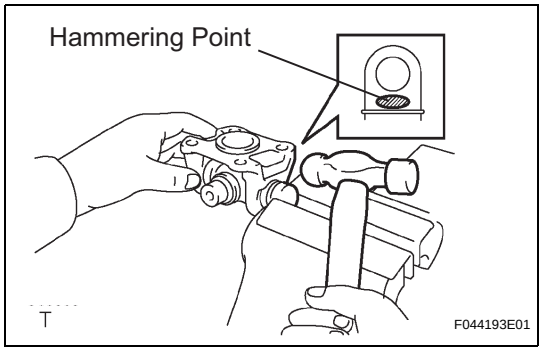

(j) Clamp the outer bearing race in a vise and tap off the yoke with a hammer.
(k) Remove the spider.

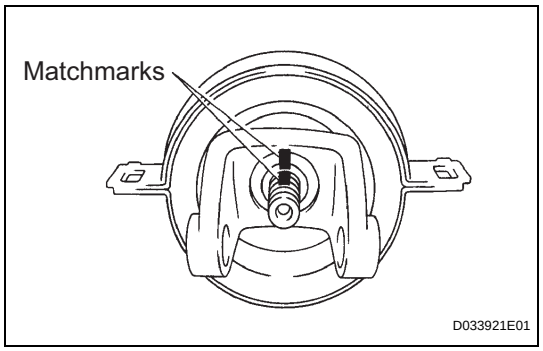

4. REMOVE CENTER SUPPORT BEARING ASSEMBLY NO. 2
(a) Fix the yoke at the center bearing section in a vice.
(b) Using a chisel and a hammer, loosen the staked part of the lock nut.
(c) Place matchmarks on the yoke and shaft.
(d) Using a brass bar and hammer, remove the center yoke, spacer and center support bearing from the intermediate shaft.

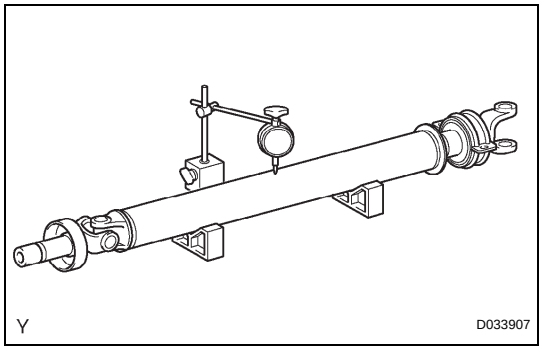

INSPECTION

1. INSPECT PROPELLER WITH CENTER BEARING SHAFT ASSEMBLY
(a) Using a dial indicator, check the propeller shaft runout.
Maximum runout:
0.6 mm (0.024 in.)
If the shaft runout is greater than the maximum, replace the shaft.

PR

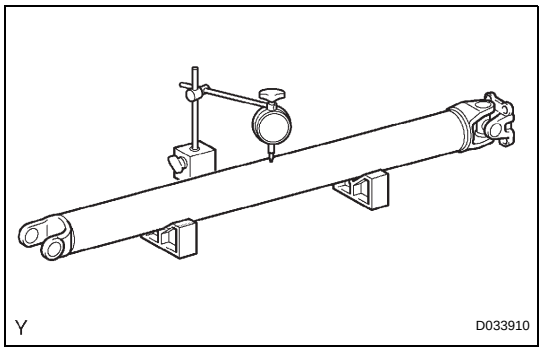

2. INSPECT PROPELLER SHAFT

(a) Using a dial indicator, check the propeller shaft runout.

Maximum runout:

0.6 mm (0.024 in.)

If the shaft runout is greater than the maximum, replace the shaft.

REASSEMBLY

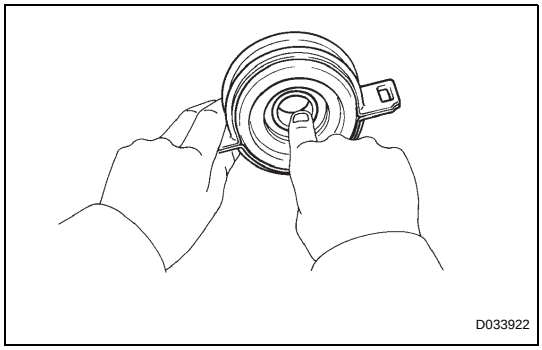

1. INSPECT CENTER SUPPORT BEARING ASSEMBLY NO. 2

(a) When turning the center bearing with your hand, check that it turns smoothly without catching and that there are no cracks or damage.
If there are any defects, replace it.

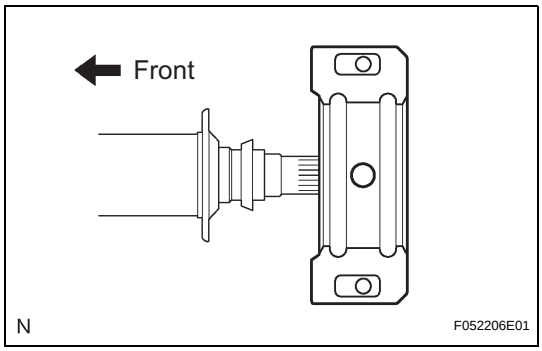

2. INSTALL CENTER SUPPORT BEARING ASSEMBLY NO. 2

(a) Install the center support bearing onto the intermediate shaft.

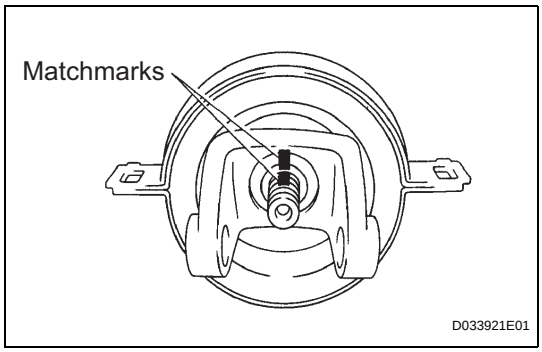

(b) Coat the splines of the intermediate shaft with MP grease No. 2.

(c) Align the matchmarks on the center yoke and intermediate shaft.
HINT:
If replacing either the center yoke or intermediate shaft, reassemble them so that the front side yoke of the intermediate shaft and the center yoke are facing in the same direction.

(d) Install the spacer.

(e) Fix the yoke at the center bearing section in a vice.

(f) Clamp the yoke in a vise, and press the bearing into position by tightening a new nut.
Torque: 182 N*m (1,850 kgf*cm, 134 ft.*lbf)

(g) Loosen the nut.

(h) Torque the nut again.
Torque: 69 N*m (700 kgf*cm, 51 ft.*lbf)

(i) Using a chisel and hammer, stake the lock nut.

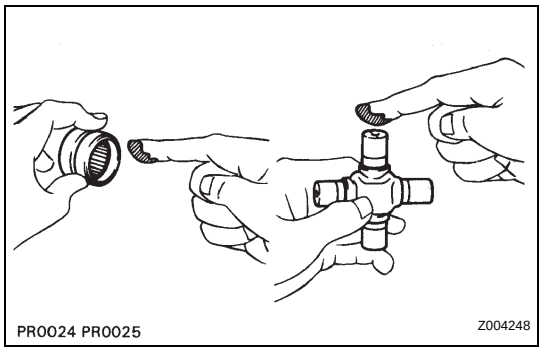

3. INSTALL PROPELLER SHAFT UNIVERSAL JOINT SPIDER BEARING

(a) Apply MP grease No. 2 to a new spider and bearings.

(b) Fit the spider into the flange yoke.

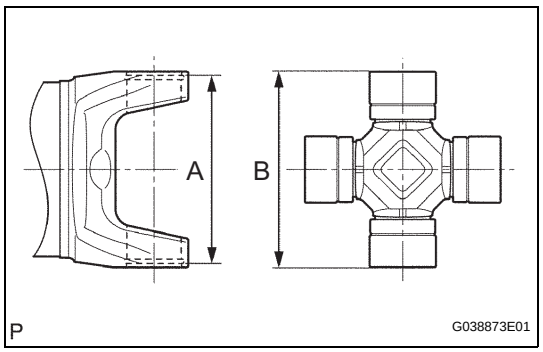

(c) Measure dimension A between the snap ring grooves.

(d) Insert the spider bearing into the spider journal portion, and then measure dimension B of the universal joint.

NOTICE:

When measuring dimension B, fix the spider and spider bearings in a vise and hold them firmly together.

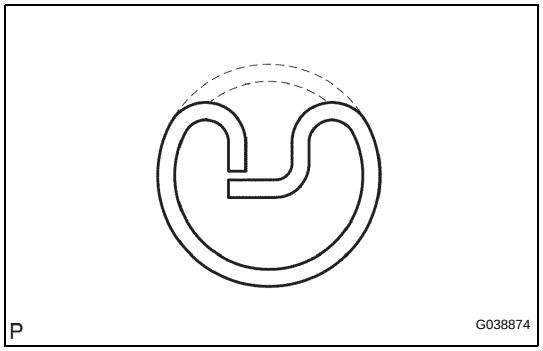

(e) Select snap rings to make dimensions A and B the same.

Snap Ring Type

Color	Thickness mm (in.)
Green	1.384 (0.0545)
Red	1.435 (0.0565)
Black	1.486 (0.0585)
Copper	1.511 (0.0595)
Silver	1.537 (0.0605)
Yellow	1.588 (0.0625)
Blue	1.638 (0.0645)

NOTICE:

- **Use new snap rings.**
- **If possible, use snap rings of the same thickness for both edges.**

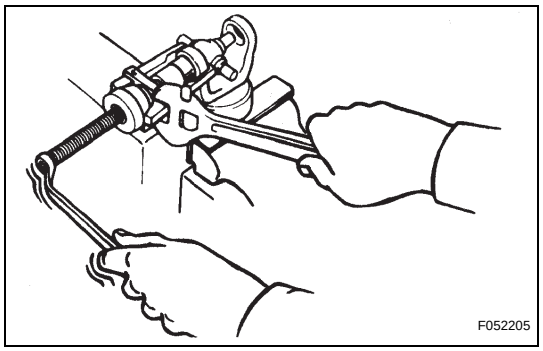

(f) Insert the spider into the yoke, and then using SST, press the spider bearing into the snap ring groove.

SST 09332-25010

(g) Press in the spider bearing on the opposite side in the same way.

NOTICE:

When pressing in the spider bearing, be careful not to damage its lip.

PR

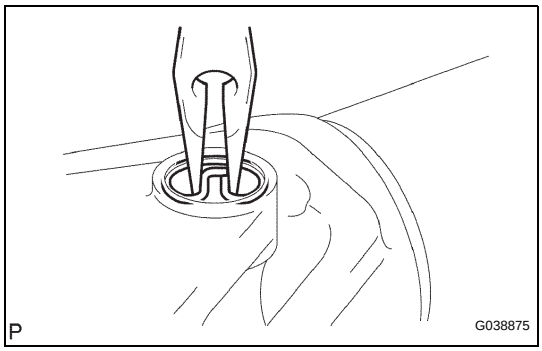

(h) Using needle-nose pliers, install new snap rings into the grooves of the yoke.

4. INSPECT PROPELLER SHAFT UNIVERSAL JOINT SPIDER BEARING

(a) Check the spider bearings for wear and damage.

(b) Check each spider bearing's axial play by turning the yoke while holding the shaft tightly.
Maximum bearing axial play:
0 to 0.05 mm (0 to 0.002 in.)

INSTALLATION

1. INSTALL PROPELLER WITH CENTER BEARING SHAFT ASSEMBLY

(a) Remove SST from the extension housing.

(b) Install the propeller shaft into the extension housing.

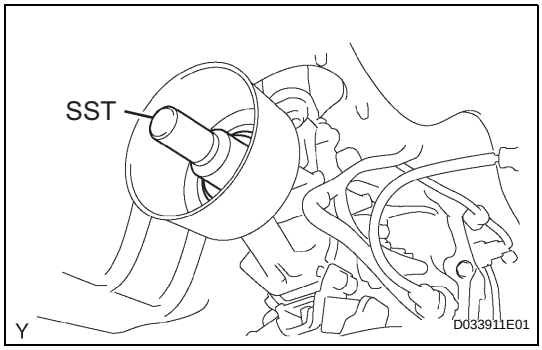

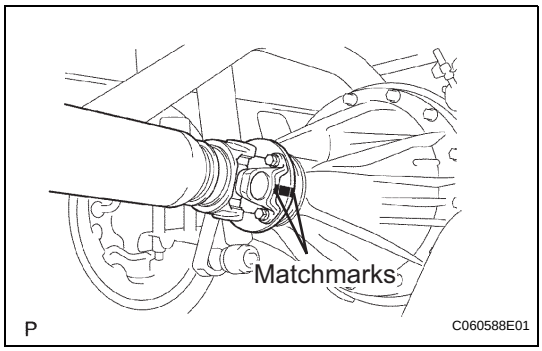

(c) Align the matchmarks on the propeller shaft flange and differential flange.

(d) Install the propeller shaft with the 4 bolts, 4 nuts and 4 washers.
Torque: 88 N*m (899 kgf*cm, 65 ft.*lbf)

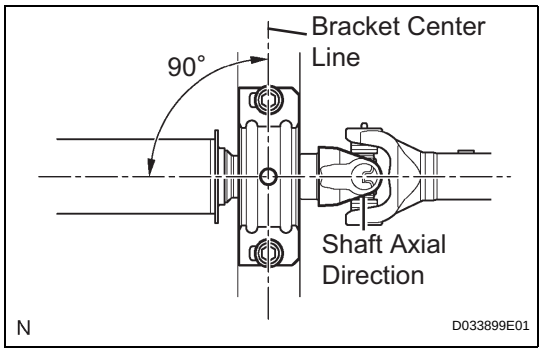

(e) Provisionally install the center support bearing with the 2 mounting bolts.
HINT:
Make sure the bearing is installed with the drain hole facing downwards.

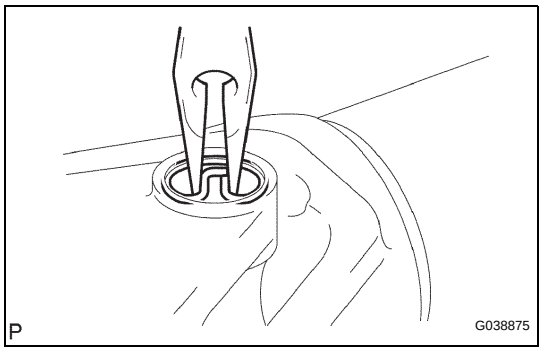

(h) Using needle-nose pliers, install new snap rings into the grooves of the yoke.

4. INSPECT PROPELLER SHAFT UNIVERSAL JOINT SPIDER BEARING

(a) Check the spider bearings for wear and damage.

(b) Check each spider bearing's axial play by turning the yoke while holding the shaft tightly.
Maximum bearing axial play:
0 to 0.05 mm (0 to 0.002 in.)

INSTALLATION

1. INSTALL PROPELLER WITH CENTER BEARING SHAFT ASSEMBLY

(a) Remove SST from the extension housing.

(b) Install the propeller shaft into the extension housing.

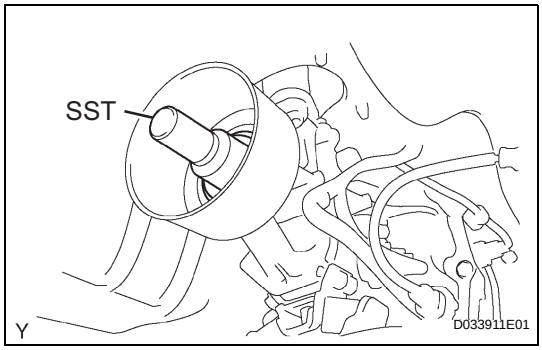

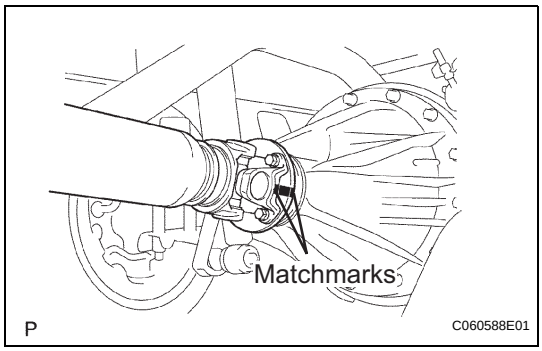

(c) Align the matchmarks on the propeller shaft flange and differential flange.

(d) Install the propeller shaft with the 4 bolts, 4 nuts and 4 washers.
Torque: 88 N*m (899 kgf*cm, 65 ft.*lbf)

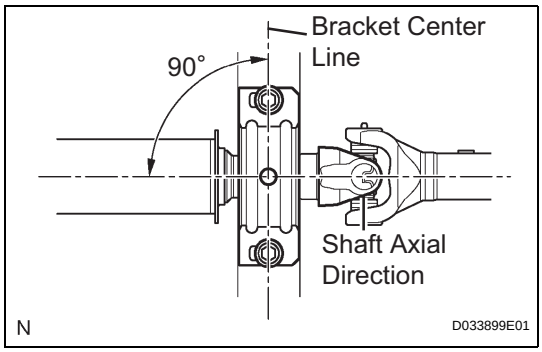

(e) Provisionally install the center support bearing with the 2 mounting bolts.
HINT:
Make sure the bearing is installed with the drain hole facing downwards.

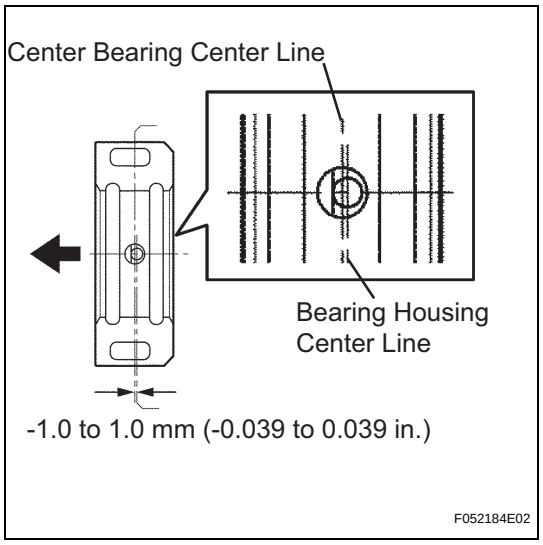

(f) Adjust the center support bearing.
HINT:
- With the vehicle unladen, adjust the center support bearing to keep the intervals, as shown.
- In the same condition, check the center line in the axial direction. Adjust the bearing if necessary.
- The center bearing center line and center bearing housing center line must be adjusted to within -1.0 to 1.0 mm (-0.039 to 0.039 in.) of each other in the vehicle's longitudinal direction when the vehicle is unladen.

(g) Torque the 2 bolts.
Torque: 36 N*m (369 kgf*cm, 27 ft.*lbf)

2. INSPECT TRANSMISSION OIL LEAKAGE

DISASSEMBLY

1. INSPECT FRONT PROPELLER SHAFT UNIVERSAL JOINT SPIDER BEARING

(a) Check the spider bearings for wear and damage.

(b) Check each spider bearing's axial play by turning the yoke while holding the shaft tightly.

Maximum bearing axial play:
0 to 0.05 mm (0 to 0.002 in.)

2. REMOVE FRONT PROPELLER SHAFT UNIVERSAL JOINT SPIDER BEARING

(a) Place matchmarks on the propeller shaft and flange yoke.

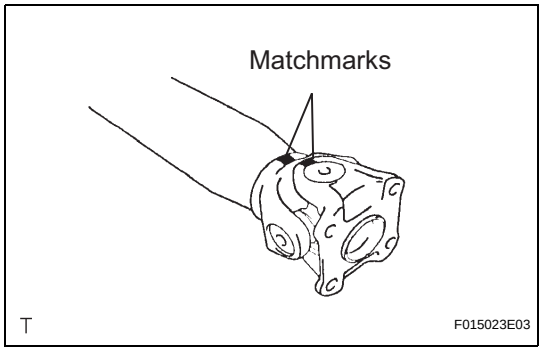

(b) Using a brass bar and a hammer, slightly tap in the spider bearing outer races.

(c) Using needle-nose pliers, remove the 4 snap rings from the grooves.

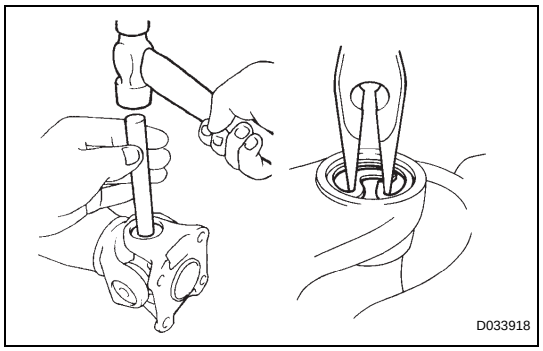

(d) Using SST, push the spider bearing out of the propeller shaft.

SST 09332-25010

HINT:
Sufficiently raise the part indicated by (A) so that it does not come into contact with the spider bearing.

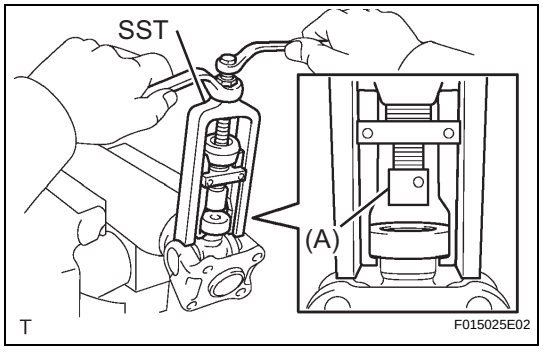

(e) Clamp the spider bearing outer race in a vise and tap off the propeller shaft with a hammer.

HINT:
Remove the bearing on the opposite side in the same procedure.

NOTICE:
Do not tap the shaft.

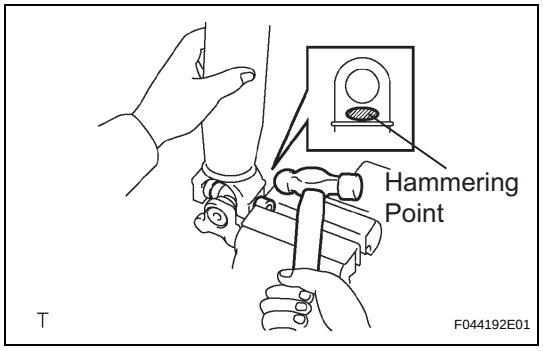

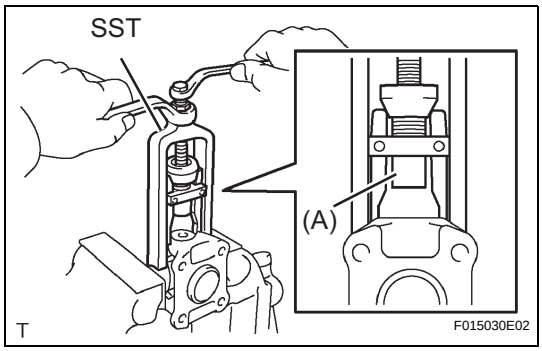

(f) Install the 2 removed spider bearing outer races onto the spider, and clamp them in a vise.
(g) Using SST, push the bearing out of the yoke.
SST 09332-25010
HINT:
Sufficiently raise the part indicated by (A) so that it does not come into contact with the bearing.

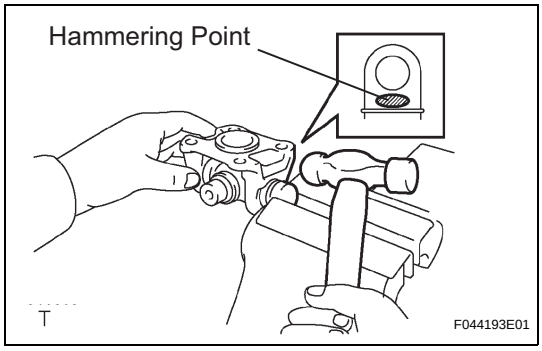

(h) Clamp the outer bearing race in a vise and tap off the flange yoke with a hammer.
(i) Remove the spider.

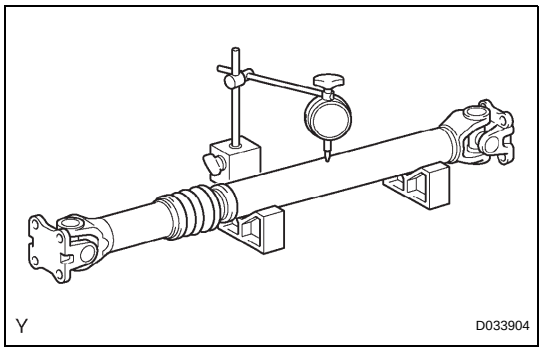

INSPECTION

1. INSPECT FRONT PROPELLER SHAFT ASSEMBLY

(a) Using a dial indicator, check the propeller shaft runout.
Maximum runout:
0.6 mm (0.024 in.)
If the shaft runout is greater than the maximum, replace the propeller shaft.

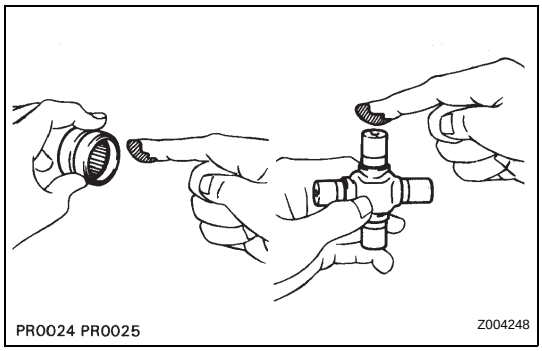

REASSEMBLY

1. INSTALL FRONT PROPELLER SHAFT UNIVERSAL JOINT SPIDER BEARING

(a) Apply MP grease No. 2 to a new spider and spider bearing.
(b) Fit the spider into the flange yoke.

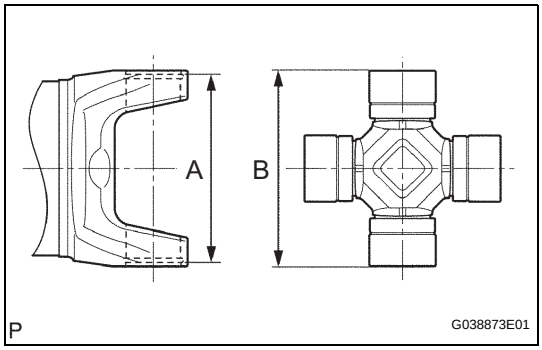

(c) Measure dimension A between the snap ring grooves.
(d) Insert the spider bearing into the spider journal portion, and then measure dimension B of the universal joint.
NOTICE:
When measuring dimension B, fix the spider and needle roller bearings in a vise and hold them firmly together.

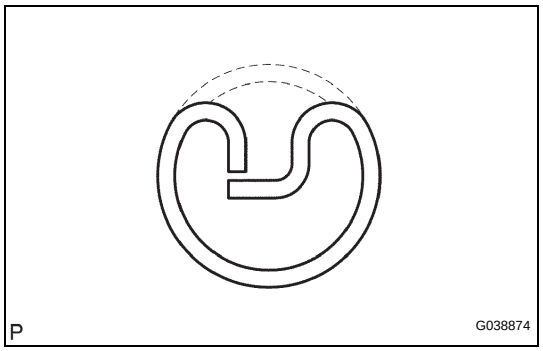

(e) Select snap rings to make dimensions A and B the same.

Snap Ring Type

Color	Thickness mm (in.)
Green	1.384 (0.0545)
Red	1.435 (0.0565)
Black	1.486 (0.0585)
Copper	1.511 (0.0595)
Silver	1.537 (0.0605)
Yellow	1.588 (0.0625)
Blue	1.638 (0.0645)

NOTICE:
- **Use new snap rings.**
- **If possible, use snap rings of the same thickness for both edges.**

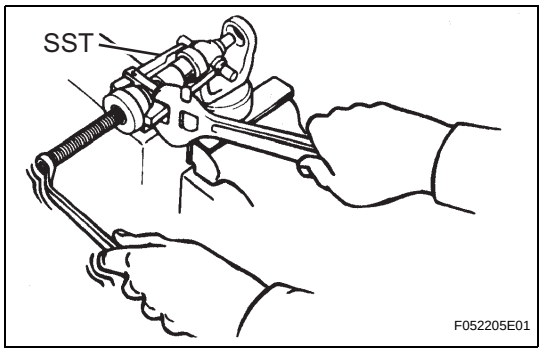

(f) Insert the spider into the yoke, and then using SST, press in the spider bearing into the snap ring groove.

SST 09332-25010

(g) Press in the spider bearing on the opposite side in the same way.

NOTICE:
When pressing in the spider bearing, be careful not to damage its lip.

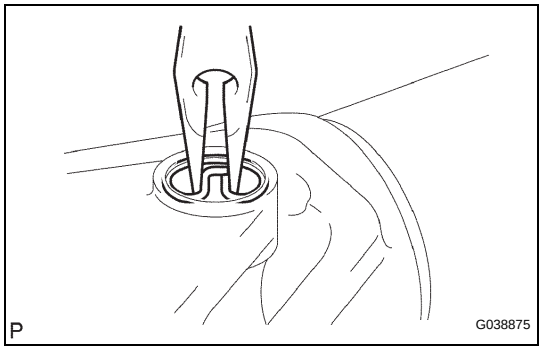

(h) Using needle-nose pliers, install new snap rings into the grooves of the yoke.

2. INSPECT FRONT PROPELLER SHAFT UNIVERSAL JOINT SPIDER BEARING

(a) Check the spider bearings for wear and damage.

(b) Check each spider bearing's axial play by turning the yoke while holding the shaft tightly.

Maximum bearing axial play:
0 to 0.05 mm (0 to 0.002 in.)

PR

INSTALLATION

1. INSPECT FRONT PROPELLER SHAFT ASSEMBLY

HINT:

When replacing the spider bearing, make sure that the grease fitting assembly hole is facing in the direction shown in the illustration.

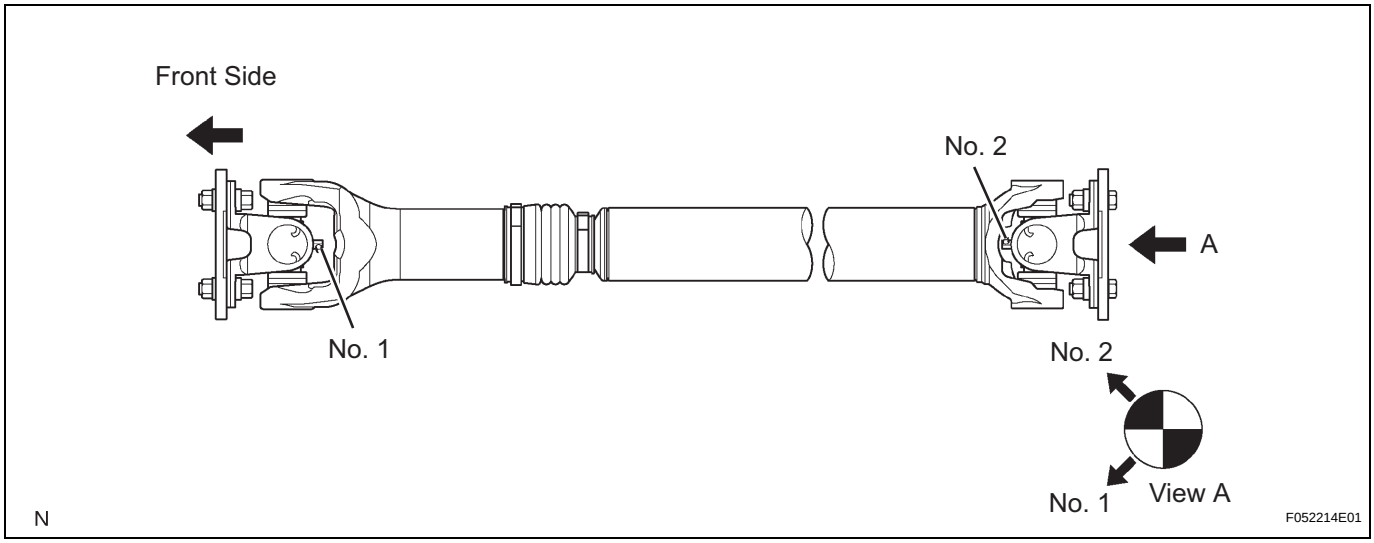

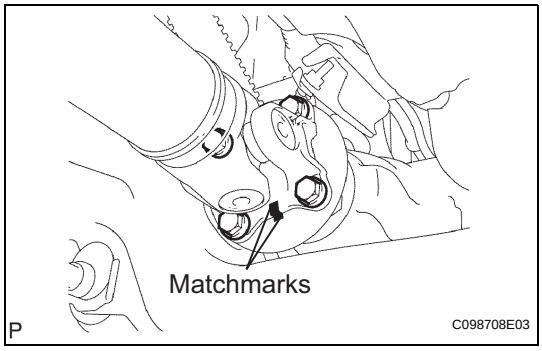

2. INSTALL FRONT PROPELLER SHAFT ASSEMBLY

(a) Align the matchmarks on the yoke and differential flange.

(b) Install the propeller shaft with the 4 bolts, 4 nuts and 4 washers.

Torque: 88 N*m (899 kgf*cm, 65 ft.*lbf)

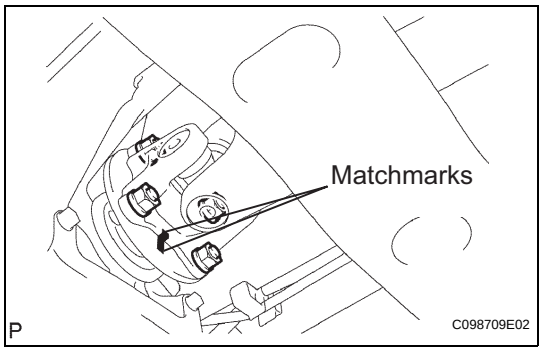

(c) Align the matchmarks on the yoke and transfer flange.

(d) Install the propeller shaft with the 4 nuts and 4 washers.

Torque: 88 N*m (899 kgf*cm, 65 ft.*lbf)

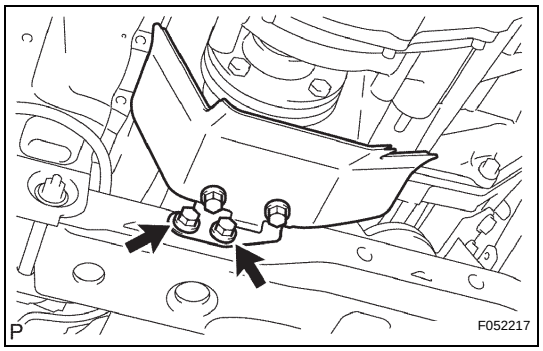

3. REMOVE PROPELLER SHAFT HEAT INSULATOR BRACKET SUB-ASSEMBLY

(a) Install the propeller shaft heat insulator bracket with the 2 bolts.
Torque: 16 N*m (160 kgf*cm, 12 ft.*lbf)

4. REMOVE EXHAUST FRONT PIPE ASSEMBLY NO. 2 (for 1GR-FE) (See page EX-3)

DISASSEMBLY

1. INSPECT PROPELLER SHAFT UNIVERSAL JOINT SPIDER BEARING

(a) Check the spider bearings for wear and damage.

(b) Check each spider bearing's axial play by turning the yoke while holding the shaft tightly.

Maximum bearing axial play:

0 to 0.05 mm (0 to 0.002 in.)

If the bearing axial play is greater than the maximum, replace the spider bearing.

2. REMOVE PROPELLER SHAFT UNIVERSAL JOINT SPIDER BEARING

(a) Place matchmarks on the flange yoke and sleeve yoke.

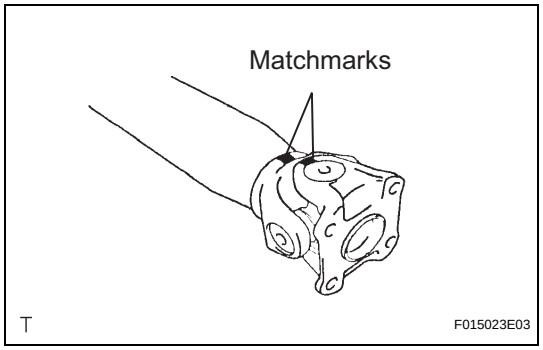

(b) Using a brass bar and a hammer, slightly tap in the spider bearing outer races.

(c) Using needle-nose pliers, remove the 4 snap rings from the grooves.

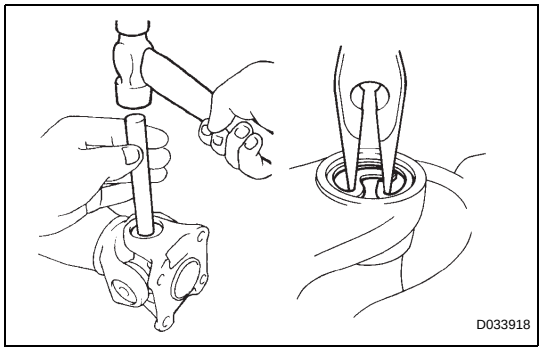

(d) Using SST, push the spider bearing out of the propeller shaft.

SST 09332-25010

HINT:

Sufficiently raise the part indicated by (A) so that it does not come into contact with the spider bearing.

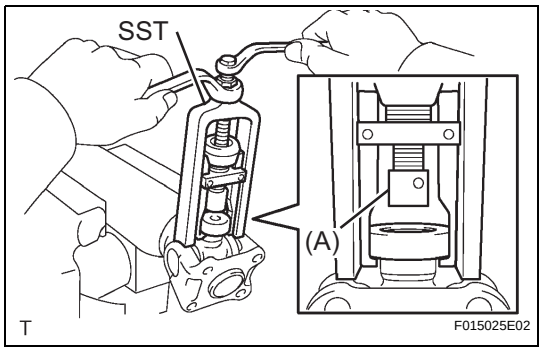

(e) Clamp the spider bearing outer race in a vise and tap off the propeller shaft with a hammer.

HINT:

Remove the bearing on opposite side in the same procedure.

NOTICE:

Do not tap the shaft.

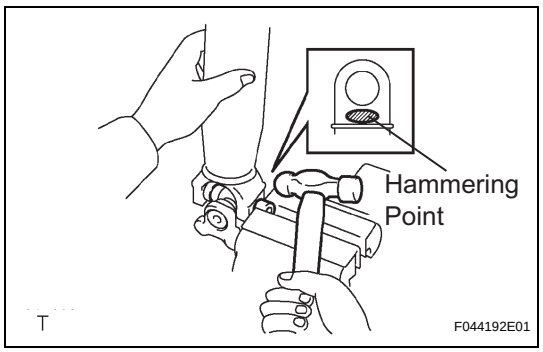

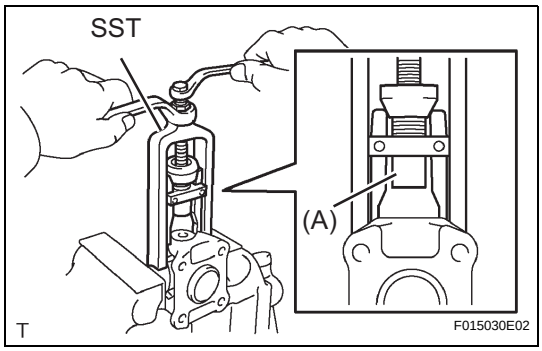

(f) Install the 2 removed spider bearing outer races onto the spider, and clamp them in a vise.
(g) Using SST, push the bearing out of the yoke.
SST 09332-25010
HINT:
Sufficiently raise the part indicated by (A) so that it does not come into contact with the bearing.

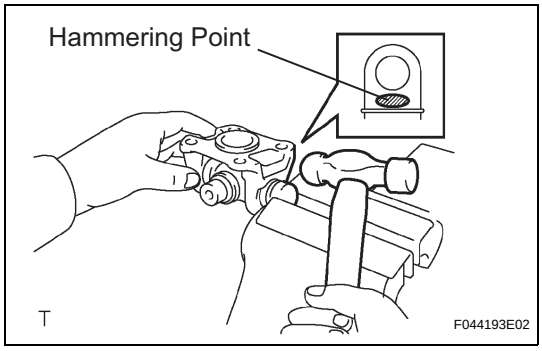

(h) Clamp the outer bearing race in a vise and tap off the flange yoke with a hammer.
(i) Remove the spider.

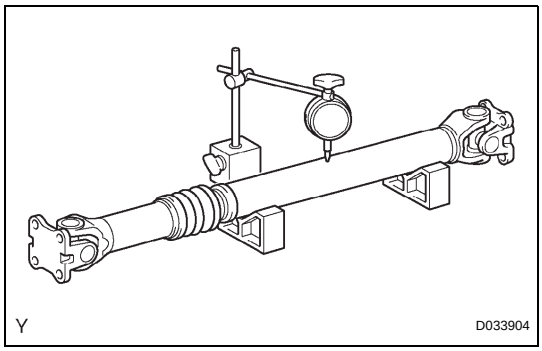

INSPECTION

1. INSPECT PROPELLER SHAFT ASSEMBLY

(a) Using a dial indicator, check the propeller shaft runout.
Maximum runout:
0.6 mm (0.024 in.)
If the shaft runout is greater than the maximum, replace the propeller shaft.

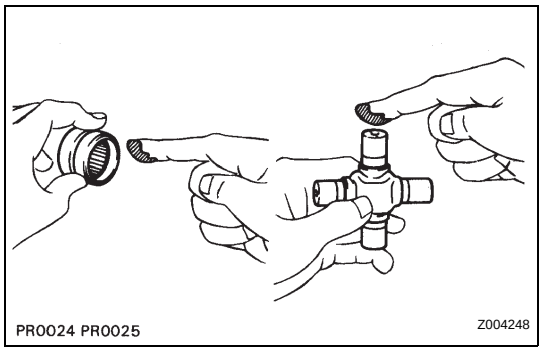

REASSEMBLY

1. INSTALL PROPELLER SHAFT UNIVERSAL JOINT SPIDER BEARING

(a) Apply MP grease No. 2 to a new spider and spider bearing.
(b) Fit the spider into the flange yoke.

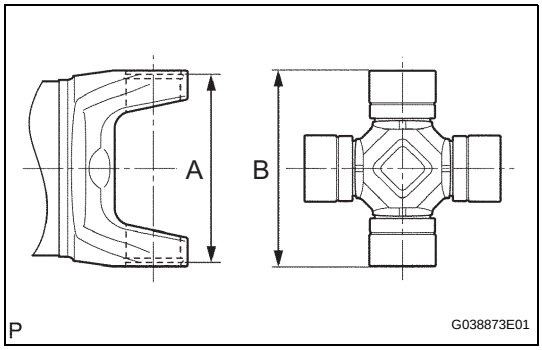

(c) Measure dimension A between the snap ring grooves.
(d) Insert the thrust washer and spider bearing into the spider journal portion, and then measure dimension B of the universal joint.
NOTICE:
When measuring dimension B, fix the spider and spider bearings in a vise and hold them firmly together.

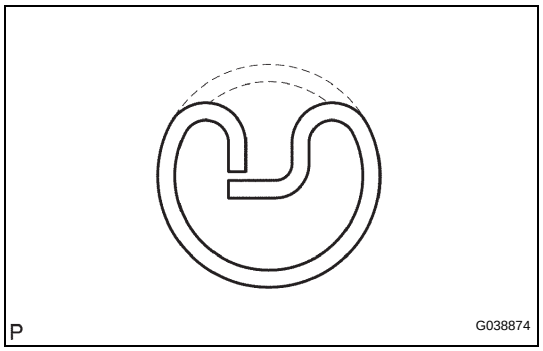

(e) Select snap rings to make dimensions A and B the same.

Snap Ring Type

Color	Thickness mm (in.)
Green	1.384 (0.0545)
Red	1.435 (0.0565)
Black	1.486 (0.0585)
Copper	1.511 (0.0595)
Silver	1.537 (0.0605)
Yellow	1.588 (0.0625)
Blue	1.638 (0.0645)

NOTICE:
- **Use new snap rings.**
- **If possible, use snap rings of the same thickness for both edges.**

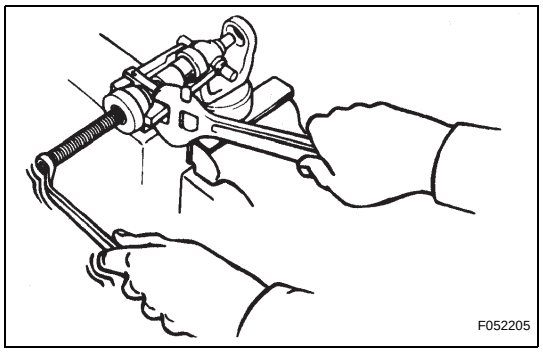

(f) Insert the spider into the yoke, and then using SST, press the spider bearing into the snap ring groove.

(g) Press in the spider bearing on the opposite side in the same way.

SST 09332-25010

NOTICE:

When pressing in the spider bearing, be careful not to damage its lip.

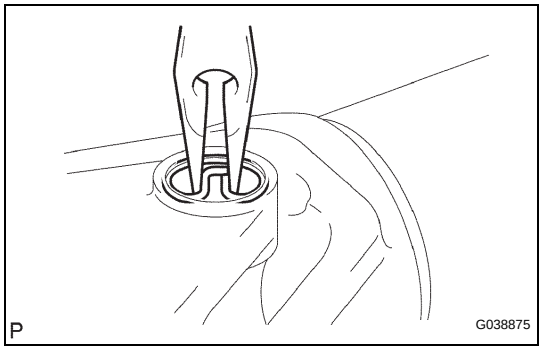

(h) Using needle-nose pliers, install new snap rings into the grooves of the yoke.

2. INSPECT PROPELLER SHAFT UNIVERSAL JOINT SPIDER BEARING

(a) Check the spider bearings for wear and damage.

(b) Check each spider bearing's axial play by turning the yoke while holding the shaft tightly.

Maximum bearing axial play:

0 to 0.05 mm (0 to 0.002 in.)

PR

INSTALLATION

1. INSPECT PROPELLER SHAFT ASSEMBLY

HINT:

When replacing the spider bearing, make sure that the grease fitting assembly hole is facing in the direction shown in the illustration.

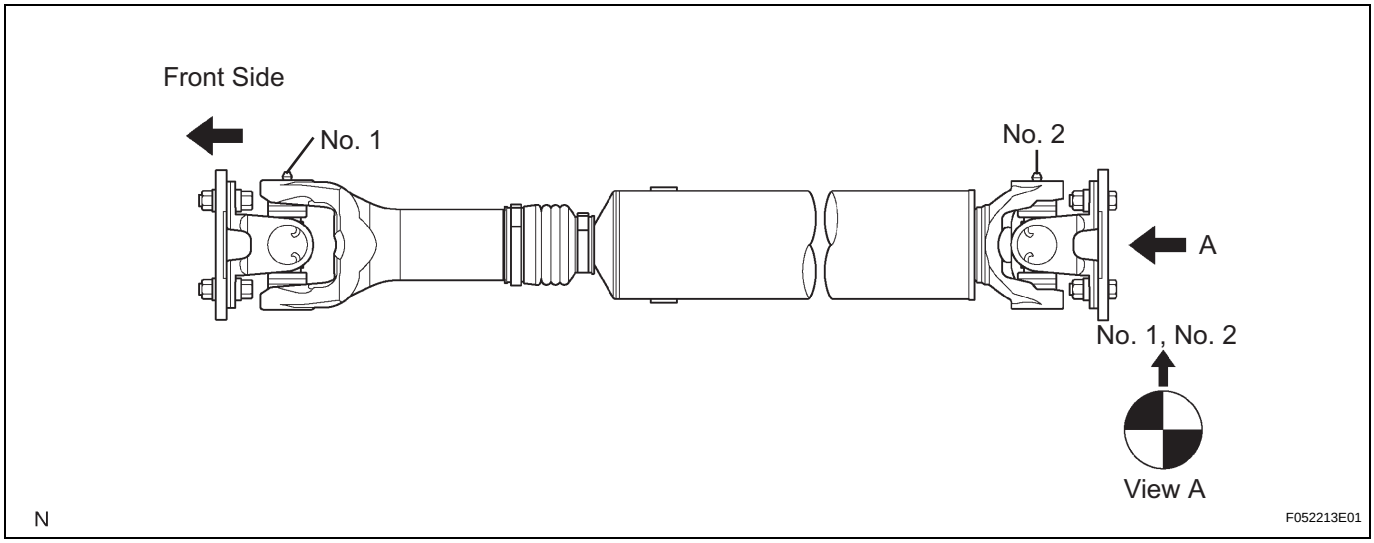

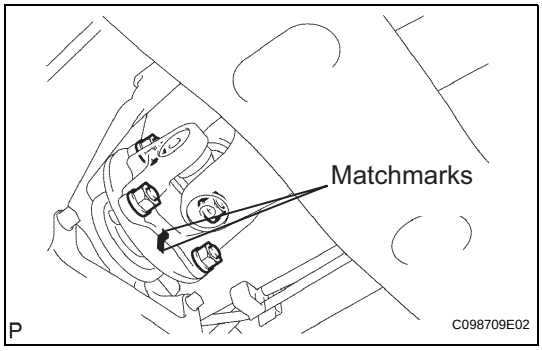

2. INSTALL PROPELLER SHAFT ASSEMBLY

(a) Align the matchmarks on the yoke and transfer flange.

(b) Install the propeller shaft with the 4 nuts and 4 washers.

Torque: 88 N*m (899 kgf*cm, 65 ft.*lbf)

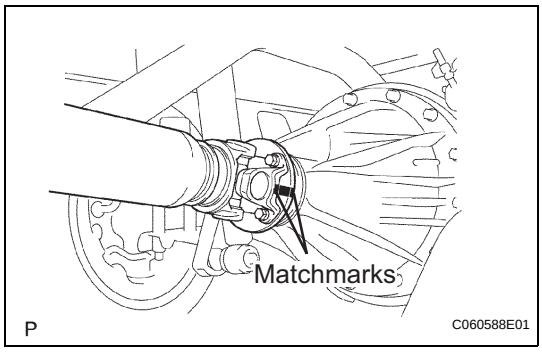

(c) Align the matchmarks on the yoke and differential flange.

(d) Install the propeller shaft with the 4 bolts, 4 nuts and 4 washers.

Torque: 88 N*m (899 kgf*cm, 65 ft.*lbf)

DISASSEMBLY

1. INSPECT PROPELLER SHAFT UNIVERSAL JOINT SPIDER BEARING

(a) Check the spider bearings for wear and damage.

(b) Check each spider bearing's axial play by turning the yoke while holding the shaft tightly.

Maximum bearing axial play:

0 to 0.05 mm (0 to 0.002 in.)

If the bearing axial play is greater than the maximum, replace the spider bearing.

2. REMOVE PROPELLER SHAFT UNIVERSAL JOINT SPIDER BEARING

(a) Place matchmarks on the propeller shaft and universal joint yoke.

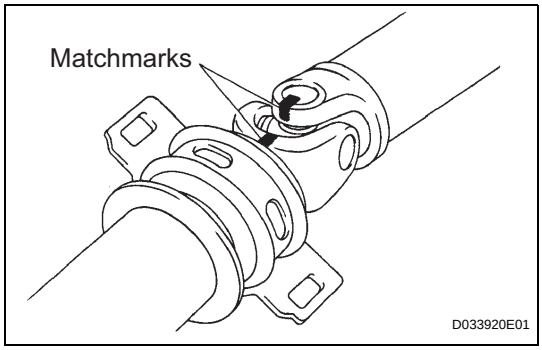

(b) Using a brass bar and hammer, slightly tap in the spider bearing.

(c) Using needle-nose pliers, remove the 4 snap rings from the grooves.

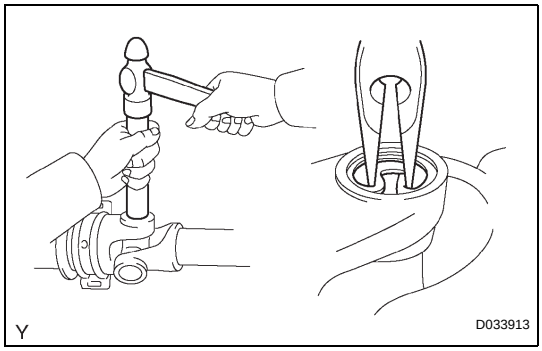

(d) Clamp the propeller shaft in a vise between aluminum plates.

(e) Using SST, push the spider bearing out of the propeller shaft.

SST 09332-25010

HINT:

Sufficiently raise the part indicated by (A) so that it does not come into contact with the spider bearing.

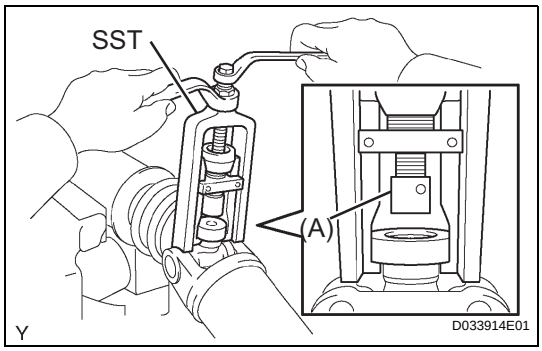

(f) Clamp the removed spider bearing outer race in a vise and tap the propeller shaft to remove the spider bearing.

NOTICE:

Do not tap the shaft tube.

HINT:

Remove the spider bearing from the opposite side of the spider using the same procedure.

(g) Separate the propeller with center bearing shaft.

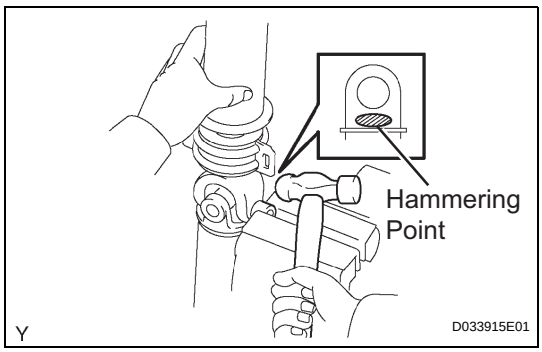

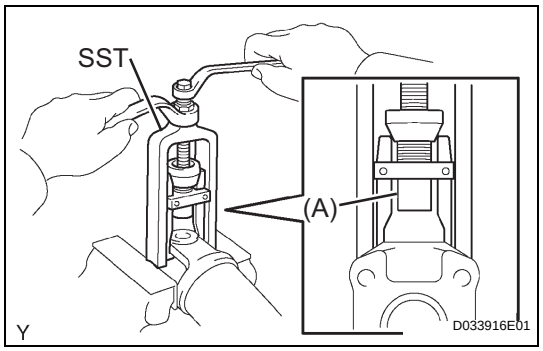

(h) Reinstall the 2 removed spider bearings onto the spider and clamp the spider bearings in a vise.
(i) Using SST, push the bearing out of the yoke.
SST 09332-25010
HINT:
Sufficiently raise the part indicated by (A) so that it does not come into contact with the bearing.

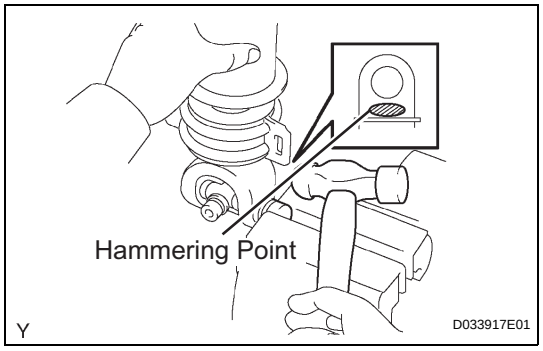

(j) Clamp the outer bearing race in a vise and tap off the yoke with a hammer.
(k) Remove the spider.

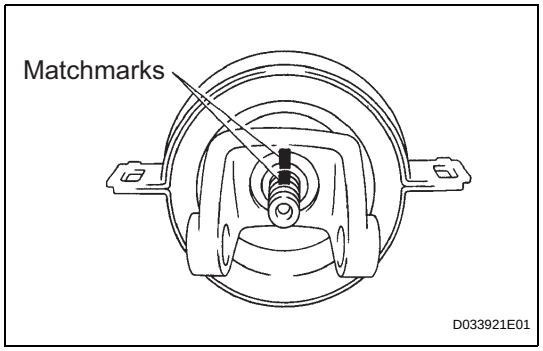

3. REMOVE CENTER SUPPORT BEARING ASSEMBLY NO. 2
(a) Fix the yoke at the center bearing section in a vice.
(b) Using a chisel and a hammer, loosen the staked part of the lock nut.
(c) Place matchmarks on the yoke and shaft.
(d) Using a brass bar and hammer, remove the center yoke, spacer and center support bearing from the intermediate shaft.

INSPECTION

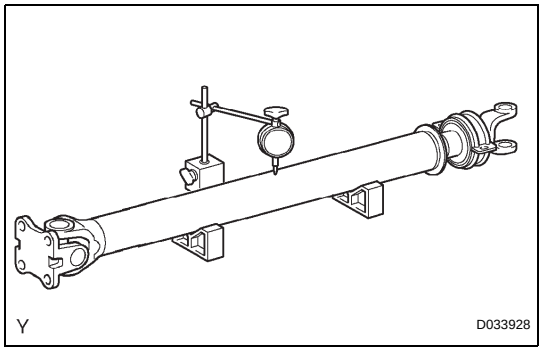

1. INSPECT PROPELLER WITH CENTER BEARING SHAFT ASSEMBLY
(a) Using a dial indicator, check the propeller shaft runout.
Maximum runout:
0.6 mm (0.024 in.)
If the shaft runout is greater than the maximum, replace the shaft.

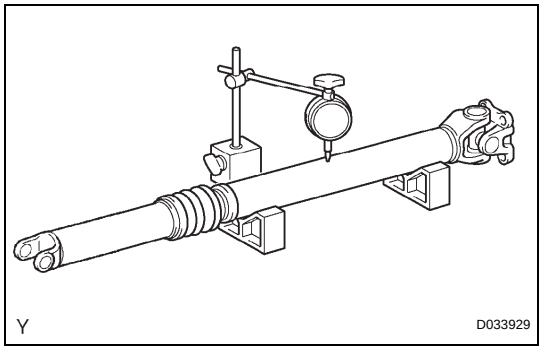

2. INSPECT PROPELLER SHAFT
(a) Using a dial indicator, check the propeller shaft runout.
Maximum runout:
0.6 mm (0.024 in.)
If the shaft runout is greater than the maximum, replace the shaft.

PR

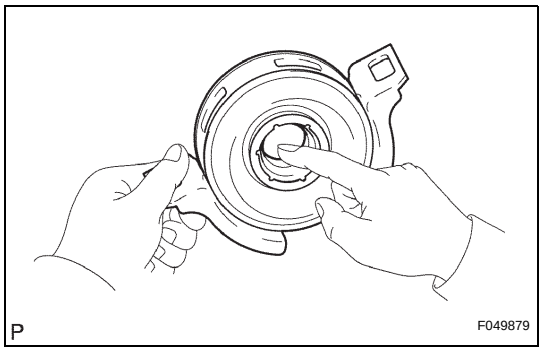

REASSEMBLY

1. INSPECT CENTER SUPPORT BEARING ASSEMBLY NO. 2

(a) When turning the center bearing with your hand, check that it turns smoothly without catching and that there are no cracks or damage.
If there are any defects, replace it.

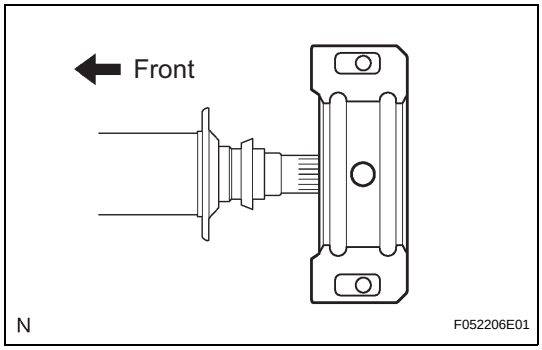

2. INSTALL CENTER SUPPORT BEARING ASSEMBLY NO. 2

(a) Install the center support bearing onto the intermediate shaft.

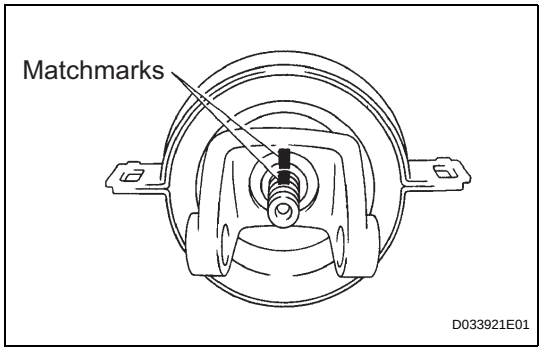

(b) Coat the splines of the intermediate shaft with MP grease.
(c) Align the matchmarks on the center yoke and intermediate shaft.
HINT:
If replacing either the center yoke or intermediate shaft, reassemble them so that the front side yoke of the intermediate shaft and the center yoke are facing in the same direction.
(d) Install the spacer.
(e) Fix the yoke at the center bearing section in a vice.
(f) Clamp the yoke in a vise, and press the bearing into position by tightening a new nut.
Torque: 182 N*m (1,850 kgf*cm, 134 ft.*lbf)
(g) Loosen the nut.
(h) Torque the nut again.
Torque: 69 N*m (700 kgf*cm, 51 ft.*lbf)
(i) Using a chisel and hammer, stake the lock nut.

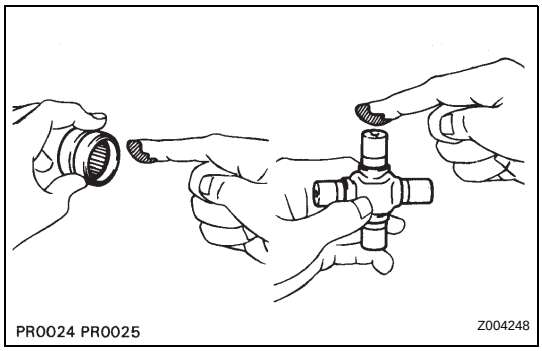

3. INSTALL PROPELLER SHAFT UNIVERSAL JOINT SPIDER BEARING

(a) Apply MP grease No. 2 to a new spider and bearings.
(b) Fit the spider into the flange yoke.

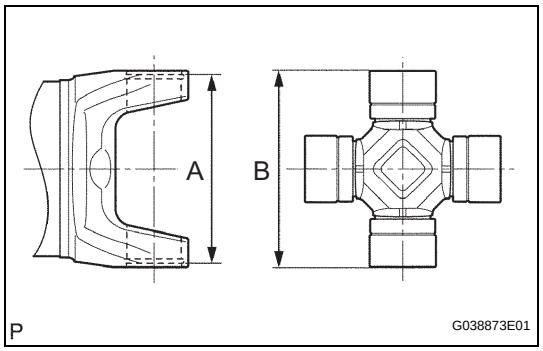

(c) Measure dimension A between the snap ring grooves.

(d) Insert the spider bearing into the spider journal portion, and then measure dimension B of the universal joint.

NOTICE:

When measuring dimension B, fix the spider and needle roller bearings in a vise and hold them firmly together.

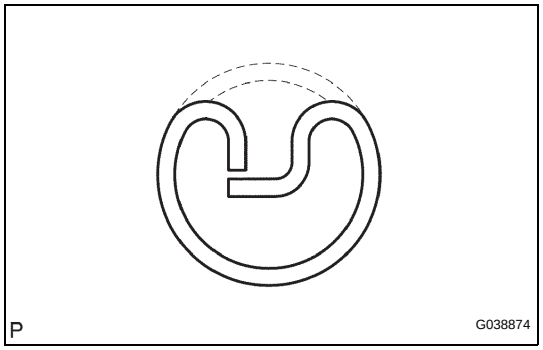

(e) Select snap rings to make dimensions A and B the same.

Snap Ring Type

Color	Thickness mm (in.)
Green	1.384 (0.0545)
Red	1.435 (0.0565)
Black	1.486 (0.0585)
Copper	1.511 (0.0595)
Silver	1.537 (0.0605)
Yellow	1.588 (0.0625)
Blue	1.638 (0.0645)

PR

NOTICE:

- **Use new snap rings.**
- **If possible, use snap rings of the same thickness for both edges.**

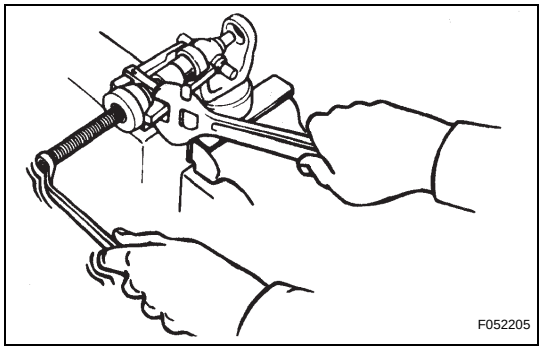

(f) Insert the spider into the yoke, and then using SST, press the spider bearing into the snap ring groove.

(g) Press in the spider bearing on the opposite side in the same way.

SST 09332-25010

NOTICE:

When pressing in the spider bearing, be careful not to damage its lip.

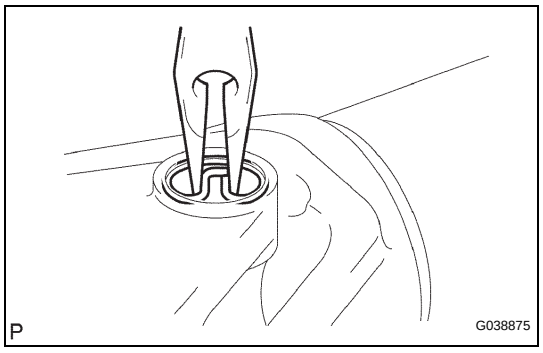

(h) Using needle-nose pliers, install new snap rings into the grooves of the yoke.

4. INSPECT PROPELLER SHAFT UNIVERSAL JOINT SPIDER BEARING

(a) Check the spider bearings for wear and damage.

(b) Check each spider bearing's axial play by turning the yoke while holding the shaft tightly.

Maximum bearing axial play:

0 to 0.05 mm (0 to 0.002 in.)

INSTALLATION

1. INSPECT PROPELLER WITH CENTER BEARING SHAFT ASSEMBLY

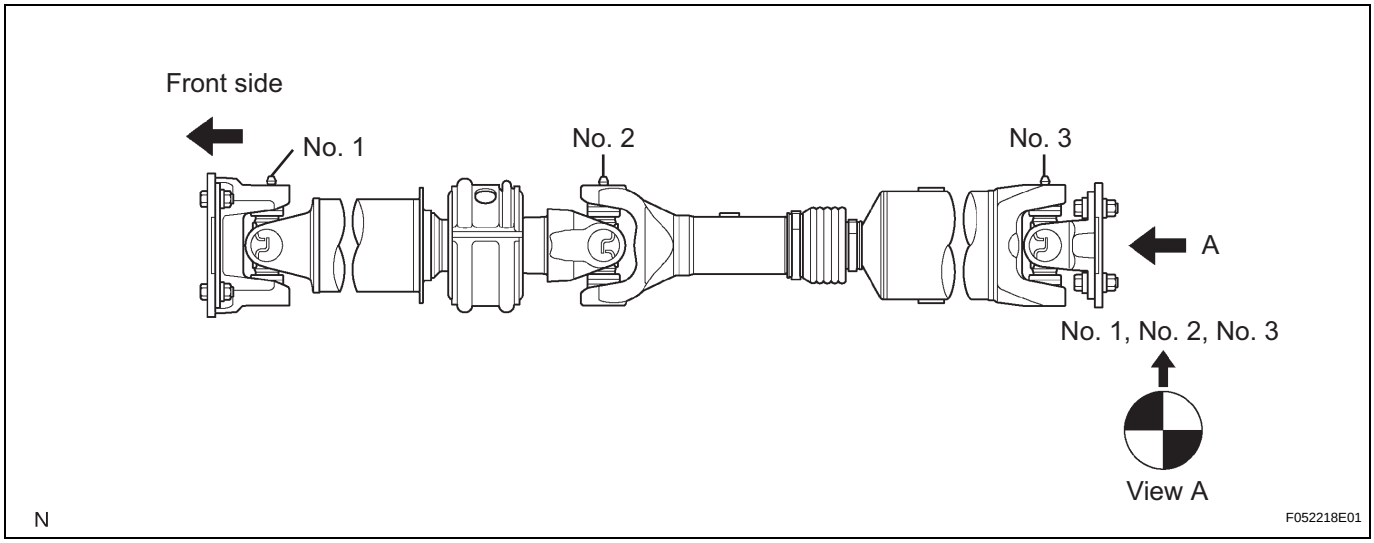

HINT:
When replacing the spider bearing, make sure that the grease fitting assembly hole is facing in the direction shown in the illustration.

2. INSTALL PROPELLER WITH CENTER BEARING SHAFT ASSEMBLY

(a) Align the matchmarks on the yoke and transfer flange.

(b) Install the propeller shaft with the 4 nuts and 4 washers.
Torque: 88 N*m (899 kgf*cm, 65 ft.*lbf)

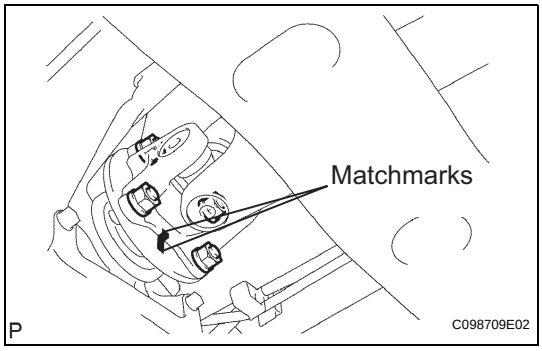

(c) Align the matchmarks on the yoke and differential flange.

(d) Install the propeller shaft with the 4 bolts, 4 nuts and 4 washers.
Torque: 88 N*m (899 kgf*cm, 65 ft.*lbf)

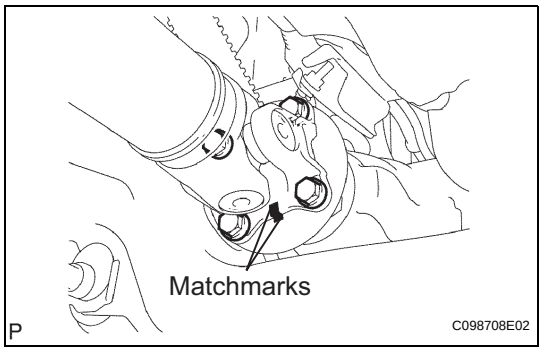

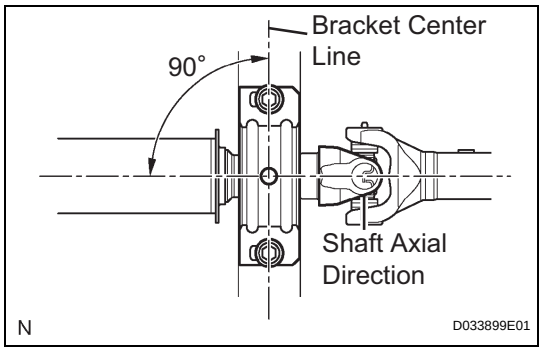

(e) Provisionally install the center support bearing with 2 mounting bolts.
HINT:
Make sure the bearing is installed with the drain hole facing downwards.

(f) Torque the 2 bolts.
Torque: 36 N*m (369 kgf*cm, 27 ft.*lbf)

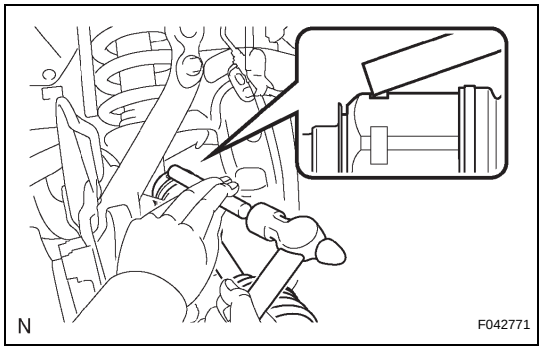

INSTALLATION

1. INSTALL FRONT DRIVE SHAFT

(a) Coat the spline of the inboard joint shaft with ATF.

(b) Align the shaft splines and install the drive shaft with a brass bar and hammer.

NOTICE:

- **Set the snap ring with the opening side facing downward.**
- **Be careful not to damage the oil seal.**

HINT:

Whether the inboard joint shaft is in contact with the pinion shaft or not can be confirmed from the sound or feeling when driving it.

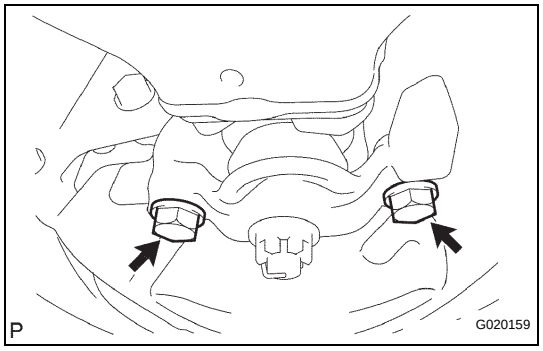

2. INSTALL FRONT SUSPENSION LOWER ARM

(a) Install the front lower ball joint attachment with the 2 bolts.

Torque: 160 N*m (1,631 kgf*cm, 118 ft.*lbf)

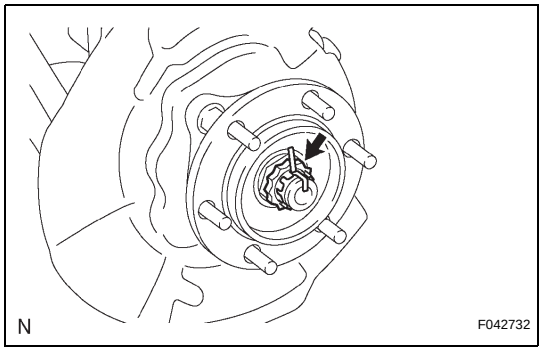

3. INSTALL FRONT AXLE HUB NUT

(a) Install the hub nut.

Torque: 235 N*m (2,396 kgf*cm, 173 ft.*lbf)

(b) Install the adjusting cap and a new cotter pin.

(c) Install the front axle hub grease cap.

4. INSTALL TIE ROD END SUB-ASSEMBLY

(a) Install the tie rod end onto the steering knuckle.

(b) Install the nut.

Torque: 91 N*m (928 kgf*cm, 67 ft.*lbf)

(c) Install a new cotter pin.

DS

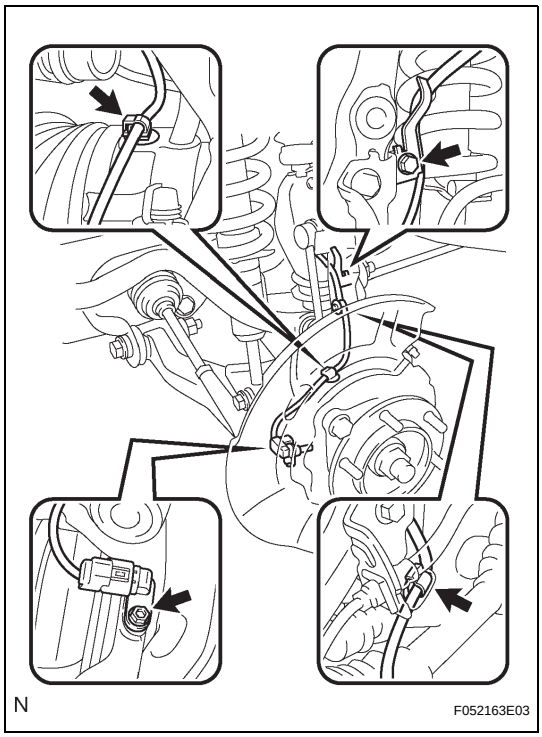

5. **INSTALL FRONT SPEED SENSOR**
   (a) Install the speed sensor wire harness onto the steering knuckle with the bolt.
   Torque: 13 N*m (133 kgf*cm, 10 ft.*lbf)
   (b) Engage the 2 clamps.
   (c) Install the speed sensor with the bolt.
   Torque: 8.3 N*m (85 kgf*cm, 73 in.*lbf)
6. **INSTALL FRONT WHEEL**
   Torque: 113 N*m (1,152 kgf*cm, 83 ft.*lbf)
7. **INSPECT DIFFERENTIAL OIL (See page DF-8)**
8. **CONNECT CABLE TO NEGATIVE BATTERY TERMINAL**
   Torque: 3.9 N*m (40 kgf*cm, 35 in.*lbf)
   (See page IN-5)
9. **CHECK VSC SENSOR SIGNAL (w/ VSC)**
   (See page BC-103)
10. **CHECK ABS SENSOR SIGNAL (w/o VSC)**
    (See page BC-7)
11. **CHECK FOR DIFFERENTIAL OIL LEAKAGE**
12. **INSPECT AND ADJUST FRONT WHEEL ALIGNMENT**
    (See page SP-7)

ON-VEHICLE INSPECTION

NOTICE:

- **Switch the four wheel drive control switch when the A/T shift lever is in the N position and the vehicle speed is 3 mph (5km/h) or less.**
- **Switch the four wheel drive control switch when the clutch start switch is turned ON and the vehicle speed is 2mph (3 km/h) or less.**
- **Do not change from H2 to H4 when the vehicle speed is 62 mph (100 km/h) or more.**

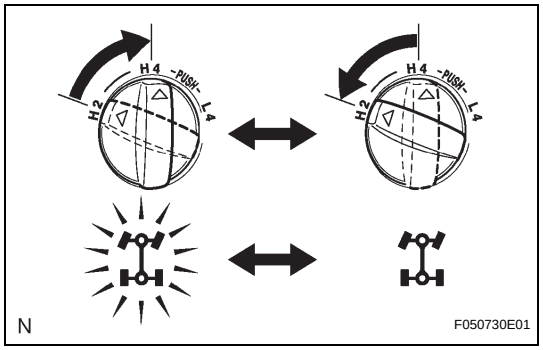

1. INSPECT H2 (2WD)-H4 (4WD) SHIFT

(a) Start the engine.
(b) Turn the four wheel drive control switch from the H2 position to the H4 position.
(c) Check that the 4WD indicator light blinks and then stays on.
(d) Turn the four wheel drive control switch from the H4 position to the H2 position.
(e) Check that the 4WD indicator light blinks and then goes off.

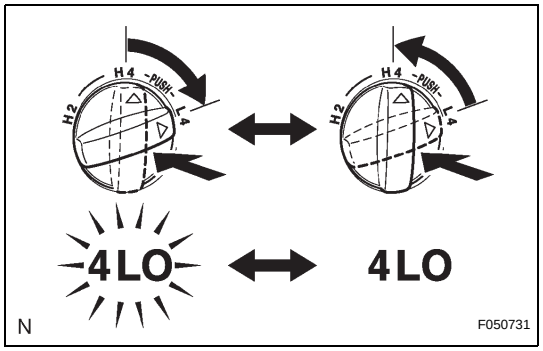

2. INSPECT H4 (4WD)-L4 (4WD) SHIFT

(a) Start the engine.
(b) Turn the four wheel drive control switch from the H4 position to the L4 position while pressing it.
(c) Check that the 4LO indicator light blinks and then stays on.
(d) Turn the four wheel drive control switch from the L4 position to the H4 position while pressing it.
(e) Check that the 4LO indicator light blinks and then goes off.

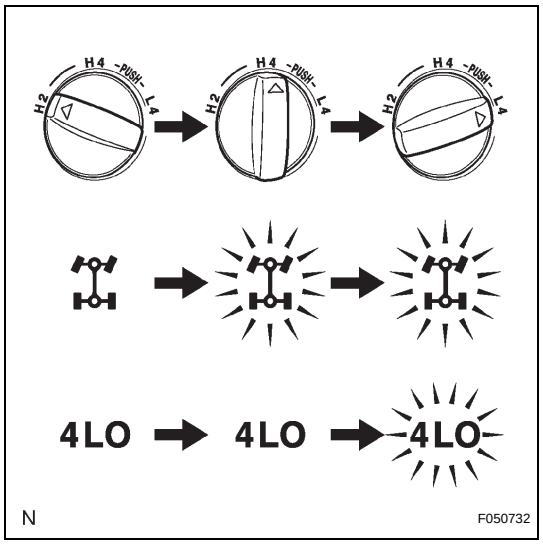

3. INSPECT H2 (2WD)-L4 (4WD) SHIFT

(a) Start the engine.
(b) Turn the four wheel drive control switch from the H2 position to the H4 position.
(c) Check that the 4WD indicator light blinks and then stays on.
(d) Turn the four wheel drive control switch from the H4 position to the L4 position while pressing it.
(e) Check that the 4LO indicator light blinks and then stays on.

DF

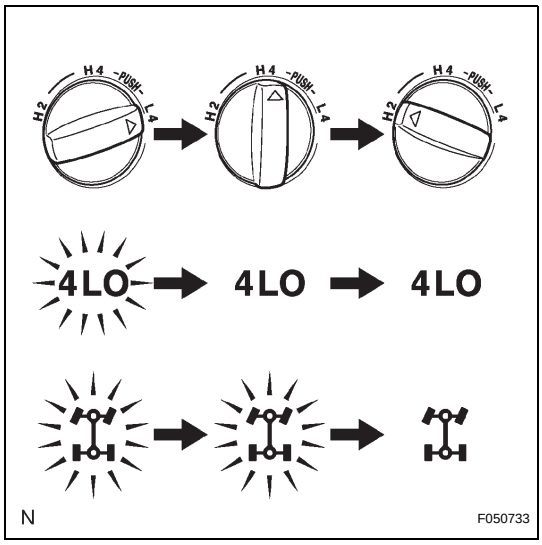

4. INSPECT L4 (4WD)-H2 (2WD) SHIFT

(a) Start the engine.

(b) Turn the four wheel drive control switch from the L4 position to the H4 position while pressing it.

(c) Check that the 4LO indicator light blinks and then goes off.

(d) Turn the four wheel drive control switch from the H4 position to the H2 position.

(e) Check that the 4WD indicator light blinks and then goes off.

INSPECTION

1. INSPECT 4 WHEEL DRIVE CONTROL SWITCH

(a) Using an ohmmeter, measure the resistance between the terminals.

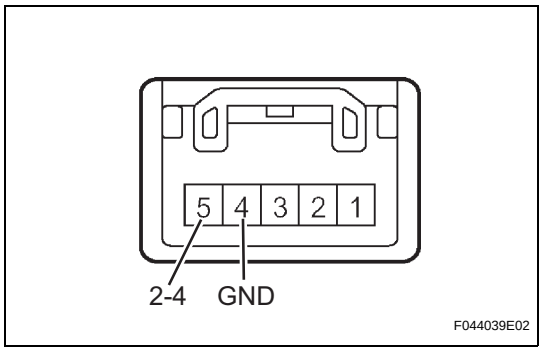

Switch position	Tester connection	Specified condition
H2	5 (2-4) - 4 (GND)	Below 1Ω
H4	5 (2-4) → 4 (GND)	Below 1Ω
H4	5 (2-4) ← 4 (GND)	100 kΩ or higher

If the result is not as specified, replace the four wheel drive control switch or bulb.

2. INSPECT DIFFERENTIAL VACUUM ACTUATOR ASSEMBLY

(a) Measure the resistance between terminals 1 - 2.

Standard resistance:

0.1 to 100 Ω

(b) Measure the resistance between terminals 1 or 2 and the body ground.

Standard resistance:

5 MΩ or more

If the result is not as specified, replace the differential vacuum actuator assembly.

(c) Apply the battery positive voltage between terminals 1 - 2, and check the actuator operation by sound, actuator status and resistance between terminals 3 - 4, 5 - 4 and 6 - 4.

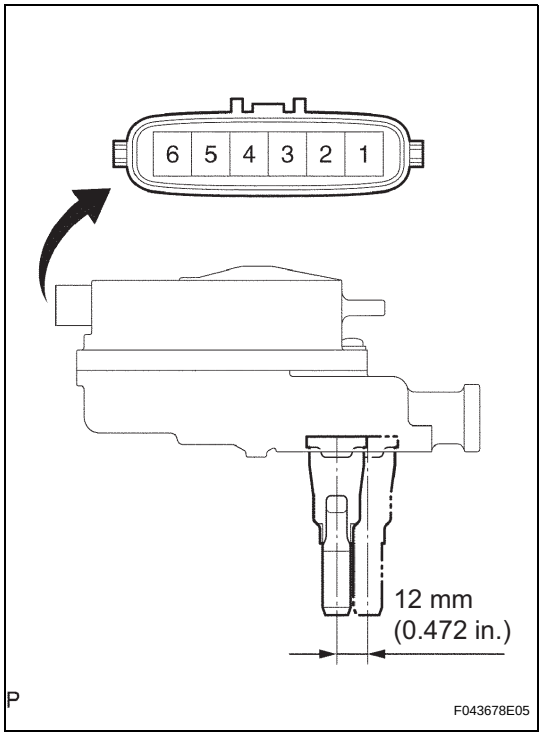

Battery voltage applied terminal	3 - 4 terminals resistance	5 - 4 terminals resistance	6 - 4 terminals resistance	Actuator status
1 (+) - 2 (-)	Below 1 Ω	Below 1 Ω	10 kΩ or higher	Connected
1 (-) - 2 (+)	10 kΩ or higher	10 kΩ or higher	Below 1 Ω	Disconnected

3. INSPECT FOUR WHEEL DRIVE CONTROL ECU

(a) Connect the wire harness side connector to the four wheel drive control ECU and inspect the wire harness side connector from the back side, as shown.

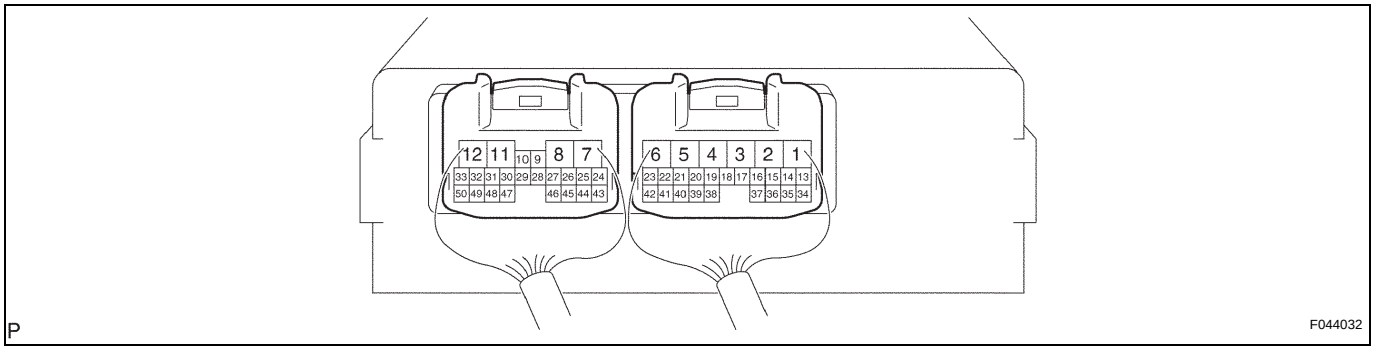

STANDARD VALUE OF ECU TERMINAL

Terminals (Symbols)	Conditions	STD Voltage (V)
2 (TM1) - 1 (TM2)	• Ignition switch ON • Differential lock switch in OFF position • Four wheel drive control switch H2 position → H4 position	10 to 14
1 (TM2) - 2 (TM1)	• Ignition switch ON • Keep pressing differential lock switch for approx. 2 seconds to turn it ON • Four wheel drive control switch L4 position → H4 position	10 to 14
3 (DM1) - 4 (DM2)	• Ignition switch ON • A.D.D. FREE → LOCK	10 to 14 or 0 to 14 pulse generation then less than 0.5
4 (DM2) - 3 (DM1)	• Ignition switch ON • A.D.D. LOCK → FREE	10 to 14 or 0 to 14 pulse generation then less than 0.5
12 (GND) - Body ground	Ignition switch OFF	Below 1Ω
11 (IG) - 12 (GND)	Ignition switch ON	10 to 14
18 (DL2) - 12 (GND)	• Ignition switch ON • A.D.D. LOCK → FREE	1.5 or less → 10 to 14
19 (DL1) - 12 (GND)	• Ignition switch ON • A.D.D. FREE → LOCK	1.5 or less → 10 to 14
25 (2-4) - 12 (GND)	• Ignition switch ON • Four wheel drive control switch L4 position → H2 position or H4 position	10 to 14 → 1.5 or less
26 (SPD) - 12 (GND)	During driving	Pulse generation
28 (IND3) - 12 (GND)	• Ignition switch ON • Four wheel drive control switch H4 position → L4 position	10 to 14 → 1.5 to 3.5
32 (LO) - 12 (GND)	• Ignition switch ON • Four wheel drive control switch H4 position → L4 position	10 to 14 → 1.5 or less
42 (ADD) - 12 (GND)	• Ignition switch ON • A.D.D. FREE → LOCK	10 to 14 → 1.5 or less
23 (L4) - 12 (GND)	• Ignition switch ON • Four wheel drive control switch H2 position or H4 position → L4 position	10 to 14 → 1.5 or less
38 (4WD) - 12 (GND)	• Ignition switch ON • Four wheel drive control switch H2 position → H4 position	10 to 14 → 1.5 or less
39 (TL3) - 12 (GND)	• Ignition switch ON • Four wheel drive control switch H2 position → L4 position	10 to 14 → 0.88 or less
40 (TL2) - 12 (GND)	• Ignition switch ON • Four wheel drive control switch H2 position → H4 position	10 to 14 → 0.88 or less
41 (TL1) - 12 (GND)	• Ignition switch ON • Four wheel drive control switch H2 position → H4 position or L4 position	0.88 or less → 10 to 14
45 (IND1) - 12 (GND)	• Ignition switch ON • Four wheel drive control switch H2 position → H4 position or L4 position	10 to 14 → 0 to 3.5
48 (N) - 12 (GND)	• Ignition switch ON • Transmission shift lever other position → N position	1.5 or less → 10 to 14

DF

Terminals (Symbols)	Conditions	STD Voltage (V)
49 (MTN) - 12 (GND)	• Ignition switch ON • Clutch start switch OFF position → ON position	10 to 14 → 1.5 or less

INSTALLATION

1. INSTALL REAR DIFFERENTIAL DRIVE PINION BEARING SPACER

(a) Install a new rear differential drive pinion bearing spacer.

2. INSTALL REAR DRIVE PINION FRONT TAPERED ROLLER BEARING

(a) Using a brass bar and a hammer, install a new oil storage ring.

(b) Using SST and a hammer, install the front bearing outer race.

(c) Install the front bearing.

SST 09316-60011 (09316-00011, 09316-00021)

3. INSTALL REAR DIFFERENTIAL DRIVE PINION OIL SLINGER (w/ Differential Lock)

4. INSTALL REAR DIFFERENTIAL CARRIER OIL SEAL

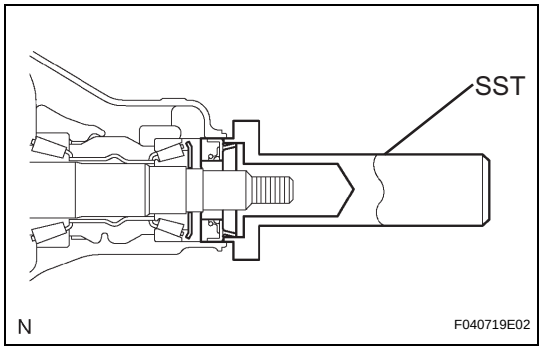

(a) Using SST and a hammer, install a new oil seal.

SST 09554-30011

Oil seal drive in depth:

-0.5 to 0.5 mm (-0.0197 to 0.0197 in.)

(b) Coat oil seal lip with MP grease.

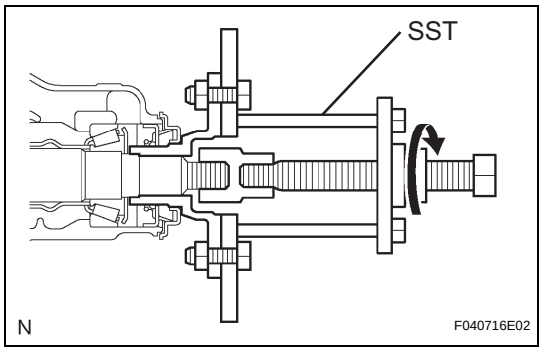

5. INSTALL REAR DRIVE COMPANION FLANGE SUB-ASSEMBLY REAR

(a) Using SST, install the companion flange.

(b) Coat the threads of a new nut with hypoid gear oil LSD.

SST 09950-30012 (09951-03010, 09953-03010, 09954-03010, 09955-03030, 09956-03030)

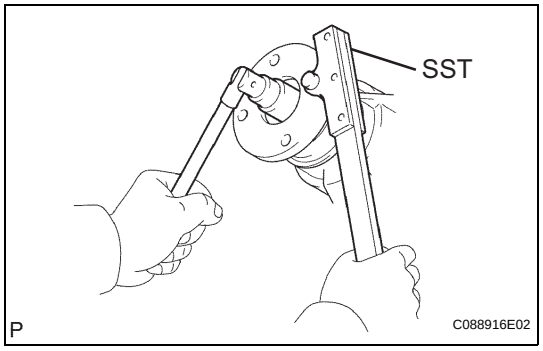

(c) Using SST to hold the companion flange, tighten the nut.

SST 09330-00021

Torque: 451 N*m (4,599 kgf*cm, 333 ft.*lbf)

DF

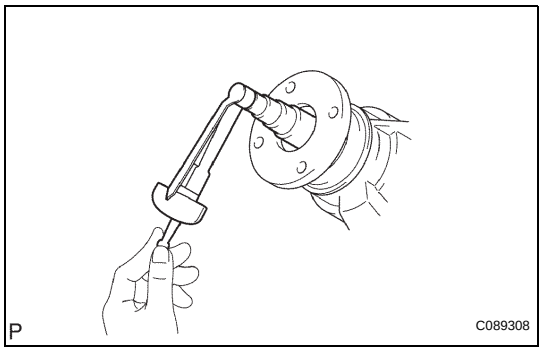

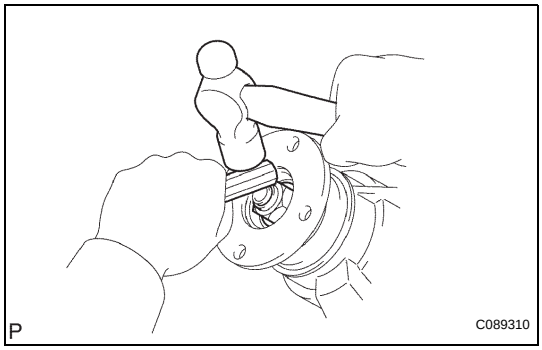

6. **INSPECT DIFFERENTIAL DRIVE PINION PRELOAD**
   (a) Using a torque wrench, measure the preload of backlash between the drive pinion and ring rear.
   New bearing:
   1.27 to 1.86 N*m (13 to 19 kgf*cm, 11 to 16 in.*lbf)
   Reused bearing:
   0.76 to 1.07 N*m (7.7 to 11 kgf*cm, 6.7 to 9.5 in.*lbf)
   If necessary, disassemble and inspect the differential assembly.
7. **INSTALL REAR DRIVE PINION NUT**
   (a) Using a chisel and a hammer, stake the nut.
8. **INSTALL PROPELLER SHAFT ASSEMBLY (for 2WD Drive Type, Regular Cab) (See page PR-6)**
9. **INSTALL PROPELLER WITH CENTER BEARING SHAFT ASSEMBLY (for 2WD Drive Type, Except Regular Cab) (See page PR-13)**
10. **INSTALL PROPELLER SHAFT ASSEMBLY (for 4WD Drive Type, Regular Cab) (See page PR-25)**
11. **INSTALL PROPELLER WITH CENTER BEARING SHAFT ASSEMBLY (4WD Drive Type, Except Regular Cab) (See page PR-32)**
12. **FILL UP DIFFERENTIAL OIL (See page DF-8)**
13. **INSPECT DIFFERENTIAL OIL (See page DF-8)**
14. **INSPECT FOR DIFFERENTIAL OIL LEAKAGE**

REMOVAL

1. **DISCONNECT CABLE FROM NEGATIVE BATTERY TERMINAL**
2. **REMOVE FRONT WHEELS**
3. **REMOVE NO.2 ENGINE UNDER COVER SUB-ASSEMBLY**
   (a) Remove the 4 bolts and No. 2 engine under cover sub-assembly.
4. **REMOVE NO.1 ENGINE UNDER COVER SUB-ASSEMBLY**
   (a) Remove the 4 bolts and No. 1 engine under cover sub-assembly.
5. **DRAIN DIFFERENTIAL OIL (See page DF-8)**
6. **REMOVE FRONT PROPELLER SHAFT ASSEMBLY (See page PR-16)**
7. **REMOVE FRONT AXLE HUB LH NUT (See page DS-3)**
8. **REMOVE FRONT AXLE HUB RH NUT**
   HINT:
   Use the same procedure as for the LH side.
9. **SEPARATE FRONT STABILIZER LINK ASSEMBLY LH (See page SP-50)**
10. **SEPARATE FRONT STABILIZER LINK ASSEMBLY RH (See page SP-50)**
11. **SEPARATE FRONT SPEED SENSOR LH (See page BC-303)**
12. **SEPARATE FRONT SPEED SENSOR RH**
    HINT:
    Use the same procedure as for the LH side.
13. **SEPARATE TIE ROD END SUB-ASSEMBLY LH (See page PS-54)**
14. **SEPARATE TIE ROD END SUB-ASSEMBLY RH (See page PS-54)**
15. **REMOVE FRONT SUSPENSION LOWER ARM LH (See page DS-4)**
16. **REMOVE FRONT SUSPENSION LOWER ARM RH**
    HINT:
    Use the same procedure as for the LH side.
17. **REMOVE FRONT DRIVE SHAFT ASSEMBLY LH (See page DS-4)**
18. **REMOVE FRONT DRIVE SHAFT ASSEMBLY RH**
    HINT:
    Use the same procedure as for the LH side.
    SST 09628-62011

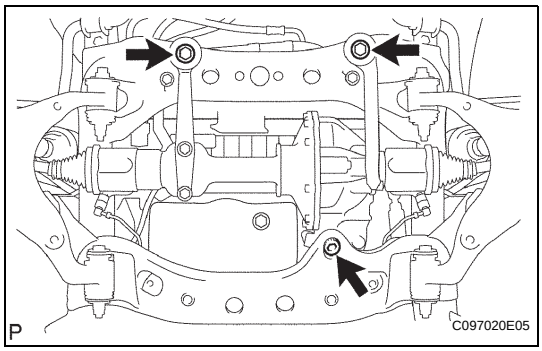

19. REMOVE FRONT DIFFERENTIAL CARRIER ASSEMBLY

(a) Remove the bolt and separate the front differential breather tube bracket.
(b) Support the front differential with a jack.
(c) Remove the front differential mount nut No. 1.
(d) Remove the 2 front mounting bolts and 2 nuts.
(e) Disconnect the actuator hose and connector.
(f) Lower the jack and remove the front differential assembly.
(g) Remove the 2 bolts and No. 3 front differential support.
(h) Remove the 5 bolts and 2 front differential supports.

DISASSEMBLY

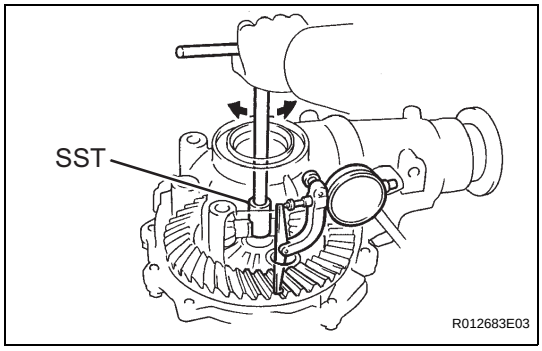

1. INSPECT BACKLASH DIFFERENTIAL RING GEAR AND DIFFERENTIAL DRIVE PINION

(a) Using SST and a dial indicator, measure the ring gear backlash.
SST 09564-32011
Backlash:
0.11 to 0.21 mm (0.0043 to 0.0083 in.)
If the backlash is not within the specification, adjust or repair the side bearing preload as necessary.

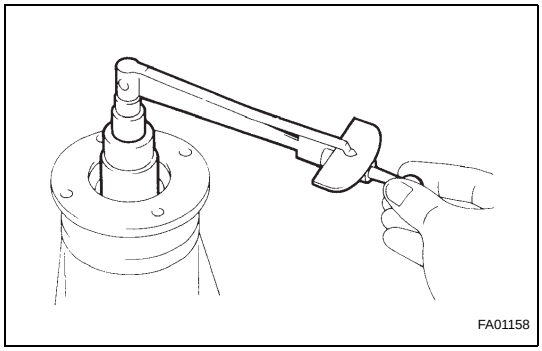

2. INSPECT DIFFERENTIAL DRIVE PINION PRELOAD

(a) Using a torque wrench, measure the preload of the backlash between the drive pinion and ring gear.
Torque: 0.49 to 0.78 N*m (5 to 8 kgf*cm, 4.3 to 6.9 in.*lbf)
If necessary, disassemble and inspect the differential assembly.

3. INSPECT TOTAL PRELOAD

(a) Using a torque wrench, measure the preload with the teeth of the drive pinion and ring gear in contact.
Total preload (at starting):
Drive pinion preload plus 0.22 to 0.88 N*m (2.2 to 8.8 kgf*cm, 2.0 to 7.8 in.*lbf)
If necessary, disassemble and inspect the differential.

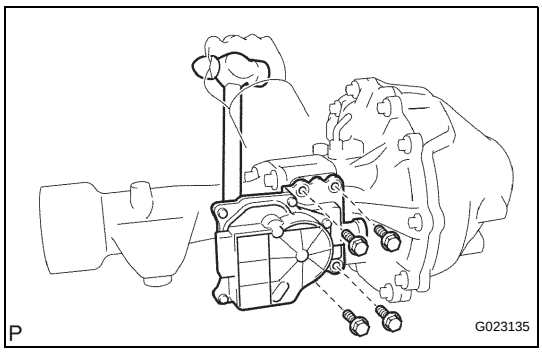

4. REMOVE DIFFERENTIAL VACUUM ACTUATOR ASSEMBLY

(a) Remove the 4 bolts.
(b) Using a hammer handle, remove the actuator assembly.

DF

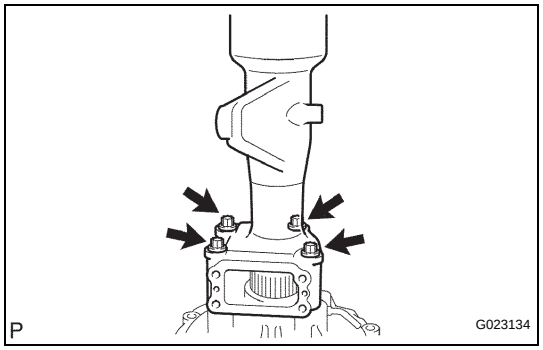

5. REMOVE FRONT DIFFERENTIAL TUBE ASSEMBLY

(a) Remove the 4 bolts.

(b) Using a plastic hammer, remove the differential tube.

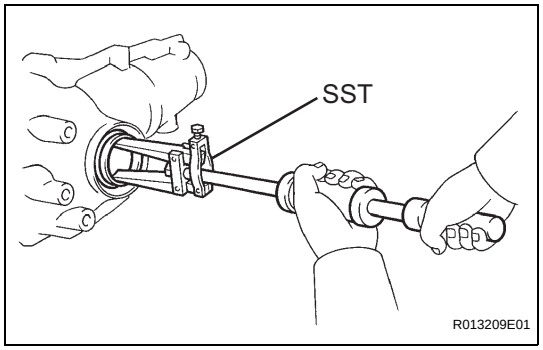

6. REMOVE DIFFERENTIAL SIDE GEAR SHAFT OIL SEAL

(a) Using SST, remove the oil seal.
SST 09308-00010

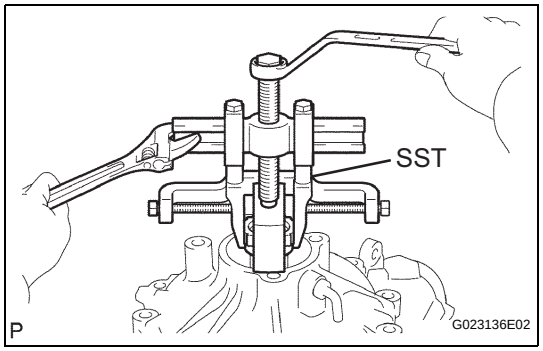

7. REMOVE DIFFERENTIAL SIDE GEAR INTER SHAFT SUB-ASSEMBLY

(a) Using SST, remove the side gear inter shaft.
SST 09350-20015 (09369-20040), 09950-40011 (09951-04010, 09952-04010, 09953-04020, 09954-04010, 09955-04011, 09957-04010, 09958-04011)

(b) Remove the snap ring from the side gear inter shaft.

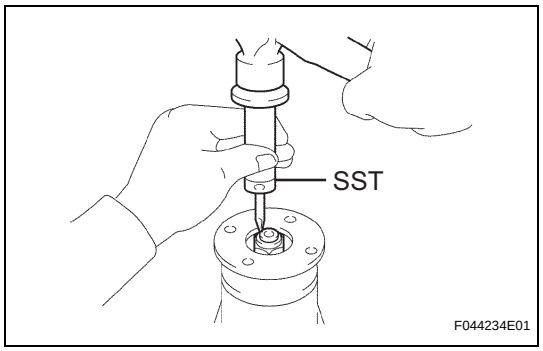

8. REMOVE FRONT DRIVE PINION COMPANION FLANGE SUB-ASSEMBLY

(a) Using SST and a hammer, remove the nut.
SST 09930-00010

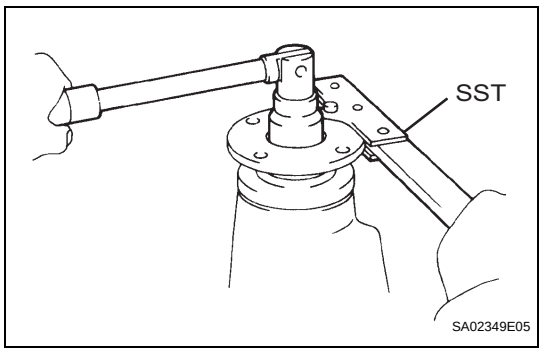

(b) Using SST to hold the companion flange, remove the nut.
SST 09330-00021

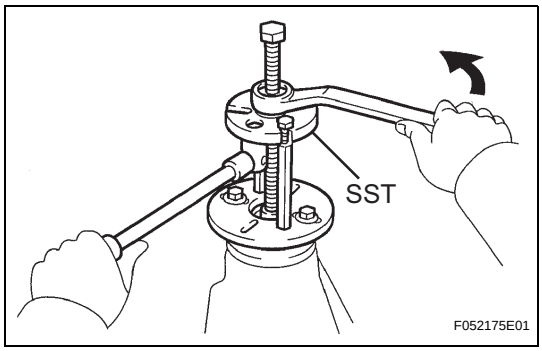

(c) Using SST, remove the companion flange.
SST 09950-30012 (09951-03010, 09953-03010, 09954-03010, 09955-03030, 09956-03020)

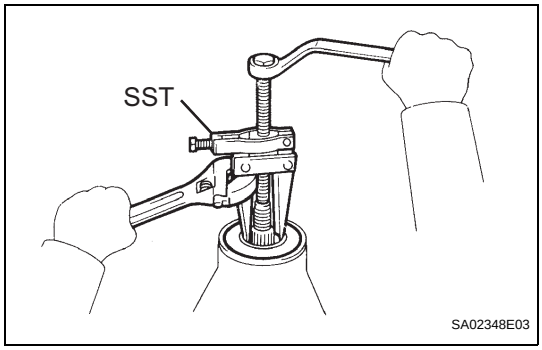

9. REMOVE FRONT DIFFERENTIAL CARRIER OIL SEAL

(a) Using SST, remove the oil seal from the differential carrier assembly.
SST 09308-10010

10. REMOVE FRONT DIFFERENTIAL DRIVE PINION OIL SLINGER

DF

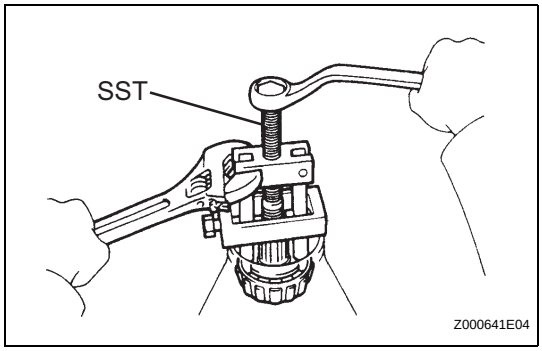

11. REMOVE FRONT DRIVE PINION REAR TAPERED ROLLER BEARING

(a) Using SST, remove the rear bearing from the drive pinion.
SST 09556-22010

(b) Remove the bearing spacer.

12. REMOVE DIFFERENTIAL SIDE BEARING RETAINER

(a) Using a screwdriver, remove the union.

(b) Remove the 10 bolts and tap out the side bearing retainer with a plastic hammer.

13. REMOVE DIFFERENTIAL CASE ASSEMBLY

14. REMOVE DIFFERENTIAL DRIVE PINION

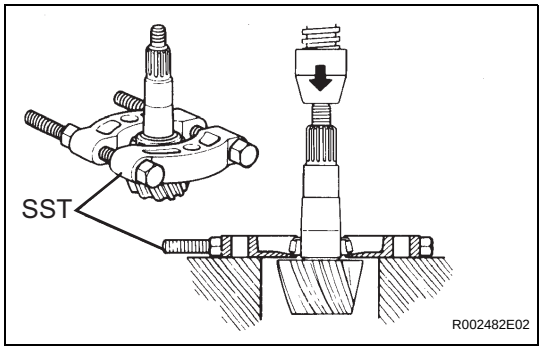

15. REMOVE FRONT DRIVE PINION FRONT TAPERED ROLLER BEARING

(a) Using SST and a press, remove the front bearing and washer from the drive pinion.
SST 09950-00020
HINT:
If the drive gear or ring gear is damaged, replace them as a set.

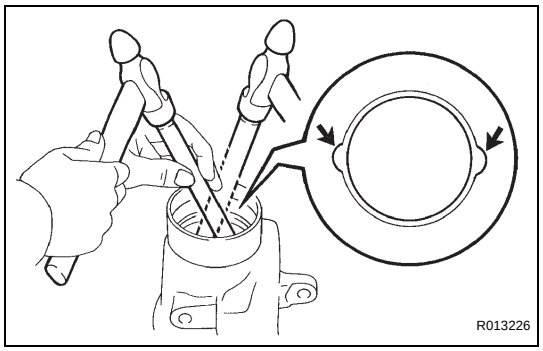

16. REMOVE FRONT BEARING OUTER RACE

(a) Using a brass bar and a hammer, remove the front bearing outer race.

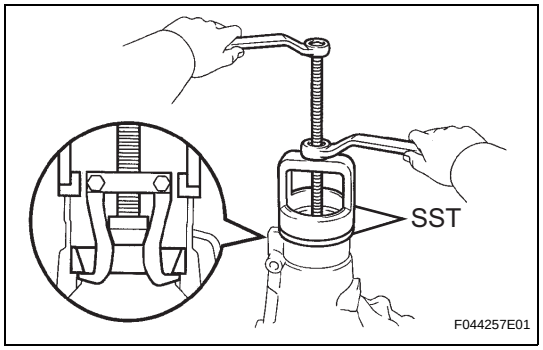

17. REMOVE REAR BEARING OUTER RACE

(a) Using SST, remove the rear bearing outer race.
SST 09502-12010, 09612-65014 (09612-01020, 09612-01050)

(b) Using a brass bar and a hammer, remove the oil storage ring.

18. REMOVE FRONT DIFFERENTIAL SIDE BEARING RETAINER DEFLECTOR

(a) Using a brass bar and hammer, remove the side bearing retainer deflector by tapping it gently.

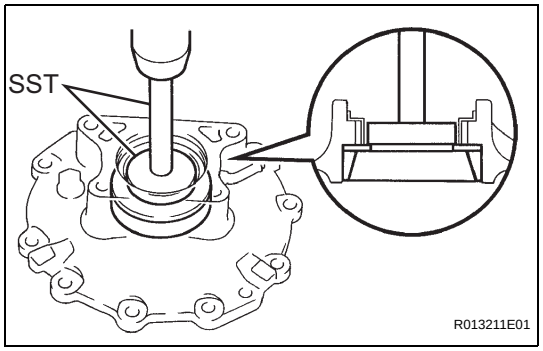

19. REMOVE SIDE BEARING OUTER RACE

HINT:
- Measure the plate washer and note its thickness.
- Tag the bearing outer races to show the location for reassembly.

(a) Using SST and a press, remove the outer race and plate washer from the bearing retainer.
SST 09950-60020 (09951-00680), 09950-70010 (09951-07150)

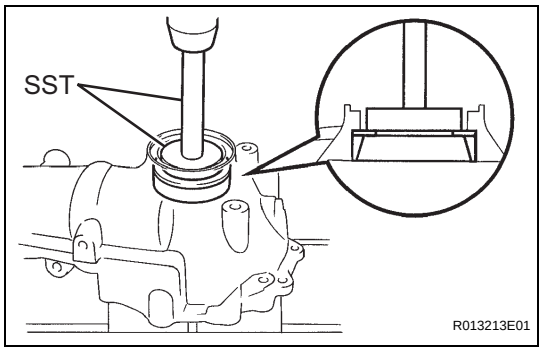

(b) Using SST and a press, remove the outer race and plate washer from the differential carrier assembly.
SST 09950-60020 (09951-00680), 09950-70010 (09951-07150)

20. REMOVE DIFFERENTIAL RING GEAR

(a) Place matchmarks on the ring gear and differential case assembly.

(b) Remove the 10 bolts.

(c) Using a plastic hammer, tap on the ring gear to separate it from the differential case assembly.

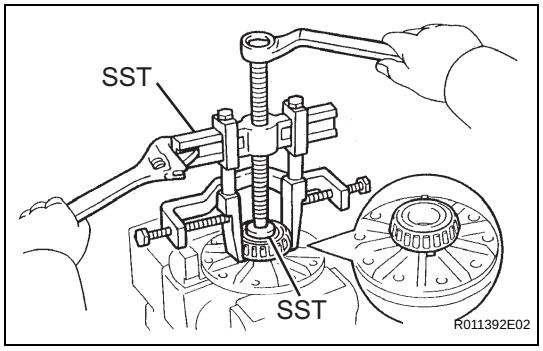

21. REMOVE FRONT DIFFERENTIAL CASE BEARING

(a) Using SST, remove the 2 differential case bearings from the differential case assembly.
SST 09950-60010 (09951-00390), 09950-40011 (09951-04020, 09952-04010, 09953-04030, 09954-04010, 09955-04061, 09957-04010, 09958-04011)

HINT:
Fix the claws of SST into the notch in the differential case assembly.

DF

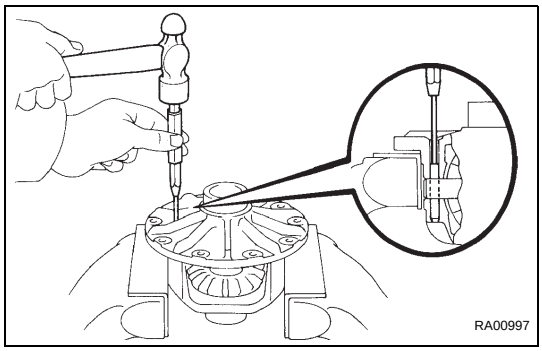

22. DISASSEMBLE DIFFERENTIAL CASE

(a) Using a pin punch and a hammer, remove the straight pin.

(b) Remove these parts from the differential case assembly.
- (1) 2 Differential side gears
- (2) 2 Differential side gear thrust washers
- (3) Differential pinion shaft
- (4) 2 Differential pinion gears
- (5) 2 Differential pinion gear thrust washers

23. INSPECT DIFFERENTIAL GEAR KIT

(a) Check that there is no damage to the pinion gear and side gear.
If the pinion gear and/or side gear is damaged, replace the differential gear kit.

24. INSPECT FRONT DIFFERENTIAL CASE

(a) Check that the differential case assembly is not damaged.
If the differential case assembly is damaged, replace it.

DF

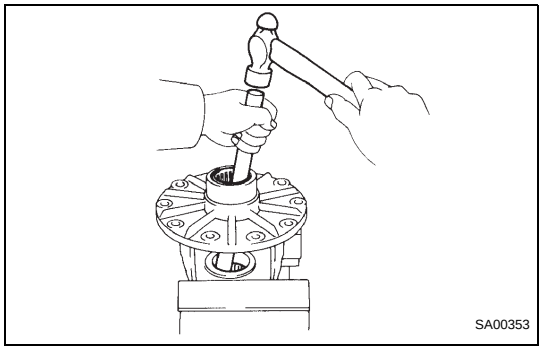

25. REMOVE FRONT DIFFERENTIAL SIDE GEAR NEEDLE ROLLER BEARING

(a) Using a brass bar and hammer, remove the 2 bearings.

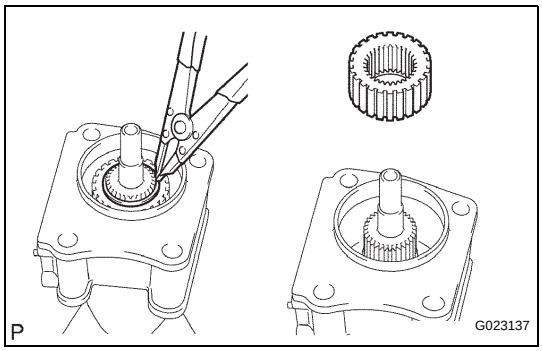

26. REMOVE DIFFERENTIAL CLUTCH HUB

(a) Using a snap ring expander, remove the snap ring.

(b) Remove the differential clutch hub.

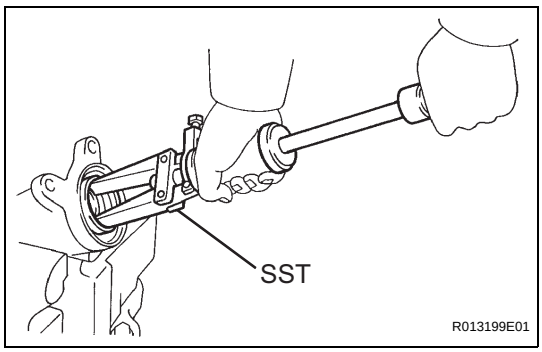

27. REMOVE DIFFERENTIAL SIDE GEAR SHAFT OIL SEAL

(a) Using SST, remove the oil seal from the differential tube.
SST 09308-00010

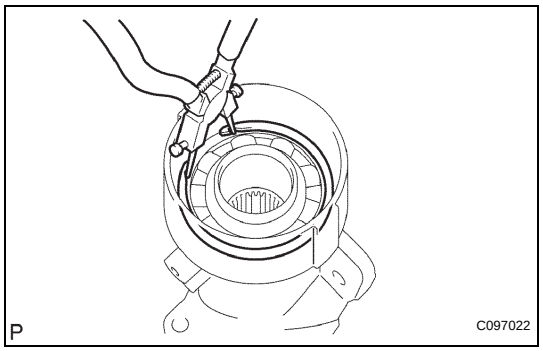

28. REMOVE DIFFERENTIAL SIDE GEAR SHAFT SUB-ASSEMBLY RH

(a) Using a snap ring expander, remove the snap ring.

(b) Remove the side gear shaft from the differential tube.

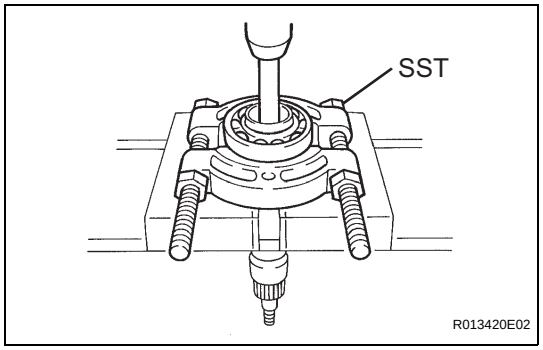

29. REMOVE FRONT DIFFERENTIAL SIDE GEAR SHAFT RH BEARING

(a) Using a snap ring expander, remove the snap ring.

(b) Using SST, a brass bar and a press, remove the bearing.

SST 09950-00020

NOTICE:

Do not damage the bearing.

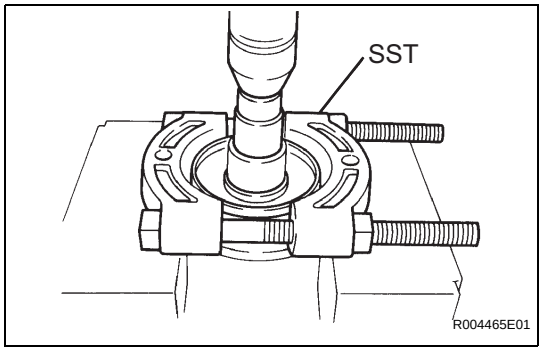

30. REMOVE FRONT DIFFERENTIAL DUST DEFLECTOR

(a) Using SST, a socket wrench and a press, remove the dust deflector.

SST 09950-00020

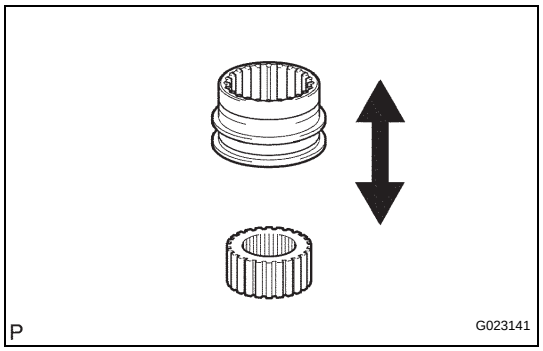

31. REMOVE DIFFERENTIAL CLUTCH SLEEVE AND DIFFERENTIAL CLUTCH HUB

(a) Check for wear and damage to the clutch hub and clutch sleeve.
If necessary, replace them.

(b) Check that the clutch sleeve slides smoothly on the clutch hub.

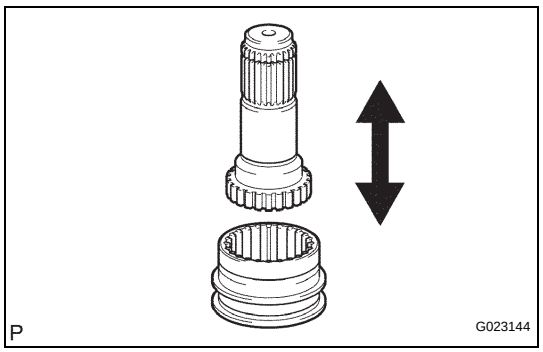

32. INSPECT DIFFERENTIAL CLUTCH SLEEVE AND CLUTCH SLEEVE FORK CLEARANCE

(a) Check for wear and damage to the clutch hub and side gear inter shaft.

(b) Check that the clutch sleeve slides smoothly on the side gear inter shaft.

DF

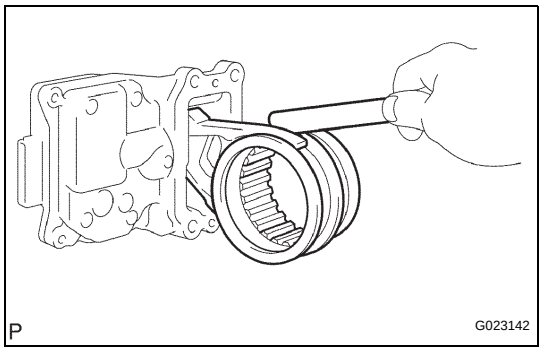

33. INSPECT DIFFERENTIAL CLUTCH SLEEVE AND CLUTCH SLEEVE FORK CLEARANCE

(a) Using a feeler gauge, measure the clearance between the sleeve fork and clutch sleeve.
Maximum clearance:
0.35 mm (0.0138 in.)
If the clearance exceeds the maximum, replace the fork or clutch sleeve.

REASSEMBLY

1. INSTALL FRONT DIFFERENTIAL DUST DEFLECTOR

(a) Using a steel plate and a press, install a new dust deflector.
NOTICE:
Do not damage the dust deflector.

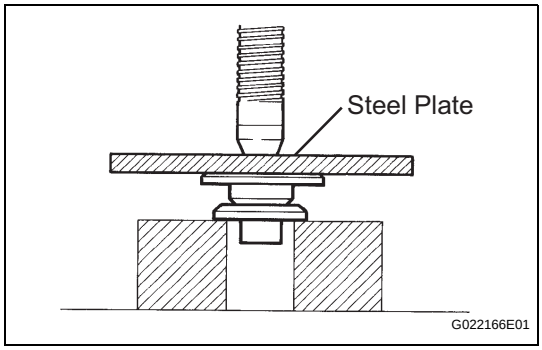

DF

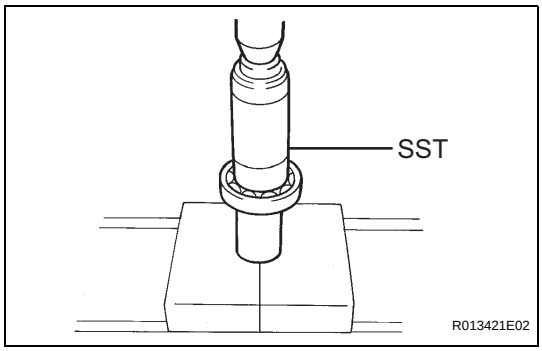

2. INSTALL FRONT DIFFERENTIAL SIDE GEAR SHAFT RH BEARING

(a) Using SST and a press, install the bearing.
SST 09223-00010
(b) Using a snap ring expander, install the snap ring.

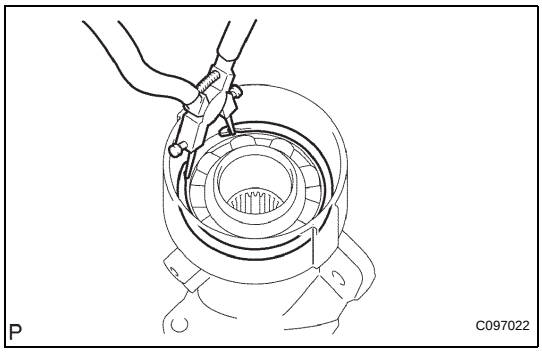

3. INSTALL DIFFERENTIAL SIDE GEAR SHAFT SUB-ASSEMBLY RH

(a) Install the side gear shaft into the differential tube.
(b) Using snap ring pliers, install the snap ring.

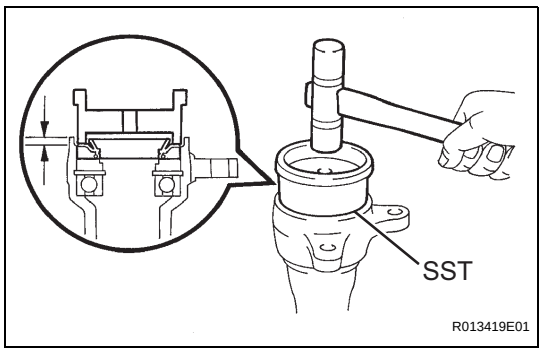

4. INSTALL DIFFERENTIAL SIDE GEAR SHAFT OIL SEAL

(a) Using SST and a plastic hammer, install a new oil seal.
SST 09608-32010
Oil seal drive in depth:
4.8 to 0.58 mm (0.1890 to 0.2284 in.)
(b) Coat the oil seal lip with MP grease.

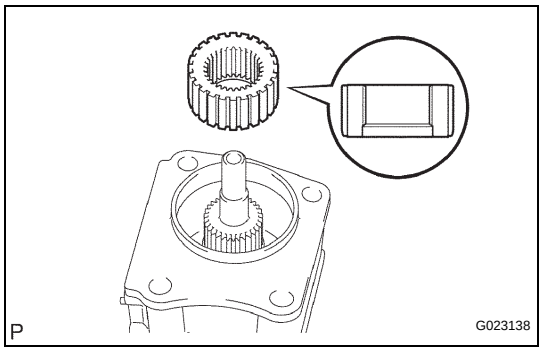

5. INSTALL DIFFERENTIAL CLUTCH HUB

(a) Install the clutch hub onto the side gear inter shaft.

(b) Using snap ring pliers, install the snap ring.

NOTICE:

Be sure to install the differential clutch hub in the correct direction.

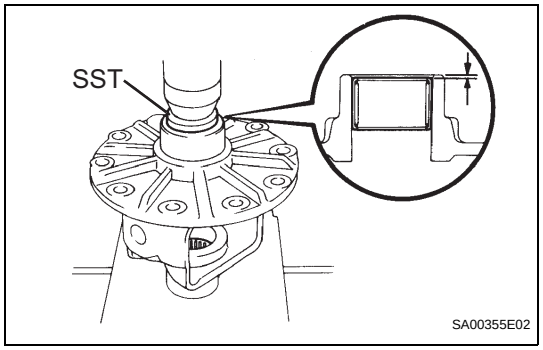

6. INSTALL FRONT DIFFERENTIAL SIDE GEAR NEEDLE ROLLER BEARING

(a) Using SST and a press, install 2 new bearings.

SST 09950-60010 (09951-00380)

Bearing press in depth:

1.4 to 2.0 mm (0.055 to 0.079 in.)

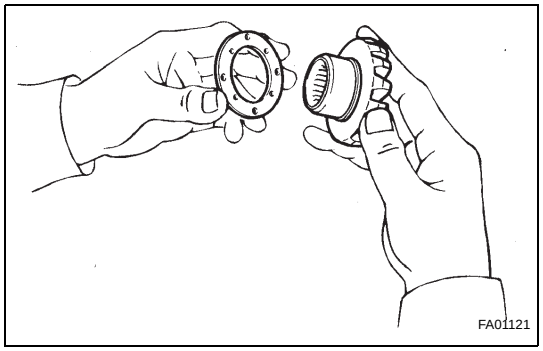

7. INSTALL FRONT DIFFERENTIAL CASE

(a) Install the 2 proper thrust washers onto the 2 side gears.

HINT:

Using the table below, select a thrust washer which will ensure that the backlash is within the specifications.

Washer thickness

Thickness mm (in.)	Thickness mm (in.)
1.50 (0.0591)	1.75 (0.0689)
1.55 (0.0610)	1.80 (0.0709)
1.60 (0.0630)	1.85 (0.0728)
1.65 (0.0650)	1.90 (0.0748)
1.70 (0.0669)	-

(b) Install the 2 side gears, 2 side gear thrust washers, 2 pinion gears, 2 pinion gear thrust washers and pinion shaft into the differential case assembly.

HINT:

Align the holes of the differential case assembly and pinion shaft.

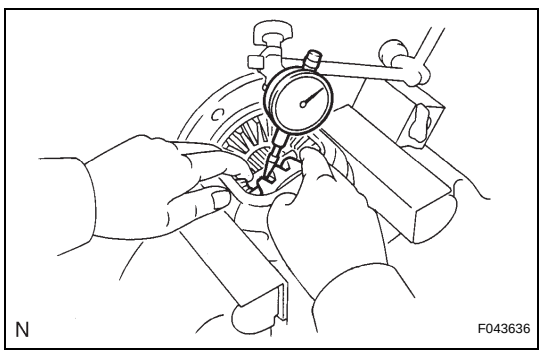

(c) Measure the side gear backlash.

(1) Using a dial indicator, measure the side gear backlash while holding one pinion gear toward the differential case assembly.

Backlash:

0 to 0.15 mm (0 to 0.0059 in.)

If the backlash is not within the specification, install a side gear thrust washer with a different thickness.

DF

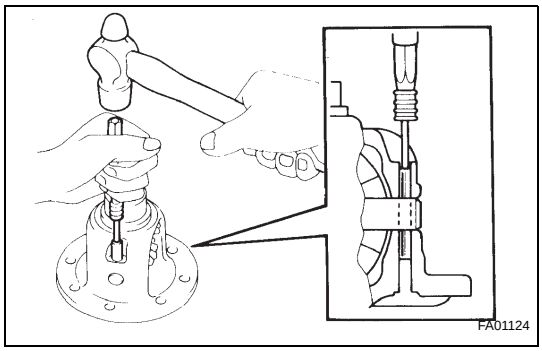

(d) Using a pin punch and hammer, install the straight pin through the differential case assembly and hole of the pinion shaft.
(e) Stake the differential case assembly.

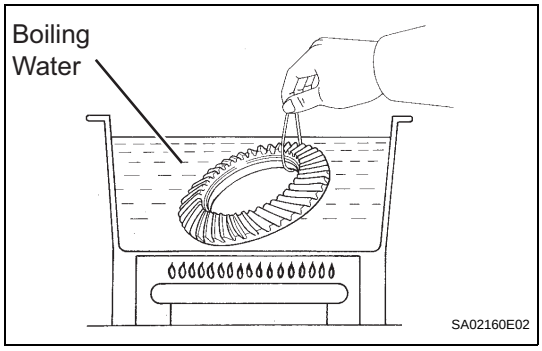

8. INSTALL DIFFERENTIAL RING GEAR

(a) Clean the contact surfaces of the differential case assembly and ring gear.
(b) Heat the ring gear to about 100°C (212°F) in boiling water.
(c) Carefully take the ring gear out of the boiling water.
(d) After any moisture on the ring gear has completely evaporated, quickly install the ring gear onto the differential case assembly.
HINT:
Align the matchmarks on the ring gear and differential case assembly.
(e) Temporarily install 10 bolts so that the bolt holes in the ring gear and differential case assembly are aligned.
(f) After the ring gear has cooled sufficiently, tighten the ring gear set bolts to which thread lock has been applied.
Torque: 97 N*m (984 kgf*cm, 71 ft.*lbf)
Thread lock:
Part No. 08833-00100, THREE BOND 1360k or equivalent

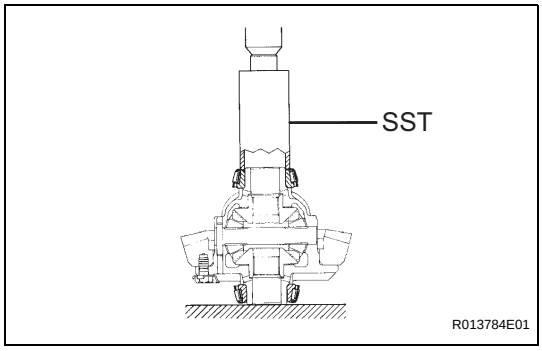

9. INSTALL FRONT DIFFERENTIAL CASE BEARING

(a) Using SST and a press, install the 2 differential case bearings into the differential case assembly.
SST 09226-10010

10. INSTALL SIDE BEARING OUTER RACE

HINT:
When replacing the 2 differential case bearings, fit 2 of the thinnest new washers to each bearing and when reusing the bearings, fit washers of the same thickness as those removed.
(a) Install a new plate washer to the side bearing retainer.

DF

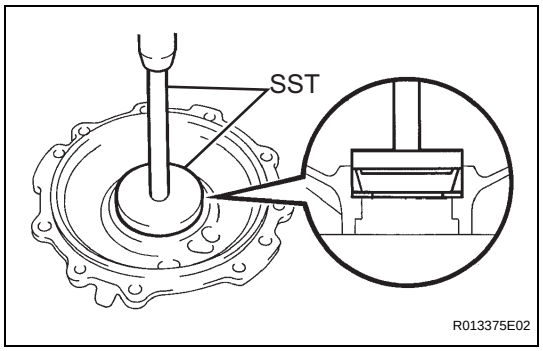

(b) Using SST and a press, install the bearing outer race onto the differential case bearing retainer assembly.
SST 09950-60020 (09951-00810), 09950-70010 (09951-07150)

(c) Install a new plate washer onto the differential carrier assembly.

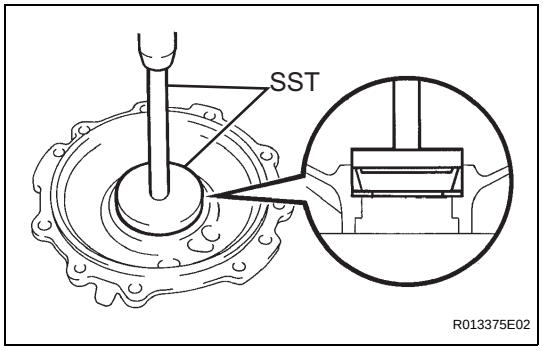

(d) Using SST and a press, install the bearing outer race onto the differential carrier assembly.
SST 09950-60020 (09951-00810), 09950-70010 (09951-07150)

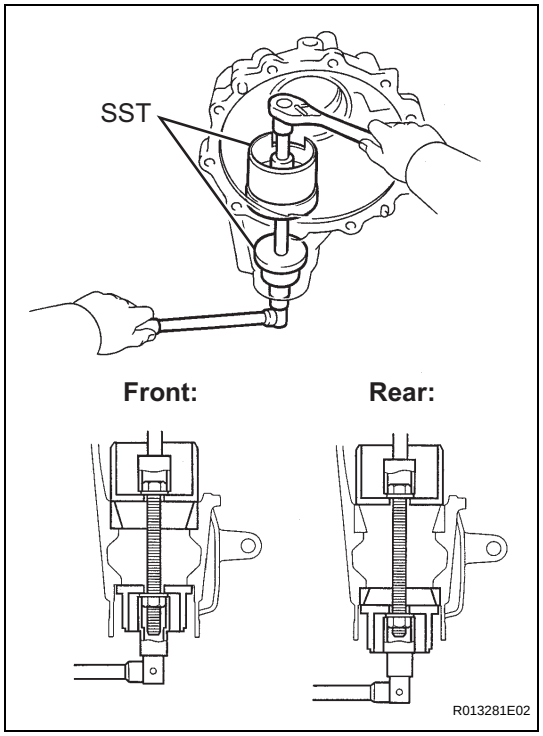

11. INSTALL FRONT BEARING OUTER RACE

(a) Using SST, install the outer race.
SST 09950-00020 (09951-00680, 09951-00890)

12. INSTALL REAR BEARING OUTER RACE

(a) Install the oil storage ring.

(b) Using SST, install the outer race.
SST 09950-00020 (09951-00680, 09951-00890)

13. INSTALL FRONT DRIVE PINION FRONT TAPERED ROLLER BEARING

(a) Install the washer onto the drive pinion.
HINT:
First, fit a washer of the same thickness as the removed washer, then after checking the tooth contact pattern, replace the washer with one of a differential thickness if necessary.

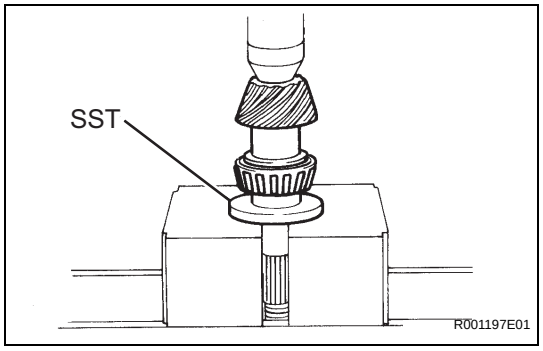

(b) Using SST and a press, install the front bearing onto the drive pinion.
SST 09506-30012

14. INSPECT DIFFERENTIAL DRIVE PINION PRELOAD

(a) Install the drive pinion.
HINT:
Assemble the spacer and oil seal after adjusting the ring gear tooth contact pattern.

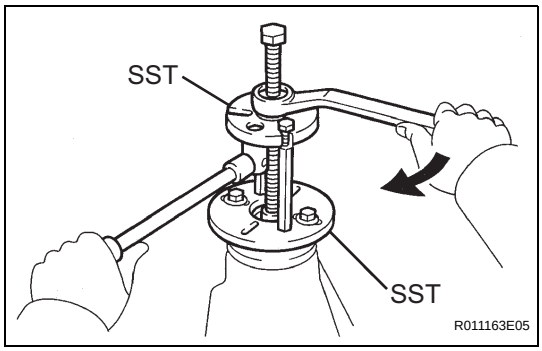

(b) Using SST, install the rear bearing, oil slinger and companion flange.
SST 09950-30012 (09951-03010, 09953-03010, 09954-03010, 09955-03030, 09956-03020)

(c) Coat the threads of the nut with hypoid gear oil.

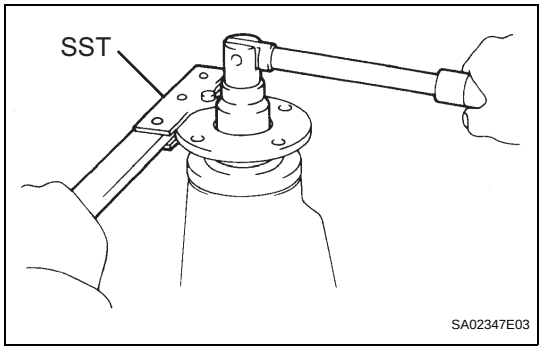

(d) Adjust the drive pinion preload by tightening the companion flange nut.

(e) Using SST to hold the companion flange, tighten the nut.
SST 09330-00021
NOTICE:
As there is no spacer, tighten the nut a little at a time, being careful not to overtighten it.

DF

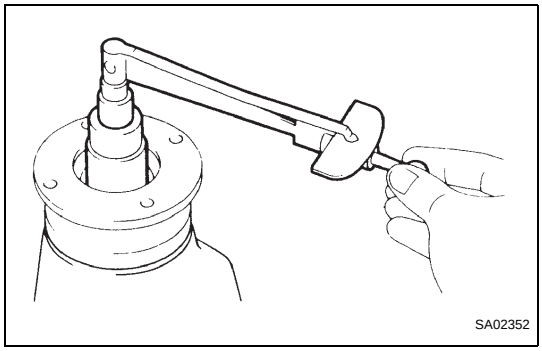

(f) Using a torque wrench, measure the preload of the backlash between the drive pinion and ring gear.
Preload (at starting)

Bearing	Standard
New	0.98 to 1.57 N*m (10 to 16 kgf*cm, 8.7 to 13.9 in.*lbf)
Reused	0.49 to 0.78 N*m (5 to 8 kgf*cm, 4.3 to 6.9 in.*lbf)

If necessary, disassemble and inspect the differential assembly.

15. INSTALL DIFFERENTIAL CASE ASSEMBLY

16. ADJUST BACKLASH DIFFERENTIAL RING GEAR AND DIFFERENTIAL DRIVE PINION

(a) Install the side bearing retainer with the 10 bolts.
Torque: 50 N*m (510 kgf*cm, 37 ft.*lbf)

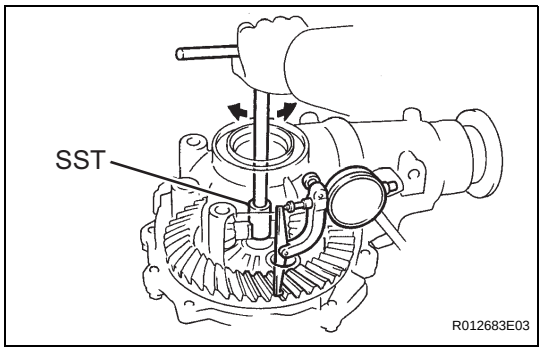

(b) Using SST and a dial indicator, measure the ring gear backlash.
SST 09564-32011
Backlash:
0.11 to 0.21 mm (0.0043 to 0.0083 in.)

(c) If it is not within the specification, adjust it by either increasing or decreasing the thickness of the washers on both sides by an equal amount.
HINT:
There should be no clearance between the plate washer and differential case.
Make sure that there is ring gear backlash.

Washer thickness

Thickness mm (in.)	Thickness mm (in.)	Thickness mm (in.)
1.58 (0.0622)	1.78 (0.0701)	1.98 (0.0780)
1.60 (0.0630)	1.80 (0.0709)	2.00 (0.0787)
1.62 (0.0638)	1.82 (0.0717)	2.02 (0.0800)

Thickness mm (in.)	Thickness mm (in.)	Thickness mm (in.)
1.64 (0.0646)	1.84 (0.0724)	2.04 (0.0803)
1.66 (0.0654)	1.86 (0.0732)	2.06 (0.0811)
1.68 (0.0661)	1.88 (0.0740)	2.08 (0.0819)
1.70 (0.0669)	1.90 (0.0748)	2.10 (0.0827)
1.72 (0.0677)	1.92 (0.0756)	2.12 (0.0835)
1.74 (0.0685)	1.94 (0.0764)	2.14 (0.0843)
1.76 (0.0693)	1.96 (0.0772)	2.16 (0.0850)

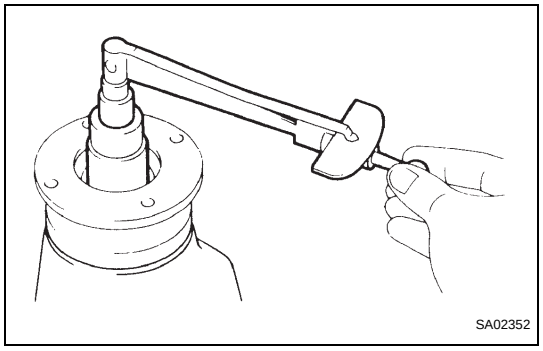

17. INSPECT TOTAL PRELOAD

(a) Using a torque wrench, measure the preload with the teeth of the drive pinion and ring gear in contact.
Total preload (at starting):
Drive pinion preload plus 0.22 to 0.88 N*m (2.2 to 8.8 kgf*cm, 2.0 to 7.8 in.*lbf)
If necessary, disassemble and inspect the differential.

18. INSPECT TOOTH CONTACT BETWEEN RING GEAR AND DRIVE PINION

(a) Remove the side bearing retainer and differential case assembly.

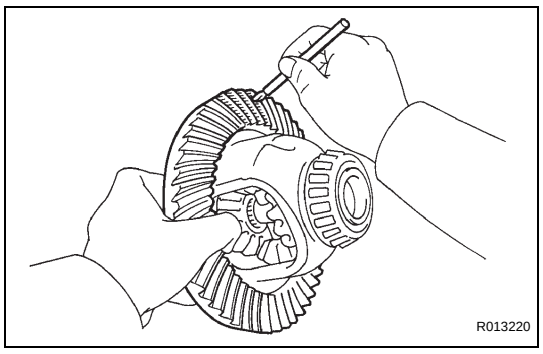

(b) Coat 3 or 4 teeth at 3 different positions on the ring gear with red lead.
(c) Install the differential case assembly and side bearing retainer.
Torque: 50 N*m (510 kgf*cm, 37 ft.*lbf)
(d) Hold the companion flange firmly and rotate the ring gear in both directions.
(e) Remove the differential case, side bearing retainer and differential case assembly.

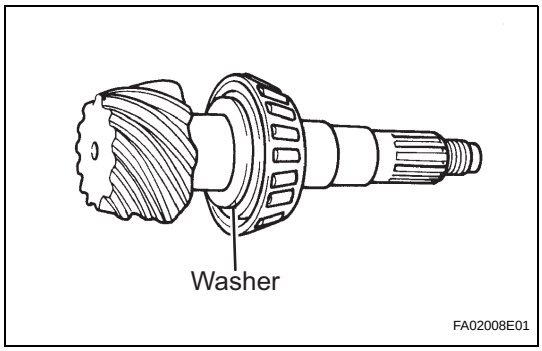

(f) Inspect the tooth contact pattern.

Driver Side:

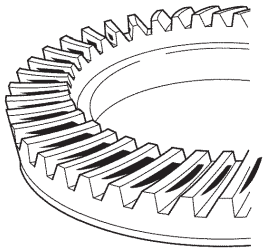

Proper Contact

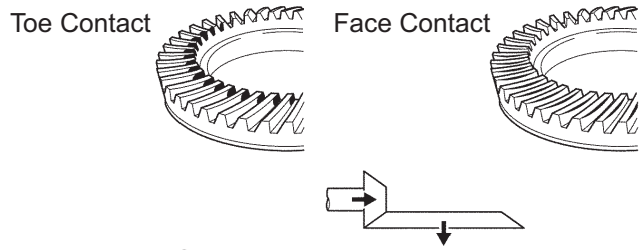

Select an adjusting washer that will bring the drive pinion closer to the ring gear.

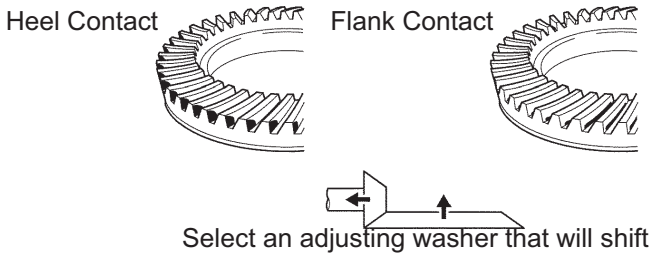

Select an adjusting washer that will shift the drive pinion away from the ring gear.

Coast Side:

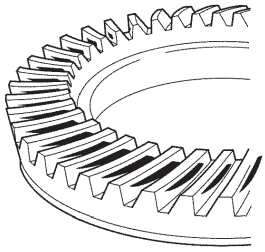

Proper Contact

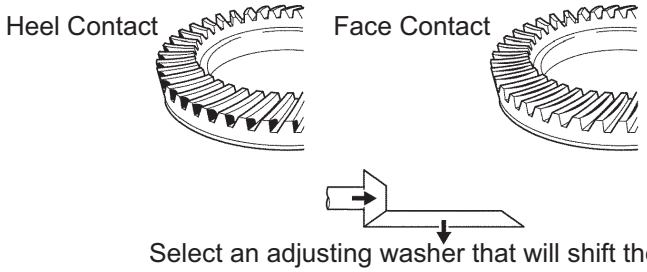

Select an adjusting washer that will shift the drive pinion closer to the ring gear.

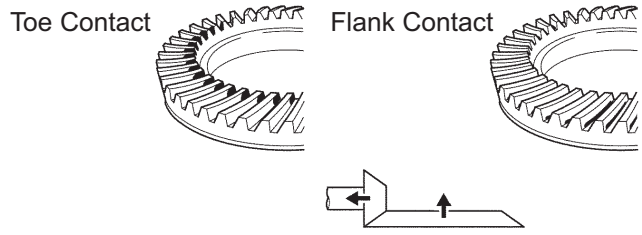

Select an adjusting washer that will bring the drive pinion away from the ring gear.

P

F052199E01

If the teeth are not engaged properly, use the following chart to select the appropriate washer for correction.

Washer thickness

Thickness mm (in.)	Thickness mm (in.)	Thickness mm (in.)
1.70 (0.0669)	1.94 (0.0764)	2.18 (0.0858)
1.73 (0.0681)	1.97 (0.0776)	2.21 (0.0870)
1.76 (0.0693)	2.00 (0.0787)	2.24 (0.0882)
1.79 (0.0705)	2.03 (0.0799)	2.27 (0.0894)
1.82 (0.0717)	2.06 (0.0811)	2.30 (0.0906)
1.85 (0.0728)	2.09 (0.0823)	2.33 (0.0917)
1.88 (0.0740)	2.12 (0.0835)	-
1.91 (0.0752)	2.15 (0.0847)	-

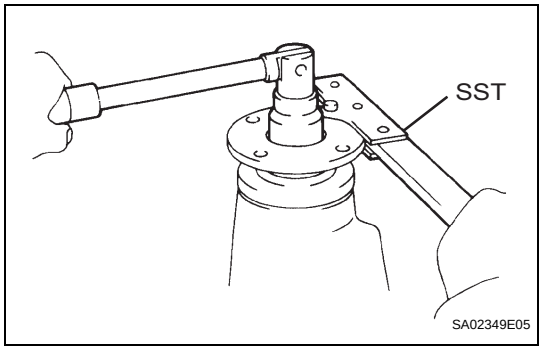

(g) Using SST to hold the companion flange, remove the nut.
SST 09330-00021

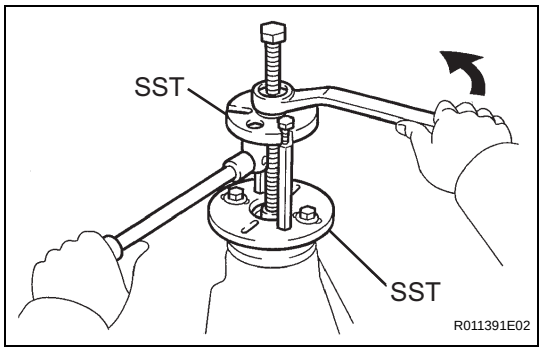

(h) Using SST, remove the companion flange.
SST 09950-30012 (09951-03010, 09953-03010, 09954-03010, 09955-03030, 09956-03020)

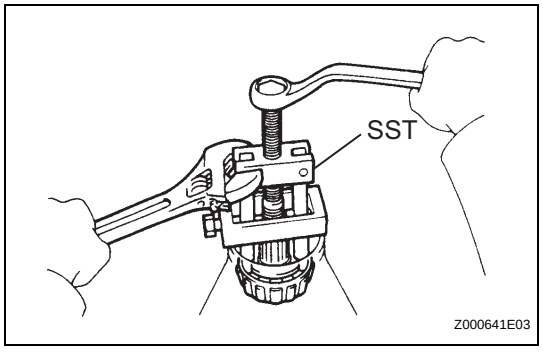

(i) Using SST, remove the rear bearing from the drive pinion.
SST 09556-22010

19. INSTALL FRONT DIFFERENTIAL DRIVE PINION BEARING SPACER

(a) Install a new bearing spacer and oil storage ring.

20. INSTALL FRONT DRIVE PINION REAR TAPERED ROLLER BEARING

21. INSTALL FRONT DIFFERENTIAL DRIVE PINION OIL SLINGER

22. INSTALL FRONT DRIVE PINION COMPANION FLANGE SUB-ASSEMBLY FRONT

(a) Place the companion flange on the drive pinion.
(b) Coat the threads of a new nut with hypoid gear oil LSD.

DF

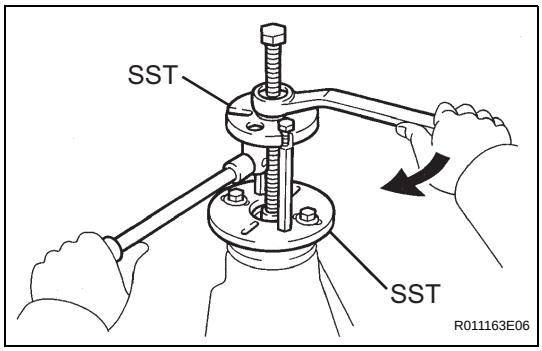

(c) Using SST and the companion flange, install the rear tapered roller bearing, then remove the companion flange.
SST 09950-30012 (09951-03010, 09953-03010, 09954-03010, 09955-03030, 09956-03020)

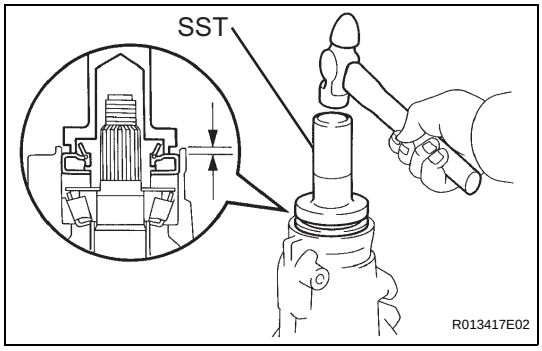

23. INSTALL FRONT DIFFERENTIAL CARRIER OIL SEAL

(a) Using SST and a hammer, install the oil seal.
SST 09554-22010
Oil seal drive in depth:
3.9 to 4.8 mm (0.153 to 0.189 in.)

(b) Coat the oil seal lip with MP grease.

DF

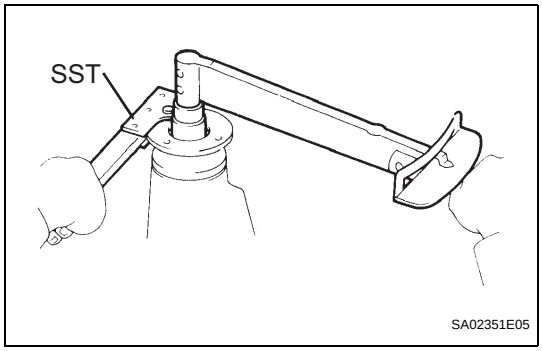

(c) Using SST to hold the flange, tighten the nut.
Torque: 370 N*m (3,773 kgf*cm, 273 ft.*lbf)
SST 09330-00021

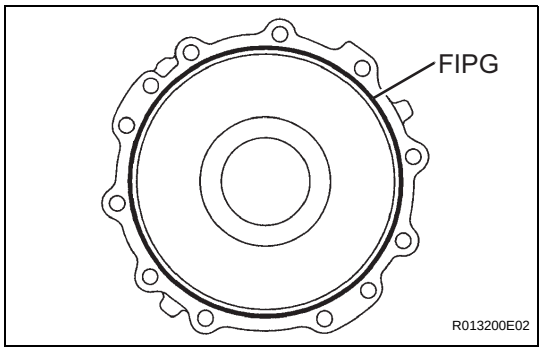

24. INSTALL DIFFERENTIAL SIDE BEARING RETAINER

(a) Remove any old FIPG material and be careful not to drop oil on the contact surfaces of the differential carrier and side bearing retainer.

(b) Clean the contact surfaces of any residual FIPG material using gasoline or alcohol.

(c) Apply FIPG to the side bearing retainer, as shown.
FIPG:
Part No. 08826-00090, THREE BOND 1281 or equivalent
HINT:
Install the side bearing retainer within 10 minutes of applying FIPG.

(d) Install the side bearing retainer with the 10 bolts.
Torque: 50 N*m (510 kgf*cm, 37 ft.*lbf)

(e) Install the union.

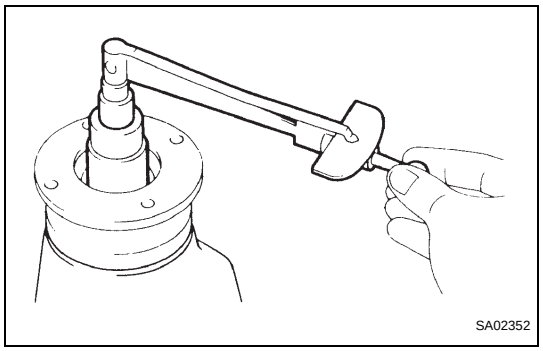

25. INSPECT DIFFERENTIAL DRIVE PINION PRELOAD

(a) Using a torque wrench, measure the preload of the backlash between the drive pinion and ring gear.
Preload (at starting)

Bearing	Standard
New	0.98 to 1.57 N*m (10 to 16 kgf*cm, 8.7 to 13.9 in.*lbf)
Reused	0.49 to 0.78 N*m (5 to 8 kgf*cm, 4.3 to 6.9 in.*lbf)

If the preload is greater than the specification, replace the bearing spacer.
If the preload is less than the specification, retighten the nut to 13 N*m (130 kgf*cm, 9 ft*lbf) a little at a time until the specified preload is reached.
Torque: 370 N*m (3,773 kgf*cm, 273 ft.*lbf) or less
If the maximum torque is exceeded while retightening the nut, replace the bearing spacer and repair the preload procedure. Do not loosen the nut to reduce the preload.

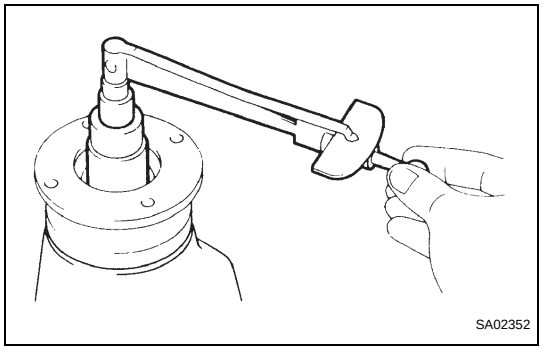

26. INSPECT TOTAL PRELOAD

(a) Using a torque wrench, measure the preload with the teeth of the drive pinion and ring gear in contact.
Total preload (at starting):
Drive pinion preload plus 0.22 to 0.88 N*m (2.2 to 8.8 kgf*cm, 2.0 to 7.8 in.*lbf)
If necessary, disassemble and inspect the differential.

27. INSPECT BACKLASH DIFFERENTIAL RING GEAR AND DIFFERENTIAL DRIVE PINION
SST 09564-32011

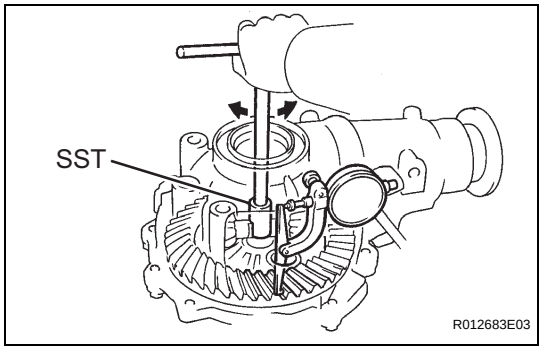

(a) Using SST and a dial indicator, measure the ring gear backlash.
Backlash:
0.11 to 0.21 mm (0.0043 to 0.0083 in.)

(b) If it is not within the specification, adjust it by either increasing or decreasing the thickness of the washers on both sides by an equal amount.
HINT:
There should be no clearance between the plate washer and differential case.
Make sure that there is ring gear backlash.

Washer thickness

Thickness mm (in.)	Thickness mm (in.)	Thickness mm (in.)
1.58 (0.0622)	1.78 (0.0701)	1.98 (0.0780)
1.60 (0.0630)	1.80 (0.0709)	2.00 (0.0787)
1.62 (0.0638)	1.82 (0.0717)	2.02 (0.0800)
1.64 (0.0646)	1.84 (0.0724)	2.04 (0.0803)
1.66 (0.0654)	1.86 (0.0732)	2.06 (0.0811)
1.68 (0.0661)	1.88 (0.0740)	2.08 (0.0819)
1.70 (0.0669)	1.90 (0.0748)	2.10 (0.0827)
1.72 (0.0677)	1.92 (0.0756)	2.12 (0.0835)
1.74 (0.0685)	1.94 (0.0764)	2.14 (0.0843)

Thickness mm (in.)	Thickness mm (in.)	Thickness mm (in.)
1.76 (0.0693)	1.96 (0.0772)	2.16 (0.0850)

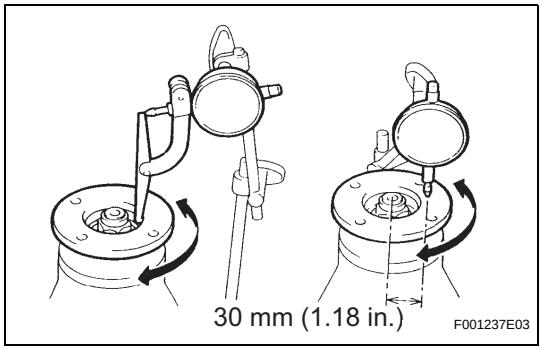

28. INSPECT AND ADJUST FRONT DRIVE PINION COMPANION FLANGE SUB-ASSEMBLY FRONT

(a) Using a dial indicator, measure the runout of the drive pinion companion flange vertically and horizontally.

Maximum runout:

Vertical runout: 0.10 mm (0.0039 in.)

Lateral runout: 0.10 mm (0.0039 in.)

If the runouts are not within the specifications, replace the companion flange.

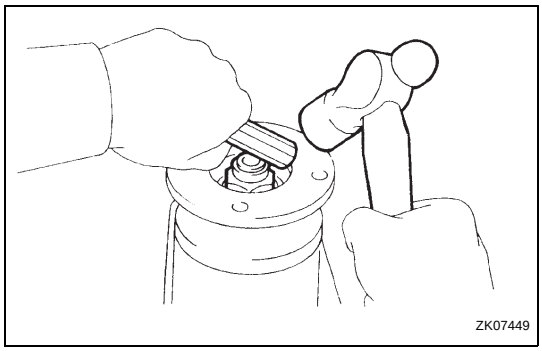

29. INSTALL FRONT DRIVE PINION COMPANION FLANGE FRONT NUT

(a) Using a chisel and hammer, stake the drive pinion nut.

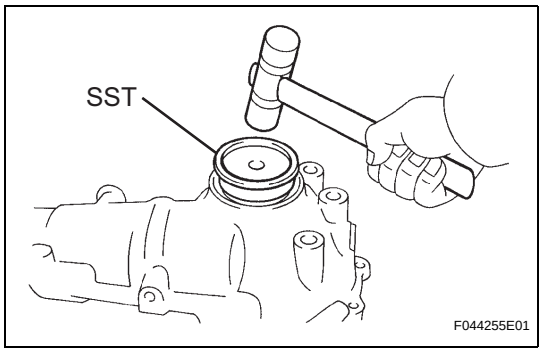

30. INSTALL DIFFERENTIAL SIDE GEAR SHAFT OIL SEAL

(a) Using SST and a plastic hammer, install a new oil seal until its surface is flush with the differential carrier end.

SST 09608-32010

(b) Coat the oil seal lip with MP grease.

Oil seal driven in depth:

-0.45 to 0.45 mm (-0.0177 to 0.0177 in.)

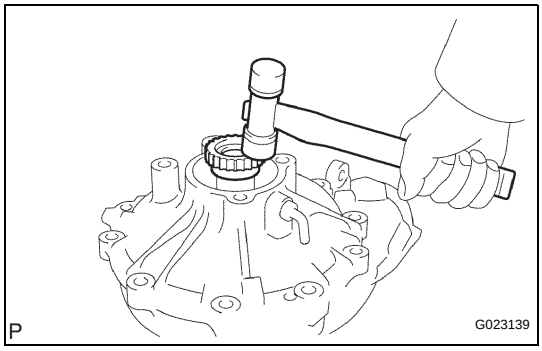

31. INSTALL DIFFERENTIAL SIDE GEAR INTER SHAFT SUB-ASSEMBLY

(a) Install a new snap ring onto the side gear inter shaft.

(b) Using a plastic hammer, install the side gear inter shaft onto the differential case.

(c) Check that there are 2 to 3 mm (0.08 to 0.12 in.) of play in the axial direction.

(d) Check that the side gear inter shaft will not come out by trying to pull it completely out by hand.

DF

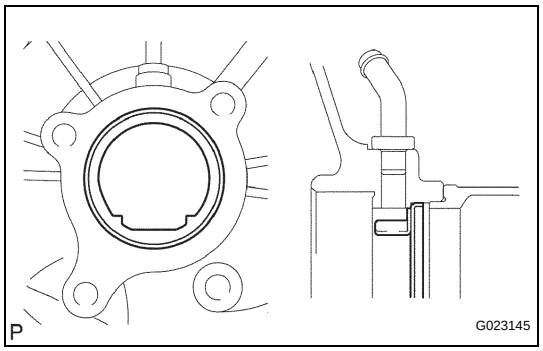

32. INSTALL FRONT DIFFERENTIAL SIDE BEARING RETAINER DEFLECTOR

(a) Using a brass bar and a hammer, install the side bearing retainer deflector.

NOTICE:

Be sure to install the side bearing retainer deflector in the correct direction.

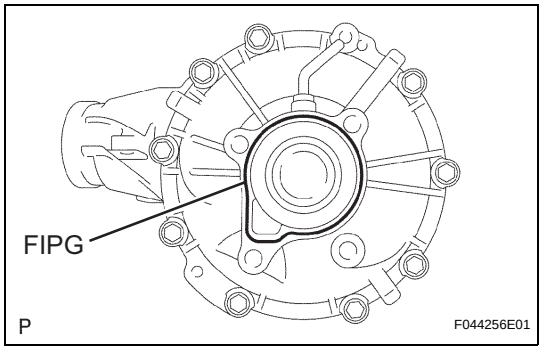

33. INSTALL FRONT DIFFERENTIAL TUBE ASSEMBLY

(a) Remove any old FIPG material and be careful not to drop oil on the contact surfaces of the differential and clutch case.

(b) Clean the contact surfaces of any residual FIPG material using gasoline or alcohol.

(c) Apply FIPG to the differential, as shown.

FIPG:

Part No. 08826-00090, THREE BOND 1281 or equivalent

HINT:

Install the differential tube within 10 minutes of applying FIPG.

(d) Install the differential tube into the differential carrier assembly.

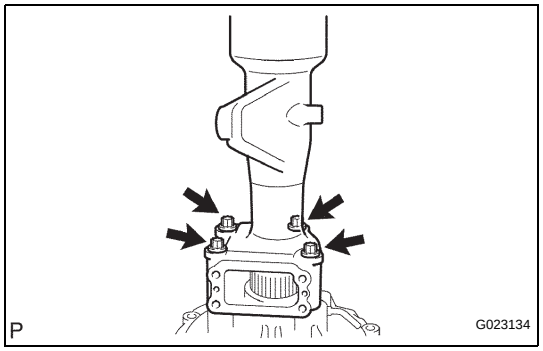

(e) Clean the threads of the 4 bolts and retainer bolt holes with toluene or trichloroethylene.

(f) Apply adhesive to 2 to 3 threads of each bolt end.

Adhesive:

Part No. 08833-00070, THREE BOND 1324 or equivalent

(g) Install the 4 bolts.

Torque: 110 N*m (1,122 kgf*cm, 81 ft.*lbf) or less

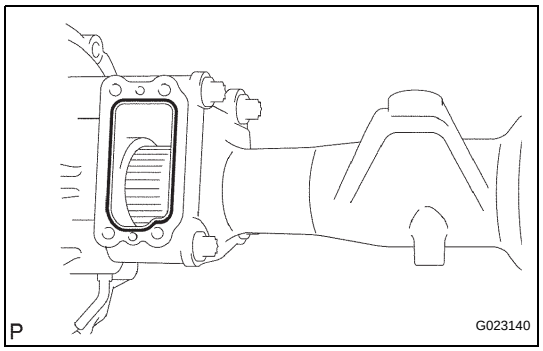

34. INSTALL DIFFERENTIAL VACUUM ACTUATOR ASSEMBLY

(a) Remove any old FIPG material and be careful not to drop oil on the contact surfaces of the actuator and clutch case.

(b) Clean the contact surfaces of any residual FIPG material using gasoline or alcohol.

(c) Apply FIPG to the differential tube, as shown.

FIPG:

Part No. 08826-00090, THREE BOND 1281 or equivalent

HINT:

Install the actuator within 10 minutes of applying FIPG.

DF

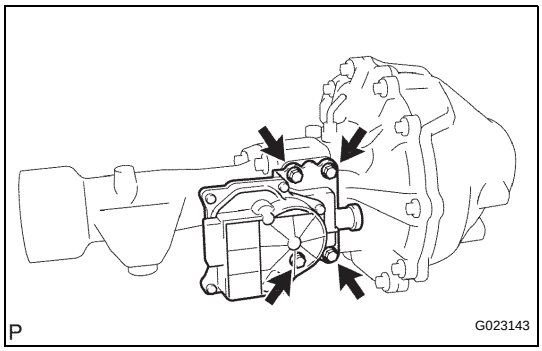

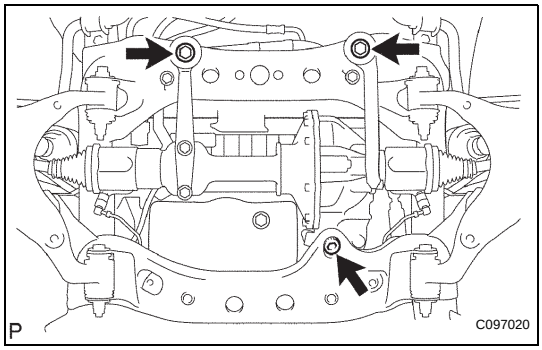

(d) Clean the threads of the 4 bolts and retainer bolt holes with toluene or trichloroethylene.
(e) Install the actuator assembly onto the differential tube.
(f) Apply adhesive to 2 to 3 threads of each bolt end.
Adhesive:
Part No. 08833-00070, THREE BOND 1281 or equivalent
(g) Install the 4 bolts.
Torque: 21 N*m (210 kgf*cm, 15 ft.*lbf)

INSTALLATION

1. **INSTALL FRONT DIFFERENTIAL CARRIER ASSEMBLY**
(a) Connect the actuator hose and connector.
(b) Install the No. 1 mounting support with the 3 bolts.
Torque: 186 N*m (1,899 kgf*cm, 138 ft.*lbf)
(c) Install the No. 2 mounting support with the 2 bolts.
Torque: 160 N*m (1,631 kgf*cm, 118 ft.*lbf)
(d) Install the No. 3 front differential support with the 2 bolts.
Torque: 108 N*m (1,100 kgf*cm, 80 ft.*lbf)
(e) Support the front differential with a jack.
(f) Install the 2 front mounting bolts and nuts.
Torque: 137 N*m (1,400 kgf*cm, 101 ft.*lbf)
(g) Install the No. 1 front differential mount nut.
Torque: 87 N*m (889 kgf*cm, 64 ft.*lbf)
(h) Install the front differential breather tube bracket with the bolt.
Torque: 13 N*m (129 kgf*cm, 8 ft.*lbf)
(i) Lower the jack.

2. **INSTALL FRONT DRIVE SHAFT ASSEMBLY LH (See page DS-4)**

3. **INSTALL FRONT DRIVE SHAFT ASSEMBLY RH**
HINT:
Use the same procedure as for the LH side.

4. **INSTALL FRONT SUSPENSION LOWER ARM LH (See page DS-9)**

5. **INSTALL FRONT SUSPENSION LOWER ARM RH**
HINT:
Use the same procedure as for the LH side.

6. **INSTALL TIE ROD END SUB-ASSEMBLY LH (See page PS-68)**

7. **INSTALL TIE ROD END SUB-ASSEMBLY RH (See page PS-68)**

8. **INSTALL FRONT SPEED SENSOR LH (See page BC-303)**

9. **INSTALL FRONT SPEED SENSOR RH**
HINT:
Use the same procedure as for the LH side.

DF

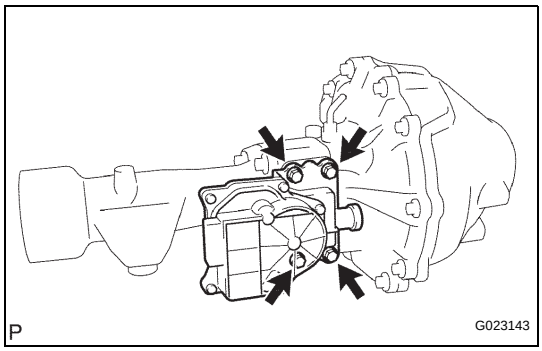

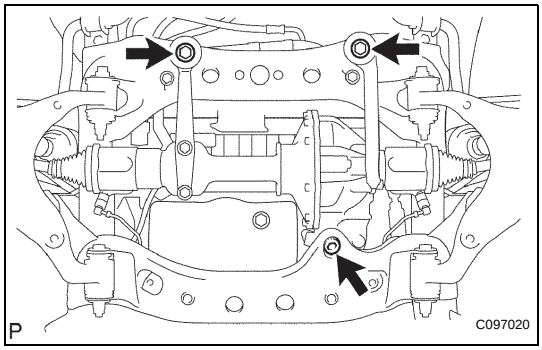

(d) Clean the threads of the 4 bolts and retainer bolt holes with toluene or trichloroethylene.
(e) Install the actuator assembly onto the differential tube.
(f) Apply adhesive to 2 to 3 threads of each bolt end.
Adhesive:
Part No. 08833-00070, THREE BOND 1281 or equivalent
(g) Install the 4 bolts.
Torque: 21 N*m (210 kgf*cm, 15 ft.*lbf)

INSTALLATION

1. **INSTALL FRONT DIFFERENTIAL CARRIER ASSEMBLY**
(a) Connect the actuator hose and connector.
(b) Install the No. 1 mounting support with the 3 bolts.
Torque: 186 N*m (1,899 kgf*cm, 138 ft.*lbf)
(c) Install the No. 2 mounting support with the 2 bolts.
Torque: 160 N*m (1,631 kgf*cm, 118 ft.*lbf)
(d) Install the No. 3 front differential support with the 2 bolts.
Torque: 108 N*m (1,100 kgf*cm, 80 ft.*lbf)
(e) Support the front differential with a jack.
(f) Install the 2 front mounting bolts and nuts.
Torque: 137 N*m (1,400 kgf*cm, 101 ft.*lbf)
(g) Install the No. 1 front differential mount nut.
Torque: 87 N*m (889 kgf*cm, 64 ft.*lbf)
(h) Install the front differential breather tube bracket with the bolt.
Torque: 13 N*m (129 kgf*cm, 8 ft.*lbf)
(i) Lower the jack.

2. **INSTALL FRONT DRIVE SHAFT ASSEMBLY LH (See page DS-4)**

3. **INSTALL FRONT DRIVE SHAFT ASSEMBLY RH**
HINT:
Use the same procedure as for the LH side.

4. **INSTALL FRONT SUSPENSION LOWER ARM LH (See page DS-9)**

5. **INSTALL FRONT SUSPENSION LOWER ARM RH**
HINT:
Use the same procedure as for the LH side.

6. **INSTALL TIE ROD END SUB-ASSEMBLY LH (See page PS-68)**

7. **INSTALL TIE ROD END SUB-ASSEMBLY RH (See page PS-68)**

8. **INSTALL FRONT SPEED SENSOR LH (See page BC-303)**

9. **INSTALL FRONT SPEED SENSOR RH**
HINT:
Use the same procedure as for the LH side.

DF

10. **INSTALL FRONT STABILIZER LINK ASSEMBLY LH (See page SP-51)**

11. **INSTALL FRONT STABILIZER LINK ASSEMBLY RH**
    HINT:
    Use the same procedure as for the LH side.

12. **INSTALL FRONT AXLE HUB LH NUT (See page AH-20)**

13. **INSTALL FRONT AXLE HUB RH NUT**
    HINT:
    Use the same procedure as for the LH side.

14. **INSTALL FRONT PROPELLER SHAFT ASSEMBLY (See page PR-19)**

15. **ADD DIFFERENTIAL OIL (See page DF-8)**

16. **INSPECT DIFFERENTIAL OIL (See page DF-8)**

17. **INSPECT FOR DIFFERENTIAL OIL LEAKAGE**

18. **INSTALL NO. 2 ENGINE UNDER COVER SUB-ASSEMBLY**
    (a) Install the No. 2 engine under cover sub-assembly with the 4 bolts.
    Torque: 30 N*m (306 kgf*cm, 22 ft.*lbf)

19. **INSTALL NO. 1 ENGINE UNDER COVER SUB-ASSEMBLY**
    (a) Install the No. 1 engine under cover sub-assembly with the 4 bolts.
    Torque: 30 N*m (306 kgf*cm, 22 ft.*lbf)

20. **INSTALL FRONT WHEEL**
    Torque: 113 N*m (1,152 kgf*cm, 83 ft.*lbf)

21. **INSPECT AND ADJUST FRONT WHEEL ALIGNMENT**
    (See page SP-7)

22. **CONNECT CABLE TO NEGATIVE BATTERY TERMINAL**
    Torque: 3.9 N*m (40 kgf*cm, 35 in.*lbf)

23. **CHECK VSC SENSOR SIGNAL (w/ VSC)**
    HINT:
    (See page BC-103)

24. **CHECK ABS SENSOR SIGNAL (w/o VSC)**
    HINT:
    (See page BC-7)

REMOVAL

1. **DISCONNECT CABLE FROM NEGATIVE BATTERY TERMINAL**
2. **REMOVE REAR WHEEL**
3. **DRAIN BRAKE FLUID**
4. **REMOVE REAR BRAKE DRUM SUB-ASSEMBLY (See page BR-68)**
5. **REMOVE FRONT BRAKE SHOE (See page BR-68)**
6. **REMOVE REAR BRAKE SHOE (See page BR-69)**
7. **REMOVE PROPELLER SHAFT ASSEMBLY (for 2WD Drive Type, Regular Cab) (See page PR-3)**
8. **REMOVE PROPELLER WITH CENTER BEARING SHAFT ASSEMBLY (for 2WD Drive Type, Except Regular Cab) (See page PR-8)**
9. **REMOVE PROPELLER SHAFT ASSEMBLY (for 4WD Type, Regular Cab) (See page PR-22)**
10. **REMOVE PROPELLER WITH CENTER BEARING SHAFT ASSEMBLY (for 4WD Drive Type, Except Regular Cab) (See page PR-8)**
11. **DRAIN DIFFERENTIAL OIL (See page DF-8)**
12. **SEPARATE REAR SPEED SENSOR LH (See page BC-304)**
13. **SEPARATE REAR SPEED SENSOR RH**
    HINT:
    Use the same procedure as for the LH side.
14. **SEPARATE NO.3 PARKING BRAKE CABLE ASSEMBLY (See page PB-21)**
15. **SEPARATE NO.2 PARKING BRAKE CABLE ASSEMBLY**
    HINT:
    Use the same procedure as for the LH side.
16. **REMOVE REAR AXLE SHAFT WITH BACKING PLATE (See page AH-29)**
17. **REMOVE REAR AXLE SHAFT WITH BACKING PLATE**
    HINT:
    Use the same procedure as for the LH side.

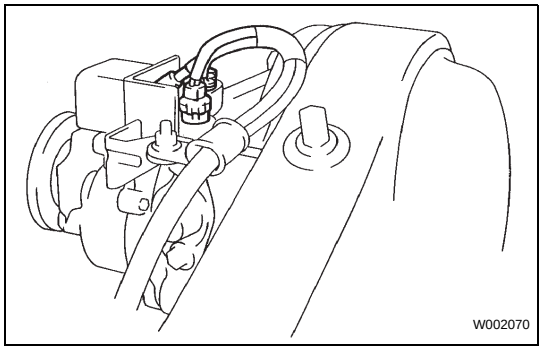

18. REMOVE REAR DIFFERENTIAL CARRIER ASSEMBLY

(a) Disconnect the differential lock actuator connector.

(b) Disconnect the rear differential lock actuator breather hose from the differential actuator assembly.

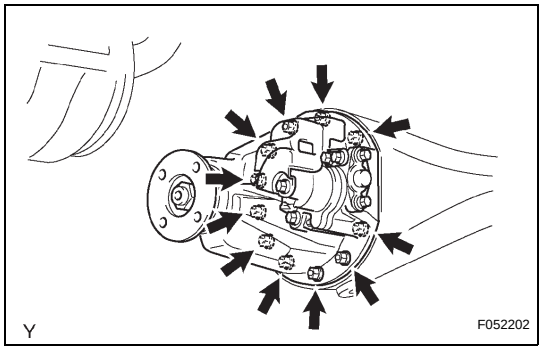

(c) Remove the 11 nuts and differential carrier assembly.

NOTICE:

Be careful not to damage the contact surfaces of the differential carrier and rear axle housing.

(d) Remove the rear differential carrier gasket from the differential carrier assembly.

DF

DISASSEMBLY

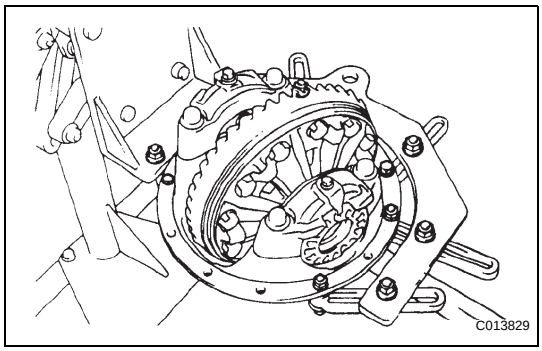

1. FIX REAR DIFFERENTIAL CARRIER ASSEMBLY

(a) Fix the rear differential carrier assembly to the overattachment.

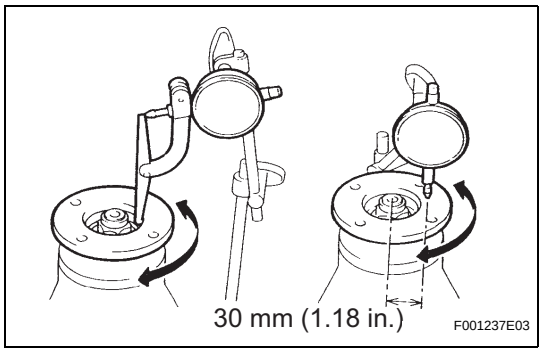

2. INSPECT REAR DRIVE PINION COMPANION FLANGE SUB-ASSEMBLY REAR

(a) Using a dial indicator, measure the runout of the companion flange vertically and horizontally.

Maximum runout:

Vertical runout: 0.10 mm (0.0039 in.)

Lateral runout: 0.10 mm (0.0039 in.)

If the runouts are not with the specifications, replace the companion flange.

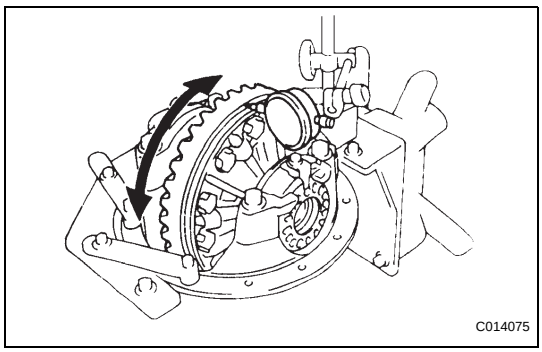

3. INSPECT RUNOUT OF DIFFERENTIAL RING GEAR

(a) Using a dial indicator, check the runout of the ring gear.

Maximum runout:

0.07 mm (0.0028 in.)

If the runout is greater than the maximum, replace the ring gear with a new one.

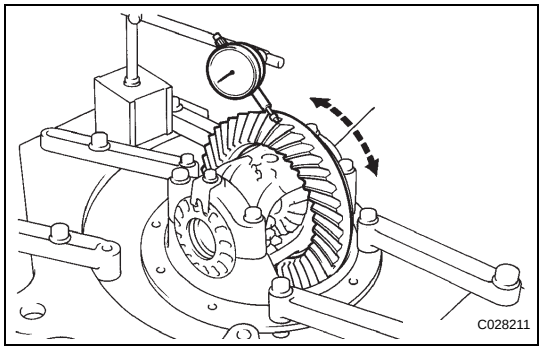

4. INSPECT DIFFERENTIAL RING GEAR BACKLASH

(a) Using a dial indicator, check the backlash of the ring gear.

Backlash:

0.13 to 0.18 mm (0.0051 to 0.0071 in.)

If the backlash is not within the specification, adjust or repair the side bearing preload as necessary.

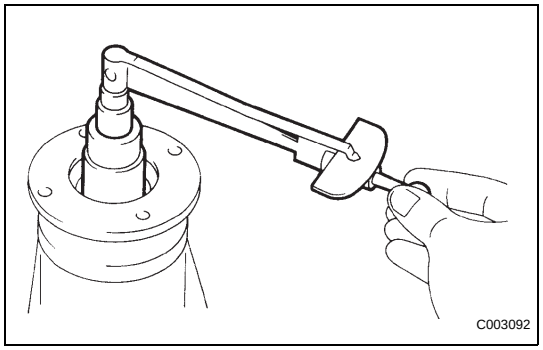

5. INSPECT DIFFERENTIAL DRIVE PINION PRELOAD

(a) Using a torque wrench, measure the preload of the backlash between the drive pinion and ring gear.

Preload (at starting):

0.56 to 0.85 N*m (5.7 to 8.7 kgf*cm, 5.0 to 7.5 in.*lbf)

If necessary, disassemble and inspect the differential assembly.

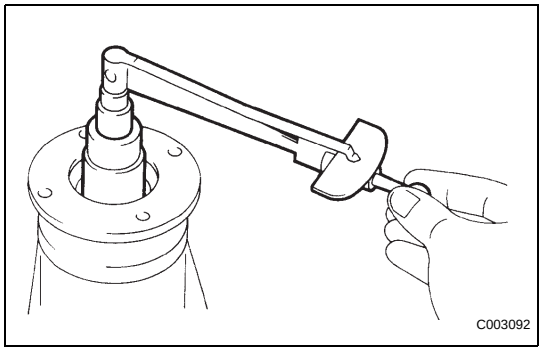

6. INSPECT TOTAL PRELOAD

(a) Using a torque wrench, measure the preload with the teeth of the drive pinion and ring gear in contact.

(b) Using a torque wrench, measure the total preload.

Total preload (at starting):

Drive pinion preload plus 0.39 to 0.59 N*m (4.0 to 6.0 kgf*cm, 3.5 to 5.2 in.*lbf)

If necessary, disassemble and inspect the differential.

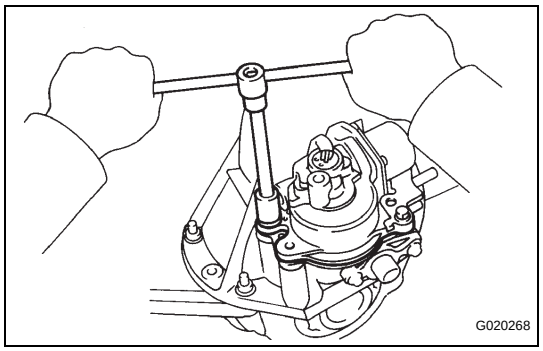

7. REMOVE DIFFERENTIAL LOCK SHIFT ACTUATOR

(a) Remove the 4 bolts and actuator from the differential carrier.

(b) Remove the O-ring.

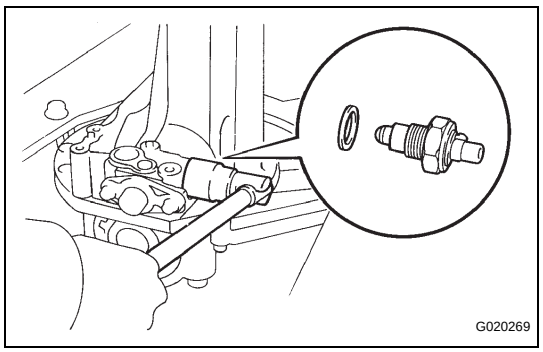

8. REMOVE NO.1 TRANSFER INDICATOR SWITCH

(a) Remove the indicator switch and gasket.

DF

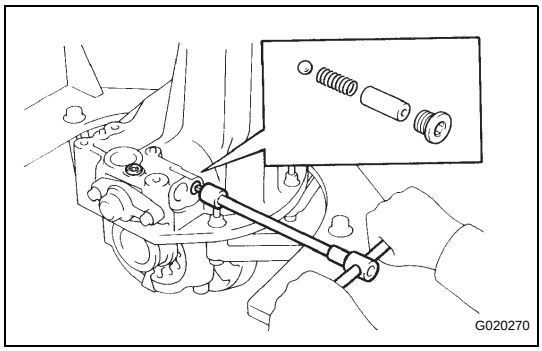

9. REMOVE REAR DIFFERENTIAL LOCK SHIFT FORK SHAFT

(a) Using a 6 mm hexagon wrench, remove the 2 screw plugs.

(b) Remove the spring seat, spring and ball.

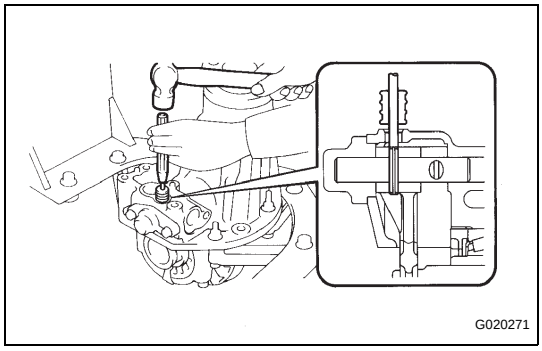

(c) Using a 5 mm pin punch and hammer, remove the slotted pin.

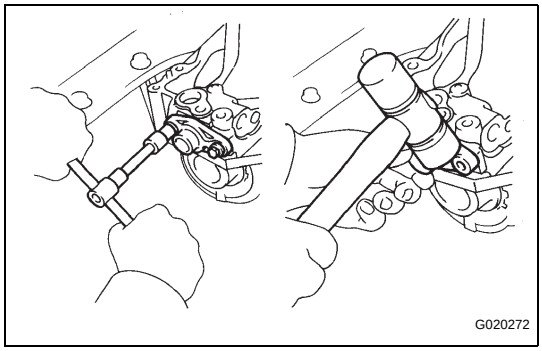

(d) Remove the 2 bolts from the shaft retainer.

(e) Using a plastic hammer, remove the shaft retainer.

(f) Remove the shift fork shaft.

10. REMOVE REAR DRIVE PINION NUT

(a) Using SST and a hammer, loosen the staked part of the nut.

SST 09930-00010

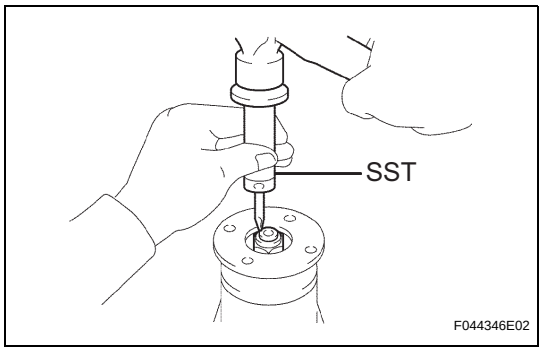

(b) Using SST to hold the drive pinion companion flange, remove the nut.

SST 09330-00021

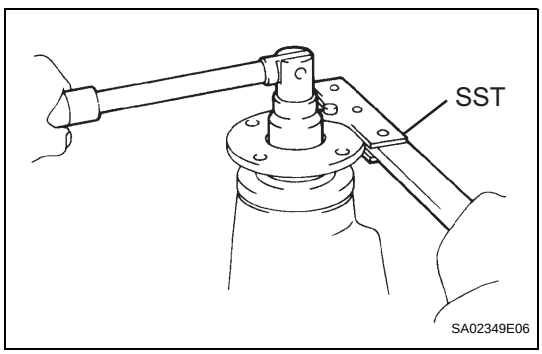

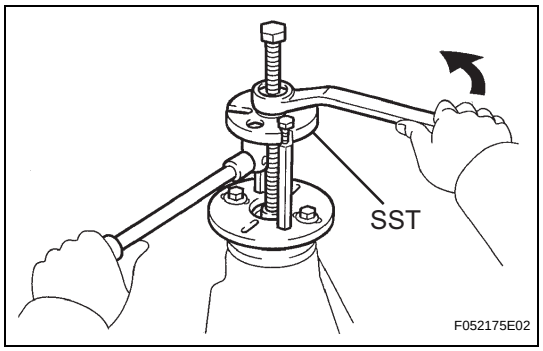

11. REMOVE REAR DRIVE PINION COMPANION FLANGE SUB-ASSEMBLY REAR

(a) Using SST, remove the drive pinion companion flange.

SST 09950-30012 (09951-03010, 09953-03010, 09954-03010, 09955-03030, 09956-03030)

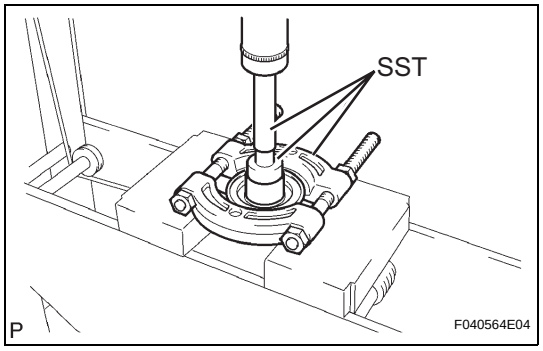

12. REMOVE REAR DIFFERENTIAL DUST DEFLECTOR

(a) Using SST and a press, remove the dust deflector.

SST 09950-60010 (09951-00380), 09950-70010 (09951-07150), 09950-00020

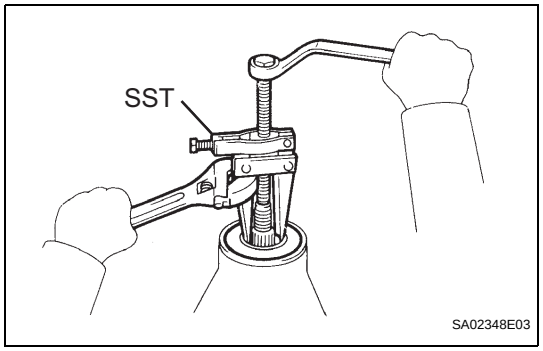

13. REMOVE REAR DIFFERENTIAL CARRIER OIL SEAL

(a) Using SST, remove the oil seal from the differential carrier.

SST 09308-10010

14. REMOVE REAR DIFFERENTIAL DRIVE PINION OIL SLINGER

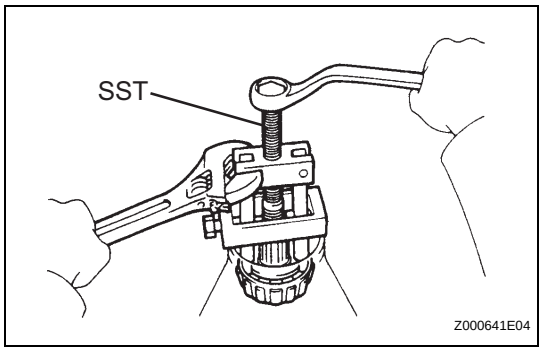

15. REMOVE REAR DRIVE PINION FRONT TAPERED ROLLER BEARING

(a) Using SST, remove the drive pinion tapered roller bearing from the drive pinion.

SST 09556-22010

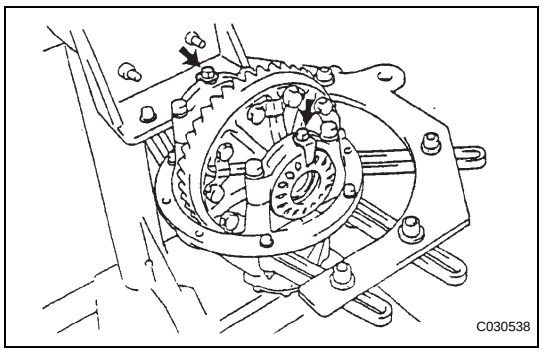

16. REMOVE REAR DIFFERENTIAL BEARING ADJUSTING NUT LOCK

(a) Remove the 2 bolts and 2 rear differential bearing adjusting nut locks.

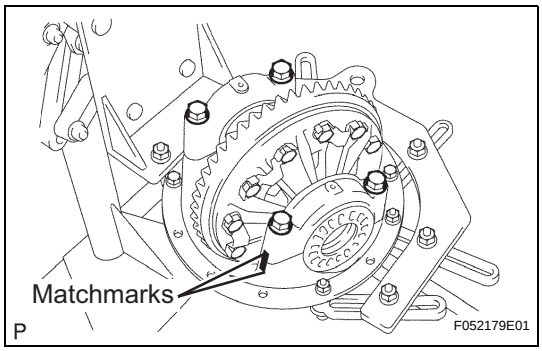

17. REMOVE DIFFERENTIAL CASE ASSEMBLY

(a) Place matchmarks on the bearing cap and differential carrier.

(b) Remove the 4 bolts and 2 differential bearing caps.

(c) Remove the 2 adjusting nuts.

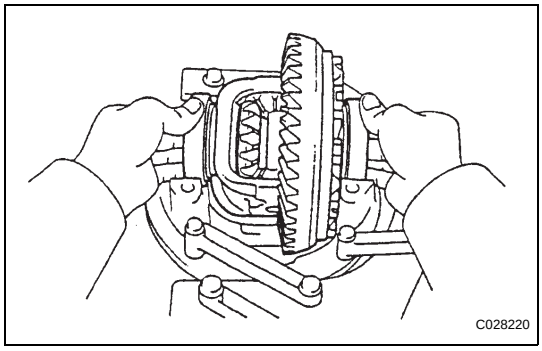

(d) Remove the rear differential case sub-assembly and 2 case bearings from the differential carrier.
HINT:
Tag the 2 case bearings outer races to show the locations for reassembly.

DF

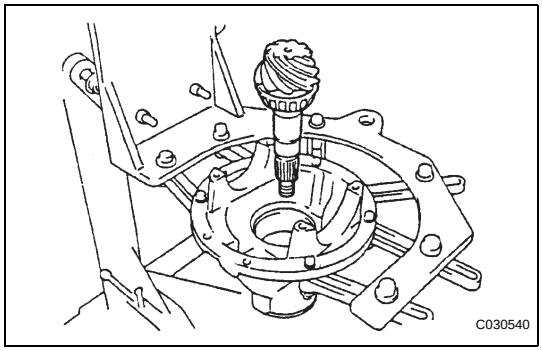

18. REMOVE DIFFERENTIAL DRIVE PINION

(a) Remove the differential drive pinion and bearing spacer from the differential carrier.

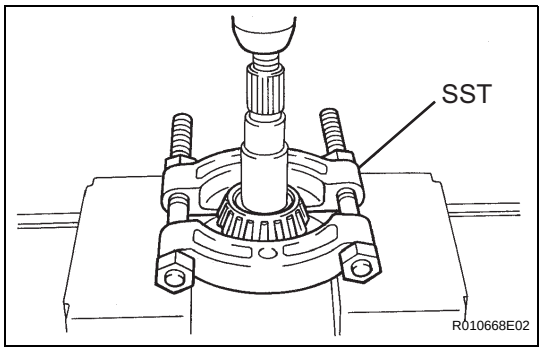

19. REMOVE REAR DRIVE PINION REAR TAPERED ROLLER BEARING

(a) Using SST and a press, remove the drive pinion tapered roller bearing from the drive pinion.
SST 09950-00020
HINT:
If either the drive pinion or ring gear is damaged, replace them as a set.

20. REMOVE REAR DIFFERENTIAL DRIVE PINION PLATE WASHER

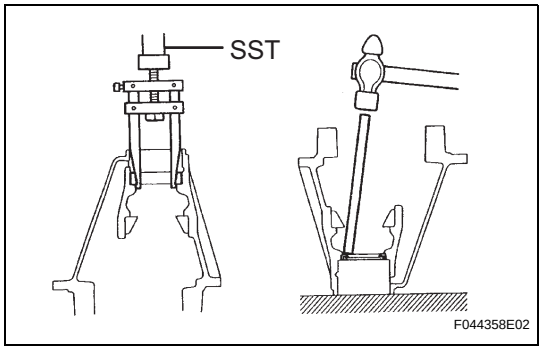

21. REMOVE REAR DRIVE PINION FRONT TAPERED ROLLER BEARING

(a) Using SST, remove the front tapered roller bearing from the carrier.
SST 09308-00010

(b) Using a brass bar and a hammer, remove the oil storage ring from the carrier.

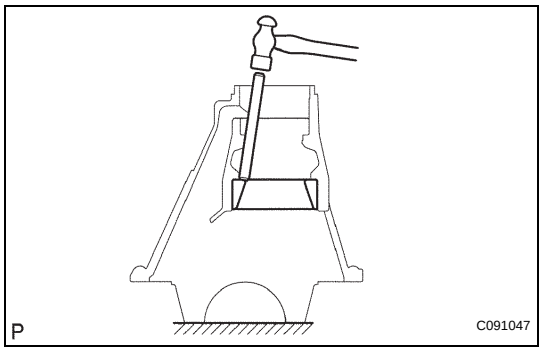

22. REMOVE REAR DRIVE PINION REAR TAPERED ROLLER BEARING

(a) Using a brass bar and a hammer, remove the rear tapered roller bearing from the carrier.

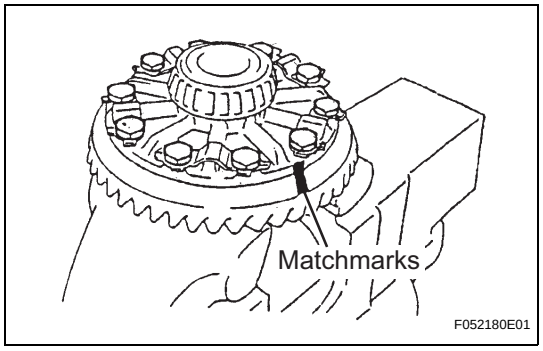

23. REMOVE DIFFERENTIAL RING GEAR

(a) Place matchmarks on the ring gear and differential case.
(b) Using a screwdriver and a hammer, unstake the lock plates.
(c) Remove the 10 ring gear set bolts and 5 lock plates.

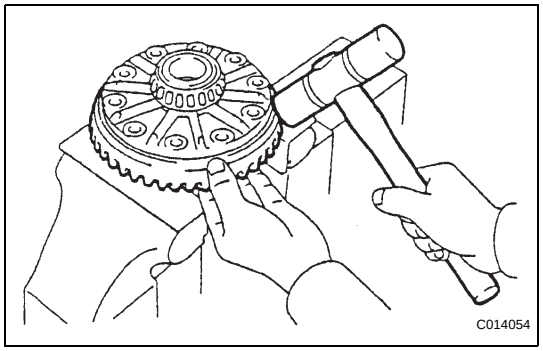

(d) Using a plastic hammer, tap on the ring gear to separate it from the differential case.

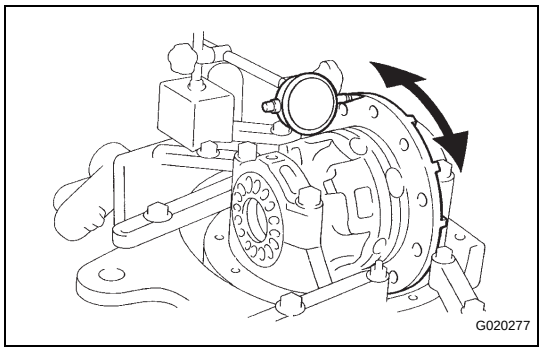

24. INSPECT DIFFERENTIAL CASE ASSEMBLY RUNOUT

(a) Install the rear differential case bearing onto the differential case.
(b) Install the differential case onto the differential carrier.
(c) Install the 2 bearing caps and 4 bolts onto the differential carrier.
Torque: 85 N*m (870 kgf*cm, 63 ft.*lbf)
(d) Inspect the differential case runout.
Maximum runout:
0.07 mm (0.0028 in.)
(e) Remove the differential case.
(f) Remove the rear differential case bearing.

DF

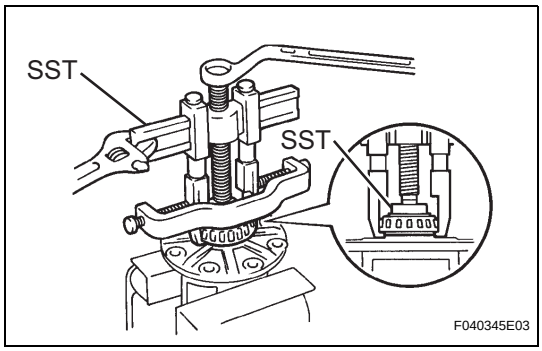

25. REMOVE REAR DIFFERENTIAL CASE BEARING

(a) Using SST, remove the 2 rear differential case bearings from the differential case.

SST 09950-40011 (09951-04020, 09952-04010, 09953-04030, 09954-04010, 09955-04061, 09957-04010, 09958-04011), 09950-60010 (09951-00360)

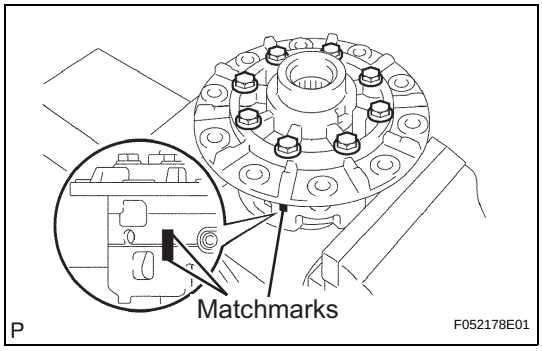

26. DISASSEMBLE DIFFERENTIAL CASE

(a) Place matchmarks on the LH and RH cases.

(b) Remove the 8 bolts.

DF

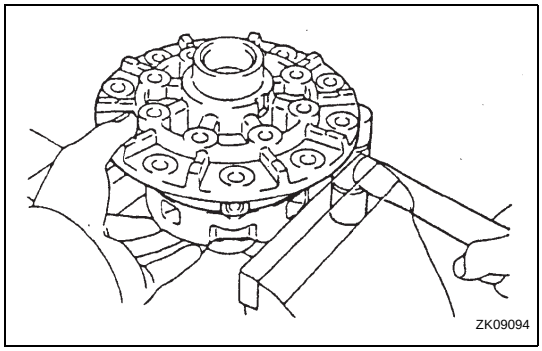

(c) Using a plastic hammer, separate the LH and RH cases.

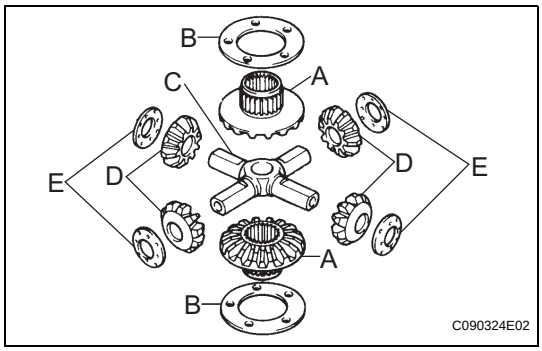

(d) Remove these parts from the differential case.

A	Side gear
B	Side gear thrust washer
C	Spider
D	Pinion gear
E	Pinion gear thrust washer

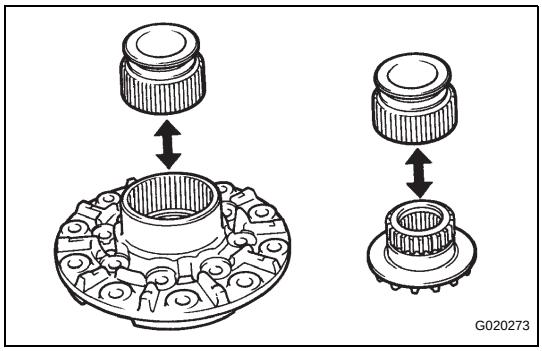

27. INSPECT REAR DIFFERENTIAL LOCK SLEEVE

(a) Install the sleeve onto the differential case (LH) and check that it moves smoothly.

(b) Install the side gear onto the sleeve and check that it moves smoothly.

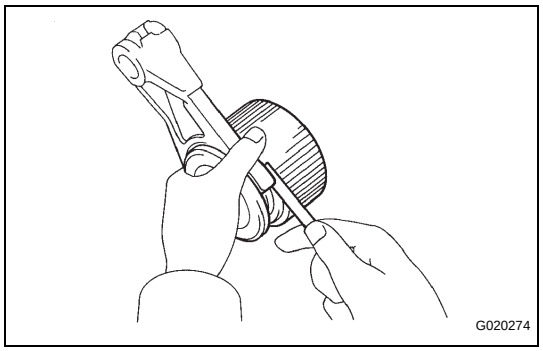

(c) Using a feeler gauge, measure the clearance between the shift fork and sleeve.
Maximum clearance:
0.15 to 0.35 mm (0.0059 to 0.0138 in.)

28. INSPECT DIFFERENTIAL PINION AND SIDE GEAR

(a) Check that there is no damage to the differential pinion and differential side gear.
If the differential pinion and/or differential side gear is damaged, replace the differential.

29. INSPECT DIFFERENTIAL CASE ASSEMBLY

(a) Check that the differential case is not damaged.
If the differential case is damaged, replace the differential case.

REASSEMBLY

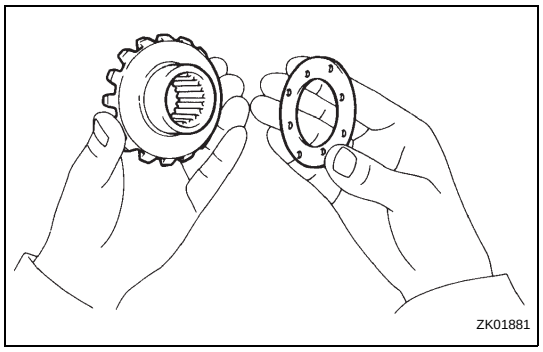

1. INSTALL DIFFERENTIAL CASE ASSEMBLY

(a) Install the rear differential side gear thrust washer onto the rear differential side gear.

(b) Install the rear differential pinion thrust washer and rear differential pinion onto the rear differential spider.

(c) Fix the differential case RH.

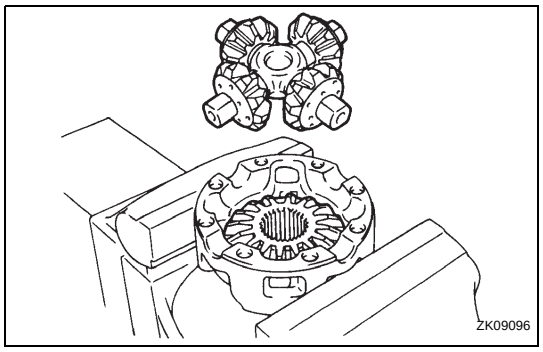

(d) Install the rear differential side gear and rear differential spider onto the differential case RH.

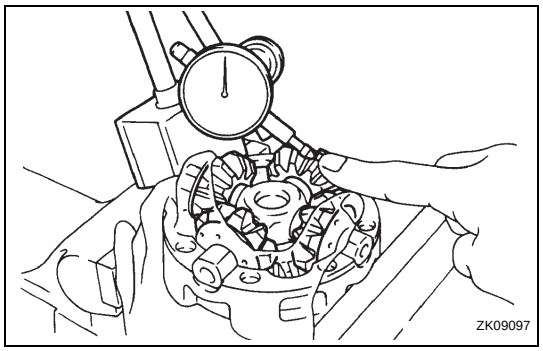

(e) Using a dial indicator, measure the differential case RH side backlash while holding the pinion toward the case.
Backlash:
0.05 to 0.20 mm (0.002 to 0.008 in.)

(f) Remove the rear differential spider from the differential case RH.

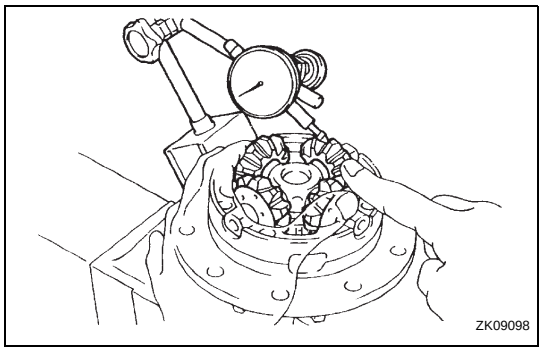

(g) Install the rear differential side gear and rear differential spider onto the differential case LH.

(h) Using a dial indicator, measure the differential case LH side backlash while holding the pinion toward the case.

Backlash:

0.05 to 0.20 mm (0.002 to 0.008 in.)

If the backlash is not within the specification, install 2 side gear thrust washers of a different thickness.

Thrust washer thickness

Thickness mm (in.)	Thickness mm (in.)
0.9 (0.0354)	1.2 (0.0472)
1.0 (0.0394)	1.3 (0.0512)
1.1 (0.0433)	-

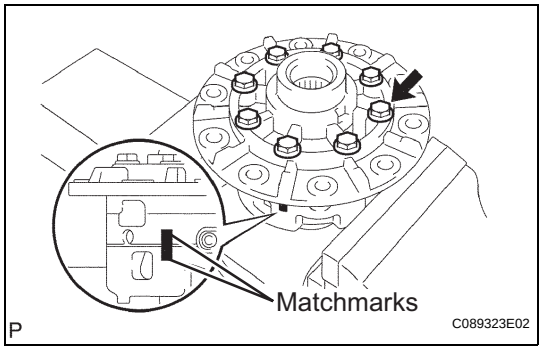

(i) Align the matchmarks and assemble the RH and LH cases.

(j) Using a plastic hammer, install the differential case.

(k) Install the 8 bolts.

Torque: 47 N*m (480 kgf*cm, 35 ft.*lbf)

DF

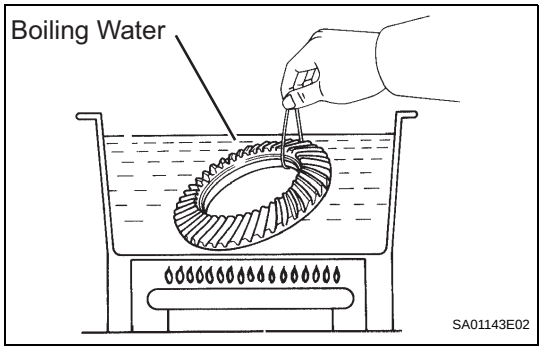

2. INSTALL DIFFERENTIAL RING GEAR

(a) Clean the contact surfaces of the differential case and ring gear.

(b) Heat the ring gear to approximately 100°C (212°F) in boiling water.

(c) Carefully take the ring gear out of the boiling water.

(d) After the moisture on the ring gear has completely evaporated, quickly install the ring gear onto the differential case.

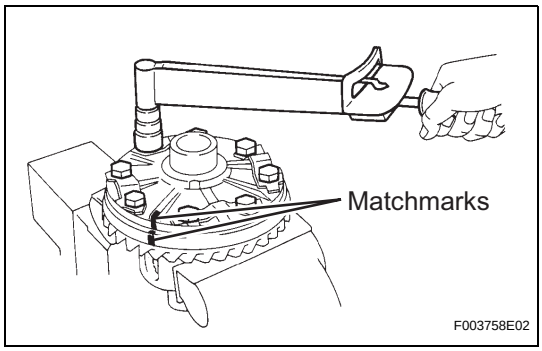

(e) Align the matchmarks on the ring gear and differential case.

(f) Temporarily install 5 new lock plates and 10 bolts.

(g) After the ring gear cools down sufficiently, torque the 8 bolts uniformly.

Torque: 97 N*m (985 kgf*cm, 71 ft.*lbf)

HINT:

Tighten the bolts in diagonal order little by little in several steps.

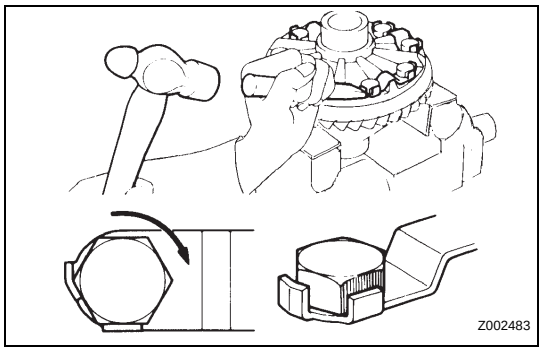

(h) Using a chisel and a hammer, stake the 5 lock plates.
HINT:
Stake one claw so that it is flush with the flat surface of the bolt.
For the claw in contact with the protruding portion of the bolt, stake only the half on the tightening side.

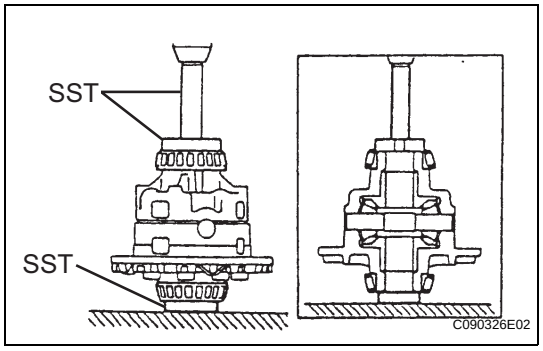

3. INSTALL REAR DIFFERENTIAL CASE BEARING

(a) Using SST and a press, install the bearing onto the differential case.
SST 09950-60010 (09951-00560, 09951-00570), 09950-70010 (09951-07150)

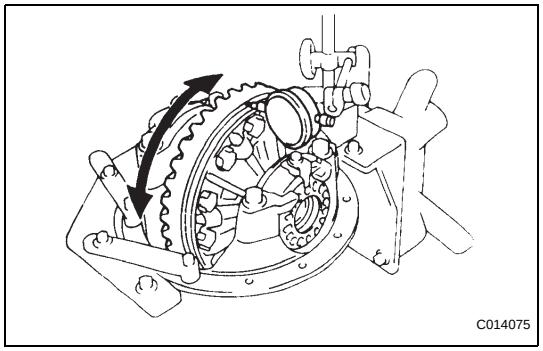

4. INSPECT DIFFERENTIAL RING GEAR RUNOUT

(a) Install the differential case onto the carrier, and install the 2 adjusting nuts so that there is no play in the bearing.
(b) Install the 2 bearing caps with the 4 bolts.
Torque: 85 N*m (870 kgf*cm, 63 ft.*lbf)
(c) Using a dial indicator, measure the runout of the ring gear.
Maximum runout:
0.07 mm (0.0028 in.)
(d) Remove the 2 bearing caps, 2 adjusting nuts and differential case.

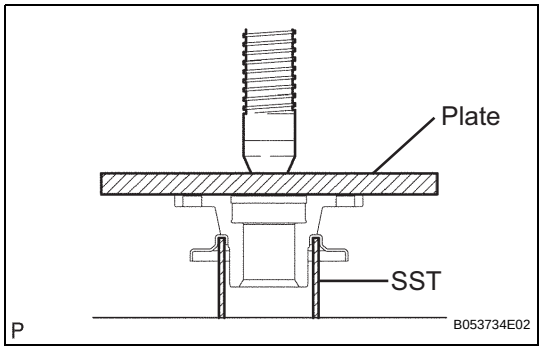

5. INSTALL REAR DIFFERENTIAL DUST DEFLECTOR

(a) Using a press, install the dust deflector.
NOTICE:
Be careful not to damage the dust deflector.
SST 09636-20010

DF

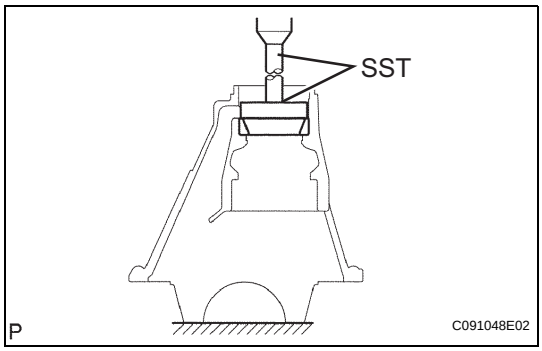

6. INSTALL REAR DRIVE PINION FRONT TAPERED ROLLER BEARING

(a) Using a brass bar and a hammer, install the oil storage ring.

(b) Using SST and a press, install the tapered roller bearing onto the carrier.
SST 09316-60011 (09316-00011, 09316-00021)

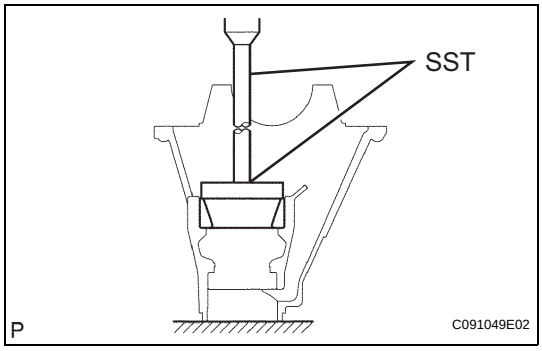

7. INSTALL REAR DRIVE PINION REAR TAPERED ROLLER BEARING

(a) Using SST and a press, install the tapered roller bearing onto the carrier.
SST 09316-60011 (09316-00041, 09316-00011)

DF

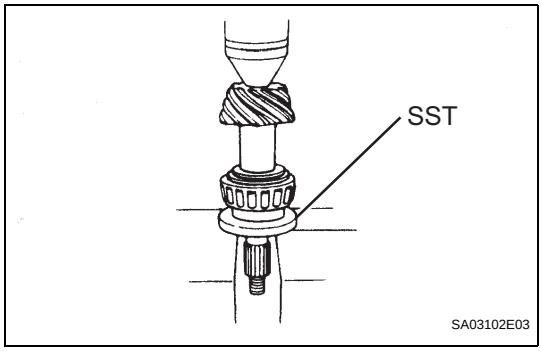

8. INSTALL REAR DRIVE PINION REAR TAPERED ROLLER BEARING

(a) Install the plate washer onto the drive pinion.

(b) Using SST and a press, install the tapered roller bearing onto the drive pinion.
SST 09506-30012

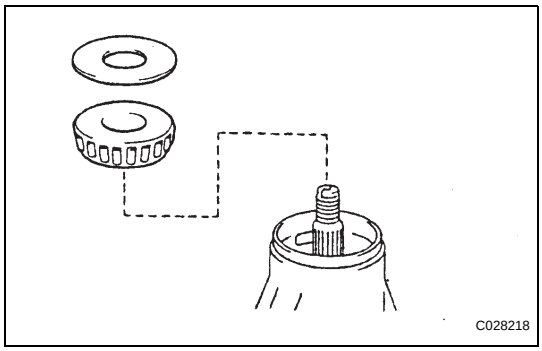

9. ADJUST DIFFERENTIAL DRIVE PINION PRELOAD

(a) Install the drive pinion, rear drive pinion tapered roller bearing and rear differential drive oil slinger.
HINT:
Assemble the spacer and oil seal after adjusting the gear contact pattern.

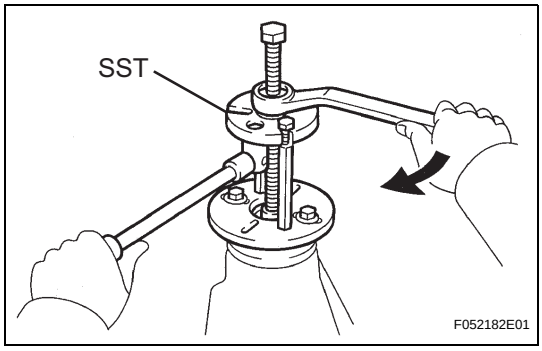

(b) Using SST, install the drive pinion companion flange.

(c) Coat the threads of the nut with hypoid gear oil LSD.
SST 09950-30012 (09951-03010, 09953-03010, 09954-03010, 09955-03030, 09956-03030)

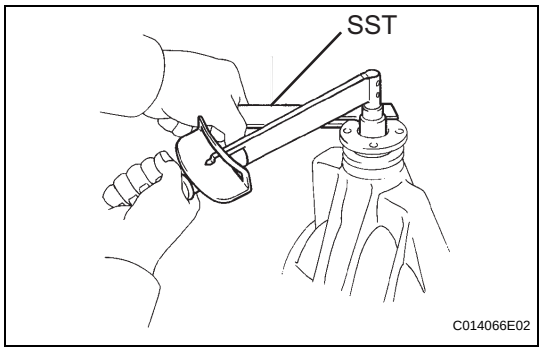

(d) Using SST to hold the drive pinion companion flange, tighten the nut.
Torque: 370 N*m (3,770 kgf*cm, 273 ft.*lbf) or less
SST 09330-00021
NOTICE:
- **As there is no spacer, tighten a little at a time, being careful not to overtighten it.**
- **Apply hypoid gear oil LSD to the nut.**

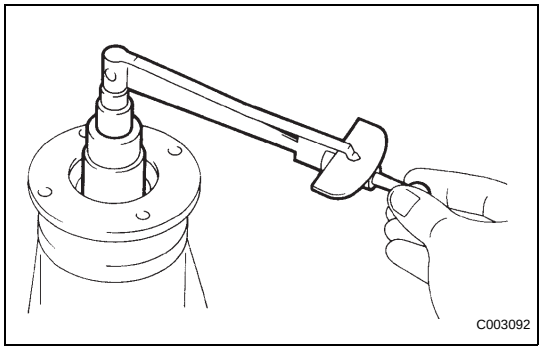

(e) Using a torque wrench, measure the preload.
Preload (at starting)

Bearing	Standard
New	1.05 to 1.64 N*m (10.7 to 16.7 kgf*cm, 9.3 to 14.5 in.*lbf)
Reused	0.56 to 0.85 N*m (5.7 to 8.7 kgf*cm, 4.9 to 7.5 in.*lbf)

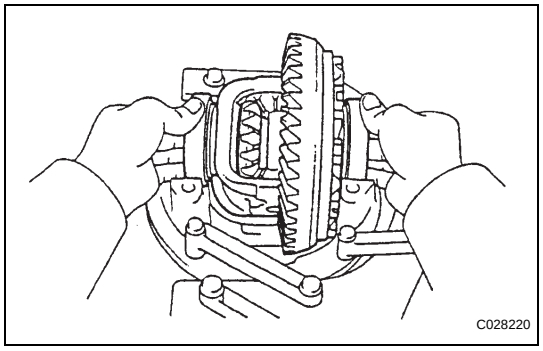

10. INSTALL DIFFERENTIAL CASE ASSEMBLY

(a) Place the 2 bearing outer races on their corresponding bearings.
HINT:
Make sure the right and left races are not interchanged.

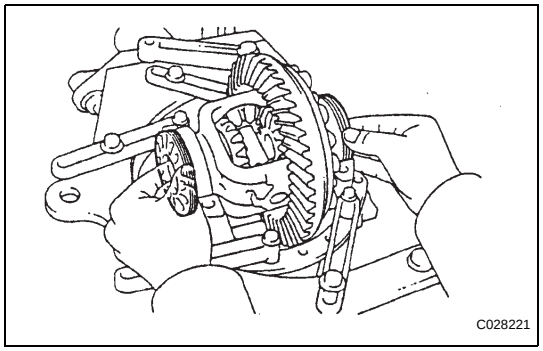

11. INSTALL REAR DIFFERENTIAL BEARING ADJUSTING NUT

(a) Install the 2 adjusting nuts into the carrier, making sure the nuts are threaded properly.

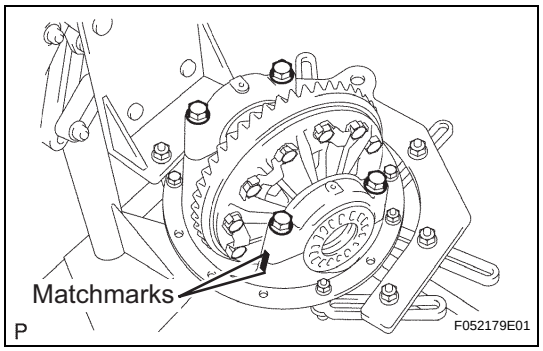

12. INSPECT AND ADJUST BACKLASH DIFFERENTIAL RING GEAR AND DIFFERENTIAL DRIVE PINION

(a) Align the matchmarks on the cap and carrier.
(b) Install the right and left bearing caps with the 4 bolts.
Torque: 85 N*m (870 kgf*cm, 63 ft.*lbf)
HINT:
If the bearing cap does not fit tightly on the carrier, the adjusting nuts are not threaded properly. Reinstall the adjusting nuts if necessary.

DF

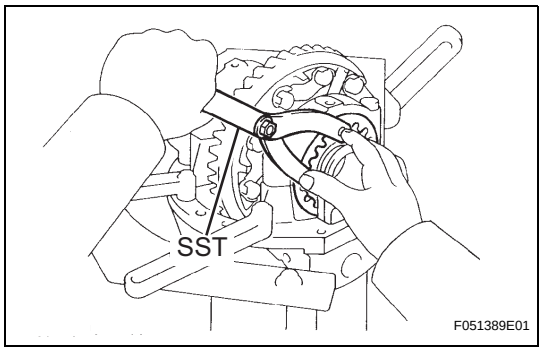

(c) Tighten the 4 bearing cap bolts to the specified torque, then loosen them to the point where the adjusting nuts can be turned by SST.
Torque: 85 N*m (870 kgf*cm, 63 ft.*lbf)

(d) Using the SST, tighten the adjusting nut on the ring gear side until the ring has a backlash of about 0.2 mm (0.008 in.).
SST 09960-10010 (09962-01000, 09963-00700)

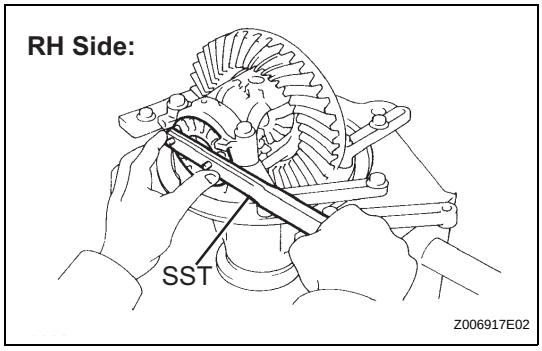

(e) While turning the ring gear, use the SST to fully tighten the adjusting nut on the drive pinion side. After the bearings have settled, loosen the adjusting nut on the drive pinion side.
SST 09504-00011

(f) Using SST, torque the adjusting nut 1 to 1.5 notches from the 0 preload position.

DF

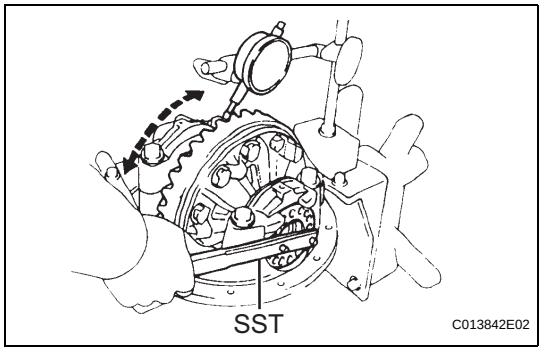

(g) Using a dial indicator, adjust the ring gear backlash until it is within the specification.
Backlash:
0.13 to 0.18 mm (0.0051 to 0.0071 in.)
HINT:
The backlash is adjusted by turning the left and right adjusting nuts for an equal amounts. For example, loosen the nut on the right side by one notch.

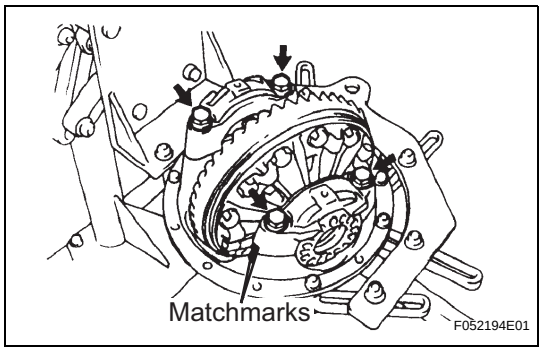

(h) Torque the bearing cap bolts.
Torque: 85 N*m (870 kgf*cm, 63 ft.*lbf)

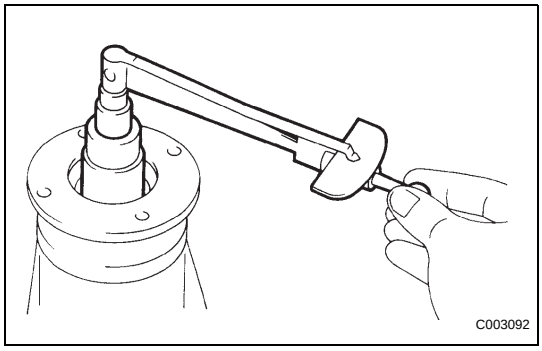

13. INSPECT TOTAL PRELOAD

(a) Using a torque wrench, measure the preload with the teeth of the drive pinion and ring gear in contact.
Total preload (at starting):
Drive pinion preload plus 0.39 to 0.59 N*m (4.0 to 6.0 kgf*cm, 3.5 to 5.2 in.*lbf)
If necessary, disassemble and inspect the differential.

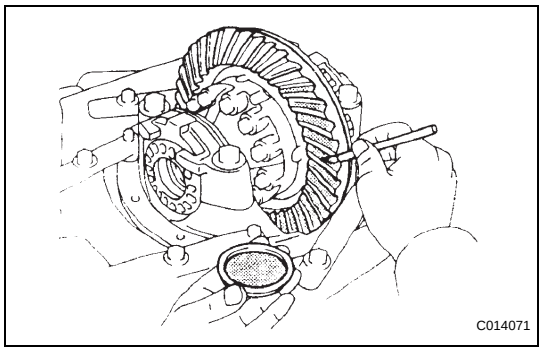

14. INSPECT TOOTH CONTACT BETWEEN RING GEAR AND DRIVE PINION

(a) Coat 3 or 4 teeth at 3 different positions on the ring gear with red lead primer.

(b) Hold the companion flange firmly and rotate the ring gear in both directions.

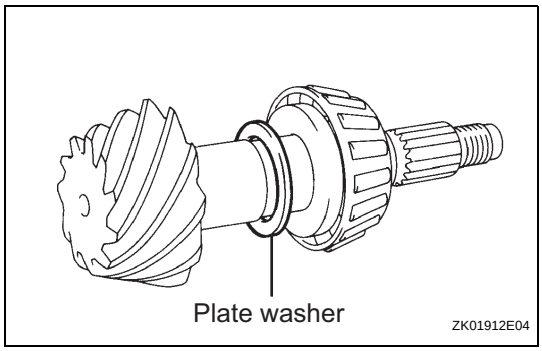

(c) Inspect the tooth contact pattern.

Driver Side:

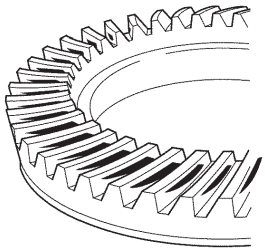

Proper Contact

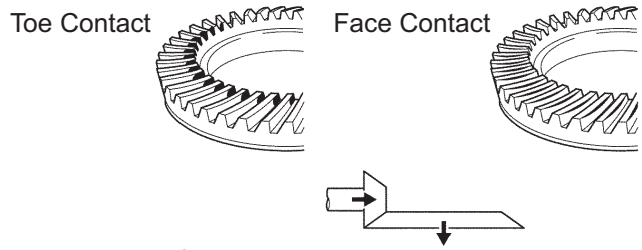

Select an adjusting washer that will bring the drive pinion closer to the ring gear.

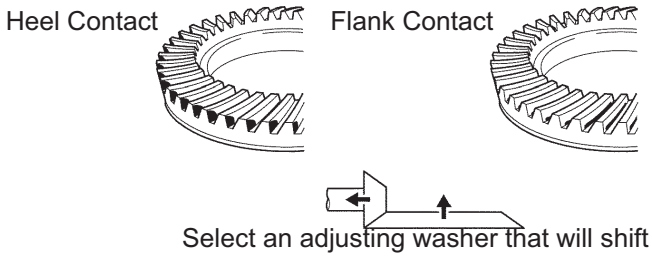

Select an adjusting washer that will shift the drive pinion away from the ring gear.

Coast Side:

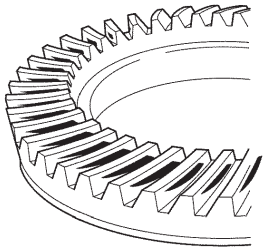

Proper Contact

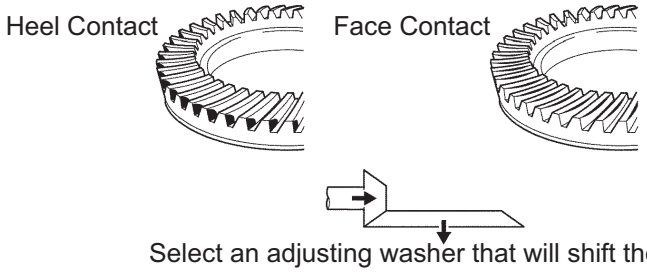

Select an adjusting washer that will shift the drive pinion closer to the ring gear.

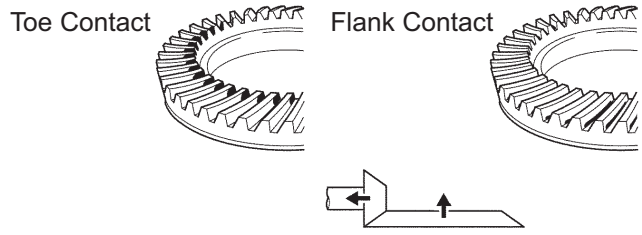

Select an adjusting washer that will bring the drive pinion away from the ring gear.

P

F052199E01

DF

If the teeth are not engaged properly, use the following chart to select an appropriate washer for correction.

Plate Washer thickness

Thickness mm (in.)	Thickness mm (in.)
1.70 (0.0669)	2.03 (0.0799)
1.73 (0.0681)	2.06 (0.0811)
1.76 (0.0693)	2.09 (0.0823)
1.79 (0.0705)	2.12 (0.0835)
1.82 (0.0717)	2.15 (0.0847)
1.85 (0.0728)	2.18 (0.0853)
1.88 (0.0740)	2.21 (0.0870)
1.91 (0.0752)	2.24 (0.0882)
1.94 (0.0764)	2.27 (0.0894)
1.97 (0.0776)	2.30 (0.0906)
2.00 (0.0787)	2.33 (0.0917)

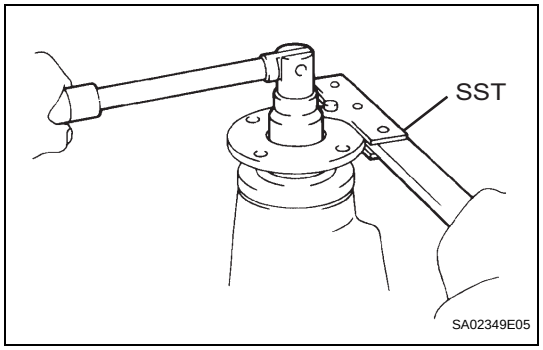

15. REMOVE REAR DRIVE PINION NUT

(a) Using SST to hold the drive pinion companion flange, remove the nut.

SST 09330-00021

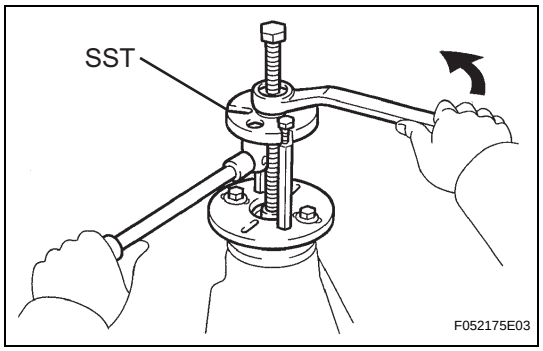

16. REMOVE REAR DRIVE PINION COMPANION FLANGE SUB-ASSEMBLY REAR

(a) Using SST, remove the drive pinion companion flange.

SST 09950-30012 (09951-03010, 09953-03010, 09954-03010, 09955-03030, 09956-03030)

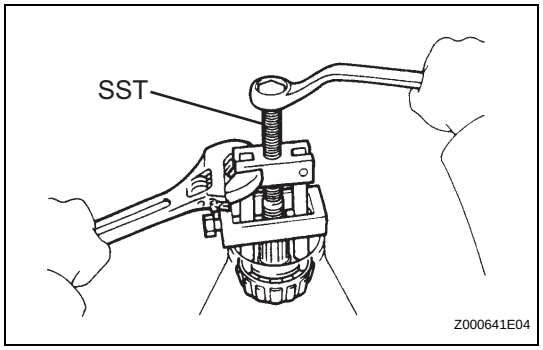

17. REMOVE REAR DRIVE PINION FRONT TAPERED ROLLER BEARING

(a) Using SST, remove the drive pinion tapered roller bearing from the drive pinion.

SST 09556-22010

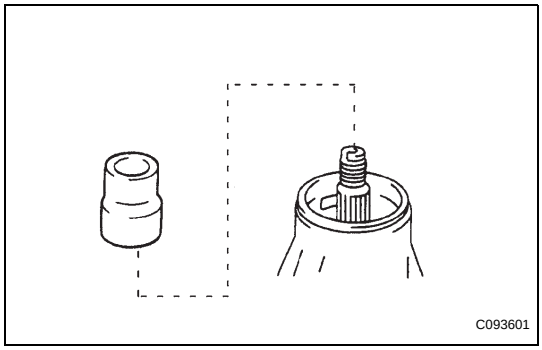

18. INSTALL REAR DIFFERENTIAL DRIVE PINION BEARING SPACER

(a) Install a new bearing spacer onto the drive pinion.

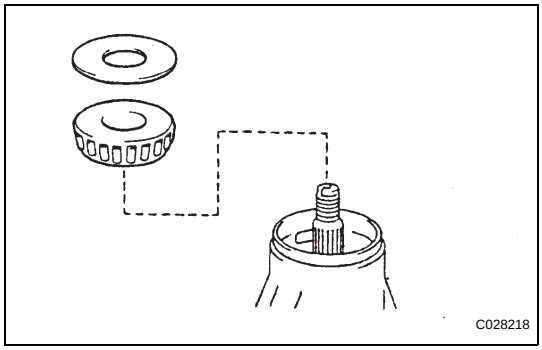

19. INSTALL REAR DRIVE PINION FRONT TAPERED ROLLER BEARING

(a) Install the drive pinion, rear drive pinion taper roller bearing and rear differential drive oil slinger.

DF

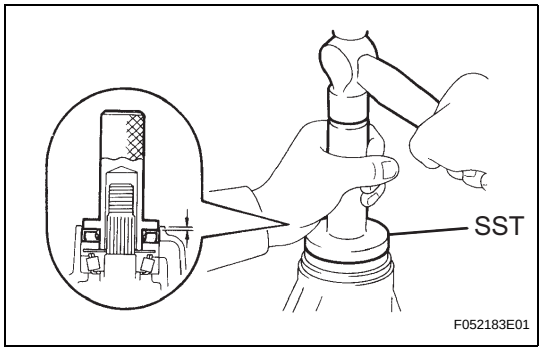

20. INSTALL REAR DIFFERENTIAL CARRIER OIL SEAL

(a) Apply MP grease to the oil seal lip.

(b) Using SST and a hammer, install a new carrier oil seal.

SST 09554-30011

Oil seal drive in depth:

0.55 to 1.45 mm (0.021 to 0.057 in.)

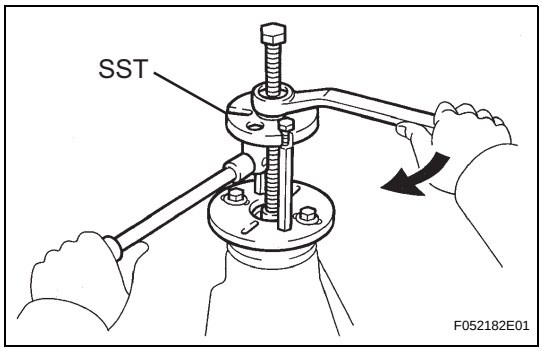

21. INSTALL REAR DRIVE PINION COMPANION FLANGE SUB-ASSEMBLY REAR

(a) Using SST, install the drive pinion companion flange onto the drive pinion.

SST 09950-30012 (09951-03010, 09953-03010, 09954-03010, 09955-03030, 09956-03030)

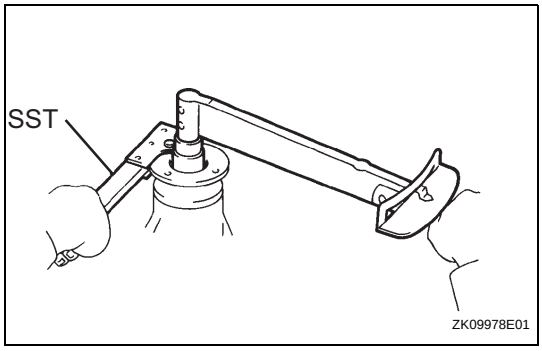

(b) Coat the threads of a new nut with hypoid gear oil LSD.

(c) Using SST to hold the flange, tighten the nut.

Torque: 370 N*m (3,770 kgf*cm, 273 ft.*lbf) or less

SST 09330-00021

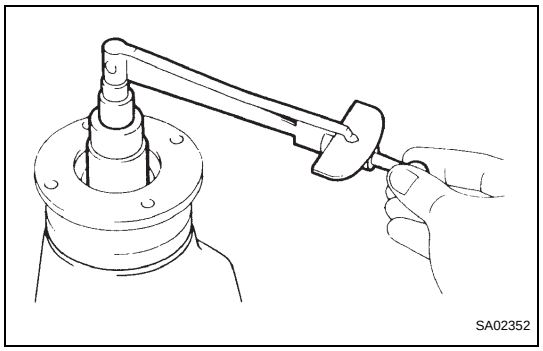

22. INSPECT DRIVE PINION PRELOAD

(a) Using a torque wrench, measure the preload of the backlash between the drive pinion and ring gear.
Preload (at starting)

Bearing	Standard
New	1.05 to 1.64 N*m (10.7 to 16.7 kgf*cm, 9.3 to 14.5 in.*lbf)
Reused	0.56 to 0.85 N*m (5.7 to 8.7 kgf*cm, 4.9 to 7.5 in.*lbf)

If the preload is greater than the specification, replace the bearing spacer.
If the preload is less than the specification, retighten the nut to 13 N*m (130 kgf*cm, 9 ft*lbf) of torque at a time until the specified preload is reached.
Torque: 370 N*m (3,770 kgf*cm, 27 ft.*lbf) or less
If the maximum torque is exceeded while retightening the nut, replace the bearing spacer and repeat the preload adjusting procedure. Do not loosen the pinion nut to reduce the preload.

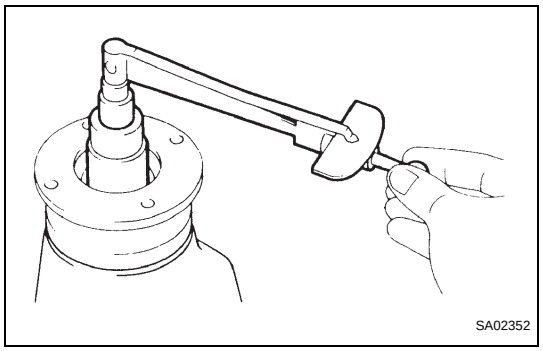

23. INSPECT TOTAL PRELOAD

(a) Using a torque wrench, measure the preload.
Total preload (at starting):
Drive pinion preload plus 0.39 to 0.59 N*m (4.0 to 6.0 kgf*cm, 3.5 to 5.2 in.*lbf)
If necessary, disassemble and inspect the differential.

DF

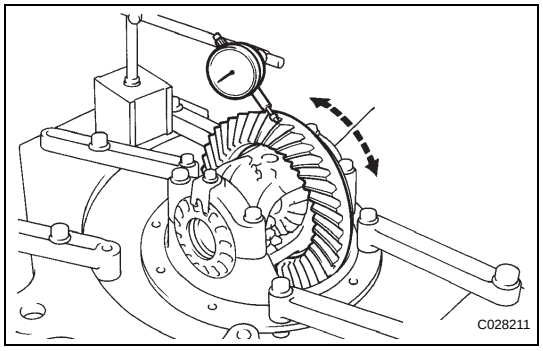

24. INSPECT DIFFERENTIAL RING GEAR BACKLASH

(a) Using a dial indicator, check the backlash of the ring gear.
Backlash:
0.13 to 0.18 mm (0.0051 to 0.0071 in.)
If the backlash is not within the specification, adjust or repair the side bearing preload as necessary.

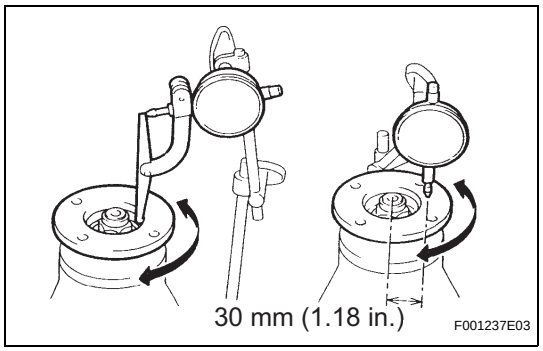

25. INSPECT RUNOUT OF REAR DRIVE PINION COMPANION FLANGE SUB-ASSEMBLY REAR

(a) Using a dial indicator, measure the runout of the drive pinion companion flange vertically and horizontally.
Maximum runout:
Vertical runout: 0.10 mm (0.0039 in.)
Lateral runout: 0.10 mm (0.0039 in.)
If the runouts are not within the specifications, replace the companion flange.

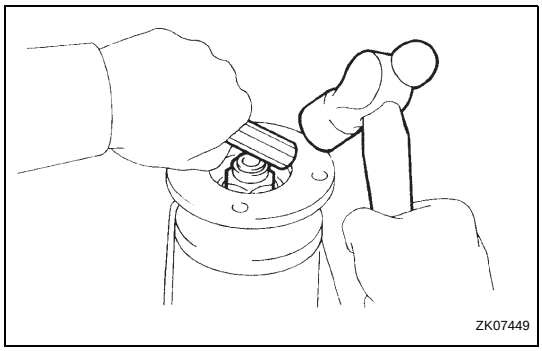

26. INSTALL REAR DRIVE PINION NUT

(a) Using a chisel and hammer, stake the drive pinion nut.

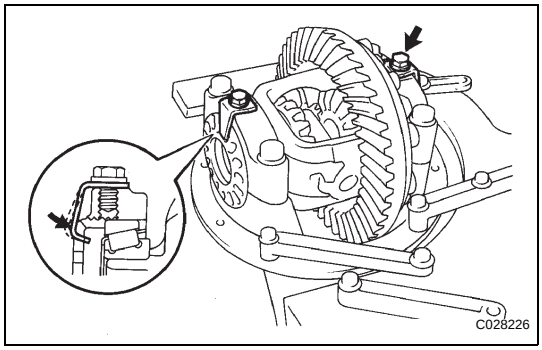

27. INSTALL REAR DIFFERENTIAL BEARING ADJUSTING NUT LOCK

(a) Install 2 new adjust locks onto the bearing caps.
Torque: 13 N*m (129 kgf*cm, 9 ft.*lbf)

(b) After tightening the bolts, bend the nut locks.

DF

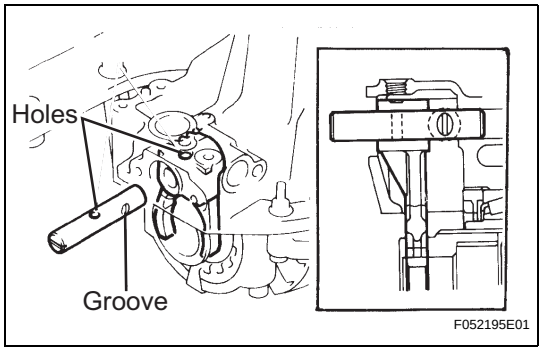

28. INSTALL REAR DIFFERENTIAL LOCK SHIFT FORK

(a) Apply MP grease onto the outer circuit of the shaft.

(b) Install the fork shaft to align the hole of the shift fork with that of the shift fork shaft.

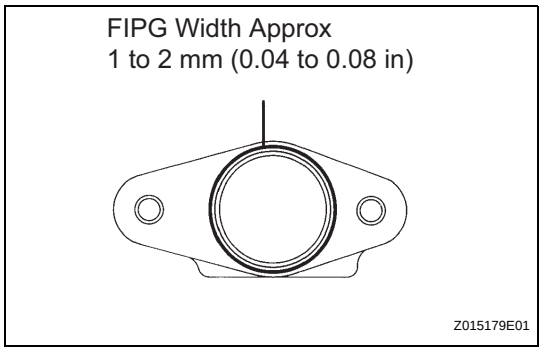

(c) Remove any FIPG material and be careful not to drop the oil shaft retainer.

(d) Apply FIPG to the carrier, as shown in the illustration.
FIPG:
Part No. 08826-00090, THREE BOND 1281 or equivalent
HINT:
Install the shaft retainer within 10 minutes of applying FIPG.

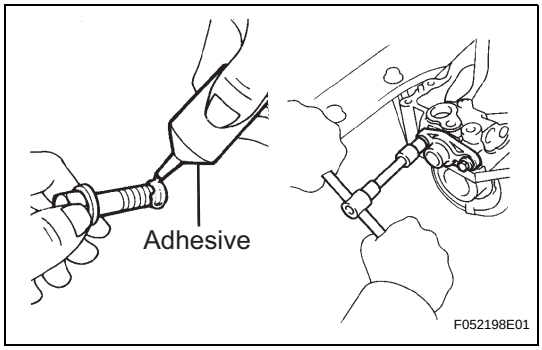

(e) Clean the threads of the bolts and retainer bolts holes with toluene or trichorethyene.

(f) Apply adhesive to 2 or 3 threads of each mount bolt end.
Adhesive:
Part No. 08833-00080, THREE BOND 1344, LOCTITE: 242 or equivalent

(g) Tighten the shaft retainer with the 2 bolts.
Torque: 24 N*m (240 kgf*cm, 17 ft.*lbf)

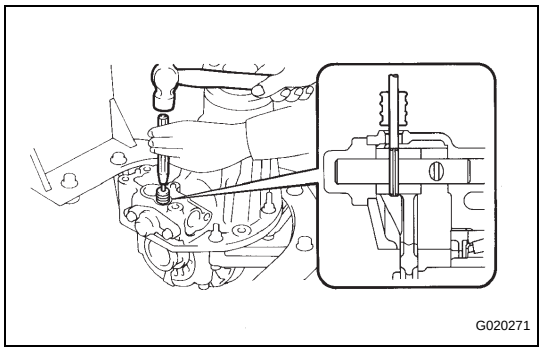

(h) Using a 5 mm pin punch and hammer, install the slotted spring pin onto the shift fork.
Torque: 22 N*m (220 kgf*cm, 16 ft.*lbf)

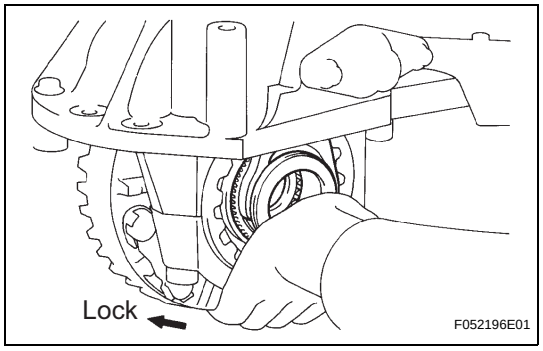

(i) Push the differential lock sleeve in deeply and hold it in position.

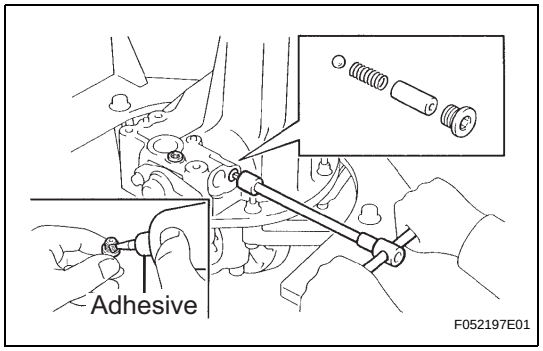

(j) Install the ball, spring and spring seat.
(k) Clean the threads of 2 plugs and plug holes with toluene or trichlorethylene.
Adhesive:
Part No. 08833-00080, THREE BOND 1344, LOCTITE: 242 or equivalent
(l) Using a 6 mm hexagon wrench, install and tighten the screw plugs.

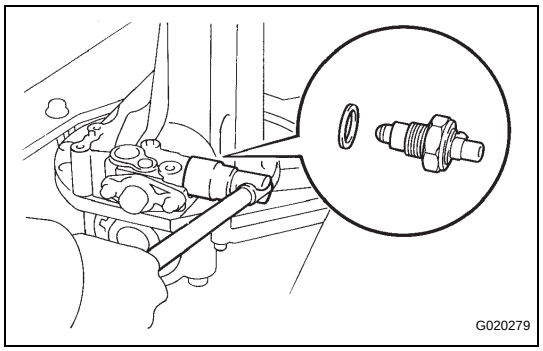

29. INSTALL NO.1 TRANSFER INDICATOR SWITCH
(a) Install the indicator switch with a new gasket.
Torque: 40 N*m (410 kgf*cm, 30 ft.*lbf)

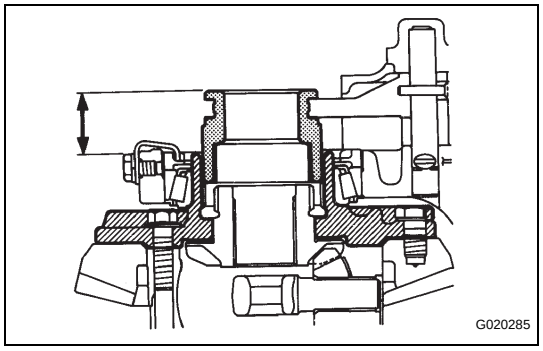

30. INSPECT REAR DIFFERENTIAL LOCK SLEEVE
(a) Measure the distance between the sleeve and tip of the differential case when the differential is FREE and LOCKED respectively.
Standard distance:
LOCKED: 17.44 to 18.86 mm (0.6866 to 0.7425 in.)
FREE: 32.40 to 33.90 mm (1.2756 to 1.3346 in.)

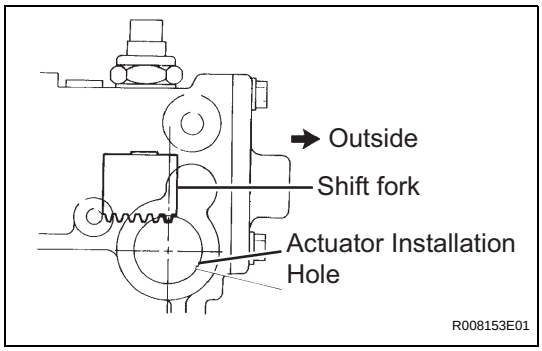

31. INSTALL DIFFERENTIAL LOCK SHIFT ACTUATOR

(a) Check that the outermost rack tooth of the shift fork is virtually above the center line of the actuator installation hole.

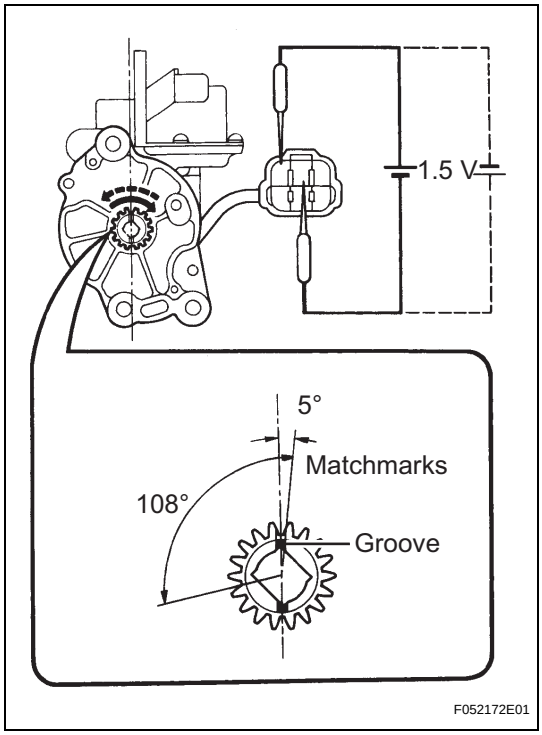

(b) Ensure that the matchmarks on the pinion of the actuator are in the range between 0 and 5 degrees clockwise above the center line of the actuator.
NOTICE:
- **If the matchmarks are not within this range, rotate the pinion.**
- **Dont supply the battery positive voltage directly between terminals.**
- **If the matchmarks come to the limit of rotation, dont apply the electric current.**

(c) Install a new O-ring onto the actuator.
(d) Apply a light coat of gear oil to the O-ring.
(e) Apply MP grease to the gear part.

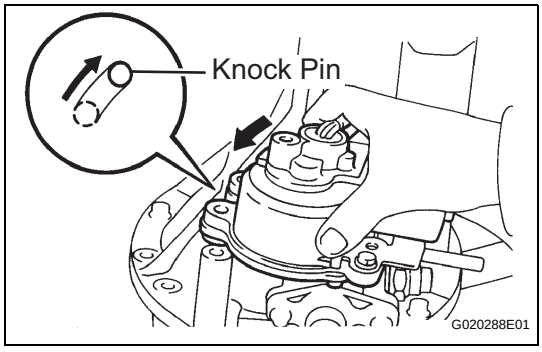

(f) Ensure that the outermost rack tooth of the shift fork fits the matchmarks on the pinion of the actuator.
(g) Install the actuator so that the long hole on the actuator side fits into the knock pin on the carrier side.
HINT:
Dont damage the O-ring of the actuator.
(h) Align the actuator with the long hole and rotate the actuator counterclockwise when the knock pin is set to the right-hand side.
(i) Install and tighten the bolts.
Torque: 27 N*m (275 kgf*cm, 20 ft.*lbf)

DF

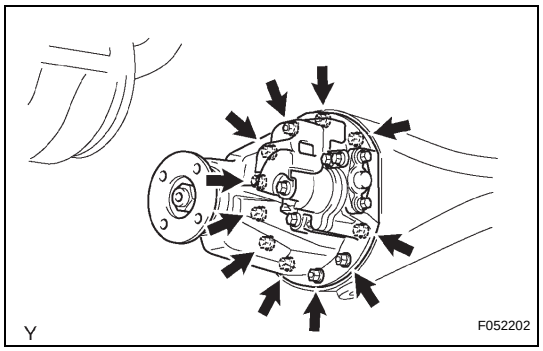

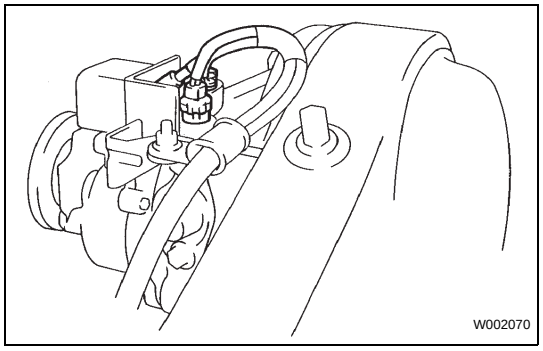

INSTALLATION

1. **INSTALL REAR DIFFERENTIAL CARRIER ASSEMBLY**
   (a) Remove any dust and oil from the differential carrier assembly and the contact surface of the axle housing.
   (b) Install the new rear differential carrier gasket and the differential carrier assembly with the 11 nuts and washers.
   (c) Connect the differential lock actuator connector.
   (d) Connect the rear differential lock actuator breather hose to the differential actuator assembly.
2. **INSTALL REAR AXLE SHAFT WITH BACKING PLATE LH (See page AH-33)**
3. **INSTALL REAR AXLE SHAFT WITH BACKING PLATE RH**
   HINT:
   Install the RH side by following the same procedures as the LH side.
4. **INSTALL NO.3 PARKING BRAKE CABLE ASSEMBLY (See page PB-22)**
5. **INSTALL NO.2 PARKING BRAKE CABLE ASSEMBLY**
   HINT:
   Install the RH side by following the same procedures as the LH side.
6. **INSTALL REAR SPEED SENSOR LH (See page BC-304)**
7. **INSTALL REAR SPEED SENSOR RH**
   HINT:
   Install the RH side by following the same procedures as the LH side.
8. **INSTALL PROPELLER SHAFT ASSEMBLY (for 2WD Drive Type, Regular Cab) (See page PR-6)**
9. **INSTALL PROPELLER WITH CENTER BEARING SHAFT ASSEMBLY (for 2WD Drive Type, Except Regular Cab) (See page PR-13)**
10. **INSTALL PROPELLER SHAFT ASSEMBLY (for 4WD Drive Type, Regular Cab) (See page PR-19)**
11. **INSTALL PROPELLER WITH CENTER BEARING SHAFT ASSEMBLY (for 4WD Drive Type, Except Regular Cab) (See page PR-32)**
12. **INSTALL REAR BRAKE SHOE (See page BR-71)**
13. **INSTALL FRONT BRAKE SHOE (See page BR-72)**
14. **CHECK REAR BRAKE DRUM INSTALLATION (See page BR-73)**

15. **INSTALL REAR BRAKE DRUM SUB-ASSEMBLY (See page BR-73)**
16. **ADJUST REAR DRUM BRAKE SHOE CLEARANCE (See page BR-74)**
17. **FILL RESERVOIR WITH BRAKE FLUID (w/ VSC) (See page BR-4)**
18. **FILL RESERVOIR WITH BRAKE FLUID (w/o VSC) (See page BR-7)**
19. **BLEED MASTER CYLINDER (w/o VSC) (See page BR-7)**
20. **BLEED BRAKE LINE (w/ VSC) (See page BR-4)**
21. **BLEED BRAKE LINE (w/o VSC) (See page BR-7)**
22. **CHECK FLUID LEVEL IN RESERVOIR (w/ VSC) (See page BR-6)**
23. **CHECK FLUID LEVEL IN RESERVOIR (w/o VSC) (See page BR-8)**
24. **CHECK FOR BRAKE FLUID LEAKAGE**
25. **ADD DIFFERENTIAL OIL (See page DF-8)**
26. **INSPECT DIFFERENTIAL OIL (See page DF-8)**
27. **INSPECT FOR DIFFERENTIAL OIL LEAKAGE**
28. **INSTALL REAR WHEEL**
    Torque: 113 N*m (1,152 kgf*cm, 83 in.*lbf)
29. **INSPECT PARKING BRAKE PEDAL TRAVEL (for Automatic Transaxle) (See page PB-1)**
30. **INSPECT PARKING BRAKE LEVER TRAVEL (for Manual Transaxle) (See page PB-1)**
31. **ADJUST PARKING BRAKE PEDAL TRAVEL (for Automatic Transaxle) (See page PB-2)**
32. **ADJUST PARKING BRAKE LEVER TRAVEL (for Manual Transaxle) (See page PB-2)**
33. **CONNECT CABLE TO NEGATIVE BATTERY TERMINAL**
    Torque: 3.9 N*m (40 kgf*cm, 35 in.*lbf)
34. **CHECK VSC SENSOR SIGNAL (w/ VSC)**
    HINT:
    (See page BC-103)
35. **CHECK ABS SENSOR SIGNAL (w/o VSC)**
    HINT:
    (See page BC-7)

REMOVAL

1. **DISCONNECT CABLE FROM NEGATIVE BATTERY TERMINAL**
2. **REMOVE REAR WHEEL**
3. **DRAIN BRAKE FLUID**
4. **REMOVE REAR BRAKE DRUM SUB-ASSEMBLY (See page BR-68)**
5. **REMOVE FRONT BRAKE SHOE (See page BR-68)**
6. **REMOVE REAR BRAKE SHOE (See page BR-69)**
7. **REMOVE PROPELLER SHAFT ASSEMBLY (for 2WD Driver Type, Regular Cab) (See page PR-3)**
8. **REMOVE PROPELLER WITH CENTER BEARING SHAFT ASSEMBLY (for 2WD Drive Type, Except Regular Cab) (See page PR-8)**
9. **REMOVE PROPELLER SHAFT ASSEMBLY (for 4WD Drive Type, Regular Cab) (See page PR-22)**
10. **REMOVE PROPELLER WITH CENTER BEARING SHAFT ASSEMBLY (for 4WD Drive Type, Except Regular Cab) (See page PR-27)**
11. **DRAIN DIFFERENTIAL OIL (See page DF-8)**
12. **SEPARATE REAR SPEED SENSOR LH (See page BC-304)**
13. **SEPARATE REAR SPEED SENSOR RH**
    HINT:
    Use the same procedure as for the LH side.
14. **SEPARATE NO.3 PARKING BRAKE CABLE ASSEMBLY (See page PB-21)**
15. **SEPARATE NO.2 PARKING BRAKE CABLE ASSEMBLY**
    HINT:
    Use the same procedure as for the LH side.
16. **REMOVE REAR AXLE SHAFT WITH BACKING PLATE (See page AH-29)**
17. **REMOVE REAR AXLE SHAFT WITH BACKING PLATE**
    HINT:
    Use the same procedure as for the LH side.

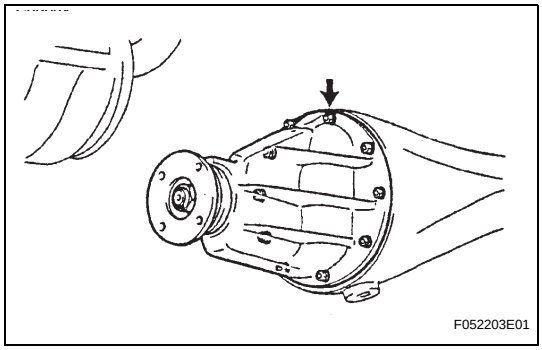

18. REMOVE REAR DIFFERENTIAL CARRIER ASSEMBLY

(a) Remove the 10 nuts and differential carrier assembly.

NOTICE:

Be careful not to damage the removal surface.

(b) Remove the rear differential carrier gasket from the differential carrier assembly.

DISASSEMBLY

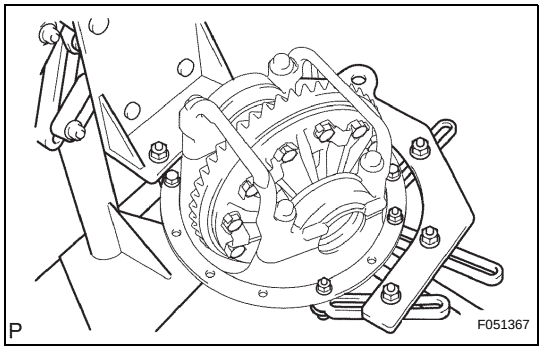

1. FIX REAR DIFFERENTIAL CARRIER ASSEMBLY

(a) Fix the rear differential carrier to the overattachment.

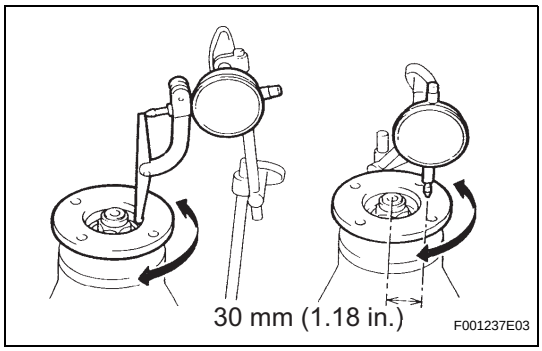

2. INSPECT RUNOUT OF REAR DRIVE PINION COMPANION FLANGE SUB-ASSEMBLY REAR

(a) Using a dial indicator, measure the vertical and horizontal runout of the companion flange.

Maximum runout:

Vertical runout: 0.10 mm (0.0039 in.)

Lateral runout: 0.10 mm (0.0039 in.)

If the runouts are not within the specifications, replace the companion flange.

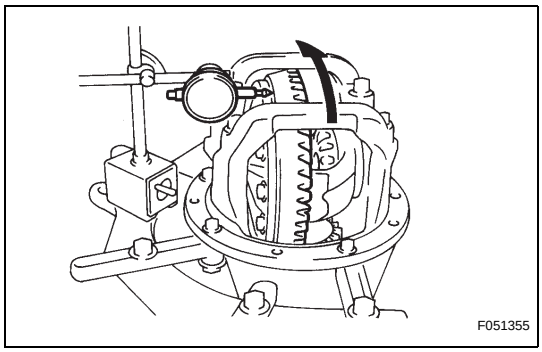

3. INSPECT RUNOUT OF DIFFERENTIAL RING GEAR

(a) Using a dial indicator, check the runout of the ring gear.

Maximum runout:

0.05 mm (0.0020 in.)

If the runout is greater than the maximum, replace the ring gear with a new one.

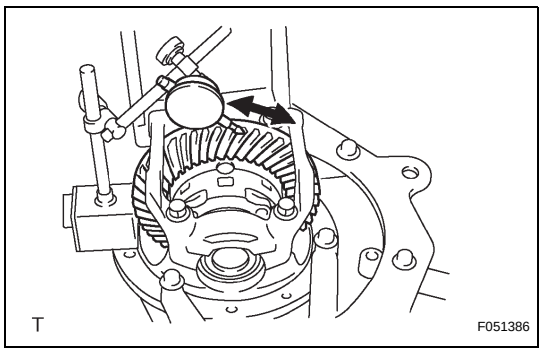

4. INSPECT DIFFERENTIAL RING GEAR BACKLASH

(a) Using a dial indicator, check the backlash of the ring gear.

Backlash:

0.13 to 0.18 mm (0.0051 to 0.0071 in.)

If the backlash is not within the specification, adjust or repair the side bearing preload as necessary.

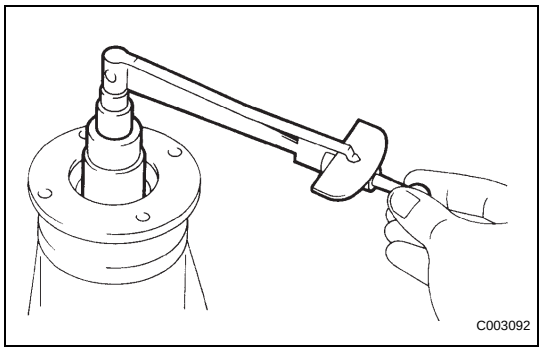

5. INSPECT DIFFERENTIAL DRIVE PINION PRELOAD

(a) Using a torque wrench, measure the preload of the backlash between the drive pinion and ring gear.
Preload (at starting):
0.78 to 1.05 N*m (8.0 to 11 kgf*cm, 6.9 to 9.3 in.*lbf)

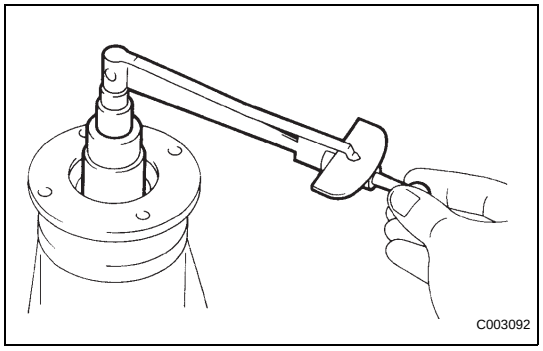

6. INSPECT TOTAL PRELOAD

(a) Using a torque wrench, measure the preload with the teeth of the drive pinion and ring gear in contact.

(b) Using a torque wrench, measure the total preload.
Total preload (at starting):
Drive pinion preload plus 0.39 to 0.59 N*m (4.0 to 6.0 kgf*cm, 3.5 to 5.2 in.*lbf)
If necessary, disassemble and inspect the differential.

DF

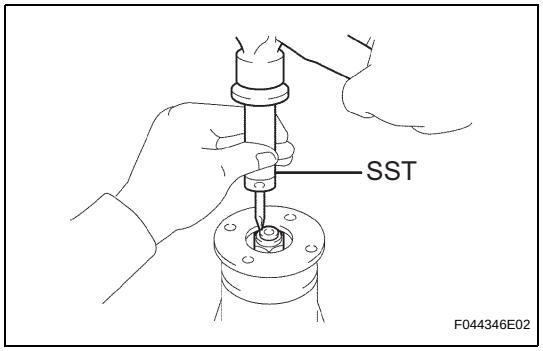

7. REMOVE REAR DRIVE PINION NUT

(a) Using SST and a hammer, loosen the staked part of the nut.
SST 09930-00010

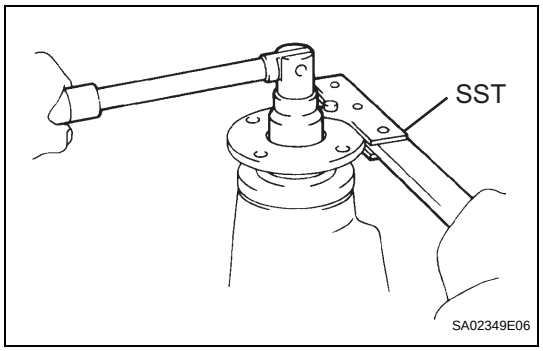

(b) Using SST to hold the drive pinion companion flange, remove the nut.
SST 09330-00021

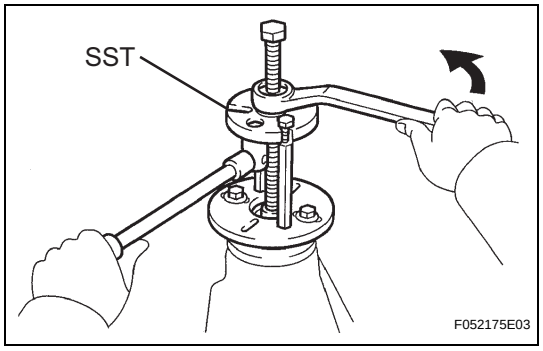

8. REMOVE REAR DRIVE PINION COMPANION FLANGE SUB-ASSEMBLY REAR

(a) Using SST, remove the drive pinion companion flange.
SST 09950-30012 (09951-03010, 09953-03010, 09954-03010, 09955-03030, 09956-03030)

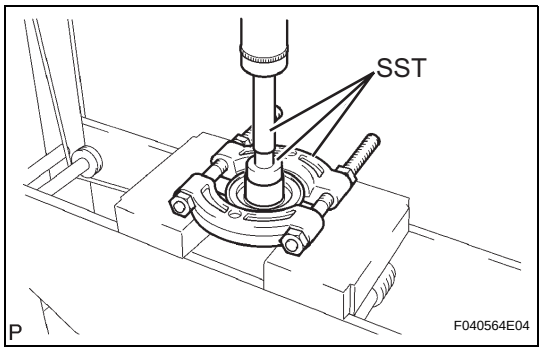

9. REMOVE REAR DIFFERENTIAL DUST DEFLECTOR

(a) Using SST and a press, remove the dust deflector.
SST 09950-60010 (09951-00380), 09950-70010 (09951-07150), 09950-00020

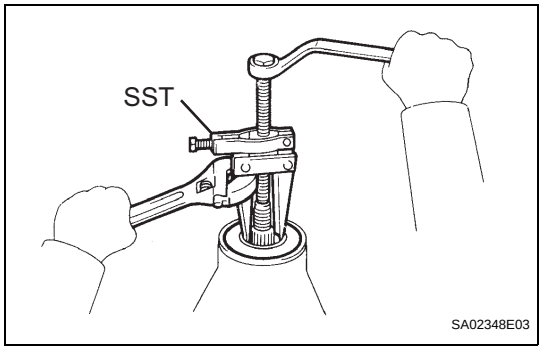

10. REMOVE REAR DIFFERENTIAL CARRIER OIL SEAL

(a) Using SST, remove the oil seal from the differential carrier.
SST 09308-10010

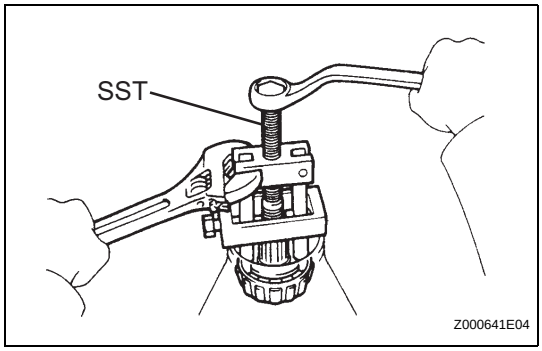

11. REMOVE REAR DRIVE PINION FRONT TAPERED ROLLER BEARING

(a) Using SST, remove the drive pinion tapered roller bearing from the drive pinion.
SST 09556-22010

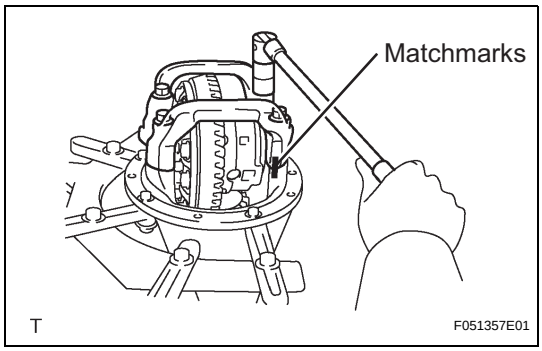

12. REMOVE DIFFERENTIAL CASE ASSEMBLY

(a) Place matchmarks on the bearing cap and differential carrier.
(b) Remove the 4 bolts and bearing cap.

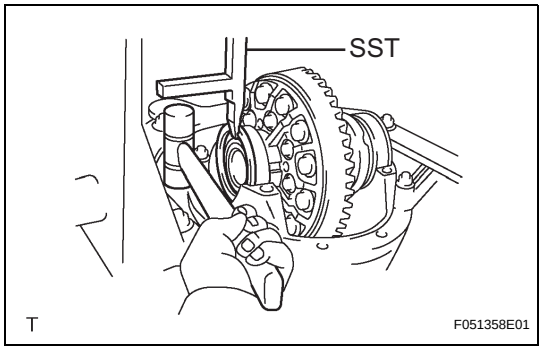

(c) Using SST and a plastic hammer, remove the 2 side bearing plate washers.
HINT:
Measure the plate washer thickness and note it down.
SST 09504-22011
(d) Remove the differential case with the bearing outer races from the carrier.
HINT:
Tag the disassembled parts to show the locations for reassembly.

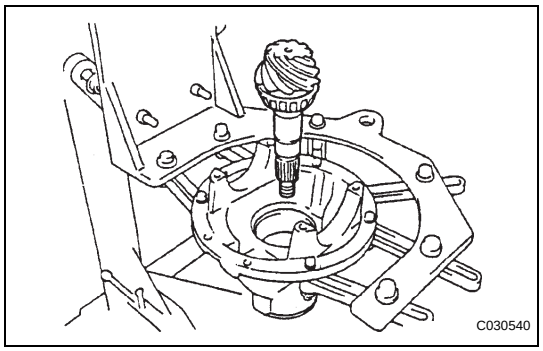

13. REMOVE DIFFERENTIAL DRIVE PINION

(a) Remove the differential drive pinion and bearing spacer from the differential carrier.

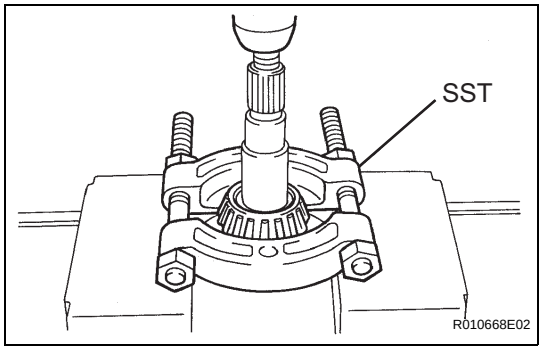

14. REMOVE REAR DRIVE PINION REAR TAPERED ROLLER BEARING

(a) Using SST and a press, remove the drive pinion tapered roller bearing from the drive pinion.
SST 09950-00020
HINT:
If either the drive pinion or ring gear are damaged, replace them as a set.

15. REMOVE REAR DIFFERENTIAL DRIVE PINION PLATE WASHER

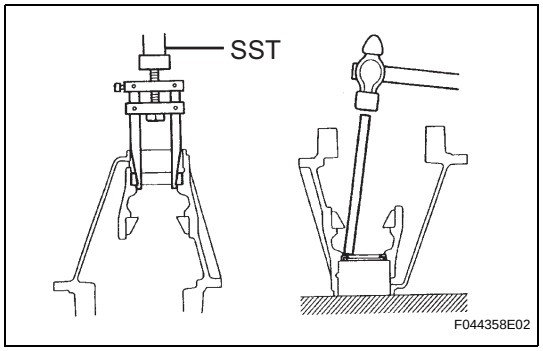

16. REMOVE REAR DRIVE PINION FRONT TAPERED ROLLER BEARING

(a) Using SST, remove the front tapered roller bearing from the carrier.
SST 09308-00010

(b) Using a brass bar and a hammer, remove the oil storage ring from the carrier.

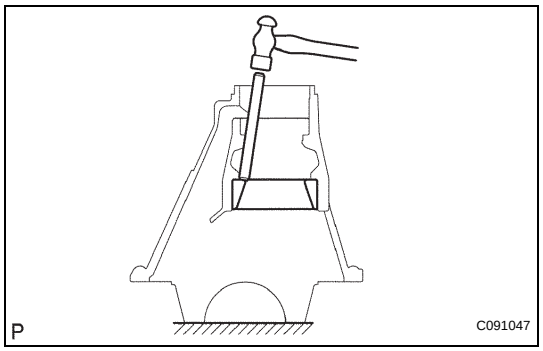

17. REMOVE REAR DRIVE PINION REAR TAPERED ROLLER BEARING

(a) Using a brass bar and a hammer, remove the rear tapered roller bearing from the carrier.

DF

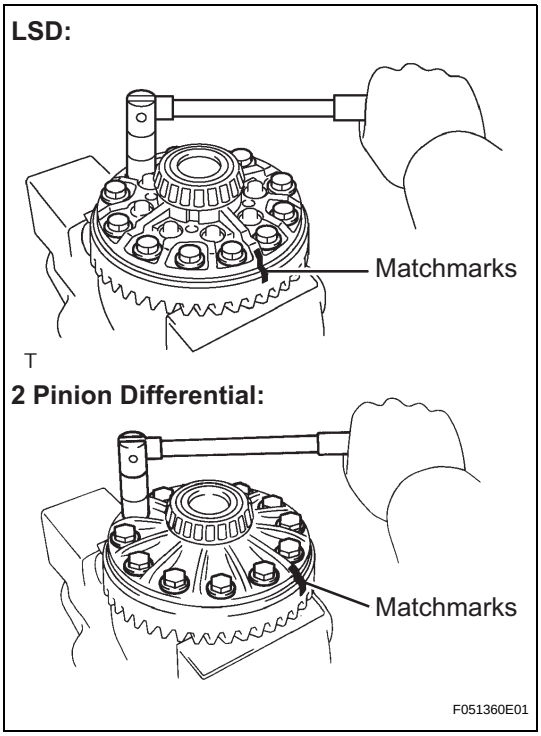

18. REMOVE DIFFERENTIAL RING GEAR

(a) Place matchmarks on the ring gear and differential case.

(b) Remove the 12 ring gear set bolts.

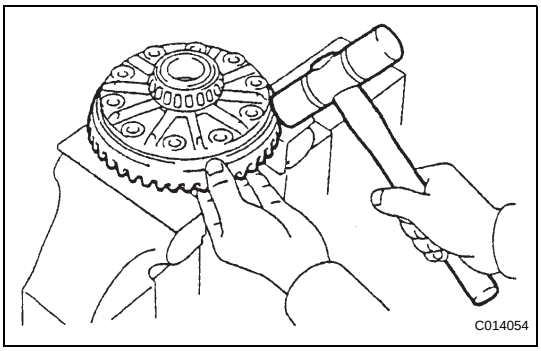

(c) Using a plastic hammer, tap on the ring gear to separate it from the differential case.

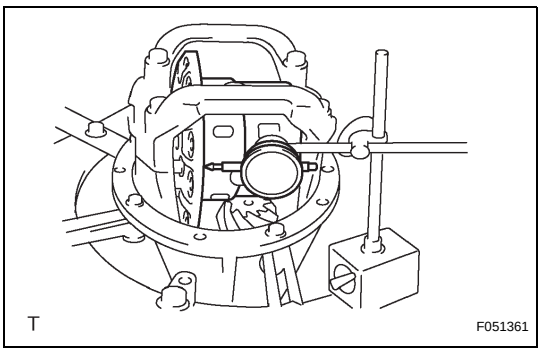

19. INSPECT DIFFERENTIAL CASE ASSEMBLY RUNOUT

(a) Install the rear differential case bearing onto the differential case.

(b) Install the differential case onto the differential carrier.

(c) Using a dial indicator, measure the differential case runout.

Maximum case runout:
0.05 mm (0.0020 in.)

(d) Remove the differential case.

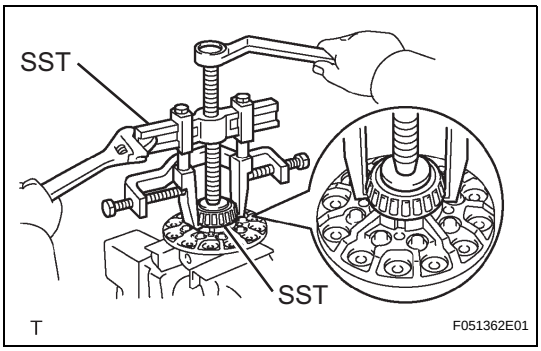

20. REMOVE REAR DIFFERENTIAL CASE BEARING

(a) Using SST, remove the 2 rear differential case bearings from the differential case.

SST 09950-40011 (09951-04020, 09952-04010, 09953-04020, 09954-04010, 09955-04061, 09957-04010, 09958-04011), 09950-60010 (09951-00480)

HINT:
Fix the claws of SST into the notch in the differential case.

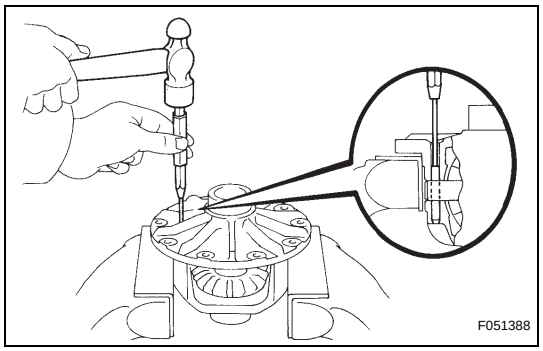

21. DISASSEMBLE DIFFERENTIAL CASE (2 PINION DIFFERENTIAL)

(a) Using a pin punch and hammer, remove the straight pin.

(b) Remove the pinion shaft, 2 pinion gears, pinion gear thrust washers, side gears and side gear thrust washers from the differential case.

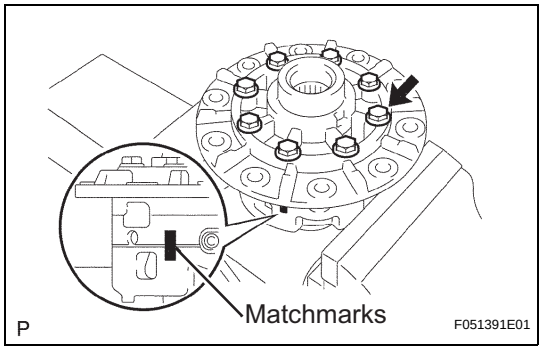

22. DISASSEMBLE DIFFERENTIAL CASE (W/ LSD DIFFERENTIAL)

(a) Place matchmarks on the LH and RH cases.

(b) Remove the 8 bolts uniformly, a little at a time.

(c) Using a plastic hammer, separate the LH and RH cases.

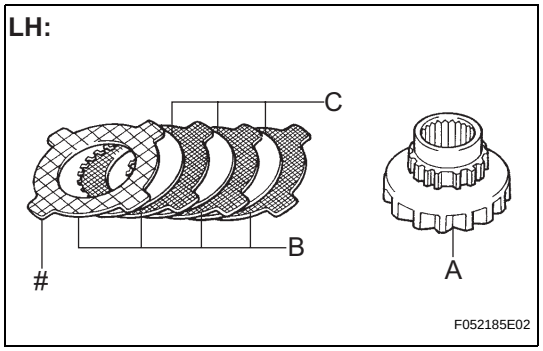

(d) Remove these parts from the LH case.

A	side gear
B	side gear thrust washer
C	clutch plates

HINT:

- Keep the disassembled parts in order.
- Face the rough side of the thrust washer marked by # to the differential case.

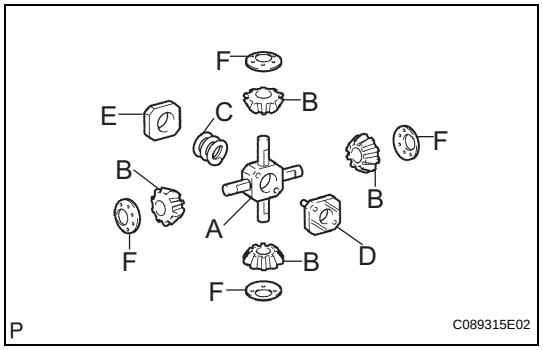

(e) Remove these parts from the RH case.

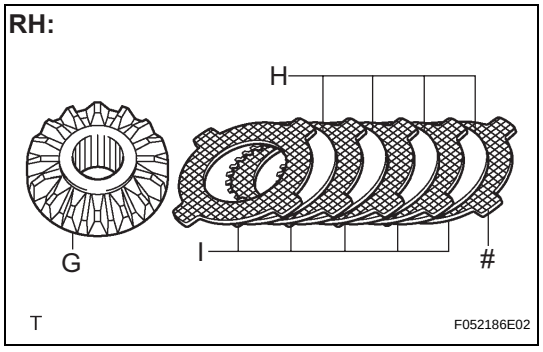

A	Spider
B	Differential pinion gear
C	Compression spring
D	Spring LH retainer
E	Spring RH retainer
F	Pinion gear thrust washer
G	Side gear
H	side gear thrust washer
I	clutch plate

DF

HINT:
Face the rough side of the thrust washer marked by # to the differential case.

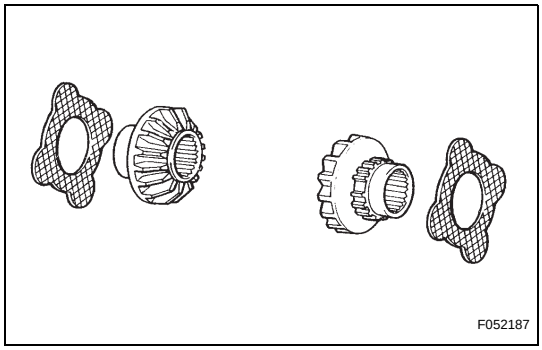

INSPECTION

1. DIFFERENTIAL SIDE GEAR (w/ LSD Differential)

(a) Check that there is no damage or wear to the side gear.
If the side gear is damaged or worn, replace the side gear.
If replacing the side gear, also replace the thrust washer that contacts with it.

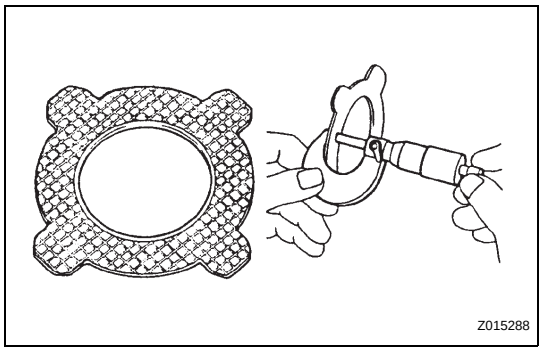

2. INSPECT REAR DIFFERENTIAL SIDE GEAR THRUST NO.1 WASHER (w/ LSD Differential)

(a) Using a micrometer, confirm that the contact surface of the thrust washer is even and check that no bare metal is showing.
Standard thickness:
1.77 to 1.86 mm (0.0697 to 0.0732 in.)
If necessary, replace the thrust washers.
HINT:
When replacing the thrust washer, also replace the clutch plate that comes into contact with it.

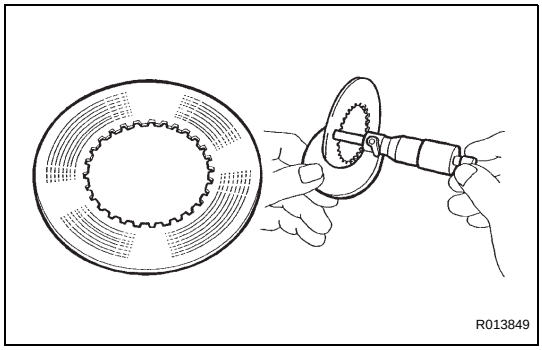

3. INSPECT CLUTCH PLATE (w/ LSD Differential)

(a) Using a micrometer, measure the contact surface of the clutch plate and check that there is no abnormal wear.
Standard thickness:
1.57 to 1.63 mm (0.0618 to 0.0642 in.)
If necessary, replace the clutch plate.

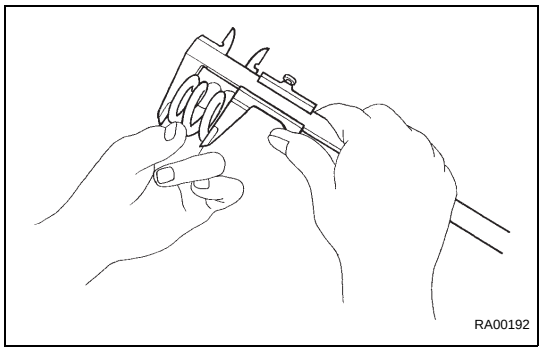

4. INSPECT REAR DIFFERENTIAL LOCK RETAINER COMPRESSION SPRING (w/ LSD Differential)

(a) Using a vernier calipers, measure the free length of the spring.
Free length:
26.35 mm (1.037 in.)

5. INSPECT DIFFERENTIAL PINION AND SIDE GEAR

(a) Check that there is no damage to the differential pinion or differential side gear.
If the differential pinion and/or differential side gear is damaged, replace the differential.

6. INSPECT DIFFERENTIAL CASE

(a) Check that the differential case is not damaged.
If the differential case is damaged, replace it.

DF

HINT:
Face the rough side of the thrust washer marked by # to the differential case.

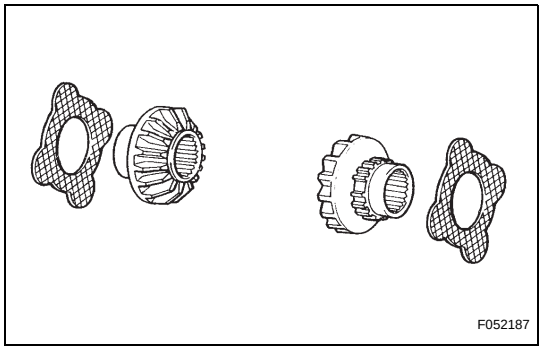

INSPECTION

1. DIFFERENTIAL SIDE GEAR (w/ LSD Differential)

(a) Check that there is no damage or wear to the side gear.
If the side gear is damaged or worn, replace the side gear.
If replacing the side gear, also replace the thrust washer that contacts with it.

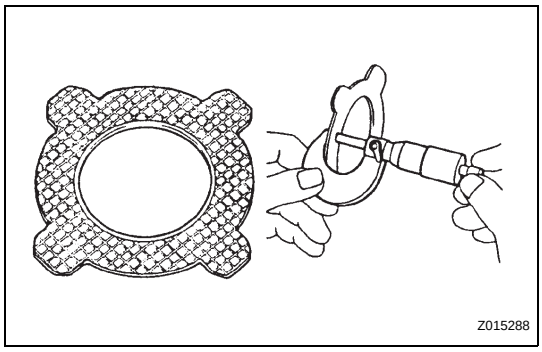

2. INSPECT REAR DIFFERENTIAL SIDE GEAR THRUST NO.1 WASHER (w/ LSD Differential)

(a) Using a micrometer, confirm that the contact surface of the thrust washer is even and check that no bare metal is showing.
Standard thickness:
1.77 to 1.86 mm (0.0697 to 0.0732 in.)
If necessary, replace the thrust washers.
HINT:
When replacing the thrust washer, also replace the clutch plate that comes into contact with it.

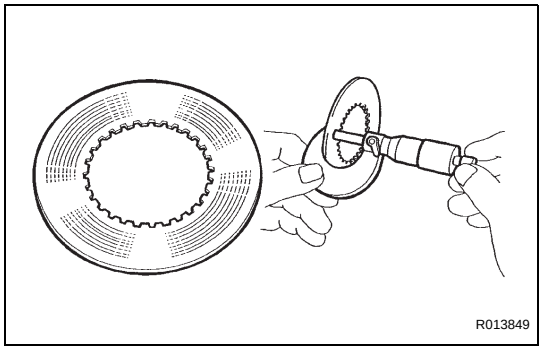

3. INSPECT CLUTCH PLATE (w/ LSD Differential)

(a) Using a micrometer, measure the contact surface of the clutch plate and check that there is no abnormal wear.
Standard thickness:
1.57 to 1.63 mm (0.0618 to 0.0642 in.)
If necessary, replace the clutch plate.

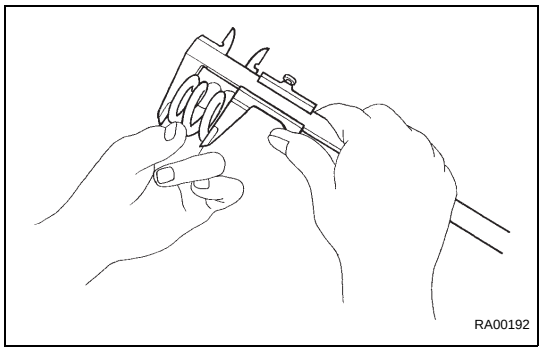

4. INSPECT REAR DIFFERENTIAL LOCK RETAINER COMPRESSION SPRING (w/ LSD Differential)

(a) Using a vernier calipers, measure the free length of the spring.
Free length:
26.35 mm (1.037 in.)

5. INSPECT DIFFERENTIAL PINION AND SIDE GEAR

(a) Check that there is no damage to the differential pinion or differential side gear.
If the differential pinion and/or differential side gear is damaged, replace the differential.

6. INSPECT DIFFERENTIAL CASE

(a) Check that the differential case is not damaged.
If the differential case is damaged, replace it.

DF

LH Case:

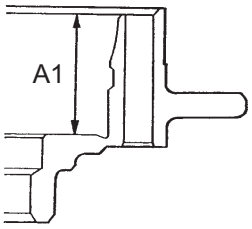

F052188E01

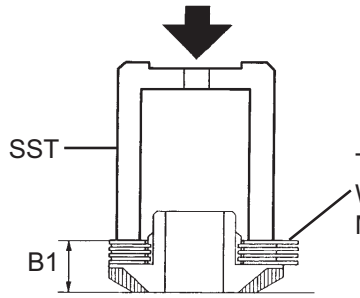

F052189E01

RH Case:

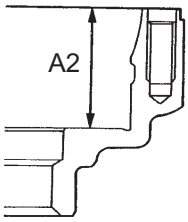

F052190E01

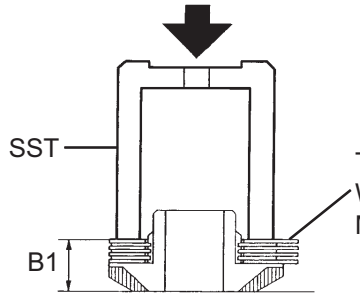

F052189E01

REASSEMBLY

1. INSTALL DIFFERENTIAL CASE ASSEMBLY (w/ LSD Differential)

(a) LH side:

(1) Measure dimension A1 of the differential case, as shown in the illustration.

(2) Install the thrust washers with their fine side facing to the side gear, and clutch plates onto the side gear.
HINT:
Install the new thrust washer (Mark N) instead of the thrust washers (Mark A - M) onto the differential case side.

(3) Using SST to press down the thrust washers and clutch plates with pressure of about 10 kgf (22 lbf), measure dimension B1 as shown in the illustration.
SST 09649-17010

(4) Refer to the following table and select the proper adjusting shim(s).
Adjusting shim thickness:
A1 - B1 - 16.175 mm (0.63681 in.)

(b) RH side:

(1) Measure the differential case dimension A2, as shown in the illustration.

(2) Install the thrust washers with their fine side facing to the side gear, and clutch plates on the side gear.
HINT:
Install the new thrust washer (Mark N) instead of the thrust washers (Mark A - M) onto the differential case side.

(3) Using SST to press down the thrust washers and clutch plates with pressure of about 10 kgf (22 lbf), measure dimension B1 as shown in the illustration.
SST 09649-17010

(4) Refer to the following table and select the proper adjusting shim(s).
Adjusting shim thickness:
A2 - B2 - 16.175 mm (0.63681 in.)
Adjust washer thickness

Thrust Washer Mark	Thickness mm (in.)
A	0.13 to 0.17 (0.0051 to 0.0067)
B	0.18 to 0.22 (0.0071 to 0.0087)
C	0.23 to 0.27 (0.0091 to 0.0106)
D	0.28 to 0.32 (0.0110 to 0.0126)
E	0.33 to 0.37 (0.0130 to 0.0146)

LH Side

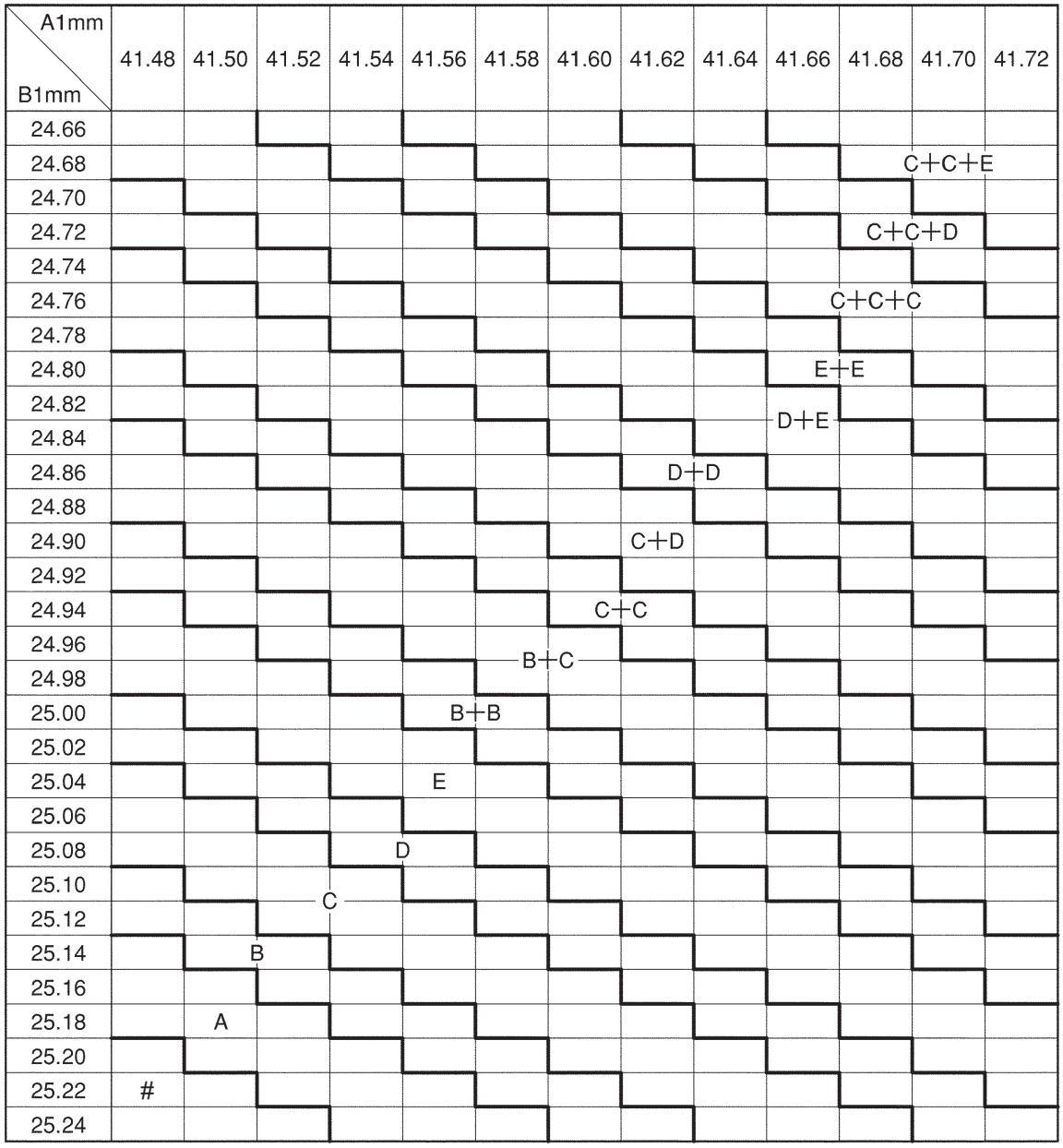

Reassemble another type shim or check the backlash after assembling A shim.

P

F052192E01

HINT:
Three or two adjusting shims can be used together if the total of their thickness meets the one of the above combinations, even if the combination does not exist in the above table.

RH Side

A2mm / B2mm	44.88	44.90	44.92	44.94	44.96	44.98	45.00	45.02	45.04	45.06	45.08	45.10	45.12
28.00											D+D+D		
28.02													
28.04													
28.06											C+C+E		
28.08													
28.10										C+C+D			
28.12													
28.14									C+C+C				
28.16													
28.18									E+E				
28.20								D+E					
28.22													
28.24								D+D					
28.26													
28.28							C+D						
28.30						C+C							
28.32													
28.34					B+C								
28.36													
28.38					B+B								
28.40													
28.42					E								
28.44													
28.46				D									
28.48			C										
28.50													
28.52			B										
28.54													
28.56		A											
28.58													
28.60													
28.62													
28.64													
28.66		#											
28.68													
28.70													
28.72	Less												

Reassemble another type shim or check the backlash after assembling A shim.

P

F052193E01

HINT:
Three or two adjusting shims can be used together if the total of their thickness meets the one of the above combinations, even if the combination does not exist in the above table.

DF

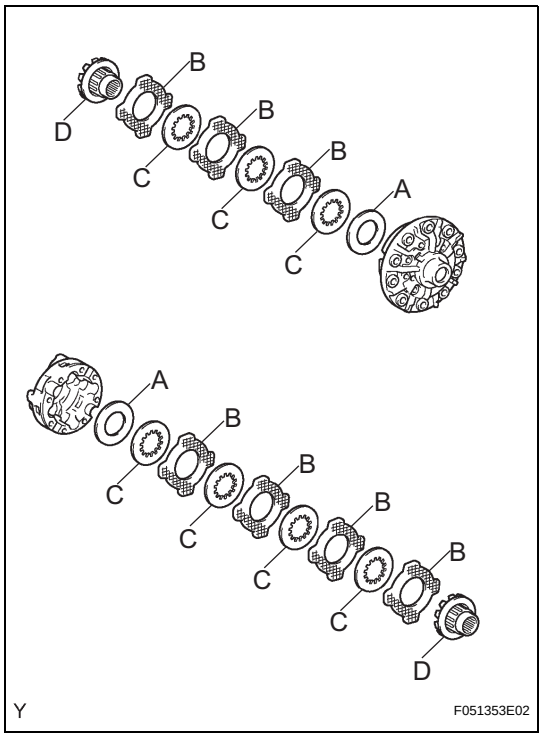

(5) Side gear thrust shim

A	Side gear thrust washer No. 1
B	Clutch plate
C	Side gear

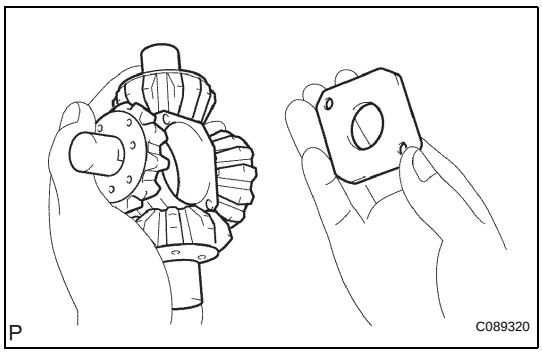

(c) Install the 4 pinion gears and thrust washers onto the spider.
(d) Align the spring RH retainer holes with the spider knock pins and install the RH retainer.
(e) Install the pinion gear and spider onto the differential RH case.
HINT:
Install the spider tightly onto the RH case while holding the spring retainer.

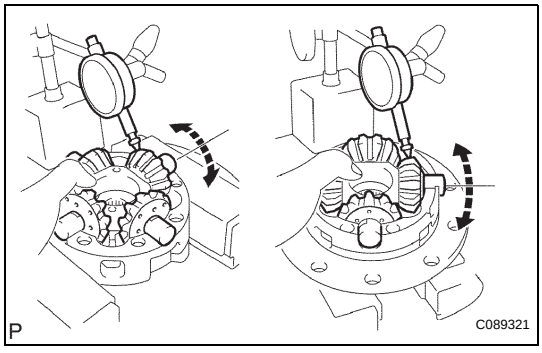

(f) Using a dial indicator, measure the side gear backlash while holding the side gear and spider.
Backlash:
0.05 to 0.20 mm (0.0020 to 0.0079 in.)
HINT:
- Measure the backlash at all 4 locations.
- Measure the backlash at the LH and RH cases.

If the backlash is not within the specification, install a adjusting shim of a different thickness.
(g) Reinstall the spider and spring RH retainer onto the differential RH case.
HINT:
Install the spider tightly onto the RH case while holding the spring retainer.
(h) Install the compression spring and spring LH retainer.

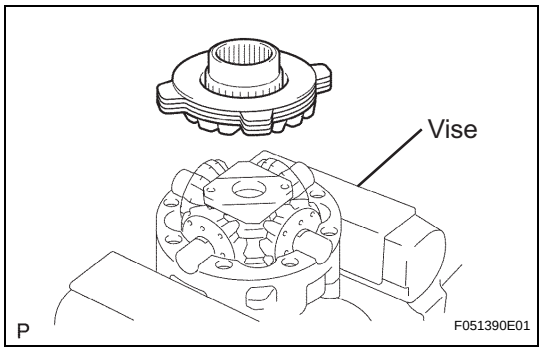

(i) Install the side gear, thrust washers and clutch plates.

(j) Align the matchmarks and assemble the RH and LH cases.
HINT:
Be careful not to drop the side gear and check the pinion and side gear alignment.

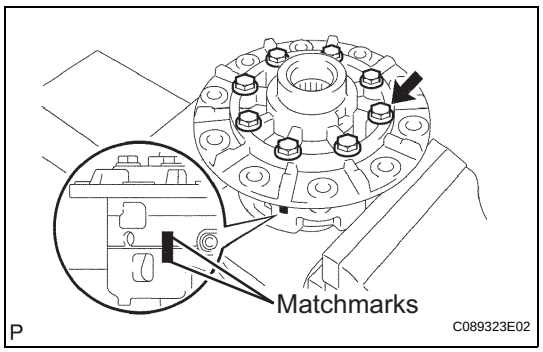

(k) Tighten the 8 bolts uniformly, a little at a time.
Torque: 47 N*m (480 kgf*cm, 35 ft.*lbf)

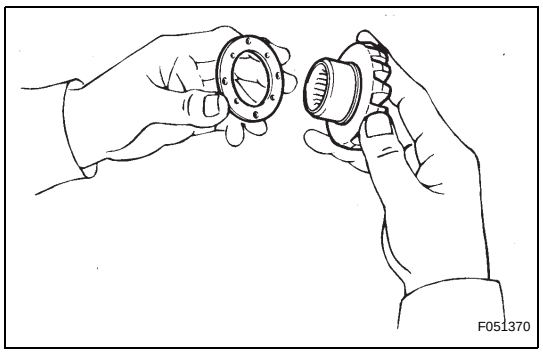

2. INSTALL DIFFERENTIAL CASE ASSEMBLY (2 Pinion Differential)

(a) Install the 2 thrust washers onto the side gears.

(b) Install the 2 side gears with the thrust washers, 2 pinion gears, 2 pinion gear thrust washers and pinion shaft.
HINT:
Align the holes for the straight pin in the differential case and pinion shaft.

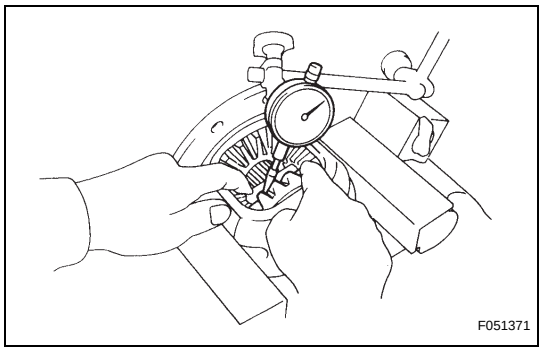

(c) Using a dial indicator, measure the side gear backlash while holding one pinion gear toward the differential case.
Backlash:
0.05 to 0.20 mm (0.0020 to 0.0079 in.)
If the backlash is not within the specified value, replace the side gear thrust washer with one of an appropriate thickness.
HINT:
Refer to the following table to select thrust washers so that the backlash is within the specified value.
Washer thickness

Thickness mm (in.)	Thickness mm (in.)
1.50 (0.0590)	1.75 (0.0689)
1.55 (0.0610)	1.80 (0.0709)
1.60 (0.0630)	1.85 (0.0728)
1.65 (0.0650)	1.90 (0.0748)
1.70 (0.0669)	-

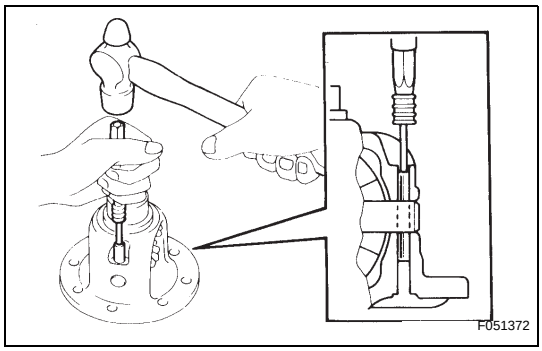

(d) Using a pin punch and hammer, install the straight pin through the holes in the differential case and pinion shaft.
(e) Using a chisel and hammer, stake the outside of the differential case pin hole.

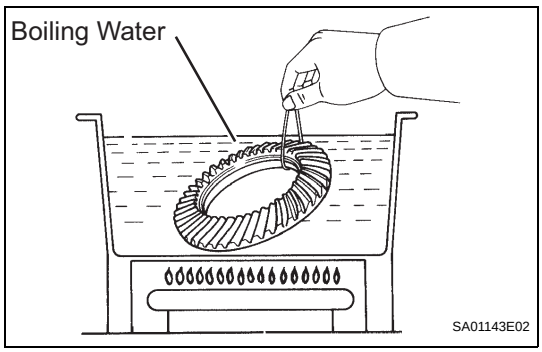

3. INSTALL DIFFERENTIAL RING GEAR

(a) Clean the contact surfaces of the differential case and ring gear.
(b) Heat the ring gear to approximately 100°C (212°F) in boiling water.
(c) Carefully take the ring gear out of the boiling water.
(d) After the moisture on the ring gear has completely evaporated, quickly install the ring gear onto the differential case.
HINT:
Align the matchmarks on the ring gear and differential case.

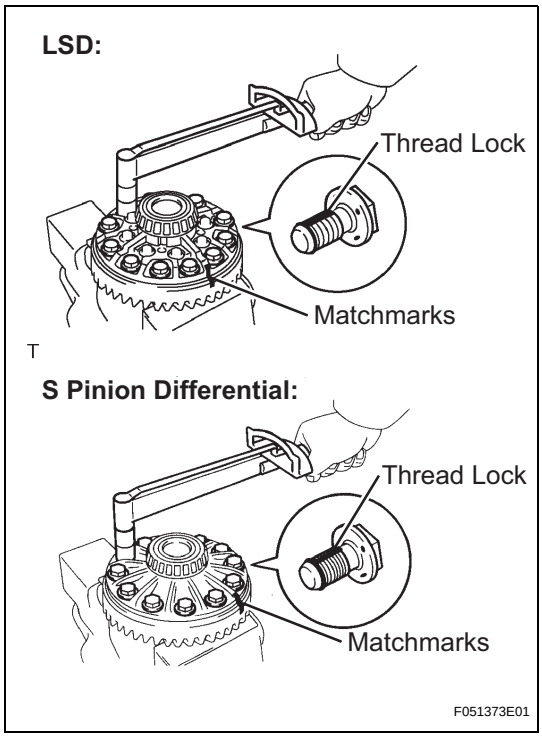

(e) After the ring gear has cooled sufficiently, torque the set bolts to which the thread lock has been applied.
Thread lock:
Part No. 08833-00100, THREE BOND 1360K or equivalent.
Torque: 125 N*m (1,270 kgf*cm, 92 ft.*lbf)

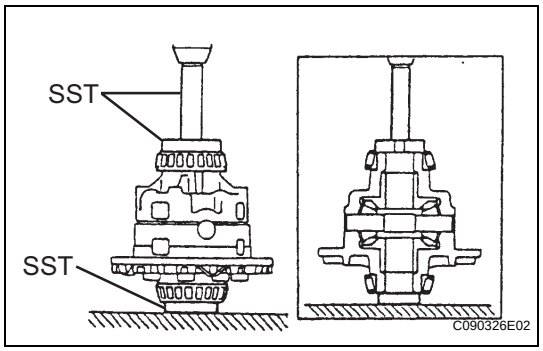

4. INSTALL REAR DIFFERENTIAL CASE BEARING

(a) Using SST and a press, install the 2 side bearings into the differential case.

SST 09950-60010 (09951-00480, 09951-00640), 09950-70010 (09951-07150)

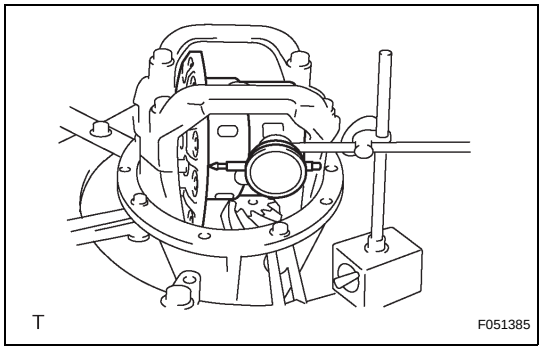

5. INSPECT DIFFERENTIAL RING GEAR RUNOUT

(a) Install the differential case onto the carrier, and install the 2 adjusting nuts so that there is no play in the bearing.

(b) Install the 2 bearing caps with the 4 bolts.

Torque: 113 N*m (1,152 kgf*cm, 83 ft.*lbf)

(c) Using a dial indicator, measure the runout of the ring gear.

Maximum runout:
0.05 mm (0.0020 in.)

(d) Remove the 2 bearing caps, 2 adjusting nuts and differential case.

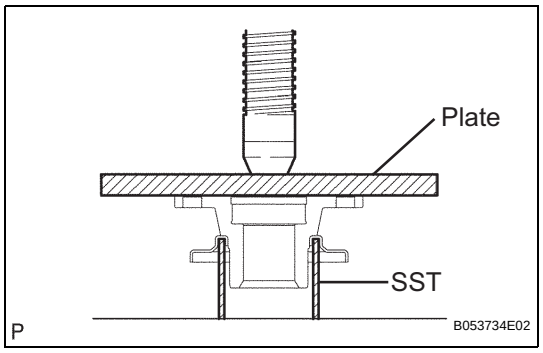

6. INSTALL REAR DIFFERENTIAL DUST DEFLECTOR

(a) Using a press, install the dust deflector.

SST 09636-20010

NOTICE:

Be careful not to damage the dust deflector.

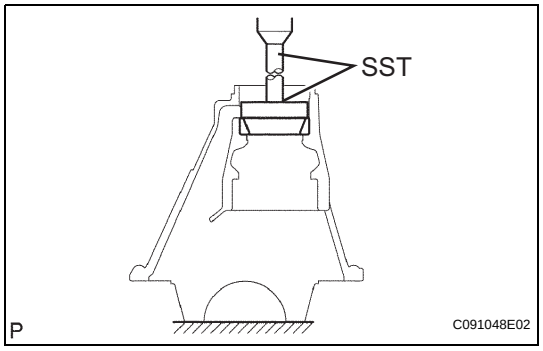

7. INSTALL REAR DRIVE PINION FRONT TAPERED ROLLER BEARING

(a) Using a brass bar and a hammer, install the oil storage ring.

(b) Using SST and a press, install the tapered roller bearing onto the carrier.

SST 09316-60011 (09316-00011, 09316-00021)

DF

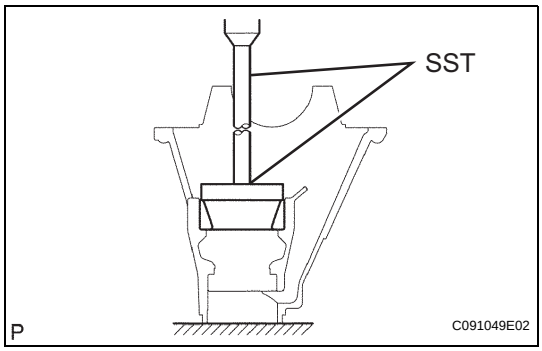

8. INSTALL REAR DRIVE PINION REAR TAPERED ROLLER BEARING

(a) Using SST and a press, install the tapered roller bearing onto the carrier.
SST 09316-60011 (09316-00041, 09316-00011)

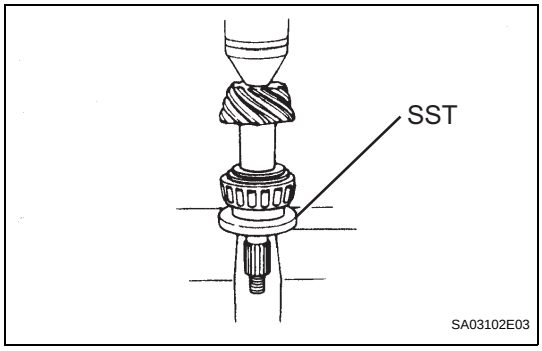

9. INSTALL REAR DRIVE PINION REAR TAPERED ROLLER BEARING

(a) Install the plate washer onto the drive pinion.
(b) Using SST and a press, install the tapered roller bearing onto the drive pinion.
SST 09506-30012

DF

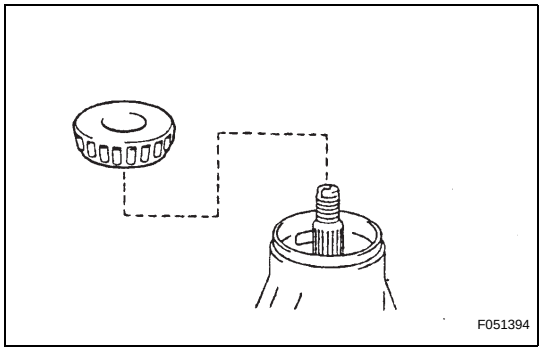

10. ADJUST DIFFERENTIAL DRIVE PINION PRELOAD

(a) Install the drive pinion and rear drive pinion tapered roller bearing.
HINT:
Assemble the spacer and oil seal after adjusting the gear contact pattern.

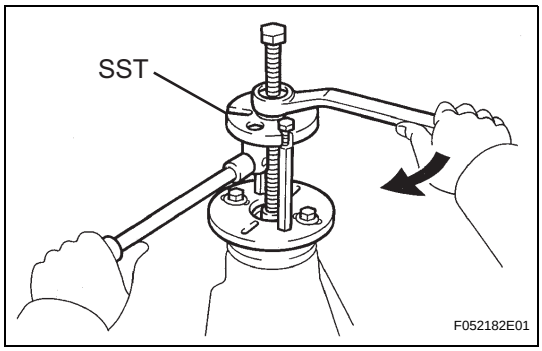

(b) Using SST, install the drive pinion companion flange.
(c) Coat the threads of the nut with hypoid gear oil LSD.
SST 09950-30012 (09951-03010, 09953-03010, 09954-03010, 09955-03030, 09956-03030)

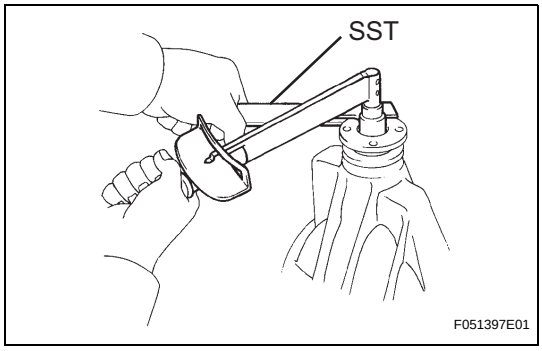

(d) Using SST to hold the drive pinion companion flange, tighten the nut.
Torque: 451 N*m (4,600 kgf*cm, 333 ft.*lbf) or less
NOTICE:
- **As there is no spacer, tighten a little at a time, being careful not to overtighten it.**
- **Apply hypoid gear oil LSD to the nut.**

SST 09330-00021

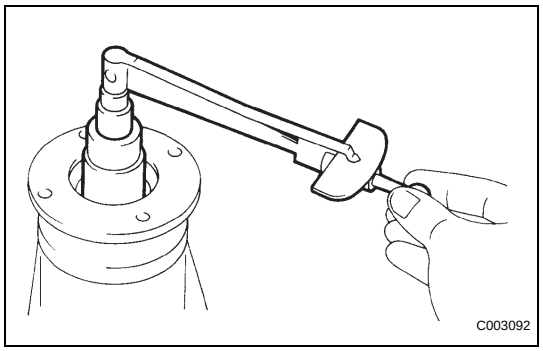

(e) Using a torque wrench, measure the preload.
Preload (at starting)

Bearing	Standard
New	1.27 to 1.86 N*m (13 to 20 kgf*cm, 11 to 16 in.*lbf)
Reused	0.78 to 1.07 N*m (8.0 to 11 kgf*cm, 6.9 to 9.5 in.*lbf)

If necessary, disassemble and inspect the differential assembly.

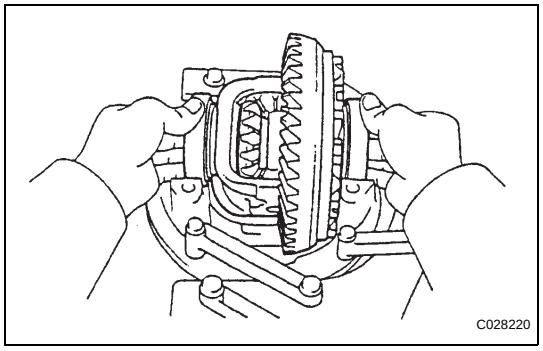

11. INSTALL DIFFERENTIAL CASE ASSEMBLY

(a) Place the 2 bearing outer races on their corresponding bearings.
HINT:
Make sure the right and left races are not interchanged.

(b) Install the differential case into the carrier.

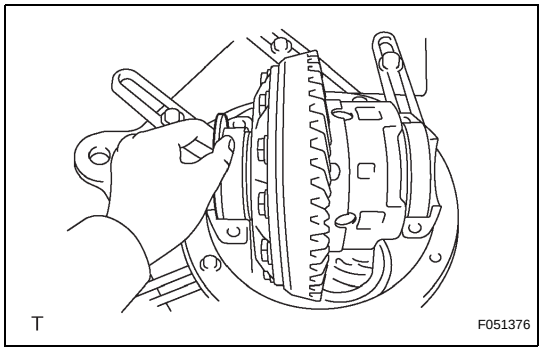

12. ADJUST DIFFERENTIAL RING GEAR BACKLASH

(a) Install the plate washer onto the ring gear back side.
HINT:
Make sure that the ring gear has backlash.

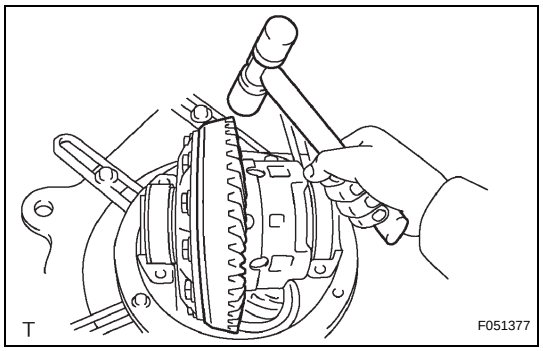

(b) Tap on the ring gear with a plastic hammer so that the washer fits into the bearing.

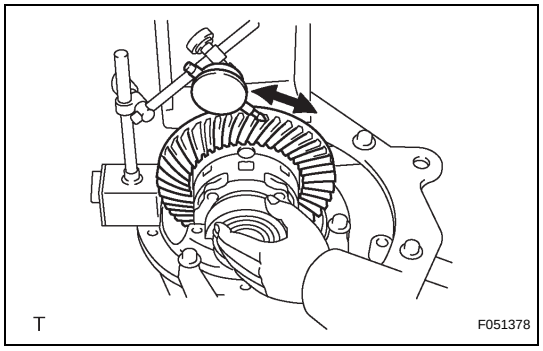

(c) Using a dial indicator, measure the ring gear backlash while holding the companion flange.
Backlash (reference):
0.13 to 0.18 mm (0.0051 to 0.0071 in.)

DF

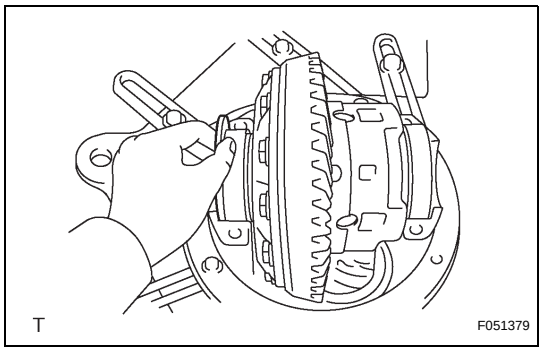

(d) Select a plate washer for the back side ring gear using the backlash as a reference.

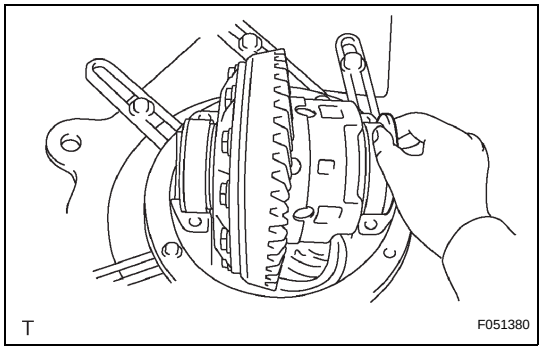

(e) Select a ring gear teeth side plate washer so that there is no clearance between the outer race and the case.
(f) Remove the 2 plate washers and differential case.
(g) Install the plate washer into the ring gear back side of the carrier.

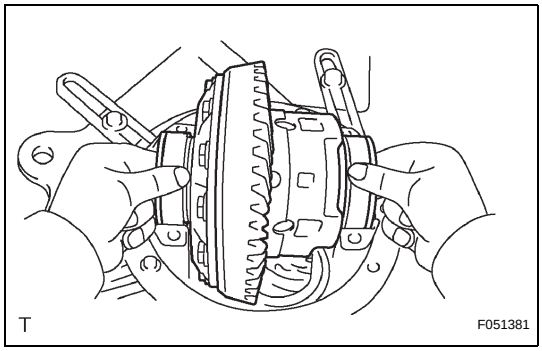

(h) Place the other plate washer onto the differential case together with the outer race, and install the differential case with the outer race into the carrier.
(i) Tap on the ring gear with a plastic hammer so that the washers fit into the bearing.

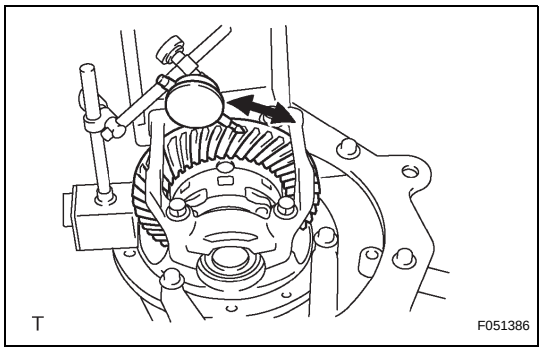

(j) Using a dial indicator, measure the ring gear backlash while holding the companion flange.
Backlash:
0.13 to 0.18 mm (0.0051 to 0.0071 in.)
If the backlash is not within the specified value, adjust it by either increasing or decreasing the thickness of washers on both sides by an equal amount.
HINT:
There should be no clearance between the plate washer and the case.
Make sure that there is a ring gear backlash.

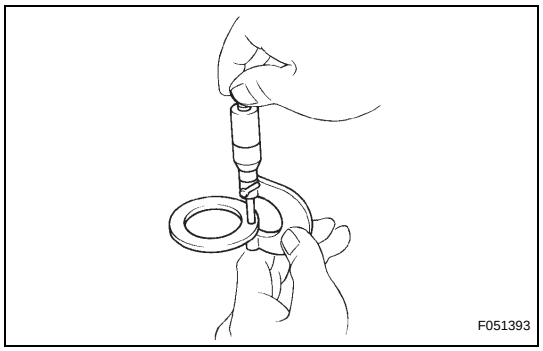

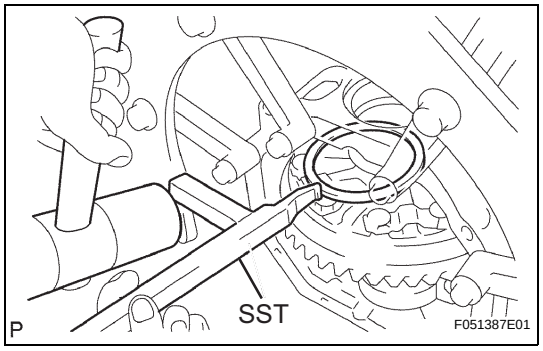

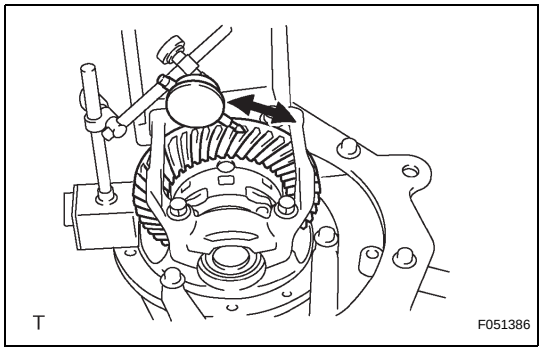

13. INSPECT SIDE BEARING PRELOAD

(a) Remove the ring gear teeth side plate washer and using a micrometer, measure the thickness.

(b) Using the backlash as a reference, install a new washer 0.06 to 0.09 mm (0.0024 to 0.0035 in.) thicker than the removed one.
HINT:
Select a washer which can be pressed in 2/3 of the way with your finger.

(c) Using SST and a plastic hammer, install the plate washer.

(d) Recheck the ring gear backlash.
Backlash:
0.13 to 0.18 mm (0.0051 to 0.0071 in.)
If the backlash is not within the specified value, adjust it by either increasing or decreasing the thickness of washers on both sides by an equal amount.
HINT:
The backlash will change by about 0.02 mm (0.0008 in.) corresponding to 0.03 mm (0.0012 in.) change in the plate washer.

DF

Washer thickness

Thickness		Thickness		Thickness	
Mark	mm (in.)	Mark	mm (in.)	Mark	mm (in.)
58	2.58 (0.1016)	90	2.90 (0.1142)	22	3.22 (0.1268)
60	2.60 (0.1024)	92	2.92 (0.1150)	24	3.24 (0.1276)
62	2.62 (0.1032)	94	2.94 (0.1158)	26	3.26 (0.1284)
64	2.64 (0.1039)	96	2.96 (0.1165)	28	3.28 (0.1291)
66	2.66 (0.1047)	98	2.98 (0.1173)	30	3.30 (0.1299)
68	2.68 (0.1055)	00	3.00 (0.1181)	32	3.32 (0.1307)
70	2.70 (0.1063)	02	3.02 (0.1189)	34	3.34 (0.1315)
72	2.72 (0.1071)	04	3.04 (0.1197)	36	3.36 (0.1323)
74	2.74 (0.1079)	06	3.06 (0.1205)	38	3.38 (0.1331)
76	2.76 (0.1087)	08	3.08 (0.1213)	40	3.40 (0.1339)
78	2.78 (0.1095)	10	3.10 (0.1221)	42	3.42 (0.1347)
80	2.80 (0.1102)	12	3.12 (0.1228)	44	3.44 (0.1354)
82	2.82 (0.1110)	14	3.14 (0.1236)	46	3.46 (0.1362)
84	2.84 (0.1118)	16	3.16 (0.1244)	48	3.48 (0.1370)
86	2.86 (0.1126)	18	3.18 (0.1257)	-	-
88	2.88 (0.1134)	20	3.20 (0.1260)	-	-

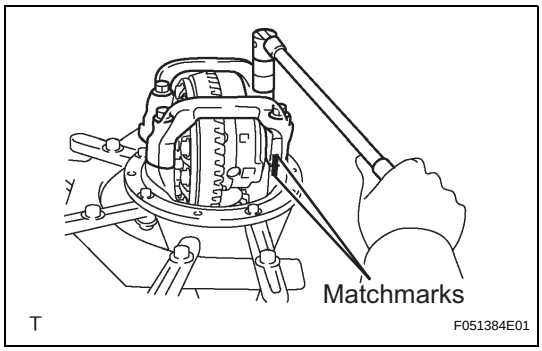

(e) Tighten the bearing cap bolts.
Torque: 113 N*m (1,152 kgf*cm, 83 ft.*lbf)

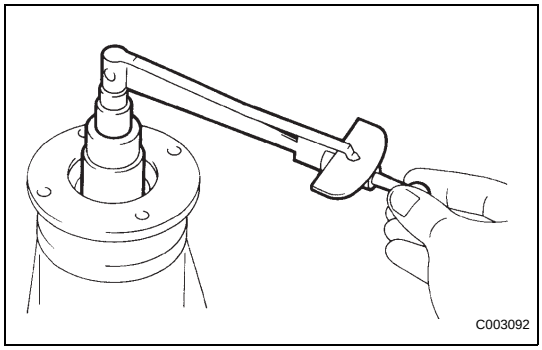

14. INSPECT TOTAL PRELOAD

(a) Using a torque wrench, measure the preload with the teeth of the drive pinion and ring gear in contact.
Total Preload (at starting):
Drive pinion preload plus 0.39 to 0.59 N*m (4.0 to 6.0 kgf*cm, 3.5 to 5.2 in.*lbf)
If necessary, disassemble and inspect the differential.

DF

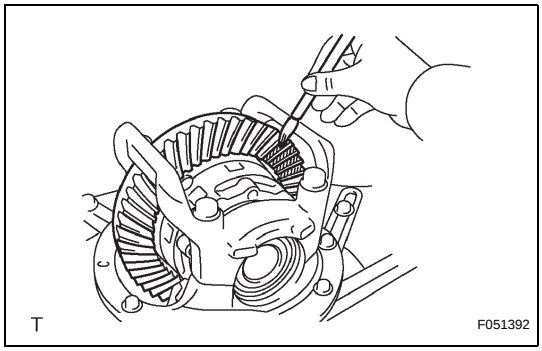

15. INSPECT TOOTH CONTACT BETWEEN RING GEAR AND DRIVE PINION

(a) Coat 3 or 4 teeth at 3 different positions on the ring gear with red lead primer.
(b) Hold the companion flange firmly and rotate the ring gear in both directions.

(c) Inspect the tooth contact pattern.

Driver Side:

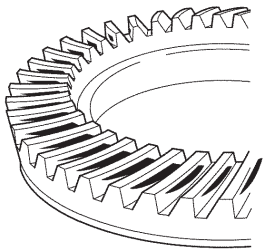

Proper Contact

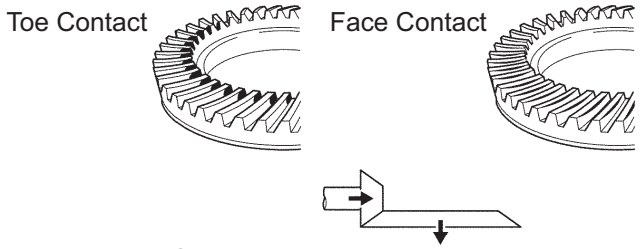

Select an adjusting washer that will bring the drive pinion closer to the ring gear.

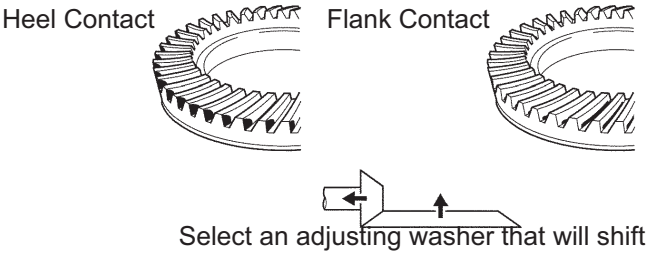

Select an adjusting washer that will shift the drive pinion away from the ring gear.

Coast Side:

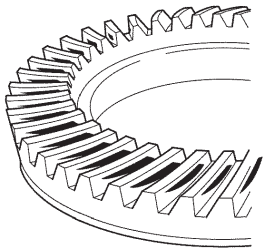

Proper Contact

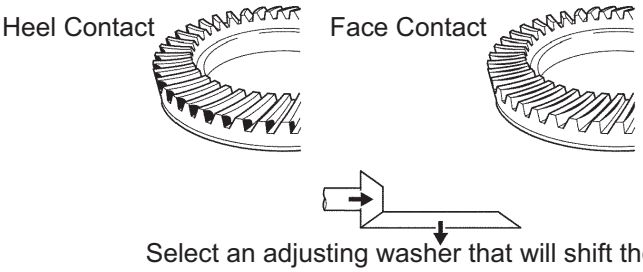

Select an adjusting washer that will shift the drive pinion closer to the ring gear.

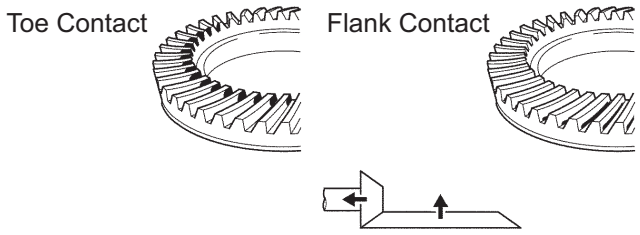

Select an adjusting washer that will bring the drive pinion away from the ring gear.

P

F052199E01

DF

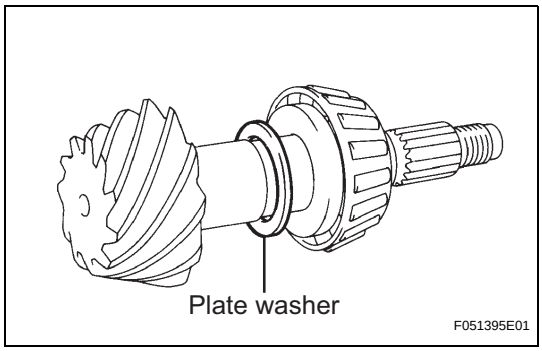

(d) If the teeth are not properly in contact, use the following chart to select an appropriate washer for correction.

Washer thickness

Thickness		Thickness		Thickness	
Mark	mm (in.)	Mark	mm (in.)	Mark	mm (in.)
87	1.87 (0.0736)	03	2.03 (0.0799)	19	2.19 (0.0862)
88	1.88 (0.0740)	04	2.04 (0.0803)	20	2.20 (0.0866)
89	1.89 (0.0744)	05	2.05 (0.0807)	21	2.21 (0.0870)
90	1.90 (0.0748)	06	2.06 (0.0811)	22	2.22 (0.0874)
91	1.91 (0.0752)	07	2.07 (0.0815)	23	2.23 (0.0878)
92	1.92 (0.0756)	08	2.08 (0.0819)	24	2.24 (0.0882)
93	1.93 (0.0760)	09	2.09 (0.0823)	25	2.25 (0.0886)
94	1.94 (0.0764)	10	2.10 (0.0827)	26	2.26 (0.0890)
95	1.95 (0.0768)	11	2.11 (0.0831)	27	2.27 (0.0894)
96	1.96 (0.0772)	12	2.12 (0.0835)	28	2.28 (0.0898)
97	1.97 (0.0776)	13	2.13 (0.0839)	-	-
98	1.98 (0.0780)	14	2.14 (0.0843)	-	-
99	1.99 (0.0784)	15	2.15 (0.0847)	-	-
00	2.00 (0.0787)	16	2.16 (0.0850)	-	-
01	2.01 (0.0791)	17	2.17 (0.0854)	-	-
02	2.02 (0.0795)	18	2.18 (0.0858)	-	-

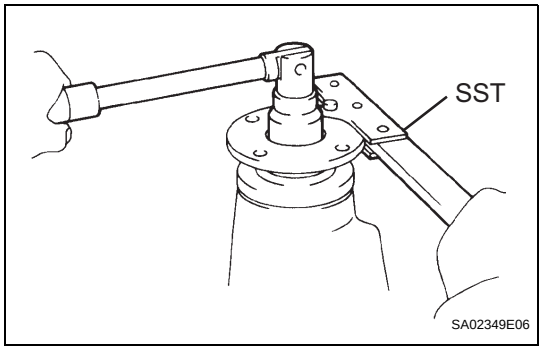

16. REMOVE REAR DRIVE PINION NUT

(a) Using SST to hold the drive pinion companion flange, remove the nut.

SST 09330-00021

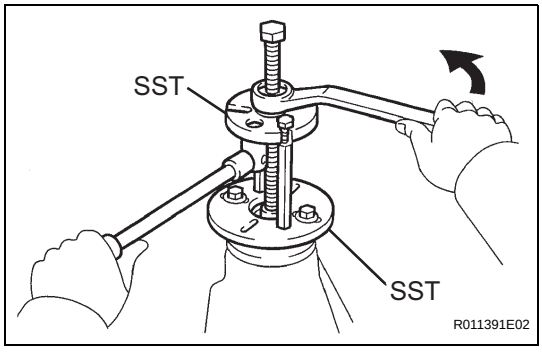

17. REMOVE REAR DRIVE PINION COMPANION FLANGE SUB-ASSEMBLY REAR

(a) Using SST, remove the drive pinion companion flange.

SST 09950-30012 (09951-03010, 09953-03010, 09954-03010, 09955-03030, 09956-03030)

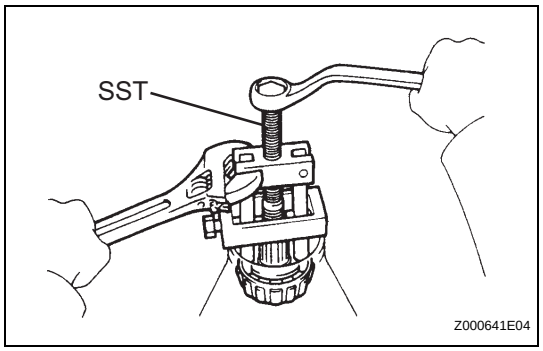

18. REMOVE REAR DRIVE PINION FRONT TAPERED ROLLER BEARING

(a) Using SST, remove the drive pinion tapered roller bearing from the drive pinion.
SST 09556-22010

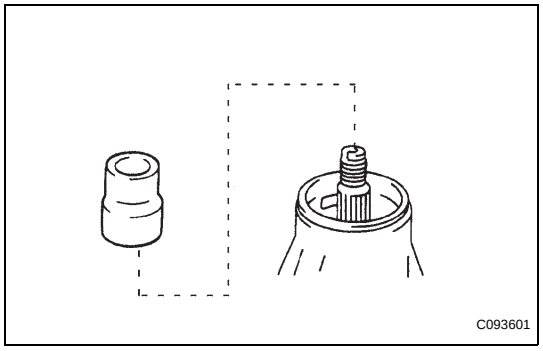

19. INSTALL REAR DIFFERENTIAL DRIVE PINION BEARING SPACER

(a) Install a new bearing spacer onto the drive pinion.

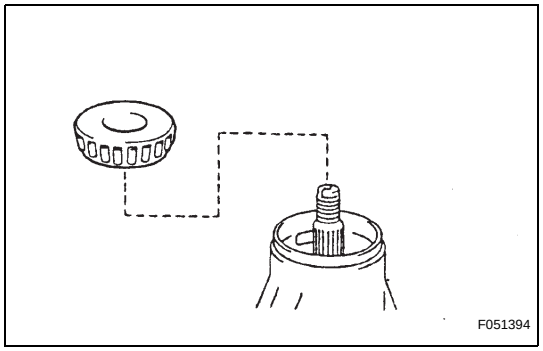

20. INSTALL REAR DRIVE PINION FRONT TAPERED ROLLER BEARING

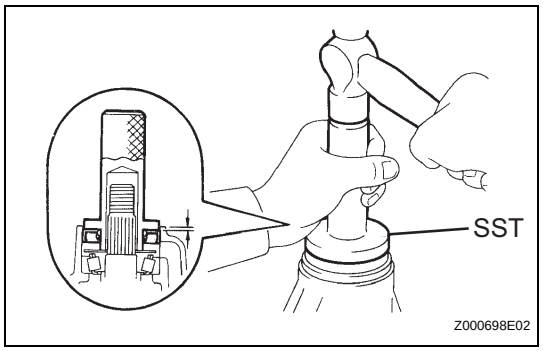

21. INSTALL REAR DIFFERENTIAL CARRIER OIL SEAL

(a) Apply MP grease to the oil seal lip.
(b) Using SST and a hammer, install a new carrier oil seal.
SST 09554-30011
Oil seal drive in depth:
-0.5 to 0.5 mm (-0.0197 to 0.0197 in)

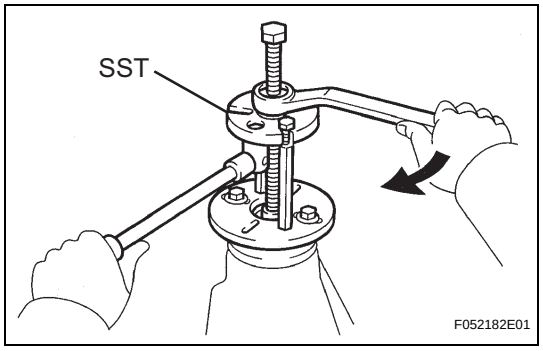

22. INSTALL REAR DRIVE PINION COMPANION FLANGE SUB-ASSEMBLY REAR

(a) Using SST, install the drive pinion companion flange onto the drive pinion.
SST 09950-30012 (09951-03010, 09953-03010, 09954-03010, 09955-03030, 09956-03030)

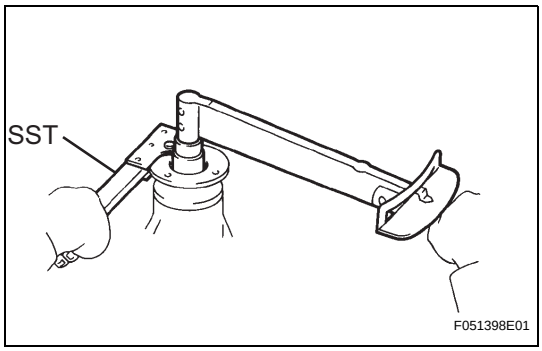

(b) Coat the threads of a new nut with hypoid gear oil LSD.
(c) Using SST to hold the flange, torque the nut.
SST 09330-00021
Torque: 451 N*m (4,600 kgf*cm, 333 ft.*lbf) or less

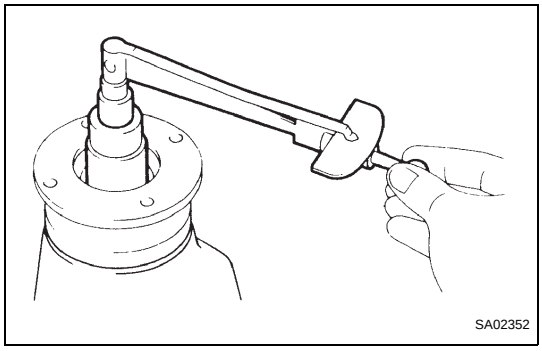

23. INSPECT DRIVE PINION PRELOAD

(a) Using a torque wrench, measure the preload of the backlash between the drive pinion and ring gear.
Preload (at starting)

Bearing	Standard
New	1.27 to 1.86 N*m (13 to 19 kgf*cm, 11 to 16 in.*lbf)
Reused	0.78 to 1.07 N*m (8.0 to 11 kgf*cm, 6.9 to 9.5 in.*lbf)

- If the preload is greater than the specification, replace the bearing spacer.
- If the preload is less than the specification, retighten the nut to 13 N*m (130 kgf*cm, 9 ft*lbf) of torque at a time until the specified preload is reached.

Torque: 451 N*m (4,600 kgf*cm, 333 ft.*lbf) or less

- If the maximum torque is exceeded while retightening the nut, replace the bearing spacer and repeat the preload adjusting procedure. Do not loosen the pinion nut to reduce the preload.

DF

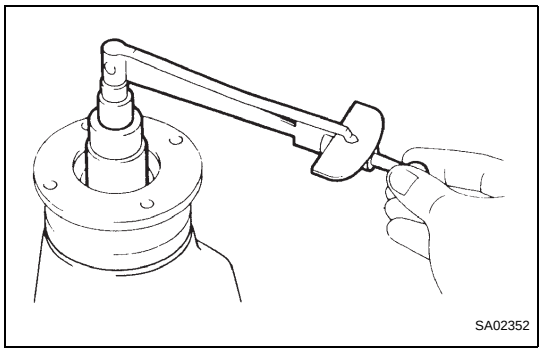

24. INSPECT TOTAL PRELOAD

(a) Using a torque wrench, measure the preload.
Total Preload (at starting):
Drive pinion preload plus 0.39 to 0.59 N*m (4 to 6 kgf*cm, 4.0 to 5.2 in.*lbf)
If the necessary, disassemble and inspect the differential.

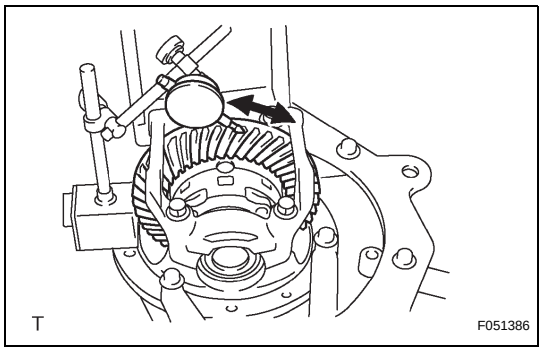

25. INSPECT DIFFERENTIAL RING GEAR BACKLASH

(a) Using a dial indicator, check the backlash of the ring gear.
Backlash:
0.13 to 0.18 mm (0.0051 to 0.0071 in.)
If the backlash is not within the specification, adjust or repair the side bearing preload as necessary.

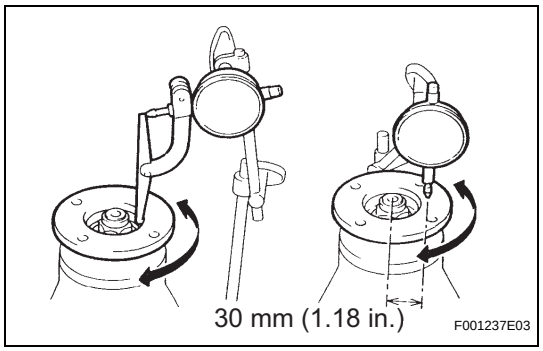

26. INSPECT RUNOUT OF REAR DRIVE PINION COMPANION FLANGE SUB-ASSEMBLY REAR

(a) Using a dial indicator, measure the vertical and horizontal runout of the drive pinion companion flange.

Maximum runout:

Vertical runout: 0.10 mm (0.0039 in.)

Lateral runout: 0.10 mm (0.0039 in.)

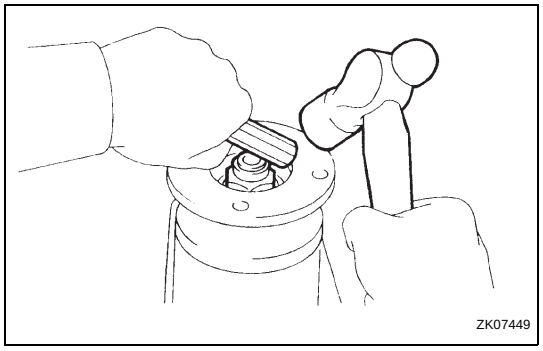

27. INSTALL REAR DRIVE PINION NUT

(a) Using a chisel and hammer, stake the drive pinion nut.

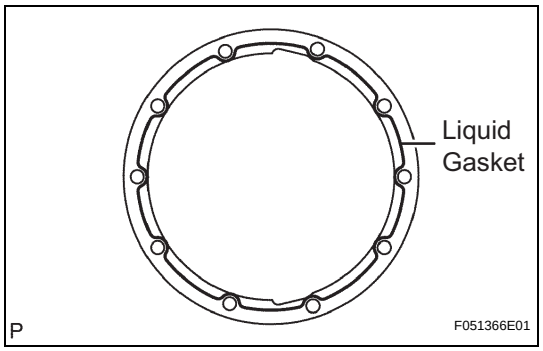

INSTALLATION

1. INSTALL REAR DIFFERENTIAL CARRIER ASSEMBLY

(a) Remove any dust and oil from the differential carrier assembly and contact surface of the axle housing.

(b) Apply liquid gasket to both sides of the gasket.

NOTICE:

Do not put the liquid gasket on the stud bolt.

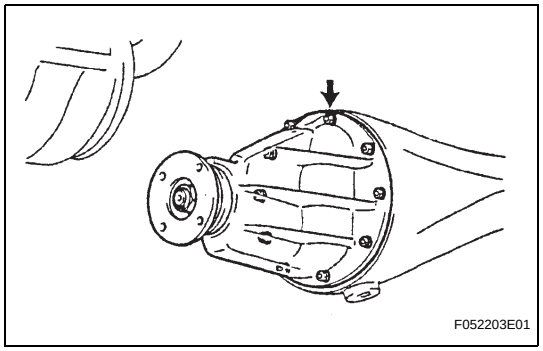

(c) Install a new gasket and the differential carrier assembly with the 10 nuts and 10 washers.

Torque: 45 N*m (459 kgf*cm, 33 ft.*lbf)

2. INSTALL REAR AXLE SHAFT WITH BACKING PLATE LH (See page AH-33)

3. INSTALL REAR AXLE SHAFT WITH BACKING PLATE RH

HINT:

Use the same procedure as for the LH side.

4. INSTALL NO.3 PARKING BRAKE CABLE ASSEMBLY (See page PB-22)

5. INSTALL NO.2 PARKING BRAKE CABLE ASSEMBLY

HINT:

Use the same procedure as for the LH side.

6. INSTALL REAR SPEED SENSOR LH (See page BC-304)

7. INSTALL REAR SPEED SENSOR RH

HINT:

Use the same procedure as for the LH side.

8. **INSTALL PROPELLER SHAFT ASSEMBLY (for 2WD Drive Type, Regular Cab) (See page PR-6)**
9. **INSTALL PROPELLER WITH CENTER BEARING SHAFT ASSEMBLY (for 2WD Drive Type, Except Regular Cab) (See page PR-13)**
10. **INSTALL PROPELLER SHAFT ASSEMBLY (for 4WD Driver Type, Regular Cab) (See page PR-25)**
11. **INSTALL PROPELLER WITH CENTER BEARING SHAFT ASSEMBLY (for 4WD Driver Type, Expect Regular Cab) (See page PR-32)**
12. **INSTALL REAR BRAKE SHOE (See page BR-71)**
13. **INSTALL FRONT BRAKE SHOE (See page BR-72)**
14. **INSPECT REAR BRAKE DRUM INSTALLATION (See page BR-73)**
15. **INSTALL REAR BRAKE DRUM SUB-ASSEMBLY (See page BR-73)**
16. **ADJUST REAR DRUM BRAKE SHOE CLEARANCE (See page BR-74)**
17. **FILL RESERVOIR WITH BRAKE FLUID (w/ VSC) (See page BR-4)**
18. **FILL RESERVOIR WITH BRAKE FLUID (w/o VSC) (See page BR-7)**
19. **BLEED MASTER CYLINDER (w/o VSC) (See page BR-7)**
20. **BLEED BRAKE LINE (w/ VSC) (See page BR-4)**
21. **BLEED BRAKE LINE (w/o VSC) (See page BR-7)**
22. **CHECK FLUID LEVEL IN RESERVOIR (w/ VSC) (See page BR-6)**
23. **CHECK FLUID LEVEL IN RESERVOIR (w/o VSC) (See page BR-8)**
24. **CHECK FOR BRAKE FLUID LEAKAGE**
25. **ADD DIFFERENTIAL OIL (See page DF-8)**
26. **INSPECT DIFFERENTIAL OIL (See page DF-8)**
27. **INSPECT FOR DIFFERENTIAL OIL LEAKAGE**
28. **INSTALL REAR WHEEL**
    Torque: 113 N*m (1,152 kgf*cm, 83 in.*lbf)
29. **INSPECT PARKING BRAKE PEDAL TRAVEL (for Automatic Transaxle) (See page PB-1)**
30. **INSPECT PARKING BRAKE LEVER TRAVEL (for Manual Transaxle) (See page PB-1)**
31. **ADJUST PARKING BRAKE PEDAL TRAVEL (for Automatic Transaxle) (See page PB-2)**

32. **ADJUST PARKING BRAKE LEVER TRAVEL (for Manual Transaxle) (See page PB-2)**

33. **CONNECT CABLE TO NEGATIVE BATTERY TERMINAL**
Torque: 3.9 N*m (40 kgf*cm, 35 in.*lbf)

34. **CHECK VSC SENSOR SIGNAL (w/ VSC)**
HINT:
(See page BC-103)

35. **CHECK ABS SENSOR SIGNAL (w/o VSC)**
HINT:
(See page BC-7)

SYSTEM DIAGRAM

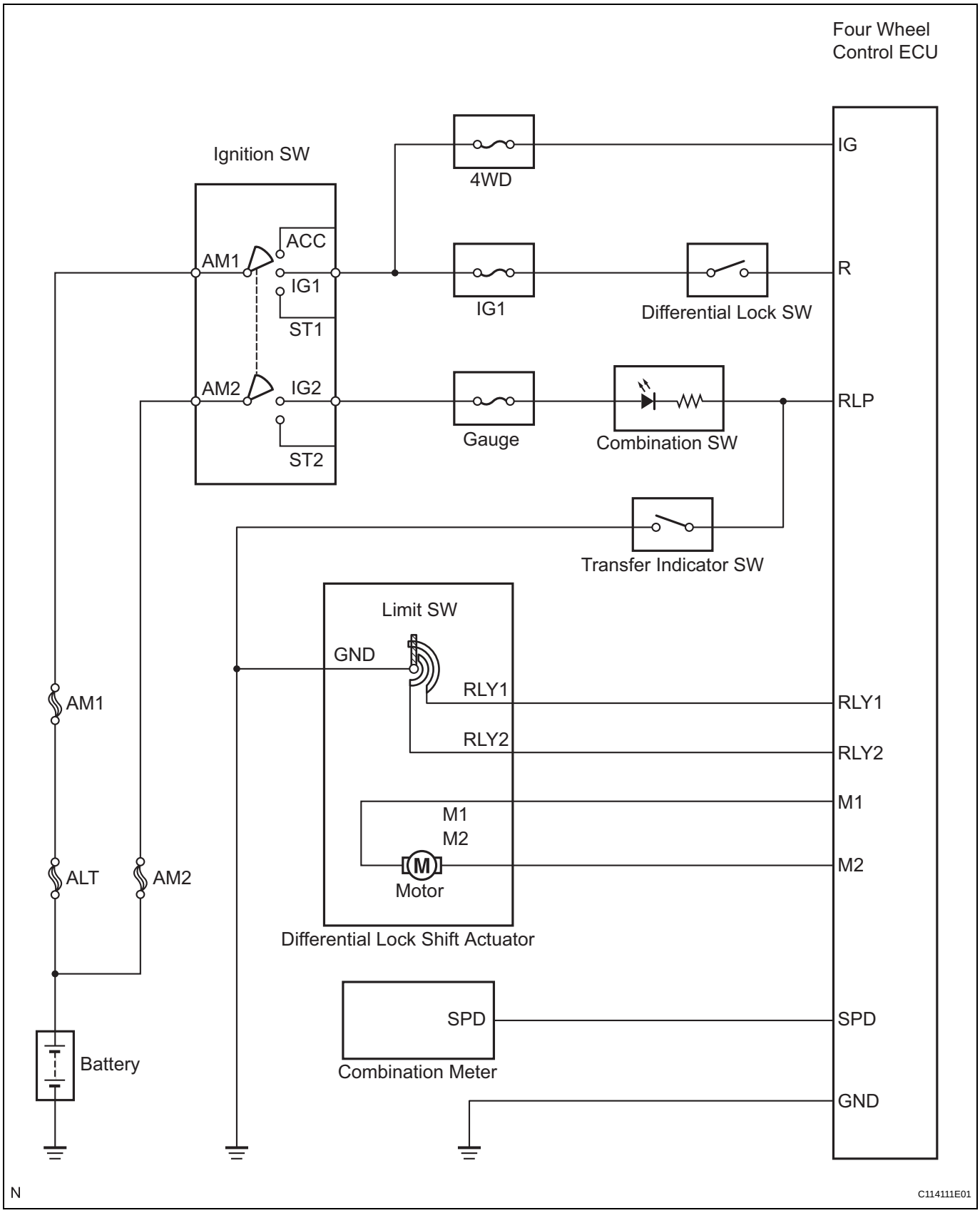

DF

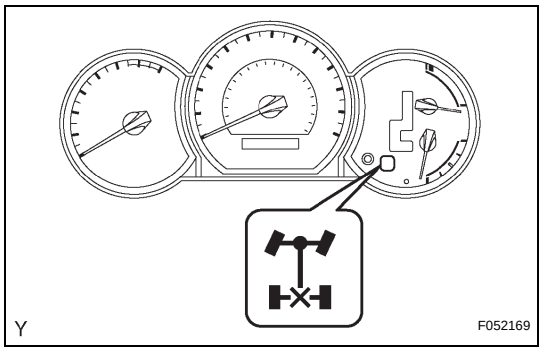

ON-VEHICLE INSPECTION

1. INSPECT REAR DIFFERENTIAL LOCK SYSTEM

(a) Inspect the indicator light.

(1) Check that the indicator light illuminates for approx. 1 second when the ignition switch is turned ON.

(b) Inspect the differential lock operation.

(1) Jack up the vehicle and start the engine.

(2) When the differential lock control switch is ON the indicator light blinks.

HINT:

If the gears of the differential lock system are not engaged, the indicator light continues blinking, so rotate the tires to engage the gear.

(3) When the differential lock control switch is in the OFF position, the indicator light goes off. The differential lock is released for the rear wheel at this time.

(4) Check the voltage between the terminals of the rear differential lock control ECU when switching the rear differential lock control ON, with the speedometer registering at approximately 7 mph (11 km/h) or more.

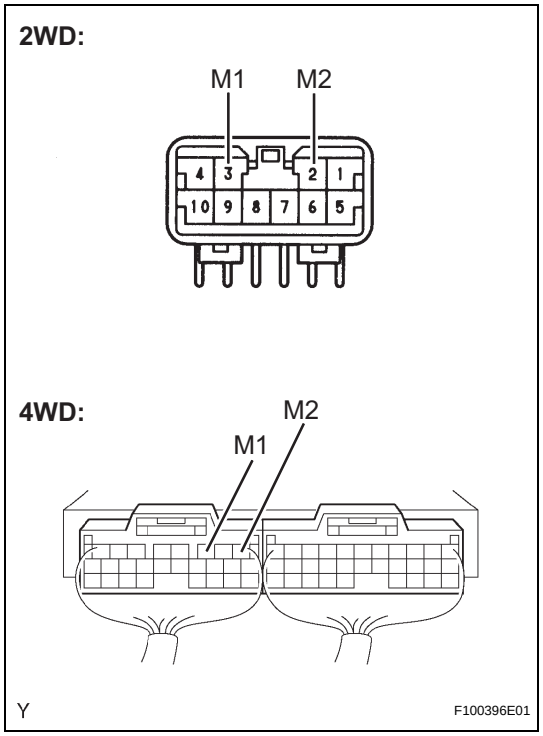

Switch position	Terminal	Specified condition
ON	M1 - M2	0.5 V or less (No change)

(5) Return the differential lock control switch to OFF.

(6) Stop the engine and lower the vehicle.

2. INSPECT DIFFERENTIAL LOCK SYSTEM CIRCUIT

(a) Inspect the battery positive voltage.

Battery positive voltage:

10 to 14 V

DF

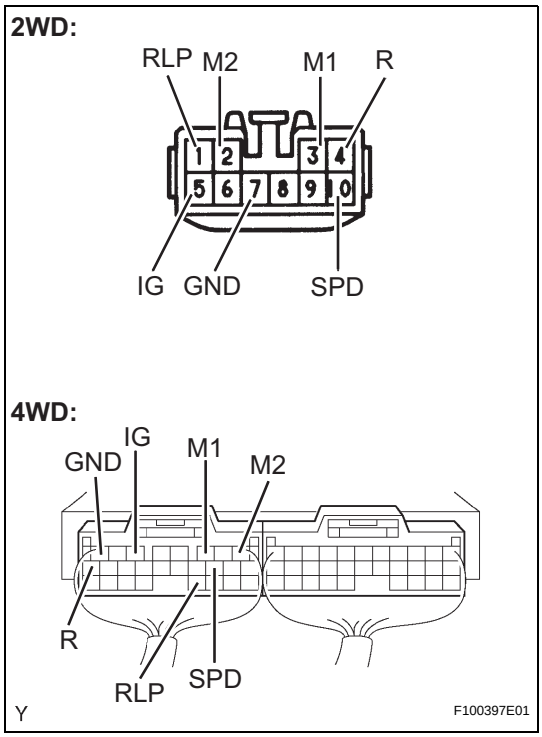

(b) Inspect the system circuit with the connector disconnected.
Disconnect the connector from the rear differential lock control ECU and inspect the connector on the wire harness side, as shown in the table.

DF

Standard

Symbols (Terminals No.)	Trouble part	Condition	Specified value
M1 - M2	RR Differential Lock Actuator	-	Less than 100 Ω
GND - Body ground	Body Ground	-	Below 1 Ω
SPD - Body ground	Speed Sensor	Vehicle moves slowly	1 pulse each 40 cm (15.75 in.)
IG - Body ground	DIFF Fuse	Ignition switch ON	10 to 14 V
RLP - Body ground	Rear Differential Lock Indicator Switch	Ignition switch ON with indicator light ON	About 0 V
		Ignition switch ON with indicator light OFF	10 to 14 V
R - Body ground	Differential Lock Control Switch	Ignition switch ON with differential lock control switch RR	10 to 14 V
		Ignition switch ON with differential lock control switch OFF	About 0 V

If the result is not as specified value, check and repair or replace the malfunctioning part shown in the table above.

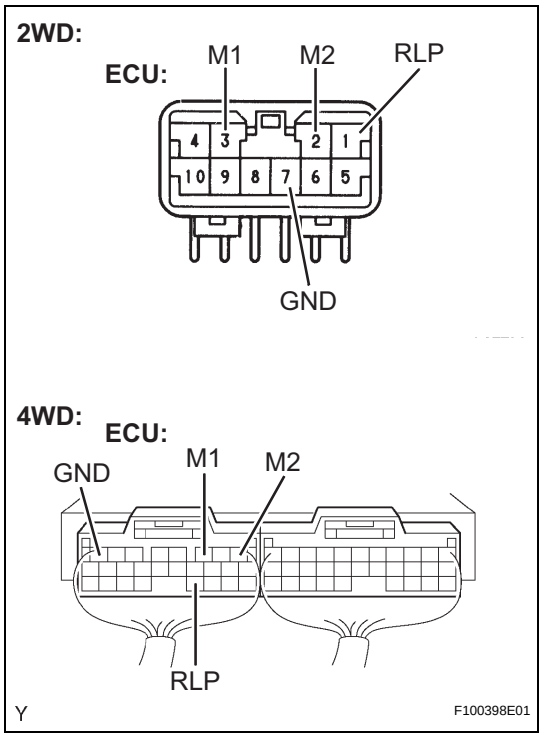

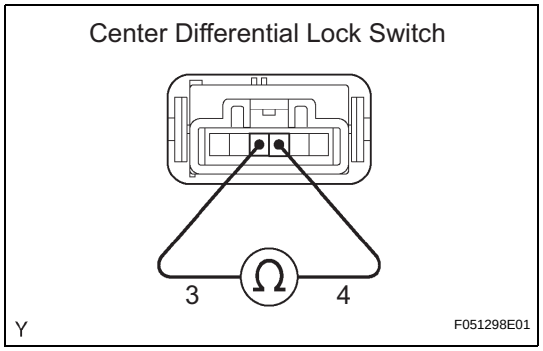

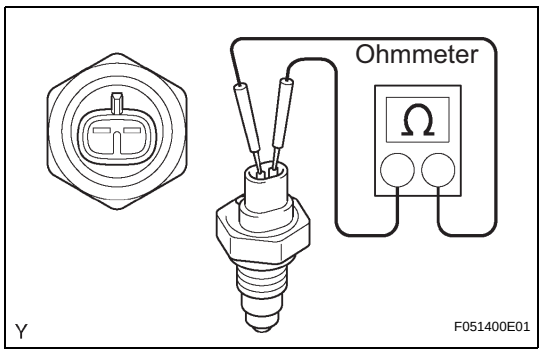

(c) Inspect the system circuit with the connector connected.
  (1) Turn the ignition switch to the ON position.
  (2) Using a voltmeter, measure the voltage when the differential lock control switch is in the positions shown in the table.

Tester Connection + - -	Switch position	Specified condition
RLP - GND	RR*	0.5 V or less
M1 - M2	OFF → RR	0.5 V or less → 10 - 14 V (Approx. 1 sec.) → 0.5 V or less
M2 - M1	RR → OFF	

HINT:
*: The rear differential should be locked mechanically. If the result is not as specified, replace the ECU.

  (3) Install the ECU

INSPECTION

1. INSPECT CENTER DIFFERENTIAL LOCK SWITCH

(a) Check the resistance.
  (1) Measure the resistance using an ohmmeter.
  Standard

Tester Connection	Switch Condition	Specified Condition
3 - 4	**Released**	**10 kΩ or higher**
3 - 4	**Pushed in**	**Below 1 Ω**

If the result is not as specified, replace the center differential lock switch.

2. INSPECT NO. 1 TRANSFER INDICATOR SWITCH

(a) Check the resistance.
  (1) Measure the resistance using an ohmmeter.
  Standard

Tester Connection	Switch Condition	Specified Condition
1 - 2	**Released**	**10 kΩ or higher**
1 - 2	**Pushed in**	**Below 1 Ω**

If the result is not as specified, replace the No. 1 transfer indicator switch.

DF

INSTALLATION

1. INSTALL FRONT AXLE HUB

2. INSTALL FRONT SUSPENSION UPPER ARM

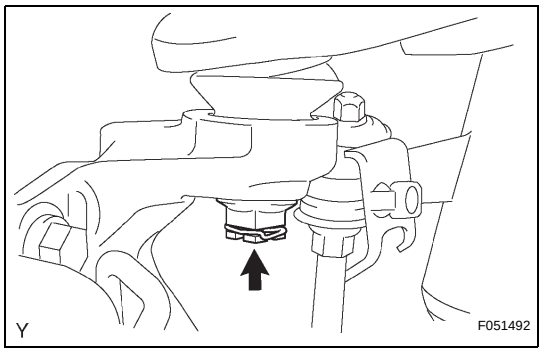

(a) Install the upper arm with a new nut.
Torque: 110 N*m (1,122 kgf*cm, 81 ft.*lbf)

(b) Install the clip.
NOTICE:
If the holes in the clip are not aligned, tighten the nut an additional 60°.

3. INSTALL FRONT SUSPENSION LOWER ARM

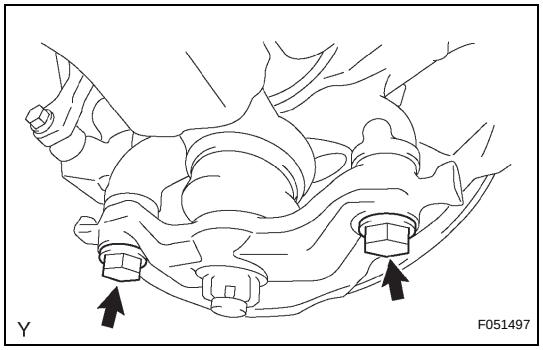

(a) Install the front lower ball joint attachment LH with the 2 bolts.
Torque: 160 N*m (1,631 kgf*cm, 118 ft.*lbf)

4. INSTALL TIE ROD END SUB-ASSEMBLY

(a) Install the tie rod end onto the steering knuckle arm.

(b) Install the nut.
Torque: 49 N*m (500 kgf*cm, 36 ft.*lbf)

(c) Install a new cotter pin.
NOTICE:
If the holes in the cotter pin are not aligned, tighten the nut an additional 60°.

5. INSTALL FRONT DISC

6. INSTALL FRONT DISC BRAKE CALIPER ASSEMBLY

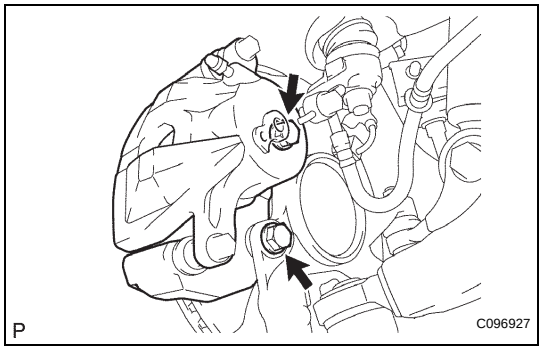

(a) Install the brake caliper with the 2 bolts.
Torque: 108 N*m (1,101 kgf*cm, 80 ft.*lbf)

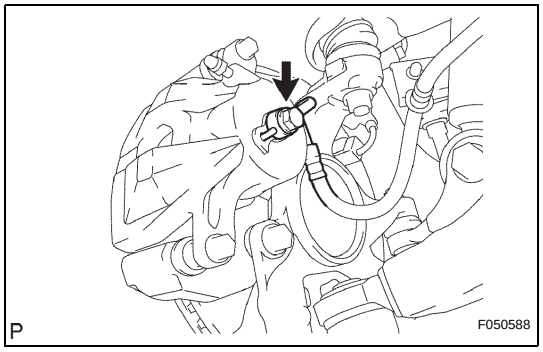

(b) Install a new gasket and flexible hose with the union bolt.
Torque: 30 N*m (306 kgf*cm, 22 ft.*lbf)
HINT:
Install the flexible hose lock securely into the lock hole in the disc brake cylinder.

AH

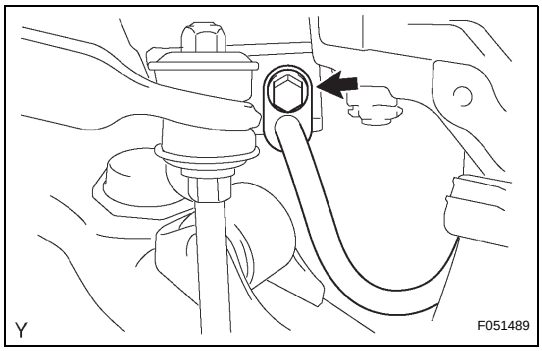

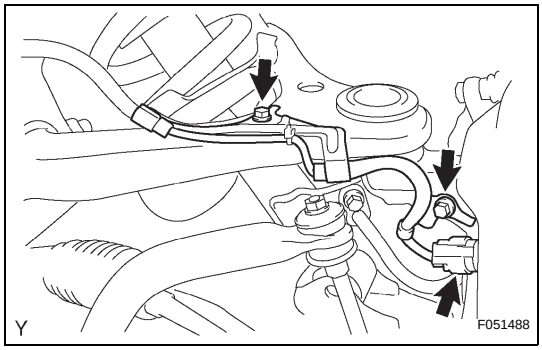

7. **INSTALL FRONT FLEXIBLE HOSE**
   (a) Install the front flexible hose with the bolt.
   Torque: 32 N*m (326 kgf*cm, 24 ft.*lbf)

8. **INSTALL FRONT SPEED SENSOR**
   (a) Install the speed sensor front with the bolt.
   Torque: 8.3 N*m (85 kgf*cm, 73 in.*lbf)
   NOTICE:
   Make sure that the sensor tip is clean.

9. **INSTALL SKID CONTROL SENSOR WIRE**
   (a) Install the skid control sensor wire with the 2 bolts.
   Torque: 5.0 N*m (51 kgf*cm, 44 in.*lbf)
   (b) Connect the speed sensor connector.

10. **INSTALL FRONT WHEEL**
    Torque: 113 N*m (1,152 kgf*cm, 83 ft.*lbf)

11. **CONNECT CABLE TO NEGATIVE BATTERY TERMINAL**
    Torque: 3.9 N*m (40 kgf*cm, 35 in.*lbf)
    (See page IN-5)

12. **FILL RESERVOIR WITH BRAKE FLUID (w/ VSC) (See page BR-4)**

13. **FILL RESERVOIR WITH BRAKE FLUID (w/o VSC) (See page BR-7)**

14. **BLEED MASTER CYLINDER (w/o VSC) (See page BR-7)**

15. **BLEED BRAKE LINE (w/ VSC) (See page BR-4)**

16. **BLEED BRAKE LINE (w/o VSC) (See page BR-7)**

17. **CHECK FLUID LEVEL IN RESERVOIR (w/ VSC) (See page BR-6)**

18. **CHECK FLUID LEVEL IN RESERVOIR (w/o VSC) (See page BR-8)**

19. **CHECK FOR BRAKE FLUID LEAKAGE**

20. **CHECK VSC SENSOR SIGNAL (w/ VSC)**
    (See page BC-103)

21. **CHECK ABS SENSOR SIGNAL (w/o VSC)**
    (See page BC-7)

22. **INSPECT AND ADJUST FRONT WHEEL ALIGNMENT**
    (See page SP-2)

REMOVAL

1. **DISCONNECT CABLE FROM NEGATIVE BATTERY TERMINAL**
2. **REMOVE FRONT WHEEL**
3. **DRAIN BRAKE FLUID**
   NOTICE:
   Immediately wash off any brake fluid that comes into contact with painted surfaces.
4. **SEPARATE FRONT SPEED SENSOR**
   (a) Remove the bolt and separate the speed sensor front LH.
   (b) Disengage the 2 clamps.
   (c) Remove the bolt and separate the speed sensor wire harness from the steering knuckle.

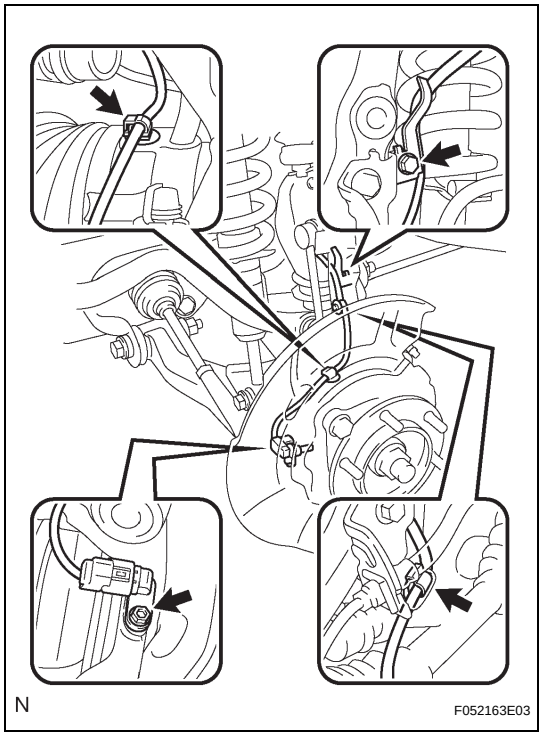

5. **REMOVE FRONT DISC BRAKE CALIPER ASSEMBLY**
   (a) Remove the bolt and separate the brake tube bracket from the steering knuckle.

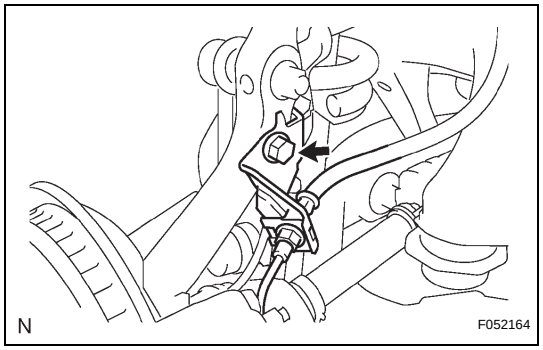

   (b) Using SST, disconnect the brake tube from the disc brake cylinder.
   SST 09023-00101
   NOTICE:
   Use a container to catch the brake fluid as it drains out.

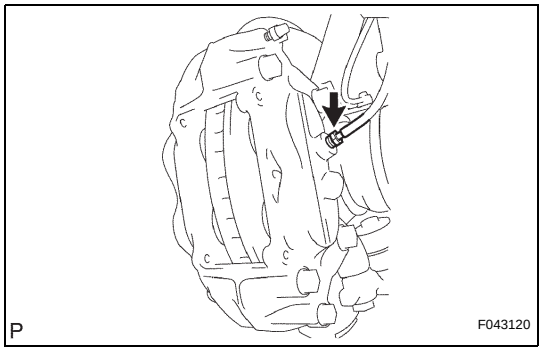

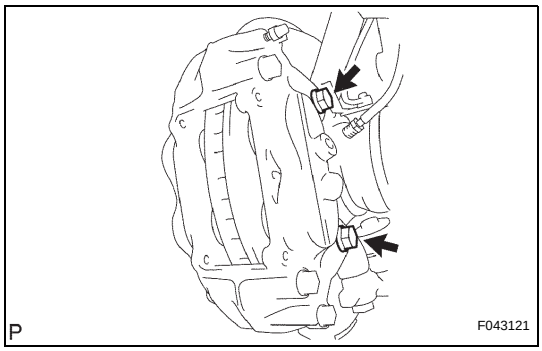

(c) Remove the 2 bolts and disc brake caliper.

6. REMOVE FRONT DISC

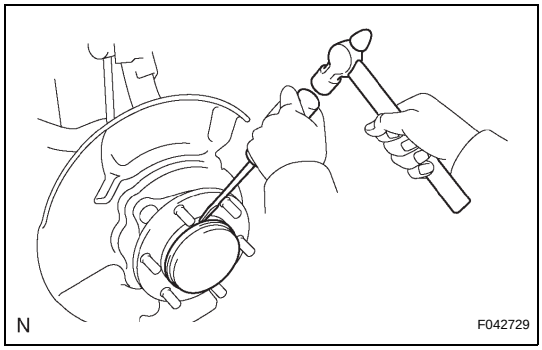

7. REMOVE FRONT AXLE HUB GREASE CAP (for 4WD)

(a) Using a screwdriver and a hammer, remove the front axle hub grease cap.
NOTICE:
Do not damage the axle hub.

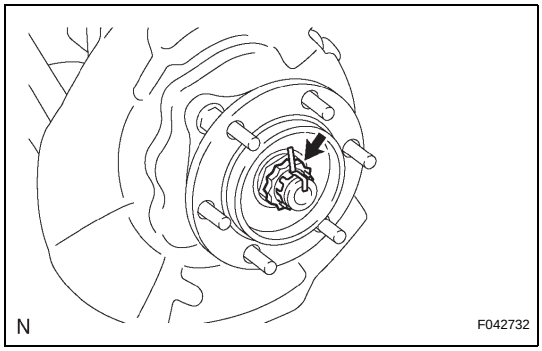

8. REMOVE FRONT AXLE HUB NUT (for 4WD)

(a) Remove the cotter pin and lock cap.
(b) Remove the front axle hub nut.

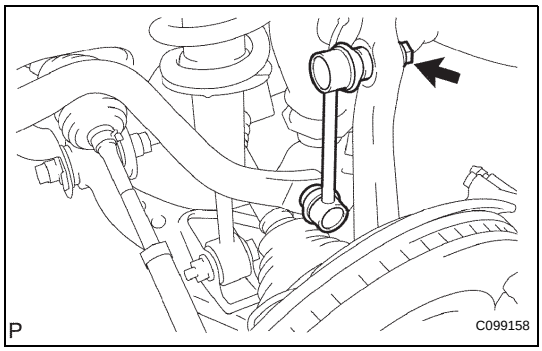

9. SEPARATE FRONT STABILIZER LINK ASSEMBLY

(a) Remove the nut and separate the stabilizer link from the steering knuckle.
HINT:
If the ball joint turns together with the nut, use a hexagon (6 mm) wrench to hold the stud.

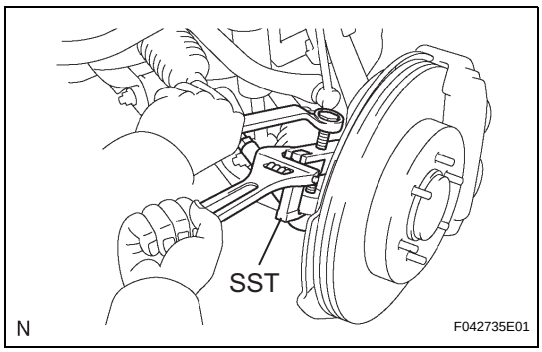

10. SEPARATE TIE ROD END SUB-ASSEMBLY

(a) Remove the cotter pin and nut.
(b) Using SST, separate the tie rod end from the steering knuckle.
SST 09628-62011

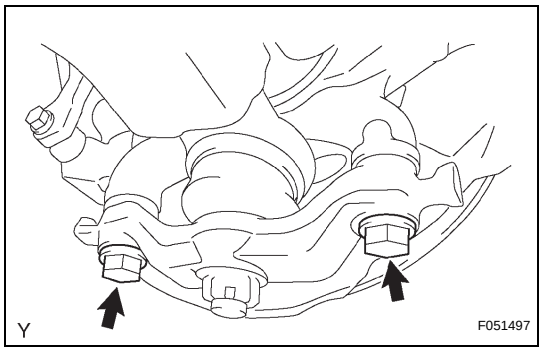

11. REMOVE FRONT SUSPENSION LOWER ARM

(a) Remove the 2 bolts, and separate the front suspension lower arm from the front axle.

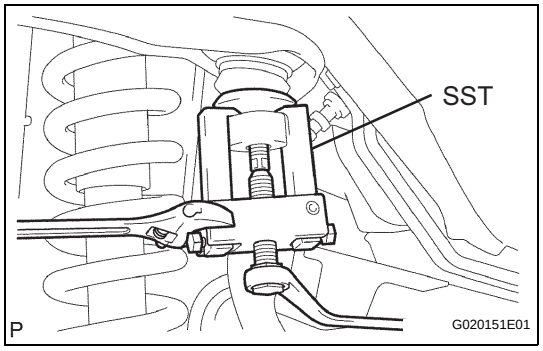

12. SEPARATE FRONT SUSPENSION UPPER ARM

(a) Support the front suspension lower arm with a jack.
(b) Remove the clip and nut.
(c) Using SST, separate the steering knuckle from the front suspension upper arm.
SST 09628-62011

13. REMOVE FRONT AXLE HUB

(a) for 4WD:
(1) Using a plastic hammer, separate the front axle hub from the front drive shaft.
(b) Remove the front axle hub.

DISASSEMBLY

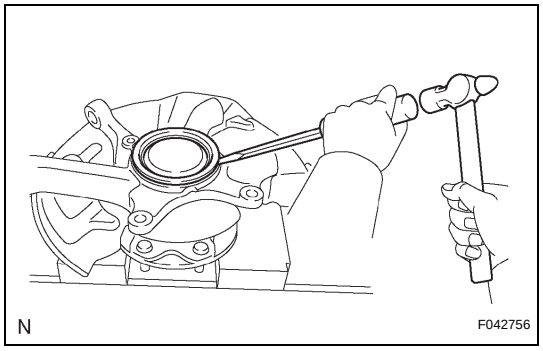

1. REMOVE KNUCKLE GREASE RETAINER CAP (for Pre-Runner)

(a) Using a screwdriver and hammer, remove the knuckle grease retainer cap.

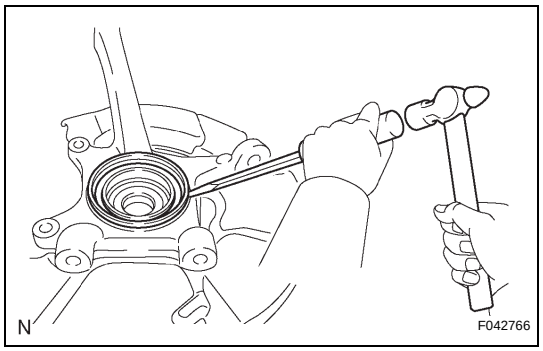

2. REMOVE FRONT AXLE HUB OIL SEAL (for 4WD)

(a) Using a screwdriver and hammer, remove the front axle hub oil seal.

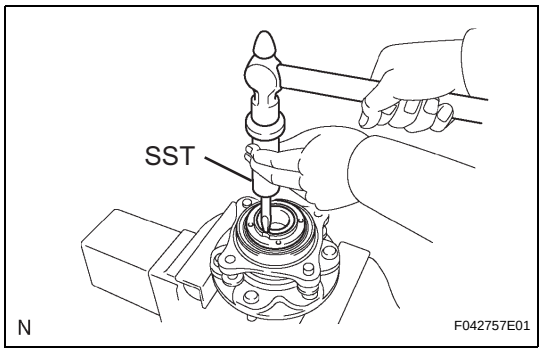

3. REMOVE FRONT WHEEL ADJUSTING NUT (for Pre-Runner)

(a) Using SST and a hammer, unstake the front wheel adjusting nut.
SST 09930-00010

AH

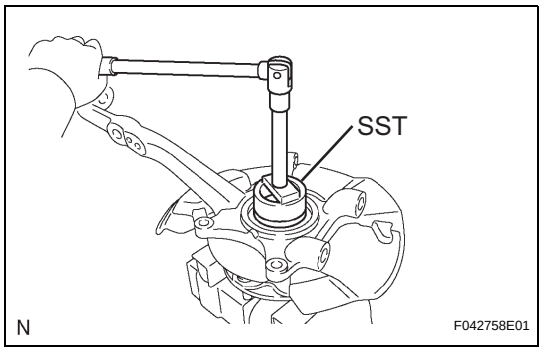

(b) Using SST, remove the front wheel adjusting nut.
SST 09318-12010

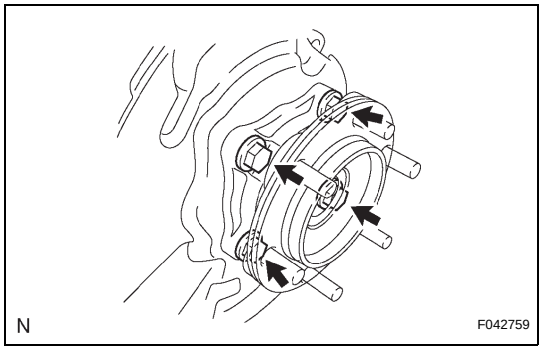

4. REMOVE FRONT AXLE HUB

(a) Remove the 4 bolts and axle hub from the steering knuckle.

(b) Remove the O-ring from the axle hub.

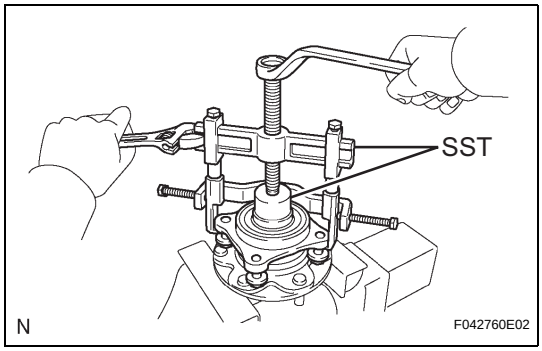

5. REMOVE FRONT AXLE WITH ABS ROTOR BEARING ASSEMBLY

(a) Gently fix the front axle hub in a vise.

(b) Using SST, remove the bearing.
SST 09710-30021 (09710-03051), 09950-40011 (09951-04020, 09952-04010, 09953-04020, 09954-04010, 09955-04061, 09957-04010, 09958-04011)

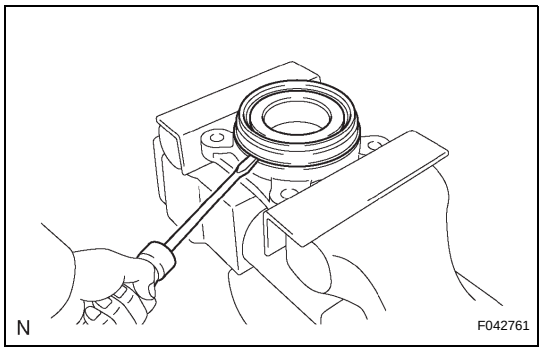

6. REMOVE FRONT AXLE HUB OIL SEAL

(a) Using a screwdriver, remove the front axle hub oil seal.

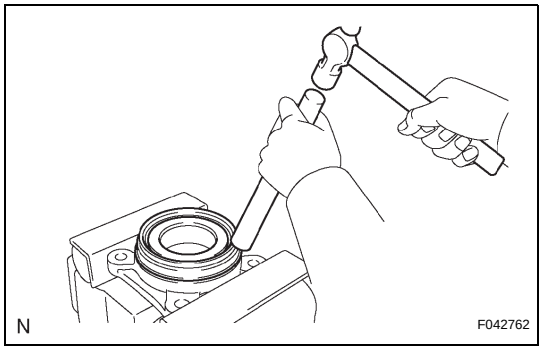

REASSEMBLY

1. INSTALL FRONT AXLE HUB OIL SEAL

(a) Using a brass bar and a hammer, install a new front axle hub oil seal.
NOTICE:
Do not damage the oil seal.

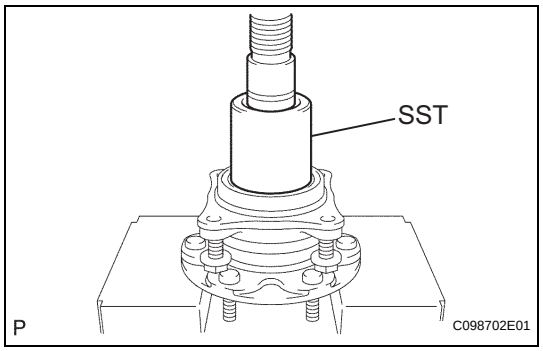

2. INSTALL FRONT AXLE WITH ABS ROTOR BEARING ASSEMBLY

(a) Using SST and a press, install a new bearing onto the front axle hub.
SST 09649-17010

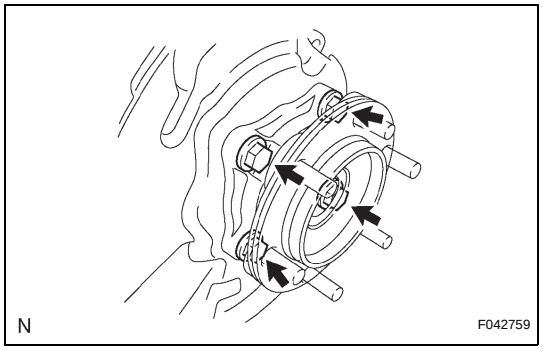

3. INSTALL FRONT AXLE HUB

(a) Apply MP grease to a new O-ring.
(b) Install the new O-ring onto the axle hub.
(c) Install the dust cover and axle hub onto the steering knuckle with the 4 bolts.
Torque: 80 N*m (816 kgf*cm, 59 ft.*lbf)

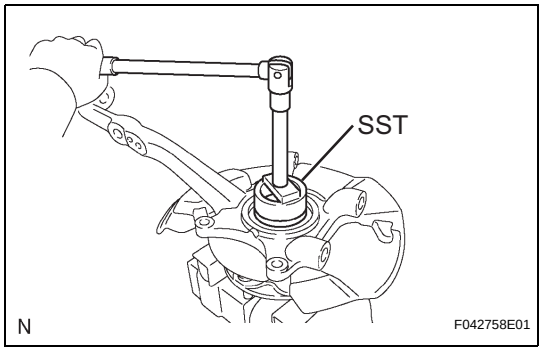

4. INSTALL FRONT WHEEL ADJUSTING NUT (for Pre-Runner)

(a) Using SST, install a new front wheel adjusting nut.
SST 09318-12010
Torque: 275 N*m (2,804 kgf*cm, 203 ft.*lbf)

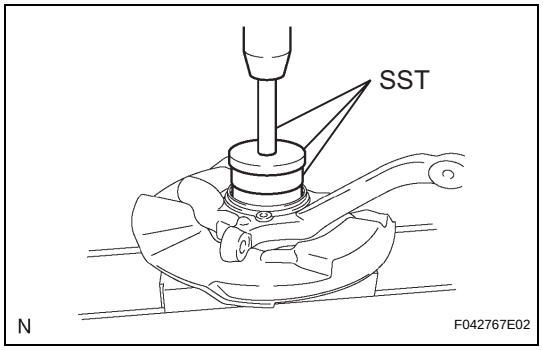

5. INSTALL FRONT AXLE HUB OIL SEAL (for 4WD)

(a) Using SST and a press, install a new front axle hub oil seal.
SST 09527-17011, 09950-70010 (09951-07100), 09951-01000

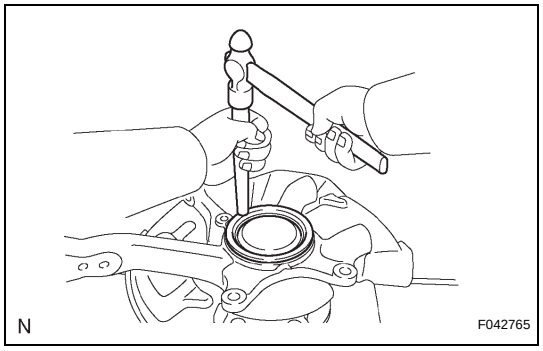

6. INSTALL KNUCKLE GREASE RETAINER CAP (for Pre-Runner)

(a) Using a brass bar and a hammer, install a new knuckle grease retainer cap.
NOTICE:
Do not damage the knuckle grease retainer cap.

INSTALLATION

1. INSTALL FRONT AXLE HUB

2. INSTALL FRONT SUSPENSION UPPER ARM

(a) Install a new nut and clip.
Torque: 110 N*m (1,122 kgf*cm, 81 ft.*lbf)

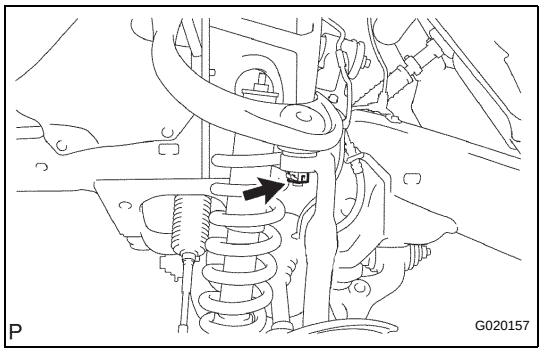

3. INSTALL FRONT SUSPENSION LOWER ARM

(a) Install the front suspension lower arm with the 2 bolts.
Torque: 160 N*m (1,631 kgf*cm, 118 ft.*lbf)

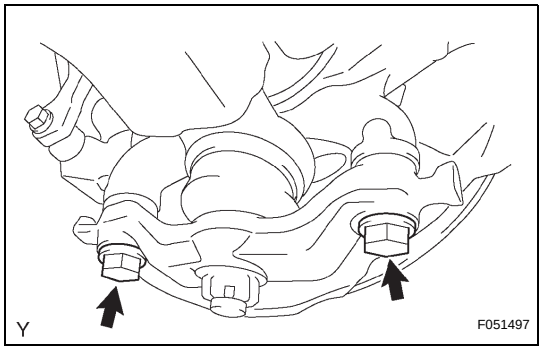

AH

4. INSTALL TIE ROD END SUB-ASSEMBLY

(a) Install the tie rod end with the nut.
Torque: 91 N*m (928 kgf*cm, 67 ft.*lbf)

(b) Install a new cotter pin.
NOTICE:
If the holes in the cotter pin are not aligned, tighten the nut an additional 60°.

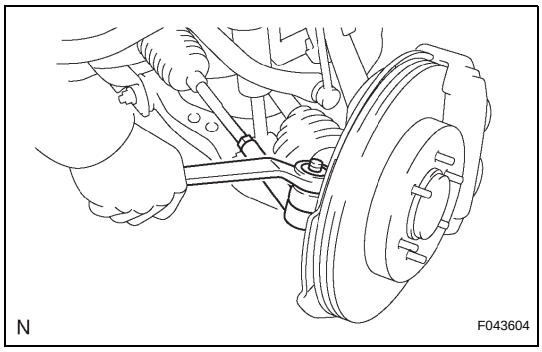

5. INSTALL FRONT STABILIZER LINK ASSEMBLY

(a) Install the stabilizer link onto the steering knuckle with the nut.
Torque: 70 N*m (714 kgf*cm, 52 ft.*lbf)
HINT:
If the ball joint turns together with the nut, use a hexagon (6 mm) wrench to hold the stud.

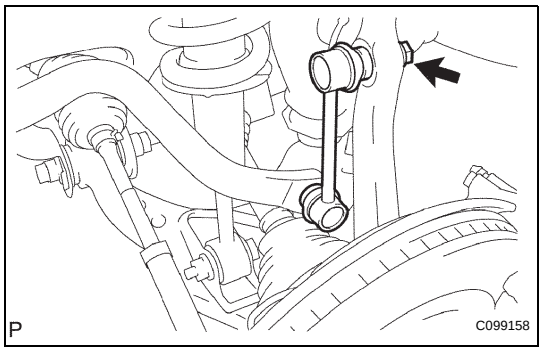

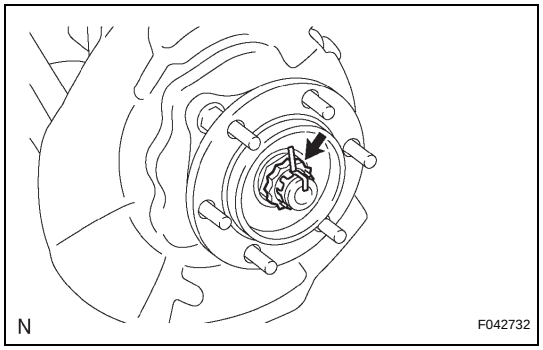

6. INSTALL FRONT AXLE HUB NUT (for 4WD)

(a) Install the hub nut.
Torque: 235 N*m (2,396 kgf*cm, 173 ft.*lbf)

(b) Install the adjusting cap and cotter pin.

7. INSTALL FRONT AXLE HUB GREASE CAP (for 4WD)

8. INSTALL FRONT DISC

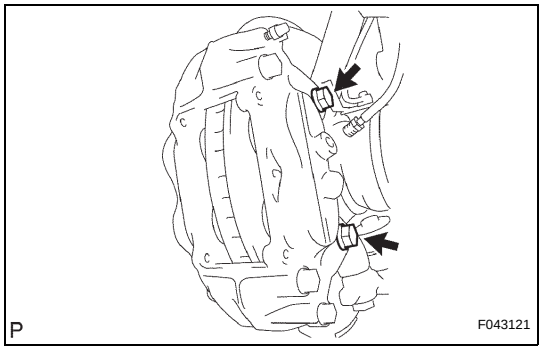

9. INSTALL FRONT DISC BRAKE CALIPER ASSEMBLY

(a) Install the front disc brake caliper with the 2 bolts.
Torque: 123 N*m (1,254 kgf*cm, 91 ft.*lbf)

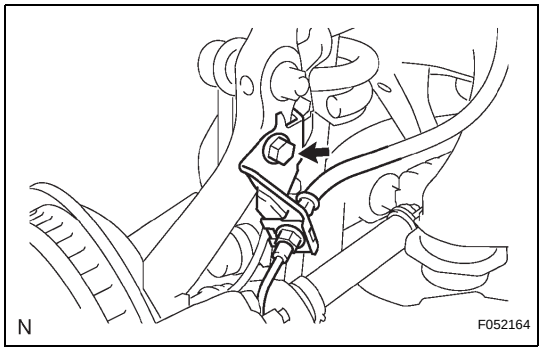

(b) Install the brake tube bracket onto the steering knuckle with the bolt.
Torque: 29 N*m (296 kgf*cm, 21 ft.*lbf)

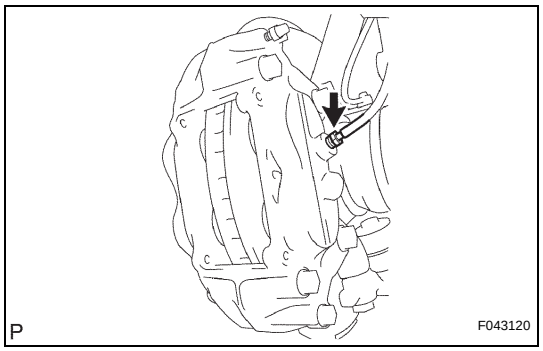

(c) Using SST, connect the brake tube to the disc brake cylinder.
SST 09023-00101
Torque: 15 N*m (155 kgf*cm, 11 ft.*lbf)

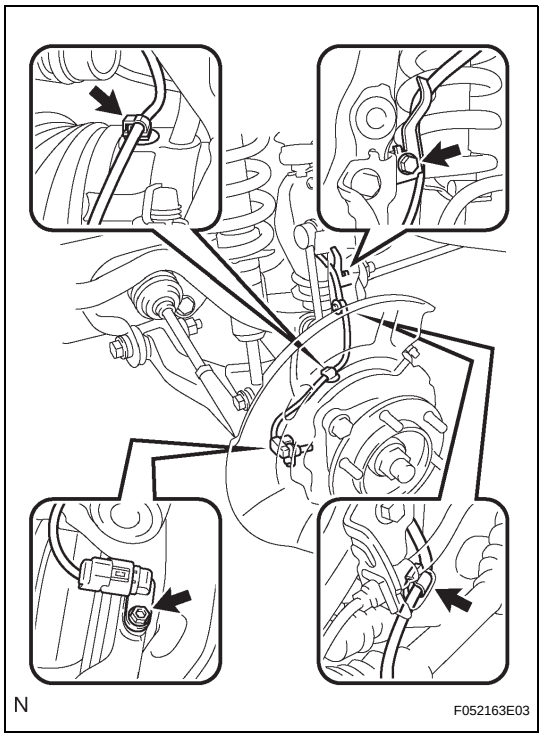

10. **INSTALL FRONT SPEED SENSOR**
    (a) Install the speed sensor wire harness onto the steering knuckle with the bolt.
    Torque: 13 N*m (133 kgf*cm, 10 ft.*lbf)
    (b) Engage the 2 clips.
    (c) Install the speed sensor with the bolt.
    Torque: 8.3 N*m (85 kgf*cm, 73 in.*lbf)
11. **INSTALL FRONT WHEEL**
    Torque: 113 N*m (1,152 kgf*cm, 83 ft.*lbf)
12. **CONNECT CABLE TO NEGATIVE BATTERY TERMINAL**
    Torque: 3.9 N*m (40 kgf*cm, 35 in.*lbf)
    (See page IN-5)
13. **FILL RESERVOIR WITH BRAKE FLUID (w/ VSC) (See page BR-4)**
14. **FILL RESERVOIR WITH BRAKE FLUID (w/o VSC) (See page BR-7)**
15. **BLEED MASTER CYLINDER (w/o VSC) (See page BR-7)**
16. **BLEED BRAKE LINE (w/ VSC) (See page BR-4)**
17. **BLEED BRAKE LINE (w/o VSC) (See page BR-7)**
18. **CHECK FLUID LEVEL IN RESERVOIR (w/ VSC) (See page BR-6)**
19. **CHECK FLUID LEVEL IN RESERVOIR (w/o VSC) (See page BR-8)**
20. **CHECK FOR BRAKE FLUID LEAKAGE**
21. **CHECK VSC SENSOR SIGNAL (w/ VSC)**
    (See page BC-103)
22. **CHECK ABS SENSOR SIGNAL (w/o VSC)**
    (See page BC-7)
23. **INSPECT AND ADJUST FRONT WHEEL ALIGNMENT**
    (See page SP-7)

AH

REMOVAL

1. **DISCONNECT CABLE FROM NEGATIVE BATTERY TERMINAL**
2. **REMOVE REAR WHEEL**
3. **DRAIN BRAKE FLUID**
4. **REMOVE REAR BRAKE DRUM SUB-ASSEMBLY (See page BR-68)**
5. **REMOVE FRONT BRAKE SHOE (See page BR-68)**
6. **REMOVE REAR BRAKE SHOE (See page BR-69)**
7. **REMOVE REAR SPEED SENSOR (See page BC-304)**
8. **SEPARATE PARKING BRAKE CABLE ASSEMBLY NO. 3**
   (a) Remove the 2 bolts and disconnect the parking brake cable from the backing plate.

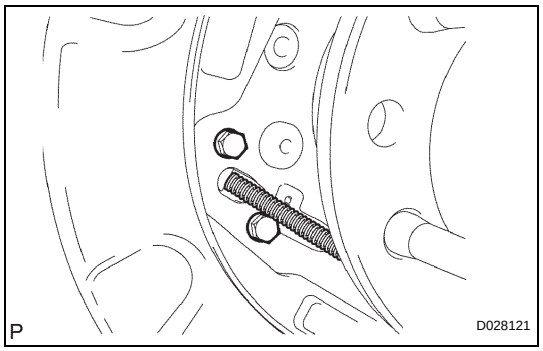

9. **SEPARATE REAR BRAKE TUBE NO. 8**
   (a) Using SST, separate the brake tube, and use a container to catch the brake fluid as it flows out.
   SST 09023-00101

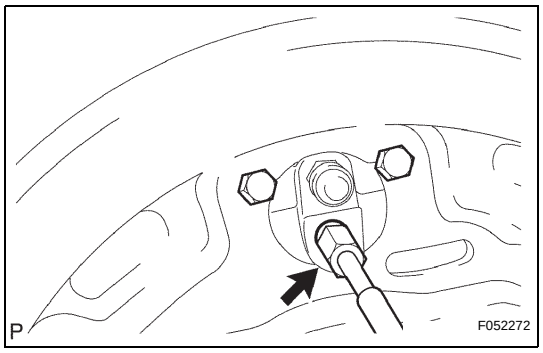

10. **REMOVE REAR AXLE SHAFT WITH BACKING PLATE**
    (a) Remove the 4 nuts and rear axle shaft with backing plate.
    (b) Remove the O-ring.

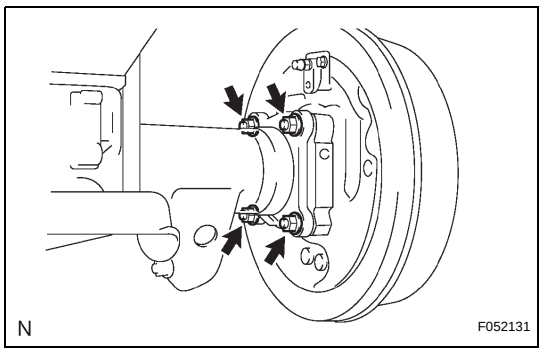

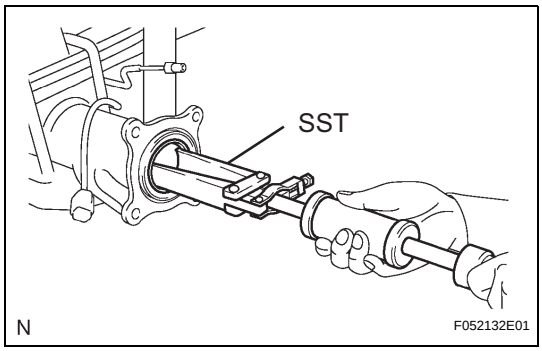

11. REMOVE REAR AXLE SHAFT OIL SEAL

(a) Using SST, remove the oil seal.
SST 09308-00010

DISASSEMBLY

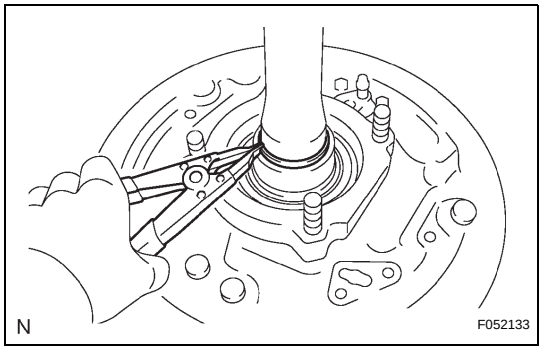

1. REMOVE REAR AXLE SHAFT SNAP RING

(a) Using a snap ring expander, remove the snap ring.

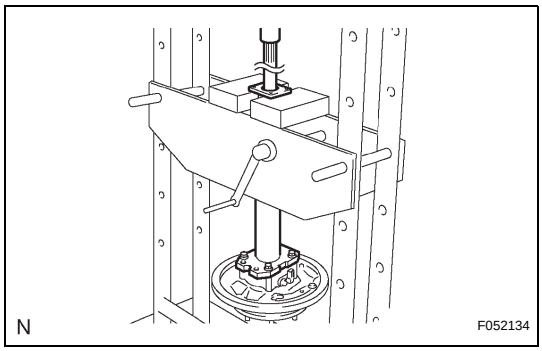

2. REMOVE REAR AXLE SHAFT

(a) Using SST and press, remove the rear axle shaft.
SST 09521-25011, 09521-25021

3. REMOVE REAR AXLE BEARING RETAINER INNER

(a) Remove the rear axle bearing retainer inner from the rear axle bearing.

4. REMOVE REAR AXLE SHAFT WASHER

(a) Remove the rear axle shaft washer from the rear axle bearing.

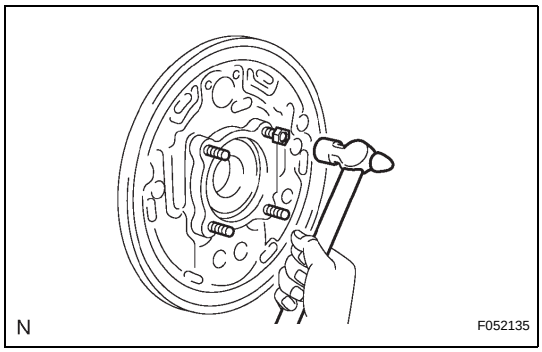

5. REMOVE REAR AXLE HUB AND BEARING ASSEMBLY

(a) Attach the 4 nuts to the rear axle housing bolts.
(b) Using a hammer, remove the 4 rear axle housing bolts and rear axle bearing.
NOTICE:
Do not reuse the nuts previously removed from the vehicle.

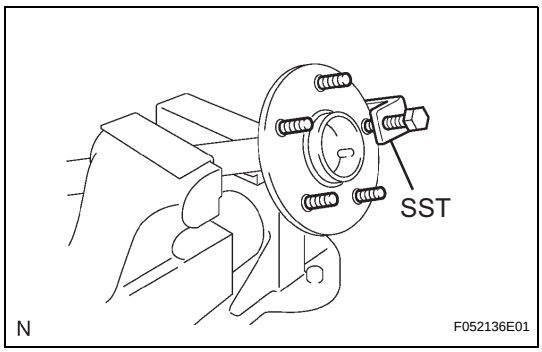

6. REMOVE REAR AXLE HUB BOLT

(a) for 2WD:
(1) Using SST, remove the 5 hub bolts.
SST 09650-17011
(b) Remove the deflector and deflector gasket from the rear axle shaft.

AH

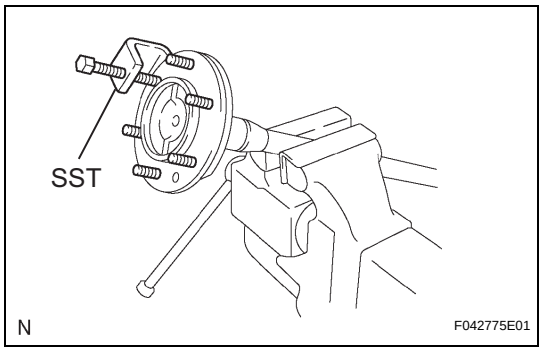

(c) for 4WD and Pre-Runner:
(1) Using SST, remove the 6 hub bolts.
SST 09650-17011
(d) Remove the deflector and deflector gasket from the rear axle shaft.

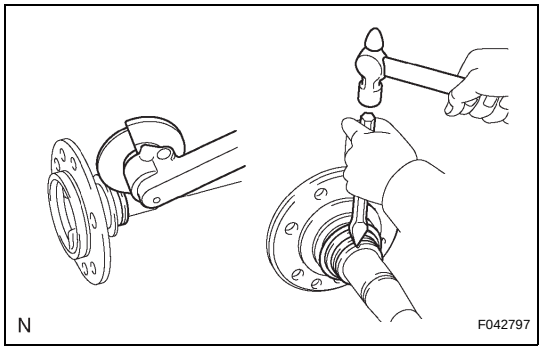

7. REMOVE REAR AXLE BEARING OIL SEAL
(a) Grind the rear axle bearing inner race surface using a grinder, and then chisel them out with a chisel.
(b) Remove the rear axle shaft oil seal from the rear axle shaft.

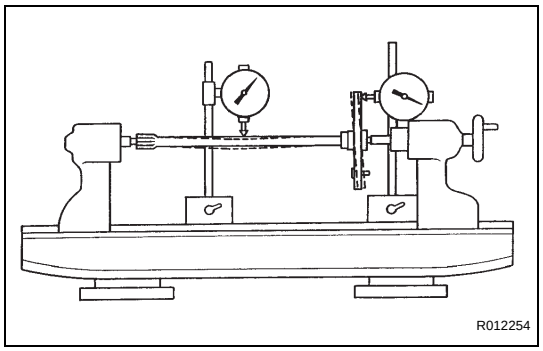

INSPECTION

1. INSPECT REAR AXLE SHAFT
(a) Using a dial indicator, measure the runout of the shaft and flange.
Maximum runout:
Shaft runout: 1.5 mm (0.0591 in.)
Flange runout: 0.05 mm (0.0020 in.)
If the rear axle shaft or flange is damaged or worn, or the runout is greater than the maximum, replace the rear axle shaft.

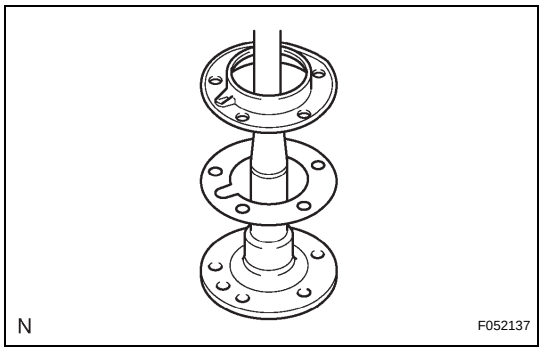

REASSEMBLY

1. INSTALL REAR AXLE HUB BOLT
(a) for 2WD:
(1) Install a new deflector gasket and deflector onto the rear axle shaft.
HINT:
Make sure that the deflector and deflector gasket are installed in the correct direction shown in the illustration.

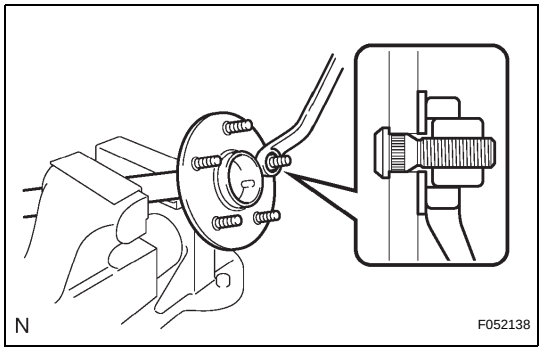

(2) Install the 5 bolts through the axle hub.
(3) Install a washer plate, as shown in the illustration, through the hub bolt, and install the hub bolt by tightening the hub nut.

AH

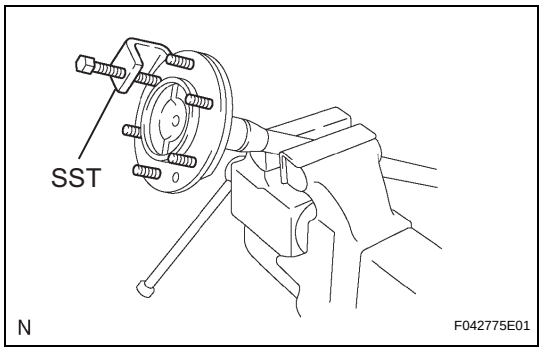

(c) for 4WD and Pre-Runner:
(1) Using SST, remove the 6 hub bolts.
SST 09650-17011
(d) Remove the deflector and deflector gasket from the rear axle shaft.

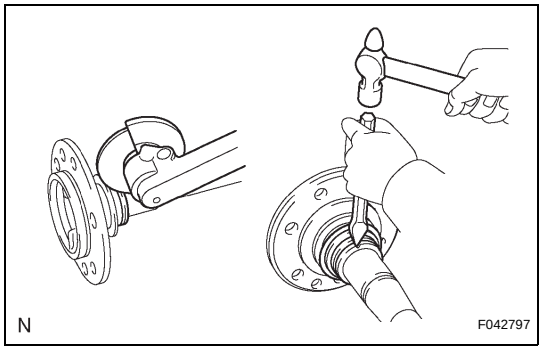

7. REMOVE REAR AXLE BEARING OIL SEAL
(a) Grind the rear axle bearing inner race surface using a grinder, and then chisel them out with a chisel.
(b) Remove the rear axle shaft oil seal from the rear axle shaft.

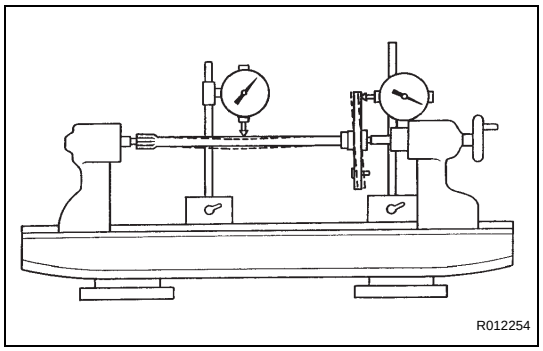

INSPECTION

1. INSPECT REAR AXLE SHAFT
(a) Using a dial indicator, measure the runout of the shaft and flange.
Maximum runout:
Shaft runout: 1.5 mm (0.0591 in.)
Flange runout: 0.05 mm (0.0020 in.)
If the rear axle shaft or flange is damaged or worn, or the runout is greater than the maximum, replace the rear axle shaft.

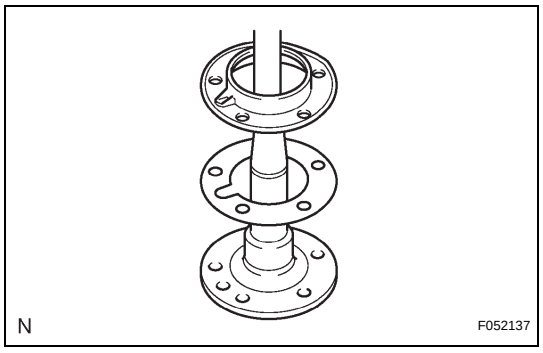

REASSEMBLY

1. INSTALL REAR AXLE HUB BOLT
(a) for 2WD:
(1) Install a new deflector gasket and deflector onto the rear axle shaft.
HINT:
Make sure that the deflector and deflector gasket are installed in the correct direction shown in the illustration.

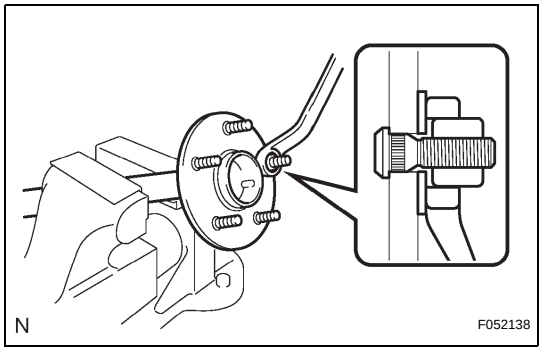

(2) Install the 5 bolts through the axle hub.
(3) Install a washer plate, as shown in the illustration, through the hub bolt, and install the hub bolt by tightening the hub nut.

AH

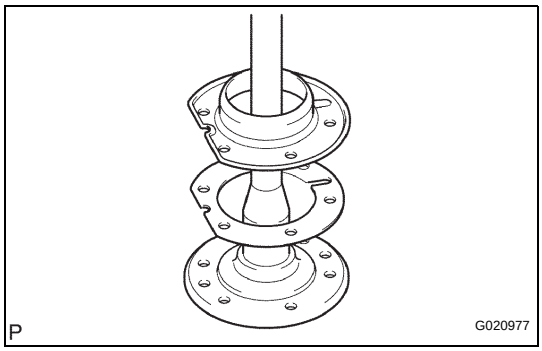

(b) for 4WD and Pre-Runner:
(1) Install a new deflector gasket and deflector onto the rear axle shaft.
HINT:
Align the 2 notches.

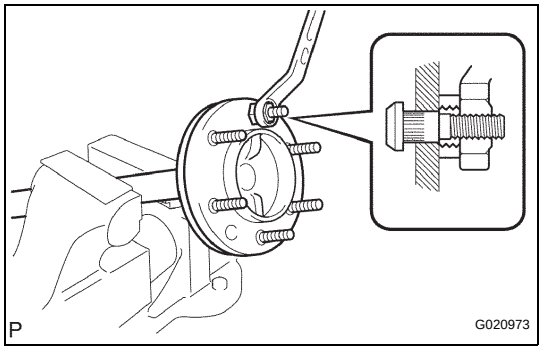

(2) Install the 6 bolts through the axle hub.
(3) Install the washer plate, as shown in the illustration, through the hub bolt, and install the hub bolt by tightening the hub nut.

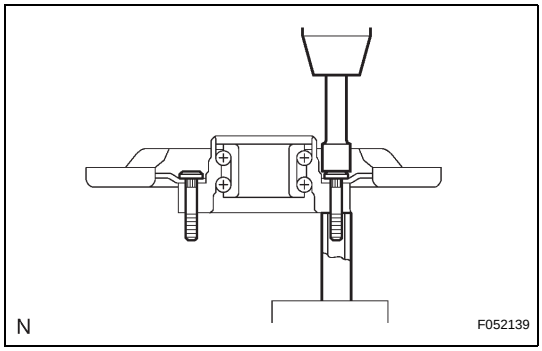

2. INSTALL REAR AXLE HUB AND BEARING ASSEMBLY
(a) Position the backing plate on the rear axle bearing, and install the 4 parking brake plates onto the rear axle housing bolts using 2 socket wrenches and a press.

3. INSTALL REAR AXLE SHAFT WASHER
(a) Install the rear axle shaft plate washer onto the rear axle shaft.

4. INSTALL REAR AXLE BEARING RETAINER INNER
(a) Install a new rear axle bearing retainer inner onto the rear axle shaft.

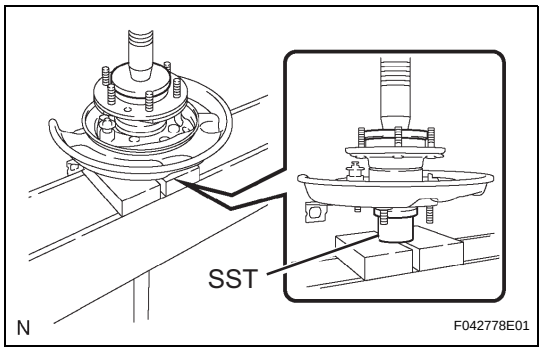

5. INSTALL REAR AXLE SHAFT
(a) Using SST and a press, install the rear axle shaft onto the rear axle bearing.
SST 09521-25011

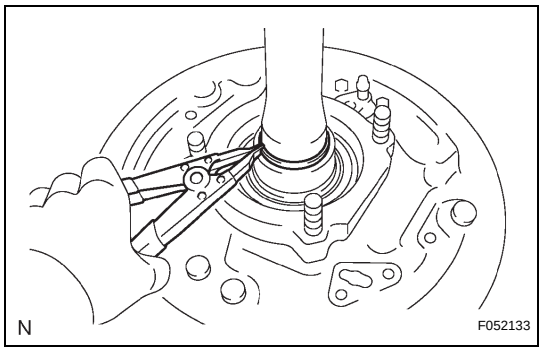

6. INSTALL REAR AXLE SHAFT SNAP RING

(a) Using a snap ring expander, install a new snap ring.

INSTALLATION

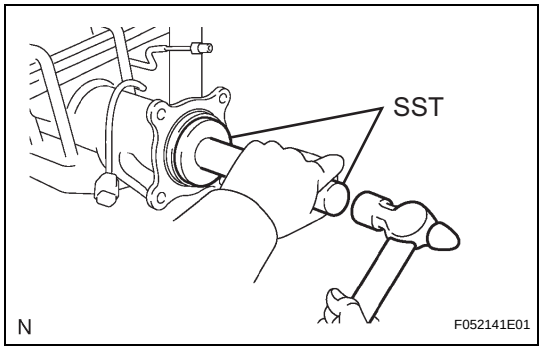

1. INSTALL REAR AXLE SHAFT OIL SEAL

(a) Using SST and a hammer, install a new oil seal.
SST 09950-60020 (09951-00770), 09950-70010 (09951-07150)

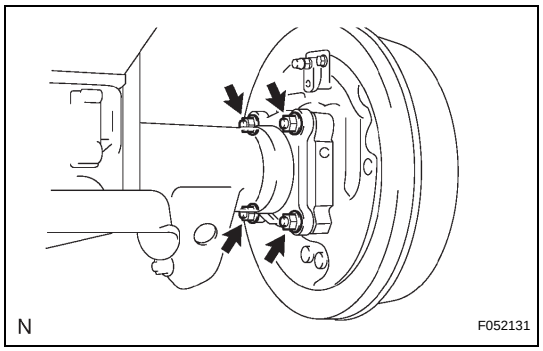

2. INSTALL REAR AXLE SHAFT WITH BACKING PLATE

(a) Install a new O-ring.
(b) Install the rear axle shaft with backing plate with the 4 nuts.
Torque: 36 N*m (367 kgf*cm, 27 ft.*lbf)

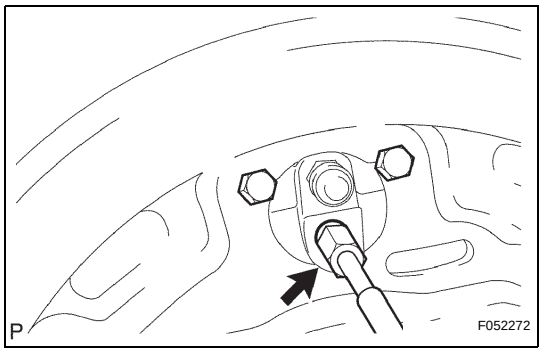

3. INSTALL REAR BRAKE TUBE NO. 8

(a) Using SST, connect the brake tube.
SST 09023-00101
Torque: 15 N*m (155 kgf*cm, 11 ft.*lbf)

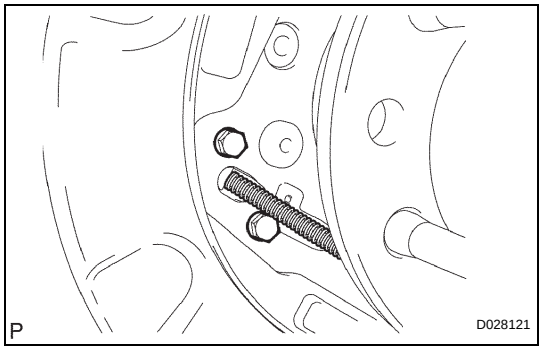

4. INSTALL PARKING BRAKE CABLE ASSEMBLY NO. 3

(a) Install the parking brake cable with the 2 bolts onto the backing plate.
Torque: 8.0 N*m (82 kgf*cm, 71 in.*lbf)

5. INSTALL REAR SPEED SENSOR (See page BC-304)

6. APPLY HIGH TEMPERATURE GREASE (See page BR-71)

7. INSTALL REAR BRAKE SHOE (See page BR-71)

8. INSTALL FRONT BRAKE SHOE (See page BR-72)

AH

9. **INSPECT REAR DRUM BRAKE INSTALLATION (See page BR-73)**
10. **INSTALL REAR BRAKE DRUM SUB-ASSEMBLY (See page BR-73)**
11. **ADJUST REAR DRUM BRAKE SHOE CLEARANCE (See page BR-74)**
12. **INSTALL REAR WHEEL**
    Torque: 113 N*m (1,152 kgf*cm, 83 ft.*lbf)
13. **CONNECT CABLE TO NEGATIVE BATTERY TERMINAL**
    Torque: 3.9 N*m (40 kgf*cm, 35 in.*lbf)
    (See page IN-5)
14. **FILL RESERVOIR WITH BRAKE FLUID (w/ VSC) (See page BR-4)**
15. **FILL RESERVOIR WITH BRAKE FLUID (w/o VSC) (See page BR-7)**
16. **BLEED MASTER CYLINDER (w/o VSC) (See page BR-7)**
17. **BLEED BRAKE LINE (w/ VSC) (See page BR-4)**
18. **BLEED BRAKE LINE (w/o VSC) (See page BR-7)**
19. **CHECK FLUID LEVEL IN RESERVOIR (w/ VSC) (See page BR-6)**
20. **CHECK FLUID LEVEL IN RESERVOIR (w/o VSC) (See page BR-8)**
21. **CHECK FOR BRAKE FLUID LEAKAGE**
22. **INSPECT PARKING BRAKE PEDAL TRAVEL (for Automatic Transmission) (See page PB-1)**
23. **INSPECT PARKING BRAKE LEVER TRAVEL (for Manual Transmission) (See page PB-1)**
24. **ADJUST PARKING BRAKE PEDAL TRAVEL (for Automatic Transmission) (See page PB-2)**
25. **ADJUST PARKING BRAKE LEVER TRAVEL (for Manual Transmission) (See page PB-2)**
26. **CHECK VSC SENSOR SIGNAL (w/ VSC)**
    (See page BC-103)
27. **CHECK ABS SENSOR SIGNAL (w/o VSC)**
    (See page BC-7)

REMOVAL

1. **REMOVE FRONT WHEELS**
2. **REMOVE ENGINE UNDER COVER SUB-ASSEMBLY NO. 1**
3. **SEPARATE FRONT STABILIZER LINK ASSEMBLY LH**
   (a) Remove the nut and disconnect the stabilizer link from the steering knuckle.
   HINT:
   If the ball joint turns together with the nut, use a hexagon (6 mm) wrench to hold the stud.

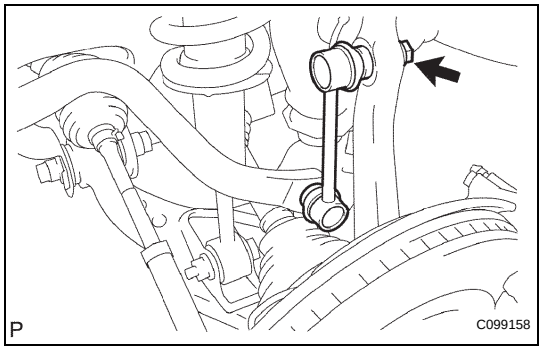

4. **SEPARATE FRONT STABILIZER LINK ASSEMBLY RH**
   HINT:
   The removal procedure for the RH side is the same as that for the LH side.
5. **REMOVE FRONT STABILIZER BRACKET NO. 1 LH (See page SP-50)**
6. **REMOVE FRONT STABILIZER BRACKET NO. 1 RH**
   HINT:
   The removal procedure for the RH side is the same as that for the LH side.
7. **REMOVE FRONT STABILIZER BAR**
8. **SEPARATE TIE ROD END SUB-ASSEMBLY (See page PS-54)**
9. **REMOVE FRONT SHOCK ABSORBER WITH COIL SPRING**
   (a) Remove the bolt, nut and washer.

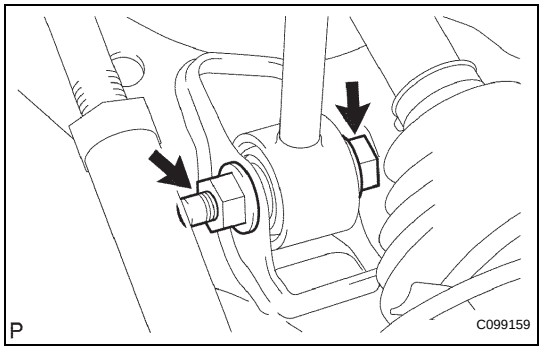

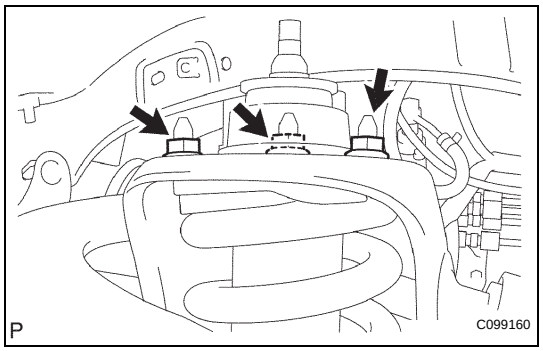

   (b) Remove the 3 nuts on the upper side of the front shock absorber with coil spring.
   (c) Remove the front shock absorber with coil spring.

SP

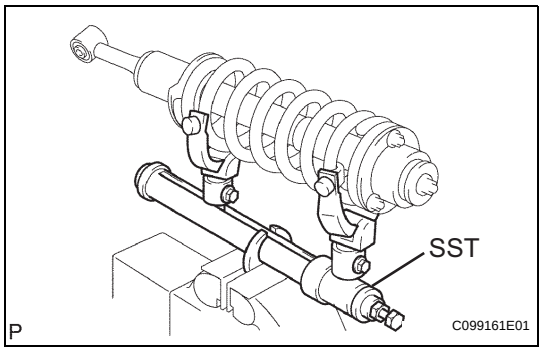

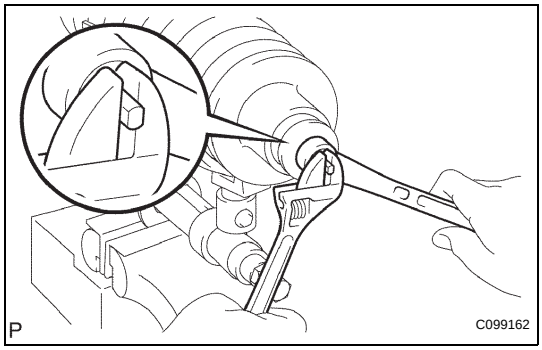

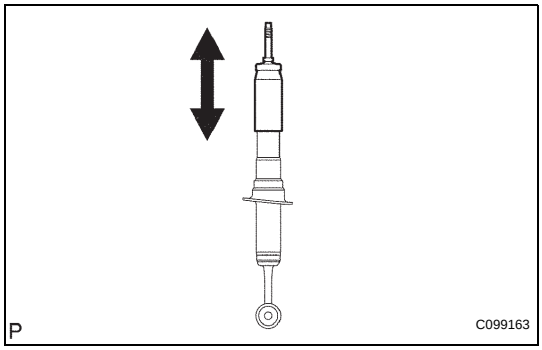

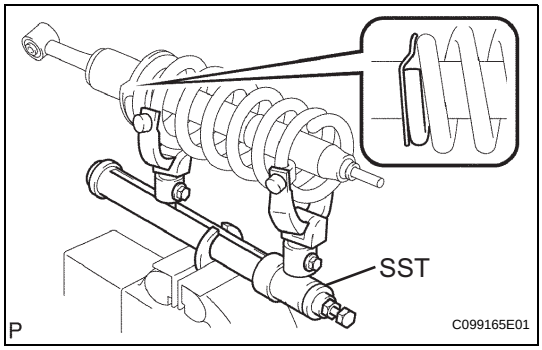

DISASSEMBLY

1. **REMOVE FRONT SUPPORT TO FRONT SHOCK ABSORBER NUT**
   (a) Using SST, compress the coil spring.
   SST 09727-30021 (09727-00010, 09727-00031), 09727-00060
   NOTICE:
   Do not use an impact wrench. It will damage SST.

   (b) While holding the shock absorber rod, remove the nut.
   NOTICE:
   Do not use an impact wrench. It will damage the shock absorber rod.
2. **REMOVE FRONT SHOCK ABSORBER CUSHION RETAINER**
3. **REMOVE FRONT SHOCK ABSORBER CUSHION NO. 1**
4. **REMOVE FRONT SUSPENSION SUPPORT SUB-ASSEMBLY**
5. **REMOVE FRONT SHOCK ABSORBER CUSHION RETAINER**
6. **REMOVE FRONT COIL SPRING**

INSPECTION

1. **INSPECT SHOCK ABSORBER ASSEMBLY FRONT**
   (a) Compress and extend the shock absorber rod and check that there is no abnormal resistance or unusual sound during operation.
   If there is any abnormality, replace the shock absorber front with a new one.
   NOTICE:
   When disposing of the shock absorber front, see DISPOSAL on page SP-24.

REASSEMBLY

1. **INSTALL FRONT COIL SPRING**
   (a) Using SST, compress the front coil spring.
   SST 09727-30021 (09727-00010, 09727-00031), 09727-00060
   NOTICE:
   Do not use an impact wrench. It will damage SST.
   (b) Install the front coil spring onto the shock absorber front.
   HINT:
   Fit the lower end of the front coil spring into the gap of the spring lower seat.
2. **INSTALL FRONT SHOCK ABSORBER CUSHION RETAINER**

3. INSTALL FRONT SUSPENSION SUPPORT SUB-ASSEMBLY

4. INSTALL FRONT SHOCK ABSORBER CUSHION NO. 1

5. INSTALL FRONT SHOCK ABSORBER CUSHION RETAINER

6. INSTALL FRONT SUPPORT TO FRONT SHOCK ABSORBER NUT

(a) Align the suspension support and the absorber bush as shown in the illustration.

(b) Fit and tighten a new lock nut.
Torque: 27 N*m (275 kgf*cm, 20 ft.*lbf)
NOTICE:
Do not use an impact wrench. It will damage the shock absorber rod.

(c) Release the coil spring while checking the position of the suspension support.

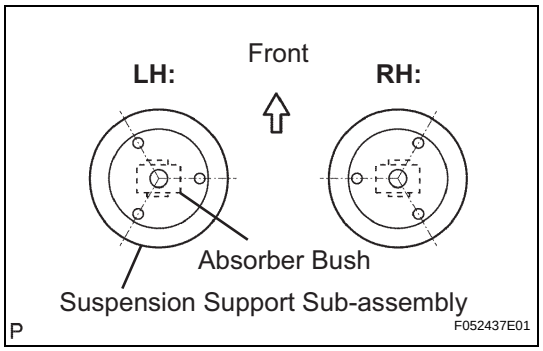

INSTALLATION

1. TEMPORARILY TIGHTEN FRONT SHOCK ABSORBER WITH COIL SPRING

(a) Install the coil spring onto the body with the lower end of the coil spring facing the rear side of the vehicle.

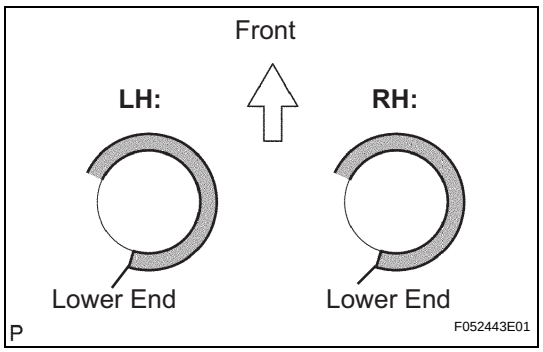

(b) Install the 3 nuts onto the upper side of the front shock absorber with coil spring.
Torque: 64 N*m (653 kgf*cm, 47 ft.*lbf)

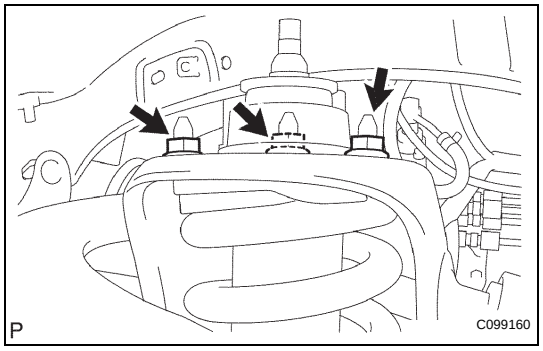

(c) Temporarily tighten the bolt, nut and washer as shown in the illustration.

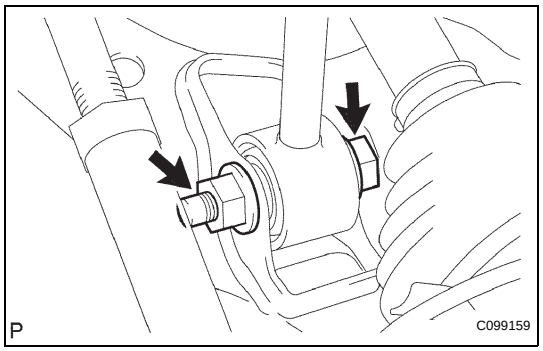

2. INSTALL TIE ROD END SUB-ASSEMBLY (See page PS-68)

3. INSTALL FRONT STABILIZER BAR

4. INSTALL FRONT STABILIZER BRACKET NO. 1 LH (See page SP-51)

5. INSTALL FRONT STABILIZER BRACKET NO. 1 RH
HINT:
The installation procedure for the RH side is the same as that for the LH side.

SP

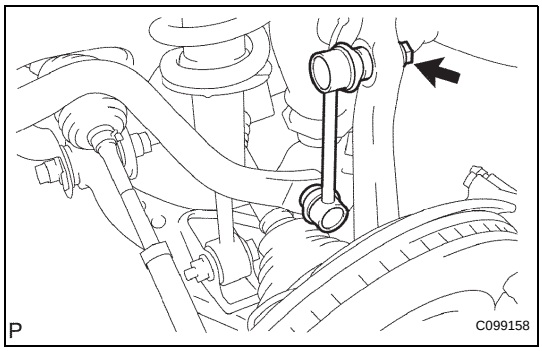

6. INSTALL FRONT STABILIZER LINK ASSEMBLY LH

(a) Connect the stabilizer link to the steering knuckle with the nut.
Torque: 70 N*m (714 kgf*cm, 52 ft.*lbf)
HINT:
If the ball joint turns together with the nut, use a hexagon (6 mm) wrench to hold the stud.

7. INSTALL FRONT STABILIZER LINK ASSEMBLY RH

HINT:
The installation procedure for the RH side is the same as that for the LH side.

8. INSTALL ENGINE UNDER COVER SUB-ASSEMBLY NO. 1
Torque: 30 N*m (306 kgf*cm, 22 ft.*lbf)

9. INSTALL FRONT WHEELS
Torque: 113 N*m (1,152 kgf*cm, 83 ft.*lbf)

10. STABILIZE SUSPENSION

(a) Jack down the vehicle.
(b) Bounce the vehicle up and down several times to stabilize the suspension.

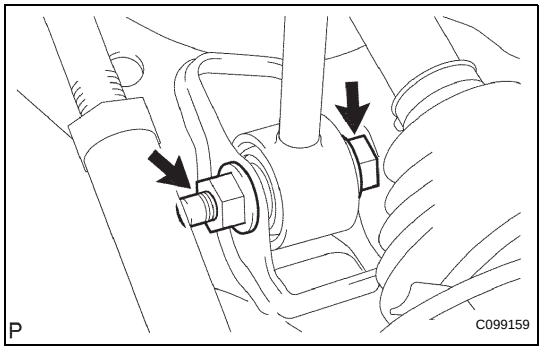

11. FULLY TIGHTEN FRONT SHOCK ABSORBER WITH COIL SPRING

(a) Fully tighten the nut.
Torque: 83 N*m (846 kgf*cm, 61 ft.*lbf)

12. INSPECT AND ADJUST FRONT WHEEL ALIGNMENT
(See page SP-7)

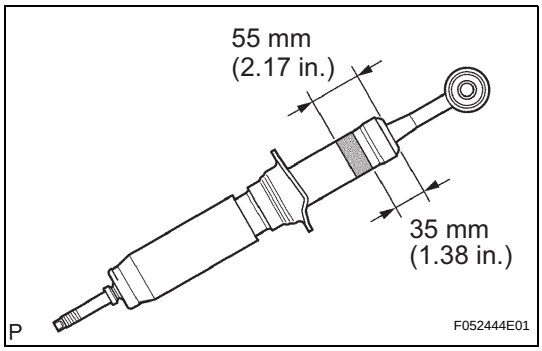

DISPOSAL

1. DISPOSE OF SHOCK ABSORBER ASSEMBLY FRONT

(a) Fully extend the shock absorber piston rod, and fix it at an angle in a vise or similar tool.
(b) Using a drill or similar tool, slowly make a hole in the shaded area shown in the illustration, and discharge the gas inside.
CAUTION:
- **The gas is colorless, odorless and harmless.**
- **Since the discharged gas may cause chips to scatter, cover the drill with a shop rag when making the hole.**

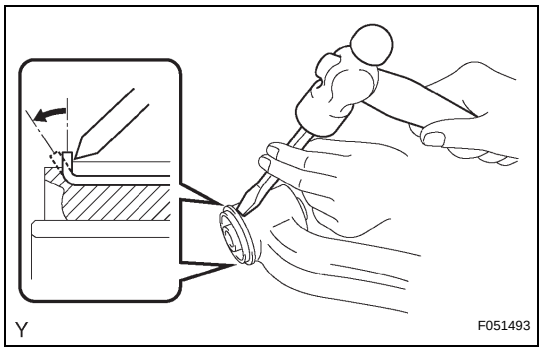

DISASSEMBLY

1. REMOVE FRONT SUSPENSION UPPER ARM BUSH

(a) Using a hammer and chisel, raise the flange of the bushing diagonally as shown in the illustration.

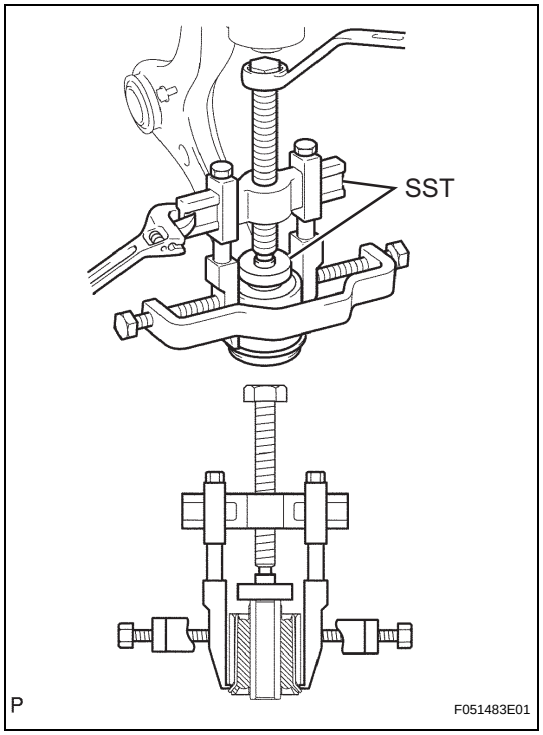

(b) Using SST, remove the upper arm bush.
SST 09950-40011 (09951-04010, 09952-04010, 09953-04020, 09954-04010, 09955-04011, 09957-04010, 09958-04011), 09950-60010 (09951-00380)

(c) The removal procedure for the rear side is the same as that for the front side.

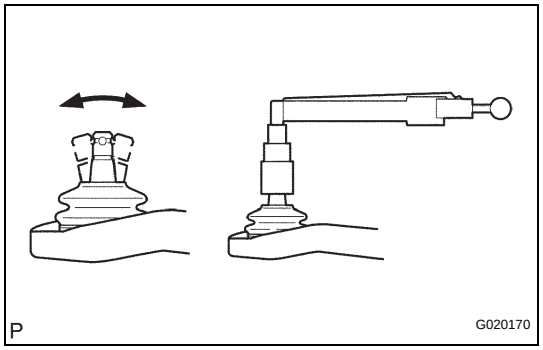

INSPECTION

1. INSPECT FRONT SUSPENSION UPPER ARM

(a) Flip the ball joint stud back and forth 5 times, as shown in the illustration, before installing the nut.

(b) Using a torque wrench, turn the nut continuously at a rate of 3 to 5 seconds per turn and take the torque reading on the 5th turn.
Torque: 4.5 N*m (46 kgf*cm, 40 in.*lbf) or less

(c) Check for any cracks and grease leakage on the ball joint dust cover.

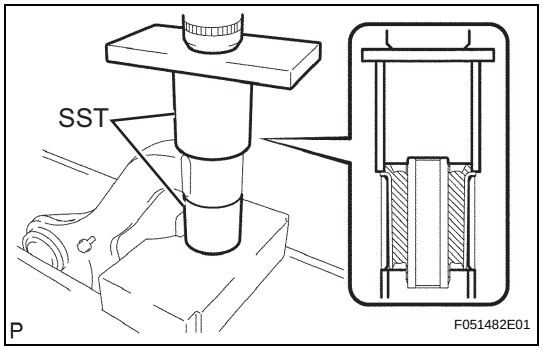

REASSEMBLY

1. INSTALL FRONT SUSPENSION UPPER ARM BUSH

(a) Using SST and a press, install a new upper arm bush (front side).
SST 09631-20081, 09710-04081

(b) The installation procedure for the rear side is the same as that for the front side.

SP

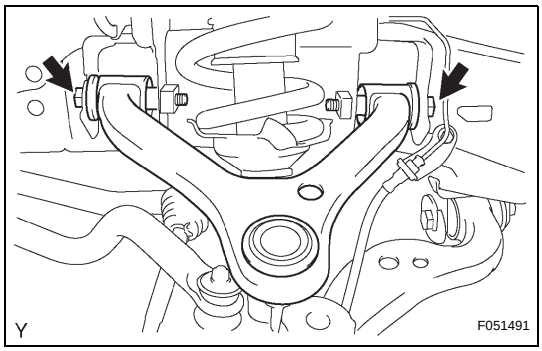

INSTALLATION

1. TEMPORARILY TIGHTEN FRONT SUSPENSION UPPER ARM

(a) Install the front suspension upper arm, and temporarily tighten the 2 bolts.

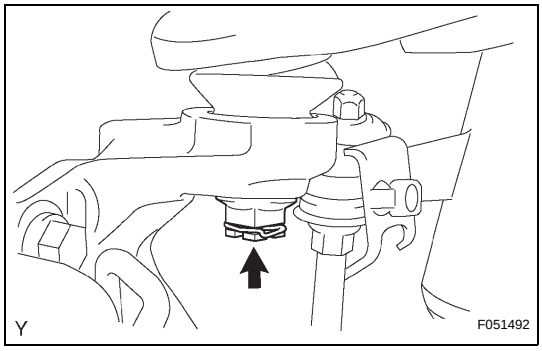

(b) Install a new nut and a new clip.
Torque: 110 N*m (1,122 kgf*cm, 81 ft.*lbf)

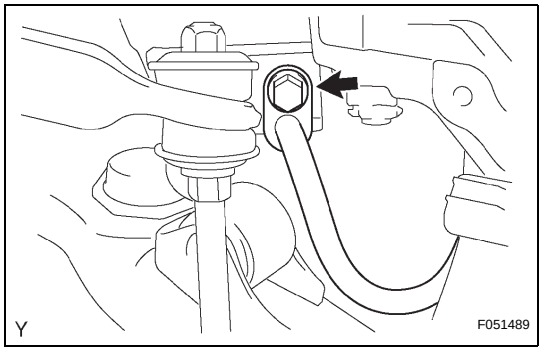

2. INSTALL FRONT FLEXIBLE HOSE

(a) Install the front flexible hose with the bolt.
Torque: 32 N*m (326 kgf*cm, 24 ft.*lbf)

SP

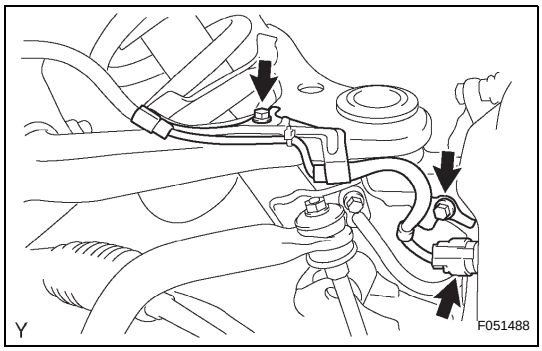

3. INSTALL SKID CONTROL SENSOR WIRE

(a) Install the skid control sensor wire with the 2 bolts.
Torque: 5.0 N*m (51 kgf*cm, 44 in.*lbf)

(b) Connect the speed sensor connector.

4. INSTALL FRONT WHEEL
Torque: 113 N*m (1,152 kgf*cm, 83 ft.*lbf)

5. STABILIZE SUSPENSION

(a) Jack down the vehicle.

(b) Bounce the vehicle up and down several times to stabilize the suspension.

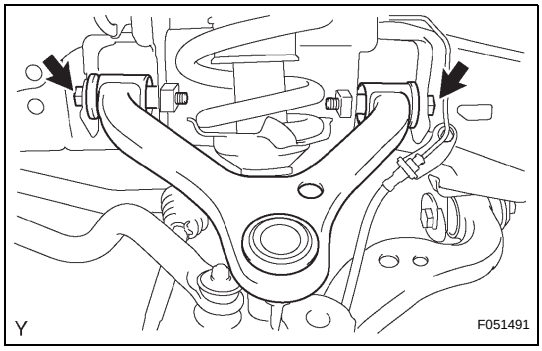

6. FULLY TIGHTEN FRONT SUSPENSION UPPER ARM

(a) Fully tighten the 2 bolts.
Torque: 82 N*m (836 kgf*cm, 60 ft.*lbf)

7. CONNECT CABLE TO NEGATIVE BATTERY TERMINAL
Torque: 3.9 N*m (40 kgf*cm, 35 in.*lbf)
(See page IN-5)

8. INSPECT AND ADJUST FRONT WHEEL ALIGNMENT
(See page SP-2)

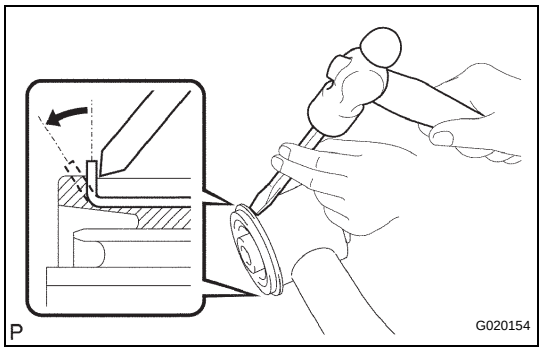

DISASSEMBLY

1. REMOVE FRONT SUSPENSION UPPER ARM BUSH

(a) Using a hammer and chisel, raise the flange of the bushing diagonally as shown in the illustration.

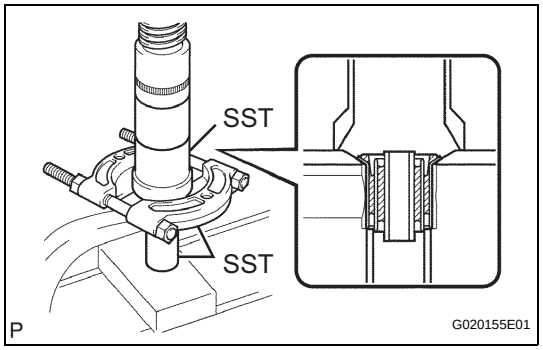

(b) Using SST and a press, remove the front suspension upper arm bush LH (front side).
SST 09613-26010, 09710-22021 (09710-01031), 09950-00020

(c) The removal procedure for the rear side is the same as that for the front side.

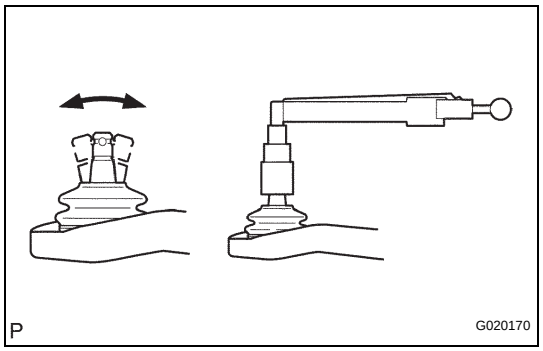

INSPECTION

1. INSPECT FRONT SUSPENSION UPPER ARM

(a) Flip the ball joint stud back and forth 5 times, as shown in the illustration, before installing the nut.

(b) Using a torque wrench, turn the nut continuously at a rate of 3 to 5 seconds per turn and take the torque reading on the 5th turn.
Torque: 4.5 N*m (46 kgf*cm, 40 in.*lbf) or less

(c) Check for any cracks and grease leakage on the ball joint dust cover.

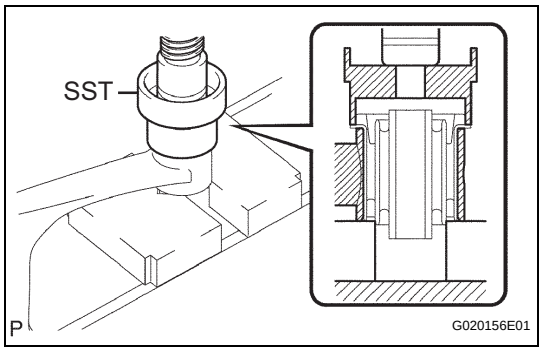

REASSEMBLY

1. INSTALL FRONT SUSPENSION UPPER ARM BUSH

(a) Using SST and a press, install a new upper arm bush (front side).
SST 09710-26010 (09710-05061)

(b) The installation procedure for the rear side is the same as that for the front side.

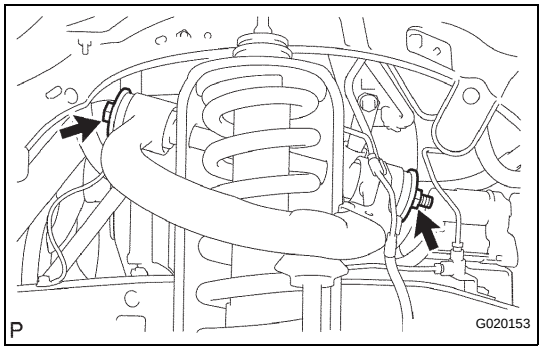

INSTALLATION

1. TEMPORARILY TIGHTEN FRONT SUSPENSION UPPER ARM

(a) Install the front suspension upper arm, and temporarily tighten the bolt, 2 washers and nut.

SP

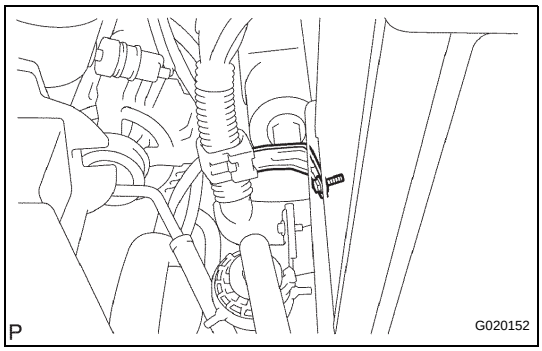

(b) Install the bracket with the bolt.
Torque: 5.8 N*m (59 kgf*cm, 51 in.*lbf)

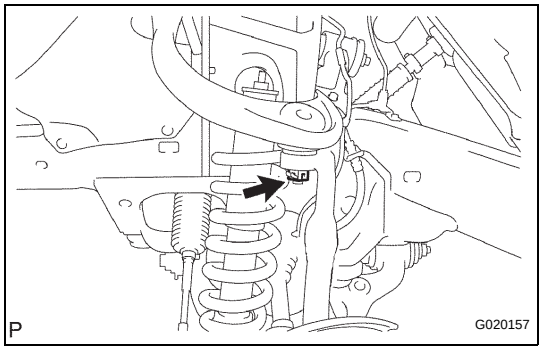

(c) Install a new nut and a new clip.
Torque: 110 N*m (1,122 kgf*cm, 81 ft.*lbf)

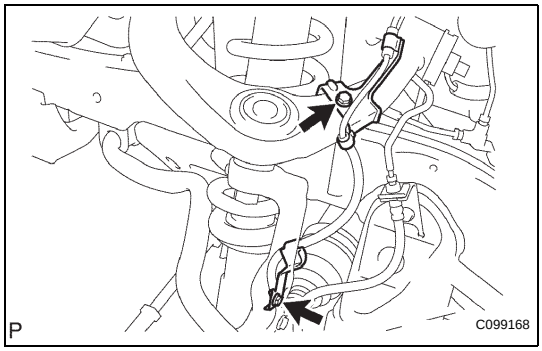

2. INSTALL SKID CONTROL SENSOR WIRE
(a) Install the skid control sensor wire with the 2 bolts.
Torque: 12.5 N*m (127 kgf*cm, 9 ft.*lbf)

3. INSTALL FRONT WHEEL
Torque: 113 N*m (1,152 kgf*cm, 83 ft.*lbf)

4. STABILIZE SUSPENSION
(a) Jack down the vehicle.
(b) Bounce the vehicle up and down several times to stabilize the suspension.

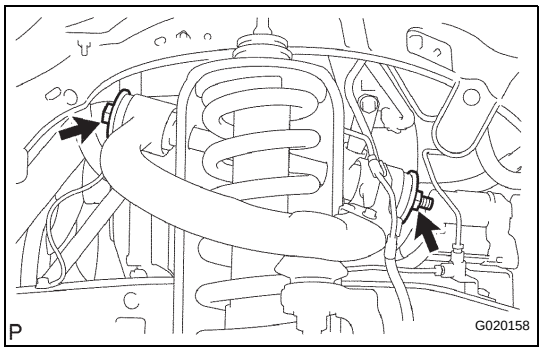

5. FULLY TIGHTEN FRONT SUSPENSION UPPER ARM
(a) Fully tighten the nut.
Torque: 115 N*m (1,173 kgf*cm, 85 ft.*lbf)

6. INSPECT AND ADJUST FRONT WHEEL ALIGNMENT
(See page SP-7)

SP

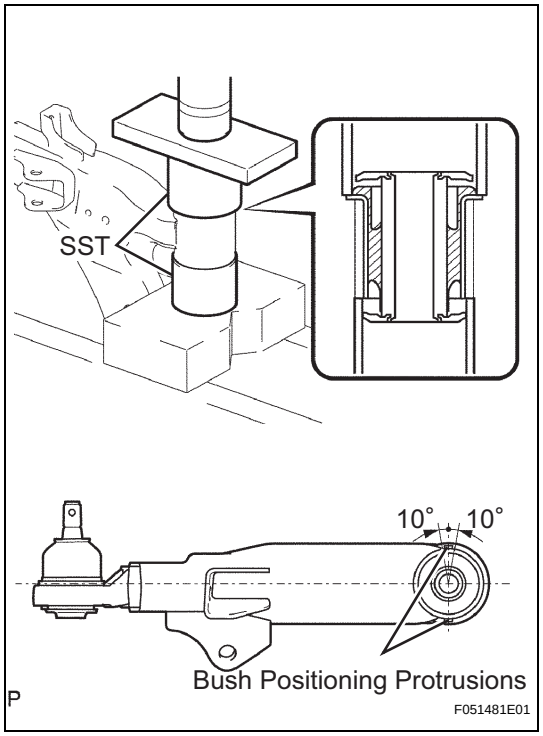

REASSEMBLY

1. INSTALL FRONT LOWER ARM BUSH NO. 1

(a) Using SST, a press and steel plate, install a new lower arm bush.

SST 09631-12090, 09631-32020

NOTICE:

Push the lower arm bush in until the bush positioning protrusions come to the positions shown in the illustration.

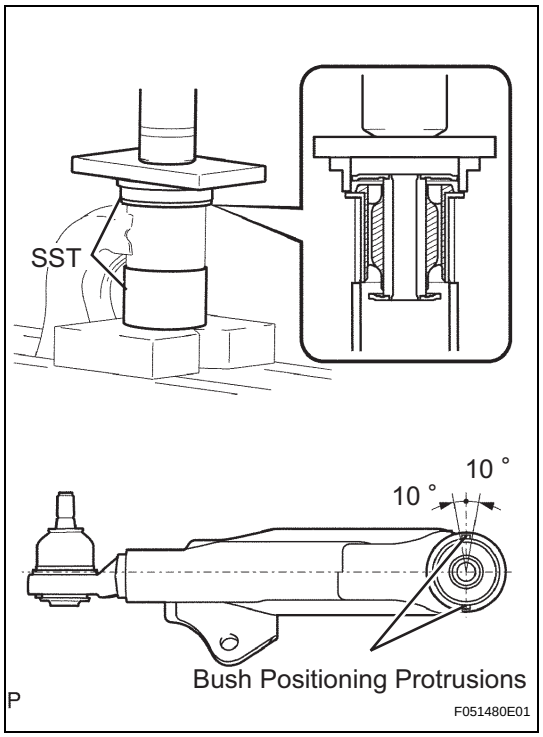

2. INSTALL FRONT LOWER ARM BUSH NO. 2

(a) Using SST, a press and steel plate, install a new lower arm bush.

SST 09502-12010, 09631-12090

NOTICE:

Push the lower arm bush in until the bush positioning protrusions come to the positions shown in the illustration.

SP

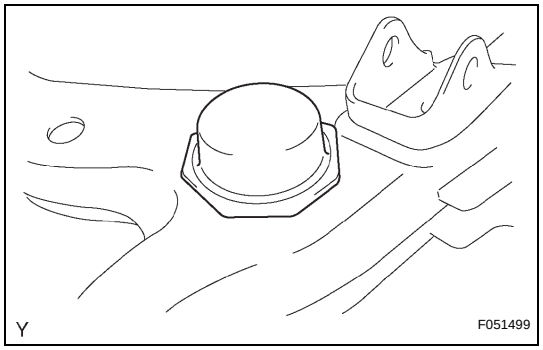

INSTALLATION

1. INSTALL FRONT SPRING BUMPER

(a) Install the front spring bumper.

Torque: 31 N*m (316 kgf*cm, 23 ft.*lbf)

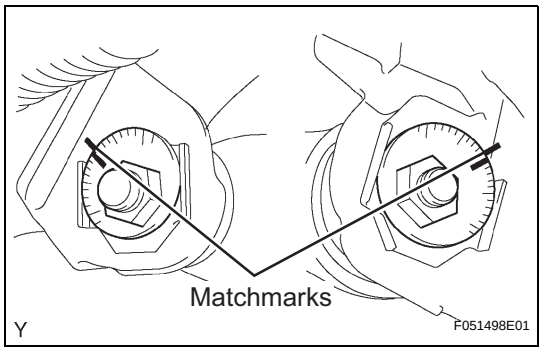

2. TEMPORARILY TIGHTEN FRONT SUSPENSION LOWER ARM

(a) Align the matchmarks on the 2 camber adjust cams and temporarily tighten the 2 nuts.

(b) Install the front lower ball joint attachment LH, a new nut and a new cotter pin.
Torque: 140 N*m (1,428 kgf*cm, 103 ft.*lbf)

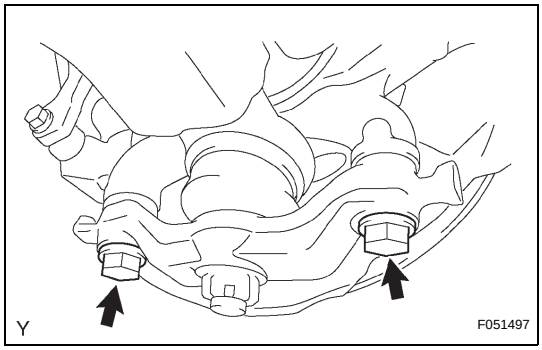

(c) Install the front lower ball joint attachment LH with the 2 bolts.
Torque: 160 N*m (1,631 kgf*cm, 118 ft.*lbf)

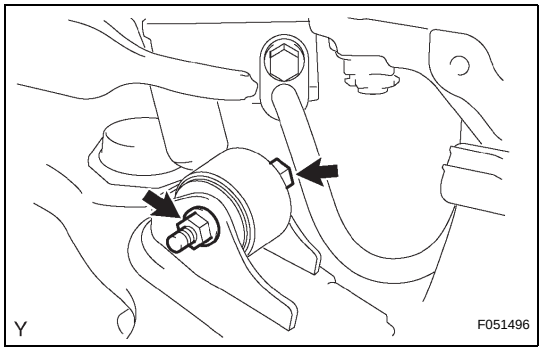

3. TEMPORARILY TIGHTEN FRONT SHOCK ABSORBER WITH COIL SPRING

(a) Install the front shock absorber with coil spring, bolt and washer, and temporarily tighten the nut.

4. INSTALL FRONT STABILIZER LINK ASSEMBLY (See page SP-48)

5. INSTALL FRONT WHEEL
Torque: 113 N*m (1,152 kgf*cm, 83 ft.*lbf)

6. STABILIZE SUSPENSION

(a) Jack down the vehicle.

(b) Bounce the vehicle up and down several times to stabilize the suspension.

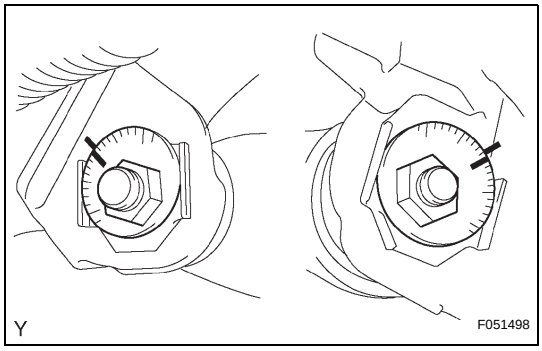

7. FULLY TIGHTEN FRONT SUSPENSION LOWER ARM

(a) Fully tighten the 2 nuts.
Torque: 210 N*m (2,141 kgf*cm, 155 ft.*lbf)

SP

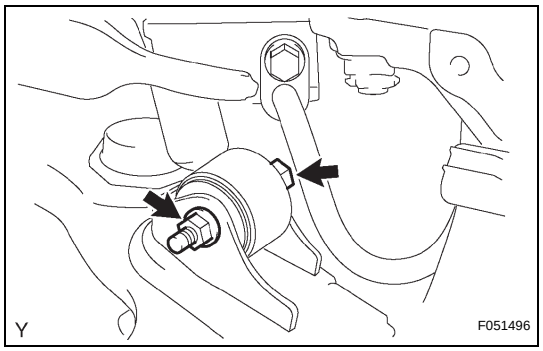

8. FULLY TIGHTEN FRONT SHOCK ABSORBER WITH COIL SPRING

(a) Fully tighten the nut.
Torque: 83 N*m (846 kgf*cm, 61 ft.*lbf)

9. INSPECT AND ADJUST FRONT WHEEL ALIGNMENT
(See page SP-2)

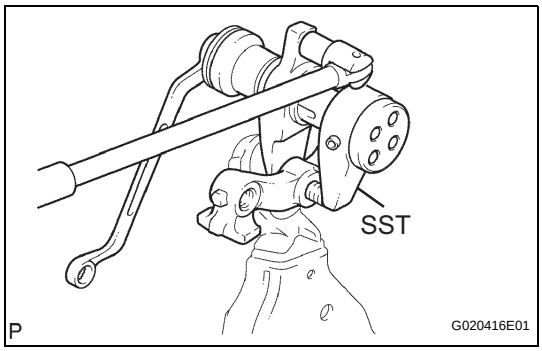

(d) Remove the cotter pin and the nut.
(e) Using SST, remove the front lower ball joint attachment LH.
SST 09628-00011

DISASSEMBLY

1. REMOVE FRONT LOWER ARM BUSH NO. 1

(a) Using a hammer and chisel, raise the flange of the bush diagonally as shown in the illustration.

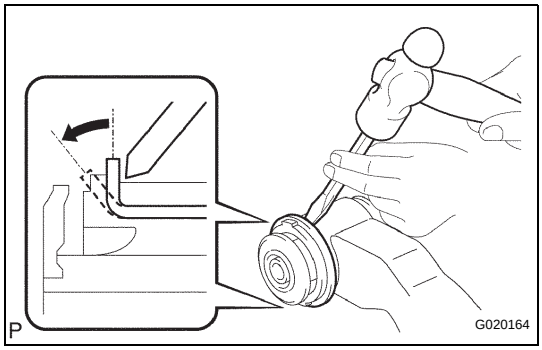

(b) Using SST, remove the lower arm bush.
SST 09950-40011 (09951-04010, 09952-04010, 09953-04020, 09954-04010, 09955-04011, 09957-04010, 09958-04011), 09950-60010 (09951-00470)

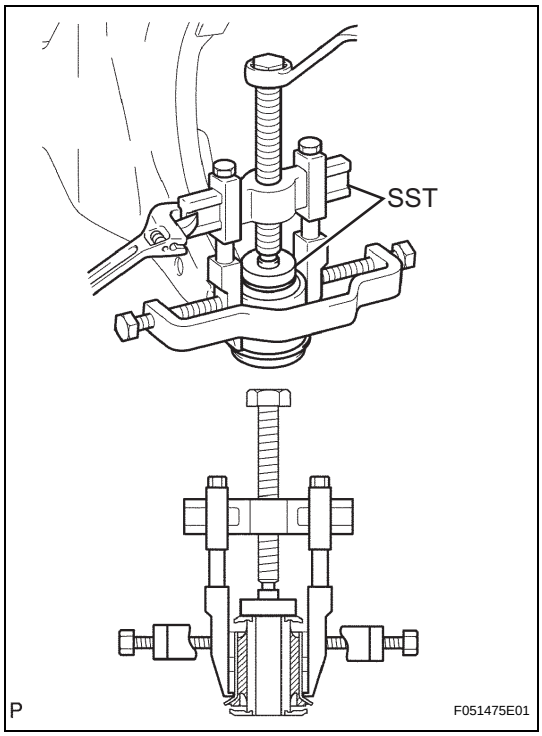

2. REMOVE FRONT LOWER ARM BUSH NO. 2

(a) Using a hammer and chisel, raise the flange of the bush diagonally as shown in the illustration.

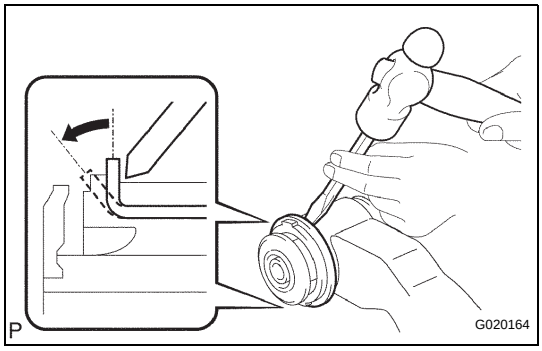

SP

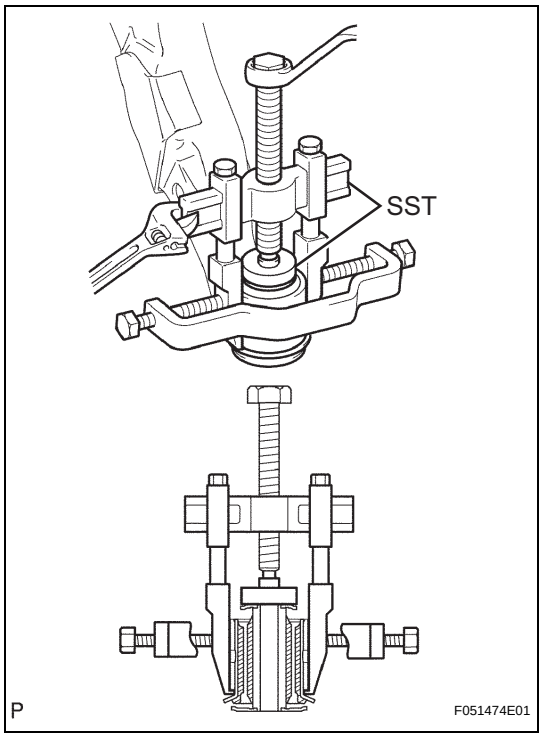

(b) Using SST, remove the lower arm bush.
SST 09950-40011 (09951-04010, 09952-04010, 09953-04020, 09954-04010, 09955-04011, 09957-04010, 09958-04011), 09950-60010 (09951-00520)

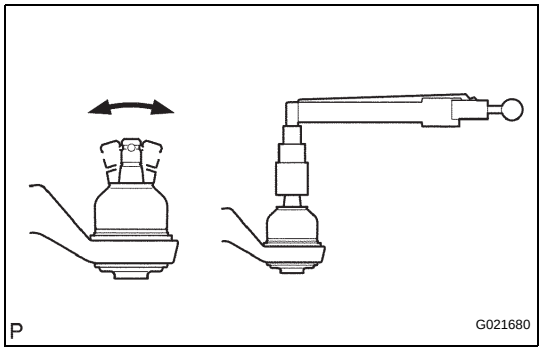

INSPECTION

1. INSPECT FRONT SUSPENSION LOWER ARM

(a) Flip the ball joint stud back and forth 5 times, as shown in the illustration, before installing the nut.

(b) Using a torque wrench, turn the nut continuously at a rate of 2 to 4 seconds per turn and take the torque reading on the 5th turn.
Torque: 3.0 N*m (31 kgf*cm, 27 in.*lbf) or less

(c) Check for any cracks and grease leakage on the ball joint dust cover.

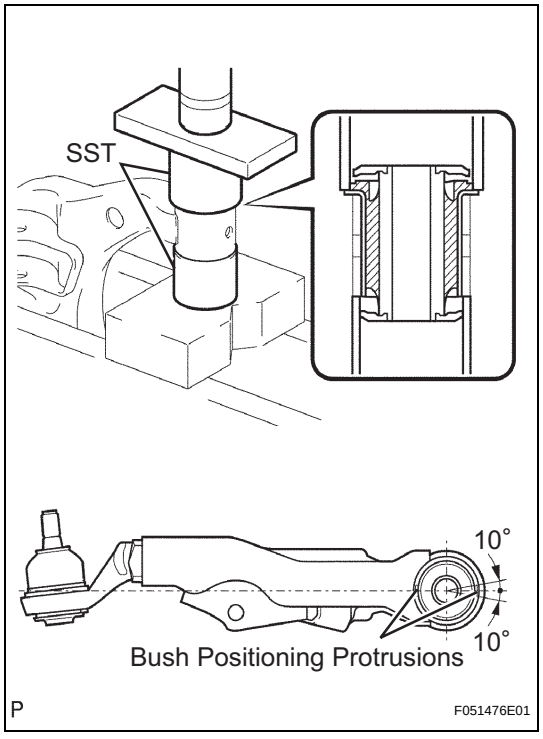

REASSEMBLY

1. INSTALL FRONT LOWER ARM BUSH NO. 1

(a) Install a new lower arm bush using SST, a press and steel plate.
SST 09631-12090, 09631-32020
NOTICE:
Push the lower arm bush in until the bush positioning protrusions come to the positions shown in the illustration.

SP

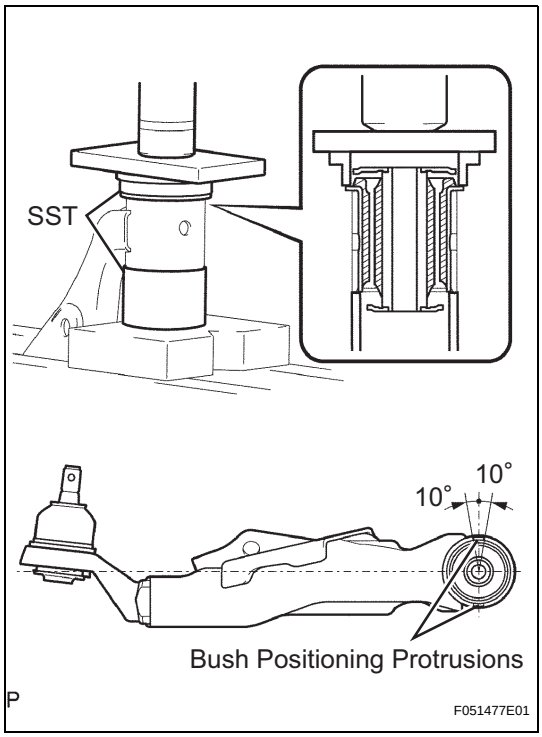

2. INSTALL FRONT LOWER ARM BUSH NO. 2

(a) Install a new lower arm bush using SST, a press and steel plate.
SST 09502-12010, 09631-12090
NOTICE:
Push the lower arm bush in until the bush positioning protrusions come to the positions shown in the illustration.

INSTALLATION

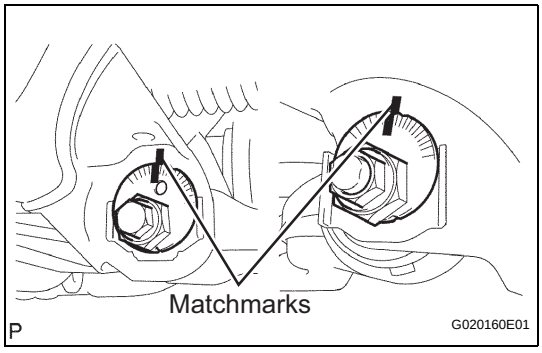

1. TEMPORARILY TIGHTEN FRONT SUSPENSION LOWER ARM

(a) Align the matchmarks on the camber adjust cam No. 2 and toe adjust cam. Temporarily tighten the bolt and the nut.

(b) Install the front lower ball joint attachment, a new nut and a new cotter pin.
Torque: 140 N*m (1,428 kgf*cm, 103 ft.*lbf)

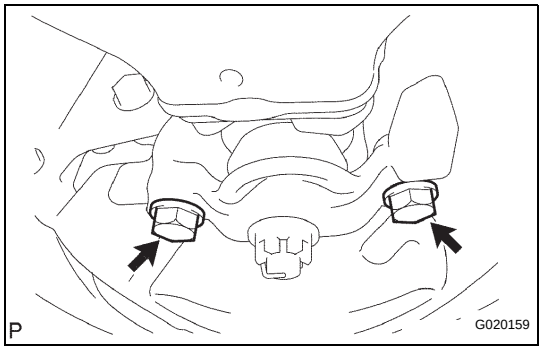

(c) Install the front lower ball joint attachment with the 2 bolts.
Torque: 160 N*m (1,631 kgf*cm, 118 ft.*lbf)

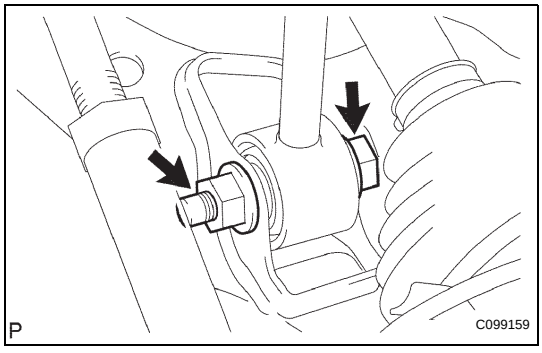

2. TEMPORARILY TIGHTEN FRONT SHOCK ABSORBER WITH COIL SPRING

(a) Install the front shock absorber with coil spring, bolt and washer, and temporarily tighten the nut.

3. INSTALL FRONT WHEEL
Torque: 113 N*m (1,152 kgf*cm, 83 ft.*lbf)

4. STABILIZE SUSPENSION

(a) Jack down the vehicle.

(b) Bounce the vehicle up and down several times to stabilize the suspension.

SP

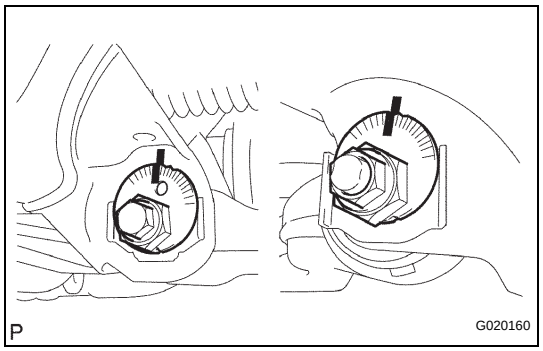

5. FULLY TIGHTEN FRONT SUSPENSION LOWER ARM

(a) Fully tighten the bolt and the nut.
Torque: 135 N*m (1,377 kgf*cm, 100 ft.*lbf)

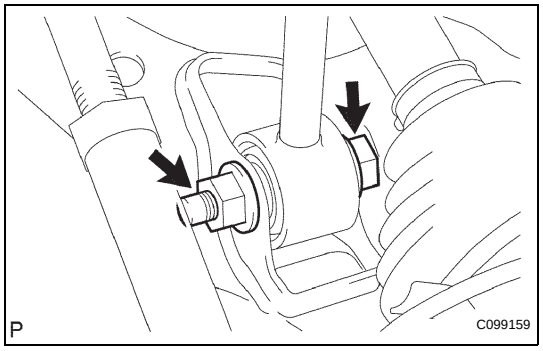

6. FULLY TIGHTEN FRONT SHOCK ABSORBER WITH COIL SPRING

(a) Fully tighten the nut.
Torque: 83 N*m (846 kgf*cm, 61 ft.*lbf)

7. INSPECT AND ADJUST FRONT WHEEL ALIGNMENT
(See page SP-7)

SP

INSTALLATION

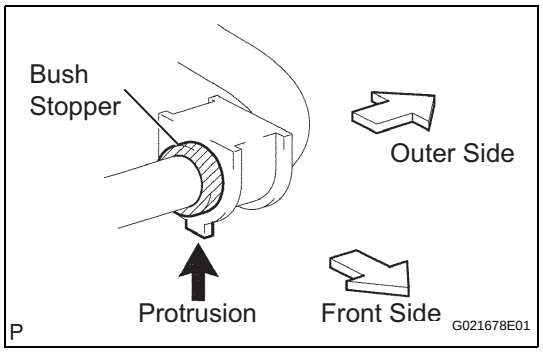

1. INSTALL FRONT STABILIZER BAR

2. INSTALL FRONT STABILIZER LOWER BRACKET BUSH LH

(a) Install the front stabilizer lower bracket bush.
HINT:
- Install the bush onto the inner side of the bush stopper on the stabilizer bar.
- Install the bush as the protrusion to be on the inner side of the vehicle.

3. INSTALL FRONT STABILIZER LOWER BRACKET BUSH RH

HINT:
The installation procedure for the RH side is the same as that for the LH side.

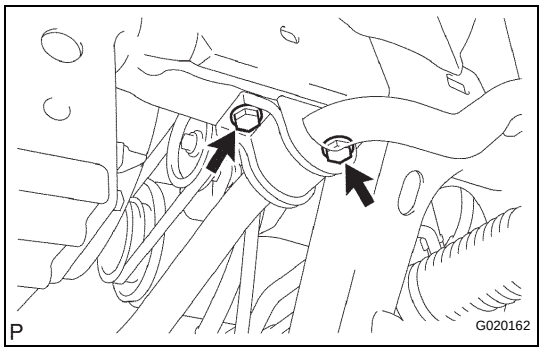

4. INSTALL FRONT STABILIZER BRACKET NO. 1 LH

(a) Install the front stabilizer bracket with the 2 bolts.
Torque: 40 N*m (408 kgf*cm, 30 ft.*lbf)

5. INSTALL FRONT STABILIZER BRACKET NO. 1 RH
NOTICE:
The installation procedure for the RH side is the same as that for the LH side.

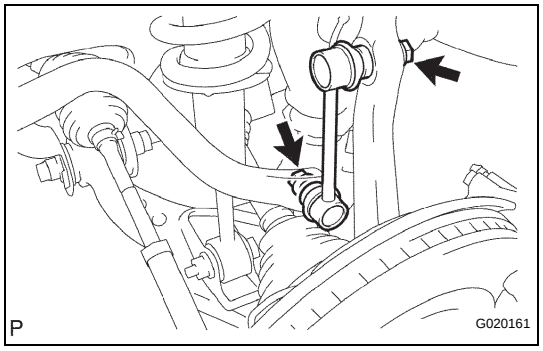

6. INSTALL FRONT STABILIZER LINK ASSEMBLY LH

(a) Install the front stabilizer link assembly LH with the 2 nuts.
Torque: 70 N*m (714 kgf*cm, 52 ft.*lbf)
HINT:
If the ball joint turns together with the nut, use a hexagon (6 mm) wrench to hold the stud.

7. INSTALL FRONT STABILIZER LINK ASSEMBLY RH

HINT:
The installation procedure for the RH side is the same as that for the LH side.

8. INSTALL ENGINE UNDER COVER SUB-ASSEMBLY NO. 1
Torque: 30 N*m (306 kgf*cm, 22 ft.*lbf)

9. INSTALL FRONT WHEELS
Torque: 113 N*m (1,152 kgf*cm, 83 ft.*lbf)

SP

REMOVAL

1. REMOVE REAR WHEEL

2. REMOVE SPARE TIRE (for 4WD and Pre-Runner)

3. SEPARATE REAR SHOCK ABSORBER

(a) Support the rear axle housing.
(b) Remove the bolt, nut and washer.
(c) for 2WD:
  (1) Separate the shock absorber from the rear spring seat.
(d) for 4WD and Pre-Runner:
  (1) Separate the shock absorber from the rear axle housing.

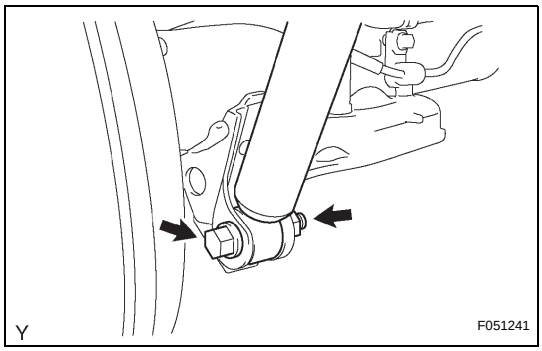

4. SEPARATE PARKING BRAKE CABLE ASSEMBLY NO. 3

(a) Remove the bolt, then separate the parking brake cable.

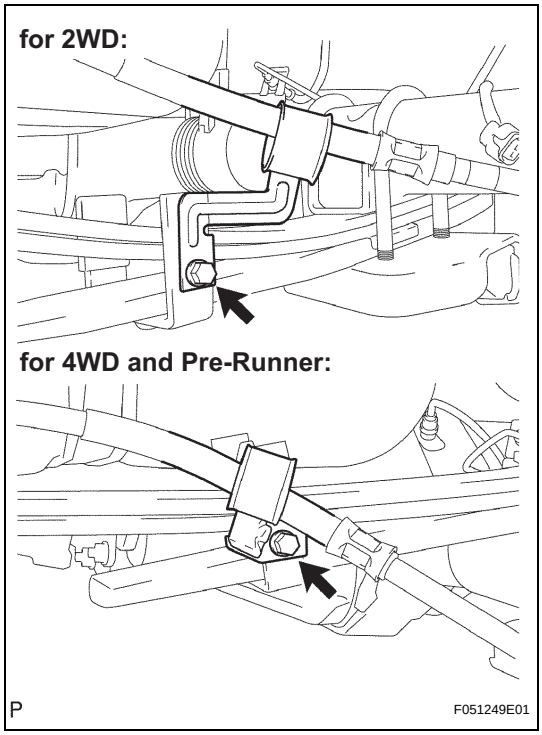

5. REMOVE REAR SPRING BUMPER NO. 1 (for 2WD)

(a) Remove the 2 nuts and spring bumper.

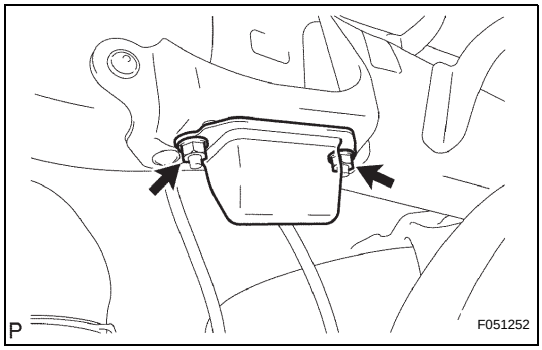

SP

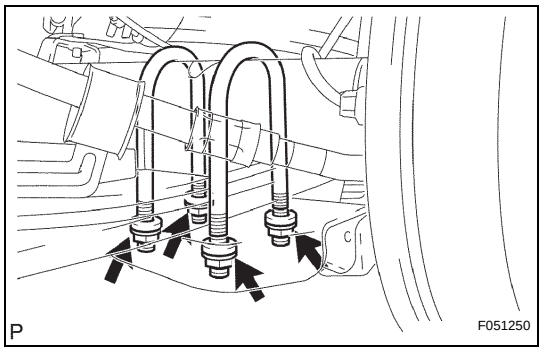

6. REMOVE REAR SPRING U BOLT (for 2WD)

(a) Remove the 4 nuts and 4 washers.

(b) Remove the spring seat and 2 U-bolts.

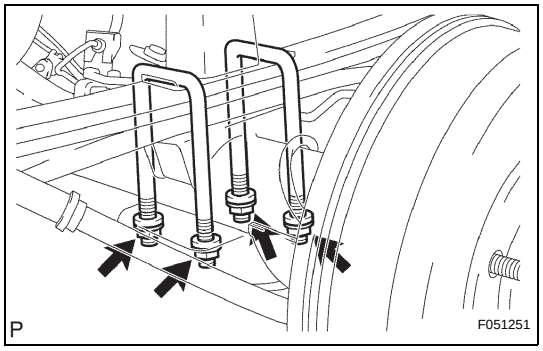

7. REMOVE REAR SPRING U BOLT (for 4WD and Pre-Runner)

(a) Remove the 4 nuts and 4 washers.

(b) Remove the spring seat and 2 U-bolts.

(c) Remove the spring bumper.

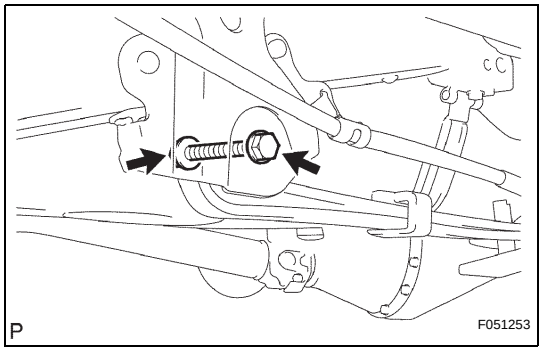

8. REMOVE REAR LEAF SPRING

(a) Remove the nut, washer and through bolt.

SP

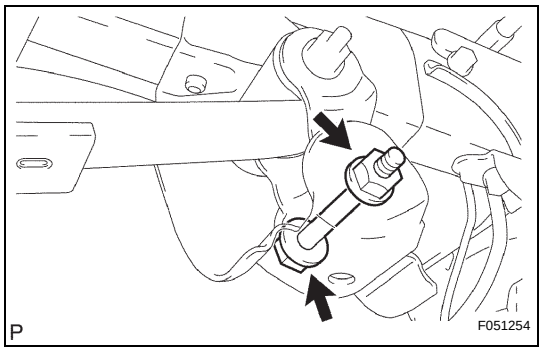

(b) Remove the nut, washer and through bolt.

NOTICE:

Be careful not to drop the spring when removing the through bolt.

(c) Remove the spring

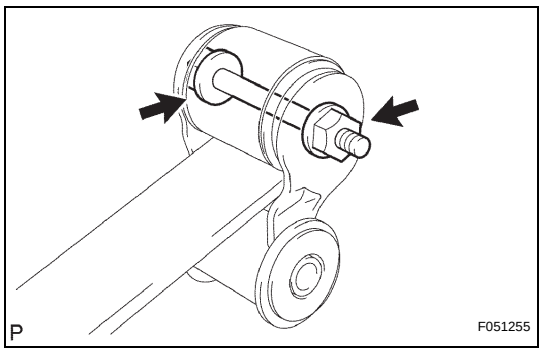

9. REMOVE REAR SPRING SHACKLE SUB-ASSEMBLY NO. 2

(a) Remove the nut, washer, through bolt and shackle.

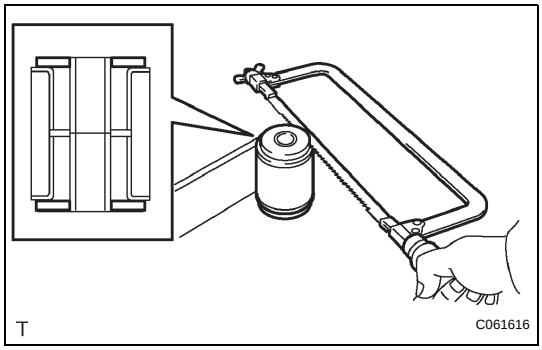

DISASSEMBLY

1. REMOVE BUSH

(a) Fix the spring in a vise.

(b) Using a hack saw, cut both ends off the bushes.

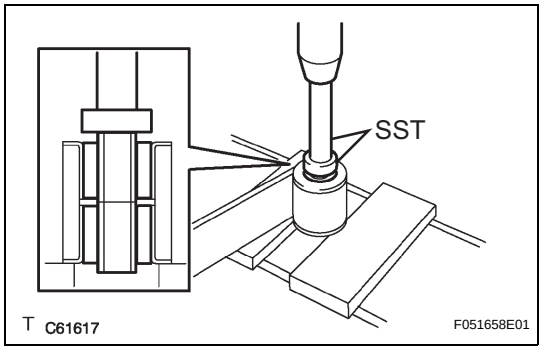

(c) Using SST and a press, press out the 2 bushes.
SST 09950-60010 (09951-00350), 09950-70010 (09951-07100)

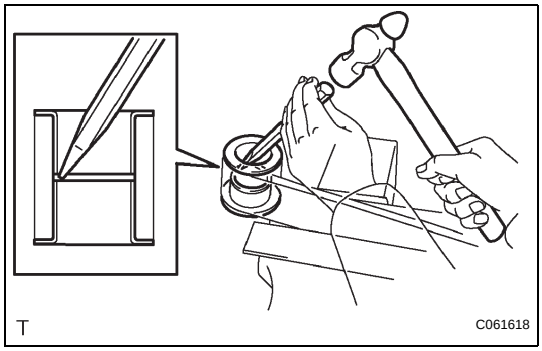

(d) Using a chisel and hammer, tap out the 2 outer tubes.

SP

REASSEMBLY

1. INSTALL BUSH

(a) Using SST and a press, press in 2 new bushes.
SST 09710-28012 (09710-07062), 09710-30041 (09710-03211)

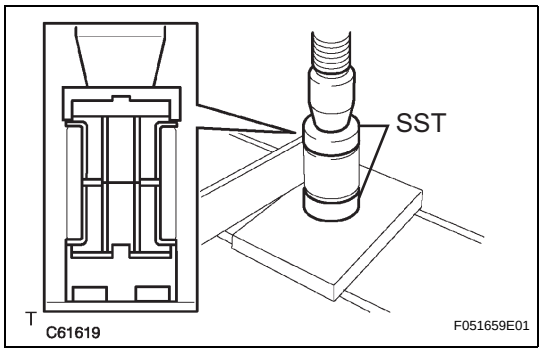

INSTALLATION

1. INSTALL REAR SPRING SHACKLE SUB-ASSEMBLY NO. 2

(a) Install the shackle with the through bolt, washer and nut.

2. INSTALL REAR LEAF SPRING

(a) Place the spring in the rear axle housing.

(b) Align the hole of the rear axle housing with the head of the spring center bolt.

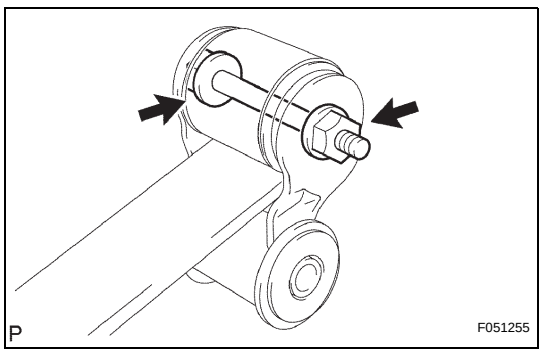

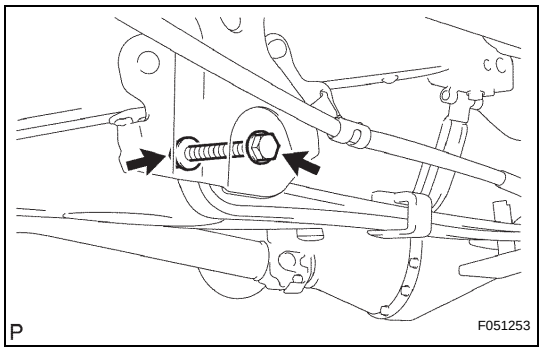

(c) Install the through bolt, washer and nut.

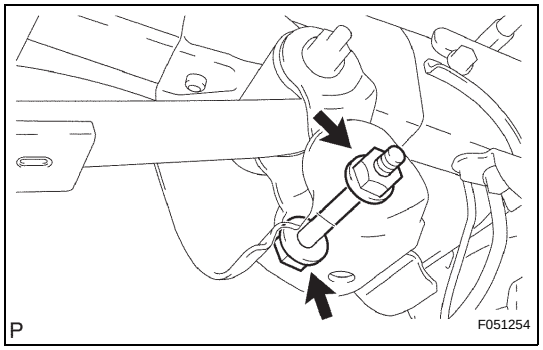

(d) Install the through bolt, washer and nut.

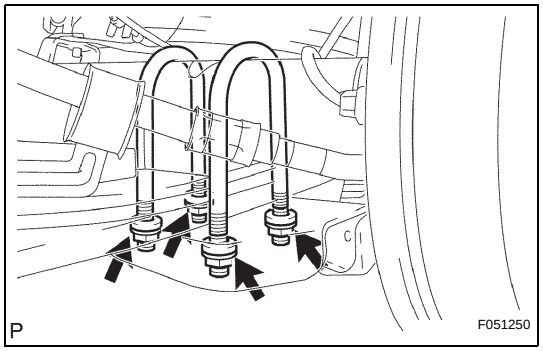

3. INSTALL REAR SPRING U BOLT (for 2WD)

(a) Install the spring seat, 2 U-bolts, 4 washers and 4 nuts.
Torque: 50 N*m (510 kgf*cm, 37 ft.*lbf)
HINT:
Tighten the U-bolts until the lengths of all the U-bolts under the spring seat are the same.

4. INSTALL REAR SPRING U BOLT (for 4WD and Pre-Runner)

(a) Install the spring bumper.

(b) Install the spring seat, 2 U-bolts, 4 washers and 4 nuts.
Torque: 50 N*m (510 kgf*cm, 37 ft.*lbf)
HINT:
Tighten the U-bolts until the lengths of all the U-bolts under the spring seat are the same.

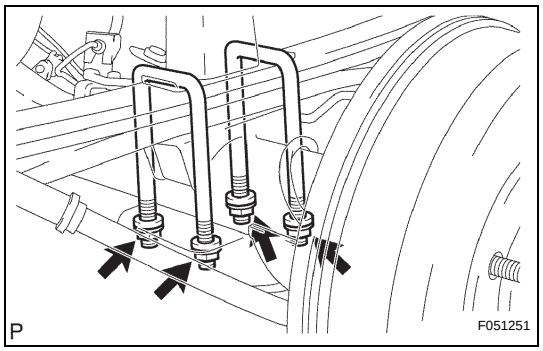

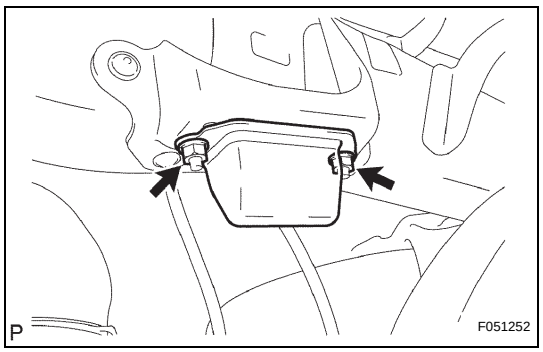

5. INSTALL REAR SPRING BUMPER NO. 1 (for 2WD)

(a) Install the spring bumper with the 2 nuts.
Torque: 15 N*m (153 kgf*cm, 11 ft.*lbf)

SP

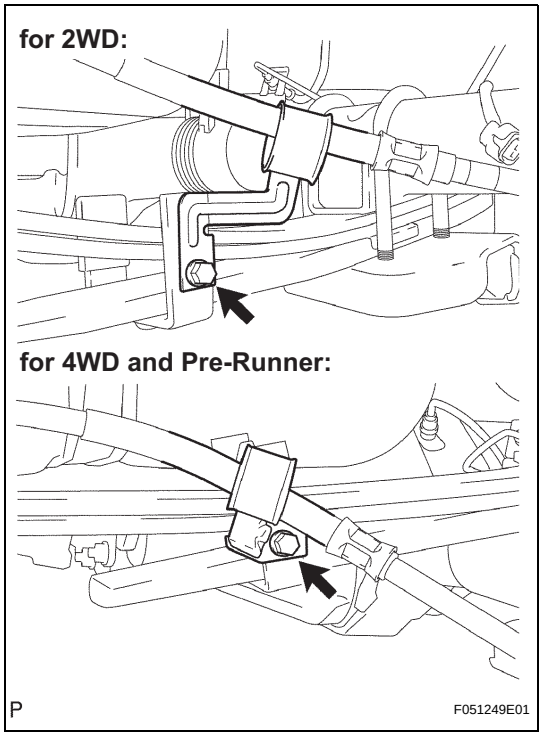

6. INSTALL PARKING BRAKE CABLE ASSEMBLY NO. 3

(a) Install the parking brake cable with the bolt.
Torque: 12.5 N*m (127 kgf*cm, 9 ft.*lbf)

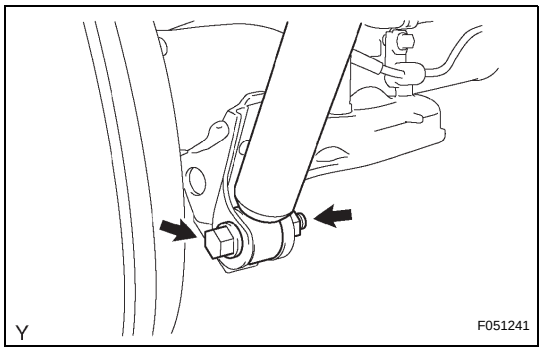

7. INSTALL REAR SHOCK ABSORBER

(a) Install the shock absorber with the bolt, nut and washer.

8. INSTALL REAR WHEEL
Torque: 113 N*m (1,152 kgf*cm, 83 ft.*lbf)

9. STABILIZE SUSPENSION

(a) Jack down the vehicle.
(b) Bounce the vehicle up and down several times to stabilize the suspension.

10. FULLY TIGHTEN REAR SUSPENSION

(a) Tighten the nuts and bolts of the rear suspension parts.

Part Tightened	N*m	kgf*cm	ft.*lbf
Rear LH spring x Rear spring shackle	120	1,224	89
Rear LH spring x Frame	120	1,224	89
Rear spring shackle x Frame	120	1,224	89
Rear shock absorber x Rear spring seat (2WD)	100	1,020	74
Rear shock absorber x Rear axle housing (4WD and Pre-Runner)	100	1,020	74

11. INSTALL SPARE TIRE (for 4WD and Pre-Runner)

SP

SYSTEM DESCRIPTION

1. DESCRIPTION OF SYSTEM

(a) Tire pressure sensors (pressure warning valves and transmitters) are installed in tire and wheel assemblies. The sensors measure the air pressures and internal temperatures of the tires. The measured values and transmitter IDs are transmitted to the tire pressure warning antenna and receiver on the body as radio waves and then sent to the tire pressure warning ECU. The ECU compares the measured air pressure values with the air pressure threshold. When the measured air pressure value is less than this threshold, the tire pressure warning light in the combination meter comes on.

- The tire pressure warning reset switch has been adopted in order to reset the warning threshold in accordance with variant tire pressure settings due to tire types and installation positions.
- The tire pressure warning valves and transmitters may not be used on wheels other than those originally fitted on the vehicle due to the air valve angle of the tire pressure warning valve and transmitter.

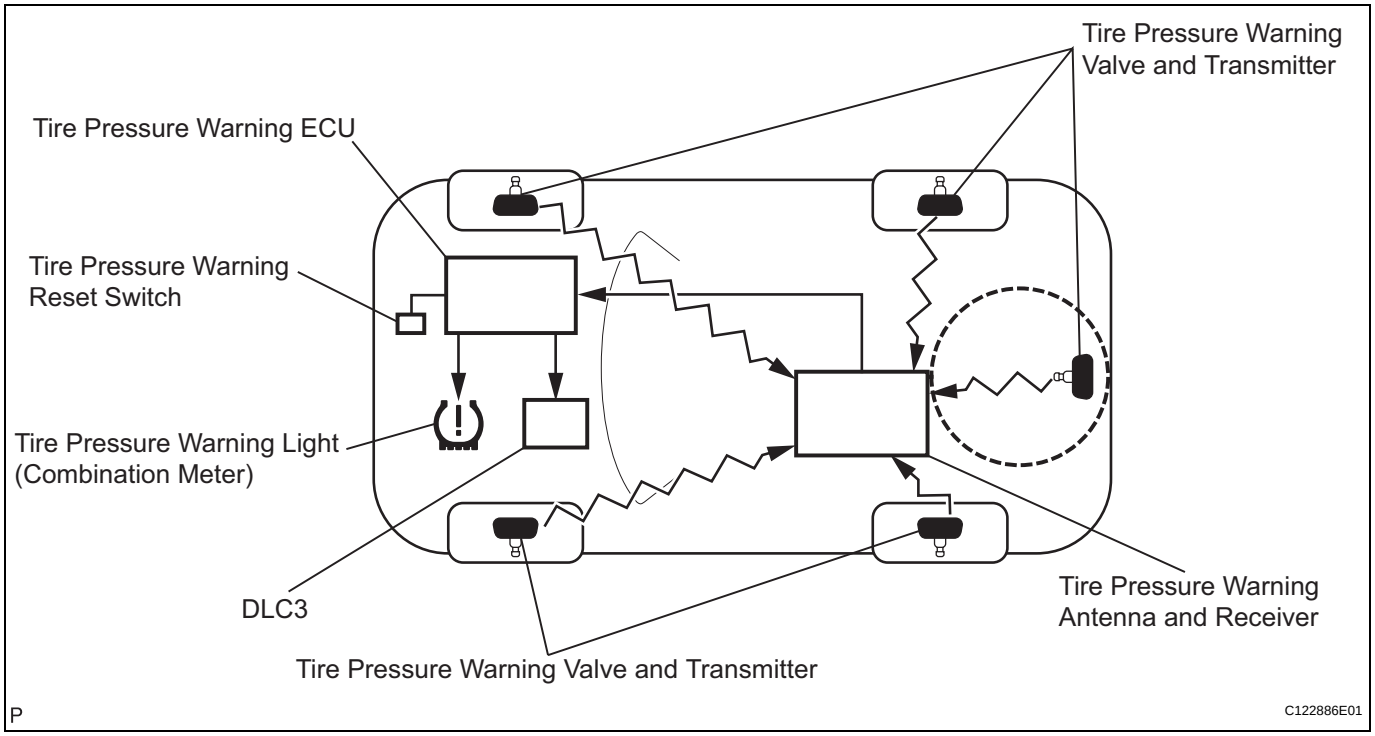

(b) After removing and installing the ECU or a tire pressure warning valve and transmitter, check that the normal code is output.

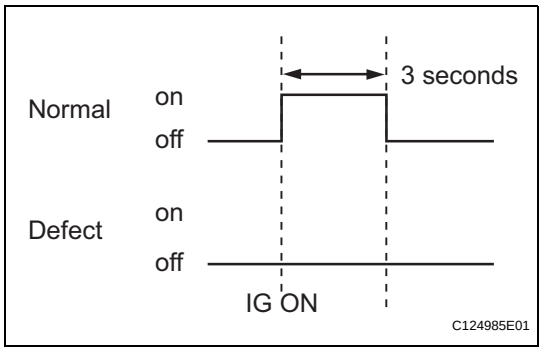

2. INITIAL CHECK

(a) The tire pressure warning light comes on for 3 seconds after the ignition switch turned ON, and then goes off.
HINT:
If the warning light does not come on for 3 seconds, trouble shoot the tire pressure warning light circuit.

Trouble Area	See Procedure
Tire pressure warning light circuit	TW-61

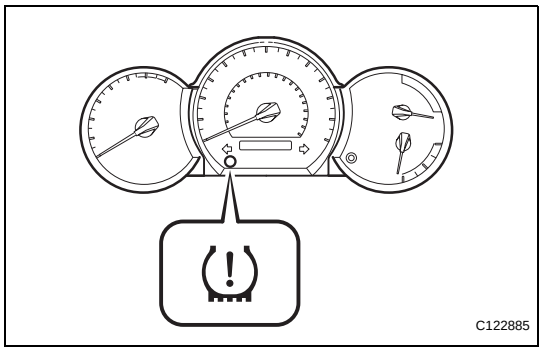

3. FAIL-SAFE FUNCTION

(a) When a malfunction occurs in the tire pressure warning system, the tire pressure warning light blinks to indicate the system failure.
(b) The result of this diagnosis is stored in the tire pressure warning ECU.

4. TIRE PRESSURE WARNING LIGHT CHART

HINT:
The table below indicates the state of the tire pressure warning light after the ignition switch is turned on.

Condition	Immediately after IG turned ON	Always						
	Comes on for 3 seconds	Goes off	Comes on	Blinks (*1)	Blinks (*2)	Blinks (*3)	Outputs DTC	Comes on 3 times (1 second intervals)
Normal	○	○	-	-	-	-	-	-
Low tire pressure	○	-	○	-	-	-	-	-
System failure	○	-	-	○	-	-	-	-
ECU connector connection poor	-	-	○	-	-	-	-	-
TC grounded (no DTCs output)	○	-	-	-	○	-	-	-
TC grounded (DTCs output)	○	-	-	-	-	-	○	-
Test mode	○	-	-	-	-	○	-	-
Entering initialization	○	-	-	-	-	-	-	○

TW

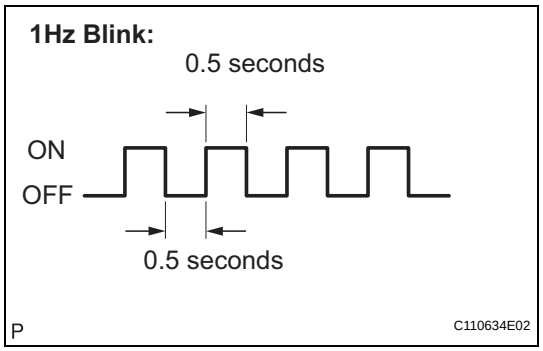

*1: Blinks at 0.5 second intervals (1Hz).

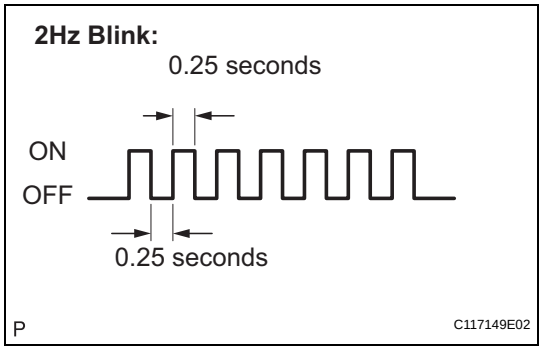

*2: Blinks at 0.25 second intervals (2Hz).

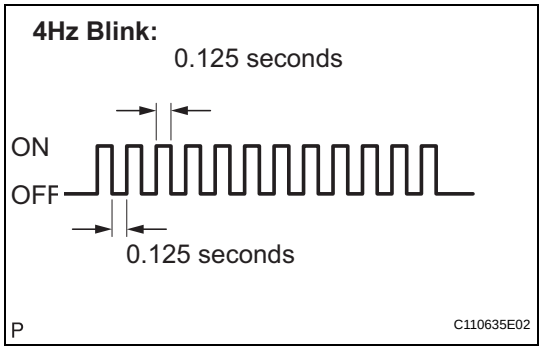

*3: Blinks at 0.125 second intervals (4Hz).

5. FUNCTIONS OF COMPONENTS

Components	Function
Tire pressure warning valve and transmitter	Consists of sensor, transmitter, and built-in battery. Measures tire pressure and internal temperature, transmits measurement values and transmitter ID to tire pressure warning antenna and receiver.
Tire pressure warning antenna and receiver	Receives signals from tire pressure warning valves and transmitters and transmits them to tire pressure warning ECU.
Tire pressure warning ECU	Receives signals from tire pressure warning antenna and receiver, and identifies them as vehicle's own signals. If measurement values less than standard or malfunctions occur in tire pressure warning system, transmits signals to combination meter to illuminate tire pressure warning light.
Tire pressure warning light	Located in combination meter, indicates decreases in tire pressure, high internal tire temperatures and system failures.
Tire pressure warning reset switch	Allows tire pressure warning system to enter initialization mode when tire or wheel replacement, or tire rotation performed.

HOW TO PROCEED WITH TROUBLESHOOTING

The intelligent tester can be used at step 4.

1	VEHICLE BROUGHT TO WORKSHOP

NEXT

2	CUSTOMER PROBLEM ANALYSIS

NEXT

3	CHECK TIRE PRESSURE WARNING LIGHT CONDITION

(a) Turn the ignition switch to the ON position.
(b) Record the condition of the tire pressure warning light in the combination meter.
(c) Refer to the TIRE PRESSURE WARNING LIGHT CHART section of the DIAGNOSIS SYSTEM when checking the condition of the tire pressure warning light (See page TW-23).

NEXT

4	DTC CHECK AND CLEAR

→ DTC OUTPUT: GO TO STEP 5
→ DTC NOT OUTPUT: GO TO STEP 6

5	DTC CHART

→ GO TO STEP 8

6	PROBLEM SYMPTOM CONFIRMATION

→ SYMPTOM DOES NOT OCCUR: GO TO STEP 7
→ SYMPTOM OCCURS: GO TO STEP 8

7	CIRCUIT INSPECTION WITH TROUBLESHOOTING

(a) Refer to PRECAUTION (See page TW-3).
(b) Refer to SYSTEM DESCRIPTION (See page TW-7).

(1) Initial check.
(2) Tire pressure warning light chart.

(c) Set the tire pressures to the appropriate specified values.
(d) Perform initialization (See page TW-15).
(e) Perform test mode procedure (See page TW-17).
(1) Check for a DTC (See page TW-26).
(2) Clear the DTC.
(3) Identify transmitter corresponding to DTC.
(f) Perform initialization (See page TW-15).
(g) Perform registration the transmitter ID (See page TW-11).
(h) Check the terminals of ECU (See page TW-22).
(i) Refer to DATA MONITOR / ACTIVE TEST (See page TW-28).

NEXT

8	REPAIR

NEXT

9	CONFIRMATION TEST

(a) Check for a DTC (See page TW-26).
(b) Perform initialization (See page TW-15).
(c) Confirm that the initialization has been completed.

NEXT

END

REGISTRATION

1. REGISTER TRANSMITTER IDs

NOTICE:

- **Register the transmitter IDs after the tire pressure warning ECU or the tire pressure warning valve and transmitters have been replaced.**
- **If the transmitter IDs cannot be registered, the tire pressure warning ECU is probably in initialization mode. Initialization mode can be terminated by making a short circuit between terminals TC and CG of the DLC3 connector.**
- **In order to avoid damage to the tire pressure warning valve and transmitters, observe the instructions when removing and installing the tire pressure warning valve and transmitters.**

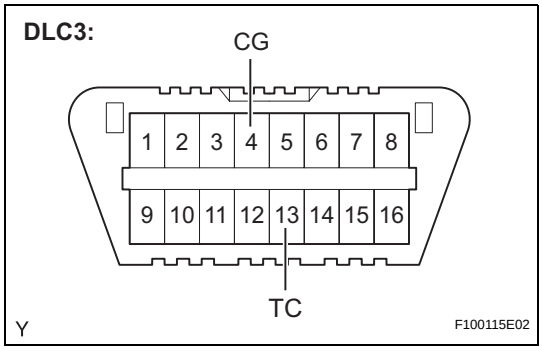

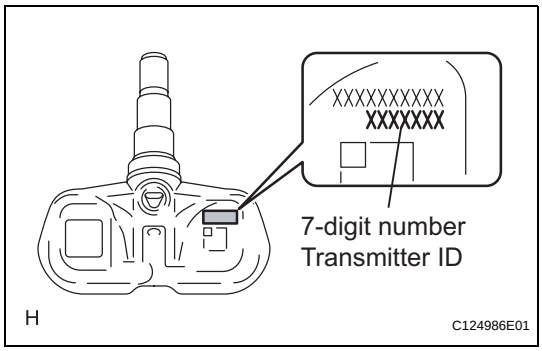

(a) Prepare the all transmitter ID data before starting registration.

HINT:

- Read the registered transmitter IDs that are stored in the ECU using the intelligent tester and note them down.
- If reading stored transmitter IDs is impossible due to malfunctions of components such as the tire pressure warning antenna and receiver, remove the tires from the wheels and check the IDs located on the tire pressure warning valves and transmitters (See page TW-95).
- When replacing the tire pressure warning valves and transmitters, note down the IDs written on the tire pressure warning valves and transmitters.

(b) Connect the intelligent tester to the DLC3.

(c) Turn the ignition switch to the ON position.

TW

(d) Select the REGIST TIRE by following the prompts displayed on the intelligent tester screen (UTILITY - REGIST TIRE).

Registration Procedure

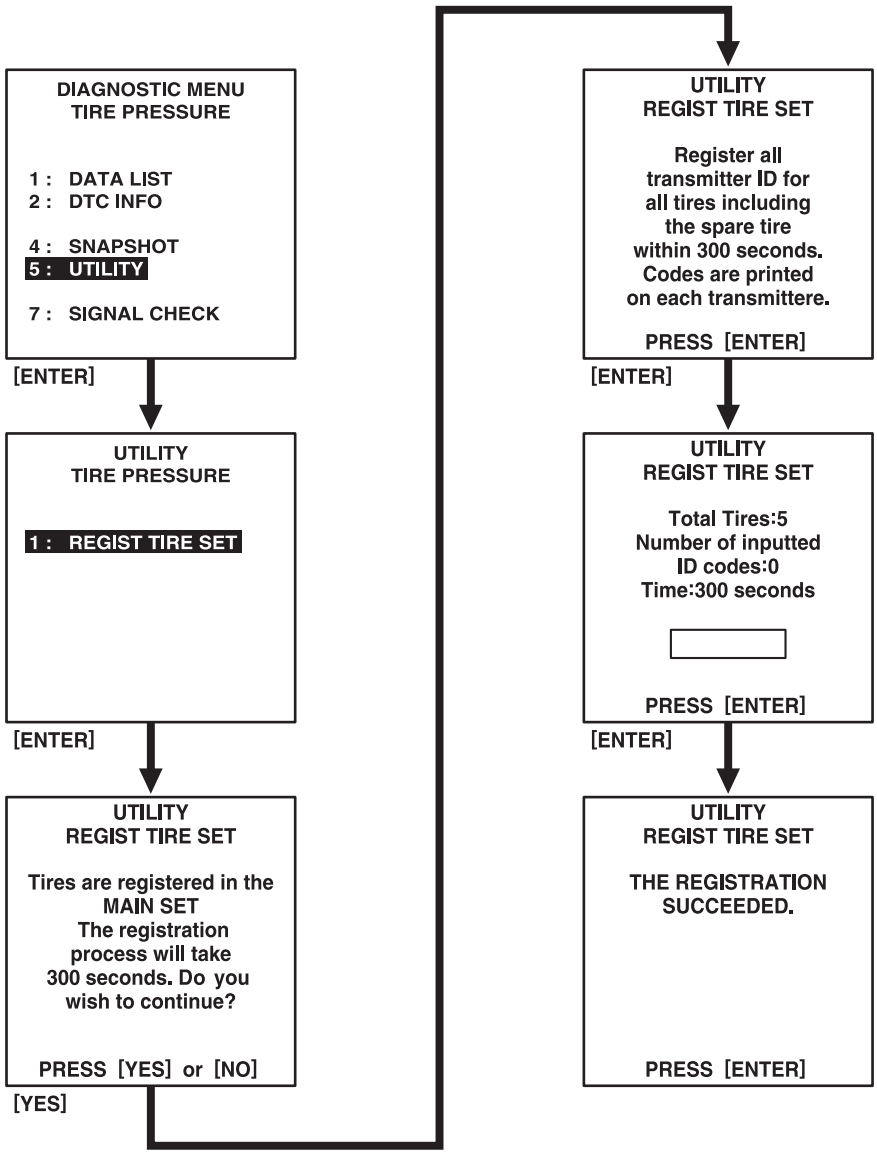

P C122895E01

NOTICE:

- **The previously registered IDs will be deleted from the memory when the registration is completed.**
- **If the procedures of the registration are not completed within 5 minutes, the mode returns to normal operation mode.**

TW

- **When the system is in initialization mode after the reset switch has been operated, the registration is disabled until the initialization process is canceled or completed.**

(e) Input the IDs (ID1 to ID5) using the intelligent tester and transmit them to the tire pressure warning ECU.

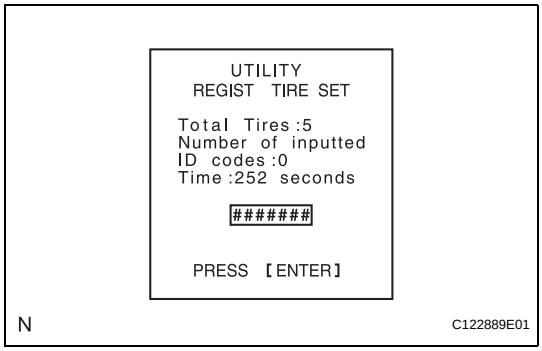

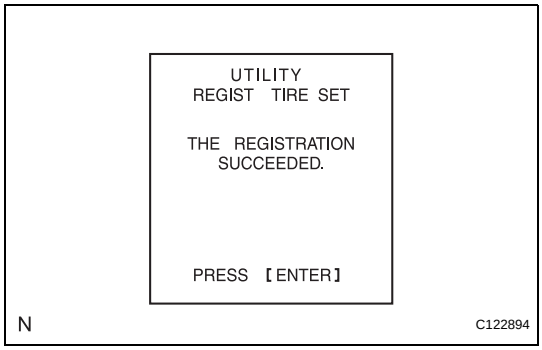

(f) When the ID transmission has successfully been completed, the message shown in the illustration appears on the tester screen.

(g) Turn the ignition switch to the OFF position, and then turn to the ON position.

(h) Select "SIGNAL CHECK" on the intelligent tester (See page TW-28).

(i) Confirm that the transmitter IDs and the data of tire pressure of all the tires are displayed on the intelligent tester screen.

TW

Item	Measurement Item/ Range (Display)	Normal Condition
REGIT ID1 CODE	Registered ID1 code/ minimum: 0 maximum: FFFFFFF	ID No. of registered transmitter ID1 displayed
REGIT ID2 CODE	Registered ID2 code/ minimum: 0 maximum: FFFFFFF	ID No. of registered transmitter ID2 displayed
REGIT ID3 CODE	Registered ID3 code/ minimum: 0 maximum: FFFFFFF	ID No. of registered transmitter ID3 displayed
REGIT ID4 CODE	Registered ID4 code/ minimum: 0 maximum: FFFFFFF	ID No. of registered transmitter ID4 displayed
REGIT ID5 CODE	Registered ID5 code/ minimum: 0 maximum: FFFFFFF	ID No. of registered transmitter ID5 displayed
TIREPRESS1	ID1 tire pressure/ minimum: 0 kPa (0 kgf/cm^2, 0 psi) maximum: 637.5 kPa (6.5 kgf/cm2, 92.5 psi)	Actual tire pressure
TIREPRESS2	ID2 tire pressure/ minimum: 0 kPa (0 kgf/cm^2, 0 psi) maximum: 637.5 kPa (6.5 kgf/cm2, 92.5 psi)	Actual tire pressure
TIREPRESS3	ID3 tire pressure/ minimum: 0 kPa (0 kgf/cm^2, 0 psi) maximum: 637.5 kPa (6.5 kgf/cm2, 92.5 psi)	Actual tire pressure
TIREPRESS4	ID4 tire pressure/ minimum: 0 kPa (0 kgf/cm^2, 0 psi) maximum: 637.5 kPa (6.5 kgf/cm2, 92.5 psi)	Actual tire pressure

Item	Measurement Item/ Range (Display)	Normal Condition
TIREPRESS5	ID5 tire pressure/ minimum: 0 kPa (0 kgf/cm^2, 0 psi) maximum: 637.5 kPa (6.5 kgf/cm2, 92.5 psi)	Actual tire pressure

NOTICE:

- **It may take up to 1 minute to update the tire pressure data.**
- **If the IDs have not been registered, DTC C2171/71 is set in the tire pressure warning ECU after approximately 30 minutes.**

(j) Disconnect the intelligent tester with the ignition switch turned OFF.

INITIALIZATION

1. INITIALIZATION

NOTICE:

- **Perform the tire pressure warning system initialization after the transmitter ID registration has been completed.**
- **The initialization is necessary when one of the following situations applies:**
  - **Tire pressure warning ECU is replaced.**
  - **Tires are replaced with those of different pressures.**
  - **Tire pressure warning valves and transmitters are replaced.**
  - **Vehicle is newly delivered.**

(a) Set the tire pressures of all the wheels, including the spare tire, to the appropriate specified values.

Tire Size	Front Wheel kPa (kgf/cm^2, psi)	Rear Wheel kPa (kgf/cm^2, psi)	Spare Wheel kPa (kgf/cm^2, psi)
P215/70 R15	200 (2.0, 29)	220 (2.2, 32)	220 (2.2, 32)
P255/45 R18	240 (2.4, 34)	240 (2.4, 34)	240 (2.4, 34)
P245/75 R16	200 (2.0, 29)	200 (2.0, 29)	200 (2.0, 29)
P265/70 R16 (ORP)*	200 (2.0, 29)	220 (2.2, 32)	220 (2.2, 32)
P265/65 R17	200 (2.0, 29)	200 (2.0, 29)	200 (2.0, 29)

*: Used on Off Road Package Models

TW

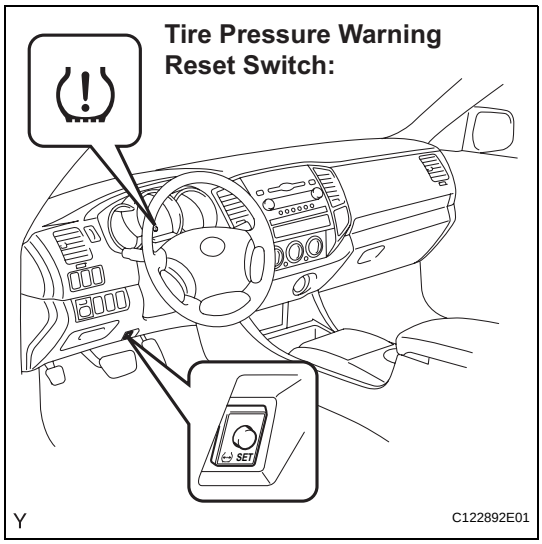

(b) Press the tire pressure warning reset switch for 3 seconds or more with the ignition switch in the ON position.

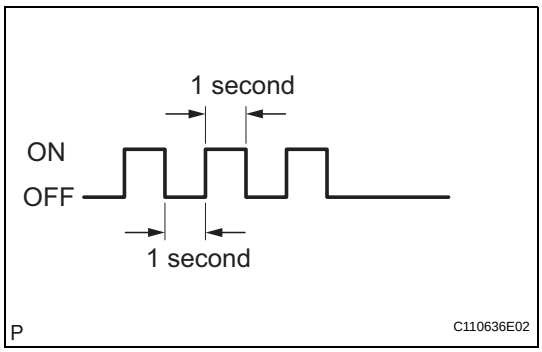

(c) Check that the tire pressure warning light blinks 3 times at 1 second intervals.

HINT:

The initialization is complete when the tire pressure warning ECU has received signals from all of the wheels.

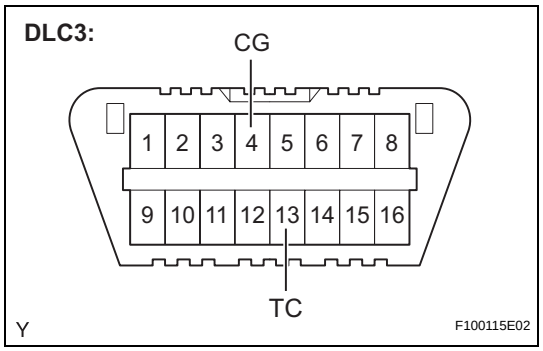

(d) Wait for 2 or 3 minutes with the ignition switch ON.
NOTICE:
- **The initialization is normally completed within 2 to 3 minutes.**
- **If the initialization has not been completed successfully, DTC C2177/77 is set approximately 20 minutes after driving starts.**
- **The initialization can be terminated by making a short circuit between terminals TC and CG of the DLC3 connector.**

(e) Confirm that the initialization has been completed using the intelligent tester.
(1) Change the mode to test mode using intelligent tester and check that test DTCs have been stored.
- The test DTCs will not be indicated until the system initialization is complete.
- After the initialization has been completed successfully, the test DTCs (C2181/81 to C2191/91) are indicated.

NOTICE:
The following operations can be used instead of above procedure:
1. **Turn the ignition switch from OFF to ON.**
2. **Monitor the tire pressure values of all the wheels using intelligent tester.**
3. **If the tire pressure values cannot be displayed on the intelligent tester screen, the initialization has failed.**
4. **It takes 2 to 3 minutes to display the tire pressure data.**

HINT:
- In winter, as the tire pressure may decrease depending on the ambient temperature, increase the tire pressure by 20 kPa (0.2 kgf/cm^2, 2.9 psi) to 30 kPa (0.3 kgf/cm^2, 4.3 psi) above the specified value after confirmation that the initialization has been completed.

TW

TEST MODE PROCEDURE

1. ENTER TEST MODE

HINT:

- The operation of the tire pressure warning reset switch can be checked in TEST MODE.
- During TEST MODE, the system cannot be initialized by pressing the tire pressure warning reset switch. The tire pressure warning reset switch circuit can be inspected in this mode.

(a) Make sure that the ignition switch is off.

(b) Connect the intelligent tester with CAN VIM to the DLC3.

(c) Turn the ignition switch to the ON position and turn the tester ON.

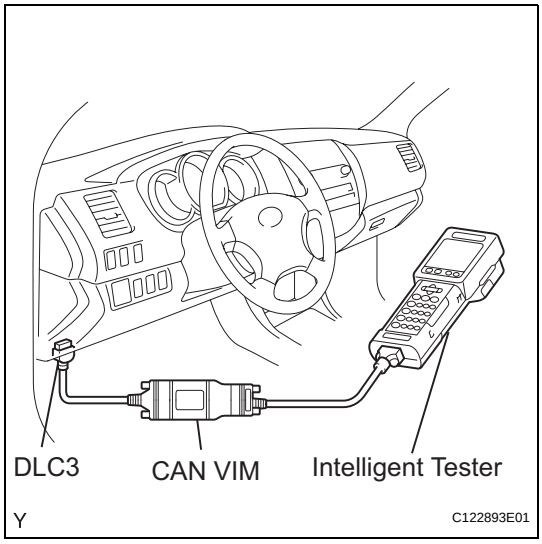

TW

(d) Select TEST MODE on the intelligent tester.

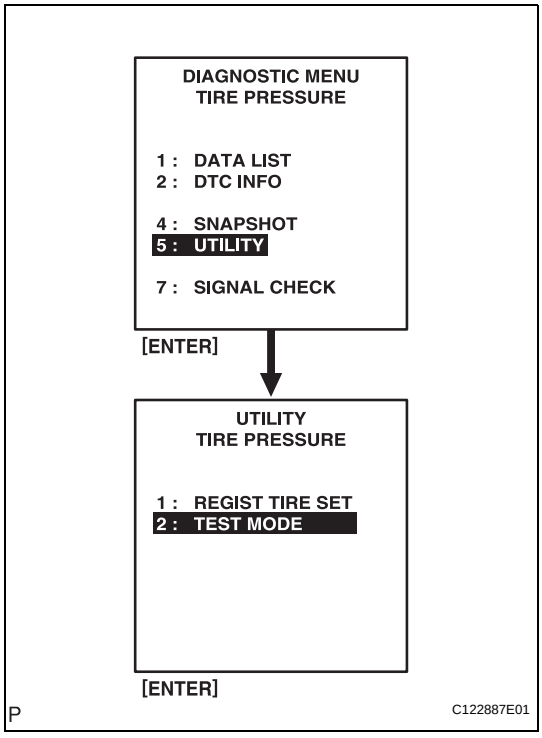

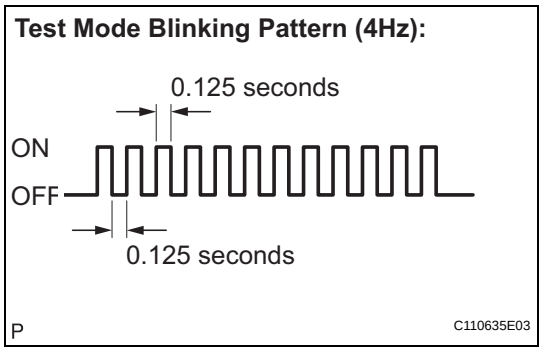

(e) Confirm that the tire pressure warning light in the combination meter blinks at 0.125 second intervals (4Hz).
HINT:
- When starting the signal checks, the tire pressure warning ECU sets all the signal check DTCs first.
  After the signal checks for each inspection item have been completed, the DTCs of the items that are determined to be normal by the tire pressure warning ECU are cleared.
  The DTCs for other inspection items may not be cleared when only a certain signal is inspected.
- When the mode returns from signal check mode to normal mode, all the signal check DTCs are cleared.

TEST MODE CODE

SIGNAL CHECK DTC	Test Signal	SIGNAL CHECK DTC Clear Condition
C2181/81 to C2185/85	Transmitter Data	Data received from the tire pressure warning valve and transmitter which has transmitter ID registered in tire pressure warning ECU
C2191/91	Vehicle Speed Signal	Vehicle speed of 12 mph (20 km/h) or more detected for 3 seconds or more
-	Tire Pressure Reset Switch	-

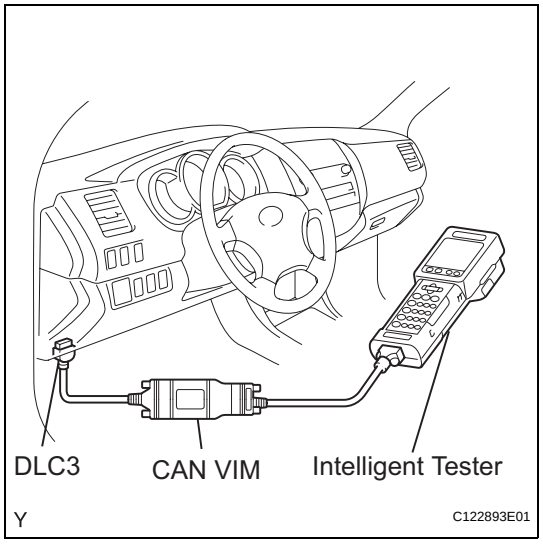

2. PERFORM SIGNAL CHECK

(a) Make sure that the ignition switch is off.
(b) Connect the intelligent tester with CAN VIM to the DLC3.
(c) Turn the ignition switch to the ON position and turn the tester ON.

(d) Select the SIGNAL CHECK on the intelligent tester.

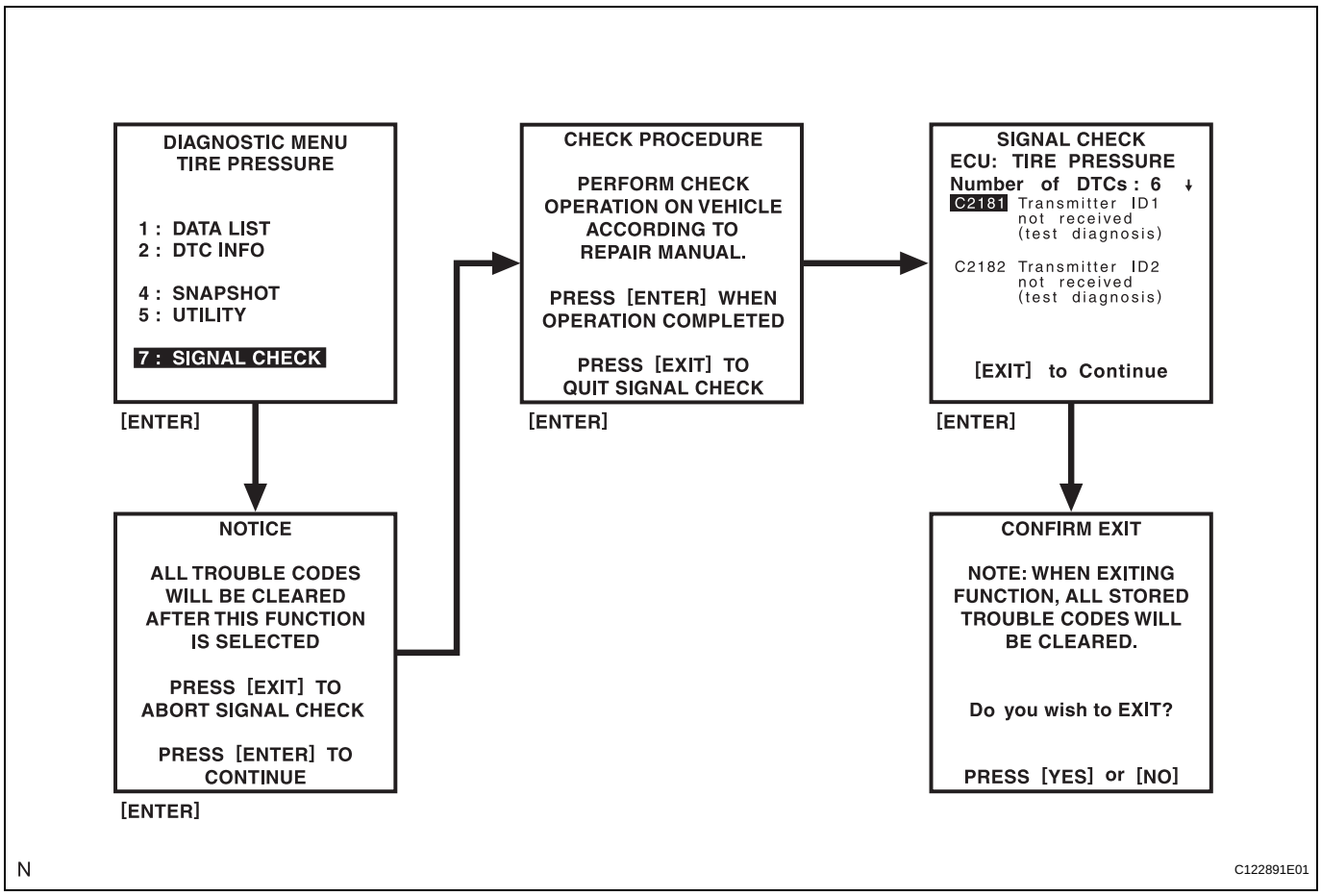

(e) Check the transmission data (for DTCs from C2181/81 to C2185/85)

(1) Set the tire pressures to the appropriate specified values.

Tire Size	Front Wheel kPa (kgf/cm^2, psi)	Rear Wheel kPa (kgf/cm^2, psi)	Spare Wheel kPa (kgf/cm^2, psi)
P215/70 R15	200 (2.0, 29)	220 (2.2, 32)	220 (2.2, 32)
P255/45 R18	240 (2.4, 34)	240 (2.4, 34)	240 (2.4, 34)
P245/75 R16	200 (2.0, 29)	200 (2.0, 29)	200 (2.0, 29)
P265/70 R16 (OPR)*	200 (2.0, 29)	220 (2.2, 32)	220 (2.2, 32)
P265/65 R17	200 (2.0, 29)	200 (2.0, 29)	200 (2.0, 29)

*: Used on Off Road Package Models

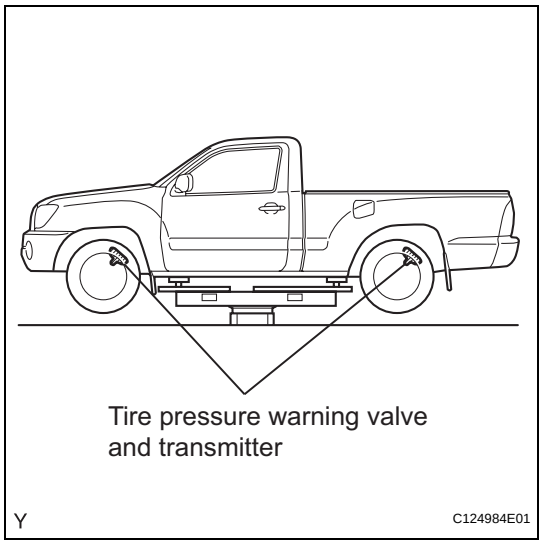

(2) Jack up the vehicle.
(3) Rapidly release the tire pressure of all the tires to 40 kPa (0.4 kgf/cm^2, 5.8 psi)/ 30 seconds or more one by one.
HINT:
- It may take up to 1 minute to update the tire pressure data.
- The tire pressure warning light that is blinking at 0.125 second intervals will come on for 1 second when the tire pressure warning ECU receives the transmission data.
- If the transmission data have not been received, reset the tire pressures to the appropriate specified values and rotate the tires 90 to 270 degrees. Then recheck for the transmission data again.

(f) Check the vehicle speed signal (for DTC C2191/91)
(1) Drive the vehicle at 12 mph (20 km/h) or more for 10 seconds or more.
HINT:
The tire pressure warning light that is blinking at 0.125 second intervals will come on for 1 second when the tire pressure warning ECU receives the transmission data.

(g) Check the tire pressure warning reset switch
HINT:
Since there is no test mode code for the reset switch, check the reset switch by observing the status of the tire pressure warning light.
(1) Press the tire pressure warning reset switch.
(2) Check the tire pressure warning light blinking pattern.

TW

Result

Test Signal	Normal Condition
Tire Pressure Warning Reset Switch	• Switch ON: Tire pressure warning light comes on • Switch OFF: Tire pressure warning light blinks (4Hz)

(h) Read the test mode code.
(1) After the signal check has been completed, check for signal check DTCs to confirm the system status (See page TW-26).

(i) Clear the DTCs.
HINT:
When the mode returns from signal check mode to normal mode, all the signal check DTCs are cleared.

(j) End SIGNAL CHECK
After SIGNAL CHECK has finished, turn the ignition switch off and disconnect the tester.
HINT:
If a trouble code is displayed during the test mode DTC check, check the circuit indicated by the code. For details of each code, refer to the relevant page listed under respective "DTC No." in the table below.

TEST MODE DTCs

DTC No.	Detection Item	Trouble Area
C2181/81 (See page TW-37)	Transmitter ID1 not received	• Tire pressure warning antenna and receiver • Each tire pressure warning valve and transmitter • Tire pressure warning ECU • Wire harness or connector
C2182/82 (See page TW-37)	Transmitter ID2 not received	• Tire pressure warning antenna and receiver • Each tire pressure warning valve and transmitter • Tire pressure warning ECU • Wire harness or connector
C2183/83 (See page TW-37)	Transmitter ID3 not received	• Tire pressure warning antenna and receiver • Each tire pressure warning valve and transmitter • Tire pressure warning ECU • Wire harness or connector
C2184/84 (See page TW-37)	Transmitter ID4 not received	• Tire pressure warning antenna and receiver • Each tire pressure warning valve and transmitter • Tire pressure warning ECU • Wire harness or connector
C2185/85 (See page TW-37)	Transmitter ID5 not received	• Tire pressure warning antenna and receiver • Each tire pressure warning valve and transmitter • Tire pressure warning ECU • Wire harness or connector
C2191/91 (See page TW-55)	Vehicle speed signal error	• Vehicle speed sensor • Combination meter • Tire pressure warning ECU • Wire harness or connector

PROBLEM SYMPTOMS TABLE

Read values of DATA LIST using the intelligent tester, and confirm that the tire pressure data of all the tires are displayed.
When those data cannot be displayed, perform the troubleshooting procedure related to DTCs C2121/21 to C2125/25 which indicate transmission or reception malfunctions first.
If there are no problem, inspect the following Problem Symptoms Table.

TIRE PRESSURE WARNING SYSTEM

Symptom	Suspected area	See page
Tire pressure warning light does not illuminate, despite tire pressure decreasing.	1. Initialization	TW-15
	2. Tire pressure warning valve and transmitter	TW-95
	3. Combination meter	ME-63
	4. Tire pressure warning ECU	TW-103
Tire pressure warning light does not illuminate.	1. Combination meter	ME-63
	2. Tire pressure warning ECU	TW-103
Tire pressure warning light remains illuminated (goes off during initial check).	1. Power source circuit	TW-63
	2. Tire pressure warning ECU	TW-103
Tire pressure warning light remains illuminated (comes on during initial check).	1. Tire pressures	TW-1
	2. Initialization	TW-15
	3. Combination meter	ME-63
	4. Tire pressure warning valve and transmitter	TW-95
	5. Tire pressure warning ECU	TW-103
Unable to perform initialization, despite reset switch being operated.	1. Tire pressure warning reset switch circuit	TW-58
	2. Combination meter	ME-63
	3. Tire pressure warning ECU	TW-103

TERMINALS OF ECU

HINT:
Inspect the connector from the back side while the connector are connected.

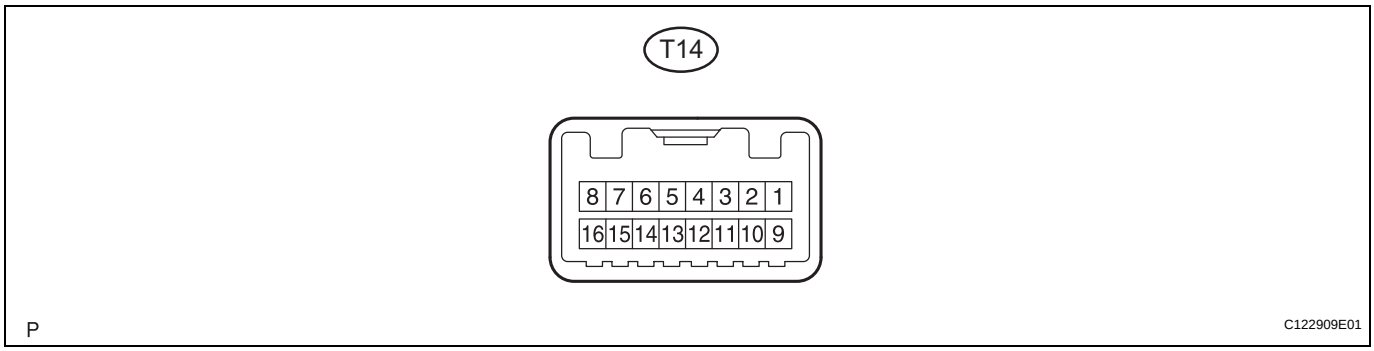

Symbols (Terminal No.)	Terminal Description	Condition	Specified Condition
IG (T14-2) - GND (T14-11)	IG power source	IG switch ON	10 to 16 V
SPD (T14-3) - GND (T14-11)	Vehicle speed signal	Vehicle running	Pulse generation (See waveform 1)
SIL (T14-4) - GND (T14-11)	Diagnosis tester communication line	IG switch ON and communication not performed with tester	8 to 15 V
IND (T14-6) - GND (T14-11)	Tire pressure warning light output signal	IG switch ON: 1. Tire pressure warning light ON 2. Tire pressure warning light OFF	1. 8 V or more 2. Below 0.5 V
RDA (T14-7) - GND (T14-11)	Tire pressure warning antenna and receiver input signal	IG switch ON and tire pressure warning antenna and receiver not connected	9 to 16 V
RF5V (T14-8) - GND (T14-11)	Tire pressure warning antenna and receiver power source	IG switch ON	4.5 to 5.5 V
CALSW (T14-10) - GND (T14-11)	Tire pressure warning reset switch	IG switch ON: 1. Tire pressure warning reset switch ON 2. Tire pressure warning reset switch OFF	1. Below 0.5 V 2. 8 to 15 V
GND (T14-11) - Body ground	Ground	Always	Below 1 Ω
TC (T14-12) - GND (T14-11)	TC terminal	Terminal TC not connected	8 to 15 V
GND2 (T14-16) - GND (T14-11)	Tire pressure warning antenna and receiver ground	Always	Below 1 Ω

1. Waveform 1

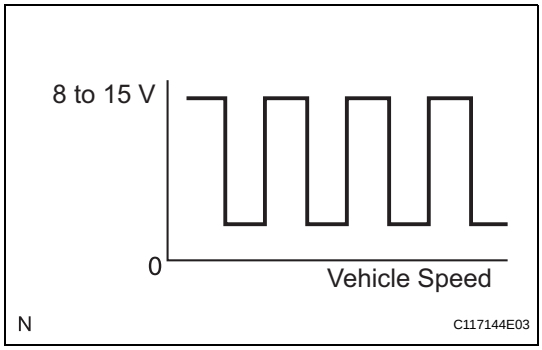

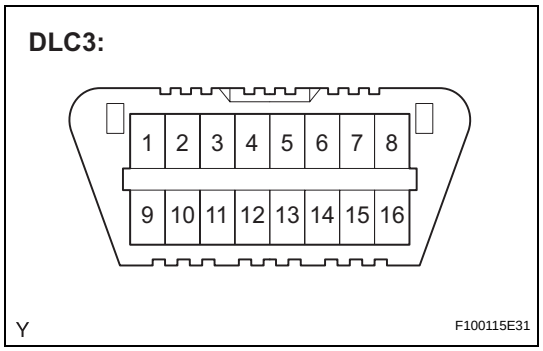

DIAGNOSIS SYSTEM

1. CHECK BATTERY VOLTAGE

Standard voltage:

11 to 14 V

If the voltage is below 11 V, recharge the battery before proceeding.

2. CHECK DLC3

(a) The vehicle's tire pressure warning ECU conforms to ISO 14230 and ISO 9141-2 for communication protocol. The terminals arrangement of the DLC3 complies with ISO 15031-3 and meets the ISO 14230 and ISO 9141-2 formats.

Verify the conditions listed in the table below

Terminal No. (Symbol)	Connection/ Voltage or Resistance	Condition
7 (SIL)	Bus + Line/ Pulse generation	During transmission
4 (CG)	Chassis Ground to Body Ground/ 1 Ω or less	Always
16 (BAT)	Battery Positive to Body Ground/ 11 to 14 V	Always

HINT:

If the intelligent tester display shows a communication error message when the cable of the intelligent tester is connected to the DLC3, the ignition switch is turned ON and the tester is turned ON, there is a problem on the vehicle side or tester side.

- If communication is normal when the tester is connected to another vehicle, inspect the DLC3 of the original vehicle.
- If communication is still not possible when the tester is connected to another vehicle, the problem may be in the tester itself. Consult the Service Department listed in the tester operator's manual.

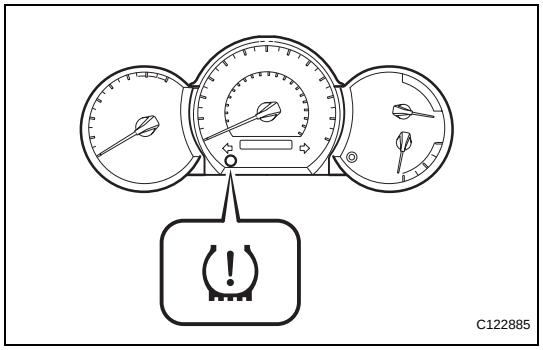

3. DIAGNOSIS SYSTEM

(a) Warning light

(1) When there is a problem in the tire pressure warning system, the tire pressure warning light blinks at 0.5 second intervals (1Hz).

NOTICE:

When the malfunction has been repaired, the tire pressure warning light does not come on.

(b) Normal mode

(1) DTCs are stored in the tire pressure warning ECU and can be read by observing the blinking patterns of the tire pressure warning light or by using the intelligent tester (See page TW-26).

TW

(c) Test mode
(1) By switching from normal mode to test mode (signal check), the tire pressure warning receiver, each tire pressure warning valve and transmitter and vehicle speed sensor can be inspected (See page TW-17).

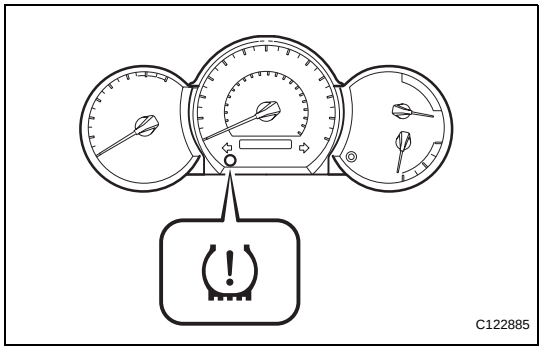

4. CHECK WARNING LIGHT

(a) Turn the ignition switch to the ON position.
(b) Check that the tire pressure warning light comes on for 3 seconds. If the warning light does not come on for 3 seconds, troubleshoot the tire pressure warning light circuit.

Trouble Area	See Procedure
Tire pressure warning light circuit	TW-61

5. TIRE PRESSURE WARNING LIGHT CHART

HINT:
The table below indicates the state of the tire pressure warning light after the ignition switch is turned on.

Condition	Immediately after IG turned ON	Always						
	Comes on for 3 seconds	Goes off	Comes on	Blinks (*1)	Blinks (*2)	Blinks (*3)	Outputs DTC	Comes on 3 times (1 second intervals)
Normal	○	○	-	-	-	-	-	-
Low tire pressure	○	-	○	-	-	-	-	-
System failure	○	-	-	○	-	-	-	-
ECU connector connection poor	-	-	○	-	-	-	-	-
TC grounded (no DTCs output)	○	-	-	-	○	-	-	-
TC grounded (DTCs outout)	○	-	-	-	-	-	○	-
Test mode	○	-	-	-	-	○	-	-
Entering initialization	○	-	-	-	-	-	-	○

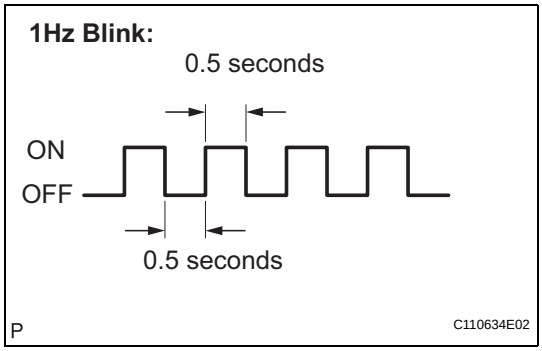

*1: Blinks at 0.5 second intervals (1Hz).

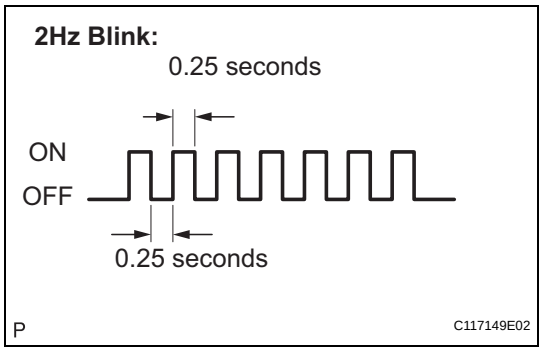

*2: Blinks at 0.25 second intervals (2Hz).

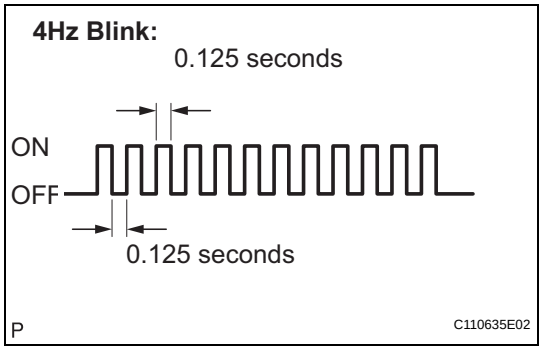

*3: Blinks at 0.125 second intervals (4Hz).

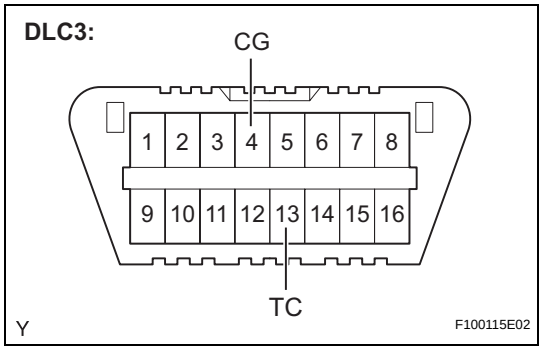

DTC CHECK / CLEAR

1. CHECK DTC (USING SST CHECK WIRE)

(a) Check DTCs.

(1) Using SST, connect terminals TC and CG of the DLC3.

SST 09843-18040

(2) Turn the ignition switch to the ON position.

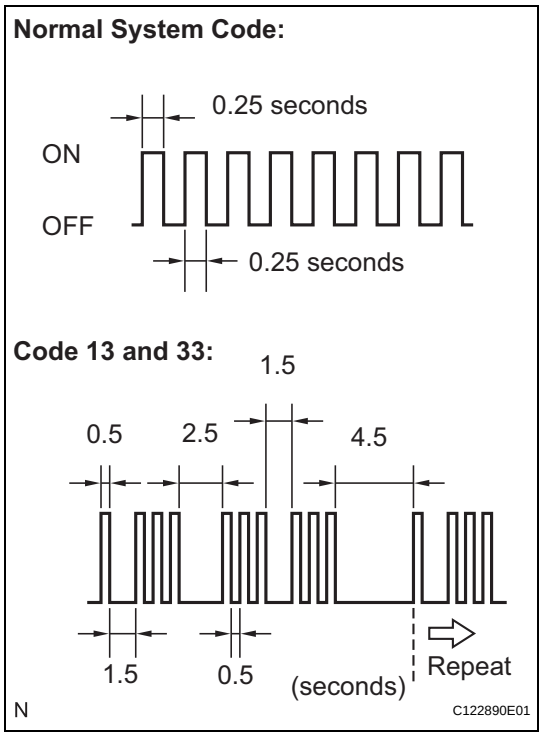

(3) Read and record any DTCs indicated by the tire pressure warning light in the combination meter. Refer to the illustration for examples of the normal system code and DTCs 13 and 33.

TW

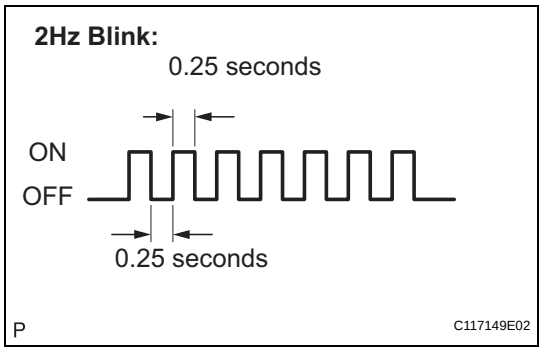

*2: Blinks at 0.25 second intervals (2Hz).

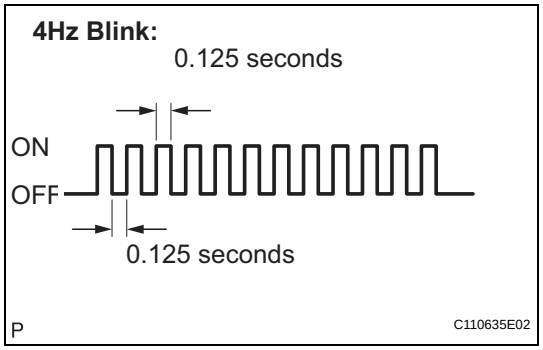

*3: Blinks at 0.125 second intervals (4Hz).

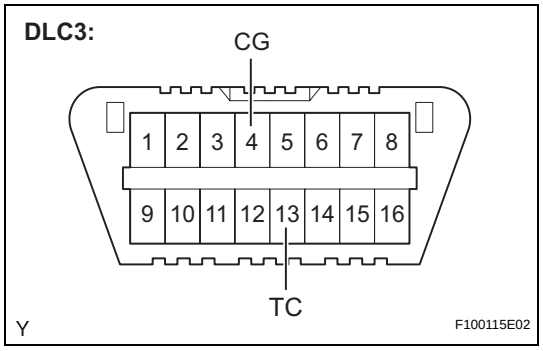

DTC CHECK / CLEAR

1. CHECK DTC (USING SST CHECK WIRE)

(a) Check DTCs.

(1) Using SST, connect terminals TC and CG of the DLC3.

SST 09843-18040

(2) Turn the ignition switch to the ON position.

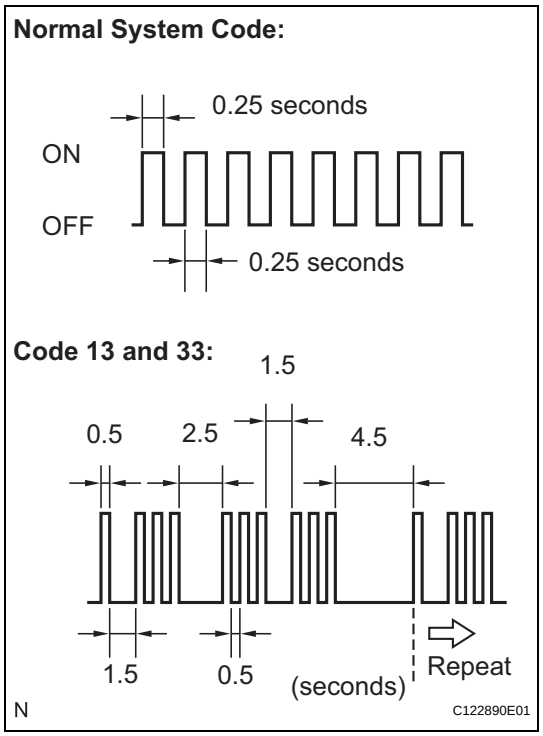

(3) Read and record any DTCs indicated by the tire pressure warning light in the combination meter. Refer to the illustration for examples of the normal system code and DTCs 13 and 33.

TW

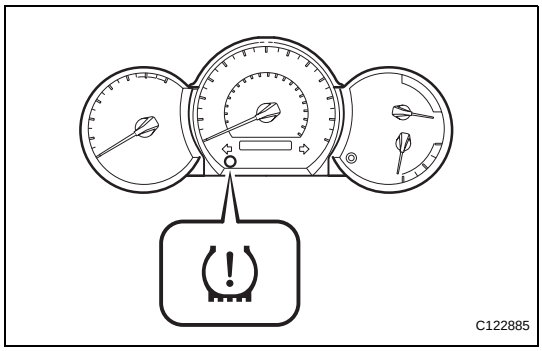

HINT:

- If the tire pressure warning light does not indicate any DTCs or the normal system code, inspect the tire pressure warning light circuit and TC and CG terminal circuit.

Trouble Area	See Procedure
Tire pressure warning light circuit	TW-61
TC and CG terminal circuit	TW-66

- If 2 or more malfunctions are indicated simultaneously, the lowest numbered DTC is displayed first.

(4) Refer to the Diagnostic Trouble Code Chart (See page TW-30) for DTC information.

(5) After completing the check, turn the ignition switch off and remove the SST from the DLC3.
SST 09843-18040

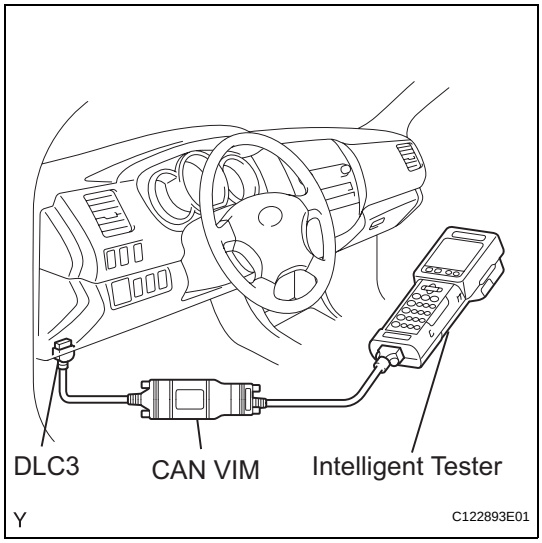

2. CHECK DTC (USING INTELLIGENT TESTER)

(a) Check DTCs.

(1) Connect the intelligent tester with CAN VIM to the DLC3.

(2) Turn the ignition switch to the ON position and turn the tester ON.

(3) Read the DTCs by following the prompts on the tester screen.
HINT:
Refer to the intelligent tester operator's manual for further details.

3. CLEAR DTC

HINT:
After repairing the malfunctions, clear the DTCs.

(a) Connect the intelligent tester with CAN VIM to the DLC3.

(b) Turn the ignition switch to the ON position.

(c) Clear the DTCs by following the prompts on the tester screen.
HINT:
Refer to the intelligent tester operator's manual for further details.

4. IDENTIFY TIRE PRESSURE WARNING VALVE AND TRANSMITTER CORRESPONDING TO DTC

(a) Set the tire pressures to the appropriate specified values.

Tire Size	Front Wheel kPa (kgf/cm^2, psi)	Rear Wheel kPa (kgf/cm^2, psi)	Spare Wheel kPa (kgf/cm^2, psi)
P215/70 R15	200 (2.0, 29)	220 (2.2, 32)	220 (2.2, 32)
P255/45 R18	240 (2.4, 34)	240 (2.4, 34)	240 (2.4, 34)
P245/75 R16	200 (2.0, 29)	200 (2.0, 29)	200 (2.0, 29)
P265/70 R16 (OPR)*	200 (2.0, 29)	220 (2.2, 32)	220 (2.2, 32)
P265/65 R17	200 (2.0, 29)	200 (2.0, 29)	200 (2.0, 29)

*: Used on Off Road Package Models

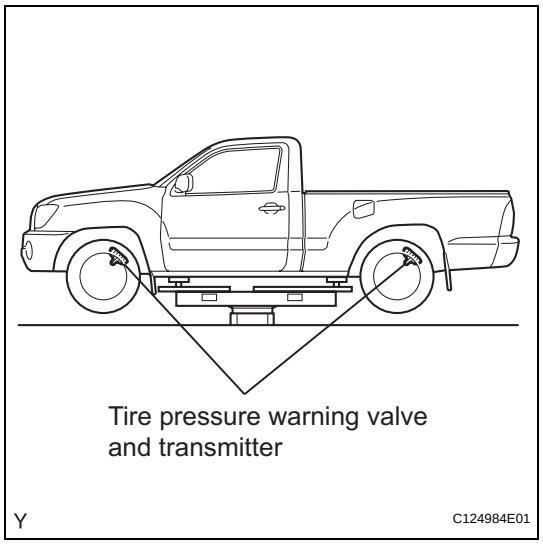

(b) Jack up the vehicle.
(c) Select TIREPRESS by following the prompts displayed on the intelligent tester.

Item	Measurement Item/ Range (Display)
TIREPRESS1	ID1 tire inflation pressure/ minimum: 0 kPa (0 kgf/cm^2, 0 psi) maximum: 637.5 kPa (6.5 kgf/cm^2, 92.5 psi)
TIREPRESS2	ID2 tire inflation pressure/ minimum: 0 kPa (0 kgf/cm^2, 0 psi) maximum: 637.5 kPa (6.5 kgf/cm^2, 92.5 psi)
TIREPRESS3	ID3 tire inflation pressure/ minimum: 0 kPa (0 kgf/cm^2, 0 psi) maximum: 637.5 kPa (6.5 kgf/cm^2, 92.5 psi)
TIREPRESS4	ID4 tire inflation pressure/ minimum: 0 kPa (0 kgf/cm^2, 0 psi) maximum: 637.5 kPa (6.5 kgf/cm^2, 92.5 psi)
TIREPRESS5	ID5 tire inflation pressure/ minimum: 0 kPa (0 kgf/cm^2, 0 psi) maximum: 637.5 kPa (6.5 kgf/cm^2, 92.5 psi)

(d) Rapidly release the tire pressure from any tire to 40 kPa (0.4 kgf/cm^2, 5.8 psi)/ 30 seconds or more.
(e) Check the DATA LIST.

Result

Display	Detection Condition
One of TIREPRESS data (ID1 to ID5) changes	**Normal**
None of TIREPRESS data change	**Transmitter corresponding to DTC**

HINT:
- When none of the TIREPRESS data (IDs 1 to 5) change, rotate the tires 90 to 270 degrees and recheck.
- When the transmitter is normal, record the tire location and the transmitter ID.

(f) Repeat this procedure to identify the malfunctioning tire pressure warning valve and transmitter.

DATA LIST / ACTIVE TEST

1. DATA LIST

(a) Connect the intelligent tester to the DLC3.
(b) Turn the ignition switch to the ON position and turn the tester ON.
(c) Read DATA LIST by following the prompts on the tester screen.

Item	Measurement Item/ Range (Display)	Normal Condition	Diagnostic Note
MODE STATUS	Tire pressure warning system mode/ NORMAL, REG 2nd, REG M or TEST	NORMAL: Normal mode TEST: Test mode	-
TIRE	Registered ID number of tire/ 0 or 1, 2, 3, 4, 5	0 to 5 displayed	-
INITIAL SW	Tire pressure warning reset switch/ ON, OFF	ON: Switch ON OFF: Switch OFF	• Tire pressure warning reset switch • Wire harness or connector • Tire pressure warning ECU
VEHICLE SPEED	Vehicle speed reading/ minimum: 0 km/h (0 mph) maximum: 255 km/h (158 mph)	Actual vehicle speed	• Speed indicated on combination meter • Tire pressure warning ECU
REGIT ID1 CODE	Registered ID1 code/ minimum: 0 maximum: FFFFFFF	ID No. of registered transmitter ID1 displayed	Registration of transmitter ID
REGIT ID2 CODE	Registered ID2 code/ minimum: 0 maximum: FFFFFFF	ID No. of registered transmitter ID2 displayed	Registration of transmitter ID
REGIT ID3 CODE	Registered ID3 code/ minimum: 0 maximum: FFFFFFF	ID No. of registered transmitter ID3 displayed	Registration of transmitter ID
REGIT ID4 CODE	Registered ID4 code/ minimum: 0 maximum: FFFFFFF	ID No. of registered transmitter ID4 displayed	Registration of transmitter ID
REGIT ID5 CODE	Registered ID5 code/ minimum: 0 maximum: FFFFFFF	ID No. of registered transmitter ID5 displayed	Registration of transmitter ID
TRANS STATUS	ID code transmission status/ FINISH or NOW	FINISH or NOW	-
TIREPRESS1	ID1 tire pressure/ minimum: 0 kPa (0 kgf/cm^2, 0 psi) maximum: 637.5 kPa (6.5 kgf/cm^2, 92.5 psi)	Actual tire pressure	• Tire pressure warning valve and transmitter • Wire harness or connector • Tire pressure warning antenna and receiver • Tire pressure warning ECU
TIREPRESS2	ID2 tire pressure/ minimum: 0 kPa (0 kgf/cm^2, 0 psi) maximum: 637.5 kPa (6.5 kgf/cm^2, 92.5 psi)	Actual tire pressure	• Tire pressure warning valve and transmitter • Wire harness or connector • Tire pressure warning antenna and receiver • Tire pressure warning ECU
TIREPRESS3	ID3 tire pressure/ minimum: 0 kPa (0 kgf/cm^2, 0 psi) maximum: 637.5 kPa (6.5 kgf/cm^2, 92.5 psi)	Actual tire pressure	• Tire pressure warning valve and transmitter • Wire harness or connector • Tire pressure warning antenna and receiver • Tire pressure warning ECU

Item	Measurement Item/ Range (Display)	Normal Condition	Diagnostic Note
TIREPRESS4	ID4 tire pressure/ minimum: 0 kPa (0 kgf/cm^2, 0 psi) maximum: 637.5 kPa (6.5 kgf/ cm^2, 92.5 psi)	Actual tire pressure	• Tire pressure warning valve and transmitter • Wire harness or connector • Tire pressure warning antenna and receiver • Tire pressure warning ECU
TIREPRESS5	ID5 tire pressure/ minimum: 0 kPa (0 kgf/cm^2, 0 psi) maximum: 637.5 kPa (6.5 kgf/ cm^2, 92.5 psi)	Actual tire pressure	• Tire pressure warning valve and transmitter • Wire harness or connector • Tire pressure warning antenna and receiver • Tire pressure warning ECU
TIRE TEMP1	ID1 temperature in tire/ minimum: - 40 °C (- 40 °F) maximum: 120 °C (248 °F)	Actual internal tire temperature	• Tire pressure warning valve and transmitter • Tire pressure warning ECU
TIRE TEMP2	ID2 temperature in tire/ minimum: - 40 °C (- 40 °F) maximum: 120 °C (248 °F)	Actual internal tire temperature	• Tire pressure warning valve and transmitter • Tire pressure warning ECU
TIRE TEMP3	ID3 temperature in tire/ minimum: - 40 °C (- 40 °F) maximum: 120 °C (248 °F)	Actual internal tire temperature	• Tire pressure warning valve and transmitter • Tire pressure warning ECU
TIRE TEMP4	ID4 temperature in tire/ minimum: - 40 °C (- 40 °F) maximum: 120 °C (248 °F)	Actual internal tire temperature	• Tire pressure warning valve and transmitter • Tire pressure warning ECU
TIRE TEMP5	ID5 temperature in tire/ minimum: - 40 °C (- 40 °F) maximum: 120 °C (248 °F)	Actual internal tire temperature	• Tire pressure warning valve and transmitter • Tire pressure warning ECU
BATT VOLT1	ID1 battery voltage/ OVER or LESS	OVER	• Tire pressure warning valve and transmitter • Tire pressure warning ECU
BATT VOLT2	ID2 battery voltage/ OVER or LESS	OVER	• Tire pressure warning valve and transmitter • Tire pressure warning ECU
BATT VOLT3	ID3 battery voltage/ OVER or LESS	OVER	• Tire pressure warning valve and transmitter • Tire pressure warning ECU
BATT VOLT4	ID4 battery voltage/ OVER or LESS	OVER	• Tire pressure warning valve and transmitter • Tire pressure warning ECU
BATT VOLT5	ID5 battery voltage/ OVER or LESS	OVER	• Tire pressure warning valve and transmitter • Tire pressure warning ECU
INIT THRESHOLD1	ID1 initial low-pressure threshold minimum: 0 kPa (0 kgf/cm^2, 0 psi) maximum: 637.5 kPa (6.5 kgf/ cm^2, 92.5 psi)	Threshold pressure after initialization	-
INIT THRESHOLD2	ID2 initial low-pressure threshold minimum: 0 kPa (0 kgf/cm^2, 0 psi) maximum: 637.5 kPa (6.5 kgf/ cm^2, 92.5 psi)	Threshold pressure after initialization	-
INIT THRESHOLD3	ID3 initial low-pressure threshold minimum: 0 kPa (0 kgf/cm^2, 0 psi) maximum: 637.5 kPa (6.5 kgf/ cm^2, 92.5 psi)	Threshold pressure after initialization	-
INIT THRESHOLD4	ID4 initial low-pressure threshold minimum: 0 kPa (0 kgf/cm^2, 0 psi) maximum: 637.5 kPa (6.5 kgf/ cm^2, 92.5 psi)	Threshold pressure after initialization	-

Item	Measurement Item/ Range (Display)	Normal Condition	Diagnostic Note
INIT THRESHOLD5	ID5 initial low-pressure threshold minimum: 0 kPa (0 kgf/cm^2, 0 psi) maximum: 637.5 kPa (6.5 kgf/cm^2, 92.5 psi)	Threshold pressure after initialization	-
#CODES	Number of DTC recorded/ minimum: 0 maximum: 255	Minimum: 0 Maximum: 255	-

DIAGNOSTIC TROUBLE CODE CHART

HINT:
If a malfunction code is displayed during the DTC check, inspect the circuit relevant to that code. For details of each code, refer to the page listed under "See page" in the table below.

DTC chart of Tire Pressure Warning

DTC No.	Detection Item	Trouble Area	See page
C2111/11	Transmitter ID1 Operation Stop	• Tire pressure warning valve and transmitter (Forced transmission of transmitter ID) • Tire pressure warning ECU	TW-33
C2112/12	Transmitter ID2 Operation Stop	• Tire pressure warning valve and transmitter (Forced transmission of transmitter ID) • Tire pressure warning ECU	TW-33
C2113/13	Transmitter ID3 Operation Stop	• Tire pressure warning valve and transmitter (Forced transmission of transmitter ID) • Tire pressure warning ECU	TW-33
C2114/14	Transmitter ID4 Operation Stop	• Tire pressure warning valve and transmitter (Forced transmission of transmitter ID) • Tire pressure warning ECU	TW-33
C2115/15	Transmitter ID5 Operation Stop	• Tire pressure warning valve and transmitter (Forced transmission of transmitter ID) • Tire pressure warning ECU	TW-33
C2121/21	No Signal from Transmitter ID1	• Tire pressure warning valve and transmitter • Tire pressure warning antenna and receiver • Tire pressure warning ECU	TW-37
C2122/22	No Signal from Transmitter ID2	• Tire pressure warning valve and transmitter • Tire pressure warning antenna and receiver • Tire pressure warning ECU	TW-37
C2123/23	No Signal from Transmitter ID3	• Tire pressure warning valve and transmitter • Tire pressure warning antenna and receiver • Tire pressure warning ECU	TW-37
C2124/24	No Signal from Transmitter ID4	• Tire pressure warning valve and transmitter • Tire pressure warning antenna and receiver • Tire pressure warning ECU	TW-37
C2125/25	No Signal from Transmitter ID5	• Tire pressure warning valve and transmitter • Tire pressure warning antenna and receiver • Tire pressure warning ECU	TW-37
C2141/41	Transmitter ID1 Error	• Tire pressure warning valve and transmitter	TW-43
C2142/42	Transmitter ID2 Error	• Tire pressure warning valve and transmitter	TW-43

DTC No.	Detection Item	Trouble Area	See page
C2143/43	Transmitter ID3 Error	• Tire pressure warning valve and transmitter	TW-43
C2144/44	Transmitter ID4 Error	• Tire pressure warning valve and transmitter	TW-43
C2145/45	Transmitter ID5 Error	• Tire pressure warning valve and transmitter	TW-43
C2165/65	Abnormal Temperature Inside ID1 Tire	• Tire pressure warning valve and transmitter • Tire	TW-46
C2166/66	Abnormal Temperature Inside ID2 Tire	• Tire pressure warning valve and transmitter • Tire	TW-46
C2167/67	Abnormal Temperature Inside ID3 Tire	• Tire pressure warning valve and transmitter • Tire	TW-46
C2168/68	Abnormal Temperature Inside ID4 Tire	• Tire pressure warning valve and transmitter • Tire	TW-46
C2169/69	Abnormal Temperature Inside ID5 Tire	• Tire pressure warning valve and transmitter • Tire	TW-46
C2171/71	Transmitter ID not Registered	• Tire pressure warning ECU • Transmitter ID registration condition	TW-49
C2176/76	Receiver Error	• Tire pressure warning antenna and receiver • Tire pressure warning ECU • Wire harness or connector	TW-51
C2177/77	Initialization not Completed	• Tire pressure warning valve and transmitter • Tire pressure warning ECU	TW-54
C2181/81	Transmitter ID1 not Received (Test Mode DTC)	• Tire pressure warning antenna and receiver • Tire pressure warning valve and transmitter • Tire pressure warning ECU • Wire harness or connector	TW-37
C2182/82	Transmitter ID2 not Received (Test Mode DTC)	• Tire pressure warning antenna and receiver • Tire pressure warning valve and transmitter • Tire pressure warning ECU • Wire harness or connector	TW-37
C2183/83	Transmitter ID3 not Received (Test Mode DTC)	• Tire pressure warning antenna and receiver • Tire pressure warning valve and transmitter • Tire pressure warning ECU • Wire harness or connector	TW-37
C2184/84	Transmitter ID4 not Received (Test Mode DTC)	• Tire pressure warning antenna and receiver • Tire pressure warning valve and transmitter • Tire pressure warning ECU • Wire harness or connector	TW-37
C2185/85	Transmitter ID5 not Received (Test Mode DTC)	• Tire pressure warning antenna and receiver • Tire pressure warning valve and transmitter • Tire pressure warning ECU • Wire harness or connector	TW-37

DTC No.	Detection Item	Trouble Area	See page
C2191/91	Vehicle Speed Signal Error (Test Mode DTC)	• Vehicle speed sensor • Tire pressure warning ECU • Combination meter • Wire harness	TW-55

TEST MODE PROCEDURE

1. TEST MODE PROCEDURE (for Using a Intelligent Tester)

HINT:

- If the ignition switch is turned from the ON to the ACC or LOCK position during test mode, DTCs related to the signal check function will be erased.
- During test mode, the skid control ECU records all DTCs related to the signal check function. By performing the signal check, the codes are erased if normality is confirmed. The codes left over are the codes where an abnormality was found.

(a) Turn the ignition switch to OFF.

(b) Check that the steering wheel is in the straight-ahead position.

(c) A/T: Check that the shift lever is in the P position and apply the parking brake.
M/T: Check that the shift lever is in neutral and apply the parking brake.

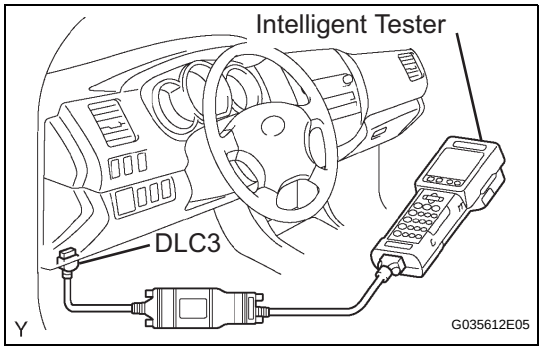

(d) Connect the intelligent tester to the DLC3.

(e) Turn the ignition switch to the ON position.

(f) Switch the ECU to test mode using the intelligent tester.
Select the following menu items: DIAGNOSIS / OBD/MOBD / select vehicle / ABS/VSC / SIGNAL CHECK.

BC

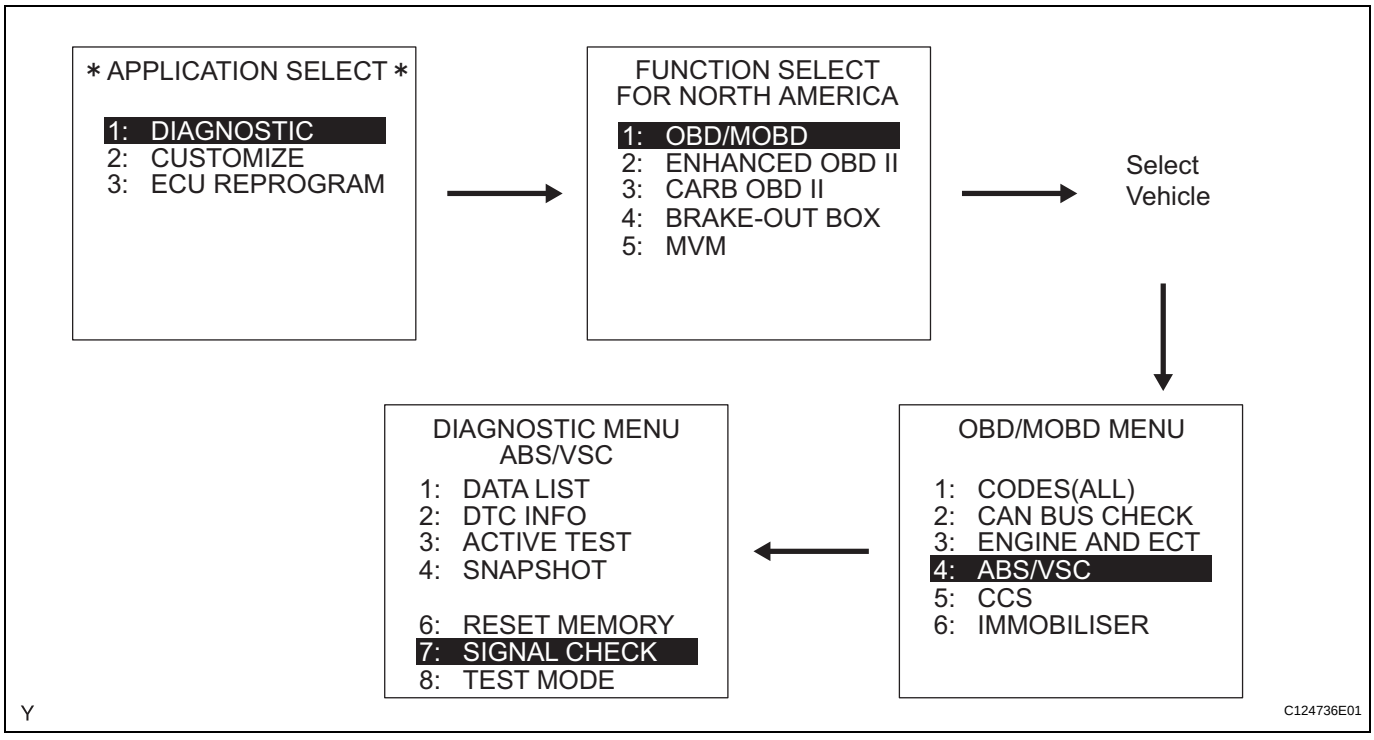

Blinking pattern in TEST MODE:

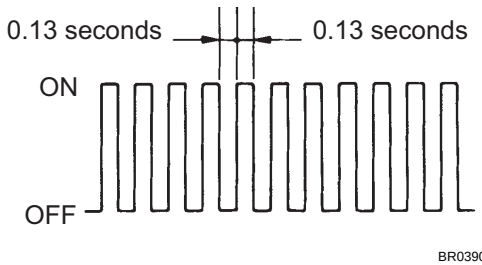

(g) Check that the ABS warning light blinks as shown in the illustration.
HINT:
If the ABS warning light does not blink, inspect the ABS warning light circuit and the TS and CG terminal circuit.

Trouble Areas	See Page
ABS warning light circuit	BC-64 BC-68
TS and CG terminal circuit	BC-78

(h) Start the engine.
(i) Active the ABS sensor (deceleration sensor, 4WD detection switch, L4 detection switch and speed sensor) in test mode (SIGNAL CHECK) using intelligent tester.

2. TEST MODE PROCEDURE (for Using a SST Check Wire)

HINT:
- If the ignition switch is turned from the ON to the ACC or LOCK position during test mode, DTCs related to the signal check function will be erased.
- During test mode, the skid control ECU records all DTCs related to the signal check function. By performing the signal check, the codes are erased if normality is confirmed. The codes left over are the codes where an abnormality was found.

(a) Turn the ignition switch to OFF.
(b) Check that the steering wheel is in the straight-ahead position.
(c) A/T: Check that the shift lever is in the P position and apply the parking brake.
M/T: Check that the shift lever is in neutral and apply the parking brake.

DLC3:

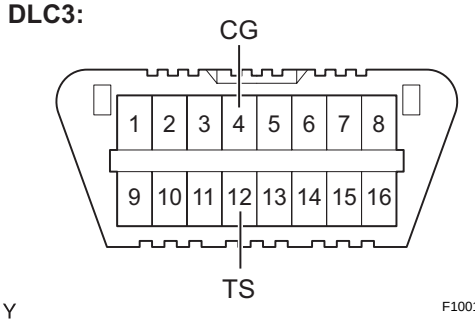

(d) Using SST, connect terminals TS and CG of the DLC3.
SST 09843-18040
(e) Turn the ignition switch to the ON position.

BC

Blinking pattern in TEST MODE:

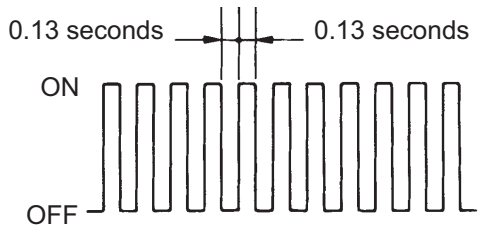

(f) Check that the ABS warning light is blinking as shown in the illustration.
HINT:
If the ABS warning light does not blink, inspect the ABS warning light circuit and TS and CG terminal circuit.

Trouble Areas	See Page
ABS warning light circuit	BC-64 BC-68
TS and CG terminal circuit	BC-78

(g) Start the engine.
(h) Activate the ABS sensor (deceleration sensor, 4WD detection switch, L4 detection switch and speed sensor) in test mode (SIGNAL CHECK) using a check wire.

Blinking pattern in TEST MODE:

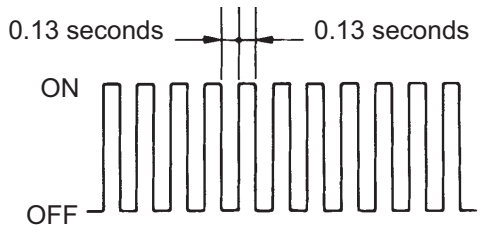

3. DECELERATION SENSOR SIGNAL CHECK (for 4WD and Pre-runner)

(a) Check that the ABS warning light is blinking as shown in the illustration.
(b) Keep the vehicle stationary on a level surface for 1 second or more.

Blinking pattern in TEST MODE:

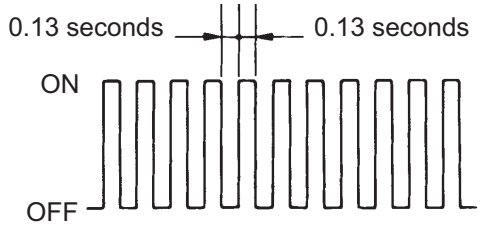

4. 4WD DETECTION SWITCH SIGNAL CHECK (for 4WD)

(a) Check that the ABS warning light is blinking as shown in the illustration.
(b) Check the transfer indicator switch (4WD position).
(1) Push the 4 wheel drive control switch on to put the vehicle in 4WD mode.
(2) Push the 4 wheel drive control switch off to put the vehicle in 2WD mode.

Blinking pattern in TEST MODE:

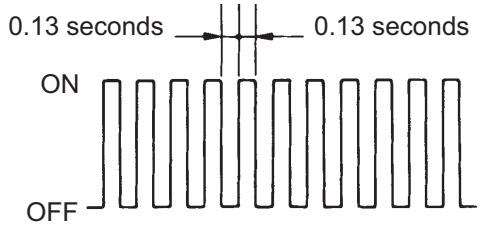

5. L4 DETECTION SWITCH SIGNAL CHECK (for 4WD)

(a) Check that the ABS warning light is blinking as shown in the illustration.
(b) Check the transfer indicator switch (L4 position).
(1) Turn the 4 wheel drive control switch to the L position to put the vehicle in L4 mode.
(2) Turn the 4 wheel drive control switch to the H position to put the vehicle in H4 mode.
HINT:
Move the vehicle either a little forward or a little backward to engage the L4 position.

Blinking pattern in TEST MODE:

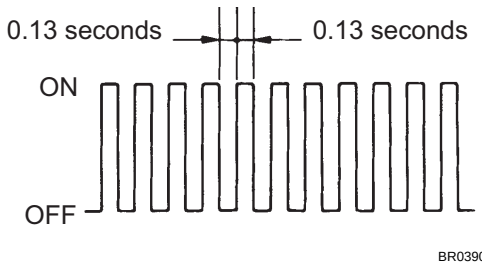

6. SPEED SENSOR CHECK

(a) Check that the ABS warning light is blinking as shown in the illustration.

(b) Check thee speed sensor signal.

(1) Drive the vehicle straight forward at a speed of 56 mph (90 km/h) or more.

(2) Drive the vehicle straight rearward at a speed of 1.9 mph (3 km/h) or more for 1 second or more.

(3) Check that the ABS warning light goes off.

HINT:

The sensor check may not be completed if the vehicle has its wheels spun or its steering wheel turned during this check.

(c) Stop the vehicle.

NOTICE:

- **Before performing the speed sensor signal check, complete the deceleration sensor, 4WD detection switch and L4 detection switch signal checks.**
- **The speed sensor signal check may not be completed if the speed sensor signal check is started while turning the steering wheel or spinning the wheels.**
- **After the ABS warning light goes off, if the vehicle speed exceeds 28 mph (45 km/h), a signal check code will be stored again. Decelerate or stop the vehicle before the speed reaches 28 mph (45 km/h).**
- **If the signal check has not been completed, the ABS warning light blinks while driving and the ABS system does not operate.**

HINT:

When the signal check has been completed, the ABS warning light goes off while driving and blinks in test mode while stationary.

7. READ DTC OF ABS SENSOR (for Using a Intelligent Tester)

(a) Read the DTC(s) by following the tester screen.

HINT:

- Refer to the intelligent tester operator's manual for further details.
- See the list of DTC.

DLC3:

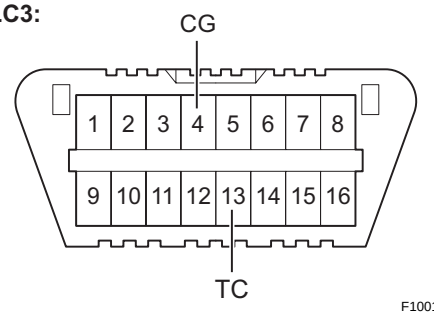

8. READ DTC OF ABS SENSOR (for Using a SST Check Wire)

(a) Using SST, connect terminals TC and CG of the DLC3.

SST 09843-18040

(b) Turn the ignition switch to the ON position.

(c) Read the number of blinks of the ABS warning light.

HINT:

- See the list of DTC.

BC

Normal System Code:

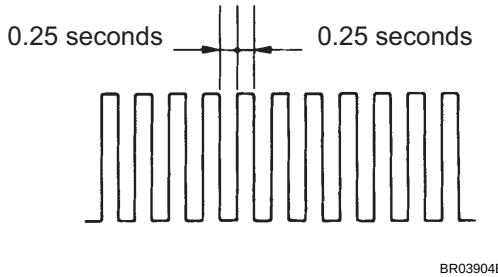

- If every sensor is normal, the normal code is displayed (A cycle of 0.25 seconds ON and 0.25 seconds OFF is repeated).
- If 2 or more malfunctions are detected at the same time, the lowest numbered DTC is displayed first.

Example: Indication of DTCs 72 and 76

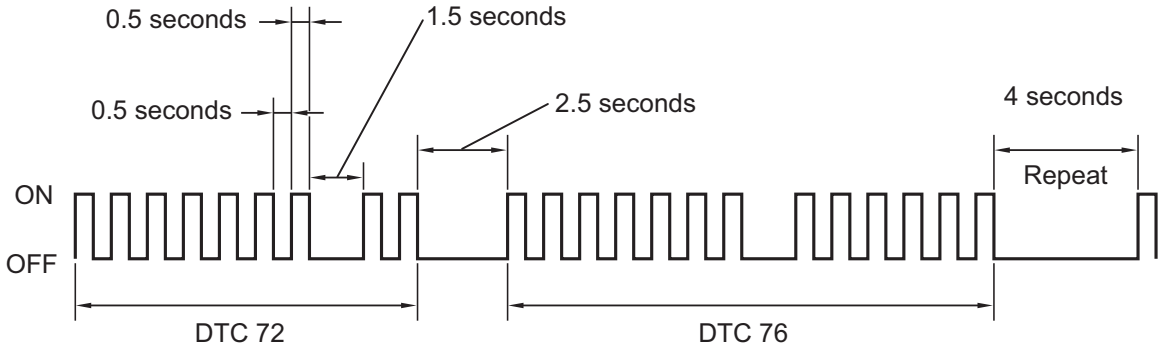

(d) After the check, disconnect the SST from terminals TC and CG of the DLC3.

(e) Turn the ignition switch to OFF.

9. DTC OF SIGNAL CHECK FUNCTION

DTC No.	Diagnosis	Trouble Areas
C1271/71	Low output voltage of right front speed sensor	• Right front speed sensor • Sensor installation • Speed sensor rotor
C1272/72	Low output voltage of left front speed sensor	• Left front speed sensor • Sensor installation • Speed sensor rotor
C1273/73	Low output voltage of right rear speed sensor	• Right rear speed sensor • Sensor installation • Speed sensor rotor
C1274/74	Low output voltage of left rear speed sensor	• Left rear speed sensor • Sensor installation • Speed sensor rotor
C1275/75	Abnormal change in output voltage of right front speed sensor	Right front speed sensor rotor
C1276/76	Abnormal change in output voltage of left front speed sensor	Left front speed sensor rotor
C1277/77	Abnormal change in output voltage of right rear speed sensor	Right rear speed sensor rotor
C1278/78	Abnormal change in output voltage of left rear speed sensor	Left rear speed sensor rotor
C1279/79 (*1), (*2)	Deceleration sensor faulty	• Deceleration sensor • Sensor installation
C1282/82 (*2)	Center differential lock position switch malfunction	Transfer indicator switch (4WD position)
C1283/83 (*2)	L4 detection switch malfunction	Transfer indicator switch (L4 position)

(*1): Pre-runner
(*2): 4WD
HINT:
The DTCs in this table are only output in test mode.

PROBLEM SYMPTOMS TABLE

If no DTCs are displayed during the DTC check but the problem still occurs, check the circuits for each problem symptom in the order given in the table below and proceed to the relevant troubleshooting page.

NOTICE:

When replacing the brake actuator or sensor, turn the ignition switch to OFF.

ANTI-LOCK BRAKE SYSTEM

Symptom	Suspected Areas	See Page
ABS does not operate	1. Check DTC reconfirming that normal code output.	BC-16
	2. IG power source circuit	BC-43
	3. Speed sensor circuit	BC-24
	4. Check brake actuator with intelligent tester. If abnormal, check hydraulic circuit for leakage.	BC-299
	5. If symptoms still occur even after above circuits in suspected areas inspected and proved to be normal, replace brake actuator.	BC-300
ABS does not operate efficiently	1. Check DTC reconfirming that normal code output.	BC-16
	2. Speed sensor circuit	BC-24
	3. Stop light switch circuit	BC-55
	4. Check brake actuator with intelligent tester. If abnormal, check hydraulic circuit for leakage.	BC-299
	5. If symptoms still occur even after above circuits in suspected areas inspected and proved to be normal, replace brake actuator.	BC-300
ABS warning light abnormal	1. ABS warning light circuit	BC-64
	2. Skid control ECU (brake actuator)	BC-300
DTC check cannot be performed	1. ABS warning light circuit	BC-64
	2. TC and CG terminal circuit	BC-75
	3. If symptoms still occur even after above circuits in suspected areas inspected and proved to be normal, replace brake actuator.	BC-300
Speed sensor signal check cannot be performed	1. Skid control ECU (brake actuator)	BC-300

TERMINALS OF ECU

1. Terminals of ECU

Skid control ECU:

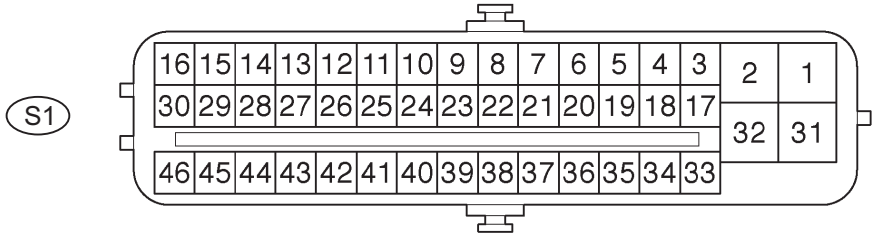

Symbols (Terminals No.)	Terminal Description
GND1 (1)	Skid control ECU ground
+BS (2)	Solenoid valve power supply
GL1 (4) (*1) (*3)	Deceleration sensor signal input
P (6) (*2)	Shift position indicator P signal input
EXI2 (7) (*3)	Rear differential lock detection switch input
GGND (8) (*1) (*3)	Deceleration sensor ground
FL- (9)	Front LH wheel speed signal input
FL+ (10)	Front LH wheel speed sensor power supply
D/G (13)	Diagnosis tester communication line
STP (14)	Stop light switch input
RL+ (15)	Rear LH wheel speed sensor power supply
RL- (16)	Rear LH wheel speed signal input
WA (17)	ABS warning light output
SP1 (18) (*2)	Speed signal output for meter
TS (20)	Sensor diagnosis check input
TC (21)	Diagnosis tester communication line
PKB (23)	Parking brake switch input
EXI (24) (*3)	ADD change over actuator switch input
+BM (31)	Motor relay power supply
GND2 (32)	Skid control ECU ground
N (36) (*2)	Shift position indicator N signal input
VGS (37) (*1) (*3)	Deceleration sensor power supply
EXI4 (38) (*3)	Detection (L4) switch input
FR- (39)	Front RH wheel speed signal input
FR+ (40)	Front RH wheel speed sensor power supply
BRL (43)	Brake warning light input
RR+ (44)	Rear RH wheel speed sensor power supply
RR- (45)	Rear RH wheel speed signal input
IG1 (46)	ECU power supply

BC

HINT:

(*1): Pre-runner

(*2): A/T

(*3): 4WD

2. Terminal Inspection

Disconnect the connector and measure the voltage on the wire harness side.

HINT:

Voltage cannot be measured with the connector connected to the skid control ECU as the connector is water resistant.

Skid Control ECU (harness side connector)

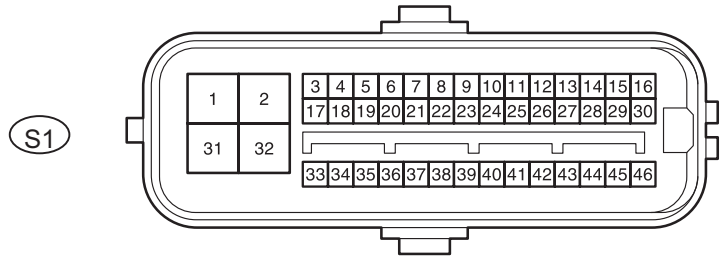

N

C124738E01

Symbols (Terminals No.)	Wiring Color	Terminal Description	Condition	STD Voltage (V)
+BS (2) - GND1 (1)	Y - W-B	Solenoid valve power supply	Always	10 to 14 V
STP (14) - GND1 (1)	L - W-B	Stop light switch input	Stop light switch ON	10 to 14 V
WA (17) - GND1 (1)	O - W-B	ABS warning light output	IG switch ON, ABS warning light ON	4 V or higher
PKB (23) - GND1 (1)	G-Y - W-B	Parking brake switch input	IG switch ON, parking brake switch ON	Below 2.0 V
PKB (23) - GND1 (1)	G-Y - W-B	Parking brake switch input	IG switch ON, parking brake switch OFF	8 to 14 V
+BM (31) - GND2 (32)	R - W-B	Motor relay power supply	Always	10 to 14 V
BRL (43) - GND1 (1)	B-W - W-B	Brake warning light output	IG switch ON, brake warning light ON	4 V or higher
IG (46) - GND1 (1)	LG - W-B	ECU power supply	IG switch ON	10 to 14 V

BC

ABS Warning Light:

USA: ABS

Canada: (ABS)

BRAKE Warning Light:

(BRAKE)

F052120E02

DIAGNOSIS SYSTEM

1. DIAGNOSIS

(a) If the skid control ECU detects a malfunction, the ABS and/or BRAKE warning lights come on in accordance with the trouble area to warn the driver. The table below indicates which lights come on when there is a malfunction in a particular function.

Item/Trouble Area	ABS System	EBD System	Skid Control ECU
ABS Warning light	O	O	O
BRAKE Warning light	-	O	O

2. Terminal Inspection

Disconnect the connector and measure the voltage on the wire harness side.

HINT:

Voltage cannot be measured with the connector connected to the skid control ECU as the connector is water resistant.

Skid Control ECU (harness side connector)

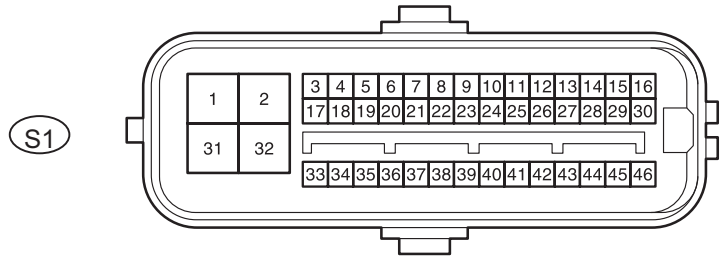

N

C124738E01

Symbols (Terminals No.)	Wiring Color	Terminal Description	Condition	STD Voltage (V)
+BS (2) - GND1 (1)	Y - W-B	Solenoid valve power supply	Always	10 to 14 V
STP (14) - GND1 (1)	L - W-B	Stop light switch input	Stop light switch ON	10 to 14 V
WA (17) - GND1 (1)	O - W-B	ABS warning light output	IG switch ON, ABS warning light ON	4 V or higher
PKB (23) - GND1 (1)	G-Y - W-B	Parking brake switch input	IG switch ON, parking brake switch ON	Below 2.0 V
PKB (23) - GND1 (1)	G-Y - W-B	Parking brake switch input	IG switch ON, parking brake switch OFF	8 to 14 V
+BM (31) - GND2 (32)	R - W-B	Motor relay power supply	Always	10 to 14 V
BRL (43) - GND1 (1)	B-W - W-B	Brake warning light output	IG switch ON, brake warning light ON	4 V or higher
IG (46) - GND1 (1)	LG - W-B	ECU power supply	IG switch ON	10 to 14 V

BC

ABS Warning Light:

USA: ABS

Canada: (ABS)

BRAKE Warning Light:

(BRAKE)

F052120E02

DIAGNOSIS SYSTEM

1. DIAGNOSIS

(a) If the skid control ECU detects a malfunction, the ABS and/or BRAKE warning lights come on in accordance with the trouble area to warn the driver. The table below indicates which lights come on when there is a malfunction in a particular function.

Item/Trouble Area	ABS System	EBD System	Skid Control ECU
ABS Warning light	O	O	O
BRAKE Warning light	-	O	O

○: Light ON
-: Light OFF
HINT:

- The DTCs are simultaneously stored in the memory. The DTCs can be read by connecting the intelligent tester.
- This system has a sensor signal check function (See page BC-7). The DTCs can be read by connecting SST (09843-18043) between terminals TC and CG of the DLC3 and observing the blinking of the ABS warning light, or by connecting a intelligent tester (See page BC-16).

2. WARNING LIGHT CHECK

(a) Release the parking brake.
NOTICE:
When releasing the parking brake, set chocks to hold the vehicle for safety.
HINT:
When the parking brake is applied or the level of the brake fluid is low, the BRAKE warning light comes on.

(b) Check that the ABS warning light and BRAKE warning light come on when the ignition switch is turned on and go off in about 3 seconds.
HINT:
If the warning lights do not illuminate, confirm whether the bulbs have burned out, and also check the wire harness between the skid control ECU and the combination meter.
If the warning light remains on, troubleshoot the effected light circuit by proceeding to the page indicated below:

Trouble Areas	See Page
ABS warning light circuit	BC-64
BRAKE warning light circuit	BC-70

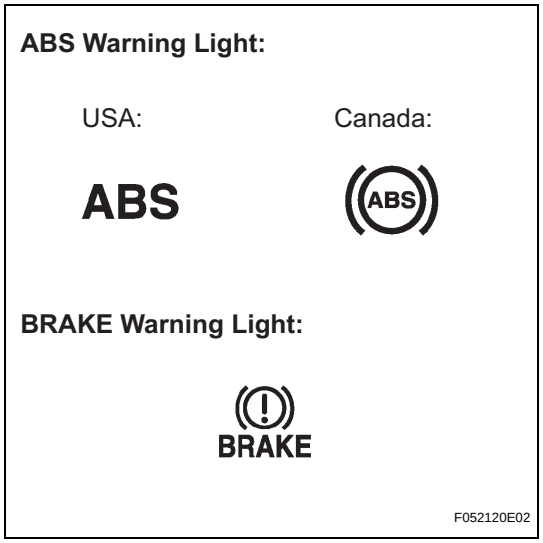

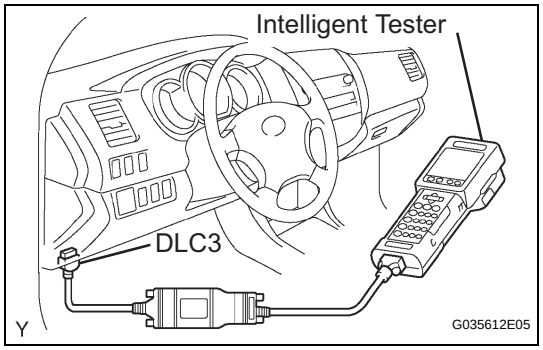

DTC CHECK / CLEAR

1. DTC CHECK / CLEAR (for Using a Intelligent Tester)

(a) Check DTCs.
(1) Connect the intelligent tester to the DLC3.
(2) Turn the ignition switch to the ON position.
(3) Turn the tester ON.
(4) Read the DTCs by following the prompts on the tester screen.

BC

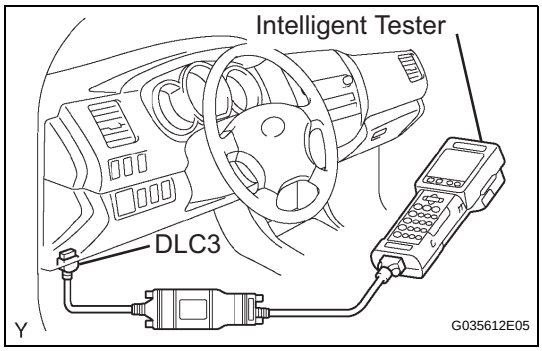

(b) Clear DTCs.
(1) Connect the intelligent tester to the DLC3.
(2) Turn the ignition switch to the ON position.
(3) Operate the intelligent tester to clear the DTCs.
HINT:
Refer to the intelligent tester operator's manual for further details.

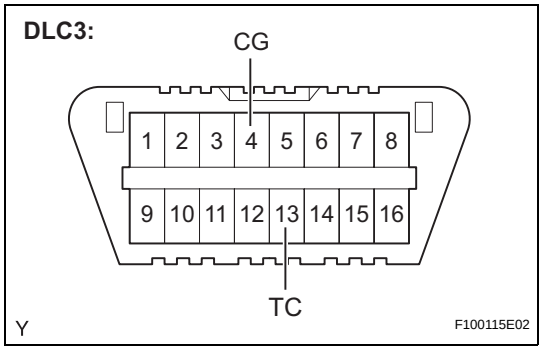

2. DTC CHECK / CLEAR (for Using a SST Check Wire)

(a) Check DTCs.
(1) Using SST, connect terminals TC and CG of the DLC3.
SST 09843-18040
(2) Turn the ignition switch to the ON position.
(3) Read 2-digit DTCs by observing the blinking of the ABS warning light on the combination meter.
HINT:
- If no code appears, inspect the ABS warning light circuit or TC and CG terminal circuit.

Trouble Areas	See Page
ABS warning light circuit	BC-64 BC-68
TC and CG terminal circuit	BC-75

- As an example, the blinking patterns of the normal system indication and DTCs 11 and 21 are shown below.

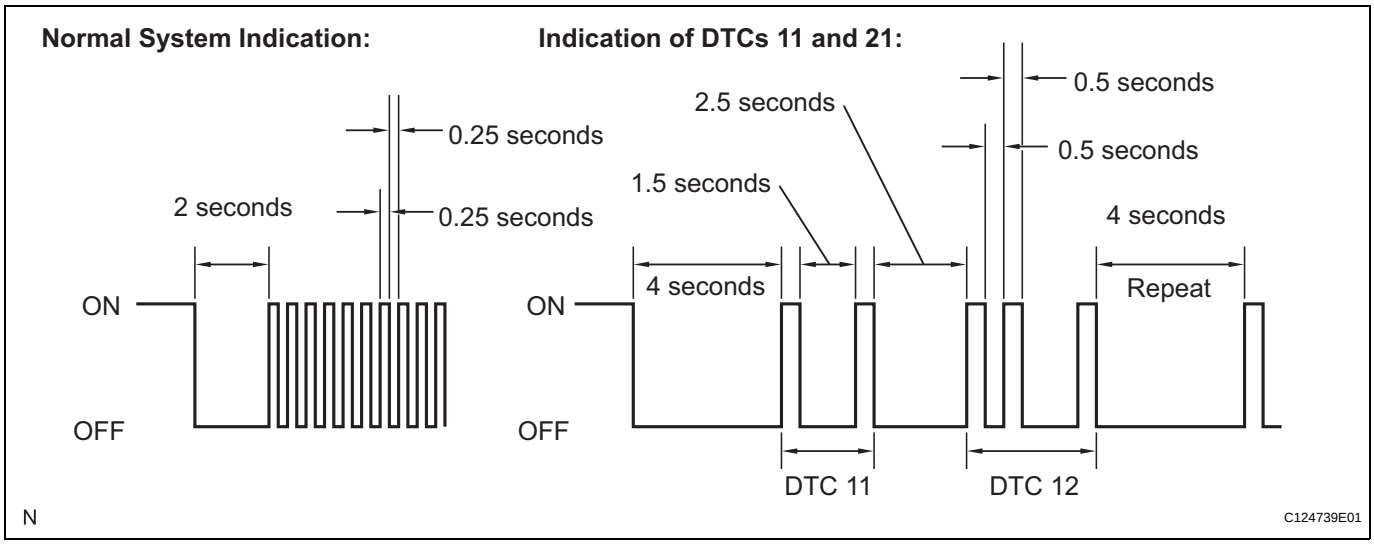

- DTCs are explained in DTC chart (See page BC-22).

BC

(4) After completing the check, disconnect SST from terminals TC and CG of the DLC3, and turn the ignition switch to OFF.
HINT:
If 2 or more malfunctions are detected at the same time, the lowest numbered DTC is displayed first.

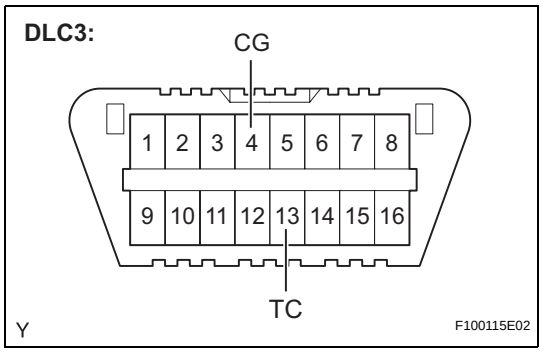

(b) Clear DTCs.
(1) Using SST, connect terminals TC and CG of the DLC3.
(2) Turn the ignition switch to the ON position.
SST 09843-18040

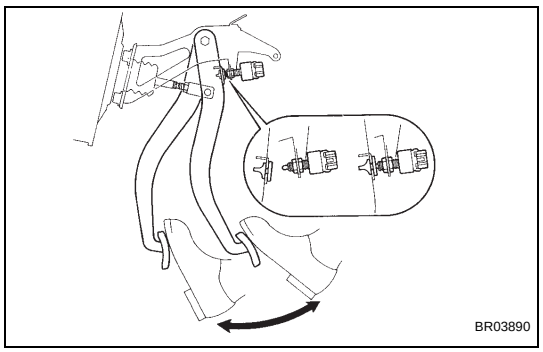

(3) Clear the DTCs stored in the ECU by depressing the brake pedal 8 times or more within 5 seconds.
(4) Check that the warning light blinks in the normal system indication pattern.
(5) Remove SST from the terminals of the DLC3.
(6) Turn the ignition switch to OFF.
HINT:
Clearing the DTCs cannot be performed by removing the battery cable.

3. END OF DTC CHECK / CLEAR

(a) Turn the ignition switch to the ON position.
(b) Check that the ABS warning light goes off within approximately 3 seconds.
(c) Turn the ignition switch to OFF.

BC

FREEZE FRAME DATA

1. FREEZE FRAME DATA

HINT:

- Whenever a DTC is detected or the ABS operates, the skid control ECU stores the current vehicle (sensor) state as freeze frame data.
- The skid control ECU stores the number of times (maximum: 31) the ignition switch has been turned from off to the On position since the last time ABS was activated. However, if the vehicle was stopped or at low speed (4.3 mph (7 km/h) or less), or if a DTC is detected, the skid control ECU will not count the number since then.
- Freeze frame data at the time the ABS operates: The skid control ECU stores and updates data whenever the ABS system operates.
  When the ECU stores data at the time a DTC is detected, the data stored when the ABS operated is erased.
- Freeze frame data at the time a DTC is detected: When the skid control ECU stores data at the time a DTC is detected, no updates will be performed until the data is cleared.

(a) Connect the intelligent tester to the DLC3.
(b) Turn the ignition switch to the ON position.
(c) From the display on the tester, select the "FREEZE FRAME DATA".

Intelligent tester display	Measurement Item	Reference Value
TROUBLE CODE	Freeze DTC	min.: 0, max.: 255
STOP LIGHT SW	Stop light switch signal	Stop light switch ON: ON, OFF: OFF
SYSTEM	System status	ABS activated: ABS Fail safe mode activated: FAIL SF No system activated: NO SYS
#IG ON	Number of operations turning ignition switch to ON after memorizing freeze frame data	0 to 31
VEHICLE SPD	Vehicle speed	min.: 0, max.: 326.4 km/h
G (BACK and FORTH)	Back and Forth G	min.: -1.869, max.: 1.869
SPD GRADE	Vehicle speed grade	min.: -1.869, max.: 1.869
WHEEL DIR FR	Front right wheel direction	Wheel direction BACK: BACK Wheel direction FORWARD: FORWARD
WHEEL DIR FL	Front left wheel direction	Wheel direction BACK: BACK Wheel direction FORWARD: FORWARD
WHEEL DIR RR	Rear right wheel direction	Wheel direction BACK: BACK Wheel direction FORWARD: FORWARD
WHEEL DIR RL	Rear left wheel direction	Wheel direction BACK: BACK Wheel direction FORWARD: FORWARD

FAIL-SAFE CHART

1. FAIL SAFE OPERATION

If there is a problem with any sensor signals or actuator systems, the skid control ECU prohibits the power supply to the brake actuator and prohibits ABS control.
ABS control will be prohibited, but EBD control continues as far as possible. If EBD control is impossible, the brake warning light comes on to warn the driver.

Malfunction	Symptom
ABS system	ABS control prohibited
EBD system	ABS & EBD control prohibited

HINT:
If the ABS system encounters a malfunction, the brake system will operate normally without ABS control.

DATA LIST / ACTIVE TEST

1. DATA LIST

HINT:

By referring to the DATA LIST displayed on the intelligent tester, you can read the value and status of parts such as switches, sensors and actuators without removing any parts. Reading the DATA LIST as the first step of troubleshooting is one method of shortening diagnostic time.

(a) Connect the intelligent tester to the DLC3.
(b) Turn the ignition switch to the ON position.
(c) Turn the intelligent tester.
(d) From the display on the tester, read the "DATA LIST".

Item	Measurement Item / Range (Display)	Normal Condition	Diagnostic Note
ABS MOT RELAY	ABS motor relay / ON or OFF	ON: Motor relay ON	-
SOL RELAY	Solenoid relay / ON or OFF	ON: Solenoid relay ON	-
STOP LIGHT SW	Stop light switch / ON or OFF	ON: Brake pedal depressed OFF: Brake pedal released	-
PKB SW	Parking brake switch / ON or OFF	ON: Parking brake applied OFF: Parking brake released	-
ABS OPERT FR	ABS operation (FR) / BEFORE or OPERATE	BEFORE: No ABS operation (FR) OPERATE: During ABS operation (FR)	-
ABS OPERT FL	ABS operation (FL) / BEFORE or OPERATE	BEFORE: No ABS operation (FL) OPERATE: During ABS operation (FL)	-
ABS OPERT RR	ABS operation (RR) / BEFORE or OPERATE	BEFORE: No ABS operation (RR) OPERATE: During ABS operation (RR)	-
ABS OPERT RL	ABS operation (RL) / BEFORE or OPERATE	BEFORE: No ABS operation (RL) OPERATE: During ABS operation (RL)	-
WHEEL SPD FR	Wheel speed sensor (FR) reading / min.: 0 km/h (0 MPH, max.: 326 km/h (202 MPH)	Actual wheel speed	Similar speed as indicated on speed meter
WHEEL SPD FL	Wheel speed sensor (FL) reading / min.: 0 km/h (0 MPH, max.: 326 km/h (202 MPH)	Actual wheel speed	Similar speed as indicated on speed meter
WHEEL SPD RR	Wheel speed sensor (RR) reading / min.: 0 km/h (0 MPH, max.: 326 km/h (202 MPH)	Actual wheel speed	Similar speed as indicated on speed meter
WHEEL SPD RL	Wheel speed sensor (RL) reading / min.: 0 km/h (0 MPH, max.: 326 km/h (202 MPH)	Actual wheel speed	Similar speed as indicated on speed meter
DECELERAT SEN (*1)	Deceleration sensor 1 reading / min.: -1.869 G, max.: 1.869 G	Approximately 0 +- 0.13G in still condition	Reading changes when vehicle bounced
DECELERAT SEN2 (*1)	Deceleration sensor 2 reading / min.: -1.869 G, max.: 1.869 G	Approximately 0 +- 0.13G in still condition	Reading changes when vehicle bounced
IG VOLTAGE	ECU power supply voltage / TOO LOW / NORMAL / TOO HIGH	TOO HIGH: 14 V or more NORMAL: 9.5 V to 14 V TOO LOW: Below 9.5 V	-
SFRR	ABS solenoid (SFRR) ON / OFF	ON: Operate	-
SFRH	ABS solenoid (SFRH) ON / OFF	ON: Operate	-
SFLR	ABS solenoid (SFLR) ON / OFF	ON: Operate	-
SFLH	ABS solenoid (SFLH) ON / OFF	ON: Operate	-

BC

Item	Measurement Item / Range (Display)	Normal Condition	Diagnostic Note
SRRR (SRR)	ABS solenoid (SRRR (SRR)) ON / OFF	ON: Operate	-
SRRH (SRH)	ABS solenoid (SRRH (SRH)) ON / OFF	ON: Operate	-
SRLR	ABS solenoid (SRLR) ON / OFF	ON: Operate	-
SRLH	ABS solenoid (SRLH) ON / OFF	ON: Operate	-
VEHICLE SPD	Maximum wheel speed sensor reading / min.: 0 mph (0 km/h), max.: 202MPH (326 km/h)	Actual vehicle speed	Speed indicated on speedometer
WHEEL DIR FR	Front right wheel direction	Wheel direction BACK: BACK, FORWARD: FORWARD	-
WHEEL DIR FL	Front left wheel direction	Wheel direction BACK: BACK, FORWARD: FORWARD	-
WHEEL DIR RR	Rear right wheel direction	Wheel direction BACK: BACK, FORWARD: FORWARD	-
WHEEL DIR RL	Rear left wheel direction	Wheel direction BACK: BACK, FORWARD: FORWARD	-
SPD SEN FR	FR speed sensor open detection / OPEN or NORMAL	OPEN: Momentary interruption	-
SPD SEN FL	FL speed sensor open detection / OPEN or NORMAL	OPEN: Momentary interruption	-
SPD SEN RR	RR speed sensor open detection / OPEN or NORMAL	OPEN: Momentary interruption	-
SPD SEN RL	RL speed sensor open detection / OPEN or NORMAL	OPEN: Momentary interruption	-
TEST MODE	Test Mode / NORMAL or TEST	NORMAL: Normal mode TEST: During test mode	-
#CODES	Number of DTC recorded / min.: 0, max.: 255	min.: 0 max.: 255	-

BC

HINT:

(*1): Pre-runner, 4WD

2. ACTIVE TEST

HINT:

Performing the ACTIVE TEST using the intelligent tester allows the relay, actuator and so on to operate without parts removal. Performing the ACTIVE TEST as the first step of troubleshooting is one of the methods to shorten labor time.

It is possible to display the DATA LIST during the ACTIVE TEST.

(a) Connect the intelligent tester to the DLC3.
(b) Turn the ignition switch to the ON position.
(c) Turn the intelligent tester ON.
(d) According to the display on the tester, perform the "ACTIVE TEST".

HINT:

Ignition switch must be turned to the ON position to proceed to the ACTIVE TEST using the intelligent tester.

Item	Vehicle Condition / Test Details	Diagnostic Note
SFRR	Turns ABS solenoid (SFRR) ON / OFF	Operation of solenoid (clicking sound) can be heard
SFRH	Turns ABS solenoid (SFRH) ON / OFF	Operation of solenoid (clicking sound) can be heard

Item	Vehicle Condition / Test Details	Diagnostic Note
SFLR	Turns ABS solenoid (SFLR) ON / OFF	Operation of solenoid (clicking sound) can be heard
SFLH	Turns ABS solenoid (SFLH) ON / OFF	Operation of solenoid (clicking sound) can be heard
SRRR	Turns ABS solenoid (SRRR) ON / OFF	Operation of solenoid (clicking sound) can be heard
SRRH	Turns ABS solenoid (SRRH) ON / OFF	Operation of solenoid (clicking sound) can be heard
SRLR	Turns ABS solenoid (SRLR) ON / OFF	Operation of solenoid (clicking sound) can be heard
SRLH	Turns ABS solenoid (SRLH) ON / OFF	Operation of solenoid (clicking sound) can be heard
SFRR & SFRH	Turns ABS solenoid SFRR & SFRH ON / OFF	Operation of solenoid (clicking sound) can be heard
SFLR & SFLH	Turns ABS solenoid SFLR & SFLH ON / OFF	Operation of solenoid (clicking sound) can be heard
SRH & SRR	Turns ABS solenoid SRH & SRR ON / OFF	Operation of solenoid (clicking sound) can be heard
SRLR & SRLH	Turns ABS solenoid SRLR & SRLH ON / OFF	Operation of solenoid (clicking sound) can be heard
SFRH & SFLH	Turns ABS solenoid SFRH & SFLH ON / OFF	Operation of solenoid (clicking sound) can be heard
SOL RELAY	Turns ABS solenoid relay ON / OFF	Operation of solenoid (clicking sound) can be heard
ABS MOT RELAY	Turns ABS motor relay ON / OFF	Operation of solenoid (clicking sound) can be heard
ABS WARN LIGHT	Turns ABS warning light ON / OFF	Observe combination meter
BRAKE WRN LIGHT	Turns BRAKE warning light ON / OFF	Observe combination meter

DIAGNOSTIC TROUBLE CODE CHART

NOTICE:
When removing any parts, turn the ignition switch to OFF.

HINT:

- Using SST 09843-18040, connect terminal TC and CG of the DLC3.
- If no abnormality is found when inspecting parts, inspect the ECU and ground points for poor contact.
- If a DTC is displayed during the DTC check, check the circuit for the DTC listed in the table below. For details of each DTC, refer to the page indicated.
- When 2 or more DTCs are recorded and the problem cannot be identified, perform circuit inspection of the other DTCs.

DTC No.	Detection Item	Trouble Areas	See page
C0200/31 (*1)	Right Front Wheel Speed Sensor Signal Malfunction	1. Right front speed sensor 2. Speed sensor circuit 3. Sensor installation 4. Brake actuator (skid control ECU)	BC-24
C0205/32 (*1)	Left Front Wheel Speed Sensor Signal Malfunction	1. Left front speed sensor 2. Speed sensor circuit 3. Sensor installation 4. Brake actuator (skid control ECU)	BC-24
C0210/33 (*1)	Right Rear Wheel Speed Sensor Signal Malfunction	1. Right rear speed sensor 2. Speed sensor circuit 3. Sensor installation 4. Brake actuator (skid control ECU)	BC-24
C0215/34 (*1)	Left Rear Wheel Speed Sensor Signal Malfunction	1. Left rear speed sensor 2. Speed sensor circuit 3. Sensor installation 4. Brake actuator (skid control ECU)	BC-24
C0226/21	SFR Solenoid Circuit	1. Brake actuator 2. SFRR or SFRH circuit	BC-31
C0236/22	SFL Solenoid Circuit	1. Brake actuator 2. SFLR or SFLH circuit	BC-31
C0246/23	SRR Solenoid Circuit	1. Brake actuator 2. SRRR or SRRH circuit	BC-31
C0256/24	SRL Solenoid Circuit	1. Brake actuator 2. SRLR or SRLH circuit	BC-31
C0273/13	Open or Short Circuit in ABS Motor Relay Circuit	1. ABS motor relay 2. ABS motor relay circuit	BC-33
C0274/14	Short to B+ in ABS Motor Relay Circuit	1. ABS motor relay 2. ABS motor relay circuit	BC-33
C0278/11	Open or Short Circuit in ABS Solenoid Relay Circuit	1. Brake actuator (skid control ECU) 2. ABS solenoid relay circuit	BC-36
C0279/12	Short to B+ in ABS Solenoid Relay Circuit	1. Brake actuator (skid control ECU) 2. ABS solenoid relay circuit	BC-36
C1235/35	Foreign Object is Attached on Tip of Front Speed Sensor RH	1. Right front speed sensor 2. Speed sensor rotor 3. Brake actuator (skid control ECU)	BC-38

DTC No.	Detection Item	Trouble Areas	See page
C1236/36	Foreign Object is Attached on Tip of Front Speed Sensor LH	1. Left front speed sensor 2. Speed sensor rotor 3. Brake actuator (skid control ECU)	BC-38
C1238/38	Foreign Object is Attached on Tip of Rear Speed Sensor RH	1. Right rear speed sensor 2. Speed sensor rotor 3. Brake actuator (skid control ECU)	BC-38
C1239/39	Foreign Object is Attached on Tip of Rear Speed Sensor LH	1. Left front speed sensor 2. Speed sensor rotor 3. Brake actuator (skid control ECU)	BC-38
C1241/41	Low Battery Positive Voltage	1. Battery 2. Charging system 3. Power source circuit	BC-43
C1243/43	Acceleration Sensor Stuck Malfunction	1. Deceleration sensor 2. Deceleration sensor circuit 3. Brake actuator (skid control ECU)	BC-46
C1244/44	Open or Short in Deceleration Sensor Circuit	1. Deceleration sensor 2. Deceleration sensor circuit 3. Brake actuator (skid control ECU)	BC-46
C1245/45	Acceleration Sensor Output Malfunction	1. Deceleration sensor 2. Deceleration sensor circuit 3. Brake actuator (skid control ECU)	BC-46
C1248/48	Open Circuit in Rear Differential Lock	1. Transfer indicator switch (rear diff. lock) 2. Rear differential lock circuit 3. Brake actuator (skid control ECU) 4. 4WD control ECU	BC-50
C1249/49	Open in Stop Light Switch Circuit	1. Stop light switch 2. Stop light switch circuit	BC-55
C1251/51	Open in Pump Motor Circuit	1. Brake actuator 2. Brake actuator circuit	BC-59
C1337/37	Different Diameter Tire Malfunction	1. Speed sensor 2. Speed sensor circuit 3. Speed sensor rotor 4. Tire size 5. Brake actuator (skid control ECU)	BC-62

(*1): Even after the trouble areas are repaired, the ABS warning light will not go off unless the following operations are performed.

1. Drive the vehicle at 12 mph (20 km/h) for 30 seconds or more and check that the ABS warning light goes off.
2. Clear the DTC.

DTC	**C0200/31**	**Right Front Wheel Speed Sensor Signal Malfunction**

DTC	**C0205/32**	**Left Front Wheel Speed Sensor Signal Malfunction**

DTC	**C0210/33**	**Right Rear Wheel Speed Sensor Signal Malfunction**

DTC	**C0215/34**	**Left Rear Wheel Speed Sensor Signal Malfunction**

DESCRIPTION

The speed sensor detects the wheel speeds and sends the appropriate signals to the skid control ECU. Speed sensor rotors have rows of alternating N and S magnetic poles, and their magnetic fields change when the rotors turn.

Each speed sensor detects that magnetic change and sends a pulse signal to the skid control ECU. The ECU monitors the wheel speeds according to the speed signals to control the ABS control system.

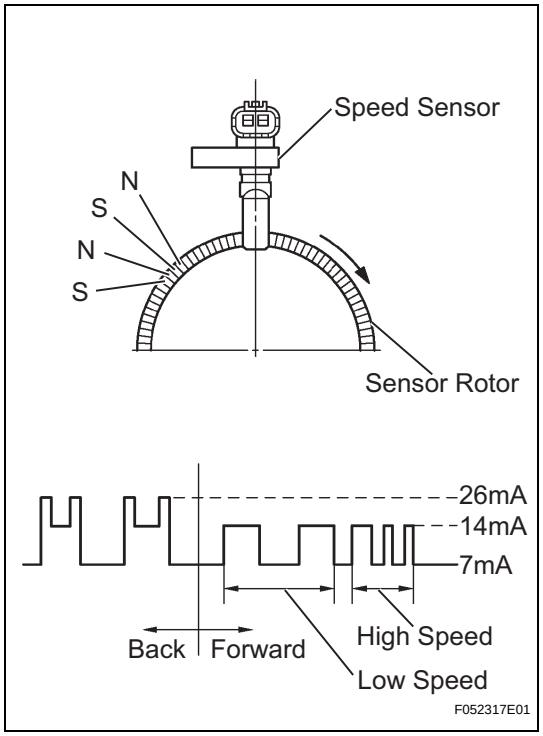

BC

DTC No.	DTC Detecting Conditions	Trouble Areas
C0200/31 C0205/32 C0210/33 C0215/34	1. At vehicle speed of 6 mph (10 km/h) or more, speed sensor signal circuit open or short for 1 second or more. 2. Speed sensor signal open circuit occurs at least 255 times. 3. Speed sensor signal circuit open for 0.5 seconds or more. 4. With ignition switch ON and vehicle speed at 2 mph (3km/h) or more, 3 wheels output reverse rotation signal and 1 wheel outputs high-frequency pulse 75 times. 5. At vehicle speed of 6 mph (10 km/h) or more, speed sensor output halves for 5 seconds. 6. At vehicle speed of 6 mph (10 km/h) or more, changing of normal rotation signal and reverse rotation signal occurs 7 times within 0.006 seconds while ignition switch ON. 7. Signal output of any one wheel different from signals of other 3 wheels for 1 second, at vehicle speed of 18 mph (30 km/h) or more. 8. Reverse rotation signal produced for 1 second or more at vehicle speed of 62 mph (100 km/h) or more. 9. At vehicle speed of 18 mph (30 km/h) or more, one speed sensor malfunctions and differs in signal direction from other 3 wheels. 10. When voltage at IG1 terminal 9.5 V or more, voltage of sensor power supply decreases for 0.5 seconds or more.	• Speed sensor • Speed sensor circuit • Speed sensor installation • Brake actuator (skid control ECU)

BC

HINT:
DTC C0200/31 relates to the front right speed sensor.
DTC C0205/32 relates to the front left speed sensor.
DTC C0210/33 relates to the rear right speed sensor.
DTC C0215/34 relates to the rear left speed sensor.

WIRING DIAGRAM

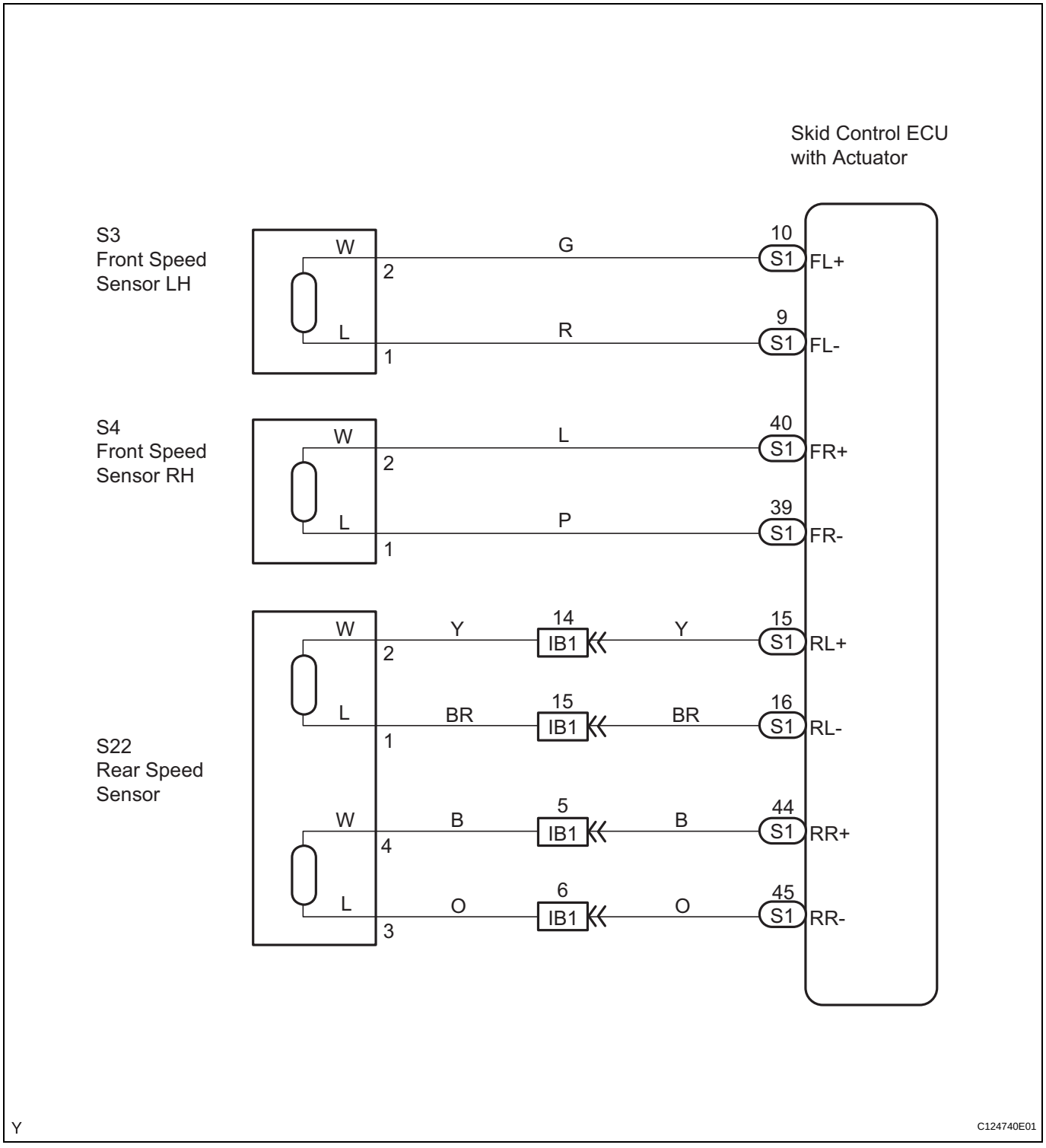

1	READ VALUE OF DATA LIST (SPEED SENSOR)

(a) Connect the intelligent tester to the DLC3.
(b) Start the engine.
(c) Select the DATA LIST mode on the intelligent tester.

BC

Item	Measurement Item / Range (Display)	Normal Condition	Diagnostic Note
WHEEL SPD FR	Wheel speed sensor (FR) reading / min.: 0 MPH (0 km/h), max.: 202 MPH (326 km/h)	Actual wheel speed	Similar speed to that indicated on speedometer
WHEEL SPD FL	Wheel speed sensor (FR) reading / min.: 0 MPH (0 km/h), max.: 202 MPH (326 km/h)	Actual wheel speed	Similar speed to that indicated on speedometer
WHEEL SPD RR	Wheel speed sensor (FR) reading / min.: 0 MPH (0 km/h), max.: 202 MPH (326 km/h)	Actual wheel speed	Similar speed to that indicated on speedometer
WHEEL SPD RL	Wheel speed sensor (FR) reading / min.: 0 MPH (0 km/h), max.: 202 MPH (326 km/h)	Actual wheel speed	Similar speed to that indicated on speedometer

(d) Check that there is no difference between the speed value output from each speed sensor displayed on the intelligent tester and the speed value displayed on the speedometer when driving the vehicle.
OK:
There is almost no difference with the displayed speed value.

HINT:
There is tolerance of +-10% in the speedometer indication.

NG → **Go to step 6**

OK

2 PERFORM TEST MODE INSPECTION (SPEED SENSOR CHECK)

(a) Check if test mode DTCs are detected (See page BC-7).

Result	Proceed to
Test mode DTC output	A
Test mode DTC not output	B

B → **Go to step 4**

A

3 RECONFIRM DTC

(a) Clear the DTCs (See page BC-16).
(b) Check if the same DTCs are recorded.

Result	Proceed to
DTC output	A
DTC not output	B

B → **CHECK FOR INTERMITTENT PROBLEMS**

A

4	CHECK SPEED SENSOR INSTALLATION

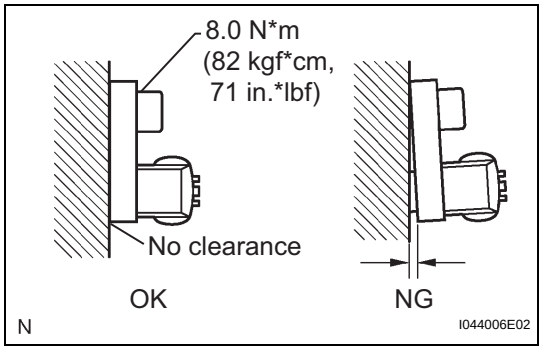

(a) Check the speed sensor installation.
OK:
The installation bolt is tightened properly and there is no clearance between the sensor and front steering knuckle.
Torque:
8.0 N*m (82 kgf*cm, 71 in.*lbf)

NG → **TIGHTEN BOLT PROPERLY**

OK

5	INSPECT SPEED SENSOR

(a) Remove the speed sensor.
(b) Check the sensor tip.
OK:
No scratches or foreign matter on the sensor tip.

NG → **CLEAN OR REPLACE SPEED SENSOR**

OK

6 CHECK HARNESS AND CONNECTOR

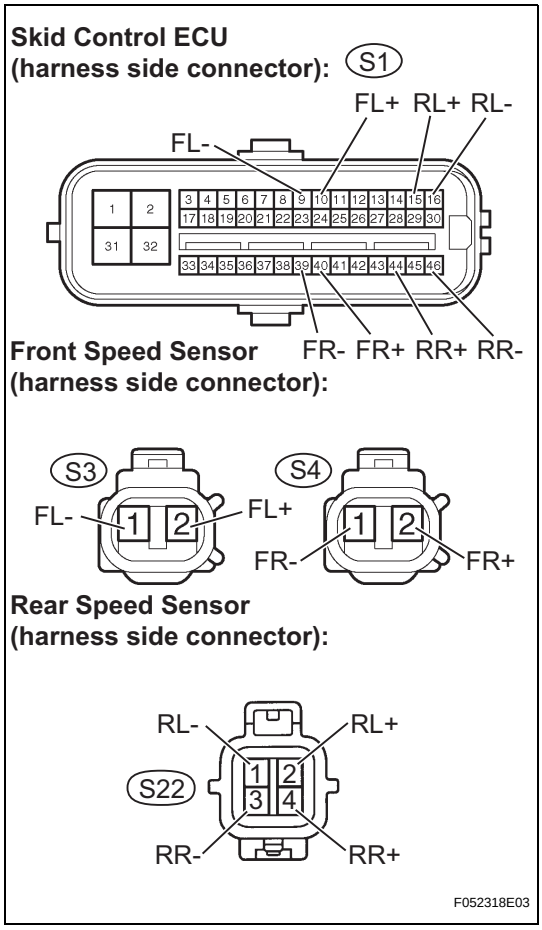

(a) Disconnect the skid control ECU connector.
(b) Disconnect the speed sensor connectors.
(c) Measure the resistance.

Standard Resistance

Tester Connection	Specified Condition
S1-10 (FL+) - S3-2 (FL+)	Below 1 Ω
S1-9 (FL-) - S3-1 (FL-)	Below 1 Ω
S1-40 (FR+) - S4-2 (FR+)	Below 1 Ω
S1-39 (FR-) - S4-1 (FR-)	Below 1 Ω
S1-15 (RL+) - S22-2 (RL+)	Below 1 Ω
S1-16 (RL-) - S22-1 (RL-)	Below 1 Ω
S1-44 (RR+) - S22-4 (RR+)	Below 1 Ω
S1-45 (RR-) - S22-3 (RR-)	Below 1 Ω

(d) Measure the resistance.

Standard Resistance

Tester Connection	Specified Condition
S1-10 (FL+) - Body ground	10 kΩ or higher
S1-9 (FL-) - Body ground	10 kΩ or higher
S1-40 (FR+) - Body ground	10 kΩ or higher
S1-39 (FR-) - Body ground	10 kΩ or higher
S1-15 (RL+) - Body ground	10 kΩ or higher
S1-16 (RL-) - Body ground	10 kΩ or higher
S1-44 (RR+) - Body ground	10 kΩ or higher
S1-45 (RR-) - Body ground	10 kΩ or higher

(e) Reconnect the speed sensor connectors.
(f) Reconnect the skid control ECU connector.

NG → **REPAIR OR REPLACE HARNESS OR CONNECTOR**

OK

BC

7 INSPECT BRAKE ACTUATOR (TERMINAL VOLTAGE)

Front Speed Sensor (harness side connector):

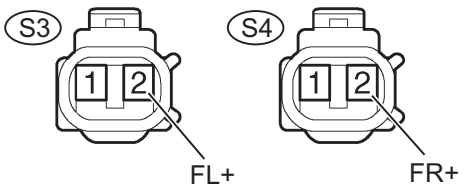

Rear Speed Sensor (harness side connector):

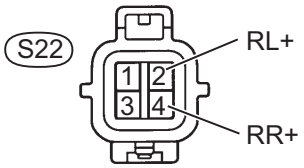

F052319E02

(a) Disconnect the speed sensor connectors.
(b) Turn the ignition switch to the ON position.
(c) Measure the voltage.

Standard voltage

Tester Connection	Specified Condition
S3-2 (FL+) - Body ground	7.5 to 12 V
S4-2 (FR+) - Body ground	7.5 to 12 V
S22-2 (RL+) - Body ground	7.5 to 12 V
S22-4 (RR+) - Body ground	7.5 to 12 V

(d) Turn the ignition switch to OFF.
(e) Reconnect the speed sensor connectors.

NG → **REPLACE BRAKE ACTUATOR**

OK

8 RECONFIRM DTC

(a) Clear the DTCs (See page BC-16).
(b) Check if the same DTCs are recorded.

Result	Proceed to
DTC output	A
DTC not output	B

B → **CHECK FOR INTERMITTENT PROBLEMS**

A

REPLACE BRAKE ACTUATOR

BC

DTC	C0226/21	SFR Solenoid Circuit

DTC	C0236/22	SFL Solenoid Circuit

DTC	C0246/23	SRR Solenoid Circuit

DTC	C0256/24	SRL Solenoid Circuit

DESCRIPTION

The solenoid goes on when signals are received from the ECU and controls the pressure action on the wheel cylinders thus controlling the braking force.

DTC No.	DTC Detecting Conditions	Trouble Areas
C0226/21	Open or short in SFRH or SFRR circuit for 0.05 seconds or more.	• Brake actuator • SFRH or SFRR circuit
C0236/22	Open or short in SFLH or SFLR circuit for 0.05 seconds or more.	• Brake actuator • SFLH or SFLR circuit
C0246/23	Open or short in SRRH or SRRR circuit for 0.05 seconds or more.	• Brake actuator • SRRH or SRRR circuit
C0256/24	Open or short in SRLH or SRLR circuit for 0.05 seconds or more.	• Brake actuator • SRLH or SRLR circuit

WIRING DIAGRAM

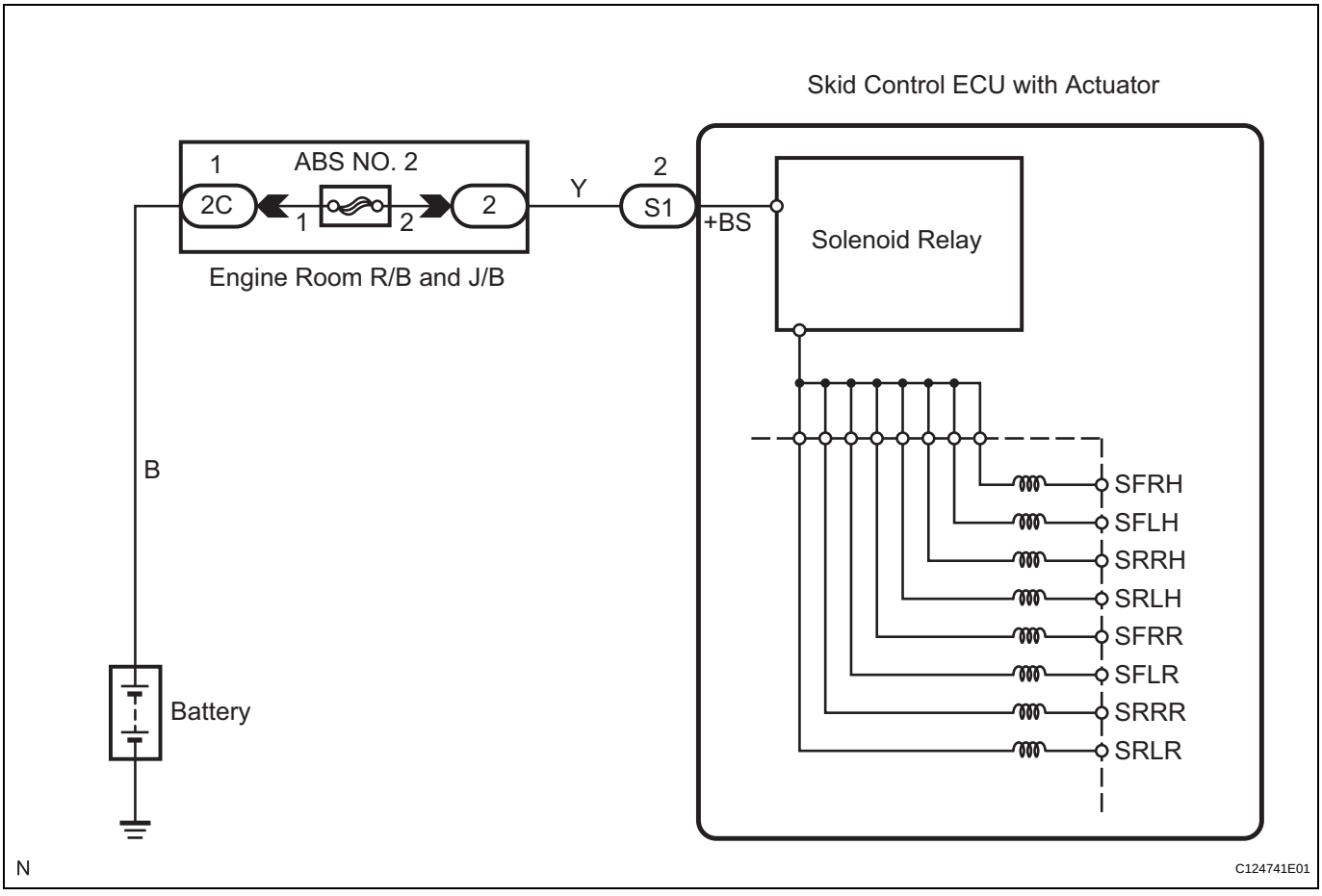

1	RECONFIRM DTC

(a) Clear the DTCs (See page BC-16).
(b) Drive the vehicle at 6 mph (10 km/h) or more to activate initial check.
(c) Check if the same DTCs are detected.

Result	Proceed to
DTC output	A
DTC not output	B

B → END

A

REPLACE BRAKE ACTUATOR

DTC	C0273/13	Open or Short Circuit in ABS Motor Relay Circuit

DTC	C0274/14	Short to B+ in ABS Motor Relay Circuit

DESCRIPTION

The ABS motor relay supplies power to the ABS pump motor. While the ABS is activated, the skid control ECU switches the motor relay ON and operates the ABS pump motor.

DTC No.	DTC Detecting Conditions	Trouble Areas
C0273/13	When either of following (1 or 2) detected: 1. Both of following conditions continue for at least 0.2 seconds. • IG1 voltage between 9.5 and 17.2 V. • Relay contact open when relay ON. 2. Both of following conditions continue for at least 0.2 seconds. • IG1 voltage less than 9.5 V. • Relay contact remains open when relay ON.	• ABS motor relay • ABS motor relay circuit
C0274/14	The following condition continues for at least 4 seconds. • Relay contact closed when relay OFF.	• ABS motor relay • ABS motor relay circuit

WIRING DIAGRAM

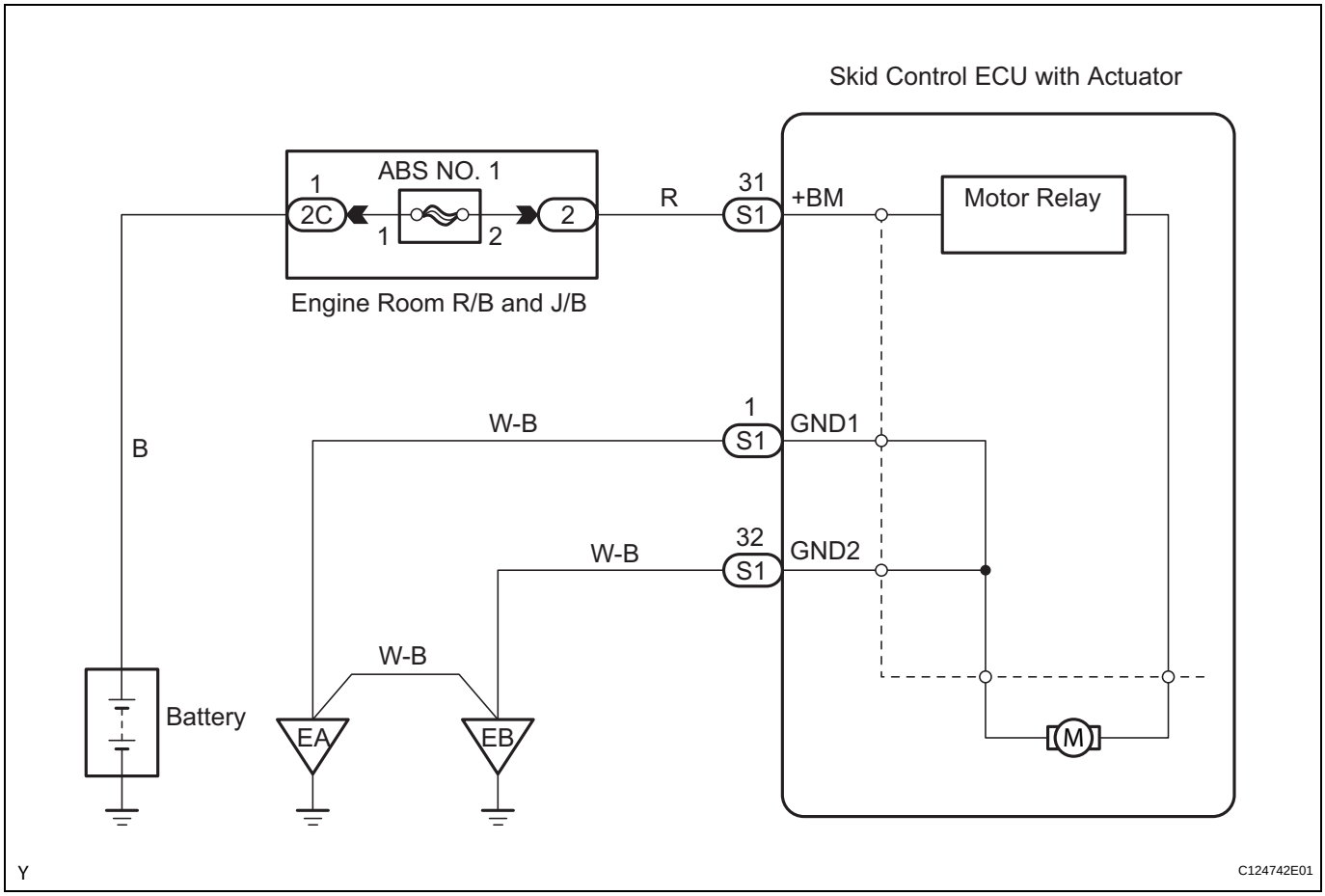

1 PERFORM ACTIVE TEST BY INTELLIGENT TESTER (ABS MOTOR RELAY)

(a) Connect the intelligent tester to the DLC3.
(b) Turn the ignition switch to the ON position.
(c) Turn the intelligent tester ON.
(d) Select the DATA LIST mode on the intelligent tester.
(e) Check the operation sound of the ABS motor when operating it with the intelligent tester.

Item	Vehicle Condition / Test Details	Diagnostic Note
ABS MOT RELAY	Turns ABS motor relay ON/OFF	Operation of motor can be heard

OK:
The operation sound of the ABS motor should be heard.

NG → **Go to step 3**

OK

2 RECONFIRM DTC

(a) Clear the DTCs (See page BC-16).
(b) Drive the vehicle at 6mph (10 km/h) or more to activate initial check.
(c) Check if the same DTCs are detected.

Result	Proceed to
DTC output	A
DTC not output	B

B → **END**

A

3 INSPECT SKID CONTROL ECU TERMINAL VOLTAGE (BM+ - GND1, GND2)

Skid Control ECU (harness side connector):

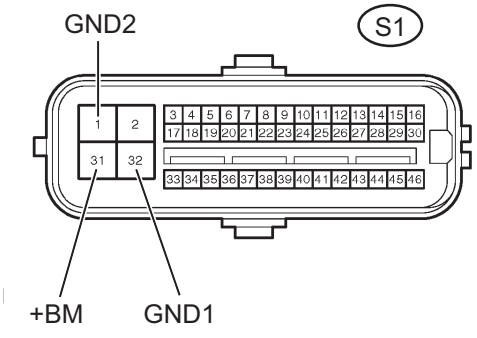

(a) Disconnect the skid control ECU connector.
(b) Measure the voltage.
Standard Voltage

Tester Connection	Condition	Specified Condition
S1-31 (+BM) - S1-1, 32 (GND1, GND2)	Always	10 to 14 V

(c) Reconnect the skid control ECU connector.

NG → **REPAIR OR REPLACE HARNESS OR CONNECTOR**

BC

OK

REPLACE BRAKE ACTUATOR

DTC	C0278/11	Open or Short Circuit in ABS Solenoid Relay Circuit

DTC	C0279/12	Short to B+ in ABS Solenoid Relay Circuit

DESCRIPTION

This relay supplies power to each ABS solenoid. After the ignition switch is turned ON, if the results of initial check are normal, the relay goes on.

DTC No.	DTC Detecting Conditions	Trouble Areas
C0278/11	When either of following (1 or 2) detected: 1. Both of following conditions continue for at least 0.2 seconds. • IG voltage between 9.5 and 17.2 V. • Relay contact open when relay ON. 2. Both of following conditions continues for at least 0.2 seconds. • IG voltage 9.5 V or less when relay ON. • Relay contact remains open.	• Brake actuator (skid control ECU) • ABS solenoid relay circuit
C0279/12	The following condition continues for at least 0.2 seconds. • Relay contact closed immediately after turning ignition switch ON when relay OFF.	• Brake actuator (skid control ECU) • ABS solenoid relay circuit

WIRING DIAGRAM

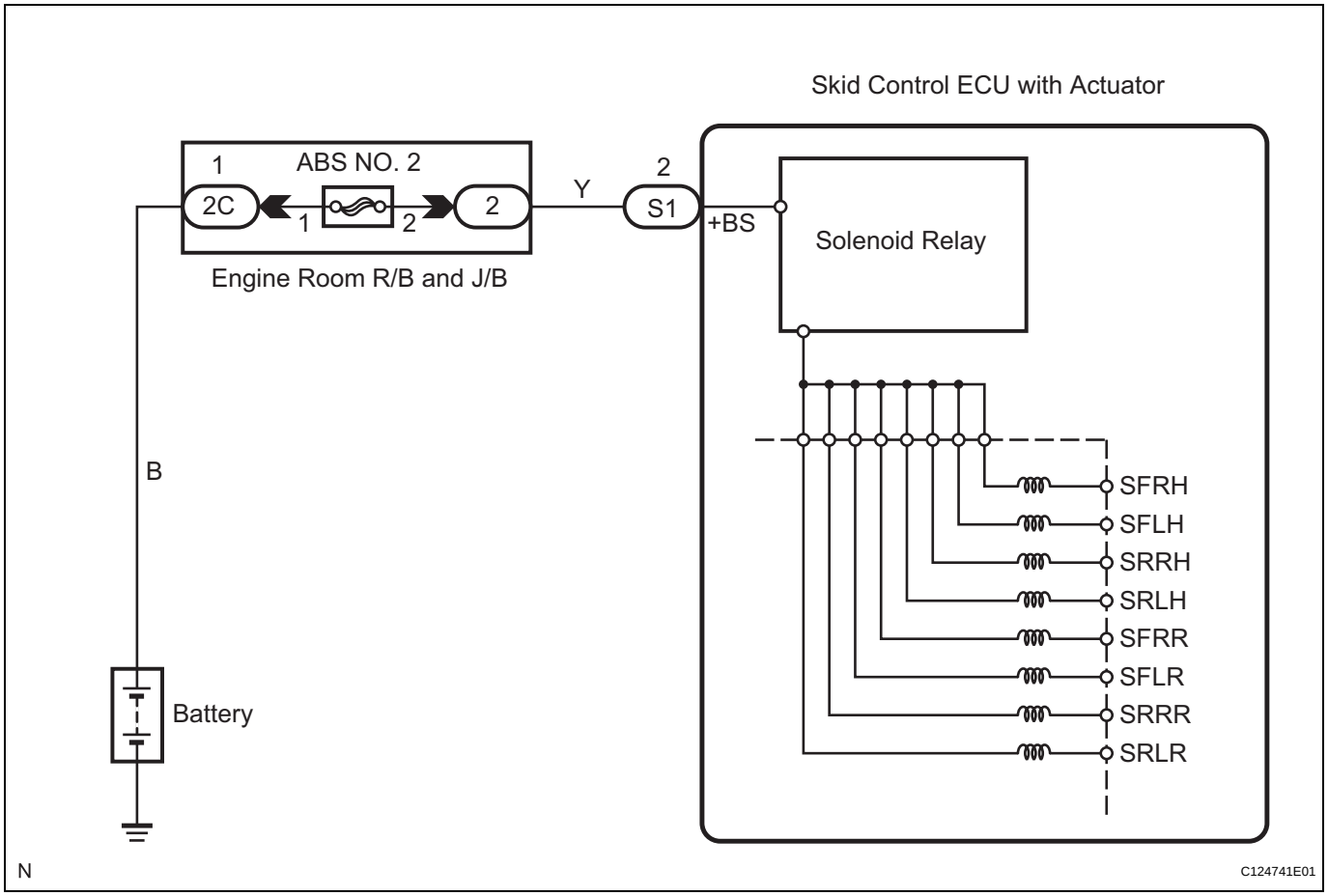

BC

1	INSPECT SKID CONTROL ECU TERMINAL VOLTAGE (+BS - GND1, GND2)

Skid Control ECU
(harness side connector):

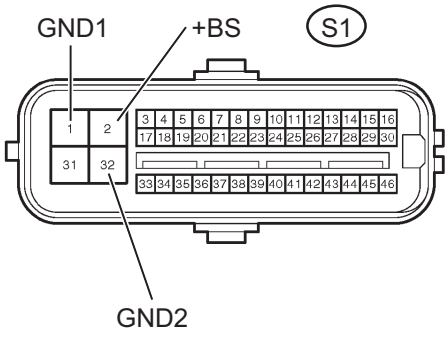

C121700E11

(a) Disconnect the skid control ECU connector.
(b) Measure the voltage.
Standard Voltage

Tester Connection	Condition	Specified Condition
S1-2 (BS+) - S1-1,32 (GND1, GND2)	Always	10 to 14 V

(c) Reconnect the skid control ECU connector.

NG → **REPAIR OR REPLACE HARNESS OR CONNECTOR**

OK

2	RECONFIRM DTC

(a) Clear the DTCs (See page BC-16).
(b) Drive the vehicle at 6 mph (10 km/h) or more to activate initial check.
(c) Check if the same DTCs are detected.

Result	Proceed to
DTC output	A
DTC not output	B

B → **END**

A

REPLACE BRAKE ACTUATOR

INSTALLATION

1. INSTALL BRAKE PEDAL PAD

(a) Install the brake pedal pad onto the brake pedal.

2. INSTALL BRAKE PEDAL LEVER

(a) Apply lithium soap base glycol grease to the 2 brake pedal link pins, 2 pedal shaft collars and 2 brake pedal links.

(b) Install the brake pedal lever with the 2 brake pedal link pins, 2 brake pedal shaft collars and 2 brake pedal links onto the brake pedal.

(c) Install 2 new E-rings onto each brake pedal link pin.

3. INSTALL BRAKE PEDAL

(a) Apply lithium soap base glycol grease to the 2 collars and 4 brake pedal bushes.

(b) Install the 2 collars and 4 brake pedal bushes onto the brake pedal and brake pedal lever.

(c) Install the brake pedal with the bolt and nut onto the brake pedal support.
Torque: 34.3 N*m (350 kgf*cm, 25 ft.*lbf)

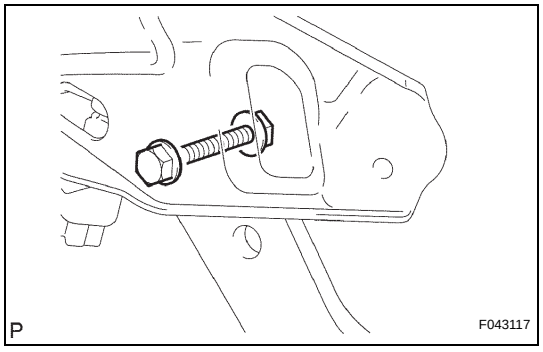

4. INSTALL STOP LIGHT SWITCH ASSEMBLY

(a) Insert the stop light switch until the body comes into contact with the cushion.
NOTICE:
When inserting the stop light switch, support the pedal from behind so that the pedal is not pushed in.

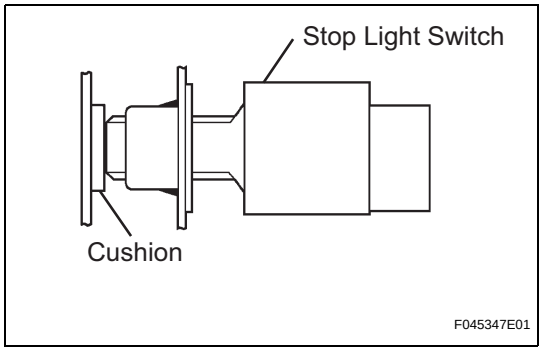

(b) Make a quarter turn clockwise to install the stop light switch.
NOTICE:
The turning torque for installing the stop light switch:
Torque: 1.5 N*m (15 kgf*cm, 13 in.*lbf) or less
HINT:
Due to the inverse screw structure, turning the stop light switch clockwise will cause it to become loose and eventually detach from the adjuster.

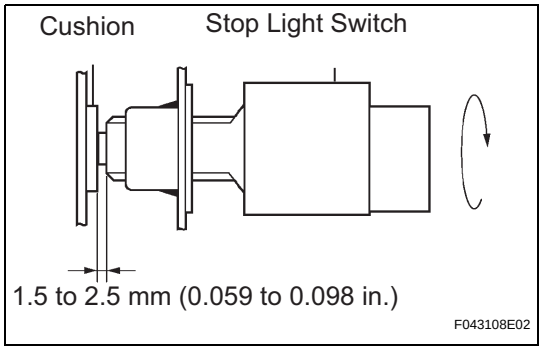

(c) Check the protrusion of the rod.
Protrusion of the rod:
1.5 to 2.5 mm (0.059 to 0.098 in.)

BR

5. INSTALL BRAKE PEDAL RETURN SPRING

(a) Apply lithium soap base glycol grease to the inner surface of the hole on the brake pedal support and brake pedal.

(b) Install the return spring onto the brake pedal support and brake pedal.

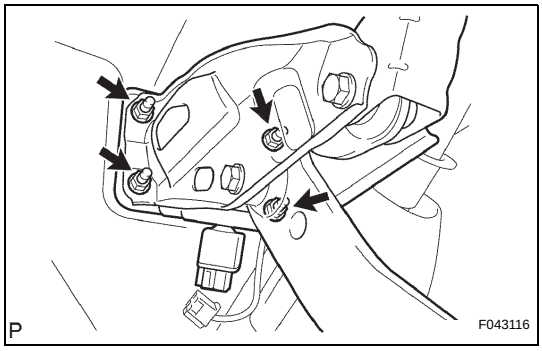

6. INSTALL BRAKE PEDAL SUPPORT SUB-ASSEMBLY

(a) Install the 4 nuts and brake pedal support.
Torque: 14.2 N*m (145 kgf*cm, 10 ft.*lbf)

(b) Connect the stop light switch connector to the stop lamp switch.

7. INSTALL BRAKE PEDAL SUPPORT REINFORCEMENT

(a) Install the reinforcement onto the brake pedal support.

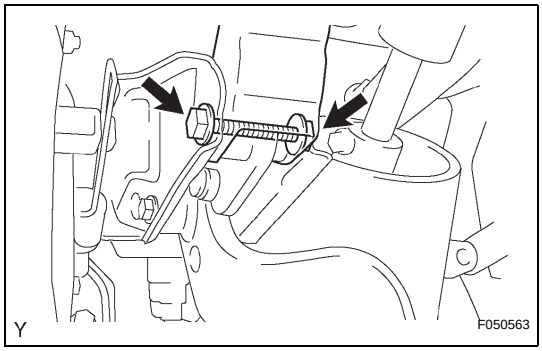

(b) Provisionally tighten the bolt and nut to the brake pedal support, reinforcement and brake pedal lever.

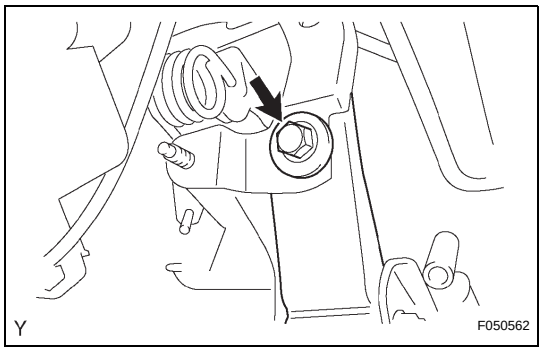

(c) Install the bolt onto the reinforcement.
Torque: 34.3 N*m (350 kgf*cm, 25 ft.*lbf)

(d) Tighten the bolt and nut.
Torque: 34.3 N*m (350 kgf*cm, 25 ft.*lbf)

8. INSTALL MASTER CYLINDER PUSH ROD CLEVIS

(a) Apply lithium soap base glycol grease to the inner surface of the hole on the brake pedal lever.

(b) Install the push rod clevis onto the brake pedal lever with the push rod pin and clip.

9. INSPECT BRAKE PEDAL HEIGHT (See page BR-11)

10. INSPECT PEDAL FREE PLAY (See page BR-14)

11. INSPECT PEDAL RESERVE DISTANCE (See page BR-14)

12. INSTALL DRIVER SIDE JUNCTION BLOCK
Torque: 8.0 N*m (82 kgf*cm, 71 in.*lbf)

13. INSTALL INSTRUMENT PANEL FINISH PANEL LOWER NO. 1 (See page IP-22)

14. INSTALL INSTRUMENT PANEL UNDER TRAY (for Automatic Transmission) (See page IP-25)

15. INSTALL INSTRUMENT PANEL HOLE COVER (for Manual Transmission) (See page IP-25)

16. **INSTALL COWL SIDE TRIM BOARD (for Regular Cab) (See page IR-52)**
17. **INSTALL COWL SIDE TRIM BOARD (for Access Cab) (See page IR-75)**
18. **INSTALL COWL SIDE TRIM BOARD (for Double Cab) (See page IR-29)**
19. **INSTALL FRONT DOOR SCUFF PLATE (for Regular Cab) (See page IR-52)**
20. **INSTALL FRONT DOOR SCUFF PLATE (for Access Cab) (See page IR-75)**
21. **INSTALL FRONT DOOR SCUFF PLATE (for Double Cab) (See page IR-29)**
22. **INSTALL FRONT FLOOR FOOTREST (See page IR-1)**
23. **CONNECT CABLE TO NEGATIVE BATTERY TERMINAL**
    Torque: 3.9 N*m (40 kgf*cm, 35 in.*lbf)
    (See page IN-5)

INSTALLATION

1. INSPECT AND ADJUST BRAKE BOOSTER PUSH ROD

NOTICE:

Make adjustments while the brake booster has no vacuum in it. (Depress the brake pedal several times with the engine stopped.)

HINT:

The brake booster push rod should be adjusted when the brake master cylinder is replaced with a new one. The adjustment is not necessary when the brake master cylinder is reinstalled and the brake booster is replaced with a new one.

(a) Apply chalk to the tip of an accessory tool.

HINT:

An accessory tool is enclosed with a new brake master cylinder sub-assembly.

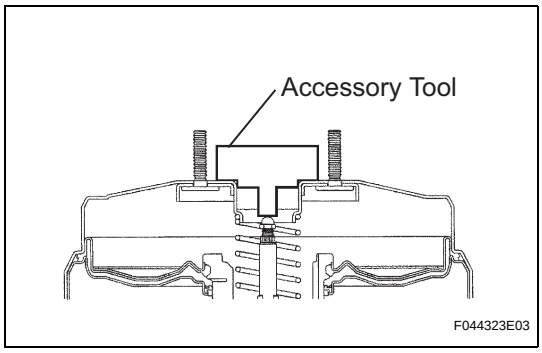

(b) Place the accessory tool on the brake booster assembly.

(c) Measure the clearance between the brake booster push rod and accessory tool.

Clearance:

0 mm (0 in.)

HINT:

Adjust the clearance in following cases:

- If there is any clearance between the accessory tool and the shell of the brake booster (floating accessory tool), the clearance is too small.
- If the chalk does not stick on the tip of the brake booster push rod, the clearance is too big.

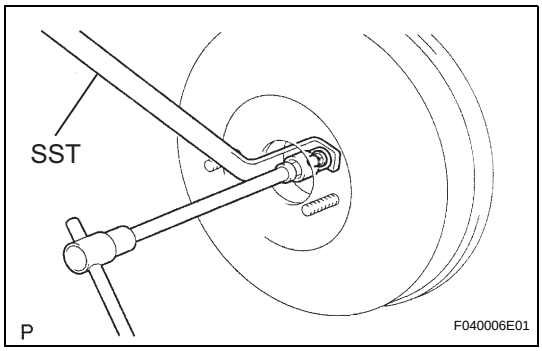

(d) If the clearance is out of the specified range, fix the push rod using SST and adjust the adjusting bolt protruding length.

SST 09737-00020

HINT:

When adjusting the push rod, depress the brake pedal sufficiently so that the push rod sticks out.

2. INSTALL BRAKE MASTER CYLINDER

(a) Install a new O-ring onto the brake master cylinder.

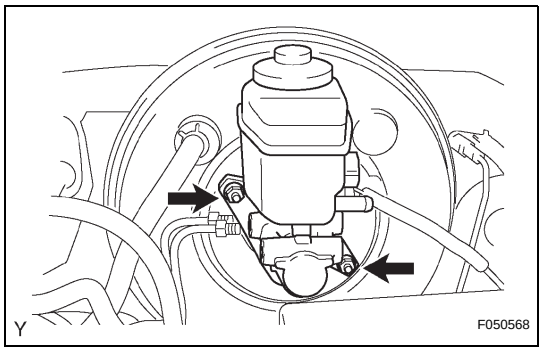

(b) Install the brake master cylinder with the 2 nuts onto the brake booster.

Torque: 12.5 N*m (127 kgf*cm, 9 ft.*lbf)

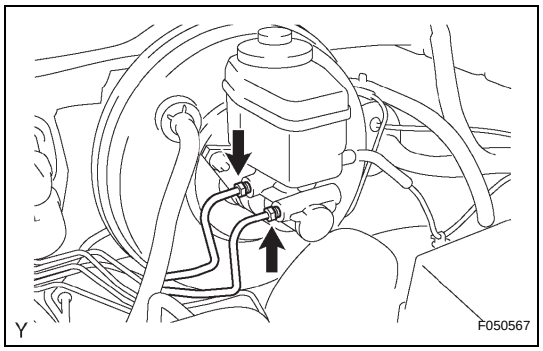

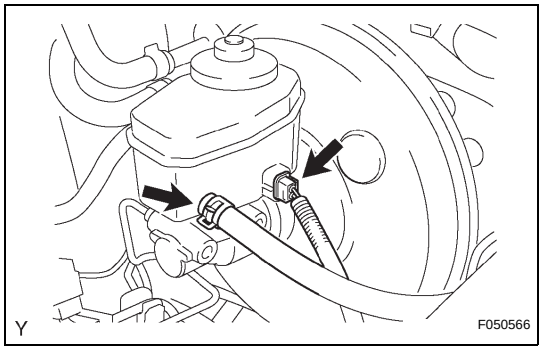

(c) Using SST, connect the 2 brake lines to the brake master cylinder.
SST 09023-00101
Torque: 15 N*m (153 kgf*cm, 11 ft.*lbf)

(d) for Manual Transmission:
(1) Connect the clutch reservoir tube to the reservoir.

(e) Connect the brake fluid level warning switch connector to the brake master cylinder.

3. **FILL RESERVOIR WITH BRAKE FLUID (See page BR-7)**
4. **BLEED MASTER CYLINDER (See page BR-7)**
5. **BLEED BRAKE LINE (See page BR-7)**
6. **CHECK FLUID LEVEL IN RESERVOIR (See page BR-8)**
7. **CHECK FOR BRAKE FLUID LEAKAGE**
8. **INSPECT BRAKE PEDAL HEIGHT (See page BR-11)**
9. **INSPECT PEDAL FREE PLAY (See page BR-14)**
10. **INSPECT PEDAL RESERVE DISTANCE (See page BR-14)**
11. **CONNECT CABLE TO NEGATIVE BATTERY TERMINAL**
Torque: 3.9 N*m (40 kgf*cm, 35 in.*lbf)
(See page IN-5)

REMOVAL

1. **DISCONNECT CABLE FROM NEGATIVE BATTERY TERMINAL**
2. **DRAIN BRAKE FLUID**
   NOTICE:
   Immediately wash off any brake fluid that comes into contact with any painted surfaces.
3. **REMOVE FRONT FLOOR FOOTREST (See page IR-1)**
4. **REMOVE FRONT DOOR SCUFF PLATE (for Regular Cab) (See page IR-40)**
5. **REMOVE FRONT DOOR SCUFF PLATE (for Access Cab) (See page IR-61)**
6. **REMOVE FRONT DOOR SCUFF PLATE (for Double Cab) (See page IR-12)**
7. **REMOVE COWL SIDE TRIM BOARD (for Regular Cab) (See page IR-40)**
8. **REMOVE COWL SIDE TRIM BOARD (for Access Cab) (See page IR-61)**
9. **REMOVE COWL SIDE TRIM BOARD (for Double Cab) (See page IR-12)**
10. **REMOVE INSTRUMENT PANEL UNDER TRAY (for Automatic Transmission) (See page IP-9)**
11. **REMOVE INSTRUMENT PANEL HOLE COVER (for Manual Transmission) (See page IP-9)**
12. **REMOVE INSTRUMENT PANEL FINISH PANEL LOWER NO. 1 (See page IP-12)**
13. **SEPARATE DRIVER SIDE JUNCTION BLOCK**
14. **REMOVE BRAKE MASTER CYLINDER (See page BR-21)**
15. **SEPARATE MASTER CYLINDER PUSH ROD CLEVIS (See page BR-15)**
16. **REMOVE BRAKE BOOSTER**
    (a) Disconnect the vacuum hose from the brake booster.

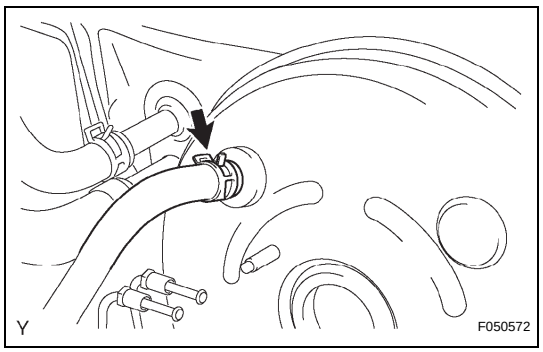

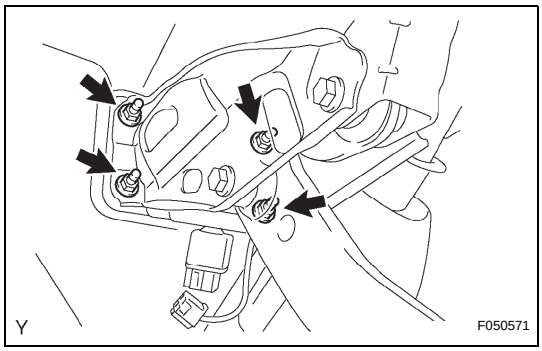

(b) Remove the 4 nuts, and pull out the brake booster.
(c) Remove the gasket from the brake booster.

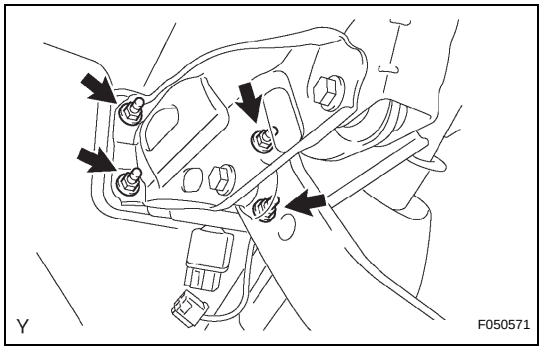

INSTALLATION

1. **INSTALL BRAKE BOOSTER**
   (a) Install a new gasket onto the brake booster.
   (b) Install the brake booster assembly with the 4 nuts.
   Torque: 14.2 N*m (145 kgf*cm, 10 ft.*lbf)
   (c) Connect the vacuum hose to the brake booster.
2. **INSTALL MASTER CYLINDER PUSH ROD CLEVIS (See page BR-18)**
3. **INSTALL BRAKE MASTER CYLINDER (See page BR-22)**
4. **FILL RESERVOIR WITH BRAKE FLUID (See page BR-7)**
5. **BLEED MASTER CYLINDER (See page BR-7)**
6. **BLEED BRAKE LINE (See page BR-7)**
7. **CHECK FLUID LEVEL IN RESERVOIR (See page BR-8)**
8. **CHECK FOR BRAKE FLUID LEAKAGE**
9. **INSPECT BRAKE PEDAL HEIGHT (See page BR-11)**
10. **INSPECT PEDAL FREE PLAY (See page BR-14)**
11. **INSPECT PEDAL RESERVE DISTANCE (See page BR-14)**
12. **INSTALL DRIVER SIDE JUNCTION BLOCK**
    Torque: 8.0 N*m (82 kgf*cm, 71 in.*lbf)
13. **INSTALL INSTRUMENT PANEL FINISH PANEL LOWER NO. 1 (See page IP-22)**
14. **INSTALL INSTRUMENT PANEL UNDER TRAY (for Automatic Transmission) (See page IP-25)**
15. **INSTALL INSTRUMENT PANEL HOLE COVER (for Manual Transmission) (See page IP-25)**
16. **INSTALL COWL SIDE TRIM BOARD (for Regular Cab) (See page IR-52)**
17. **INSTALL COWL SIDE TRIM BOARD (for Access Cab) (See page IR-75)**
18. **INSTALL COWL SIDE TRIM BOARD (for Double Cab) (See page IR-29)**
19. **INSTALL FRONT DOOR SCUFF PLATE (for Regular Cab) (See page IR-52)**
20. **INSTALL FRONT DOOR SCUFF PLATE (for Access Cab) (See page IR-75)**
21. **INSTALL FRONT DOOR SCUFF PLATE (for Double Cab) (See page IR-29)**
22. **INSTALL FRONT FLOOR FOOTREST (See page IR-1)**

23. CONNECT CABLE TO NEGATIVE BATTERY TERMINAL
Torque: 3.9 N*m (40 kgf*cm, 35 in.*lbf)
(See page IN-5)

ON-VEHICLE INSPECTION

1. INSPECT BRAKE MASTER CYLINDER FLUID PRESSURE CHANGE

(a) Inspect the battery positive voltage.
Battery positive voltage:
10 to 14 V

(b) Turn the ignition switch to OFF, and depress the brake pedal more than 20 times.
HINT:
When pressure in the accumulator is released, the reaction force becomes lighter and the stroke becomes longer.

(c) Install a LSPV gauge (SST) and brake pedal effort gauge, and bleed the air.
SST 09709-29018

(d) When the booster does not operate:

(1) Depress the brake pedal and check the fluid pressure.
At 245 N (25 kgf, 55 lbf)

Front brake pressure	Rear brake pressure
1,840 kPa (18.8 kgf/cm^2, 267 psi) or more	0 kPa (0 kgf/cm^2, 0 psi)

At 343 N (35 kgf, 77 lbf)

Front brake pressure	Rear brake pressure
2,710 kPa (27.6 kgf/cm^2, 393 psi) or more	0 kPa (0 kgf/cm^2, 0 psi)

(e) When the booster operates:

(1) Turn the ignition switch to ON, and wait until the pump motor has stopped (step A).
HINT:
Pump operating sound can be heard.

(2) Turn the ignition switch to OFF, and depress the brake pedal more than 20 times (step B).
HINT:
When pressure in the accumulator is released, the reaction force becomes lighter and the stroke becomes longer.

(3) Repeat step A and B 5 times (step C).

(4) Turn the ignition switch to ON, and check that the pump stops after approximately 8 to 14 seconds.
NOTICE:
If the pump does not stop, repeat step C again.

(5) Depress the brake pedal and check the fluid pressure.
At 49 N (5 kgf, 11 lbf)

Front brake pressure	Rear brake pressure
770 to 1,280 kPa (7.9 to 13.1 kgf/cm^2, 112 to 186 psi)	800 to 1,330 kPa (8.2 to 13.6 kgf/cm^2, 116 to 193 psi)

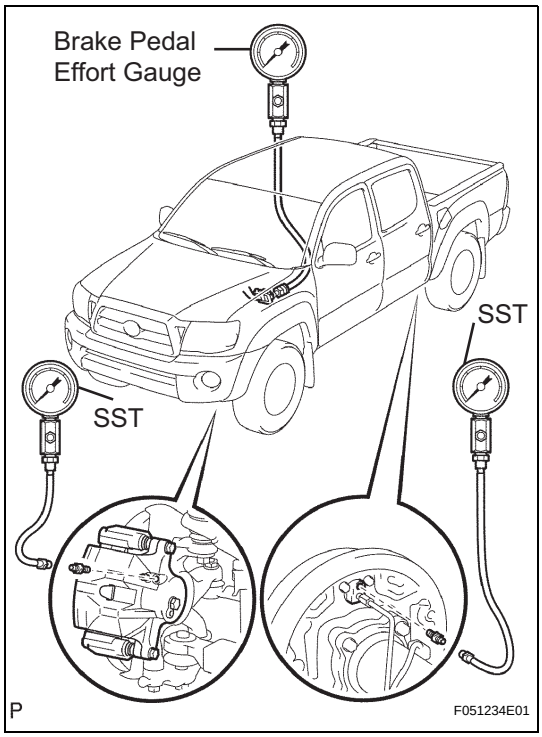

BR

At 98 N (10 kgf, 22 lbf)

Front brake pressure	Rear brake pressure
2,650 to 3,590 kPa (27.0 to 36.6 kgf/cm^2, 384 to 521 psi)	2,680 to 3,630 kPa (27.3 to 37.0 kgf/cm^2, 389 to 526 psi)

At 147 N (15 kgf, 33 lbf)

Front brake pressure	Rear brake pressure
4,680 to 5,720 kPa (47.7 to 58.3 kgf/cm^2, 679 to 830 psi)	4,710 to 5,760 kPa (48.0 to 58.7 kgf/cm^2, 683 to 835 psi)

At 196 N (20 kgf, 44 lbf)

Front brake pressure	Rear brake pressure
6,610 to 7,680 kPa (67.4 to 78.3 kgf/cm^2, 959 to 1,114 psi)	6,640 to 7,720 kPa (67.7 to 78.7 kgf/cm^2, 963 to 1,120 psi)

2. INSPECT BRAKE MASTER CYLINDER OPERATION

(a) Inspect the battery positive voltage.
Battery positive voltage:
10 to 14 V

(b) Turn the ignition switch to OFF, and depress the brake pedal more than 20 times.
HINT:
When pressure in the accumulator is released, the reaction force becomes lighter and the stroke becomes longer.

(c) Check that the brake pedal becomes easy to depress.
If the pedal does not become easy to depress, check and replace the brake line and hydraulic brake booster.

(d) Turn the ignition switch to ON and check the pump motor operation noise.
If the pump motor does not operate, check and replace the wire harness and pump motor (see page BR-48).

(e) Connect the intelligent tester.
(1) Connect the intelligent tester to the DLC3.
(2) Turn the ignition switch to ON.
(3) Select "ACTIVE TEST" mode on the intelligent tester.
HINT:
- Refer to the intelligent tester operator manual for further details.
- To protect the solenoids, intelligent tester turns off automatically 2 seconds after every solenoid has been turned on.

(f) Check the master cylinder solenoid operation.

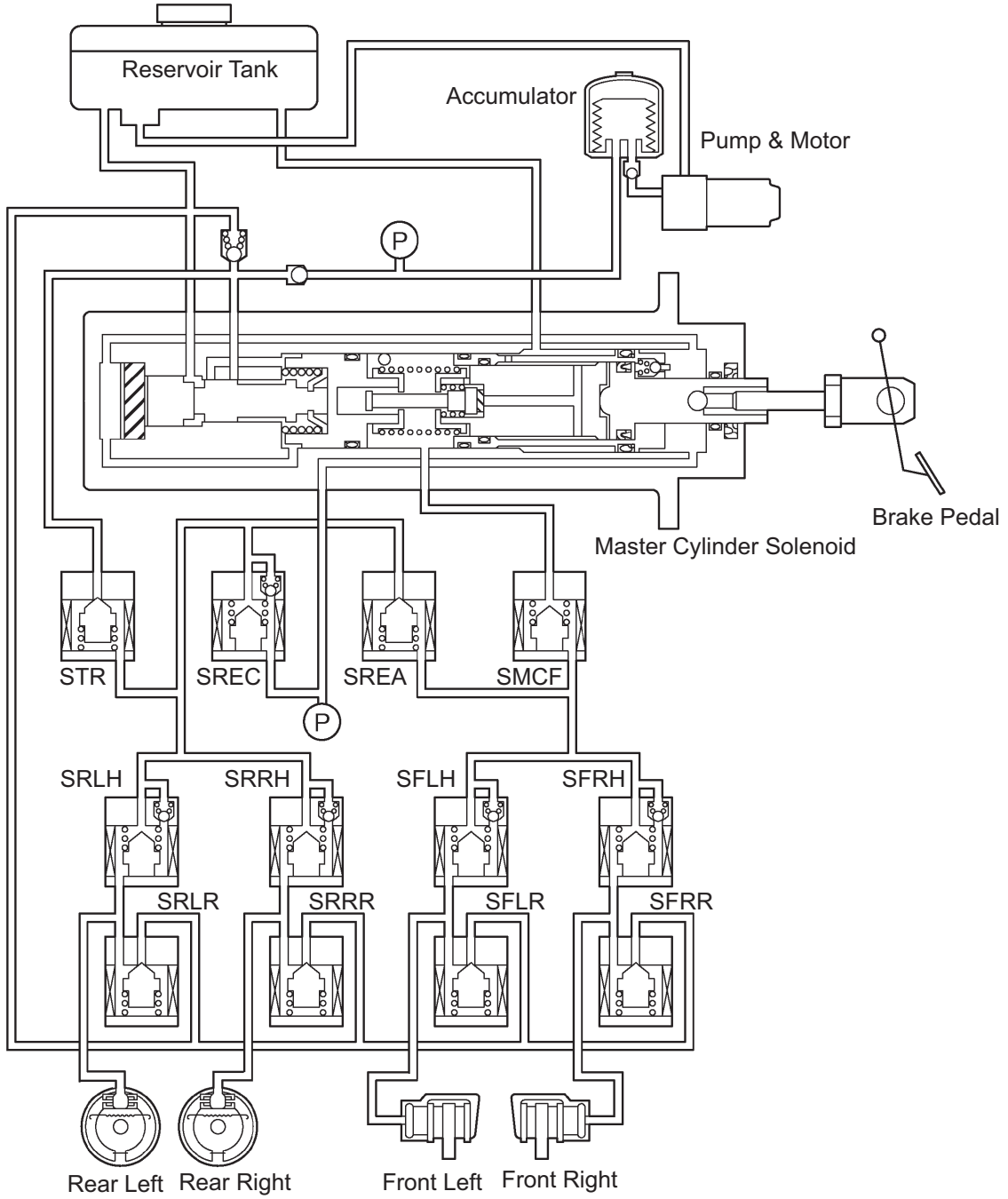

Inspection Order (Step)	SOL Selected By Active Test	SOL To Be Activated
D	SRCF (SA1)	SMCF
E	SRCF (SA1) and SRCR (SA2)	SREA and SMCF

Inspection Order (Step)	SOL Selected By Active Test	SOL To Be Activated
F	SFRH	SFRH
G	SFLH	SFLH
H	SFRR & SFRH	SFRR and SFRH
I	SFLR & SFLH	SFLR and SFLH
J	SRMF (SMCF, SA3)	SREC
K	SRMF (SMCF, SA3) and SRMR (SMCR, STR)	STR and SREC
L	SRRH	SRRH
M	SRLH	SRLH
N	SRH & SRR	SRRR and SRRH
O	SRLR & SRLH	SRLR and SRLH

(g) Inspect front VSC solenoid (SMCF) operation (step D).
HINT:
- ON: Activate SMCF and check that the brake pedal cannot be depressed (the pedal feels tight).
- OFF: Deactivate SMCF and check that the brake pedal can be depressed.

(1) Select "SRCF (SA1)" on the intelligent tester.
(2) Turn the "SRCF (SA1)" on by the intelligent tester, then depress the brake pedal with stable force and check that the pedal cannot be depressed.
If the pedal can be depressed, replace the hydraulic brake booster.
HINT:
To protect the solenoid, intelligent tester turns off automatically 2 seconds after every solenoid has been turned on.
NOTICE:
When operating it continuously, set the interval of more than 20 seconds.
(3) Release the brake pedal.
(4) When the solenoid is off, depress the brake pedal again and check that the brake pedal can be depressed.
If the pedal can be depressed, replace the hydraulic brake booster.

(h) Prepare the vehicle.
(1) Jack up and support the vehicle.
(2) Release the parking brake pedal (lever).
(3) Shift the shift lever to the "N" position and check the rear wheels by rotating them by hand.

(i) Inspect front VSC solenoid (SREA) operation (step E).
HINT:
- ON: Activate SREA and SMCF, depress the brake pedal, and then check that the front wheels do not rotate.

- OFF: Deactivate SREA and SMCF. Reactivate SMCF, depress the brake pedal, and then check that the front wheels rotate.

(1) Select "SRCR (SA2)" and "SRCF (SMCF)" on the intelligent tester.
(2) Turn the "SRCR (SA2)" and "SRCF (SMCF)" on simultaneously by the intelligent tester, then depress the brake pedal with stable force.
(3) When the solenoids are on, check that the front wheels do not rotate by hand.
If the front wheels rotate, replace the brake master cylinder.
HINT:
- To protect the solenoids, intelligent tester turns off automatically 2 seconds after every solenoid has been turned on.
- When rotating the wheels fast, the fail-safe function is activated and judgement cannot be made properly. So rotate the wheels as slowly as possible.

NOTICE:
When operating it continuously, set the interval of more than 20 seconds.

(4) When the solenoids are off, turn the "SRCF (SMCF)" on again, then depress the brake pedal and check the front wheels by rotating them by hand.
If front wheels stop, replace the hydraulic brake booster.
(5) When the "SRCF (SMCF)" is off, depress the brake pedal again and check that the brake pedal can be depressed.
If the pedal can be depressed, replace the hydraulic brake booster.

(j) Inspect front ABS solenoid (SFRH) operation (step F).
HINT:
- ON: Activate SFRH, depress the brake pedal, and then check that the right front wheel rotates.
- OFF: Deactivate SFRH, depress the brake pedal, and then check that the front right wheel does not rotate.

(1) Select "SFRH" on the intelligent tester.
(2) Turn the "SFRH" on by the intelligent tester, then depress the brake pedal with stable force.
(3) When the solenoid is on, check the right front wheel by rotating it by hand.
If the right front wheel stops, replace the hydraulic brake booster.
HINT:
- To protect the solenoid, intelligent tester turns off automatically 2 seconds after every solenoid has been turned on.

- When rotating the wheel fast, the fail-safe function is activated and judgement cannot be made properly. So rotate the wheel as slowly as possible.

NOTICE:
When operating it continuously, set the interval of more than 20 seconds.

(4) When the solenoid is off, depress the brake pedal again and check that the right front wheel does not rotate by hand.
If the right front wheel rotates, replace the hydraulic brake booster.

(k) Inspect front ABS solenoid (SFLH) operation (step G).
HINT:
- ON: Activate SFLH, depress the brake pedal, and then check that the left front wheel rotates.
- OFF: Deactivate SFLH, depress the brake pedal, and then check that the front left wheel does not rotate.

(1) Select "SFLH" on the intelligent tester.
(2) Turn the "SFLH" on by the intelligent tester, then depress the brake pedal with stable force.
(3) When the solenoid is on, check the left front wheel by rotating it by hand.
If the left front wheel stops, replace the hydraulic brake booster.
HINT:
- To protect the solenoid, intelligent tester turns off automatically 2 seconds after every solenoid has been turned on.
- When rotating the wheel fast, the fail-safe function is activated and judgement cannot be made properly. So rotate the wheel as slowly as possible.

NOTICE:
When operating it continuously, set the interval of more than 20 seconds.

(4) When the solenoid is off, depress the brake pedal again and check that the left front wheel does not rotate by hand.
If the left front wheel rotates, replace the hydraulic brake booster.

(l) Inspect front ABS solenoid (SFRR) operation (step H).
HINT:
- ON: Depress the brake pedal, activate SFRR and SFRH, and then check that the right front wheel rotates.
- OFF: Deactivate SFRR and SFRH, depress the brake pedal, and then check that the right front wheel does not rotate.

(1) Select "SFRR & SFRH" on the intelligent tester.

(2) Depress the brake pedal with stable force, then turn the "SFRR & SFRH" on simultaneously by the intelligent tester.
(3) When the solenoids are on, check the right front wheel by rotating it by hand.
If the right front wheel stops, replace the hydraulic brake booster.
HINT:
- To protect the solenoids, intelligent tester turns off automatically 2 seconds after every solenoid has been turned on.
- When rotating the wheel fast, the fail-safe function is activated and judgement cannot be made properly. So rotate the wheel as slowly as possible.

NOTICE:
When operating it continuously, set the interval of more than 20 seconds.

(4) When the solenoids are off, depress the brake pedal again and check that the right front wheel does not rotate by hand.
If the right front wheel rotates, replace the hydraulic brake booster.

(m) Inspect front ABS solenoid (SFLR) operation (step I).
HINT:
- ON: Depress the brake pedal, activate SFLR and SFLH, and then check that the left front wheel rotates.
- OFF: Deactivate SFLR and SFLH, depress the brake pedal, and then check that the left front wheel does not rotate.

(1) Select "SFLR & SFLH" on the intelligent tester.
(2) Depress the brake pedal with stable force, then turn the "SFLR & SFLH" on simultaneously by the intelligent tester.
(3) When the solenoids are on, check the left front wheel by rotating it by hand.
If the left front wheel stops, replace the hydraulic brake booster.
HINT:
- To protect the solenoids, intelligent tester turns off automatically 2 seconds after every solenoid has been turned on.
- When rotating the wheel fast, the fail-safe function is activated and judgement cannot be made properly. So rotate the wheel as slowly as possible.

NOTICE:
When operating it continuously, set the interval of more than 20 seconds.

(4) When the solenoids are off, depress the brake pedal again and check that the left front wheel does not rotate by hand.
If the left front wheel rotates, replace the hydraulic brake booster.

(n) Inspect rear VSC solenoid (SREC) operation (step J).
HINT:
- ON: Depress the brake pedal, activate SREC. Release the brake pedal and check that the rear wheels do not rotate.
- OFF: Deactivate SREC and check that the rear wheels rotate.

(1) Select "SRMF (SMCF, SA3)" on the intelligent tester.
(2) Depress the brake pedal with stable force, then turn the "SRMF (SMCF, SA3)" on by the intelligent tester.
(3) Release the brake pedal when the solenoid is on, and check that the rear wheels do not rotate by hand.
If the rear wheels rotate, replace the hydraulic brake booster.
HINT:
- To protect the solenoids, intelligent tester turns off automatically 2 seconds after every solenoid has been turned on.
- When rotating the wheels fast, the fail-safe function is activated and judgement cannot be made properly. So rotate the wheels as slowly as possible.

NOTICE:
When operating it continuously, set the interval of more than 20 seconds.

(4) When the solenoid is off, check the rear wheels by rotating them by hand.
If the rear wheels stop, replace the hydraulic brake booster.

(o) Inspect rear VSC solenoid (STR) operation (step K).
HINT:
- ON: Activate STR and SREC, then check that the rear wheels do not rotate.
- OFF: Deactivate STR and SREC. Reactivate SREC and check that the rear wheels rotate.

(1) Select "SRMR (SMCR, STR)" on the intelligent tester.
(2) Turn the "SRMR (SMCR, STR) on simultaneously by the intelligent tester.
(3) When the solenoids are on , check that the rear wheels do not rotate by hand.
If the rear wheels rotate, replace the hydraulic brake booster.

HINT:
- To protect the solenoids, intelligent tester turns off automatically 2 seconds after every solenoid has been turned on.
- When rotating the wheels fast, the fail-safe function is activated and judgement cannot be made properly. So rotate the wheels as slowly as possible.

NOTICE:
When operating it continuously, set the interval of more than 20 seconds.

(4) When the solenoids are off, check the rear wheels by rotating them by hand.
If the rear wheels stop, replace the hydraulic brake booster.

(5) When the "SRMF (SREC)" is off, depress the brake pedal again and check that the rear wheels do not rotate by hand.
If the rear wheels rotate, replace the hydraulic brake booster.

(p) Inspect rear ABS solenoid (SRRH) operation (step L).
HINT:
- ON: Activate SRRH, depress the brake pedal, and then check that the right rear wheel rotates.
- OFF: Deactivate SRRH, depress the brake pedal, and then check that the right rear wheel does not rotate.

(1) Select "SRRH" on the intelligent tester.

(2) Turn the "SRRH" on by the intelligent tester, then depress the brake pedal with stable force.

(3) When the solenoid is on, check the right rear wheel by rotating it by hand.
If the right rear wheel stops, replace the hydraulic brake booster.
HINT:
- To protect the solenoids, intelligent tester turns off automatically 2 seconds after every solenoid has been turned on.
- When rotating the wheel fast, the fail-safe function is activated and judgement cannot be made properly. So rotate the wheel as slowly as possible.

NOTICE:
When operating it continuously, set the interval of more than 20 seconds.

(4) When the solenoid is off, depress the brake pedal again and check that the right rear wheel does not rotate by hand.
If the right rear wheel rotates, replace the hydraulic brake booster.

(q) Inspect front ABS solenoid (SRLH) operation (step M).
HINT:
- ON: Activate SRLH, depress the brake pedal, and then check that the left rear wheel rotates.
- OFF: Deactivate SRLH, depress the brake pedal, and then check that the left rear wheel does not rotate.

(1) Select "SRLH" on the intelligent tester.
(2) Turn the "SRLH" on by the intelligent tester, then depress the brake pedal with stable force.
(3) When the solenoid is on, check the left rear wheel by rotating it by hand.
If the left rear wheel stops, replace the hydraulic brake booster.
HINT:
- To protect the solenoid, intelligent tester turns off automatically 2 seconds after every solenoid has been turned on.
- When rotating the wheel fast, the fail-safe function is activated and judgement cannot be made properly. So rotate the wheel as slowly as possible.

NOTICE:
When operating it continuously, set the interval of more than 20 seconds.

(4) When the solenoid is off, depress the brake pedal again and check that the left rear wheel does not rotate by hand.
If the left rear wheel rotates, replace the hydraulic brake booster.

(r) Inspect rear ABS solenoid (SRRR) operation (step N).
HINT:
- ON: Depress the brake pedal, activate SRRR and SRRH, and then check that the right rear wheel rotates.
- OFF: Deactivate SRRR and SRRH, depress the brake pedal, and then check that the right rear wheel does not rotate.

(1) Select "SRH & SRR" on the intelligent tester.
(2) Depress the brake pedal with stable force, then turn the "SRH & SRR" on simultaneously by the intelligent tester.
(3) When the solenoids are on, check the right rear wheel by rotating it by hand.
If the right rear wheel stops, replace the hydraulic brake booster.
HINT:
- To protect the solenoids, intelligent tester turns off automatically 2 seconds after every solenoid has been turned on.

- When rotating the wheel fast, the fail-safe function is activated and judgement cannot be made properly. So rotate the wheel as slowly as possible.

NOTICE:
When operating it continuously, set the interval of more than 20 seconds.

(4) When the solenoids are off, depress the brake pedal again and check that the right rear wheel does not rotate by hand.
If the right rear wheel rotates, replace the hydraulic brake booster.

(s) Inspect rear ABS solenoid (SRLR) operation (step O).
HINT:
- ON: Depress the brake pedal, activate SRLR and SRLH, and then check that the left rear wheel rotates.
- OFF: Deactivate SRLR and SRLH, depress the brake pedal, and then check that the left rear wheel does not rotate.

(1) Select "SRLR & SRLH" on the intelligent tester.
(2) Depress the brake pedal with stable force, then turn the "SRLR & SRLH" on simultaneously by the intelligent tester.
(3) When the solenoids are on, check the left rear wheel by rotating it by hand.
If the left rear wheel stops, replace the hydraulic brake booster.
HINT:
- To protect the solenoids, intelligent tester turns off automatically 2 seconds after every solenoid has been turned on.
- When rotating the wheel fast, the fail-safe function is activated and judgement cannot be made properly. So rotate the wheel as slowly as possible.

NOTICE:
When operating it continuously, set the interval of more than 20 seconds.

(4) When the solenoids are off, depress the brake pedal again and check that the left rear wheel does not rotate by hand.
If the left rear wheel rotates, replace the hydraulic brake booster.

(t) Lower the vehicle.
(u) Disconnect the intelligent tester.

REMOVAL

NOTICE:

- **Before starting the work, make sure that the ignition switch is OFF and depress the brake pedal more than 20 times.**
- **As high pressure is applied to the brake actuator tube No. 1, never deform it.**
- **Do not turn the ignition switch to ON until the work is completed.**

HINT:

When pressure in the accumulator is released, reaction force becomes lighter and stroke becomes longer.

1. **DISCONNECT CABLE FROM NEGATIVE BATTERY TERMINAL**
2. **DRAIN BRAKE FLUID**
   NOTICE:
   Immediately wash off any brake fluid off immediately that comes into contact with a painted surface.
3. **REMOVE FRONT FLOOR FOOTREST (See page IR-1)**
4. **REMOVE FRONT DOOR SCUFF PLATE (for Regular Cab) (See page IR-40)**
5. **REMOVE FRONT DOOR SCUFF PLATE (for Access Cab) (See page IR-61)**
6. **REMOVE FRONT DOOR SCUFF PLATE (for Double Cab) (See page IR-12)**
7. **REMOVE COWL SIDE TRIM BOARD (for Regular Cab) (See page IR-40)**
8. **REMOVE COWL SIDE TRIM BOARD (for Access Cab) (See page IR-61)**
9. **REMOVE COWL SIDE TRIM BOARD (for Double Cab) (See page IR-12)**
10. **REMOVE INSTRUMENT PANEL UNDER TRAY (for Automatic Transmission) (See page IP-9)**
11. **REMOVE INSTRUMENT PANEL HOLE COVER (for Manual Transmission) (See page IP-9)**
12. **REMOVE INSTRUMENT PANEL FINISH PANEL LOWER NO. 1 (See page IP-12)**
13. **SEPARATE DRIVER SIDE JUNCTION BLOCK**
14. **SEPARATE MASTER CYLINDER PUSH ROD CLEVIS (See page BR-15)**

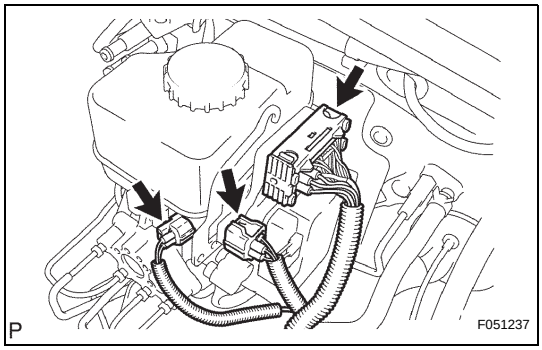

15. REMOVE HYDRAULIC BRAKE BOOSTER

(a) Disconnect the 3 connectors from the hydraulic brake booster.

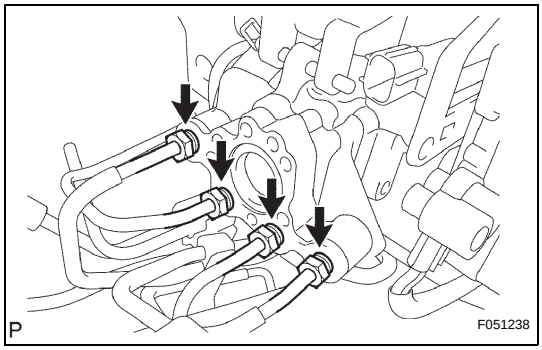

(b) Using SST, disconnect the 4 brake lines from the hydraulic brake booster.
SST 09023-00101

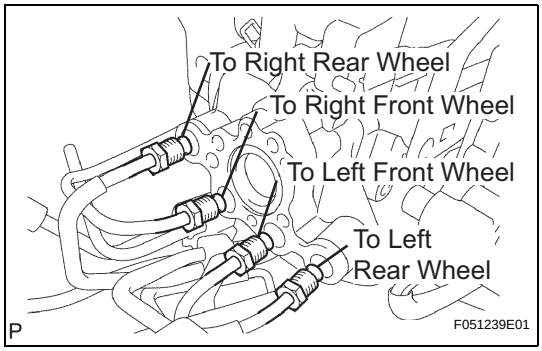

(c) Use tags or labels to identify the place to reconnect each line.

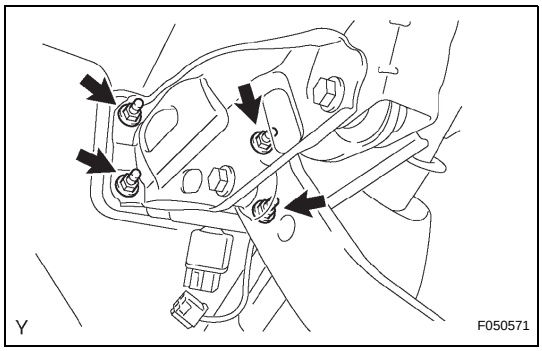

(d) Remove the 4 nuts and pull out the hydraulic brake booster.
(e) Remove the brake booster gasket.

DISASSEMBLY

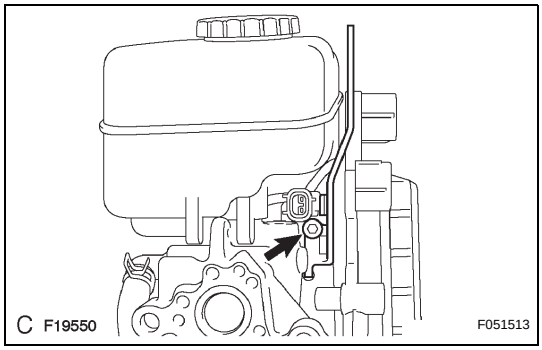

1. REMOVE BRAKE ACTUATOR BRACKET NO. 1

(a) Using a hexagon wrench (5 mm), remove the screw and brake actuator bracket No. 1.

BR

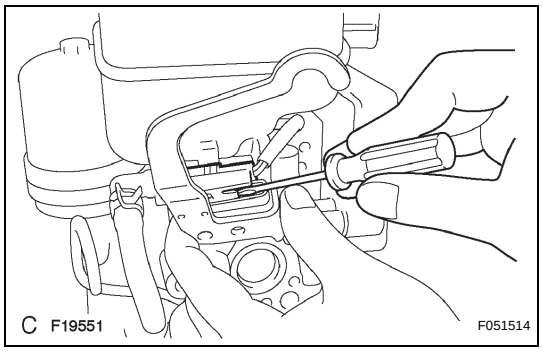

(b) Using a screwdriver, remove the fluid level warning switch connector.

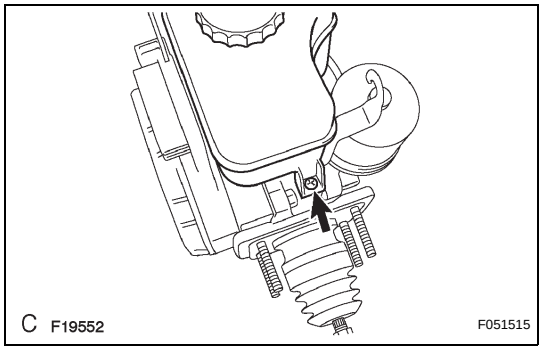

2. REMOVE BRAKE MASTER CYLINDER RESERVOIR SUB-ASSEMBLY

(a) Remove the screw from the master cylinder reservoir.

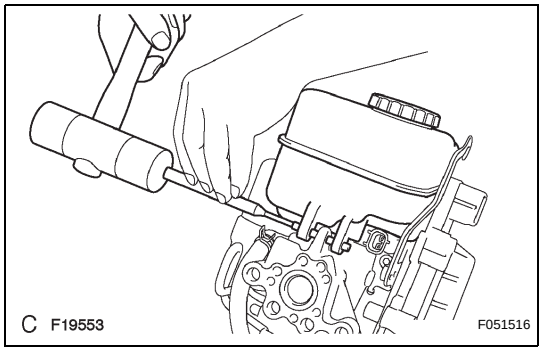

(b) Using a pin punch and hammer, remove the pin from the master cylinder reservoir.
(c) Pull out the master cylinder reservoir.
(d) Remove the 3 grommets.
(e) Remove the cap.

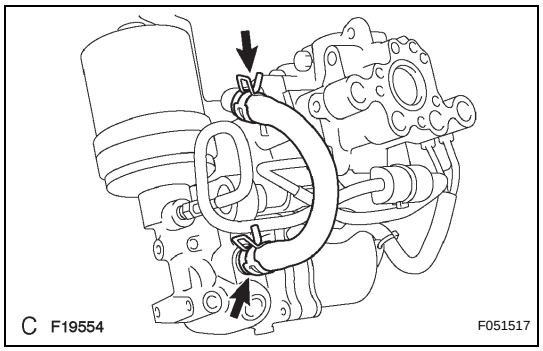

3. REMOVE BRAKE ACTUATOR HOSE

(a) Using needle-nose pliers, slide the 2 clips.
(b) Remove the brake actuator hose.

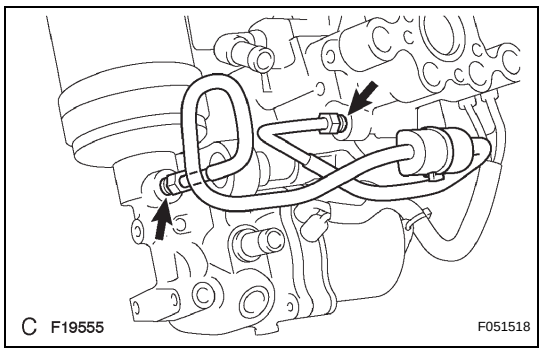

4. REMOVE BRAKE ACTUATOR TUBE NO. 1

(a) Using SST, remove the brake actuator tube No. 1.
SST 09023-00101

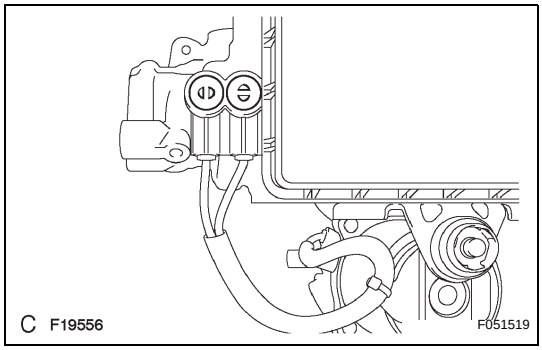

5. REMOVE BRAKE BOOSTER WITH ACCUMULATOR PUMP ASSEMBLY

(a) Using a screwdriver, remove the 2 plugs.

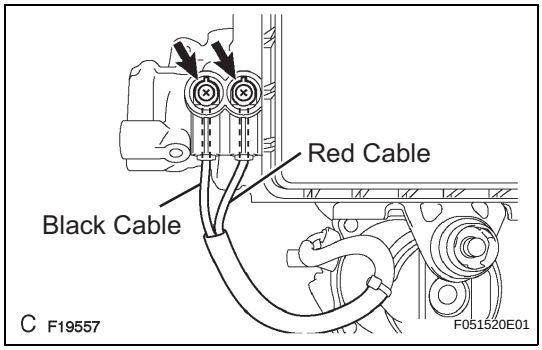

(b) Remove the 2 screws and pull the wire harness.

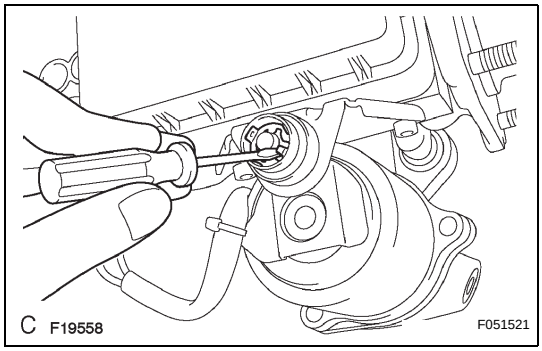

(c) Using a screwdriver, remove the clip.

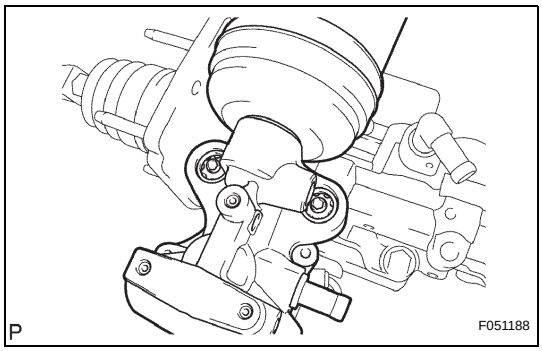

(d) Remove the brake booster w/ accumulator pump assembly.

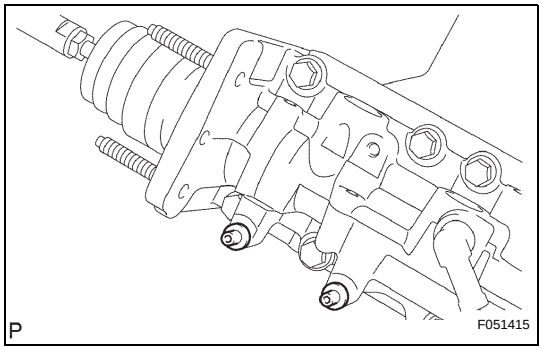

(e) Using a hexagon wrench (4 mm), remove the 2 pins.

(f) Remove the 2 bushes and 2 collars from the brake booster with accumulator pump assembly.

BR

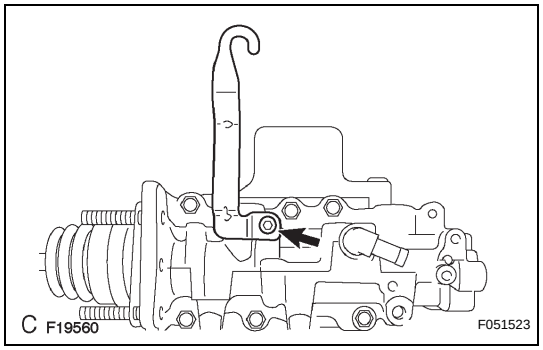

6. REMOVE BRAKE ACTUATOR BRACKET

(a) Using a hexagon wrench (5 mm), remove the screw and brake actuator bracket.

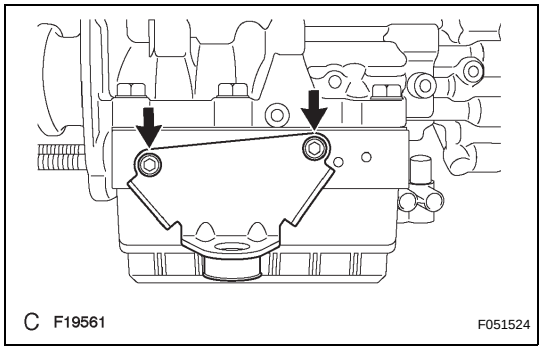

7. REMOVE BRAKE BOOSTER PUMP BRACKET

(a) Using a hexagon wrench (5 mm), remove the 2 screws and brake booster pump bracket.

(b) Remove the bush from the brake booster pump bracket.

8. REMOVE MASTER CYLINDER PUSH ROD CLEVIS

(a) Loosen the lock nut on the brake master cylinder side, and then remove the rod operating adapter and lock nut.

(b) Loosen the lock nut on the rod operating adapter, and then remove the push rod clevis and lock nut.

9. REMOVE MASTER CYLINDER BOOT

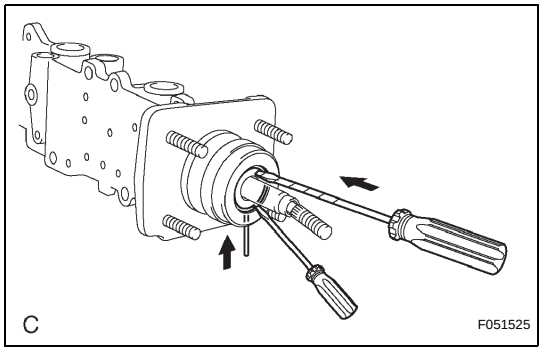

10. REMOVE PISTON

(a) Which pressing in the piston with a screwdriver, use a pin or equivalent to push the C-ring from the hole in the master cylinder body. Then remove the snap ring with another screwdriver.

(b) Remove the piston by pulling it straight out, not at an angle.

NOTICE:

- **If the piston is pulled out at an angle, there is a possibility that the cylinder bore could be damaged.**
- **Be careful not to damage the rubber lips on the piston when reassembling.**

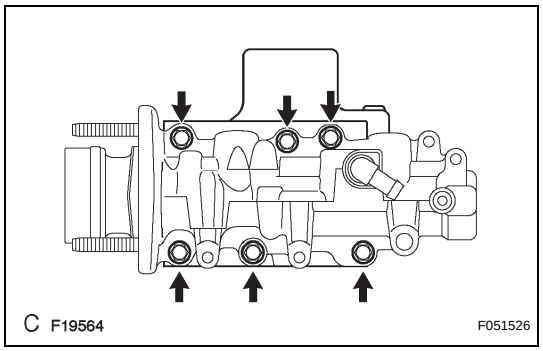

11. REMOVE MASTER CYLINDER SOLENOID

(a) Remove the 6 bolts.

(b) Remove the master cylinder solenoid and the gasket.

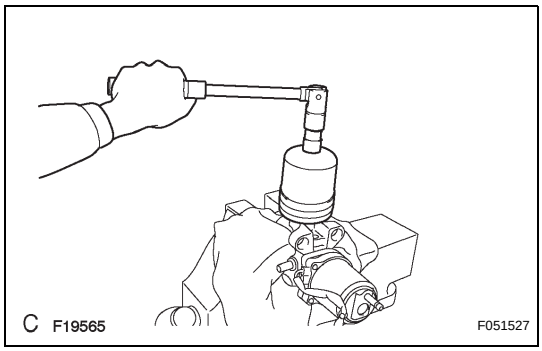

12. REMOVE BRAKE BOOSTER ACCUMULATOR ASSEMBLY

(a) Place the brake booster with accumulator pump assembly in a vise with a cloth.

(b) Using a socket wrench (17 mm), remove the brake booster accumulator.

(c) Remove the brake booster accumulator pipe, compression spring and O-ring.

INSPECTION

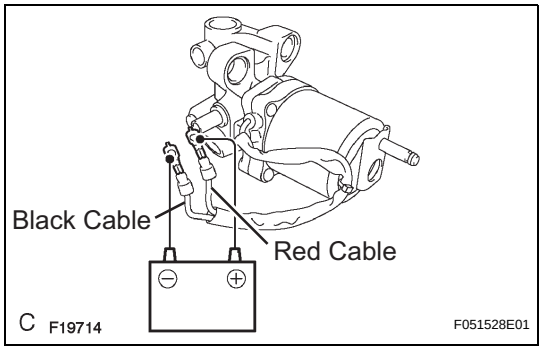

1. INSPECT BRAKE BOOSTER PUMP ASSEMBLY

(a) Connect the positive (+) lead from the battery to the red cable of the pump, and the negative (-) lead to the black cable.

(b) Check the brake booster pump operation.

OK:

Operation sound is heard.

REASSEMBLY

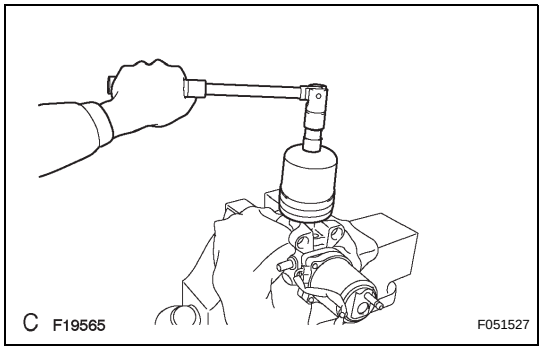

1. INSTALL BRAKE BOOSTER ACCUMULATOR ASSEMBLY

(a) Place the brake booster pump in a vise with a cloth.

(b) Install the brake booster accumulator pipe, compression spring and a new O-ring.

NOTICE:

Ensure that no foreign matter enters the pump.

(c) Using a socket wrench (17 mm), install the brake booster accumulator onto the brake booster pump.

Torque: 57.4 N*m (585 kgf*cm, 42 ft.*lbf)

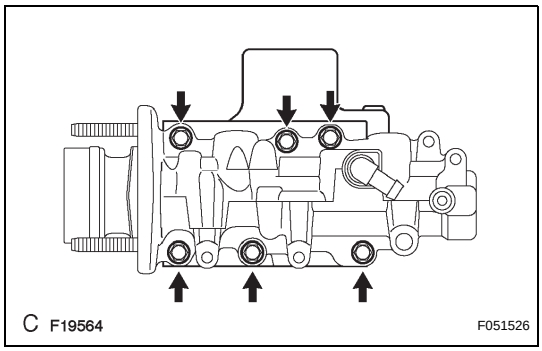

2. INSTALL MASTER CYLINDER SOLENOID

(a) Place a new gasket on the master cylinder solenoid and install them onto the master cylinder body with 6 new bolts.

Torque: 31.9 N*m (325 kgf*cm, 24 ft.*lbf)

NOTICE:

Do not let water, dust, and/or other objects attach to the surface and/or attaching surface of the master cylinder solenoid, master cylinder and body gasket.

3. INSTALL PISTON

(a) Apply lithium soap base glycol grease to the new piston.

(b) Install the piston onto the master cylinder body.

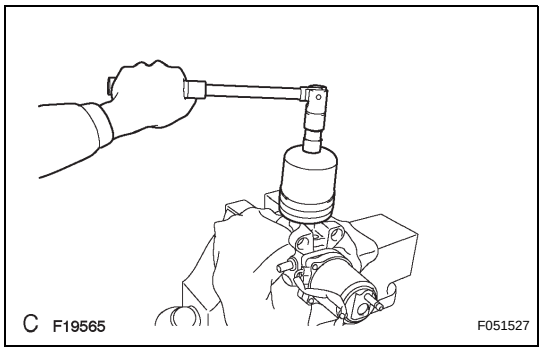

12. REMOVE BRAKE BOOSTER ACCUMULATOR ASSEMBLY

(a) Place the brake booster with accumulator pump assembly in a vise with a cloth.

(b) Using a socket wrench (17 mm), remove the brake booster accumulator.

(c) Remove the brake booster accumulator pipe, compression spring and O-ring.

INSPECTION

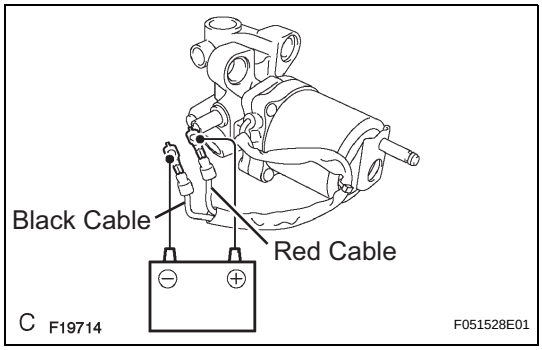

1. INSPECT BRAKE BOOSTER PUMP ASSEMBLY

(a) Connect the positive (+) lead from the battery to the red cable of the pump, and the negative (-) lead to the black cable.

(b) Check the brake booster pump operation.

OK:

Operation sound is heard.

REASSEMBLY

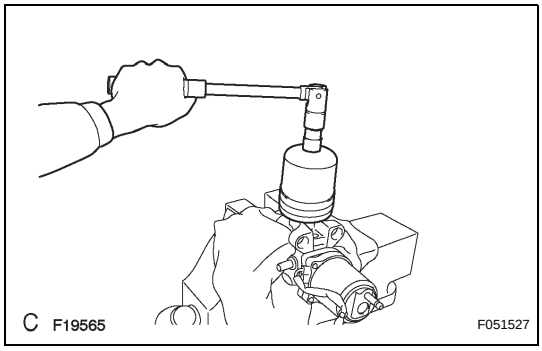

1. INSTALL BRAKE BOOSTER ACCUMULATOR ASSEMBLY

(a) Place the brake booster pump in a vise with a cloth.

(b) Install the brake booster accumulator pipe, compression spring and a new O-ring.

NOTICE:

Ensure that no foreign matter enters the pump.

(c) Using a socket wrench (17 mm), install the brake booster accumulator onto the brake booster pump.

Torque: 57.4 N*m (585 kgf*cm, 42 ft.*lbf)

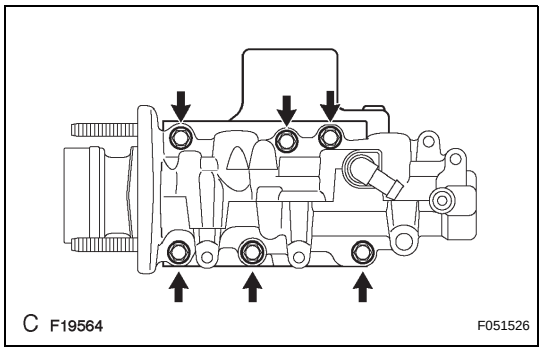

2. INSTALL MASTER CYLINDER SOLENOID

(a) Place a new gasket on the master cylinder solenoid and install them onto the master cylinder body with 6 new bolts.

Torque: 31.9 N*m (325 kgf*cm, 24 ft.*lbf)

NOTICE:

Do not let water, dust, and/or other objects attach to the surface and/or attaching surface of the master cylinder solenoid, master cylinder and body gasket.

3. INSTALL PISTON

(a) Apply lithium soap base glycol grease to the new piston.

(b) Install the piston onto the master cylinder body.

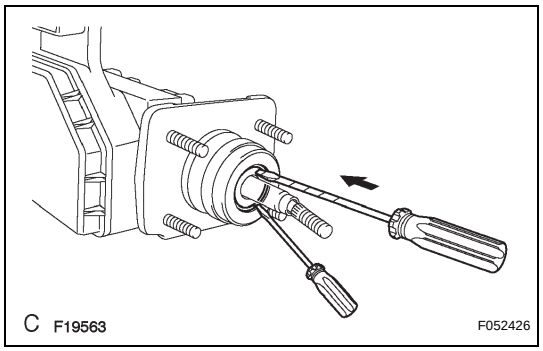

(c) Using 2 screwdrivers, install a new C-ring while pressing the piston.
NOTICE:
- **If the piston is pulled out at an angle, there is a possibility that the cylinder bore could be damaged.**
- **Be careful not to damage the rubber lips on the piston when reassembling.**

4. INSTALL MASTER CYLINDER BOOT

5. INSTALL MASTER CYLINDER PUSH ROD CLEVIS

(a) Install the lock nut and master cylinder push rod clevis onto the rod operating adapter.

(b) Install the hydraulic brake booster side lock nut and rod operating adapter onto the hydraulic brake booster.
Torque: 25.5 N*m (260 kgf*cm, 19 ft.*lbf)

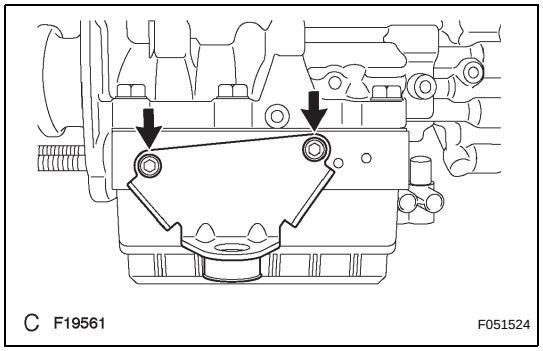

6. INSTALL BRAKE BOOSTER PUMP BRACKET

(a) Using a hexagon wrench (5 mm), install the brake booster pump bracket with the 2 screws.
Torque: 7.8 N*m (80 kgf*cm, 69 in.*lbf)

(b) Install the bush onto the brake booster pump bracket.

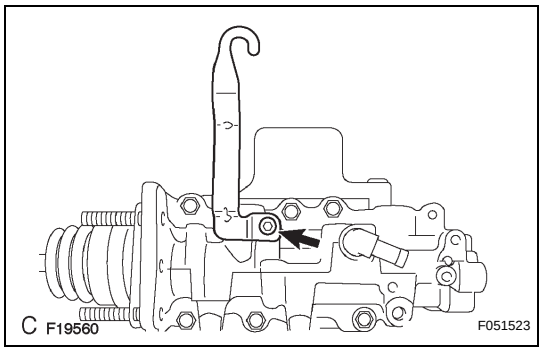

7. INSTALL BRAKE ACTUATOR BRACKET

(a) Using a hexagon wrench (5 mm), install the brake actuator bracket with the screw.
Torque: 7.8 N*m (80 kgf*cm, 69 in.*lbf)

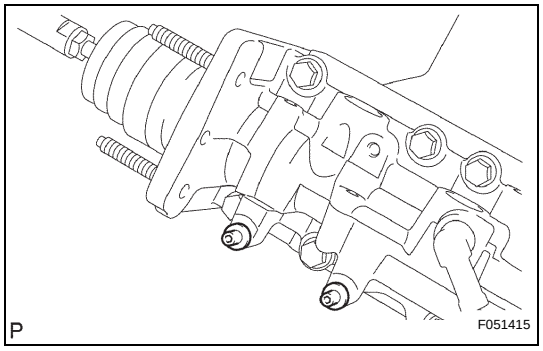

8. INSTALL BRAKE BOOSTER WITH ACCUMULATOR PUMP ASSEMBLY

(a) Install the 2 collars and 2 bushes onto the brake booster w/ accumulator pump assembly.

(b) Using a hexagon wrench (4 mm), install the 2 pins.
Torque: 7.8 N*m (80 kgf*cm, 69 in.*lbf)

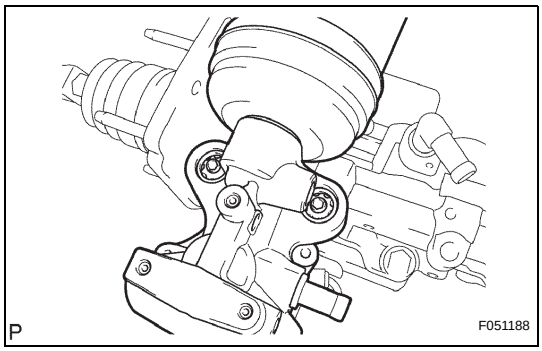

(c) Install the brake booster w/ accumulator pump assembly.

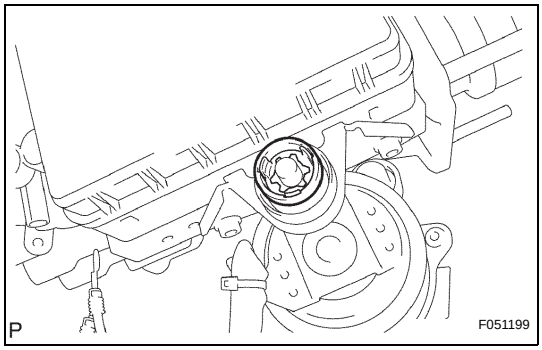

(d) Install a new clip.

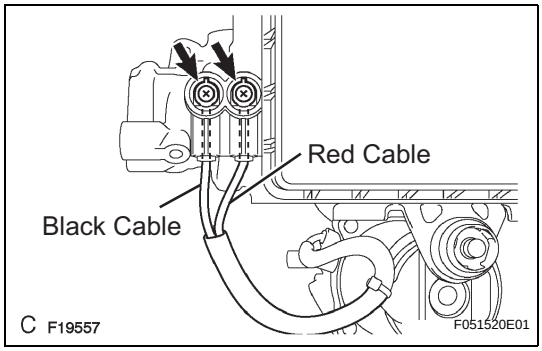

(e) Install the wire harness with the 2 screws.
Torque: 2.9 N*m (30 kgf*cm, 26 in.*lbf)

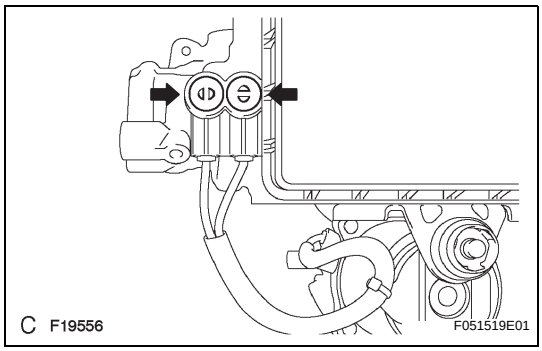

(f) Install the 2 new plugs.

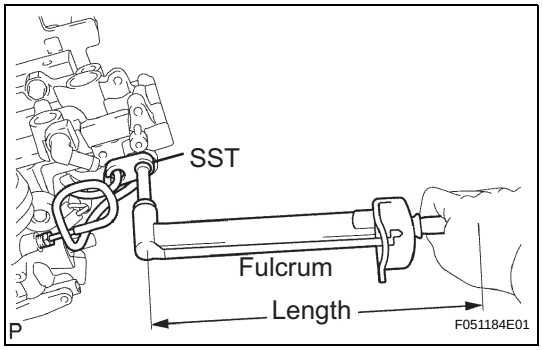

9. INSTALL BRAKE ACTUATOR TUBE NO. 1

(a) Using SST, install the brake actuator tube No. 1.
SST 09023-00101
Torque: for use without SST
15.2 N*m (155 kgf*cm, 11 ft.*lbf)
for use with SST
14 N*m (143 kgf*cm, 10 ft.*lbf)

HINT:

- Use a torque wrench with a fulcrum length of 250 mm (9.84 in.).

BR

- This torque value is effective when SST is parallel to a torque wrench.

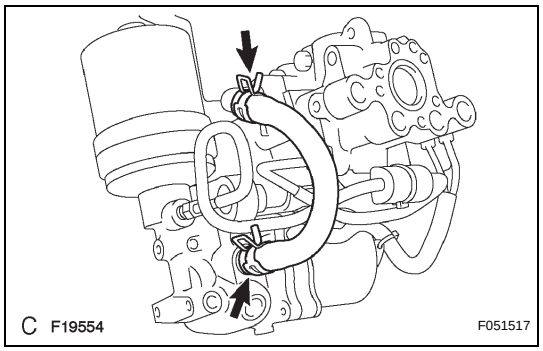

10. INSTALL BRAKE ACTUATOR HOSE

(a) Using needle-nose pliers, install the brake actuator hose and 2 clips.

11. INSTALL BRAKE MASTER CYLINDER RESERVOIR SUB-ASSEMBLY

(a) Install the cap.

(b) Apply lithium soap base glycol grease to the 3 new grommets.

(c) Install the 3 grommets to the master cylinder body.
NOTICE:
Be careful of the size of each grommets.

(d) Install the master cylinder reservoir.

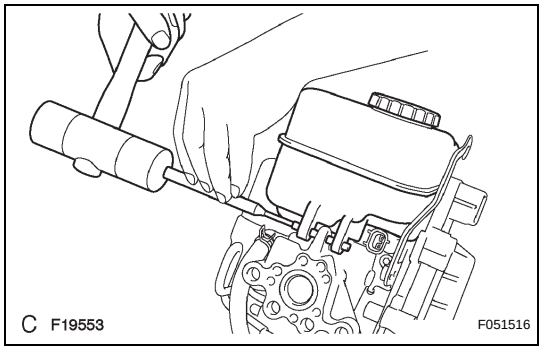

(e) Using a pin punch and hammer, install a new pin onto the master cylinder reservoir.

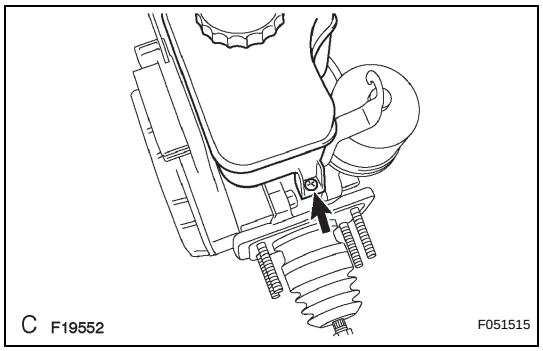

(f) Install the screw onto the master cylinder reservoir.
Torque: 1.7 N*m (17 kgf*cm, 15 in.*lbf)

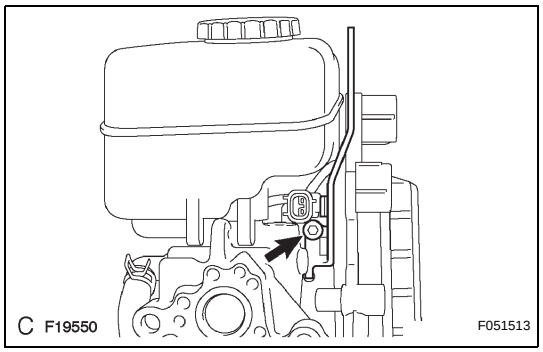

12. INSTALL BRAKE ACTUATOR BRACKET NO. 1

(a) Install the fluid level warning switch connector.

(b) Using a hexagon wrench (5 mm), install the brake actuator bracket No. 1 with the screw.
Torque: 7.8 N*m (80 kgf*cm, 69 in.*lbf)

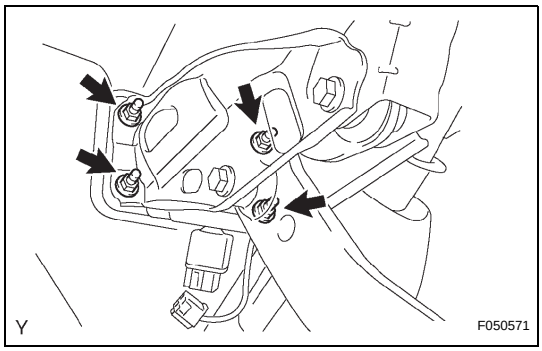

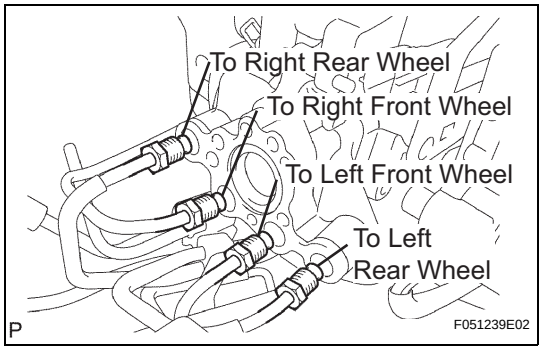

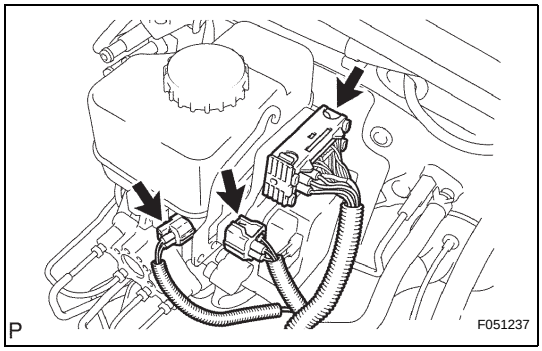

INSTALLATION

1. **INSTALL HYDRAULIC BRAKE BOOSTER**
   (a) Install a new brake booster gasket onto the hydraulic brake booster.
   (b) Install the hydraulic brake booster with the 4 nuts.
   Torque: 14.2 N*m (145 kgf*cm, 10 ft.*lbf)

   (c) Using SST, connect the 4 brake lines to the correct positions of the hydraulic brake booster, as shown in the illustration.
   SST 09023-00101
   Torque: 15.2 N*m (155 kgf*cm, 11 ft.*lbf)

   (d) Connect the 3 connectors.

2. **INSTALL MASTER CYLINDER PUSH ROD CLEVIS (See page BR-18)**
3. **INSTALL DRIVER SIDE JUNCTION BLOCK**
   Torque: 8.0 N*m (82 kgf*cm, 71 in.*lbf)
4. **INSTALL INSTRUMENT PANEL FINISH PANEL LOWER NO. 1 (See page IP-22)**
5. **INSTALL INSTRUMENT PANEL UNDER TRAY (for Automatic Transmission) (See page IP-25)**
6. **INSTALL INSTRUMENT PANEL HOLE COVER (for Manual Transmission) (See page IP-25)**
7. **INSTALL COWL SIDE TRIM BOARD (for Regular Cab) (See page IR-52)**
8. **INSTALL COWL SIDE TRIM BOARD (for Access Cab) (See page IR-75)**
9. **INSTALL COWL SIDE TRIM BOARD (for Double Cab) (See page IR-29)**
10. **INSTALL FRONT DOOR SCUFF PLATE (for Regular Cab) (See page IR-52)**
11. **INSTALL FRONT DOOR SCUFF PLATE (for Access Cab) (See page IR-75)**
12. **INSTALL FRONT DOOR SCUFF PLATE (for Double Cab) (See page IR-29)**
13. **INSTALL FRONT FLOOR FOOTREST (See page IR-1)**
14. **CONNECT CABLE TO NEGATIVE BATTERY TERMINAL**
    Torque: 3.9 N*m (40 kgf*cm, 35 in.*lbf)

(See page IN-5)

15. **INSPECT BRAKE PEDAL HEIGHT (See page BR-11)**
16. **INSPECT PEDAL FREE PLAY (See page BR-14)**
17. **INSPECT PEDAL RESERVE DISTANCE (See page BR-14)**
18. **FILL RESERVOIR WITH BRAKE FLUID (See page BR-4)**
19. **BLEED BRAKE BOOSTER WITH ACCUMULATOR PUMP ASSEMBLY (See page BR-4)**
20. **BLEED BRAKE LINE (See page BR-4)**
21. **BLEED MASTER CYLINDER SOLENOID (See page BR-5)**
22. **CHECK FLUID LEVEL IN RESERVOIR (See page BR-6)**
23. **CHECK FOR BRAKE FLUID LEAKAGE**
24. **INSPECT BRAKE MASTER CYLINDER OPERATION (See page BR-33)**

DISPOSAL

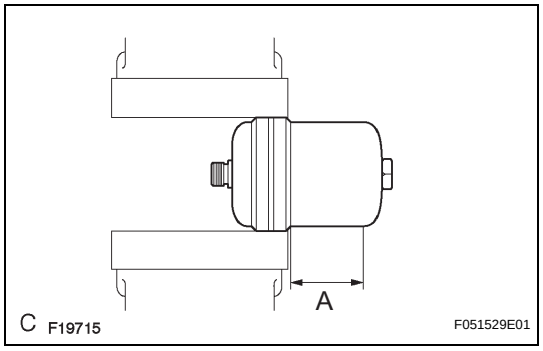

1. **DISPOSE OF BRAKE BOOSTER ACCUMULATOR ASSEMBLY**
   (a) Place the brake booster accumulator in a vise and cover it with a cloth.
   (b) Slowly cut a hole on the brake booster accumulator side in the A portion shown in the illustration on the left. And discharge the gas and liquid inside.
   NOTICE:
   - **As gas may spray out, cover the brake booster accumulator with a cloth when performing the operation.**
   - **Work slowly and do not cut the hole too quickly or suddenly.**
   - **Wear protective glasses during the operation.**

   (c) When the outer body of the brake booster accumulator is cut, gas and liquid discharge.
   HINT:
   - The gas is colorless, odorless and nonpoisonous nitrogen gas.
   - The liquid is brake fluid.

INSPECTION

1. INSPECT BRAKE CYLINDER AND PISTON

(a) Check the cylinder bore and disc brake piston for rust and scoring.
If necessary, replace the disc brake cylinder.

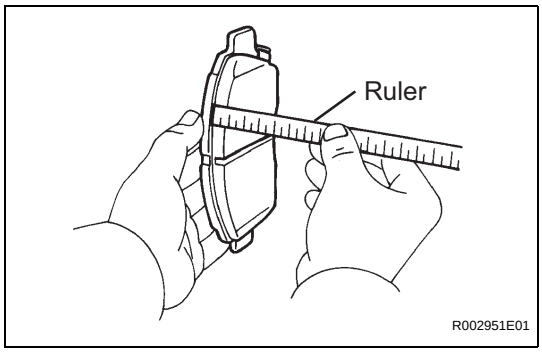

2. INSPECT PAD LINING THICKNESS

(a) Using a ruler, measure the pad lining thickness.
Standard thickness:
12.0 mm (0.472 in.)
Minimum thickness:
1.0 mm (0.039 in.)
If the pad lining thickness is less than to the minimum thickness, replace the brake pad kit front.

3. INSPECT FRONT DISC BRAKE PAD SUPPORT PLATE

(a) Make sure that both plates have sufficient rebound, have no deformation, cracks or wear, and that all rust and dirt are cleaned off.
If necessary, replace the brake pad support plate.

REASSEMBLY

1. TEMPORARILY TIGHTEN FRONT DISC BRAKE BLEEDER PLUG

(a) Provisionally tighten the bleeder plug to the disc brake cylinder.

2. INSTALL PISTON SEAL

(a) Apply lithium soap base glycol grease to a new piston seal.

(b) Install the piston seal onto the disc brake cylinder.

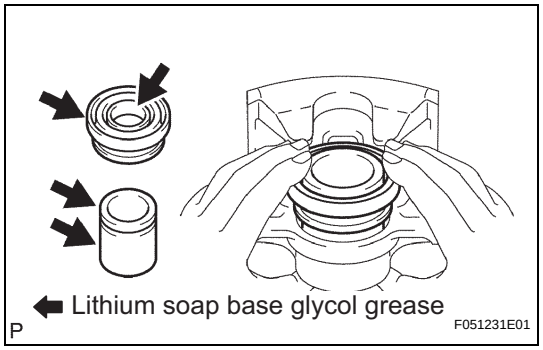

3. INSTALL FRONT DISC BRAKE PISTON

(a) Apply lithium soap base glycol grease to the disc brake piston and a new cylinder boot.

(b) Install the cylinder boot onto the front disc brake piston.

(c) Install the disc brake piston into the disc brake cylinder.

HINT:

Do not install the disc brake piston into the disc brake cylinder forcibly.

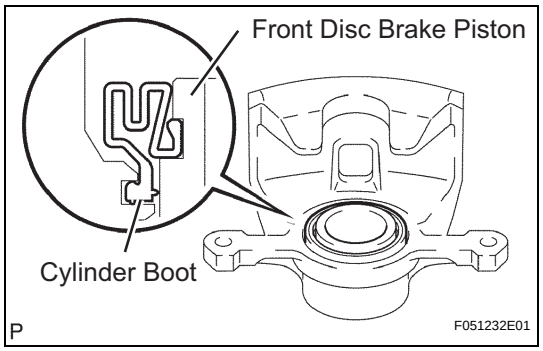

4. INSTALL CYLINDER BOOT

(a) Install the cylinder boot onto the disc brake cylinder.

HINT:

Install the cylinder boot securely into the grooves of the disc brake cylinder and piston.

INSTALLATION

1. INSTALL FRONT DISC

(a) Aligning the matchmarks, install the front disc.
HINT:
When replacing the disc with a new one, select the installation position where the disc has the minimum runout.

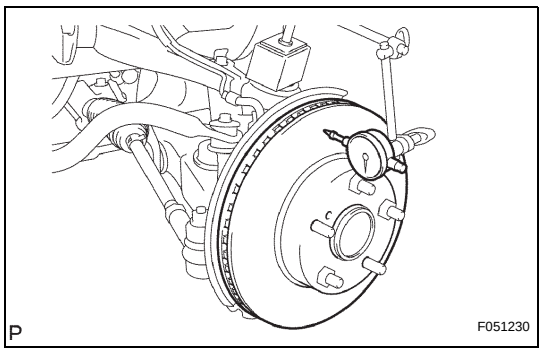

2. INSPECT DISC RUNOUT

(a) Provisionally fasten the disc with the hub nuts.
Torque: 113 N*m (1,152 kgf*cm, 83 ft.*lbf)

(b) Using a dial indicator, measure the disc runout 10 mm (0.39 in.) away from the outer edge of the disc.
Maximum disc runout:
0.05 mm (0.0020 in.)

(c) If the disc runout is the maximum value or greater, check the bearing play in the axial direction and check the axle hub runout (see page AH-1). If the bearing play and axle hub runout are normal, adjust the disc runout or grind it on an on-car brake lathe.

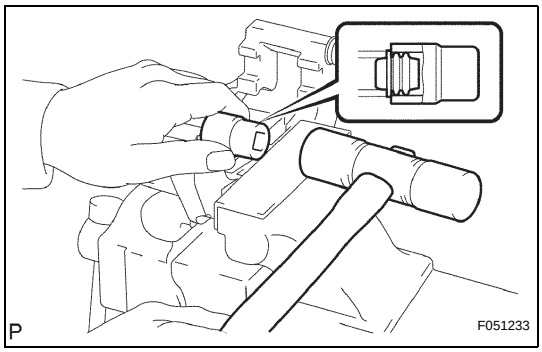

3. INSTALL FRONT DISC BRAKE BUSH DUST BOOT

(a) Place soft jaws on a vise and hold the disc brake cylinder mounting in the vise through aluminum plates.

(b) Apply lithium soap base glycol grease to the sealing surface of 2 new front disc brake bush dust boots.

(c) Using a socket wrench (19 mm) and hammer, tap the 2 disc brake bush dust boots into the disc brake cylinder mounting.

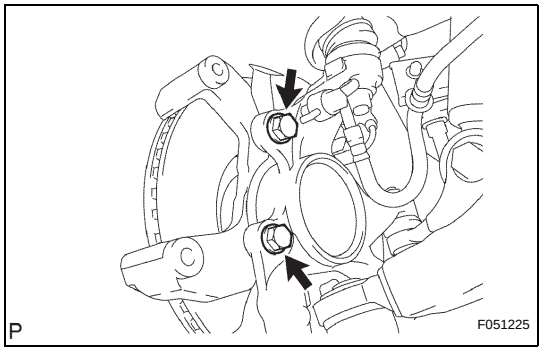

4. INSTALL FRONT DISC BRAKE CYLINDER MOUNTING

(a) Install the disc brake cylinder mounting with the 2 bolts.
Torque: 108 N*m (1,101 kgf*cm, 80 ft.*lbf)

5. INSTALL FRONT DISC BRAKE CYLINDER SLIDE BUSH

(a) Apply lithium soap base glycol grease to a new disc brake cylinder slide bush.

(b) Install the disc brake cylinder slide bush to the bottom side of the disc brake cylinder slide pin (No. 2).

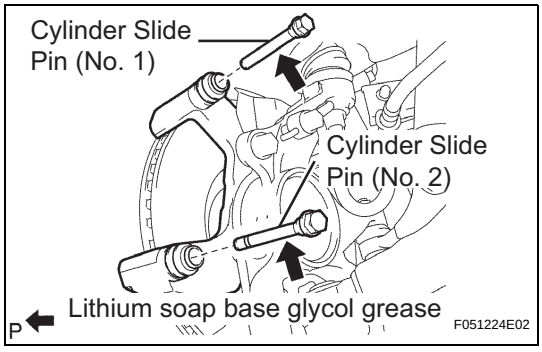

6. INSTALL FRONT DISC BRAKE CYLINDER SLIDE PIN

(a) Apply lithium soap base glycol grease to the sliding part and the sealing surface of the disc brake cylinder slide pin.

(b) Install the disc brake cylinder slide pin onto the disc brake cylinder mounting.

7. INSTALL FRONT DISC BRAKE PAD SUPPORT PLATE

(a) Install the 2 disc brake pad support plates onto the disc brake cylinder mounting.

8. **INSTALL ANTI SQUEAL SHIM KIT FRONT**
NOTICE:
If necessary, replace the anti-squeal shim kit when replacing the brake pad.
(a) Apply disc brake grease to the both surfaces of the 2 anti-squeal shims and install them.
(b) Install the 2 outside anti-squeal shims onto the brake pads.
(c) Install the pad wear indicator plate facing upward, and install each pad.

9. **INSTALL DISC BRAKE PAD KIT FRONT (PAD ONLY)**
(a) Install the 2 disc brake pads with anti-squeal shim onto the disc brake cylinder mounting.
NOTICE:
There should be no oil or grease on the friction surfaces of the brake pads or the front disc.

10. **INSTALL DISC BRAKE CYLINDER ASSEMBLY**
(a) Install the disc brake cylinder with the 2 bolts.
Torque: 36.3 N*m (370 kgf*cm, 27 ft.*lbf)

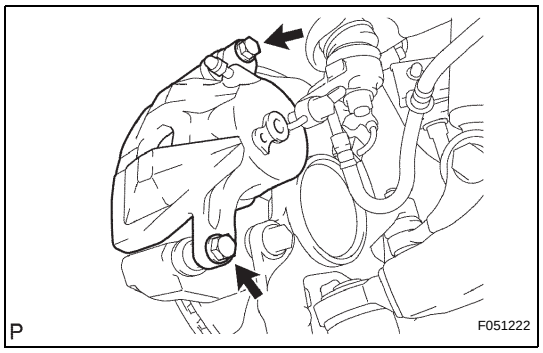

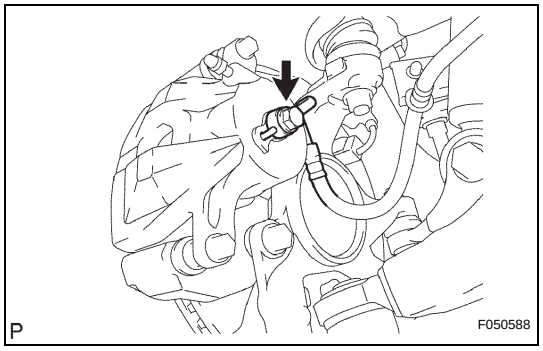

(b) Install a new gasket and flexible hose with the union bolt.
Torque: 30 N*m (306 kgf*cm, 22 ft.*lbf)
HINT:
Install the flexible hose lock securely into the lock hole in the disc brake cylinder.

11. **FILL RESERVOIR WITH BRAKE FLUID (w/ VSC) (See page BR-4)**

12. **FILL RESERVOIR WITH BRAKE FLUID (w/o VSC) (See page BR-7)**

13. **BLEED MASTER CYLINDER (w/o VSC) (See page BR-7)**

14. **BLEED BRAKE LINE (w/ VSC) (See page BR-4)**

15. **BLEED BRAKE LINE (w/o VSC) (See page BR-7)**

16. **CHECK FLUID LEVEL IN RESERVOIR (w/ VSC) (See page BR-6)**

17. **CHECK FLUID LEVEL IN RESERVOIR (w/o VSC) (See page BR-8)**

18. **CHECK FOR BRAKE FLUID LEAKAGE**

19. **INSTALL FRONT WHEEL**
Torque: 113 N*m (1,152 kgf*cm, 83 ft.*lbf)

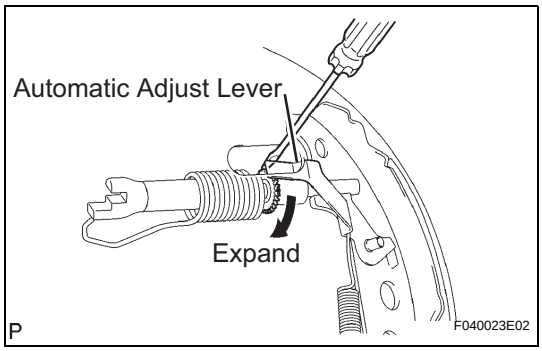

INSTALLATION

1. **INSTALL REAR BRAKE DRUM SUB-ASSEMBLY**
   (a) Install a new drum gasket onto the rear brake drum.
   (b) Install the rear brake drum.
2. **ADJUST REAR DRUM BRAKE SHOE CLEARANCE**
   (a) Provisionally install the hub nuts.
   (b) Remove the hole plug, and turn the adjuster to expand the shoe until the drum locks.
   (c) Using a screwdriver, release the adjuster 15 notches.
   (d) Install the hole plug.
3. **FILL RESERVOIR WITH BRAKE FLUID (w/ VSC) (See page BR-4)**
4. **FILL RESERVOIR WITH BRAKE FLUID (w/o VSC) (See page BR-7)**
5. **BLEED MASTER CYLINDER (w/o VSC) (See page BR-7)**
6. **BLEED BRAKE LINE (w/ VSC) (See page BR-4)**
7. **BLEED BRAKE LINE (w/o VSC) (See page BR-7)**
8. **CHECK FLUID LEVEL IN RESERVOIR (w/ VSC) (See page BR-6)**
9. **CHECK FLUID LEVEL IN RESERVOIR (w/o VSC) (See page BR-8)**
10. **CHECK FOR BRAKE FLUID LEAKAGE**
11. **INSTALL REAR WHEEL**
    Torque: 113 N*m (1,152 kgf*cm, 83 ft.*lbf)
12. **INSPECT PARKING BRAKE PEDAL TRAVEL (for Automatic Transmission) (See page PB-1)**
13. **INSPECT PARKING BRAKE LEVER TRAVEL (for Manual Transmission) (See page PB-1)**
14. **ADJUST PARKING BRAKE PEDAL TRAVEL (for Automatic Transmission) (See page PB-2)**
15. **ADJUST PARKING BRAKE LEVER TRAVEL (for Manual Transmission) (See page PB-2)**

INSTALLATION

1. INSTALL PARKING PEDAL PAD

2. INSTALL PARKING BRAKE SWITCH ASSEMBLY

(a) Install the parking brake switch assembly with the screw.

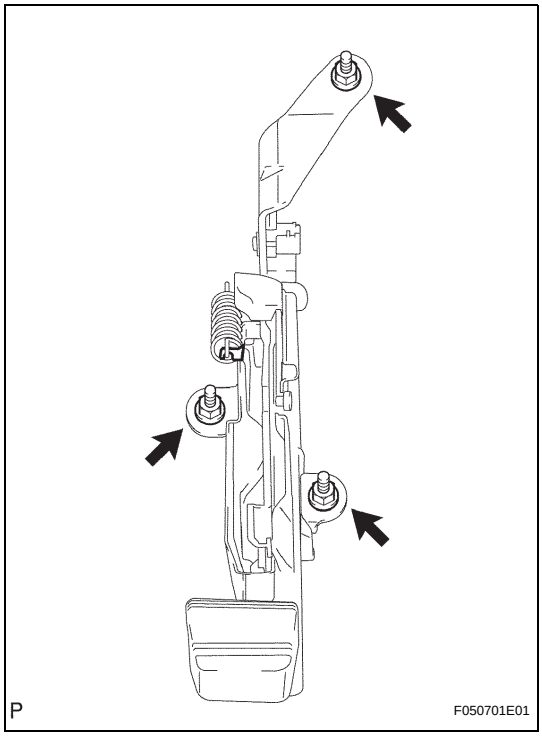

3. INSTALL PARKING BRAKE PEDAL

(a) Install the parking brake control pedal assembly with the 3 nuts.
Torque: 13 N*m (127 kgf*cm, 9 ft.*lbf)

(b) Connect the parking brake switch connector.

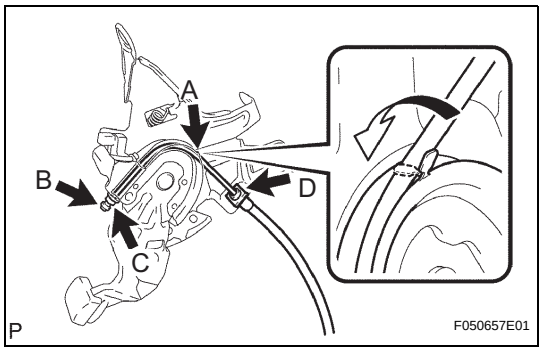

4. INSTALL PARKING BRAKE CABLE ASSEMBLY NO. 1

(a) Install the parking brake cable assembly No. 1 with the clip D, adjusting nut C and lock nut B.
Torque: 5.4 N*m (55 kgf*cm, 48 in.*lbf)

(b) Bend the claw A.

5. CONNECT CABLE TO NEGATIVE BATTERY TERMINAL
Torque: 3.9 N*m (40 kgf*cm, 35 in.*lbf)
(See page IN-5)

6. INSPECT PARKING BRAKE PEDAL TRAVEL (See page PB-1)

7. ADJUST PARKING BRAKE PEDAL TRAVEL (See page PB-2)

REMOVAL

1. **PRECAUTION**
   (See page RS-1)
2. **DISCONNECT CABLE FROM NEGATIVE BATTERY TERMINAL**
   HINT:
   Wait for at least 90 seconds after disconnecting the cable to prevent the airbag from working.
3. **REMOVE CONSOLE UPPER REAR PANEL SUB-ASSEMBLY (for Automatic Transmission on Separate Seat Type) (See page IP-9)**
4. **REMOVE CONSOLE UPPER REAR PANEL SUB-ASSEMBLY (for Manual Transmission on Separate Seat Type) (See page IP-9)**
5. **REMOVE REAR CONSOLE BOX ASSEMBLY (for Separate Seat Type) (See page IP-10)**
6. **REMOVE INSTRUMENT PANEL CUP HOLDER TRAY (for Automatic Transmission on Separate Seat Type) (See page IP-10)**
7. **REMOVE FRONT CONSOLE BOX (for Automatic Transmission on Separate Seat Type) (See page IP-10)**
8. **REMOVE FRONT CONSOLE BOX (for Manual Transmission on Separate Seat Type) (See page IP-11)**
9. **REMOVE FRONT CONSOLE BOX (for Automatic Transmission on Bench Seat Type) (See page IP-11)**
10. **REMOVE FRONT CONSOLE BOX (for Manual Transmission on Bench Seat Type) (See page IP-11)**
11. **REMOVE CENTER AIRBAG SENSOR ASSEMBLY (See page RS-603)**
12. **REMOVE VOLTAGE INVERTER ASSEMBLY (w/ Voltage Inverter) (See page AV-104)**
13. **REMOVE PARKING BRAKE CABLE JOINT PROTECTOR (for Bench Seat Type) (See page PB-2)**
14. **REMOVE REAR WHEEL**
15. **REMOVE REAR BRAKE DRUM SUB-ASSEMBLY (See page BR-68)**
16. **REMOVE FRONT BRAKE SHOE (See page BR-68)**
17. **REMOVE REAR BRAKE SHOE (See page BR-69)**
18. **REMOVE PARKING BRAKE CABLE ASSEMBLY NO. 1 (for Automatic Transmission)**
    (a) Release the parking brake.

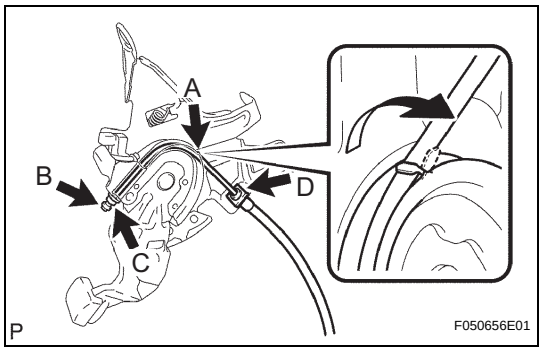

(b) Disengage the claw A.
(c) Remove the lock nut B, adjusting nut C and clip D and disconnect the parking brake cable from the parking brake control pedal.
(d) Remove the 4 nuts A, 2 clamps B and 2 bolts C from the parking brake cable.

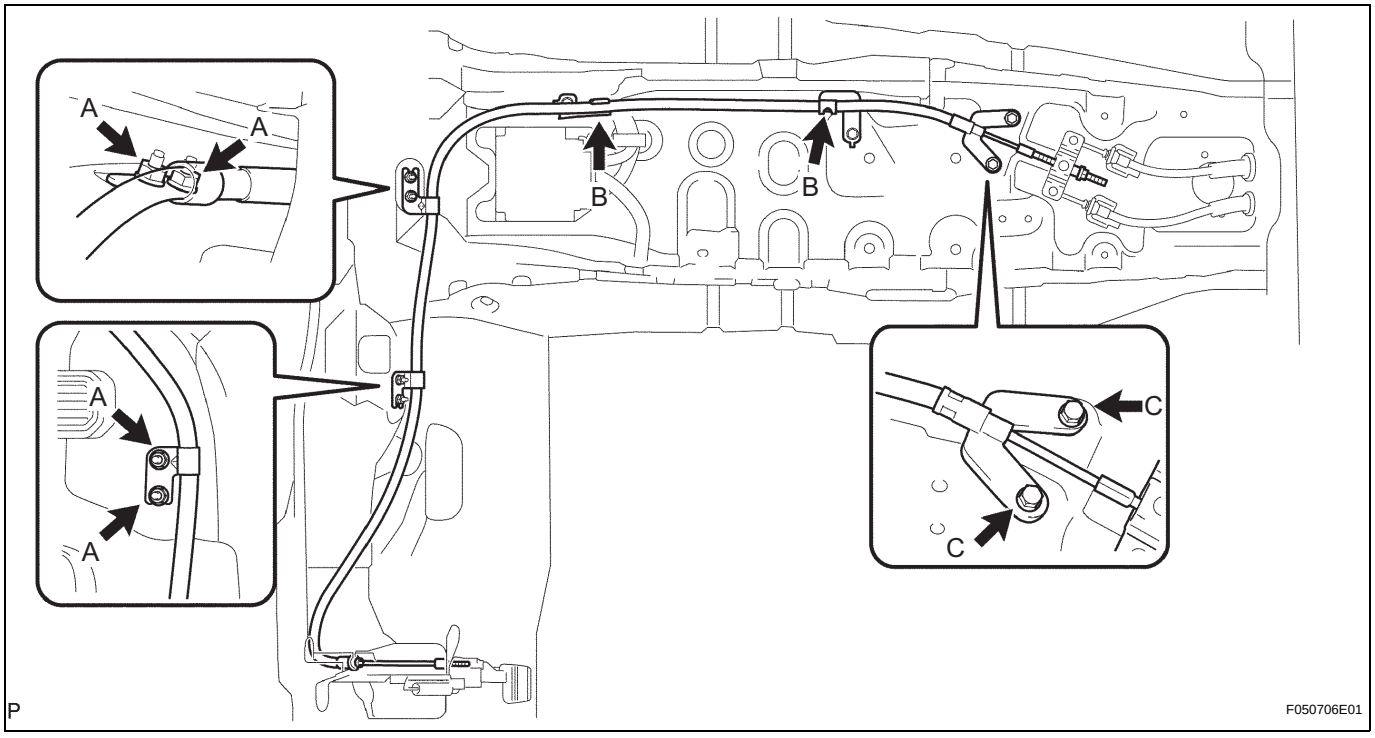

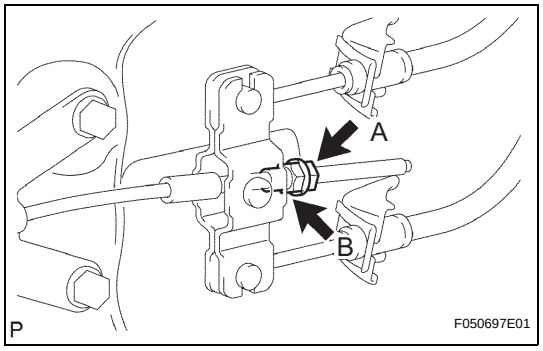

(e) Remove the lock nut A, adjusting nut B and parking brake cable from the parking brake equalizer.

19. REMOVE PARKING BRAKE CABLE ASSEMBLY NO. 1 (for Manual Transmission)

(a) Release the parking brake lever.

PB

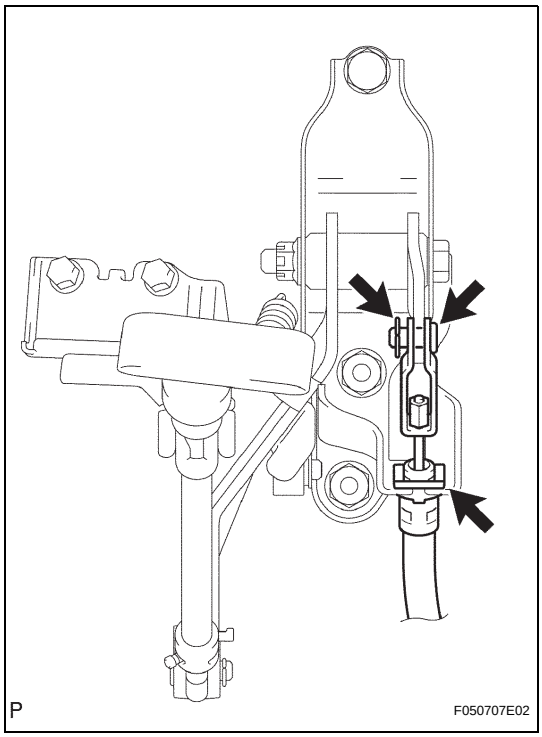

(b) Disengage the clip, remove the pin and separate the sleeve.
(c) Disengage the clip and disconnect the parking brake cable from the parking brake lever.
(d) Remove the 2 nuts A, 2 clamps B and 2 bolts C from the parking brake cable.

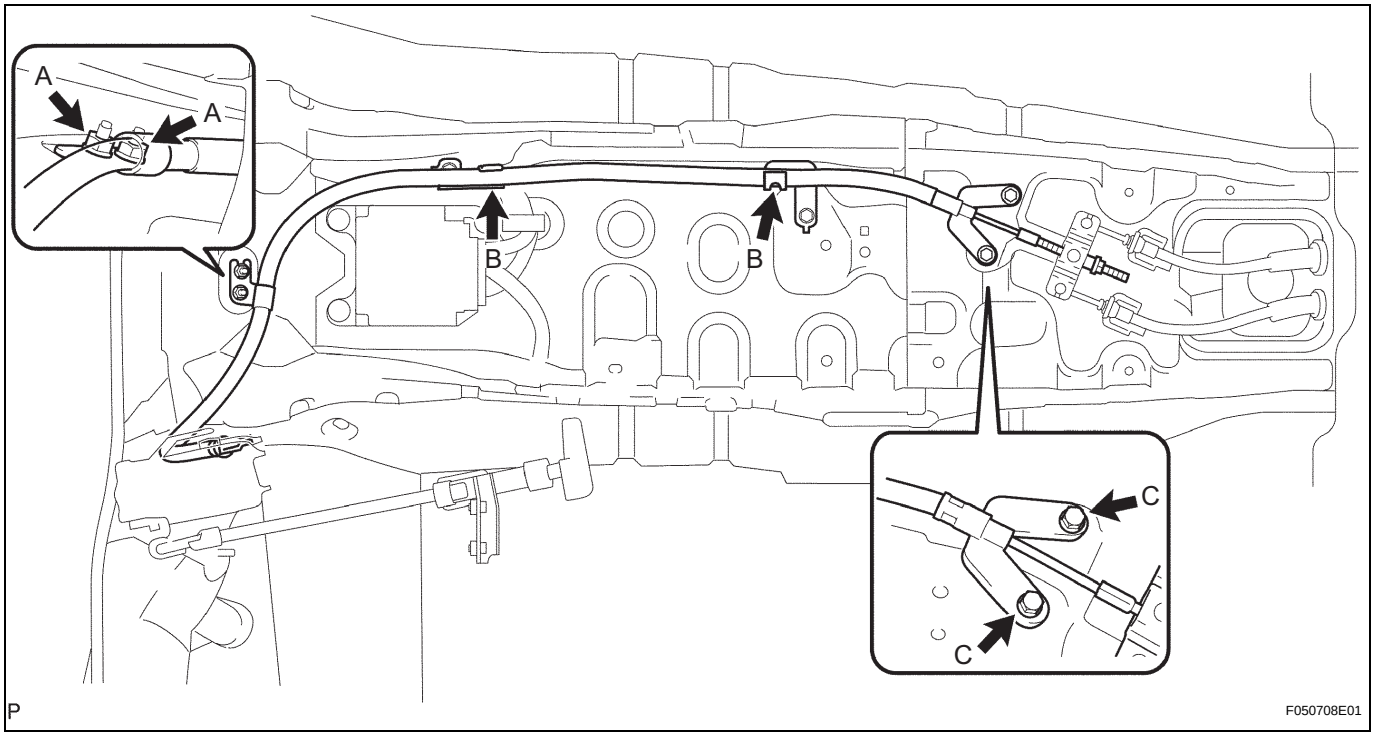

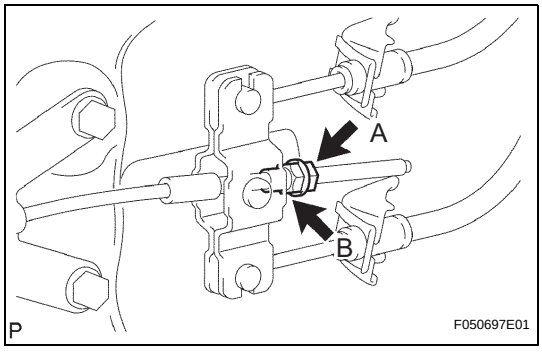

(e) Remove the lock nut A, adjusting nut B and parking brake cable from the parking brake equalizer.

PB

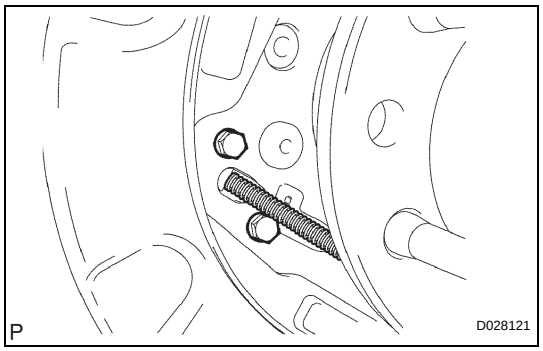

20. REMOVE PARKING BRAKE CABLE ASSEMBLY NO. 3

(a) Remove the 2 bolts and disconnect the parking brake cable from the backing plate.

(b) Remove the 4 bolts from the parking brake cable.

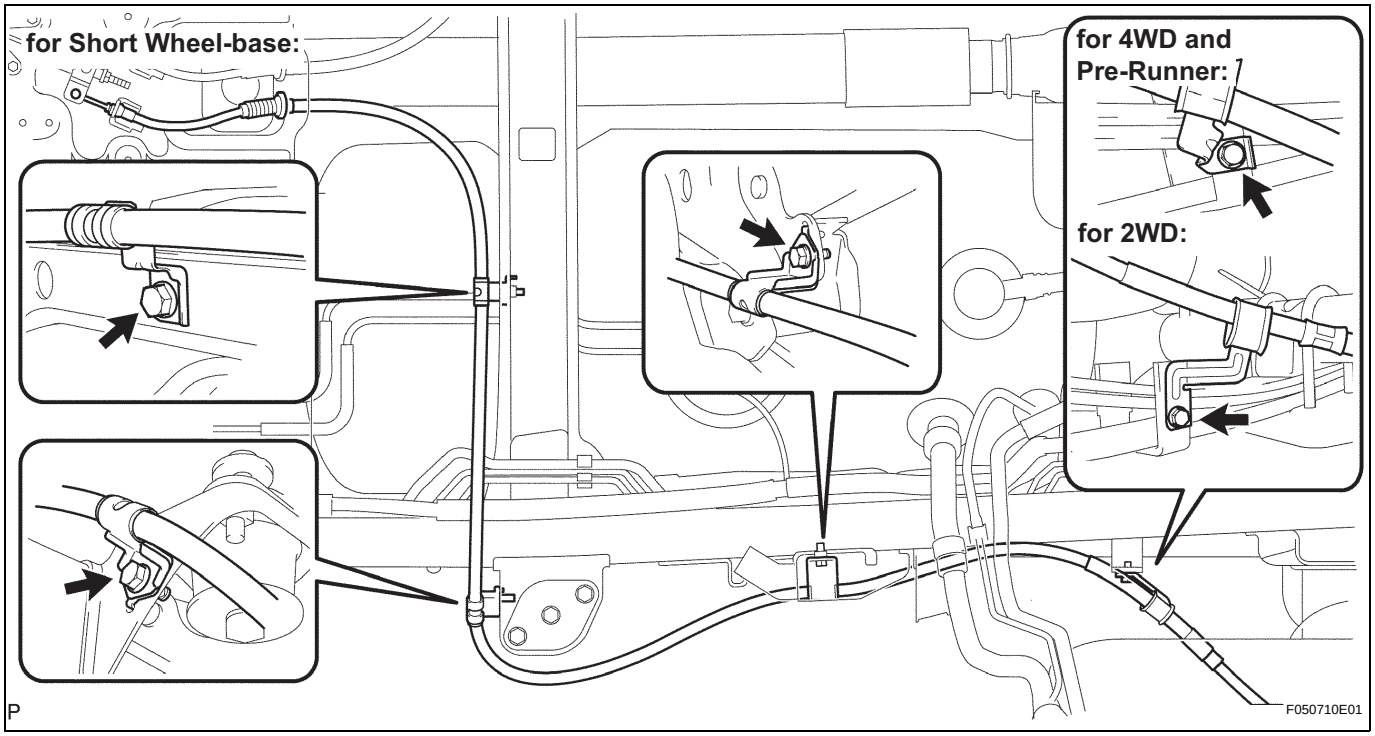

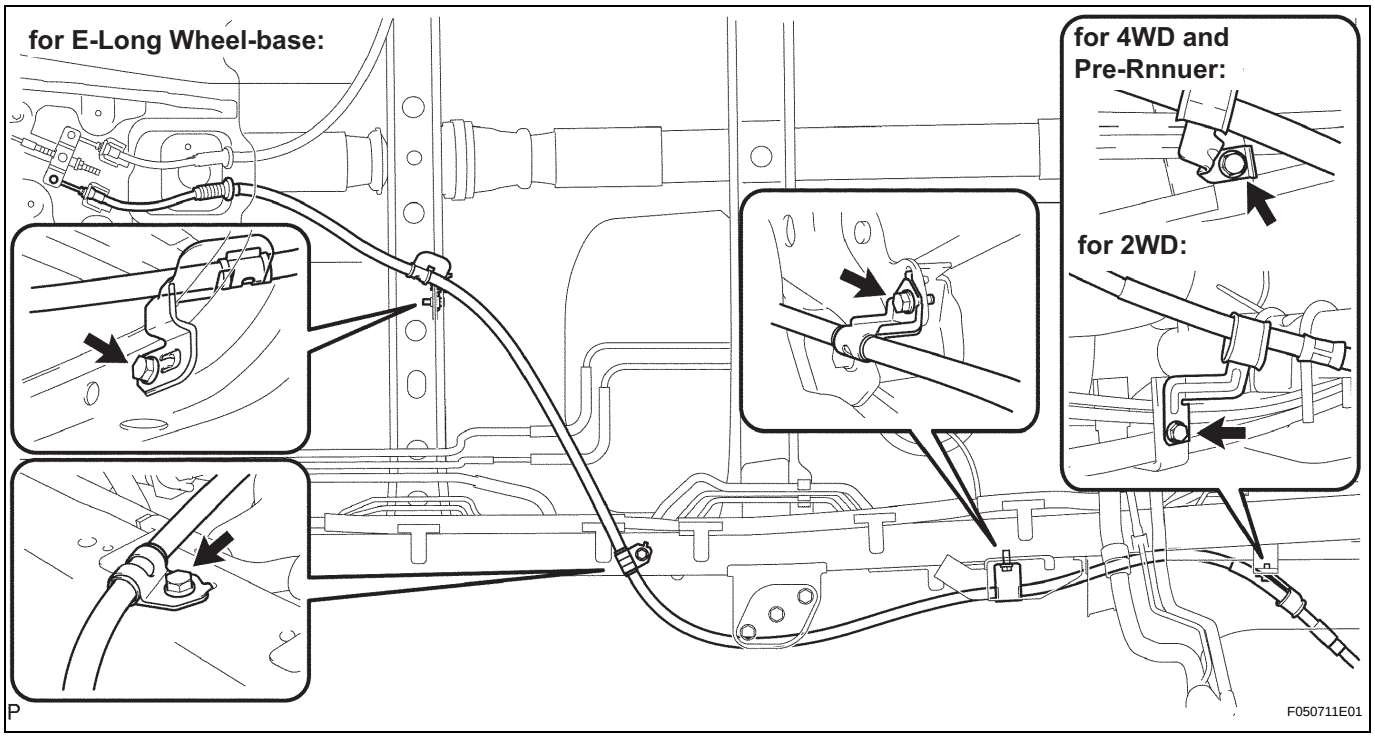

PB

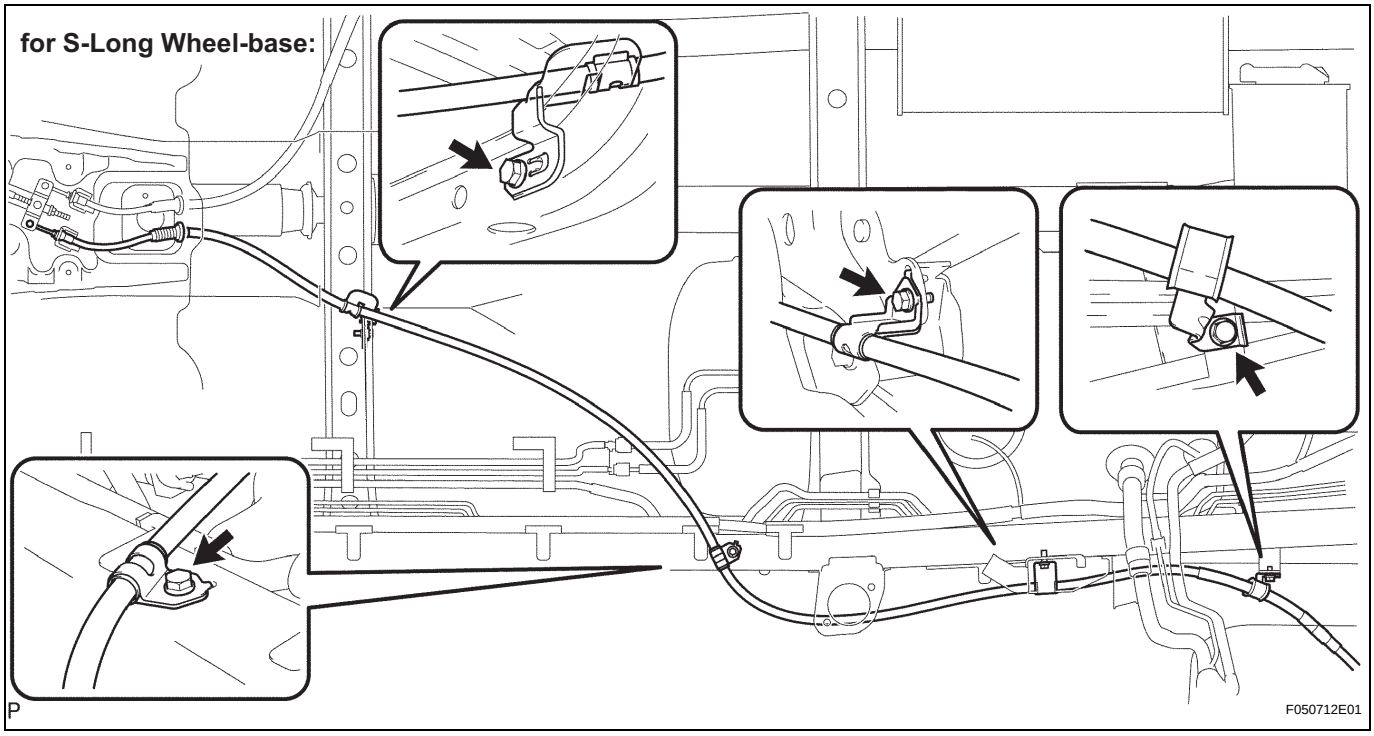

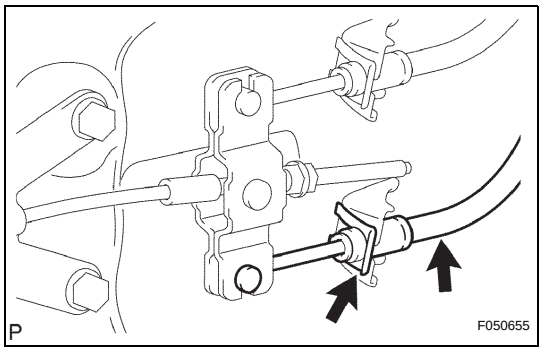

(c) Disengage the clip and disconnect the parking brake cable from the parking brake equalizer.

INSTALLATION

1. INSTALL PARKING BRAKE CABLE ASSEMBLY NO. 3

(a) Install the parking brake cable with the clip onto the parking brake equalizer.

(b) Install the parking brake cable with the 4 bolts.
Torque: 13 N*m (127 kgf*cm, 9 ft.*lbf)

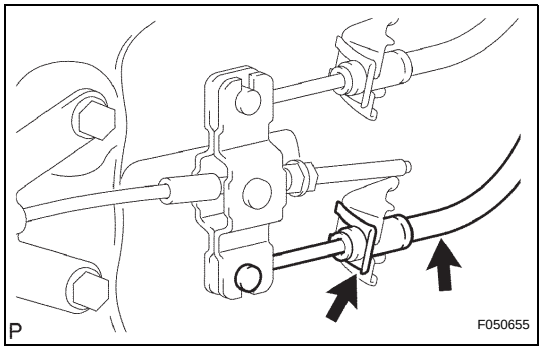

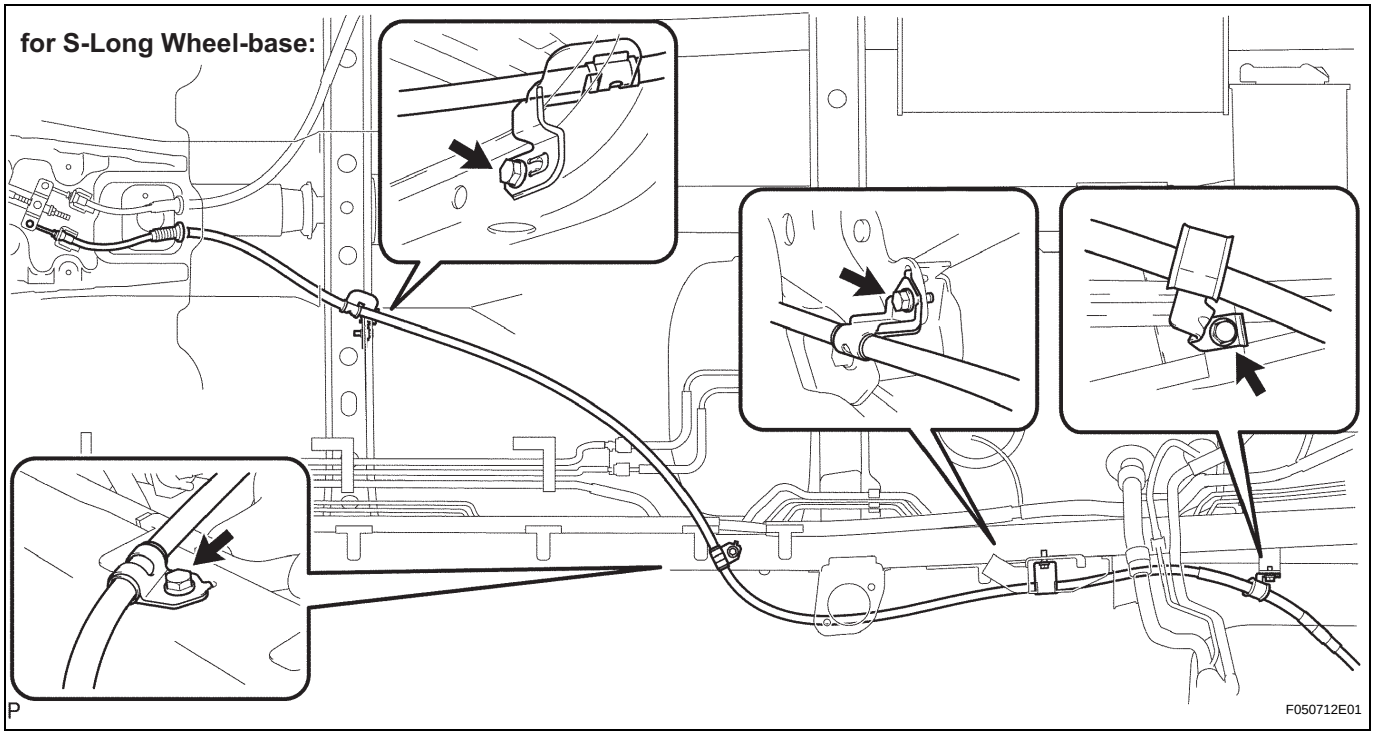

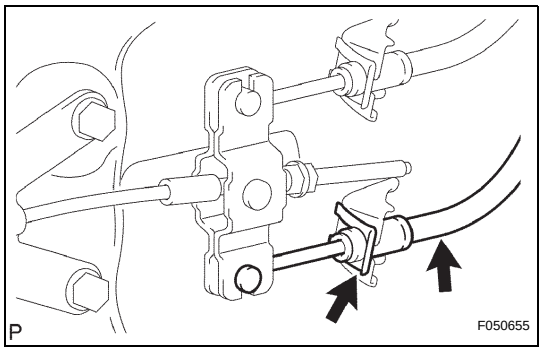

(c) Disengage the clip and disconnect the parking brake cable from the parking brake equalizer.

INSTALLATION

1. INSTALL PARKING BRAKE CABLE ASSEMBLY NO. 3

(a) Install the parking brake cable with the clip onto the parking brake equalizer.

(b) Install the parking brake cable with the 4 bolts.
Torque: 13 N*m (127 kgf*cm, 9 ft.*lbf)

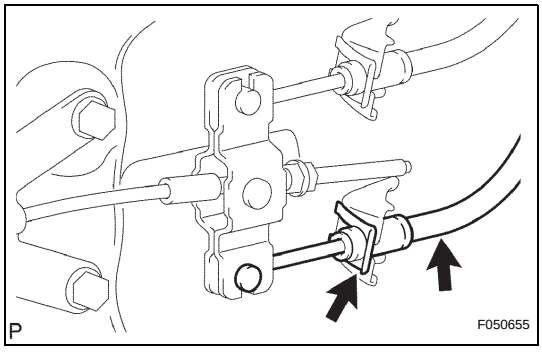

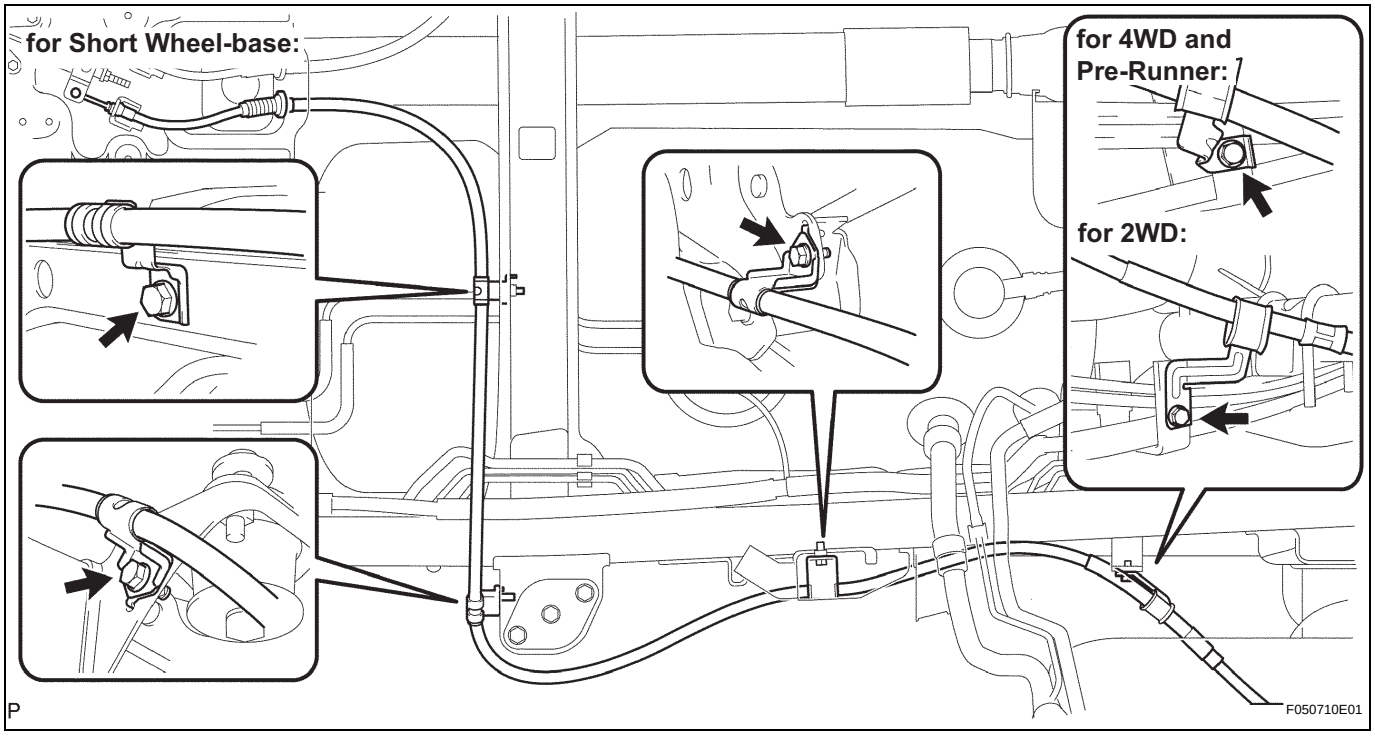
for Short Wheel-base:
for 4WD and Pre-Runner:
for 2WD:
P
F050710E01

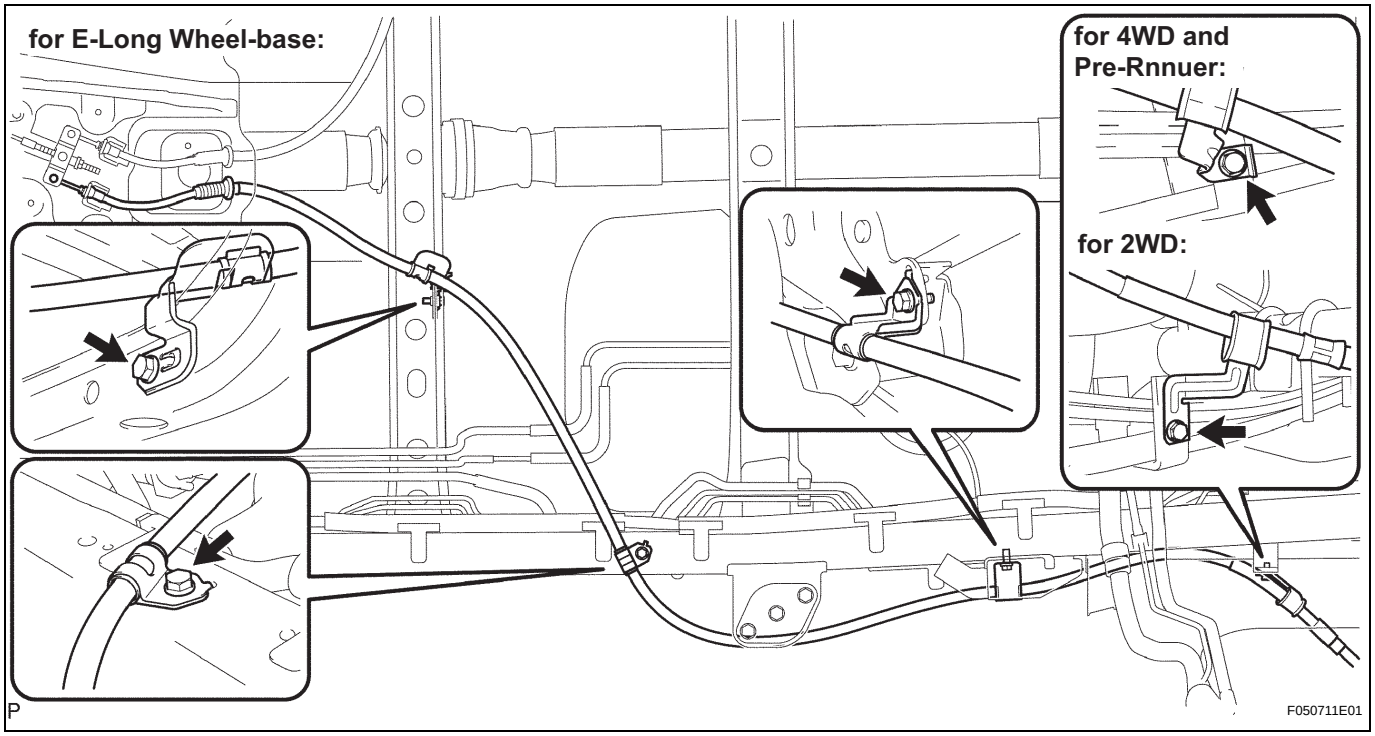
for E-Long Wheel-base:
for 4WD and Pre-Rnnuer:
for 2WD:
P
F050711E01

PB

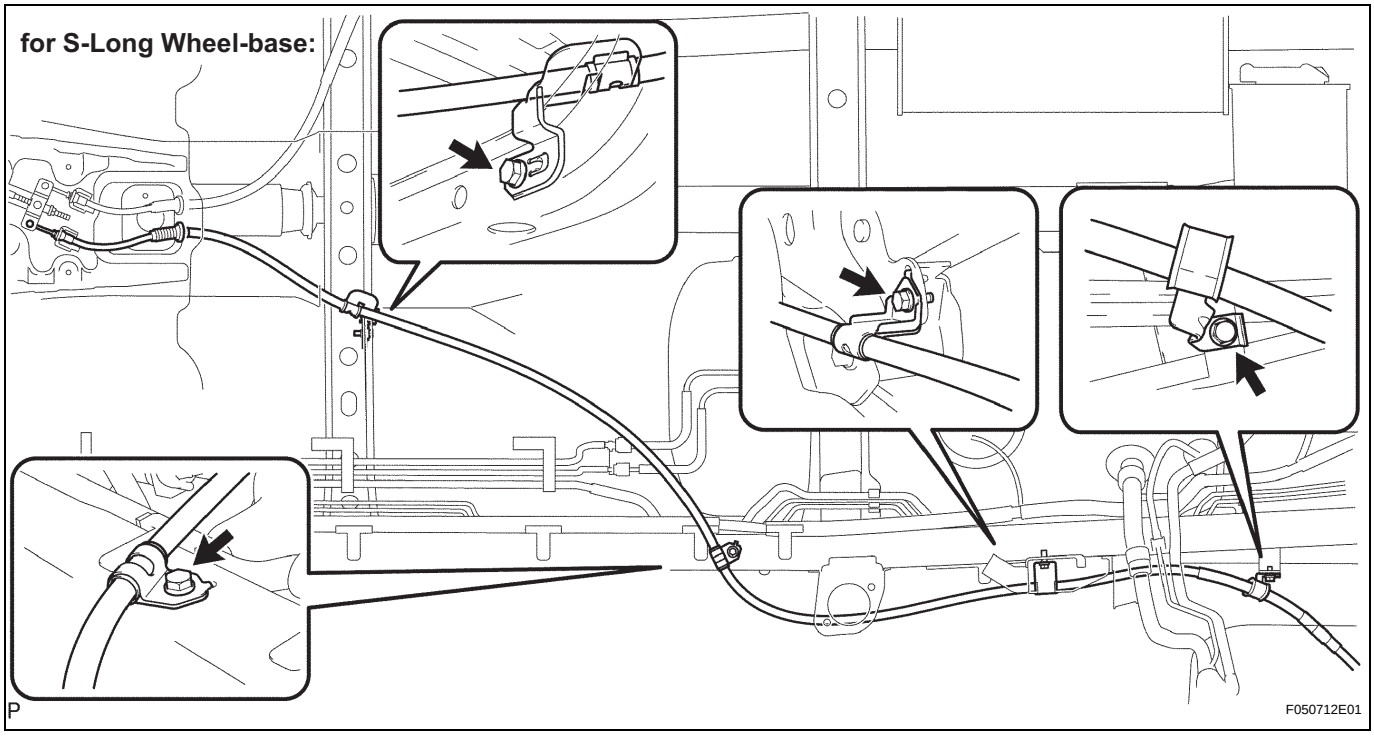

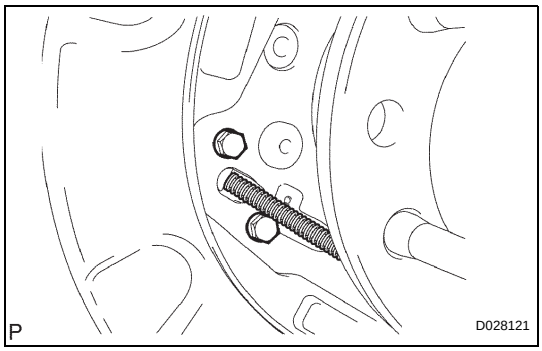

(c) Install the parking brake cable with the 2 bolts onto the backing plate.
Torque: 8.0 N*m (82 kgf*cm, 71 in.*lbf)

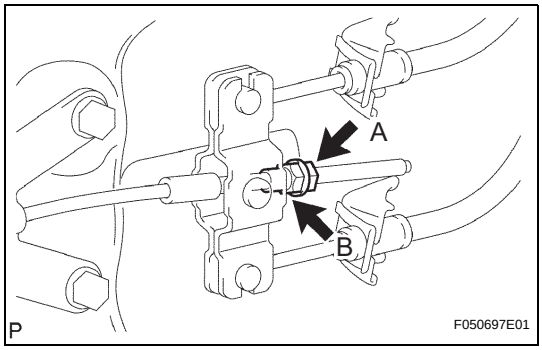

2. INSTALL PARKING BRAKE CABLE ASSEMBLY NO. 1 (for Automatic Transmission)

(a) Install the parking brake cable and provisionally tighten the adjusting nut B and lock nut A.

(b) Install the parking brake cable with the 4 nuts A, 2 clamps B, 2 bolts C.
Torque: Nut A
6.0 N*m (61 kgf*cm, 53 in.*lbf)
Bolt C
13 N*m (127 kgf*cm, 9 ft.*lbf)

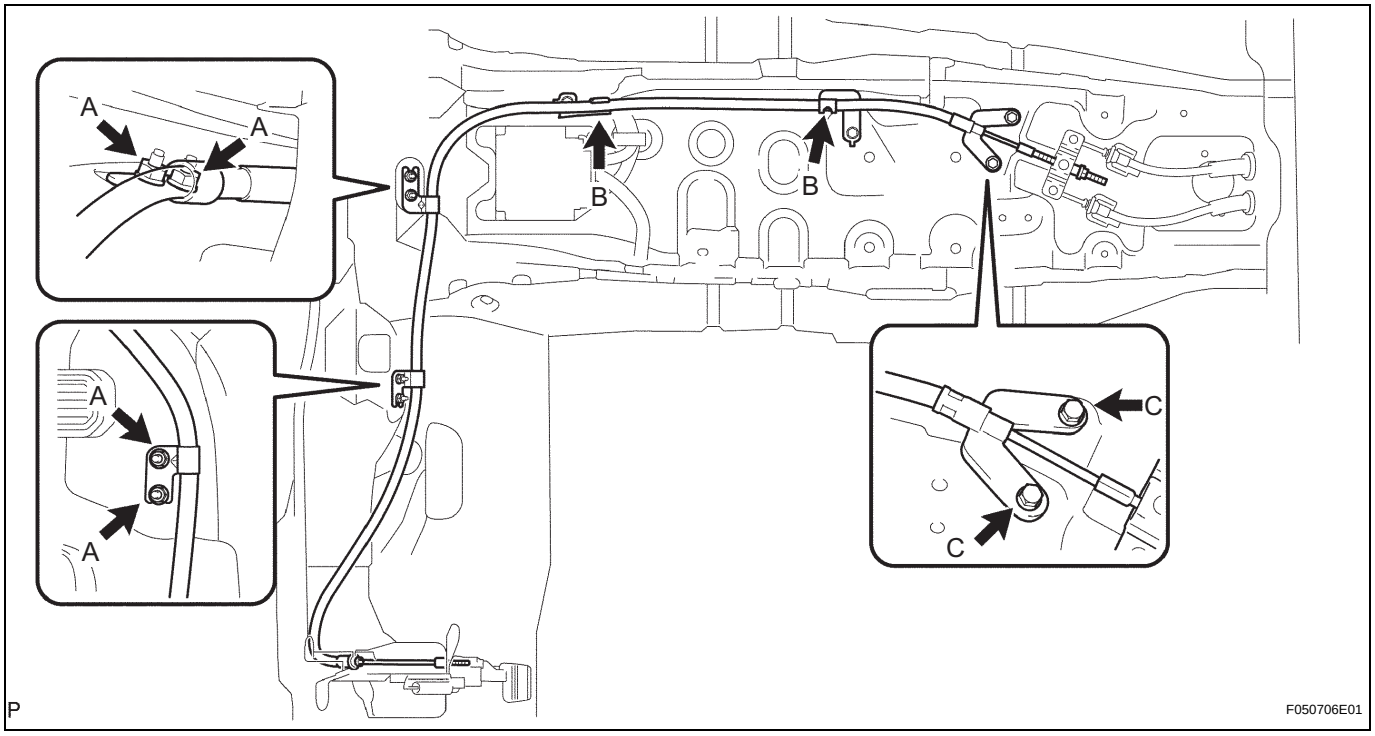

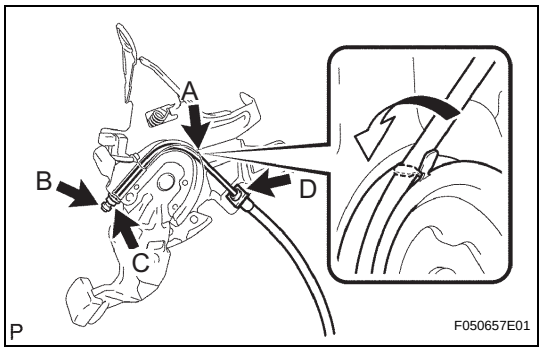

(c) Install the parking brake cable with the clip D, adjusting nut C and lock nut B onto the parking brake control pedal.
Torque: 13 N*m (127 kgf*cm, 9 ft.*lbf)

(d) Bend the claw A.

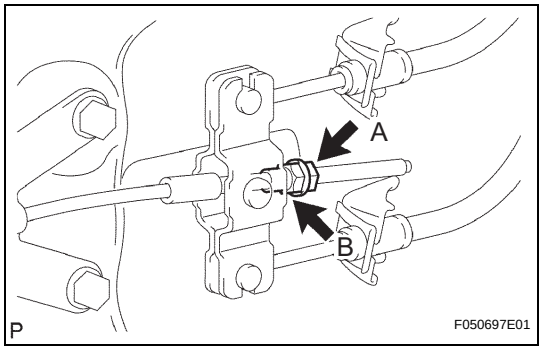

3. INSTALL PARKING BRAKE CABLE ASSEMBLY NO. 1 (for Manual Transmission)

(a) Install the parking brake cable and provisionally tighten the adjusting B nut and lock nut A.

(b) Install the parking brake cable with the 2 nuts A, 2 clamps B and 2 bolts C.
Torque: Nut A
6.0 N*m (61 kgf*cm, 53 in.*lbf)
Bolt C
13 N*m (127 kgf*cm, 9 ft.*lbf)

PB

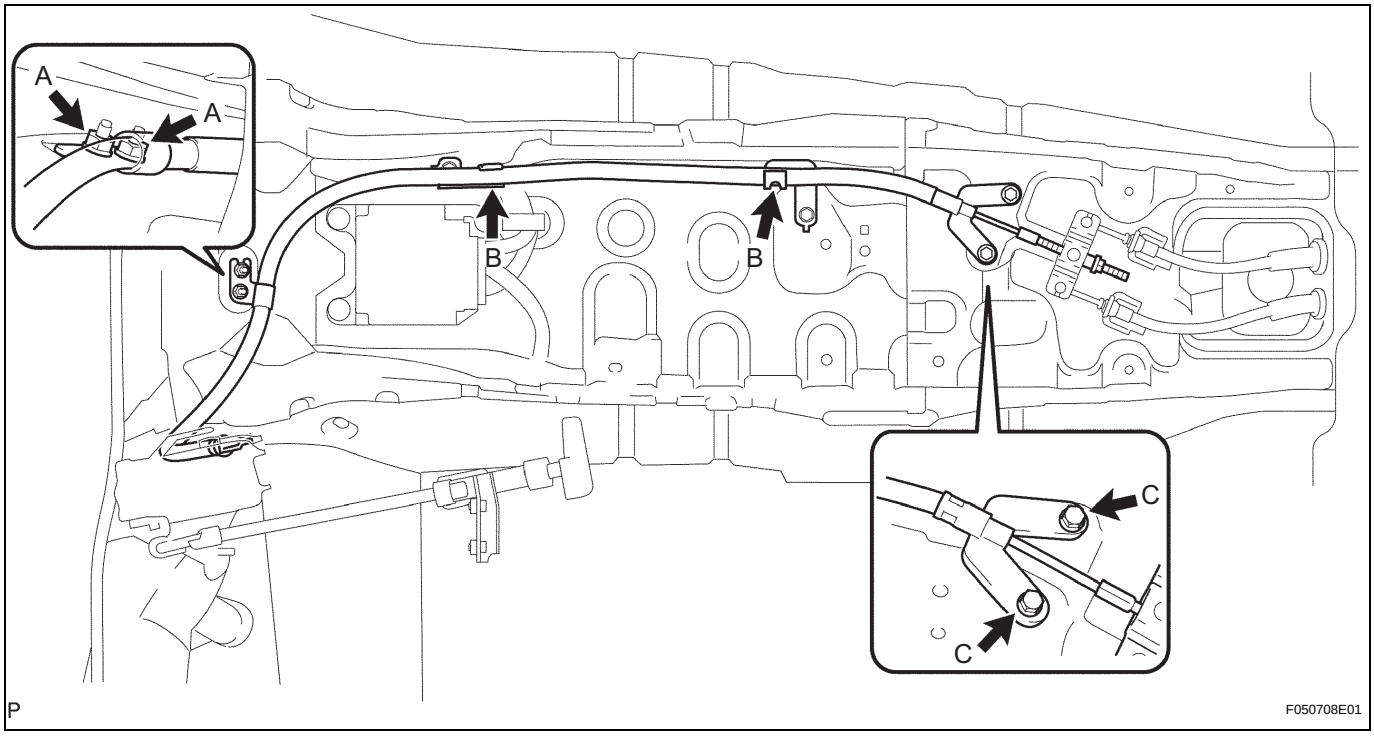

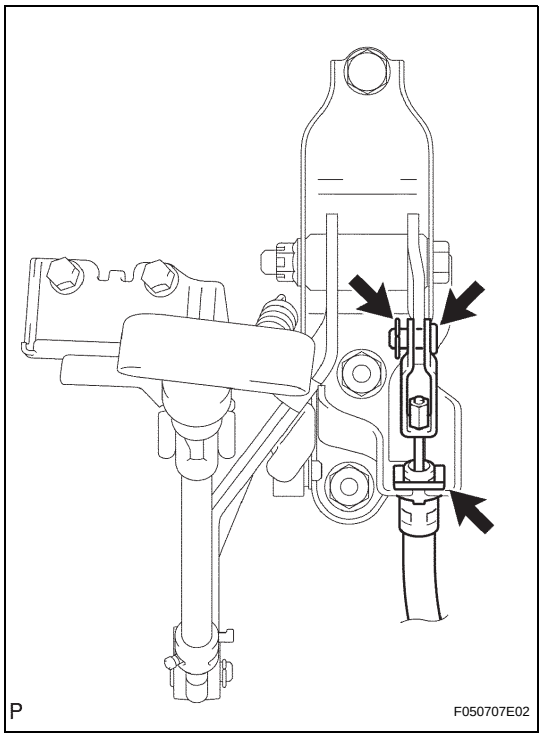

(c) Install the parking brake cable onto the parking brake lever with the clip.
(d) Install the sleeve with the pin and clip.

4. **APPLY HIGH TEMPERATURE GREASE (See page BR-71)**
5. **INSTALL REAR BRAKE SHOE (See page BR-71)**
6. **INSTALL FRONT BRAKE SHOE (See page BR-72)**
7. **INSPECT REAR DRUM BRAKE INSTALLATION (See page BR-73)**
8. **INSTALL REAR BRAKE DRUM SUB-ASSEMBLY (See page BR-73)**
9. **ADJUST REAR DRUM BRAKE SHOE CLEARANCE (See page BR-74)**
10. **INSTALL REAR WHEEL**
    Torque: 113 N*m (1,152 kgf*cm, 83 ft.*lbf)
11. **INSTALL PARKING BRAKE CABLE JOINT PROTECTOR (for Bench Seat Type) (See page PB-2)**
12. **INSTALL VOLTAGE INVERTER ASSEMBLY (w/ Voltage Inverter) (See page AV-105)**
13. **INSTALL CENTER AIRBAG SENSOR ASSEMBLY (See page RS-603)**
14. **INSTALL FRONT CONSOLE BOX (for Automatic Transmission on Separate Seat Type) (See page IP-24)**
15. **INSTALL FRONT CONSOLE BOX (for Manual Transmission on Separate Seat Type) (See page IP-23)**

16. **INSTALL FRONT CONSOLE BOX (for Automatic Transmission on Bench Seat Type) (See page IP-23)**
17. **INSTALL FRONT CONSOLE BOX (for Manual Transmission on Bench Seat Type) (See page IP-22)**
18. **INSTALL INSTRUMENT PANEL CUP HOLDER TRAY (for Automatic Transmission on Separate Seat Type) (See page IP-24)**
19. **INSTALL REAR CONSOLE BOX ASSEMBLY (for Separate Seat Type) (See page IP-24)**
20. **INSTALL CONSOLE UPPER REAR PANEL SUB-ASSEMBLY (for Automatic Transmission on Separate Seat Type) (See page IP-25)**
21. **INSTALL CONSOLE UPPER REAR PANEL SUB-ASSEMBLY (for Manual Transmission on Separate Seat Type) (See page IP-25)**
22. **CONNECT CABLE TO NEGATIVE BATTERY TERMINAL**
    Torque: 3.9 N*m (40 kgf*cm, 35 in.*lbf)
    (See page IN-5)
23. **INSPECT SRS WARNING LIGHT**
    (See page RS-28)
24. **INSPECT PARKING BRAKE PEDAL TRAVEL (for Automatic Transmission) (See page PB-1)**
25. **INSPECT PARKING BRAKE LEVER TRAVEL (for Manual Transmission) (See page PB-1)**
26. **ADJUST PARKING BRAKE PEDAL TRAVEL (for Automatic Transmission) (See page PB-2)**
27. **ADJUST PARKING BRAKE LEVER TRAVEL (for Manual Transmission) (See page PB-2)**

REMOVAL

1. **PRECAUTION**
   (See page RS-1)

2. **DISCONNECT CABLE FROM NEGATIVE BATTERY TERMINAL**
   Wait for at least 90 seconds after disconnecting the cable to prevent the airbag from working.

3. **PLACE FRONT WHEELS FACING STRAIGHT AHEAD**

4. **REMOVE NO.2 LOWER STEERING WHEEL COVER**
   (a) Using a screwdriver with its tip wrapped in protective tape, disengage the claw and remove the steering wheel cover lower No. 2.

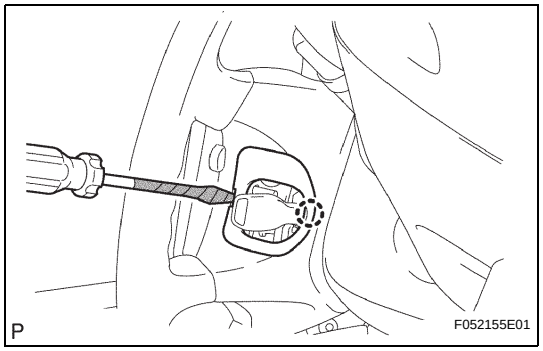

5. **REMOVE NO.3 LOWER STEERING WHEEL COVER**
   (a) Using a screwdriver with its tip wrapped in protective tape, disengage the claw and remove the No. 3 lower steering wheel cover.

6. **REMOVE STEERING PAD (See page RS-558)**

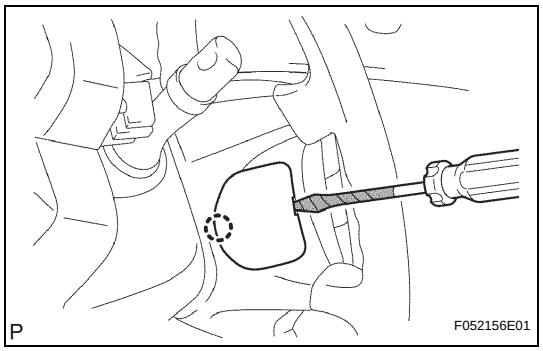

7. **REMOVE STEERING WHEEL ASSEMBLY**
   (a) Remove the steering wheel assembly set nut.
   (b) Place matchmarks on the steering wheel assembly and main shaft assembly.
   (c) Using SST, remove the steering wheel assembly.
   SST 09950-50013 (09951-05010, 09952-05010, 09953-05020, 09954-05021)

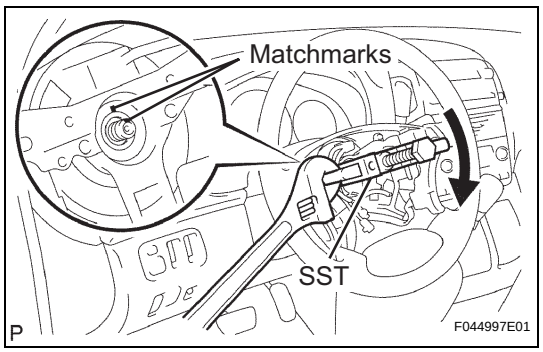

8. **REMOVE LOWER STEERING COLUMN COVER**
   (a) Remove the 2 screws.
   (b) Disengage the 2 claws to remove the lower steering column cover.

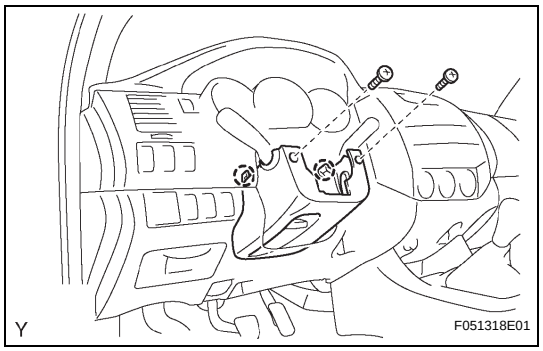

SR

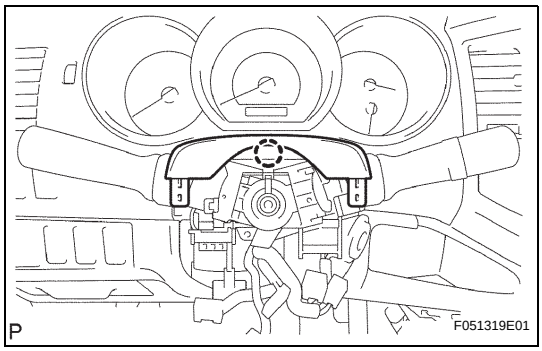

9. **REMOVE UPPER STEERING COLUMN COVER**
   (a) Disengage the claw and then remove the upper steering column cover.
10. **REMOVE SPIRAL CABLE SUB-ASSEMBLY (See page RS-566)**
11. **REMOVE WINDSHIELD WIPER SWITCH ASSEMBLY (See page WW-17)**
12. **REMOVE FRONT FLOOR FOOTREST (See page IR-1)**
13. **REMOVE FRONT DOOR SCUFF PLATE LH (for Regular Cab) (See page IR-40)**
14. **REMOVE FRONT DOOR SCUFF PLATE LH (for Access Cab) (See page IR-61)**
15. **REMOVE FRONT DOOR SCUFF PLATE LH (for Double Cab) (See page IR-12)**
16. **REMOVE COWL SIDE TRIM BOARD LH (for Regular Cab) (See page IR-40)**
17. **REMOVE COWL SIDE TRIM BOARD LH (for Access Cab) (See page IR-61)**
18. **REMOVE COWL SIDE TRIM BOARD LH (for Double Cab) (See page IR-12)**
19. **REMOVE INSTRUMENT PANEL UNDER TRAY (for Pedal Type Parking Brake) (See page IP-9)**
20. **REMOVE INSTRUMENT PANEL HOLE COVER (for Lever Type Parking Brake) (See page IP-9)**
21. **REMOVE INSTRUMENT PANEL LOWER LH (See page IP-14)**
22. **REMOVE INSTRUMENT PANEL COVER SUB-ASSEMBLY LOWER (See page IP-14)**

SR

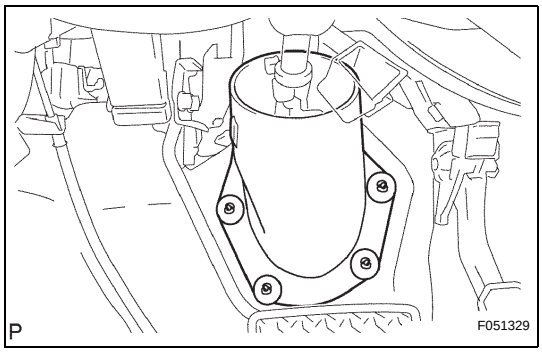

23. **REMOVE STEERING COLUMN HOLE COVER**
   (a) Disengage the 4 clips and remove the steering column hole cover.
24. **REMOVE NO. 1 ENGINE UNDER COVER SUB-ASSEMBLY**
   (a) Remove the No. 1 engine under cover sub-assembly with the 4 bolts.

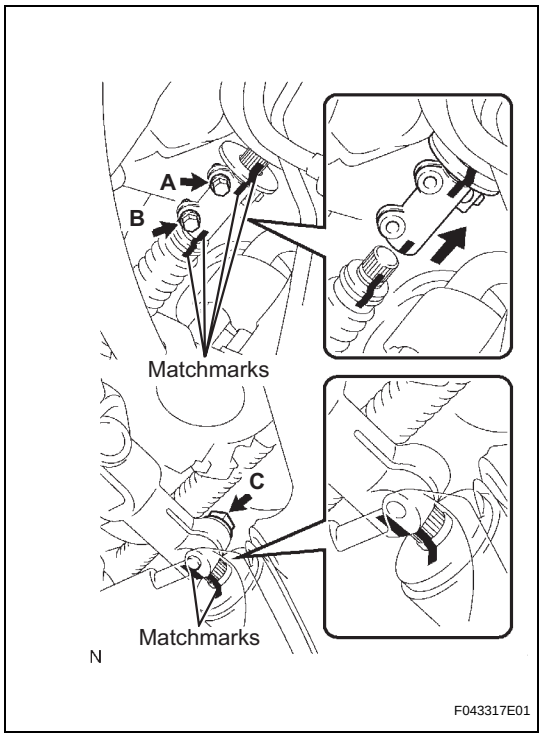

25. REMOVE NO. 2 STEERING INTERMEDIATE SHAFT

(a) Mark matchmarks on the power steering gear assembly and No. 2 steering intermediate shaft.

(b) Remove bolt C and No. 2 steering intermediate shaft from the power steering gear assembly.

26. REMOVE STEERING SLIDING YOKE

(a) Mark matchmarks on the steering sliding yoke, steering intermediate shaft sub-assembly No. 2 and steering intermediate shaft assembly.

(b) Remove bolts A and B from the steering sliding yoke.

(c) Slide the steering sliding yoke up and separate it from the steering intermediate shaft sub-assembly No. 2.

(d) Pull down the steering sliding yoke from the steering intermediate shaft assembly to remove.

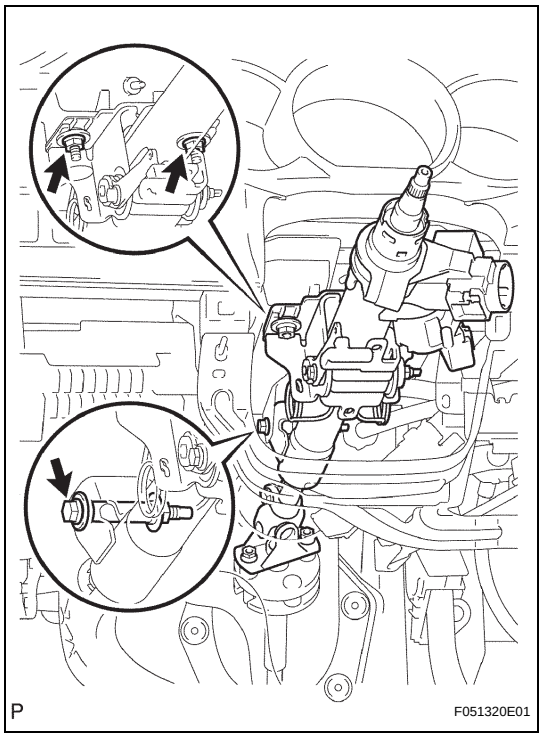

27. REMOVE STEERING COLUMN ASSEMBLY

(a) Disconnect the connectors and wire harness clamps.

(b) Remove the bolt and 2 nuts, then remove the steering column assembly from the instrument panel reinforcement assembly.

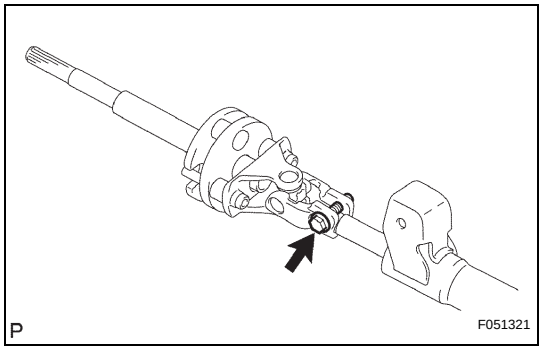

DISASSEMBLY

1. REMOVE STEERING INTERMEDIATE SHAFT ASSEMBLY

(a) Place matchmarks on the steering intermediate shaft sub-assembly and steering shaft.

(b) Remove the bolt and steering intermediate shaft sub-assembly.

SR

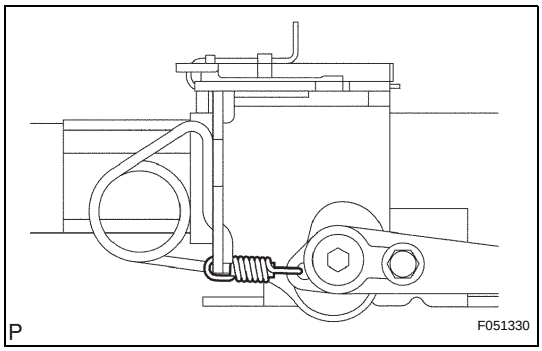

2. REMOVE TILT LEVER RETURN SPRING

(a) Remove the tilt lever return spring from the steering upper support bracket and steering tilt lever.

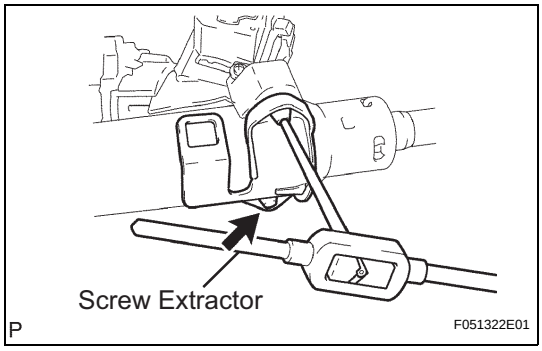

3. REMOVE UPPER STEERING COLUMN CLAMP

(a) Using a centering punch, make the center of the 2 taped- hand bolts.

(b) Using a drill, make a hole in the 2 steering lock set bolts and set a screw extractor.

(c) Using the screw extractor, remove the steering column bracket assembly upper and upper steering column clamp from the steering column tube upper.

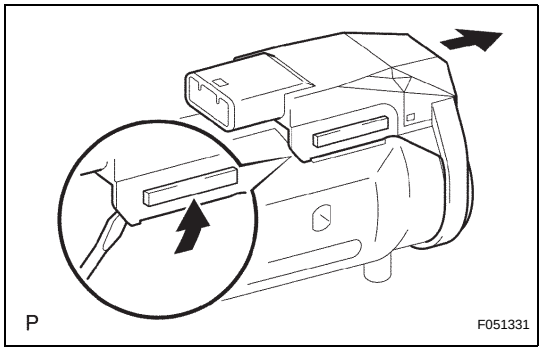

4. REMOVE TRANSPONDER KEY AMPLIFIER

(a) Widen the claw hung on the upper bracket by approximately 1.0 mm (0.039 in.) using a screwdriver.

(b) Pull the transponder key amplifier toward the rear of the vehicle with the claw open.

NOTICE:

Take care not to apply excessive force to prevent the case from being damaged.

SR

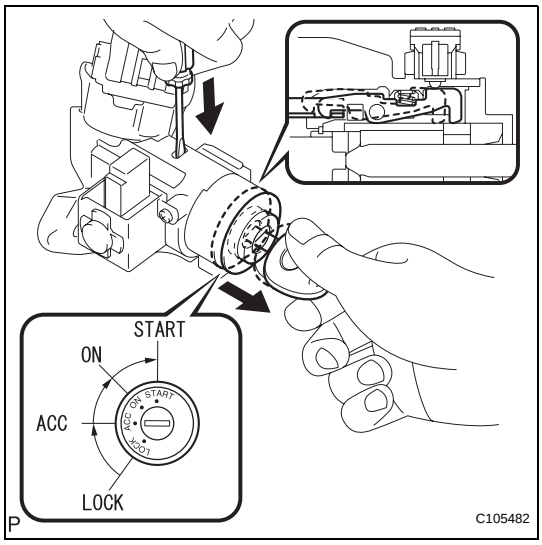

5. REMOVE IGNITION SWITCH LOCK CYLINDER & KEY SET

(a) Place the ignition switch lock cylinder assembly in the accessory position.

(b) Insert screwdriver in the steering column bracket assembly upper as shown in the illustration. Then slide ignition switch lock cylinder assembly until the claw of the ignition switch lock cylinder assembly comes into contact with the steering column bracket assembly upper stopper.

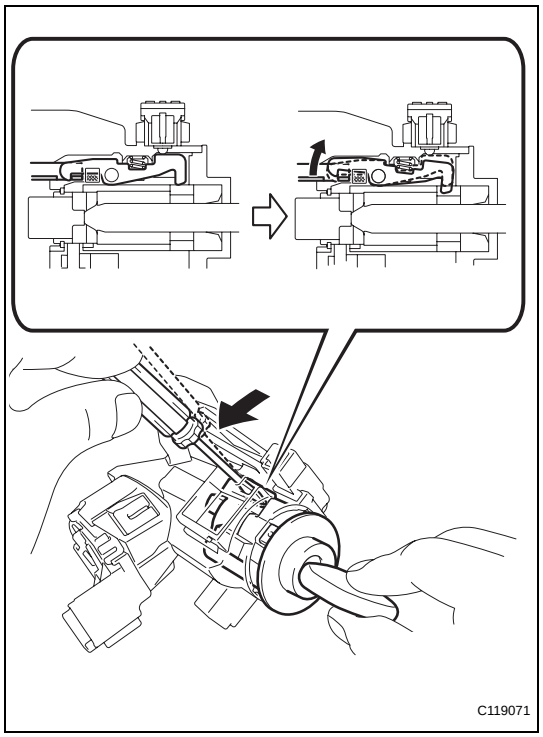

(c) Insert a screwdriver into the steering column bracket assembly upper as shown in the illustration .Then tilt the screwdriver as shown in the illustration to disengage the claw of the ignition lock cylinder assembly and remove the cylinder.
HINT:
When the ignition lock cylinder assembly disengages, a click sound is heard.

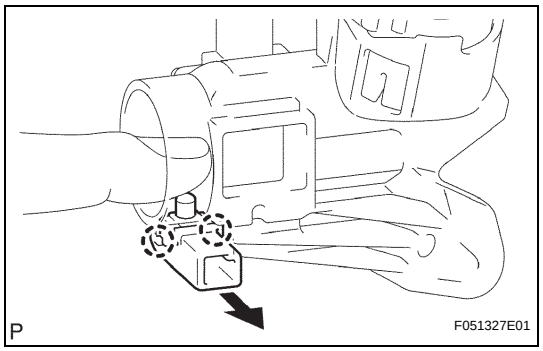

6. REMOVE UN-LOCK WARNING SWITCH ASSEMBLY

(a) Disconnect the un-lock warning switch assembly connector from the ignition or start switch assembly.
(b) Remove the un-lock warning switch assembly toward the rear of the vehicle by pushing up the center part.

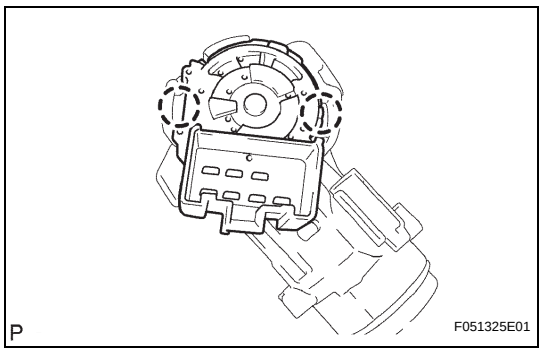

7. REMOVE IGNITION OR STARTER SWITCH ASSEMBLY

(a) Disengage the 2 claws and ignition or starter switch assembly from the steering column bracket assembly upper.

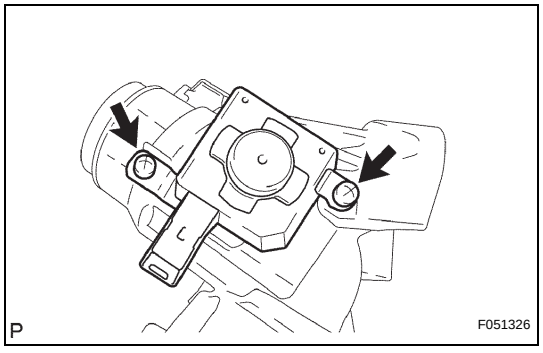

8. REMOVE KEY INTER LOCK SOLENOID (for Automatic Transmission)

(a) Remove the 2 screws and key inter lock solenoid from the steering column bracket assembly upper.

SR

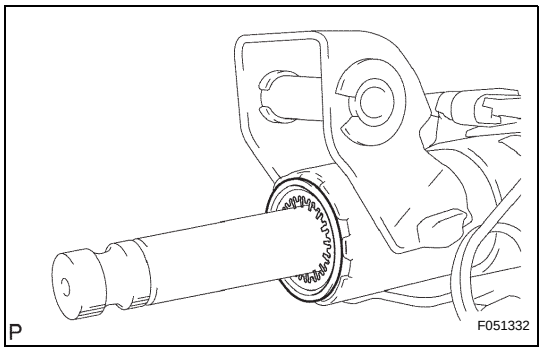

9. REMOVE STEERING MAIN SHAFT ASSEMBLY

(a) Using a screwdriver, remove the steering column No. 1 ring from the steering main shaft.

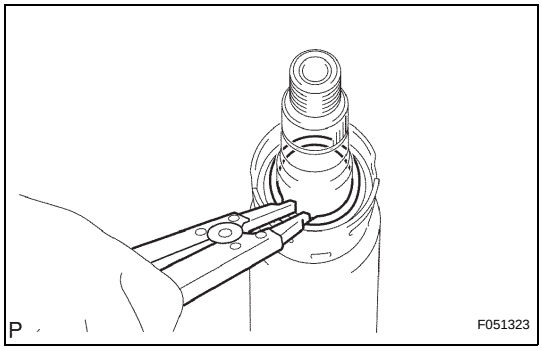

(b) Using a snap ring expander, remove the snap ring and No. 1 main shaft.

(c) Remove the compression spring, bearing thrust collar and bearing from the No. 1 main shaft.

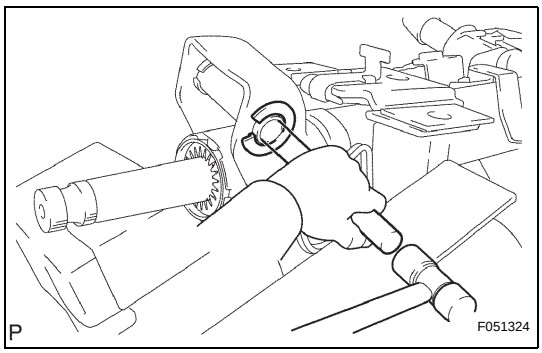

10. REMOVE NO.1 TILT STEERING SUPPORT COLLAR

(a) Using a brass bar, hammer and vise, gently strike the central part of the steering column bracket spacer and remove it.

(b) Remove the No. 1 tilt steering support collar from the steering column tube lower.

REASSEMBLY

1. INSTALL NO.1 TILT STEERING SUPPORT COLLAR

(a) Install the No. 1 tilt steering support collar from the steering column tube lower.

(b) Using a hammer and vise, install the steering column bracket spacer.

NOTICE:

- **The inclination of the steering column bracket spacer should be within +- 15° when installing, as shown in the illustration.**
- **The turning angle of the No. 1 tilt steering support collar should be within +- 15° when installing.**

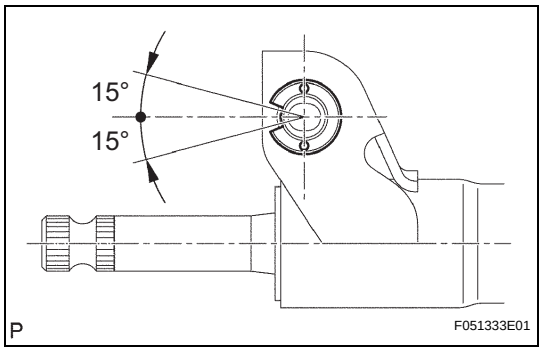

2. INSTALL STEERING MAIN SHAFT ASSEMBLY

(a) Install the steering main shaft onto the steering column tube upper and steering column tube lower.

(b) Using a snap ring expander, install a new snap ring onto the main shaft.

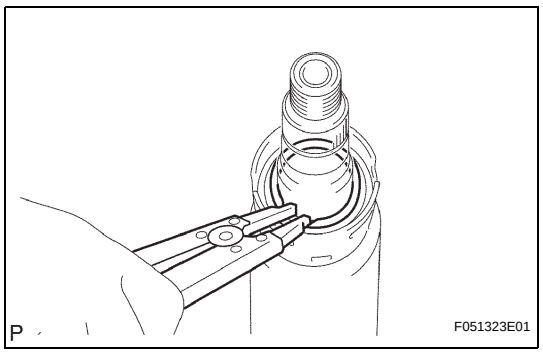

(c) Install the steering column No. 1 ring onto the steering main shaft.

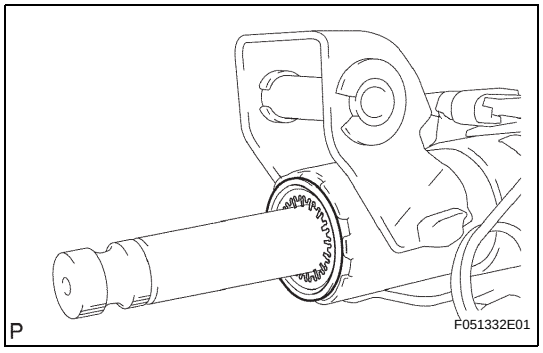

3. INSTALL KEY INTER LOCK SOLENOID (for Automatic Transmission)

(a) Install the key inter lock solenoid onto the steering column bracket assembly upper with 2 screws.

4. INSTALL IGNITION OR STARTER SWITCH ASSEMBLY

(a) Engage the ignition starter switch assembly into the steering column bracket assembly upper with the 2 claws.

5. INSTALL UN-LOCK WARNING SWITCH ASSEMBLY

(a) Install the un-lock warning switch assembly onto the steering column bracket assembly upper.

(b) Connect the un-lock warning switch assembly connector to the ignition switch assembly.

6. INSTALL IGNITION SWITCH LOCK CYLINDER & KEY SET

(a) Make sure that the ignition switch lock cylinder assembly is in the accessory position.

(b) Install the ignition switch lock cylinder assembly.

HINT:

When the ignition lock cylinder assembly engages, a click sound is heard.

7. INSTALL TRANSPONDER KEY AMPLIFIER

NOTICE:

Take care not to push the amplifier up forcibly to prevent it from being damaged.

(a) Align the transponder key amplifier with the installation position of the upper bracket with the amplifier inclined.

(b) Push up the transponder key amplifier and connect it to the upper bracket.

8. INSPECT STEERING LOCK OPERATION

(a) Check that the steering mechanism is activated when removing the key.

(b) Check that the steering mechanism is deactivated when inserting the key and turning it to ACC position.

9. INSTALL UPPER STEERING COLUMN CLAMP

(a) Provisionally install the steering column bracket assembly upper and steering column upper clamp with the 2 new tapered-head bolts.

(b) Tighten the 2 tapered-head bolts until the bolt heads break off.

10. INSTALL TILT LEVER RETURN SPRING

(a) Install the tilt lever return spring onto the bracket and steering tilt lever.

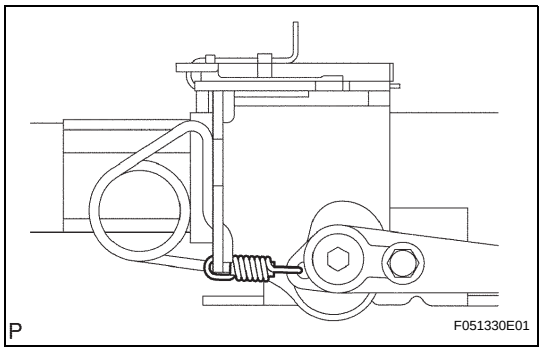

SR

11. INSTALL STEERING INTERMEDIATE SHAFT ASSEMBLY

(a) Align the matchmarks on the steering intermediate shaft sub-assembly and steering main shaft assembly.

(b) Temporarily install the steering intermediate shaft sub- assembly with the bolt.

Torque: 35 N*m (357 kgf*cm, 26 ft.*lbf)

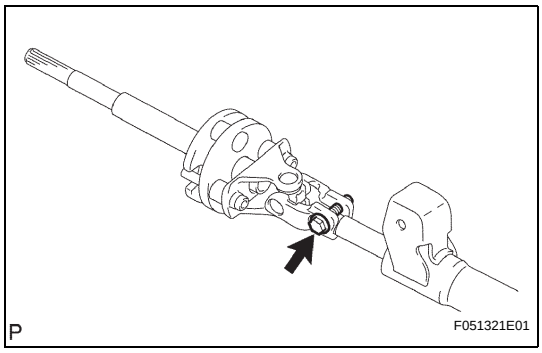

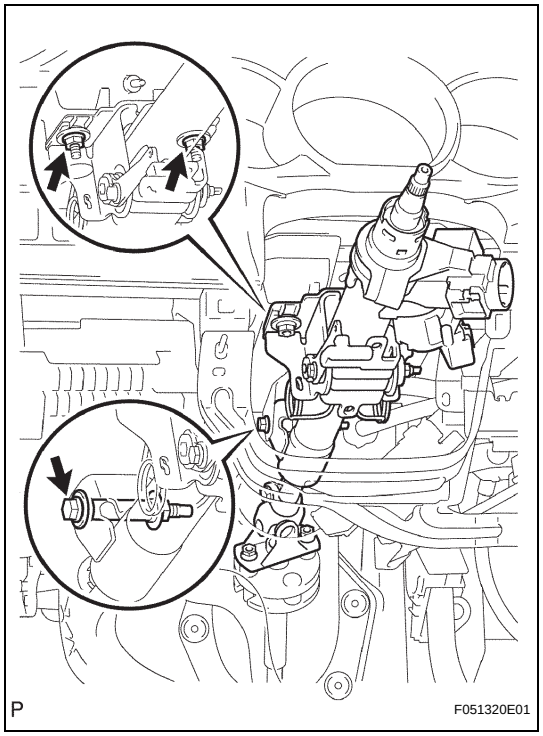

INSTALLATION

1. INSTALL STEERING COLUMN ASSEMBLY

(a) Install the steering column assembly with the 2 nuts and bolt.
Torque: 21 N*m (210 kgf*cm, 16 ft.*lbf)

(b) Connect each of the connectors to the steering column assembly.

(c) Connect the wire harness clamps to the steering column assembly.
CAUTION:
Use a shop rag to wipe any dirt off the installation plane and column body side.
NOTICE:
Be careful not to scratch or soil the installation plane of the steering column.

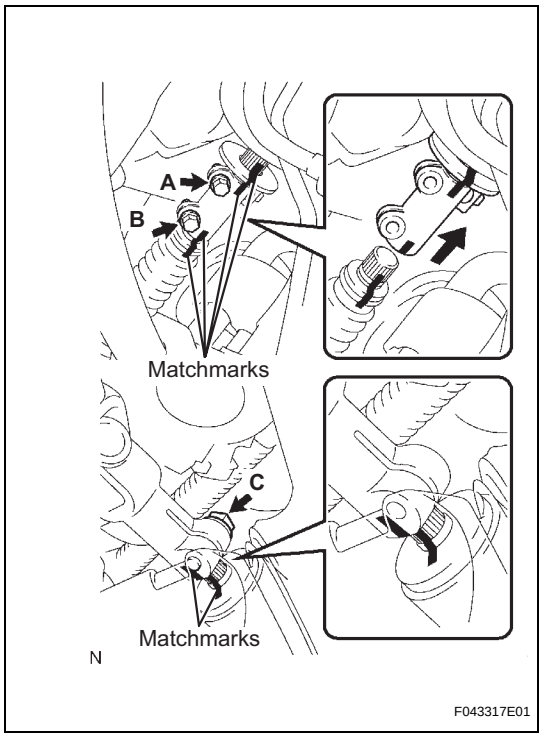

2. INSTALL NO.2 STEERING INTERMEDIATE SHAFT

(a) Align the matchmarks on the power steering gear and No. 2 steering intermediate shaft.

(b) Install the No. 2 steering intermediate shaft onto the steering gear box with bolt C.
Torque: 35 N*m (357 kgf*cm, 26 ft.*lbf) for bolt C

3. INSTALL STEERING SLIDING YOKE

(a) Align the matchmarks on the steering column and steering sliding yoke.

(b) Install the steering sliding yoke onto the steering column assembly and slide it upward.

(c) Align the matchmarks on the intermediate shaft sub-assembly No. 2 and steering sliding yoke.

(d) Install the sliding yoke onto the intermediate shaft sub- assembly No. 2 with bolts A and B.
Torque: 35 N*m (357 kgf*cm, 26 ft.*lbf) for bolt A, B

4. INSTALL NO.1 ENGINE UNDER COVER SUB-ASSEMBLY

(a) Install the No. 1 engine under cover sub-assembly with the 4 bolts.
Torque: 30 N*m (306 kgf*cm, 22 ft.*lbf)

SR

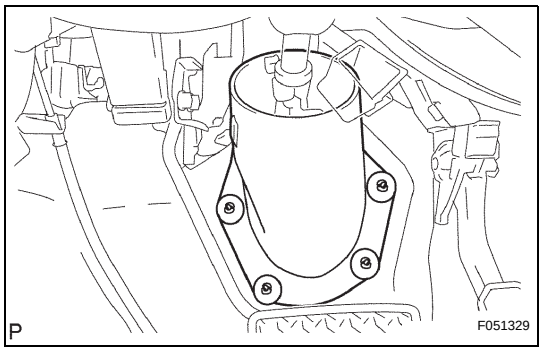

5. **INSTALL STEERING COLUMN HOLE COVER**
   (a) Install the steering column hole cover with the 4 clips.
6. **INSTALL LOWER INSTRUMENT PANEL LH (See page IP-20)**
7. **REMOVE INSTRUMENT PANEL SUB-ASSEMBLY (See page IP-22)**
8. **INSTALL INSTRUMENT PANEL HOLE COVER (for Lever Type Parking Brake) (See page IP-25)**
9. **INSTALL INSTRUMENT PANEL UNDER TRAY (for Pedal Type Parking Brake) (See page IP-25)**
10. **INSTALL COWL SIDE TRIM BOARD LH (for Regular Cab) (See page IR-52)**
11. **INSTALL COWL SIDE TRIM BOARD LH (for Access Cab) (See page IR-75)**
12. **INSTALL COWL SIDE TRIM BOARD LH (for Double Cab) (See page IR-29)**
13. **INSTALL FRONT DOOR SCUFF PLATE LH (for Regular Cab) (See page IR-52)**
14. **INSTALL FRONT DOOR SCUFF PLATE LH (for Access Cab) (See page IR-75)**
15. **INSTALL FRONT DOOR SCUFF PLATE LH (for Double Cab) (See page IR-29)**
16. **INSTALL FRONT FLOOR FOOTREST (See page IR-1)**
17. **INSTALL WINDSHIELD WIPER SWITCH ASSEMBLY (See page WW-19)**
18. **INSTALL SPIRAL CABLE SUB-ASSEMBLY (See page RS-567)**
19. **INSTALL UPPER STEERING COLUMN COVER**
    (a) Engage the claw and then install the steering column cover upper.
20. **INSTALL LOWER STEERING COLUMN COVER**
    (a) Engage the 2 claws.
    (b) Install the steering column cover lower with the 2 screws.
21. **INSTALL STEERING WHEEL ASSEMBLY**
    (a) Align the matchmarks on the steering wheel assembly and steering main shaft assembly.
    (b) Install the steering wheel assembly set nut.
    Torque: 50 N*m (510 kgf*cm, 37 ft.*lbf)
22. **INSTALL STEERING PAD (See page RS-558)**
23. **INSTALL NO.3 LOWER STEERING WHEEL COVER**
    (a) Engage the claw and install the No. 3 lower steering wheel cover onto the steering wheel assembly.

24. INSTALL NO.2 LOWER STEERING WHEEL COVER

(a) Engage the claw and install the No. 2 lower steering wheel cover onto the steering wheel assembly.

25. PLACE FRONT WHEELS FACING STRAIGHT AHEAD

26. CONNECT CABLE TO NEGATIVE BATTERY TERMINAL

Torque: 3.9 N*m (40 kgf*cm, 35 in.*lbf)

27. INSPECT SRS WARNING LIGHT

(See page RS-28)

REASSEMBLY

NOTICE:
When installing, coat the parts indicated by the arrows with power steering fluid (See page PS-3).

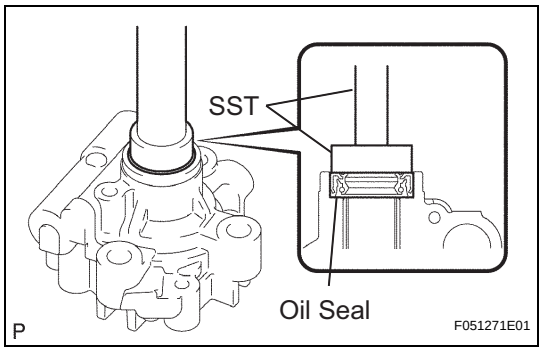

1. INSTALL VANE PUMP HOUSING OIL SEAL

(a) Coat a new vane pump housing oil seal lip with power steering fluid.

(b) Using SST and a press, install a new oil seal.

SST 09950-60010 (09951-00280), 09950-70010 (09951-07100)

NOTICE:
Make sure that the oil seal is installed facing in the correct direction.

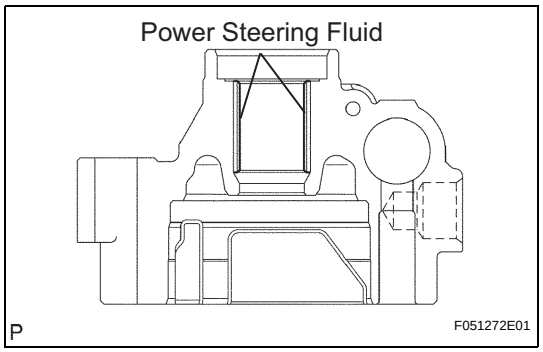

2. INSTALL PULLEY SHAFT SUB-ASSEMBLY

(a) Coat the bushing inner surface of the vane pump housing front with power steering fluid.

(b) Gradually insert the vane pump shaft.

NOTICE:
Do not damage the vane pump housing oil seal lip in the vane pump housing front.

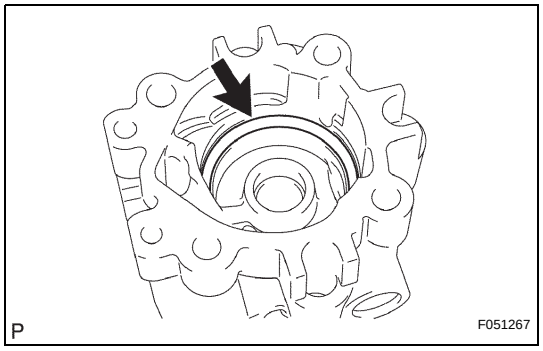

3. INSTALL VANE PUMP SIDE PLATE FRONT

(a) Coat a new O-ring with power steering fluid and install it onto the vane pump housing front.

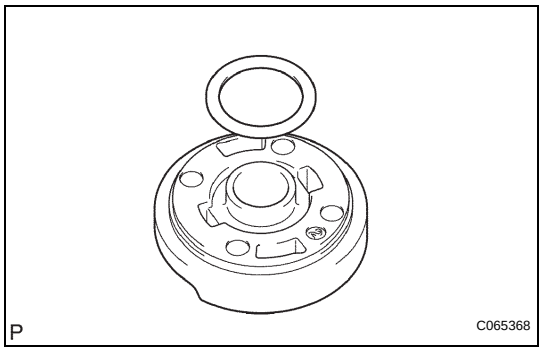

(b) Coat a new O-ring with power steering fluid and install it onto the side plate.

PS

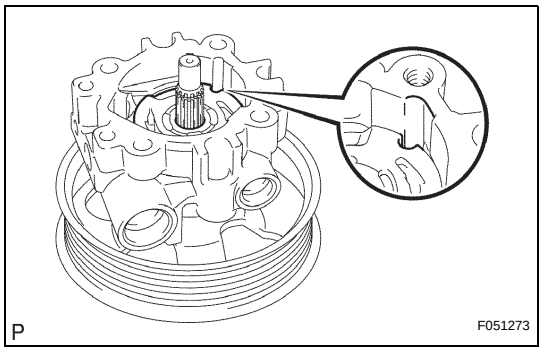

(c) Align the dent of the side plate with that of the vane pump housing front and install the side plate.
NOTICE:
Make sure that the side plate is installed facing the correct direction.

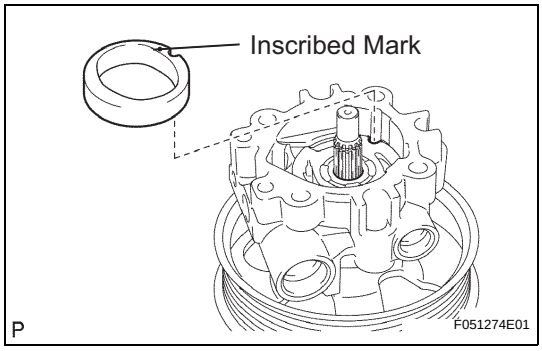

4. INSTALL VANE PUMP CAM RING

(a) Align the dent of the cam ring with that of the side plate and install the cam ring with the inscribed mark facing outward.

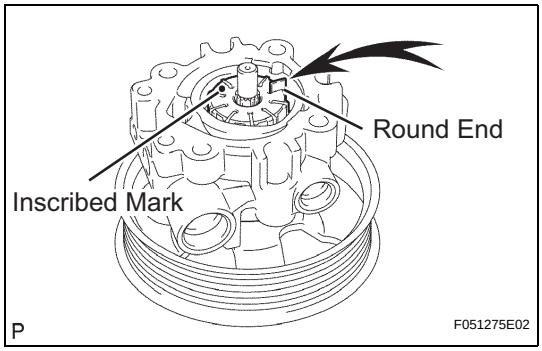

5. INSTALL VANE PUMP ROTOR

(a) Install the vane pump rotor with the inscribed mark facing outward.
(b) Coat the 10 vane plates with power steering fluid.
(c) Install the vane plates with the round ends facing outward.

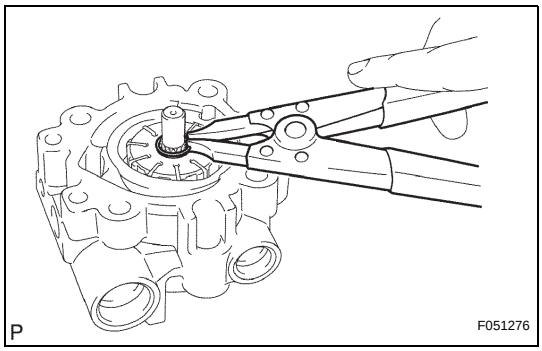

(d) Using a snap ring expander, install a new snap ring onto the pulley shaft.

PS

6. INSTALL VANE PUMP HOUSING REAR

(a) Coat a new O-ring with power steering fluid and install it onto the vane pump housing rear.
(b) Align the straight pin of the vane pump housing rear with the dents of the cam ring, side plate and vane pump housing front, and install the vane pump housing rear with the 4 bolts.
Torque: 22 N*m (224 kgf*cm, 16 ft.*lbf)

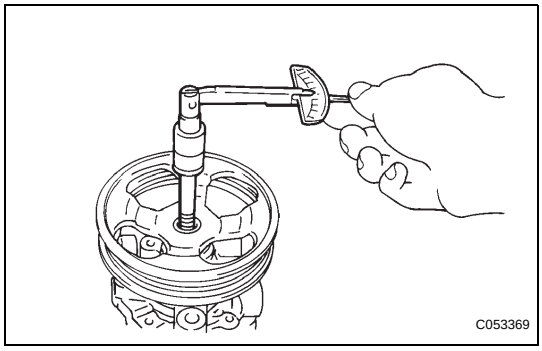

7. INSPECT PRELOAD

(a) Check that the pump rotates smoothly without making any abnormal noises.
(b) Provisionally install the service bolt.
Recommended service bolt:
Thread diameter:
10 mm (0.3937 in.)
Thread pitch:
1.25 mm (0.0492 in.)
Bolt length:
50 mm (1.9685 in.)

(c) Using a torque wrench, check the pump rotating torque.
Torque: 0.27 N*m (2.8 kgf*cm, 2.4 in.*lbf)

8. INSTALL POWER STEERING OIL PRESSURE SWITCH

(a) Coat the O-ring with power steering fluid and install it onto the power steering oil pressure switch.
(b) Install the power steering oil pressure switch onto the vane pump.
Torque: 21 N*m (214 kgf*cm, 15 ft.*lbf)

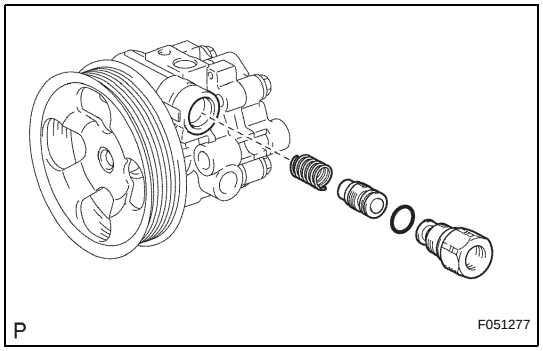

9. INSTALL FLOW CONTROL VALVE

(a) Coat the compression spring and flow control valve with power steering fluid.
(b) Install the compression spring and flow control valve.
(c) Coat a new O-ring with power steering fluid and install it onto the pressure port union.
(d) Install the pressure port union.
Torque: 69 N*m (704 kgf*cm, 51 ft.*lbf)

10. INSTALL POWER STEERING SUCTION PORT UNION

(a) Coat a new O-ring with power steering fluid, and install it onto the suction port union.
(b) Install the suction port union with the bolt.
Torque: 12 N*m (122 kgf*cm, 9 ft.*lbf)

INSTALLATION

1. INSTALL VANE PUMP

(a) Install the vane pump assembly with the 2 bolts.
Torque: 21 N*m (214 kgf*cm, 15 ft.*lbf)

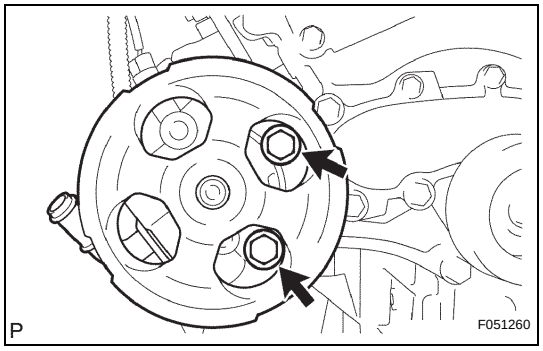

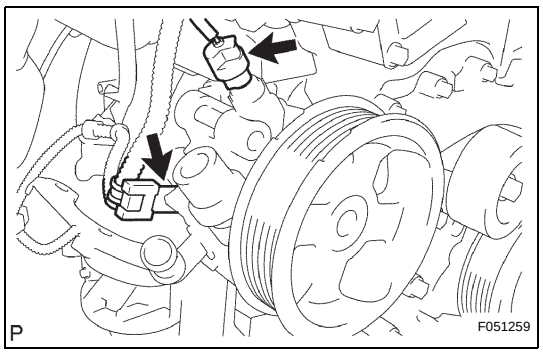

(b) Install the wire harness clamp bracket with the bolt.
Torque: 8.0 N*m (82 kgf*cm, 71 in.*lbf)
(c) Connect the oil pressure switch connector.
NOTICE:
Make sure that no oil adheres to the connector.

PS

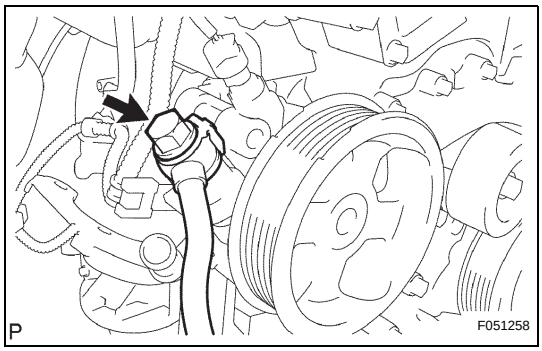

2. **CONNECT PRESSURE FEED TUBE ASSEMBLY**
   (a) Install a new gasket onto the pressure feed tube.
   (b) Install the pressure feed tube with the union bolt.
   Torque: 51 N*m (520 kgf*cm, 38 ft.*lbf)

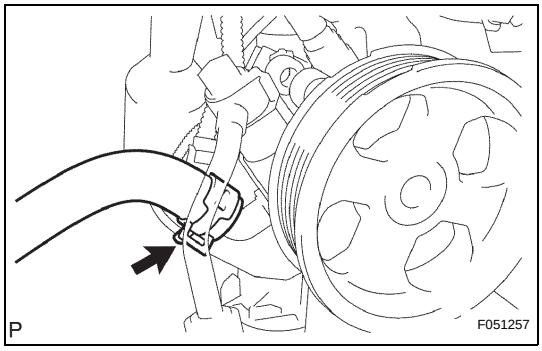

3. **CONNECT OIL RESERVOIR TO PUMP HOSE NO. 1**
   (a) Connect the oil reservoir to pump hose No. 1 with the clip.
4. **INSTALL FAN AND GENERATOR V BELT (See page EM-5)**
5. **CONNECT CABLE TO NEGATIVE BATTERY TERMINAL**
   Torque: 3.9 N*m (40 kgf*cm, 35 in.*lbf)
   (See page IN-5)
6. **ADD POWER STEERING FLUID**
7. **BLEED POWER STEERING FLUID (See page PS-2)**
8. **CHECK FOR POWER STEERING FLUID LEAKAGE**
9. **INSTALL ENGINE UNDER COVER SUB-ASSEMBLY NO. 1 (for 4WD and Pre-Runner)**
   Torque: 30 N*m (306 kgf*cm, 22 ft.*lbf)

REMOVAL

1. **DISCONNECT CABLE FROM NEGATIVE BATTERY TERMINAL**
2. **REMOVE ENGINE UNDER COVER SUB-ASSEMBLY NO. 1 (for 4WD and Pre-Runner)**
3. **REMOVE FAN AND GENERATOR V BELT (See page EM-5)**
4. **DRAIN POWER STEERING FLUID**
5. **DISCONNECT PRESSURE FEED TUBE ASSEMBLY**
   (a) Disengage the clip and disconnect the return hose.

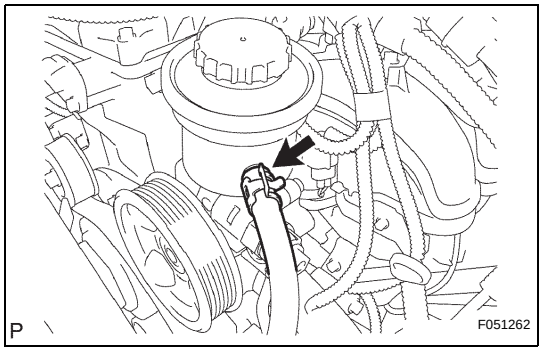

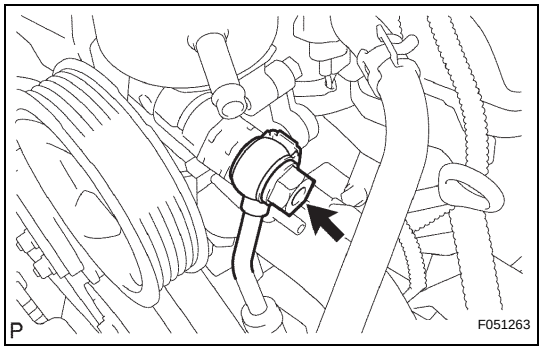

   (b) Remove the union bolt, then disconnect the pressure feed tube.
   (c) Remove the gasket from the pressure feed tube.

6. **REMOVE VANE PUMP**
   (a) Disconnect the oil pressure switch connector.

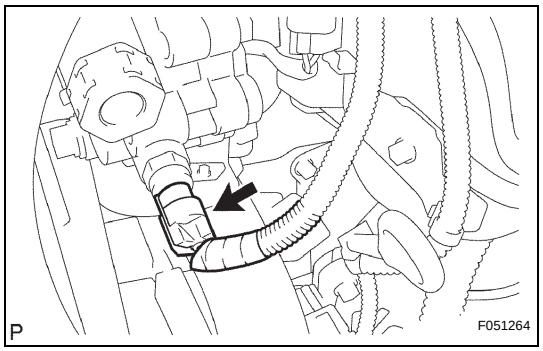

   (b) Remove the 2 bolts and vane pump assembly.

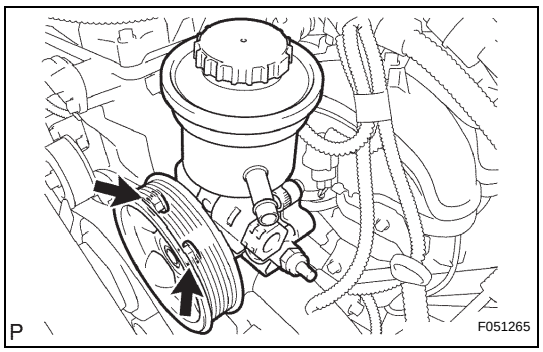

PS

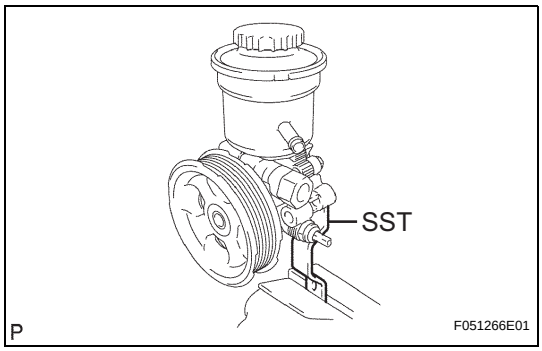

DISASSEMBLY

1. FIX VANE PUMP

(a) Using SST, fix the vane pump assembly in a vise.
SST 09630-00014 (09631-00132)
NOTICE:
When using a vise, do not over tighten it.

2. REMOVE VANE PUMP OIL RESERVOIR SUB-ASSEMBLY

(a) Remove the 3 bolts and vane pump oil reservoir.
(b) Remove the O-ring from the vane pump oil reservoir.

3. REMOVE FLOW CONTROL VALVE

(a) Remove the pressure port union.
(b) Remove the O-ring from the pressure port union.
(c) Remove the flow control valve and compression spring.

4. REMOVE POWER STEERING OIL PRESSURE SWITCH
NOTICE:
Be careful not to drop or badly damage the oil pressure switch. If damaged, replace it with a new one.

5. REMOVE VANE PUMP HOUSING REAR

(a) Remove the 4 bolts and vane pump housing rear from the vane pump housing front.
(b) Remove the O-ring from the vane pump housing front.

6. REMOVE PULLEY SHAFT SUB-ASSEMBLY
NOTICE:
Be careful not to drop or badly damage the pulley shaft. If damaged, replace it with a new one.

(a) Using a screwdriver, remove the snap ring from the pulley shaft.
(b) Remove the pulley shaft.

7. REMOVE VANE PUMP ROTOR

(a) Remove the 10 vane plates.
(b) Remove the vane pump rotor.

8. REMOVE VANE PUMP CAM RING

9. REMOVE VANE PUMP SIDE PLATE FRONT

(a) Remove the side plate from the vane pump housing front.
(b) Remove the O-ring from the side plate.

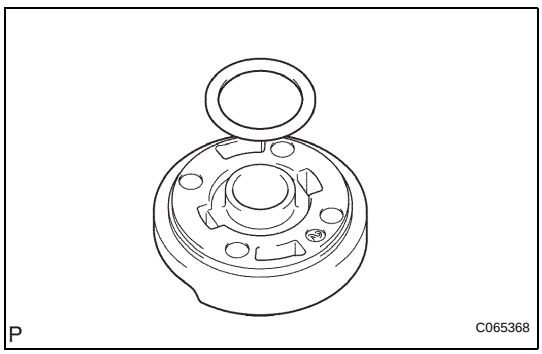

PS

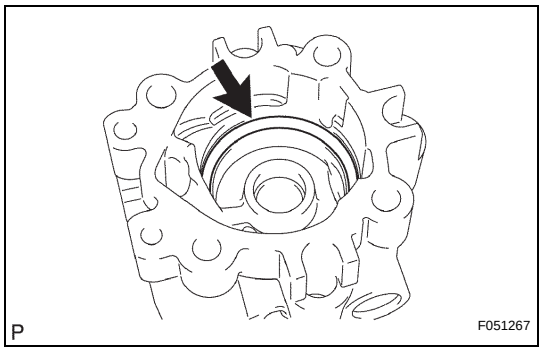

(c) Remove the O-ring from the vane pump housing front.

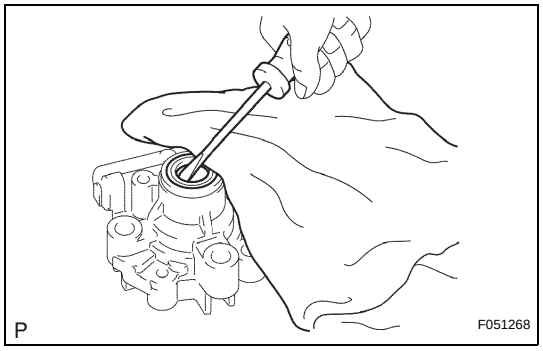

10. REMOVE VANE PUMP HOUSING OIL SEAL

(a) Using screwdriver, remove the oil seal.
NOTICE:
Be careful not to damage the vane pump housing front.

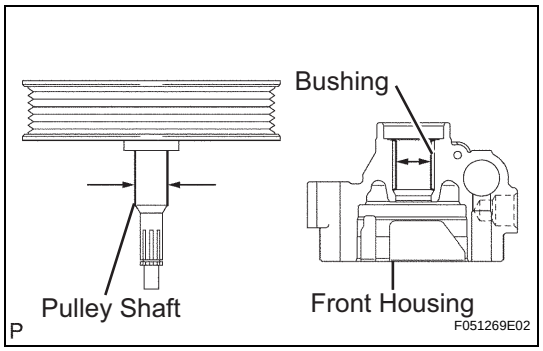

INSPECTION

1. INSPECT OIL CLEARANCE

(a) Using a micrometer and caliper gauge, measure the oil seal clearance.
Standard clearance:
0.021 to 0.043 mm (0.0008 to 0.0017 in.)
Maximum clearance:
0.07 mm (0.0028 in.)
If it is greater than the maximum, replace the vane pump assembly.

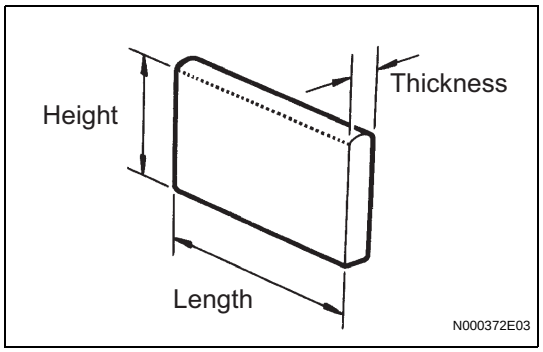

2. INSPECT VANE PUMP ROTOR AND VANE PUMP PLATE

(a) Using a micrometer, measure the height, thickness and length of the vane plates.
Minimum height:
7.7 mm (0.303 in.)
Minimum thickness:
1.408 mm (0.0554 in.)
Minimum length:
11.993 mm (0.4722 in.)

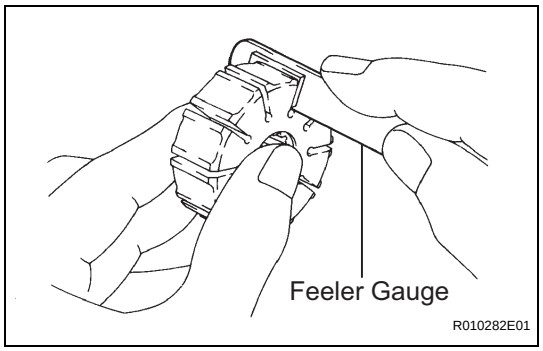

(b) Using a feeler gauge, measure the clearance between a side face of the vane pump rotor groove and vane plate.
Maximum clearance:
0.025 mm (0.0012 in.)
If it is greater than the maximum, replace the vane pump assembly.

PS

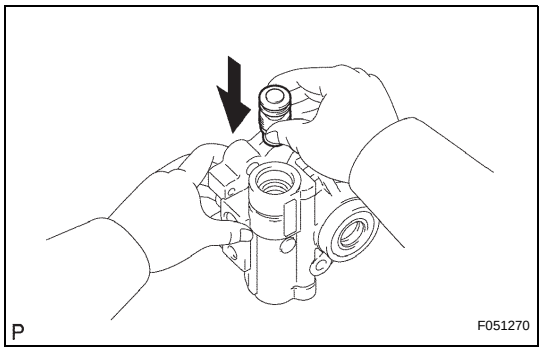

3. INSPECT FLOW CONTROL VALVE

(a) Coat the flow control valve with power steering fluid and check that it falls smoothly into the flow control valve hole under its own weight.

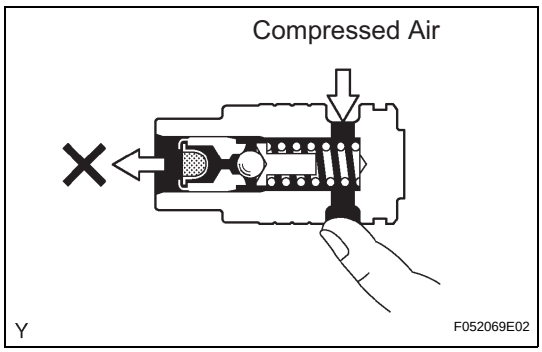

(b) Check the flow control valve for leakage. Close one of the holes and apply compressed air of 392 to 490 kPa (4 to 5 kgf/cm^2, 57 to 71 psi) to the hole on the opposite side. Confirm that the air does not flow out of the end hole.
If necessary, replace the vane pump assembly.

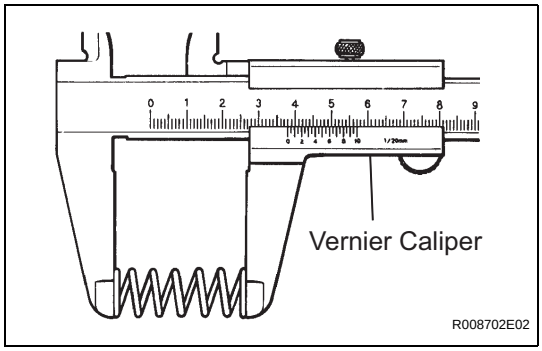

4. INSPECT COMPRESSION SPRING

(a) Using vernier calipers, measure the free length of the spring.
Minimum free length:
36.9 mm (1.453 in.)
If it is not within the specification, replace the vane pump assembly.

5. INSPECT PRESSURE PORT UNION SUB-ASSEMBLY

(a) If the union seat in the pressure port union is badly damaged, it could cause fluid leakage, so replace the vane pump assembly.

REASSEMBLY

NOTICE:
When installing, coat the parts indicated by the arrows with power steering fluid (See page PS-3).

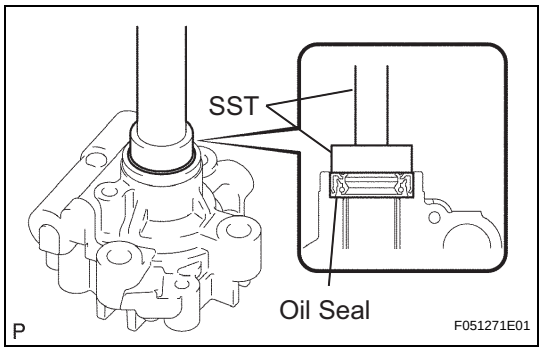

1. INSTALL VANE PUMP HOUSING OIL SEAL

(a) Coat a new vane pump housing oil seal lip with power steering fluid.

(b) Using SST and a press, install a new oil seal.

SST 09950-60010 (09951-00280), 09950-70010 (09951-07100)

NOTICE:
Make sure that the oil seal is installed facing in the correct direction.

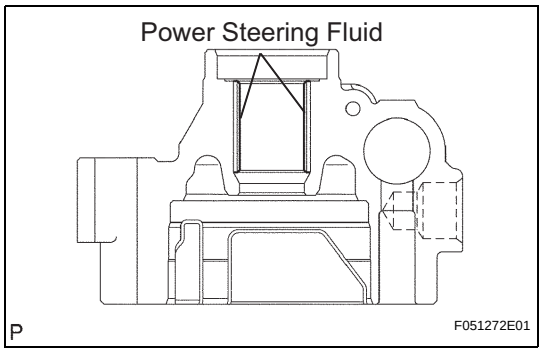

2. INSTALL PULLEY SHAFT SUB-ASSEMBLY

(a) Coat the bushing inner surface of the vane pump housing front with power steering fluid.

(b) Gradually insert the vane pump shaft.

NOTICE:
Do not damage the vane pump housing oil seal lip in the vane pump housing front.

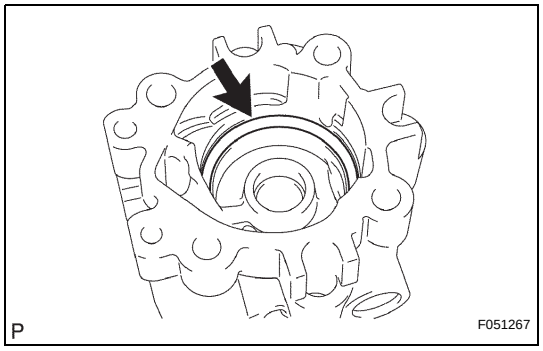

3. INSTALL VANE PUMP SIDE PLATE FRONT

(a) Coat a new O-ring with power steering fluid and install it onto the vane pump housing front.

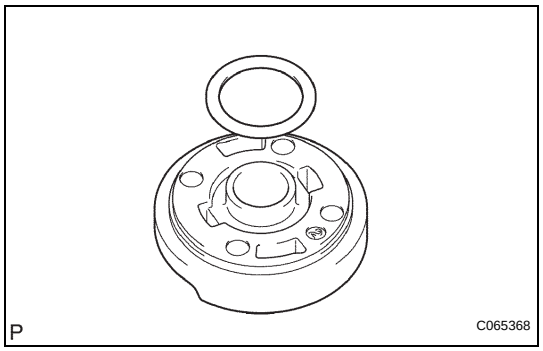

(b) Coat a new O-ring with power steering fluid and install it onto the side plate.

PS

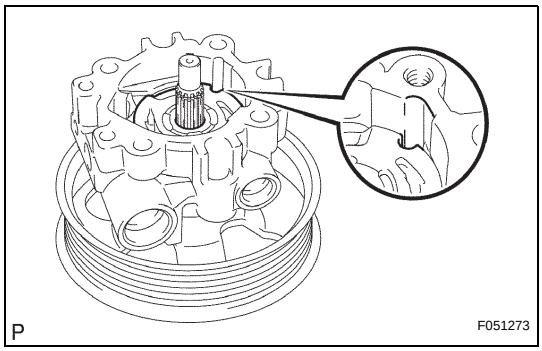

(c) Align the dent of the side plate with that of the vane pump housing front and install the side plate.
NOTICE:
Make sure that the side plate is installed facing the correct direction.

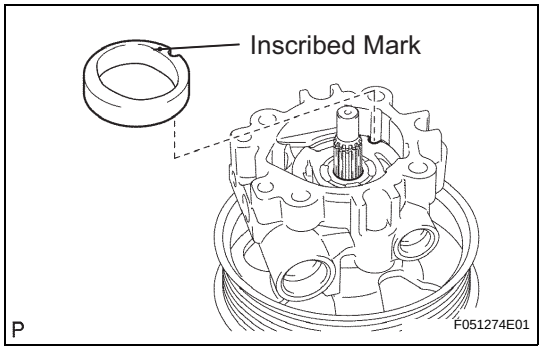

4. INSTALL VANE PUMP CAM RING

(a) Align the dent of the cam ring with that of the side plate and install the cam ring with the inscribed mark facing outward.

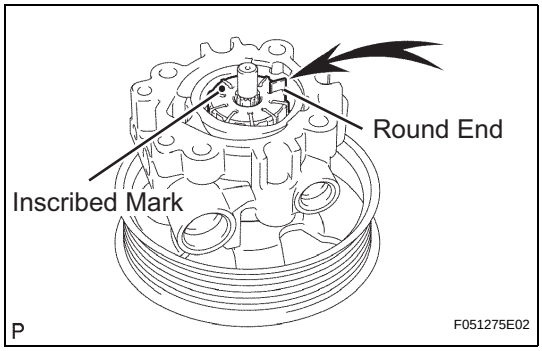

5. INSTALL VANE PUMP ROTOR

(a) Install the vane pump rotor with the inscribed mark facing outward.
(b) Coat the 10 vane plates with power steering fluid.
(c) Install the vane plates with the round ends facing outward.

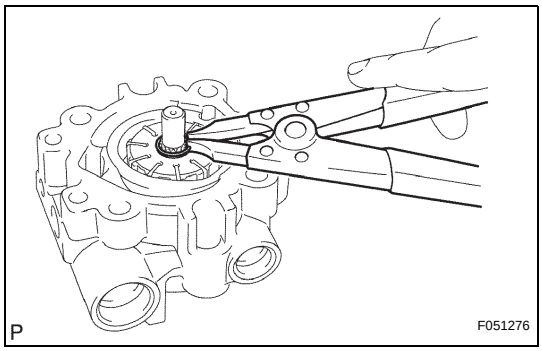

(d) Using a snap ring expander, install a new snap ring onto the pulley shaft.

PS

6. INSTALL VANE PUMP HOUSING REAR

(a) Coat a new O-ring with power steering fluid and install it onto the vane pump housing rear.
(b) Align the straight pin of the vane pump housing rear with the dents of the cam ring, side plate and vane pump housing front, and install the vane pump housing rear with the 4 bolts.
Torque: 22 N*m (224 kgf*cm, 16 ft.*lbf)

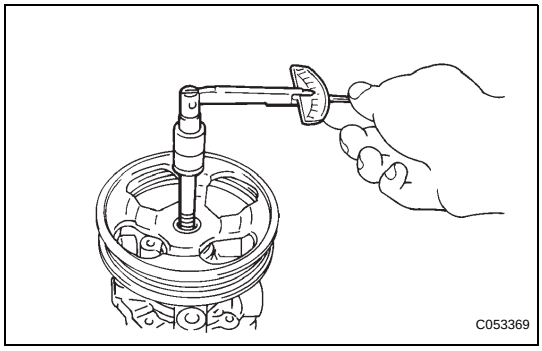

7. INSPECT PRELOAD

(a) Check that the pump rotates smoothly without making any abnormal noises.
(b) Provisionally install the service bolt.
Recommended service bolt:
Thread diameter:
10 mm (0.3937 in.)
Thread pitch:
1.25 mm (0.0492 in.)
Bolt length:
50 mm (1.9685 in.)

(c) Using a torque wrench, check the pump rotating torque.
Torque: 0.27 N*m (2.8 kgf*cm, 2.4 in.*lbf) or less

8. INSTALL POWER STEERING OIL PRESSURE SWITCH

(a) Coat the O-ring with power steering fluid and install it onto the power steering oil pressure switch.
(b) Install the power steering oil pressure switch onto the vane pump assembly.
Torque: 21 N*m (214 kgf*cm, 15 ft.*lbf)

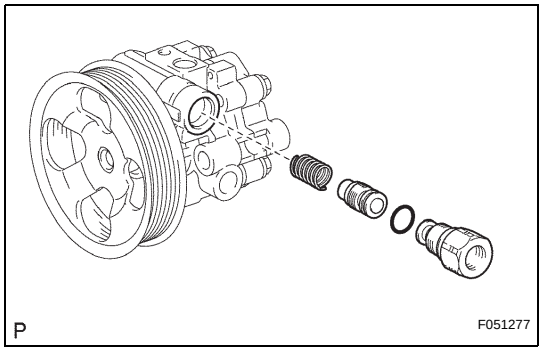

9. INSTALL FLOW CONTROL VALVE

(a) Coat the compression spring and flow control valve with power steering fluid.
(b) Install the compression spring and flow control valve.
(c) Coat a new O-ring with power steering fluid and install it onto the pressure port union.
(d) Install the pressure port union.
Torque: 69 N*m (704 kgf*cm, 51 ft.*lbf)

10. INSTALL VANE PUMP OIL RESERVOIR SUB-ASSEMBLY

(a) Coat a new O-ring with power steering fluid, and install it onto the vane pump oil reservoir.
(b) Install the vane pump oil reservoir with the 3 bolts.
Torque: 9.0 N*m (92 kgf*cm, 80 in.*lbf)

INSTALLATION

1. INSTALL VANE PUMP

(a) Install the vane pump assembly with the 2 bolts.
Torque: 21 N*m (214 kgf*cm, 15 ft.*lbf)

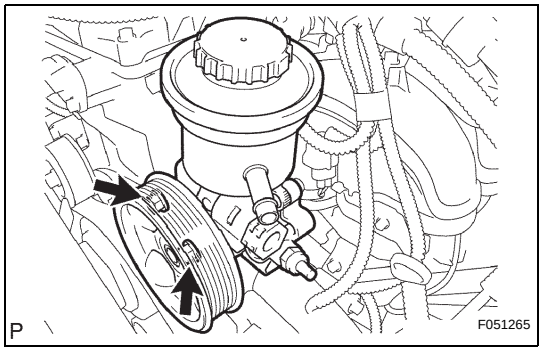

PS

(b) Connect the oil pressure switch connector.
NOTICE:
Make sure that no oil adheres to the connector.

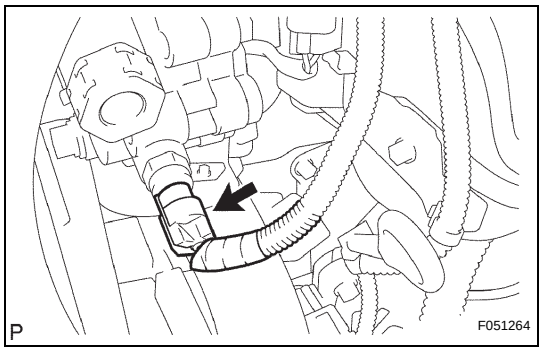

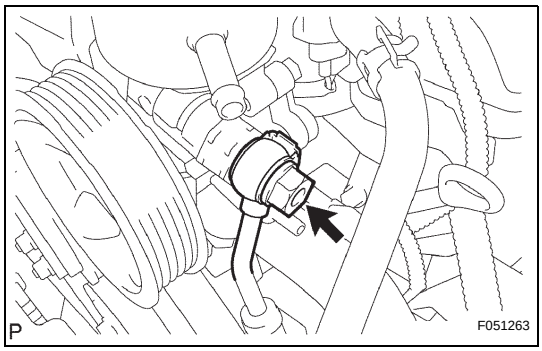

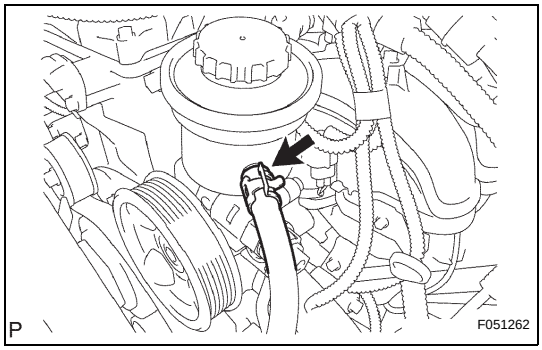

2. CONNECT PRESSURE FEED TUBE ASSEMBLY

(a) Install a new gasket onto the pressure feed tube.

(b) Install the pressure feed tube with the union bolt.
Torque: 51 N*m (520 kgf*cm, 38 ft.*lbf)

(c) Connect the return hose with the clip.

3. INSTALL FAN AND GENERATOR V BELT (See page EM-6)

4. CONNECT CABLE TO NEGATIVE BATTERY TERMINAL
Torque: 3.9 N*m (40 kgf*cm, 35 in.*lbf)
(See page IN-5)

5. ADD POWER STEERING FLUID

6. BLEED POWER STEERING FLUID (See page PS-2)

7. CHECK POWER STEERING FLUID LEAKAGE

8. INSTALL ENGINE UNDER COVER SUB-ASSEMBLY NO. 1 (for 4WD and Pre-Runner)
Torque: 30 N*m (306 kgf*cm, 22 ft.*lbf)

REMOVAL

1. DISCONNECT CABLE FROM NEGATIVE BATTERY TERMINAL

2. PLACE FRONT WHEELS FACING STRAIGHT AHEAD

3. REMOVE FRONT WHEELS

4. REMOVE STEERING INTERMEDIATE SHAFT NO. 2

(a) Fix the steering wheel with the seat belt in order to prevent it from rotating.
HINT:
The operation is effective for preventing any damage to the spiral cable.

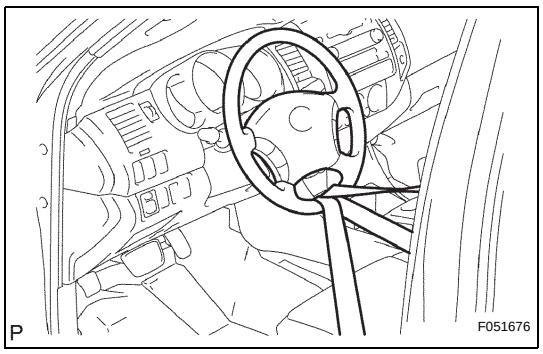

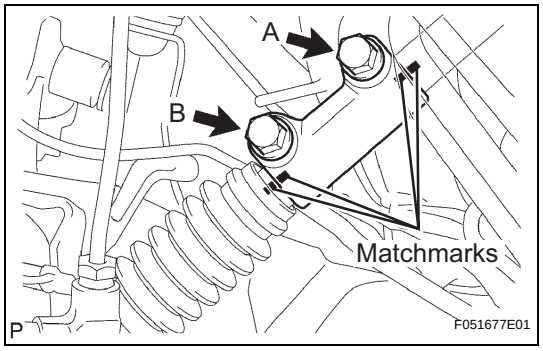

(b) Place matchmarks on the steering sliding yoke, steering intermediate shaft No. 2 and steering intermediate shaft.
(c) Remove bolts A and B from the steering sliding yoke.
(d) Slide the steering sliding yoke up and separate it from the steering intermediate shaft No. 2.
(e) Pull down the steering sliding yoke from the steering intermediate shaft to remove it.

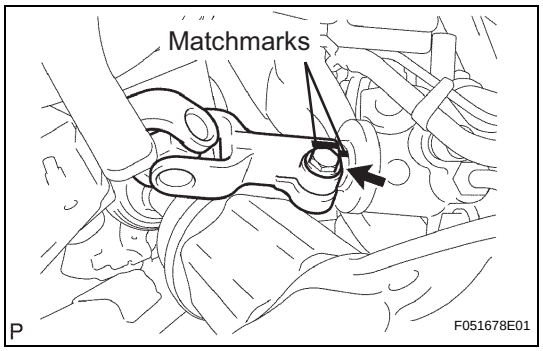

(f) Place matchmarks on the steering intermediate shaft No. 2 and power steering link.
(g) Remove bolt C from the steering intermediate shaft No. 2.
(h) Slide the steering intermediate shaft No. 2 up and remove it from the power steering link.

5. SEPARATE TIE ROD END SUB-ASSEMBLY LH

(a) Remove the cotter pin and nut.

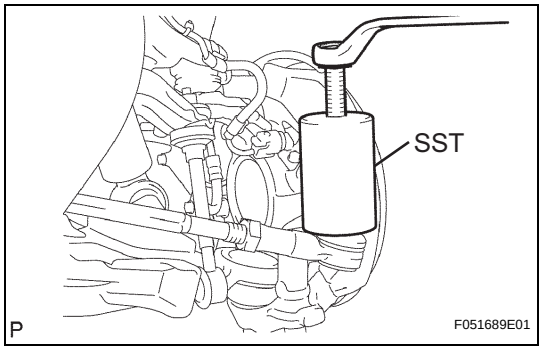

(b) Using SST, separate the tie rod end from the steering knuckle arm.
SST 09610-20012

6. SEPARATE TIE ROD END SUB-ASSEMBLY RH
HINT:
The removal procedure for the RH side is the same as that for the LH side.

PS

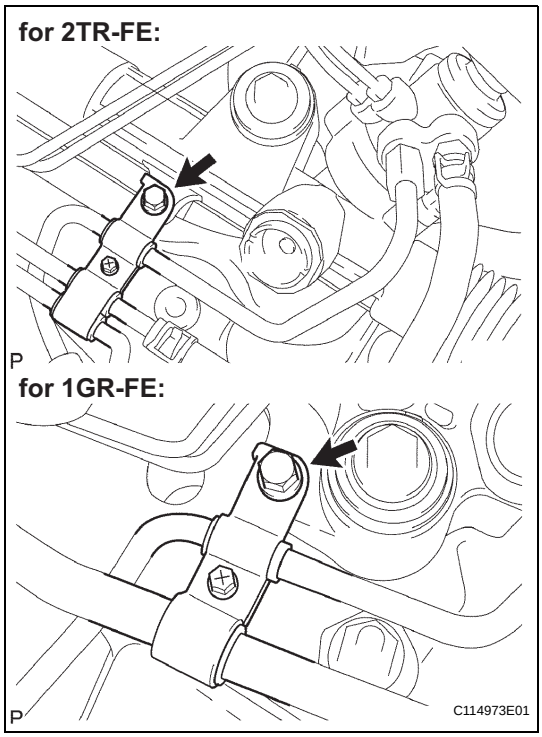

7. SEPARATE PRESSURE FEED TUBE ASSEMBLY

(a) Remove the bolt and separate the tube support bracket.

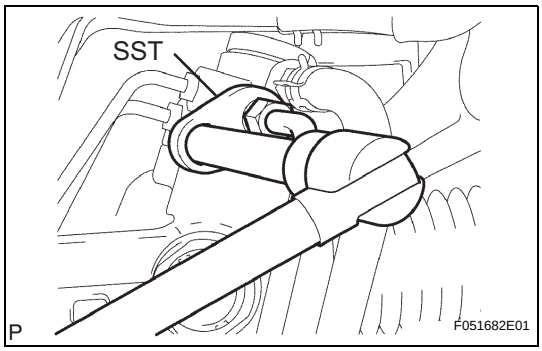

(b) Using SST, loosen the flare nut and separate the pressure feed tube.
SST 09023-12701

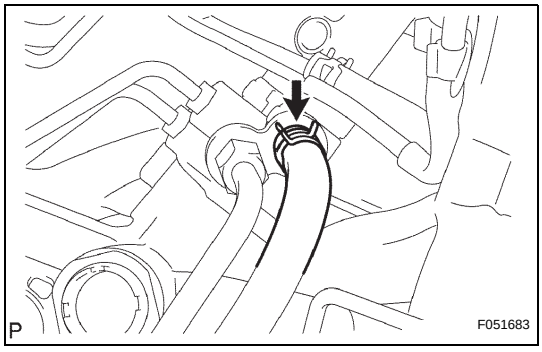

(c) Disengage the clip and disconnect the return hose.

PS

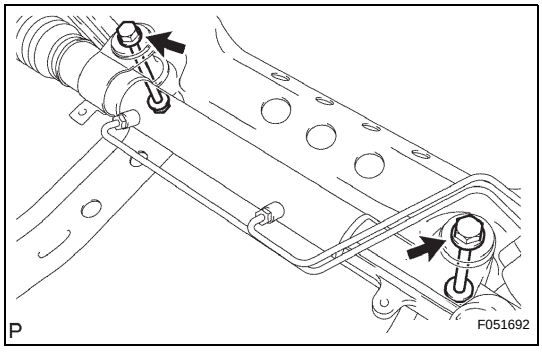

8. REMOVE POWER STEERING LINK

(a) Remove the 2 bolts, 2 nuts and power steering link.
NOTICE:
The nut has a detent, so never turn the nut. Be sure to turn only the bolt.

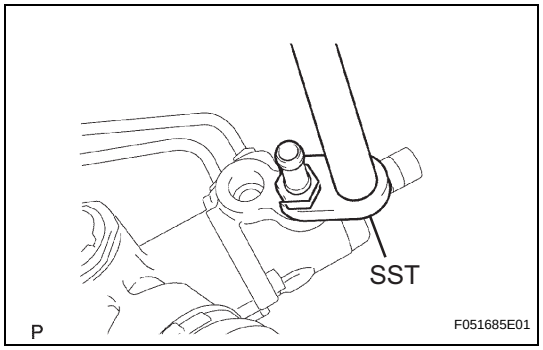

DISASSEMBLY

1. REMOVE STEERING GEAR OUTLET RETURN TUBE

(a) Using SST, remove the return tube.
SST 09023-12701

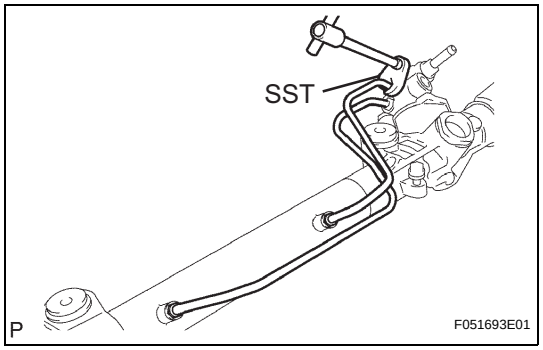

2. REMOVE STEERING TURN PRESSURE TUBE

(a) Using SST, remove the 2 pressure tubes.
SST 09023-38401

(b) Remove the 4 O-rings from the pressure tubes.

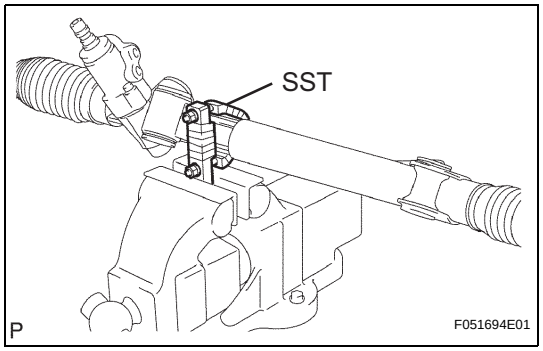

3. FIX POWER STEERING LINK

(a) Using SST, fix the power steering link between aluminium plates in a vise, as shown in the illustration.
SST 09612-00012
NOTICE:
When using a vise, do not over tighten it.

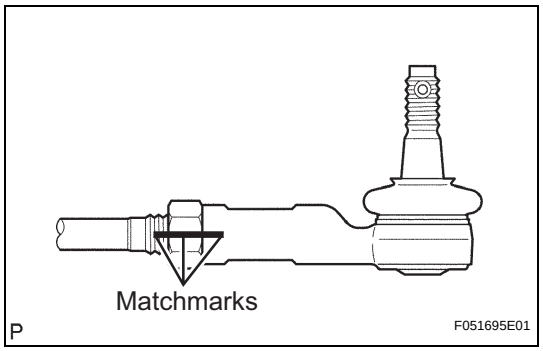

4. REMOVE TIE ROD END SUB-ASSEMBLY LH

(a) Place matchmarks on the tie rod end, lock nut and rack end.

(b) Loosen the lock nut and remove the tie rod end and lock nut.

5. REMOVE TIE ROD END SUB-ASSEMBLY RH

HINT:
The removal procedure for the RH side is the same as that for the LH side.

6. REMOVE STEERING RACK BOOT CLIP

(a) Remove the 2 rack boot clips.

7. REMOVE STEERING RACK BOOT NO. 1 CLAMP

(a) Using pliers, remove the rack boot No. 1 clamp.
NOTICE:
Be careful not to damage the steering rack boot No. 1.

8. REMOVE STEERING RACK BOOT NO. 2 CLAMP

HINT:
The removal procedure for the No. 2 side is the same as that for the No. 1 side.

PS

9. REMOVE STEERING RACK BOOT NO. 1

10. REMOVE STEERING RACK BOOT NO. 2

11. REMOVE STEERING RACK END SUB-ASSEMBLY

(a) Using a screwdriver and hammer, unstake the claw washer.

NOTICE:
Avoid any impact to the power steering rack.

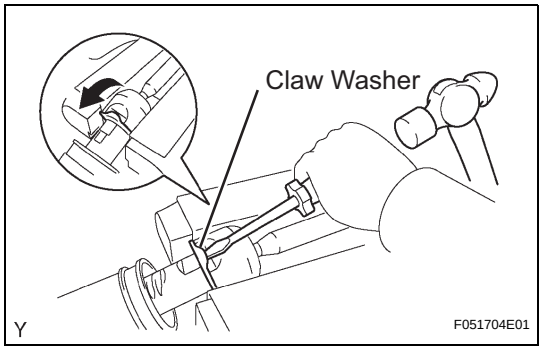

(b) Using 2 SSTs, remove the 2 steering rack ends and 2 claw washers.

SST 09922-10010

NOTICE:
- **Turn SST 09922-10010 in the direction shown in the illustration.**
- **Securely hold the steering rack end with SST.**

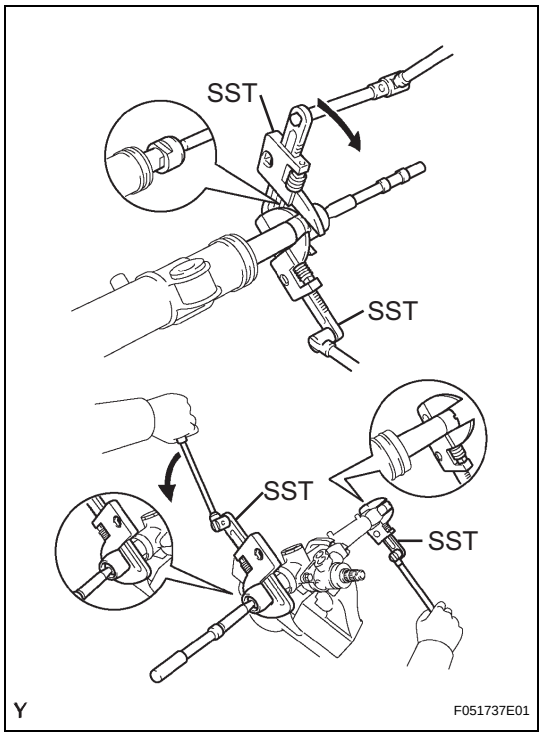

PS

12. REMOVE STEERING GEAR RACK GUIDE

(a) Using SST, remove the rack guide spring cap nut.

SST 09922-10010

NOTICE:
Turn SST 09922-10010 in the direction shown in the illustration.

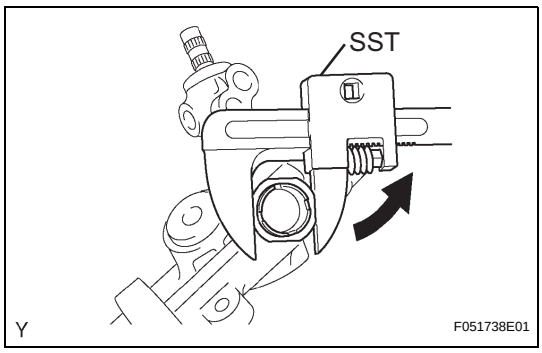

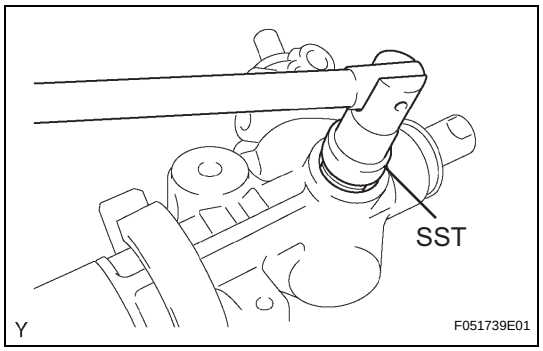

(b) Using SST, remove the rack guide spring cap.
SST 09631-10021
(c) Remove the rack guide spring and rack guide.

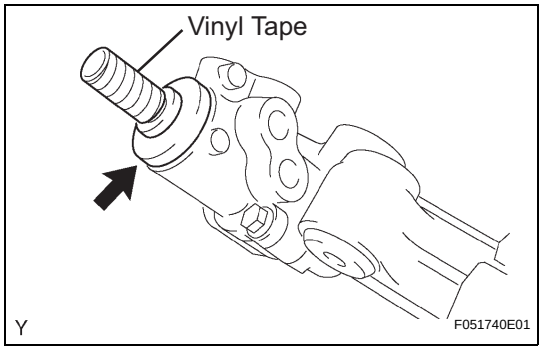

13. REMOVE POWER STEERING CONTROL VALVE ASSEMBLY
(a) Wind vinyl tape around the serrated portion of the control valve.
(b) Remove the dust cover from the control valve housing.

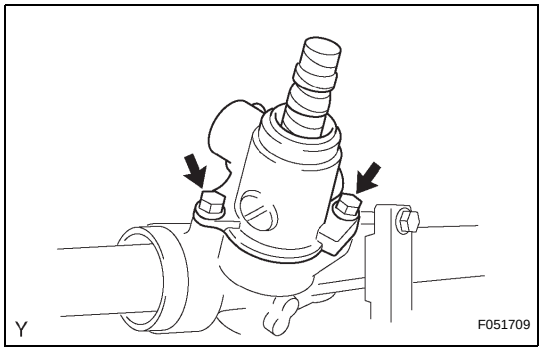

(c) Remove the 2 bolts and control valve w/ control valve housing.
(d) Remove the O-ring from the control valve housing.

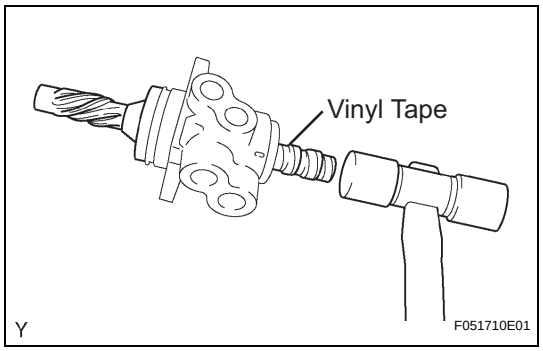

(e) To prevent the oil seal lip form getting damaged, wind vinyl tape around the serrated portion of the control valve.
(f) Using a plastic hammer, remove the control valve from the control valve housing.

PS

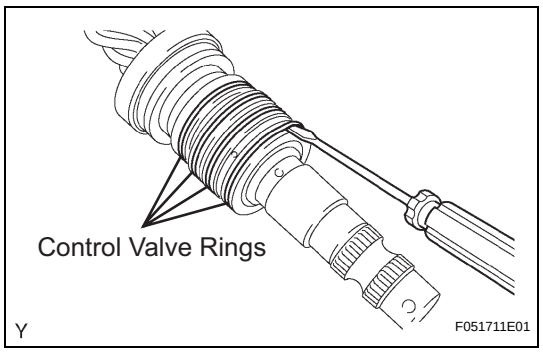

(g) Using a screwdriver, remove the 4 control valve rings.
NOTICE:
Be careful not to damage the grooves for the control valve rings.

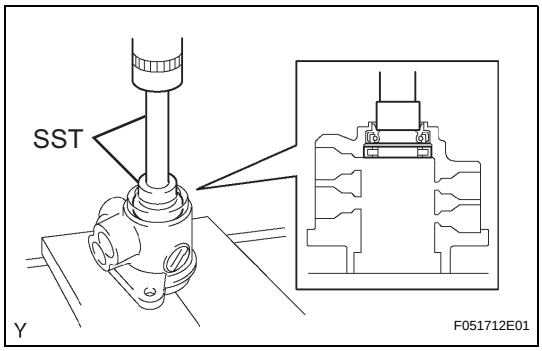

14. REMOVE POWER STEERING CONTROL VALVE UPPER OIL SEAL

(a) Using SST and a press, remove the control valve upper bearing and control valve upper oil seal from the control valve housing.

SST 09950-60010 (09951-00250), 09950-70010 (09951-07150)

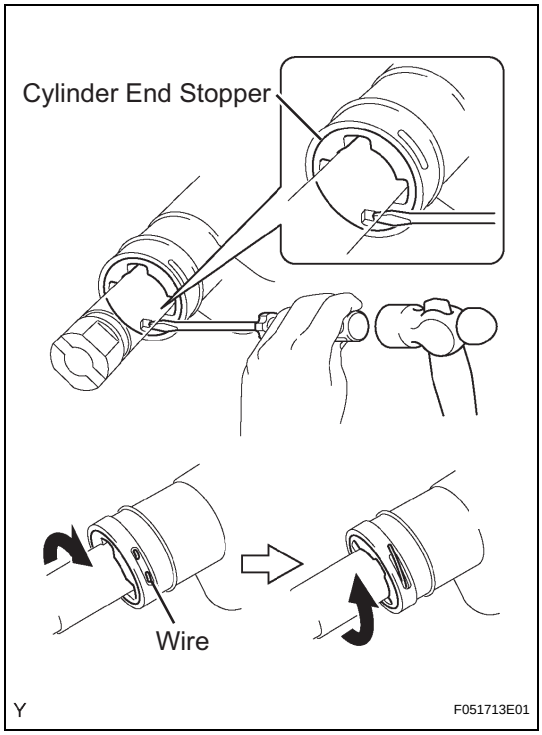

15. REMOVE CYLINDER END STOPPER

(a) Using a screwdriver and hammer, turn the cylinder end stopper clockwise until the wire end can be seen through the service hole.

(b) Using a screwdriver and hammer, turn the cylinder end stopper counterclockwise, and remove the wire and cylinder end stopper.

16. REMOVE POWER STEERING RACK

17. REMOVE POWER STEERING RACK BUSH

(a) Remove the rack bush from the power steering rack.

(b) Using a screwdriver, remove the O-ring from the rack bush.

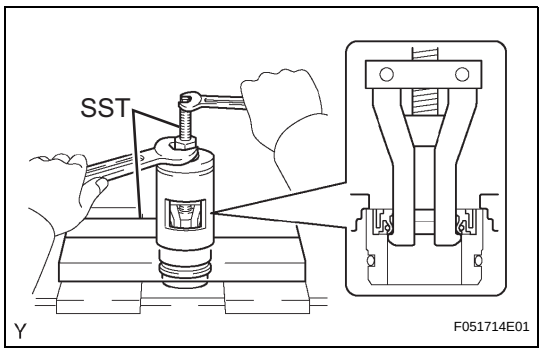

(c) Using SST, remove the rack bush oil seal.

SST 09527-21011, 09612-24014 (09613-22011)

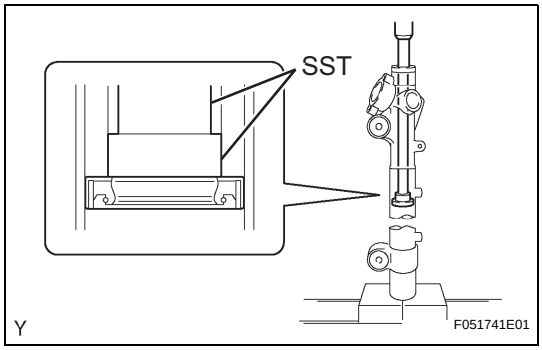

18. REMOVE POWER STEERING CYLINDER TUBE OIL SEAL

(a) Using SST and a press, remove the cylinder tube oil seal.

SST 09950-60010 (09951-00290), 09950-70010 (09951-07360)

PS

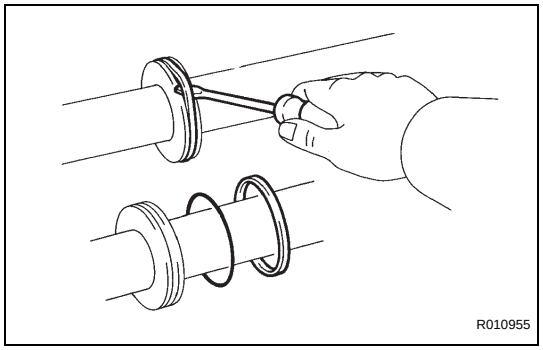

19. REMOVE RACK STEERING PISTON RING

(a) Using a screwdriver, remove the piston ring and O-ring.

NOTICE:

Be careful not to damage the groove for the piston ring.

INSPECTION

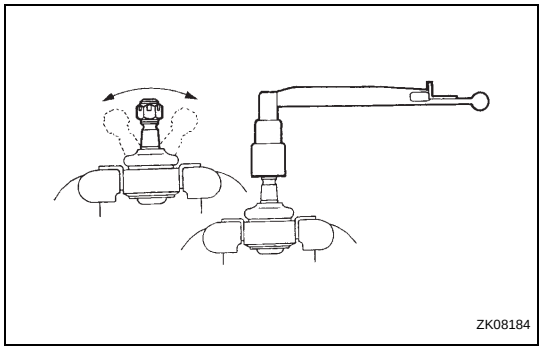

1. INSPECT TIE ROD END SUB-ASSEMBLY

(a) Flip the ball joint stud back and forth 5 times as shown in the illustration before installing the nut.

(b) Using a torque wrench, turn the nut continuously at a rate of 2 to 4 seconds per turn and check the torque reading on the 5th turn.

Torque: 0.83 to 3.43 N*m (8.5 to 35.0 kgf*cm, 7.35 to 30.36 in.*lbf)

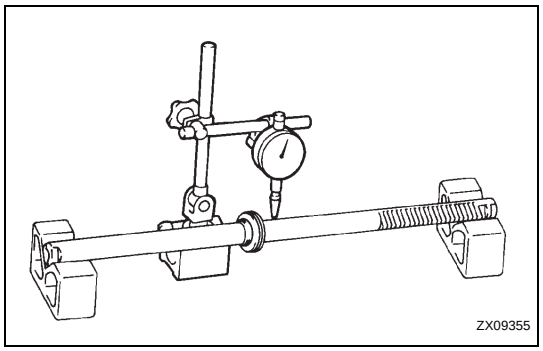

2. INSPECT POWER STEERING RACK

(a) Using a dial indicator, check the power steering rack for runout, teeth wear and damage.

Maximum runout:

0.3 mm (0.012 in.)

If necessary, replace the power steering link assembly.

(b) Check the back surface for wear and damage.

If necessary, replace the power steering link assembly.

REASSEMBLY

NOTICE:
When installing, coat the parts indicated by the arrows with power steering fluid (See page PS-3).

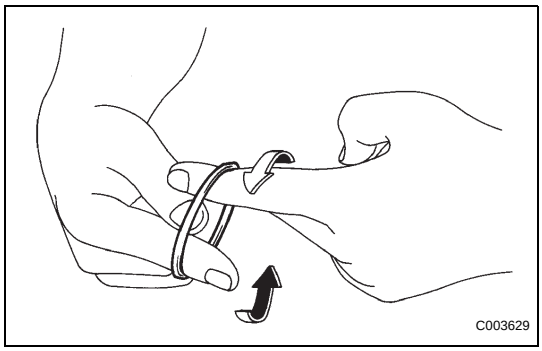

1. INSTALL RACK STEERING PISTON RING

(a) Coat a new O-ring with power steering fluid and install it onto the power steering rack.

(b) Expand a new piston ring with your fingers.

NOTICE:
Be careful not to over expand the rack steering piston ring.

(c) Coat a new piston ring with power steering fluid.

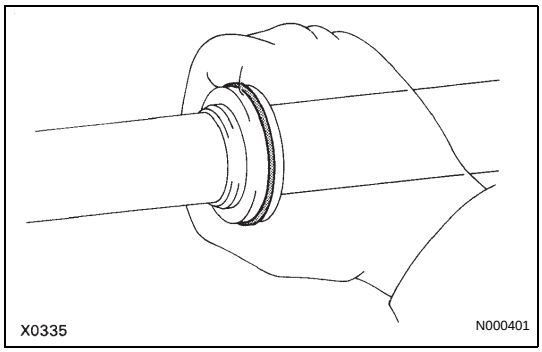

(d) Install the piston ring onto the power steering rack, and position it with your fingers.

2. INSTALL POWER STEERING CYLINDER TUBE OIL SEAL

(a) Coat a new cylinder tube oil seal lip with power steering fluid.

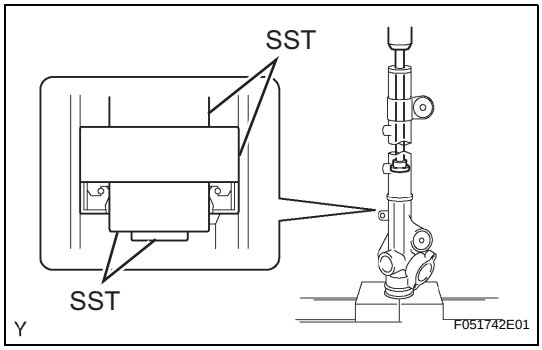

(b) Using SST and a press, install the cylinder tube oil seal.

SST 09950-60010 (09951-00250, 09951-00440, 09952-06010), 09950-70010 (09951-07360)

NOTICE:

- **Make sure that the cylinder tube oil seal is installed facing in the correct direction.**
- **Take care not to reverse the cylinder tube oil seal direction when installing.**

PS

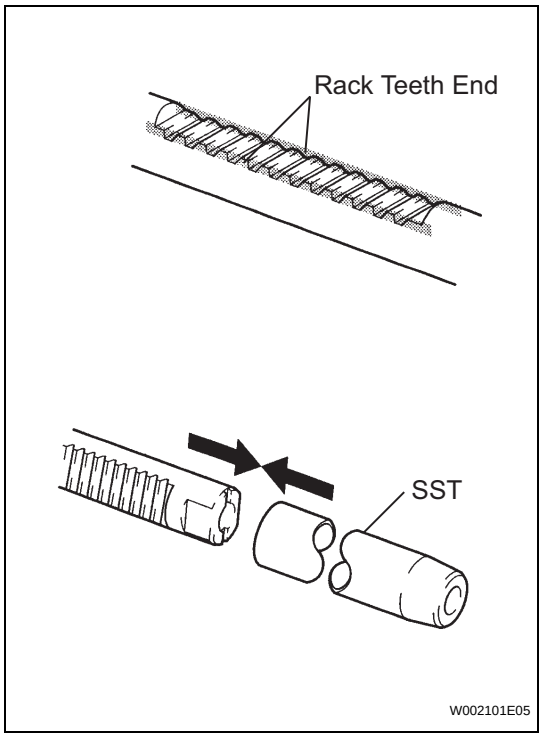

3. INSTALL POWER STEERING RACK

(a) Install SST onto the power steering rack.
SST 09631-33010
HINT:
If necessary, scrape the burrs off the power steering rack teeth end and burnish.
(b) Coat SST with power steering fluid.
(c) Install the power steering rack into the rack housing.
(d) Remove SST.

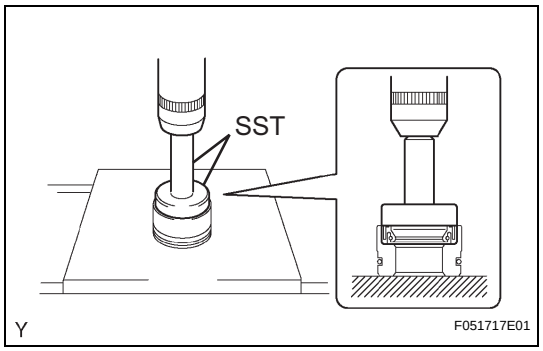

4. INSTALL POWER STEERING RACK BUSH

(a) Using SST and a press, install a new rack bush oil seal onto the rack bush.
SST 09950-60010 (09951-00400), 09950-70010 (09951-07100)
NOTICE:
Make sure that the rack bush oil seal is installed facing the correct direction.
(b) Coat a new O-ring with power steering fluid and install it onto the rack bush.

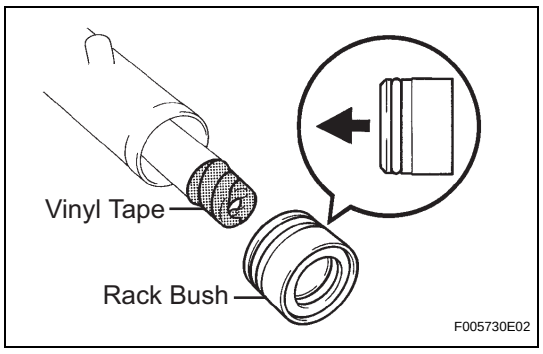

(c) To prevent the rack bush oil seal lip from being damaged, wind vinyl tape around the rack end and apply power steering fluid.
(d) Install the rack bush onto the power steering rack.

PS

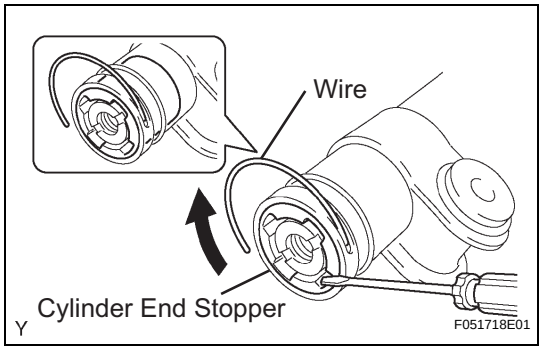

5. INSTALL CYLINDER END STOPPER

(a) Align the installation hole for the wire of the cylinder end stopper with the slot of the rack housing.
(b) Install a new wire into the cylinder end stopper.
(c) Using a screwdriver, turn the cylinder end stopper clockwise by 400 to 500°.

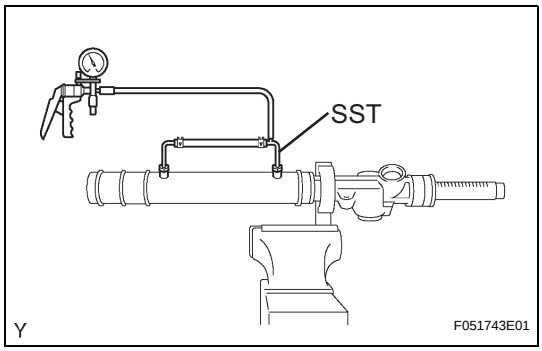

6. AIR TIGHTNESS TEST

(a) Install SST onto the rack housing.

(b) Apply a vacuum of 53 kPa (400 mmHg, 15.75 in.Hg) for about 30 seconds.

(c) Check that there is no change in the vacuum.
If there is any change in the vacuum, check whether the oil seals are installed correctly.

7. INSTALL POWER STEERING CONTROL VALVE UPPER OIL SEAL

(a) Coat the control valve upper bearing and a new control valve upper oil seal with power steering fluid.

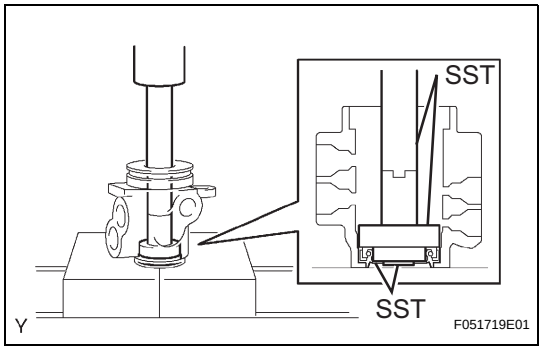

(b) Using SST and a press, install the control valve upper oil seal.
SST 09950-60010 (09951-00180, 09951-00320, 09952-06010), 09950-70010 (09951-07150)

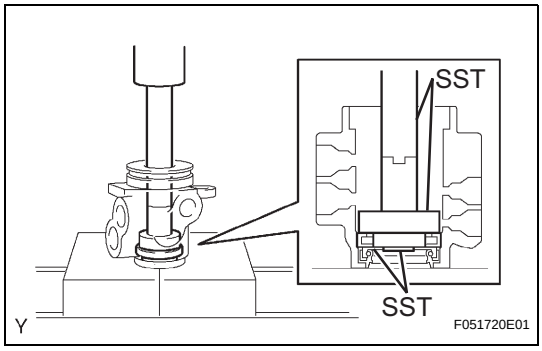

(c) Using SST and a press, install the control valve upper bearing.
SST 09950-60010 (09951-00180, 09951-00340, 09952-06010), 09950-70010 (09951-07150)

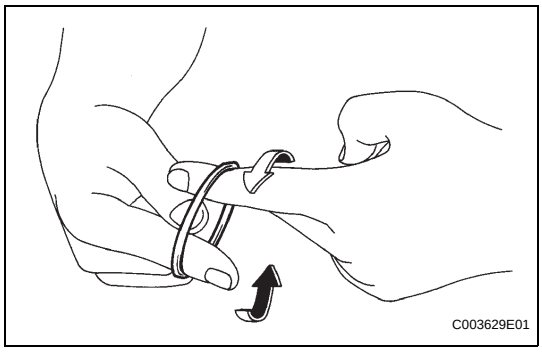

8. INSTALL POWER STEERING CONTROL VALVE ASSEMBLY

(a) Expand 4 new control valve rings with your fingers.
NOTICE:
Be careful not to over expand the control valve rings.

(b) Coat the 4 control valve rings with power steering fluid.

(c) Install the 4 control valve rings onto the control valve, and position them with your fingers.

PS

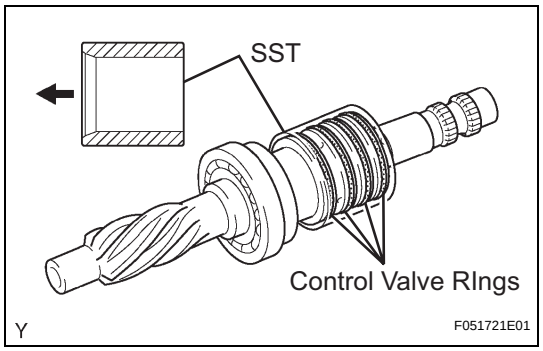

(d) Carefully slide the tapered end of SST over the control valve rings until they fit to the control valve.
SST 09631-20081
NOTICE:
Be careful not to damage the control valve rings.

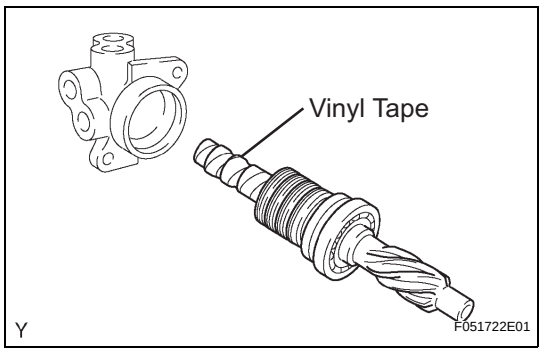

(e) To prevent the control valve upper oil seal lip from getting damaged, wind vinyl tape around the serrated portion of the control valve.
(f) Coat the control valve upper oil seal lip with power steering fluid.
(g) Install the control valve onto the control valve housing.
NOTICE:
Be careful not to damage the control valve ring and control valve upper oil seal lip.
(h) Apply grease to the needle roller bearing.
(i) Install a new O-ring onto the control valve housing.
(j) Wind vinyl tape around the serrated portion of the control valve.

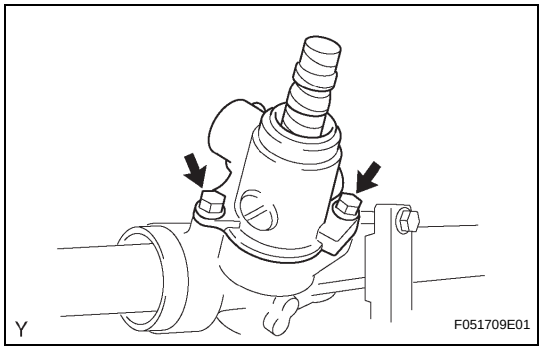

(k) Install the control valve w/ control valve housing onto the rack housing with the 2 bolts.
Torque: 18 N*m (184 kgf*cm, 13 ft.*lbf)

9. INSTALL STEERING GEAR RACK GUIDE
(a) Install the rack guide.
(b) Install the rack guide spring.
(c) Apply sealant to 2 or 3 threads of the rack guide spring cap.
Sealant:
Part No. 08833-00080, THREE BOND 1344, LOCTITE 242 or equivalent
(d) Provisionally install the rack guide spring cap.

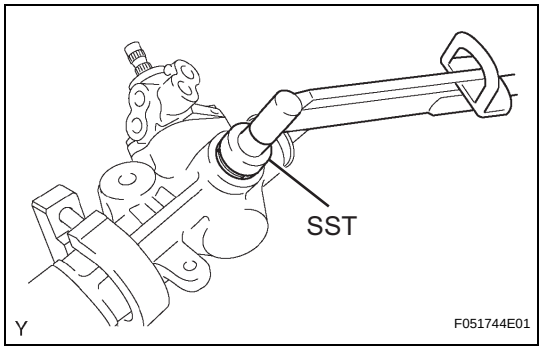

10. ADJUST TOTAL PRELOAD
(a) To prevent the steering rack teeth from damaging the oil seal lip, provisionally install the RH and LH steering rack end.
(b) Using SST, torque the rack guide spring cap.
SST 09631-10021
Torque: 25 N*m (254 kgf*cm, 18 ft.*lbf)

PS

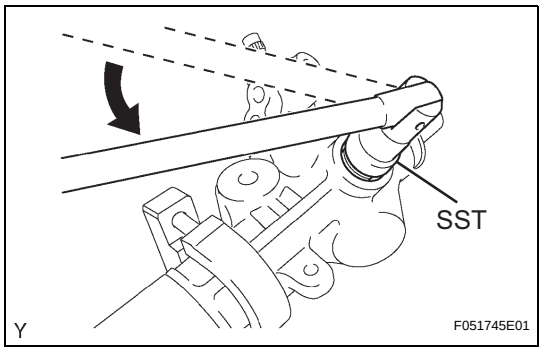

(c) Using SST, loosen the rack guide spring cap.
SST 09631-10021

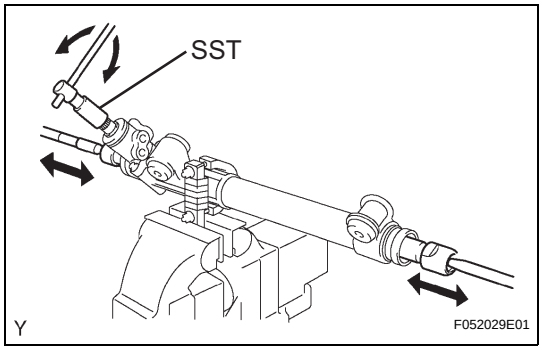

(d) Using SST, turn the control valve to the right and left once or twice.
SST 09616-00011

(e) Using SST, loosen the rack guide spring cap until the rack guide spring ceases to function.
SST 09631-10021

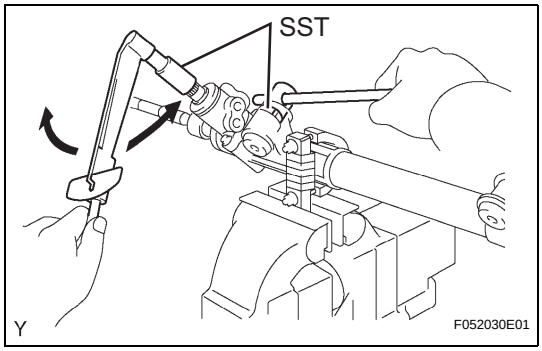

(f) Using SST and a torque wrench, tighten the rack guide spring cap until the preload is within the specification.
SST 09631-10021, 09616-00011
Preload (turning):
0.8 to 1.1 N*m (8.2 to 11.2 kgf*cm, 7.1 to 9.7 in.*lbf)

(g) Apply sealant to 2 or 3 threads of the rack guide spring cap nut.
Sealant:
Part No. 08833-00080, THREE BOND 1344, LOCTITE 242 or equivalent

(h) Provisionally install the rack guide spring cap nut.

PS

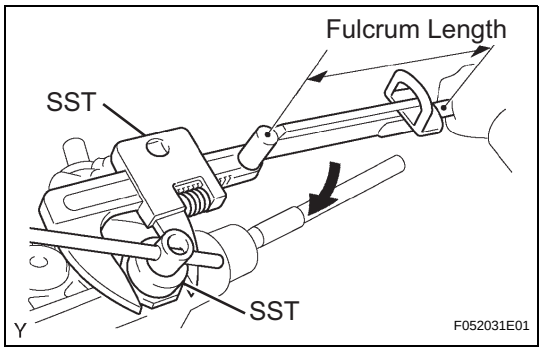

(i) Using SST, hold the rack guide spring cap and using another SST, torque the rack guide spring cap nut.
SST 09631-10021, 09922-10010
Torque: for use without SST
59 N*m (601 kgf*cm, 44 ft.*lbf)
for use with SST
43 N*m (440 kgf*cm, 32 ft.*lbf)
NOTICE:
Turn SST 09922-10010 in the direction shown in the illustration.
HINT:
Use a torque wrench with a fulcrum length of 345 mm (13.58 in.).

(j) Recheck the total preload.
Preload (turning):
0.8 to 1.1 N*m (8.2 to 11.2 kgf*cm, 7.1 to 9.7 in.*lbf)

(k) Remove the RH and LH steering rack ends

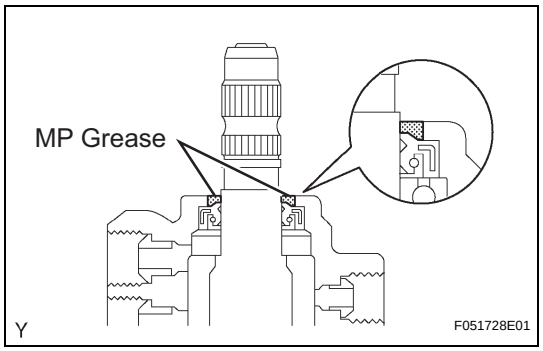

(l) Apply MP grease to the control valve as shown in the illustration.

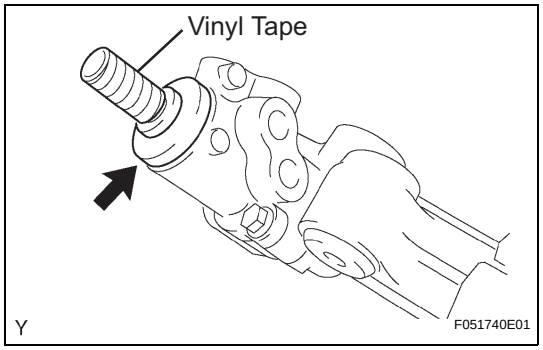

(m) Wind vinyl tape around the serrated portion of the control valve.
(n) Install the dust cover onto the control valve housing.

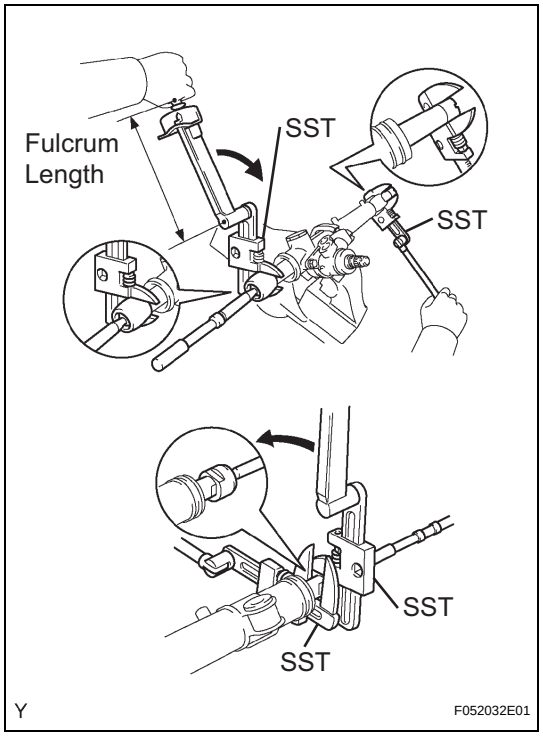

11. INSTALL STEERING RACK END SUB-ASSEMBLY

(a) Install 2 new claw washers, and provisionally install the 2 steering rack ends.
HINT:
Align the claws of the claw washers with the power steering rack grooves.

(b) Using 2 SSTs, install the 2 steering rack ends.
SST 09922-10010
Torque: for use without SST
84 N*m (851 kgf*cm, 62 ft.*lbf)
for use with SST
61 N*m (619 kgf*cm, 45 ft.*lbf)
NOTICE:
Turn SST 09922-10010 in the direction shown in the illustration.
HINT:
- Using SST, hold the power steering rack and install the rack end sub-assembly.
- Use a torque wrench with a fulcrum length of 345 mm (13.58 in.).

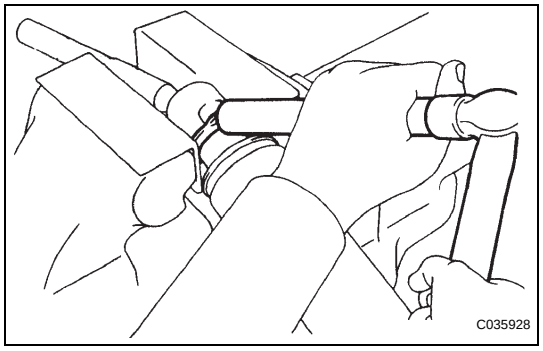

(c) Using a brass bar and hammer, stake the 2 claw washers.
NOTICE:
Avoid any impact to the power steering rack.

PS

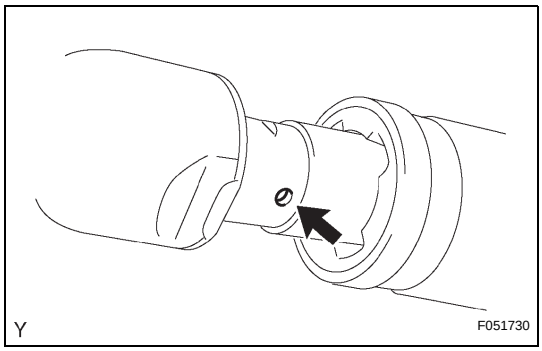

12. INSPECT STEERING RACK END SUB-ASSEMBLY

(a) Ensure that the steering rack end hole is not clogged with grease.

HINT:

If the hole is clogged, the pressure inside the boot will change after it has been assembled, when the steering wheel is turned.

13. INSTALL STEERING RACK BOOT NO. 1

14. INSTALL STEERING RACK BOOT NO. 2

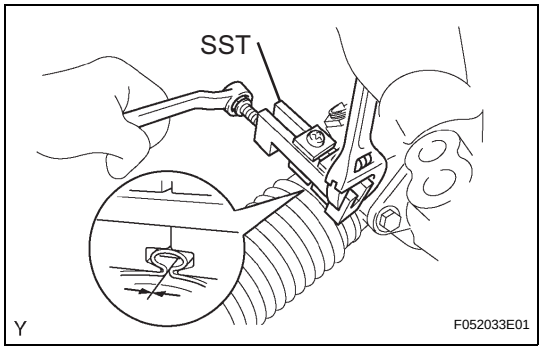

15. INSTALL STEERING RACK BOOT NO. 1 CLAMP

(a) Using SST, tighten the rack boot No. 1 clamp as shown in the illustration.

SST 09521-24010

Clearance:

3.0 mm (0.118 in.) or less

NOTICE:

Be careful not to damage the rack boot No. 1.

16. INSTALL STEERING RACK BOOT NO. 2 CLAMP

HINT:

The installation procedure for the No. 2 side is the same as that for the No. 1 side.

SST 09521-24010

17. INSTALL STEERING RACK BOOT CLIP

(a) Using pliers, install the 2 rack boot clips.

18. INSTALL TIE ROD END SUB-ASSEMBLY LH

(a) Screw the lock nut and tie rod end onto the rack end until the matchmarks are aligned.

(b) After adjusting toe-in, torque the nut.

Torque: 55.5 N*m (566 kgf*cm, 41 ft.*lbf)

19. INSTALL TIE ROD END SUB-ASSEMBLY RH

HINT:

The installation procedure for the RH side is the same as that for the LH side.

PS

20. INSTALL STEERING TURN PRESSURE TUBE

(a) Coat 4 new O-rings with power steering fluid and install them onto the pressure tubes.

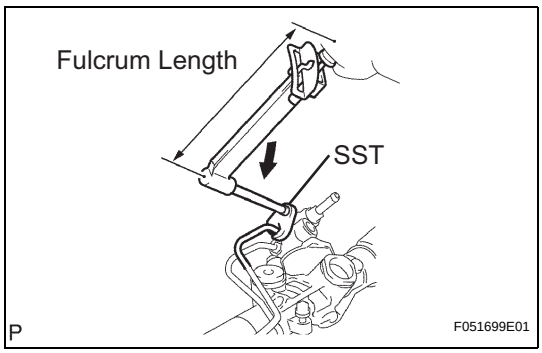

(b) Using SST, install the 2 pressure tubes.

SST 09023-38401

Torque: for use without SST

15 N*m (153 kgf*cm, 11 ft.*lbf)

for use with SST

14 N*m (141 kgf*cm, 10 ft.*lbf)

HINT:

- Use a torque wrench with a fulcrum length of 345 mm (13.58 in.).
- This torque value is effective when SST is parallel to a torque wrench.

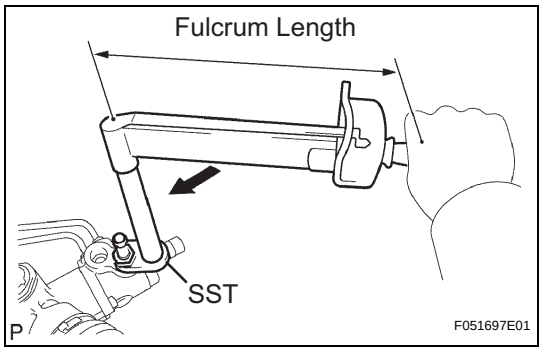

21. REMOVE STEERING GEAR OUTLET RETURN TUBE

(a) Using SST, install the return tube.

SST 09023-12701

Torque: for use without SST

24 N*m (245 kgf*cm, 18 ft.*lbf)

for use with SST

22 N*m (222 kgf*cm, 16 ft.*lbf)

HINT:

- Use a torque wrench with a fulcrum length of 300 mm (11.81 in.).
- This torque value is effective when SST is parallel to a torque wrench.

INSTALLATION

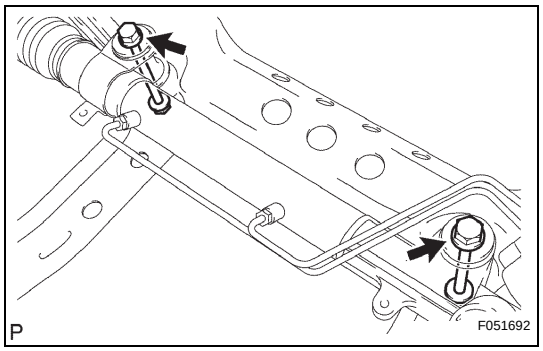

1. INSTALL POWER STEERING LINK

(a) Install the power steering link with the 2 bolts and 2 nuts.

Torque: 92 N*m (938 kgf*cm, 68 ft.*lbf)

NOTICE:

Never turn the nut since it has a detent. Be sure to turn only the bolt.

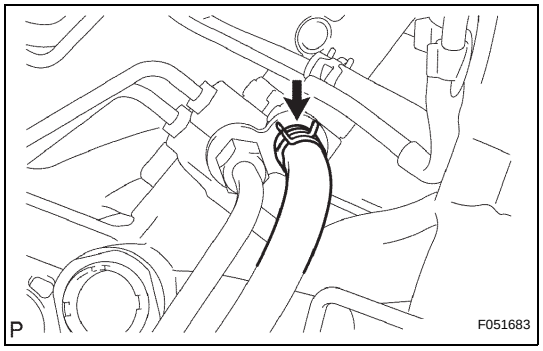

2. INSTALL PRESSURE FEED TUBE ASSEMBLY

(a) Connect the return hose with the clip.

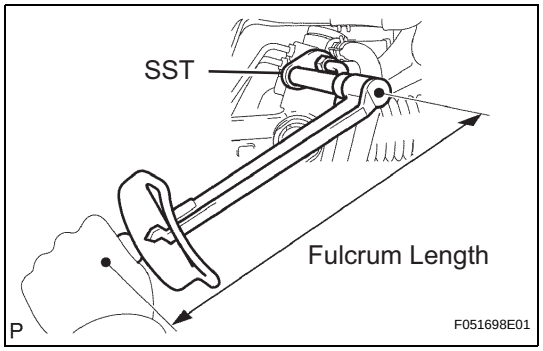

(b) Using SST, tighten the flare nut and connect the pressure feed tube.

SST 09023-12701

Torque: for use without SST

24 N*m (245 kgf*cm, 18 ft.*lbf)

for use with SST

22 N*m (222 kgf*cm, 16 ft.*lbf)

HINT:

- Use a torque wrench with a fulcrum length of 300 mm (11.81 in.).
- This torque value is effective when SST is parallel to a torque wrench.

PS

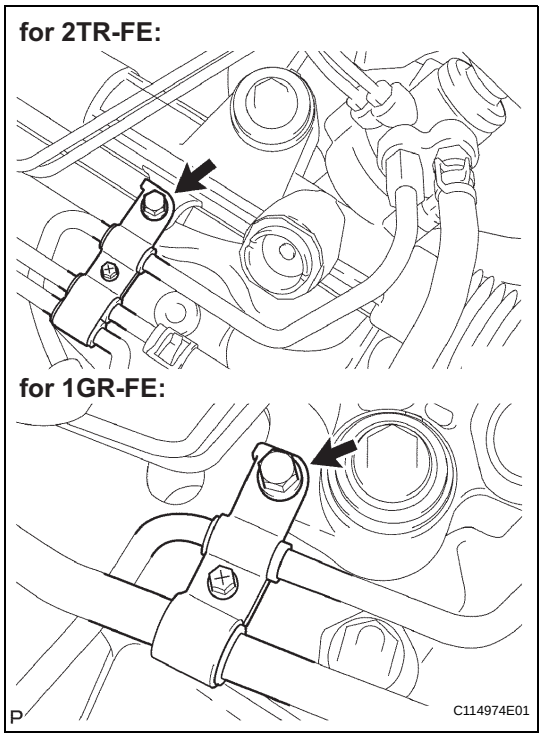

(c) Install the tube support bracket with the bolt.
Torque: 28 N*m (286 kgf*cm, 21 ft.*lbf)

3. INSTALL TIE ROD END SUB-ASSEMBLY LH

(a) Install the tie rod end onto the steering knuckle arm.
(b) Install the nut.
Torque: 49 N*m (500 kgf*cm, 36 ft.*lbf)
(c) Install a new cotter pin.

4. INSTALL TIE ROD END SUB-ASSEMBLY RH

HINT:
The installation procedure for the RH side is the same as that for the LH side.

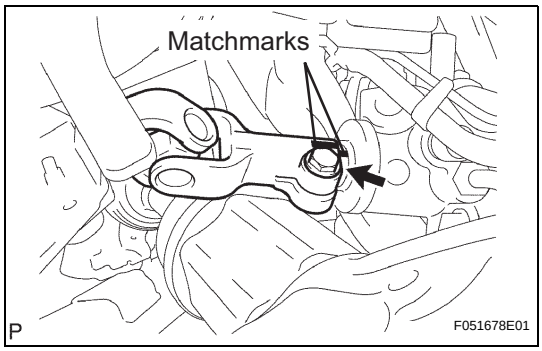

5. INSTALL STEERING INTERMEDIATE SHAFT NO. 2

(a) Align the matchmarks on the steering intermediate shaft No. 2 and power steering link.
(b) Install the steering intermediate shaft No. 2 onto the power steering link with bolt C.
Torque: 35 N*m (357 kgf*cm, 26 ft.*lbf)

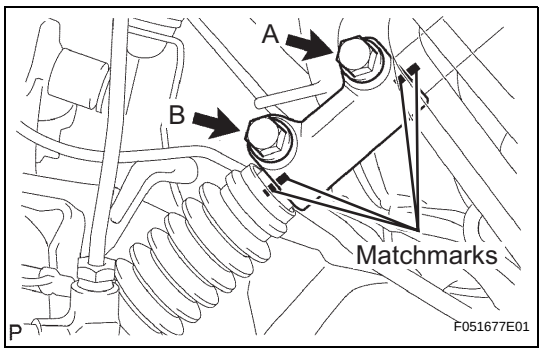

(c) Align the matchmarks on the steering intermediate shaft and steering sliding yoke.
(d) Install the steering sliding yoke onto the steering intermediate shaft and slide it upward.
(e) Align the matchmarks on the steering sliding yoke and steering intermediate shaft No. 2.
(f) Install the steering sliding yoke with bolts A and B.
Torque: 35 N*m (357 kgf*cm, 26 ft.*lbf)

6. INSTALL FRONT WHEELS
Torque: 113 N*m (1,152 kgf*cm, 83 ft.*lbf)

7. PLACE FRONT WHEELS FACING STRAIGHT AHEAD

8. INSPECT STEERING WHEEL CENTER POINT

9. CONNECT CABLE TO NEGATIVE BATTERY TERMINAL
Torque: 3.9 N*m (40 kgf*cm, 35 in.*lbf)
(See page IN-5)

10. ADD POWER STEERING FLUID

11. BLEED POWER STEERING FLUID (See page PS-2)

12. **CHECK FOR POWER STEERING FLUID LEAKAGE**
13. **INSPECT AND ADJUST FRONT WHEEL ALIGNMENT**
    (See page SP-2)

REMOVAL

1. **DISCONNECT CABLE FROM NEGATIVE BATTERY TERMINAL**
2. **PLACE FRONT WHEELS FACING STRAIGHT AHEAD**
3. **REMOVE FRONT WHEELS**
4. **REMOVE ENGINE UNDER COVER SUB-ASSEMBLY NO. 1**
5. **REMOVE EXHAUST PIPE ASSEMBLY FRONT (for 2TR-FE) (See page EX-2)**
6. **REMOVE EXHAUST FRONT PIPE ASSEMBLY NO. 2 (for 1GR-FE) (See page EX-3)**
7. **REMOVE EXHAUST PIPE ASSEMBLY FRONT (for 1GR-FE) (See page EX-3)**
8. **REMOVE PROPELLER SHAFT ASSEMBLY FRONT (for 4WD) (See page PR-16)**
9. **REMOVE PROPELLER SHAFT ASSEMBLY (for Regular Cab Pre-Runner) (See page PR-3)**
10. **REMOVE PROPELLER WITH CENTER BEARING SHAFT ASSEMBLY (for Except Regular Cab Pre-Runner) (See page PR-8)**
11. **REMOVE PROPELLER SHAFT ASSEMBLY (for Regular Cab 4WD) (See page PR-22)**
12. **REMOVE PROPELLER WITH CENTER BEARING SHAFT ASSEMBLY (for Except Regular Cab 4WD) (See page PR-27)**
13. **REMOVE FRAME CROSSMEMBER SUB-ASSEMBLY NO. 3 (See page MT-10)**
14. **SEPARATE FRONT STABILIZER LINK ASSEMBLY LH (See page SP-21)**
15. **SEPARATE FRONT STABILIZER LINK ASSEMBLY RH**
    HINT:
    The removal procedure for the RH side is the same as that for the LH side.
16. **REMOVE FRONT STABILIZER BRACKET NO. 1 LH (See page SP-50)**
17. **REMOVE FRONT STABILIZER BRACKET NO. 1 RH**
    HINT:
    The removal procedure for the RH side is the same as that for the LH side.
18. **REMOVE FRONT STABILIZER BAR**

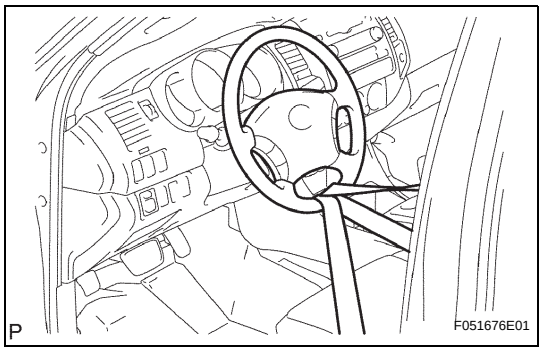

19. REMOVE STEERING INTERMEDIATE SHAFT NO. 2

(a) Fix the steering wheel with the seat belt in order to prevent it from rotating.
HINT:
The operation is effective for preventing any damage to the spiral cable.

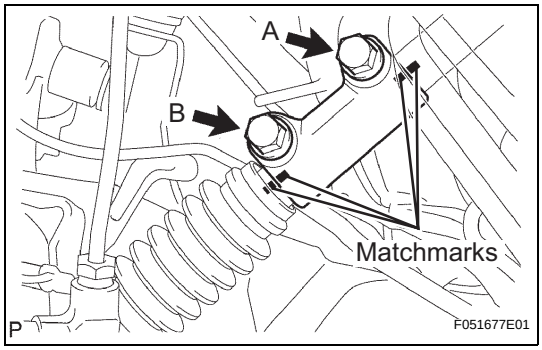

(b) Place matchmarks on the steering sliding yoke, steering intermediate shaft No. 2 and steering intermediate shaft.
(c) Remove bolts A and B from the steering sliding yoke.
(d) Slide the steering sliding yoke up and separate it from the steering intermediate shaft No. 2.
(e) Pull down the steering sliding yoke from the steering intermediate shaft to remove it.

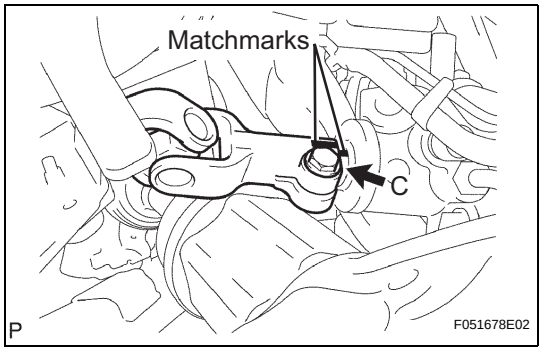

(f) Place matchmarks on the steering intermediate shaft No. 2 and power steering link.
(g) Remove bolt C from the steering intermediate shaft No. 2.
(h) Slide the steering intermediate shaft No. 2 up and remove it from the power steering link.

20. SEPARATE TIE ROD END SUB-ASSEMBLY LH

(a) Remove the cotter pin and nut.

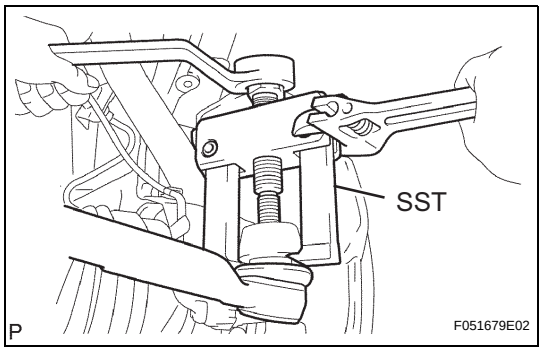

(b) Using SST, separate the tie rod end from the steering knuckle arm.
SST 09628-62011

21. SEPARATE TIE ROD END SUB-ASSEMBLY RH

HINT:
The removal procedure for the RH side is the same as that for the LH side.

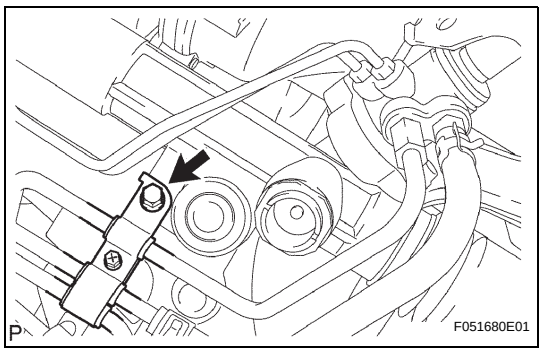

22. SEPARATE PRESSURE FEED TUBE ASSEMBLY

(a) for 2TR-FE:
(1) Remove the bolt and separate the tube support bracket.

PS

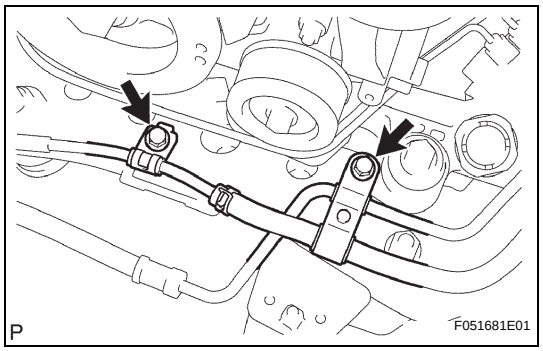

(b) for 1GR-FE:
(1) Remove the 2 bolts and separate the tube support brackets.

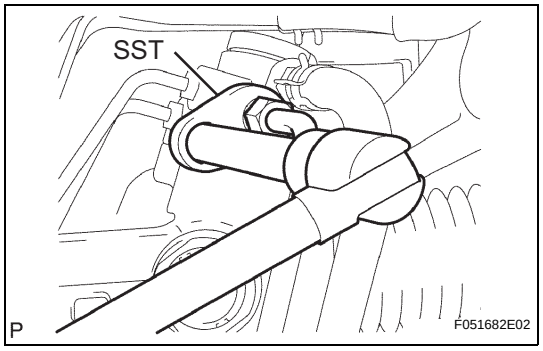

(c) Using SST, loosen the flare nut and separate the pressure feed tube.
SST 09023-12701

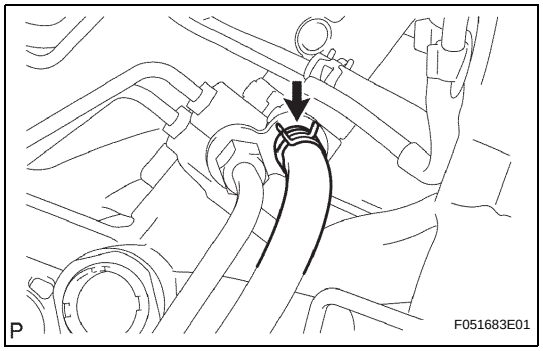

(d) Disengage the clip and disconnect the return hose.

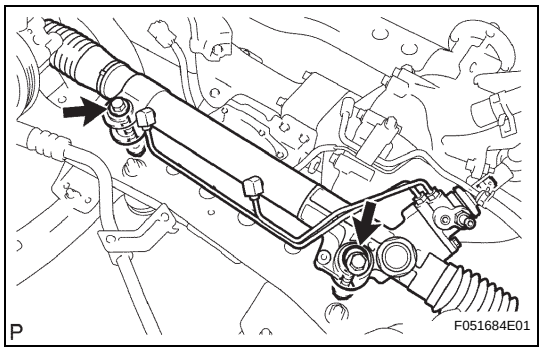

23. REMOVE POWER STEERING LINK
(a) Remove the 2 bolts and 2 nuts.
NOTICE:
The nut has a detent, so never turn the nut. Be sure to turn only the bolt.
(b) Tilt the transmission and remove the power steering link.

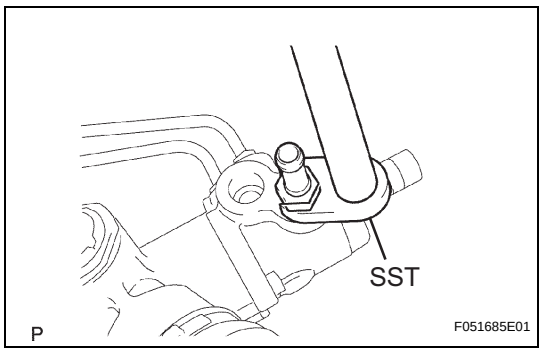

DISASSEMBLY

1. REMOVE STEERING GEAR OUTLET RETURN TUBE
(a) Using SST, remove the return tube.
SST 09023-12701

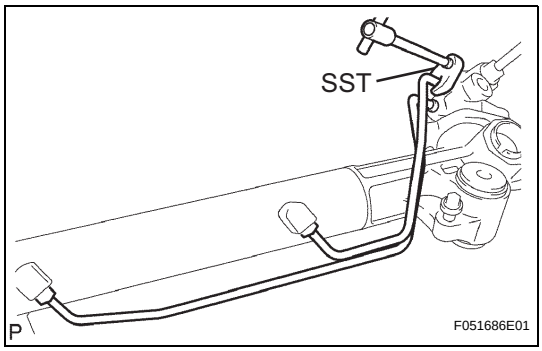

2. REMOVE STEERING TURN PRESSURE TUBE

(a) Using SST, remove the 2 pressure tubes.
SST 09023-38401

(b) Remove the 4 O-rings from the pressure tubes.

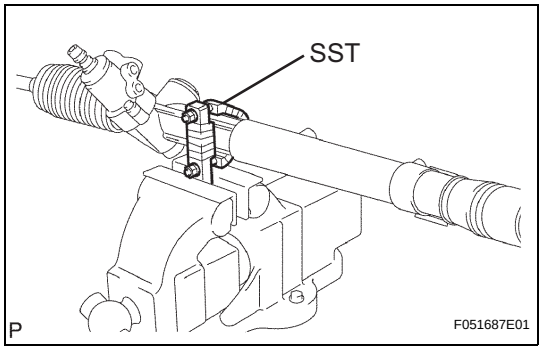

3. FIX POWER STEERING LINK

(a) Using SST, fix the power steering link between aluminium plates in a vise, as shown in the illustration.
SST 09612-00012
NOTICE:
When using a vise, do not over tighten it.

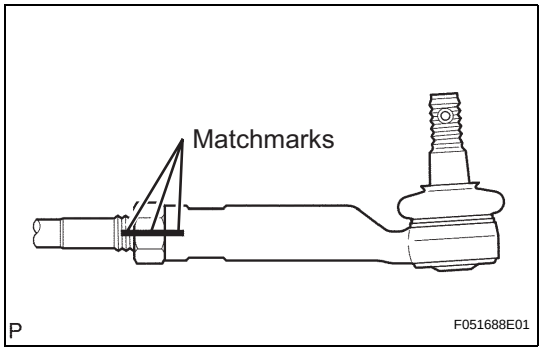

4. REMOVE TIE ROD END SUB-ASSEMBLY LH

(a) Place matchmarks on the tie rod end, lock nut and rack end.

(b) Loosen the lock nut and remove the tie rod end and lock nut.

5. REMOVE TIE ROD END SUB-ASSEMBLY RH

HINT:
The removal procedure for the RH side is the same as that for the LH side.

6. REMOVE STEERING RACK BOOT CLIP

(a) Remove the 2 rack boot clips.

7. REMOVE STEERING RACK BOOT NO. 1 CLAMP

(a) Using pliers, remove the rack boot No. 1 clamp.
NOTICE:
Be careful not to damage the steering rack boot No. 1.

8. REMOVE STEERING RACK BOOT NO. 2 CLAMP

HINT:
The removal procedure for the No. 2 side is the same as that for the No. 1 side.

9. REMOVE STEERING RACK BOOT NO. 1

10. REMOVE STEERING RACK BOOT NO. 2

PS

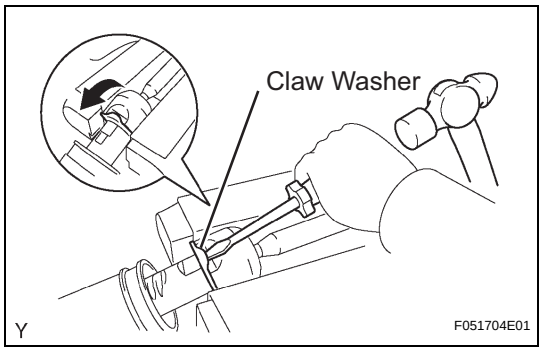

11. REMOVE STEERING RACK END SUB-ASSEMBLY

(a) Using a screwdriver and hammer, unstake the claw washer.
NOTICE:
Avoid any impact to the power steering rack.

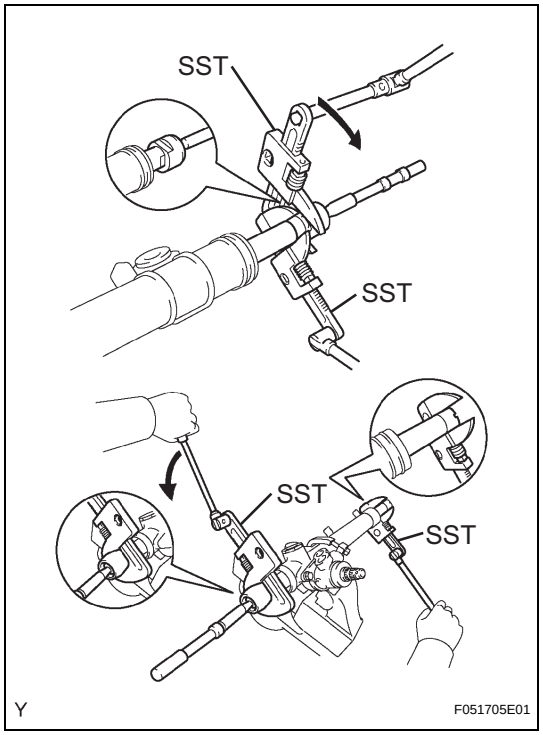

(b) Using 2 SSTs, remove the 2 steering rack ends and 2 claw washers.
SST 09922-10010
NOTICE:
- **Turn SST 09922-10010 in the direction shown in the illustration.**
- **Securely hold the steering rack end with SST.**

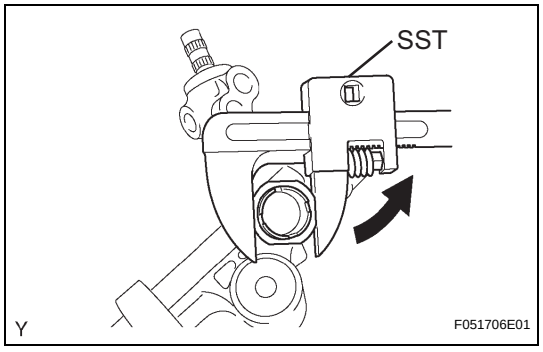

12. REMOVE STEERING GEAR RACK GUIDE

(a) Using SST, remove the rack guide spring cap nut.
SST 09922-10010
NOTICE:
Turn SST 09922-10010 in the direction shown in the illustration.

PS

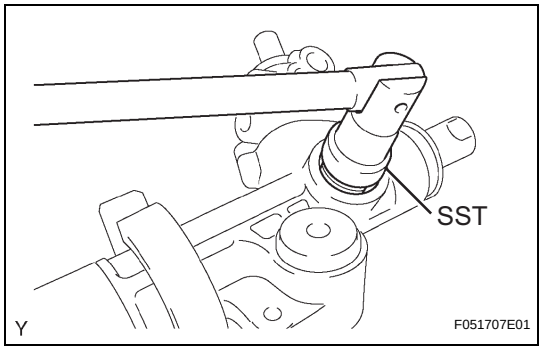

(b) Using SST, remove the rack guide spring cap.
SST 09631-10021

(c) Remove the rack guide spring and rack guide.

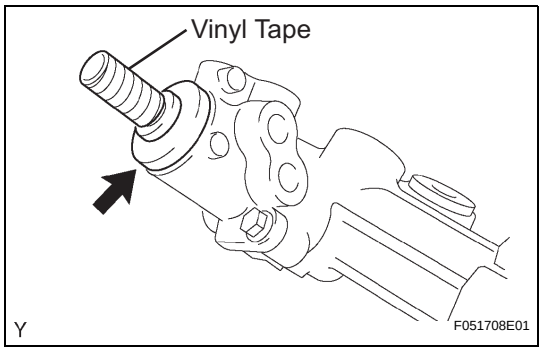

13. REMOVE POWER STEERING CONTROL VALVE ASSEMBLY

(a) Wind vinyl tape around the serrated portion of the control valve.

(b) Remove the dust cover from the control valve housing.

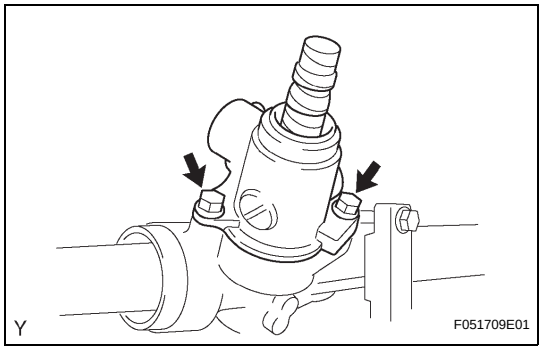

(c) Remove the 2 bolts and the control valve w/ control valve housing.

(d) Remove the O-ring from the control valve housing.

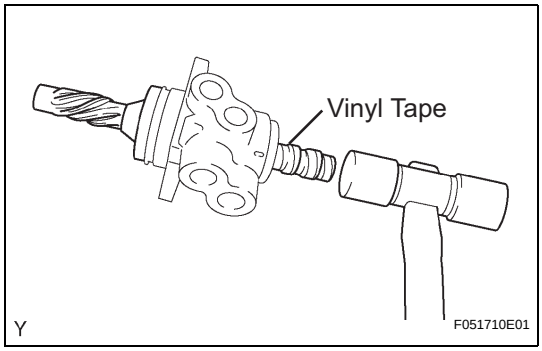

(e) To prevent the oil seal lip from getting damaged, wind vinyl tape around the serrated portion of the control valve.

(f) Using a plastic hammer, remove the control valve from the control valve housing.

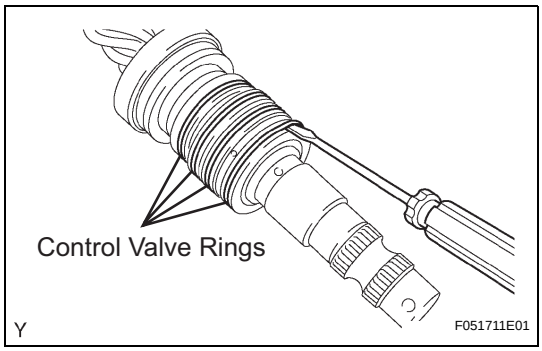

(g) Using a screwdriver, remove the 4 control valve rings.

NOTICE:

Be careful not to damage the grooves for the control valve rings.

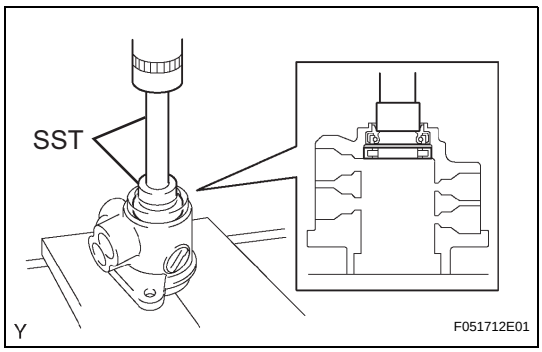

14. REMOVE POWER STEERING CONTROL VALVE UPPER OIL SEAL

(a) Using SST and a press, remove the control valve upper bearing and control valve upper oil seal from the control valve housing.

SST 09950-60010 (09951-00250), 09950-70010 (09951-07150)

PS

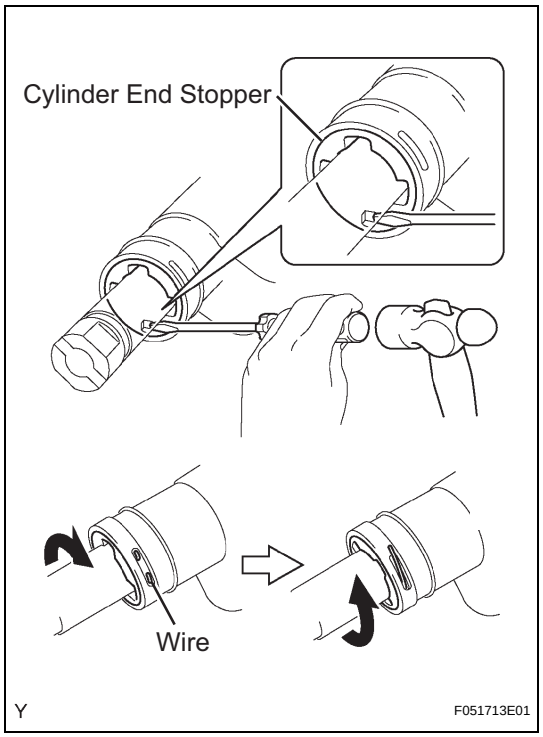

15. REMOVE CYLINDER END STOPPER

(a) Using a screwdriver and hammer, turn the cylinder end stopper clockwise until the wire end can be seen through the service hole.

(b) Using a screwdriver and hammer, turn the cylinder end stopper counterclockwise, and remove the wire and cylinder end stopper.

16. REMOVE POWER STEERING RACK

17. REMOVE POWER STEERING RACK BUSH

(a) Remove the rack bush from the power steering rack.

(b) Using a screwdriver, remove the O-ring from the rack bush.

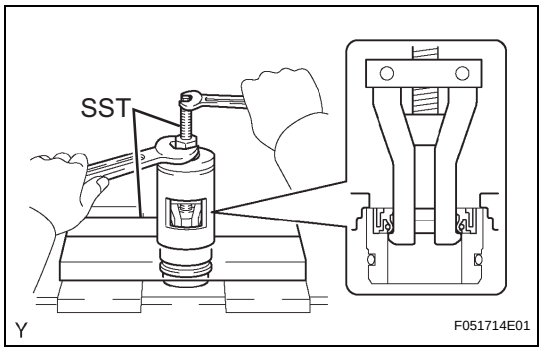

(c) Using SST, remove the rack bush oil seal.
SST 09527-21011, 09612-24014 (09613-22011)

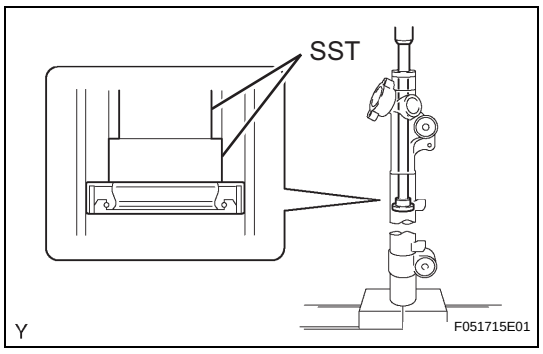

18. REMOVE POWER STEERING CYLINDER TUBE OIL SEAL

(a) Using SST and a press, remove the cylinder tube oil seal.
SST 09950-60010 (09951-00320), 09950-70010 (09951-07360)

PS

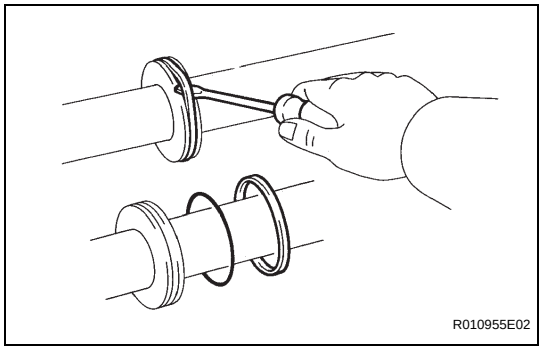

19. REMOVE RACK STEERING PISTON RING

(a) Using a screwdriver, remove the piston ring and O-ring.
NOTICE:
Be careful not to damage the groove for the piston ring.

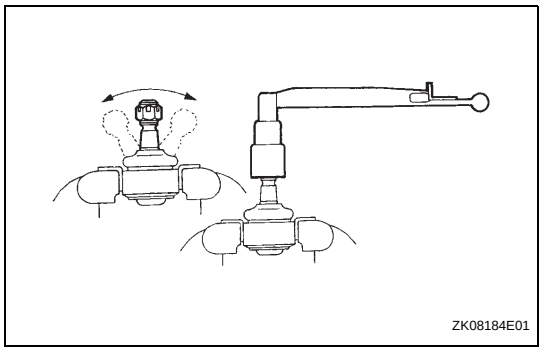

INSPECTION

1. INSPECT TIE ROD END SUB-ASSEMBLY

(a) Flip the ball joint stud back and forth 5 times as shown in the illustration before installing the nut.

(b) Using a torque wrench, turn the nut continuously at a rate of 2 to 4 seconds per turn and check the torque reading on the 5th turn.

Torque: 0.49 to 3.43 N*m (5.0 to 35.0 kgf*cm, 4.34 to 30.36 in.*lbf)

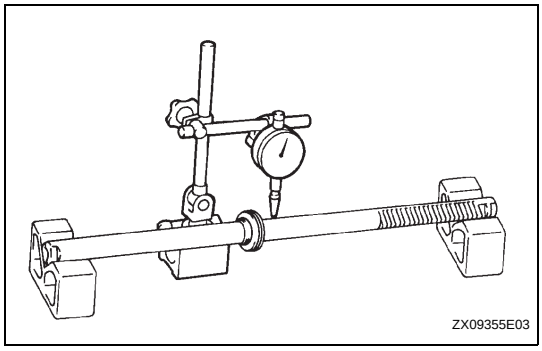

2. INSPECT POWER STEERING RACK

(a) Using a dial indicator, check the power steering rack for runout, teeth wear and damage.

Maximum runout:
0.3 mm (0.012 in.)

If necessary, replace the power steering link assembly.

(b) Check the back surface for wear and damage.
If necessary, replace the power steering link assembly.

REASSEMBLY

NOTICE:
When installing, coat the parts indicated by the arrows with power steering fluid (See page PS-3).

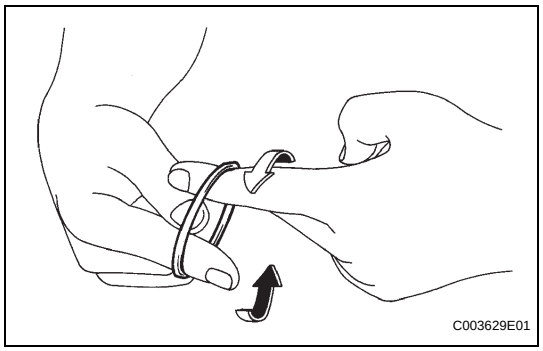

1. INSTALL RACK STEERING PISTON RING

(a) Coat a new O-ring with power steering fluid and install it onto the power steering rack.

(b) Expand a new piston ring with your fingers.
NOTICE:
Be careful not to over expand the rack steering piston ring.

(c) Coat a new piston ring with power steering fluid.

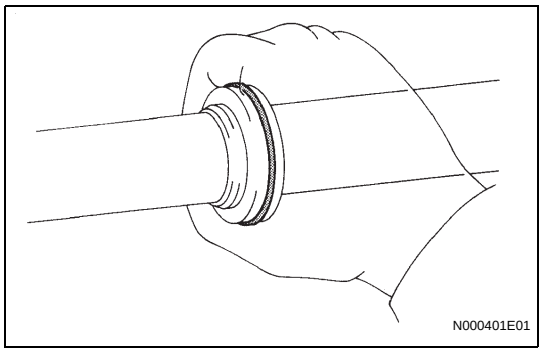

(d) Install the piston ring onto the power steering rack, and position it with your fingers.

2. INSTALL POWER STEERING CYLINDER TUBE OIL SEAL

(a) Coat a new cylinder tube oil seal lip with power steering fluid.

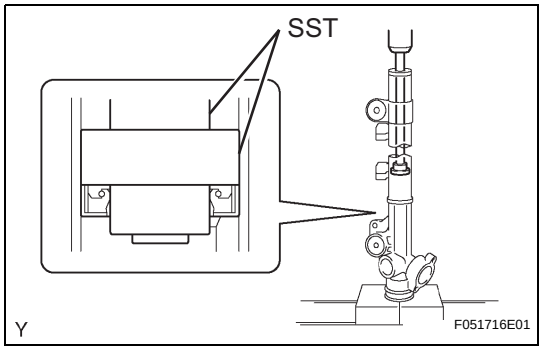

(b) Using SST and a press, install the cylinder tube oil seal.
SST 09950-60010 (09951-00280, 09951-00480, 09952-06010), 09950-70010 (09951-07360)
NOTICE:
- **Make sure that the cylinder tube oil seal is installed facing in the correct direction.**
- **Take care not to reverse the cylinder tube oil seal direction when installing.**

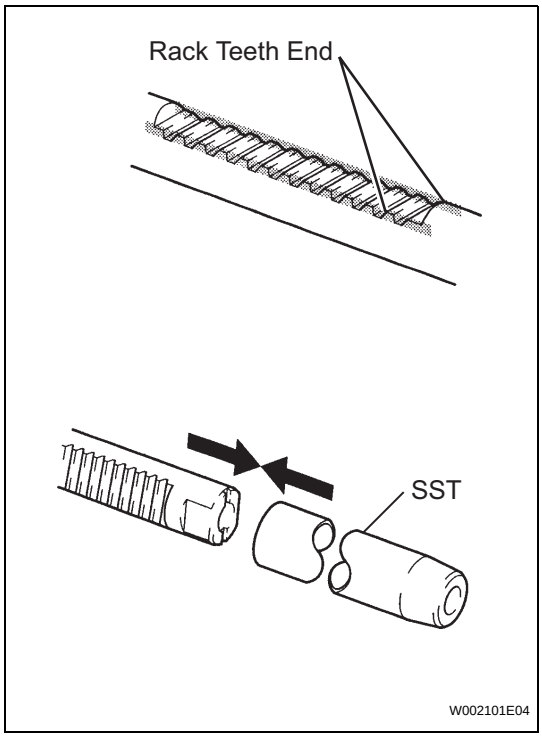

3. INSTALL POWER STEERING RACK

(a) Install SST onto the power steering rack.
SST 09631-20111
HINT:
If necessary, scrape the burrs off the power steering rack teeth end and burnish.
(b) Coat SST with power steering fluid.
(c) Install the power steering rack into the rack housing.
(d) Remove SST.

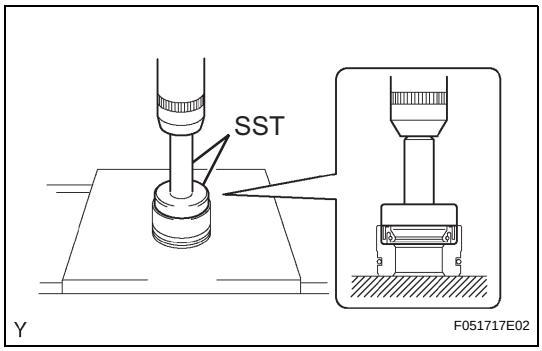

4. INSTALL POWER STEERING RACK BUSH

(a) Using SST and a press, install a new rack bush oil seal onto the rack bush.
SST 09950-60010 (09951-00440), 09950-70010 (09951-07100)
NOTICE:
Make sure that the rack bush oil seal is installed facing the correct direction.
(b) Coat a new O-ring with power steering fluid and install it onto the rack bush.

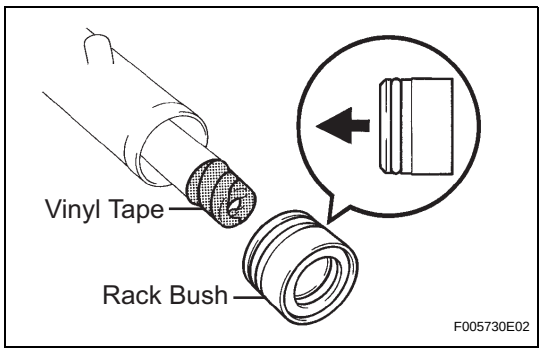

(c) To prevent the rack bush oil seal lip from being damaged, wind vinyl tape around the rack end and apply power steering fluid.
(d) Install the rack bush onto the power steering rack.

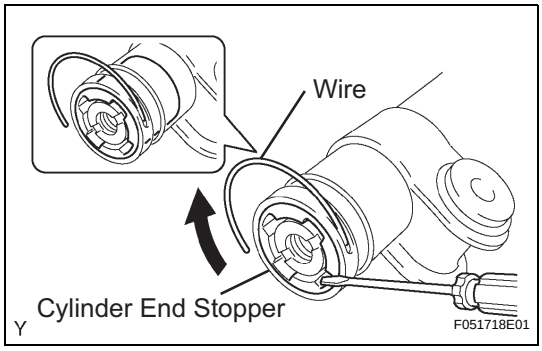

5. INSTALL CYLINDER END STOPPER

(a) Align the installation hole for the wire of the cylinder end stopper with the slot of the rack housing.
(b) Install a new wire into the cylinder end stopper.
(c) Using a screwdriver, turn the cylinder end stopper clockwise by 400 to 500°.

PS

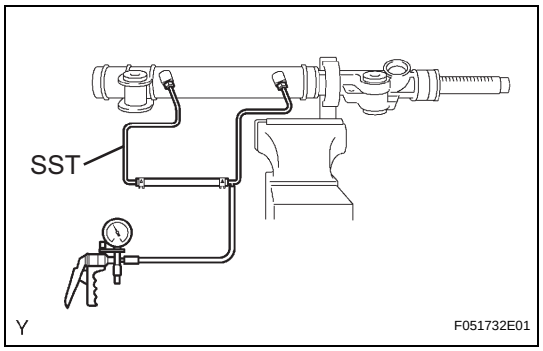

6. AIR TIGHT TEST

(a) Install SST onto the rack housing.

(b) Apply a vacuum of 53 kPa (400 mmHg, 15.75 in.Hg) for about 30 seconds.

(c) Check that there is no change in the vacuum.
If there is any change in the vacuum, check whether the oil seals are installed correctly.

7. INSTALL POWER STEERING CONTROL VALVE UPPER OIL SEAL

(a) Coat the control valve upper bearing and a new control valve upper oil seal with power steering fluid.

(b) Using SST and a press, install the control valve upper oil seal.
SST 09950-60010 (09951-00180, 09951-00320, 09952-06010), 09950-70010 (09951-07150)

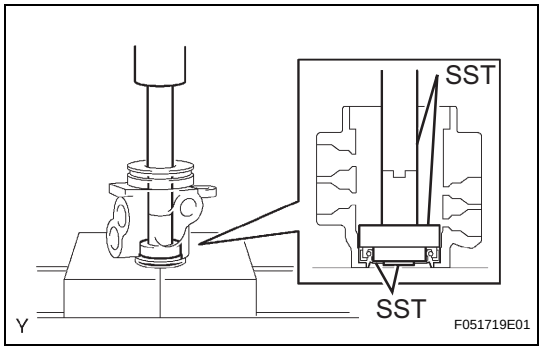

(c) Using SST and a press, install the control valve upper bearing.
SST 09950-60010 (09951-00180, 09951-00340, 09952-06010), 09950-70010 (09951-07150)

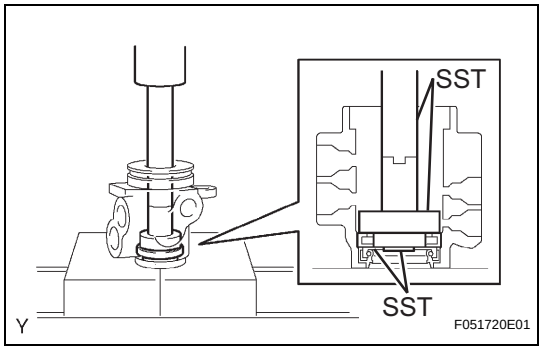

8. INSTALL POWER STEERING CONTROL VALVE ASSEMBLY

(a) Expand 4 new control valve rings with your fingers.
NOTICE:
Be careful not to over expand the control valve rings.

(b) Coat the 4 control valve rings with power steering fluid.

(c) Install the 4 control valve rings onto the control valve, and position them with your fingers.

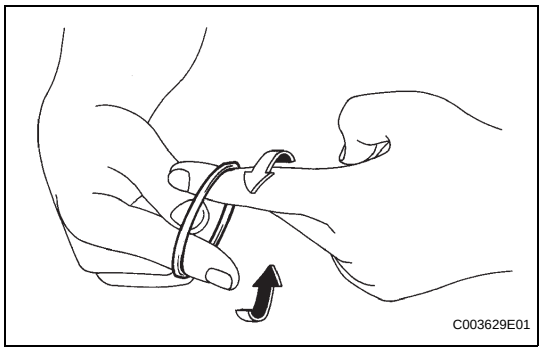

PS

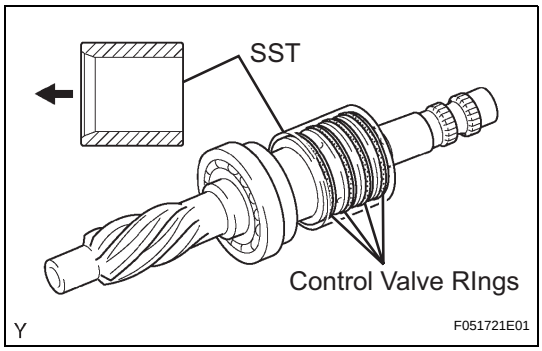

(d) Carefully slide the tapered end of SST over the control valve rings until they fit to the control valve.
SST 09631-20081
NOTICE:
Be careful not to damage the control valve rings.

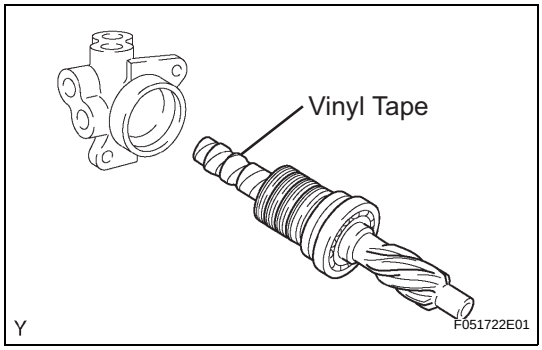

(e) To prevent the control valve upper oil seal lip from getting damaged, wind vinyl tape around the serrated portion of the control valve.
(f) Coat the control valve upper oil seal lip with power steering fluid.
(g) Install the control valve onto the control valve housing.
NOTICE:
Be careful not to damage the control valve ring and control valve upper oil seal lip.
(h) Apply grease to the needle roller bearing.
(i) Install a new O-ring onto the control valve housing.
(j) Wind vinyl tape around the serrated portion of the control valve.

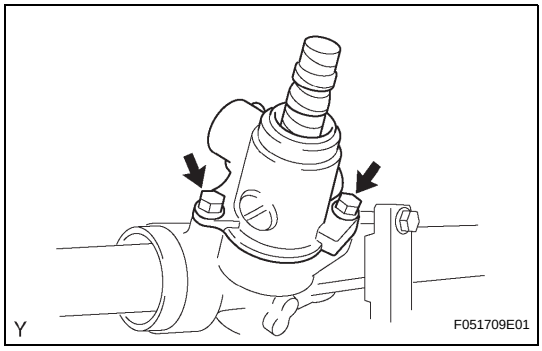

(k) Install the control valve w/ control valve housing onto the rack housing with the 2 bolts.
Torque: 18 N*m (184 kgf*cm, 13 ft.*lbf)

9. INSTALL STEERING GEAR RACK GUIDE
(a) Install the rack guide.
(b) Install the rack guide spring.
(c) Apply sealant to 2 or 3 threads of the rack guide spring cap.
Sealant:
Part No. 08833-00080, THREE BOND 1344, LOCTITE 242 or equivalent
(d) Provisionally install the rack guide spring cap.

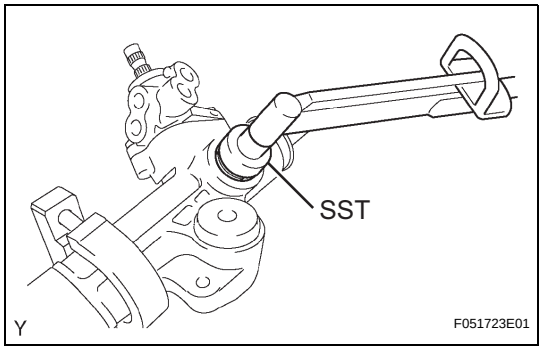

10. ADJUST TOTAL PRELOAD
(a) To prevent the steering rack teeth from damaging the oil seal lip, provisionally install the RH and LH steering rack end.
(b) Using SST, torque the rack guide spring cap.
SST 09631-10021
Torque: 25 N*m (254 kgf*cm, 18 ft.*lbf)

PS

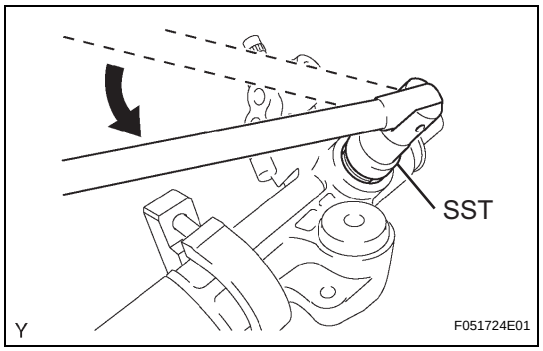

(c) Using SST, loosen the rack guide spring cap.
SST 09631-10021

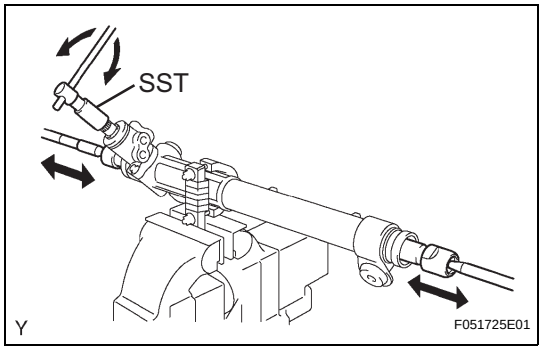

(d) Using SST, turn the control valve to the right and left once or twice.
SST 09616-00011

(e) Using SST, loosen the rack guide spring cap until the rack guide spring ceases to function.
SST 09631-10021

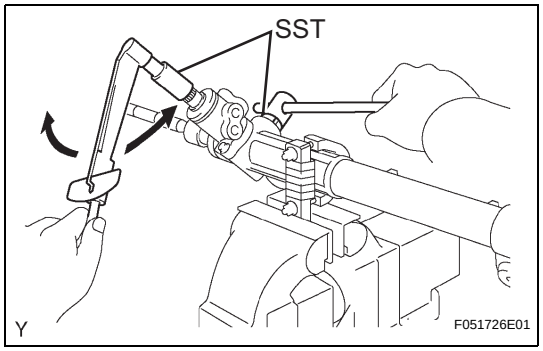

(f) Using SST and a torque wrench, tighten the rack guide spring cap until the preload is within the specification.
SST 09631-10021, 09616-00011
Preload (turning):
0.9 to 1.5 N*m (9.2 to 15.3 kgf*cm, 8.0 to 13.3 in.*lbf)

(g) Apply sealant to 2 or 3 threads of the rack guide spring cap nut.
Sealant:
Part No. 08833-00080, THREE BOND 1344, LOCTITE 242 or equivalent

(h) Provisionally install the rack guide spring cap nut.

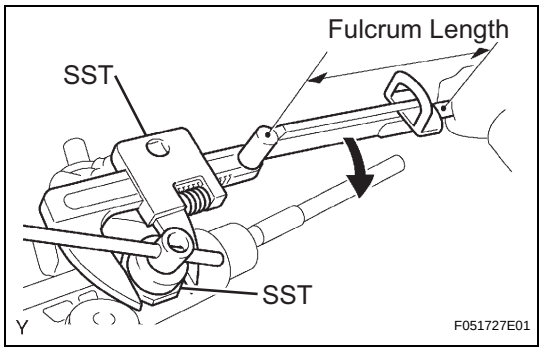

(i) Using SST, hold the rack guide spring cap and using another SST, torque the rack guide spring cap nut.
SST 09631-10021, 09922-10010
Torque: for use without SST
59 N*m (601 kgf*cm, 44 ft.*lbf)
for use with SST
43 N*m (440 kgf*cm, 32 ft.*lbf)
NOTICE:
Turn SST 09922-10010 in the direction shown in the illustration.
HINT:
Use a torque wrench with a fulcrum length of 345 mm (13.58 in.).

(j) Recheck the total preload.
Preload (turning):
0.9 to 1.5 N*m (9.2 to 15.3 kgf*cm, 8.0 to 13.3 in.*lbf)

(k) Remove the RH and LH steering rack ends.

PS

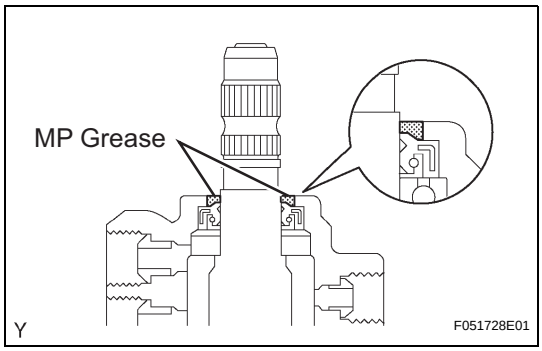

(l) Apply MP grease to the control valve as shown in the illustration.

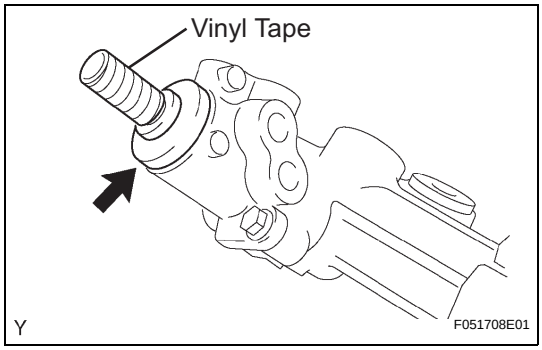

(m) Wind vinyl tape around the serrated portion of the control valve.

(n) Install the dust cover onto the control valve housing.

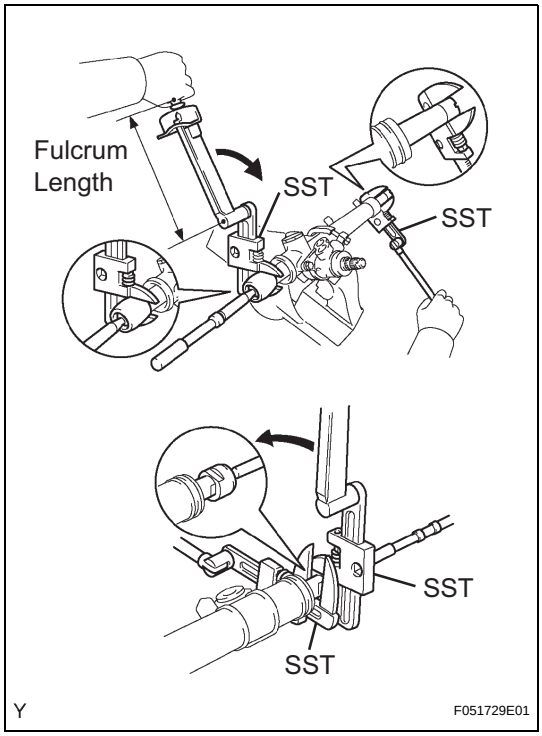

11. INSTALL STEERING RACK END SUB-ASSEMBLY

(a) Install 2 new claw washers, and provisionally install the 2 steering rack ends.
HINT:
Align the claws of the claw washers with the power steering rack grooves.

(b) Using 2 SSTs, install the 2 steering rack ends.
SST 09922-10010
Torque: for use without SST
84 N*m (851 kgf*cm, 62 ft.*lbf)
for use with SST
61 N*m (620 kgf*cm, 45 ft.*lbf)
NOTICE:
Turn SST 09922-10010 in the direction shown in the illustration.
HINT:
- Using SST, hold the power steering rack and install the rack end sub-assembly.
- Use a torque wrench with a fulcrum length of 345 mm (13.58 in.).

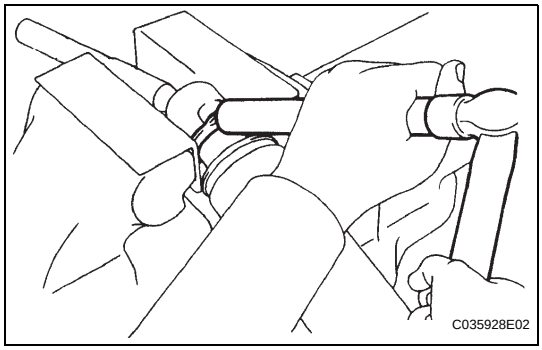

(c) Using a brass bar and hammer, stake the 2 claw washers.
NOTICE:
Avoid any impact to the power steering rack.

PS

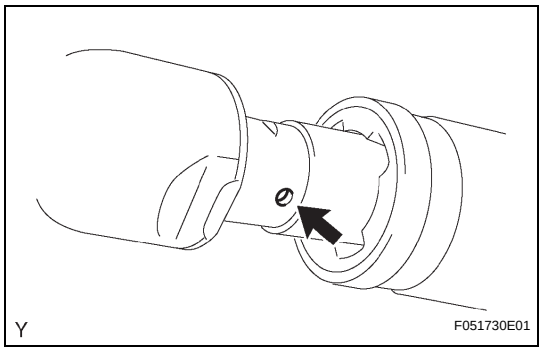

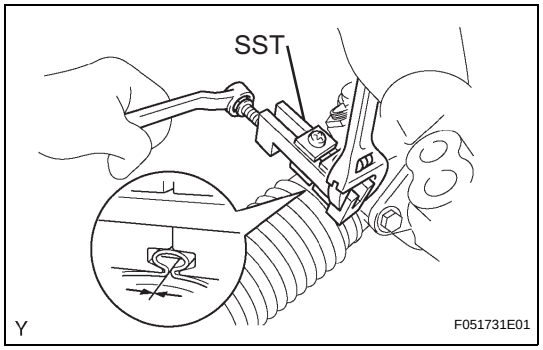

12. INSPECT STEERING RACK END SUB-ASSEMBLY

(a) Ensure that the steering rack end hole is not clogged with grease.
HINT:
If the hole is clogged, the pressure inside the boot will change after it has been assembled, when the steering wheel is turned.

13. INSTALL STEERING RACK BOOT NO. 1

14. INSTALL STEERING RACK BOOT NO. 2

15. INSTALL STEERING RACK BOOT NO. 1 CLAMP

(a) Using SST, tighten the rack boot No. 1 clamp as shown in the illustration.
SST 09521-24010
Clearance:
3.0 mm (0.118 in.) or less
NOTICE:
Be careful not to damage the rack boot No. 1.

16. INSTALL STEERING RACK BOOT NO. 2 CLAMP

HINT:
The installation procedure for the No. 2 side is the same as that for the No. 1 side.

17. INSTALL STEERING RACK BOOT CLIP

(a) Using pliers, install the 2 rack boot clips.

18. INSTALL TIE ROD END SUB-ASSEMBLY LH

(a) Screw the lock nut and tie rod end onto the rack end until the matchmarks are aligned.
(b) After adjusting toe-in, torque the nut.
Torque: 55.5 N*m (566 kgf*cm, 41 ft.*lbf)

19. INSTALL TIE ROD END SUB-ASSEMBLY RH

HINT:
The installation procedure for the RH side is the same as that for the LH side.

20. INSTALL STEERING TURN PRESSURE TUBE

(a) Coat 4 new O-rings with power steering fluid and install them onto the pressure tubes.

(b) Using SST, install the 2 pressure tubes.
SST 09023-38401
Torque: for use without SST
15 N*m (153 kgf*cm, 11 ft.*lbf)
for use with SST
14 N*m (141 kgf*cm, 10 ft.*lbf)
HINT:
- Use a torque wrench with a fulcrum length of 345 mm (13.58 in.).
- This torque value is effective when SST is parallel to a torque wrench.

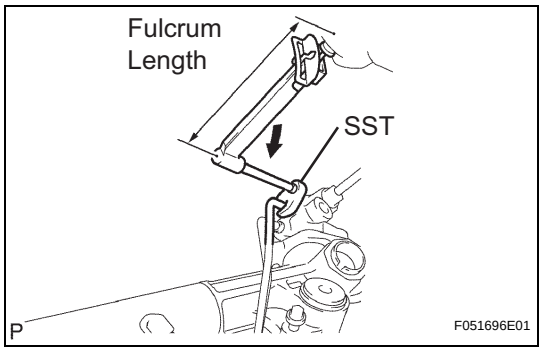

PS

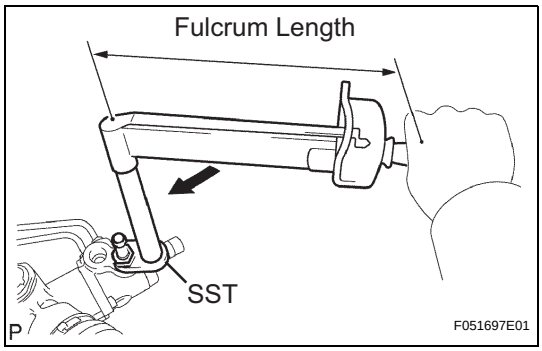

21. INSTALL STEERING GEAR OUTLET RETURN TUBE

(a) Using SST, install the return tube.

SST 09023-12701

Torque: for use without SST

24 N*m (245 kgf*cm, 18 ft.*lbf)

for use with SST

22 N*m (222 kgf*cm, 16 ft.*lbf)

HINT:

- Use a torque wrench with a fulcrum length of 300 mm (11.81 in.).
- This torque value is effective when SST is parallel to a torque wrench.

INSTALLATION

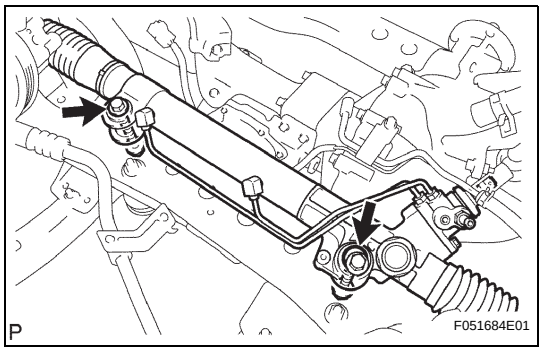

1. INSTALL POWER STEERING LINK

(a) Install the power steering link with the 2 bolts and 2 nuts.

Torque: 92 N*m (938 kgf*cm, 68 ft.*lbf)

NOTICE:

Never turn the nut since it has a detent. Be sure to turn only the bolt.

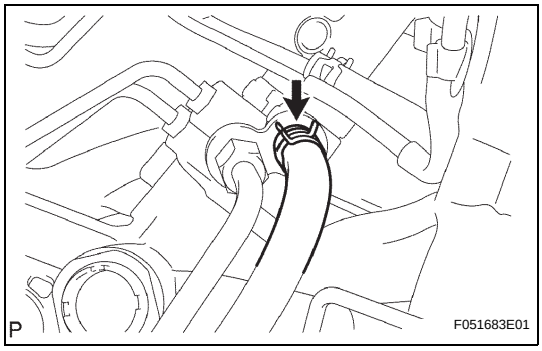

2. INSTALL PRESSURE FEED TUBE ASSEMBLY

(a) Connect the return hose with the clip.

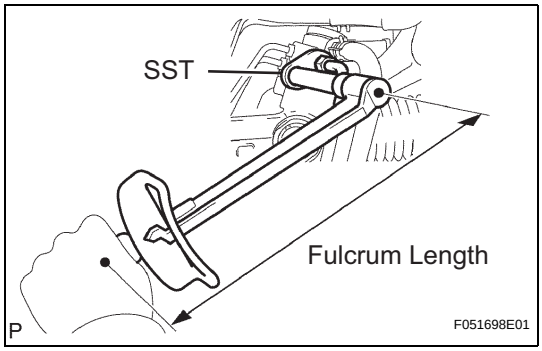

(b) Using SST, tighten the flare nut and connect the pressure feed tube.

SST 09023-12701

Torque: for use without SST

24 N*m (245 kgf*cm, 18 ft.*lbf)

for use with SST

22 N*m (222 kgf*cm, 16 ft.*lbf)

HINT:

- Use a torque wrench with a fulcrum length of 300 mm (11.81 in.).
- This torque value is effective when SST is parallel to a torque wrench.

PS

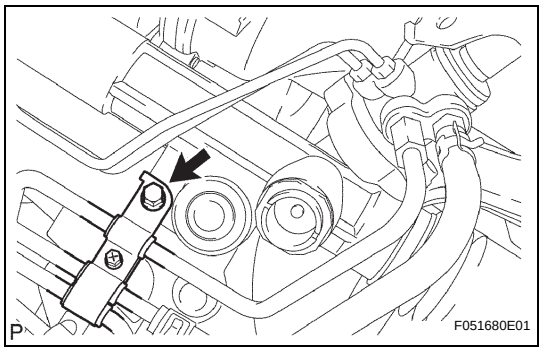

(c) for 2TR-FE:
(1) Install the tube support bracket with the bolt.
Torque: 28 N*m (286 kgf*cm, 21 ft.*lbf)

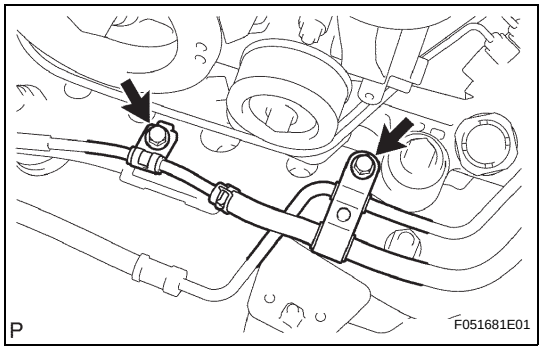

(d) for 1GR-FE:
(1) Install the tube support brackets with the 2 bolts.
Torque: 28 N*m (286 kgf*cm, 21 ft.*lbf)

3. INSTALL TIE ROD END SUB-ASSEMBLY LH
(a) Install the tie rod end onto the steering knuckle arm.
(b) Install the nut.
Torque: 91 N*m (928 kgf*cm, 67 ft.*lbf)
(c) Install a new cotter pin.

4. INSTALL TIE ROD END SUB-ASSEMBLY RH
HINT:
The installation procedure for the RH side is the same as that for the LH side.

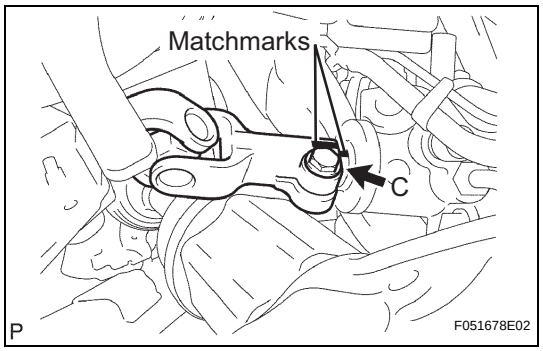

5. INSTALL STEERING INTERMEDIATE SHAFT NO. 2
(a) Align the matchmarks on the steering intermediate shaft No. 2 and power steering link.
(b) Install the steering intermediate shaft No. 2 onto the power steering link with bolt C.
Torque: 35 N*m (357 kgf*cm, 26 ft.*lbf)

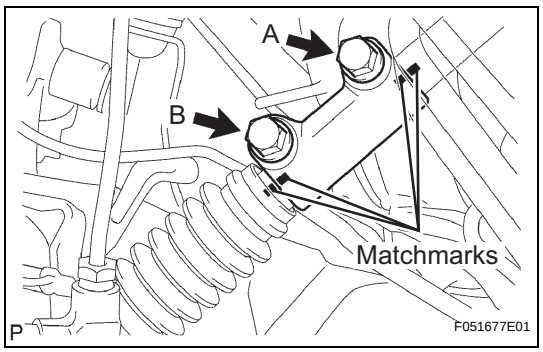

(c) Align the matchmarks on the steering intermediate shaft and steering sliding yoke.
(d) Install the steering sliding yoke onto the steering intermediate shaft and slide it upward.
(e) Align the matchmarks on the steering sliding yoke and steering intermediate shaft No. 2.
(f) Install the steering sliding yoke with bolts A and B.
Torque: 35 N*m (357 kgf*cm, 26 ft.*lbf)

6. INSTALL FRONT STABILIZER BAR

7. INSTALL FRONT STABILIZER BRACKET NO. 1 LH (See page SP-51)

8. INSTALL FRONT STABILIZER BRACKET NO. 1 RH
HINT:
The installation procedure for the RH is the same as that for the LH side.

PS

9. **INSTALL FRONT STABILIZER LINK ASSEMBLY LH (See page SP-24)**
10. **INSTALL FRONT STABILIZER LINK ASSEMBLY RH**
    HINT:
    The installation procedure for the RH is the same as that for the LH side.
11. **INSTALL FRAME CROSSMEMBER SUB-ASSEMBLY NO. 3 (See page MT-12)**
12. **INSTALL PROPELLER SHAFT ASSEMBLY (for Regular Cab Pre-Runner) (See page PR-6)**
13. **INSTALL PROPELLER WITH CENTER BEARING SHAFT ASSEMBLY (for Except Regular Cab Pre-Runner) (See page PR-13)**
14. **INSTALL PROPELLER SHAFT ASSEMBLY (for Regular Cab 4WD) (See page PR-25)**
15. **INSTALL PROPELLER WITH CENTER BEARING SHAFT ASSEMBLY (for Except Regular Cab 4WD) (See page PR-32)**
16. **INSTALL PROPELLER SHAFT ASSEMBLY FRONT (for 4WD) (See page PR-19)**
17. **INSTALL EXHAUST PIPE ASSEMBLY FRONT (for 2TR-FE) (See page EX-2)**
18. **INSTALL EXHAUST PIPE ASSEMBLY FRONT (for 1GR-FE) (See page EX-3)**
19. **INSTALL EXHAUST FRONT PIPE ASSEMBLY NO. 2 (for 1GR-FE) (See page EX-3)**
20. **INSTALL FRONT WHEELS**
    Torque: 113 N*m (1,152 kgf*cm, 83 ft.*lbf)
21. **PLACE FRONT WHEELS FACING STRAIGHT AHEAD**
22. **INSPECT STEERING WHEEL CENTER POINT**
23. **CONNECT CABLE TO NEGATIVE BATTERY TERMINAL**
    Torque: 3.9 N*m (40 kgf*cm, 35 in.*lbf)
    (See page IN-5)
24. **ADD POWER STEERING FLUID**
25. **BLEED POWER STEERING FLUID (See page PS-2)**
26. **CHECK FOR POWER STEERING FLUID LEAKAGE**
27. **CHECK FOR EXHAUST GAS LEAKAGE**
28. **INSPECT AND ADJUST FRONT WHEEL ALIGNMENT** (See page SP-7)
29. **INSTALL ENGINE UNDER COVER SUB-ASSEMBLY NO. 1**
    Torque: 30 N*m (306 kgf*cm, 22 ft.*lbf)

SYSTEM DIAGRAM

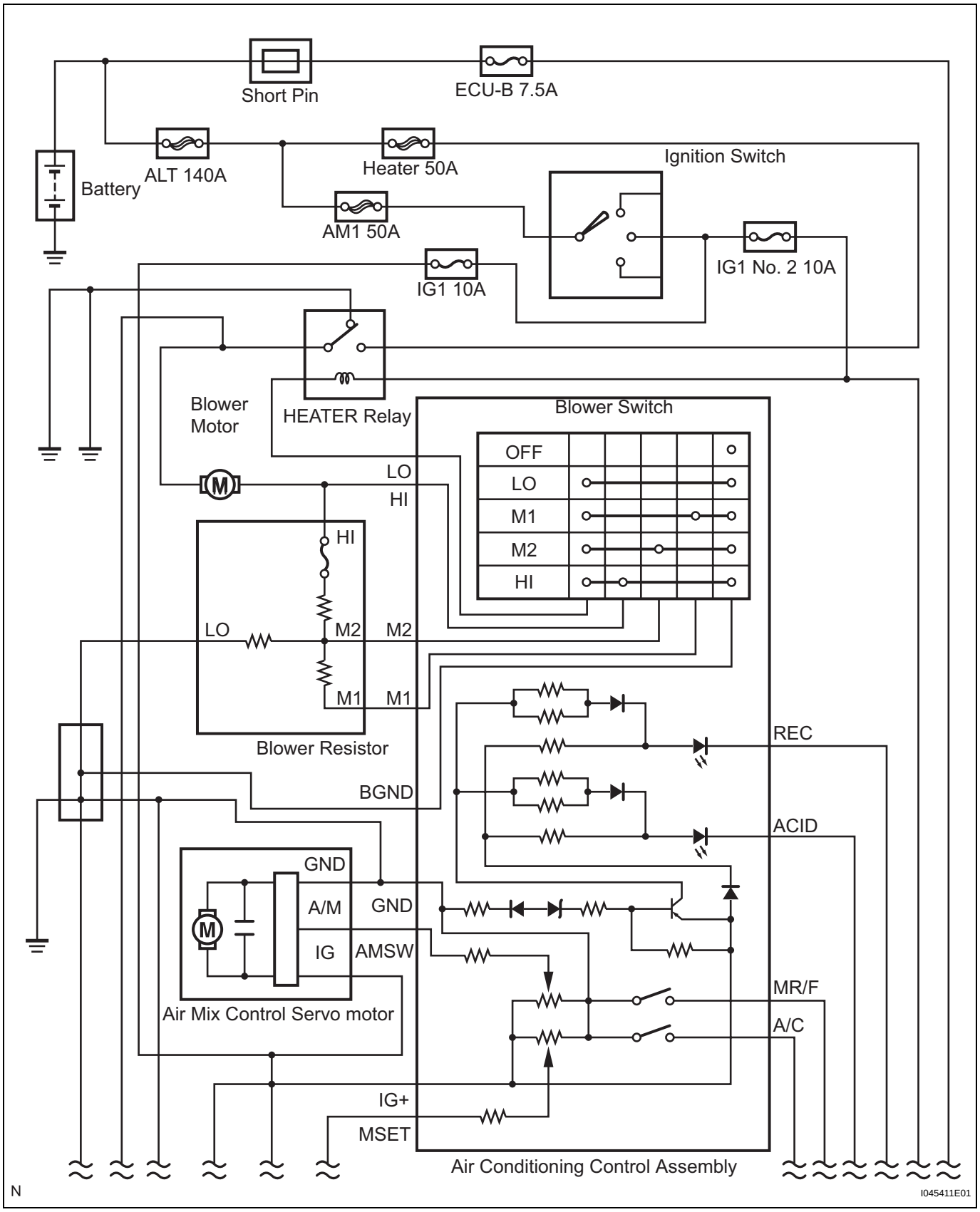

AC

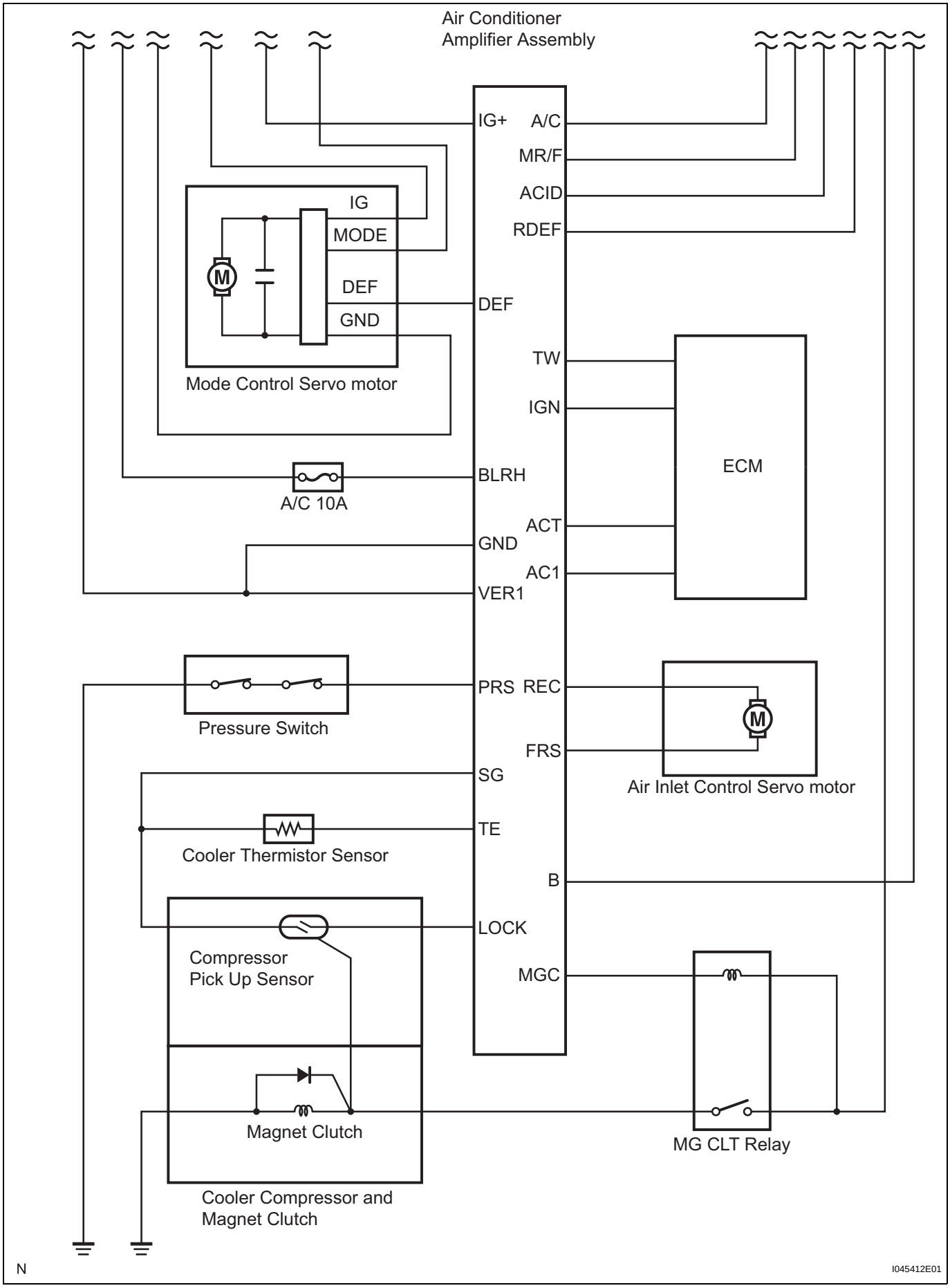
Air Conditioner
Amplifier Assembly
IG+
A/C
MR/F
ACID
RDEF
IG
MODE
DEF
GND
DEF
Mode Control Servo motor
TW
IGN
ECM
BLRH
A/C 10A
ACT
GND
AC1
VER1
PRS
REC
Pressure Switch
FRS
Air Inlet Control Servo motor
SG
TE
Cooler Thermistor Sensor
B
LOCK
Compressor
Pick Up Sensor
MGC
Magnet Clutch
MG CLT Relay
Cooler Compressor and
Magnet Clutch
N
I045412E01

AC

PROBLEM SYMPTOMS TABLE

Check the suspected areas for each problem symptom in the order given in the table below and proceed to the relevant troubleshooting page.

HINT:

Inspect the fuses and relays before inspecting the suspected areas shown in the table below.

If the malfunction still exists even after checking and confirming that all the suspected areas are normal, replace the A/C amplifier.

Symptom	Suspected area	See page
No Cool Air Comes Out: • Compressor Not Operating	A/C fuse	-
	Volume of refrigerant	AC-14
	Pressure switch	AC-85
	Magnetic clutch	AC-70
	Cooler thermistor sensor	AC-84
	Air conditioner amplifier assembly	AC-9
	Compressor pick up sensor	AC-70
	Cooler compressor	AC-67
	Cooler compressor	AC-73
	Wire harness or connector	-
No Cool Air Comes Out: • Blower Not Operating	HTR fuse	-
	Heater relay	AC-88
	Blower resistor	AC-63
	Blower motor	AC-62
	Blower speed control switch	AC-91
	Air conditioning control assembly	AC-91
	Wire harness or connector	-
No Cool Air Comes Out: • Air Mix Damper Servo Not Operating	Air mix damper fuse	-
	Air mix control servo motor	AC-82
	Air conditioning control assembly	AC-91
	Wire harness or connector	-
No Cool Air Comes Out: • Insufficient Cooling	Volume of refrigerant	AC-14
	Blower motor performance check	-
	Air mix damper servo full travel check	-
	Recirculation damper servo operation check	-
No Engine Idle-up when A/C Switch ON	Air conditioner amplifier assembly	AC-9
	Idling control system (2TR-FE)	ES-252
	Idling control system (1GR-FE)	ES-246
	Wire harness or connector	-
No Warm Air Comes Out: • Blower Not Operating	HTR fuse	-
	Heater relay	AC-88
	Blower resistor	AC-63
	Blower motor	AC-62
	Blower speed control switch	AC-91
	Air conditioning control assembly	AC-91
	Wire harness or connector	-

Symptom	Suspected area	See page
No Warm Air Comes Out: • Air Mix Damper Servo Not Operating	Air mix damper fuse	-
	Air mix control servo motor	AC-82
	Air conditioning control assembly	AC-91
	Wire harness or connector	-
No Warm Air Comes Out: • Insufficient Cooling	Volume of engine coolant	-
	Air conditioning control assembly	AC-91
	Blower motor performance check	-
	Air mix damper servo full travel check	-
	Recirculation damper servo operation check	-
	Heater radiator	-
Air Not Coming From Desired Outlets: • Blower Not Operating	HTR fuse	-
	Heater relay	AC-88
	Blower resistor	AC-63
	Blower motor	AC-62
	Blower speed control switch	AC-91
	Air conditioning control assembly	AC-91
	Wire harness or connector	-
Air Not Coming From Desired Outlets: • Air Mix Damper Servo Not Operating	Air mix damper fuse	-
	Air mix control servo motor	AC-82
	Air conditioning control assembly	AC-91
	Wire harness or connector	-
Windshield Fogging: • Compressor Not Operating	A/C fuse	-
	Volume of refrigerant	AC-14
	Pressure switch	AC-85
	Magnetic clutch	AC-70
	Cooler thermistor sensor	AC-84
	Air conditioner amplifier assembly	AC-9
	Compressor pick up sensor	AC-70
	Cooler compressor	AC-67
	Cooler compressor	AC-73
	Wire harness or connector	-
Windshield Fogging: • Blower Not Operating	HTR fuse	-
	Heater relay	AC-88
	Blower resistor	AC-63
	Blower motor	AC-62
	Blower speed control switch	AC-91
	Air conditioning control assembly	AC-91
	Wire harness or connector	-
Windshield Fogging: • Air Mix Damper Servo Not Operating	Air mix damper fuse	-
	Air mix control servo motor	AC-82
	Air conditioning control assembly	AC-91
	Wire harness or connector	-
Windshield Fogging: • Insufficient Cooling	Volume of refrigerant	AC-14
	Blower motor performance check	-
	Air mix damper servo full travel check	-
	Recirculation damper servo operation check	-

Symptom	Suspected area	See page
Defrosting Insufficient: • Air flow from def outlet insufficient (Check airflow when engine is running, blower MAX and DEF mode)	Blower motor	AC-62
	Mode doors: Check cooling, heating & door operation	-
	Mode control servo motor: Hot air not coming, Go to no hot air comes out	-
	Mode control servo motor: Cold air not coming, Go to no cold air comes out	-
Noise: • Blower noise (Check noise when ignition switch ON and blower ON)	Blower motor: Inspect blower motor for debris/cracks	-
	Fresh air intake area: Inspect fresh air intake area for debris	-
Noise: • A/C system (Engine is running, A/C switch is ON. Detect noise source using soundscope and moving around the refrigerant system.)	Cooler compressor: Cooler compressor incorrectly fitted	AC-73
	Magnetic clutch	AC-70
	Refrigerant charge amount	AC-18
	Compressor mounting bracket: Compressor mounting bracket incorrectly fitted (2TR-FE)	ES-447
	Compressor mounting bracket: Compressor mounting bracket incorrectly fitted (1GR-FE (2WD))	EM-26
	Compressor mounting bracket: Compressor mounting bracket incorrectly fitted (1GR-FE (PRE RUNNER/4WD))	EM-48
	A/C lines secure & not grounded	-
Odor (Cycle through blower speed, mode, temperature to define odor type when engine is running and A/C switch is ON. (Musty smell, coolant oil smell))	Wet carpet: Inspect water, engine coolant or oil leaks	-
	A/C drain tube: Inspect water, engine coolant or oil leaks	-
	Fresh air intake area: Inspect water, engine coolant or oil leaks	-
	Heater hose: Inspect water, engine coolant or oil leaks	-
	Evaporator: Inspect water, engine coolant or oil leaks	-
	Evapo case: Inspect water, engine coolant or oil leaks	-
Air Not Coming from Desired Outlets (Cycle the mode lever and check airflow for outlets when engine is running, A/C switch is ON.)	Blower motor	AC-62
	Mode control servo motor	AC-82
	Mode doors: Check cooling, heating & door operation	-
	Wire harness or connector	-
	Air conditioning control assembly	AC-91

TERMINALS OF ECU

1. INSPECT AIR CONDITIONER AMPLIFIER ASSEMBLY

(a) Disconnect the connector from the air conditioner amplifier assembly and inspect the connector on the wire harness side, as shown in the table below.

Wire Harness Side:

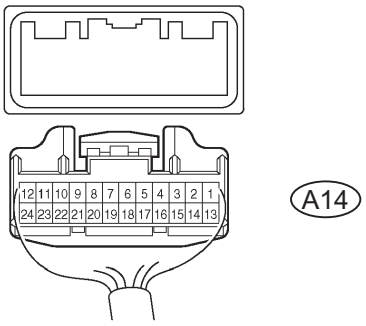

C

I036518E01

Symbols (Terminals No.)	Wiring Colors	Terminal Descriptions	Conditions	STD Voltages
IG+ (A14-12) - GND (A14-1)	P - W-B	Power source (IG)	Ignition switch: OFF → ON	Below 1.0 → 10 to 14 V
+B (A14-24) - GND (A14-1)	P - W-B	Power source (Back-up)	Always	10 to 14 V
GND (A14-1) - Body ground	W-B - Body ground	Ground for main power supply	Always	Below 1.0 Ω

If the results are not as specified, inspect the circuits connected to the other parts.

(b) Connect the connector to the air conditioning amplifier assembly and inspect the wire harness side connector from the back side, as shown in the table below.

From Back Side:

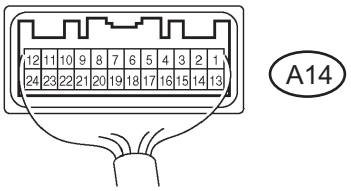

AC

C

I036517E01

Symbols (Terminals No.)	Wiring Colors	Terminal Descriptions	Conditions	STD Voltages
DEF (A14-2) - GND (A14-1)	LG - W-B	Mode switch signal	Ignition switch: ON Mode select switch: Except DEF → DEF	1.0 to 14 → Below 1.0 V
LOCK (A14-6) - SG (A14-3)	R-W - W	Magnet clutch signal	Start engine Operate A/C system Magnet clutch: ON	Pulse generation (See waveform 1)
ACI (A14-9) - GND (A14-1)	G-W - W-B	Idle up request signal	Engine idling Operate A/C system Magnet clutch: OFF → ON	10 to 14 → Below 1.0 V
FRS (A14-10) - GND (A14-1)	V-W - W-B	Recirculation/Fresh switch signal	Ignition switch: ON Recirculation/Fresh switch: RECIRCULATION → FRESH	Below 1.0 → 10 to 14 V

Symbols (Terminals No.)	Wiring Colors	Terminal Descriptions	Conditions	STD Voltages
REC (A14-11) - GND (A14-1)	P-B - W-B	Recirculation/Fresh switch signal	Ignition switch: ON Recirculation/Fresh switch: FRESH → RECIRCULATION	Below 1.0 → 10 to 14 V
MGC (A14-21) - GND (A14-1)	G - W-B	Magnet clutch relay signal	Engine idling Operate A/C system Magnet clutch: OFF → ON	10 to 14 → Below 1.0 V
PRS (A14-5) - GND (A14-1)	O - W-B	A/C pressure sensor signal	Start engine Operate A/C system Refrigerant pressure: Abnormal (More than 3,030 kPa (31.0 kgf/cm^2, 440 psi))	4.7 V or higher
PRS (A14-5) - GND (A14-1)	O - W-B	A/C pressure sensor signal	Start engine Operate A/C system Refrigerant pressure: Abnormal (Less than 186 kPa (1.9 kgf/cm^2, 27 psi))	Below 0.7 V
PRS (A14-5) - GND (A14-11)	O - W-B	A/C pressure sensor signal	Start engine Operate A/C system Refrigerant pressure: Normal (Less than 3,030 kPa (31.0 kgf/cm^2, 440 psi)) and more than 186 kPa (1.9 kgf/cm^2, 27 psi))	0.7 to 4.7 V
TE (A14-4) - GND (A14-1)	B - W-B	A/C evaporator temperature sensor signal	Ignition switch: ON Evaporator temperature: 0 → 15°C (32 → 59°F)	2.0 to 2.4 → 1.4 to 1.8 V
BLRH (A14-23) - GND (A14-1)	G-Y - W-B	Blower switch signal	Ignition switch: ON Blower switch: ON OFF → ON (LO, M1, M2, H1)	0 → 10 to 14 V
ACID (A14-15) - GND (A14-1)	Y - W-B	A/C switch LED signal	Ignition switch: ON Blower switch: ON A/C switch: OFF → ON	10 to 14 → Below 3.0 V
RDEF (A14-16) - GND (A14-1)	L-W - W-B	REC switch LED signal	Ignition switch: ON Blower switch: ON REC switch: OFF → ON	10 to 14 → Below 1.0 V
MR/F (A14-17) - GND (A14-1)	G-B - W-B	REC switch operation signal	Ignition switch: ON REC switch: OFF → ON	4 to 5 → Below 1.0 V
A/C (A14-18) - GND (A14-1)	GR - W-B	A/C switch operation signal	Ignition switch: ON A/C switch: OFF → ON	4 to 5 → Below 1.0 V
GND (A14-1) - Body ground	W-B - Body ground	Ground for main power supply	Always	Below 1.0 Ω
SG (A14-3) - Body ground	W - Body ground	Ground for A/C evaporator temperature sensor	Always	Below 1.0 Ω
IG (A14-12) - Body ground	P - Body ground	Power source (IG)	Ignition switch: OFF → ON	Below 1.0 → 10 to 14 V
+B (A14-24) - Body ground	R - Body ground	Power source (Back-up)	Always	10 to 14 V

If the results are not as specified, replace the air conditioning amplifier assembly with a new one. If the results are still not as specified after replacing the air conditioning control assembly, inspect the circuits connected to other parts.

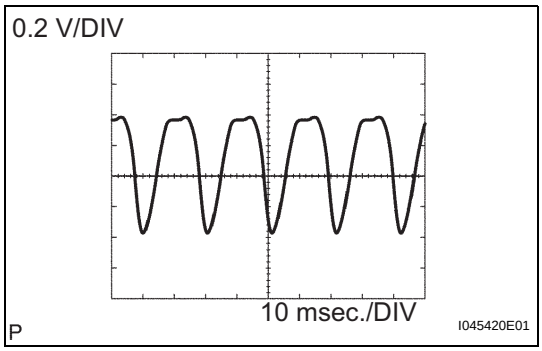

(1) WAVEFORM 1:
Magnet clutch signal

ECM Terminal Names	Between LOCK and SG
Tester Ranges	0.2 V/DIV, 10 msec./DIV
Conditions	Idling

HINT:
The wavelength becomes shorter as the engine rpm increases.

2. Inspect ECM (2TR-FE)

(a) Connect the connector to the ECM and inspect the wire harness side connector from the back side, as shown in the table below.

From Back Side:

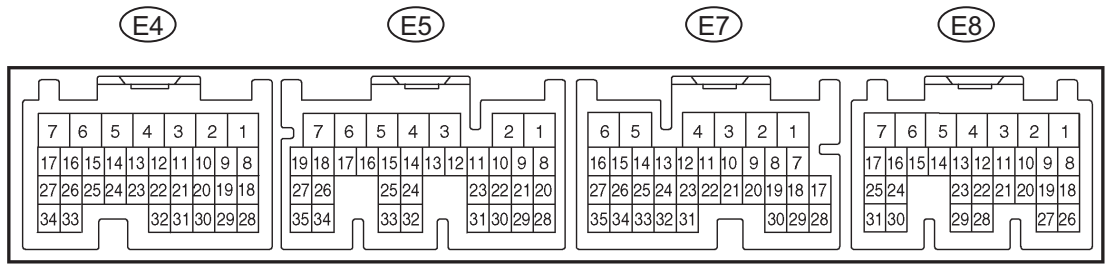

Symbols (Terminals No.)	Wiring Colors	Terminal Descriptions	Conditions	STD Voltages
ACT (E7-25) - E1 (E4-3)	L - BR	Magnet clutch ON Permit signal	Start engine Operate A/C system Accelerator pedal: released → depressed	10 to 14 → Below 1.0 V
THWO (E7-14) - E2 (E4-28)	GR-B - BR	Engine coolant temperature sensor signal	Ignition switch: ON	Pulse generation (See waveform 1)
TACH (E7-1) - E1 (E4-3)	B-W - BR	Engine speed signal	Engine idling	Pulse generation (See waveform 2)

AC

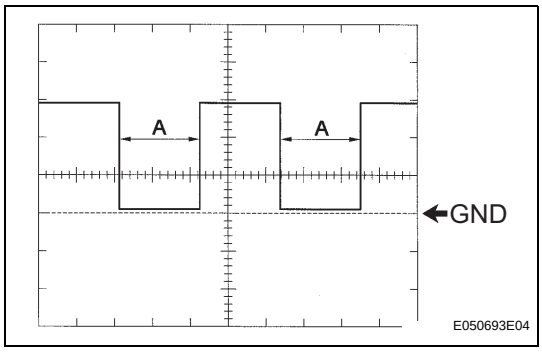

(1) WAVEFORM 1:
Engine coolant temperature sensor signal

ECM Terminal Names	Between THWO and E2
Tester Ranges	5 V/DIV, 0.1 sec./DIV
Conditions	Ignition switch ON

A changes in accordance with the engine coolant temperature.

Coolant Temperature	Below 30°	Approx. 75°C	Above 90°F
A	Approx. 16 ms	Approx. 204 ms	Approx. 262 ms

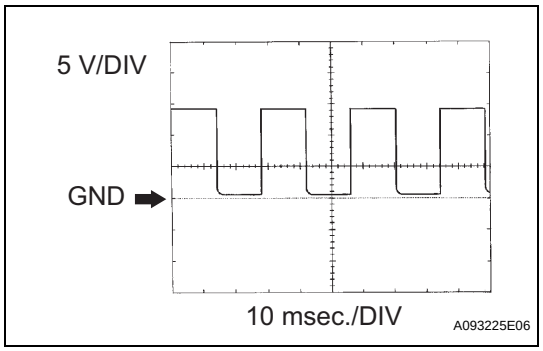

(2) WAVEFORM 2:
Engine speed signal

ECM Terminal Names	Between TACH and E1
Tester Ranges	5 V/DIV, 10 msec./DIV
Conditions	Idling

HINT:
The wavelength becomes shorter as the engine rpm increases.

3. INSPECT ECM (1GR-FE)

(a) Connect the connector to the ECM and inspect the wire harness side connector from the back side, as shown in the table below.

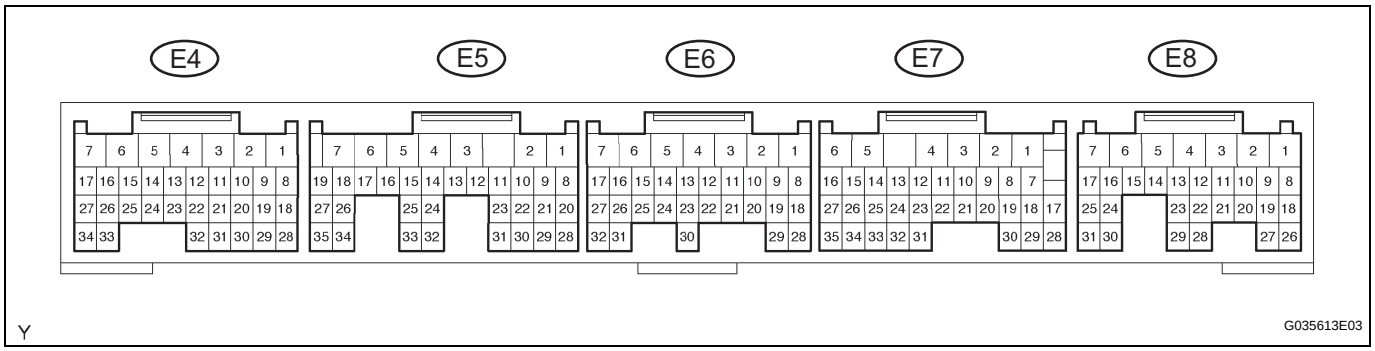

Symbols (Terminals No.)	Wiring Colors	Terminal Descriptions	Conditions	STD Voltages
ACT (E7-25) - E1 (E6-1)	L - BR	Magnet clutch ON permit signal	Start engine Operate A/C system Accelerator pedal: released → depressed	10 to 14 → Below 1.0 V
THWO (E7-14) - E2 (E4-28)	GR-B - BR	Engine coolant temperature sensor signal	Ignition switch: ON	Pulse generation (See waveform 1)
TACH (E7-1) - E1 (E6-1)	B-W - BR	Engine speed signal	Engine idling	Pulse generation (See waveform 2)

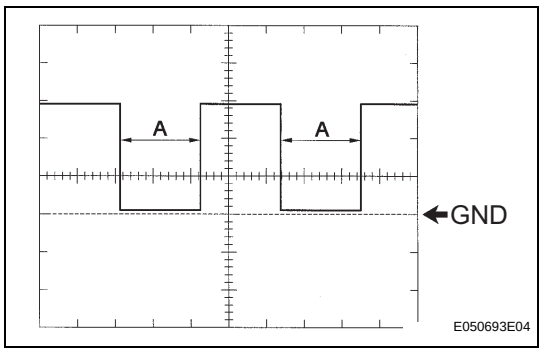

(1) WAVEFORM 1:
Engine coolant temperature sensor signal

ECM Terminal Names	Between THWO and E2
Tester Ranges	5 V/DIV, 0.1 sec./DIV
Conditions	Ignition switch ON

A changes in accordance with the engine coolant temperature.

Coolant Temperature	Below 30°	Approx. 75°	Above 90°
A	Approx. 16ms	Approx. 204ms	Approx. 262ms

AC

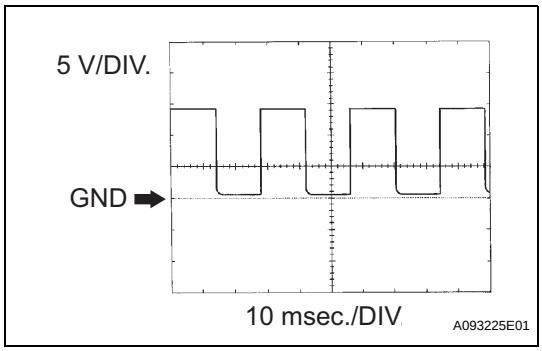

(2) WAVEFORM 2:
Engine speed signal

ECM Terminal Names	Between TACH and E1
Tester Ranges	5 V/DIV, 10 msec./DIV
Conditions	Idling

HINT:
The wavelength becomes shorter as the engine rpm increases.

REPLACEMENT

1. DISCHARGE REFRIGERANT FROM REFRIGERATION SYSTEM

(a) Start up the engine.
(b) Turn the A/C switch to ON.
(c) Operate the cooler compressor with an engine speed of approximately 1,000 rpm for 5 to 6 minutes to circulate the refrigerant and collect the compressor oil remaining in each component into the cooler compressor.
(d) Stop the engine.
(e) Using SST, let the refrigerant gas out.
SST 07110-58060 (07117-58080, 07117-58090, 07117-78050, 07117-88060, 07117-88070, 07117-88080)

2. CHARGE REFRIGERANT

(a) Perform vacuum purging using a vacuum pump.
(b) Charge refrigerant HFC-134a (R134a).
Standard:
570 to 630 g (20.10 to 22.22 oz.)
SST 07110-58060 (07117-58060, 07117-58070, 07117-58080, 07117-58090, 07117-78050, 07117-88060, 07117-88070, 07117-88080)
NOTICE:
Do not start the engine before charging it with refrigerant as the cooler compressor does not work properly without any refrigerant. This could cause the compressor to overheat.

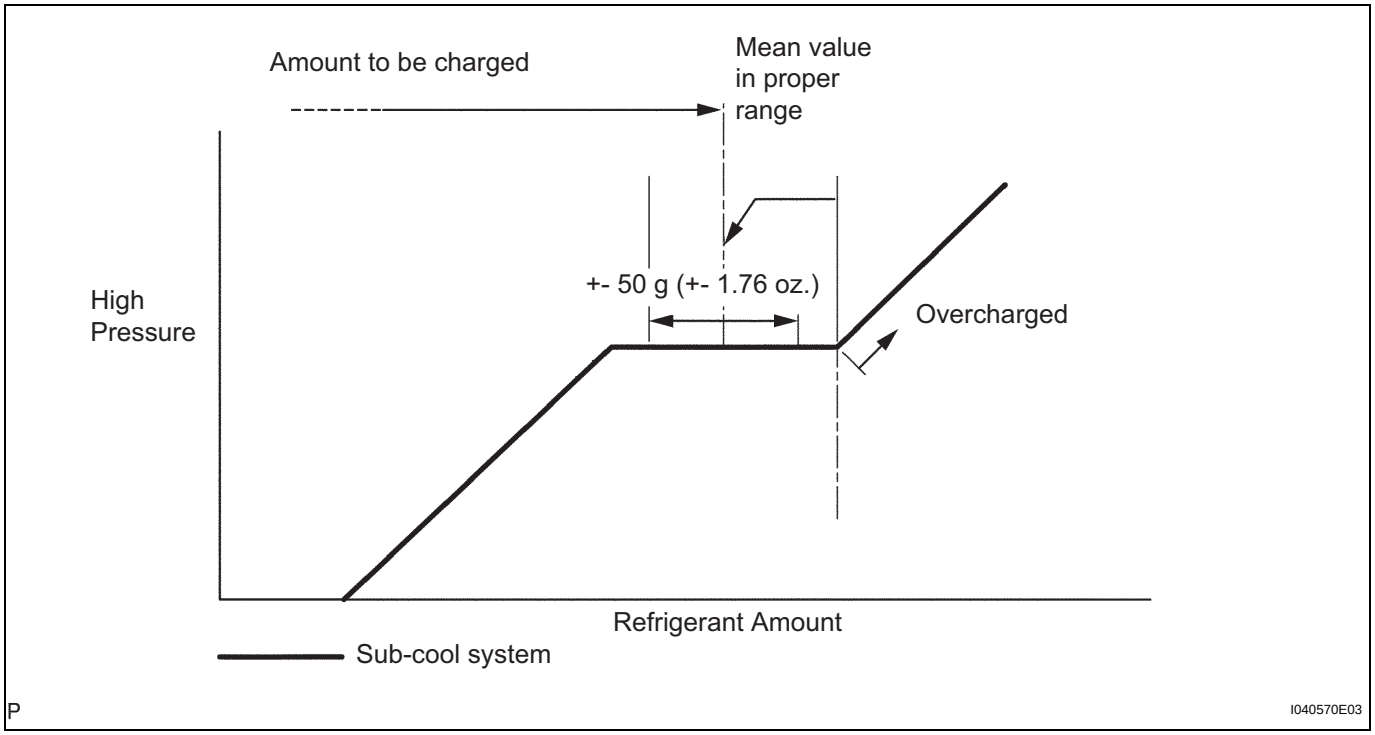

3. WARM UP ENGINE

NOTICE:

Warm up the engine at less than 2,000 rpm for 2 minutes or more after charging it with refrigerant.

4. CHECK FOR REFRIGERANT LEAKAGE

(a) After recharging the refrigerant gas, check for refrigerant gas leakage using a halogen leak detector.

(b) Perform the operation under these conditions:
- Stop the engine.
- Secure good ventilation (the gas leak detector may react to volatile gases other than refrigerant, such as evaporated gasoline or exhaust gas).
- Repeat the test 2 or 3 times.
- Make sure that some refrigerant remains in the refrigeration system.
  When compressor is off: approximately 392 to 588 kPa (4 to 6 kgf/cm^2, 57 to 85 psi)

(c) Using a gas leak detector, check the refrigerant line for leakage.

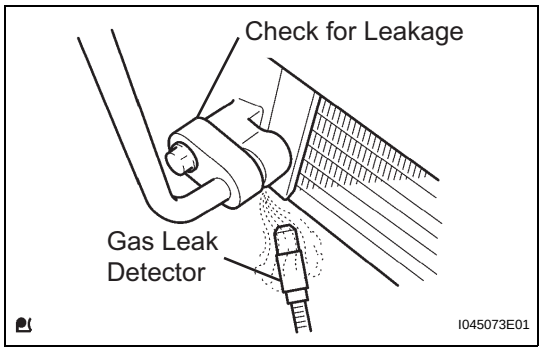

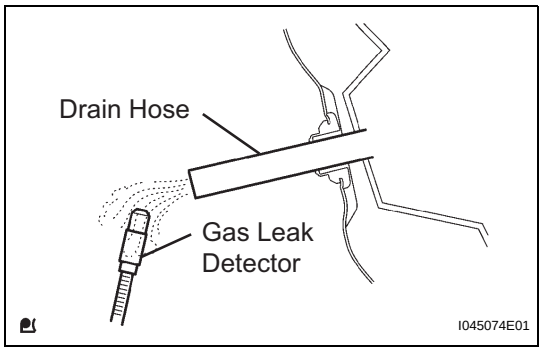

(d) Bring the gas leak detector close to the drain hose with the detector power off.
HINT:
- After the blower motor has stopped, leave the cooling unit for more than 15 minutes.
- Place the gas leak detector sensor under the drain hose.
- When bringing the gas leak detector close to the drain hose, make sure that the gas leak detector does not react to the volatile gases.

If such reaction is unavoidable, the vehicle must be lifted up.

(e) If a gas leak is not detected from the drain hose, remove the blower motor control from the cooling unit. Insert the gas leak detector sensor into the unit and perform the test.

(f) Disconnect the pressure switch connector and leave it for approximately 20 minutes. Bring the gas leak detector close to the pressure switch and perform the test.

REMOVAL

1. **PRECAUTION**
   RS-1

2. **DISCHARGE REFRIGERANT FROM REFRIGERATION SYSTEM (See page AC-18)**

3. **DISCONNECT CABLE FROM NEGATIVE BATTERY TERMINAL**
   Wait at least for 90 seconds after disconnecting the cable to prevent the airbag from working.

4. **DRAIN ENGINE COOLANT (for 2TR-FE) (See page CO-3)**

5. **DRAIN ENGINE COOLANT (for 1GR-FE) (See page CO-3)**

6. **DISCONNECT SUCTION HOSE SUB-ASSEMBLY**
   (a) Remove the 2 bolts and separate the suction hose sub-assembly.

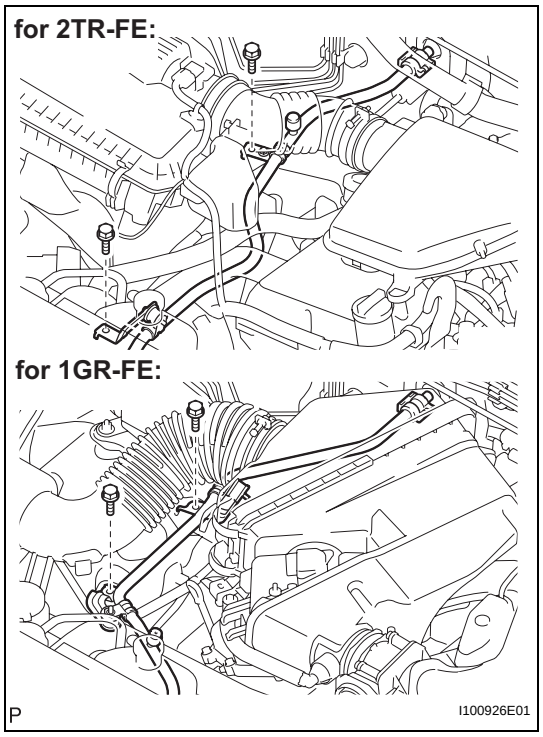

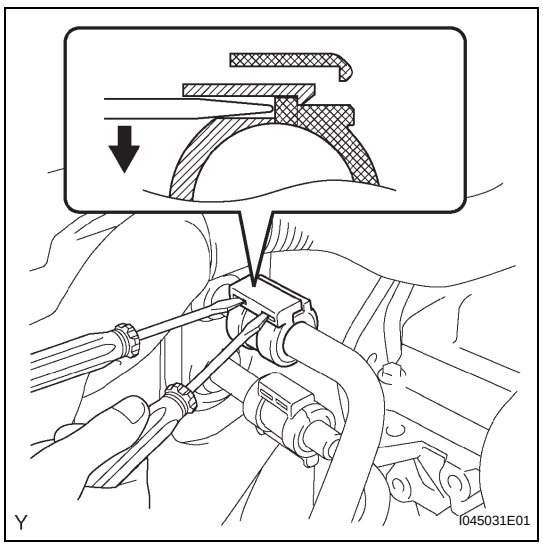

(b) Insert 2 screwdrivers into the 2 piping clamp slots, and while holding them down, disengage the piping clamp claws and the piping clamp.

AC

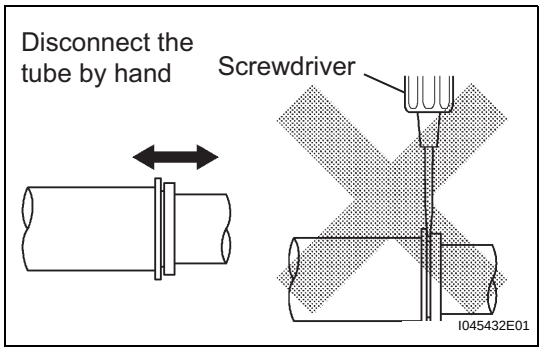

(c) Disconnect the suction hose sub-assembly.
NOTICE:
- **Do not use a screwdriver or any other tool to disconnect the hose.**
- **Seal the openings of the disconnected parts using vinyl tape to prevent moisture and foreign matter from entering.**

(d) Remove the 2 O-rings from the suction hose sub-assembly.

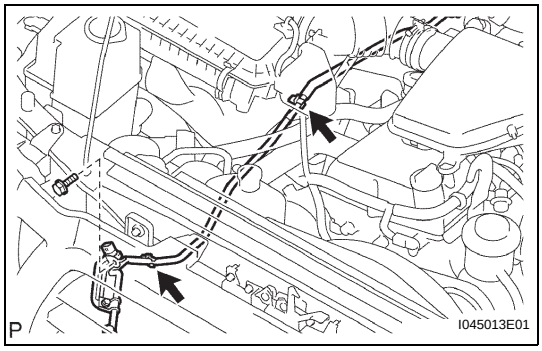

7. DISCONNECT AIR CONDITIONING TUBE ASSEMBLY

(a) Remove the bolt.

(b) Disengage the 2 clamps and separate the air conditioning tube assembly.

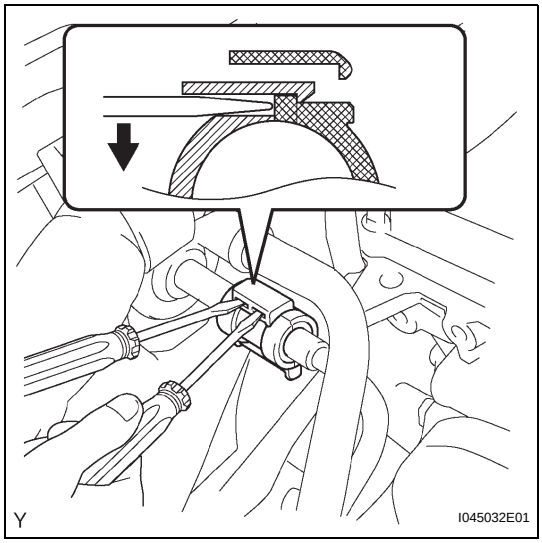

(c) Insert 2 screwdrivers into the 2 piping clamp slots, and while holding them down, disengage the piping clamp claws and the piping clamp.

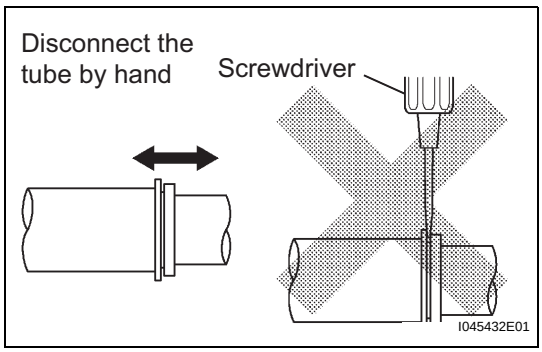

(d) Disconnect the air conditioner tube.
NOTICE:
- **Do not use a screwdriver or any other tool to disconnect the tube.**
- **Seal the openings of the disconnected parts using vinyl tape to prevent moisture and foreign matter from entering.**

(e) Remove the 2 O-rings from the air conditioner tube.

AC

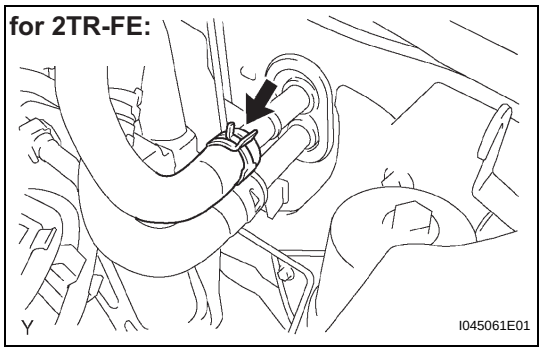

8. **DISCONNECT HEATER WATER INLET HOSE (for 2TR-FE)**
   (a) Using pliers, grip the claws of the clip, slide the clip and disconnect the heater water inlet hose from the heater unit.

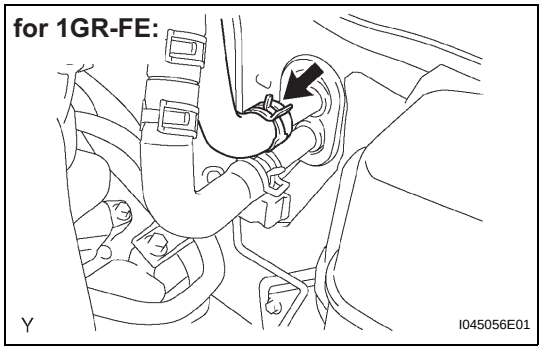

9. **DISCONNECT HEATER WATER INLET HOSE (for 1GR-FE)**
   (a) Using pliers, grip the claws of the clip, slide the clip and disconnect the heater water inlet hose from the heater unit.

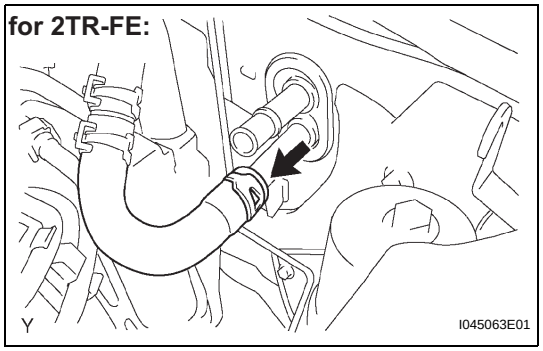

10. **DISCONNECT HEATER WATER OUTLET HOSE (for 2TR-FE)**
    (a) Using pliers, grip the claws of the clip, slide the clip and disconnect the heater water outlet hose from the heater unit.

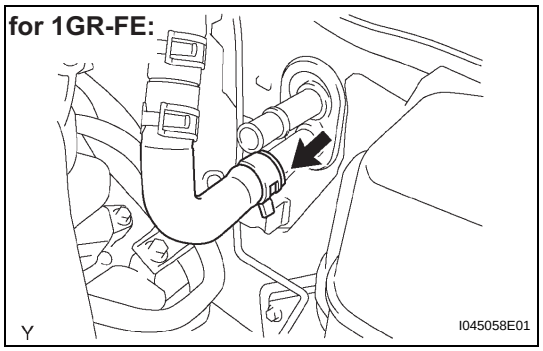

11. **DISCONNECT HEATER WATER OUTLET HOSE (for 1GR-FE)**
    (a) Using pliers, grip the claws of the clip, slide the clip and disconnect the heater water outlet hose from the heater unit.

12. **REMOVE FRONT WIPER ARM HEAD CAP (See page WW-7)**

13. **REMOVE FRONT WIPER ARM LH (See page WW-8)**

14. **REMOVE FRONT WIPER ARM RH (See page WW-8)**

15. **REMOVE FRONT FENDER TO COWL SIDE SEAL LH (See page WW-8)**

16. **REMOVE FRONT FENDER TO COWL SIDE SEAL RH (See page WW-8)**

17. **REMOVE COWL TOP VENTILATOR LOUVER SUB-ASSEMBLY (See page WW-8)**

18. **PLACE FRONT WHEELS FACING STRAIGHT AHEAD**

19. **REMOVE LOWER NO. 2 STEERING WHEEL COVER (See page RS-558)**

20. **REMOVE LOWER NO. 3 STEERING WHEEL COVER (See page RS-558)**
21. **REMOVE HORN BUTTON ASSEMBLY (See page RS-558)**
22. **REMOVE STEERING WHEEL ASSEMBLY (See page SR-9)**
23. **REMOVE STEERING COLUMN COVER LOWER (See page SR-9)**
24. **REMOVE STEERING COLUMN COVER UPPER (See page SR-10)**
25. **REMOVE SPIRAL CABLE SUB-ASSEMBLY (See page RS-566)**
26. **REMOVE WINDSHIELD WIPER SWITCH ASSEMBLY (See page WW-17)**
27. **REMOVE FRONT FLOOR FOOTREST (See page IR-1)**
28. **REMOVE FRONT DOOR SCUFF PLATE LH (for Regular Cab) (See page IR-40)**
29. **REMOVE FRONT DOOR SCUFF PLATE LH (for Access Cab) (See page IR-61)**
30. **REMOVE FRONT DOOR SCUFF PLATE LH (for Double Cab) (See page IR-12)**
31. **REMOVE FRONT DOOR SCUFF PLATE RH (for Regular Cab) (See page IR-41)**
32. **REMOVE FRONT DOOR SCUFF PLATE RH (for Access Cab) (See page IR-61)**
33. **REMOVE FRONT DOOR SCUFF PLATE RH (for Double Cab) (See page IR-12)**
34. **REMOVE COWL SIDE TRIM BOARD LH (for Regular Cab) (See page IR-40)**
35. **REMOVE COWL SIDE TRIM BOARD LH (for Access Cab) (See page IR-61)**
36. **REMOVE COWL SIDE TRIM BOARD LH (for Double Cab) (See page IR-12)**
37. **REMOVE COWL SIDE TRIM BOARD RH (for Regular Cab) (See page IR-40)**
38. **REMOVE COWL SIDE TRIM BOARD RH (for Access Cab) (See page IR-61)**
39. **REMOVE COWL SIDE TRIM BOARD RH (for Double Cab) (See page IR-12)**
40. **SEPARATE FRONT DOOR OPENING TRIM WEATHERSTRIP LH**
    (a) Separate the front door opening trim weatherstrip LH.

AC

41. **SEPARATE FRONT DOOR OPENING TRIM WEATHERSTRIP RH**
    (a) Separate the front door opening trim weatherstrip RH.
42. **REMOVE FRONT PILLAR GARNISH LH (for Regular Cab) (See page IR-41)**
43. **REMOVE FRONT PILLAR GARNISH LH (for Access Cab) (See page IR-62)**
44. **REMOVE FRONT PILLAR GARNISH LH (for Double Cab) (See page IR-13)**
45. **REMOVE FRONT PILLAR GARNISH RH (for Regular Cab) (See page IR-41)**
46. **REMOVE FRONT PILLAR GARNISH RH (for Access Cab) (See page IR-63)**
47. **REMOVE FRONT PILLAR GARNISH RH (for Double Cab) (See page IR-14)**
48. **REMOVE INSTRUMENT PANEL UNDER TRAY (for Pedal Type Parking Brake) (See page IP-9)**
49. **REMOVE INSTRUMENT PANEL HOLE COVER (for Lever Type Parking Brake) (See page IP-9)**
50. **REMOVE CONSOLE UPPER REAR PANEL SUB-ASSEMBLY (for Automatic Transmission on Separate Seat Type) (See page IP-9)**
51. **REMOVE CONSOLE UPPER REAR PANEL SUB-ASSEMBLY (for Manual Transmission on Separate Seat Type) (See page IP-9)**
52. **REMOVE REAR CONSOLE BOX ASSEMBLY (for Separate Seat Type) (See page IP-10)**
53. **REMOVE INSTRUMENT PANEL CUP HOLDER TRAY (for Automatic Transmission on Separate Seat Type) (See page IP-10)**
54. **REMOVE FRONT CONSOLE BOX (for Automatic Transmission on Separate Seat Type) (See page IP-10)**
55. **REMOVE FRONT CONSOLE BOX (for Manual Transmission on Separate Seat Type) (See page IP-11)**
56. **REMOVE FRONT CONSOLE BOX (for Automatic Transmission on Bench Seat Type) (See page IP-11)**
57. **REMOVE FRONT CONSOLE BOX (for Manual Transmission on Bench Seat Type) (See page IP-11)**
58. **REMOVE AIR CONDITIONING CONTROL ASSEMBLY (See page IP-12)**
59. **REMOVE RADIO RECEIVER ASSEMBLY (See page AV-69)**

60. **SEPARATE HOOD LOCK CONTROL LEVER SUB-ASSEMBLY (See page ED-3)**

61. **REMOVE LOWER NO. 1 INSTRUMENT PANEL FINISH PANEL (See page IP-12)**

62. **REMOVE INSTRUMENT CLUSTER FINISH PANEL SUB-ASSEMBLY (See page IP-12)**

63. **REMOVE COMBINATION METER ASSEMBLY (See page IP-13)**

64. **REMOVE INSTRUMENT CLUSTER CENTER FINISH PANEL SUB-ASSEMBLY (See page IP-13)**

65. **REMOVE GLOVE COMPARTMENT DOOR ASSEMBLY (See page IP-13)**

66. **REMOVE LOWER INSTRUMENT PANEL FINISH PANEL SUB-ASSEMBLY RH (See page IP-13)**

67. **REMOVE LOWER INSTRUMENT PANEL LH (See page IP-14)**

68. **REMOVE INSTRUMENT LOWER COVER SUB-ASSEMBLY (See page IP-14)**

69. **REMOVE INSTRUMENT SIDE PANEL RH (See page IP-14)**

70. **DISCONNECT PASSENGER AIRBAG CONNECTOR (See page RS-576)**

71. **REMOVE INSTRUMENT PANEL SUB-ASSEMBLY W/ PASSENGER AIRBAG ASSEMBLY (See page IP-14)**

72. **REMOVE NO. 1 HEATER TO REGISTER DUCT**
    (a) Remove the nut and heater to register duct.

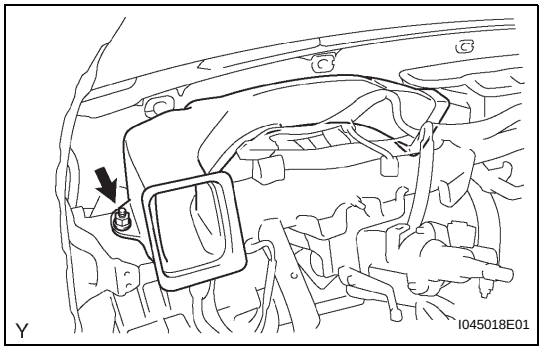

73. **REMOVE NO. 3 HEATER TO REGISTER DUCT**
    (a) Remove the nut and heater to register duct.

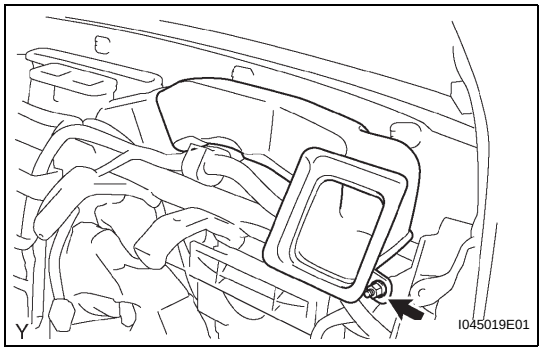

AC

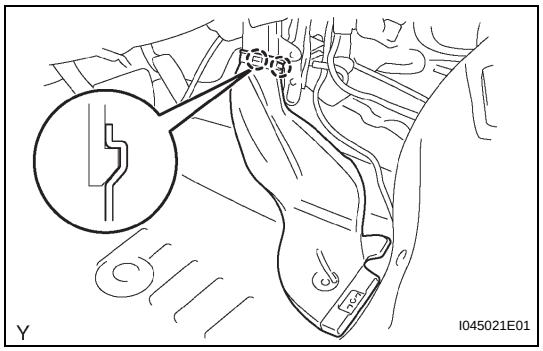

74. REMOVE NO. 2 REAR AIR DUCT (for Double Cab)

(a) Fold back the floor carpet.

(b) Disengage the 2 claws and remove the air duct rear.

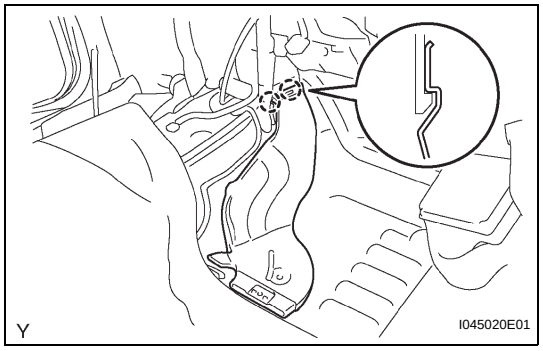

75. REMOVE NO. 1 REAR AIR DUCT (for Double Cab)

(a) Fold back the floor carpet.

(b) Disengage the 2 claws and remove the air duct rear.

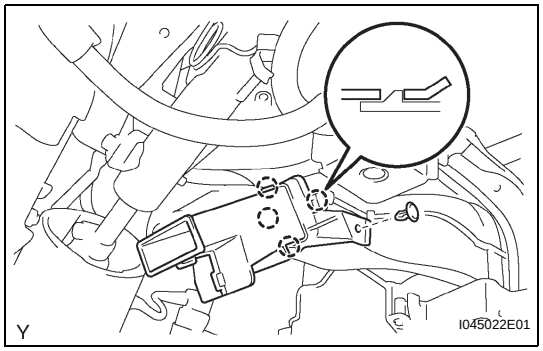

76. REMOVE AIR DUCT ASSEMBLY LH

(a) Remove the clip.

(b) Disengage the 4 claws and remove the air duct assembly heater.

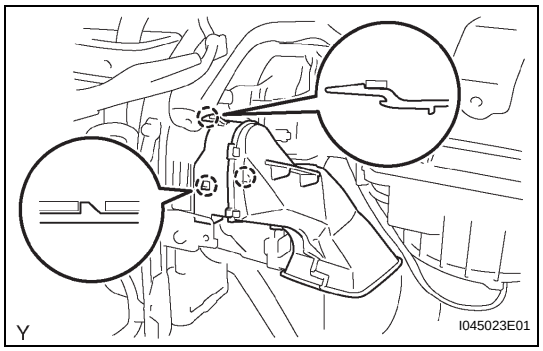

77. REMOVE AIR DUCT ASSEMBLY RH

(a) Disengage the 3 claws and remove the air duct assembly.

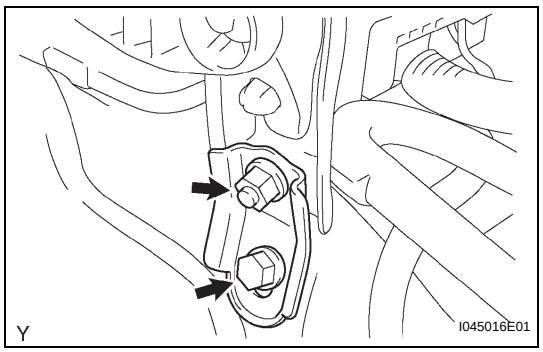

78. REMOVE NO. 1 INSTRUMENT PANEL BRACE MOUNTING BRACKET

(a) Remove the bolt, nut and instrument panel brace mounting bracket LH.

AC

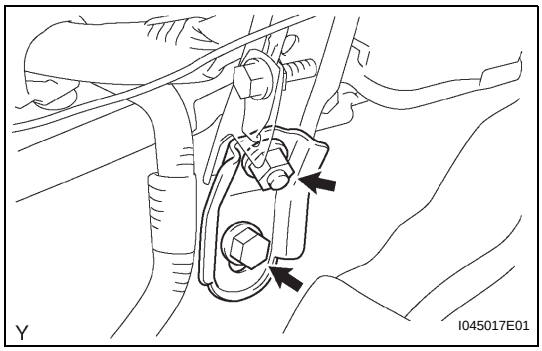

(b) Remove the bolt, nut and instrument panel brace mounting bracket RH.

79. REMOVE STEERING COLUMN HOLE COVER (See page SR-10)

80. SEPARATE STEERING SLIDING YOKE (See page SR-11)

81. REMOVE STEERING COLUMN ASSEMBLY (See page SR-11)

82. REMOVE PARKING BRAKE CONTROL LEVER ASSEMBLY (for Lever Type Parking Brake) (See page PB-6)

83. REMOVE ECM (for 2TR-FE) (See page ES-467)

84. REMOVE ECM (for 1GR-FE) (See page ES-428)

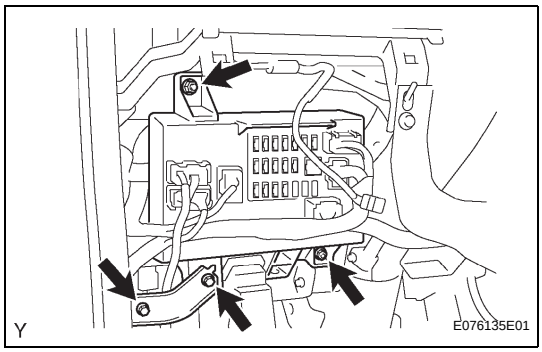

85. SEPARATE DRIVER SIDE JUNCTION BLOCK

(a) Remove the 2 bolts and bracket.

(b) Remove the 2 nuts and separate the driver side junction block assembly.

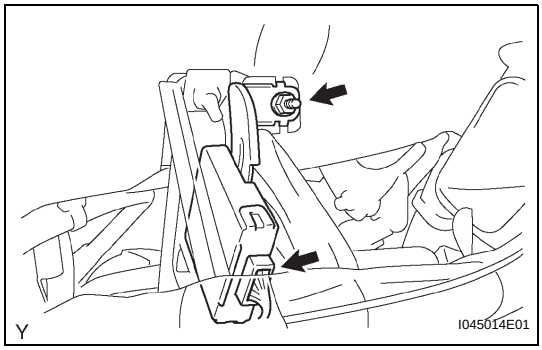

86. REMOVE TRANSPONDER KEY ECU ASSEMBLY

(a) Disconnect the connector.

(b) Remove the nut and the transponder key ECU assembly.

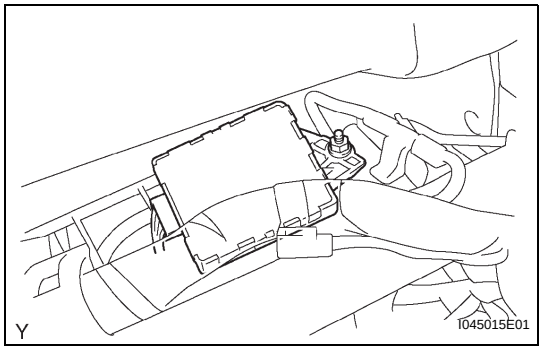

87. REMOVE AIR CONDITIONER AMPLIFIER ASSEMBLY

(a) Disconnect the connector.

(b) Remove the nut and the air conditioner amplifier assembly.

AC

88. REMOVE AIR CONDITIONING UNIT ASSEMBLY

(a) Disengage the 4 clamps and disconnect the 6 connectors from the air conditioning unit assembly.

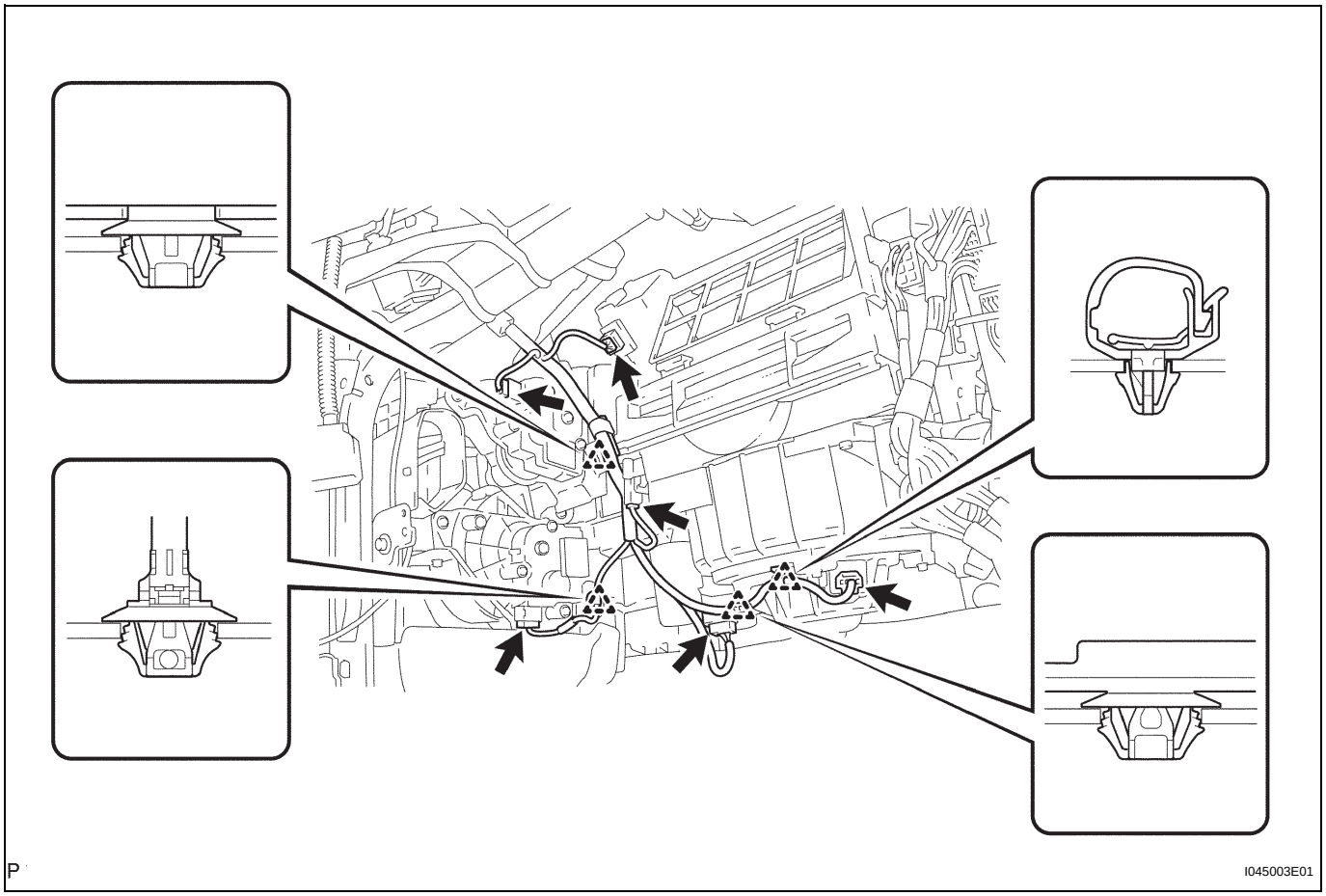

(b) Remove the 3 bolts.

(c) Disconnect the connector.

(d) Disconnect the 2 airbag connectors (see page 60-6).

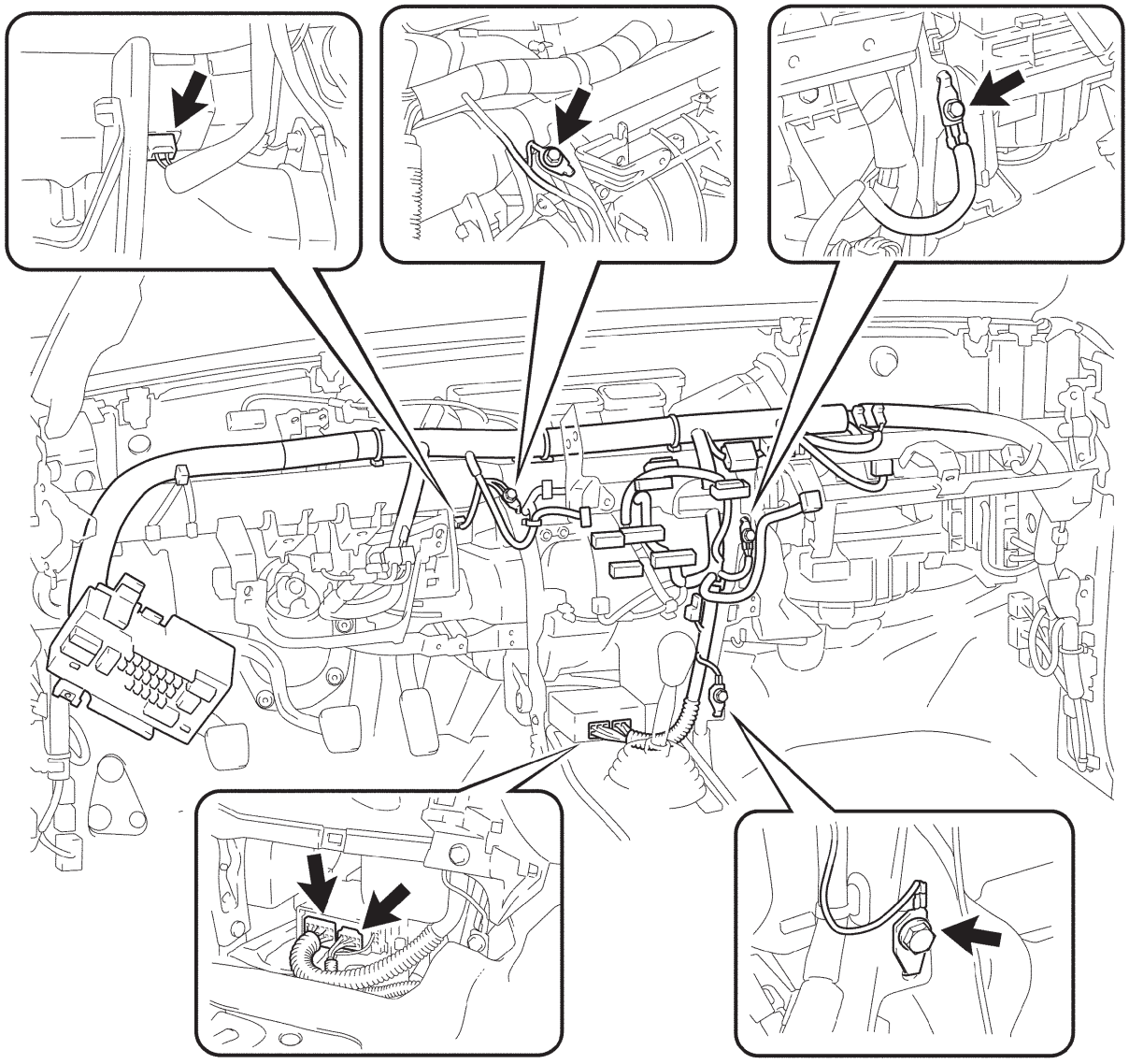

P

I045002E01

(e) Disengage the 20 clamps.

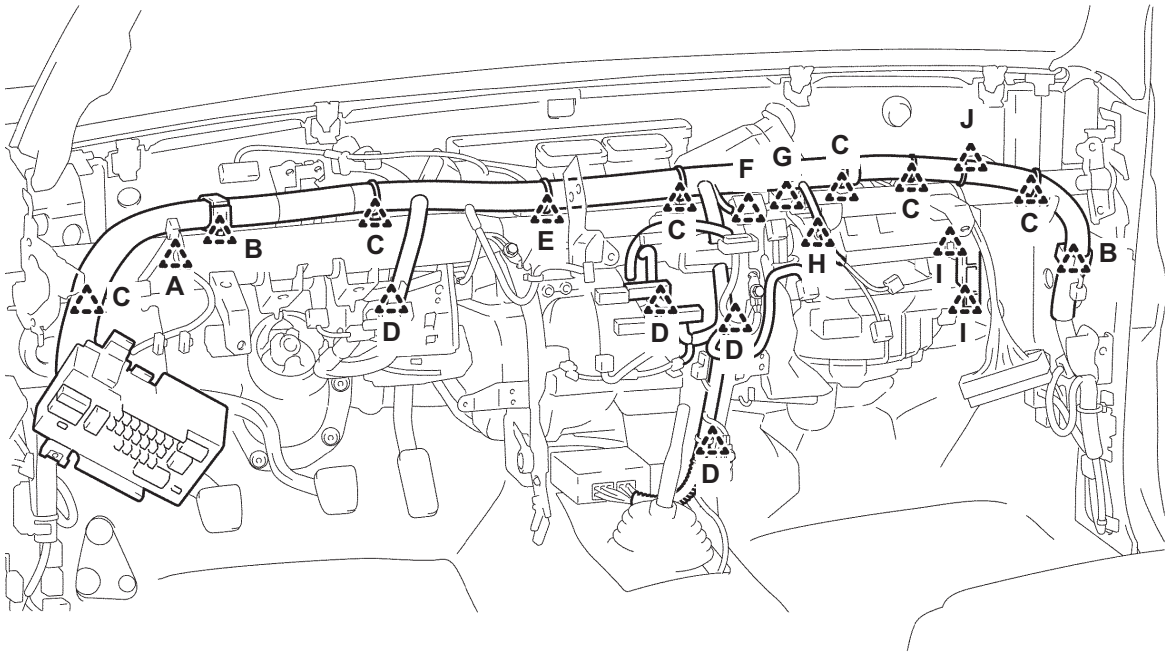

Type A: 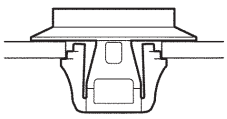	**Type B:** 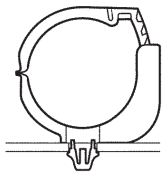	**Type C:** 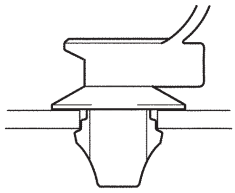	**Type D:** 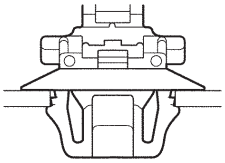
Type E: 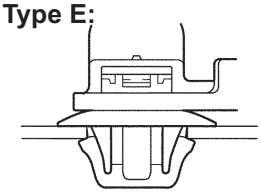	**Type F:** 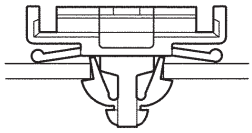	**Type G:** 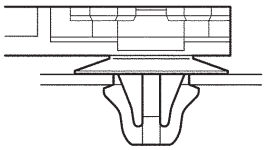	**Type H:** 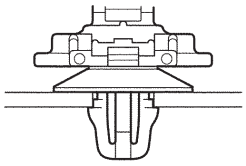
Type I: 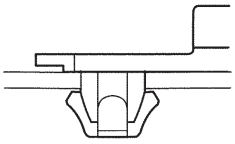	**Type J:** 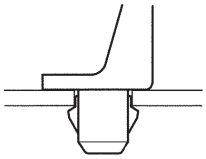		

P

I045001E01

AC

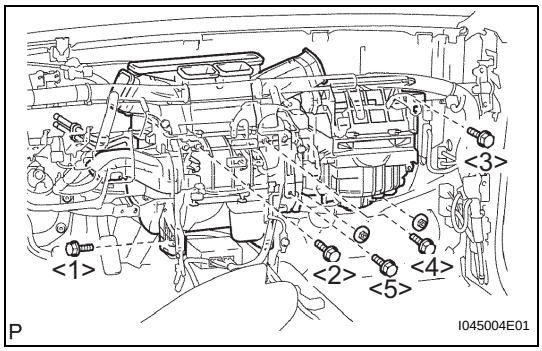

(f) Remove the 5 bolts and 2 nuts.
(g) Remove the 2 caps and 7 bolts.
(h) Disengage the reinforcement hook of the air conditioning unit, and remove the reinforcement.
(i) Remove the air conditioner unit assembly.

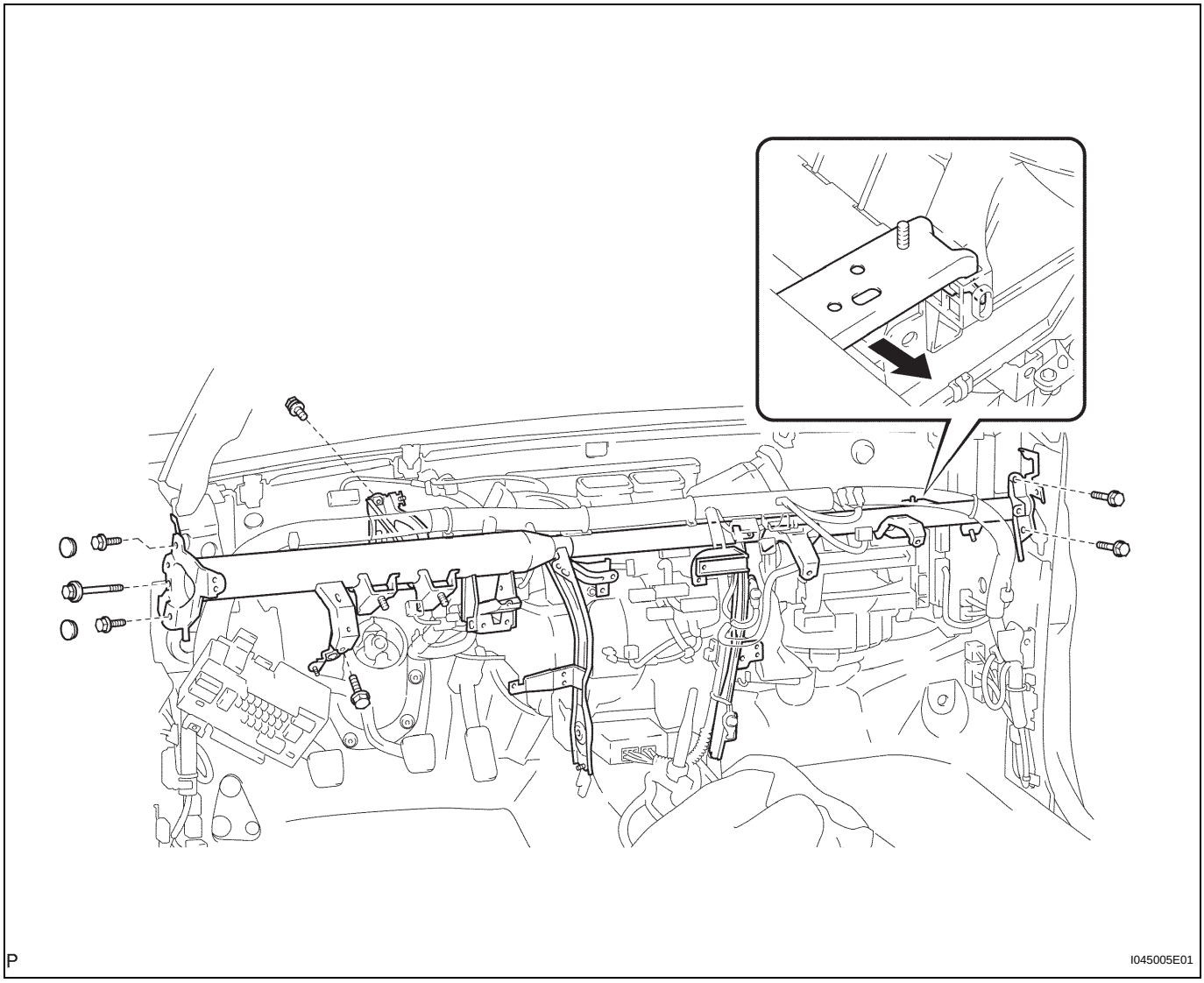

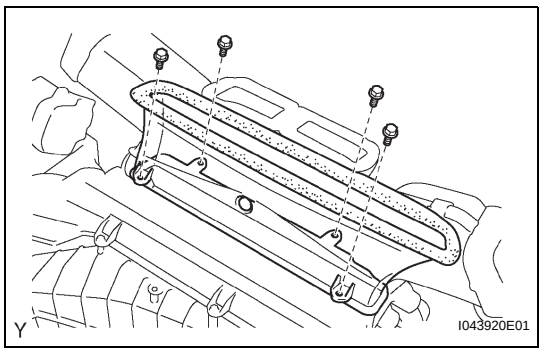

DISASSEMBLY

1. REMOVE DEFROSTER NOZZLE ASSEMBLY LOWER

(a) Remove the 4 bolts and the defroster nozzle assembly lower.

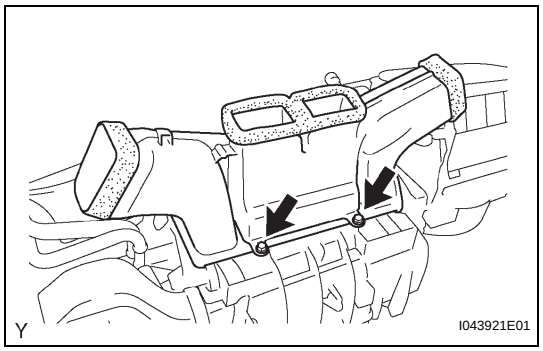

2. REMOVE HEATER TO REGISTER CENTER DUCT

(a) Remove the 2 bolts and heater to register duct center.

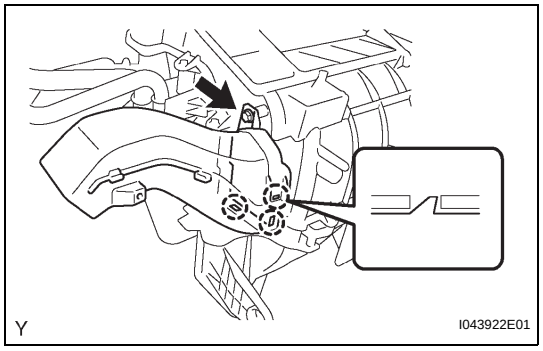

3. REMOVE NO. 1 AIR DUCT

(a) Remove the bolt.

(b) Disengage the 3 claws and remove the air duct.

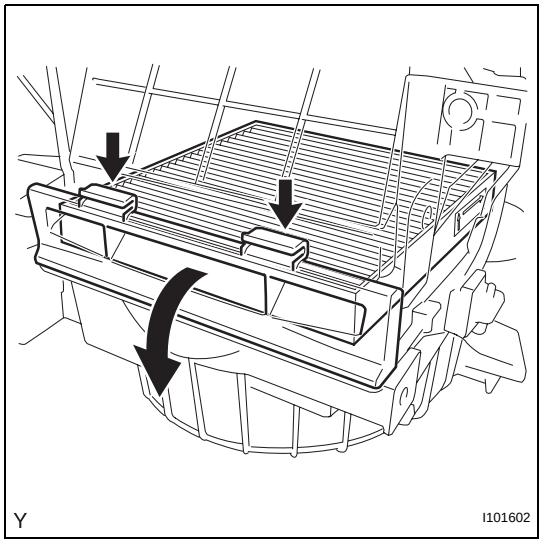

4. REMOVE AIR FILTER

(a) Push down on the 2 tabs and open the filter door.

(b) Remove the air filter.

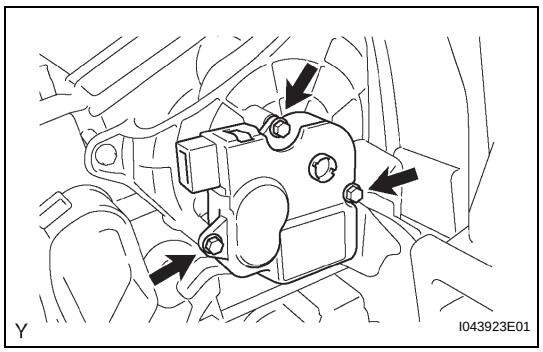

5. REMOVE MODE CONTROL SERVO MOTOR

(a) Remove the 3 bolts and mode control servo motor.

AC

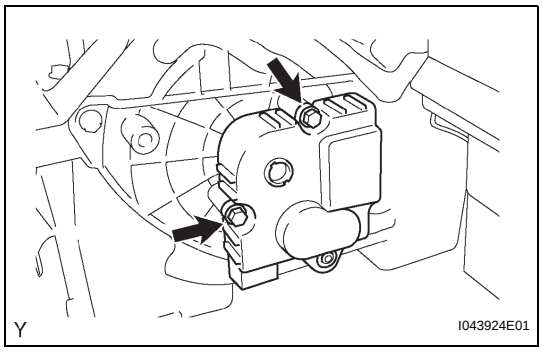

6. REMOVE AIR MIX CONTROL SERVO MOTOR

(a) Remove the 2 bolts and air mix control servo motor.

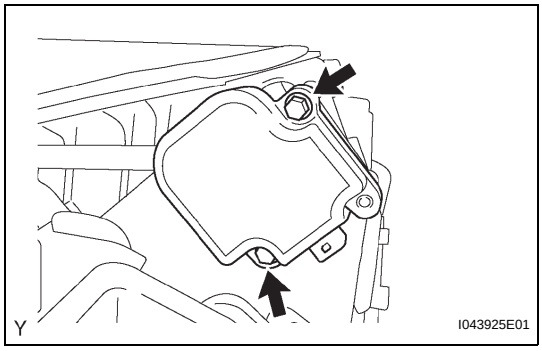

7. REMOVE AIR INLET CONTROL SERVO MOTOR

(a) Remove the 2 bolts and air inlet control servo motor.

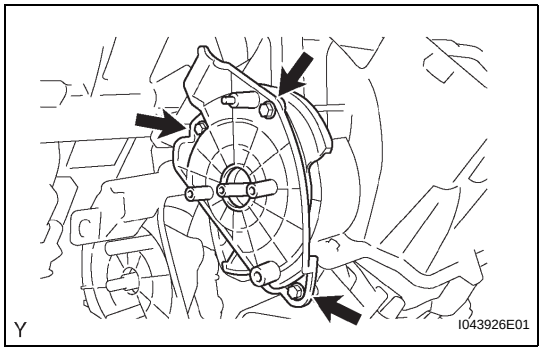

8. REMOVE HEATER RADIATOR ASSEMBLY

(a) Remove the 3 bolts and temperature mounting plate.

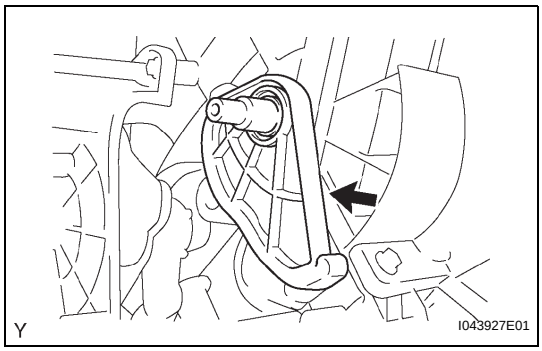

(b) Remove the temperature cam.

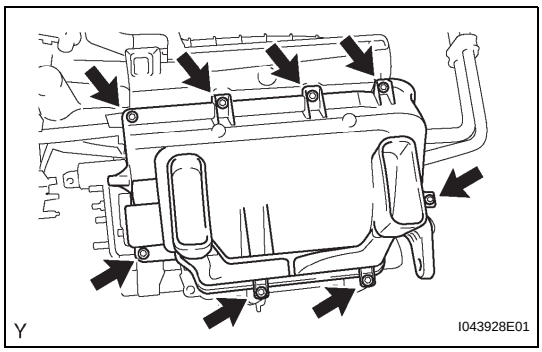

(c) Remove the 8 bolts and heater cover case.

AC

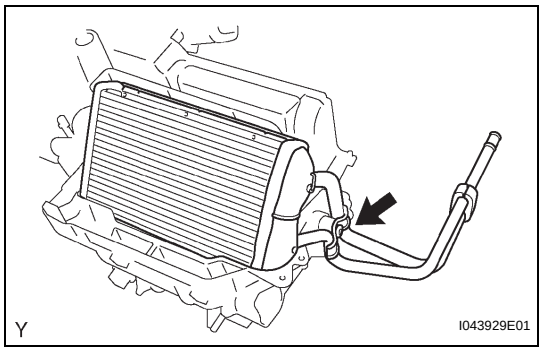

(d) Using "Torx" socket wrench T30, remove the bolt, clamp and heater radiator assembly.

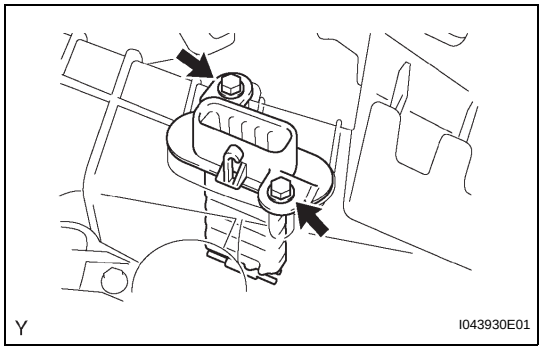

9. REMOVE BLOWER RESISTOR

(a) Remove the 2 bolts and blower resistor.

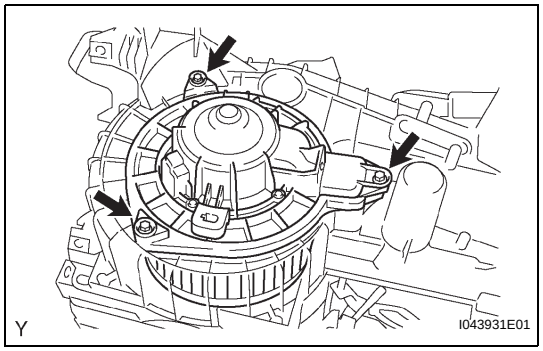

10. REMOVE BLOWER MOTOR

(a) Remove the 3 bolts and blower motor.

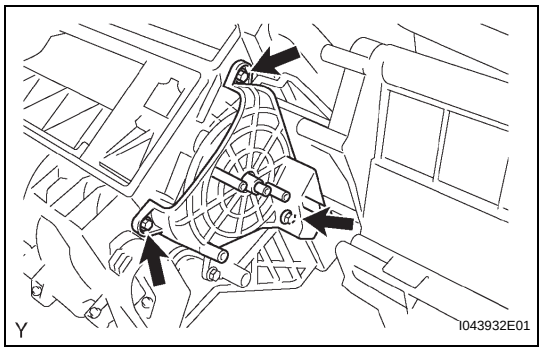

11. REMOVE EVAPORATOR CORE

(a) Remove the 3 bolts and mode mounting plate.

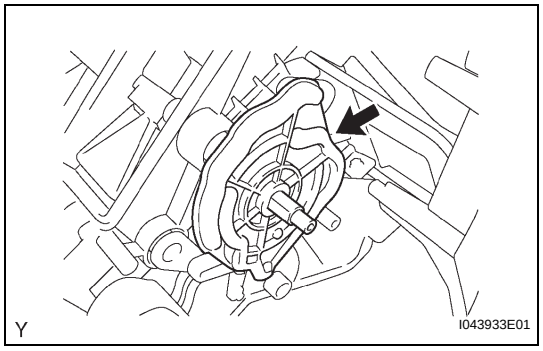

(b) Remove the mode cam.

AC

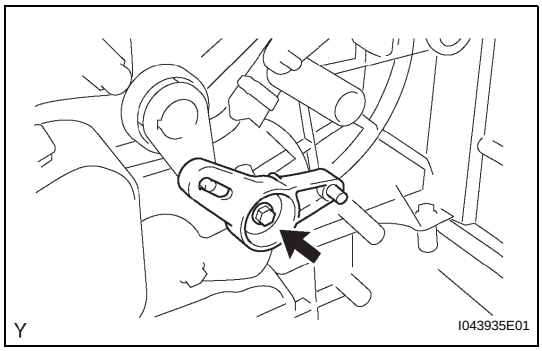

(c) Remove the bolt and heater pivot.

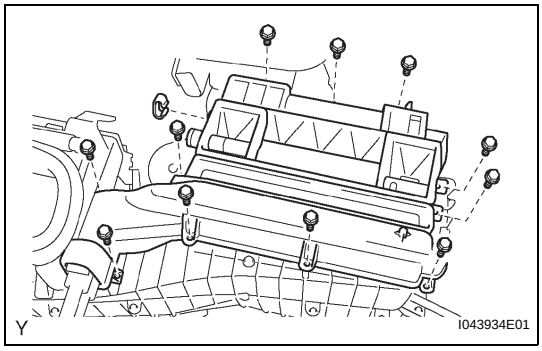

(d) Disengage the clip and remove the 11 bolts and mode case.

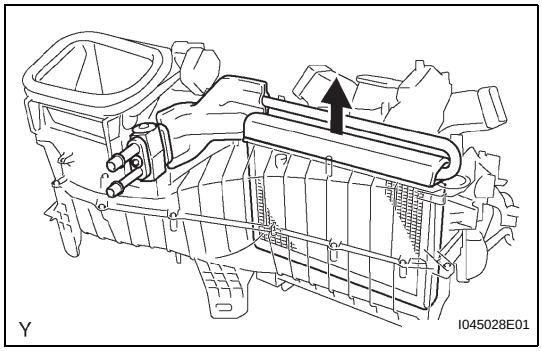

(e) Remove the evaporator core.
HINT:
If a new evaporator is installed, add compressor oil to the evaporator as follows.
Compressor oil:
RL-897 or equivalent
Add 40 cc (1.4 fl.oz.)

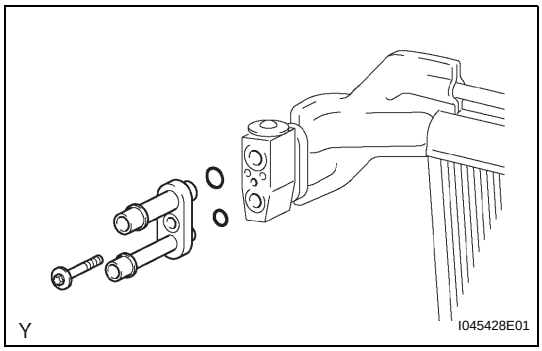

12. REMOVE VALVE TO CONNECTOR TUBE
(a) Using "Torx" socket wrench E10, remove the bolt and valve to connector tube.
(b) Remove the 2 seal washers from the air conditioning tube assembly.

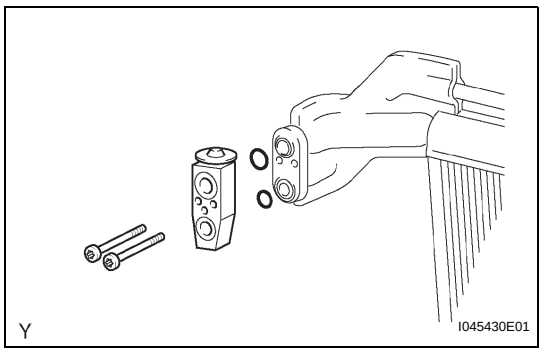

13. REMOVE EXPANSION VALVE
(a) Using "Torx" socket wrench T25, remove the 2 bolts and expansion valve.
(b) Remove the 2 seal washers from the expansion valve.

AC

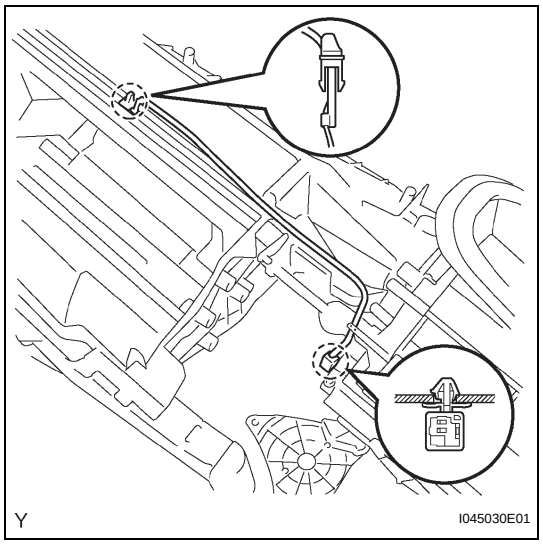

14. REMOVE COOLER THERMISTOR SENSOR

(a) Disengage the 2 clamps and remove the cooler thermistor sensor.

15. REMOVE NO. 1 COOLER UNIT DRAIN HOSE

REASSEMBLY

1. INSTALL NO. 1 COOLER UNIT DRAIN HOSE

2. INSTALL COOLER THERMISTOR SENSOR

(a) Engage the 2 clamps and install the cooler thermistor sensor.

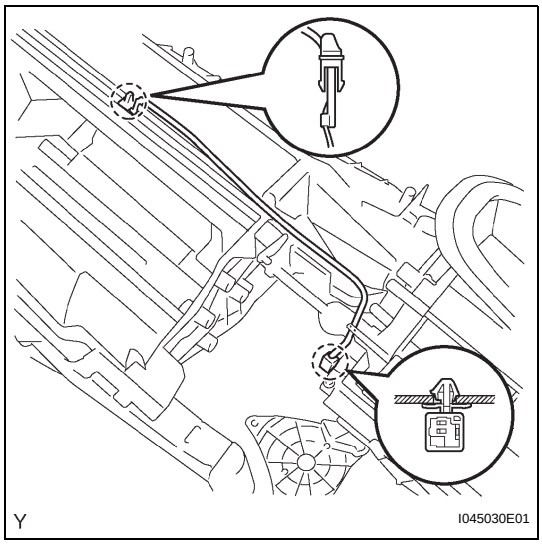

3. INSTALL EXPANSION VALVE

(a) Apply sufficient compressor oil to 2 new seal washers and the fitting surface of the expansion valve.
Compressor oil:
RL-897 or equivalent

(b) Install the 2 seal washers onto the expansion valve.

(c) Using "Torx" socket wrench T25, install the expansion valve with the 2 bolts.
Torque: 7.0 N*m (71 kgf*cm, 62 in.*lbf)

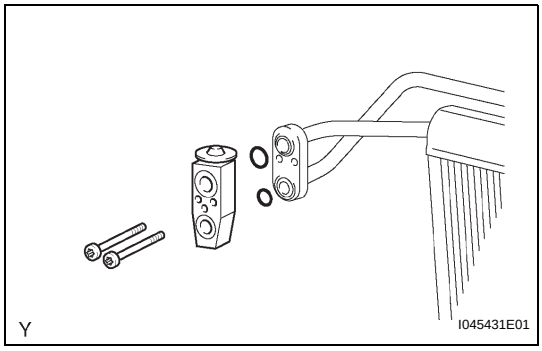

4. INSTALL VALVE TO CONNECTOR TUBE

(a) Apply sufficient compressor oil to 2 new seal washers and fitting surface of the valve to connector tube.
Compressor oil:
RL-897 or equivalent

(b) Install the 2 seal washers onto the valve to connector tube.

(c) Using "Torx" socket wrench E10, install the air conditioning tube assembly with the bolt.
Torque: 25 N*m (255 kgf*cm, 18 ft.*lbf)

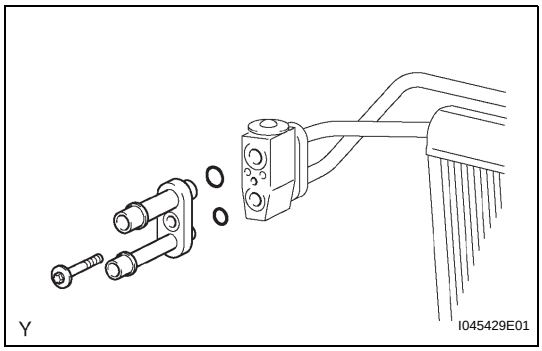

5. INSTALL EVAPORATOR CORE

(a) Attach the evaporator side seal to both sides of the evaporator.

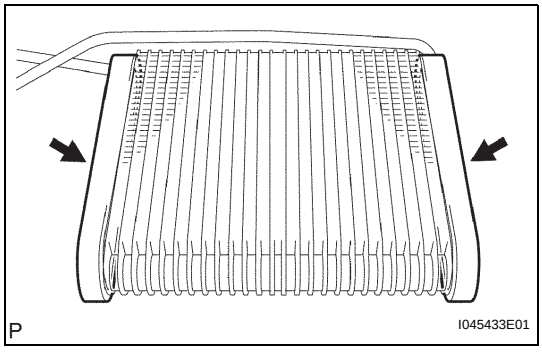

AC

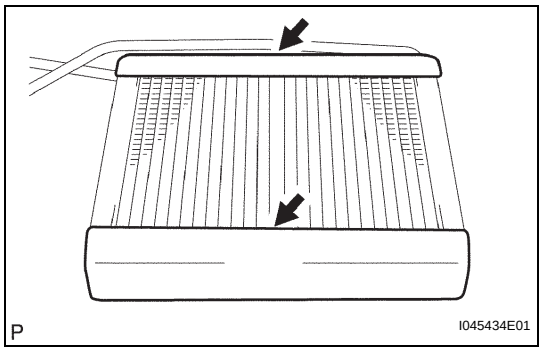

(b) Attach the evaporator top seal to the upper side and the evaporator bottom seal to the lower side of the evaporator.

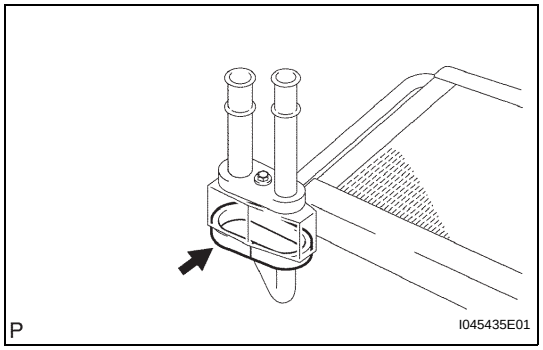

(c) Align and apply the expansion valve seal to the periphery of the expansion valve protrusions on the back side of the expansion valve.

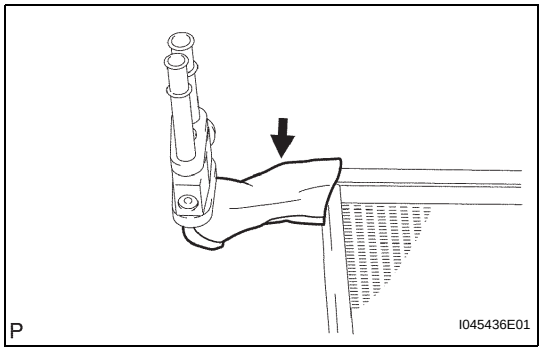

(d) Align and attach the 2 different seals to the evaporator inlet and outlet pipes.

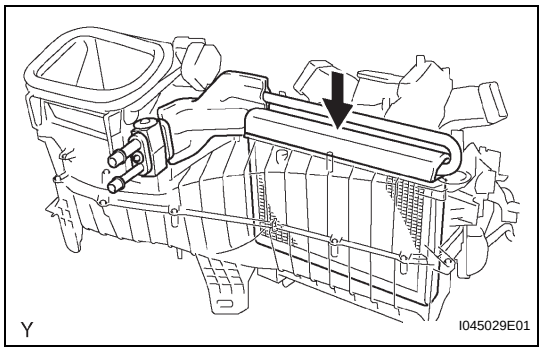

(e) Install the evaporator core.

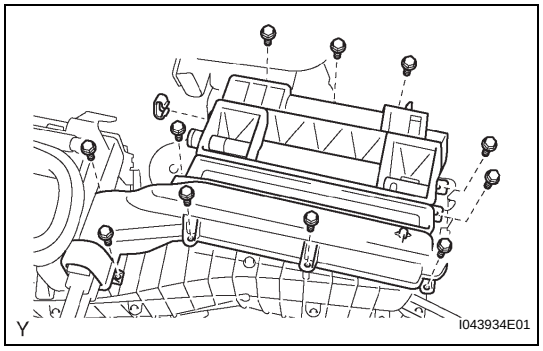

(f) Install the mode case with the clip and 11 bolts.
Torque: 2.0 N*m (20 kgf*cm, 18 in.*lbf)

AC

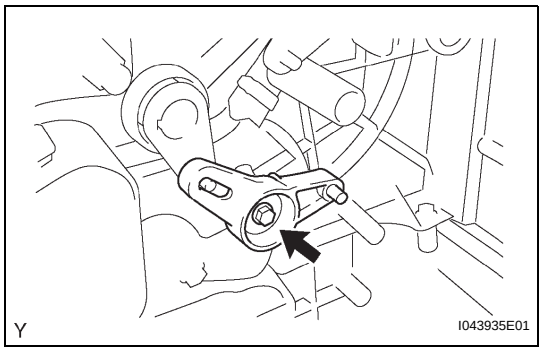

(g) Install the heater pivot with the bolt.
Torque: 2.0 N*m (20 kgf*cm, 18 in.*lbf)

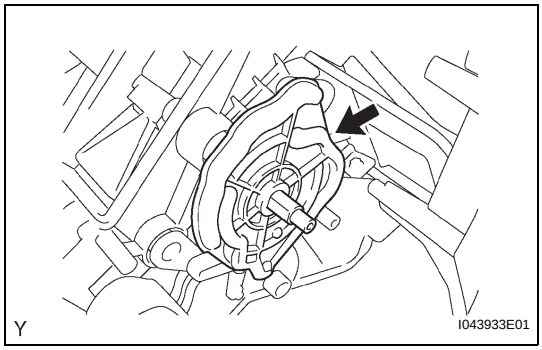

(h) Install the mode cam.

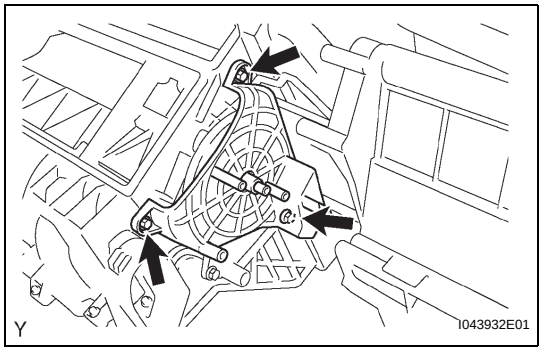

(i) Install the mode mounting plate with the 3 bolts.
Torque: 2.0 N*m (20 kgf*cm, 18 in.*lbf)

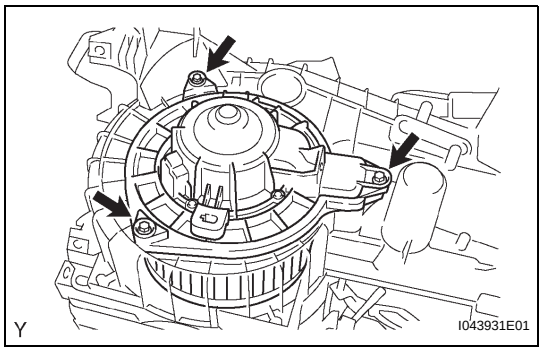

6. INSTALL BLOWER MOTOR

(a) Install the blower motor with the 3 bolts.
Torque: 2.0 N*m (20 kgf*cm, 18 in.*lbf)

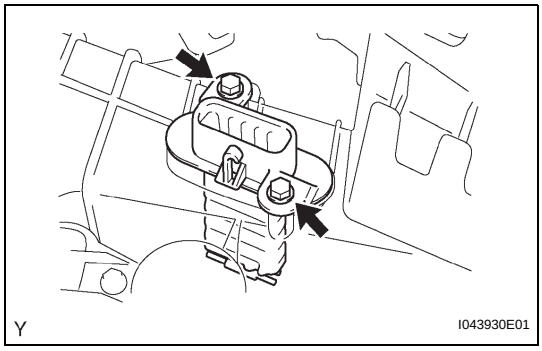

7. INSTALL BLOWER RESISTOR

(a) Install the blower resistor with the 2 bolts.
Torque: 2.0 N*m (20 kgf*cm, 18 in.*lbf)

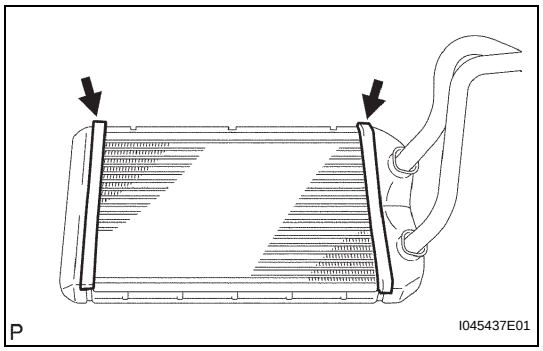

8. INSTALL HEATER RADIATOR ASSEMBLY

(a) Apply the heater core short seal to both sides of the heater core.

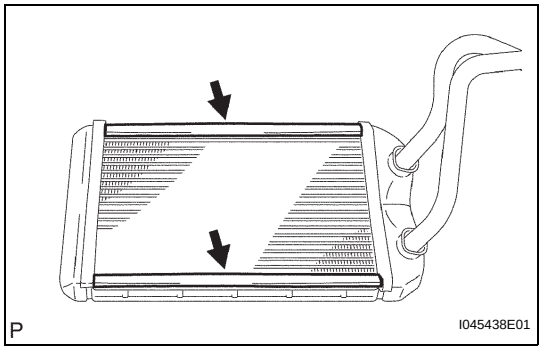

(b) Apply the heater core long seal to the upper and lower sides of the heater core.

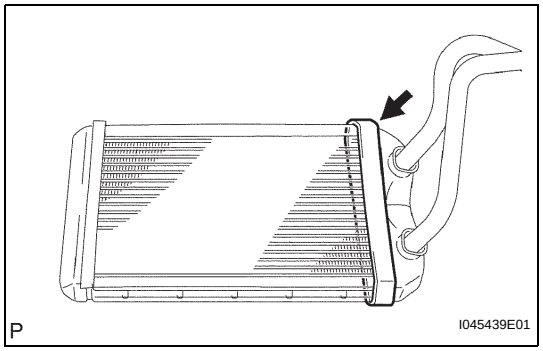

(c) Apply the heater core header seal to the right side of the heater core.

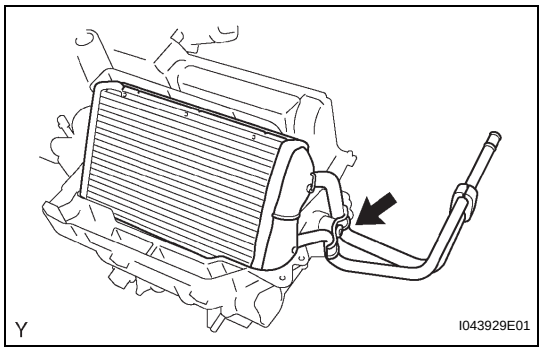

(d) Using "Torx" socket wrench T30, install the heater radiator assembly with the bolt and clamp.
Torque: 4.0 N*m (41 kgf*cm, 35 in.*lbf)

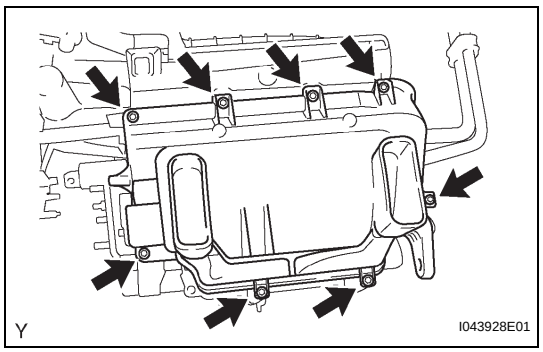

(e) Install the heater cover case with the 8 bolts.
Torque: 2.0 N*m (20 kgf*cm, 18 in.*lbf)

AC

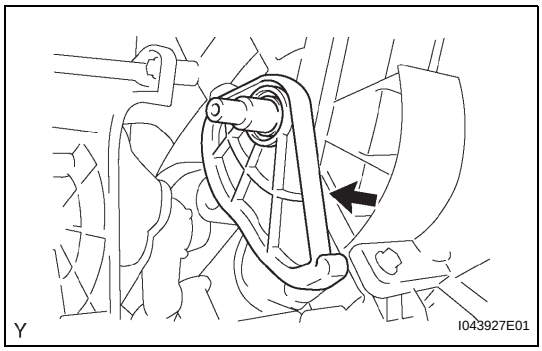

(f) Install the temperature cam.

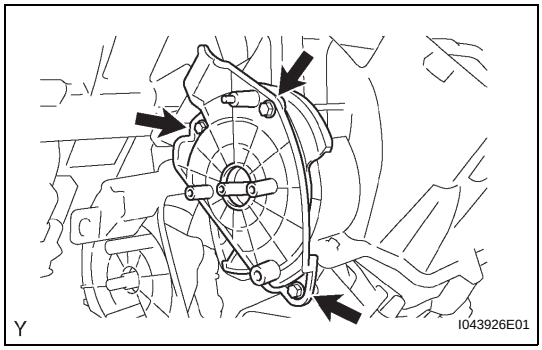

(g) Install the temperature mounting plate with the 3 bolts.
Torque: 2.0 N*m (20 kgf*cm, 18 in.*lbf)

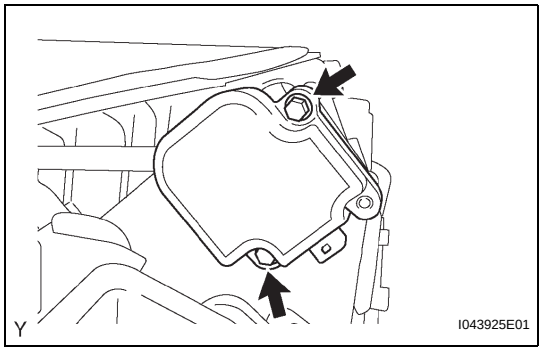

9. INSTALL AIR INLET CONTROL SERVO MOTOR

(a) Install the air inlet control servo motor with the 2 bolts.
Torque: 2.0 N*m (20 kgf*cm, 18 in.*lbf)

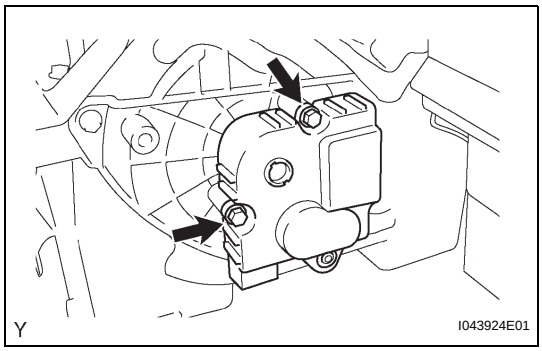

10. INSTALL AIR MIX CONTROL SERVO MOTOR

(a) Install the air mix control servo motor with the 2 bolts.
Torque: 2.0 N*m (20 kgf*cm, 18 in.*lbf)

AC

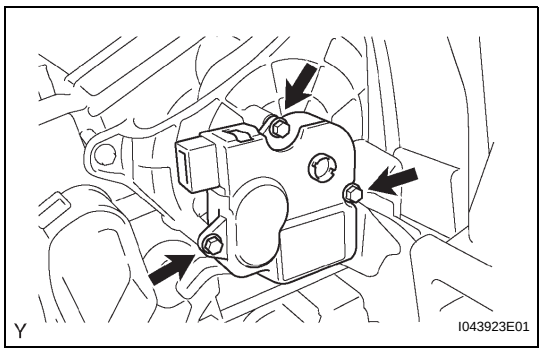

11. INSTALL MODE CONTROL SERVO MOTOR

(a) Install the mode control servo motor with the 3 bolts.
Torque: 2.0 N*m (20 kgf*cm, 18 in.*lbf)

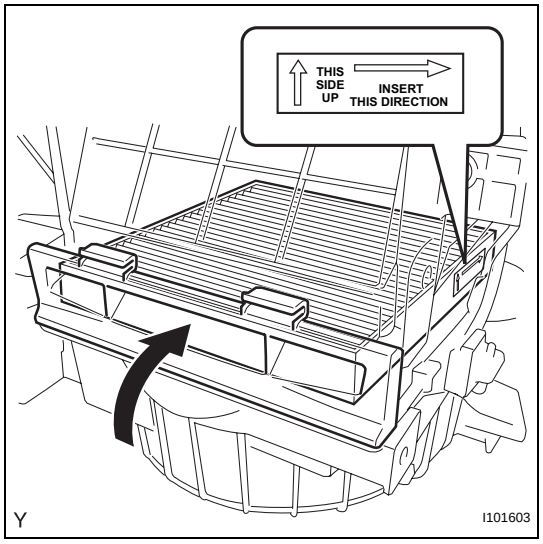

12. INSTALL AIR FILTER

(a) Install the air filter.

NOTICE:

Check the installation direction as shown and install the air filter.

(b) Engage the 2 tabs and close the filter door.

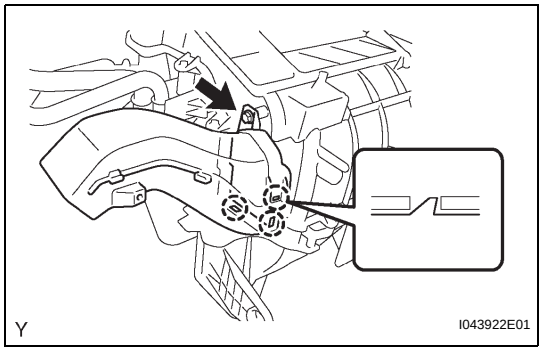

13. INSTALL NO. 1 AIR DUCT

(a) Engage the 3 claws and install the air duct.

(b) Install the bolt.

Torque: 2.0 N*m (20 kgf*cm, 18 in.*lbf)

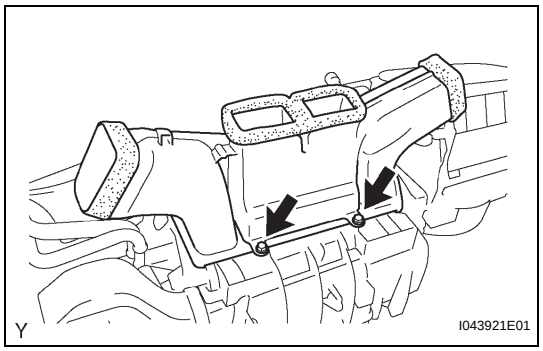

14. INSTALL HEATER TO REGISTER CENTER DUCT

(a) Install the heater to register duct center with the 2 bolts.

Torque: 2.0 N*m (20 kgf*cm, 18 in.*lbf)

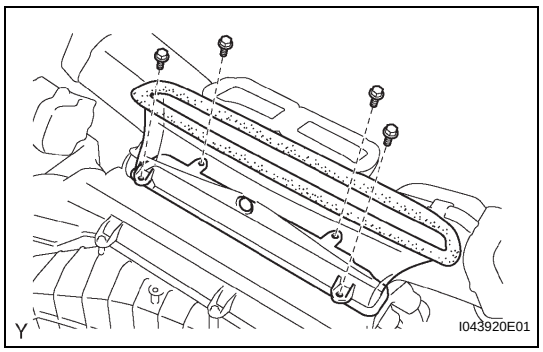

15. INSTALL DEFROSTER NOZZLE ASSEMBLY LOWER

(a) Install the defroster nozzle assembly lower with the 4 bolts.

Torque: 2.0 N*m (20 kgf*cm, 18 in.*lbf)

INSTALLATION

1. INSTALL AIR CONDITIONING UNIT ASSEMBLY

(a) Provisionally install the air conditioning unit assembly.

(b) Insert the bracket hook into the holes of the reinforcement bracket, and provisionally install the reinforcement.

(c) Install the instrument panel reinforcement with the 7 bolts.

(d) Install the 2 caps.

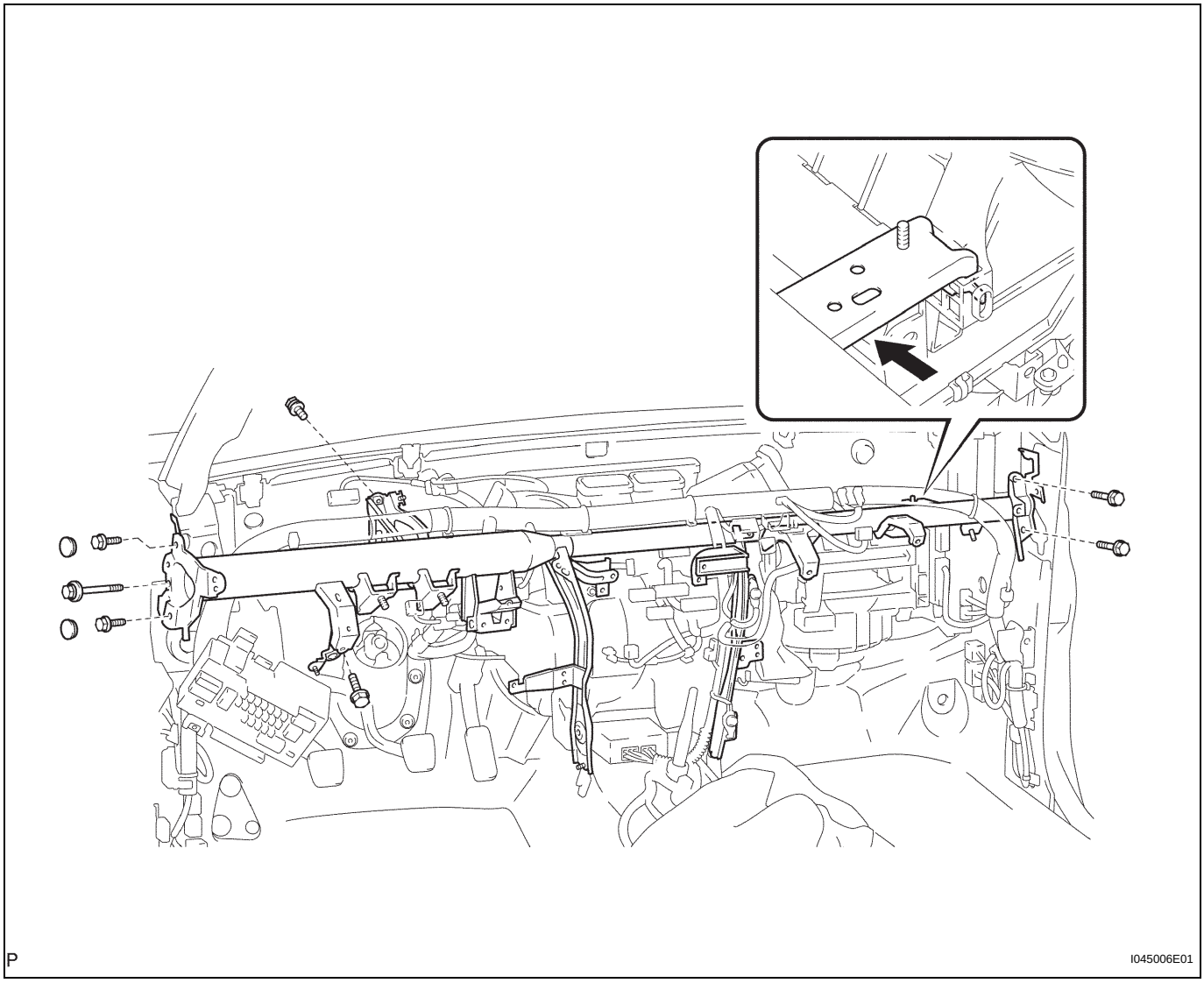

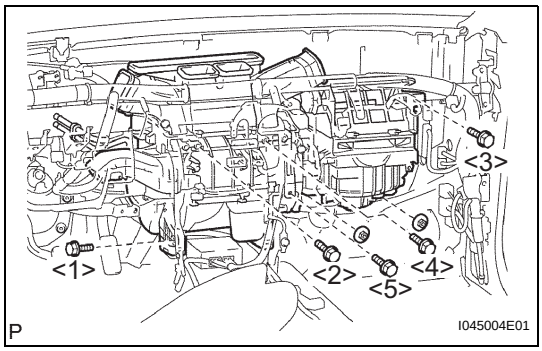

(e) Install the 5 bolts.
Torque: 5.0 N*m (51 kgf*cm, 44 in.*lbf)
NOTICE:
Tighten the bolts in the sequence order shown in the illustration to install the air conditioner unit assembly.

(f) Install the 2 nuts.
Torque: 5.0 N*m (51 kgf*cm, 44 in.*lbf)

(g) Engage the 20 clamps.

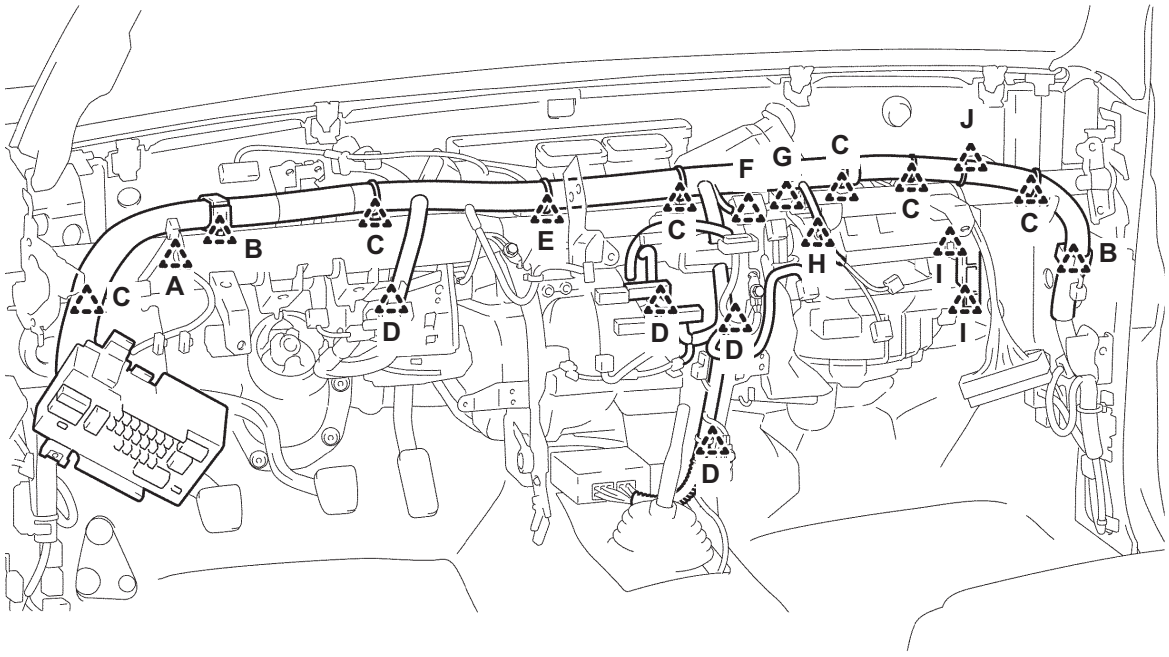

Type A: 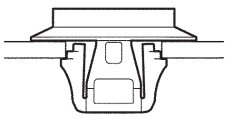	**Type B:** 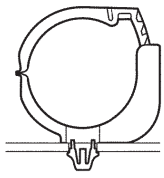	**Type C:** 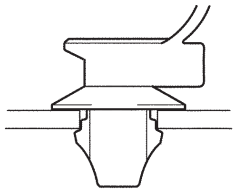	**Type D:** 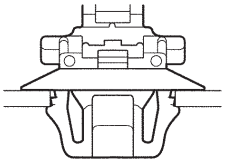
Type E: 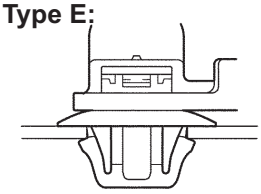	**Type F:** 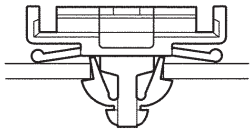	**Type G:** 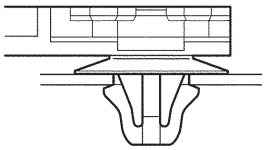	**Type H:** 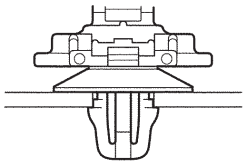
Type I: 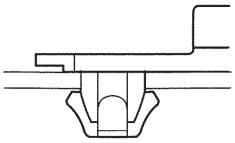	**Type J:** 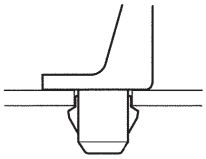		

P

I045001E01

(h) Connect the connector.
(i) Connect the 2 airbag connectors (see page 60-6).

AC

(j) Install the 3 bolts.

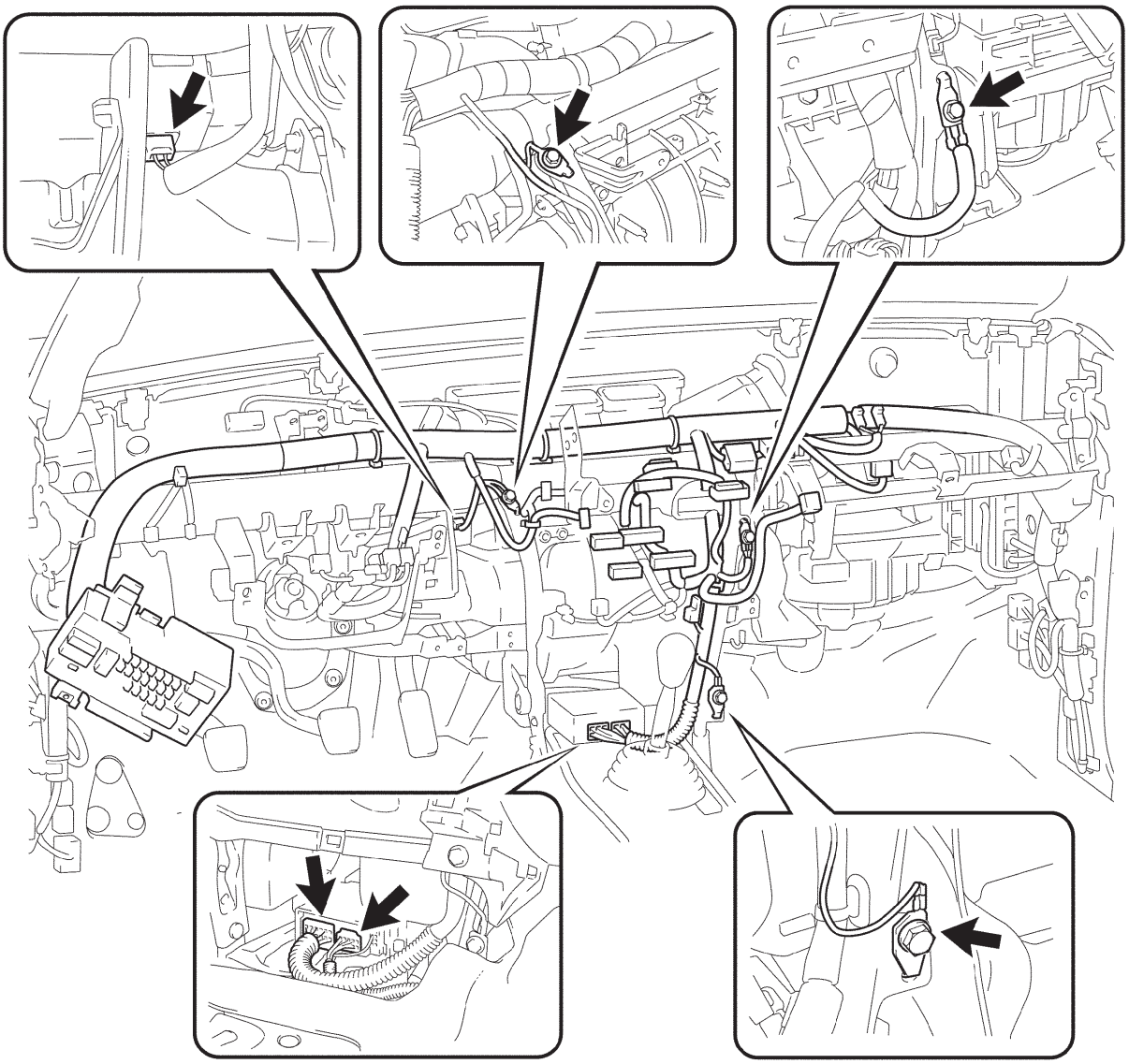

P

I045002E01

(k) Engage the 2 clamps and connect the 6 connectors to the air conditioning unit assembly.

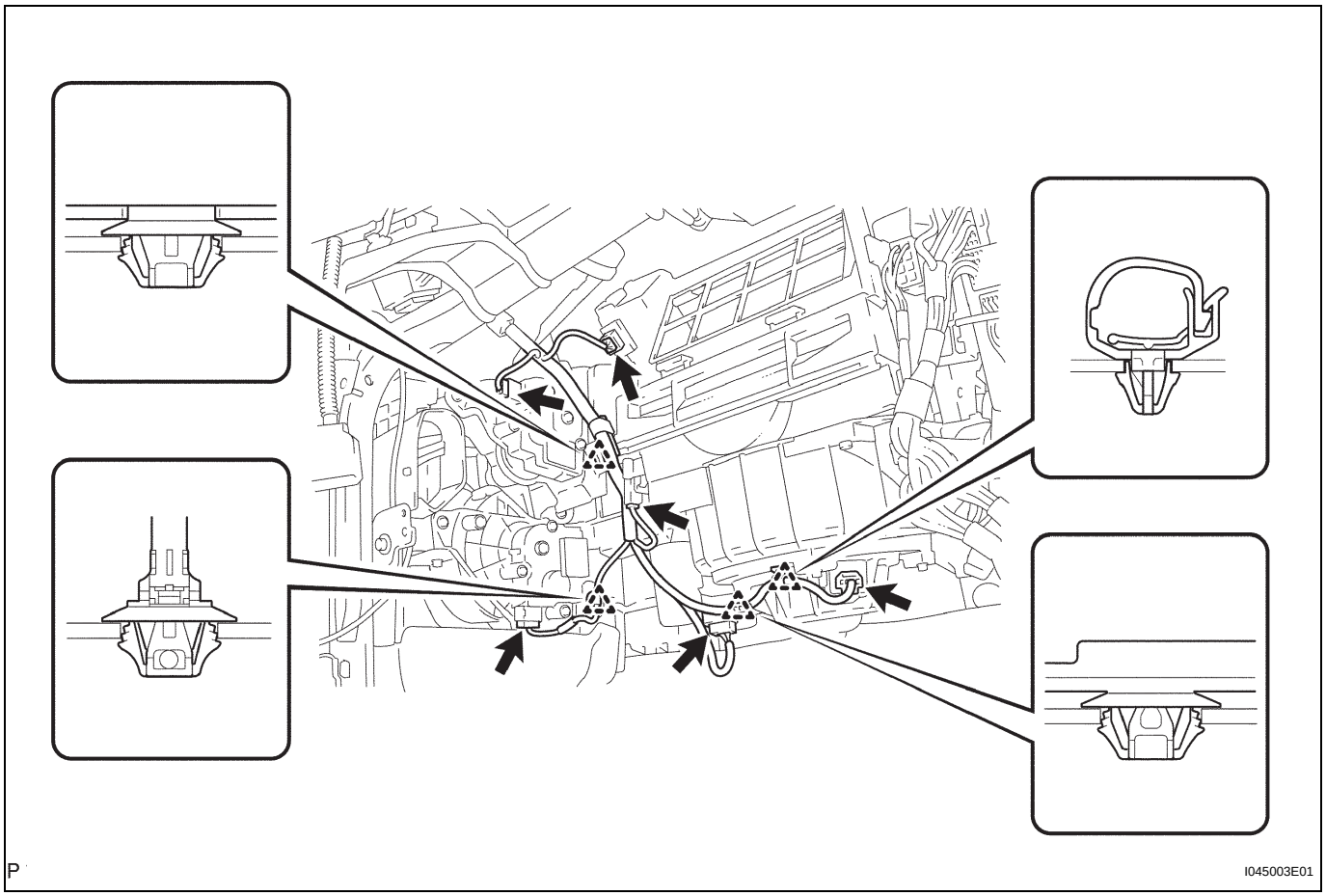

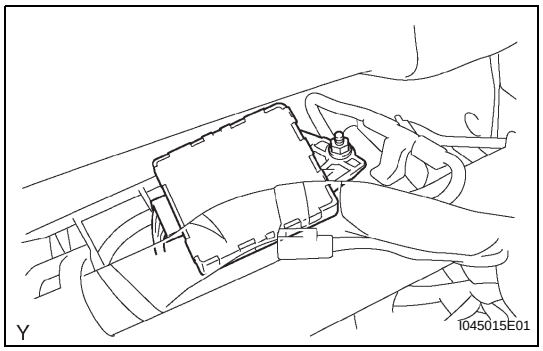

2. INSTALL AIR CONDITIONER AMPLIFIER ASSEMBLY

(a) Install the air conditioner amplifier assembly with the nut.

Torque: 7.0 N*m (71 kgf*cm, 62 in.*lbf)

(b) Connect the connector.

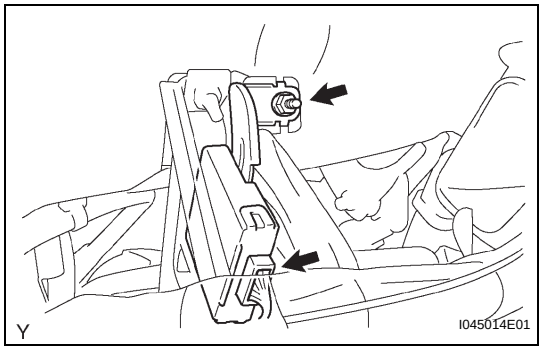

3. INSTALL TRANSPONDER KEY ECU ASSEMBLY

(a) Install the transponder key ECU assembly with the nut.

(b) Connect the connector.

AC

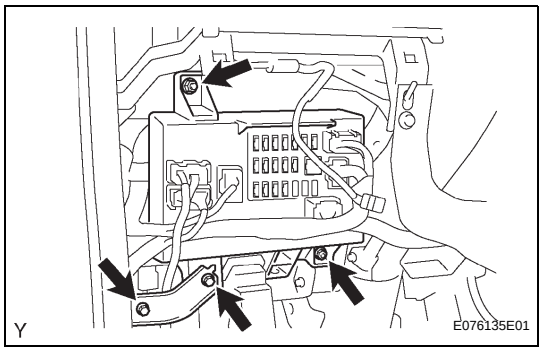

4. **INSTALL DRIVER SIDE JUNCTION BLOCK**
   (a) Install the driver side junction block assembly with the 2 nuts.
   Torque: 8.0 N*m (82 kgf*cm, 71 in.*lbf)
   (b) Install the bracket with the 2 bolts.
   Torque: 8.0 N*m (82 kgf*cm, 71 in.*lbf)
5. **INSTALL ECM (for 2TR-FE) (See page ES-467)**
6. **INSTALL ECM (for 1GR-FE) (See page ES-429)**
7. **INSTALL PARKING BRAKE CONTROL LEVER ASSEMBLY (for Lever Type Parking Brake) (See page PB-7)**
8. **INSTALL STEERING COLUMN ASSEMBLY (See page SR-16)**
9. **INSTALL STEERING SLIDING YOKE (See page SR-17)**
10. **INSTALL STEERING COLUMN HOLE COVER (See page SR-17)**

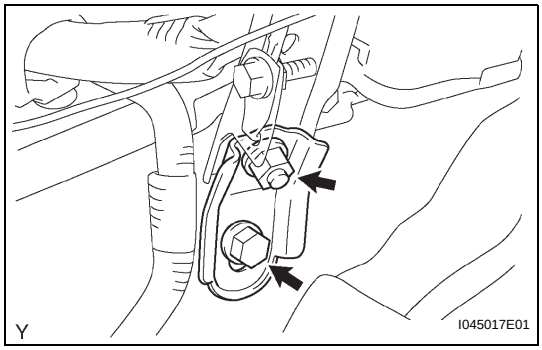

11. **INSTALL NO. 1 INSTRUMENT PANEL BRACE MOUNTING BRACKET**
    (a) Install the instrument panel brace mounting bracket RH with the bolt and nut.

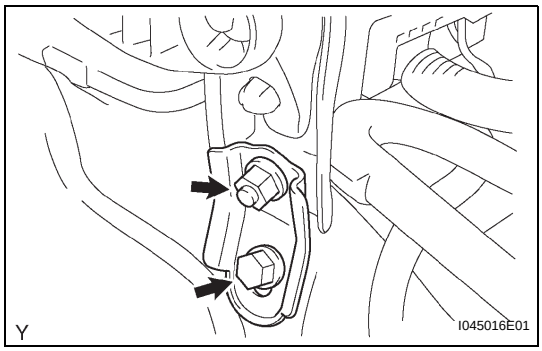

    (b) Install the instrument panel brace mounting bracket LH with the bolt and nut.

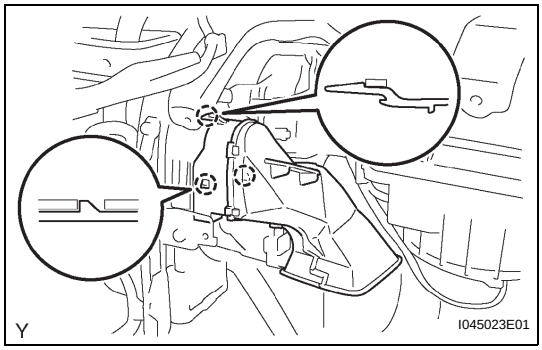

12. **INSTALL AIR DUCT ASSEMBLY RH**
    (a) Engage the 3 claws and install the air duct assembly.

AC

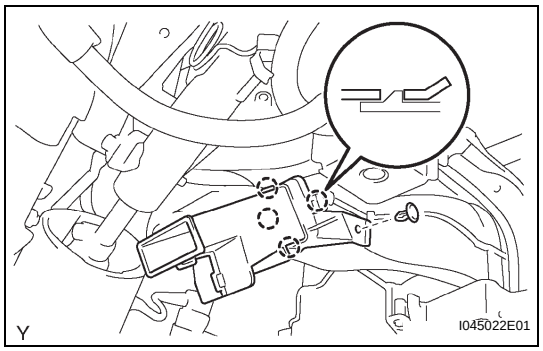

13. INSTALL AIR DUCT ASSEMBLY LH

(a) Engage the 4 claws and remove the air duct assembly heater.

(b) Engage the clip.

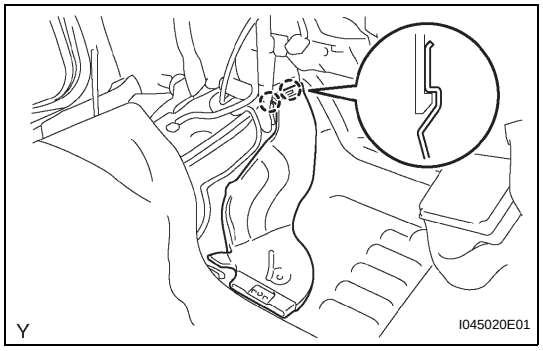

14. INSTALL NO. 1 REAR AIR DUCT (for Double Cab)

(a) Engage the 2 claws and install the air duct rear.

(b) Put the floor carpet back down.

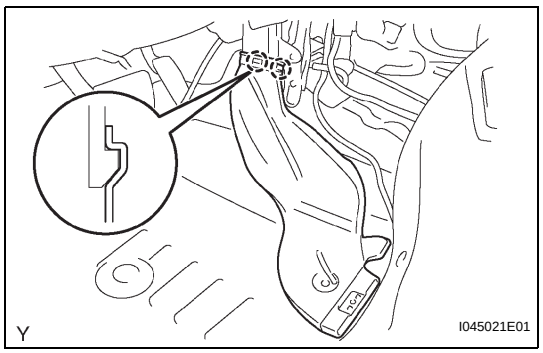

15. INSTALL NO. 2 REAR AIR DUCT (for Double Cab)

(a) Engage the 2 claws and install the air duct rear.

(b) Put the floor carpet back down.

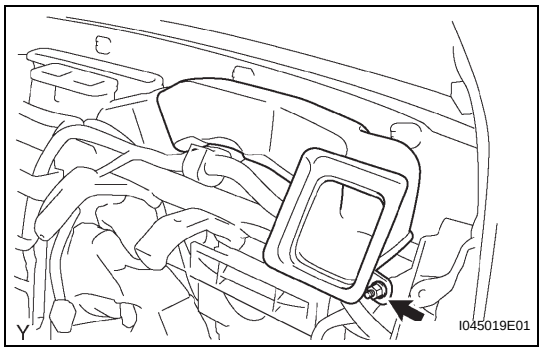

16. INSTALL NO. 3 HEATER TO REGISTER DUCT

(a) Install the heater to register duct with the nut.

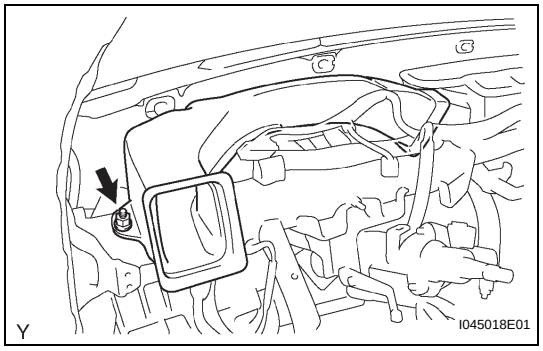

17. INSTALL NO. 1 HEATER REGISTER DUCT

(a) Install the heater to register duct with the nut.

18. INSTALL INSTRUMENT PANEL SUB-ASSEMBLY W/ PASSENGER AIRBAG ASSEMBLY (See page IP-18)

19. CONNECT PASSENGER AIRBAG CONNECTOR

20. INSTALL INSTRUMENT SIDE PANEL RH (See page IP-20)

21. INSTALL INSTRUMENT LOWER COVER SUB-ASSEMBLY (See page IP-20)

AC

22. INSTALL LOWER INSTRUMENT PANEL LH (See page IP-20)
23. INSTALL INSTRUMENT PANEL LOWER FINISH PANEL SUB-ASSEMBLY RH (See page IP-20)
24. INSTALL GLOVE COMPARTMENT DOOR ASSEMBLY (See page IP-20)
25. INSTALL INSTRUMENT CLUSTER CENTER FINISH PANEL SUB-ASSEMBLY (See page IP-21)
26. INSTALL COMBINATION METER ASSEMBLY (See page IP-21)
27. INSTALL INSTRUMENT CLUSTER FINISH PANEL SUB-ASSEMBLY (See page IP-21)
28. INSTALL LOWER NO. 1 INSTRUMENT PANEL FINISH PANEL (See page IP-22)
29. CONNECT HOOD LOCK CONTROL LEVER SUB-ASSEMBLY (See page ED-8)
30. INSTALL RADIO RECEIVER ASSEMBLY (See page AV-70)
31. INSTALL AIR CONDITIONING CONTROL ASSEMBLY (See page IP-22)
32. INSTALL FRONT CONSOLE BOX (for Manual Transmission on Bench Seat Type) (See page IP-22)
33. INSTALL FRONT CONSOLE BOX (for Automatic Transmission on Bench Seat Type) (See page IP-23)
34. INSTALL FRONT CONSOLE BOX (for Manual Transmission on Separate Seat Type) (See page IP-23)
35. INSTALL FRONT CONSOLE BOX (for Automatic Transmission on Separate Seat Type) (See page IP-24)
36. INSTALL INSTRUMENT PANEL CUP HOLDER TRAY (for Automatic Transmission on Separate Seat Type) (See page IP-24)
37. INSTALL REAR CONSOLE BOX ASSEMBLY (for Separate Seat Type) (See page IP-24)
38. INSTALL CONSOLE UPPER REAR PANEL SUB-ASSEMBLY (for Manual Transmission on Separate Seat Type) (See page IP-25)
39. INSTALL CONSOLE UPPER REAR PANEL SUB-ASSEMBLY (for Automatic Transmission on Separate Seat Type) (See page IP-25)
40. INSTALL INSTRUMENT PANEL HOLE COVER (for Lever Type Parking Brake) (See page IP-25)
41. INSTALL INSTRUMENT PANEL UNDER TRAY (for Pedal Type Parking Brake) (See page IP-25)

42. INSTALL FRONT PILLAR GARNISH LH (for Regular Cab) (See page IR-51)
43. INSTALL FRONT PILLAR GARNISH LH (for Access Cab) (See page IR-74)
44. INSTALL FRONT PILLAR GARNISH LH (for Double Cab) (See page IR-28)
45. INSTALL FRONT PILLAR GARNISH RH (for Regular Cab) (See page IR-52)
46. INSTALL FRONT PILLAR GARNISH RH (for Access Cab) (See page IR-74)
47. INSTALL FRONT PILLAR GARNISH RH (for Double Cab) (See page IR-28)
48. INSTALL FRONT DOOR OPENING TRIM WEATHERSTRIP LH
49. INSTALL FRONT DOOR OPENING TRIM WEATHERSTRIP RH
50. INSTALL COWL SIDE TRIM BOARD LH (for Regular Cab) (See page IR-52)
51. INSTALL COWL SIDE TRIM BOARD LH (for Access Cab) (See page IR-75)
52. INSTALL COWL SIDE TRIM BOARD LH (for Double Cab) (See page IR-29)
53. INSTALL COWL SIDE TRIM BOARD RH (for Regular Cab) (See page IR-52)
54. INSTALL COWL SIDE TRIM BOARD RH (for Access Cab) (See page IR-75)
55. INSTALL COWL SIDE TRIM BOARD RH (for Double Cab) (See page IR-29)
56. INSTALL FRONT DOOR SCUFF PLATE LH (for Regular Cab) (See page IR-52)
57. INSTALL FRONT DOOR SCUFF PLATE LH (for Access Cab) (See page IR-75)
58. INSTALL FRONT DOOR SCUFF PLATE LH (for Double Cab) (See page IR-29)
59. INSTALL FRONT DOOR SCUFF PLATE RH (for Regular Cab) (See page IR-52)
60. INSTALL FRONT DOOR SCUFF PLATE RH (for Access Cab) (See page IR-75)
61. INSTALL FRONT DOOR SCUFF PLATE RH (for Double Cab) (See page IR-29)
62. INSTALL FRONT FLOOR FOOTREST (See page IR-1)
63. INSTALL WINDSHIELD WIPER SWITCH ASSEMBLY (See page WW-19)

64. **INSTALL SPIRAL CABLE SUB-ASSEMBLY (See page RS-567)**
65. **CENTER SPIRAL CABLE (See page RS-567)**
66. **INSTALL STEERING COLUMN COVER UPPER (See page RS-568)**
67. **INSTALL STEERING COLUMN COVER LOWER (See page RS-568)**
68. **INSTALL STEERING WHEEL ASSEMBLY (See page SR-18)**
69. **INSTALL HORN BUTTON ASSEMBLY (See page RS-558)**
70. **INSTALL NO. 3 STEERING WHEEL COVER LOWER (See page RS-559)**
71. **INSTALL NO. 2 STEERING WHEEL COVER LOWER (See page RS-559)**
72. **INSTALL COWL TOP VENTILATOR LOUVER SUB-ASSEMBLY (See page WW-10)**
73. **INSTALL FRONT FENDER TO COWL SIDE SEAL RH (See page WW-10)**
74. **INSTALL FRONT FENDER TO COWL SIDE SEAL LH (See page WW-11)**
75. **INSTALL FRONT WIPER ARM RH (See page WW-11)**
76. **INSTALL FRONT WIPER ARM LH (See page WW-12)**
77. **INSTALL FRONT WIPER ARM HEAD CAP (See page WW-12)**
78. **INSTALL HEATER WATER OUTLET HOSE (for 2TR-FE)**
    (a) Install the heater water outlet hose onto the heater unit.
    NOTICE:
    Make sure that the hose clip and mark are at the correct angle when installing.

for 2TR-FE:

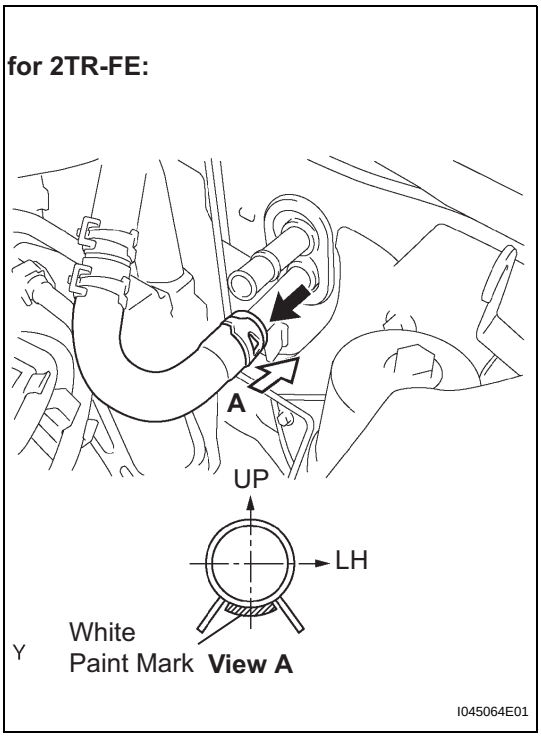

AC

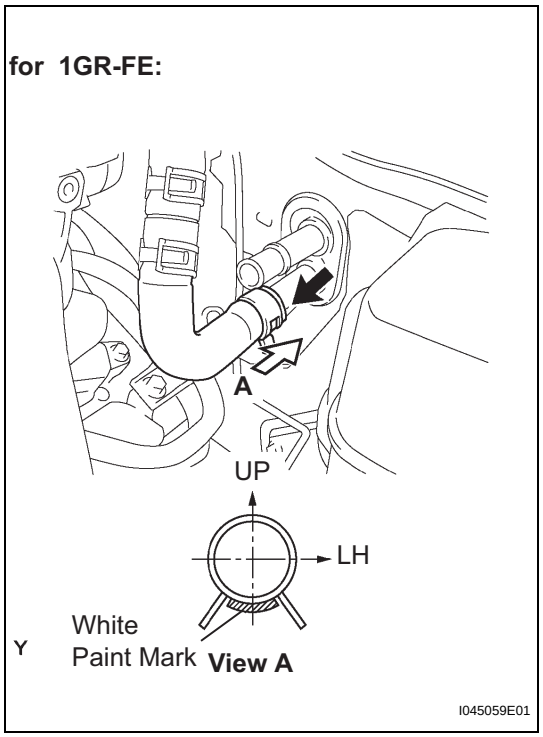

79. INSTALL HEATER WATER OUTLET HOSE (for 1GR-FE)

(a) Install the heater water outlet hose onto the heater unit.

NOTICE:

Make sure that the hose clip and mark are at the correct angle when installing.

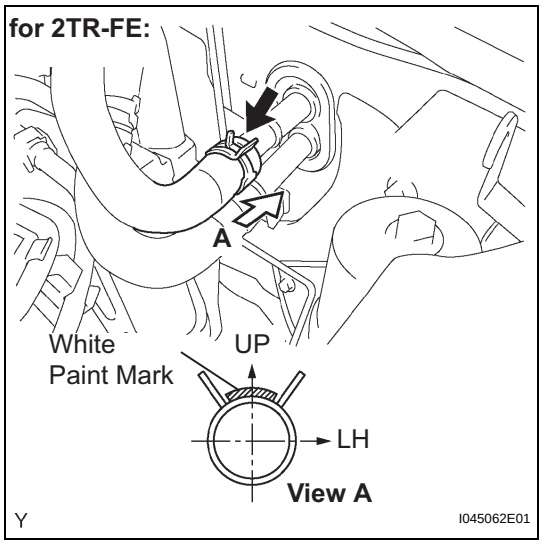

80. INSTALL HEATER WATER INLET HOSE (for 2TR-FE)

(a) Install the heater water inlet hose onto the heater unit.

NOTICE:

Make sure that the hose clip and mark are at the correct angle when installing.

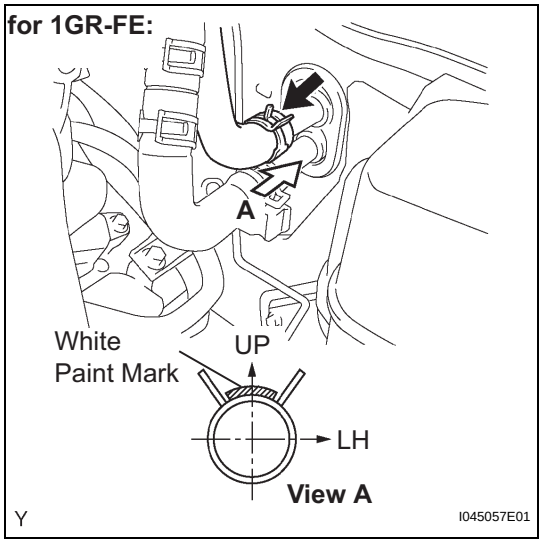

81. INSTALL HEATER WATER INLET HOSE (for 1GR-FE)

(a) Install the heater water inlet hose onto the heater unit.

NOTICE:

Make sure that the hose clip and mark are at the correct angle when installing.

AC

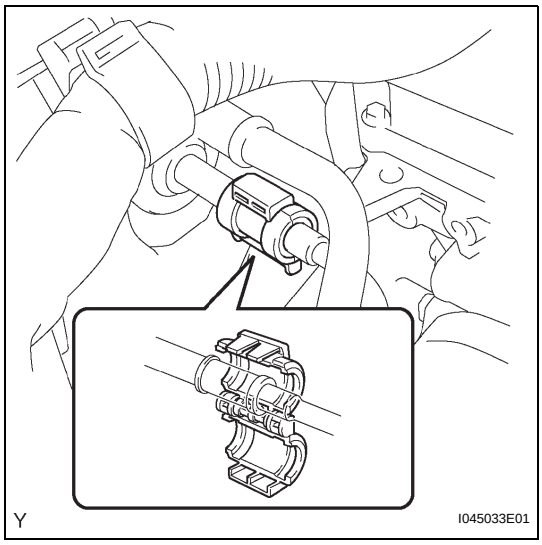

82. INSTALL AIR CONDITIONING TUBE ASSEMBLY

(a) Apply compressor oil to 2 new O-rings and install them onto the hose.
Compressor oil:
RL-897 or equivalent

(b) Install the air conditioner tube and piping clamp.
HINT:
Check that the claw of the piping clamp is correctly fitted.

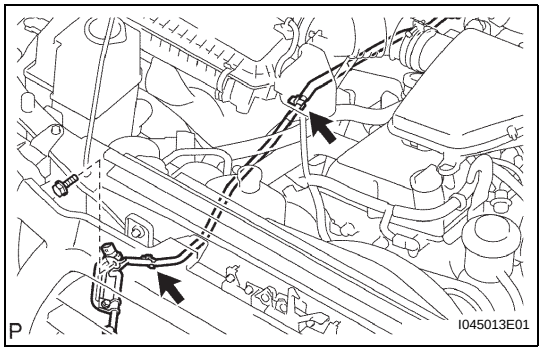

(c) Install the bracket with the bolt and 2 clamps.
Torque: 7.5 N*m (76 kgf*cm, 66 in.*lbf)

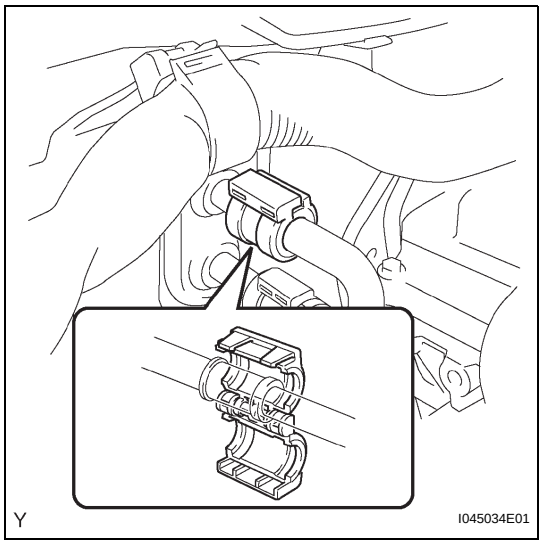

83. INSTALL SUCTION HOSE SUB-ASSEMBLY

(a) Apply compressor oil to 2 new O-rings and install them onto the pipe.
Compressor oil:
RL-897 or equivalent

(b) Install the suction hose and piping clamp.
HINT:
Check that the claws of the piping clamp are correctly fitted.

AC

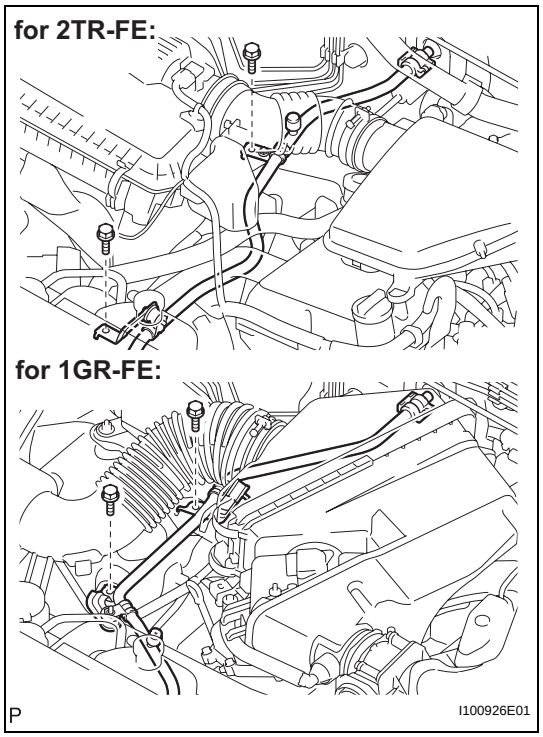

(c) Install the bracket with the 2 bolts.
Torque: 7.5 N*m (76 kgf*cm, 66 in.*lbf)

84. **CONNECT CABLE TO NEGATIVE BATTERY TERMINAL**
Torque: 3.9 N*m (40 kgf*cm, 35 in.*lbf)

85. **ADD ENGINE COOLANT (for 2TR-FE) (See page CO-3)**

86. **ADD ENGINE COOLANT (for 1GR-FE) (See page CO-3)**

87. **CHECK FOR ENGINE COOLANT LEAKAGE (for 2TR-FE) (See page CO-2)**

88. **CHECK FOR ENGINE COOLANT LEAKAGE (for 1GR-FE) (See page CO-4)**

89. **CHARGE REFRIGERANT (See page AC-18)**

90. **WARM UP ENGINE (See page AC-19)**

91. **CHECK FOR REFRIGERANT LEAKAGE (See page AC-19)**

92. **PLACE FRONT WHEELS FACING STRAIGHT AHEAD**

93. **INSPECT SRS WARNING LIGHT**
(See page RS-28)

REMOVAL

1. **DISCHARGE REFRIGERANT FROM REFRIGERATION SYSTEM (See page AC-18)**
2. **DISCONNECT CABLE FROM NEGATIVE BATTERY TERMINAL**
3. **REMOVE FRONT WHEEL LH**
4. **REMOVE NO. 1 ENGINE UNDER COVER SUB-ASSEMBLY (for 2TR-FE) (See page EM-21)**
5. **REMOVE NO. 1 ENGINE UNDER COVER SUB-ASSEMBLY (for 1GR-FE) (See page EM-166)**
6. **REMOVE V-BANK COVER (for 1GR-FE) (See page ES-414)**
7. **REMOVE RADIATOR SUPPORT TO FRAME SEAL LH (for 1GR-FE) (See page CO-15)**
8. **REMOVE FAN SHROUD (for 1GR-FE) (See page CO-15)**
9. **REMOVE FAN AND GENERATOR V BELT (for 2TR-FE) (See page EM-5)**
10. **REMOVE FAN AND GENERATOR V BELT (for 1GR-FE) (See page EM-5)**
11. **REMOVE GENERATOR ASSEMBLY (for 1GR-FE) (See page CH-7)**
12. **REMOVE FRONT FENDER APRON SEAL UPPER**
    (a) Using a clip remover, disengage the 5 clips and remove the front fender apron seal upper. (4WD, PRE RUNNER)

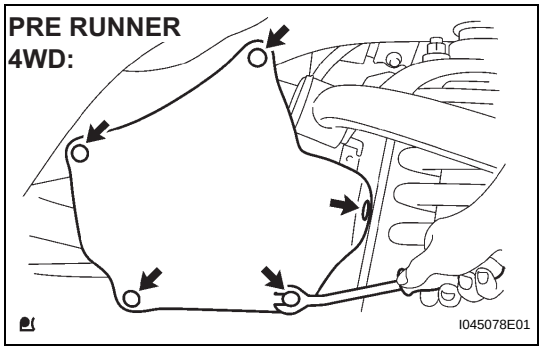

    (b) Using a clip remover, disengage the 6 clips and remove the front fender apron seal upper. (2WD)

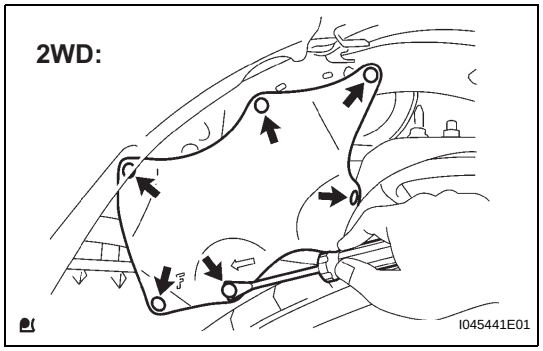

AC

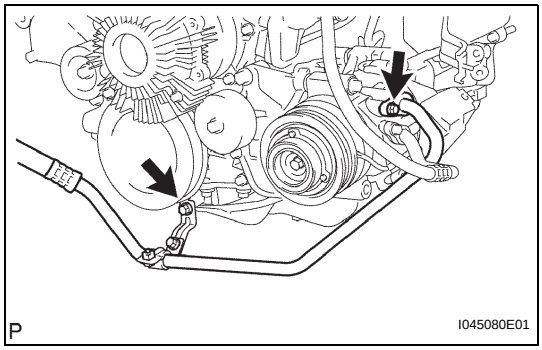

13. DISCONNECT SUCTION HOSE SUB-ASSEMBLY (for 2TR-FE)

(a) Remove the bolt and separate the suction hose sub-assembly.

(b) Remove the bolt and disconnect the suction hose sub-assembly.

(c) Remove the seal washer from the suction hose sub-assembly.

NOTICE:

Seal the opening of the disconnected parts using vinyl tape to prevent moisture and foreign matter from entering.

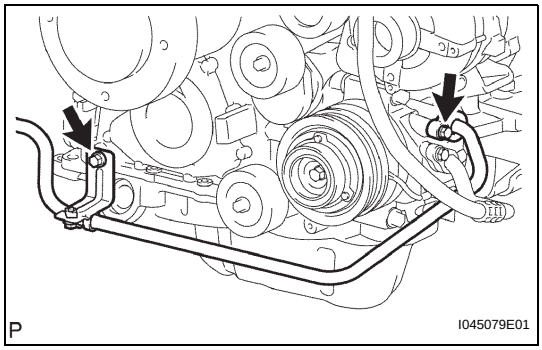

14. DISCONNECT SUCTION HOSE SUB-ASSEMBLY (for 1GR-FE)

(a) Remove the bolt and separate the suction hose sub-assembly.

(b) Remove the bolt and disconnect the suction hose sub-assembly.

(c) Remove the seal washer from the suction hose sub-assembly.

NOTICE:

Seal the opening of the disconnected parts using vinyl tape to prevent moisture and foreign matter from entering.

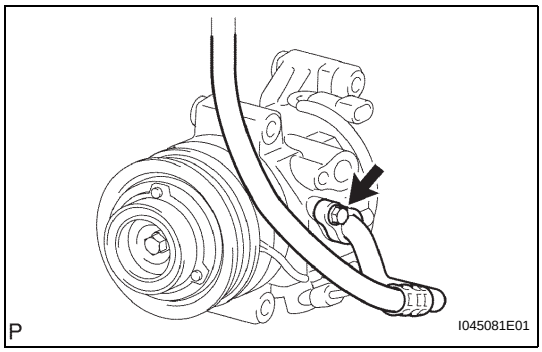

15. DISCONNECT DISCHARGE HOSE SUB-ASSEMBLY

(a) Remove the bolt and disconnect the cooler refrigerant discharge hose sub-assembly.

(b) Remove the seal washer from the cooler refrigerant discharge hose sub-assembly.

NOTICE:

Seal the opening of the disconnected parts using vinyl tape to prevent moisture and foreign matter from entering.

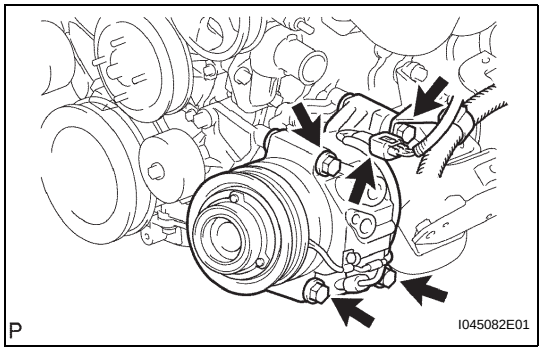

16. REMOVE COMPRESSOR AND MAGNETIC CLUTCH (for 2TR-FE)

(a) Disconnect the connector.

(b) Remove the 4 bolts and harness bracket, and remove the cooler compressor and magnetic clutch.

AC

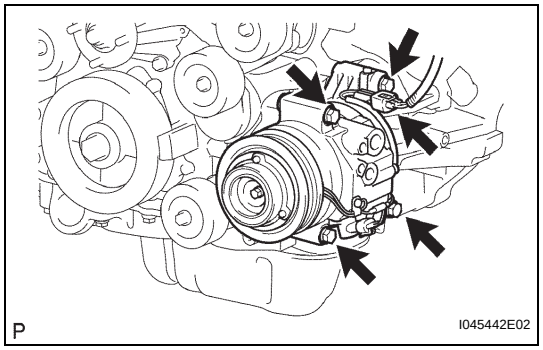

17. REMOVE COMPRESSOR AND MAGNETIC CLUTCH (for 1GR-FE)

(a) Disconnect the connector.

(b) Remove the 4 bolts and cooler compressor and magnetic clutch.

DISASSEMBLY

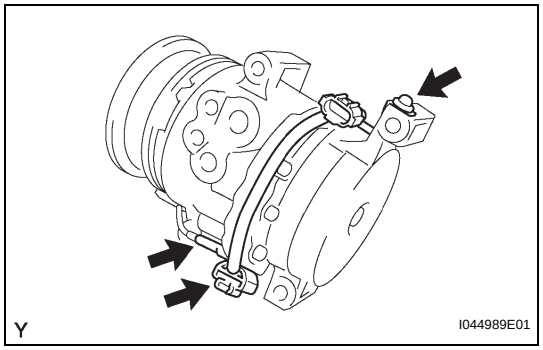

1. REMOVE COOLER BRACKET

(a) Disconnect the 2 connectors.

(b) Remove the screw and the cooler bracket.

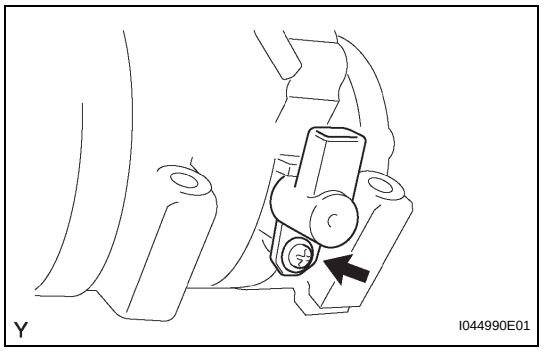

2. REMOVE COMPRESSOR PICK UP SENSOR

(a) Remove the screw and the compressor pick up sensor.

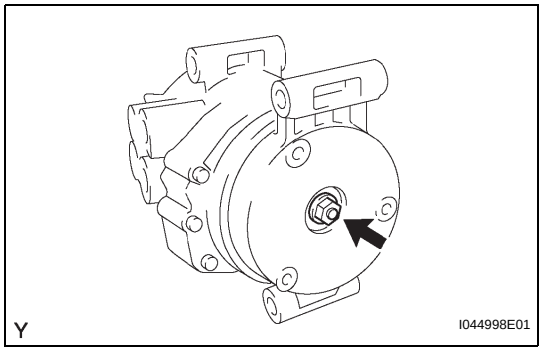

3. REMOVE PRESSURE RELIEF VALVE

(a) Remove the pressure relief valve and O-ring.

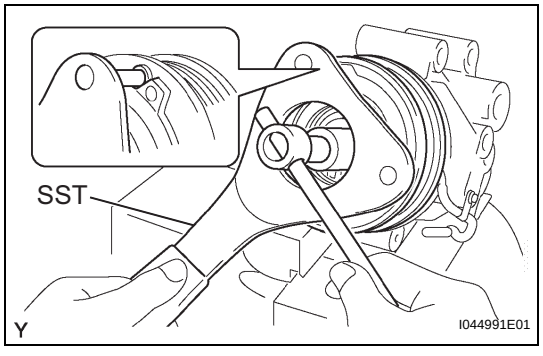

4. REMOVE MAGNET CLUTCH ASSEMBLY

(a) Using SST, hold the magnet clutch hub.
SST 07112-76060

(b) Remove the bolt, magnet clutch hub and compressor spacer.
HINT:
There is no set number of magnet clutch washers since they are used for adjusting.

AC

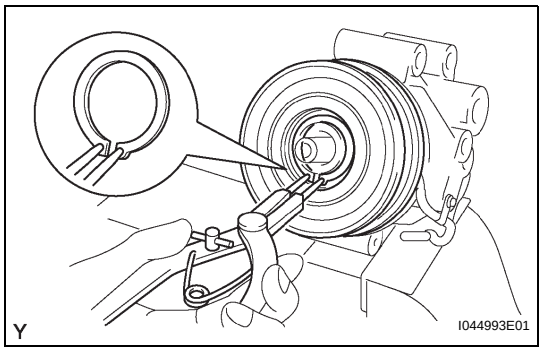

(c) Using SST, remove the snap ring and magnet clutch rotor.
SST 95994-10020
NOTICE:
Take care not to damage the seal cover of the bearing when removing the snap ring.

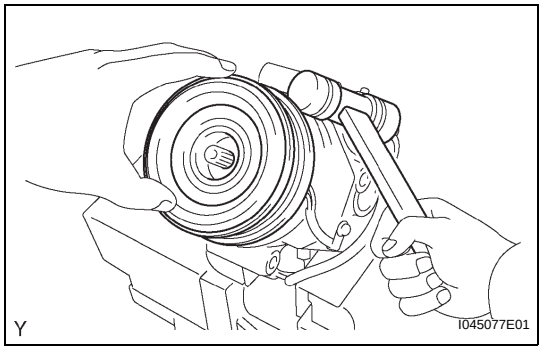

(d) When the magnet clutch rotor and snap ring are difficult to remove, use a plastic hammer to tap them off the shaft.
NOTICE:
Be careful not to damage the pulley when tapping the rotor.

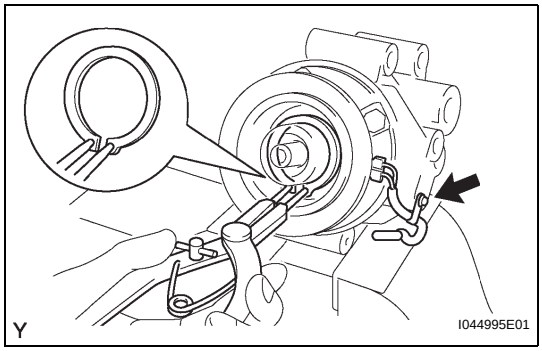

(e) Remove the screw and separate the wire harness.
(f) Using SST, remove the snap ring and magnet clutch stator.
SST 95994-10020

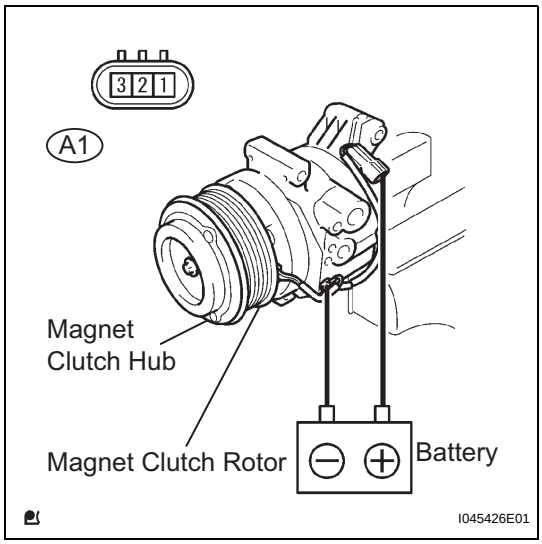

INSPECTION

1. INSPECT MAGNET CLUTCH ASSEMBLY

(a) Inspect the magnet clutch assembly.
(b) Confirm that the magnet clutch hub and magnet clutch rotor lock when the battery positive lead is connected to terminal 1 (MG+) of the magnet clutch, and the negative lead is connected to the earth wire. If the operation is not as specified, replace the magnet clutch assembly.

AC

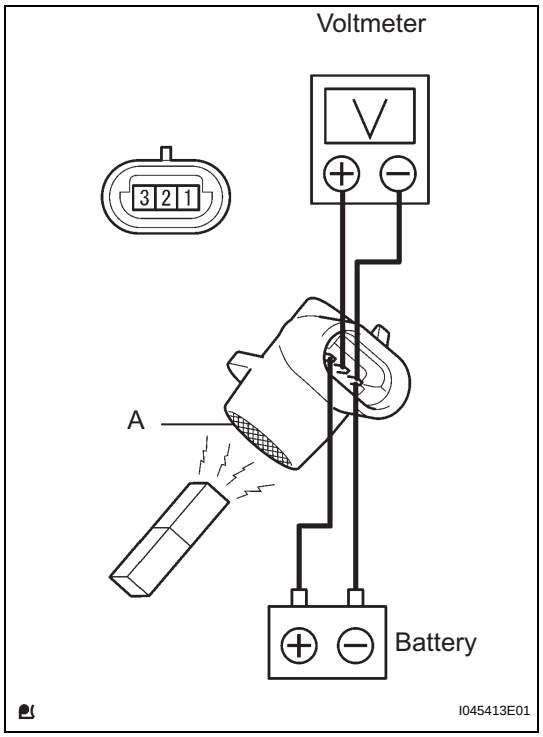

2. INSPECT COMPRESSOR PICK UP SENSOR

(a) Check the compressor pick up sensor voltage.

(1) Connect the positive (+) lead from the battery to terminal 3 (SSR-) and the negative (-) lead to terminal 1 (MG+), and measure the voltage between terminals 1 (MG+) and 2 (SSR+).

Standard:

2.0 to 3.0 V

(2) When surface A of the compressor pick up sensor is close to the S-pole, the voltage between terminals 1 (MG+) and 2 (SSR+) increases. When it is close to the N-pole, the voltage between the terminals decreases.

If the result is not as specified, replace the compressor pick up sensor.

REASSEMBLY

1. INSTALL MAGNET CLUTCH ASSEMBLY

(a) Install the magnet clutch stator with the parts shown in the illustration matched.

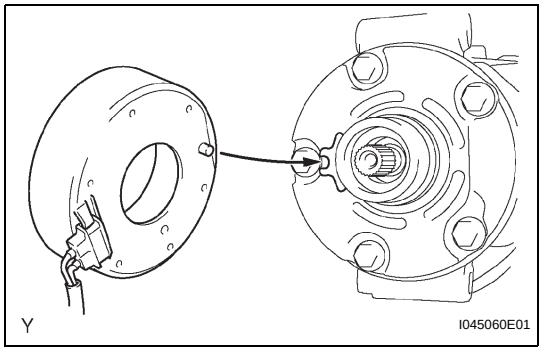

(b) Using SST, install a new snap ring with the chamfered side facing up.

SST 95994-10020

(c) Install the wire harness with the screw.

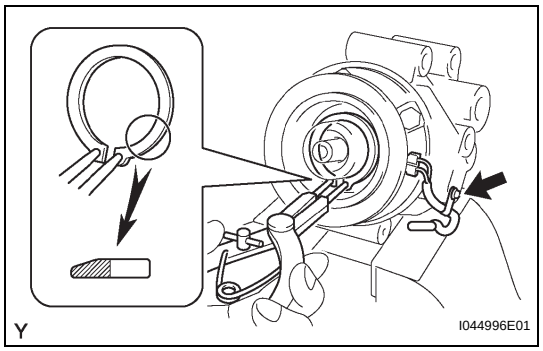

(d) Using SST, install the magnet clutch rotor and a new snap ring with the chamfered side facing up.

SST 95994-10020

NOTICE:

Take care not to damage the seal cover of the bearing when installing the snap ring.

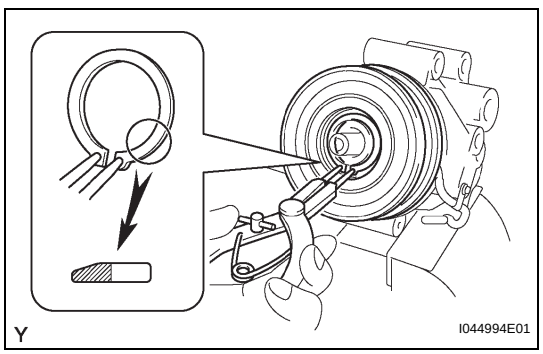

(e) Install the compressor spacer and magnet clutch hub.

NOTICE:

Do not change the combination of the compressor spacer used before disassembly.

AC

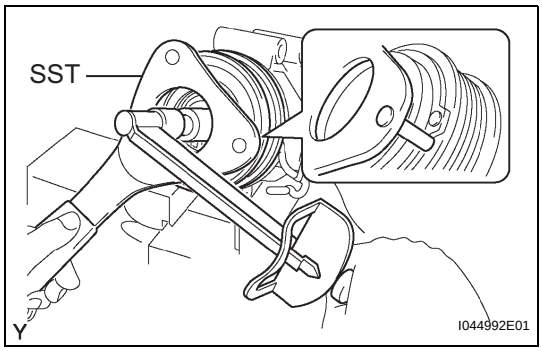

(f) Using SST, hold the magnet clutch hub and install the new bolt.
SST 07112-76060
Torque: 13.5 N*m (138 kgf*cm, 10 ft.*lbf)
NOTICE:
Make sure that there is no foreign matter or oil on the compressor shaft, bolt, and clutch hub.
HINT:
Use new bolt (88329-04050) for clutch installation.

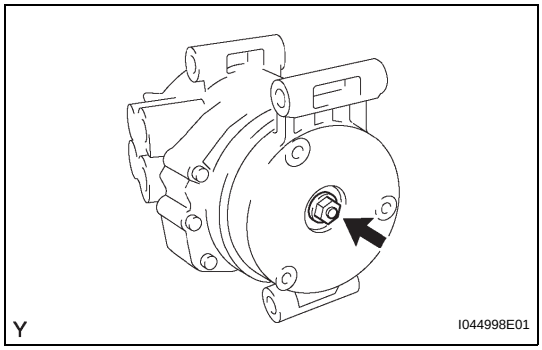

2. INSTALL PRESSURE RELIEF VALVE
(a) Install a new O-ring onto the pressure relief valve.
(b) Install the pressure relief valve.
Torque: 8.0 N*m (82 kgf*cm, 71 in.*lbf)

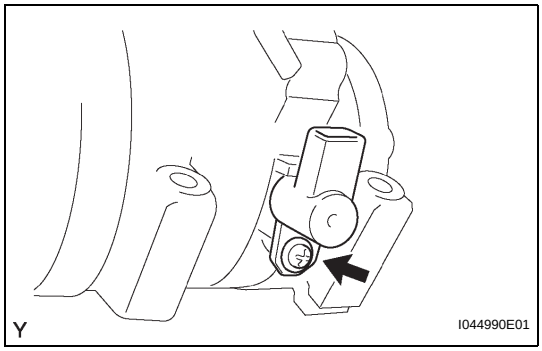

3. INSTALL COMPRESSOR PICK UP SENSOR
(a) Install the compressor pick up sensor with the screw.
Torque: 4.0 N*m (41 kgf*cm, 35 in.*lbf)

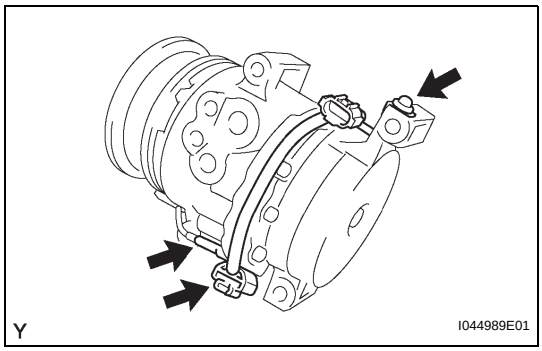

4. INSTALL COOLER BRACKET
(a) Install the cooler bracket with the screw.
(b) Connect the 2 connectors.

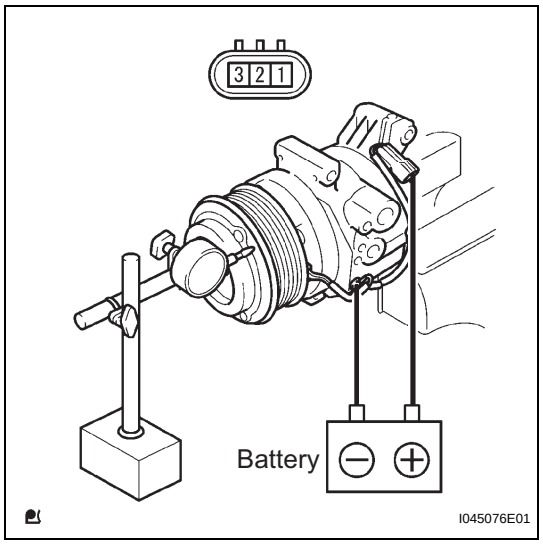

5. INSPECT MAGNET CLUTCH CLEARANCE

(a) Clamp the compressor and magnetic clutch in a vise.

(b) Set the dial indicator to the magnet clutch hub.

(c) Connect the battery positive lead to terminal 1 (MG+) of the magnet clutch connector and the negative lead to the earth wire. Turn the magnet clutch on and off and measure the clearance.

Standard clearance:

0.30 to 0.60 mm (0.012 to 0.024 in.)

If the measured value is not within the standard clearance, remove the magnet clutch hub and adjust the clearance using compressor spacer to obtain the standard clearance.

Compressor spacer thickness:

0.2 mm (0.008 in.)
0.3 mm (0.012 in.)
0.5 mm (0.020 in.)

NOTICE:

Adjustment should be performed with 3 or less magnet clutch washers.

(d) Remove the compressor and magnetic clutch from the vise.

INSTALLATION

1. ADJUST COMPRESSOR OIL

(a) When replacing the compressor and magnetic clutch with new ones, after gradually discharging the refrigerant gas from the service valve, drain the following volume of oil from new compressor and magnetic clutch before installation.

Standard:

(Oil capacity inside a new compressor and magnetic clutch: 150 + 15 cc (5.1 + 0.51 fl.oz.)) - (Remaining oil amount in the removed compressor and magnetic clutch) = (Oil amount to be removed when replacing the compressor)

NOTICE:

- **When checking the compressor oil level, observe the precautions on the cooler removal/installation.**
- **If a new compressor and magnetic clutch are installed without removing some oil remaining in the pipes of the vehicle, the oil amount becomes too large. This prevents heat exchange in the refrigerant cycle and causes refrigerant failure.**
- **If the volume of oil remaining in the removed compressor and magnetic clutch is too small, check for oil leakage.**
- **Be sure to use RL-897 for compressor oil.**

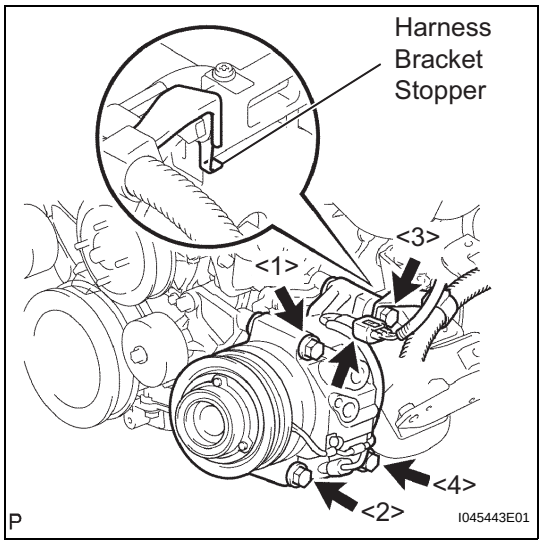

2. INSTALL COMPRESSOR AND MAGNETIC CLUTCH (for 2TR-FE)

(a) Provisionally tighten the compressor and magnetic clutch with the 4 bolts and harness bracket.

NOTICE:

The harness bracket stopper should be in contact with compressor case.

(b) Tighten the compressor and magnetic clutch with the 4 bolts.

Torque: 21 N*m (214 kgf*cm, 16 ft.*lbf)

NOTICE:

Tighten the bolts in the sequence order shown in the illustration to install the compressor and magnetic clutch.

(c) Connect the connector.

AC

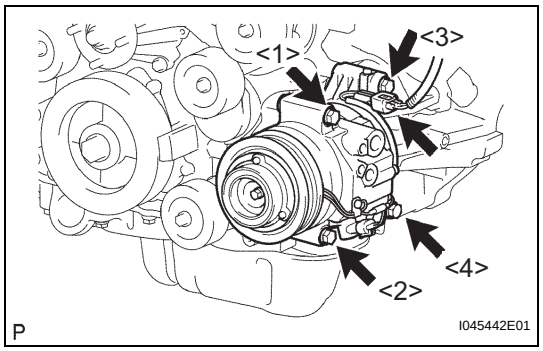

3. INSTALL COMPRESSOR AND MAGNETIC CLUTCH (for 1GR-FE)

(a) Provisionally tighten the compressor and magnetic clutch with the 4 bolts.

(b) Tighten the compressor and magnetic clutch with the 4 bolts.

Torque: 21 N*m (214 kgf*cm, 16 ft.*lbf)

NOTICE:

Tighten the bolts in the sequence order shown in the illustration to install the compressor and magnetic clutch.

(c) Connect the connector.

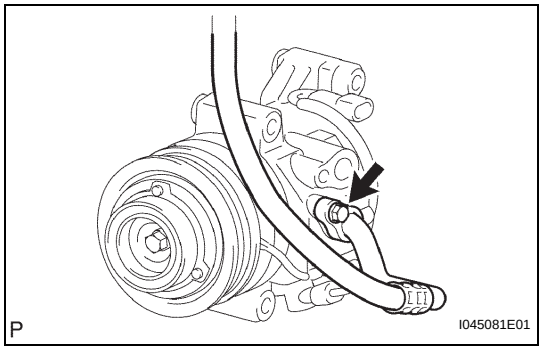

4. INSTALL DISCHARGE HOSE SUB-ASSEMBLY

(a) Remove the attached vinyl tape from the hose.

(b) Apply sufficient compressor oil to a new seal washer and fitting surface of the compressor and magnetic clutch.

Compressor oil:
RL-897 or equivalent

(c) Install the seal washer onto the cooler refrigerant discharge hose sub-assembly.

(d) Install the cooler refrigerant discharge hose sub-assembly onto the compressor and magnetic clutch with the bolt.

Torque: 19 N*m (194 kgf*cm, 14 ft.*lbf)

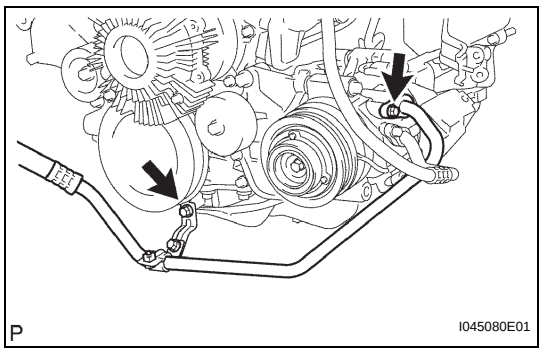

5. INSTALL SUCTION HOSE SUB-ASSEMBLY (for 2TR-FE)

(a) Remove the attached vinyl tape from the hose.

(b) Apply sufficient compressor oil to a new seal washer and fitting surface of the compressor and magnetic clutch.

Compressor oil:
RL-897 or equivalent

(c) Install the seal washer onto the suction hose sub-assembly.

(d) Install the suction hose sub-assembly onto the compressor and magnetic clutch with the bolt.

Torque: 19 N*m (194 kgf*cm, 14 ft.*lbf)

(e) Install the suction hose sub-assembly with the bolt.

Torque: 7.5 N*m (76 kgf*cm, 66 in.*lbf)

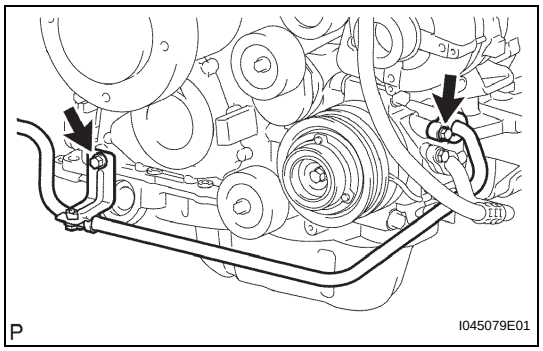

6. INSTALL SUCTION HOSE SUB-ASSEMBLY (for 1GR-FE)

(a) Remove the attached vinyl tape from the hose.

(b) Apply sufficient compressor oil to a new seal washer and fitting surface of the compressor and magnetic clutch.

Compressor oil:
RL-897 or equivalent

(c) Install the seal washer onto the suction hose sub-assembly.

(d) Install the suction hose sub-assembly onto the compressor and magnetic clutch with the bolt.

Torque: 19 N*m (194 kgf*cm, 14 ft.*lbf)

(e) Install the suction hose sub-assembly with the bolt.
Torque: 7.5 N*m (76 kgf*cm, 66 in.*lbf)

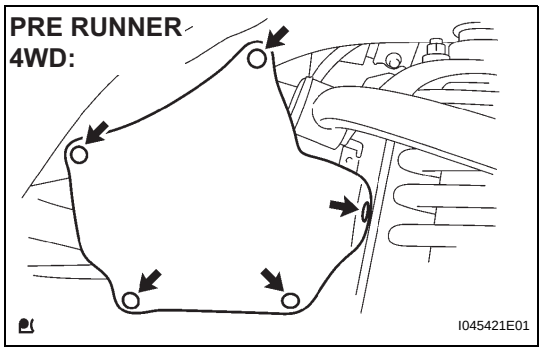

7. INSTALL FRONT FENDER APRON SEAL UPPER

(a) Install the front fender apron seal upper with the 5 clips. (4WD, PRE RUNNER)

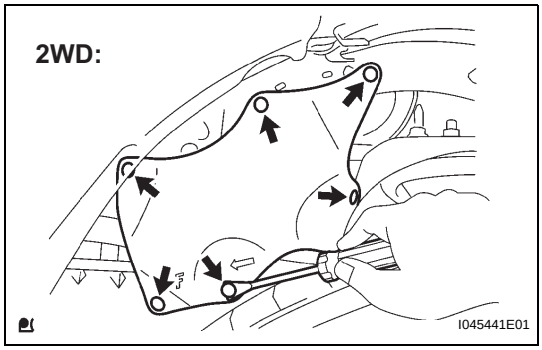

(b) Install the front fender apron seal upper with the 6 clips. (2WD)

8. INSTALL GENERATOR ASSEMBLY (for 1GR-FE) (See page CH-13)

9. INSTALL FAN AND GENERATOR V BELT (for 2TR-FE) (See page EM-6)

10. INSPECT FAN AND GENERATOR V BELT (for 2TR-FE) (See page EM-5)

11. INSTALL FAN AND GENERATOR V BELT (for 1GR-FE) (See page EM-5)

12. INSTALL FAN SHROUD (for 1GR-FE) (See page CO-20)

13. INSTALL RADIATOR SUPPORT TO FRAME SEAL LH (for 1GR-FE)

14. INSTALL V-BANK COVER (for 1GR-FE) (See page EM-166)

15. INSTALL NO. 1 ENGINE UNDER COVER SUB-ASSEMBLY (for 2TR-FE) (See page EM-35)

16. INSTALL NO. 1 ENGINE UNDER COVER SUB-ASSEMBLY (for 1GR-FE) (See page EM-166)

17. INSTALL FRONT WHEEL LH
Torque: 113 N*m (1152 kgf*cm, 83 ft.*lbf)

18. CONNECT CABLE TO NEGATIVE BATTERY TERMINAL
Torque: 3.9 N*m (40 kgf*cm, 35 in.*lbf)

19. CHARGE REFRIGERANT (See page AC-18)

20. WARM UP ENGINE (See page AC-19)

21. CHECK FOR REFRIGERANT LEAKAGE (See page AC-19)

REMOVAL

1. **DISCHARGE REFRIGERANT FROM REFRIGERATION SYSTEM (See page AC-18)**
2. **DISCONNECT CABLE FROM NEGATIVE BATTERY TERMINAL**
3. **DRAIN ENGINE COOLANT (for 2TR-FE) (See page CO-3)**
4. **DRAIN ENGINE COOLANT (for 1GR-FE) (See page CO-3)**
5. **REMOVE RADIATOR GRILLE (See page ET-4)**
6. **REMOVE RADIATOR SUPPORT TO FRAME SEAL LH (for 2TR-FE) (See page CO-12)**
7. **REMOVE RADIATOR SUPPORT TO FRAME SEAL LH (for 1GR-FE) (See page CO-15)**
8. **REMOVE FAN SHROUD (for 2TR-FE) (See page CO-13)**
9. **REMOVE FAN SHROUD (for 1GR-FE) (See page CO-15)**
10. **REMOVE RADIATOR ASSEMBLY (for 2TR-FE) (See page CO-14)**
11. **REMOVE RADIATOR ASSEMBLY (for 1GR-FE) (See page CO-15)**
12. **DISCONNECT DISCHARGE HOSE SUB-ASSEMBLY**
    (a) Remove the bolt and disconnect the discharge hose sub-assembly from the cooler condenser assembly.
    (b) Remove the seal washer from the discharge hose sub-assembly.
    NOTICE:
    Seal the openings of the disconnected parts using vinyl tape to prevent moisture and foreign matter from entering.

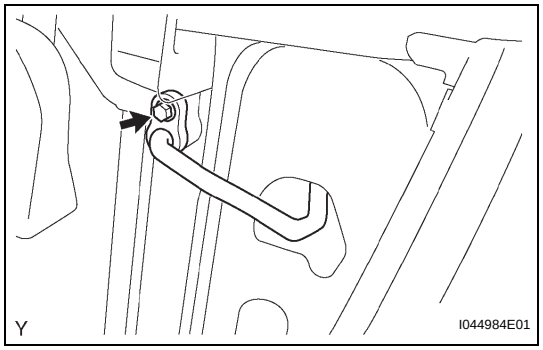

13. **DISCONNECT AIR CONDITIONING TUBE ASSEMBLY**
    (a) Remove the bolt and disconnect the air conditioning tube assembly from the cooler condenser assembly.
    (b) Remove the seal washer from the air conditioning tube assembly.
    NOTICE:
    Seal the openings of the disconnected parts using vinyl tape to prevent moisture and foreign matter from entering.

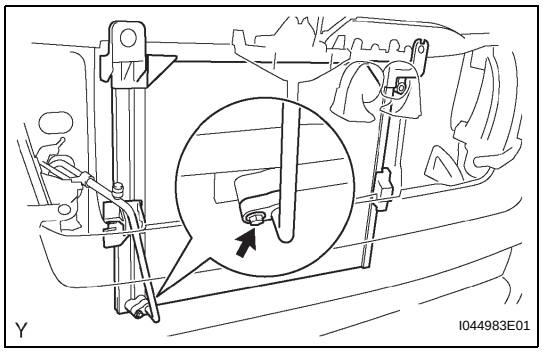

AC

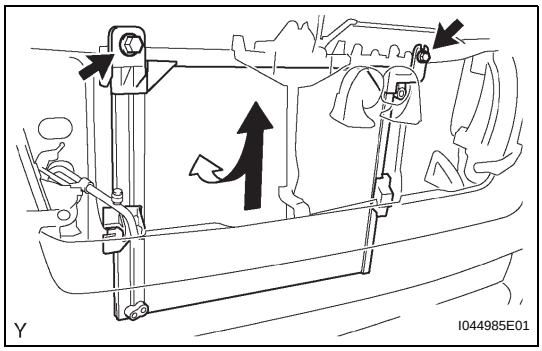

14. REMOVE COOLER CONDENSER ASSEMBLY

(a) Remove the 2 bolts.

(b) Lift the condenser up, disengage the fitting of the condenser lower bracket and remove the condenser from the rear side of the vehicle.

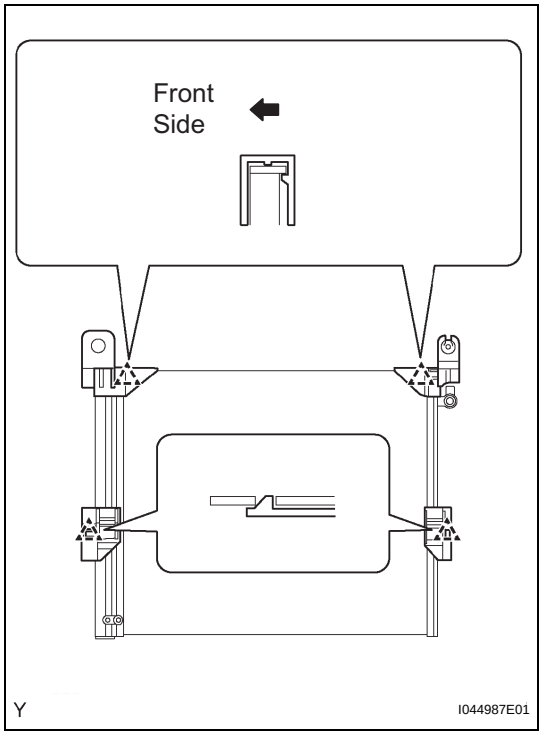

(c) Using a screwdriver, disengage the claw and remove the condenser upper bracket LH.
HINT:
Tape up the screwdriver tip before use.

(d) Using a screwdriver, disengage the claw and remove the condenser upper bracket RH.
HINT:
Tape up the screwdriver tip before use.

(e) Using a screwdriver, disengage the claw and remove the condenser lower bracket LH.
HINT:
Tape up the screwdriver tip before use.

(f) Using a screwdriver, disengage the claw and remove the condenser lower bracket RH.

(g) Remove the condenser.
HINT:
At the time of installation, please refer to the following instructions. If installing a new condenser, add compressor oil to the condenser.
Compressor oil:
RL-897 or equivalent
Add 40 cc (1.4 fl.oz.)

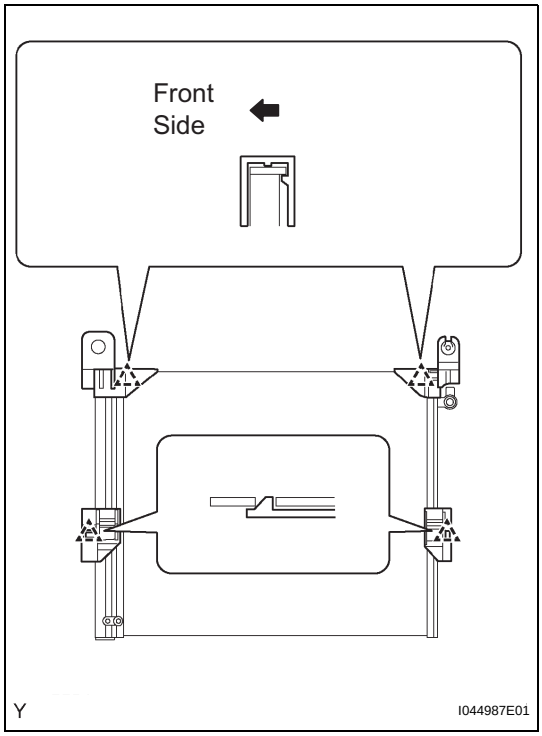

INSTALLATION

1. INSTALL COOLER CONDENSER ASSEMBLY

(a) Engage the claw and install the condenser upper bracket LH.

(b) Engage the claw and install the condenser upper bracket RH.

(c) Engage the claw and install the condenser lower bracket LH.

(d) Engage the claw and install the condenser lower bracket RH.

AC

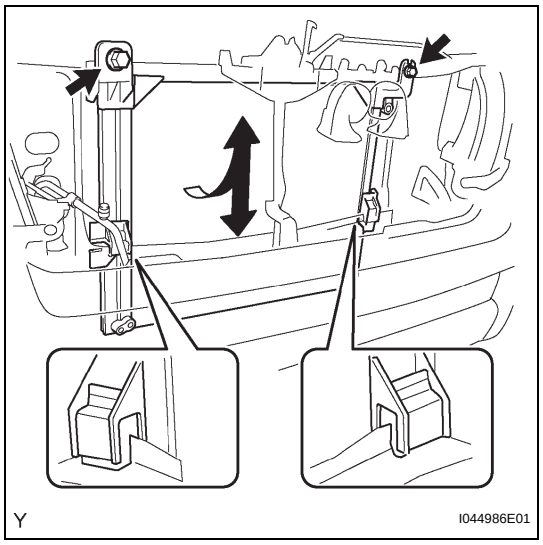

(e) Lift the condenser up from the rear side of the vehicle, and install the condenser lower brackets onto the upper part of the radiator lower supports with the 2 bolts.
Torque: 9.0 N*m (92 kgf*cm, 80 in.*lbf)

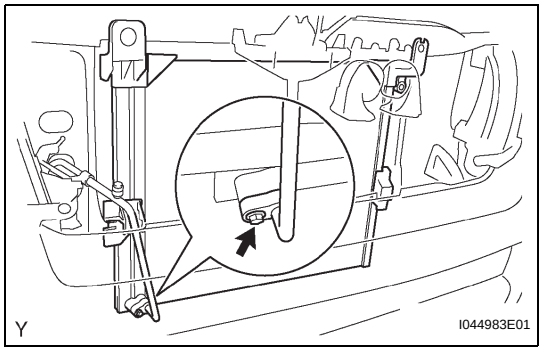

2. INSTALL AIR CONDITIONING TUBE ASSEMBLY

(a) Remove the attached vinyl tape from the pipe and the connecting part of the cooler condenser assembly.
(b) Apply sufficient compressor oil to a new seal washer and the fitting surface of the pipe joint.
Compressor oil:
RL-897 or equivalent
(c) Install the seal washer onto the air conditioning tube assembly.
(d) Install the air conditioning tube assembly onto the cooler condenser assembly with the bolt.
Torque: 7.5 N*m (76 kgf*cm, 66 in.*lbf)

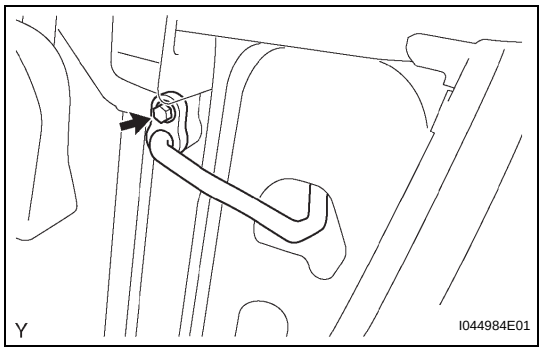

3. INSTALL DISCHARGE HOSE SUB-ASSEMBLY

(a) Remove the attached vinyl tape from the hose and the connecting part of the cooler condenser assembly.
(b) Apply sufficient compressor oil to a new seal washer and the fitting surface of the hose joint.
Compressor oil:
RL-897 or equivalent
(c) Install the seal washer onto the discharge hose sub-assembly.
(d) Install the discharge hose sub-assembly onto the cooler condenser assembly with the bolt.
Torque: 7.5 N*m (76 kgf*cm, 66 in.*lbf)

4. INSTALL RADIATOR ASSEMBLY (for 2TR-FE) (See page CO-17)

5. INSTALL RADIATOR ASSEMBLY (for 1GR-FE) (See page CO-19)

6. INSTALL FAN SHROUD (for 2TR-FE) (See page CO-18)

7. INSTALL FAN SHROUD (for 1GR-FE) (See page CO-20)

8. **INSTALL RADIATOR SUPPORT TO FRAME SEAL LH (for 2TR-FE) (See page CO-19)**
9. **INSTALL RADIATOR SUPPORT TO FRAME SEAL LH (for 1GR-FE)**
10. **INSTALL RADIATOR GRILLE (See page ET-11)**
11. **CONNECT CABLE TO NEGATIVE BATTERY TERMINAL**
    Torque: 3.9 N*m (40 kgf*cm, 35 in.*lbf)
12. **ADD ENGINE COOLANT (for 2TR-FE) (See page CO-3)**
13. **ADD ENGINE COOLANT (for 1GR-FE) (See page CO-3)**
14. **CHECK FOR ENGINE COOLANT LEAKAGE (for 2TR-FE) (See page CO-2)**
15. **CHECK FOR ENGINE COOLANT LEAKAGE (for 1GR-FE) (See page CO-4)**
16. **CHARGE REFRIGERANT (See page AC-18)**
17. **WARM UP ENGINE (See page AC-19)**
18. **CHECK FOR REFRIGERANT LEAKAGE (See page AC-19)**

SYSTEM DIAGRAM

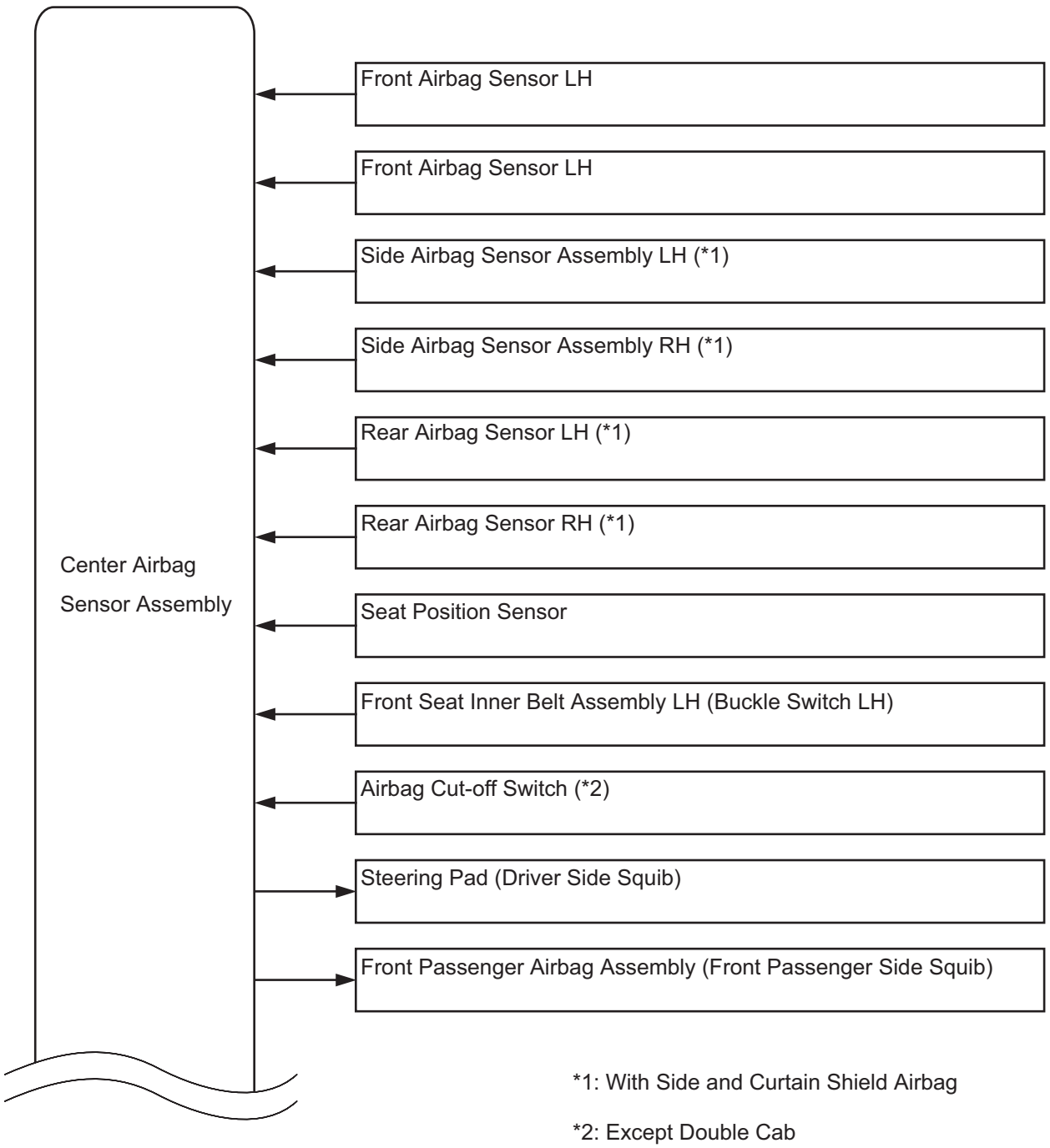

RS

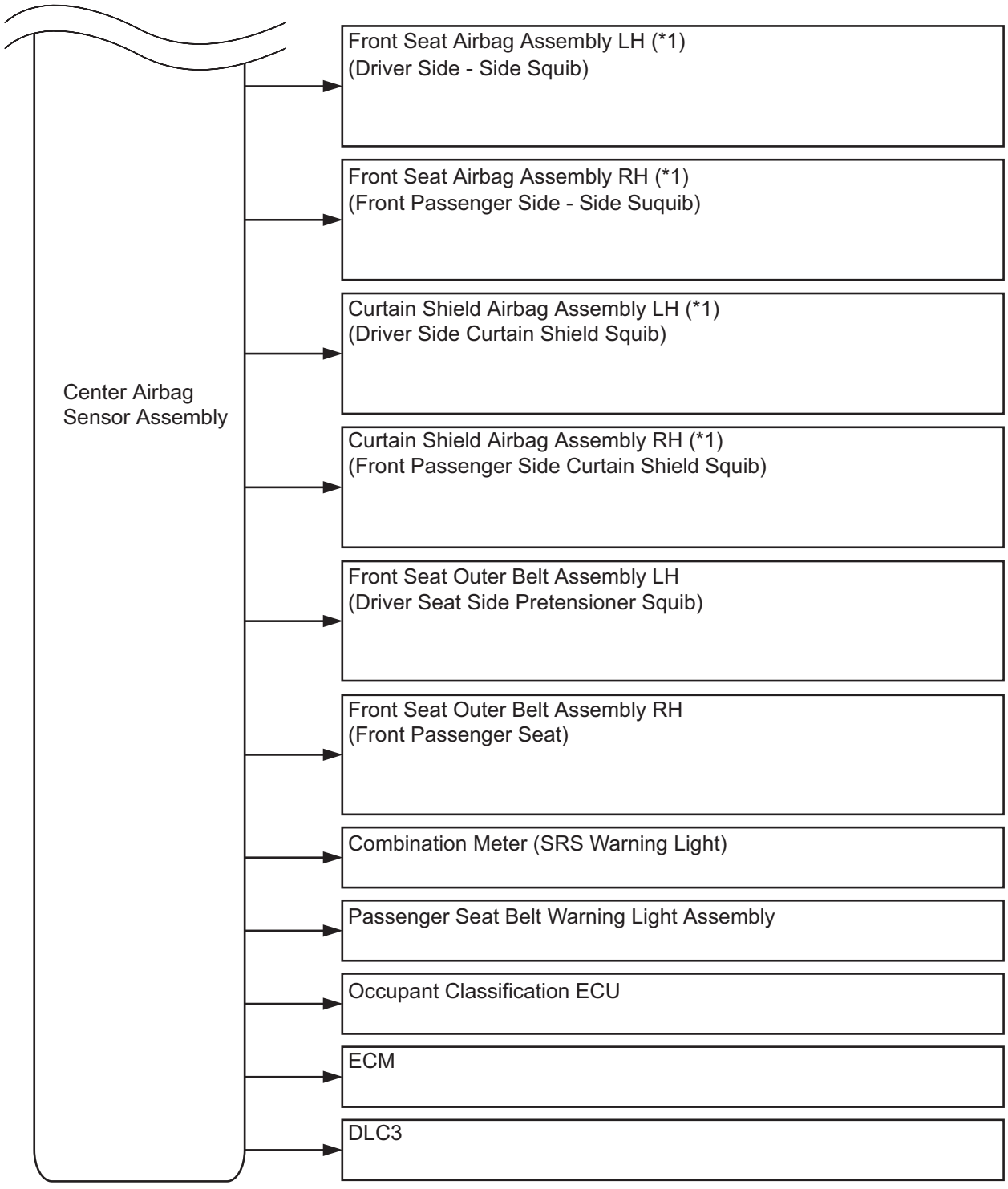
Center Airbag Sensor Assembly
Front Seat Airbag Assembly LH (*1)
(Driver Side - Side Squib)
Front Seat Airbag Assembly RH (*1)
(Front Passenger Side - Side Suquib)
Curtain Shield Airbag Assembly LH (*1)
(Driver Side Curtain Shield Squib)
Curtain Shield Airbag Assembly RH (*1)
(Front Passenger Side Curtain Shield Squib)
Front Seat Outer Belt Assembly LH
(Driver Seat Side Pretensioner Squib)
Front Seat Outer Belt Assembly RH
(Front Passenger Seat)
Combination Meter (SRS Warning Light)
Passenger Seat Belt Warning Light Assembly
Occupant Classification ECU
ECM
DLC3
*1: With Side and Curtain Shield Airbag
H101931E01

RS

SYSTEM DESCRIPTION

1. SRS (SUPPLEMENTAL RESTRAINT SYSTEM) AIRBAG SYSTEM

(a) General Description

(1) The SRS airbag system consists of the following airbag and main components:

Airbag	Regular Cab Model	Access Cab Model	Double Cab Model
Driver Airbag	Standard	Standard	Standard
Front Passenger Airbag	Standard	Standard	Standard
Side Airbag	-	-	Option
Curtain Shield Airbag	-	-	Option

Main Components	Features
Center Airbag Sensor Assembly	• Controls airbag deployment • Activates dual stage control for driver and front passenger airbags • Detects malfunctions in SRS airbag system
Occupant Classification ECU	Determines front passenger seat occupant conditions through occupant classification sensors
Front Airbag Sensor	Detect intensity of frontal collisions though electrical deceleration sensor
Side Airbag Sensor	Detect intensity of side collision through electrical deceleration sensor
Curtain Shield Airbag Sensors	Detect intensity of side rear collision through electrical deceleration sensor
Occupant Classification Sensors	Detect occupant weight on front passenger seat
Seat Position Sensor	Detects driver seat position
Seat Belt Buckle Switches	Detect whether of not seat belt fastened
Airbag ON/OFF Indicator	Illuminates ON or OFF light to indicate front and side passenger airbag deployment availability
SRS Warning Light	Illuminates to indicate existence of malfunctions in SRS airbag system
Airbag Cut-Off Switch	Prohibits deployment of front passenger airbag when switched to OFF

2. AIRBAG DEPLOYMENT

(a) Front Collisions

(1) The driver and front passenger airbags are in case of frontal collisions. These airbags deploy by dual stage control. In order to activate dual stage control, the center airbag sensor assembly monitors the following information through the components shown in the table below:

RS

Seat	Information	Models with Bench Seat	Models with Separate Seat
Driver	Intensity of Impact	Front Airbag Sensor (RH or LH)	Same As Left
Driver	Driver Seat Position	Seat Position Sensor	Same As Left
Driver	Seat Belt Position	Seat Belt Buckle Switches	Same As Left
Front Passenger	Intensity of Impact	Front Airbag Sensor (RH or LH)	Same As Left
Front Passenger	Occupant Weight	Occupant Classification Sensor	Four Occupant Classification Sensors
Front Passenger	Seat Belt Condition	Seat Belt Buckle Switches	Same As Left

(b) Side Collisions

(1) The side and curtain shield airbags are in case of side collisions. The side airbags are installed in the seat backs of the driver seat and the front passenger seat, and the curtain shield airbags are installed in the upper areas of the right and left center pillars. If a side airbag sensor detects an impact, the airbag sensor assembly center causes the side and curtain shield airbags to be deployed simultaneously.

Airbag Deployment for Side Collisions:

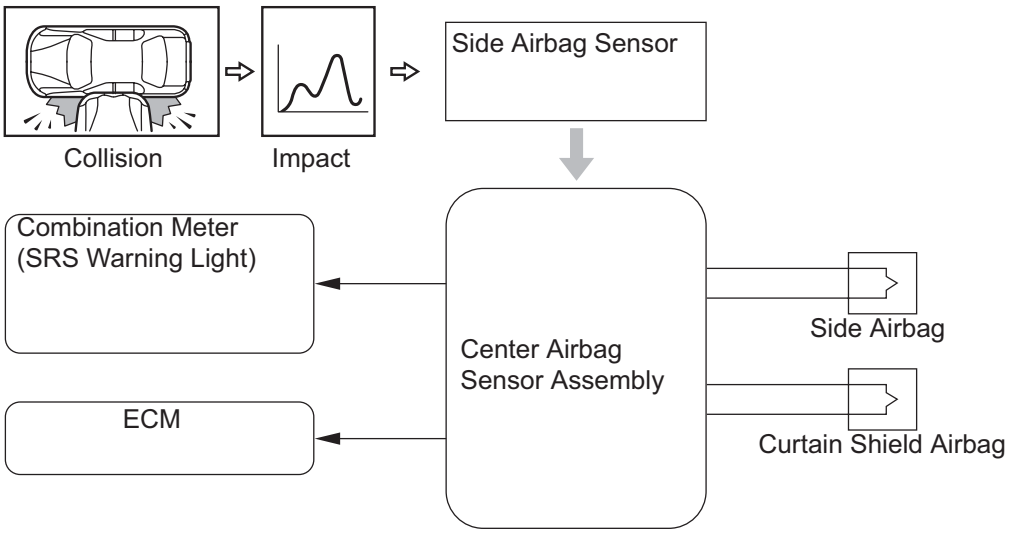

Y H101814E01

(c) Rear Side Collisions

(1) The curtain shield airbags are in case of rear side collisions. The curtain shield airbags are installed in the upper areas of the right and left center pillars. If a curtain shield airbag sensor detects an impact, the airbag sensor assembly center causes a curtain shield airbag to be deployed.

RS

Airbag Deployment for Rear Side Collisions:

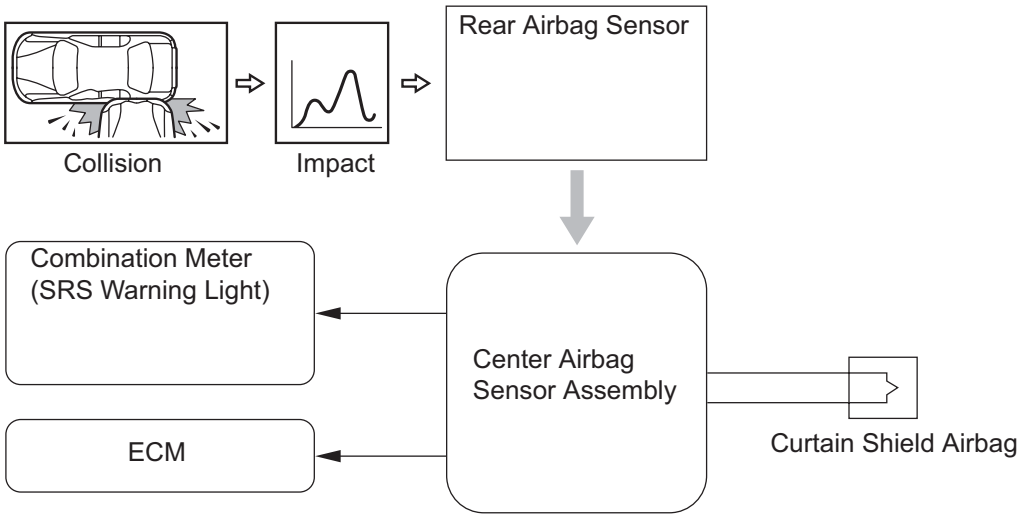

Y

H101815E01

HOW TO PROCEED WITH TROUBLESHOOTING

1 VEHICLE BROUGHT TO WORKSHOP

NEXT

2 CUSTOMER PROBLEM ANALYSIS (See page IN-26)

(a) Confirm problem symptoms.

NEXT

3 WARNING LIGHT CHECK (See page RS-28)

NEXT

4 DTC CHECK (Present and Past DTCs) (See page RS-34)

Result	Proceed to
DTCs OUTPUT (INCLUDING NORMAL SYSTEM INDICATION)	A
DTCs NOT OUTPUT (PROBLEM SYMPTOMS TABLE)	B

B → PROBLEM SYMPTOMS TABLE

A

5 DTC CHART (See page RS-38)

NEXT

6 CIRCUIT INSPECTION

NEXT

7 REPAIR OR REPLACEMENT

NEXT

RS

8	DTCs CLEARANCE (Present and Past DTCs) (See page RS-34)

NEXT

9	DTC CHECK (Present and Past DTCs) (See page RS-34)

Result	Proceed to
DTCs NOT OUTPUT	A
DTCs OUTPUT	B

B → Go to step 5

A

10	SYMPTOM SIMULATION

Result	Proceed to
WARNING LIGHT REMAINS OFF	A
WARNING LIGHT ON	B

B → Go to step 5

A

11	CONFIRMATION TEST

NEXT

END

PROBLEM SYMPTOMS TABLE

Symptom	Suspected area	See page
When ignition switch in ON position, SRS warning light occasionally comes on approximately 6 seconds after engine start.	SRS warning light circuit malfunction (SRS Warning Light Remains ON).	RS-341
SRS warning light always comes on even when DTC not set.	SRS warning light circuit malfunction (SRS Warning Light Remains ON).	RS-341
With ignition switch in ON position, SRS warning light does not come on.	SRS warning light circuit malfunction (SRS Warning Light does not Come On).	RS-346
Although SRS warning light operates normaly, neither DTCs normal system indication displayed.	TC and CG Terminal Circuit	RS-349
Although terminals TC and CG not connected, DTC or normal system indication displayed.	TC and CG Terminal Circuit	RS-349

TERMINALS OF ECU

1. CENTER AIRBAG SENSOR ASSEMBLY

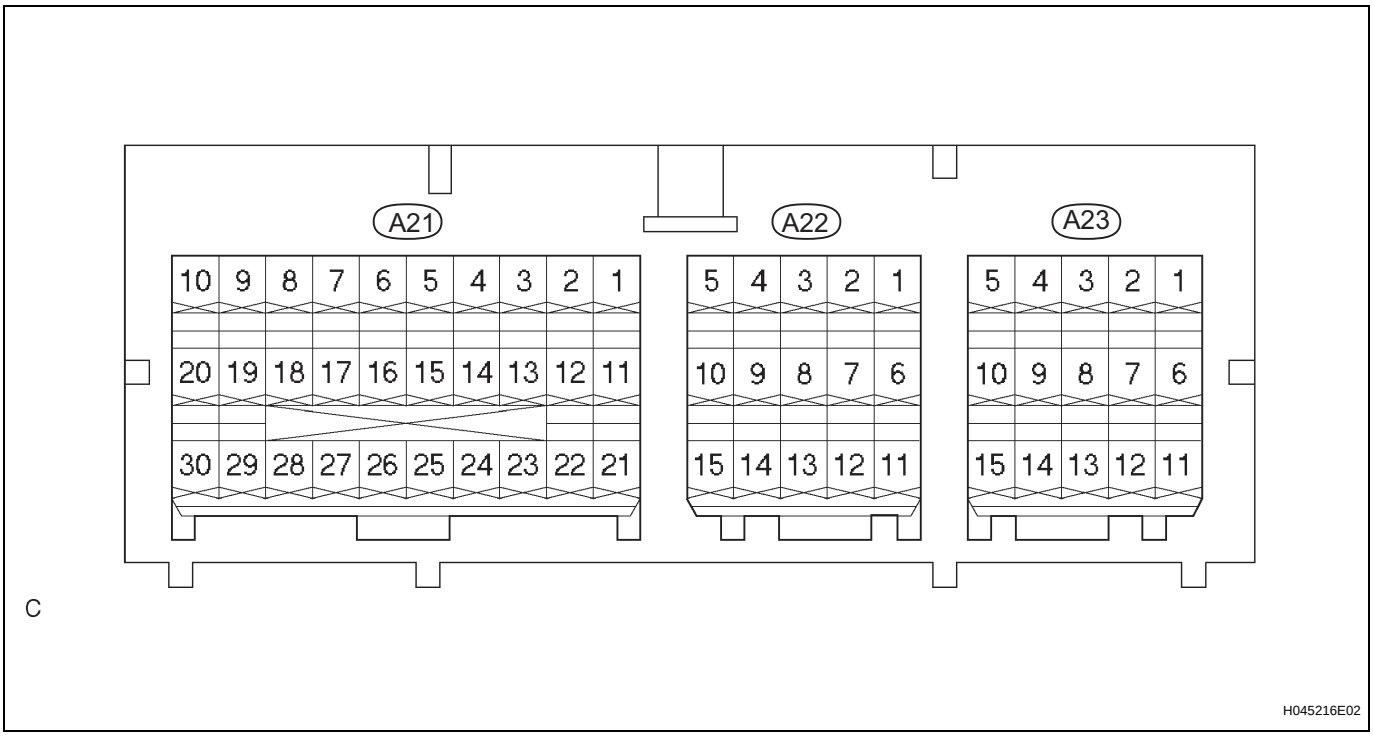

Terminal No.	Terminal Symbol	Destination
A21-1	P2+	Front passenger airbag assembly (Front passenger side squib 2nd step)
A21-2	P2-	Front passenger airbag assembly (Front passenger side squib 2nd step)
A21-3	P-	Front passenger airbag assembly (Front passenger side squib)
A21-4	P+	Front passenger airbag assembly (Front passenger side squib)
A21-5	D+	Steering pad (Driver side squib)
A21-6	D-	Steering pad (Driver side squib)
A21-7	D2-	Steering pad (Driver side squib 2nd step)
A21-8	D2+	Steering pad (Driver side squib 2nd step)
A21-11(*1)	MSW+	Airbag cut-off switch
A21-12(*1)	MSW-	Airbag cut-off switch
A21-13	PBEW	Passenger seat belt warning light assembly
A21-14	LA	Combination meter assembly
A21-15	TC	DLC3
A21-16	SIL	DLC3
A21-17	P-AB	Passenger seat belt warning light assembly
A21-21	IG2	IGN fuse (Power Source)
A21-22	GSW2	ECM
A21-23	PAON	Passenger seat belt warning light assembly
A21-24(*3)	GSW3	Occupant classification ECU
A21-25	E1	Ground
A21-26	E2	Ground
A21-27	-SR	Front airbag sensor RH
A21-28	-SL	Front airbag sensor LH
A21-29	+SR	Front airbag sensor RH
A21-30	+SL	Front airbag sensor LH
A22-1	PD-	Front seat outer belt assembly LH (Front pretensioner squib LH)

Terminal No.	Terminal Symbol	Destination
A22-2	PD+	Front seat outer belt assembly RH (Front pretensioner squib RH)
A22-6(*2)	ICD-	Curtain shield airbag assembly LH (Curtain shield squib LH)
A22-7(*2)	ICD+	Curtain shield airbag assembly LH (Curtain shield squib LH)
A22-8(*2)	BBD+	Side airbag sensor assembly LH
A22-9(*2)	SFD+	Front seat airbag assembly LH (Side squib LH)
A22-10(*2)	SFD-	Front seat airbag assembly LH (Side squib LH)
A22-11	DBE+	Front seat inner belt assembly LH
A22-12	DBE-	Front seat inner belt assembly LH
A22-13	DSP-	Seat position sensor
A22-14	DSP+	Seat position sensor
A22-15 (*2)	BBD-	Side airbag sensor assembly LH
A23-4	PP+	Front seat outer belt assembly RH (Front pretensioner squib RH)
A23-5	PP-	Front seat outer belt assembly RH (Front pretensioner squib RH)
A23-6(*2)	SFP-	Front seat airbag assembly RH (Side squib RH)
A23-7(*2)	SFP+	Front seat airbag assembly RH (Side squib RH)
A23-8(*2)	BBP+	Side airbag sensor assembly RH
A23-9 (*2)	ICP+	Curtain shield airbag assembly RH (Curtain shield squib RH)
A23-10 (*2)	ICP-	Curtain shield airbag assembly RH (Curtain shield squib RH)
A23-11(*2)	BBP-	Side airbag sensor assembly RH
A23-12	FSP+	Occupant classification ECU
A23-13	FSP-	Occupant classification ECU

*1:Except double cab

*2:With side and curtain shield airbag

*3:Bench Seat

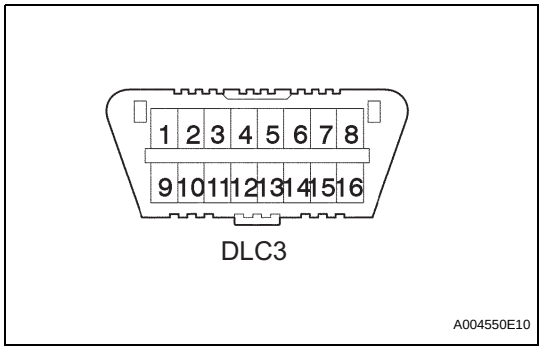

DIAGNOSIS SYSTEM

1. CHECK DLC3

(a) The vehicle's ECU uses the ISO 9141-2 for communication protocol. The terminal arrangement of the DLC3 complies with SAE J1962 and matches the ISO 15765-4 format.

RS

Symbols (Terminals No.)	Terminal Description	Condition	Specified condition
SIL (7) - SG (5)	Bus + line	During transmission	Pulse generation
CG (4) - Body ground	Chassis ground	Always	Below 1 Ω
BAT (16) - Body ground	Battery positive	Always	10 to 14 V

HINT:

If the display shows a communication error message when connecting the cable of the intelligent tester to the DLC3, turning the engine switch on (IG) and operating the intelligent tester, there is a problem on the vehicle side or tool side.

- If communication is normal when the tool is connected to another vehicle, inspect the DLC3 on the original vehicle.
- If communication is still not possible when the tool is connected to another vehicle, the problem is probably in the tool itself. Consult the Service Department listed in the tool's instruction manual.

2. SYMPTOM SIMULATION

HINT:

The most difficult case in troubleshooting is when no symptoms occur. In such cases, a thorough customer problem analysis must be carried out. Then the same or similar conditions and environment in which the problem occurred in the customer's vehicle should be simulated. No matter how experienced or skilled a technician may be, if he proceeds to troubleshoot without confirming the problem symptoms, he will likely overlook something important and make a wrong guess at some points in the repair operation.

This leads to a standstill in troubleshooting.

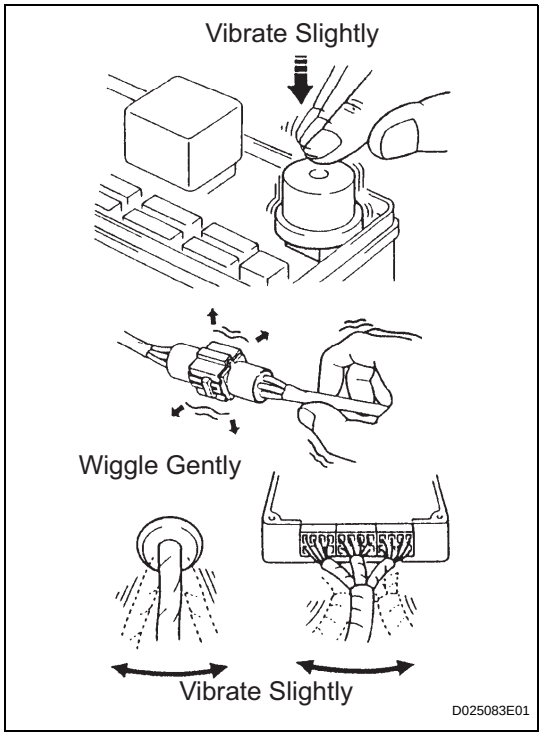

(a) Vibration method: When vibration seems to be the major cause.

HINT:

Perform the simulation method only during the primary check period (for approximately 6 seconds after the engine switch is turned on (IG)).

(1) Slightly vibrate the part of the sensor considered to be the problem cause with your fingers and check whether the malfunction occurs.

HINT:

Shaking the relays too strongly may result in open relays.

(2) Slightly shake the connector vertically and horizontally.

(3) Slightly shake the wire harness vertically and horizontally.

The connector joint and fulcrum of the vibration are the major areas to be checked thoroughly.

3. FUNCTION OF SRS WARNING LIGHT

(a) Primary check.

(1) Turn the engine switch off. Wait for at least 2 seconds, then turn the engine switch on (IG). The SRS warning light comes on for approximately 6 seconds and the diagnosis of the airbag system (including the seat belt pretensioners) is performed.

HINT:

If trouble is detected during the primary check, the SRS warning light remains on even after the primary check period (for approximately 6 seconds) has elapsed.

RS

(b) Constant check.
(1) After the primary check, the center airbag sensor assembly constantly monitors the airbag system for trouble.
HINT:
If trouble is detected during the constant check, the center airbag sensor assembly functions as follows:
- The SRS warning light comes on.
- The SRS warning light goes off, and then comes on. This blinking pattern indicates a source voltage drop. The SRS warning light goes off 10 seconds after the source voltage returns to normal.

(c) Review.
(1) When the airbag system is normal:
The SRS warning light comes on only during the primary check period (for approximately 6 seconds after the engine switch is turned on (IG)).
(2) When the airbag system has trouble:
- The SRS warning light remains on even after the primary check period has elapsed.
- The SRS warning light goes off after the primary check, but comes on again during the constant check.
- The SRS warning light does not come on when turning the engine switch from off to on (IG).

HINT:
The center airbag sensor assembly keeps the SRS warning light on if the airbag has been deployed.

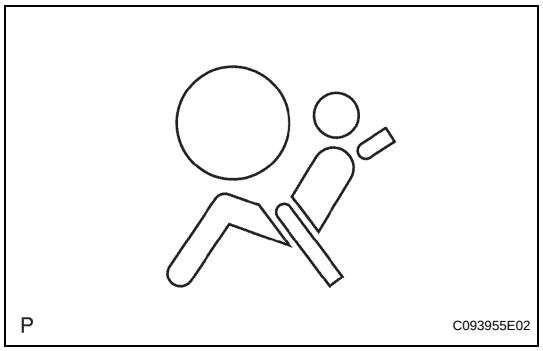

4. SRS WARNING LIGHT CHECK

(a) Turn the engine switch on (IG), and check that the SRS warning light comes on for approximately 6 seconds (primary check).
(b) Check that the SRS warning light goes off approximately 6 seconds after the engine switch is turned on (IG) (constant check).
HINT:
When any of the following symptoms occur, refer to the "Problem Symptoms Table" (See page RS-26).
- The SRS warning light comes on occasionally, after the primary check period has elapsed.
- The SRS warning light comes on, but a DTC is not output.
- The engine switch is turned from off to on (IG), but the SRS warning light does not come on.

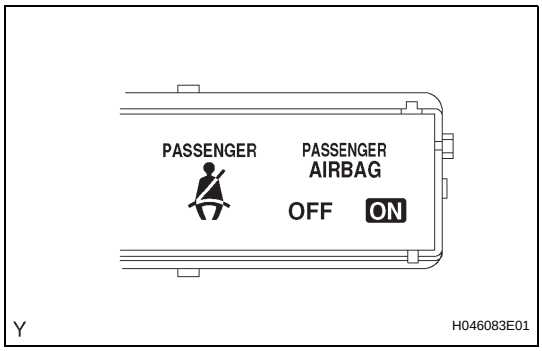

5. PASSENGER AIRBAG ON/OFF INDICATOR CHECK

(a) Turn the ignition switch to the ON position.

(b) Check that the passenger airbag ON/OFF indicator (ON and OFF) comes on for approximately 4 seconds, then turns off for approximately 2 seconds.

HINT:

Refer to the table in step 4 regarding the passenger airbag ON/ OFF indicator when the ignition switch is turned to the ON position and approximately 6 seconds have passed.

6. RELEASE METHOD OF ACTIVATION PREVENTION MECHANISM

(a) The activation prevention mechanism is built into the connector for the squib circuit of the SRS. As explained in the troubleshooting section, insert a piece of paper that is the same thickness as the male terminal between the terminal and the short spring to release it (refer to the illustrations on the next 3 pages).

CAUTION:

Never release the activation prevention mechanism on the squib connector even when inspecting with the squib disconnected.

NOTICE:

- **Do not release the activation prevention mechanism unless specially directed by the troubleshooting procedure.**
- **To prevent the terminal and the short spring from being damaged, always use a piece of paper of the same thickness as the male terminal.**

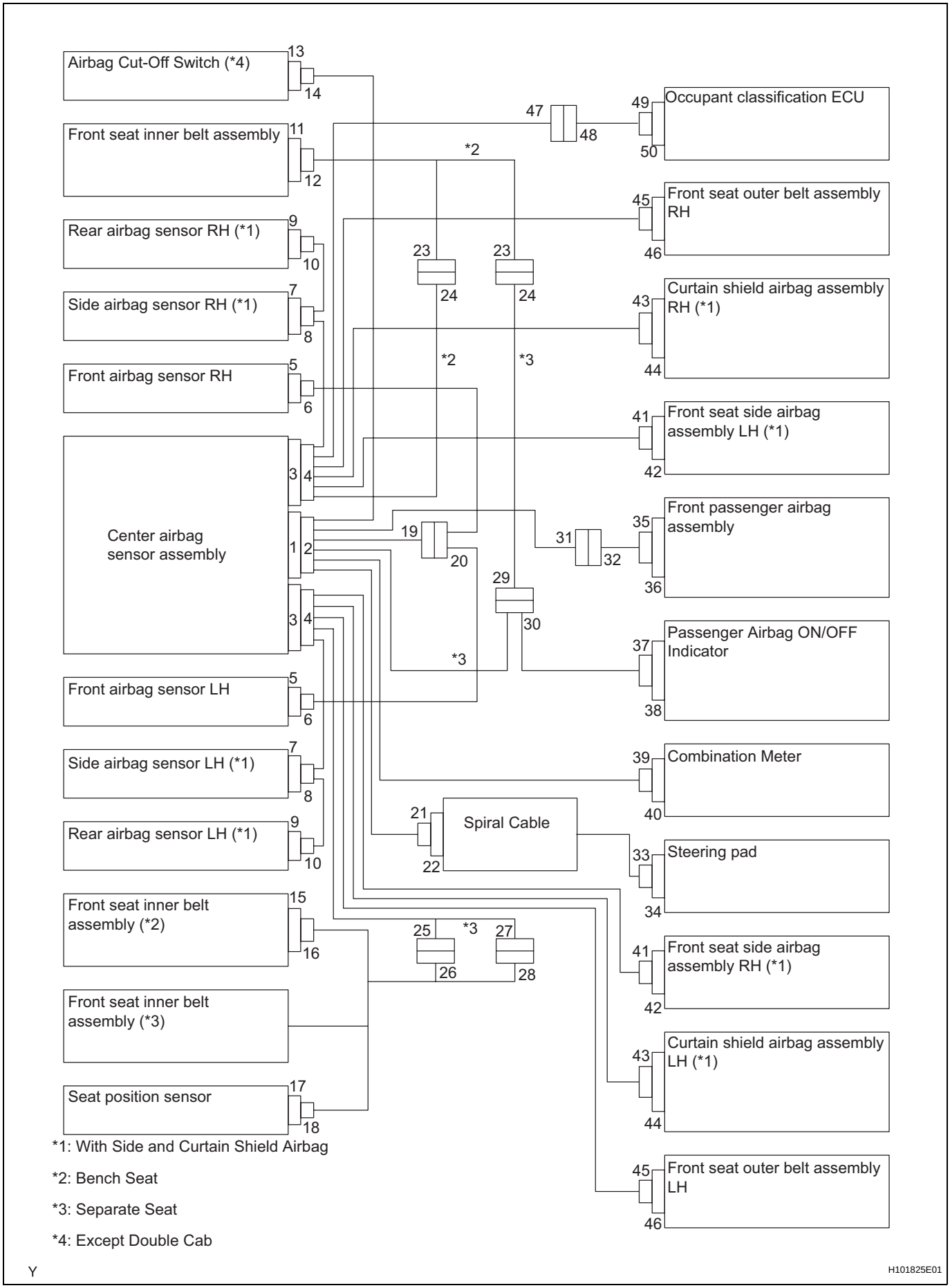
Airbag Cut-Off Switch (*4)
13
14
Front seat inner belt assembly
11
12
Rear airbag sensor RH (*1)
9
10
Side airbag sensor RH (*1)
7
8
Front airbag sensor RH
5
6
Center airbag sensor assembly
3
4
1
2
3
4
Front airbag sensor LH
5
6
Side airbag sensor LH (*1)
7
8
Rear airbag sensor LH (*1)
9
10
Front seat inner belt assembly (*2)
15
16
Front seat inner belt assembly (*3)
Seat position sensor
17
18
47
48
*2
23
24
23
24
*2
*3
19
20
29
30
*3
21
22
Spiral Cable
25
26
*3
27
28
49
50
Occupant classification ECU
45
46
Front seat outer belt assembly RH
43
44
Curtain shield airbag assembly RH (*1)
41
42
Front seat side airbag assembly LH (*1)
31
32
35
36
Front passenger airbag assembly
37
38
Passenger Airbag ON/OFF Indicator
39
40
Combination Meter
33
34
Steering pad
41
42
Front seat side airbag assembly RH (*1)
43
44
Curtain shield airbag assembly LH (*1)
45
46
Front seat outer belt assembly LH
*1: With Side and Curtain Shield Airbag
*2: Bench Seat
*3: Separate Seat
*4: Except Double Cab
Y
H101825E01

RS

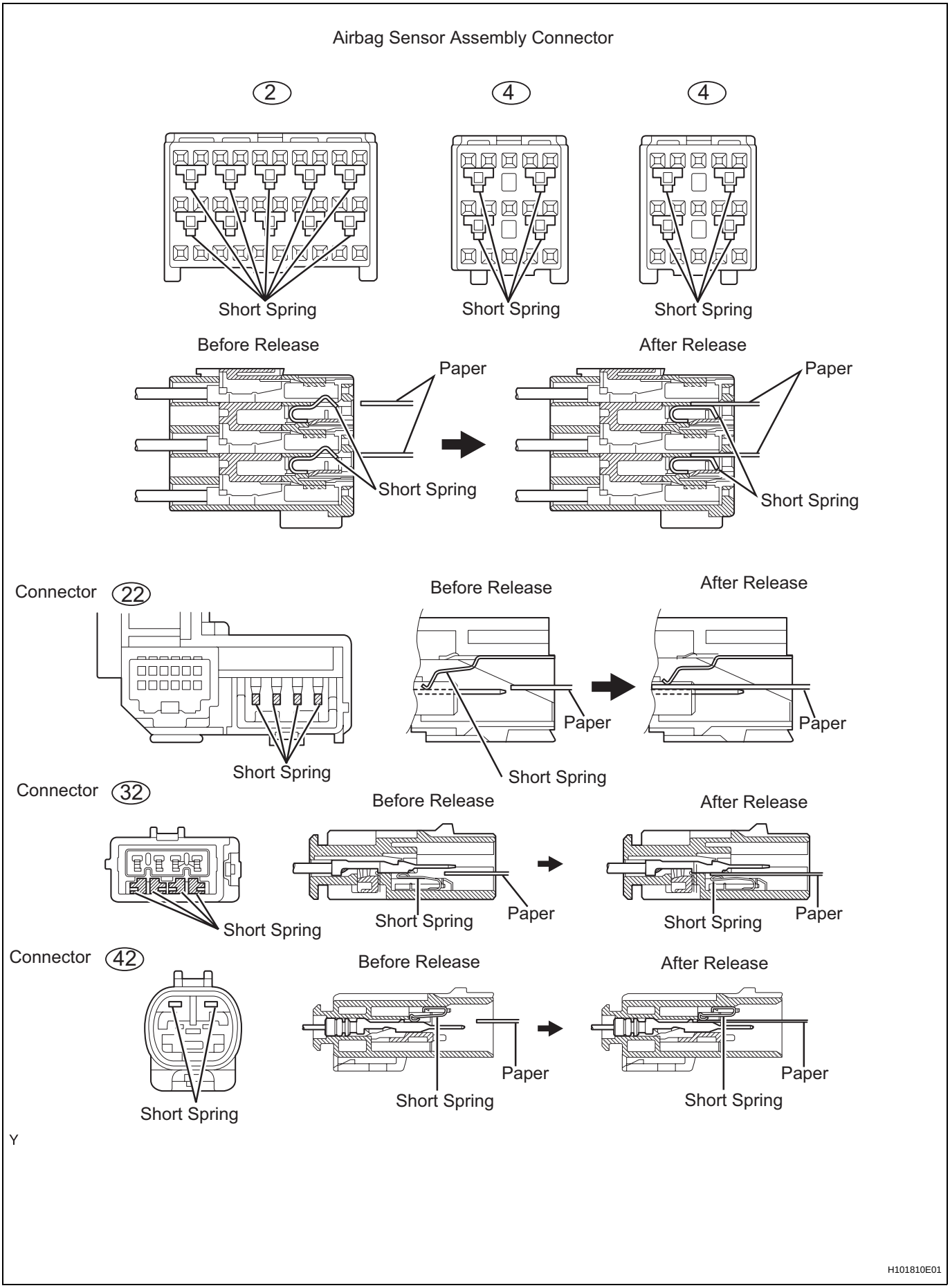

RS

Y

H101810E01

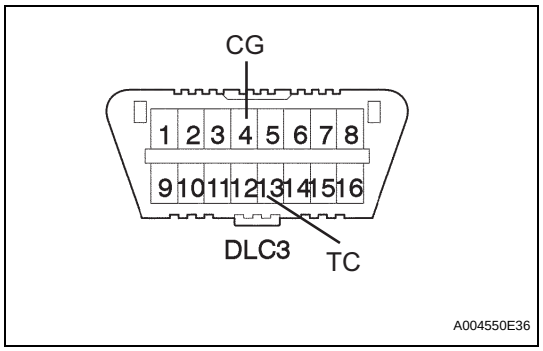

DTC CHECK / CLEAR

1. SUPPLEMENTAL RESTRAINT SYSTEM DTC CHECK (USING SST CHECK WIRE)

(a) Check the DTCs (Present DTCs).

(1) Turn the ignition switch to the ON position, and wait for approximately 60 seconds.

(2) Using SST, connect terminals TC and CG of the DLC3.

SST 09843-18040

NOTICE:

Connect the terminals to the correct positions to avoid a malfunction.

(b) Check the DTCs (Past DTCs).

(1) Using SST, connect terminals TC and CG of the DLC3.

SST 09843-18040

NOTICE:

Connect the terminals to the correct positions to avoid a malfunction.

(2) Turn the ignition switch to the ON position, and wait for approximately 60 seconds.

(c) Read the DTCs.

(1) Read the blinking patterns of the DTCs. Examples, the blinking patterns for the normal system indication, the past DTC indication, and the present DTC indication are shown in the illustration.

- Normal system indication
  The SRS warning light blinks twice per second.
- Past DTC indication
  When any past DTCs are stored in the center airbag sensor assembly, the SRS warning light blinks only once per second.
- Present DTC indication
  The first blinking indicates the first digit of a 2-digit DTC. The second blinking occurs after a 1.5-second pause to indicate the second digit.

If there are more than one DTC, there is a 2.5-second pause after each one. After all the DTC are displayed, there is a 4.0-second pause, and they are repeated.

HINT:

- If 2 or more malfunctions are found, the indication begins with the smaller numbered code.
- If DTCs are indicated without connecting the terminals, proceed to the "TC and CG Terminal Circuit" (See page RS-349).

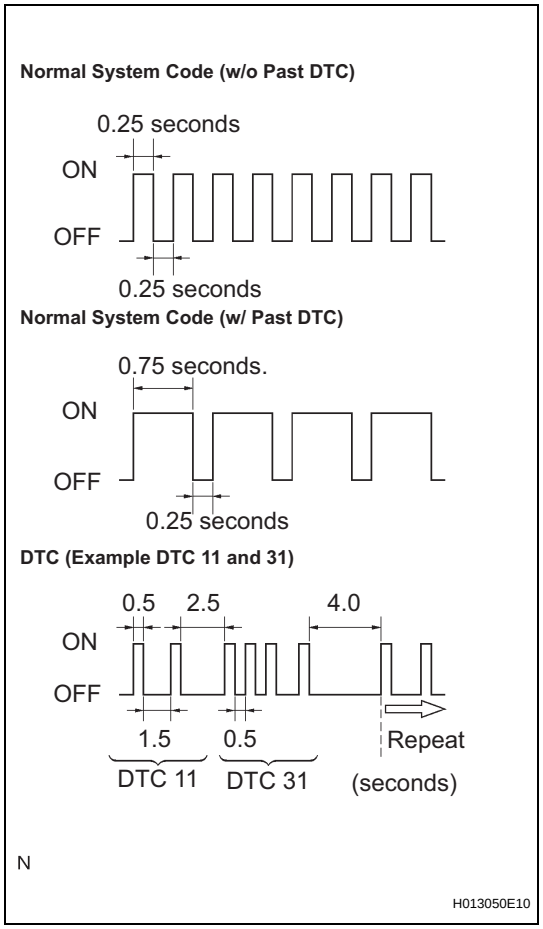

RS

2. DTC CLEAR (USING SST CHECK WIRE)

(a) Clear the DTCs.

(1) When the ignition switch is turned off (turned to the lock position), the DTCs are cleared.
HINT:
Depending on the DTCs, the DTCs may not be cleared by turning off the ignition switch. In this case, proceed to the next procedure.

(2) Using SST, connect terminals TC and CG of the DLC3, and then turn the ignition switch to the ON position.
SST 09843-18040

(3) Disconnect terminal TC of the DLC3 within 3 to 10 seconds after the DTCs being output, and check if the SRS warning light comes on within 3 seconds.

(4) Within 2 to 4 seconds of the SRS warning light coming on, connect terminals TC and CG of the DLC3.

(5) The SRS warning light should turn off within 2 to 4 seconds after connecting terminals TC and CG of the DLC3. Then, disconnect terminal TC within 2 to 4 seconds after the SRS warning light turning off.

(6) The SRS warning light comes on again within 2 to 4 seconds after disconnecting terminal TC. Then, reconnect terminals TC and CG within 2 to 4 seconds after the SRS warning light coming on, connect terminals TC and CG of the DLC3.

(7) Check if the SRS warning light turns off 2 to 4 seconds after connecting terminals TC and CG of the DLC3. Also check if the normal system indication is displayed within 1 second of the SRS warning light turning off.
If DTCs are not cleared, repeat this procedure until the codes are cleared.

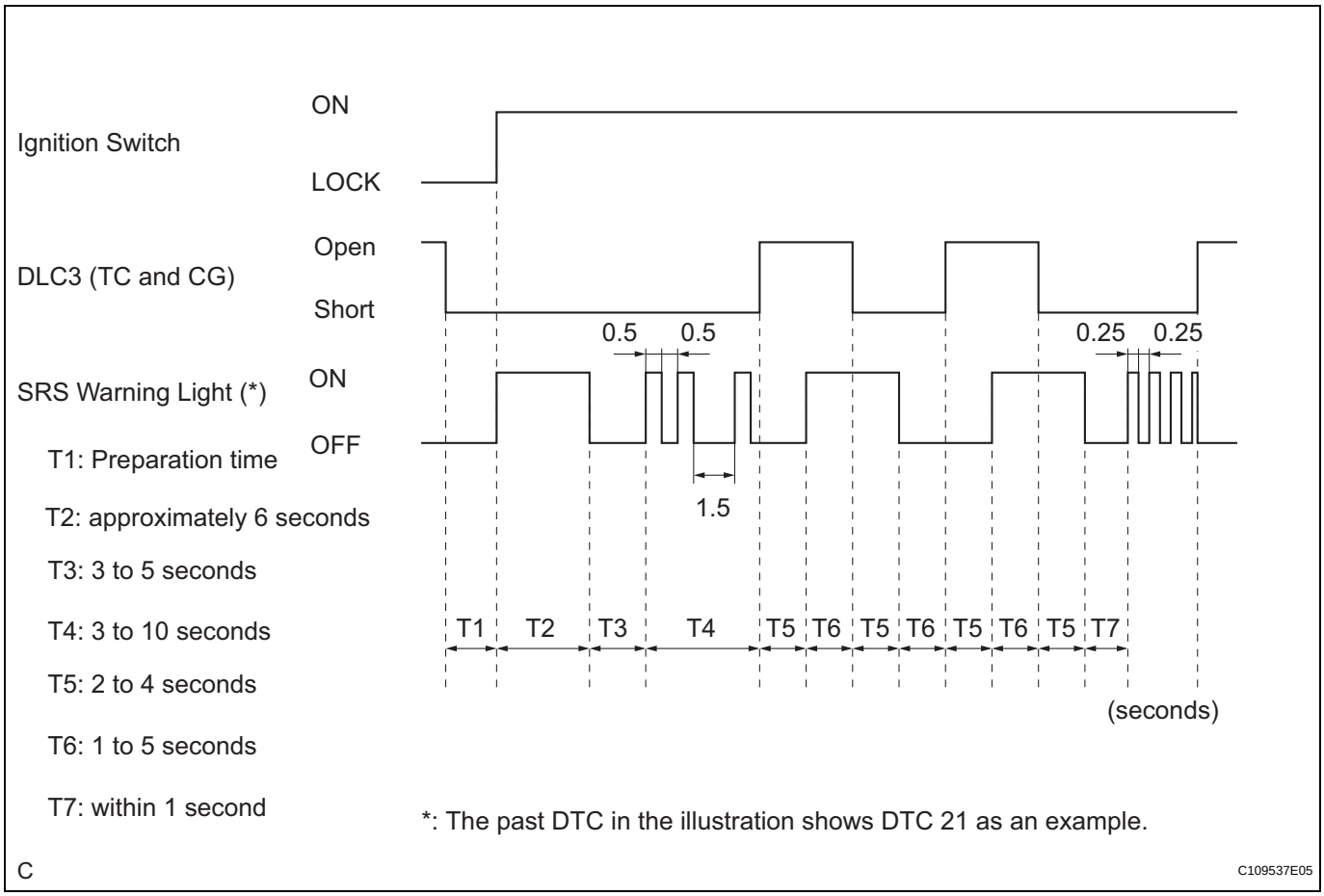

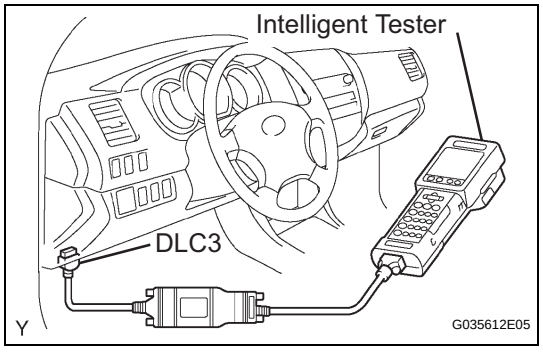

3. SUPPLEMENTAL RESTRAINT SYSTEM DTC CHECK (USING INTELLIGENT TESTER)

(a) Check the DTCs.
(1) Connect the intelligent tester to the DLC3.
(2) Turn the ignition switch to the ON position and turn the tester on.
(3) Check the DTCs by following the prompts on the tester screen.
HINT:
Refer to the intelligent tester operator manual for further details.

(b) Clear the DTCs.
(1) Connect the intelligent tester to the DLC3.
(2) Turn the ignition switch to the ON position and turn the tester on.
(3) Clear the DTCs by following the prompts on the tester screen.
HINT:
Refer to the intelligent tester operator's manual for further details.

RS

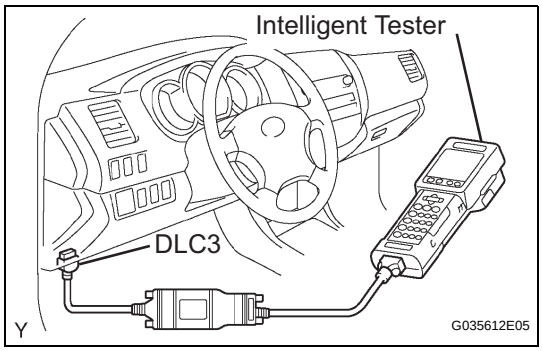

CHECK MODE PROCEDURE

1. CHECK MODE (SIGNAL CHECK): (USING INTELLIGENT TESTER)

(a) Connect the intelligent tester to the DLC3.
(b) Turn the ignition switch to the ON position and turn the tester on.
(c) Select the SIGNAL CHECK on the tester, and proceed checking with the tester.

DATA LIST / ACTIVE TEST

HINT:
By accessing the DATA LIST displayed on the intelligent tester, you can perform such functions as reading the values of switches and sensors without removing any parts. Reading the DATA LIST is the first step of troubleshooting and is one method to shorten labor time.

1. DATA LIST FOR CENTER AIRBAG SENSOR ASSEMBLY

(a) Connect the intelligent tester to the DLC3.
(b) Turn the ignition switch to the ON position and turn the tester on.
(c) Follow the display on the tester screen to enter the "DATA LIST".
(d) Check the condition by referring to the table below.

Item	Measure Item/ Range (Display)	Normal Condition	Diagnostic Note
D SEAT POSITION	Seat position (Driver side)/ FORWARD: Seat position is forward BKWARD: Seat position is rearward FAIL: A failure is detected	FORWARD/BKWARD	-
PASSENGER CLASS(*1)	Passenger classification/ NG: Date is not determined NONE: Vacant CHILD: Child (less than 36 kg (79.37 lb)) is seated SMALL: Adult (36 to 54 kg (79.37 to 119.05 lb)) is seated REGULAR: Adult (More than 54 kg (119.05 lb)) is seated FAIL: A failure is detected	NG/NONE/CHILD/SMALL/ REGULAR	-
D BUCKLE SW	Buckle switch (Driver side)/ UNSET: The seat belt is not fastened SET: The seat belt is fastened NG: Data is not determined	UNSET/SET	-
P BUCKLE SW	Buckle switch (Right side)/ UNSET: The seat belt is not fastened SET: The seat belt is fastened NG: Data is not determined	UNSET/SET	-
DISPLAY TYPE	Display type identification information/ LR: The display is indicated by LH/RH DP: The display is indicated by Driver/Passenger	DP	-

*1: Separate Seat

DIAGNOSTIC TROUBLE CODE CHART

If a DTC is displayed during the DTC check, check the circuit listed for the DTC in the table below (refer to the appropriate page).

HINT:

- When the SRS warning light remains on and the normal system code is output, a decrease in the source voltage is likely to occur. This malfunction is not stored in the memory of the center airbag sensor assembly. If the power source voltage returns to normal, the SRS warning light will automatically go off.
- When 2 or more DTCs are indicated, the DTC with the lowest number appears first.
- If a DTC is not listed on the DTC chart, the center airbag sensor may have malfunctioned.
- In the case of any malfunctions concerning open circuits, shorts to ground, or shorts to B+ due to squibs, other DTCs may not be set. In this case, repair the malfunction currently indicated and then perform malfunction diagnosis again.
- Mark in the check mode column:
  -: DTC does not correspond to check mode.
  ○: DTC corresponds to check mode.
- When DTC B1650/32 is set as a result of troubleshooting the Supplemental Restraint System (SRS), perform troubleshooting for the occupant classification system.

Center Airbag Sensor

DTC No.	Detection Item	Trouble Area	Check Mode	SRS Warning Light	See page
B1000/31	Center Airbag Sensor Assembly Malfunction	1. Center airbag sensor assembly	-	ON	RS-42
B1610/13	Front Airbag Sensor RH Circuit Malfunction	1. Instrument panel wire 2. Engine room main wire 3. Front airbag sensor RH 4. Center airbag sensor assembly	-	ON	RS-43
B1615/14	Front Airbag Sensor LH Circuit Malfunction	1. Instrument panel wire 2. Engine room main wire 3. Front airbag sensor LH 4. Center airbag sensor assembly	-	ON	RS-43
B1620/21	Driver Side - Side Airbag Sensor Circuit Malfunction	1. No. 2 floor wire 2. Side airbag sensor LH 3. Rear airbag sensor LH 4. Center airbag sensor assembly	-	ON	RS-74
B1625/22	Front Passenger Side - Side Airbag Sensor Circuit Malfunction	1. Floor wire 2. Side airbag sensor RH 3. Rear airbag sensor RH 4. Center airbag sensor assembly	-	ON	RS-74
B1630/23	Driver Side Rear Airbag Sensor Circuit Malfunction	1. No. 2 floor wire 2. Side airbag sensor LH 3. Rear airbag sensor LH 4. Center airbag sensor assembly	-	ON	RS-103
B1635/24	Front Passenger Side Rear Airbag Sensor Circuit Malfunction	1. Floor wire 2. Side airbag sensor RH 3. Rear airbag sensor RH 4. Center airbag sensor assembly	-	ON	RS-103

DTC No.	Detection Item	Trouble Area	Check Mode	SRS Warning Light	See page
B1650/32	Occupant Classification System Malfunction	1. No. 1 seat wire 2. Floor wire 3. Occupant classification system 4. Center airbag sensor assembly	-	ON	RS-123
B1651/33	Manual Cut off Switch Trouble	1. Instrument panel wire 2. Airbag Cut-Off Switch 3. Center airbag sensor assembly	-	ON	RS-135
B1653/35	Seat Position Airbag Sensor Circuit Malfunction	1. No. 1 seat wire (*2) 2. No. 2 seat wire (*2) 3. No. 2 floor wire 4. Front seat inner belt assembly LH (*1) 5. Seat position sensor 6. Center airbag sensor assembly	-	ON	RS-141
B1655/37	Driver Side Seat Belt Buckle Switch Circuit Malfunction	1. No. 1 seat wire (*2) 2. No. 2 seat wire (*2) 3. No. 2 floor wire 4. Front seat inner belt assembly 5. Center airbag sensor assembly	-	ON	RS-157
B1660/43	Passenger Airbag ON / OFF Indicator Circuit Malfunction	1. Passenger Airbag ON/OFF Indicator (Passenger seat belt warning light assembly 2. Instrument panel wire 3. Center airbag sensor assembly	-	ON	RS-171
B1662/45	Indicator Light Circuit Malfunction	1. Instrument panel wire 2. Combination meter assembly 3. Center airbag sensor assembly	-	ON	RS-182
B1800/51	Short in Driver Side Squib Circuit	1. Instrument panel wire 2. Spiral cable 3. Steering pad (Driver side squib) 4. Center airbag sensor assembly	O	ON	RS-187
B1801/51	Open in Driver Side Squib Circuit	Same as DTC No. B1800/51	O	ON	RS-187
B1802/51	Short to GND in Driver Side Squib Circuit	Same as DTC No. B1800/51	O	ON	RS-187
B1803/51	Short to B+ in Driver Side Squib Circuit	Same as DTC No. B1800/51	O	ON	RS-187
B1805/52	Short in Front Passenger Side Squib Circuit	1. Instrument panel wire 2. Instrument panel wire assembly 3. Front passenger airbag assembly (Front passenger side squib) 4. Center airbag sensor assembly	O	ON	RS-201
B1806/52	Open in Front Passenger Side Squib Circuit	Same as DTC No. B1805/52	O	ON	RS-201
B1807/52	Short to GND in Front Passenger Side Squib Circuit	Same as DTC No. B1805/52	O	ON	RS-201
B1808/52	Short to B+ in Front Passenger Side Squib Circuit	Same as DTC No. B1805/52	O	ON	RS-201
B1810/53	Short in Driver Side Squib 2nd Step Circuit	1. Instrument panel wire 2. Spiral cable 3. Steering pad (Driver side squib 2nd step) 4. Center airbag sensor assembly	O	ON	RS-217
B1811/53	Open in Driver Side Squib 2nd Step Circuit	Same as DTC No. B1810/53	O	ON	RS-217
B1812/53	Short to GND in Driver Side Squib 2nd Step Circuit	Same as DTC No. B1810/53	O	ON	RS-217
B1813/53	Short to B+ in Driver Side Squib 2nd Step Circuit	Same as DTC No. B1810/53	O	ON	RS-217

DTC No.	Detection Item	Trouble Area	Check Mode	SRS Warning Light	See page
B1815/54	Short in Front Passenger Side Squib 2nd Step Circuit	1. Instrument panel wire 2. Instrument panel wire assembly 3. Front passenger airbag assembly (Front passenger side squib 2nd step) 4. Center airbag sensor assembly	O	ON	RS-233
B1816/54	Open in Front Passenger Side Squib 2nd Step Circuit	Same as DTC No. B1815/54	O	ON	RS-233
B1817/54	Short to GND in Front Passenger Side Squib 2nd Step Circuit	Same as DTC No. B1815/54	O	ON	RS-233
B1818/54	Short to B+ in Front Passenger Side Squib 2nd Step Circuit	Same as DTC No. B1815/54	O	ON	RS-233
B1820/55	Short in Driver Side - Side Squib Circuit	1. No. 2 floor wire 2. Front seat with adjuster frame assembly LH (Driver side-side squib) 3. Center airbag sensor	O	ON	RS-249
B1821/55	Open in Driver Side - Side Squib Circuit	Same as DTC No. B1820/55	O	ON	RS-249
B1822/55	Short to GND in Driver Side - Side Squib Circuit	Same as DTC No. B1820/55	O	ON	RS-249
B1823/55	Short to B+ in Driver Side - Side Squib Circuit	Same as DTC No. B1820/55	O	ON	RS-249
B1825/56	Short in Front Passenger Side - Side Squib Circuit	1. Floor wire 2. Front seat with adjuster frame assembly RH (Front passenger side-side squib) 3. Center airbag sensor assembly	O	ON	RS-260
B1826/56	Open in Front Passenger Side - Side Squib Circuit	Same as DTC No. B1825/56	O	ON	RS-260
B1827/56	Short to GND in Front Passenger Side - Side Squib Circuit	Same as DTC No. B1825/56	O	ON	RS-260
B1828/56	Short to B+ in Front Passenger Side - Side Squib Circuit	Same as DTC No. B1825/56	O	ON	RS-260
B1830/57	Short in Driver Side Curtain Shield Squib Circuit	1. No. 2 floor wire 2. Curtain shield airbag assembly (Driver side curtain shield squib) 3. Center airbag sensor assembly	O	ON	RS-271
B1831/57	Open in Driver Side Curtain Shield Squib Circuit	Same as DTC No. B1830/57	O	ON	RS-271
B1832/57	Short to GND in Driver Side Curtain Shield Squib Circuit	Same as DTC No. B1830/57	O	ON	RS-271
B1833/57	Short to B+ in Driver Side Curtain Shield Squib Circuit	Same as DTC No. B1830/57	O	ON	RS-271
B1835/58	Short in Front Passenger Side Curtain Shield Squib Circuit	1. Floor wire 2. Curtain shield airbag assembly (Front passenger side curtain shield squib) 3. Center airbag sensor assembly	O	ON	RS-282
B1836/58	Open in Front Passenger Side Curtain Shield Squib Circuit	Same as DTC No. B1835/58	O	ON	RS-282

DTC No.	Detection Item	Trouble Area	Check Mode	SRS Warning Light	See page
B1837/58	Short to GND in Front Passenger Side Curtain Shield Squib Circuit	Same as DTC No. B1835/58	O	ON	RS-282
B1838/58	Short to B+ in Front Passenger Side Curtain Shield Squib Circuit	Same as DTC No. B1835/58	O	ON	RS-282
B1900/73	Short in Driver Side Front Pretensioner Squib Circuit	1. No. 2 floor wire 2. No. 2 rear door wire (*3) 3. Front seat outer belt assembly LH (Driver side front pretensioner squib) 4. Center airbag sensor assembly	O	ON	RS-293
B1901/73	Open in Driver Side Front Pretensioner Squib Circuit	Same as DTC No. B1900/73	O	ON	RS-293
B1902/73	Short to GND in Driver Side Front Pretensioner Squib Circuit	Same as DTC No. B1900/73	O	ON	RS-293
B1903/73	Short to B+ in Driver Side Front Pretensioner Squib Circuit	Same as DTC No. B1900/73	O	ON	RS-293
B1905/74	Short in Front Passenger Side Front Pretensioner Squib Circuit	1. Floor wire 2. No. 1 rear door wire (*3) 3. Front seat outer belt assembly RH (Front passenger side front pretensioner squib) 4. Center airbag sensor assembly	O	ON	RS-317
B1906/74	Open in Front Passenger Side Front Pretensioner Squib Circuit	Same as DTC No. B1905/74	O	ON	RS-317
B1907/74	Short to GND in Front Passenger Side Front Pretensioner Squib Circuit	Same as DTC No. B1905/74	O	ON	RS-317
B1908/74	Short to B+ in Front Passenger Side Front Pretensioner Squib Circuit	Same as DTC No. B1905/74	O	ON	RS-317

*1: For separate seat
*2: For bench seat
*3: For access cab

DTC	B1000/31	Center Airbag Sensor Assembly Malfunction

DESCRIPTION

The center airbag sensor assembly consists of parts such as the airbag sensor, the safing sensor, the drive circuit, the diagnostic circuit and the ignition control.
When the center airbag sensor assembly receives signals from the airbag sensor, it determines whether or not the SRS should be activated.
B1000/31 is set when a malfunction is detected in the center airbag sensor assembly .

DTC No.	DTC Detecting Condition	Trouble Area
B1000/31	• Center airbag sensor assembly malfunction	• Center airbag sensor assembly

HINT:
When any other DTCs are set simultaneously with B1000/31, repair the malfunctions indicated by those DTCs first.

1	CHECK CENTER AIRBAG SENSOR ASSEMBLY

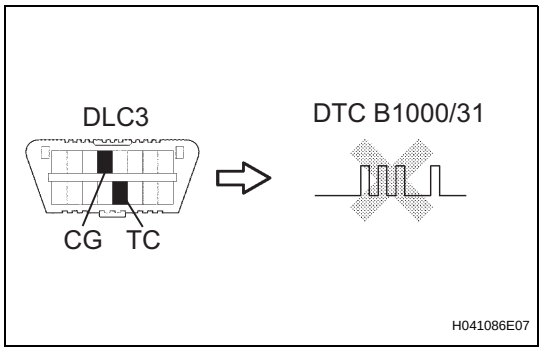

(a) Turn the ignition switch to the LOCK position.
(b) Disconnect the negative (-) terminal cable from the battery, and wait for at least 90 seconds.
(c) Connect the negative (-) terminal cable to the battery, and wait for at least 2 seconds.
(d) Turn the ignition switch to the ON position, and wait for at least 60 seconds.
(e) Clear any DTCs stored in the memory (See page RS-34).
(f) Turn the ignition switch to the LOCK position.
(g) Turn the ignition switch to the ON position, and wait for at least 60 seconds.
(h) Check for DTCs (See page RS-34).
OK:
DTC B1000/31 is not output.

NG → **REPLACE CENTER AIRBAG SENSOR ASSEMBLY**

OK

USE SIMULATION METHOD TO CHECK

RS

DTC	B1610/13	Front Airbag Sensor RH Circuit Malfunction

DTC	B1615/14	Front Airbag Sensor LH Circuit Malfunction

DESCRIPTION

The front airbag sensor RH consists of parts such as the diagnostic circuit and the frontal detection sensor.
The configuration of the front airbag sensor LH is the same as that of the RH.
When the center airbag sensor assembly receives signals from the frontal deceleration sensor, it determines whether or not the SRS should be activated.
DTC B1610/13 is set when a malfunction is detected in the front airbag sensor RH circuit.
DTC B1615/14 is set when a malfunction is detected in the front airbag sensor LH circuit.

DTC No.	DTC Detecting Condition	Trouble Areas
B1610/13	• The center airbag sensor assembly receives a line short signal, an open signal, a short to ground signal or a short to B+ signal in the front airbag sensor RH circuit for 2 seconds • Front airbag sensor RH malfunction • Center airbag sensor assembly malfunction	• Front airbag sensor RH • Center airbag sensor assembly • Instrument panel wire • Engine room main wire
B1615/14	• The center airbag sensor assembly receives a line short signal, an open signal, a short to ground signal or a short to B+ signal in the front airbag sensor LH circuit for 2 seconds • Front airbag sensor LH malfunction • Center airbag sensor assembly malfunction	• Front airbag sensor LH • Center airbag sensor assembly • Instrument panel wire • Engine room main wire

WIRING DIAGRAM

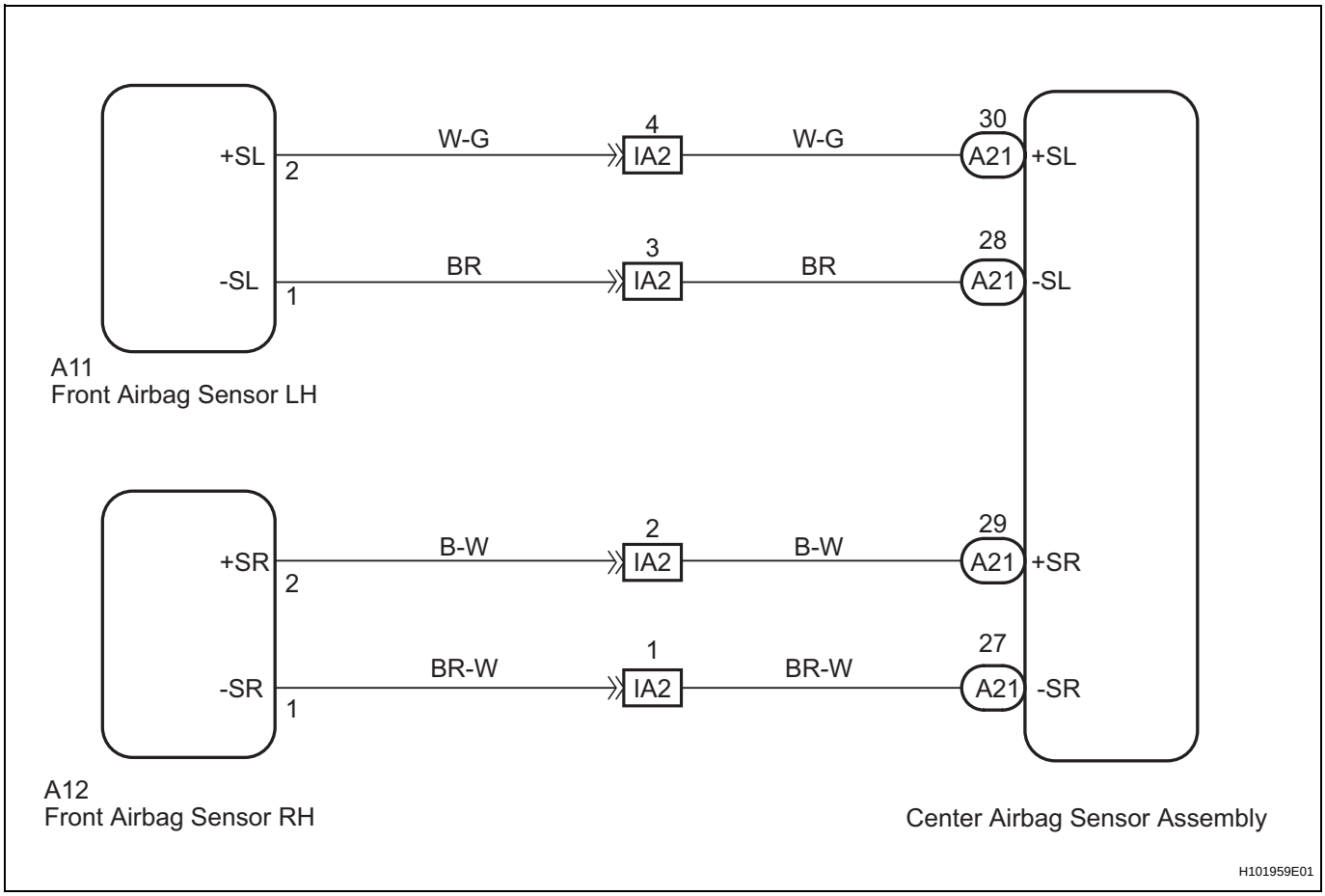

RS

CAUTION:
In order to prevent unexpected airbag deployment, disconnect the following connectors before inspecting parts such as wire harnesses, if the application of tester probes to the center airbag sensor assembly connector is necessary.
(a) Turn the ignition switch to the LOCK position.
(b) Disconnect the negative (-) terminal cable from the battery, and wait for at least 90 seconds.
(c) Disconnect the connectors from the center airbag sensor assembly.
(d) Disconnect the connectors from the steering pad.
(e) Disconnect the connector from the front passenger airbag assembly.
(f) Disconnect the connector from the front seat outer belt assembly LH.
(g) Disconnect the connector from the front seat outer belt assembly RH.
HINT:
Skip the following steps if side and curtain shield airbags are not fitted.
(h) Disconnect the connector from the front seat airbag assembly LH.
(i) Disconnect the connector from the front seat airbag assembly RH.
(j) Disconnect the connector from the curtain shield airbag assembly LH.
(k) Disconnect the connector from the curtain shield airbag assembly RH.

1 CHECK DTC

(a) Proceed to the appropriate step according to DTC readings.
(1) Check the DTC (See page RS-34).
Result

Result	Proceed to
DTC B1610/13 is output.	A
DTC B1615/14 is output.	B
DTC B1610/13 and B1615/14 are output.	C
Neither DTC B1610/13 nor B1615/14 is output.	D

B → **Go to step 14**

C → **Go to step 26**

D → **USE SIMULATION METHOD TO CHECK**

A

RS

2 CHECK CONNECTION OF CONNECTORS

(a) Turn the ignition switch to the LOCK position.
(b) Disconnect the negative (-) terminal cable from the battery, and wait for at least 90 seconds.
(c) Check that the connectors are properly connected to the center airbag sensor assembly and the airbag sensor front RH.
OK:
The connectors are properly connected.

NG → **CONNECT CONNECTORS**

OK

3	CHECK CONNECTOR

(a) Check that the connectors (on the center airbag sensor assembly side and airbag sensor front RH side) are not damaged (See page IN-34).
OK:
The connectors are not deformed or damaged.

NG → **REPAIR OR REPLACE WIRE HARNESS**

OK

4	CHECK FRONT AIRBAG SENSOR RH CIRCUIT (FOR OPEN)

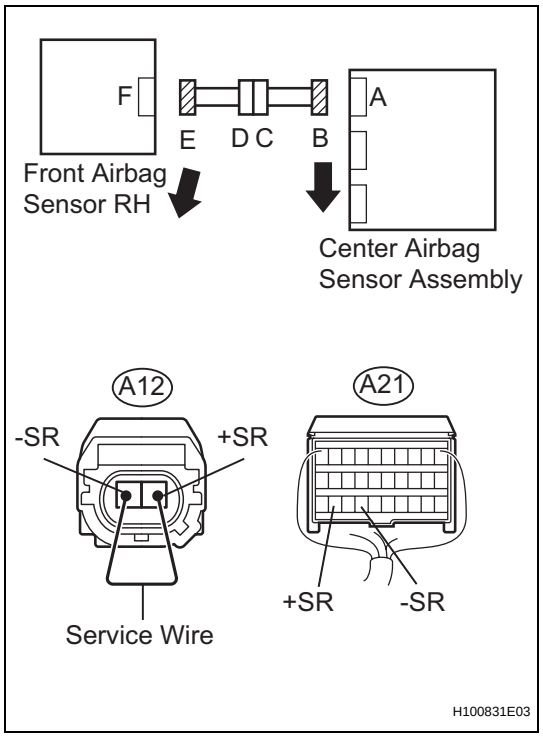

(a) Disconnect the connectors from the center airbag sensor assembly and the front airbag sensor RH.
(b) Using a service wire, connect A12-2 (+SR) and A12-1 (-SR) of connector E.
NOTICE:
Do not forcibly insert the service wires into the terminals of the connector when connecting.
(c) Measure the resistance.
Standard resistance

Tester connection	Condition	Specified Condition
A21-29 (+SR) - A21-27 (-SR)	Always	Below 1 Ω

NG → **Go to step 10**

OK

RS

5 CHECK FRONT AIRBAG SENSOR RH CIRCUIT (FOR SHORT)

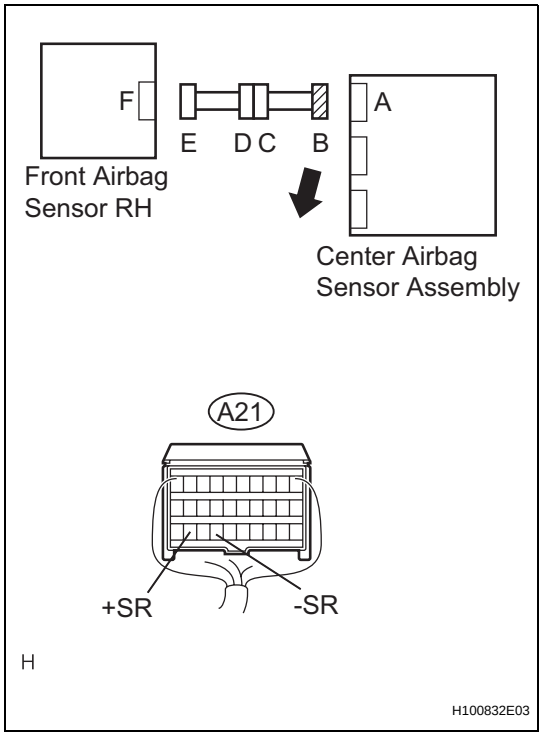

(a) Disconnect the service wire from connector E.
(b) Measure the resistance.
Standard resistance

Tester connection	Condition	Specified Condition
A21-29 (+SR) - A21-27 (-SR)	Always	1 MΩ or higher

NG → **Go to step 11**

OK

6 CHECK FRONT AIRBAG SENSOR RH CIRCUIT (TO B+)

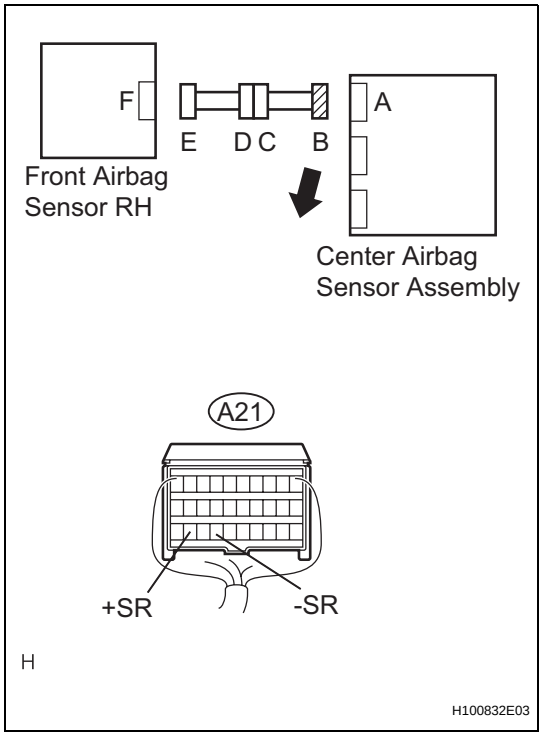

(a) Connect the negative (-) terminal cable to the battery, and wait for at least 2 seconds.
(b) Turn the ignition switch to the ON position.
(c) Measure the voltage.
Standard voltage

Tester connection	Condition	Specified Condition
A21-29 (+SR) - Body ground	Ignition switch ON	Below 1 V
A21-27 (-SR) - Body ground	Ignition switch ON	Below 1 V

NG → **Go to step 12**

OK

RS

7 CHECK FRONT AIRBAG SENSOR RH CIRCUIT (TO GROUND)

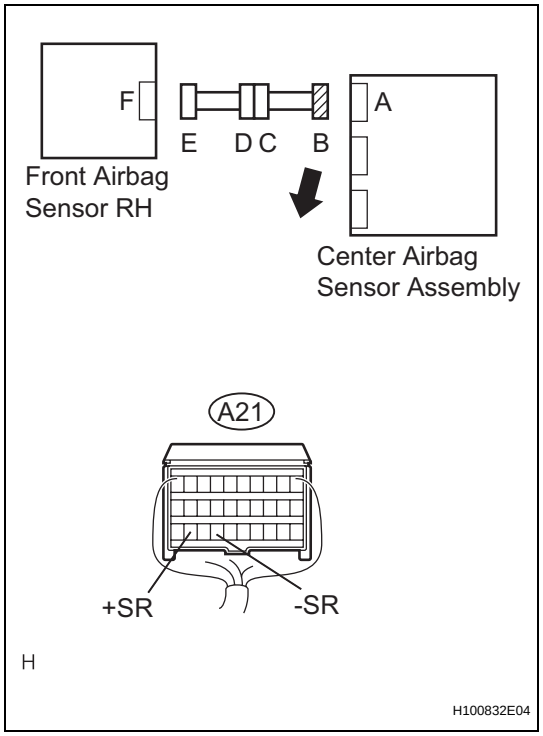

(a) Turn the ignition switch to the LOCK position.
(b) Disconnect the negative (-) terminal cable from the battery, and wait for at least 90 seconds.
(c) Measure the resistance.

Standard resistance

Tester connection	Condition	Specified Condition
A21-29 (+SR) - Body ground	Always	1 MΩ or higher
A21-27 (-SR) - Body ground	Always	1 MΩ or higher

NG → **Go to step 13**

OK

8 CHECK FRONT AIRBAG SENSOR RH

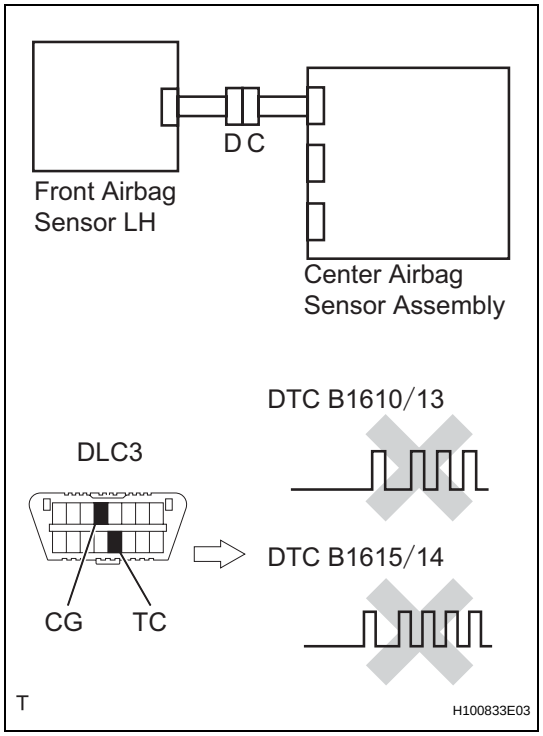

(a) Connect the connectors to the center airbag sensor assembly.
(b) Interchange the airbag sensor front RH with the front airbag sensor LH and connect the connectors to them.
(c) Connect the negative (-) terminal cable to the battery, and wait for at least 2 seconds.
(d) Turn the ignition switch to the ON position, and wait for at least 60 seconds.
(e) Clear any DTCs stored in the memory (See page RS-34).
(f) Turn the ignition switch to the LOCK position.
(g) Turn the ignition switch to the ON position, and wait for at least 60 seconds.
(h) Check for DTCs (See page RS-34).

Result

Result	Proceed to
DTC B1610/13 is output.	A
DTC B1615/14 is output.	B
Neither DTC B1610/13 nor B1615/14 is output.	C

B → **REPLACE FRONT AIRBAG SENSOR RH**

C → **USE SIMULATION METHOD TO CHECK**

RS

A

9	REPLACE CENTER AIRBAG SENSOR ASSEMBLY

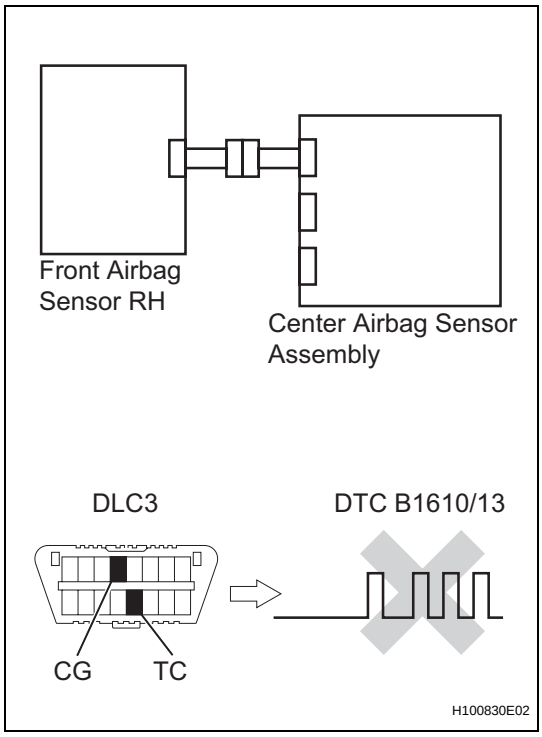

(a) Turn the ignition switch to the LOCK position.
(b) Disconnect the negative (-) terminal cable from the battery, and wait for at least 90 seconds.
(c) Replace the center airbag sensor assembly (See page RS-602).

HINT:
Perform the inspection using parts from a normal vehicle when possible.

(d) Connect the connectors to the center airbag sensor assembly.
(e) Connect the negative (-) terminal cable to the battery, and wait for at least 2 seconds.
(f) Turn the ignition switch to the ON position, and wait for at least 60 seconds.
(g) Clear any DTCs stored in the memory (See page RS-34).
(h) Turn the ignition switch to the LOCK position.
(i) Turn the ignition switch to the ON position, and wait for at least 60 seconds.
(j) Check for DTCs (See page RS-34).

OK:
DTC B1610/13 is not output.

HINT:
DTCs other than B1610/13 may be output at this time, but they are not related to this check.

NG → **REPLACE FRONT AIRBAG SENSOR RH**

OK

END

RS

10	CHECK ENGINE ROOM MAIN WIRE (FOR OPEN)

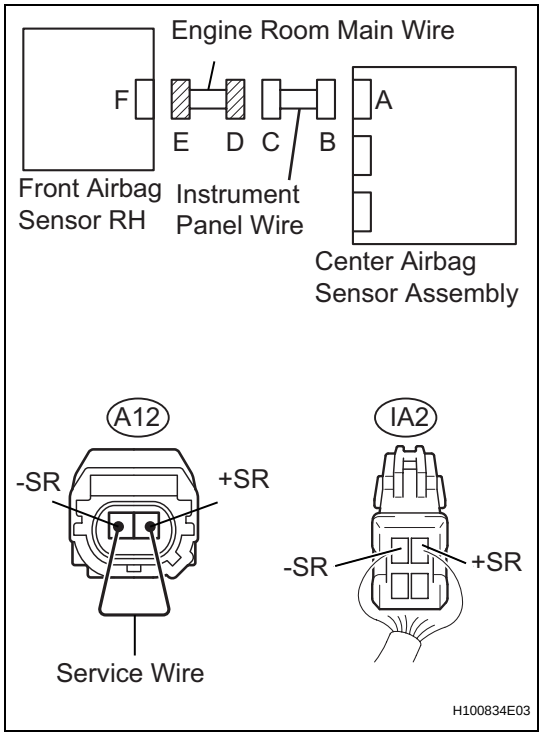

(a) Disconnect the engine room main wire connector from the instrument panel wire.

HINT:

The service wire has already been inserted into connector E.

(b) Measure the resistance.

Standard resistance

Tester Connection	Condition	Specified Condition
IA2 -1 (-SR) - IA2-2 (+SR)	Always	Below 1 Ω

NG → **REPAIR OR REPLACE ENGINE ROOM MAIN WIRE**

OK

REPAIR OR REPLACE INSTRUMENT PANEL WIRE

RS

11	CHECK ENGINE ROOM MAIN WIRE (FOR SHORT)

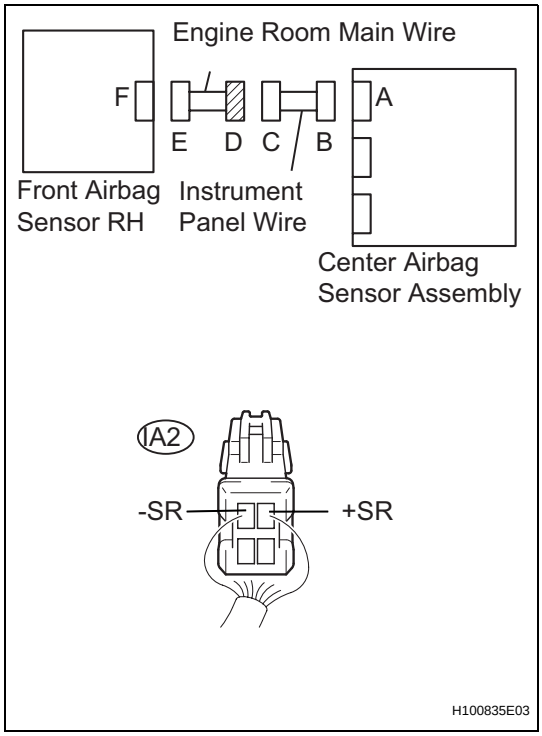

(a) Disconnect the engine room main wire connector from the instrument panel wire.
(b) Measure the resistance.
Standard resistance

Tester Connection	Condition	Specified Condition
IA2 -1 (-SR) - IA2-2 (+SR)	Always	1 MΩ or higher

NG → **REPAIR OR REPLACE ENGINE ROOM MAIN WIRE**

OK

REPAIR OR REPLACE INSTRUMENT PANEL WIRE

12	CHECK ENGINE ROOM MAIN WIRE (TO B+)

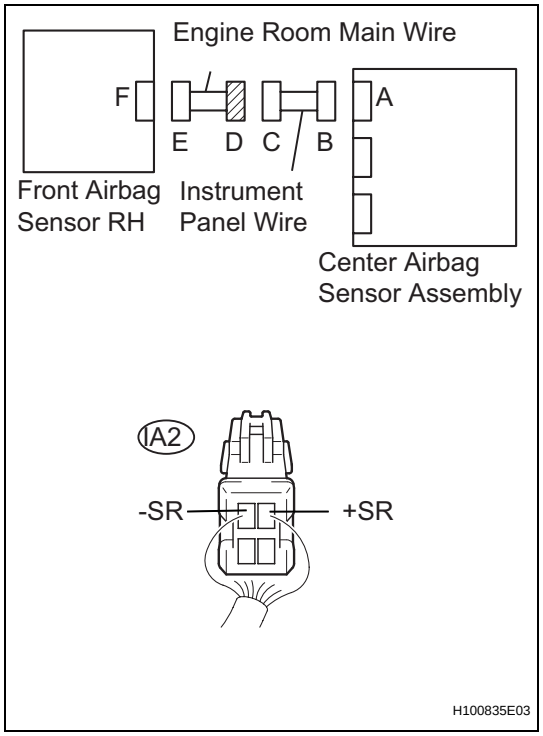

(a) Turn the ignition switch to the LOCK position.
(b) Disconnect the negative (-) terminal cable from the battery, and wait for at least 90 seconds.
(c) Disconnect the engine room main wire connector from the instrument panel wire.
(d) Connect the negative (-) terminal cable to the battery, and wait for at least 2 seconds.
(e) Turn the ignition switch to the ON position.
(f) Measure the voltage.

Standard voltage

Tester Connection	Condition	Specified Condition
IA2 -1 (-SR) - Body ground	Ignition switch ON	Below 1 V
IA2-2 (+SR) - Body ground	Ignition switch ON	Below 1 V

NG → **REPAIR OR REPLACE ENGINE ROOM MAIN WIRE**

OK

REPAIR OR REPLACE INSTRUMENT PANEL WIRE

RS

13	CHECK ENGINE ROOM MAIN WIRE (TO GROUND)

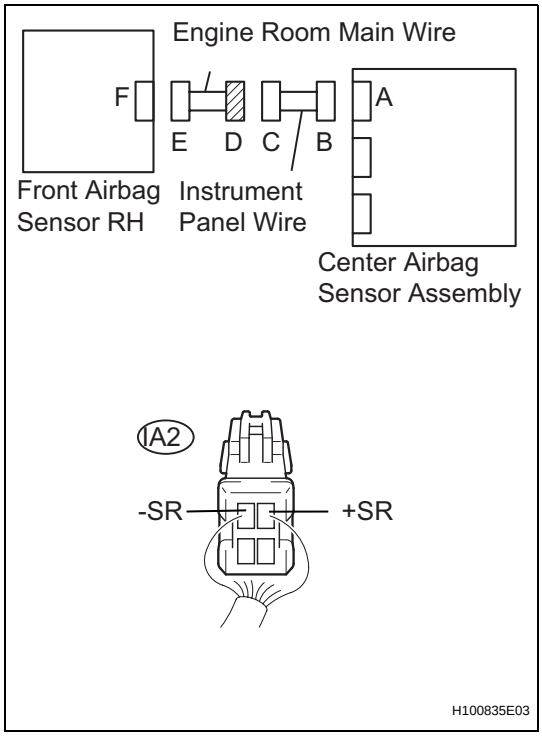

(a) Disconnect the engine room main wire connector from the instrument panel wire.
(b) Measure the resistance.
Standard resistance

Tester Connection	Condition	Specified Condition
IA2 -1 (-SR) - Body ground	Always	1 MΩ or higher
IA2-2 (+SR) - Body ground	Always	1 MΩ or higher

NG → **REPAIR OR REPLACE ENGINE ROOM MAIN WIRE**

OK

REPAIR OR REPLACE INSTRUMENT PANEL WIRE

14	CHECK CONNECTION OF CONNECTORS

(a) Turn the ignition switch to the LOCK position.
(b) Disconnect the negative (-) terminal cable from the battery, and wait for at least 90 seconds.
(c) Check that the connectors are properly connected to the center airbag sensor assembly and the front airbag sensor LH.
OK:
The connectors are properly connected.

NG → **CONNECT CONNECTORS**

OK

15	CHECK CONNECTOR

(a) Check that the connectors (on the center airbag sensor assembly side and front airbag sensor LH side) are not damaged (See page IN-34).
OK:
The connectors are not deformed or damaged.

RS

NG → REPAIR OR REPLACE WIRE HARNESS

OK

16 CHECK FRONT AIRBAG SENSOR LH CIRCUIT (FOR OPEN)

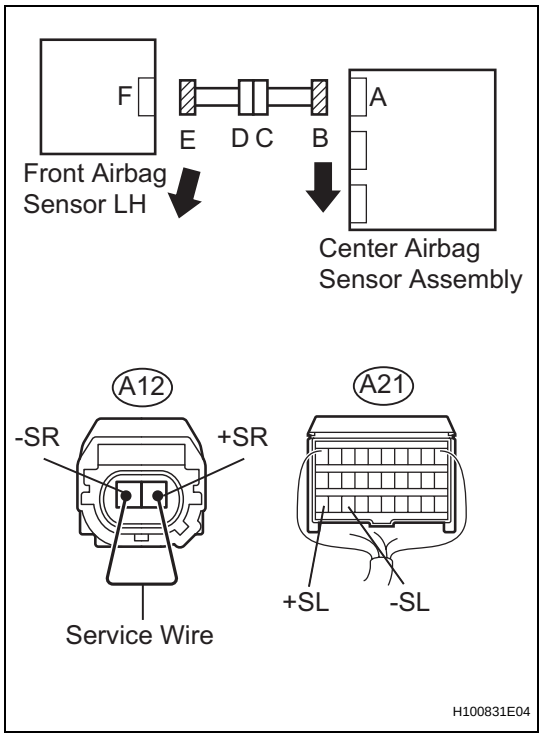

(a) Disconnect the connectors from the center airbag sensor assembly and the front airbag sensor LH.

(b) Using a service wire, connect A11-2 (+SL) and A11-1 (-SL) of connector E.

NOTICE:

Do not forcibly insert the service wire into the terminals of the connector when connecting.

(c) Measure the resistance.

Standard resistance

Tester Connection	Condition	Specified Condition
A21 -30 (+SL) - A21-28 (-SL)	Always	Below 1 Ω

NG → Go to step 22

OK

RS

17 CHECK FRONT AIRBAG SENSOR LH CIRCUIT (FOR SHORT)

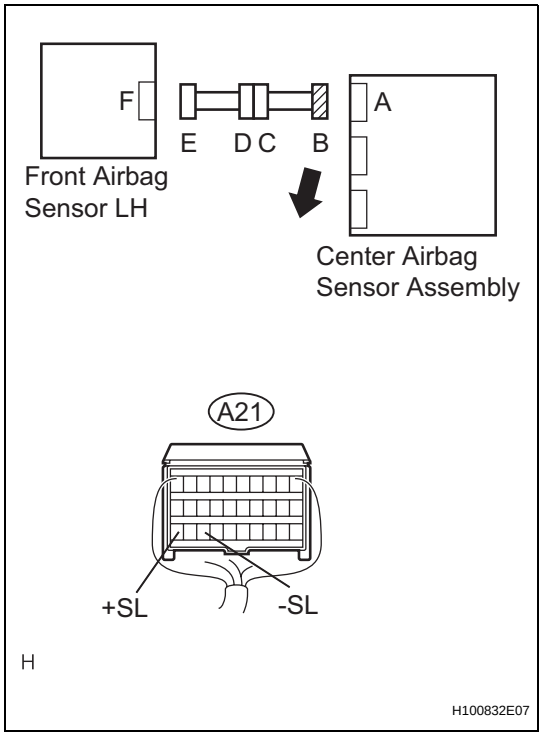

(a) Disconnect the service wire from connector E.
(b) Measure the resistance.
Standard resistance

Tester Connection	Condition	Specified Condition
A21 -30 (+SL) - A21-28 (-SL)	Always	1 MΩ or Higher

NG → **Go to step 23**

OK

18 CHECK FRONT AIRBAG SENSOR LH CIRCUIT (TO B+)

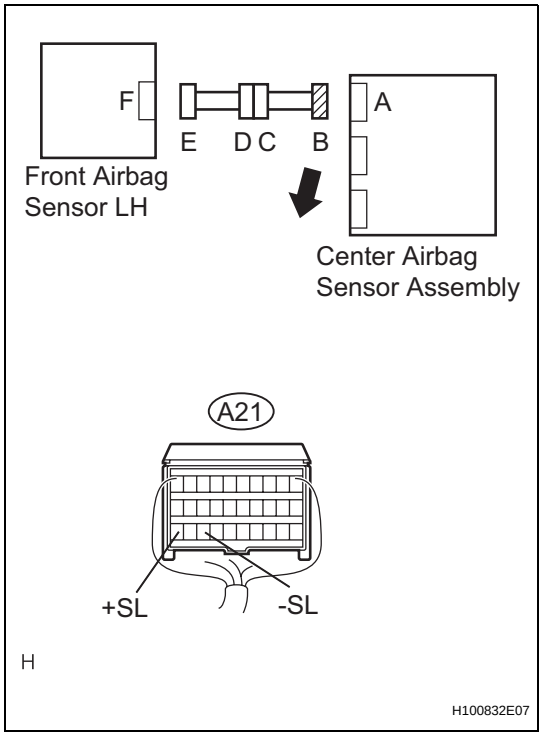

(a) Connect the negative (-) terminal cable to the battery, and wait for at least 2 seconds.
(b) Turn the ignition switch to the ON position.
(c) Measure the voltage.
Standard voltage

Tester Connection	Condition	Specified Condition
A21 -30 (+SL) - Body ground	Ignition switch ON	Below 1V
A21-28 (-SL) - Body ground	Ignition switch ON	Below 1V

NG → **Go to step 24**

OK

RS

19 CHECK FRONT AIRBAG SENSOR LH CIRCUIT (TO GROUND)

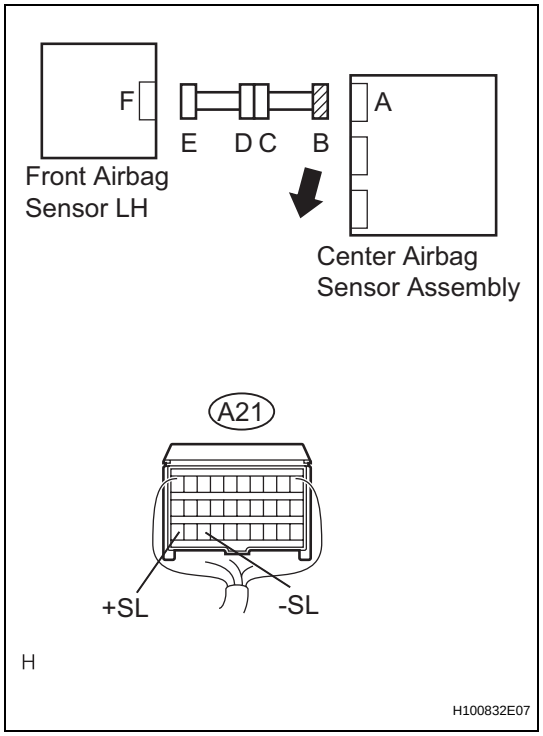

(a) Turn the ignition switch to the LOCK position.
(b) Disconnect the negative (-) terminal cable from the battery, and wait for at least 90 seconds.
(c) Measure the resistance.

Standard resistance

Tester Connection	Condition	Specified Condition
A21 -30 (+SL) - Body ground	Always	1 MΩ or Higher
A21-28 (-SL) - Body ground	Always	1 MΩ or Higher

NG → **Go to step 25**

OK

20 CHECK FRONT AIRBAG SENSOR LH

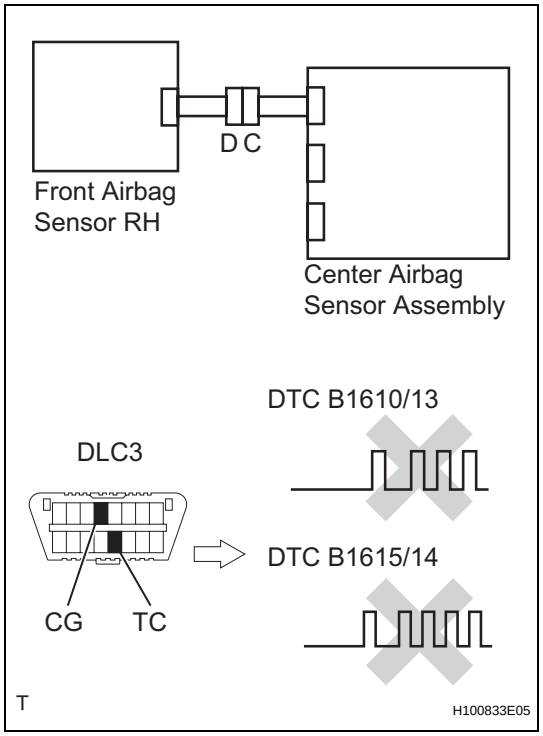

(a) Connect the connectors to the center airbag sensor assembly.
(b) Interchange the front airbag sensor RH with the front airbag sensor LH and connect the connectors to them.
(c) Connect the negative (-) terminal cable to the battery, and wait for at least 2 seconds.
(d) Turn the ignition switch to the ON position, and wait for at least 60 seconds.
(e) Clear any DTCs stored in the memory (See page RS-34).
(f) Turn the ignition switch to the LOCK position.
(g) Turn the ignition switch to the ON position, and wait for at least 60 seconds.
(h) Check for DTCs (See page RS-34).

Result

Result	Proceed to
DTC B1615/14 is output.	A
DTC B1610/13 is output.	B
Neither DTC B1610/13 nor B1615/14 is output.	C

B → **REPLACE CENTER AIRBAG SENSOR ASSEMBLY**

RS

C → USE SIMULATION METHOD TO CHECK

A

21 REPLACE CENTER AIRBAG SENSOR ASSEMBLY

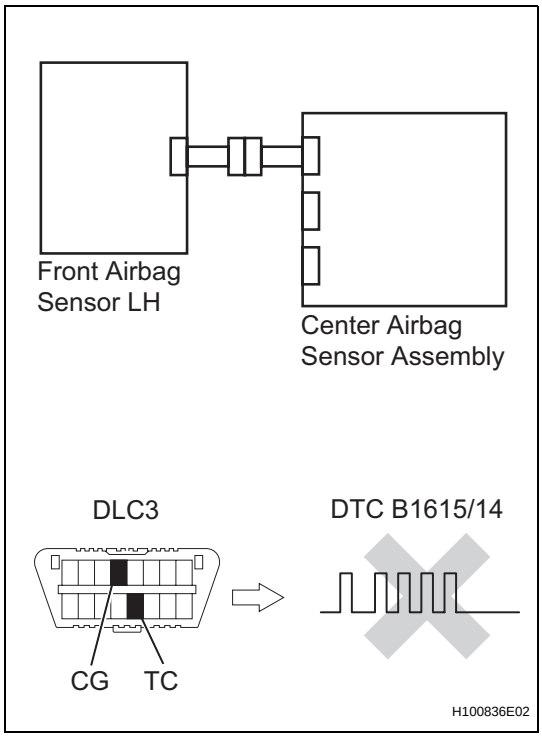

(a) Turn the ignition switch to the LOCK position.
(b) Disconnect the negative (-) terminal cable from the battery, and wait for at least 90 seconds.
(c) Replace the center airbag sensor assembly (See page RS-602).

HINT:
Perform the inspection using parts from a normal vehicle when possible.

(d) Connect the connectors to the center airbag sensor assembly .
(e) Connect the negative (-) terminal cable to the battery, and wait for at least 2 seconds.
(f) Turn the ignition switch to the ON position, and wait for at least 60 seconds.
(g) Clear any DTCs stored in the memory (See page RS-34).
(h) Turn the ignition switch to the LOCK position.
(i) Turn the ignition switch to the ON position, and wait for at least 60 seconds.
(j) Check for DTCs (See page RS-34).

OK:

DTC B1615/14 is not output.

HINT:
DTCs other than B1615/14 may be output at this time, but they are not related to this check.

NG → REPLACE FRONT AIRBAG SENSOR LH (LH)

OK

END

RS

22 CHECK ENGINE ROOM MAIN WIRE (FOR OPEN)

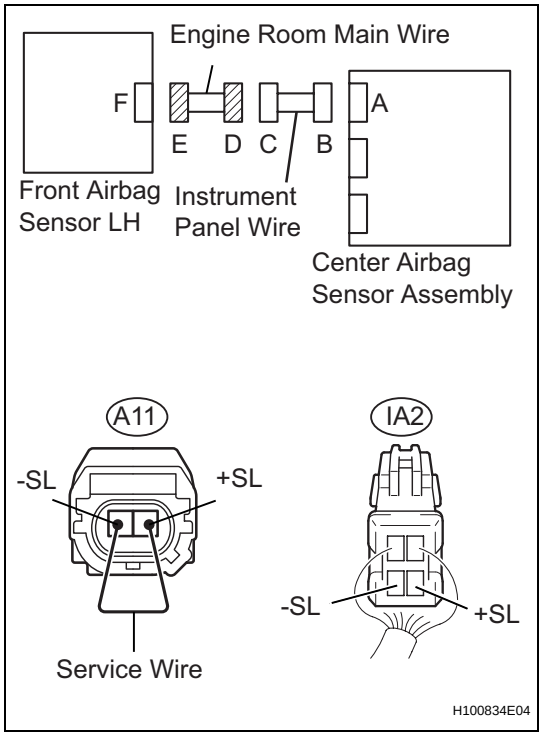

(a) Disconnect the engine room main wire connector from the instrument panel wire.
HINT:
The service wire has already been inserted into connector E.

(b) Measure the resistance.
Standard resistance

Tester Connection	Condition	Specified Condition
IA2-3 (-SL) - IA2-4 (+SL)	Always	Below 1 Ω

NG → **REPAIR OR REPLACE ENGINE ROOM MAIN WIRE**

OK

REPAIR OR REPLACE INSTRUMENT PANEL WIRE

RS

23	CHECK ENGINE ROOM MAIN WIRE (FOR SHORT)

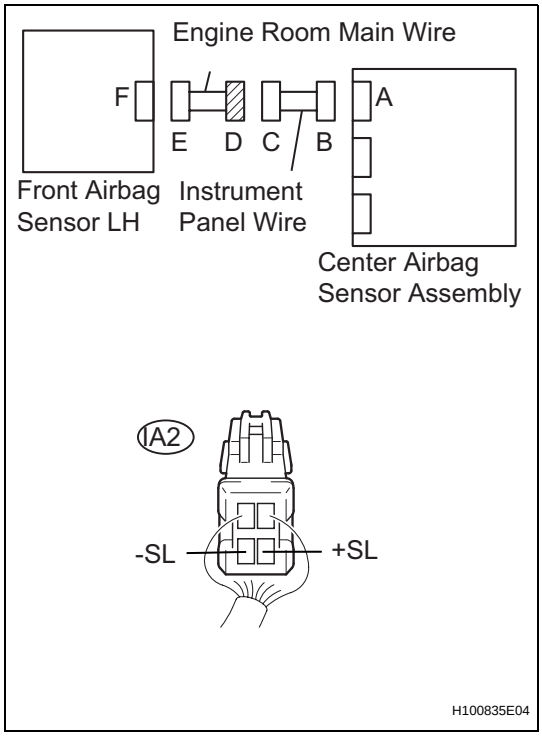

(a) Disconnect the engine room main wire connector from the instrument panel wire.
(b) Measure the resistance.
Standard resistance

Tester Connection	Condition	Specified Condition
IA2-3 (-SL) - IA2-4 (+SL)	Always	1 MΩ or Higher

NG → **REPAIR OR REPLACE ENGINE ROOM MAIN WIRE**

OK

REPAIR OR REPLACE INSTRUMENT PANEL WIRE

24	CHECK ENGINE ROOM MAIN WIRE (TO B+)

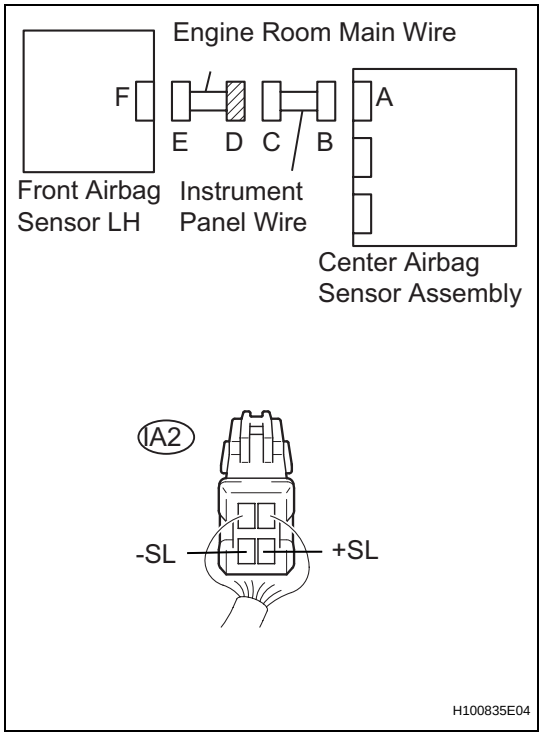

(a) Turn the ignition switch to the LOCK position.
(b) Disconnect the negative (-) terminal cable from the battery, and wait for at least 90 seconds.
(c) Disconnect the engine room main wire connector from the instrument panel wire.
(d) Connect the negative (-) terminal cable to the battery, and wait for at least 2 seconds.
(e) Turn the ignition switch to the ON position.
(f) Measure the voltage.

Standard voltage

Tester Connection	Condition	Specified Condition
IA2-3 (-SL) - Body ground	Ignition switch ON	Below 1 V
IA2-4 (+SL) - Body ground	Ignition switch ON	Below 1 V

NG → **REPAIR OR REPLACE ENGINE ROOM MAIN WIRE**

OK

REPAIR OR REPLACE INSTRUMENT PANEL WIRE

RS

25	CHECK ENGINE ROOM MAIN WIRE (TO GROUND)

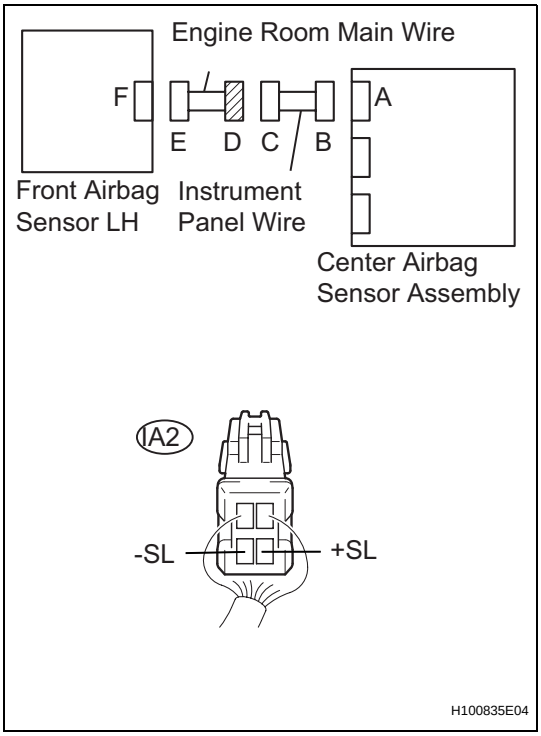

(a) Disconnect the engine room main wire connector from the instrument panel wire.
(b) Measure the resistance.
Standard resistance

Tester Connection	Condition	Specified Condition
IA2-3 (-SL) - Body ground	Always	1 MΩ or Higher
IA2-4 (+SL) - Body ground	Always	1 MΩ or Higher

NG → **REPAIR OR REPLACE ENGINE ROOM MAIN WIRE**

OK

REPAIR OR REPLACE INSTRUMENT PANEL WIRE

26	CHECK CONNECTION OF CONNECTORS

(a) Turn the ignition switch to the LOCK position.
(b) Disconnect the negative (-) terminal cable from the battery, and wait for at least 90 seconds.
(c) Check that the connectors are properly connected to the center airbag sensor assembly , the front airbag sensor LH and the front airbag sensor LH.
OK:
The connectors are properly connected.

NG → **CONNECT CONNECTORS**

OK

27	CHECK CONNECTOR

(a) Check that the connectors (on the center airbag sensor assembly side, front airbag sensor LH side and front airbag sensor RH side) are not damaged (See page IN-34).

RS

OK:
The connectors are not deformed or damaged.

NG → **REPAIR OR REPLACE WIRE HARNESS**

OK

28 CHECK FRONT AIRBAG SENSOR RH CIRCUIT (FOR OPEN)

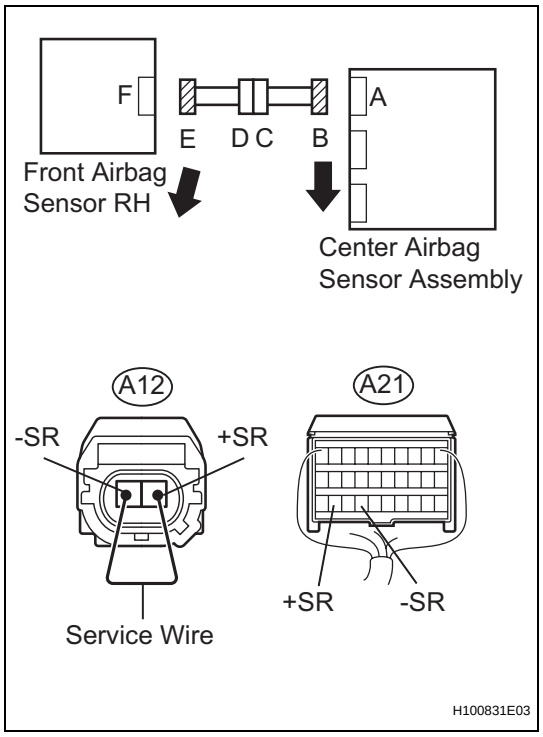

(a) Disconnect the connectors from the center airbag sensor assembly and the front airbag sensor RH.
(b) Using a service wire, connect A12-2 (+SR) and A12-1 (-SR) of connector E.

NOTICE:
Do not forcibly insert the service wires into the terminals of the connector when connecting.

(c) Measure the resistance.
Standard resistance

Tester Connection	Condition	Specified Condition
A21-29 (+SR) - A21-27 (-SR)	Always	Below 1 Ω

NG → **Go to step 32**

OK

RS

29 CHECK FRONT AIRBAG SENSOR RH CIRCUIT (FOR SHORT)

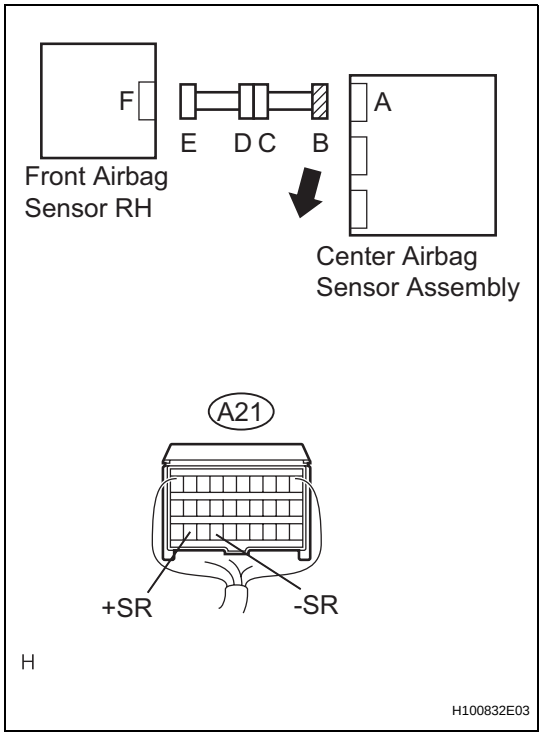

(a) Disconnect the service wire from connector E.
(b) Measure the resistance.
Standard resistance

Tester Connection	Condition	Specified Condition
A21-29 (+SR) - A21-27 (-SR)	Always	1 MΩ or Higher

NG → **Go to step 33**

OK

30 CHECK FRONT AIRBAG SENSOR RH CIRCUIT (TO B+)

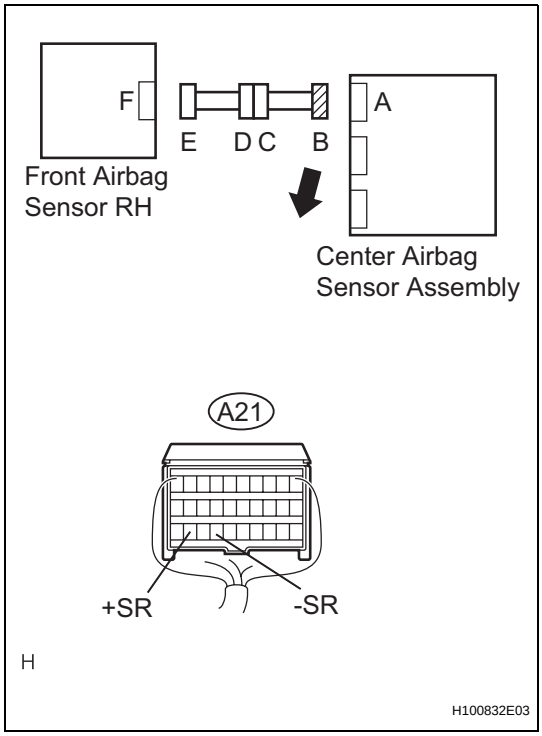

(a) Connect the negative (-) terminal cable to the battery, and wait for at least 2 seconds.
(b) Turn the ignition switch to the ON position.
(c) Measure the voltage.
Standard voltage

Tester Connection	Condition	Specified Condition
A21-29 (+SR) - Body ground	Ignition switch ON	Below 1 V
A21-27 (-SR) - Body ground	Ignition switch ON	Below 1 V

NG → **Go to step 34**

OK

RS

31 CHECK FRONT AIRBAG SENSOR RH CIRCUIT (TO GROUND)

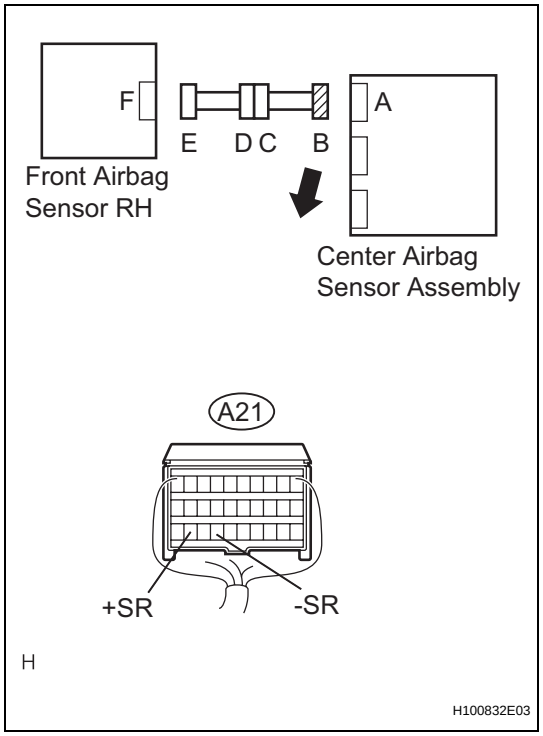

(a) Turn the ignition switch to the LOCK position.
(b) Disconnect the negative (-) terminal cable from the battery, and wait for at least 90 seconds.
(c) Measure the resistance.

Standard resistance

Tester Connection	Condition	Specified Condition
A21-29 (+SR) - Body ground	Always	1 MΩ or Higher
A21-27 (+SR) - Body ground	Always	1 MΩ or Higher

NG	Go to step 35
OK	Go to step 36

32 CHECK ENGINE ROOM MAIN WIRE (FOR OPEN)

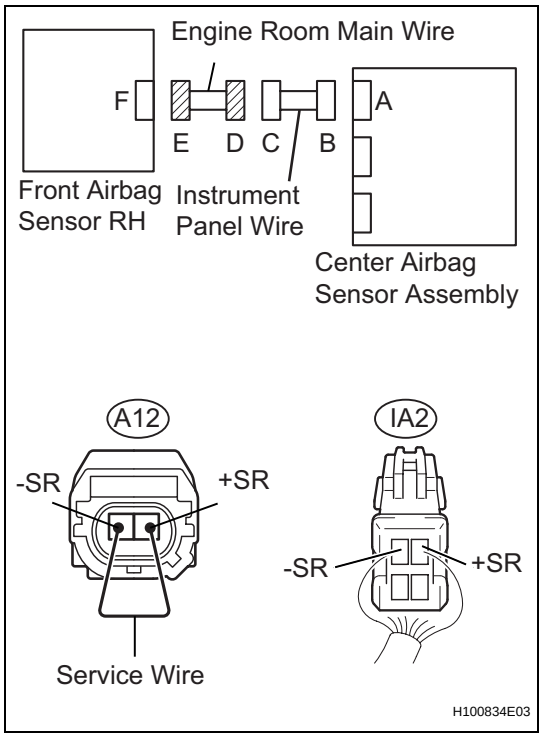

(a) Disconnect the engine room main wire connector from the instrument panel wire.

HINT:
The service wire has already been inserted into connector E.

(b) Measure the resistance.

Standard resistance

Tester Connection	Condition	Specified Condition
IA2-1 (-SR) - IA2-2 (+SR)	Always	Below 1 Ω

NG	REPAIR OR REPLACE ENGINE ROOM MAIN WIRE

RS

OK

REPAIR OR REPLACE INSTRUMENT PANEL WIRE

33 CHECK ENGINE ROOM MAIN WIRE (FOR SHORT)

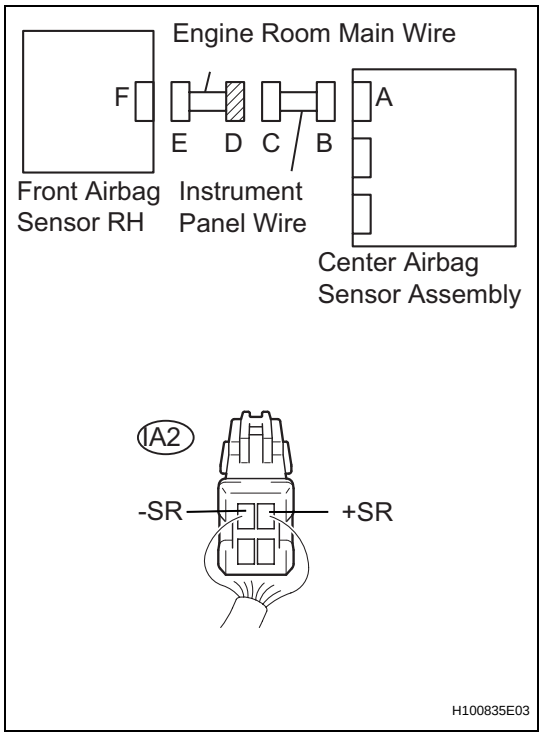

(a) Disconnect the engine room main wire connector from the instrument panel wire.
(b) Measure the resistance.
Standard resistance

Tester Connection	Condition	Specified Condition
IA2-1 (-SR) - IA2-2 (+SR)	Always	1 MΩ or Higher

NG → **REPAIR OR REPLACE ENGINE ROOM MAIN WIRE**

OK

REPAIR OR REPLACE INSTRUMENT PANEL WIRE

RS

34	CHECK ENGINE ROOM MAIN WIRE (TO B+)

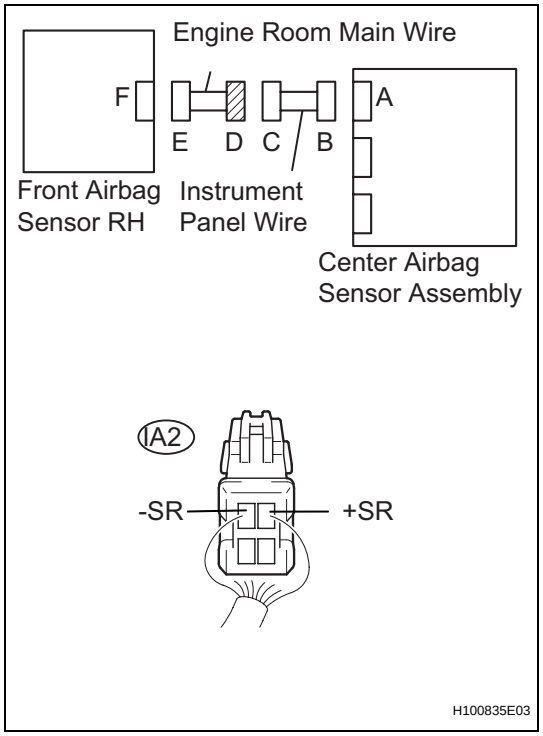

(a) Turn the ignition switch to the LOCK position.
(b) Disconnect the negative (-) terminal cable from the battery, and wait for at least 90 seconds.
(c) Disconnect the engine room main wire connector from the instrument panel wire.
(d) Connect the negative (-) terminal cable to the battery, and wait for at least 2 seconds.
(e) Turn the ignition switch to the ON position.
(f) Measure the voltage.

Standard voltage

Tester Connection	Condition	Specified Condition
IA2-1 (-SR) - Body ground	Ignition switch ON	Below 1 V
IA2-2 (+SR) - Body ground	Ignition switch ON	Below 1 V

NG → **REPAIR OR REPLACE ENGINE ROOM MAIN WIRE**

OK

REPAIR OR REPLACE INSTRUMENT PANEL WIRE

RS

35	CHECK ENGINE ROOM MAIN WIRE (TO GROUND)

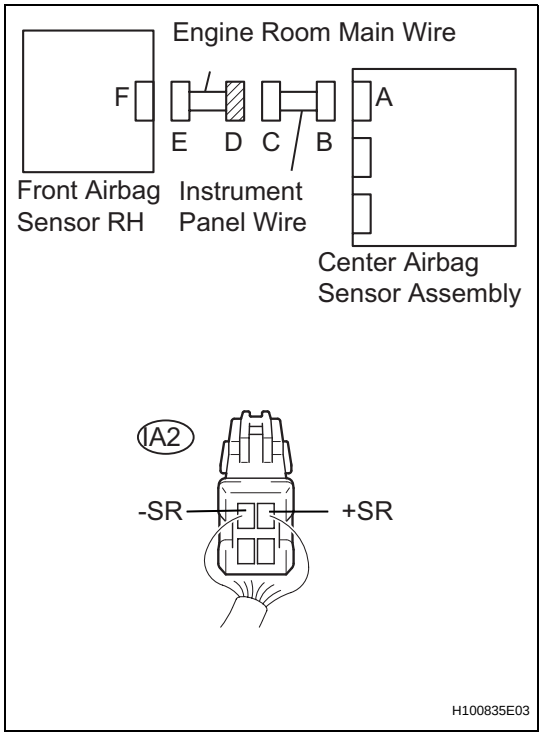

(a) Disconnect the engine room main wire connector from the instrument panel wire.
(b) Measure the resistance.
Standard resistance

Tester Connection	Condition	Specified Condition
IA2-1 (-SR) - Body ground	Always	1 MΩ or Higher
IA2-2 (+SR) - Body ground	Always	1 MΩ or Higher

NG → **REPAIR OR REPLACE ENGINE ROOM MAIN WIRE**

OK

REPAIR OR REPLACE INSTRUMENT PANEL WIRE

36 CHECK FRONT AIRBAG SENSOR LH CIRCUIT (FOR OPEN)

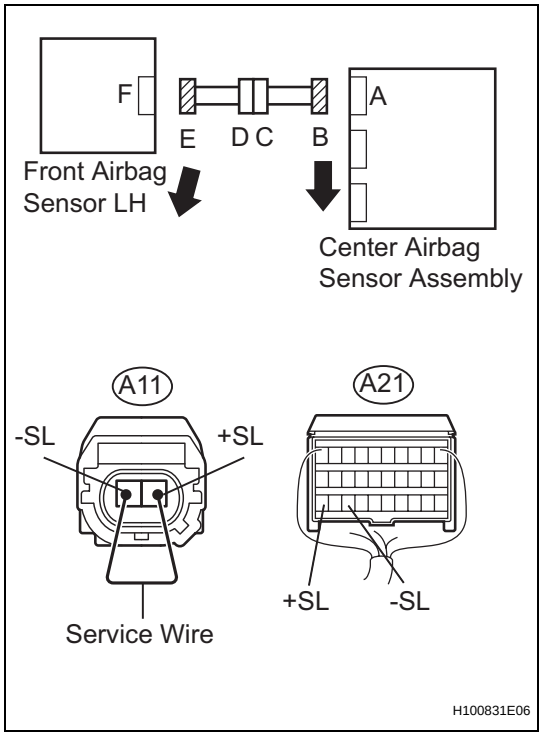

(a) Disconnect the connectors from the center airbag sensor assembly and the front airbag sensor LH.
(b) Using a service wire, connect A11-2 (+SL) and A11-1 (-SL) of connector E.

NOTICE:
Do not forcibly insert the service wire into the terminals of the connector when connecting.

(c) Measure the resistance.
Standard resistance

Tester Connection	Condition	Specified Condition
A21-30 (+SR) - A21-28 (-SR)	Always	Below 1 Ω

NG → **Go to step 40**

OK

37 CHECK FRONT AIRBAG SENSOR LH CIRCUIT (FOR SHORT)

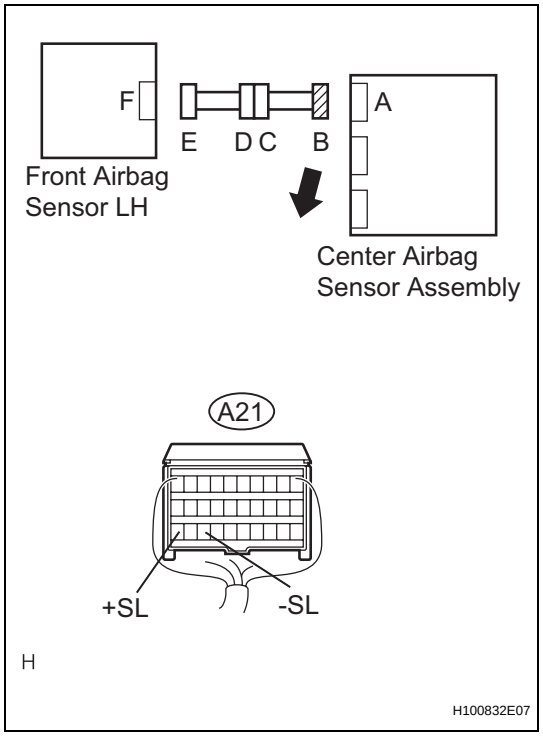

(a) Disconnect the service wire from connector E.
(b) Measure the resistance.
Standard resistance

Tester Connection	Condition	Specified Condition
A21-30 (+SL) - A21-28 (-SL)	Always	1 MΩ or Higher

NG → **Go to step 41**

OK

RS

38 CHECK FRONT AIRBAG SENSOR LH CIRCUIT (TO B+)

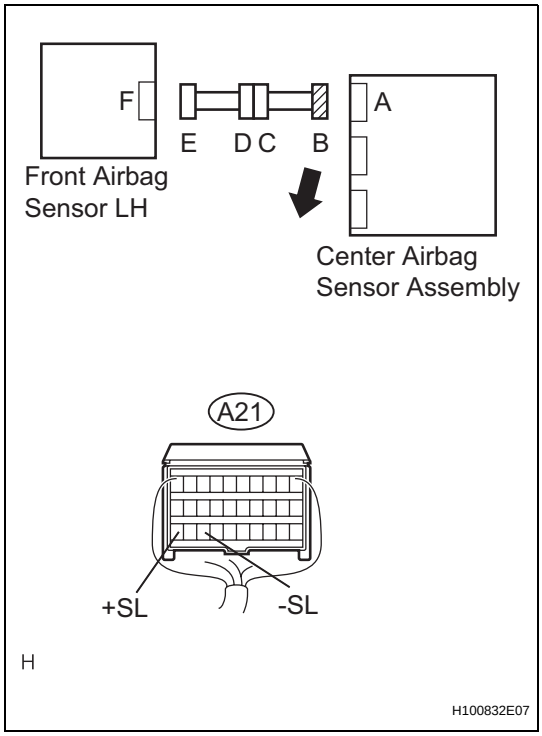

(a) Connect the negative (-) terminal cable to the battery, and wait for at least 2 seconds.
(b) Turn the ignition switch to the ON position.
(c) Measure the voltage.

Standard voltage

Tester Connection	Condition	Specified Condition
A21-30 (+SL) - Body ground	Ignition switch ON	Below 1 V
A21-28 (-SL) - Body ground	Ignition switch ON	Below 1 V

NG → **Go to step 42**

OK

39 CHECK FRONT AIRBAG SENSOR LH CIRCUIT (TO GROUND)

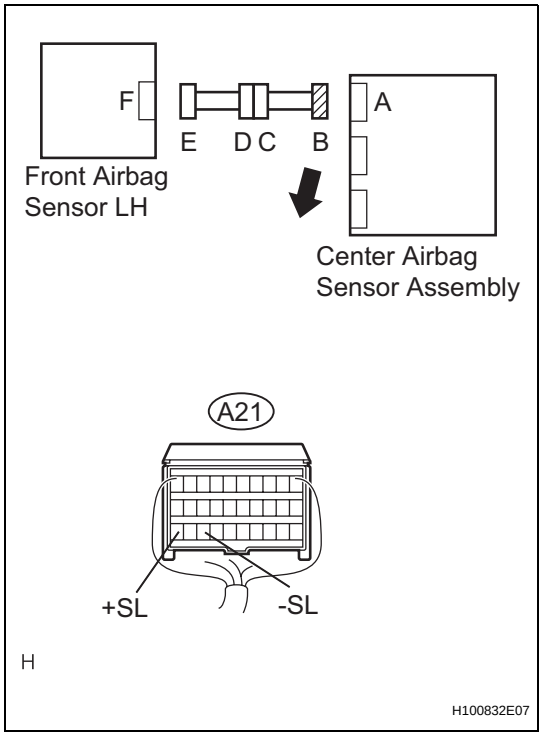

(a) Turn the ignition switch to the LOCK position.
(b) Disconnect the negative (-) terminal cable from the battery, and wait for at least 90 seconds.
(c) Measure the resistance.

Standard resistance

Tester Connection	Condition	Specified Condition
A21-30 (+SL) - Body ground	Always	1 MΩ or Higher
A21-28 (-SL) - Body ground	Always	1 MΩ or Higher

NG → **Go to step 43**

OK → **Go to step 44**

RS

40	CHECK ENGINE ROOM MAIN WIRE (FOR OPEN)

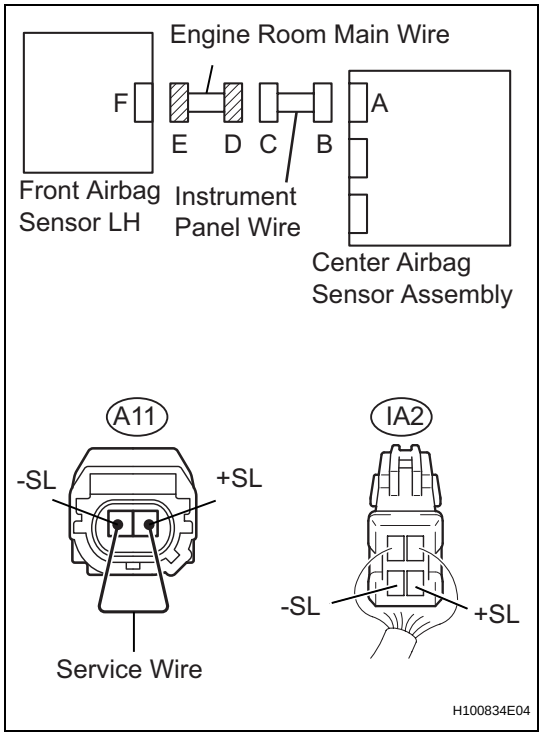

(a) Disconnect the engine room main wire connector from the instrument panel wire.
HINT:
The service wire has already been inserted into connector E.

(b) Measure the resistance.
Standard resistance

Tester Connection	Condition	Specified Condition
IA2-3 (-SL) - IA2-4 (+SL)	Always	Below 1 Ω

NG → **REPAIR OR REPLACE ENGINE ROOM MAIN WIRE**

OK

REPAIR OR REPLACE INSTRUMENT PANEL WIRE

RS

41	CHECK ENGINE ROOM MAIN WIRE (FOR SHORT)

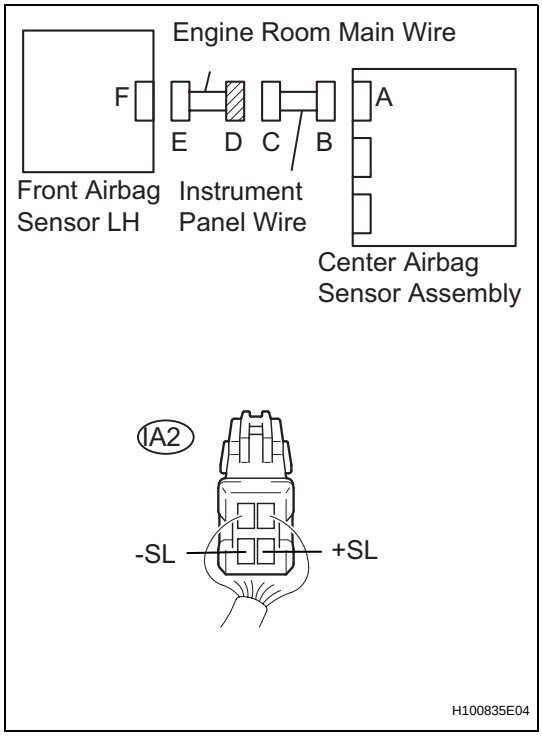

(a) Disconnect the engine room main wire connector from the instrument panel wire.
(b) Measure the resistance.
Standard resistance

Tester Connection	Condition	Specified Condition
IA2-3 (-SL) - IA2-4 (+SL)	Always	1 MΩ or Higher

NG → **REPAIR OR REPLACE ENGINE ROOM MAIN WIRE**

OK

REPAIR OR REPLACE INSTRUMENT PANEL WIRE

42	CHECK ENGINE ROOM MAIN WIRE (TO B+)

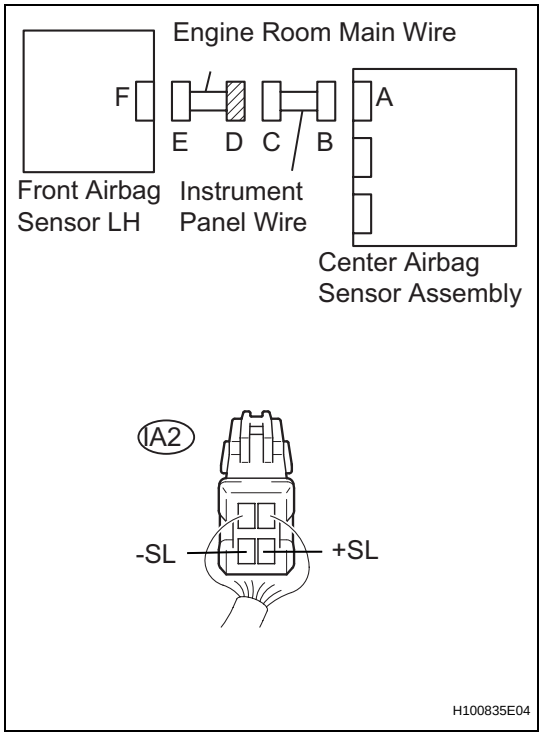

(a) Turn the ignition switch to the LOCK position.
(b) Disconnect the negative (-) terminal cable from the battery, and wait for at least 90 seconds.
(c) Disconnect the engine room main wire connector from the instrument panel wire.
(d) Connect the negative (-) terminal cable to the battery, and wait for at least 2 seconds.
(e) Turn the ignition switch to the ON position.
(f) Measure the voltage.

Standard voltage

Tester Connection	Condition	Specified Condition
IA2-3 (-SL) - Body ground	Ignition switch ON	Below 1 V
IA2-4 (+SL) - Body ground	Ignition switch ON	Below 1 V

NG → **REPAIR OR REPLACE ENGINE ROOM MAIN WIRE**

OK

REPAIR OR REPLACE INSTRUMENT PANEL WIRE

RS

43 CHECK ENGINE ROOM MAIN WIRE (TO GROUND)

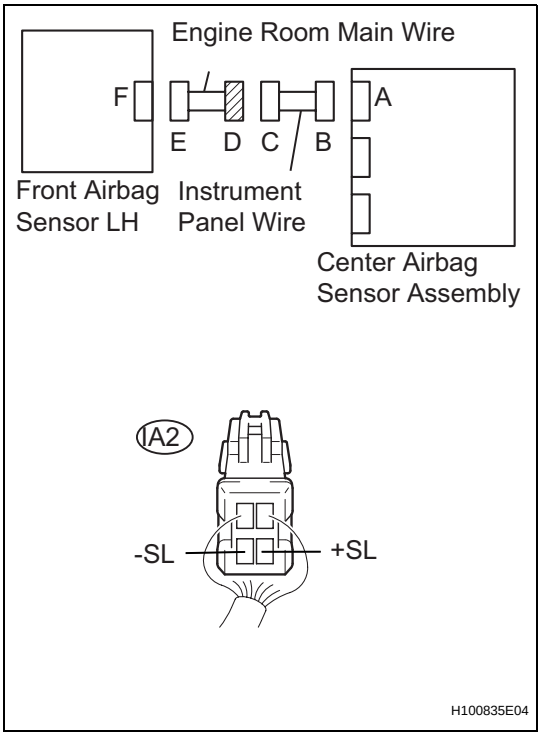

(a) Disconnect the engine room main wire connector from the instrument panel wire.
(b) Measure the resistance.
Standard resistance

Tester Connection	Condition	Specified Condition
IA2-3 (-SL) - Body ground	Always	1 MΩ or Higher
IA2-4 (+SL) - Body ground	Always	1 MΩ or Higher

NG → **REPAIR OR REPLACE ENGINE ROOM MAIN WIRE**

OK

REPAIR OR REPLACE INSTRUMENT PANEL WIRE

44 REPAIR OR REPLACE INSTRUMENT PANEL WIRE

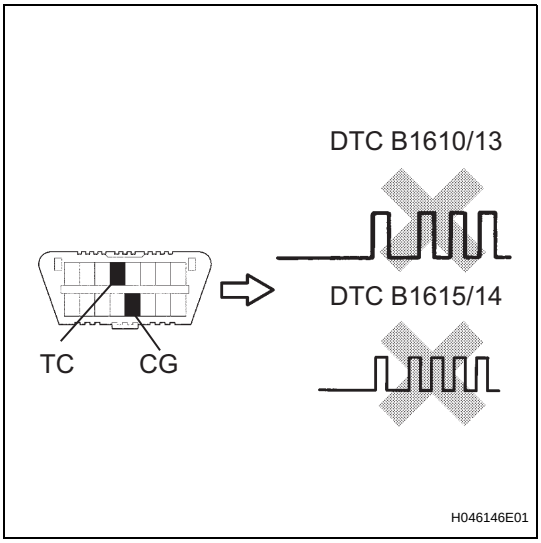

(a) Turn the ignition switch to the LOCK position.
(b) Disconnect the negative (-) terminal cable from the battery, and wait for at least 90 seconds.
(c) Replace the center airbag sensor assembly (See page RS-602).

HINT:
Perform the inspection using parts from a normal vehicle when possible.

(d) Connect the connectors to the center airbag sensor assembly , front airbag sensor RH and front airbag sensor LH .
(e) Connect the negative (-) terminal cable to the battery, and wait for at least 2 seconds.
(f) Turn the ignition switch to the ON position, and wait for at least 60 seconds.
(g) Clear any DTCs stored in the memory (See page RS-34).
(h) Turn the ignition switch to the LOCK position.
(i) Turn the ignition switch to the ON position, and wait for at least 60 seconds.
(j) Check for DTCs (See page RS-34).

RS

OK:

DTC B1610/13 and B1615/14 are not output.

HINT:

DTCs other than B1610/13 and B1615/14 may be output at this time, but they are not related to this check.

NG → **REPLACE FRONT AIRBAG SENSOR RH AND LH**

OK

END

DTC	B1620/21	Driver Side - Side Airbag Sensor Circuit Malfunction

DTC	B1625/22	Front Passenger Side - Side Airbag Sensor Circuit Malfunction

DESCRIPTION

The side airbag sensor assembly LH consists of parts such as the safing sensor, the diagnostic circuit and the lateral deceleration sensor. The configuration of the side airbag sensor assembly RH is the same as that of the LH.

When the airbag sensor assembly center receives signals from the lateral deceleration sensor, it determines whether or not the SRS should be activated.

DTC B1620/21 is set when a malfunction is detected in the side airbag sensor assembly (driver seat side) circuit.

DTC B1625/22 is set when a malfunction is detected in the side airbag sensor assembly (front passenger seat side) circuit.

DTC No.	DTC Detecting Conditions	Trouble Areas
B1620/21	• The center airbag sensor assembly receives a line short circuit signal, an open circuit signal, a short circuit to ground signal or a short circuit to B+ signal in the side airbag sensor assembly (Driver seat side) circuit for 2 seconds • Side airbag sensor assembly LH malfunction • Rear airbag sensor LH malfunction • Center airbag sensor assembly malfunction	• Side airbag sensor assembly LH • Rear airbag sensor LH • Center airbag sensor assembly • No. 2 floor wire
B1625/22	• The center airbag sensor assembly receives a line short circuit signal, an open circuit signal, a short circuit to ground signal or a short circuit to B+ signal in the side airbag sensor assembly (Front passenger seat side) circuit for 2 seconds • Side airbag sensor assembly RH malfunction • Rear airbag sensor RH malfunction • Center airbag sensor assembly malfunction	• Side airbag sensor assembly RH • Rear airbag sensor RH • Center airbag sensor assembly • Floor wire

WIRING DIAGRAM

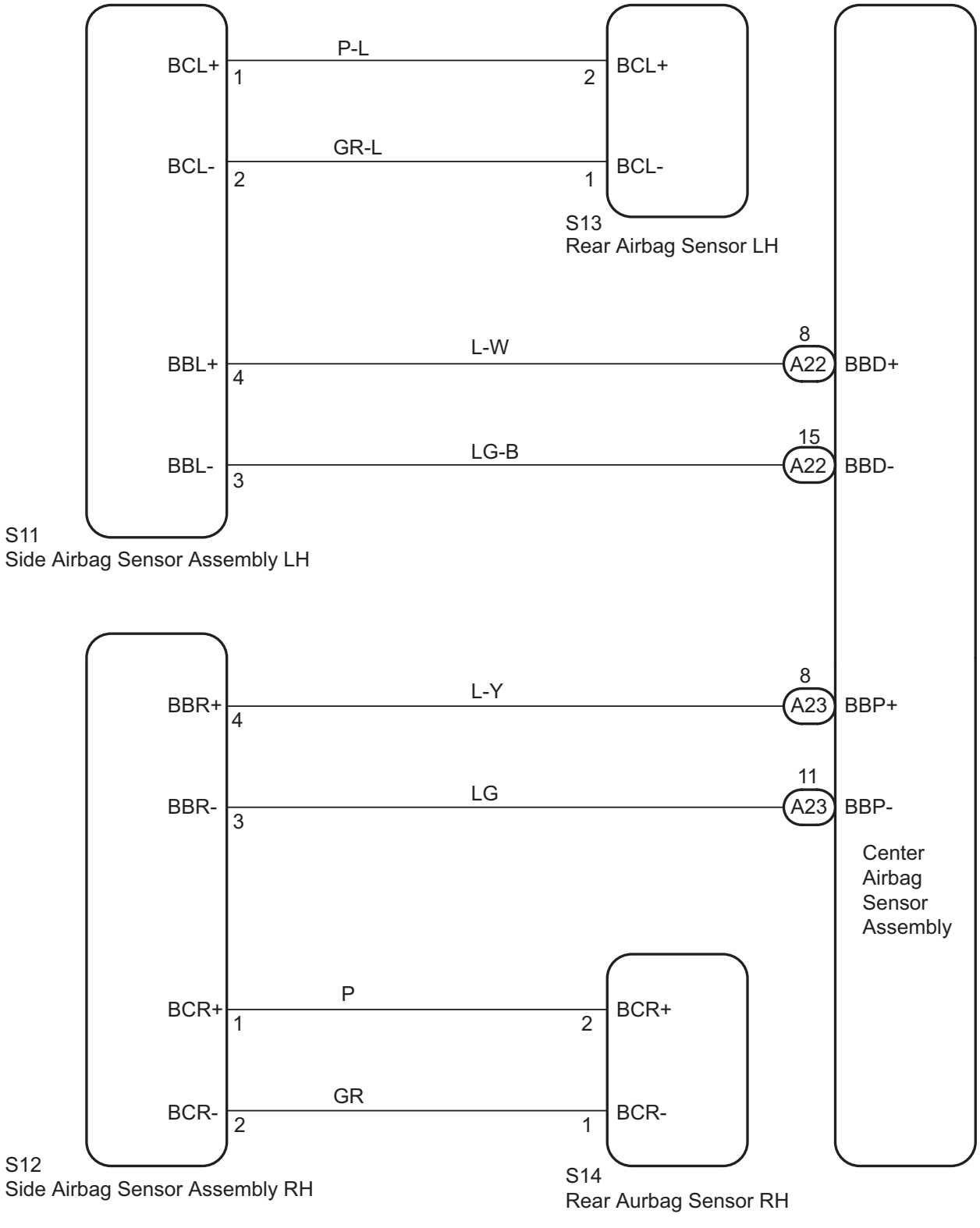

RS

NOTICE:
In order to prevent unexpected airbag deployment, disconnect the following connectors before inspecting parts such as wire harnesses, if the application of tester probes to the center airbag sensor assembly connector is necessary.
(a) Turn the ignition switch to the LOCK position.
(b) Disconnect the negative (-) terminal cable from the battery, and wait for at least 90 seconds.
(c) Disconnect the connectors from the center airbag sensor assembly.
(d) Disconnect the connectors from the steering pad.
(e) Disconnect the connector from the front passenger airbag assembly.
(f) Disconnect the connector from the front seat airbag assembly LH.
(g) Disconnect the connector from the front seat airbag assembly RH.
HINT:
Skip the following steps if side and curtain shield airbags are not fitted.
(h) Disconnect the connector from the curtain shield airbag assembly LH.
(i) Disconnect the connector from the curtain shield airbag assembly RH.
(j) Disconnect the connector from the front seat outer belt assembly LH.
(k) Disconnect the connector from the front seat outer belt assembly RH.

1 CHECK DTC

(a) Proceed to the appropriate step according to DTC readings.
(1) Check the DTC (See page RS-34.
Result

Result	Proceed to
DTC B1620/21 is output.	A
DTC B1625/22 is output.	B
DTC B1620/21 and B1625/22 are output.	C
Neither DTC B1620/21 nor B1625/22 is output.	D

B → **Go to step 17**
C → **Go to step 32**
D → **USE SIMULATION METHOD TO CHECK**

A

RS

2 CHECK CONNECTION OF CONNECTORS

(a) Turn the ignition switch to the LOCK position.
(b) Disconnect the negative (-) terminal cable from the battery, and wait for at least 90 seconds.
(c) Check that the connectors are properly connected to the center airbag sensor assembly and the side airbag sensor assembly LH.
OK:
The connectors are properly connected.

NG → **CONNECT CONNECTORS**

OK

3	CHECK CONNECTORS

(a) Check that the connectors (on the center airbag sensor assembly side and side airbag sensor assembly LH side) are not damaged (See page IN-34).
OK:
The connectors are not deformed or damaged.

NG → **REPAIR OR REPLACE WIRE HARNESS**

OK

4	CHECK NO. 2 FLOOR WIRE (FOR OPEN)

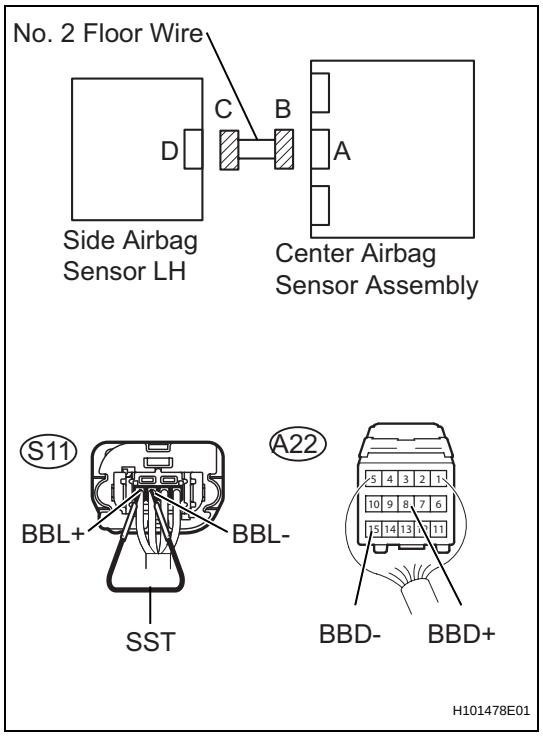

SST 09843-18040

(a) Disconnect the connectors from the center airbag sensor assembly and the side airbag sensor assembly LH.
(b) Using SST, connect S11-4 (BBL+) and S11-3 (BBL-) of connector C.
(c) Measure the resistance.
Standard resistance

Tester Connection	Condition	Specified Condition
A22-8 (BBD+) - A22-15 (BBD-)	Always	Below 1 Ω

NG → **REPAIR OR REPLACE NO. 2 FLOOR WIRE**

OK

RS

5 CHECK NO. 2 FLOOR WIRE (FOR SHORT)

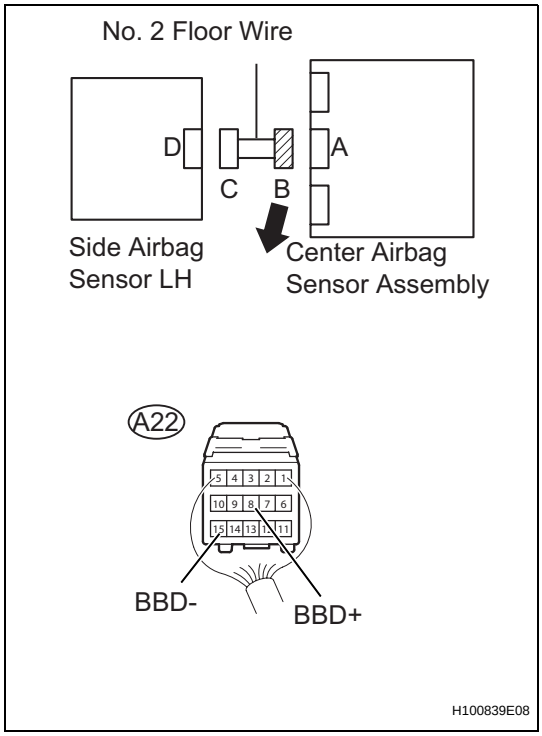

(a) Disconnect the SST from connector C.
(b) Measure the resistance.
Standard resistance

Tester Connection	Condition	Specified Condition
A22-8 (BBD+) - A22-15 (BBD-)	Always	1 MΩ or Higher

NG → REPAIR OR REPLACE NO. 2 FLOOR WIRE

OK

6 CHECK NO. 2 FLOOR WIRE (TO B+)

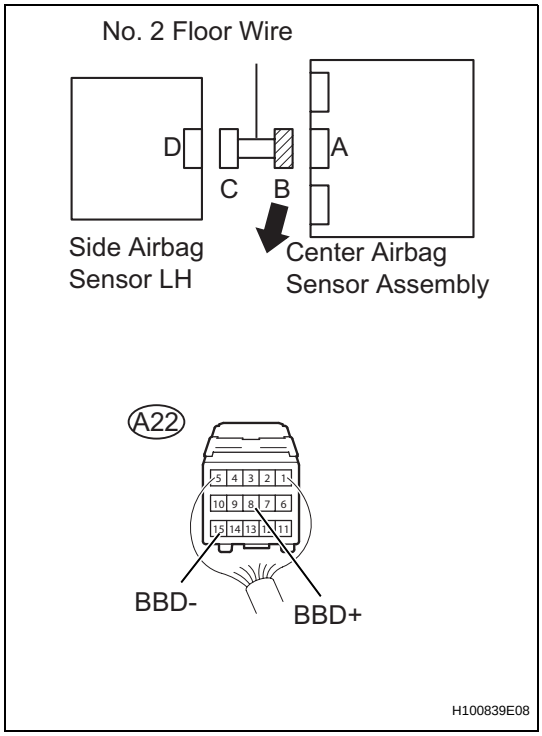

(a) Connect the negative (-) terminal cable to the battery, and wait for at least 2 seconds.
(b) Turn the ignition switch to the ON position.
(c) Measure the voltage.
Standard voltage

Tester Connection	Condition	Specified Condition
A22-8 (BBD+) - Body ground	Ignition switch ON	Below 1 V
A22-15 (BBD-) - Body ground	Ignition switch ON	Below 1 V

NG → REPAIR OR REPLACE NO. 2 FLOOR WIRE

OK

RS

7 CHECK NO. 2 FLOOR WIRE (TO GROUND)

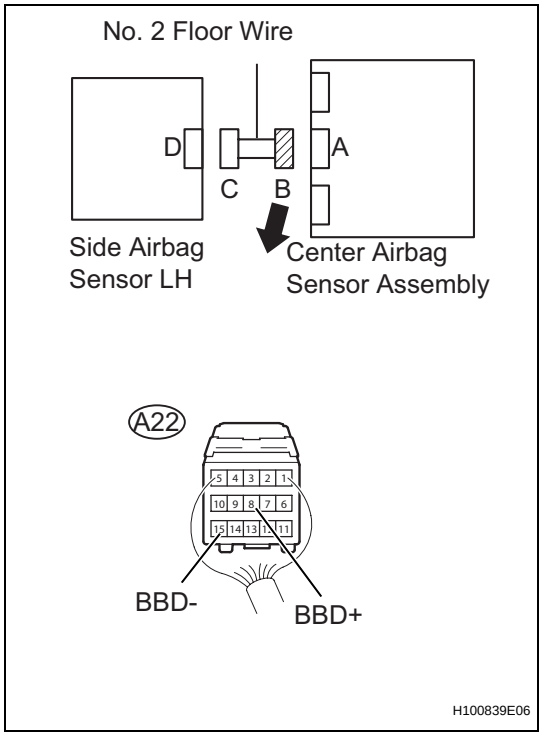

(a) Turn the ignition switch to the LOCK position.
(b) Disconnect the negative (-) terminal cable from the battery, and wait for at least 90 seconds.
(c) Measure the resistance.

Standard resistance

Tester Connection	Condition	Specified Condition
A22-8 (BBD+) - Body ground	Always	1 MΩ or Higher
A22-15 (BBD-) - Body ground	Always	1 MΩ or Higher

NG → REPAIR OR REPLACE NO. 2 FLOOR WIRE

OK

8 CHECK SIDE AIRBAG SENSOR ASSEMBLY LH

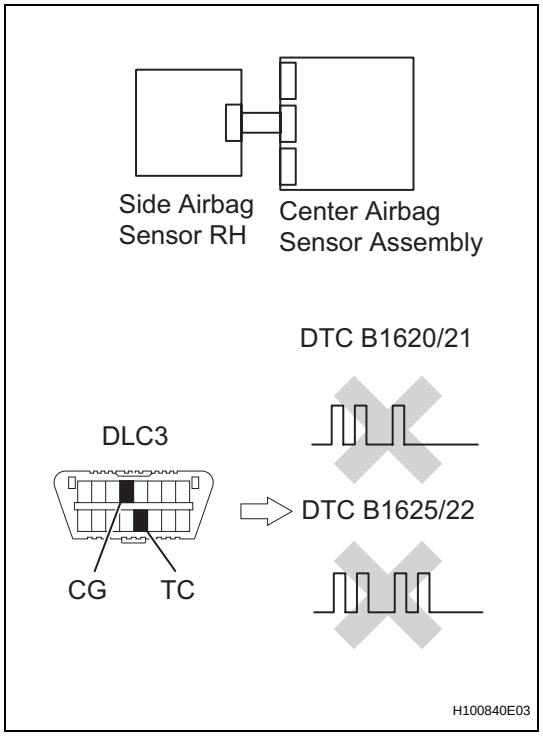

(a) Connect the connectors to the center airbag sensor assembly.
(b) Interchange the side airbag sensor assembly RH with the side airbag sensor assembly LH and connect the connectors to them.
(c) Connect the negative (-) terminal cable to the battery, and wait for at least 2 seconds.
(d) Turn the ignition switch to the ON position, and wait for at least 60 seconds.
(e) Clear the DTCs stored in the memory (See page RS-34).
(f) Turn any ignition switch to the LOCK position.
(g) Turn the ignition switch to the ON position, and wait for at least 60 seconds.
(h) Check for DTCs (See page RS-34).

Result

Result	Proceed to
DTC B1620/21 is output.	A
DTC B1625/22 is output.	B
Neither DTC B1620/21 nor B1625/22 is output.	C

B → REPLACE REAR AIRBAG SENSOR LH

C → USE SIMULATION METHOD TO CHECK

RS

A

9	CHECK CONNECTION OF CONNECTORS

(a) Turn the ignition switch to the LOCK position.
(b) Disconnect the negative (-) terminal cable from the battery, and wait for at least 90 seconds.
(c) Check that the connectors are properly connected to the rear airbag sensor LH.
OK:
The connectors are properly connected.

NG → **CONNECT CONNECTORS**

OK

10	CHECK CONNECTORS

(a) Check that the connectors (on the side airbag sensor assembly LH side and rear airbag sensor LH side) are not damaged (See page IN-34).
OK:
The connectors are not deformed or damaged.

NG → **REPAIR OR REPLACE WIRE HARNESS**

OK

11	CHECK NO. 2 FLOOR WIRE (FOR OPEN)

SST 09843-18040

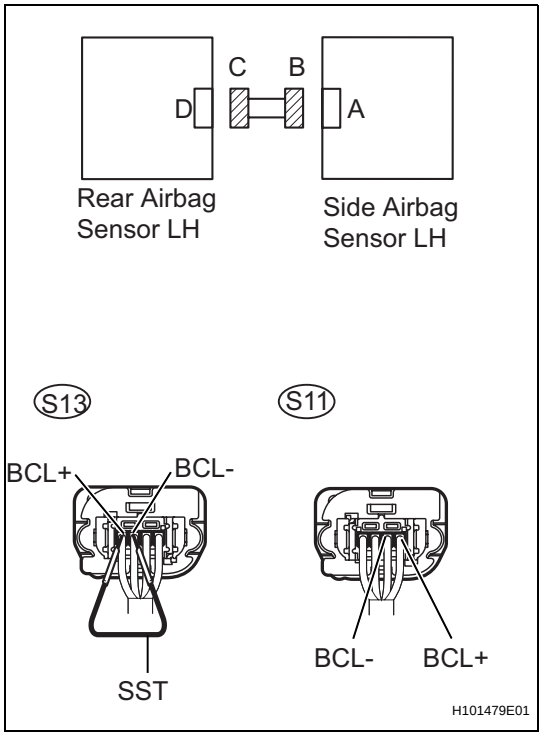

(a) Disconnect the connectors from the side airbag sensor assembly LH and the rear airbag sensor LH.
(b) Using SST, connect S13-1 (BCL-) and S13-2 (BCL+) of connector C.
(c) Measure the resistance.
Standard resistance

Tester Connection	Condition	Specified Condition
S11-1 (BCL+) - S11-2 (BCL-)	Always	Below 1 Ω

NG → **REPAIR OR REPLACE NO. 2 FLOOR WIRE**

RS

OK

12 CHECK NO. 2 FLOOR WIRE (FOR SHORT)

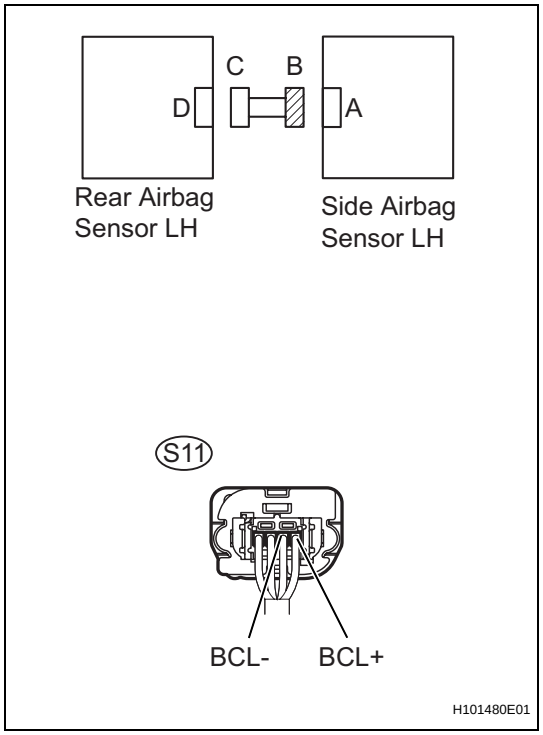

(a) Disconnect the SST from connector C.
(b) Measure the resistance.
Standard resistance

Tester Connection	Condition	Specified Condition
S11-1 (BCL+) - S11-2 (BCL-)	Always	1 MΩ or Higher

NG → REPAIR OR REPLACE NO. 2 FLOOR WIRE

OK

13 CHECK NO. 2 FLOOR WIRE (TO B+)

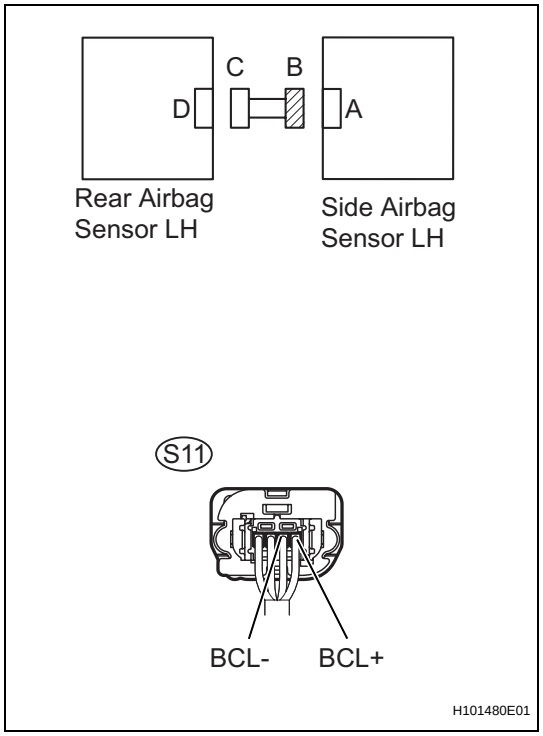

(a) Connect the negative (-) terminal cable to the battery, and wait for at least 2 seconds.
(b) Turn the ignition switch to the ON position.
(c) Measure the voltage.
Standard voltage

Tester Connection	Condition	Specified Condition
S11-1 (BCL+) - Body ground	Ignition switch ON	Below 1 V
S11-2 (BCL-) - Body ground	Ignition switch ON	Below 1 V

NG → REPAIR OR REPLACE NO. 2 FLOOR WIRE

RS

OK

14 CHECK NO. 2 FLOOR WIRE (TO GROUND)

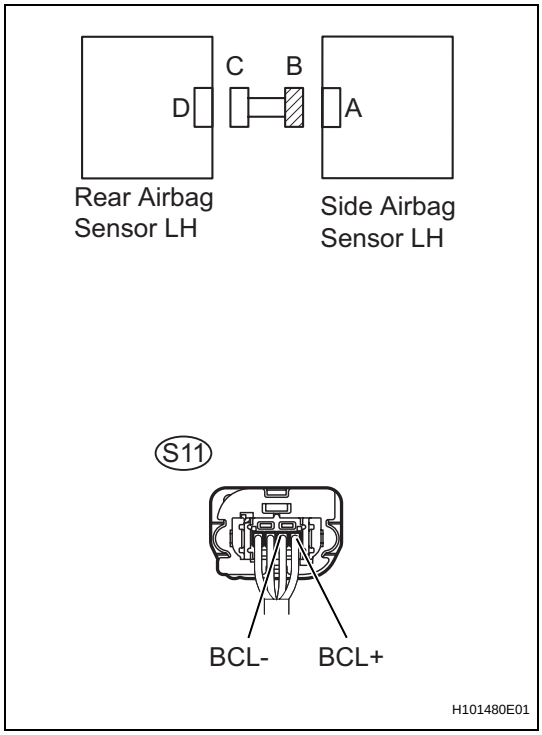

(a) Turn the ignition switch to the LOCK position.
(b) Disconnect the negative (-) terminal cable from the battery, and wait for at least 90 seconds.
(c) Measure the resistance.

Standard resistance

Tester Connection	Condition	Specified Condition
S11-1 (BCL+) - Body ground	Always	1 MΩ or Higher
S11-2 (BCL-) - Body ground	Always	1 MΩ or Higher

NG → **REPAIR OR REPLACE NO. 2 FLOOR WIRE**

OK

15 CHECK DTC

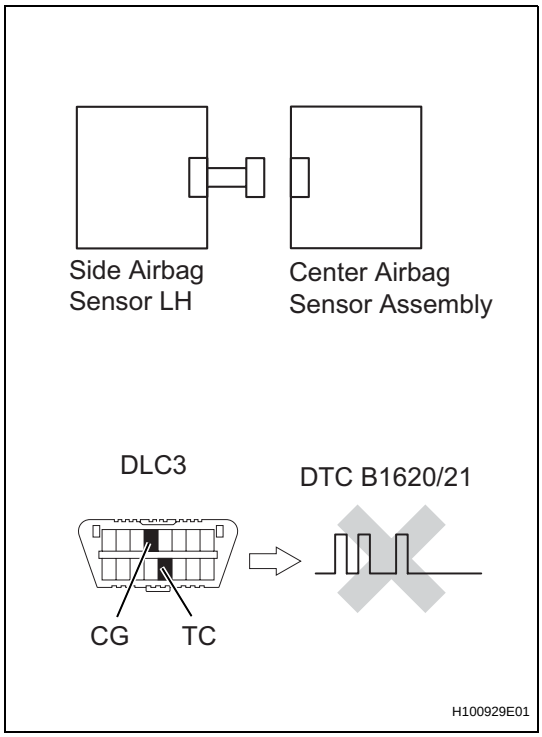

(a) Connect the connectors to the center airbag sensor assembly.
(b) Connect the negative (-) terminal cable to the battery, and wait for at least 2 seconds.
(c) Turn the ignition switch to the ON position, and wait for at least 60 seconds.
(d) Clear any DTCs stored in the memory (See page RS-34).
(e) Turn the ignition switch to the LOCK position.
(f) Turn the ignition switch to the ON position, and wait for at least 60 seconds.
(g) Check for DTCs (See page RS-34).

OK:

DTC B1620/21 is not output.

HINT:
DTCs other than B1620/21 may be output at this time, but they are not related to this check.

OK → **REPLACE REAR AIRBAG SENSOR LH**

RS

NG

16	REPLACE CENTER AIRBAG SENSOR ASSEMBLY

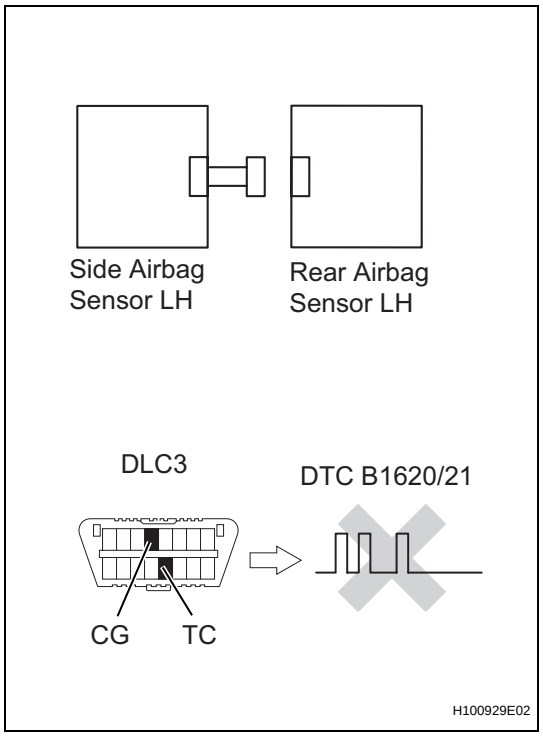

(a) Turn the ignition switch to the LOCK position.
(b) Disconnect the negative (-) terminal cable from the battery, and wait for at least 90 seconds.
(c) Replace the center airbag sensor assembly (See page RS-602).

HINT:
Perform the inspection using parts from a normal vehicle when possible.

(d) Connect the connectors to the center airbag sensor assembly.
(e) Connect the negative (-) terminal cable to the battery, and wait for at least 2 seconds.
(f) Turn the ignition switch to the ON position, and wait for at least 60 seconds.
(g) Clear any DTCs stored in the memory (See page RS-34).
(h) Turn the ignition switch to the LOCK position.
(i) Turn the ignition switch to the ON position, and wait for at least 60 seconds.
(j) Check for DTCs (See page RS-34).

OK:
B1620/21 is not output.

HINT:
DTCs other than B1620/21 may be output at this time, but they are not related to this check.

NG → **REPLACE SIDE AIRBAG SENSOR ASSEMBLY LH**

OK

END

RS

17	CHECK CONNECTION OF CONNECTORS

(a) Turn the ignition switch to the LOCK position.
(b) Disconnect the negative (-) terminal cable from the battery, and wait for at least 90 seconds.
(c) Check that the connectors are properly connected to the center airbag sensor assembly and the side airbag sensor assembly RH.

OK:
The connectors are properly connected.

NG → **CONNECT CONNECTORS**

OK

18	CHECK CONNECTORS

(a) Check that the connectors (on the center airbag sensor assembly side and side airbag sensor assembly RH side) are not damaged (See page IN-34).
OK:
The connectors are not deformed or damaged.

NG → **REPAIR OR REPLACE WIRE HARNESS**

OK

19	CHECK FLOOR WIRE (FOR OPEN)

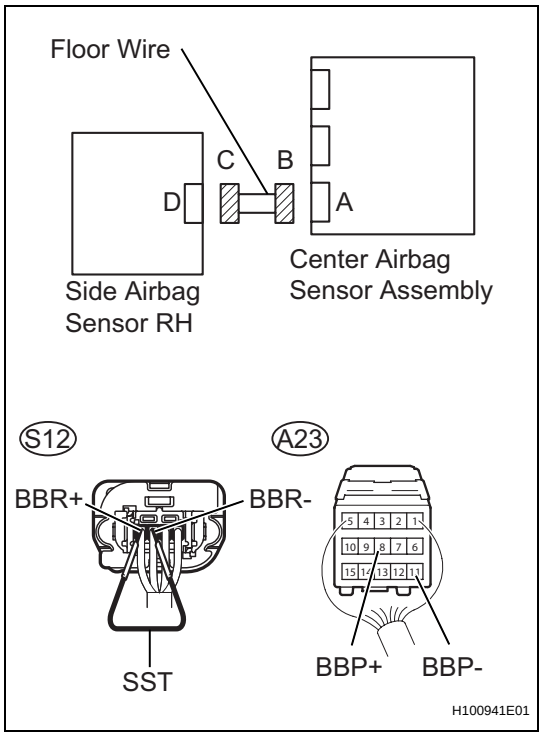

SST 09843-18040

(a) Disconnect the connectors from the center airbag sensor assembly and the side airbag sensor assembly RH.
(b) Using SST, connect S12-4 (BBR+) and S12-3 (BBR-) of connector C.
(c) Measure the resistance.
Standard resistance

Tester Connection	Condition	Specified Condition
A23-8 (BBP+) - A23-11 (BBP-)	Always	Below 1 Ω

NG → **REPAIR OR REPLACE FLOOR WIRE**

RS

OK

20 CHECK FLOOR WIRE (FOR SHORT)

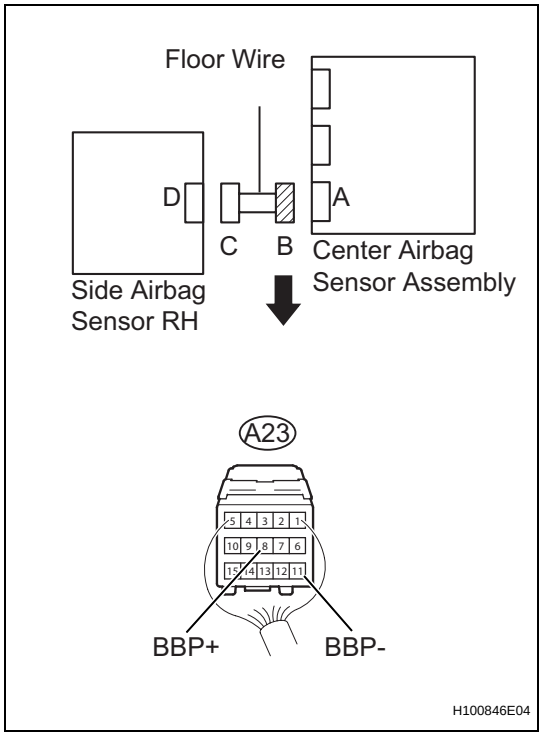

(a) Disconnect the SST from connector C.
(b) Measure the resistance.
Standard resistance

Tester Connection	Condition	Specified Condition
A23-8 (BBP+) - A23-11 (BBP-)	Always	1 MΩ or Higher

NG → **REPAIR OR REPLACE FLOOR WIRE**

OK

21 CHECK FLOOR WIRE (TO B+)

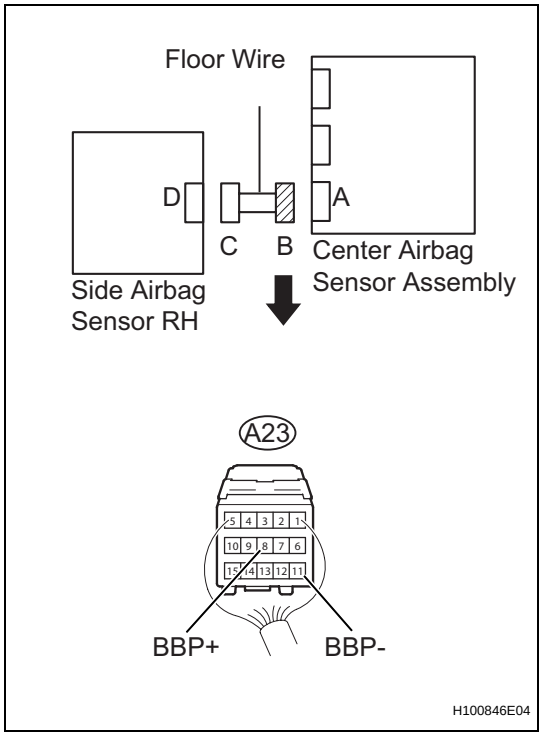

(a) Connect the negative (-) terminal cable to the battery, and wait for at least 2 seconds.
(b) Turn the ignition switch to the ON position.
(c) Measure the voltage.
Standard voltage

Tester Connection	Condition	Specified Condition
A23-8 (BBP+) - Body ground	Ignition switch	Below 1 V
A23-11 (BBP-) - Body ground	Ignition switch	Below 1 V

NG → **REPAIR OR REPLACE FLOOR WIRE**

OK

RS

22 CHECK FLOOR WIRE (TO GROUND)

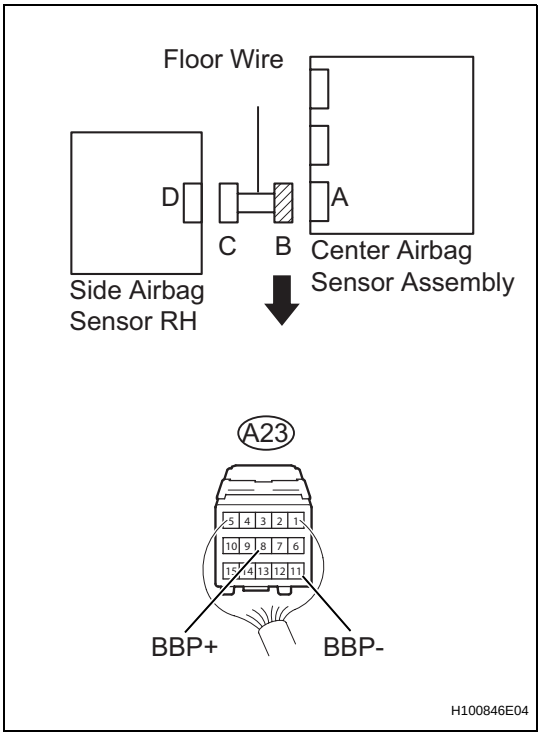

(a) Turn the ignition switch to the LOCK position.
(b) Disconnect the negative (-) terminal cable from the battery, and wait for at least 90 seconds.
(c) Measure the resistance.

Standard resistance

Tester Connection	Condition	Specified Condition
A23-8 (BBP+) - Body ground	Always	1 MΩ or Higher
A23-11 (BBP-) - Body ground	Always	1 MΩ or Higher

NG → REPAIR OR REPLACE FLOOR WIRE

OK

23 CHECK SIDE AIRBAG SENSOR ASSEMBLY RH

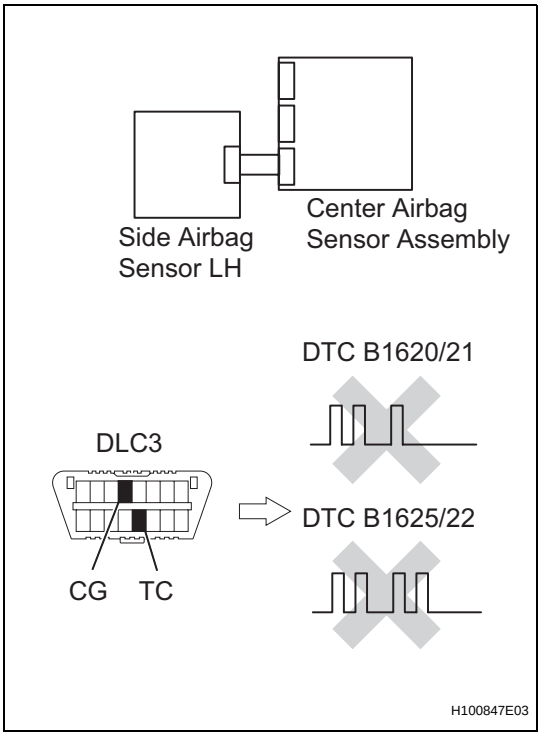

(a) Connect the connectors to the center airbag sensor assembly.
(b) Interchange the side airbag sensor assembly RH with the side airbag sensor assembly LH and connect the connectors to them.
(c) Connect the negative (-) terminal cable to the battery, and wait for at least 2 seconds.
(d) Turn the ignition switch to the ON position, and wait for at least 60 seconds.
(e) Clear any DTCs stored in the memory (See page RS-34).
(f) Turn the ignition switch to the LOCK position.
(g) Turn the ignition switch to the ON position, and wait for at least 60 seconds.
(h) Check for DTCs (See page RS-34).

Result

Result	Proceed to
DTC B1625/22 is output.	A
DTC B1620/21 is output.	B
Neither DTC B1620/21 nor B1625/22 is output.	C

B → REPLACE REAR AIRBAG SENSOR RH

RS

C → USE SIMULATION METHOD TO CHECK

A

24	CHECK CONNECTION OF CONNECTORS

(a) Turn the ignition switch to the LOCK position.
(b) Disconnect the negative (-) terminal cable from the battery, and wait for at least 90 seconds.
(c) Check that the connectors are properly connected to the center airbag sensor assembly and the side airbag sensor assembly RH.

OK:

The connectors are properly connected.

NG → CONNECT CONNECTORS

OK

25	CHECK CONNECTORS

(a) Check that the connectors (on the side airbag sensor assembly RH side and rear airbag sensor RH side) are not damaged (See page IN-34).

OK:

The connectors are not deformed or damaged.

NG → REPAIR OR REPLACE WIRE HARNESS

OK

26	CHECK FLOOR WIRE (FOR OPEN)

SST 09843-18040

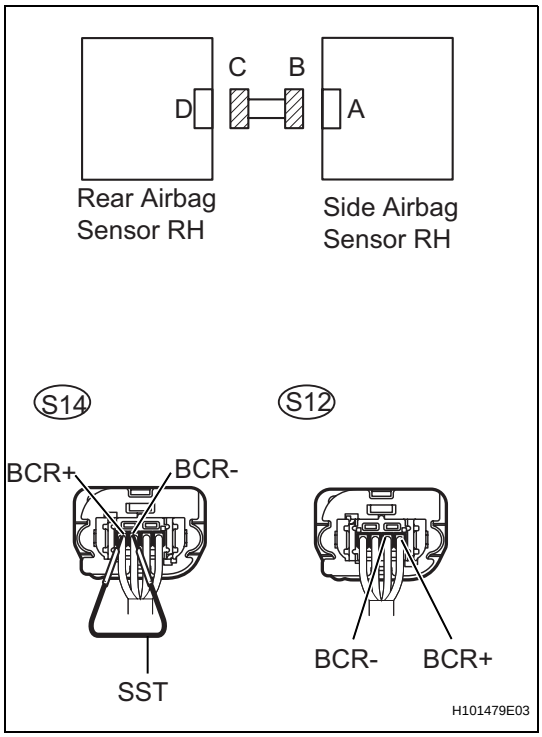

(a) Disconnect the connectors from the side airbag sensor assembly RH and the rear airbag sensor RH.
(b) Using SST, connect S14-1 (BCR-) and S14-2 (BCR+) of connector C.
(c) Measure the resistance.
Standard resistance

Tester Connection	Condition	Specified Condition
S12-1 (BCR+) - S12-2 (BCR-)	Always	Below 1 Ω

NG → **REPAIR OR REPLACE FLOOR WIRE**

OK

27 CHECK FLOOR WIRE (FOR SHORT)

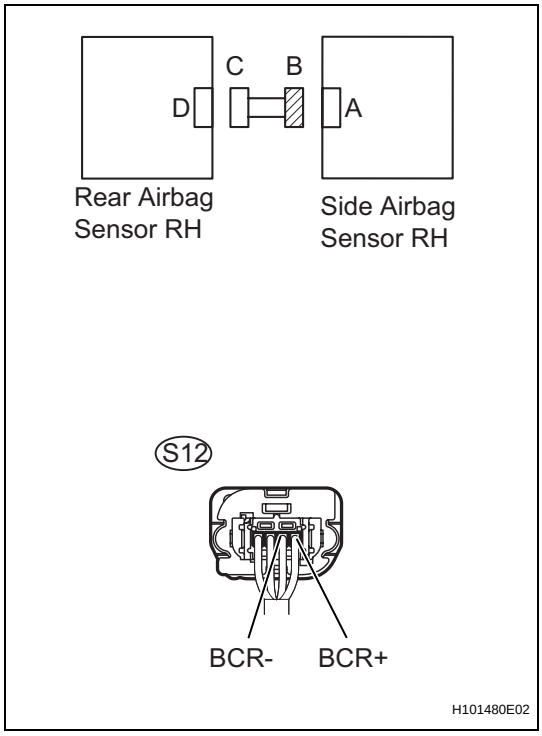

(a) Disconnect the SST from connector C.
(b) Measure the resistance.
Standard resistance

Tester Connection	Condition	Specified Condition
S12-1 (BCR+) - S12-2 (BCR-)	Always	1 MΩ or Higher

NG → **REPAIR OR REPLACE FLOOR WIRE**

OK

RS

28 CHECK FLOOR WIRE (TO B+)

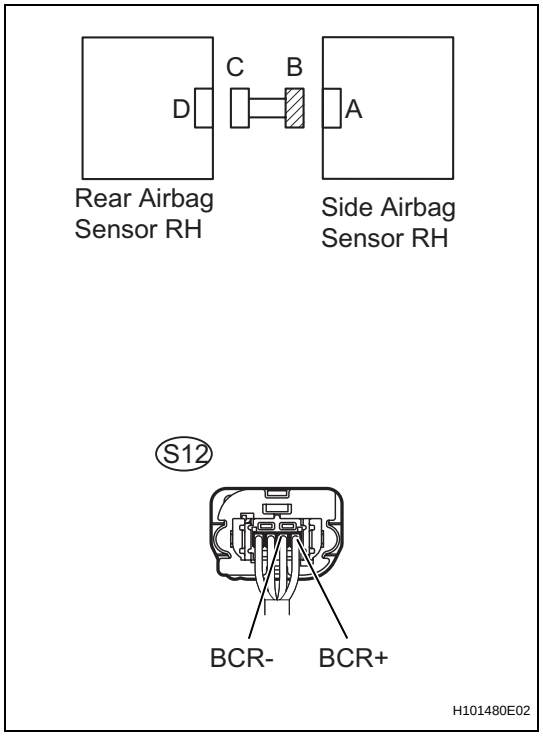

(a) Connect the negative (-) terminal cable to the battery, and wait for at least 2 seconds.
(b) Turn the ignition switch to the ON position.
(c) Measure the voltage.

Standard resistance

Tester Connection	Condition	Specified Condition
S12-1 (BCR+) - Body ground	Ignition switch ON	Below 1 V
S12-2 (BCR-) - Body ground	Ignition switch ON	Below 1 V

NG → **REPAIR OR REPLACE FLOOR WIRE**

OK

29 CHECK FLOOR WIRE (TO GROUND)

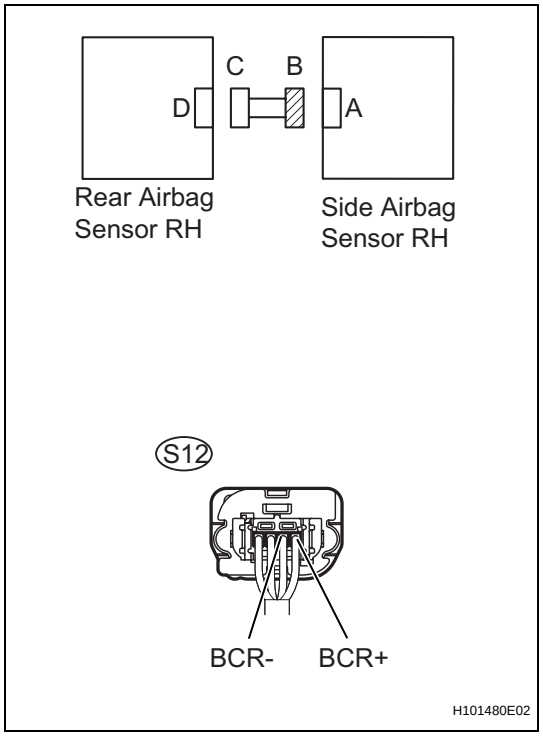

(a) Turn the ignition switch to the LOCK position.
(b) Disconnect the negative (-) terminal cable from the battery, and wait for at least 90 seconds.
(c) Measure the resistance.

Standard resistance

Tester Connection	Condition	Specified Condition
S12-1 (BCR+) - Body ground	Always	1 MΩ or Higher
S12-2 (BCR-) - Body ground	Always	1 MΩ or Higher

NG → **REPAIR OR REPLACE FLOOR WIRE**

OK

RS

30	CHECK DTC

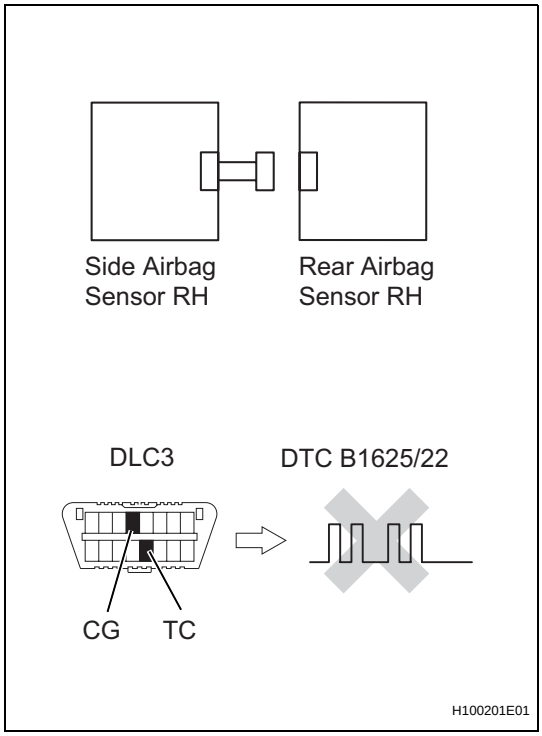

(a) Connect the connectors to the center airbag sensor assembly.
(b) Connect the negative (-) terminal cable to the battery, and wait for at least 2 seconds.
(c) Turn the ignition switch to the ON position, and wait for at least 60 seconds.
(d) Clear any DTCs stored in the memory (See page RS-34).
(e) Turn the ignition switch to the LOCK position.
(f) Turn the ignition switch to the ON position, and wait for at least 60 seconds.
(g) Check for DTCs (See page RS-34).

OK:

DTC B1625/22 is not output.

HINT:
DTCs other than B1625/22 may be output at this time, but they are not related to this check.

OK → **REPLACE REAR AIRBAG SENSOR RH**

NG

31	CHECK SIDE AIRBAG SENSOR ASSEMBLY RH

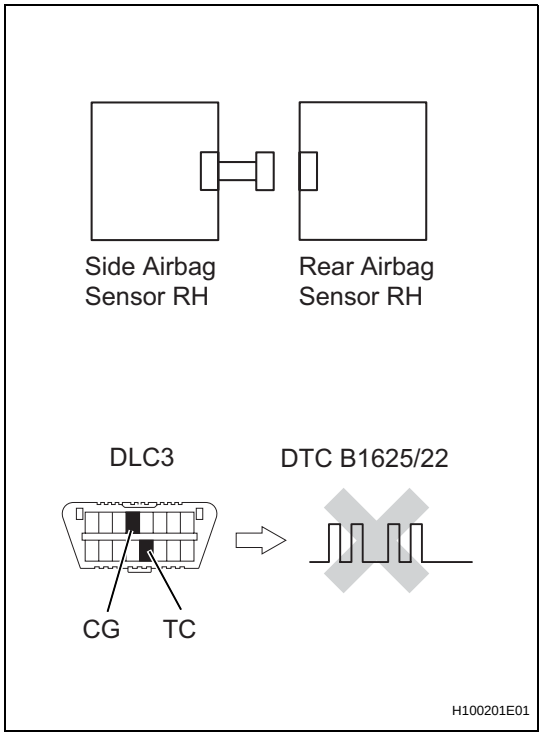

(a) Turn the ignition switch to the LOCK position.
(b) Disconnect the negative (-) terminal cable from the battery, and wait for at least 90 seconds.
(c) Replace the center airbag sensor assembly (See page RS-602).

HINT:
Perform the inspection using parts from a normal vehicle when possible.

(d) Connect the negative (-) terminal cable to the battery, and wait for at least 2 seconds.
(e) Turn the ignition switch to the ON position, and wait for at least 60 seconds.
(f) Clear any DTCs stored in the memory (See page RS-34).
(g) Turn the ignition switch to the LOCK position.
(h) Turn the ignition switch to the ON position, and wait for at least 60 seconds.
(i) Check for DTCs (See page RS-34).

OK:

DTC B1625/22 is not output.

HINT:
DTCs other than B1625/22 may be output at this time, but they are not related to this check.

RS

NG → REPLACE SIDE AIRBAG SENSOR ASSEMBLY RH

OK

END

32 CHECK CONNECTION OF CONNECTORS

(a) Turn the ignition switch to the LOCK position.
(b) Disconnect the negative (-) terminal cable from the battery, and wait for at least 90 seconds.
(c) Check that the connectors are properly connected to the center airbag sensor assembly and the side airbag sensor assembly LH.
OK:
The connectors are properly connected.

NG → CONNECT CONNECTORS

OK

33 CHECK CONNECTORS

(a) Check that the connectors (on the center airbag sensor assembly side and side airbag sensor assembly LH side) are not damaged (See page IN-34).
OK:
The connectors are not deformed or damaged.

NG → REPAIR OR REPLACE WIRE HARNESS

OK

34 CHECK NO. 2 FLOOR WIRE (FOR OPEN)

SST 09843-18040

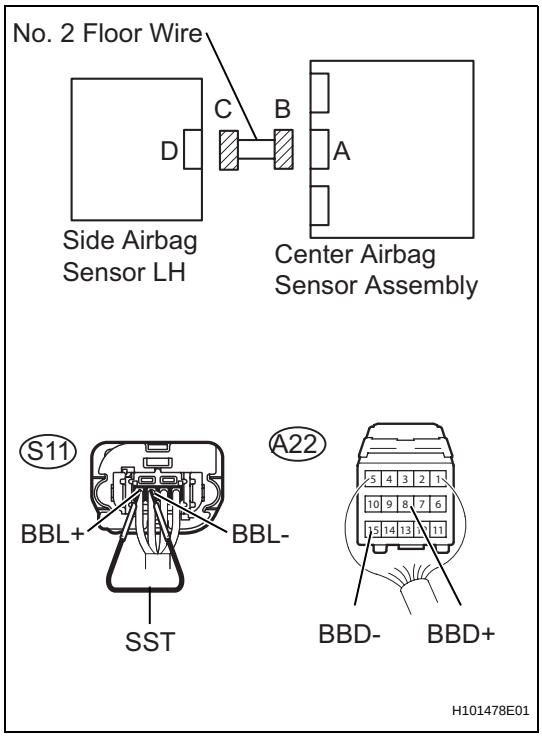

(a) Disconnect the connectors from the center airbag sensor assembly and the side airbag sensor assembly LH.
(b) Using SST, connect S11-4 (BBL+) and S11-3 (BBL-) of connector C.
(c) Measure the resistance.
Standard resistance

Tester Connection	Condition	Specified Condition
A22-8 (BBD+) - A22-15 (BBD-)	Always	Below 1 Ω

NG → **REPAIR OR REPLACE NO. 2 FLOOR WIRE**

OK

35 CHECK NO. 2 FLOOR WIRE (FOR SHORT)

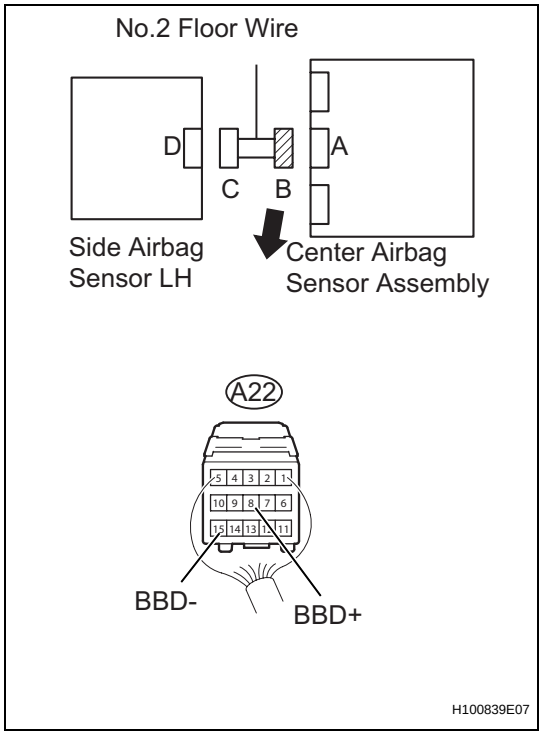

(a) Disconnect the SST from connector C.
(b) Measure the resistance.
Standard resistance

Tester Connection	Condition	Specified Condition
A22-8 (BBD+) - A22-15 (BBD-)	Always	1 MΩ or Higher

NG → **REPAIR OR REPLACE NO. 2 FLOOR WIRE**

OK

RS

36 CHECK NO. 2 FLOOR WIRE (TO B+)

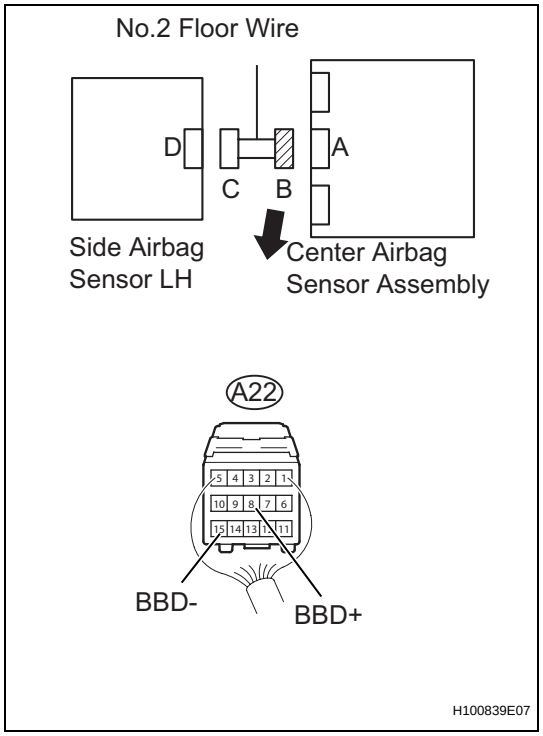

(a) Connect the negative (-) terminal cable to the battery, and wait for at least 2 seconds.
(b) Turn the ignition switch to the ON position.
(c) Measure the voltage.
Standard voltage

Tester Connection	Condition	Specified Condition
A22-8 (BBD+) - Body ground	Ignition switch ON	Below 1 Ω
A22-15 (BBD-) - Body ground	Ignition switch ON	Below 1 Ω

NG → **REPAIR OR REPLACE NO. 2 FLOOR WIRE**

OK

37 CHECK NO. 2 FLOOR WIRE (TO GROUND)

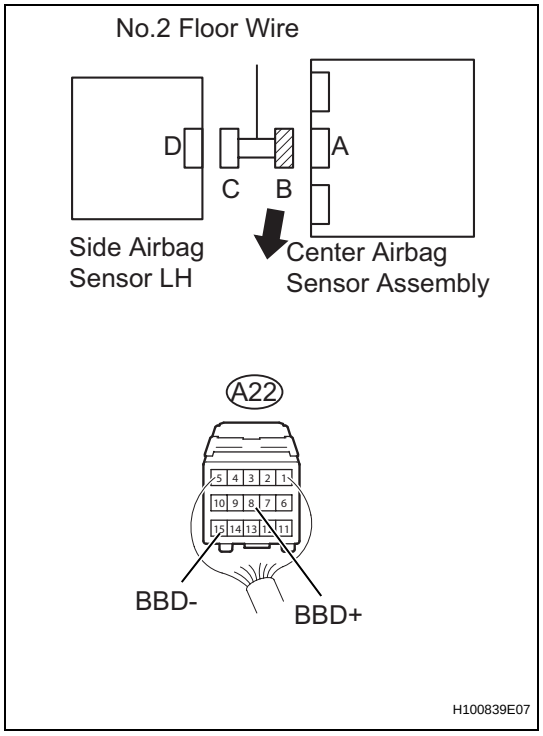

(a) Turn the ignition switch to the LOCK position.
(b) Disconnect the negative (-) terminal cable from the battery, and wait for at least 90 seconds.
(c) Measure the resistance.
Standard resistance

Tester Connection	Condition	Specified Condition
A22-8 (BBD+) - Body ground	Always	1 MΩ or Higher
A22-15 (BBD-) - Body ground	Always	1 MΩ or Higher

NG → **REPAIR OR REPLACE NO. 2 FLOOR WIRE**

RS

OK

38 CHECK CONNECTION OF CONNECTORS

(a) Check that the connectors are properly connected to the rear airbag sensor LH.
OK:
The connectors are properly connected.

NG → **CONNECT CONNECTORS**

OK

39 CHECK CONNECTORS

(a) Check that the connectors (on the side airbag sensor assembly LH side and rear airbag sensor LH side) are not damaged (See page IN-34).
OK:
The connectors are not deformed or damaged.

NG → **REPAIR OR REPLACE WIRE HARNESS**

OK

40 CHECK NO. 2 FLOOR WIRE (FOR OPEN)

SST 09843-18040

(a) Disconnect the connectors from the side airbag sensor assembly LH and the rear airbag sensor LH.
(b) Using SST, connect S13-1 (BCL-) and S13-2 (BCL+) of connector C.
(c) Measure the resistance.
Standard resistance

Tester Connection	Condition	Specified Condition
S11-1 (BCL+) - S11-2 (BCL-)	Always	Below 1 Ω

NG → **REPAIR OR REPLACE NO. 2 FLOOR WIRE**

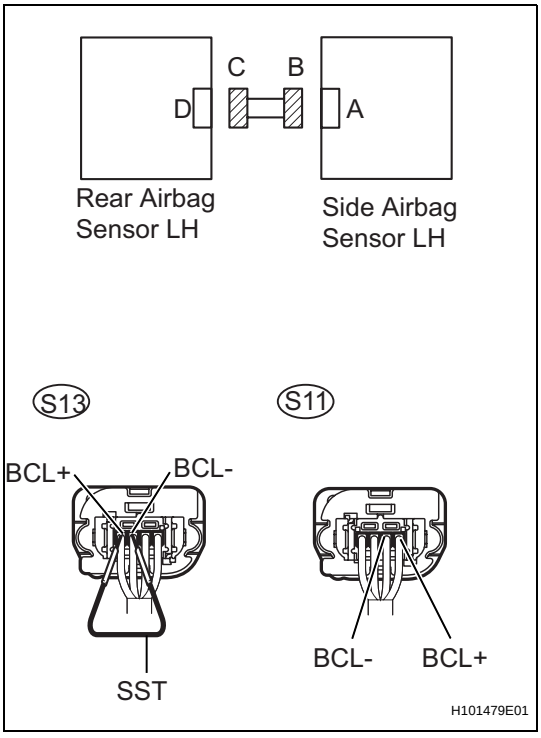

OK

RS

41 CHECK NO. 2 FLOOR WIRE (FOR SHORT)

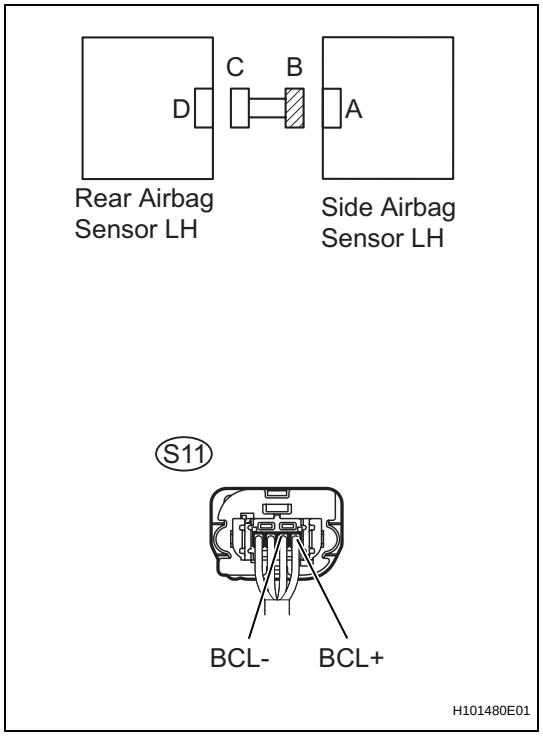

(a) Disconnect the SST from connector C.
(b) Measure the resistance.
Standard resistance

Tester Connection	Condition	Specified Condition
S11-1 (BCL+) - S11-2 (BCL-)	Always	1 MΩ or Higher

NG → **REPAIR OR REPLACE NO. 2 FLOOR WIRE**

OK

42 CHECK NO. 2 FLOOR WIRE (TO B+)

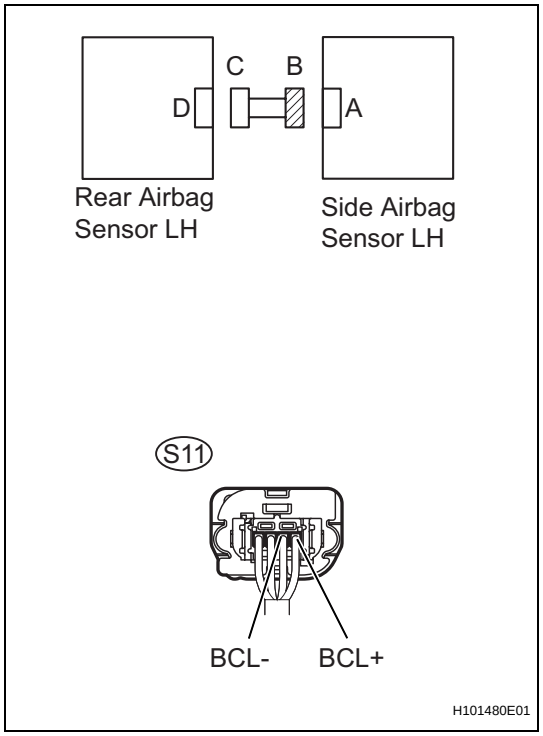

(a) Connect the negative (-) terminal cable to the battery, and wait for at least 2 seconds.
(b) Turn the ignition switch to the ON position.
(c) Measure the voltage.
Standard voltage

Tester Connection	Condition	Specified Condition
S11-1 (BCL+) - Body ground	Ignition switch ON	Below 1 Ω
S11-2 (BCL-) - Body ground	Ignition switch ON	Below 1 Ω

NG → **REPAIR OR REPLACE NO. 2 FLOOR WIRE**

OK

RS

43 CHECK NO. 2 FLOOR WIRE (TO GROUND)

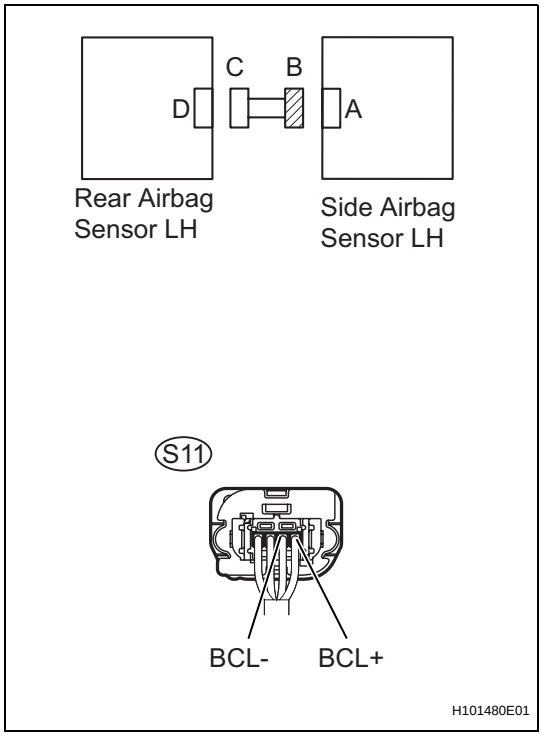

(a) Turn the ignition switch to the LOCK position.
(b) Disconnect the negative (-) terminal cable from the battery, and wait for at least 90 seconds.
(c) Measure the resistance.

Standard resistance

Tester Connection	Condition	Specified Condition
S11-1 (BCL+) - Body ground	Always	1 MΩ or Higher
S11-2 (BCL-) - Body ground	Always	1 MΩ or Higher

NG → **REPAIR OR REPLACE NO. 2 FLOOR WIRE**

OK

44 CHECK CONNECTION OF CONNECTORS

(a) Check that the connectors are properly connected to the center airbag sensor assembly and the side airbag sensor assembly RH.

OK:

The connectors are properly connected.

NG → **CONNECT CONNECTORS**

OK

45 CHECK CONNECTORS

(a) Check that the connectors (on the center airbag sensor assembly side and side airbag sensor assembly RH side) are not damaged (See page IN-34).

OK:

The connectors are not deformed or damaged.

NG → **REPAIR OR REPLACE WIRE HARNESS**

OK

46 CHECK FLOOR WIRE (FOR OPEN)

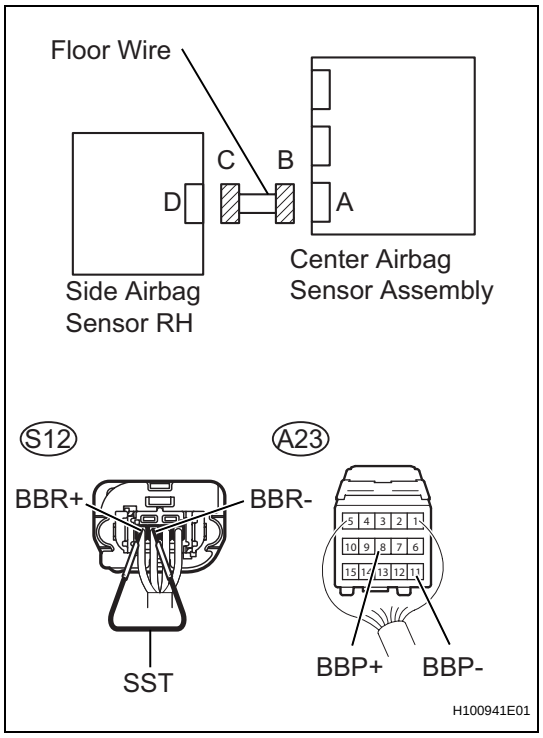

SST 09843-18040

(a) Disconnect the connectors from the center airbag sensor assembly and the side airbag sensor assembly RH.
(b) Using SST, connect S12-4 (BBR+) and S12-3 (BBR-) of connector C.
(c) Measure the resistance.

Standard resistance

Tester Connection	Condition	Specified Condition
A23-8 (BBP+) - A23-11 (BBP-)	Always	Below 1 Ω

NG → **REPAIR OR REPLACE FLOOR WIRE**

OK

47 CHECK FLOOR WIRE (FOR SHORT)

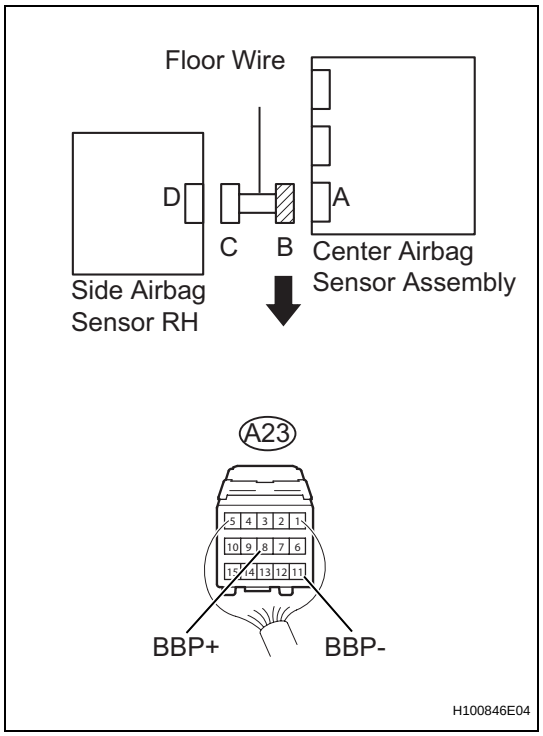

(a) Disconnect the SST from connector C.
(b) Measure the resistance.

Standard resistance

Tester Connection	Condition	Specified Condition
A23-8 (BBP+) - A23-11 (BBP-)	Always	1 MΩ or Higher

NG → **REPAIR OR REPLACE FLOOR WIRE**

RS

OK

48 CHECK FLOOR WIRE (TO B+)

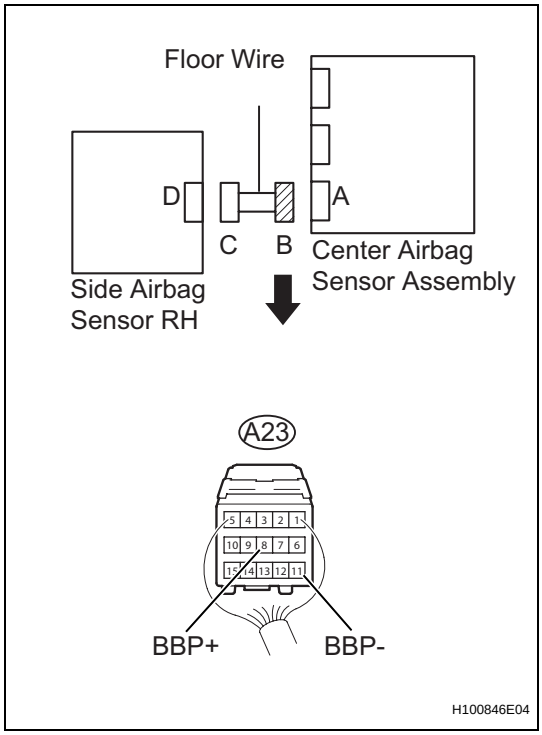

(a) Connect the negative (-) terminal cable to the battery, and wait for at least 2 seconds.
(b) Turn the ignition switch to the ON position.
(c) Measure the voltage.

Standard voltage

Tester Connection	Condition	Specified Condition
A23-8 (BBP+) - Body ground	Ignition switch ON	Below 1 V
A23-11 (BBP-) - Body ground	Ignition switch ON	Below 1 V

NG → REPAIR OR REPLACE FLOOR WIRE

OK

49 CHECK FLOOR WIRE (TO GROUND)

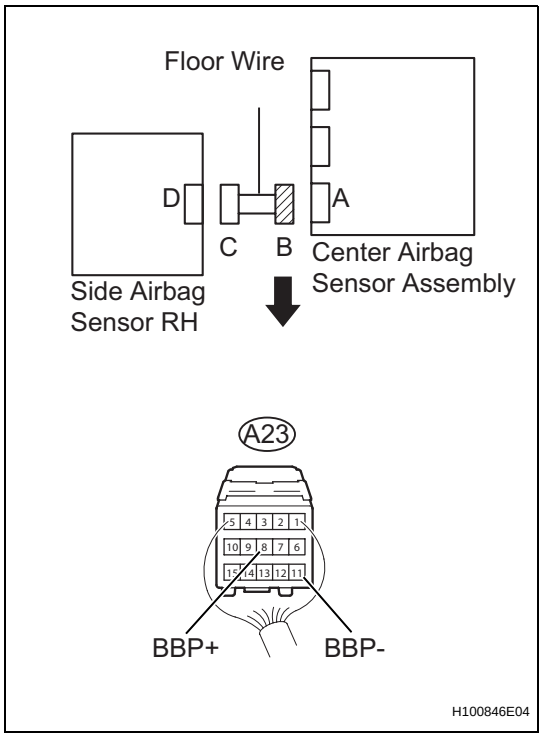

(a) Turn the ignition switch to the LOCK position.
(b) Disconnect the negative (-) terminal cable from the battery, and wait for at least 90 seconds.
(c) Measure the resistance.

Standard resistance

Tester Connection	Condition	Specified Condition
A23-8 (BBP+) - Body ground	Always	1 MΩ or Higher
A23-11 (BBP-) - Body ground	Always	1 MΩ or Higher

NG → REPAIR OR REPLACE FLOOR WIRE

RS

OK

50	CHECK CONNECTION OF CONNECTORS

(a) Check that the connectors are properly connected to the center airbag sensor assembly and the side airbag sensor assembly RH.

OK:

The connectors are properly connected.

NG → **CONNECT CONNECTORS**

OK

51	CHECK CONNECTORS

(a) Check that the connectors (on the side airbag sensor assembly RH side and rear airbag sensor RH side) are not damaged (See page IN-34).

OK:

The connectors are not deformed or damaged.

NG → **REPAIR OR REPLACE WIRE HARNESS**

OK

52	CHECK FLOOR WIRE (FOR OPEN)

SST 09843-18040

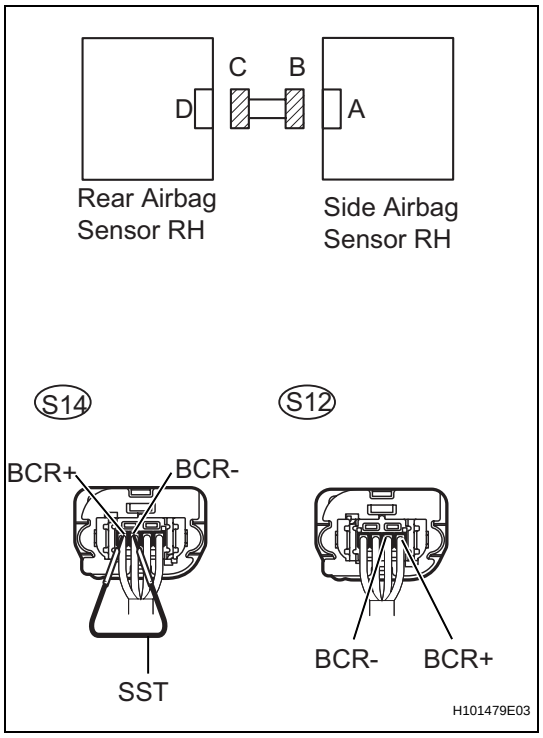

(a) Disconnect the connectors from the side airbag sensor assembly RH and the rear airbag sensor RH.

(b) Using SST, connect S14-1 (BCR-) and S14-2 (BCR+) of connector C.

(c) Measure the resistance.

Standard resistance

Tester Connection	Condition	Specified Condition
S12-1 (BCR+) - S12-2 (BCR-)	Always	Below 1 Ω

NG → **REPAIR OR REPLACE FLOOR WIRE**

OK

RS

53 CHECK FLOOR WIRE (FOR SHORT)

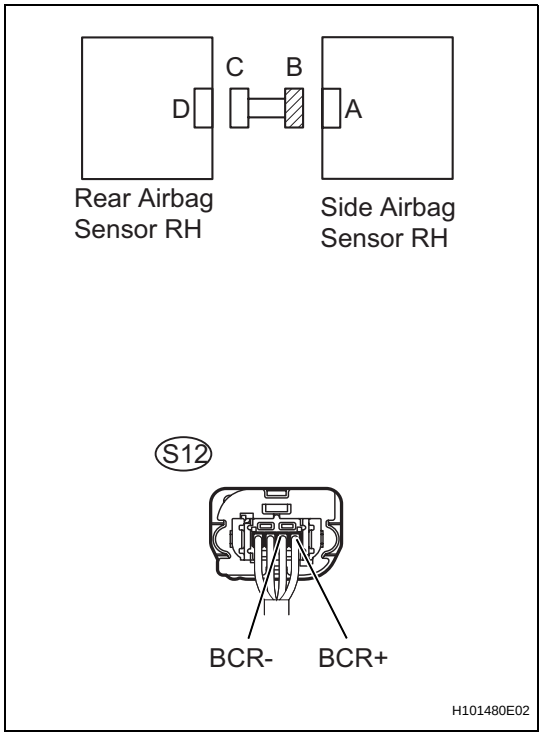

(a) Disconnect the SST from connector C.
(b) Measure the resistance.
Standard resistance

Tester Connection	Condition	Specified Condition
S12-1 (BCR+) - S12-2 (BCR-)	Always	Below 1 Ω

NG → **REPAIR OR REPLACE FLOOR WIRE**

OK

54 CHECK FLOOR WIRE (TO B+)

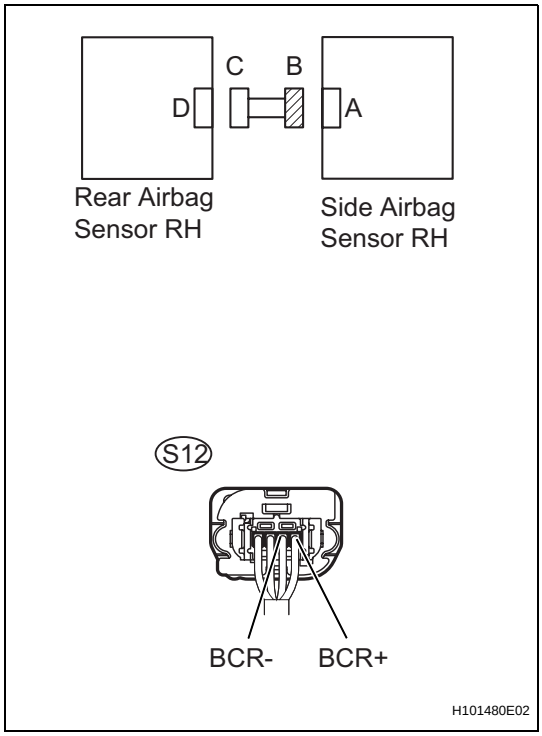

(a) Connect the negative (-) terminal cable to the battery, and wait for at least 2 seconds.
(b) Turn the ignition switch to the ON position.
(c) Measure the voltage.
Standard voltage

Tester Connection	Condition	Specified Condition
S12-1 (BCR+) - Body ground	Ignition switch ON	Below 1 V
S12-2 (BCR-) - Body ground	Ignition switch ON	Below 1 V

NG → **REPAIR OR REPLACE FLOOR WIRE**

OK

RS

55 CHECK FLOOR WIRE (TO GROUND)

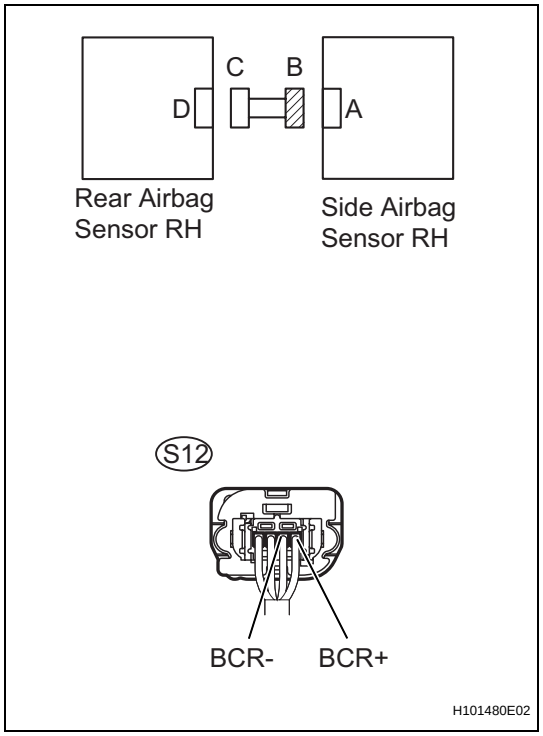

(a) Turn the ignition switch to the LOCK position.
(b) Disconnect the negative (-) terminal cable from the battery, and wait for at least 90 seconds.
(c) Measure the resistance.

Standard resistance

Tester Connection	Condition	Specified Condition
S12-1 (BCR+) - Body ground	Always	1 MΩ or Higher
S12-2 (BCR-) - Body ground	Always	1 MΩ or Higher

NG → **REPAIR OR REPLACE FLOOR WIRE**

OK

56 CHECK DTC

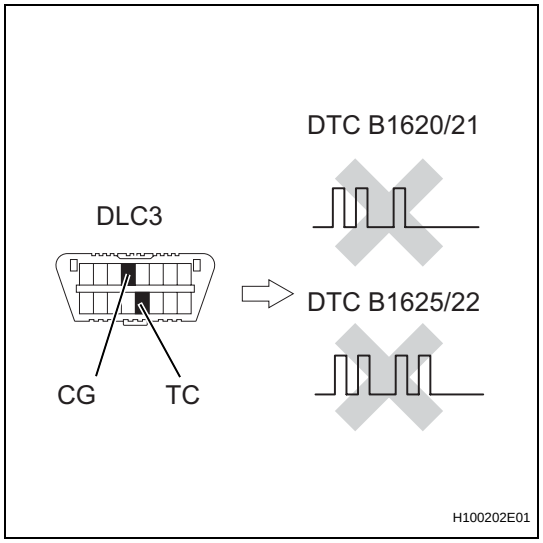

(a) Connect the connectors to the center airbag sensor assembly and side airbag sensor assembly.

NOTICE:
Do not connect the rear airbag sensor LH and the rear airbag sensor RH connector.

(b) Connect the negative (-) terminal cable to the battery, and wait for at least 2 seconds.
(c) Turn the ignition switch to the ON position, and wait for at least 60 seconds.
(d) Clear any DTCs stored in the memory (See page RS-34).
(e) Turn the ignition switch to the LOCK position.
(f) Turn the ignition switch to the ON position, and wait for at least 60 seconds.
(g) Check for DTCs (See page RS-34).

OK:
DTC B1620/21 and B1625/22 are not output.

HINT:
DTCs other than B1620/21 and B1625/22 may be output at this time, but they are not related to this check.

NG → **REPLACE REAR AIRBAG SENSOR LH AND REAR AIRBAG SENSOR RH**

RS

OK

57	CHECK SIDE AIRBAG SENSOR ASSEMBLY RH

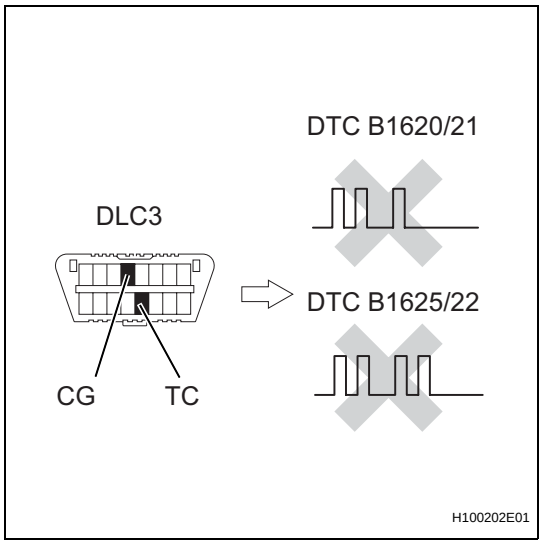

(a) Turn the ignition switch to the LOCK position.
(b) Disconnect the negative (-) terminal cable from the battery, and wait for at least 90 seconds.
(c) Connect the connectors to the rear airbag sensor LH and the rear airbag sensor RH.
(d) Replace the center airbag sensor assembly (See page RS-602).

HINT:
Perform the inspection using parts from a normal vehicle when possible.

(e) Connect the negative (-) terminal cable to the battery, and wait for at least 2 seconds.
(f) Turn the ignition switch to the ON position, and wait for at least 60 seconds.
(g) Clear any DTCs stored in the memory (See page RS-34).
(h) Turn the ignition switch to the LOCK position.
(i) Turn the ignition switch to the ON position, and wait for at least 60 seconds.
(j) Check for DTCs (See page RS-34).

OK:
DTC B1620/21 and B1625/22 are not output.

HINT:
DTCs other than B1620/21 and B1625/22 may be output at this time, but they are not related to this check.

NG → **REPLACE REAR AIRBAG SENSOR LH AND REAR AIRBAG SENSOR RH**

OK

END

DTC	B1630/23	Driver Side Rear Airbag Sensor Circuit Malfunction

DTC	B1635/24	Front Passenger Side Rear Airbag Sensor Circuit Malfunction

DESCRIPTION

The airbag sensor LH consists of parts such as the safing sensor, the diagnostic circuit and the lateral deceleration sensor. The configuration of the rear airbag sensor RH is the same as that of the LH.
When the center airbag sensor assembly receives signals from the lateral deceleration sensor, it determines whether or not the SRS should be activated.
DTC B1630/23 is set when a malfunction is detected in the curtain shield airbag sensor (driver seat side) circuit.
DTC B1635/24 is set when a malfunction is detected in the curtain shield airbag sensor (front passenger seat side) circuit.

DTC No.	DTC Detections Conditions	Trouble Areas
B1630/23	• The center airbag sensor assembly receives an open circuit signal in the curtain shield airbag sensor (Driver seat side) circuit for 2 seconds • Rear airbag sensor LH malfunction • Side airbag sensor assembly LH malfunction • Center airbag sensor assembly center malfunction	• Rear airbag sensor LH • Side airbag sensor assembly LH • Center center airbag sensor assembly • No. 2 floor wire
B1635/24	• The center airbag sensor assembly receives an open circuit signal in the curtain shield airbag sensor (Front passenger seat side) circuit for 2 seconds • Rear airbag sensor RH malfunction • Side airbag sensor assembly RH malfunction • Center airbag sensor assembly center malfunction	• Rear airbag sensor RH • Side airbag sensor assembly RH • Center center airbag sensor assembly • Floor wire

HINT:
Troubleshoot DTC B1620/21 first when the DTC B1620/21 and B1630/23 are output simultaneously.

WIRING DIAGRAM

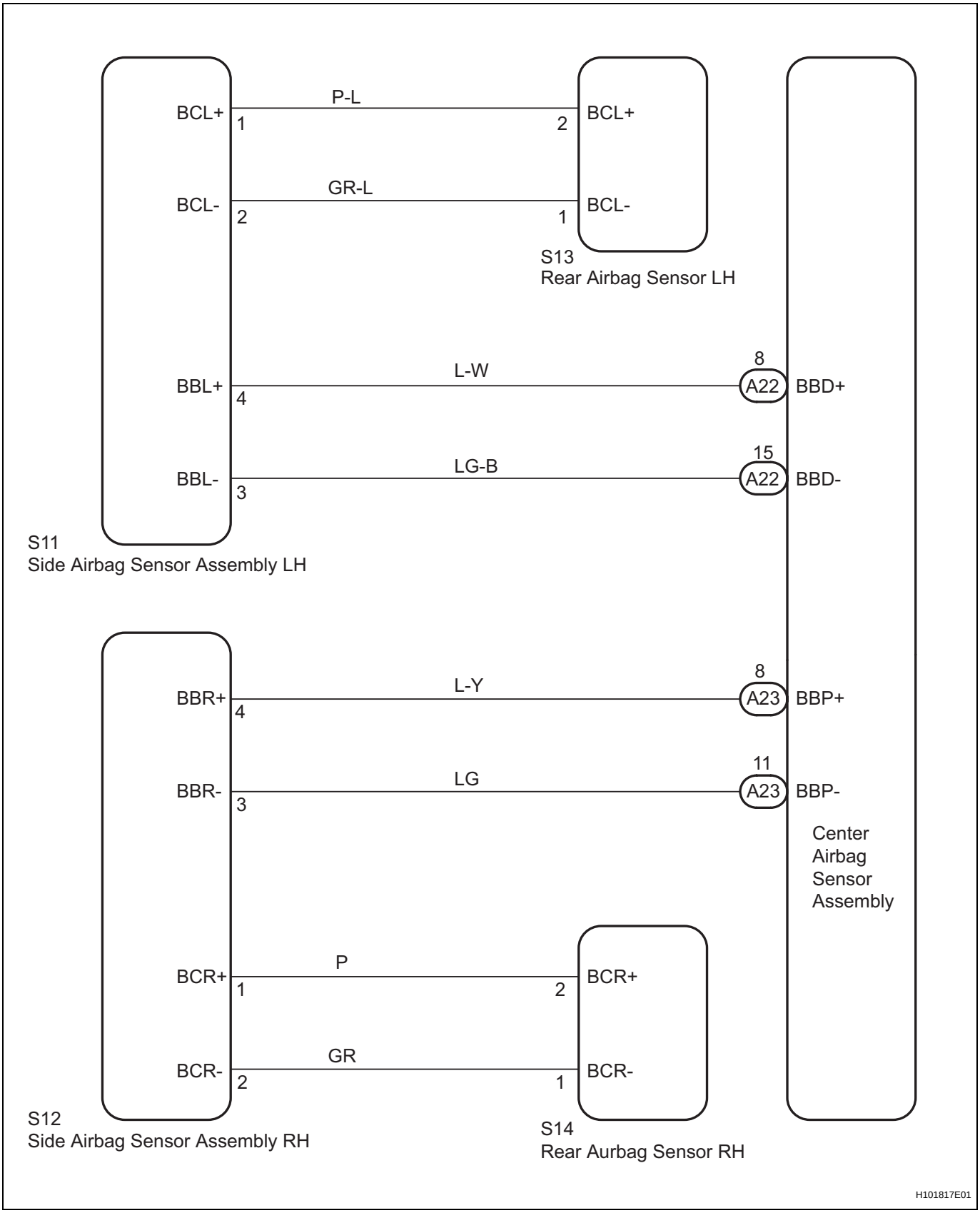

RS

CAUTION:
In order to prevent unexpected airbag deployment, disconnect the following connectors before inspecting parts such as wire harnesses, if the application of tester probes to the center airbag sensor assembly connector is necessary.
(a) Turn the ignition switch to the LOCK position.
(b) Disconnect the negative (-) terminal cable from the battery, and wait for at least 90 seconds
(c) Disconnect the connectors from the center airbag sensor assembly.
(d) Disconnect the connectors from the steering pad.
(e) Disconnect the connector from the front passenger airbag assembly.
(f) Disconnect the connector from the front seat airbag assembly LH.
(g) Disconnect the connector from the front seat airbag assembly RH.
HINT:
Skip the following steps if side and curtain shield airbags are not fitted.
(h) Disconnect the connector from the curtain shield airbag assembly LH.
(i) Disconnect the connector from the curtain shield airbag assembly RH.
(j) Disconnect the connector from the front seat outer belt assembly LH.
(k) Disconnect the connector from the front seat outer belt assembly RH.

1 CHECK DTC

(a) Proceed to the appropriate step according to DTC readings.
(1) Check the DTC (See page RS-34).
Result

Result	Proceed to
DTC B1630/23 is output.	A
DTC B1635/24 is output.	B
DTC B1630/23 and B1635/24 are output.	C
Neither DTC B1630/23 nor B1635/24 is output.	D

B → **Go to step 12**
C → **Go to step 22**
D → **USE SIMULATION METHOD TO CHECK**

A

2 CHECK CONNECTOR OF CONNECTORS

(a) Turn the ignition switch to the LOCK position.
(b) Disconnect the negative (-) terminal cable from the battery, and wait for at least 90 seconds.
(c) Check that the connectors are properly connected to the side airbag sensor assembly LH and the rear airbag sensor LH.
OK:
The connectors are properly connected.

NG → **CONNECT CONNECTORS**

OK

RS

3	CHECK CONNECTORS

(a) Check that the connectors (on the side airbag sensor assembly LH side and rear airbag sensor LH side) are not damaged (See page IN-34).

OK:

The connectors are not deformed or damaged.

NG → **REPAIR OR REPLACE WIRE HARNESS**

OK

4	CHECK NO. 2 FLOOR WIRE (FOR OPEN)

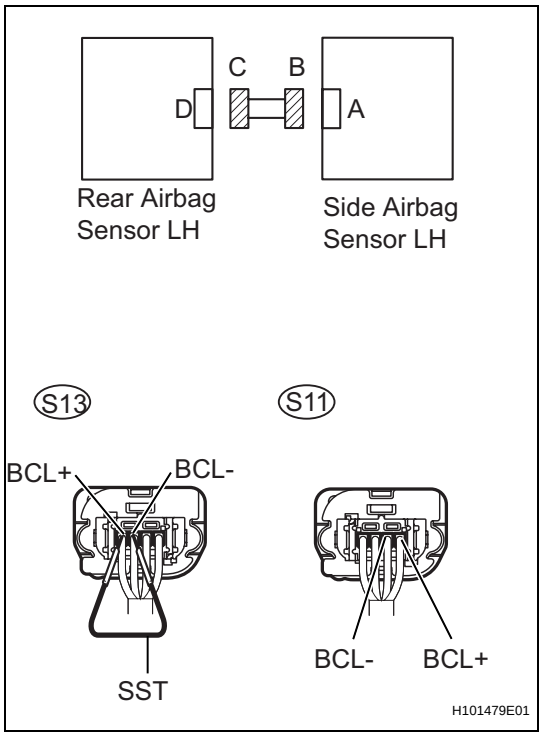

SST 09843-18040

(a) Disconnect the connectors from the side airbag sensor assembly LH and the rear airbag sensor LH.

(b) Using SST, connect S13-2 (BCL+) and S13-1 (BCL-) of connector C.

(c) Measure the resistance.

Standard resistance

Tester Connection	Condition	Specified Condition
S11-1 (BCL+) - S11-2 (BCL-)	Always	Below 1 Ω

NG → **REPAIR OR REPLACE NO. 2 FLOOR WIRE**

RS

OK

5 CHECK NO. 2 FLOOR WIRE (FOR SHORT)

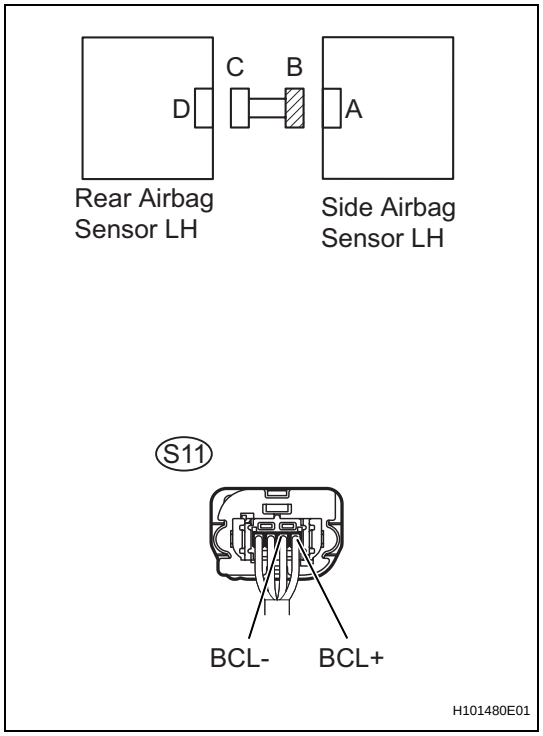

(a) Disconnect the SST from connector C.
(b) Disconnect the connectors from the side airbag sensor assembly LH and rear airbag sensor LH.
(c) Measure the resistance.

Standard resistance

Tester Connection	Condition	Specified Condition
S11-1 (BCL+) - S11-2 (BCL-)	Always	1 MΩ or Higher

NG → REPAIR OR REPLACE NO. 2 FLOOR WIRE

OK

6 CHECK NO. 2 FLOOR WIRE (TO B+)

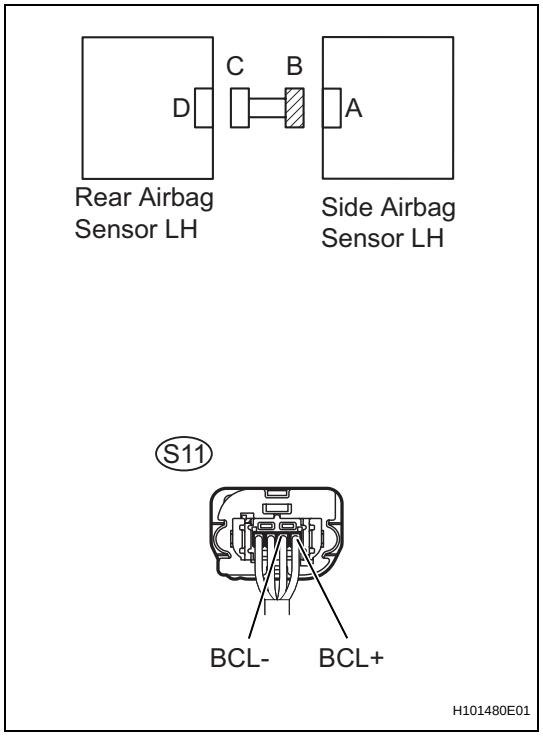

(a) Connect the negative (-) terminal cable to the battery, and wait for at least 2 seconds.
(b) Turn the ignition switch to the ON position.
(c) Measure the voltage.

Standard voltage

Tester Connection	Condition	Specified Condition
S11-1 (BCL+) - Body ground	Ignition switch ON	Below 1 V
S11-2 (BCL-) - Body ground	Ignition switch ON	Below 1 V

NG → REPAIR OR REPLACE NO. 2 FLOOR WIRE

OK

RS

7 CHECK NO. 2 FLOOR WIRE (TO GROUND)

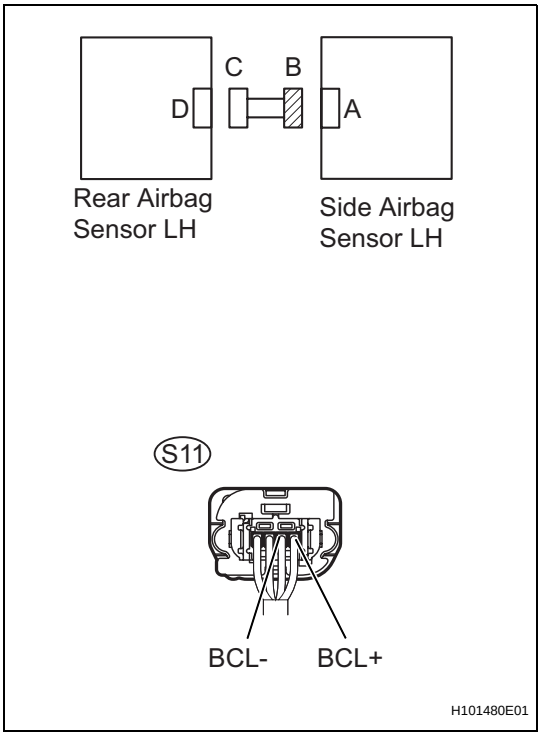

(a) Turn the ignition switch to the LOCK position.
(b) Disconnect the negative (-) terminal cable from the battery, and wait for at least 90 seconds.
(c) Measure the resistance.

Standard resistance

Tester Connection	Condition	Specified Condition
S11-1 (BCL+) - Body ground	Always	1 MΩ or Higher
S11-2 (BCL-) - Body ground	Always	1 MΩ or Higher

NG → REPAIR OR REPLACE NO. 2 FLOOR WIRE

OK

8 CHECK REAR AIRBAG SENSOR LH

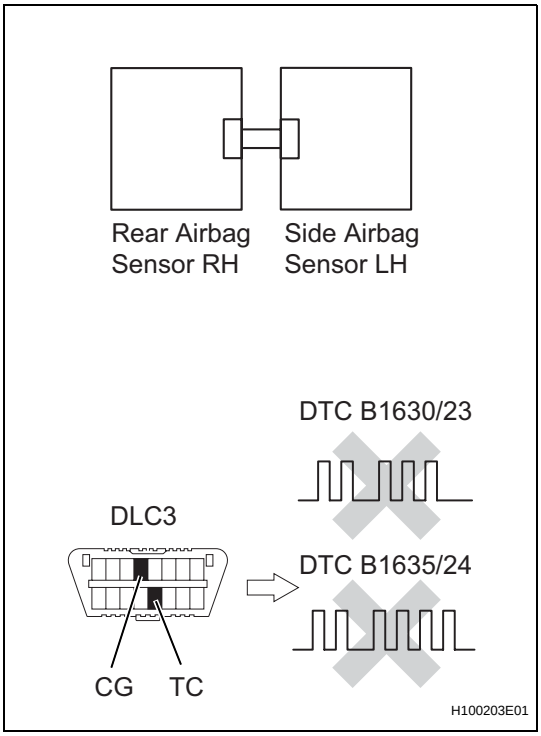

(a) Connect the connector to the side airbag sensor assembly LH.
(b) Interchange the rear airbag sensor LH with the rear airbag sensor RH and connect the connectors to them.
(c) Connect the negative (-) terminal cable to the battery, and wait for at least 2 seconds.
(d) Turn the ignition switch to the ON position, and wait for at least 60 seconds.
(e) Clear any DTCs stored in the memory (See page RS-34).
(f) Turn the ignition switch to the LOCK position.
(g) Turn the ignition switch to the ON position, and wait for at least 60 seconds.
(h) Check for DTCs (See page RS-34).

Result

Result	Proceed to
DTC B1630/23 is output.	A
DTC B1635/24 is output.	B
Neither DTC B1630/23 nor B1635/24 is output.	C

B → REPLACE REAR AIRBAG SENSOR LH

C → USE SIMULATION METHOD TO CHECK

RS

A

9 CHECK SIDE AIRBAG SENSOR ASSEMBLY LH

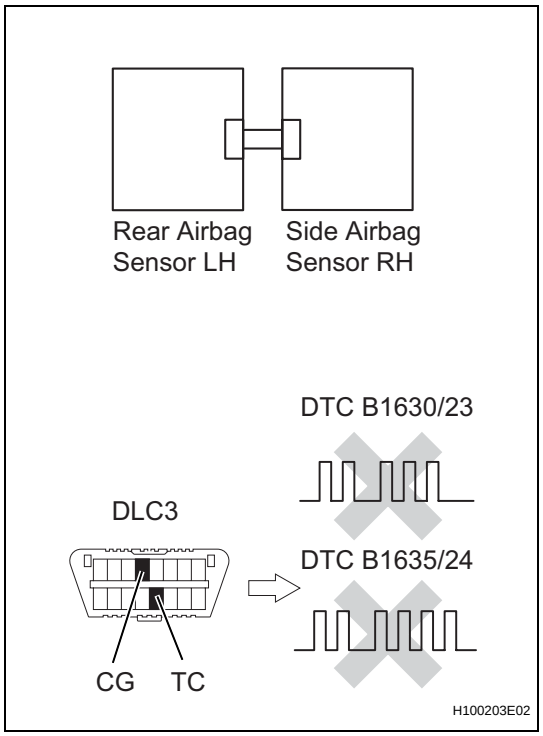

(a) Turn the ignition switch to the LOCK position.
(b) Disconnect the negative (-) terminal cable from the battery, and wait for at least 90 seconds.
(c) Return the rear airbag sensor LH and RH to their original positions and connect the connectors to them.
(d) Interchange the side airbag sensor assembly LH with the side airbag sensor assembly RH and connect the connectors to them.
(e) Connect the negative (-) terminal cable to the battery, and wait for at least 2 seconds.
(f) Turn the ignition switch to the ON position, and wait for at least 60 seconds.
(g) Clear any DTCs stored in the memory (See page RS-34).
(h) Turn the ignition switch to the LOCK position.
(i) Turn the ignition switch to the ON position, and wait for at least 60 seconds.
(j) Check for DTCs (See page RS-34).

Result

Result	Proceed to
DTC B1630/23 is output.	A
DTC B1635/24 is output.	B
Neither DTC B1630/23 nor B1635/24 is output.	C

HINT:
DTCs other than B1630/23 and B1635/24 may be output at this time, but they are not related to this check.

B → **REPLACE SIDE AIRBAG SENSOR ASSEMBLY LH**

C → **USE SIMULATION METHOD TO CHECK**

A

RS

10	REPLACE CENTER AIRBAG SENSOR ASSEMBLY

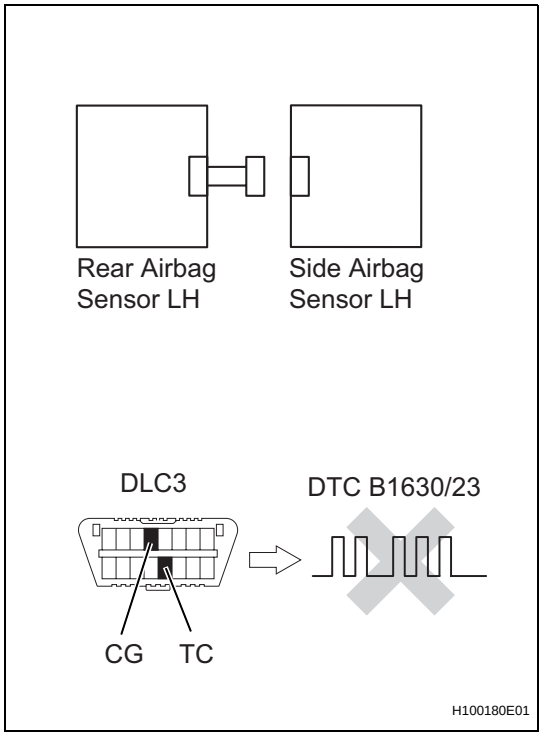

(a) Turn the ignition switch to the LOCK position.
(b) Disconnect the negative (-) terminal cable from the battery, and wait for at least 90 seconds.
(c) Replace the center airbag sensor assembly (See page RS-602).

HINT:
Perform the inspection using parts from a normal vehicle when possible.

(d) Connect the connectors to the center airbag sensor assembly.
(e) Connect the negative (-) terminal cable to the battery, and wait for at least 2 seconds.
(f) Turn the ignition switch to the ON position, and wait for at least 60 seconds.
(g) Clear any DTCs stored in the memory (See page RS-34).
(h) Turn the ignition switch to the LOCK position.
(i) Turn the ignition switch to the ON position, and wait for at least 60 seconds.
(j) Check for DTCs (See page RS-34).

OK:

DTC B1630/23 is not output.

HINT:
DTCs other than B1630/23 may be output at this time, but they are not related to this check.

OK → **END**

NG

11	CHECK REAR AIRBAG SENSOR LH

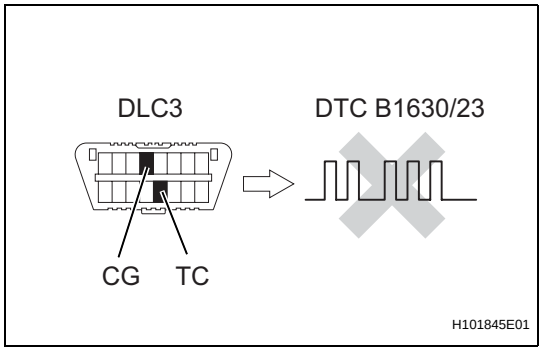

(a) Turn the ignition switch to the LOCK position.
(b) Disconnect the negative (-) terminal cable from the battery, and wait for at least 90 seconds.
(c) Replace the rear airbag sensor LH (See page RS-613).
(d) Connect the connectors to the center airbag sensor assembly.
(e) Connect the negative (-) terminal cable to the battery, and wait for at least 2 seconds.
(f) Turn the ignition switch to the ON position, and wait for at least 60 seconds.
(g) Clear any DTCs stored in the memory (See page RS-34).
(h) Turn the ignition switch to the LOCK position.
(i) Turn the ignition switch to the ON position, and wait for at least 60 seconds.
(j) Check for DTCs (See page RS-34).

OK:

DTC B1630/23 is not output.

RS

HINT:
DTCs other than B1630/23 may be output at this time, but they are not related to this check.

NG → **REPLACE SIDE AIRBAG SENSOR ASSEMBLY LH**

OK

END

12	CHECK CONNECTION OF CONNECTORS

(a) Turn the ignition switch to the LOCK position.
(b) Disconnect the negative (-) terminal cable from the battery, and wait for at least 90 seconds.
(c) Check that the connectors are properly connected to the side airbag sensor assembly RH and the rear airbag sensor RH.
OK:
The connectors are properly connected.

NG → **CONNECT CONNECTORS**

OK

13	CHECK CONNECTORS

(a) Check that the connectors (on the side airbag sensor assembly RH side and airbag sensor rear RH side) are not damaged (See page IN-34).
OK:
The connectors are not deformed or damaged.

NG → **REPAIR OR REPLACE WIRE HARNESS**

OK

14	CHECK FLOOR WIRE (FOR OPEN)

SST 09843-18040

RS

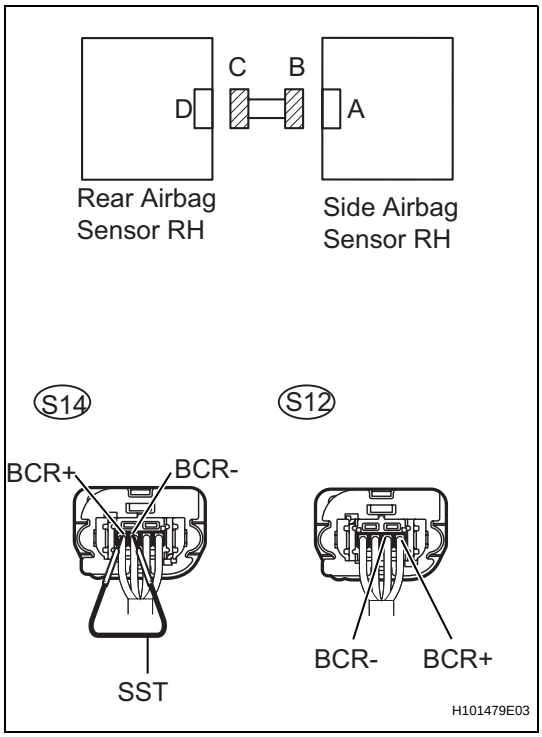

(a) Disconnect the connectors from the side airbag sensor assembly RH and the rear airbag sensor RH.
(b) Using SST, connect S14-2 (BCR+) and S14-1 (BCR-) of connector C.
(c) Measure the resistance.
Standard resistance

Tester Connection	Condition	Specified Condition
S12-1 (BCR+) - S12-2 (BCR-)	Always	Below 1 Ω

NG → **REPAIR OR REPLACE FLOOR WIRE**

OK

15 CHECK FLOOR WIRE (FOR SHORT)

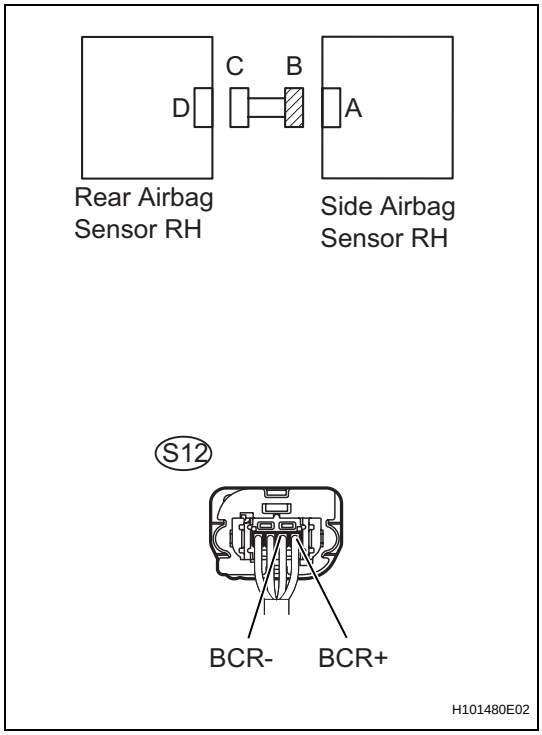

(a) Disconnect the SST from connector C.
(b) Measure the resistance.
Standard resistance

Tester Connection	Condition	Specified Condition
S12-1 (BCR+) - S12-2 (BCR-)	Always	1 MΩ or Higher

NG → **REPAIR OR REPLACE FLOOR WIRE**

OK

RS

16 CHECK FLOOR WIRE (TO B+)

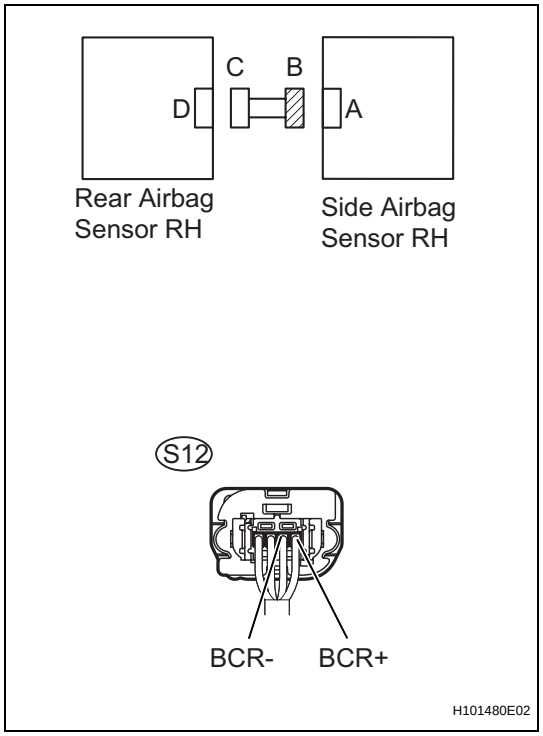

(a) Connect the negative (-) terminal cable to the battery, and wait for at least 2 seconds.
(b) Turn the ignition switch to the ON position.
(c) Measure the voltage.
Standard voltage

Tester Connection	Condition	Specified Condition
S12-1 (BCR+) - Body ground	Ignition switch ON	Below 1 V
S12-2 (BCR-) - Body ground	Ignition switch ON	Below 1 V

NG → **REPAIR OR REPLACE FLOOR WIRE**

OK

17 CHECK FLOOR WIRE (TO GROUND)

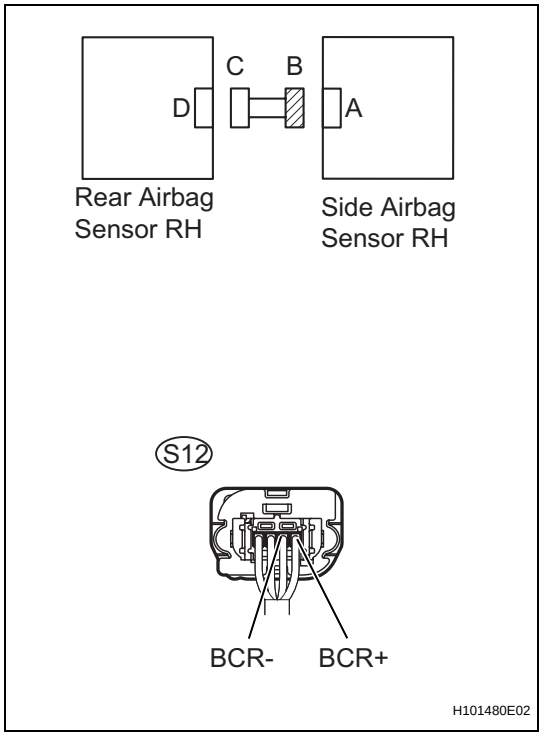

(a) Turn the ignition switch to the LOCK position.
(b) Disconnect the negative (-) terminal cable from the battery, and wait for at least 90 seconds.
(c) Measure the resistance.
Standard resistance

Tester Connection	Condition	Specified Condition
S12-1 (BCR+) - Body ground	Always	1 MΩ or Higher
S12-2 (BCR-) - Body ground	Always	1 MΩ or Higher

NG → **REPAIR OR REPLACE FLOOR WIRE**

OK

RS

18 CHECK REAR AIRBAG SENSOR RH

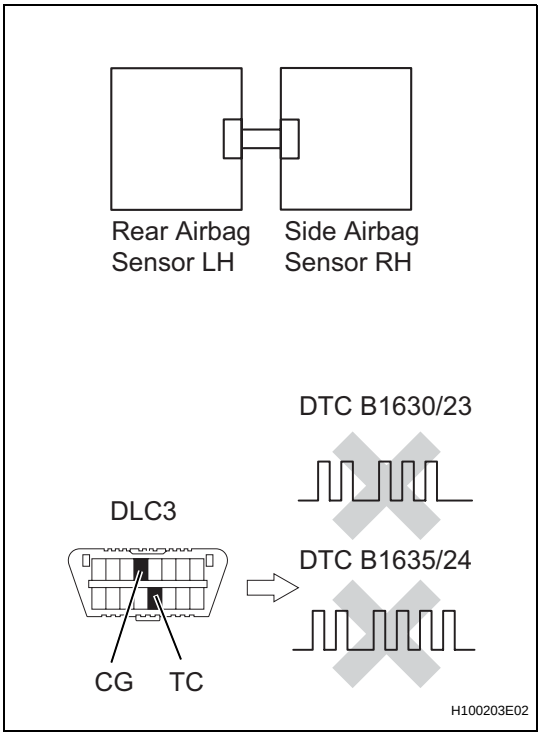

(a) Connect the connector to the side airbag sensor assembly RH.
(b) Interchange the rear airbag sensor RH with the rear airbag sensor LH and connect the connectors to them.
(c) Connect the negative (-) terminal cable to the battery, and wait for at least 2 seconds.
(d) Turn the ignition switch to the ON position, and wait for at least 60 seconds.
(e) Clear any DTCs stored in the memory (See page RS-34).
(f) Turn the ignition switch to the LOCK position.
(g) Turn the ignition switch to the ON position, and wait for at least 60 seconds.
(h) Check for DTCs (See page RS-34).

Result

Result	Proceed to
DTC B1635/24 is output.	A
DTC B1630/23 is output.	B
Neither DTC B1630/23 nor B1635/24 is output.	C

B → REPLACE REAR AIRBAG SENSOR RH

C → USE SIMULATION METHOD TO CHECK

A

19 CHECK SIDE AIRBAG SENSOR ASSEMBLY RH

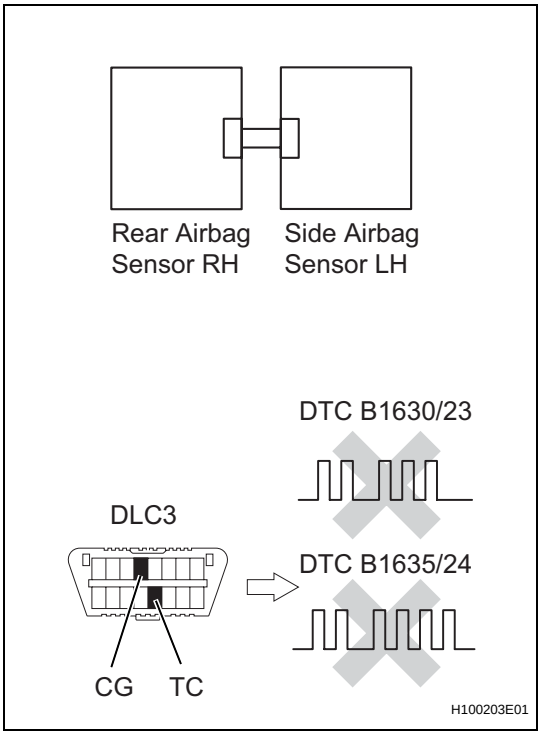

(a) Turn the ignition switch to the LOCK position.
(b) Disconnect the negative (-) terminal cable from the battery, and wait for at least 90 seconds.
(c) Return the rear airbag sensor LH and RH to their original positions and connect the connectors to them.
(d) Interchange the side airbag sensor assembly RH with the side airbag sensor assembly LH and connect the connectors to them.
(e) Connect the negative (-) terminal cable to the battery, and wait for at least 2 seconds.
(f) Turn the ignition switch to the ON position, and wait for at least 60 seconds.
(g) Clear any DTCs stored in the memory (See page RS-34).
(h) Turn the ignition switch to the LOCK position.
(i) Turn the ignition switch to the ON position, and wait for at least 60 seconds.
(j) Check for DTCs (See page RS-34).

Result

Result	Proceed to
DTC B1635/24 is output.	A

RS

Result	Proceed to
DTC B1630/23 is output.	B
Neither DTC B1630/23 nor B1635/24 is output.	C

B → REPLACE SIDE AIRBAG SENSOR ASSEMBLY RH

C → USE SIMULATION METHOD TO CHECK

A

20 REPLACE CENTER AIRBAG SENSOR ASSEMBLY

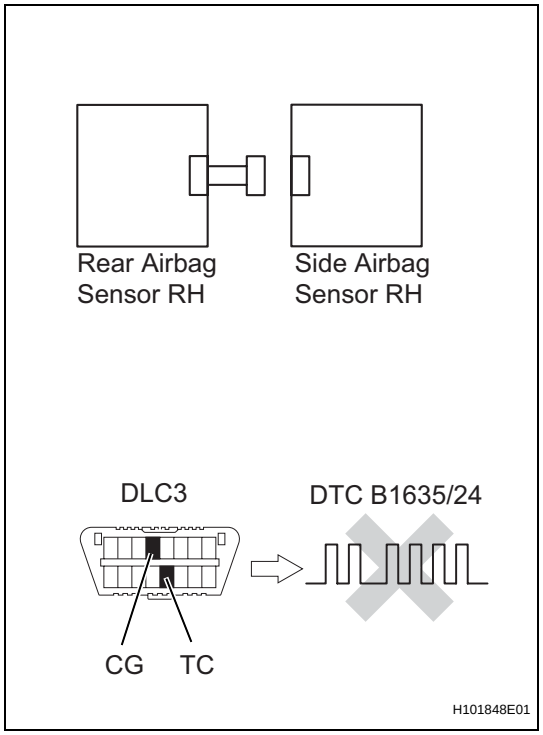

(a) Turn the ignition switch to the LOCK position.
(b) Disconnect the negative (-) terminal cable from the battery, and wait for at least 90 seconds.
(c) Replace the center airbag sensor assembly (See page RS-602).

HINT:
Perform the inspection using parts from a normal vehicle when possible.

(d) Connect the connectors to the center airbag sensor assembly.
(e) Connect the negative (-) terminal cable to the battery, and wait for at least 2 seconds.
(f) Turn the ignition switch to the ON position, and wait for at least 60 seconds.
(g) Clear any DTCs stored in the memory (See page RS-34).
(h) Turn the ignition switch to the LOCK position.
(i) Turn the ignition switch to the ON position, and wait for at least 60 seconds.
(j) Check for DTCs (See page RS-34).

OK:
DTC B1635/24 is not output.

HINT:
DTCs other than B1635/24 may be output at this time, but they are not related to this check.

OK → END

NG

RS

21	REPLACE REAR AIRBAG SENSOR RH

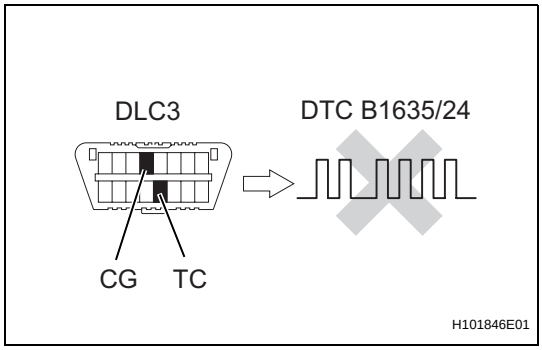

(a) Turn the ignition switch to the LOCK position.
(b) Disconnect the negative (-) terminal cable from the battery, and wait for at least 90 seconds.
(c) Replace the rear airbag sensor RH (See page RS-613).
(d) Connect the connectors to the center airbag sensor assembly.
(e) Connect the negative (-) terminal cable to the battery, and wait for at least 2 seconds.
(f) Turn the ignition switch to the ON position, and wait for at least 60 seconds.
(g) Clear any DTCs stored in the memory (See page RS-34).
(h) Turn the ignition switch to the LOCK position.
(i) Turn the ignition switch to the ON position, and wait for at least 60 seconds.
(j) Check for DTCs (See page RS-34).

OK:

DTC B1635/24 is not output.

HINT:
DTCs other than B1635/24 may be output at this time, but they are not related to this check.

NG → **REPLACE SIDE AIRBAG SENSOR ASSEMBLY RH**

OK

END

22	CHECK CONNECTION OF CONNECTORS

(a) Turn the ignition switch to the LOCK position.
(b) Disconnect the negative (-) terminal cable from the battery, and wait for at least 90 seconds.
(c) Check that the connectors are properly connected to the side airbag sensor assembly LH and the rear airbag sensor LH.
(d) Check that the connectors are properly connected to the side airbag sensor assembly RH and the rear airbag sensor RH.

OK:

The connectors are properly connected.

NG → **CONNECT CONNECTORS**

OK

RS

23	CHECK CONNECTORS

(a) Check that the connectors (on the side airbag sensor assembly LH side and airbag sensor rear LH side) are not damaged (See page IN-34).
(b) Check that the connectors (on the side airbag sensor assembly RH side and airbag sensor rear RH side) are not damaged (See page IN-34).

OK:

The connectors are not deformed or damaged.

NG → **REPAIR OR REPLACE WIRE HARNESS**

OK

24	CHECK NO. 2 FLOOR WIRE (FOR OPEN)

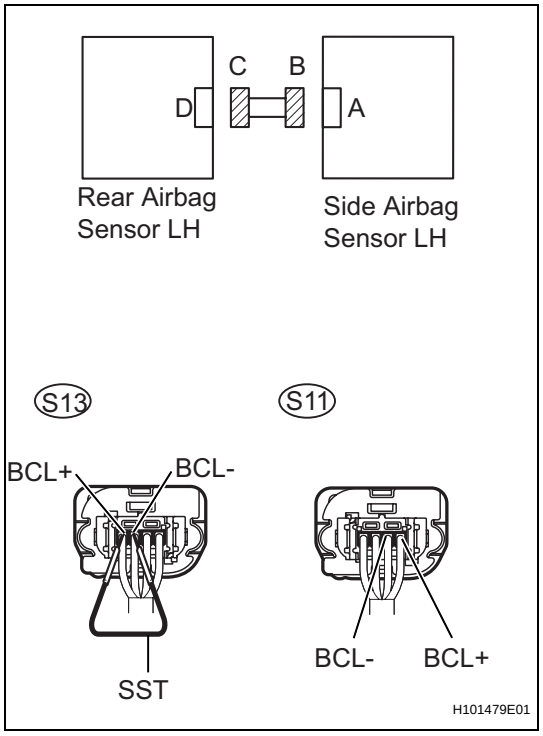

SST 09843-18040

(a) Disconnect the connectors from the side airbag sensor assembly LH and the rear airbag sensor LH.
(b) Using SST, connect S13-2 (BCL+) and S13-1 (BCL-) of connector C.
(c) Measure the resistance.

Standard resistance

Tester Connection	Condition	Specified Condition
S11-1 (BCL+) - S11-2 (BCL-)	Always	Below 1 Ω

NG → **REPAIR OR REPLACE NO. 2 FLOOR WIRE**

OK

RS

25 CHECK NO. 2 FLOOR WIRE (FOR SHORT)

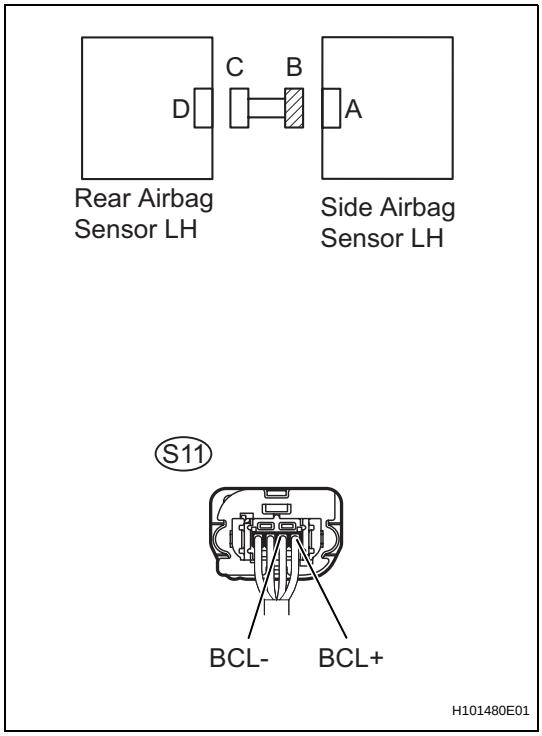

(a) Disconnect the SST from connector C.
(b) Disconnect the connectors from the side airbag sensor assembly LH and rear airbag sensor LH.
(c) Measure the resistance.

Standard resistance

Tester Connection	Condition	Specified Condition
S11-1 (BCL+) - S11-2 (BCL-)	Always	1 MΩ or Higher

NG → REPAIR OR REPLACE NO. 2 FLOOR WIRE

OK

26 CHECK NO. 2 FLOOR WIRE (TO B+)

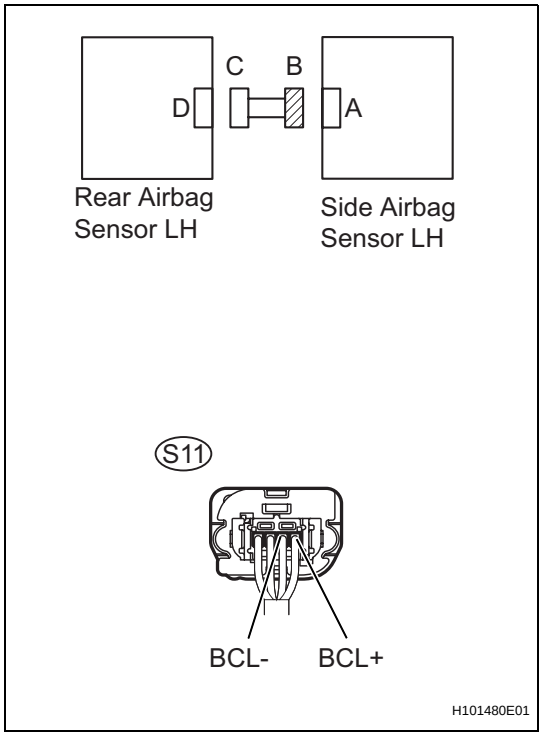

(a) Connect the negative (-) terminal cable to the battery, and wait for at least 2 seconds.
(b) Turn the ignition switch to the ON position.
(c) Measure the voltage.

Standard voltage

Tester Connection	Condition	Specified Condition
S11-1 (BCL+) - Body ground	Ignition switch ON	Below 1 V
S11-2 (BCL-) - Body ground	Ignition switch ON	Below 1 V

NG → REPAIR OR REPLACE NO. 2 FLOOR WIRE

OK

RS

27 CHECK NO. 2 FLOOR WIRE (TO GROUND)

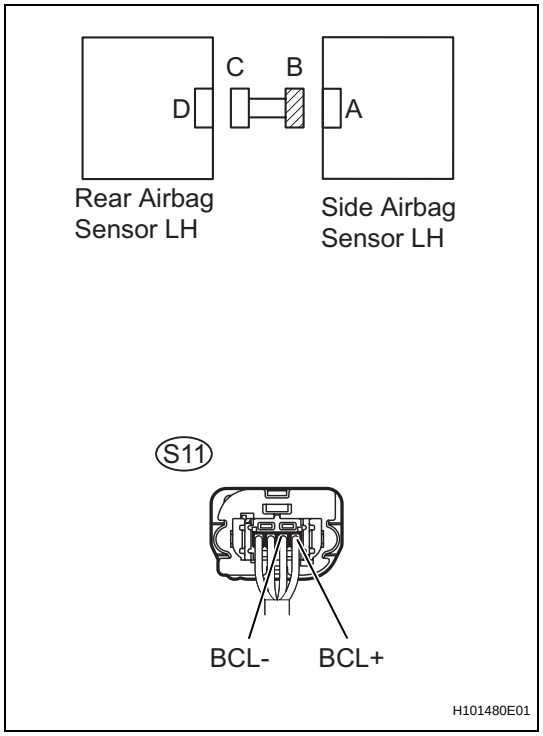

(a) Turn the ignition switch to the LOCK position.
(b) Disconnect the negative (-) terminal cable from the battery, and wait for at least 90 seconds.
(c) Measure the resistance.

Standard resistance

Tester Connection	Condition	Specified Condition
S11-1 (BCL+) - Body ground	Always	1 MΩ or Higher
S11-2 (BCL-) - Body ground	Always	1 MΩ or Higher

NG → **REPAIR OR REPLACE NO. 2 FLOOR WIRE**

OK

28 CHECK FLOOR WIRE (FOR OPEN)

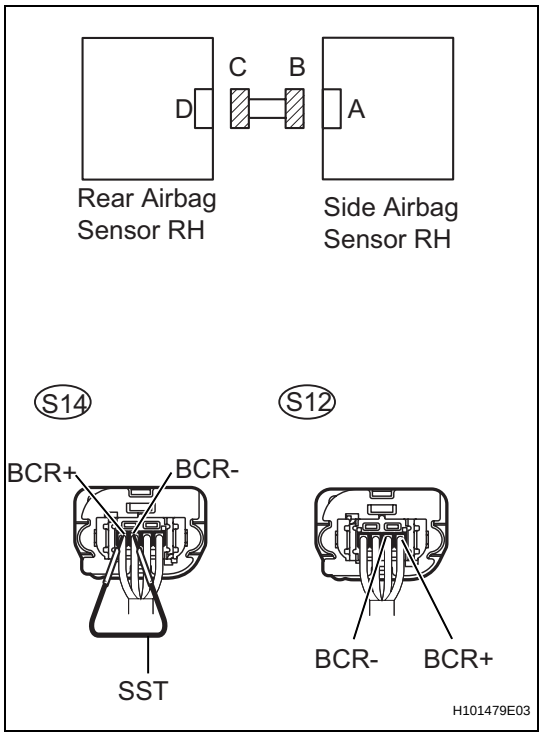

SST 09843-18040

(a) Disconnect the connectors from the side airbag sensor assembly RH and the rear airbag sensor RH.
(b) Using SST, connect S14-2 (BCR+) and S14-1 (BCR-) of connector C.
(c) Measure the resistance.

Standard resistance

Tester Connection	Condition	Specified Condition
S12-1 (BCR+) - S12-2 (BCR-)	Always	Below 1 Ω

NG → **REPAIR OR REPLACE FLOOR WIRE**

RS

OK

29 CHECK FLOOR WIRE (FOR SHORT)

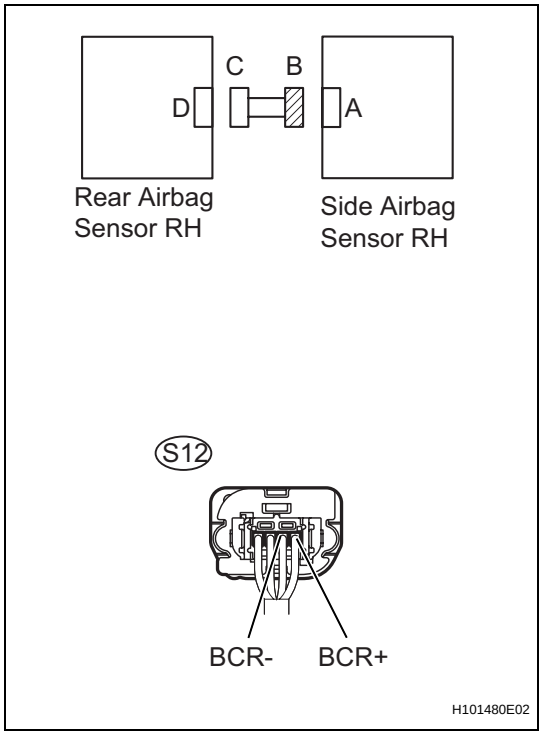

(a) Disconnect the SST from connector C.
(b) Measure the resistance.
Standard resistance

Tester Connection	Condition	Specified Condition
S12-1 (BCR+) - S12-2 (BCR-)	Always	1 MΩ or Higher

NG → REPAIR OR REPLACE FLOOR WIRE

OK

30 CHECK FLOOR WIRE (TO B+)

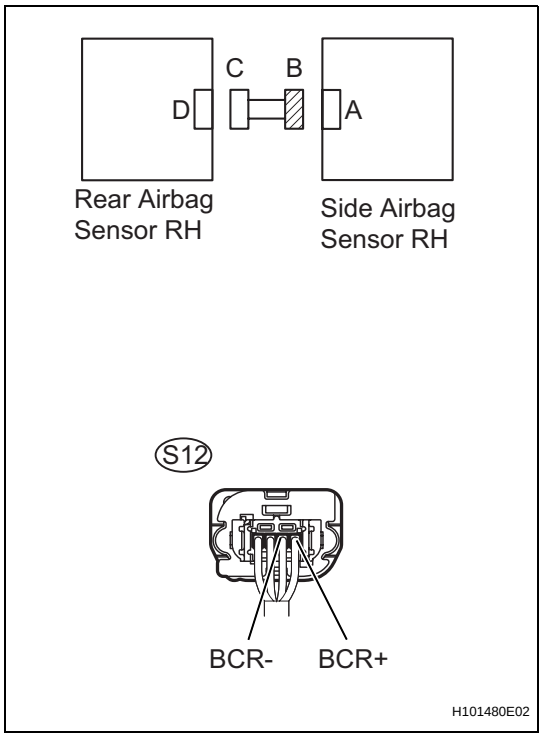

(a) Connect the negative (-) terminal cable to the battery, and wait for at least 2 seconds.
(b) Turn the ignition switch to the ON position.
(c) Measure the voltage.
Standard voltage

Tester Connection	Condition	Specified Condition
S12-1 (BCR+) - Body ground	Ignition switch ON	Below 1 V
S12-2 (BCR-) - Body ground	Ignition switch ON	Below 1 V

NG → REPAIR OR REPLACE FLOOR WIRE

RS

OK

31 CHECK FLOOR WIRE (TO GROUND)

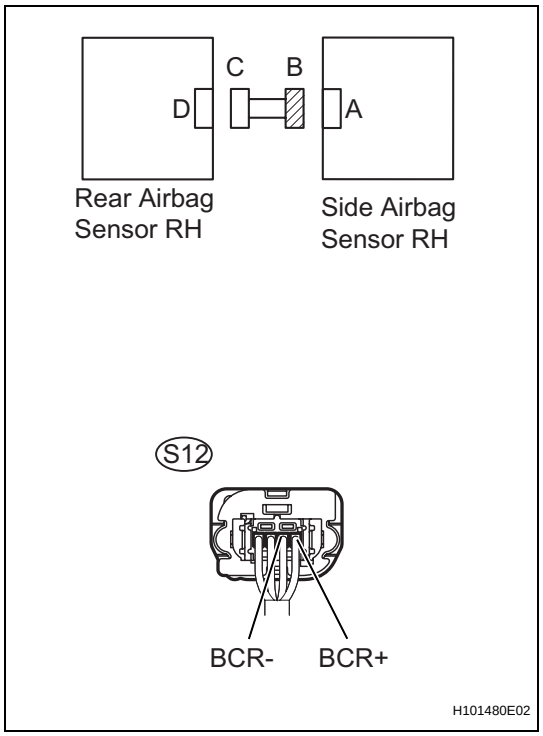

(a) Turn the ignition switch to the LOCK position.
(b) Disconnect the negative (-) terminal cable from the battery, and wait for at least 90 seconds.
(c) Measure the resistance.

Standard resistance

Tester Connection	Condition	Specified Condition
S12-1 (BCR+) - Body ground	Always	1 MΩ or Higher
S12-2 (BCR-) - Body ground	Always	1 MΩ or Higher

NG → **REPAIR OR REPLACE FLOOR WIRE**

OK

32 REPLACE CENTER AIRBAG SENSOR ASSEMBLY

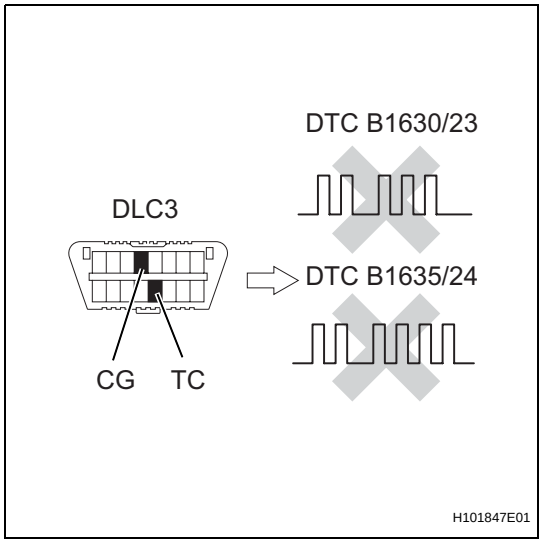

(a) Turn the ignition switch to the LOCK position.
(b) Disconnect the negative (-) terminal cable from the battery, and wait for at least 90 seconds.
(c) Replace the center airbag sensor assembly (See page RS-602).

HINT:
Perform the inspection using parts from a normal vehicle when possible.

(d) Connect the negative (-) terminal cable to the battery, and wait for at least 2 seconds.
(e) Turn the ignition switch to the ON position, and wait for at least 60 seconds.
(f) Clear any DTCs stored in the memory (See page RS-34).
(g) Turn the ignition switch to the LOCK position.
(h) Turn the ignition switch to the ON position, and wait for at least 60 seconds.
(i) Check for DTCs (See page RS-34).

OK:

DTC B1630/23 and B1635/24 are not output.

RS

HINT:
DTCs other than B1630/23 and B1635/24 may be output at this time, but they are not related to this check.

OK	END

NG

33	REPLACE REAR AIRBAG SENSOR RH

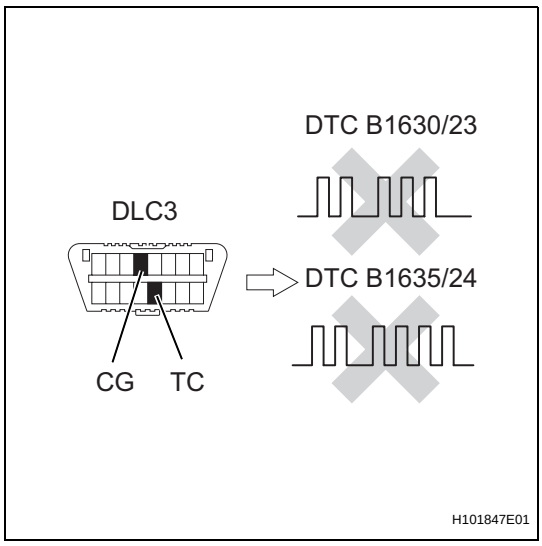

(a) Connect the connectors to the side airbag sensor assembly RH, the side airbag sensor assembly LH and center airbag sensor assembly.
(b) Replace the rear airbag sensor RH and the rear airbag sensor LH (See page RS-613).

HINT:
Perform the inspection using parts from a normal vehicle when possible.

(c) Connect the negative (-) terminal cable to the battery, and wait for at least 2 seconds.
(d) Turn the ignition switch to the ON position, and wait for at least 60 seconds.
(e) Clear any DTCs stored in the memory (See page RS-34).
(f) Turn the ignition switch to the LOCK position.
(g) Turn the ignition switch to the ON position, and wait for at least 60 seconds.
(h) Check for DTCs (See page RS-34).

OK:
DTC B1630/23 and B1635/24 are not output.

NG	**REPLACE SIDE AIRBAG SENSOR ASSEMBLY LH AND SIDE AIRBAG SENSOR ASSEMBLY RH**

OK

END

RS

DTC	B1650/32	Occupant Classification System Malfunction

DESCRIPTION

The occupant classification system circuit consists of the center airbag sensor assembly and the occupant classification system.

When the center airbag sensor assembly receives signals from the occupant classification ECU, it determines whether or not the front passenger airbag assembly, front seat airbag assembly RH and seat belt pretensioner RH should be operated.

DTC B1650/32 is set when a malfunction is detected in the occupant classification system circuit.

DTC No.	DTC Detecting Conditions	Trouble Areas
B1650/32	• Occupant classification system malfunction • The center airbag sensor assembly receives a line short circuit signal, an open circuit signal, a short circuit to ground signal or a short circuit to B+ signal in the occupant classification system circuit for 2 seconds • Center airbag sensor assembly malfunction	• Occupant classification system • Center airbag sensor assembly • Floor wire • No. 1 seat wire

WIRING DIAGRAM

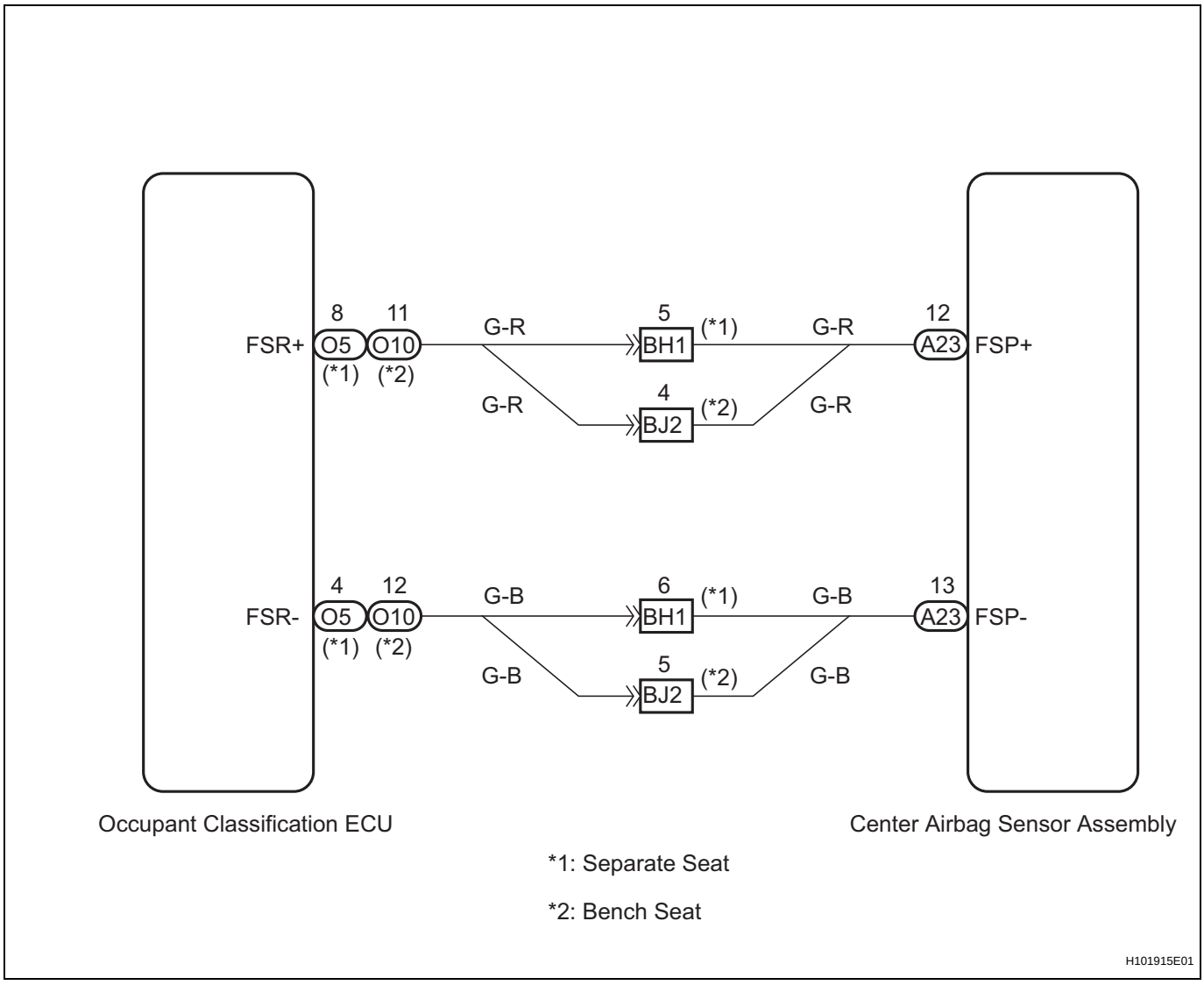

RS

CAUTION:
In order to prevent unexpected airbag deployment, disconnect the following connectors before inspecting parts such as wire harnesses, if the application of tester probes to the center airbag sensor assembly connector is necessary.
(a) Turn the ignition switch to the LOCK position.
(b) Disconnect the negative (-) terminal cable from the battery, and wait for at least 90 seconds.
(c) Disconnect the connectors from the center airbag sensor assembly.
(d) Disconnect the connectors from the steering pad.
(e) Disconnect the connector from the front passenger airbag assembly.
(f) Disconnect the connector from the front seat airbag assembly LH.
(g) Disconnect the connector from the front seat airbag assembly RH.
HINT:
Skip the following steps if side and curtain shield airbags are not fitted.
(h) Disconnect the connector from the curtain shield airbag assembly LH.
(i) Disconnect the connector from the curtain shield airbag assembly RH.
(j) Disconnect the connector from the front seat outer belt assembly LH.
(k) Disconnect the connector from the front seat outer belt assembly RH.

1	CHECK DTC (CENTER AIRBAG SENSOR ASSEMBLY)

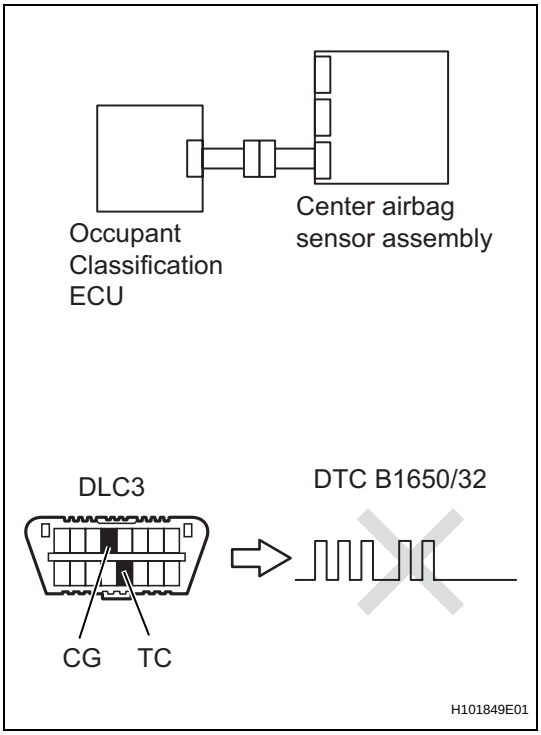

(a) Turn the ignition switch to the ON position.
(b) Clear any DTCs stored in the memory (See page RS-34).
(c) Turn the ignition switch to the LOCK position.
(d) Turn the ignition switch to the ON position, and wait for at least 60 seconds.
(e) Check for DTCs (See page RS-34).
OK:
DTC B1650/32 is not output.
HINT:
DTCs other than B1650/32 may be output at this time, but they are not related to this check.

OK → **USE SIMULATION METHOD TO CHECK**

NG

2	CHECK DTC (OCCUPANT CLASSIFICATION ECU)

(a) Turn the ignition switch to the ON position, and wait for at least 10 seconds.
(b) Using the intelligent tester, check for DTCs of the occupant classification ECU (See page RS-362).
OK:
DTC is not output.

RS

NG → GO TO DTC CHART

OK

3	CHECK CONNECTION OF CONNECTORS

(a) Turn the ignition switch to the LOCK position.
(b) Disconnect the negative (-) terminal cable from the battery, and wait for at least 90 seconds.
(c) Check that the connectors are properly connected to the center airbag sensor assembly and the occupant classification ECU.
OK:
The connectors are properly connected.

NG → CONNECT CONNECTORS

OK

4	CHECK CONNECTORS

(a) Check that the connectors (on the center airbag sensor assembly side and occupant classification ECU side) are not damaged (See page IN-34).
OK:
The connectors are not deformed or damaged.

NG → REPAIR OR REPLACE WIRE HARNESS

OK

5	CHECK OCCUPANT CLASSIFICATION SYSTEM CIRCUIT (FOR OPEN)

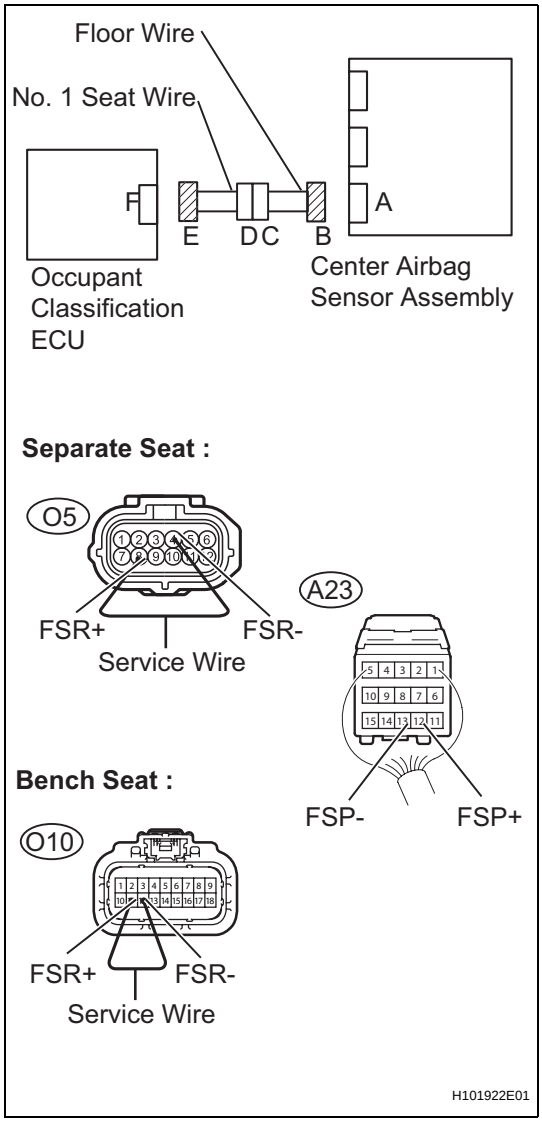

(a) Disconnect the connectors from the center airbag sensor assembly and the occupant classification ECU.

(b) Separate Seat :
Using a service wire, connect O5-8 (FSR+) and O5-4 (FSR-) of connector E.

NOTICE:
Do not forcibly insert a service wire into the terminals of the connector when connecting.

(c) Bench Seat :
Using a service wire, connect O10-11 (FSR+) and O10-12 (FSR-) of connector E.

NOTICE:
Do not forcibly insert a service wire into the terminals of the connector when connecting.

(d) Measure the resistance.
Standard resistance

Tester Connection	Condition	Specified Condition
A23-12 (FSP+) - A23-13 (FSP-)	Always	Below 1 Ω

NG → **Go to step 13**

OK

RS

6 CHECK OCCUPANT CLASSIFICATION SYSTEM CIRCUIT (FOR SHORT)

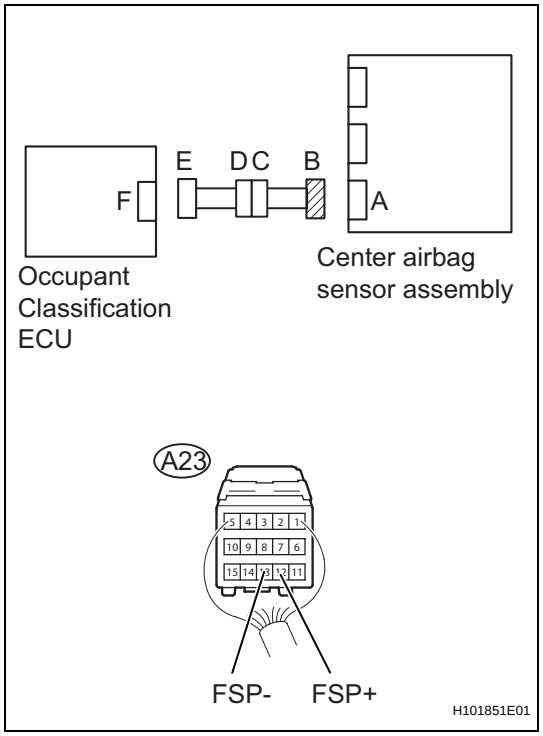

(a) Disconnect the service wire from connector E.
(b) Measure the resistance.
Standard resistance

Tester Connection	Condition	Specified Condition
A23-12 (FSP+) - A23-13 (FSP-)	Always	1 MΩ or Higher

NG → **Go to step 14**

OK

7 CHECK OCCUPANT CLASSIFICATION SYSTEM CIRCUIT (TO B+)

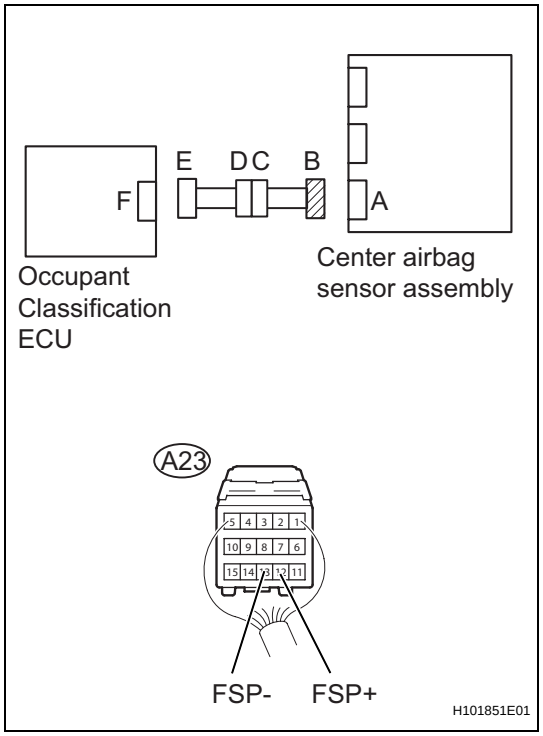

(a) Connect the negative (-) terminal cable to the battery, and wait for at least 2 seconds.
(b) Turn the ignition switch to the ON position.
(c) Measure the voltage.
Standard voltage

Tester Connection	Condition	Specified Condition
A23-12 (FSP+) - Body ground	Ignition switch ON	Below 1 V
A23-13 (FSP-) - Body ground	Ignition switch ON	Below 1 V

NG → **Go to step 15**

OK

RS

8 CHECK OCCUPANT CLASSIFICATION SYSTEM CIRCUIT (TO GROUND)

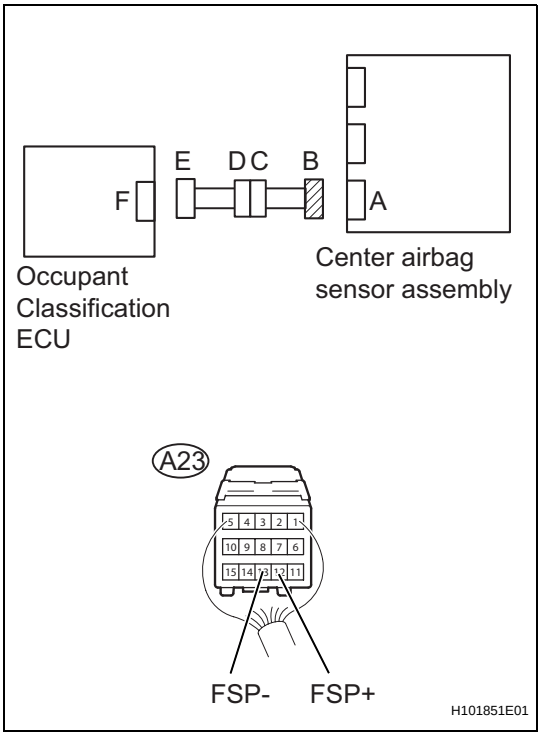

(a) Turn the ignition switch to the LOCK position.
(b) Disconnect the negative (-) terminal cable from the battery, and wait for at least 90 seconds.
(c) Measure the resistance.

Standard resistance

Tester Connection	Condition	Specified Condition
A23-12 (FSP+) - Body ground	Always	1 MΩ or Higher
A23-13 (FSP-) - Body ground	Always	1 MΩ or Higher

NG → **Go to step 16**

OK

9 CHECK CENTER AIRBAG SENSOR ASSEMBLY

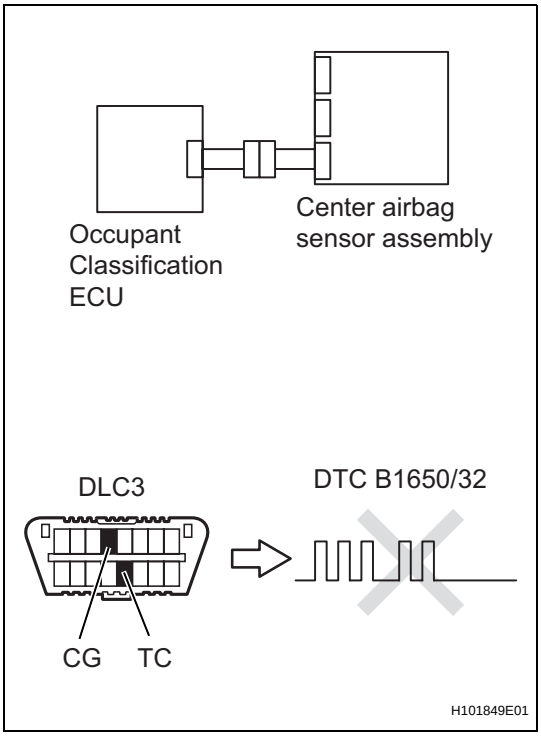

(a) Turn the ignition switch to the LOCK position.
(b) Disconnect the negative (-) terminal cable from the battery, and wait for at least 90 seconds.
(c) Replace the center airbag sensor assembly (See page RS-602).

HINT:
Perform the inspection using parts from a normal vehicle when possible.

(d) Connect the connectors to the center airbag sensor assembly.
(e) Connect the negative (-) terminal cable to the battery, and wait for at least 2 seconds.
(f) Turn the ignition switch to the ON position, and wait for at least 60 seconds.
(g) Clear any DTCs stored in the memory (See page RS-34).
(h) Turn the ignition switch to the LOCK position.
(i) Turn the ignition switch to the ON position, and wait for at least 60 seconds.
(j) Check for DTCs (See page RS-34).

Result

Result	Proceed to
DTC B1650/32 is output (for separate seat)	A

RS

Result	Proceed to
DTC B1650/32 is not output (for bench seat)	B
DTC B1650/32 is not output	C

HINT:
DTCs other than B1650/32 may be output at this time, but they are not related to this check.

B	Go to step 17
C	END

A

10 REPLACE OCCUPANT CLASSIFICATION ECU

(a) Turn the ignition switch to the LOCK position.
(b) Disconnect the negative (-) terminal cable from the battery, and wait for at least 90 seconds.
(c) Replace the occupant classification ECU (See page RS-631).

NEXT

11 PERFORM ZERO POINT CALIBRATION

(a) Connect the negative (-) terminal cable to the battery.
(b) Connect the intelligent tester to the DLC3.
(c) Turn the ignition switch to the ON position.
(d) Using the intelligent tester, perform the zero point calibration (See page RS-357).
OK:
COMPLETED is displayed on the tester.

NEXT

12 PERFORM SENSITIVITY CHECK

(a) Using the intelligent tester, perform the sensitivity check (See page RS-357).
Standard Value:
27 to 33 kg (59.52 to 72.75 lb)

NEXT

END

RS

13	CHECK NO. 1 SEAT WIRE (FOR OPEN)

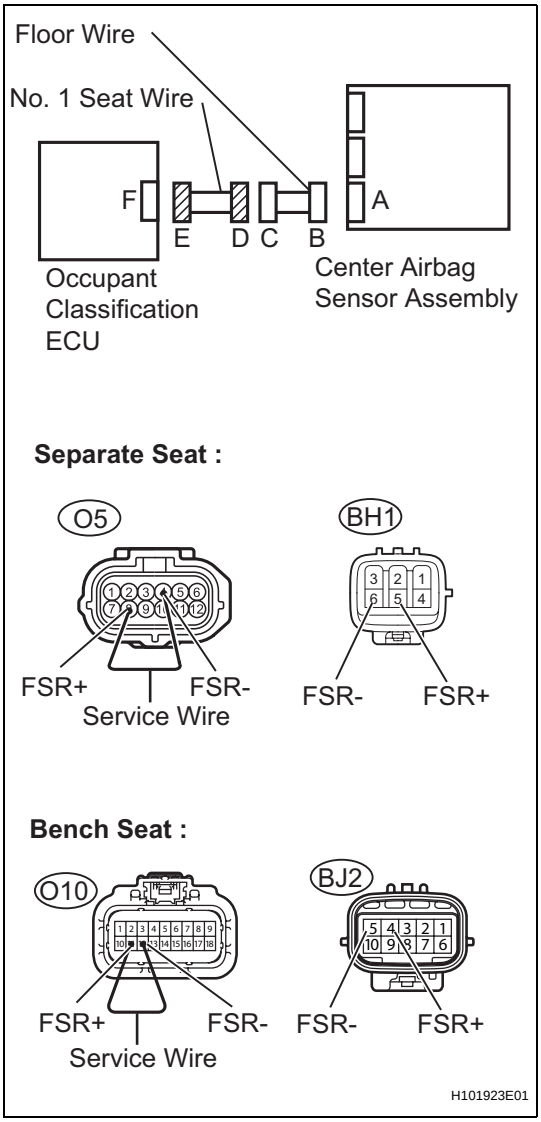

(a) Disconnect the No. 1 seat wire connector from the instrument panel wire.

HINT:

The service wire has already been inserted into connector E.

(b) Measure the resistance.

Standard resistance

Tester Connection	Condition	Specified Condition
BH1-5 (FSR+) - BH1-6 (FSR-) *1	Always	Below 1 Ω
BJ2-4 (FSR+) - BJ2-5 (FSR-) *2	Always	Below 1 Ω

*1 : Separate Seat

*2 : Bench Seat

NG → **REPAIR OR REPLACE NO. 1 SEAT WIRE**

OK

RS

REPAIR OR REPLACE FLOOR WIRE

14 **CHECK NO. 1 SEAT WIRE (FOR SHORT)**

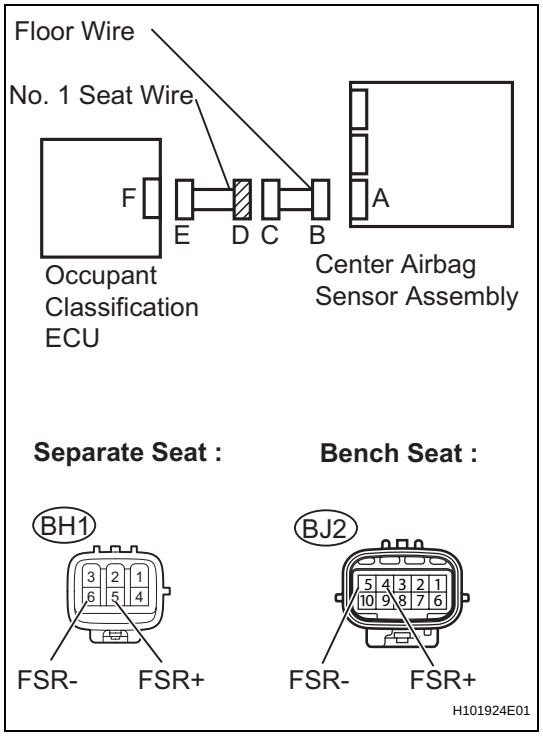

(a) Disconnect the No. 1 seat wire connector from the instrument panel wire.
(b) Measure the resistance.
Standard resistance

Tester Connection	Condition	Specified Condition
BH1-5 (FSR+) - BH1-6 (FSR-) *1	Always	1 MΩ or Higher
BJ2-4 (FSR+) - BJ2-5 (FSR-) *2	Always	1 MΩ or Higher

*1 : Separate Seat
*2 : Bench Seat

NG → **REPAIR OR REPLACE NO. 1 SEAT WIRE**

OK

REPAIR OR REPLACE FLOOR WIRE

RS

15	CHECK NO. 1 SEAT WIRE (TO B+)

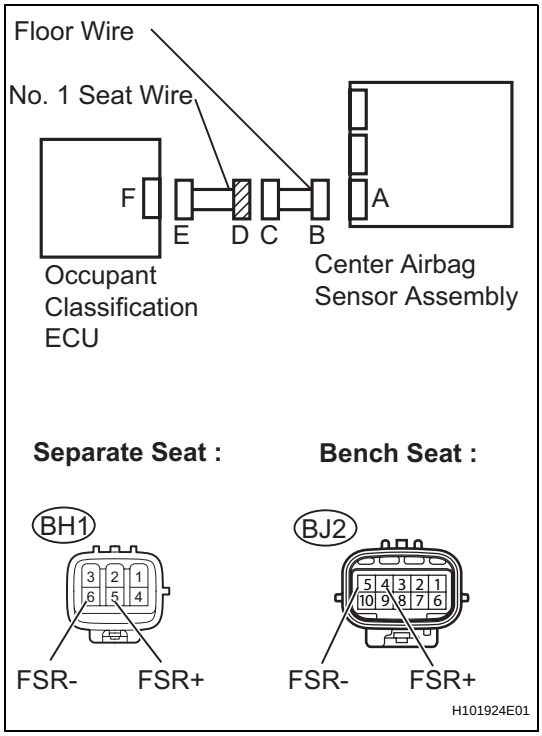

(a) Disconnect the No. 1 seat wire connector from the instrument panel wire.
(b) Connect the negative (-) terminal cable to the battery, and wait for at least 2 seconds.
(c) Turn the ignition switch to the ON position.
(d) Measure the voltage.

Standard voltage

Tester Connection	Condition	Specified Condition
BH1-5 (FSR+) - Body ground *1	Ignition switch ON	Below 1 V
BH1-6 (FSR-) - Body ground *1	Ignition switch ON	Below 1 V
BJ2-4 (FSR+) - Body ground *2	Ignition switch ON	Below 1 V
BJ2-5 (FSR-) - Body ground *2	Ignition switch ON	Below 1 V

*1 : Separate Seat
*2 : Bench Seat

NG → **REPAIR OR REPLACE NO. 1 SEAT WIRE**

OK

REPAIR OR REPLACE FLOOR WIRE

16 CHECK NO. 1 SEAT WIRE (TO GROUND)

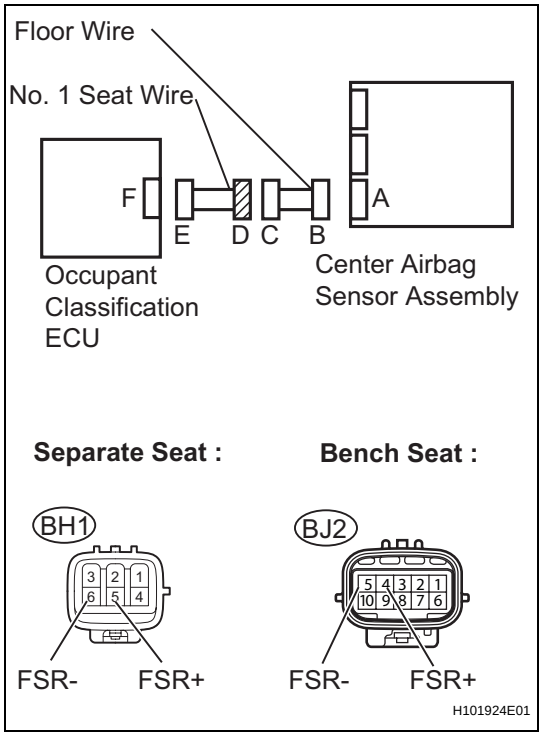

(a) Disconnect the No. 1 seat wire connector from the instrument panel wire.
(b) Measure the resistance.

Standard resistance

Tester Connection	Condition	Specified Condition
BH1-5 (FSR+) - Body ground *1	Always	1 MΩ or Higher
BH1-6 (FSR-) - Body ground *1	Always	1 MΩ or Higher
BJ2-4 (FSR+) - Body ground *2	Always	1 MΩ or Higher
BJ2-5 (FSR-) - Body ground *2	Always	1 MΩ or Higher

*1 : Separate Seat
*2 : Bench Seat

NG → **REPAIR OR REPLACE NO. 1 SEAT WIRE**

OK

REPAIR OR REPLACE FLOOR WIRE

17 REPLACE OCCUPANT CLASSIFICATION ECU

(a) Turn the ignition switch to the ON position.
(b) Using the intelligent tester, read the current setting data stored in the occupant classification ECU (See page RS-476).
HINT:
If the previous ECU data cannot be stored in the intelligent tester, replace the front seat cushion assembly (with occupant classification ECU, occupant classification sensor).
(c) Turn the ignition switch to the LOCK position.
(d) Disconnect the negative (-) terminal cable from the battery, and wait for at least 90 seconds.
(e) Replace the occupant classification ECU (See page RS-634).
(f) Connect the negative (-) terminal cable to the battery.
(g) Turn the ignition switch to the ON position.
(h) Using an intelligent tester, write the setting data read from the previously installed occupant classification ECU into the newly installed occupant classification ECU (See page RS-476).

RS

NEXT

18	PERFORM SENSITIVITY CHECK

(a) Perform the sensitivity check (See page RS-480).

NEXT

END

REMOVAL

HINT:
Use the same procedures for the RH side and LH side.

1. **PRECAUTION**
   (See page RS-1)
2. **DISCONNECT CABLE FROM NEGATIVE BATTERY TERMINAL**
   Wait for at least 90 seconds after disconnecting the cable to prevent the airbag from working.
3. **REMOVE FRONT DOOR SCUFF PLATE LH (See page IR-12)**
4. **REMOVE REAR DOOR SCUFF PLATE LH (See page IR-13)**
5. **REMOVE FRONT DOOR OPENING TRIM WEATHERSTRIP LH (See page IR-13)**
6. **REMOVE REAR DOOR OPENING TRIM WEATHERSTRIP LH (See page IR-13)**
7. **REMOVE LAP BELT OUTER ANCHOR COVER (See page IR-15)**
8. **REMOVE CENTER PILLAR LOWER GARNISH LH (See page IR-15)**
9. **REMOVE SIDE AIRBAG SENSOR**
   (a) Remove the bolt and the side airbag sensor.
   (b) Disconnect the connector from the side airbag sensor.

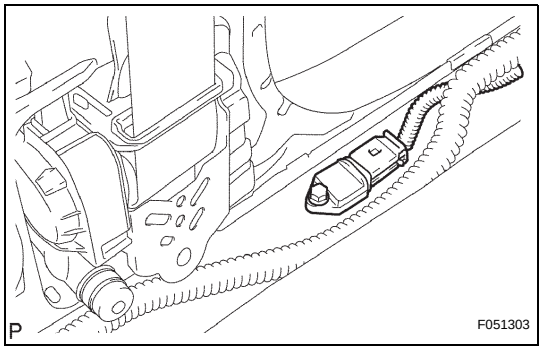

INSTALLATION

HINT:
Use the same procedures for the RH side and LH side.

1. **REMOVE SIDE AIRBAG SENSOR**
   (a) Check that the ignition switch is OFF.
   (b) Check that the cable is disconnected from the battery negative (-) terminal.
   CAUTION:
   After disconnecting the cable from the terminal, wait for at least 90 seconds before starting the operation.
   (c) Install the side airbag sensor with the bolt.
   Torque:
   9.0 N*m (80 kgf*cm, 80 in.*lbf)
   NOTICE:
   - **Installation of the connector is done with the sensor assembly installed. Make sure that the sensor assembly is installed to the specified torque.**
   - **If the sensor assembly has been dropped, or there are cracks, dents or other defects in the case, bracket or connector, replace the sensor assembly with a new one.**
   - **When installing the sensor assembly, make sure that the SRS wiring does not interfere with other parts and is not pinched between other parts.**
   - **After installation, shake the sensor assembly to check that it is not loose.**
   (d) Check that there is no slack in the installation parts of the side airbag sensor.
   (e) Connect the connector to the side airbag sensor.
2. **INSTALL CENTER PILLAR LOWER GARNISH LH (See page IR-26)**
3. **INSTALL LAP BELT OUTER ANCHOR COVER (See page IR-27)**
4. **INSTALL REAR DOOR OPENING TRIM WEATHERSTRIP LH (See page IR-28)**
5. **INSTALL FRONT DOOR OPENING TRIM WEATHERSTRIP LH (See page IR-29)**
6. **INSTALL REAR DOOR SCUFF PLATE LH (See page IR-29)**
7. **INSTALL FRONT DOOR SCUFF PLATE LH (See page IR-29)**
8. **CONNECT CABLE TO NEGATIVE BATTERY TERMINAL**
   Torque: 3.9 N*m (40 kgf*cm, 35 in.*lbf)
9. **INSPECT SRS WARNING LIGHT**
   (See page RS-28)

REMOVAL

HINT:
Use the same procedures for RH side and LH side.

1. **PRECAUTION**
   (See page RS-1)
2. **DISCONNECT CABLE FROM NEGATIVE BATTERY TERMINAL**
   Wait for at least 90 seconds after disconnecting the cable to prevent the airbag from working.
3. **REMOVE REAR SEAT BACK HINGE COVER (See page SE-71)**
4. **REMOVE REAR SEAT BACK ASSEMBLY LH (See page SE-71)**
5. **REMOVE REAR SEAT BACK HINGE SUB-ASSEMBLY LH (See page SE-71)**
6. **REMOVE REAR DOOR SCUFF PLATE LH (See page IR-13)**
7. **REMOVE REAR DOOR OPENING TRIM WEATHERSTRIP LH (See page SB-54)**
8. **REMOVE LUGGAGE COMPARTMENT SIDE TRAY (See page IR-16)**
9. **REMOVE QUARTER TRIM LOWER PANEL LH (See page IR-17)**
10. **REMOVE QUARTER INSIDE TRIM BOARD LH (See page SB-54)**
11. **REMOVE REAR SEAT OUTER BELT ASSEMBLY LH (See page SB-55)**
12. **REMOVE REAR AIRBAG SENSOR**
    (a) Disconnect the connector from the rear airbag sensor.
    (b) Remove the nut and the rear airbag sensor.

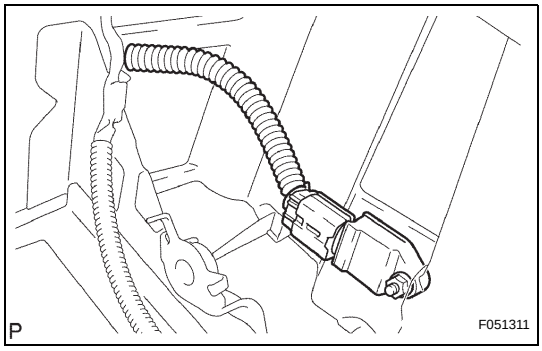

RS

INSTALLATION

HINT:
Use the same procedures for the RH side and LH side.

1. **INSTALL REAR AIRBAG SENSOR**
   (a) Check that the ignition switch is OFF.
   (b) Check that the cable is disconnected from the battery negative (-) terminal.
   CAUTION:
   After disconnecting the cable from the terminal, wait for at least 90 seconds before starting the operation.
   (c) Install the rear airbag sensor with the nut.
   Torque: 9.0 N*m (92 kgf*cm, 80 in.*lbf)
   NOTICE:
   - **Installation of the connector is done with the sensor assembly installed. Make sure the sensor assembly is installed to the specified torque.**
   - **If the sensor assembly has been dropped, or there are cracks, dents or other defects in the case, bracket or connector, replace the sensor assembly with a new one.**
   - **When installing the sensor assembly, make sure that the SRS wiring does not interfere with any other parts and is not pinched between other parts.**
   - **After installation, shake the sensor assembly to check that it is not loose.**
2. **INSTALL REAR SEAT OUTER BELT ASSEMBLY LH (See page SB-55)**
3. **INSTALL QUARTER INSIDE TRIM BOARD LH (See page SB-56)**
4. **INSTALL QUARTER TRIM LOWER PANEL LH (See page IR-25)**
5. **INSTALL LUGGAGE COMPARTMENT SIDE TRAY (See page IR-25)**
6. **INSTALL REAR DOOR OPENING TRIM WEATHERSTRIP LH (See page SB-57)**
7. **INSTALL REAR DOOR SCUFF PLATE LH (See page IR-29)**
8. **INSTALL REAR SEAT BACK HINGE SUB-ASSEMBLY LH (See page SE-77)**
9. **INSTALL REAR SEAT BACK ASSEMBLY LH (See page SE-77)**
10. **INSTALL REAR SEAT BACK HINGE COVER (See page SE-78)**
11. **CONNECT CABLE TO NEGATIVE BATTERY TERMINAL**
    Torque: 3.9 N*m (40 kgf*cm, 35 in.*lbf)

12. INSPECT SRS WARNING LIGHT

REMOVAL

1. **PRECAUTION**
2. **DISCONNECT CABLE FROM NEGATIVE BATTERY TERMINAL**
   Wait for at least 90 seconds after disconnecting the cable to prevent the airbag from working.
3. **REMOVE SEAT TRACK COVER (See page SE-23)**
4. **REMOVE FRONT SEAT ASSEMBLY (See page SE-23)**
5. **REMOVE SEAT POSITION SENSOR**
   (a) Disconnect the connector from the seat position sensor.
   (b) Using a "torx" socket wrench (T30), remove the "torx" screw and the seat position sensor.

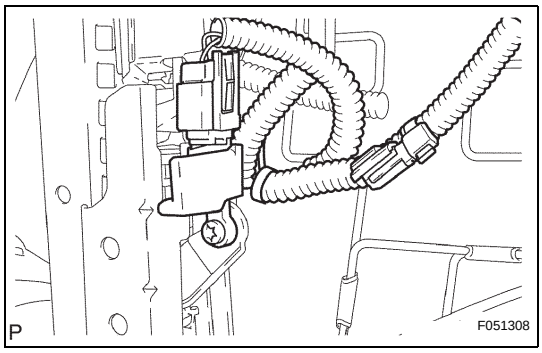

INSTALLATION

1. **INSTALL SEAT POSITION SENSOR**
   (a) Check that the ignition switch is OFF.
   (b) Check that the cable is disconnected from the battery negative (-) terminal.
   CAUTION:
   After disconnecting the cable from the terminal, wait for at least 90 seconds before starting the operation.
   NOTICE:
   - **Installation of the connector is done with the sensor assembly installed. Make sure the sensor assembly is installed to the specified torque.**
   - **If the sensor assembly has been dropped, or there are cracks, dents or other defects in the case, bracket or connector, replace the sensor assembly with a new one.**
   - **When installing the sensor assembly, make sure that the SRS wiring does not interfere with any other parts and is not pinched between other parts.**
   - **After installation, shake the sensor assembly to check that it is not loose.**

   (c) Using a "torx" socket wrench (T30), tighten the "torx" screw to install the seat position sensor.
   Torque: 8.0 N*m (82 kgf*cm, 71 in.*lbf)
   (d) Make sure that the clearance between the seat position sensor and the seat rail is within 0.6 mm (0.023 in.) and 2 mm (0.079 in.).
   (e) Check that there is no slack in the installation parts of the seat position sensor.
   (f) Connect the connector to the seat position sensor.
2. **INSTALL FRONT SEAT ASSEMBLY (See page SE-34)**
3. **INSTALL SEAT TRACK COVER (See page SE-34)**
4. **CONNECT CABLE TO NEGATIVE BATTERY TERMINAL**
   Torque: 3.9 N*m (40 kgf*cm, 35 in.*lbf)
5. **INSPECT SRS WARNING LIGHT**
   (See page RS-28)

REMOVAL

NOTICE:

- **If the wiring connector for the SRS is disconnected with the ignition switch in the ON position, DTCs will be recorded.**
- **Never use SRS parts from another vehicle. When replacing the parts, replace them with new ones.**
- **Never reuse a seat position sensor if an airbag has previously deployed in a collision.**

1. **DISCONNECT CABLE FROM NEGATIVE BATTERY TERMINAL**
   Wait for at least 90 seconds after disconnecting the cable to prevent the airbag from working.
2. **REMOVE FRONT SEAT INNER BELT ASSEMBLY LH (See page SB-12)**
3. **REMOVE FRONT SEAT INNER BELT ASSEMBLY RH (See page SB-12)**
4. **REMOVE FRONT SEAT HEADREST ASSEMBLY (See page SE-53)**
5. **REMOVE FRONT SEAT ASSEMBLY (See page SE-53)**
6. **REMOVE SEAT POSITION SENSOR PROTECTOR (for RHD)**
   (a) Remove the seat slide position sensor protector from the seat position airbag sensor.
7. **REMOVE SEAT POSITION SENSOR (for RHD)**
   (a) Disconnect the connector from the seat position sensor.
   (b) Using "Torx" socket wrench T30, remove the "Torx" screw and the seat position sensor.

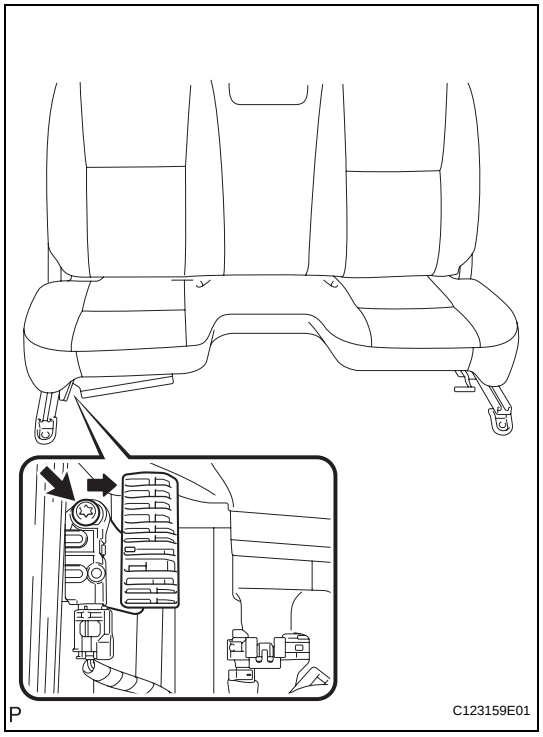

RS

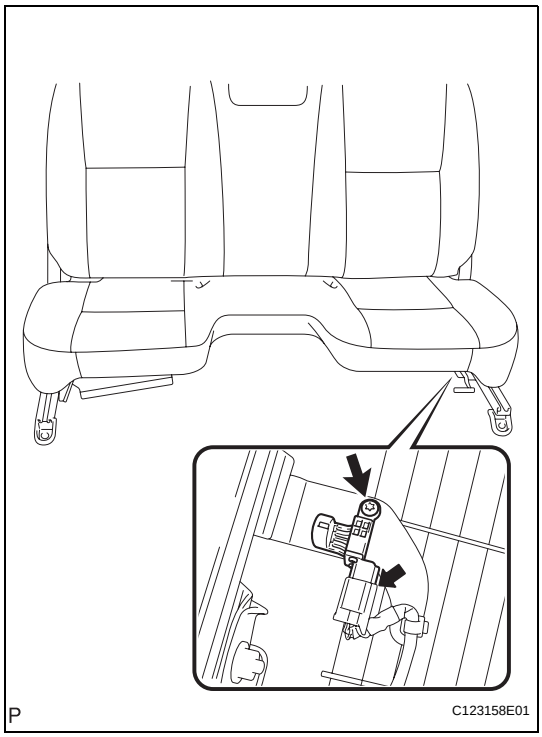

8. REMOVE SEAT POSITION SENSOR (for LHD)

(a) Disconnect the connector from the seat position sensor.

(b) Using "Torx" socket wrench T30, remove the "Torx" screw and the seat position sensor.

INSTALLATION

1. INSTALL SEAT POSITION SENSOR (for RHD)

(a) Check that the ignition switch is OFF.

(b) Check that the cable is disconnected from the negative battery (-) terminal.

CAUTION:

After disconnecting the cable from the terminal, wait for at least 90 seconds before starting the operation.

NOTICE:

- **Installation of the connector is done with the sensor assembly installed. Make sure the sensor assembly is installed to the specified torque.**
- **If the sensor assembly has been dropped, or there are cracks, dents or other defects in the case, bracket or connector, replace the sensor assembly with a new one.**
- **When installing the sensor assembly, make sure that the SRS wiring does not interfere with any other parts and is not pinched between other parts.**

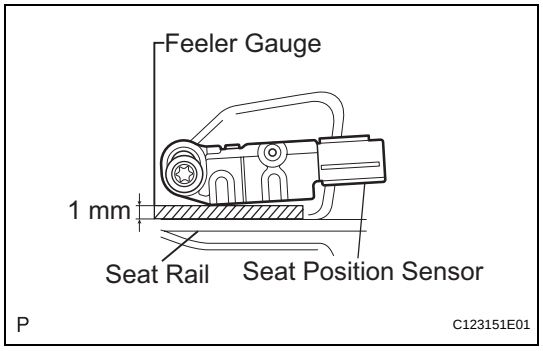

(c) Using "Torx" socket wrench T30, tighten the "Torx" screw to install the seat position sensor.

Torque: 8.0 N*m (82 kgf*cm, 71 in.*lbf)

(d) Make sure that the clearance between the seat position sensor and the seat rail is between 0.6 mm (0.023 in.) and 2 mm (0.079 in.). Check that there is no slack in the installation parts of the seat position sensor.

(e) Connect the connector to the seat position sensor.

2. INSTALL SEAT POSITION SENSOR PROTECTOR (for RHD)

(a) Install a new seat position protector onto the seat position sensor.

3. INSTALL SEAT POSITION SENSOR (for LHD)

(a) Check that the ignition switch is OFF.

(b) Check that the cable is disconnected from the negative battery (-) terminal.

CAUTION:

After disconnecting the cable from the terminal, wait for at least 90 seconds before starting the operation.

NOTICE:

- **Installation of the connector is done with the sensor assembly installed. Make sure the sensor assembly is installed to the specified torque.**
- **If the sensor assembly has been dropped, or there are cracks, dents or other defects in the case, bracket or connector, replace the sensor assembly with a new one.**

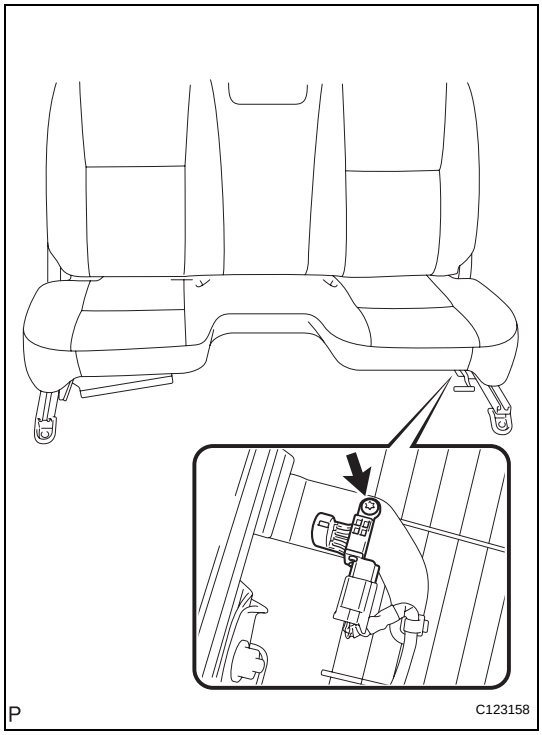

- **When installing the sensor assembly, make sure that the SRS wiring does not interfere with any other parts and is not pinched between other parts.**
- **After installation, shake the sensor assembly to check that it is not loose.**

(c) Using "Torx" socket wrench T30, tighten the "Torx" screw to install the seat position sensor.
Torque: 8.0 N*m (82 kgf*cm, 71 in.*lbf)

(d) Make sure that the clearance between the seat position sensor and the seat rail is within 0.6 mm (0.023 in.) and 2 mm (0.079 in.).

(e) Check that there is no slack in the installation parts of the seat position sensor.

(f) Connect the connector to the seat position sensor.

4. **INSTALL FRONT SEAT ASSEMBLY (See page SE-67)**
5. **INSTALL FRONT SEAT HEADREST ASSEMBLY (See page SE-68)**
6. **INSTALL FRONT SEAT INNER BELT ASSEMBLY LH (See page SB-13)**
7. **INSTALL FRONT SEAT INNER BELT ASSEMBLY RH (See page SB-14)**
8. **CONNECT CABLE TO NEGATIVE BATTERY TERMINAL**
Torque: 3.9 N*m (40 kgf*cm, 35 in.*lbf)
9. **INSPECT SRS WARNING LIGHT**
(See page RS-28)

ON-VEHICLE INSPECTION

1. **INSPECT FRONT SEAT CUSHION ASSEMBLY (w/ Occupant Classification ECU, Occupant Classification Sensor) (for Vehicle not Involved in Collision)**
   (a) Perform a diagnostic system check (See page RS-487).

2. **INSPECT FRONT SEAT CUSHION ASSEMBLY (w/ Occupant Classification ECU, Occupant Classification Sensor) (for Vehicle Involved in Collision)**
   (a) Perform a diagnostic system check (See page RS-487).
   (b) Even if the airbag was not deployed, check if there is any damage to the seat position sensor. If there are any defects as mentioned below, replace the seat position sensor with a new one:
   - Cracks, dents or chips on the sensor housing.
   - Cracks or other damage to the connector.

   CAUTION:
   Be sure to follow the correct removal and installation procedures.

REMOVAL

NOTICE:

- **If the wiring connector of the SRS is disconnected with the ignition switch in the ON position, DTCs will be recorded.**
- **Never use SRS parts from another vehicle. When replacing the parts, replace them with new ones.**
- **Never reuse an occupant classification sensor if an airbag has previously deployed in a collision.**
- **Remove the front seat cushion cover pad and front seat cushion cover together, in order to avoid occupant classification sensor malfunctions.**

1. **DISCONNECT CABLE FROM NEGATIVE BATTERY**
   Wait for 90 seconds after disconnecting the cable to prevent the airbag from working.
2. **REMOVE FRONT SEAT INNER BELT ASSEMBLY LH (See page SB-12)**
3. **REMOVE FRONT SEAT INNER BELT ASSEMBLY RH (See page SB-12)**
4. **REMOVE FRONT SEAT ASSEMBLY (See page SE-53)**
5. **REMOVE OCCUPANT CLASSIFICATION ECU (See page RS-635)**
6. **REMOVE FRONT SEAT HINGE COVER LH (See page SE-55)**
7. **REMOVE FRONT SEAT HINGE COVER RH (See page SE-55)**
8. **REMOVE FRONT SEATBACK ASSEMBLY (See page SE-55)**
9. **REMOVE FRONT SEAT TRACK LOWER FRONT BRACKET LH (See page SE-57)**
10. **REMOVE FRONT SEAT TRACK LOWER FRONT BRACKET RH (See page SE-57)**
11. **REMOVE FRONT SEAT TRACK LOWER REAR BRACKET LH (See page SE-57)**
12. **REMOVE FRONT SEAT TRACK LOWER REAR BRACKET RH (See page SE-57)**
13. **REMOVE FRONT SEAT OUTER TRACK ASSEMBLY LH (See page SE-57)**
14. **REMOVE FRONT SEAT OUTER TRACK ASSEMBLY RH (See page SE-57)**
15. **REMOVE FRONT SEAT CUSHION SPRING ASSEMBLY (See page SE-57)**

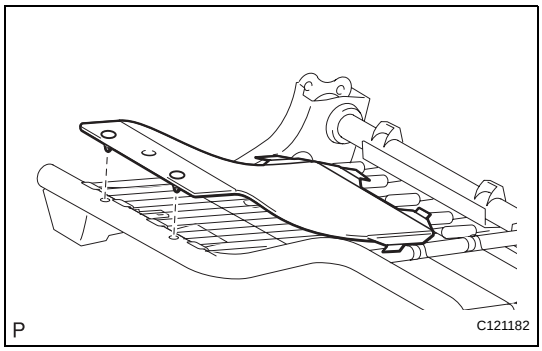

16. REMOVE OCCUPANT CLASSIFICATION SENSOR

(a) Disconnect the connector from the occupant classification sensor.
(b) Remove the wiring harness clamp.
(c) Disengage the clamps from the seat cushion frame.
(d) Remove the 2 clips and the occupant classification sensor.

INSTALLATION

NOTICE:

- **Install new parts from prepared service kits.**
- **Never use SRS parts from another vehicle. When replacing the parts, replace them with new ones.**
- **Never reuse an occupant classification sensor involved in a collision when the airbag has deployed.**
- **If the occupant classification sensor has been dropped, or there are any cracks, dents or other defects in the case, bracket or connector, replace it with a new one.**
- **When installing the occupant classification sensor, make sure that the SRS wiring does not interfere with other parts and that it is not pinched between other parts.**
- **After installing, shake the occupant classification sensor to check that there is no looseness.**
- **Remove the front seat cushion cover pad and front seat cushion cover together, in order to avoid occupant classification sensor malfunctions.**

1. INSTALL OCCUPANT CLASSIFICATION SENSOR

(a) Install the occupant classification sensor with the 2 clips.

(b) Engage the clamps to the seat cushion frame.

(c) Pass the tube of the occupant classification sensor through marked portion A and then fix it at marked portion B on the front seat cushion spring assembly with the wiring harness clamp, as shown in the illustration on the following page.

HINT:

Cut the wiring harness clamp leaving 5 to 10 mm (0.20 to 0.39 in.) at the end.

(d) Connect the connector to the occupant classification sensor.

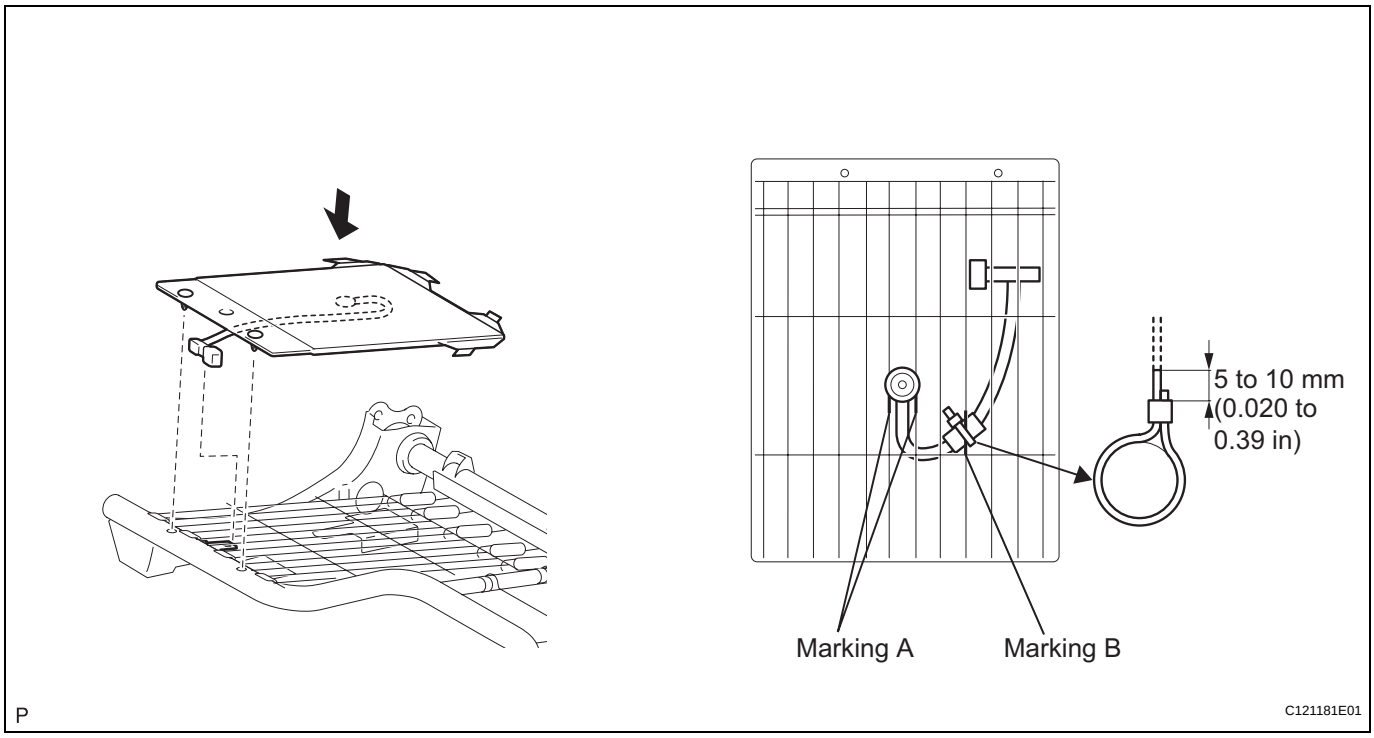

2. **INSTALL FRONT SEAT CUSHION SPRING ASSEMBLY (See page SE-62)**
3. **INSTALL FRONT SEAT OUTER TRACK ASSEMBLY LH (See page SE-62)**
4. **INSTALL FRONT SEAT OUTER TRACK ASSEMBLY RH (See page SE-62)**
5. **INSTALL FRONT SEAT TRACK LOWER REAR BRACKET LH (See page SE-63)**
6. **INSTALL FRONT SEAT TRACK LOWER REAR BRACKET RH (See page SE-63)**
7. **INSTALL FRONT SEAT TRACK LOWER FRONT BRACKET LH (See page SE-63)**
8. **INSTALL FRONT SEAT TRACK LOWER FRONT BRACKET RH (See page SE-63)**
9. **INSTALL OCCUPANT CLASSIFICATION ECU (See page RS-635)**
10. **INSTALL FRONT SEATBACK ASSEMBLY (See page SE-66)**
11. **INSTALL FRONT SEAT HINGE COVER LH (See page SE-66)**
12. **INSTALL FRONT SEAT HINGE COVER RH (See page SE-66)**
13. **INSTALL FRONT SEAT ASSEMBLY (See page SE-67)**

14. **INSTALL FRONT SEAT HEADREST ASSEMBLY (See page SE-68)**
15. **INSTALL FRONT SEAT INNER BELT ASSEMBLY LH (See page SB-13)**
16. **INSTALL FRONT SEAT INNER BELT ASSEMBLY RH (See page SB-14)**
17. **CONNECT CABLE TO NEGATIVE BATTERY TERMINAL**
    Torque: 3.9 N*m (40 kgf*cm, 35 in.*lbf)
18. **PERFORM ZERO POINT CALIBRATION AND SENSITIVITY CHECK**
    (See page RS-480)
19. **INSPECT SRS WARNING LIGHT**
    (See page RS-28)

REMOVAL

1. PRECAUTION

2. DISCONNECT CABLE FROM NEGATIVE BATTERY TERMINAL

Wait for at least 90 seconds after disconnecting the cable to prevent the airbag from working.

3. REMOVE FRONT SEAT ASSEMBLY RH

4. REMOVE OCCUPANT CLASSIFICATION ECU

(a) Disconnect the connector from the occupant classification ECU.

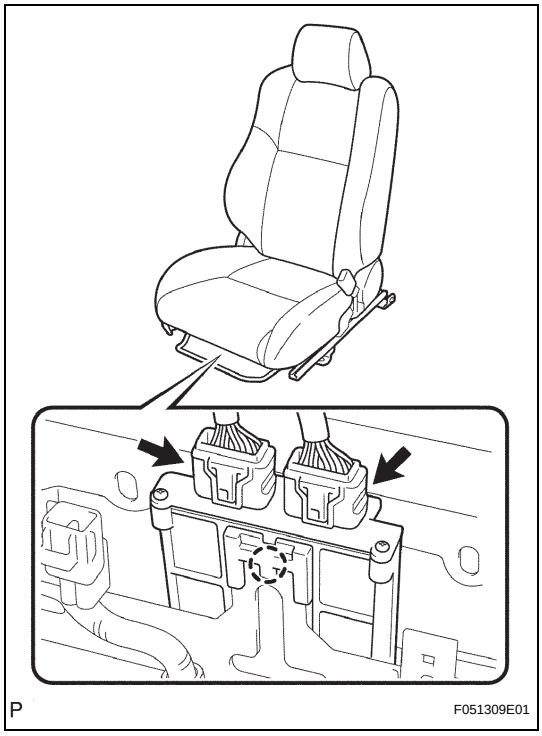

(b) Disengage the claw and remove the occupant classification ECU.

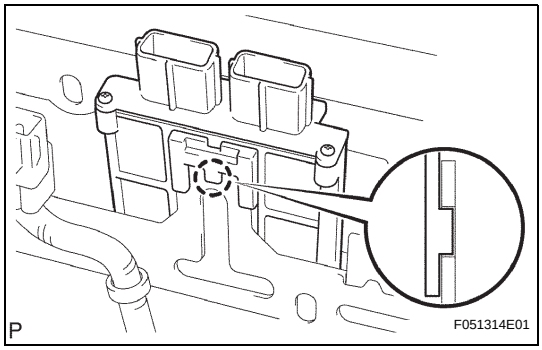

INSTALLATION

1. **INSTALL OCCUPANT CLASSIFICATION ECU**
   (a) Check that the ignition switch is OFF.
   (b) Check that the cable is disconnected from the battery negative (-) terminal is disconnected.
   CAUTION:
   After removing the cable from the terminal, wait for at least 90 seconds before starting the operation.
   (c) Engage the claw and install the occupant classification ECU.
   NOTICE:
   - **If the occupant classification ECU has been dropped, or there are cracks, dents or other defects in the case or connector, replace it with a new one.**
   - **When installing the occupant classification ECU, make sure that the SRS wiring does not interfere with any other parts and that it is not pinched between other parts.**
   (d) Connect the connector to the occupant classification ECU.
2. **INSTALL FRONT SEAT ASSEMBLY RH**
3. **CONNECT CABLE TO NEGATIVE BATTERY TERMINAL**
   Torque: 3.9 N*m (40 kgf*cm, 35 in.*lbf)
4. **OCCUPANT CLASSIFICATION ECU INITIALIZATION**
5. **INSPECT SRS WARNING LIGHT**
   (See page RS-28)

REMOVAL

NOTICE:

- **If the wiring connector of the SRS is disconnected with the ignition switch in the ON position, DTCs will be recorded.**
- **Never use SRS parts from another vehicle. When replacing the parts, replace them with new ones.**
- **Never reuse an occupant classification ECU if an airbag has previously deployed in a collision.**
- **Remove the front seat cushion cover pad and front seat cushion cover together, in order to avoid occupant classification sensor malfunctions.**

1. **READ IN OCCUPANT CLASSIFICATION ECU DATA (See page RS-476)**
2. **DISCONNECT CABLE FROM NEGATIVE BATTERY TERMINAL**
   Wait for 90 seconds after disconnecting the cable to prevent the airbag from working.
3. **REMOVE FRONT SEAT INNER BELT ASSEMBLY LH (See page SB-12)**
4. **REMOVE FRONT SEAT INNER BELT ASSEMBLY RH (See page SB-12)**
5. **REMOVE FRONT SEAT HEADREST ASSEMBLY (See page SE-53)**
6. **REMOVE FRONT SEAT ASSEMBLY (See page SE-53)**
7. **REMOVE OCCUPANT CLASSIFICATION ECU**
   (a) Disconnect the connector from the the occupant classification ECU.
   (b) Remove the 2 bolts and the occupant classification ECU.

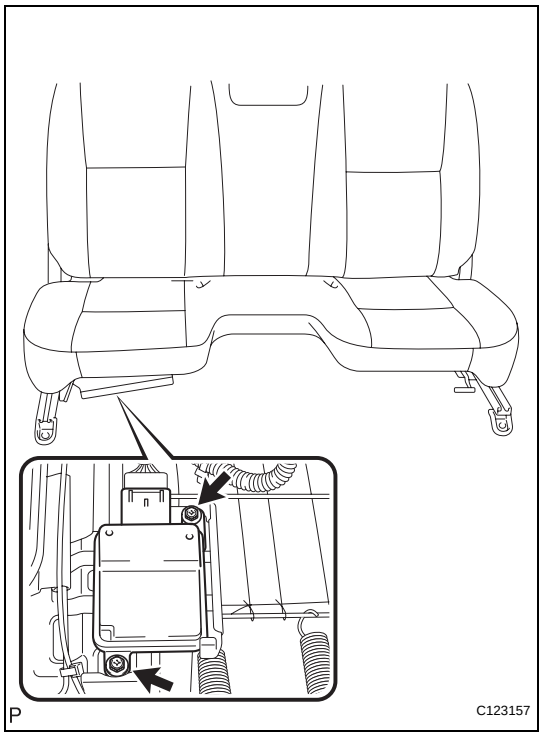

RS

INSTALLATION

NOTICE:

- **Never use SRS parts from another vehicle. When replacing the parts, replace them with new ones.**
- **Never reuse an occupant classification ECU involved in a collision when the airbag has deployed.**
- **If the occupant classification ECU has been dropped, or there are any cracks, dents or other defects in the case, bracket or connector, replace it with a new one.**
- **When installing the occupant classification ECU, make sure that the SRS wiring does not interfere with other parts and that it is not pinched between other parts.**
- **After installing, shake the occupant classification ECU to check that there is no looseness.**
- **Remove the front seat cushion cover pad and front seat cushion cover together, in order to avoid occupant classification sensor malfunctions.**

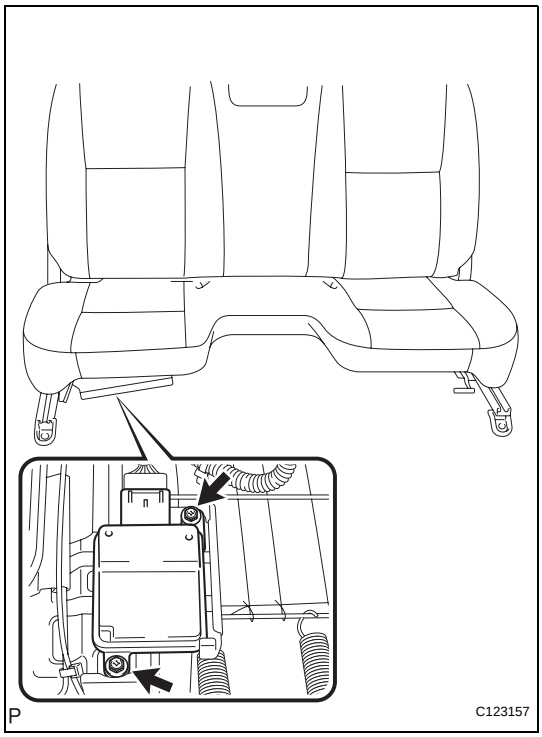

1. INSTALL OCCUPANT CLASSIFICATION ECU

(a) Check that the ignition switch is OFF.

(b) Check that the negative battery (-) terminal is disconnected.

CAUTION:
After disconnecting the negative battery terminal, wait for at least 90 seconds before starting the operation.

(c) Install the occupant classification ECU with the 2 bolts.

Torque: 3.0 N*m (31 kgf*cm, 27 in.*lbf)

(d) Connect the connector to the occupant classification ECU.

NOTICE:

- **If the occupant classification ECU has been dropped, or there are any cracks, dents or other defects in the case or connector, replace it with a new one.**
- **When installing the occupant classification ECU, make sure that the SRS wiring does not interfere with other parts and that it is not pinched between other parts.**
- **When replacing the occupant classification ECU, replace the bolt with a new one.**

2. INSTALL FRONT SEAT ASSEMBLY (See page SE-67)

3. INSTALL FRONT SEAT HEADREST ASSEMBLY (See page SE-68)

4. INSTALL FRONT SEAT INNER BELT ASSEMBLY LH (See page SB-13)

5. INSTALL FRONT SEAT INNER BELT ASSEMBLY RH (See page SB-14)

6. CONNECT CABLE TO NEGATIVE BATTERY TERMINAL
Torque: 3.9 N*m (40 kgf*cm, 35 in.*lbf)

RS

7. **INSERT OCCUPANT CLASSIFICATION ECU DATA (See page RS-476)**
8. **PERFORM ZERO POINT CALIBRATION AND SENSITIVITY CHECK**
   (See page RS-480)
9. **INSPECT SRS WARNING LIGHT**
   (See page RS-28)

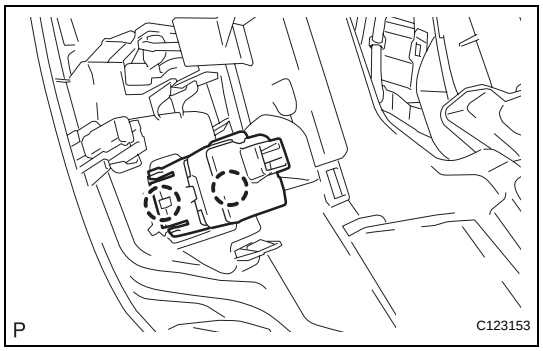

13. REMOVE AIRBAG CUT OFF SWITCH

(a) Disconnect the airbag cut off switch connector.

(b) Remove the instrument cluster finish panel sub-assembly center while holding the 2 claws of the airbag cut off switch.

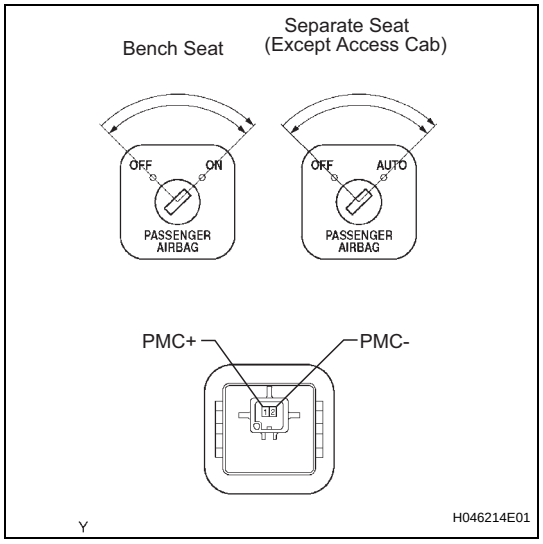

INSPECTION

1. INSPECT AIRBAG CUT OFF SWTCH

(a) Check the resistance.

(1) Using an ohmmeter, measure the resistance between the terminals.

Standard :

Switch Connection	Tester Condition	Specified Condition
OFF	1 (MSW+) - 2 (MSW-)	80 to 120Ω
ON	1 (MSW+) - 2 (MSW-)	320 to 480Ω

If the result is not as specified, replace the air bag cut off switch.

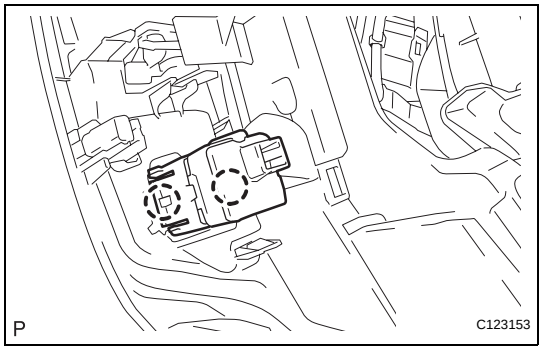

INSTALLATION

1. INSTALL AIRBAG CUT-OFF SWITCH

(a) Engage the 2 claws of the cut off switch with the instrument cluster finish panel sub-assembly center.

(b) Attach the connector to the airbag cut off switch.

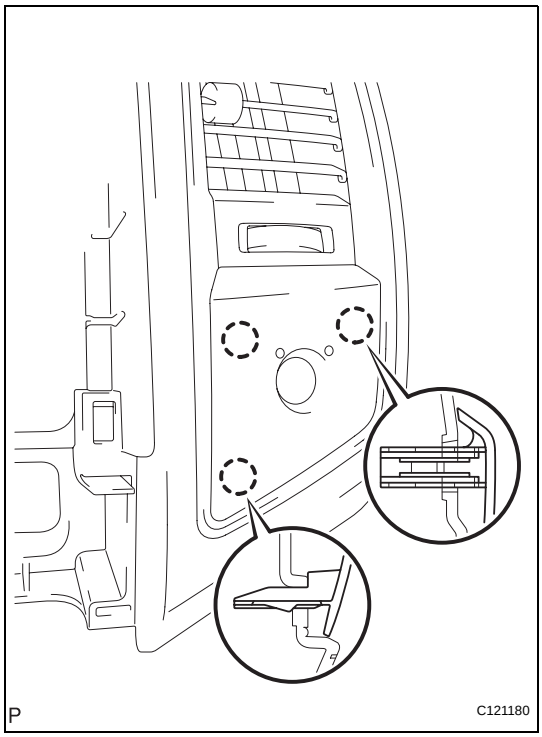

2. **INSTALL SWITCH BASE HOLE COVER**
   (a) Disengage the 3 claws and install the switch base hole cover.
3. **INSTALL CENTER INSTRUMENT CLUSTER FINISH PANEL SUB-ASSEMBLY (See page IP-21)**
4. **INSTALL INSTRUMENT CLUSTER FINISH PANEL SUB-ASSEMBLY (See page IP-21)**
5. **INSTALL INSTRUMENT LOWER PANEL LH (See page IP-20)**
6. **INSTALL NO.1 LOWER INSTRUMENT PANEL FINISH PANEL (See page IP-22)**
7. **CONNECT HOOD LOCK CONTROL LEVER SUB-ASSEMBLY (See page ED-8)**
8. **INSTALL RADIO RECEIVER ASSEMBLY WITH BRACKET (See page AV-70)**
9. **INSTALL AIR CONDITIONING CONTROL ASSEMBLY (See page IP-22)**
10. **INSTALL INSTRUMENT PANEL HOLE COVER (for Lever Type Parking Brake) (See page IP-25)**
11. **INSTALL INSTRUMENT PANEL UNDER TRAY (for Pedal Type Parking Brake) (See page IP-25)**
12. **CONNECT CABLE TO NEGATIVE BATTERY TERMINAL**
    Torque: 3.9 N*m (40 kgf*cm, 35 in.*lbf)
13. **INSPECT SRS WARNING LIGHT**
    (See page RS-28)

SYSTEM DESCRIPTION

When the ignition switch ON, this system detects the condition of the seat belts based on the signals from the front seat inner belt switches (for driver side only) and the occupant detection sensor or weight sensor (front passenger side only).

For bench seat:

The weight sensor, which is built into the seat cushion of the front passenger seat, is used to detect whether or not the front passenger seat is occupied.

For separate seat:

The occupant detection sensor, which is built into the seat cushion of the front passenger seat, is used to detect whether or not the front passenger seat is occupied.

PROBLEM SYMPTOMS TABLE

HINT:
Proceed to the troubleshooting for each circuit in the table below.

SEAT BELT WARNING SYSTEM

Symptom	Suspected area	See page
Driver side seat belt warning light does not blink	GAUGE fuse	-
	Front seat inner belt assembly LH (bench seat type)	SB-13
	Front seat inner belt assembly LH (separate seat type)	SB-9
	Combination meter assembly	ME-47
	Multiplex network body ECU	-
	Wire harness	-
Passenger side seat belt warning light does not blink	IG1 fuse	-
	Front seat outer belt assembly RH (bench seat type)	RS-545
	Front seat inner belt assembly RH (bench seat type)	SB-13
	Front seat inner belt assembly RH (separate seat type)	SB-9
	Occupant classification sensor (bench seat type)	RS-626
	Occupant classification sensor (separate seat type)	RS-434
	Occupant classification ECU (bench seat type)	RS-634
	Occupant classification ECU (separate seat type)	RS-630
	Hazard warning signal switch assembly	ME-51
	Center air bag sensor assembly	RS-602
	Wire harness	-

REMOVAL

CAUTION:
Some of these service operations affect the SRS airbag system. Read the precautionary notices concerning the SRS airbag system before servicing (w/ Front Seat Side Airbag) (See page RS-1).

1. **REMOVE CABLE FROM NEGATIVE BATTERY TERMINAL**
   Wait for at least 90 seconds after disconnecting the cable to prevent the air bag from working (w/ Front Seat Side Airbag).

2. **REMOVE SEAT TRACK COVER**
   (a) for Separate Seat Type Driver Side:
      (1) Remove the seat track cover (See page SE-23).
   (b) for Separate Seat Type Front Passenger Side:
      (1) Remove the seat track cover (See page SE-38).
   (c) for Separate Folding Seat Type:
      (1) Remove the seat track cover (See page SE-5).

3. **REMOVE FRONT SEAT ASSEMBLY**
   (a) for Separate Seat Type Driver Side:
      (1) Remove the front seat assembly (See page SE-23).
   (b) for Separate Seat Type Front Passenger Side:
      (1) Remove the front seat assembly (See page SE-38).
   (c) for Separate Folding Seat Type:
      (1) Remove the front seat assembly (See page SE-5).

4. **REMOVE FRONT SEAT INNER BELT ASSEMBLY**
   (a) for Separate Seat Type Driver Side:
      (1) Using a clip remover, remove the wire harness clamp and 2 connector clamps.
      (2) Remove the wire harness clamp.
      (3) Disconnect the seat position sensor connector.
      (4) Remove the nut and front seat inner belt.

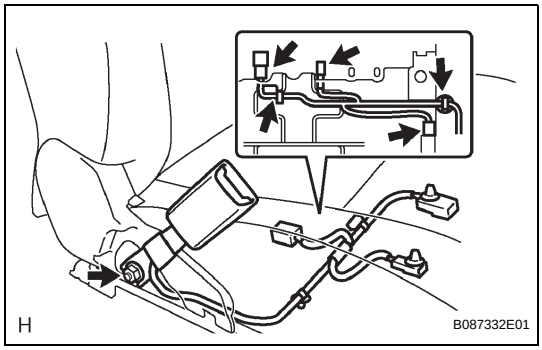

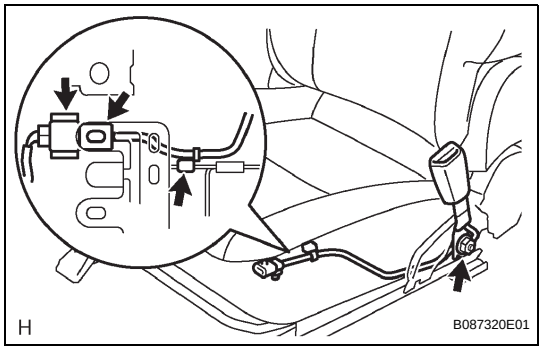

   (b) for Separate Seat Type Front Passenger Side and Separate Folding Seat Type:
      (1) Disconnect the seat wire connector.
      (2) Using a clip remover, remove the connector clamp.
      (3) Remove the wire harness clamp.
      (4) Remove the nut and front seat inner belt.

SB

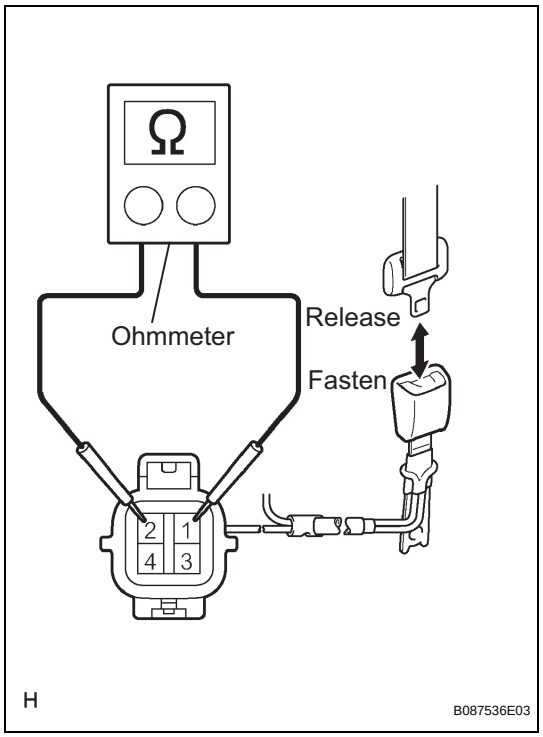

INSPECTION

1. INSPECT FRONT SEAT INNER BELT ASSEMBLY LH

(a) for Separate Seat Type Driver Side:

(1) Check the resistance.

1. Using an ohmmeter, measure the resistance between the terminals.

Standard resistance

Tester Connection	Condition	Specified Condition
1 - 2	Fasten seat belt	10 kΩ or higher
1 - 2	Release seat belt	Below 1 Ω

If the result is not as specified, replace the front seat inner belt.

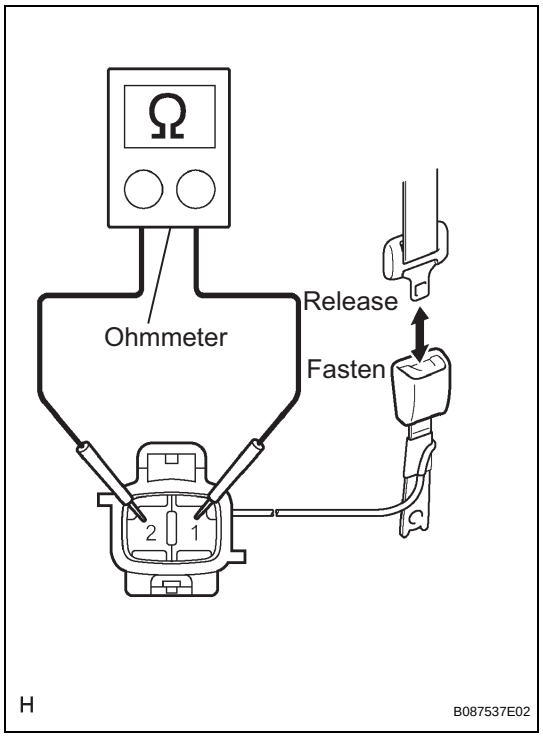

(b) for Separate Seat Type Front Passenger Side and Separate Folding Seat Type:

(1) Check the resistance.

1. Using an ohmmeter, measure the resistance between the terminals.

Standard resistance

Tester Connection	Condition	Specified Condition
1 - 2	Fasten seat belt	10 kΩ or higher
1 - 2	Release seat belt	Below 1 Ω

If the result is not as specified, replace the front seat inner belt.

INSTALLATION

CAUTION:
Some of these service operations affect the SRS airbag system. Read the precautionary notices concerning the SRS airbag system before servicing (w/ Front Seat Side Airbag) (See page RS-1).

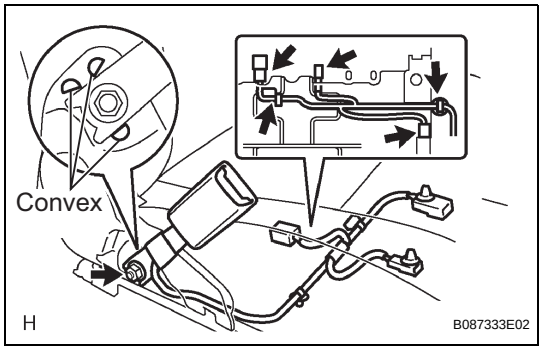

1. INSTALL FRONT SEAT INNER BELT ASSEMBLY

(a) for Separate Seat Type Driver Side:

(1) Install the front seat inner belt with the nut.
Torque: 42 N*m (430 kgf*cm, 31 ft.*lbf)
NOTICE:
Be careful not to place the front seat inner belt over the convex areas of the front seat with adjuster frame.

(2) Check that the front seat inner belt rotates smoothly.

(3) Connect the seat position sensor connector.

(4) Install the 2 wire harness clamps and 2 connector clamps.

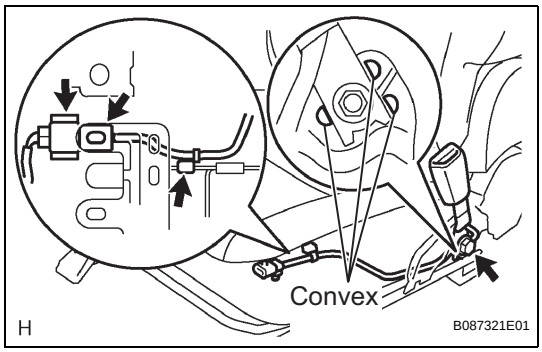

(b) for Separate Seat Type Front Passenger Side and Separate Folding Seat Type:

(1) Install the front seat inner belt with the nut.
Torque: 42 N*m (430 kgf*cm, 31 ft.*lbf)
NOTICE:
Be careful not to place the front seat inner belt over the convex areas of the front seat with adjuster frame.

(2) Check that the front seat inner belt rotates smoothly.

(3) Install the wire harness clamp and connector clamp.

(4) Connect the seat wire connector.

2. INSTALL FRONT SEAT ASSEMBLY

(a) for Separate Seat Type Driver Side:

(1) Install the front seat assembly (See page SE-34).

(b) for Separate Seat Type Front Passenger Side:

(1) Install the front seat assembly (See page SE-47).

(c) for Separate Folding Seat Type:

(1) Install the front seat assembly (See page SE-18).

3. INSTALL SEAT TRACK COVER

(a) for Separate Seat Type Driver Side:

(1) Install the seat track cover (See page SE-34).

(b) for Separate Seat Type Front Passenger Side:

(1) Install the seat track cover (See page SE-48).

(c) for Separate Folding Seat Type:

(1) Install the seat track cover (See page SE-19).

4. CONNECT CABLE TO NEGATIVE BATTERY TERMINAL
Torque: 3.9 N*m (40 kgf*cm, 35 in.*lbf)

SB

5. INSPECT SRS WARNING LIGHT (w/ Front Seat Side Airbag)
(See page RS-28)

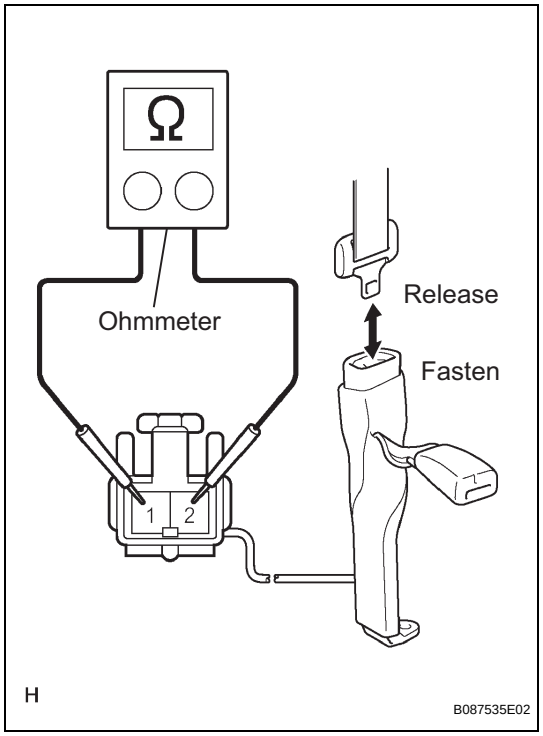

INSPECTION

1. INSPECT FRONT SEAT INNER BELT ASSEMBLY LH

(a) Check the resistance.

(1) Using an ohmmeter, measure the resistance between the terminals.

Standard resistance

Tester Connection	Condition	Specified condition
1 - 2	Fasten seat belt	10 kΩ or higher
1 - 2	Release seat belt	Below 1 Ω

If the result is not as specified, replace the front seat inner belt.

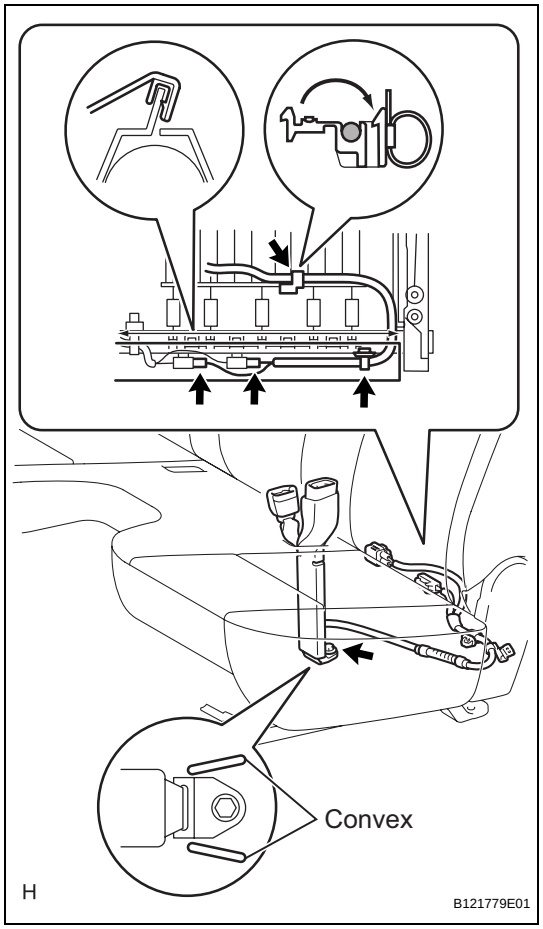

INSTALLATION

1. INSTALL FRONT SEAT INNER BELT ASSEMBLY LH

(a) Slide the front seat to the most forward position.

(b) Install the front seat inner belt with the bolt.

Torque: 42 N*m (430 kgf*cm, 31 ft.*lbf)

NOTICE:

Be careful not to place the front seat inner belt over the convex areas of the floor panel.

(c) Install the 2 wiring harness clamps.

(d) Connect the 2 connectors.

(e) Engage the hook.

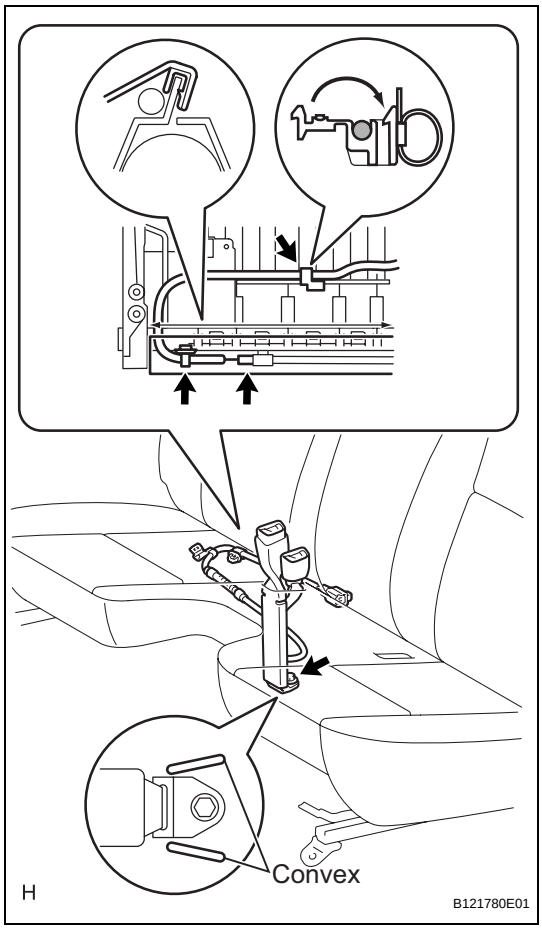

2. INSTALL FRONT SEAT INNER BELT ASSEMBLY RH

(a) Slide the front seat to the most forward position.

(b) Install the front seat inner belt with the bolt.
Torque: 42 N*m (430 kgf*cm, 31 ft.*lbf)
NOTICE:
Be careful not to place the front seat inner belt over the convex areas of the floor panel.

(c) Install the 2 wiring harness clamps.

(d) Connect the connector.

(e) Engage the hook.

3. CONNECT CABLE TO NEGATIVE BATTERY TERMINAL
Torque: 3.9 N*m (40 kgf*cm, 35 in.*lbf)

INSTALLATION

CAUTION:
Some of these service operations affect the SRS airbag system. Read the precautionary notices concerning the SRS airbag system before servicing (See page RS-1).

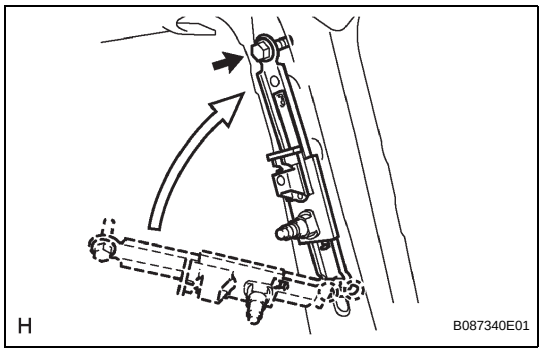

1. INSTALL FRONT SHOULDER BELT ANCHOR ADJUSTER ASSEMBLY

(a) Insert the 2 claws of the front shoulder belt anchor adjuster into the hole in the body and mount the bolt.
Torque: 42 N*m (430 kgf*cm, 31 ft.*lbf)

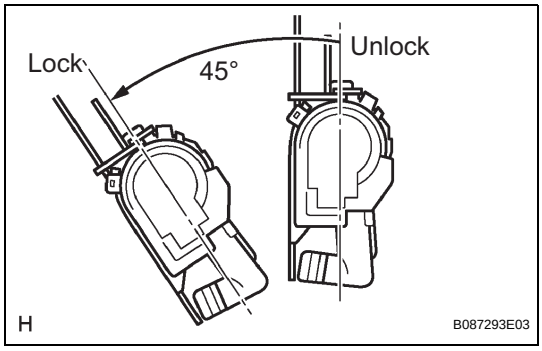

2. INSTALL FRONT SEAT OUTER BELT ASSEMBLY

(a) Check the amount of inclination required to lock the retractor.
(1) Gently incline the retractor from its initial position. Check that the belt does not lock when the retractor is inclined 15° or less in any directions. Also check that the belt locks when the inclination of the retractor is 45° or more.
NOTICE:
Do not disassemble the retractor.
If operation is not as specified, replace the front seat outer belt.

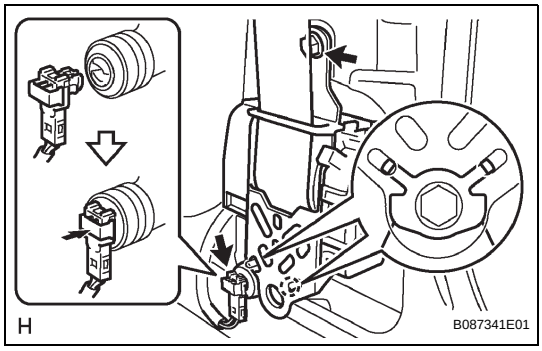

(b) Hook the lower stay of the retractor onto the 2 body hooks.
(c) Install the retractor with the bolt.
Torque: 8.5 N*m (85 kgf*cm, 75 in.*lbf)
(d) Connect the pretensioner connector as shown in the illustration.



(e) Install the shoulder anchor with the nut.
Torque: 42 N*m (430 kgf*cm, 31 ft.*lbf)
(f) Check that the shoulder anchor rotates smoothly.

SB

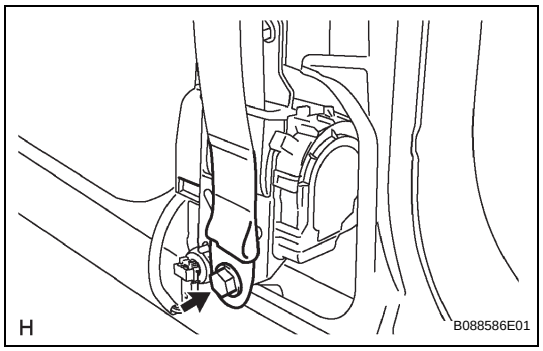

(g) Install the floor anchor of the front seat outer belt with the bolt.
Torque: 42 N*m (430 kgf*cm, 31 ft.*lbf)

(h) Check the ELR lock.
NOTICE:
- **The check should be performed with the front seat outer belt installed.**
- **Do not allow the anchor part of the front seat outer belt and the protruding parts of the floor panel to overlap.**

(1) With the belt installed, check that the belt locks when it is pulled out quickly.
If operation is not as specified, replace the front seat outer belt.

(i) Remove the bolt and floor anchor.

3. INSTALL CENTER PILLAR UPPER GARNISH (See page IR-26)

4. INSTALL CENTER PILLAR LOWER GARNISH (See page IR-26)

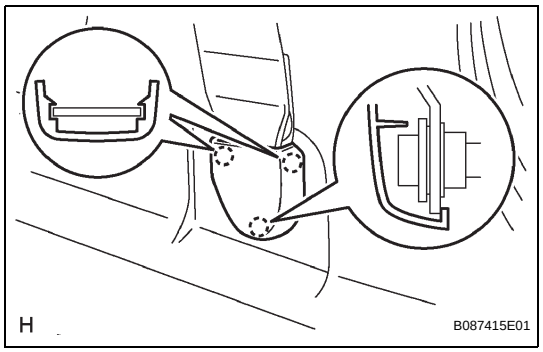

5. INSTALL LAP BELT OUTER ANCHOR COVER

(a) Engage the 3 claws and install the lap belt outer anchor cover.

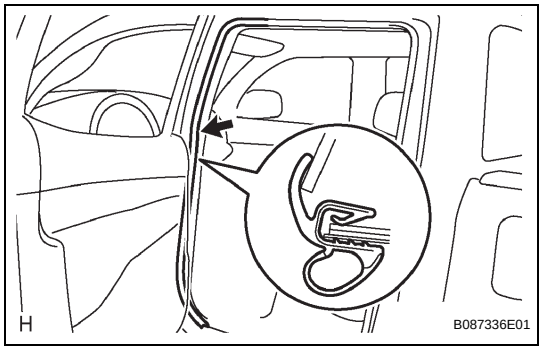

6. INSTALL REAR DOOR OPENING TRIM WEATHERSTRIP

(a) Install the rear door opening trim weatherstrip.

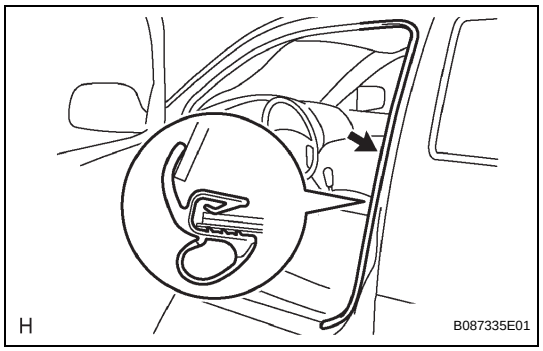

7. INSTALL FRONT DOOR OPENING TRIM WEATHERSTRIP

(a) Install the front door opening trim weatherstrip.

8. INSTALL REAR DOOR SCUFF PLATE (See page IR-29)

9. INSTALL FRONT DOOR SCUFF PLATE (See page IR-29)

10. CONNECT CABLE TO NEGATIVE BATTERY TERMINAL
Torque: 3.9 N*m (40 kgf*cm, 35 in.*lbf)

11. INSPECT SRS WARNING LIGHT
(See page RS-28)

DISPOSAL

HINT:
When scrapping vehicles equipped with a seat belt pretensioner or disposing of a front seat outer belt (with seat belt pretensioner), always first activate the seat belt pretensioner in accordance with the procedures described below. If any abnormality occurs during activation of the seat belt pretensioner, contact the SERVICE DEPARTMENT of TOYOTA MOTOR SALES, U.S.A., INC. When disposing of a front seat outer belt assembly (with seat belt pretensioner) that was activated in a collision, start by step 2-(f) in this section.

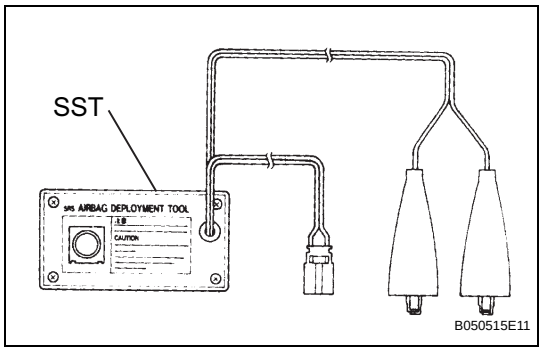

CAUTION:

- **Never dispose of a front seat outer belt assembly that has an inactivated pretensioner.**
- **The seat belt pretensioner produces a loud, exploding sound when it activates. Perform the operation where it will not be a nuisance to persons nearby.**
- **When activating a front sear outer belt (with seat belt pretensioner), stand at least 10 m (33ft) away from the front seat outer belt.**
- **Use gloves and safety glasses when handling a front seat belt with an activated pretensioner.**
- **Always wash your hands with water after completing activation.**
- **Do not apply water to a front seat outer belt that has an activated pretensioner.**
- **When activating the seat belt pretensioner, always use the specified SST (SRS air bag deployment tool).**
- **Perform operation in a place away from electrical interference.**

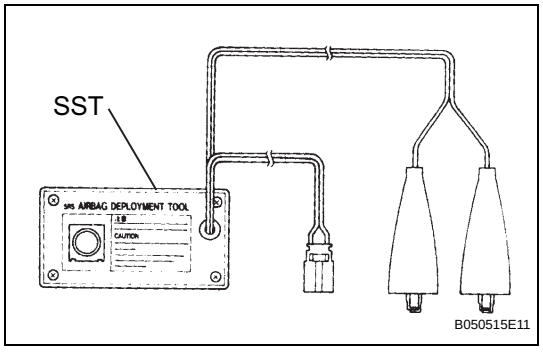

1. DISPOSE OF FRONT SEAT OUTER BELT ASSEMBLY (When Installed in Vehicle)

HINT:
Prepare a battery to power activation of the seat belt pretensioner.

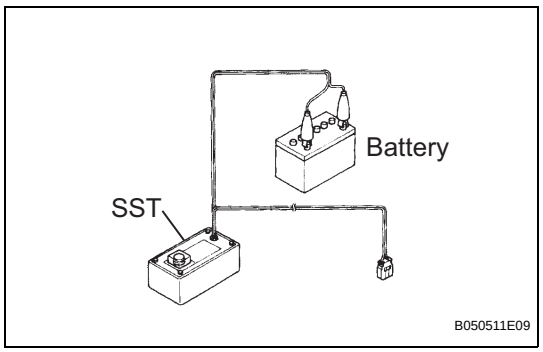

(a) Check whether SST is functioning.
SST 09082-00700, 09082-00770
CAUTION:
When activating the seat belt pretensioner, always use the specified SST.

(1) Connect SST red clip to the battery positive (+) terminal and the black clip to the battery negative (-) terminal.
HINT:
Do not connect the yellow connector. The yellow connector is used to connect to the seat belt pretensioner.

SB

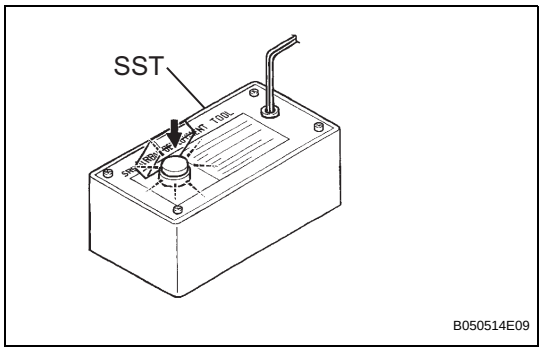

(2) Press SST activation switch and check that the LED of SST activation switch turns on.
CAUTION:
If the LED turns on when the activation switch is not being pressed, SST may be malfunctioning. Do not use SST.

(b) Disconnect SST from the battery.

(c) Disconnect the pretensioner connector.
(1) Disconnect cable from negative battery terminal.
(2) Remove the front door scuff plate (See page SB-16).
(3) Remove the rear door scuff plate (See page SB-16).
(4) Remove the front door opening trim weatherstrip (See page SB-16).
(5) Remove the rear door opening trim weatherstrip (See page SB-16).
(6) Remove the lap belt outer anchor cover (See page SB-16).
(7) Remove the center pillar lower garnish (See page SB-16).

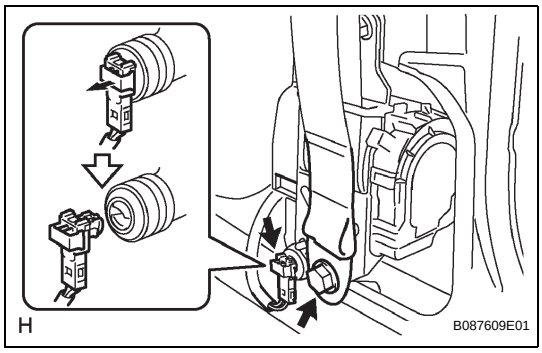

(8) Install the floor anchor with the bolt.
Torque: 42 N*m (430 kgf*cm, 31 ft.*lbf)
(9) Disconnect the pretensioner connector as shown in the illustration.

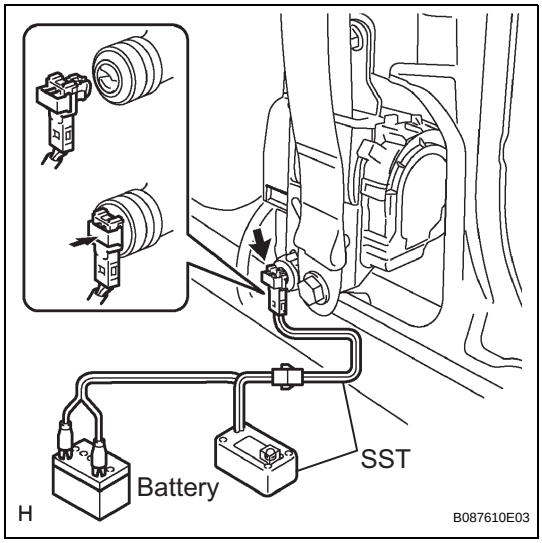

(d) Connect the SST.
(1) Connect SST, then connect the yellow connector to the seat belt pretensioner.
SST 09082-00700, 09082-00770
NOTICE:
To avoid damaging SST connector and wire harness, do not lock the secondary lock of the twin lock.

SB

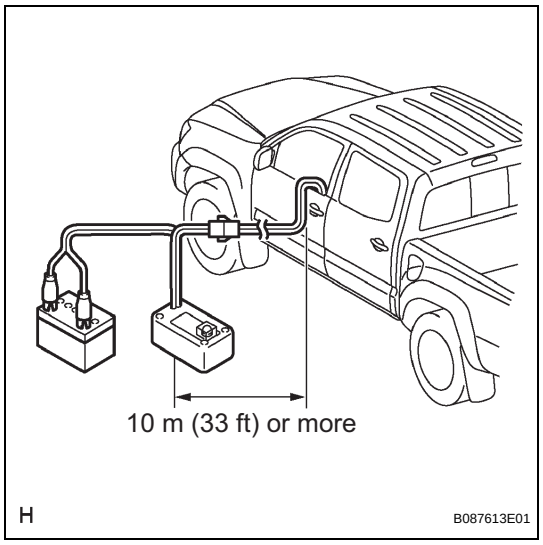

(2) Move SST at least 10 m (33 ft) away from the front of the vehicle.
(3) Close all the doors and windows of the vehicle.
HINT:
Do not close the windows fully. Leave a gap for inserting SST wire harness.
NOTICE:
Take care not to damage SST wire harness.
(4) Connect SST red clip to the battery positive (+) terminal and the black clip to the battery negative (-) terminal.

(e) Activate the seat belt pretensioner.
(1) Confirm that no one is inside the vehicle or within 10 m (33 ft) of the vehicle.
(2) Press SST activation switch and activate the seat belt pretensioner.
HINT:
The seat belt pretensioner operates simultaneously with SST activation switch LED light.

(f) Dispose of the outer belt (with the seat belt pretensioner).
CAUTION:
- **Do not touch the outer belt for at least 30 minutes after the seat belt pretensioner has been activated. It is very hot.**
- **Use gloves and safety glasses when handling an outer belt with a pretensioner that has been activated.**
- **Always wash your hands with water after completing the operation.**
- **Do not apply water to a front seat outer belt that has an activated pretensioner.**

HINT:
When scrapping a vehicle, activate the seat belt pretensioner, and then scrap the vehicle with the activated outer belt still installed.

2. DISPOSE OF FRONT SEAT OUTER BELT ASSEMBLY (When not Installed in Vehicle)
NOTICE:
Be sure to follow the procedures listed below when activating the seat belt pretensioner.
HINT:
Prepare a battery as the power source to activate the seat belt pretensioner.
(a) Remove the front seat outer belt (See page SB-16).

SB

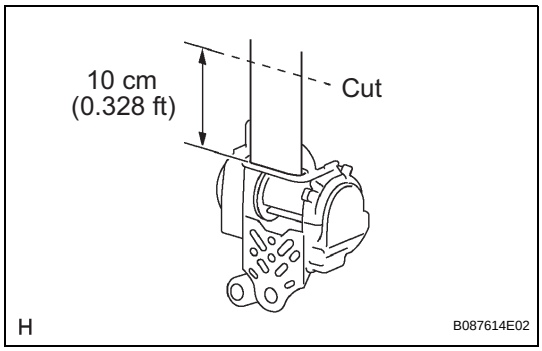

(b) Wind the seat belt with the retractor.
(c) When the seat belt is sufficiently wound, cut the seat belt approximately 10 cm (0.328 ft) from the retractor, as shown in the illustration.
HINT:
The retractor resistance increases in correlation with how much the seat belt is wound.

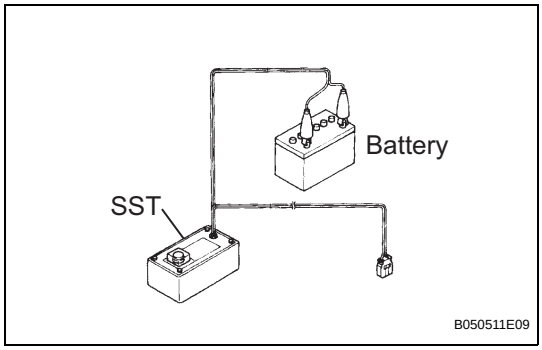

(d) Check whether SST is functioning (see step 2-(a)).
SST 09082-00700, 09082-00770
CAUTION:
When activating the seat belt pretensioner, always use the specified SST.

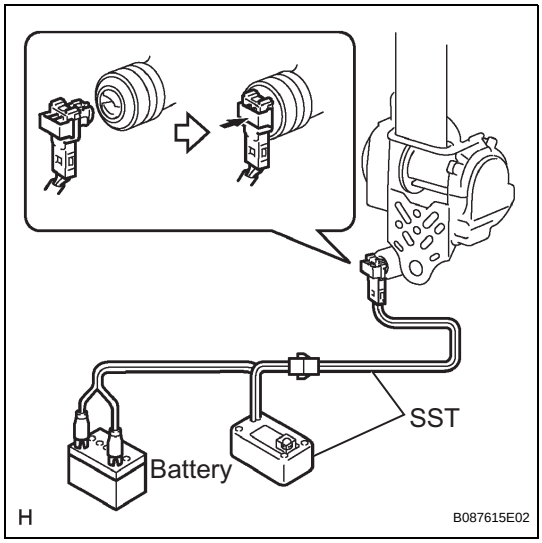

(e) Connect SST.
(1) Connect SST, then connect them to the seat belt pretensioner.
NOTICE:
To avoid damaging SST connector and wire harness, do not lock the secondary lock of the twin lock.

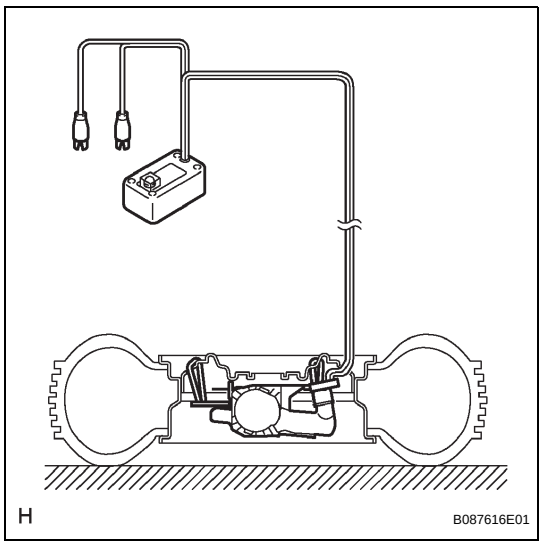

(2) Place the outer belt on the ground and cover it with a tire with a wheel attached.
NOTICE:
Set up the front seat outer belt assembly shown in the illustration.

SB

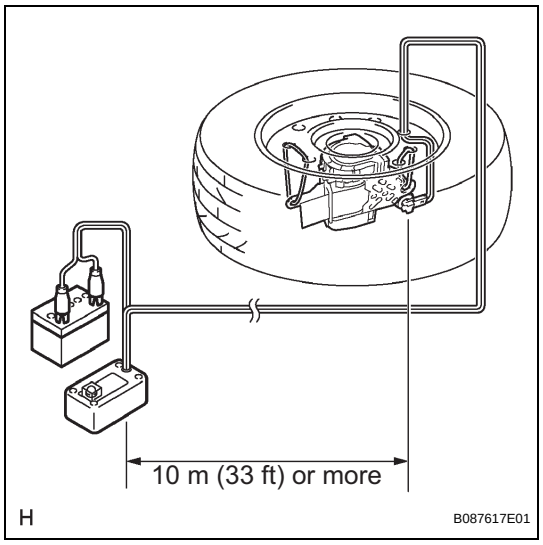

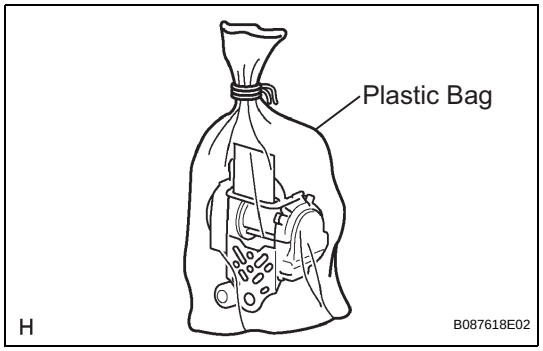

(3) Move SST at least 10 m (33 ft) away from the wheel.

NOTICE:

Take care not to damage SST wire harness.

(f) Activate the seat belt pretensioner.

(1) Connect SST red clip to the battery positive (+) terminal and the black clip to the battery negative (-) terminal.

(2) Check that no one is within 10 m (33 ft) of the wheel.

(3) Press SST activation switch and activate the seat belt pretensioner.

HINT:

The seat belt pretensioner operates simultaneously with SST activation switch LED light.

(g) Dispose of the outer belt (with the seat belt pretensioner).

CAUTION:

- **Do not touch the outer belt for at least 30 minutes after the seat belt pretensioner has been activated. It is very hot.**
- **Use gloves and safety glasses when handling an outer belt assembly with a pretensioner that has been activated.**
- **Always wash your hands with water after completing operation.**
- **Do not apply water to an outer belt assembly that has an activated pretensioner.**

(1) Remove the wheel and SST.

(2) Place the outer belt in a plastic bag, tie the end tightly and dispose of it in the same way as other general parts.

REMOVAL

CAUTION:
Some of these service operations affect the SRS airbag system. Read the precautionary notices concerning the SRS airbag system before servicing (See page RS-1).

1. **DISCONNECT CABLE FROM NEGATIVE BATTERY TERMINAL**
   Wait for at least 90 seconds after disconnecting the cable to prevent the airbag from working.
2. **REMOVE FRONT DOOR SCUFF PLATE (See page IR-40)**
3. **REMOVE FRONT DOOR OPENING TRIM WEATHERSTRIP**
   (a) Separate the front door opening trim weatherstrip to the extent which allows the removal of the quarter trim lower panel and quarter inside trim board.

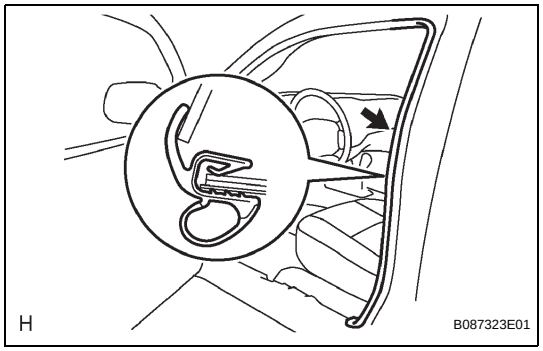

4. **REMOVE BACK PANEL TRIM COVER (See page IR-42)**
5. **REMOVE BACK PANEL UPPER GARNISH (See page IR-43)**
6. **REMOVE JACK ASSEMBLY (for Separate Seat Type)**
7. **REMOVE BACK PANEL TRIM COVER (for Separate Seat Type) (See page IR-43)**
8. **REMOVE BACK PANEL TRIM (for Separate Seat Type) (See page IR-43)**
9. **REMOVE QUARTER TRIM LOWER PANEL (See page IR-43)**
10. **REMOVE QUARTER INSIDE TRIM BOARD (See page IR-44)**
11. **REMOVE FRONT SEAT OUTER BELT ASSEMBLY**
    (a) Remove the bolt and shoulder anchor.

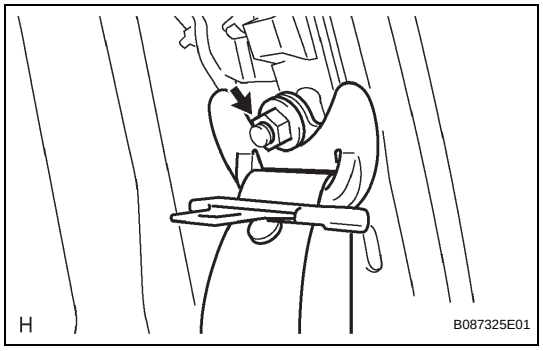

SB

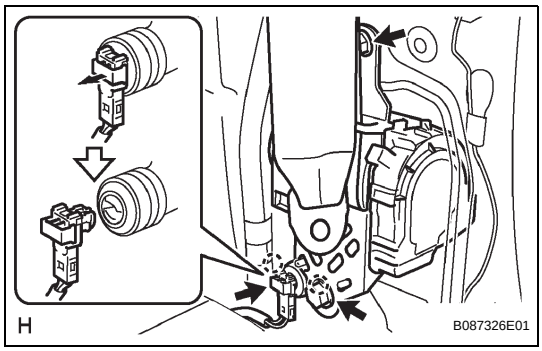

(b) Disconnect the pretensioner connector as shown in the illustration.
(c) Remove the 2 bolts and retractor.

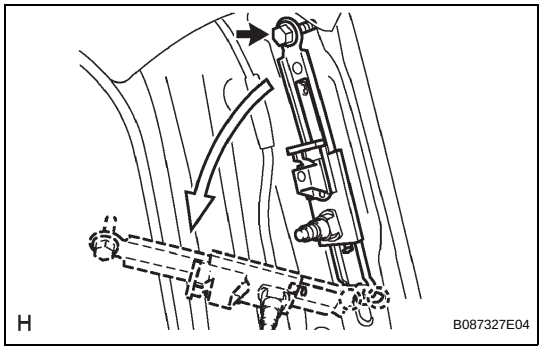

12. REMOVE FRONT SHOULDER BELT ANCHOR ADJUSTER ASSEMBLY
(a) Remove the bolt.
(b) Disengage the 2 claws and remove the front shoulder belt anchor adjuster.

INSTALLATION

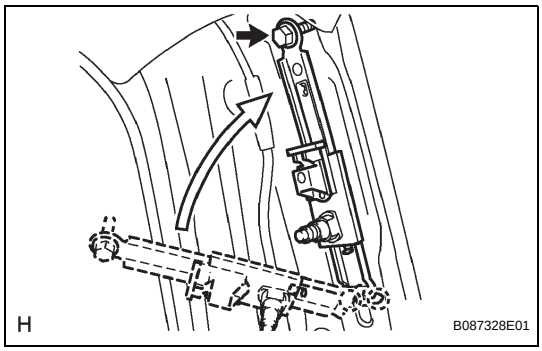

1. INSTALL FRONT SHOULDER BELT ANCHOR ADJUSTER ASSEMBLY
(a) Insert the 2 claws of the front shoulder belt anchor adjuster into the hole in body and mount the bolt.
Torque: 42 N*m (430 kgf*cm, 31 ft.*lbf)

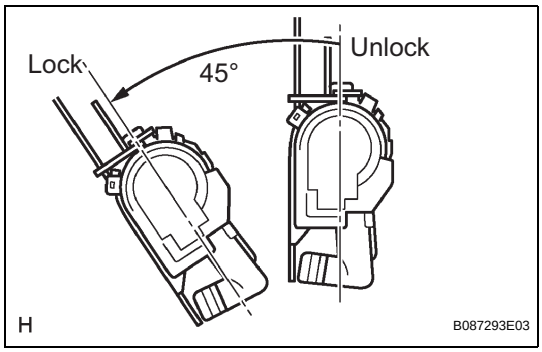

2. INSTALL FRONT SEAT OUTER BELT ASSEMBLY
(a) Check the amount of inclination required to lock the retractor.
(1) Gently incline the retractor from its initial position. Check that belt does not lock when the retractor is inclined 15° or less in any directions. Also check that the belt locks when the inclination of the retractor is 45° or more.
NOTICE:
Do not disassemble the retractor.
If operation is not as specified, replace the front seat outer belt.

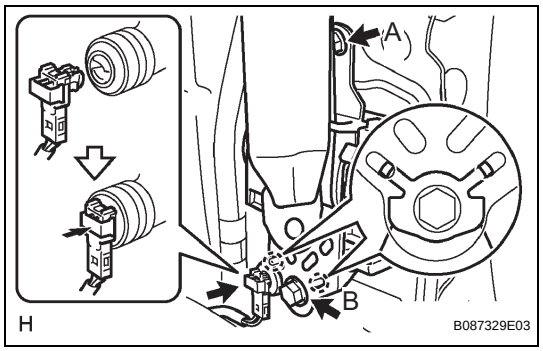

(b) Hook the lower stay of the retractor onto the 2 body hooks.
(c) Tighten bolt A, and then tighten bolt B.
Torque: 8.5 N*m (85 kgf*cm, 75 in.*lbf) for bolt A
42 N*m (430 kgf*cm, 31 ft.*lbf) for bolt B
(d) Connect the pretensioner connector as shown in the illustration.

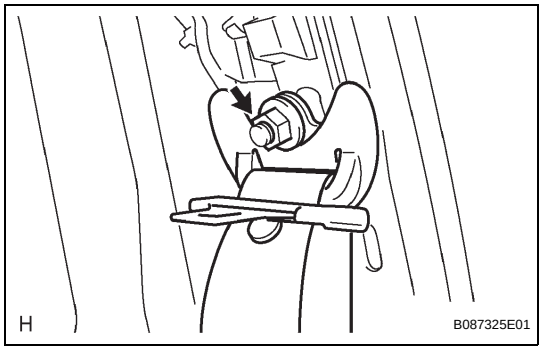

(e) Install the shoulder anchor with the nut.
Torque: 42 N*m (430 kgf*cm, 31 ft.*lbf)
(f) Check that the shoulder anchor rotates smoothly.
(g) Check the ELR lock.
NOTICE:
- **The check should be performed with the front seat outer belt installed.**
- **Do not allow the anchor part of the front seat belt outer and the protruding parts of the floor panel to overlap.**

(1) With the belt installed, check that the belt locks when it is pulled out quickly.
If operation is not as specified, replace the front seat outer belt.

3. **INSTALL QUARTER INSIDE TRIM BOARD (See page IR-48)**
4. **INSTALL QUARTER TRIM LOWER PANEL (See page IR-49)**
5. **INSTALL BACK PANEL TRIM (for Separate Seat Type) (See page IR-49)**
6. **INSTALL JACK ASSEMBLY (for Separate Seat Type)**
7. **INSTALL BACK PANEL UPPER GARNISH (See page IR-50)**
8. **INSTALL BACK PANEL TRIM COVER (See page IR-50)**

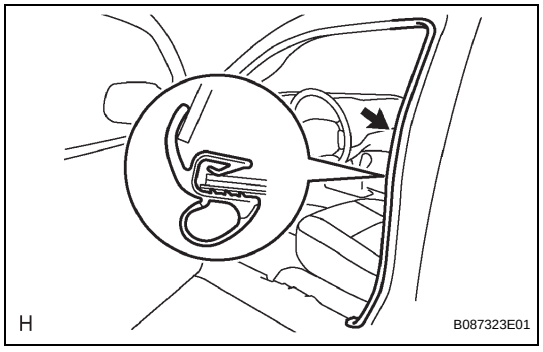

9. **INSTALL FRONT DOOR OPENING TRIM WEATHERSTRIP**
(a) Install the front door opening trim weatherstrip.
10. **INSTALL FRONT DOOR SCUFF PLATE (See page IR-52)**
11. **CONNECT CABLE TO NEGATIVE BATTERY TERMINAL**
Torque: 3.9 N*m (40 kgf*cm, 35 in.*lbf)
12. **INSPECT SRS WARNING LIGHT**
(See page RS-28)

SB

DISPOSAL

HINT:
When scrapping vehicles equipped with a seat belt pretensioner or disposing of a front seat outer belt (with seat belt pretensioner), always first activate the seat belt pretensioner in accordance with the procedures described below. If any abnormality occurs during activation of the seat belt pretensioner, contact the SERVICE DEPARTMENT of TOYOTA MOTOR SALES, U.S.A., INC. When disposing of a front seat outer belt assembly (with seat belt pretensioner) that was activated in a collision, start by step 2-(f) in this section.

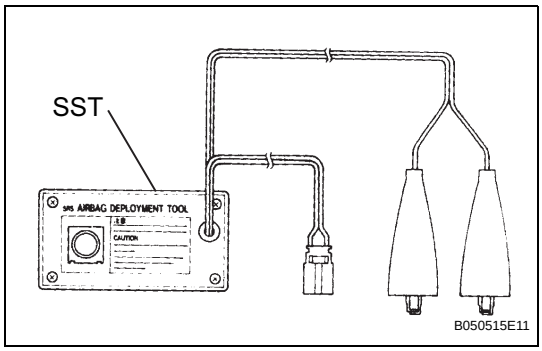

CAUTION:

- **Never dispose of a front seat outer belt assembly that has an inactivated pretensioner.**
- **The seat belt pretensioner produces a loud, exploding sound when it activates. Perform the operation where it will not be a nuisance to persons nearby.**
- **When activating a front seat outer belt (with seat belt pretensioner), stand at least 10 m (33 ft) away from the front seat outer belt.**
- **Use gloves and safety glasses when handling a front seat belt with an activated pretensioner.**
- **Always wash your hands with water after completing activation.**
- **Do not apply water to a front seat outer belt that has an activated pretensioner.**
- **When activating the seat belt pretensioner, always use the specified SST (SRS air bag deployment tool).**
- **Perform operation in a place away from electrical interference.**

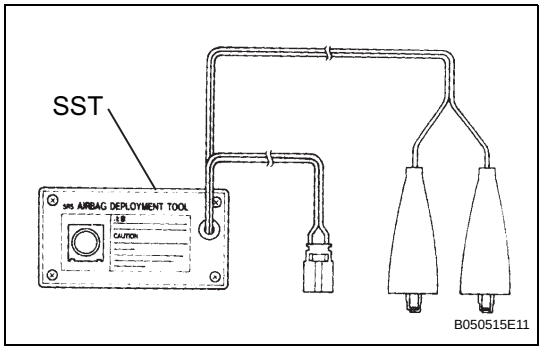

1. DISPOSE OF FRONT SEAT OUTER BELT ASSEMBLY (When Installed in Vehicle)

HINT:
Prepare a battery to power activation of the seat belt pretensioner.

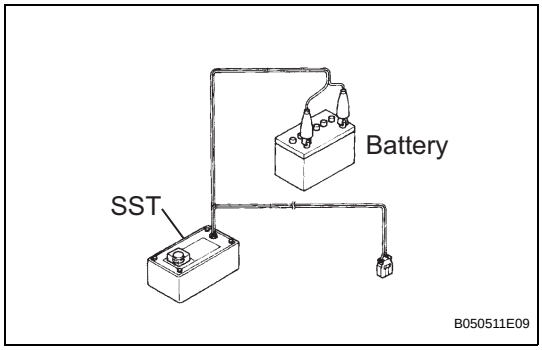

(a) Check whether SST is functioning.
SST 09082-00700, 09082-00770
CAUTION:
When activating the seat belt pretensioner, always use the specified SST.

(1) Connect SST red clip to the battery positive (+) terminal and the black clip to the battery negative (-) terminal.
HINT:
Do not connect the yellow connector. The yellow connector is used to connect to the seat belt pretensioner.

SB

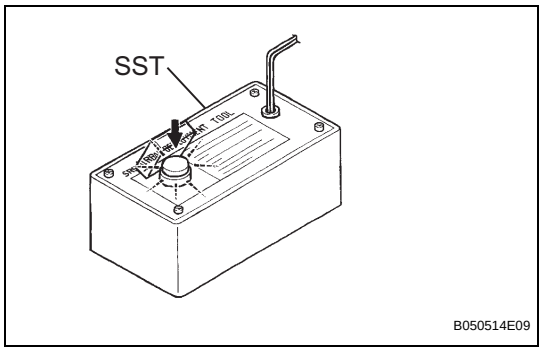

(2) Press SST activation switch and check that the LED of SST activation switch turns on.
CAUTION:
If the LED turns on when the activation switch is not being pressed, SST may be malfunctioning. Do not use SST.

(b) Disconnect SST from the battery.

(c) Disconnect the pretensioner connector.
(1) Disconnect cable from negative battery terminal.
(2) Remove the front door scuff plate (See page SB-27).
(3) Remove the front door opening trim weatherstrip (See page SB-27).
(4) Remove the back panel trim cover (See page SB-27).
(5) Remove the back panel upper garnish (See page SB-27).
(6) Remove the jack (for Separate Seat Type).
(7) Remove the back panel trim cover (for Separate Seat Type) (See page SB-27).
(8) Remove the back panel trim (for Separate Seat Type) (See page SB-27).
(9) Remove the quarter trim lower panel (See page SB-27).

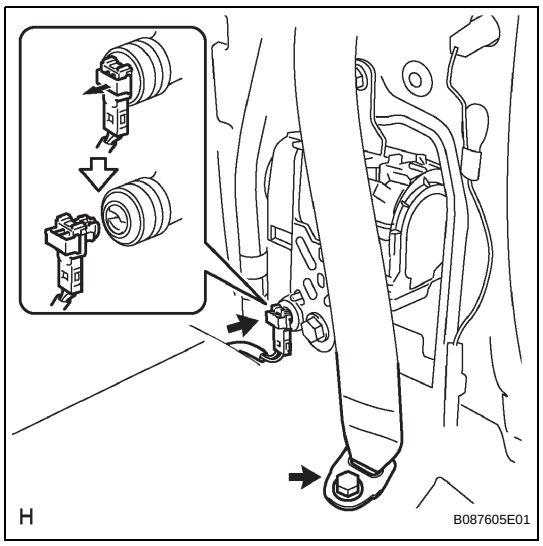

(10) Install the floor anchor with the bolt.
Torque: 42 N*m (430 kgf*cm, 31 ft.*lbf)

(11) Disconnect the pretensioner connector as shown in the illustration.

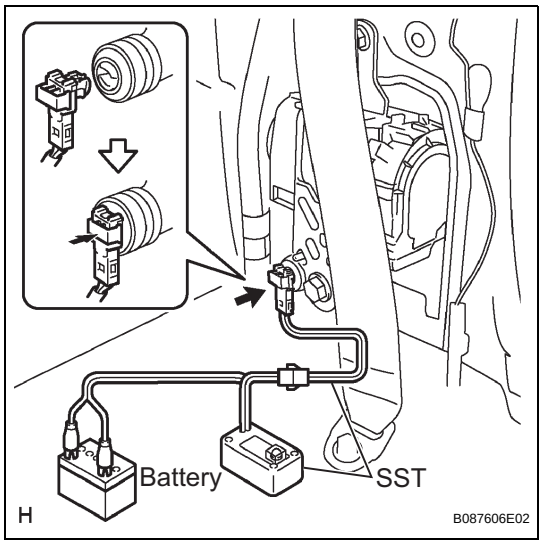

(d) Connect the SST.
(1) Connect SST, then connect the yellow connector to the seat belt pretensioner.
SST 09082-00700, 09082-00770
NOTICE:
To avoid damaging SST connector and wire harness, do not lock the secondary lock of the twin lock.

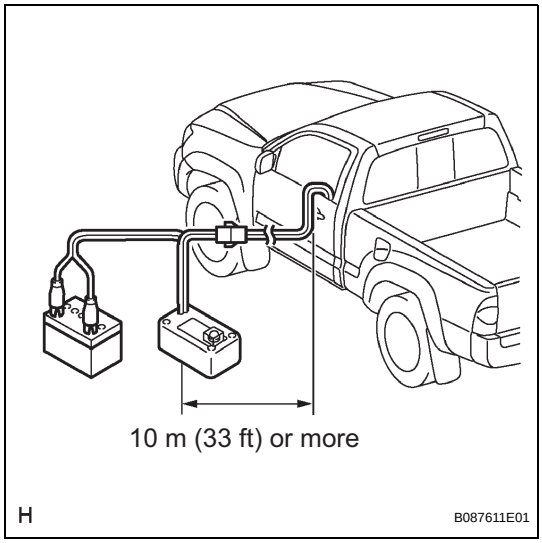

(2) Move SST at least 10 m (33 ft) away from the front of the vehicle.
(3) Close all the doors and windows of the vehicle.
HINT:
Do not close the windows fully. Leave a gap for inserting SST wire harness.
NOTICE:
Take care not to damage SST wire harness.
(4) Connect SST red clip to the battery positive (+) terminal and the black clip to the battery negative (-) terminal.

(e) Activate the seat belt pretensioner.
(1) Confirm that no one is inside the vehicle or within 10 m (33 ft) of the vehicle.
(2) Press SST activation switch and activate the seat belt pretensioner.
HINT:
The seat belt pretensioner operates simultaneously with SST activation switch LED light.

(f) Dispose of the outer belt (with the seat belt pretensioner).
CAUTION:
- **Do not touch the outer belt for at least 30 minutes after the seat belt pretensioner has been activated. It is very hot.**
- **Use gloves and safety glasses when handling an outer belt with a pretensioner that has been activated.**
- **Always wash your hands with water after completing the operation.**
- **Do not apply water to a front seat outer belt that has an activated pretensioner.**

HINT:
When scrapping a vehicle, activate the seat belt pretensioner, and then scrap the vehicle with the activated outer belt still installed.

SB

2. DISPOSE OF FRONT SEAT OUTER BELT ASSEMBLY (When not Installed in Vehicle)

NOTICE:

- **When only disposing of the front seat outer belt (with the seat belt pretensioner), never use the customers vehicle to activate the seat belt pretensioner.**
- **Be sure to follow the procedures listed below when activating the seat belt pretensioner.**

HINT:

Prepare a battery as the power source to activate the seat belt pretensioner.

(a) Remove the front seat outer belt (See page SB-27).

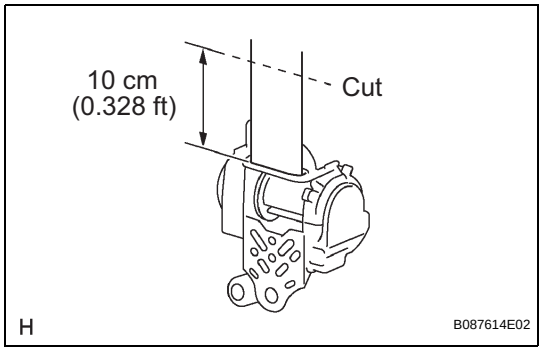

(b) Wind the seat belt with the retractor.

(c) When the seat belt is sufficiently wound, cut the seat belt approximately 10 cm (0.328 ft) from the retractor, as shown in the illustration.

HINT:

The retractor resistance increases in correlation with how much the seat belt is wound.

(d) Check whether SST is functioning (see step 2-(a)).

SST 09082-00700, 09082-00770

CAUTION:

When activating the seat belt pretensioner, always use the specified SST.

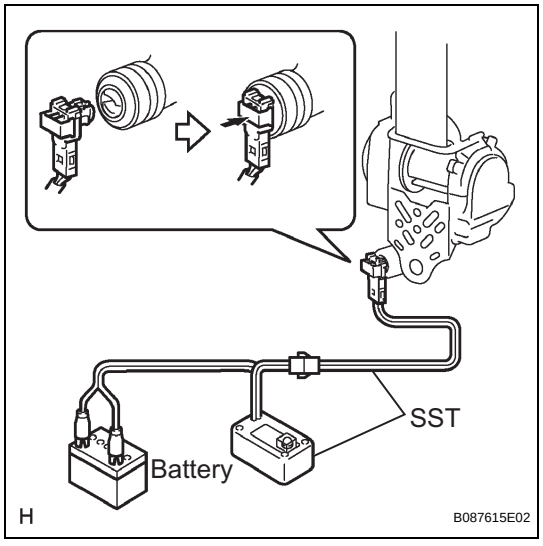

(e) Connect SST.

(1) Connect SST, then connect them to the seat belt pretensioner.

NOTICE:

To avoid damaging SST connector and wire harness, do not lock the secondary lock of the twin lock.

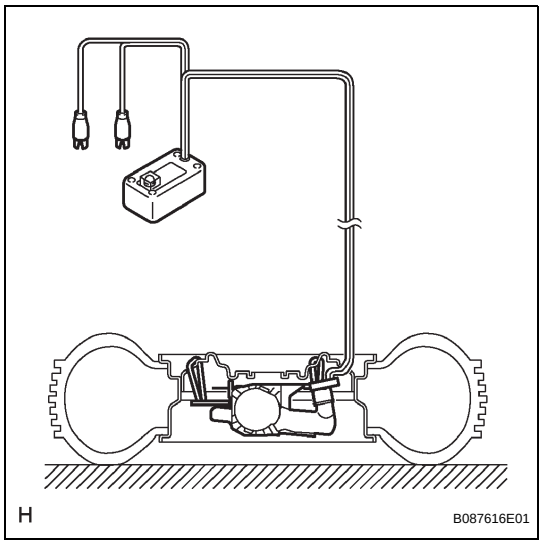

(2) Place the outer belt on the ground and cover it with a tire with a wheel attached.
NOTICE:
Set up the front seat outer belt assembly as shown in the illustration.

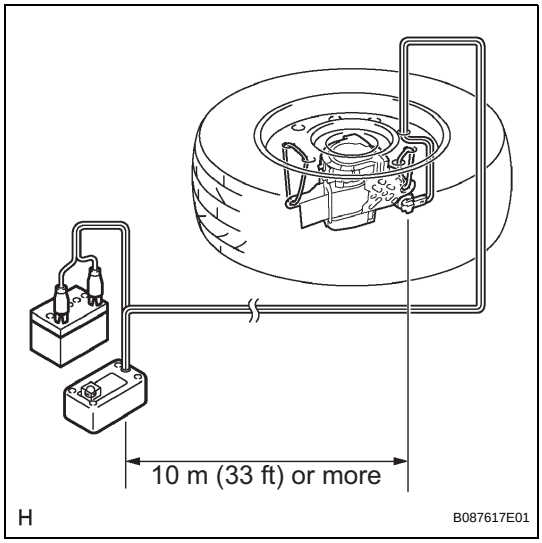

(3) Move SST at least 10 m (33 ft) away from the wheel.
NOTICE:
Take care not to damage SST wire harness.

(f) Activate the seat belt pretensioner.
(1) Connect SST red clip to the battery positive (+) terminal and the black clip to the battery negative (-) terminal.
(2) Check that no one is within 10 m (33 ft) of the wheel.
(3) Press SST activation switch and activate the seat belt pretensioner.
HINT:
The seat belt pretensioner operates simultaneously with SST activation switch LED light.

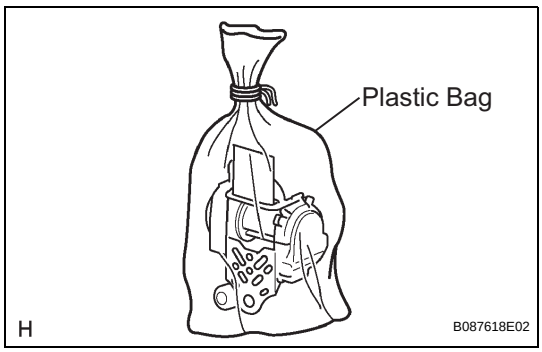

(g) Dispose of the outer belt (with the seat belt pretensioner).
CAUTION:
- **Do not touch the outer belt for at least 30 minutes after the seat belt pretensioner has been activated. It is very hot.**
- **Use gloves and safety glasses when handling an outer belt assembly with a pretensioner that has been activated.**
- **Always wash your hands with water after completing operation.**
- **Do not apply water to an outer belt assembly that has an activated pretensioner.**

(1) Remove the wheel and SST.
(2) Place the outer belt in a plastic bag, tie the end tightly and dispose of it in the same way as other general parts.

SB

INSTALLATION

CAUTION:
Some of these service operations affect the SRS airbag system. Read the precautionary notices concerning the SRS airbag system before servicing (See page RS-1).

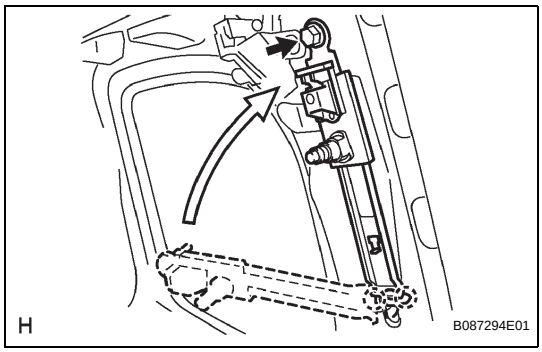

1. INSTALL FRONT SHOULDER BELT ANCHOR ADJUSTER ASSEMBLY

(a) Insert the 2 claws of the front shoulder belt anchor adjuster into the hole in the body and mount the bolt.
Torque: 42 N*m (430 kgf*cm, 31 ft.*lbf)

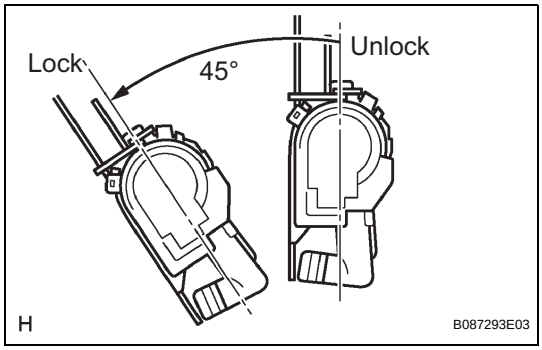

2. INSTALL FRONT SEAT OUTER BELT ASSEMBLY

(a) Check the amount of inclination required to lock the retractor.
(1) Gently incline the retractor from its initial position. Check that the belt does not lock when the retractor is inclined 15° or less in any directions. Also check that the belt locks when the inclination of the retractor is 45° or more.
NOTICE:
Do not disassemble the retractor.
If operation is not as specified, replace the front seat outer belt.

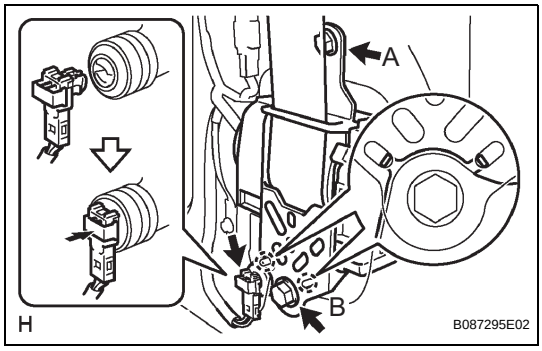

(b) Hook the lower stay of the retractor onto the 2 body hooks.
(c) Tighten bolt A, and then tighten bolt B.
Torque: 8.5 N*m (85 kgf*cm, 75 in.*lbf) for bolt A
42 N*m (430 kgf*cm, 31 ft.*lbf) for bolt B
(d) Connect the pretensioner connector as shown in the illustration.

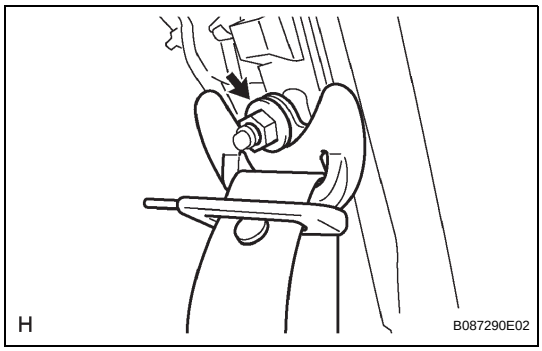

(e) Install the shoulder anchor with the nut.
Torque: 42 N*m (430 kgf*cm, 31 ft.*lbf)
(f) Check that the shoulder anchor rotates smoothly.

SB

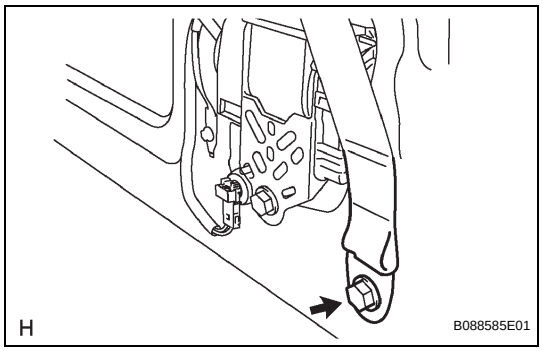

(g) Install the floor anchor of the front seat outer belt with the bolt.
(h) Check the ELR lock.
NOTICE:
- **The check should be performed with the front seat outer belt installed.**
- **Do not allow the anchor part of the front seat belt outer and the protruding parts of the door panel to overlap.**

(1) With the belt installed, check that the belt locks when it is pulled out quickly.
If operation is not as specified, replace the front seat outer belt.

(i) Remove the bolt and floor anchor.

3. INSTALL ACCESS PANEL INSIDE HANDLE SUB-ASSEMBLY (See page ED-62)

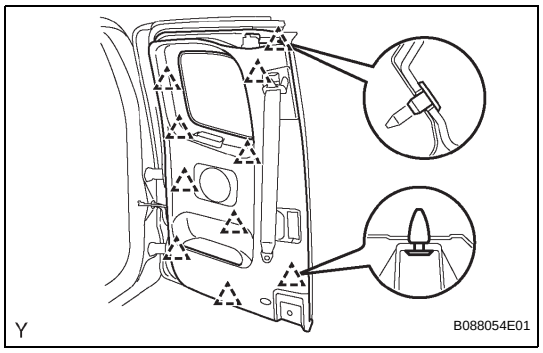

4. INSTALL REAR DOOR TRIM BOARD SUB-ASSEMBLY
(a) Engage the 9 clips and install the rear door trim board.
(b) Install the clip.

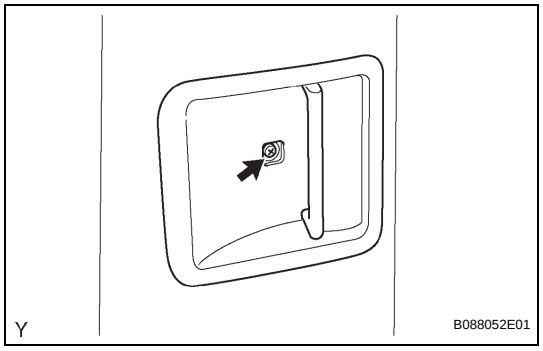

5. INSTALL ACCESS PANEL INSIDE HANDLE BEZEL
(a) Install the access panel inside handle bezel with the screw.
(b) Close the cover.

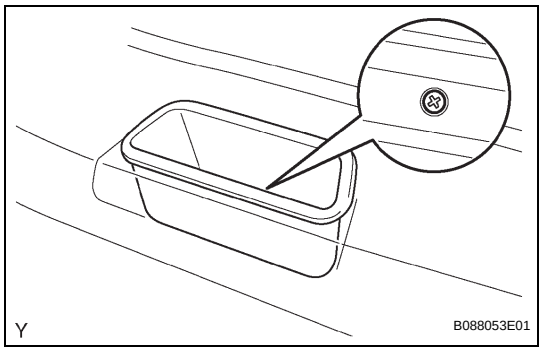

6. INSTALL DOOR PULL HANDLE
(a) Install the door pull handle with the screw.

7. INSTALL LAP BELT OUTER ANCHOR COVER (See page ED-63)

8. INSTALL ACCESS PANEL REAR WEATHERSTRIP (See page ED-64)

9. CONNECT CABLE TO NEGATIVE BATTERY TERMINAL
Torque: 3.9 N*m (40 kgf*cm, 35 in.*lbf)

10. INSPECT SRS WARNING LIGHT
(See page RS-28)

SB

DISPOSAL

HINT:
When scrapping vehicles equipped with a seat belt pretensioner or disposing of a front seat outer belt (with seat belt pretensioner), always first activate the seat belt pretensioner in accordance with the procedures described below. If any abnormality occurs during activation of the seat belt pretensioner, contact the SERVICE DEPARTMENT of TOYOTA MOTOR SALES, U.S.A., INC. When disposing of a front seat outer belt assembly (with seat belt pretensioner) that was activated in a collision, start by step 2-(f) in this section.

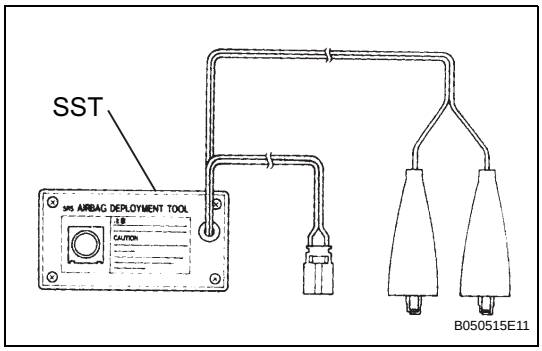

CAUTION:

- **Never dispose of a front seat outer belt assembly that has an inactivated pretensioner.**
- **The seat belt pretensioner produces a loud, exploding sound when it activates. Perform the operation where it will not be a nuisance to persons nearby .**
- **When activating a front seat outer belt (with seat belt pretensioner), stand at least 10 m (33 ft) away from the front seat outer belt.**
- **Use gloves and safety glasses when handling a front seat belt with an activated pretensioner.**
- **Always wash your hands with water after completing activation.**
- **Do not apply water to a front seat outer belt that has an activated pretensioner.**
- **When activating the seat belt pretensioner, always use the specified SST (SRS air bag deployment tool).**
- **Perform operation in a place away from electrical interference.**

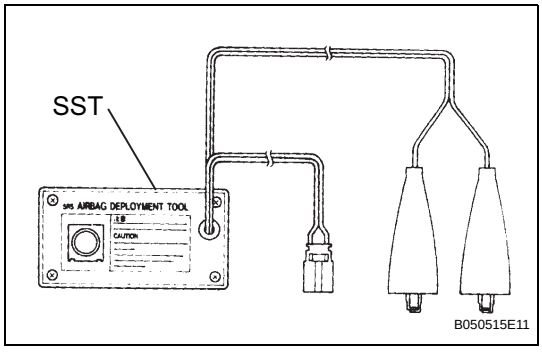

1. DISPOSE OF FRONT SEAT OUTER BELT ASSEMBLY (When Installed in Vehicle)

HINT:
Prepare a battery to power activation of the seat belt pretensioner.

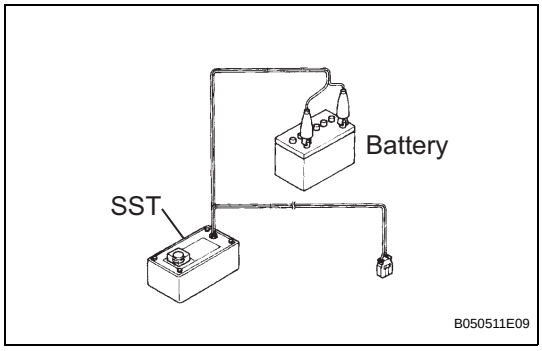

(a) Check whether SST is functioning.
SST 09082-00700, 09082-00770
CAUTION:
When activating the seat belt pretensioner, always use the specified SST.

(1) Connect SST red clip to the battery positive (+) terminal and the black clip to the battery negative (-) terminal.
HINT:
Do not connect the yellow connector. The yellow connector is used to connect to the seat belt pretensioner.

SB

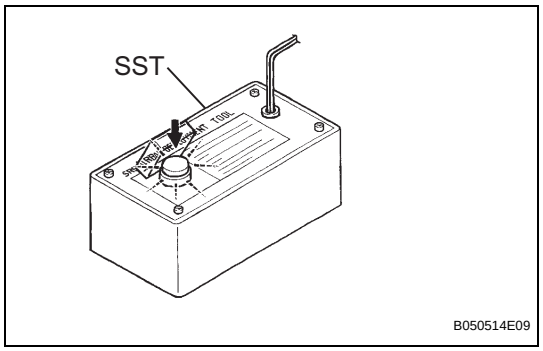

(2) Press SST activation switch and check that the LED of SST activation switch turns on.
CAUTION:
If the LED turns on when the activation switch is not being pressed, SST may be malfunctioning. Do not use SST.

(b) Disconnect SST from the battery.

(c) Disconnect the pretensioner connector.
(1) Disconnect cable from negative battery terminal.
(2) Remove the access panel rear weatherstrip (See page SB-36).
(3) Remove the lap belt outer anchor cover (See page SB-36).
(4) Remove the door pull handle (See page SB-36).
(5) Remove the access panel inside handle bezel (See page SB-36).
(6) Remove the rear door trim board (See page SB-37).

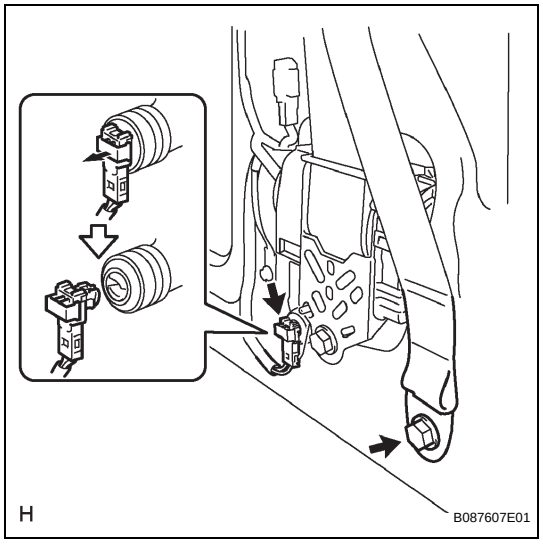

(7) Install the floor anchor with the bolt.
Torque: 42 N*m (430 kgf*cm, 31 ft.*lbf)
(8) Disconnect the pretensioner connector as shown in the illustration.

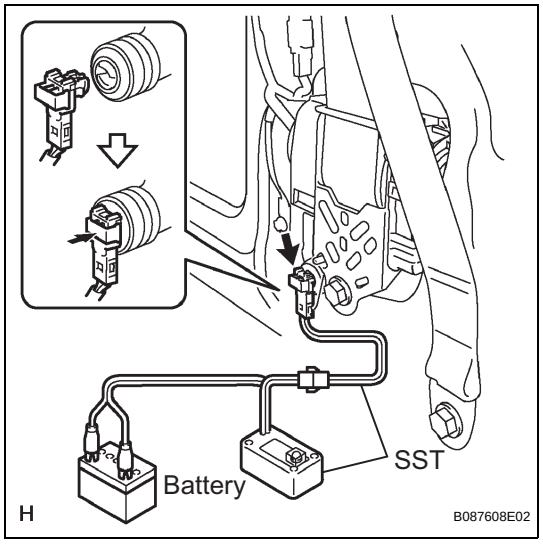

(d) Connect the SST.
(1) Connect SST, then connect the yellow connector to the seat belt pretensioner.
SST 09082-00700, 09082-00770
NOTICE:
To avoid damaging SST connector and wire harness, do not lock the secondary lock of the twin lock.

SB

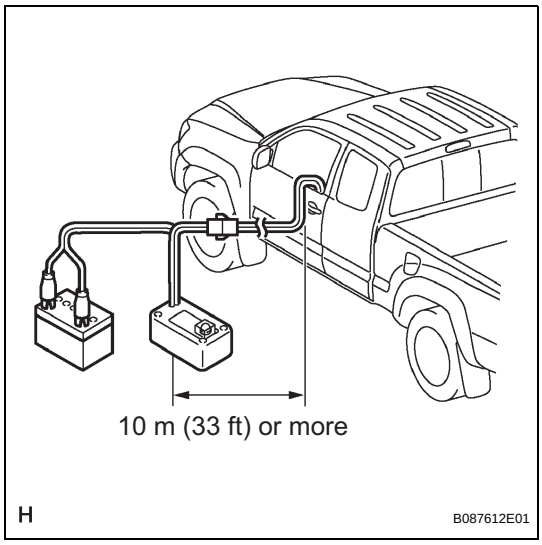

(2) Move SST at least 10 m (33 ft) away from the front of the vehicle.
(3) Close all the doors and windows of the vehicle.
HINT:
Do not close the windows fully. Leave a gap for inserting SST wire harness.
NOTICE:
Take care not to damage SST wire harness.
(4) Connect SST red clip to the battery positive (+) terminal and the black clip to the battery negative (-) terminal.

(e) Activate the seat belt pretensioner.
(1) Confirm that no one is inside the vehicle or within 10 m (33 ft) of the vehicle.
(2) Press SST activation switch and activate the seat belt pretensioner.
HINT:
The seat belt pretensioner operates simultaneously with SST activation switch LED light.

(f) Dispose of the outer belt (with the seat belt pretensioner).
CAUTION:
- **Do not touch the outer belt for at least 30 minutes after the seat belt pretensioner has been activated. It is very hot.**
- **Use gloves and safety glasses when handling an outer belt with a pretensioner that has been activated.**
- **Always wash your hands with water after completing the operation.**
- **Do not apply water to a front seat outer belt that has an activated pretensioner.**

HINT:
When scrapping a vehicle, activate the seat belt pretensioner, and then scrap the vehicle with the activated outer belt still installed.

2. DISPOSE OF FRONT SEAT OUTER BELT ASSEMBLY (When not Installed in Vehicle)
NOTICE:
- **When only disposing of the front seat outer belt (with the seat belt pretensioner), never use the customers vehicle to activate the seat belt pretensioner.**
- **Be sure to follow the procedures listed below when activating the seat belt pretensioner.**

HINT:
Prepare a battery as the power source to activate the seat belt pretensioner.
(a) Remove the front seat outer belt (See page SB-36).

SB

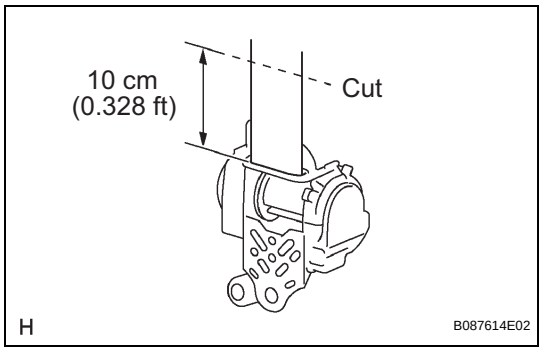

(b) Wind the seat belt with the retractor.
(c) When the seat belt is sufficiently wound, cut the seat belt approximately 10 cm (0.328 ft) from the retractor, as shown in the illustration.
HINT:
The retractor resistance increases in correlation with how much the seat belt is wound.

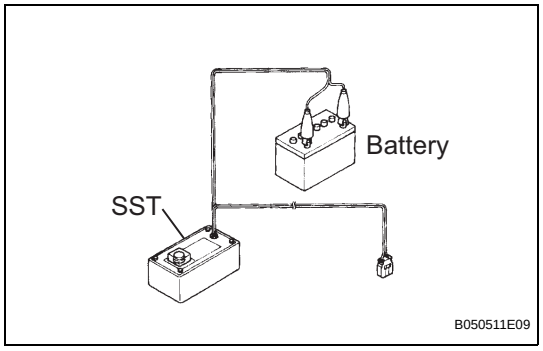

(d) Check whether SST is functioning (see step 2-(a)).
SST 09082-00700, 09082-00770
CAUTION:
When activating the seat belt pretensioner, always use the specified SST.

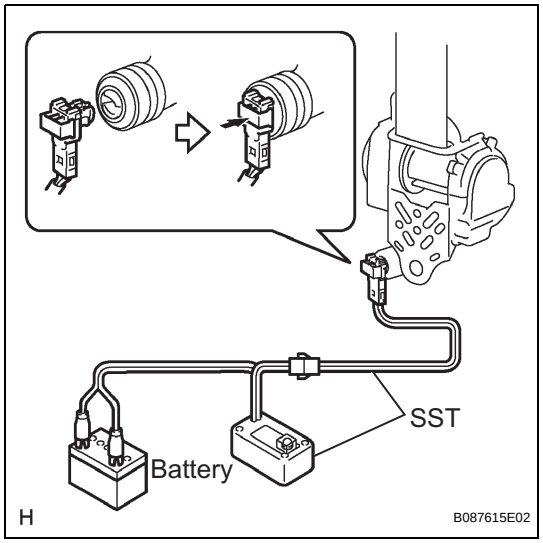

(e) Connect SST.
(1) Connect SST, then connect them to the seat belt pretensioner.
NOTICE:
To avoid damaging SST connector and wire harness, do not lock the secondary lock of the twin lock.

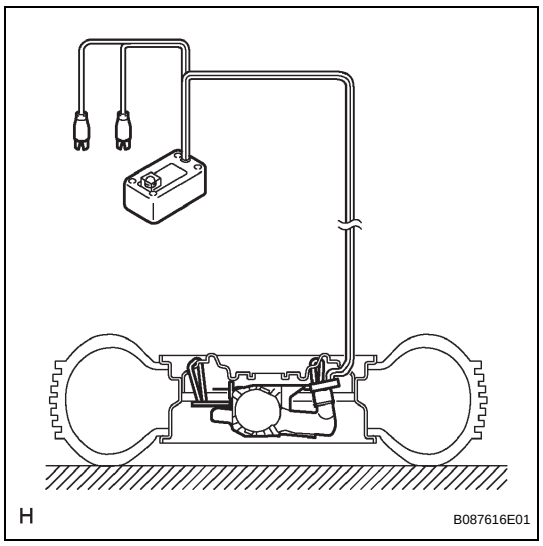

(2) Place the outer belt on the ground and cover it with a tire with a wheel attached.
NOTICE:
Set up the front seat outer belt assembly as shown in the illustration.

SB

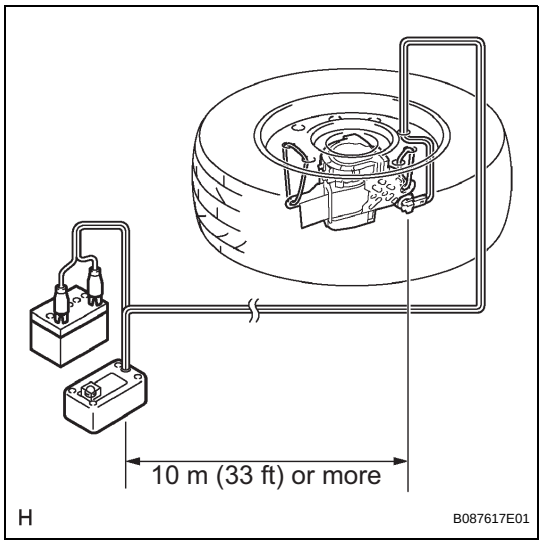

(3) Move SST at least 10 m (33 ft) away from the wheel.
NOTICE:
Take care not to damage SST wire harness.

(f) Activate the seat belt pretensioner.
(1) Connect SST red clip to the battery positive (+) terminal and the black clip to the battery negative (-) terminal.
(2) Check that no one is within 10 m (33 ft) of the wheel.
(3) Press SST activation switch and activate the seat belt pretensioner.
HINT:
The seat belt pretensioner operates simultaneously with SST activation switch LED light.

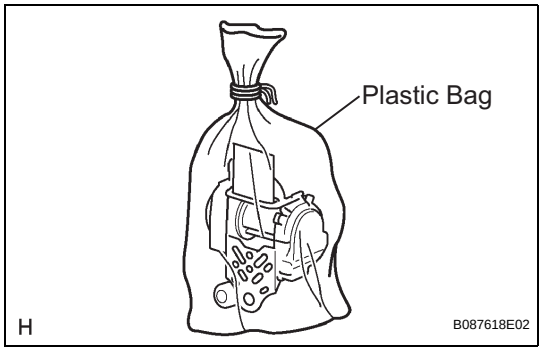

(g) Dispose of the outer belt (with the seat belt pretensioner).
CAUTION:
- **Do not touch the outer belt for at least 30 minutes after the seat belt pretensioner has been activated. It is very hot.**
- **Use gloves and safety glasses when handling an outer belt assembly with a pretensioner that has been activated.**
- **Always wash your hands with water after completing operation.**
- **Do not apply water to an outer belt assembly that has an activated pretensioner.**

(1) Remove the wheel and SST.
(2) Place the outer belt in a plastic bag, tie the end tightly and dispose of it in the same way as other general parts.

REGISTRATION

1. DESCRIPTION OF CODE REGISTRATION

(a) When adding master keys and sub-keys (additional registration).

(1) Register the key code (immobiliser code) in the transponder key ECU assembly.

Target ECU	See step
Transponder key ECU assembly	Procedure "A"

(b) When replacing the transponder key ECU assembly (new registration):

(1) Register the key code (immobiliser code) in the transponder key ECU assembly.

Target ECU	See step
Transponder key ECU assembly	Procedure "B"

(2) Register the ECU COMMUNICATION ID between the ECM and the transponder key ECU assembly.

Target ECU	See step
ECM	Procedure "C"

(c) When replacing the ECM:

(1) Register the ECU COMMUNICATION ID between the ECM and the transponder key ECU assembly.

Target ECU	See step
Transponder key ECU assembly	Procedure "C"

(d) Erasure of key code:

(1) Erasure the key code.

Target ECU	See step
Transponder key ECU assembly	Procedure "D"

2. KEY REGISTRATION IN AUTOMATIC REGISTRATION (PROCEDURE "B")

(a) When an ignition key is inserted into the ignition cylinder, the key code (immobiliser code) registration is automatic. In this mode, a maximum of 4 key codes for 3 master keys and 1 sub-key can be registered. Any order of registration for the master keys and sub-keys is fine because the transponder key ECU assembly can distinguish the types of keys.

HINT:

- When a new transponder key ECU assembly is installed, key codes (immobiliser codes) must be registered with ignition keys.
- New transponder key ECU assemblies are automatically set to automatic key code registration mode.

Automatic Key Code Registration (New Registration)

Procedure	Security Indicator Condition
1. Start (Procedure "E")	Blinking occurs until the first key is inserted.

Procedure	Security Indicator Condition
2. Insert the key into the ignition key cylinder.	ON
3. Registration begins. HINT: The registration will be completed approx. 1 second after the key is inserted.	OFF HINT: Approx. 1 second
4. Remove the key.	ON HINT: When the maximum number of the key codes is registered, the security indicator remains off until the last key registered is removed. After it is removed, the security indicator starts blinking.
5. Register another key? Yes: Go to procedure "E". No: Go to procedure "F".	
6. End (Procedure "F")	

HINT:

- When no key is inserted in the ignition key cylinder in automatic key code registration mode, the security indicator remains ON.
- When the immobiliser system is operating normally and the key is pulled out, the security indicator blinks continuously.

- If the key code registration has failed in automatic key code registration mode, code 2-1 will be output from the security indicator. Trying to re-register an already registered key will cause code 2-2 to be output when the key is inserted. If the number of registered key codes exceeds the limit, code 2-3 will be output from the security indicator. The output details are shown below.

Security Indicator:

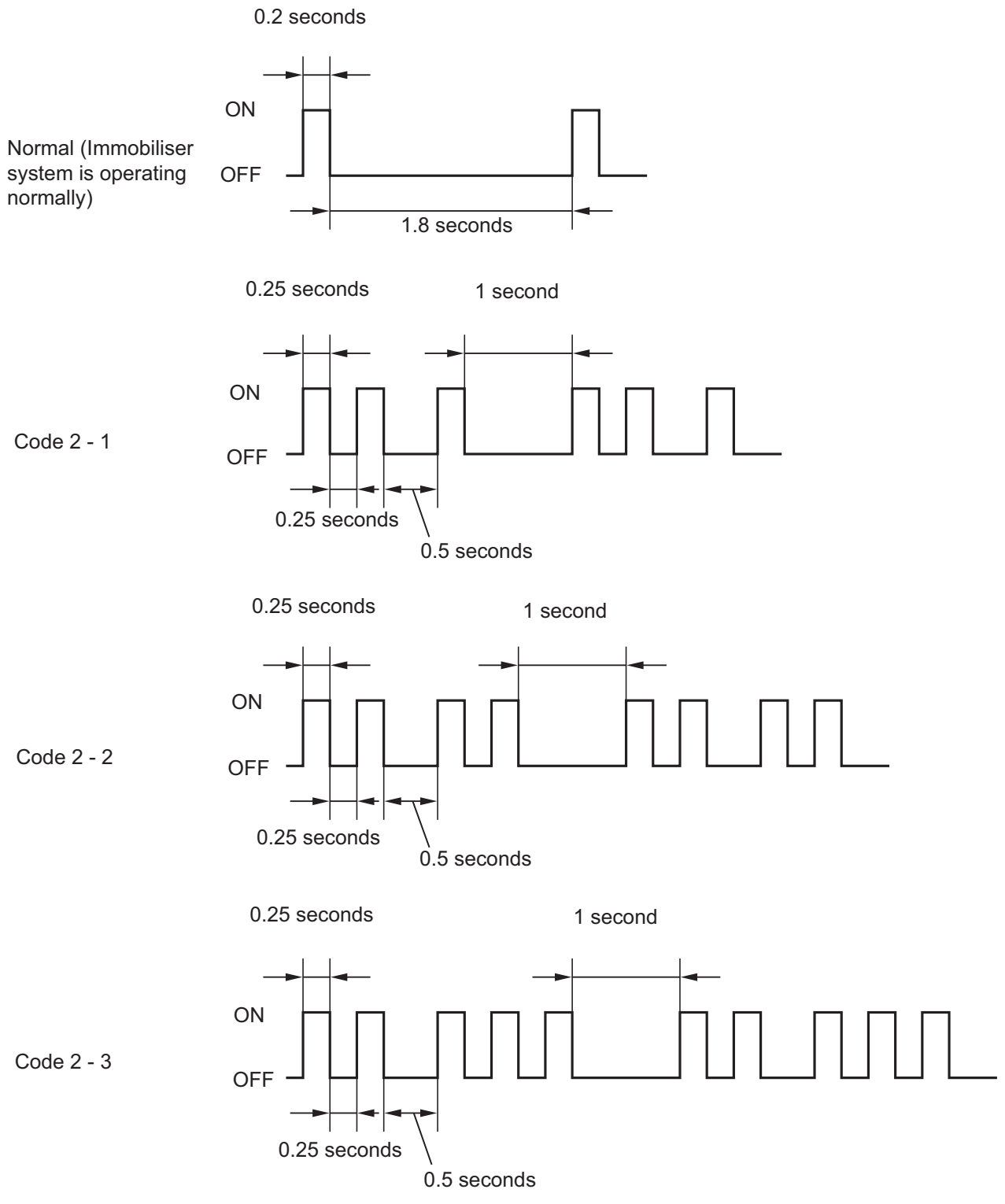

HINT:
The automatic key code registration mode can be forced to end when 1 or more key codes (immobiliser code) for the master key has been registered.

EI

(b) Finish the automatic key code registration mode. The automatic key code registration mode can be forced to end when at least 1 key code for the master key has been registered.
(1) Turn the ignition switch ON and OFF 5 times within 10 seconds using the already registered master key.

3. PERFORM REGISTRATION OF ADDITIONAL KEY (PROCEDURE "A")

(a) Register an additional key by using the intelligent tester.
HINT:
- A maximum of 5 master key codes and 3 sub-key codes can be registered.
- Registration mode will end if each step is not completed within the specified time.
- When the ignition cylinder or the key cylinder set is replaced, remove the transmitter module from the original master key. Then install this transmitter module to a new key and use the new key as the master key. If necessary, use this master key to register other keys.

NOTICE:
When the ignition key cylinder has been replaced, locking and unlocking doors is possible with the new master key's transmitter module (taken from the original master key). However, the new master key will not be able to lock and unlock doors through the door key cylinder. Keep the original master key. If the new master key's transmitter module's battery fails, the original master key can be used to lock and unlock doors through the door key cylinder.

Additional Registration

Procedure	Time (Completion of operation)	Security indicator Condition
1. Start	-	The indicator will blink until the first key is inserted.
2. Insert the already registered master key in the ignition key cylinder and turn the ignition switch on.		
3. Intelligent tester operation: (1) Select IMMOBILISER. (2) Select ID UTILITY. (3) Select TRANS CODE REG. HINT: After completing the above operation, proceed to the next step in accordance with the prompts on the tester screen.	Within 120 seconds	OFF
4. Remove the master key.	Within 20 seconds of the instruction on the tester.	ON
5. Insert the key to be registered in the ignition key cylinder.	Within 10 seconds	
6. After 60 sec. the key is registered. HINT: Security indicator goes off.	-	Blinking
7. Next		OFF
8. End		

EI

HINT:

- A brief outline of the procedures for key code registration is shown on this page. For more detailed information, please refer to the intelligent tester screen's instructions.
- When the immobiliser system is operating normally and the key is pulled out, the security indicator blinks continuously.
- If the key code registration has failed in automatic key code registration mode, code 2-1 will be output from the security indicator. Trying to re-register an already registered key will cause code 2-2 to be output when the key is inserted. If the number of registered key codes exceeds the limit, code 2-3 will be output from the security indicator. The output details are shown in step 2 (new registration).

4. ERASURE OF KEY CODE (PROCEDURE "D")

(a) Erase key codes using the intelligent tester.

HINT:

- All key codes are erased except for the master key, which is used for erasing the key codes. In order to use a key whose code has been erased, a new key code must be registered.
- Registration will be cancelled if each step is not completed within the specified time.
- Conduct this operation with the driver door closed.

Erasing Key Code

Procedure	Time (Completion of operation)	Security Indicator Condition
1. Start	-	The indicator will blink until the first key is inserted.
2. Insert the already registered master key in the ignition key cylinder and turn the ignition switch on.		
3. Intelligent tester operation: (1) Select IMMOBILISER. (2) Select ID UTILITY. Select TRANS CODE REG. HINT: After completing the above operation, proceed to the next step in accordance with the prompts on the tester screen.	Within 120 seconds	OFF
4. Remove the master key.	Within 10 seconds of the instruction on the tester.	ON for 1 sec. then OFF
5. Next	-	Blinking
6. End		

HINT:

- A brief outline of procedures for key code erasure is shown on this page. For more detailed information, please refer to the intelligent tester screen's instructions.
- When the immobiliser system is operating normally and the key is pulled out, the security indicator blinks continuously.

EI

5. REGISTRATION OF ECU COMMUNICATION ID (PROCEDURE "C")

NOTICE:

- **The ECU COMMUNICATION ID should be registered when the transponder key ECU assembly and/or the ECM is replaced in order to match these ECM COMMUNICATION ID**
- **The engine cannot be started unless the ECM COMMUNICATION ID matches.**

(a) Register the ECU communication ID

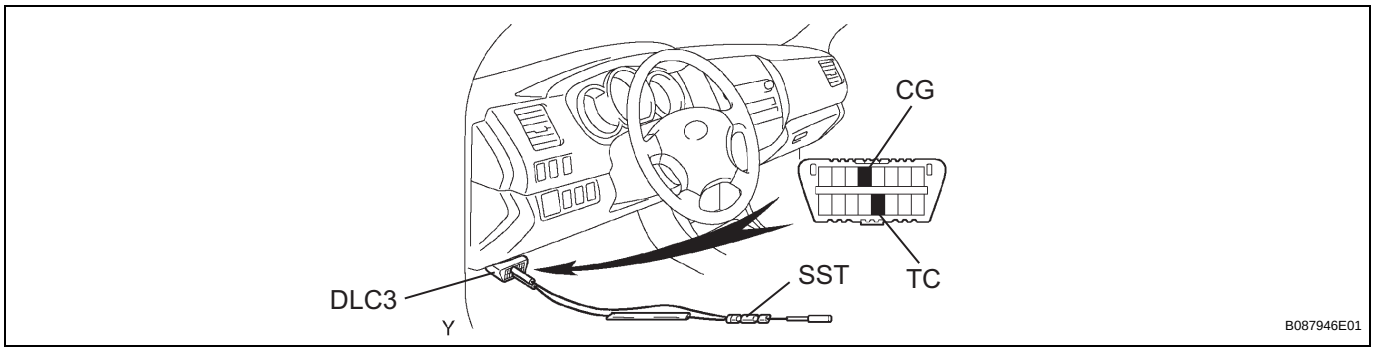

(1) Before operation, make sure that no key is in the ignition key cylinder.
(2) Using SST, connect terminals TC and CG of the DLC3. SST 09843-18040
(3) Insert a key, of which the key code has already been registered, into the ignition key cylinder.
(4) Turn the ignition switch ON (do not start the engine) and leave it as is for 30 minutes.
(5) Turn the ignition switch OFF and disconnect terminals TC and CG.
(6) Check that the engine starts.
HINT:
After the engine has been started, delete DTC 2799 (indicating immobiliser communication failures in the ECM) by following either one of the operations below with the ignition switch OFF:
    - Delete the DTC using intelligent tester.
    - Disconnect the negative battery cable from the battery terminal for at least 30 seconds.

PROBLEM SYMPTOMS TABLE

Immobiliser function

Symptom	Suspected area	See page
Engine does not start	ECU power source circuit	EI-37
	Transponder key ECU assembly	EI-13
	SFI system (2TR-FE)	ES-29
	SFI system (1GR-FE)	ES-28

TERMINALS OF ECU

1. CHECK TRANSPONDER KEY AMPLIFIER

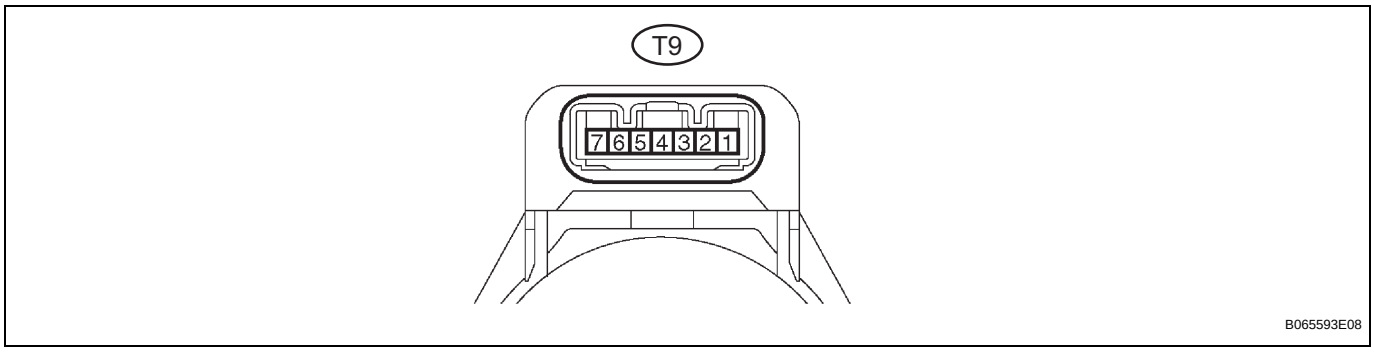

(a) Disconnect the T9 amplifier connector.
(b) Measure the resistance of the wire harness side connector.

Standard resistance:

Symbols (Terminal No.)	Wiring Color	Terminal Description	Condition	Specified Condition
AGND (T9-7) - Body ground	L - Body ground	Ground	Always	Below 1 Ω

If the result is not as specified, there may be a malfunction on the wire harness side.
(c) Reconnect the T9 amplifier connector.
(d) Measure the resistance and voltage of the connector.

Standard:

Symbols (Terminal No.)	Wiring Color	Terminal Description	Condition	Specified Condition
VC5 (T9-1) - AGND(T9-7)	GR-B - L	Power source	No key in ignition key cylinder	0 V
VC5 (T9-1) - AGND(T9-7)	GR-B - L	Power source	Key inserted	4.6 to 5.4 V
CODE (T9-4) - AGND (T9-7)	P-G - L	Demodulated signal of key code data	No key in ignition key cylinder → Key inserted	Pulse generation (see waveform 1)
TXCT (T9-5) - AGND (T9-7)	LG-R - L	Key code output signal	No key in ignition key cylinder → Key inserted	Pulse generation (see waveform 2)
AGND (T9-7) - Body ground	L - Body ground	Ground	Always	Below 1 Ω

If the result is not as specified, there may be a malfunction on the amplifier.

(e) Inspect using an oscilloscope.
(1) Waveform 1

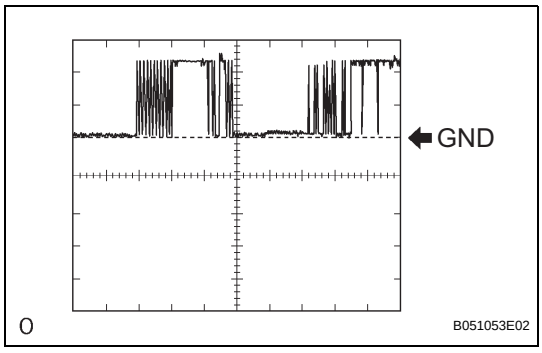

Terminal	CODE (T9-4) - AGND (T9-7)
Tool Setting	2 V/DIV., 20 msec/DIV.
Condition	No key in ignition key cylinder → Key inserted

EI

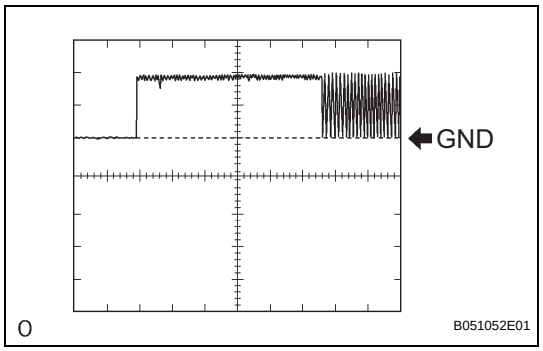

(2) Waveform 2

Terminal	TXCT (T9-5) - AGND (T9-7)
Tool Setting	2 V/DIV., 20 msec/DIV.
Condition	No key in ignition key cylinder → Key inserted

2. CHECK TRANSPONDER KEY ECU ASSEMBLY

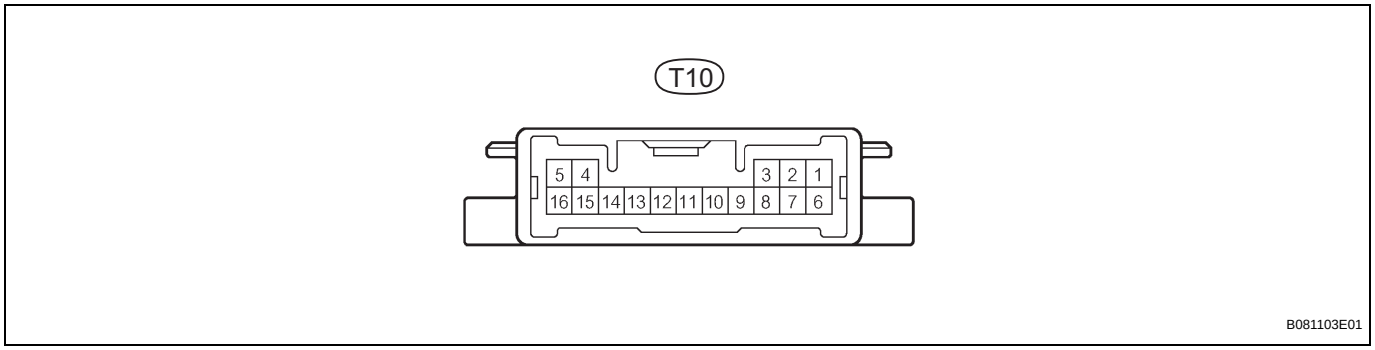

(a) Disconnect the T10 ECU connector.
(b) Measure the resistance and voltage of the wire harness side connector.

Standard:

Symbols (Terminal No.)	Wiring Color	Terminal Description	Condition	Specified Condition
GND (T10-16) - Body ground	W-B - Body ground	Ground	Always	Below 1 Ω
+B (T10-1) - GND (T10-16)	R - W-B	Battery	Always	10 to 14 V
IG (T10-2) - GND (T10-16)	O - W-B	Ignition switch	Ignition switch OFF	0 V
IG (T10-2) - GND (T10-16)	O - W-B	Ignition switch	Ignition switch ON	10 to 14 V
KSW (T10-3) - AGND (T10-5)	G-B - L	Unlock warning switch	No key in ignition key cylinder	10 kΩ or higher
KSW (T10-3) - AGND (T10-5)	G-B - L	Unlock warning switch	Key inserted	Below 1Ω

If the result is not as specified, there may be a malfunction on the wire harness side.
(c) Reconnect the T10 ECU connector.
(d) Measure the voltage of the connector.

Standard voltage:

Symbols (Terminal No.)	Wiring Color	Terminal Description	Condition	Specified Condition
VC5 (T10-14) - GND (T10-16)	GR-B - W-B	Power source	No key in ignition key cylinder	0 V
VC5 (T10-14) - GND (T10-16)	GR-B - W-B	Power source	Key inserted	4.6 to 5.4 V
TXCT (T10-4) - GND (T10-16)	LG-R - W-B	Transponder key amplifier communication signal	No key in ignition key cylinder → Key inserted	Pulse generation (see waveform 1)
CODE (T10-15) - GND (T10-16)	P-G - W-B	Transponder key amplifier communication signal	No key in ignition key cylinder → Key inserted	Pulse generation (see waveform 2)
EFIO (T10-13) - GND (T10-16)	L-W - W-B	ECM output signal	Ignition switch OFF → ON	Pulse generation (see waveform 3)
EFII (T10-12) - GND (T10-16)	LG-B - W-B	ECM input signal	Ignition switch OFF → ON	Pulse generation (see waveform 4)

If the result is not as specified, there may be a malfunction on the ECU.

(e) Inspect using an oscilloscope.

(1) Waveform 1

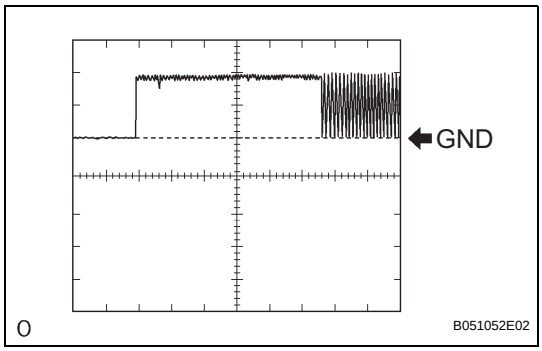

Terminal	TXCT (T10-4) - GND (T10-16)
Tool Setting	2.5 V/DIV., 20 msec/DIV.
Condition	No key in ignition key cylinder → Key inserted

(2) Waveform 2 (Reference)

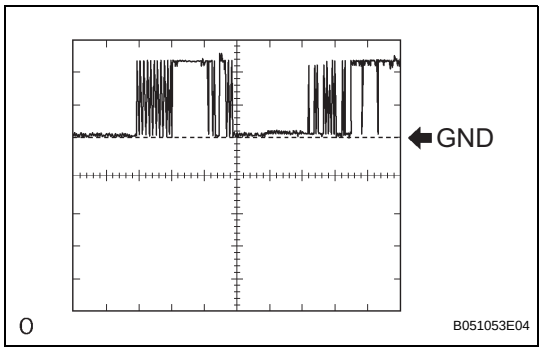

Terminal	CODE (T10-15) - GND (T10-16)
Tool Setting	2.5 V/DIV., 20 msec/DIV.
Condition	No key in ignition key cylinder → Key inserted

(3) Waveform 3

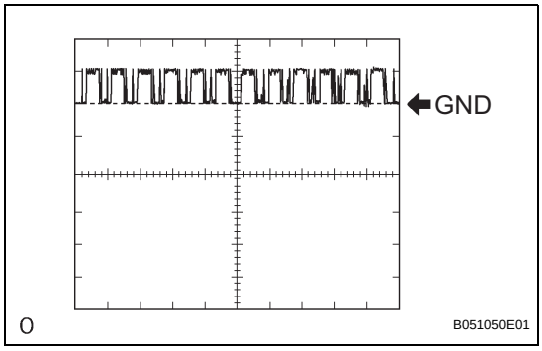

Terminal	EFIO (T10-13) - GND (T10-16)
Tool Setting	12 V/DIV., 100 msec/DIV.
Condition	Ignition switch OFF → ON

(4) Waveform 4

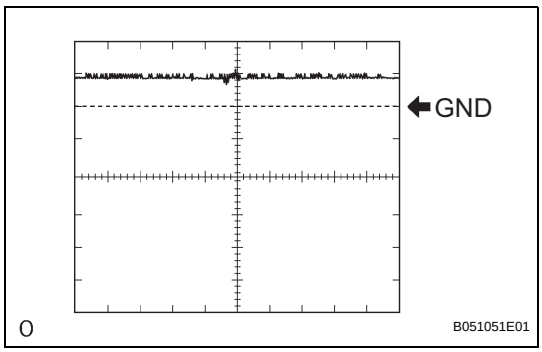

Terminal	EFII (T10-12) - GND (T10-16)
Tool Setting	10 V/DIV., 100 msec/DIV.
Condition	Ignition switch OFF → ON

3. CHECK ECM (2TR-FE)

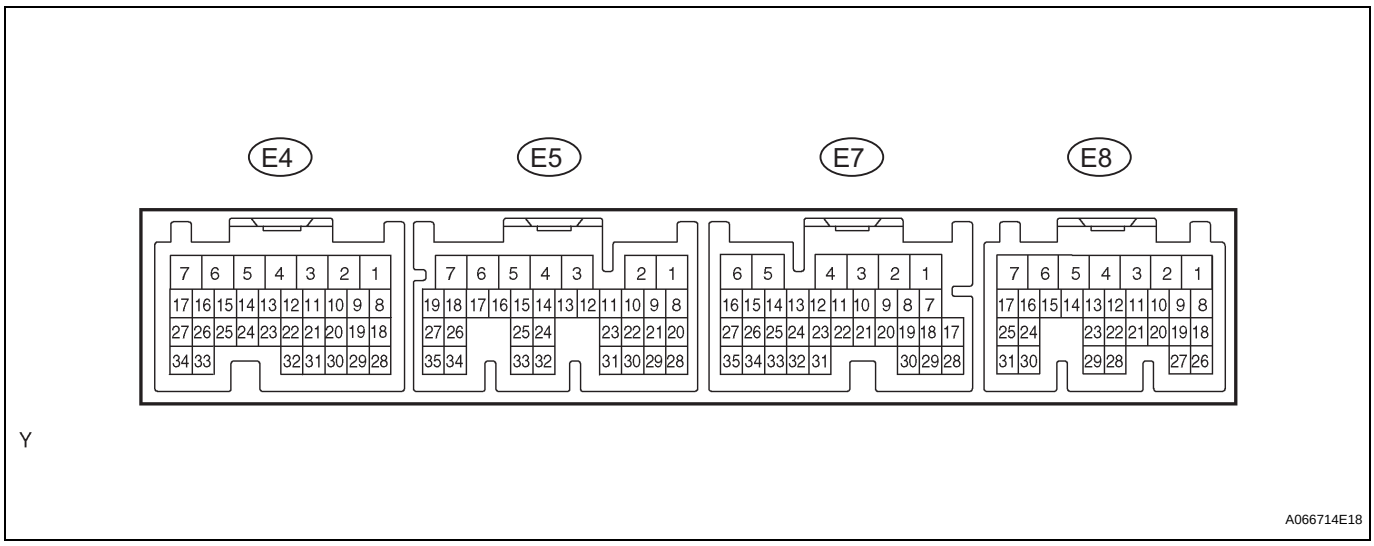

(a) Disconnect the E7 and E8 ECM connectors.
(b) Measure the resistance and voltage of the wire harness side connector.

Standard:

Symbols (Terminal No.)	Wiring Color	Terminal Description	Condition	Specified Condition
IMI (E7-16) - EOM (E8-29)	L-W - W-B	Transponder key ECU input signal	Ignition switch OFF → ON	Pulse generation (see waveform 1)
IMO (E7-15) - EOM (E8-29)	LG-B - W-B	Transponder key ECU output signal	Ignition switch OFF → ON	Pulse generation (see waveform 2)
EOM (E8-29) - Body ground	W-B - Body ground	Ground	Always	Below 1 Ω

If the result is not as specified, the ECM may have a malfunction.

(c) Inspect using an oscilloscope.
(1) Waveform 1

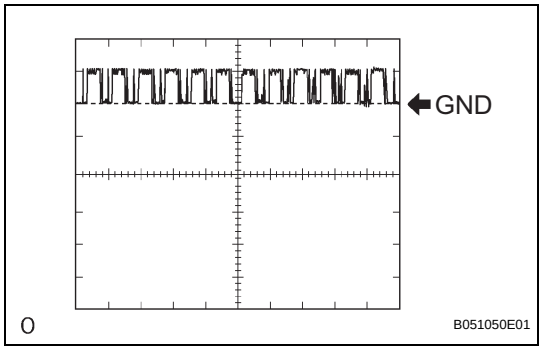

Terminal	IMI (E7-16) - EOM (E8-29)
Tool Setting	12 V/DIV., 100 msec/DIV.
Condition	Ignition switch OFF → ON

(2) Waveform 2

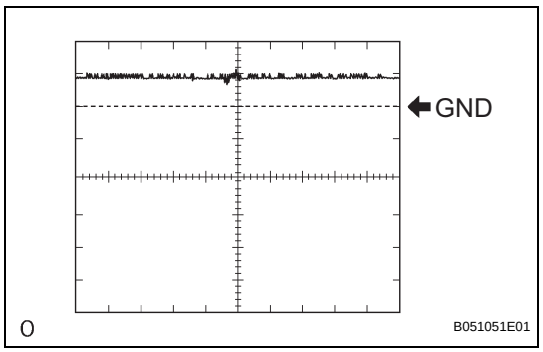

Terminal	IMO (E7-15) - EOM (E8-29)
Tool Setting	10 V/DIV., 100 msec/DIV.
Condition	Ignition switch OFF → ON

EI

4. CHECK ECM (1GR-FE)

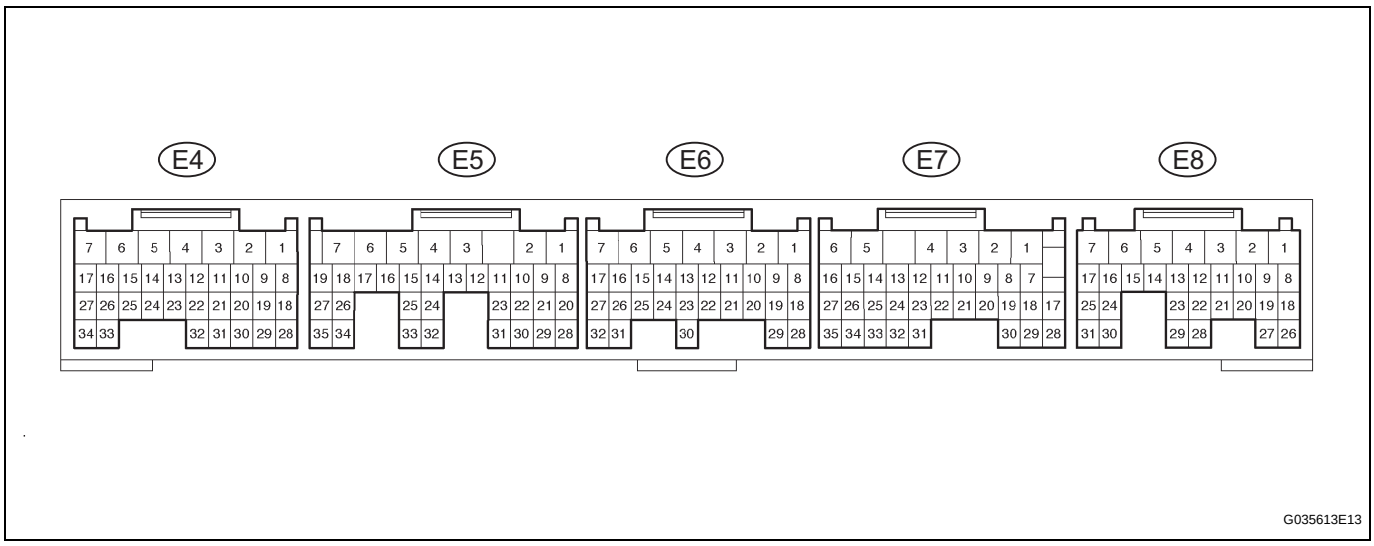

(a) Disconnect the E7 ECM connectors.
(b) Measure the resistance and voltage of the wire harness side connector.

Standard:

Symbols (Terminal No.)	Wiring Color	Terminal Description	Condition	Specified Condition
IMI (E7-16) - EOM (E7-35)	L-W - W-B	Transponder key ECU input signal	Ignition switch OFF → ON	Pulse generation (see waveform 1)
IMO (E7-15) - EOM (E7-35)	LG-B - W-B	Transponder key ECU output signal	Ignition switch OFF → ON	Pulse generation (see waveform 2)
EOM (E7-35) - Body ground	W-B - Body ground	Ground	Always	Below 1 Ω

If the result is not as specified, the ECM may have a malfunction.

(c) Inspect using an oscilloscope.
(1) Waveform 1

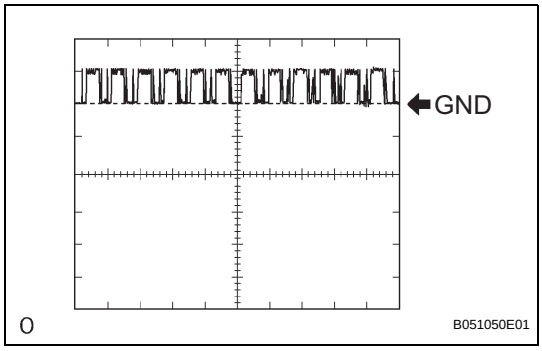

Terminal	IMI (E7-16) - EOM (E7-35)
Tool Setting	12 V/DIV., 100 msec/DIV.
Condition	Ignition switch OFF → ON

(2) Waveform 2

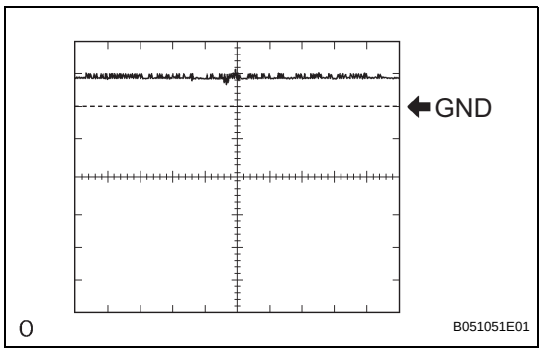

Terminal	IMO (E7-15) - EOM (E7-35)
Tool Setting	10 V/DIV., 100 msec/DIV.
Condition	Ignition switch OFF → ON

EI

DIAGNOSIS SYSTEM

1. DESCRIPTION

(a) The ECM controls the vehicle's immobiliser system functions. immobiliser system data and the DTCs can be read through the vehicle's DLC3. In some cases, a malfunction may be occurring in the immobiliser system even though the security indicator light is not illuminated. When the system seems to be malfunctioning, use the intelligent tester to check for a malfunctions and perform repairs.

2. CHECK DLC3

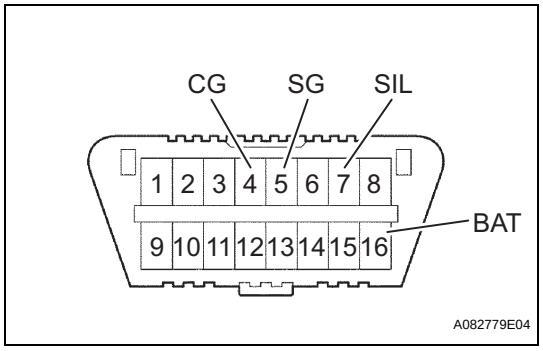

Symbols (Terminals No.)	Terminal Description	Condition	Specified Condition
SIL (7) - SG (5)	Bus "+" line	During transmission	Pulse generation
CG (4) - Body ground	Chassis ground	Always	Below 1 Ω
SG (5) - Body ground	Signal ground	Always	Below 1 Ω
BAT (16) - Body ground	Battery positive	Always	11 to 14 V

If the result is not as specified, the DLC3 may have a malfunction. Repair or replace the harness and connector.

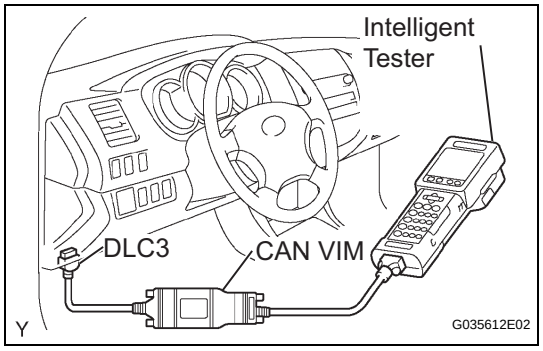

HINT:

Connect the cable of the intelligent tester with CAN VIM to the DLC3, turn the ignition switch ON and attempt to use the tester. If the screen displays the message UNABLE TO CONNECT TO VEHICLE, there is a problem either with the vehicle or with the tester.

- If communication is normal when the tester is connected to another vehicle, inspect the DLC3 of the original vehicle.
- If communication is still not possible when the tester is connected to another vehicle, the problem is probably in the tester itself. Consult the Service Department listed in the tester's instruction manual.

3. INSPECT BATTERY VOLTAGE

Standard voltage:

11 to 14 V

If the voltage is below 11 V, recharge or replace the battery before proceeding.

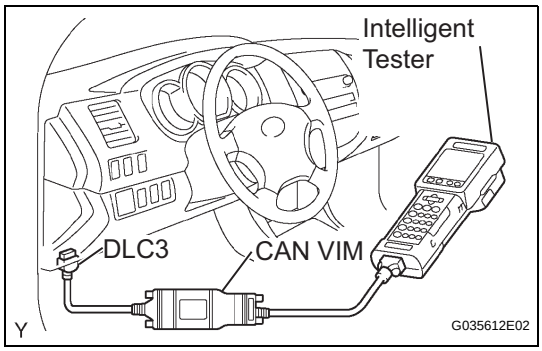

DTC CHECK / CLEAR

1. CHECK DTC

(a) Connect the intelligent tester with CAN VIM to the DLC3.
(b) Turn the ignition switch ON.
(c) Read the DTCs by following the directions on the tester's screen.
HINT:
Refer to the intelligent tester operator's manual for further details.

2. CLEAR DTC

(a) Connect the intelligent tester to the DLC3.
(b) Turn the ignition switch ON.
(c) Erase the DTCs by following the directions on the tester's screen.
HINT:
Refer to the intelligent tester operator's manual for further details.

DATA LIST / ACTIVE TEST

1. READ DATA LIST

HINT:

Using the intelligent tester's DATA LIST allows switch, sensor, actuator and other item values to be read without removing any parts. Reading the DATA LIST early in troubleshooting is one way to save time.

(a) Connect the intelligent tester to the DLC3.
(b) Turn the ignition switch ON.
(c) Read the DATA LIST.

Transponder key ECU assembly

Item	Measurement Item / Display (Range)	Normal Condition	Diagnostic Note
KEY SW	Unlock warning switch signal/ ON or OFF	ON: Key is in ignition key cylinder OFF: No key is in ignition key cylinder	-
IG SW	Ignition switch signal / ON or OFF	ON: Ignition switch ON OFF: Ignition switch OFF or ACC	-
IMMOBILISER	Immobiliser system status / SET or UNSET	SET: Without key UNSET: Ignition switch ON	-
PERMIT (START)	Start control system starting control / OK or NG	OK: Start control system starting is permitted NG: Start control system starting is not permitted	-
RESPONSE	Transponder chip data / OK or NG	OK: Data OK NG: Data error	-
FRAME	Transponder chip data / OK or NG	OK: Data OK NG: Data error	-
SERIAL NUMBER	Transponder chip signal / OK or NG	OK: Data OK NG: Data error	-
ENCRYPT CODE	Transponder chip signal / OK or NG	OK: Data OK NG: Data error	-
STATUS	Transponder chip signal / OK or NG	OK: Data OK NG: Data error	-
BCC	Transponder chip signal / OK or NG	OK: Correct data sending NG: Incorrect data sending	-
SUB KEY	Sub-key code signal / NO MATCH or MATCH	NO MATCH: Unmatched sub-key code is sent MATCH: Sub-key code is sent	-
MASTER KEY	Master key code signal / MATCH or NO MATCH	NO MATCH: Unmatched sub-key code is sent MATCH: Sub-key code is sent	-
REGIST SUB CODE	Number of registered sub- key / min. 0, max. 15	Number of registered sub-keys	-
REGIST MAS CODE	Number of registered master key / min. 0, max. 15	Number of registered master keys	-
REG CODE SPACE	Memory space for key codes registration / NOT FUL or FULL	NOT FUL: Possible to register more key codes Full: Cannot register any more key codes	-
+B	+B judgment / NORMAL or BREAK	NORMAL: Battery supply is normal BREAK: Battery supply is malfunctioning	-
ANTENNA COIL	Antenna coil condition / NORMAL or FAIL	NORMAL: Antenna coil is normal FAIL: Antenna coil is malfunctioning	-
G-CODE SUPPORT	G code judgment / NOT SUPPORT or SUPPORT	NOT SUPPORT: G-code is not supported SUPPORT: G-code is supported	-
G-CODE DECISION	G code judgment / YES or NO	-	-
WIRELS C-CODE	REGD or NOT REGD	-	-

2. PERFORM ACTIVE TEST

HINT:

Perform the intelligent tester's ACTIVE TEST allows relay, VSV, actuator and other items to be operated without removing any parts. Performing the ACTIVE TEST early in troubleshooting is one way to save time. The DATA LIST can be displayed during the ACTIVE TEST.

(a) Connect the intelligent tester to the DLC3.
(b) Turn the ignition switch ON.
(c) Perform the ACTIVE TEST according to the display on the tester.

Transponder key ECU

Item	Test Details	Diagnostic Note
SECURITY INDC	Turn security indicator ON/OFF	-

DIAGNOSTIC TROUBLE CODE CHART

TRANSPONDER KEY ECU DTC CHART

DTC No.	Detection Item	Trouble Areas	See page
B2780	Push Switch / Key Unlock Warning Switch Malfunction	Unlock warning switch assembly Wire harness and connector Transponder key ECU assembly	EI-22
B2784	Antenna Coil Open / Short	Wire harness and connector Transponder key amplifier Transponder key ECU assembly	EI-24
B2793	Transponder Chip Malfunction	Key	EI-26
B2794	Unmatched Encryption Code	Key	EI-27
B2795	Unmatched Key Code	Key	EI-28
B2796	No Communication in Immobiliser System	Key Transponder key amplifier Wire harness and connector Transponder key ECU assembly	EI-29
B2797	Communication Malfunction No. 1	Key Wire harness and connector Transponder key amplifier Transponder key ECU assembly	EI-32
B2798	Communication Malfunction No. 2	Key	EI-29

ECM DTC CHART

DTC No.	Detection Item	Trouble Areas	See page
B2799	Engine Immobiliser System	Wire harness and connector ECM	EI-35

DTC	B2780	Push Switch / Key Unlock Warning Switch Malfunction

DESCRIPTION

This DTC will be output if the transponder key ECU does not detect that the unlock warning switch is ON even when the key is inserted into the ignition key cylinder. Under normal conditions, the unlock warning switch is ON when the key is inserted into the ignition key cylinder.

DTC No.	DTC Detection Condition	Trouble Areas
B2780	Unlock warning switch ON is not detected when when the key is inserted into the ignition key cylinder	• Unlock warning switch assembly • Wire harness and connector • Transponder key ECU assembly

WIRING DIAGRAM

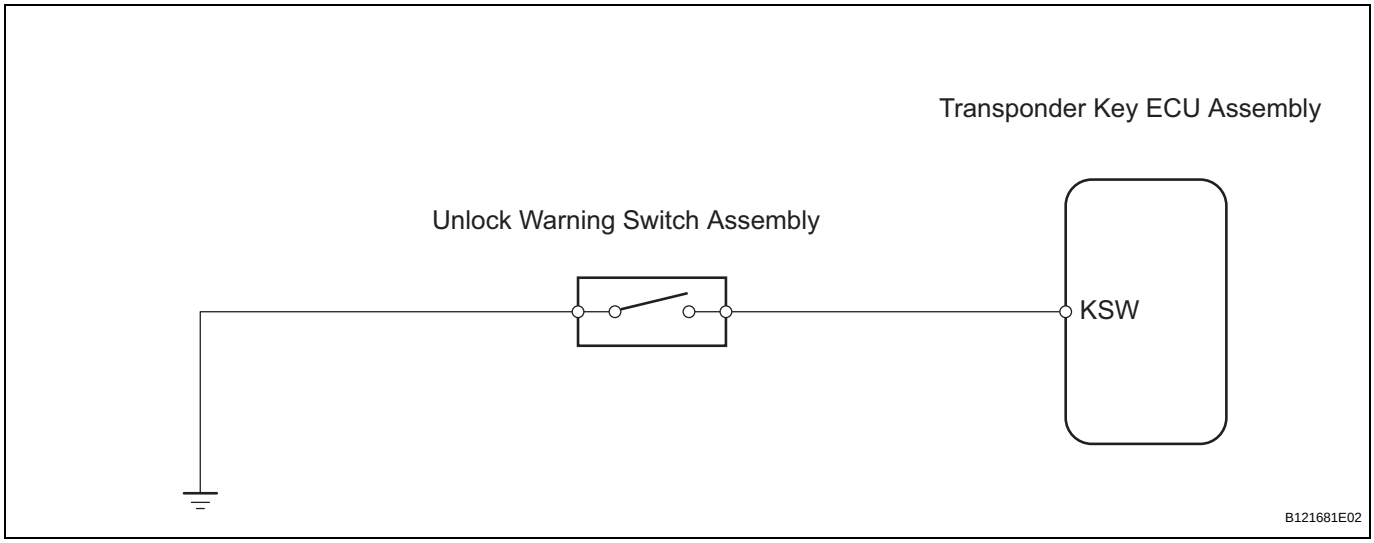

1	READ VALUE OF INTELLIGENT TESTER (UNLOCK WARNING SWITCH)

(a) Connect the intelligent tester to the DLC3.
(b) Turn the ignition switch ON with the key that cannot start the engine.
(c) On the intelligent tester, enter the following menus: DIAGNOSIS / ENHANCED OBD II / DATA LIST / IMMOBILISER / KEY SW. Read the values.

EI

Transponder key ECU assembly

Item	Measurement Item/ ON or OFF	Normal Condition	Diagnostic Note
KEY SW	Unlock warning switch signal / ON or OFF	OFF: No key is in ignition key cylinder ON: Key is in ignition key cylinder	-

OK:
"ON" (key is in ignition key cylinder) appears on the screen.

OK	REPLACE TRANSPONDER KEY ECU ASSEMBLY

NG

2 INSPECT UNLOCK WARNING SWITCH ASSEMBLY

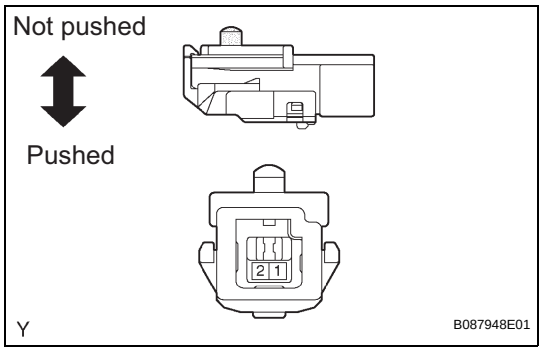

(a) Remove the unlock warning switch.
(b) Measure the resistance of the switch.
Standard resistance

Tester Connection	Switch Condition	Specified Condition
1-2	Pushed	Below 1Ω
1-2	Not pushed	10 kΩ or higher

(c) Reinstall the unlock warning switch.

NG → **REPLACE UNLOCK WARNING SWITCH ASSEMBLY**

OK

3 CHECK HARNESS AND CONNECTOR (TRANSPONDER KEY ECU - UNLOCK WARNING SWITCH)

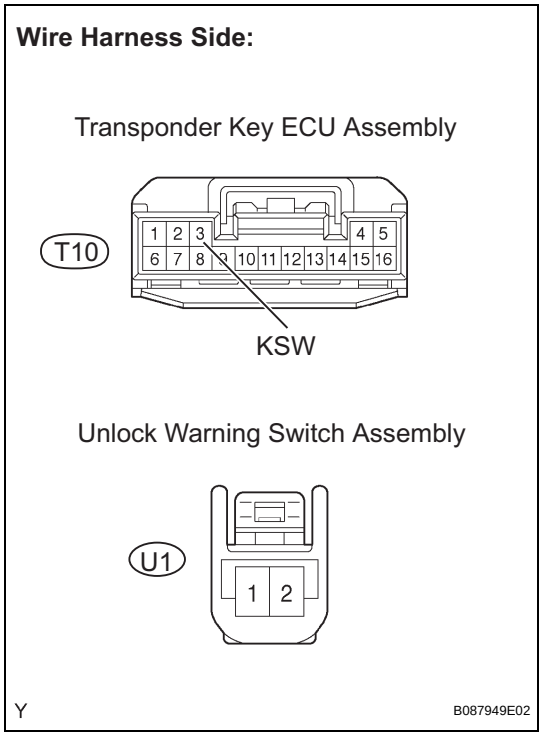

(a) Disconnect the T10 ECU connector.
(b) Disconnect the U1 switch connector.
(c) Measure the resistance of the wire harness side connectors.
Standard resistance

Tester Connection	Specified Condition
T10-3 (KSW) - U1-1	Below 1 Ω
U1-2 - Body ground	Below 1 Ω

(d) Reconnect the unlock warning switch connector.
(e) Reconnect the ECU connector.

NG → **REPAIR OR REPLACE HARNESS OR CONNECTOR**

OK

REPLACE TRANSPONDER KEY ECU ASSEMBLY

EI

DTC	B2784	Antenna Coil Open / Short

DESCRIPTION

The transponder key coil receives key code signals from key's transponder chip. The coil is built into the transponder key amplifier, which amplifies the key code signals and output the signals to the transponder key ECU.

DTC No.	DTC Detection Condition	Trouble Area
B2784	Open or short in antenna coil circuit	• Wire harness and connector • Transponder key amplifier • Transponder key ECU assembly

WIRING DIAGRAM

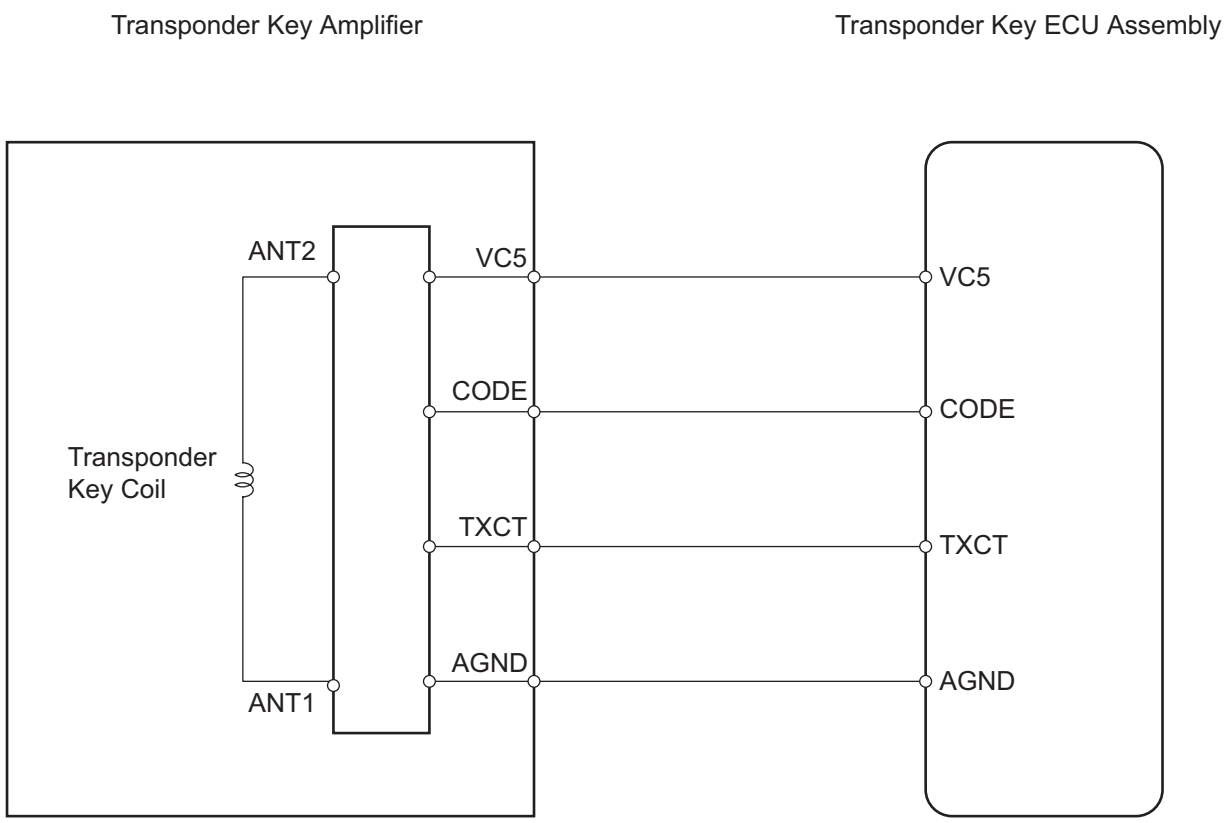

EI

1	READ VALUE OF INTELLIGENT TESTER (TRANSPONDER KEY COIL)

(a) Connect the intelligent tester to the DLC3.
(b) Turn the ignition switch ON with the key that cannot start the engine.

(c) On the intelligent tester, enter the following menus: DIAGNOSIS/ENHANCED OBD II/DATA LIST/ IMMOBILISER/ ANTENNA COIL. Read the values.

Transponder key ECU assembly

Item	Measurement Item / Display (Range)	Normal Condition	Diagnostic Note
ANTENNA COIL	Transponder key coil condition / NORMAL or FAIL	NORMAL: Transponder key coil is normal FAIL: Transponder key coil is malfunctioning	-

OK:
"NORMAL" (Transponder key coil is normal) appears on the screen.

OK → **REPLACE TRANSPONDER KEY ECU ASSEMBLY**

NG

2 CHECK HARNESS AND CONNECTOR (TRANSPONDER KEY ECU ASSEMBLY - TRANSPONDER KEY AMPLIFIER)

Wire Harness Side:

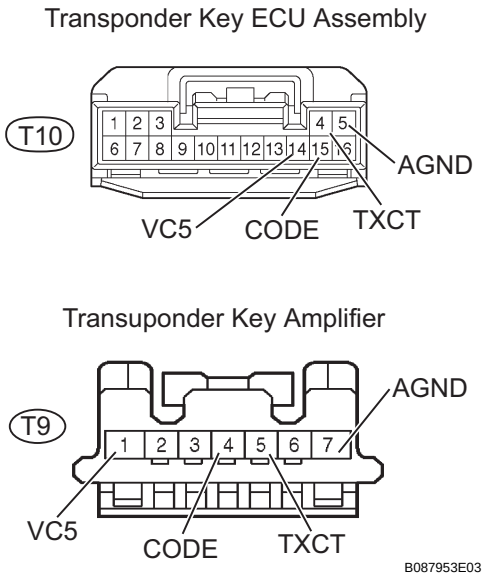

(a) Disconnect the T10 ECU connector.
(b) Disconnect the T9 amplifier connector.
(c) Measure the resistance of the wire harness side connectors.

Standard resistance

Tester Connection	Specified Condition
T10-14 (VC5) - T9-1 (VC5)	Below 1Ω
T10-15 (CODE) - T9-4 (CODE)	Below 1Ω
T10-4 (TXCT) - T9-5 (TXCT)	Below 1Ω
T10-5 (AGND) - T9-7 (AGND)	Below 1Ω
T10-14 (VC5) or T9-1 (VC5) - Body ground	10 kΩ or higher
T10-15 (CODE) or T9-4 (CODE) - Body ground	10 kΩ or higher
T10-4 (TXCT) or T9-5 (TXCT) - Body ground	10 kΩ or higher
T10-5 (AGND) or T9-7 (AGND) - Body ground	10 kΩ or higher

(d) Reconnect the ECU connector.
(e) Reconnect the amplifier connector.

NG → **REPAIR OR REPLACE HARNESS OR CONNECTOR**

OK

REPLACE TRANSPONDER KEY AMPLIFIER

EI

DTC	B2793	Transponder Chip Malfunction

DESCRIPTION

This DTC is output when: 1) during key code registration, a key malfunction occurs; or 2) the key code was unable to be registered properly. Follow the inspection procedure below.

DTC No.	DTC Detection Condition	Trouble Area
B2793	Transponder chip malfunction	Key

1	RE-REGISTER KEY

(a) Delete the DTC (see page EI-19).
(b) Re-register the key (see page EI-6), and check that the engine starts with the key.
OK:
Engine starts.

NG → **REPLACE KEY**

OK ↓

NORMAL (INSPECTION FINISHED)

DTC	B2794	Unmatched Encryption Code

DESCRIPTION

This DTC is output when a key with an incomplete key code is inserted into the ignition key cylinder.

DTC No.	DTC Detection Condition	Trouble Area
B2794	Key with incomplete key code is inserted	Key

1	RE-REGISTER KEY

(a) Delete the DTC (see page EI-19).
(b) RE-register the key (see page EI-6), and check that the engine starts with the key.
OK:
Engine starts.

NG → **REPLACE KEY**

OK

END

DTC	B2795	Unmatched Key Code

DESCRIPTION

This DTC is output when a key with a key code that has not been registered in the ECU is inserted into the ignition key cylinder.

DTC No.	DTC Detection Condition	Trouble Area
B2795	Key with unregistered key code is inserted	Key

1	RE-REGISTER KEY

(a) Delete the DTC (see page EI-19).
(b) Reregister the key, and check that the engine starts with the key (see page EI-6).

OK:
Engine starts.

NG → **REPLACE KEY**

OK

NORMAL (INSPECTION FINISHED)

DTC	B2796	No Communication in Immobiliser System

DTC	B2798	Communication Malfunction No. 2

DESCRIPTION

When a key is inserted into the ignition key cylinder but no communication occurs between the key and transponder key ECU assembly, DTC B2796 is output. When a key is inserted into the ignition key cylinder but a communication error occurs between the key and transponder key ECU assembly, DTC B2798 is output.

DTC No.	DTC Detection Conditions	Trouble Areas
B2796	No communication	• Key • Wire harness and connector • Transponder key amplifier • Transponder key ECU assembly
B2798	Communication error	Key

WIRING DIAGRAM

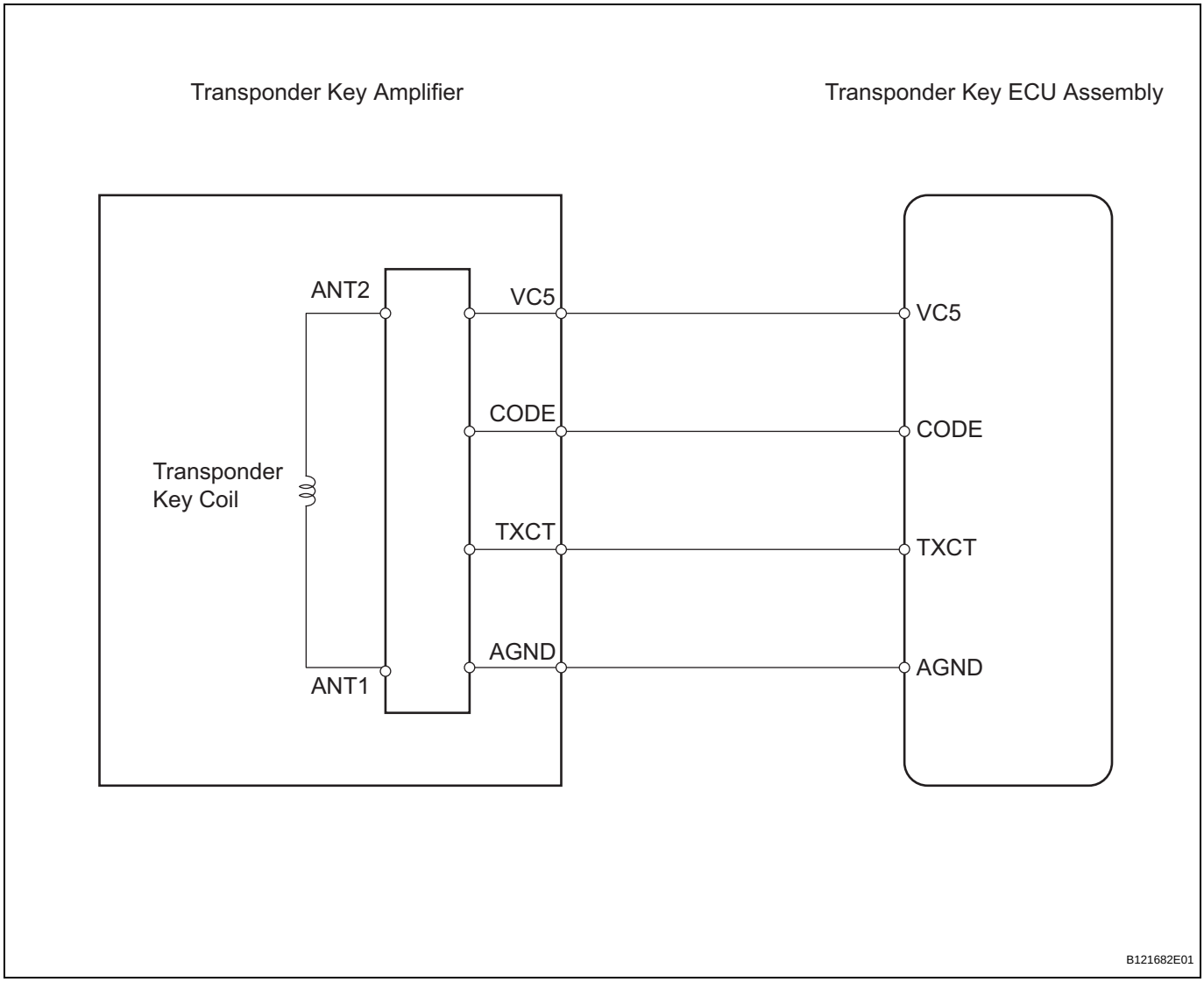

EI

1	READ VALUE OF INTELLIGENT TESTER (ENGINE IMMOBILISER SYSTEM)

(a) Connect the intelligent tester to the DLC3.
(b) Turn the ignition switch ON with the key that cannot start the engine.
(c) On the intelligent tester enter the following menus: DIAGNOSIS / ENHANCED OBD II / DATA LIST / IMMOBILISER / IMMOBILISER. Read the values.

Transponder key ECU assembly

Item	Measurement Item / Display (Range)	Normal Condition	Diagnostic Note
IMMOBILISER	Immobiliser system status / SET or UNSET	UNSET: Ignition switch ON SET: Without key	-

OK:
"UNSET" (ignition switch ON) appears on the screen.

OK → **REPLACE TRANSPONDER KEY ECU ASSEMBLY**

NG

2	CHECK WHETHER ENGINE STARTS WITH OTHER KEYS

(a) Check whether the engine starts with the vehicle's other keys.
OK:
Engine starts.

OK → **RE- REGISTER OR REPLACE KEY THAT CANNOT START ENGINE**

NG

3	READ VALUE OF INTELLIGENT TESTER

(a) Connect the intelligent tester to the DLC3.
(b) Turn the ignition switch ON with the key that will not start the engine.
(c) On the intelligent tester, enter the following menus: DIAGNOSIS / ENHANCED OBD II / DATA LIST / IMMOBILISER / ANTENNA COIL. Read the values.

EI

Transponder key ECU assembly

Item	Measurement Item / Display (Range)	Normal Condition	Diagnostic Note
ANTENNA COIL	Transponder key coil condition / NORMAL or FAIL	NORMAL: Transponder key coil is normal FAIL: Transponder key coil is malfunctioning	-

OK:
NORMAL (transponder key coil is normal) appears on screen.

OK → **REPLACE TRANSPONDER KEY AMPLIFIER**

NG

4	CHECK HARNESS AND CONNECTOR (TRANSPONDER KEY ECU ASSEMBLY - TRANSPONDER KEY AMPLIFIER)

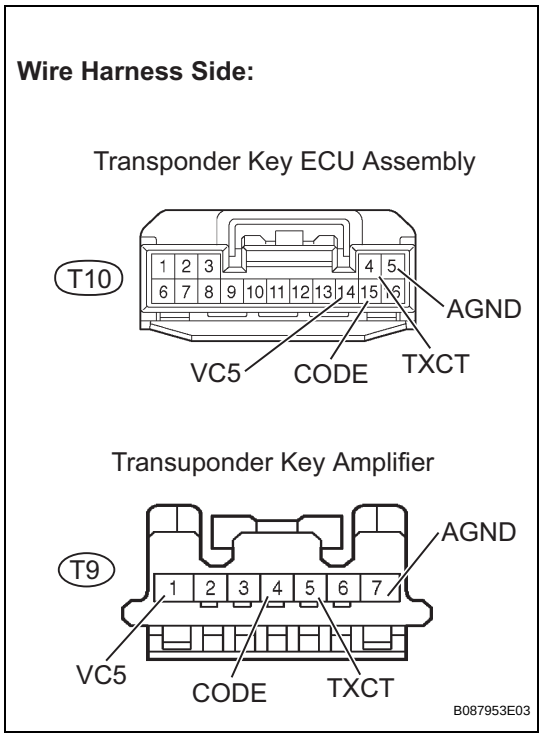

(a) Disconnect the T10 ECU connector.
(b) Disconnect the T9 amplifier connector.
(c) Measure the resistance of the wire harness side connectors.

Standard resistance

Tester Connection	Specified Condition
T10-14 (VC5) - T9-1 (VC5)	Below 1Ω
T10-15 (CODE) - T9-4 (CODE)	Below 1Ω
T10-4 (TXCT) - T9-5 (TXCT)	Below 1Ω
T10-5 (AGND) - T9-7 (AGND)	Below 1Ω
T10-14 (VC5) or T9-1 (VC5) - Body ground	10 kΩ or higher
T10-15 (CODE) or T9-4 (CODE) - Body ground	10 kΩ or higher
T10-4 (TXCT) or T9-5 (TXCT) - Body ground	10 kΩ or higher
T10-5 (AGND) or T9-7 (AGND) - Body gorund	10 kΩ or higher

(d) Reconnect the ECU connector.
(e) Reconnect the amplifier connector.

NG → **REPAIR OR REPLACE HARNESS OR CONNECTOR**

OK

5	REPLACE TRANSPONDER KEY AMPLIFIER (OPERATION)

(a) After replacing the transponder key amplifier with a normally functioning amplifier, check that the engine starts.

OK:

Engine starts.

NG → **REPLACE TRANSPONDER KEY ECU ASSEMBLY**

OK

NORMAL (TRANSPONDER KEY AMPLIFIER DEFECTIVE)

EI

DTC	B2797	Communication Malfunction No. 1

DESCRIPTION

This DTC is output when a communication error occurs between the transponder key amplifier and transponder key ECU. Some possible reasons for the communication error are: 1) 2 or more ignition keys are positioned too close together, or 2) noise is occurring in the communication line.

DTC No.	DTC Detection Conditions	Trouble Areas
B2797	Keys are positioned too close each other, or noise occurred in communication line	• Key • Wire harness and connector • Transponder key amplifier • Transponder key ECU assembly

WIRING DIAGRAM

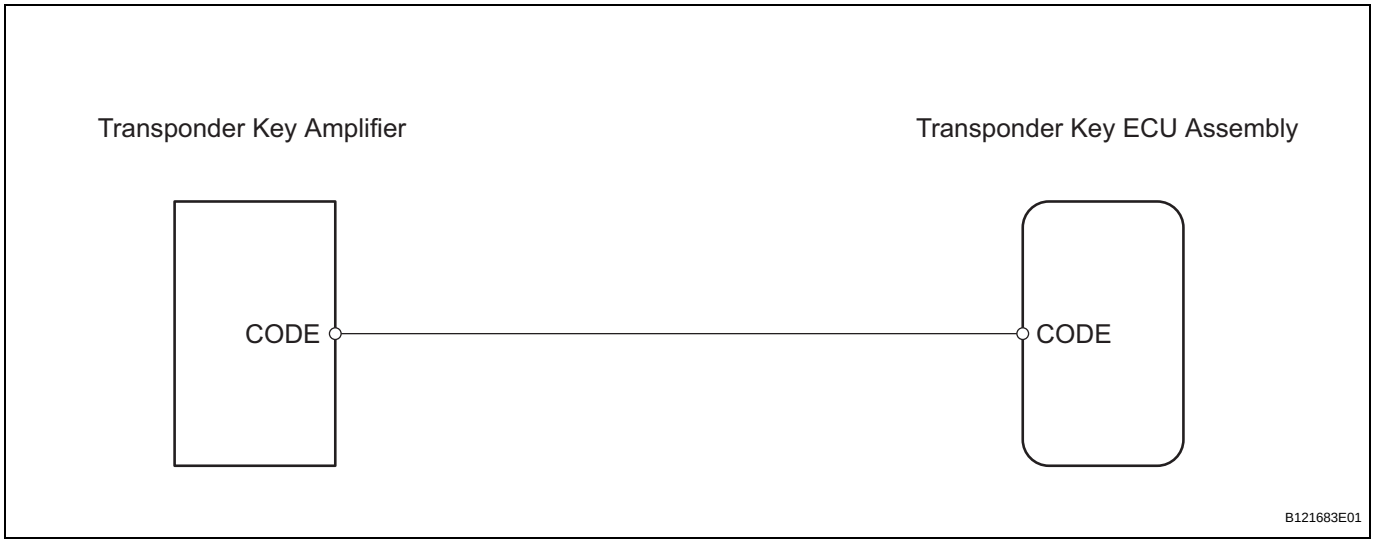

1	CHECK KEYS

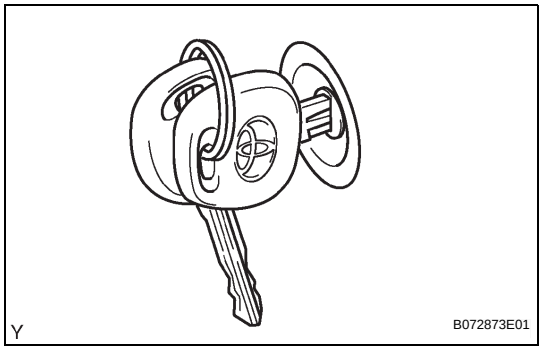

(a) Check if the ignition key being used is near other ignition keys, as shown in the illustration. Also, check if the key ring is in contact with the key grip.

Result

Result	Proceed to
The key is near other keys and/ or the key rings is in contact with key grip.	**A**
The key is not near other keys and/or the key ring is not in contact with the key grip.	**B**

B → **Go to step 3**

A

2	CHECK FOR DTCS

(a) Separate the keys from each other and/or remove the key ring.

EI

(b) Delete the DTC (see page EI-19).
(c) Insert a key into the ignition cylinder. Remove it. Repeat for all the other keys.
(d) Check that no code is output.
OK:
No code is output

OK → **NORMAL (INSPECTION FINISHED)**

NG

3 CHECK TRANSPONDER KEY ECU ASSEMBLY

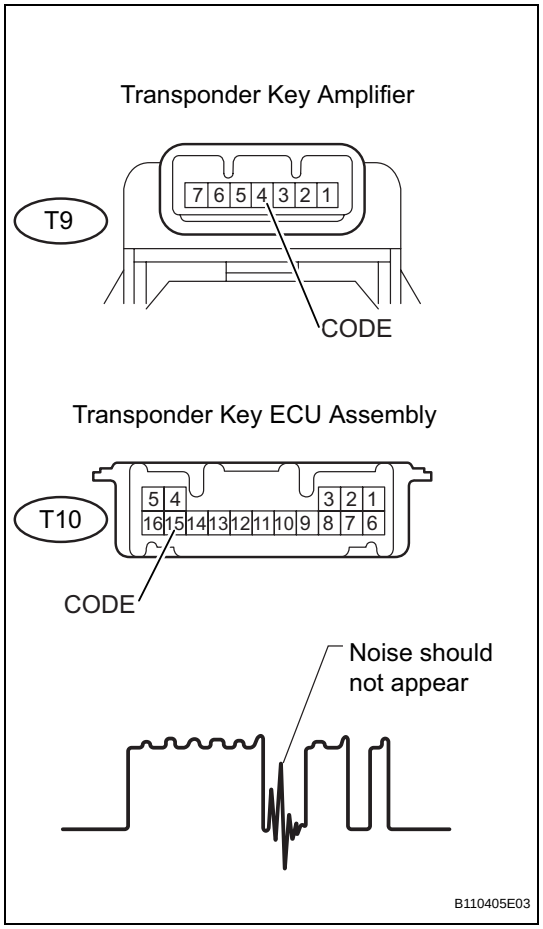

(a) Using an oscilloscope or the intelligent tester check for noise in the waveform between the terminals of the T9 amplifier connector and T10 ECU connector.
OK:
No noise is present (see illustration)

Tester Connection	Specified Condition
T10-15 (CODE) - T9-4 (CODE)	No noise is present

Tool Setting	5 V/div. 20 ms/DIV.
Condition	Ignition switch: OFF → ON

NG → **FIND CAUSE OF NOISE AND REMOVE IT**

OK

EI

4	CHECK HARNESS AND CONNECTOR (TRANSPONDER KEY ECU ASSEMBLY - TRANSPONDER KEY AMPLIFIER)

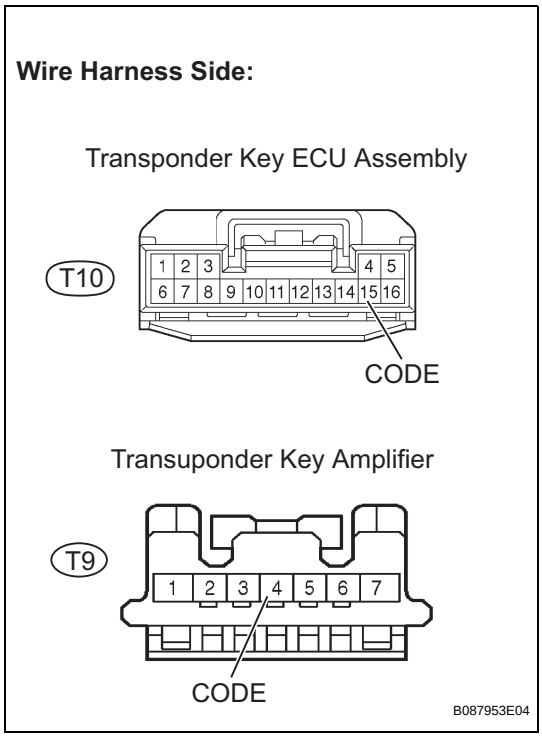

(a) Disconnect the T10 ECU connector.
(b) Disconnect the T9 amplifier connector.
(c) Measure the resistance of the wire harness side connectors.

Standard resistance

Tester Connection	Specified Condition
T10-15 (CODE) - T9-4 (CODE)	Below 1Ω

(d) Reconnect the ECU connector.
(e) Reconnect the amplifier connector.

NG → **REPAIR OR REPLACE HARNESS OR CONNECTOR**

OK

5	REPLACE TRANSPONDER KEY AMPLIFIER (OPERATION)

(a) After replacing the transponder key amplifier with a normally functioning amplifier, check that the engine starts.

OK:

Engine starts.

NG → **REPLACE TRANSPONDER KEY ECU ASSEMBLY**

OK

END (TRANSPONDER KEY AMPLIFIER DEFECTIVE)

DTC	B2799	Engine Immobiliser System

DESCRIPTION

This DTC is output when one of the following occurs: 1) the ECM detected errors in its own communications with the immobiliser code ECU; 2) the ECM detects errors in the communication lines; or 3) the ECU communication ID between the immobiliser code ECU and ECM is different and an engine start is attempted. Before troubleshooting for this DTC, make sure no certification ECU DTCs are present. If present, troubleshoot the certification ECU DTCs first.

DTC No.	DTC Detection Condition	Trouble Area
B2799	• Error in communication between ECM and transponder key ECU, and in communication line • Communication ID is different during communication with transponder key ECU	• Wire harness and connector • ECM

WIRING DIAGRAM

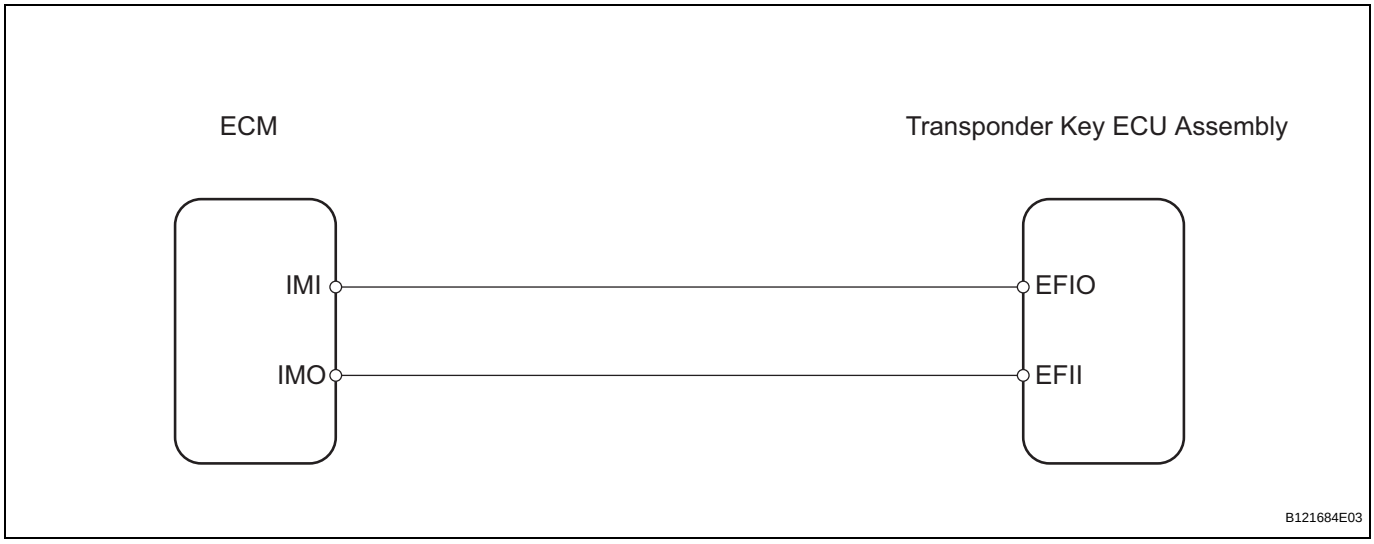

1	CHECK HARNESS AND CONNECTOR (TRANSPONDER KEY ECU ASSEMBLY - ECM)

Wire Harness Side:

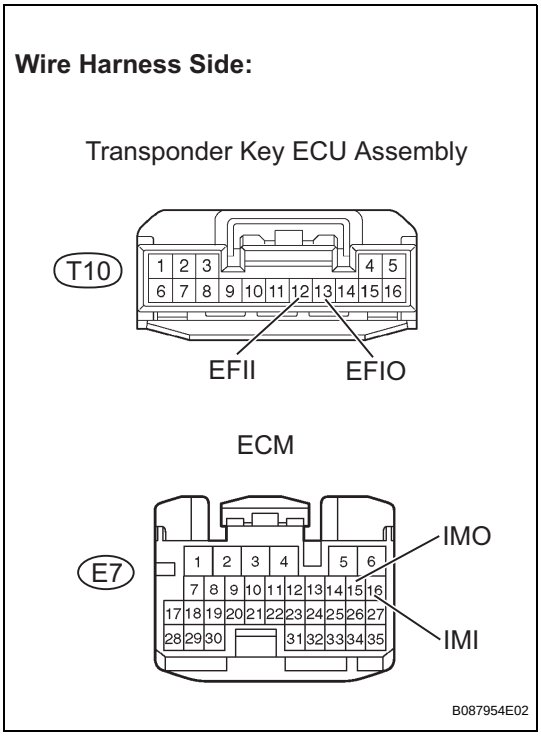

(a) Disconnect the T10 ECU connector.
(b) Disconnect the E7 ECM connector.
(c) Measure the resistance of the wire harness side connectors.

Standard resistance

Tester Connection	Specified Condition
T10-13 (EFIO) - E7-16 (IMI)	Below 1 Ω
T10-12 (EFII) - E7-15 (IMO)	Below 1 Ω
T10-13 (EFIO) or E7-16 (IMI) - Body ground	10 kΩ or higher
T10-12 (EFII) or E7-15 (IMO) - Body ground	10 kΩ or higher

(d) Reconnect the ECU connector.
(e) Reconnect the amplifier connector.

NG → **REPAIR OR REPLACE HARNESS OR CONNECTOR**

OK

REPLACE ECM

HOW TO PROCEED WITH TROUBLESHOOTING

HINT:
*: Use the intelligent tester.

1	**VEHICLE BROUGHT TO WORKSHOP**

NEXT

2	**CUSTOMER PROBLEM ANALYSIS**

NEXT

3	**PROBLEM SYMPTOM CONFIRMATION**

- **SYMPTOM DOES NOT OCCUR (Go to step 4**
- **SYMPTOM OCCURS (Go to step 5)**

4	**SYMPTOM SIMULATION**

NEXT

5	**CHECK CAN COMMUNICATION SYSTEM**

(a) Check the battery voltage.
Standard Voltage:
11 to 14 V

NEXT

6	**DTC CHECK***

(a) Check for cruise control system DTC output.

- **DTCS BEEN STORED (Go to step 7)**
- **NO DTC OUTPUT (Go to step 8)**

CC

7	**DTC CHART**

NEXT

8	**PROBLEM SYMPTOM TABLE**

NEXT

9	**CIRCUIT INSPECTION***

NEXT

10	**TERMINALS OF ECU**

NEXT

11	**IDENTIFICATION OF PROBLEM**

NEXT

12	**REPAIR OR REPLACE**

NEXT

13	**CONFIRMATION TEST***

NEXT

END

ROAD TEST

HINT:
'SET' and '-', 'RES' and '+', 'ON-OFF' functions share the same switch. Operate the cruise control main switch according to the directions indicated on the switch.

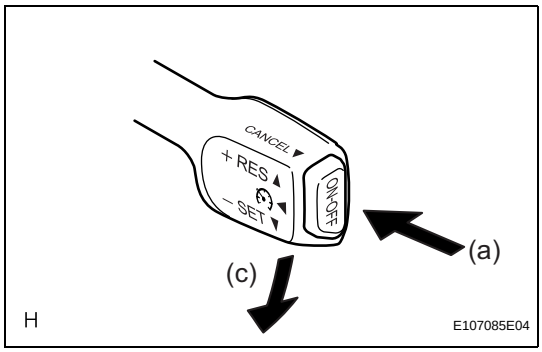

1. INSPECT 'SET' FUNCTION

(a) Push the ON-OFF button on.
(b) Drive at the vehicle at a desired speed 25 mph (40 km/h) or higher.
(c) Push down the control switch lever to "-/SET" to set the cruising speed.
(d) After releasing the lever, check that the vehicle cruises at the set speed.

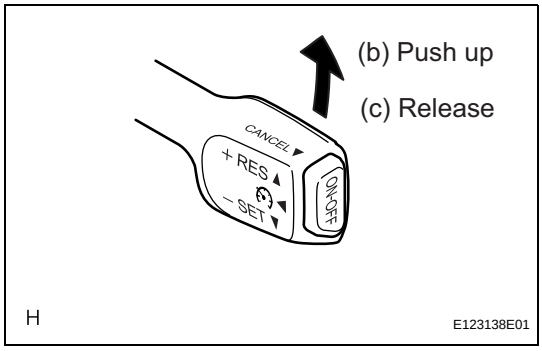

2. INSPECT '+' FUNCTION

(a) Set a desired speed as in step 1.
(b) Check that the vehicle speed increases while the control switch lever is pushed up to "+/RES".
(c) Check that the vehicle cruises at the newly set speed when the switch is released.
(d) Momentarily (approximately 0.6 seconds) push up the control switch lever to the "+/RES", and then release it. Check that the vehicle speed increases by approximately 1 mph (1.6 km/h) with each lever operation (Tap-up function).

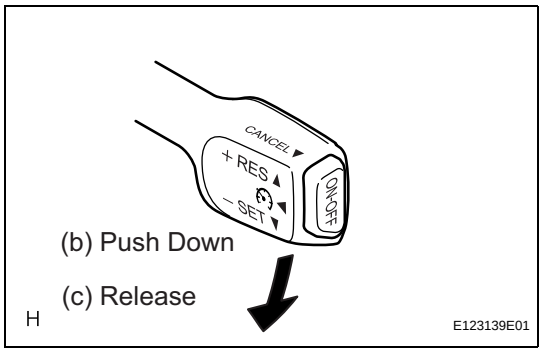

3. INSPECT '-' FUNCTION

(a) Set a desired speed as in step 1.
(b) Check that the vehicle speed decreases while the control switch lever is pushed down to "-/SET".
(c) Check that the vehicle cruises at the newly set speed when the switch is released.
(d) Momentarily (approximately 0.6 seconds) push down the control switch to "-/SET", and then release it. Check that the vehicle speed decreases by approximately 1 mph (1.6 km/h) with each lever operation (Tap-down function).
HINT:
- The cruise control system automatically cancels when the vehicle speed decreases to below 25 mph (40 km/h).

CC

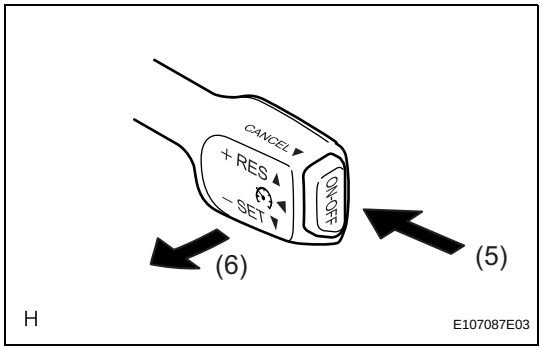

4. INSPECT 'CANCEL' FUNCTION

(a) Set a desired speed as in step 1.
(b) Check that the system cancels cruise control when one of the following is conducted:
(1) Depressing the brake pedal
(2) Depressing the clutch pedal (M/T)
(3) Shifting into any position except D and 3 while driving (A/T: 2TR-FE)
(4) Shifting into any position except D and 4 while driving (A/T: 1GR-FE)

(5) Pushing the cruise control main switch ON-OFF button off
(6) Pulling the cruise control switch lever to "CANCEL"

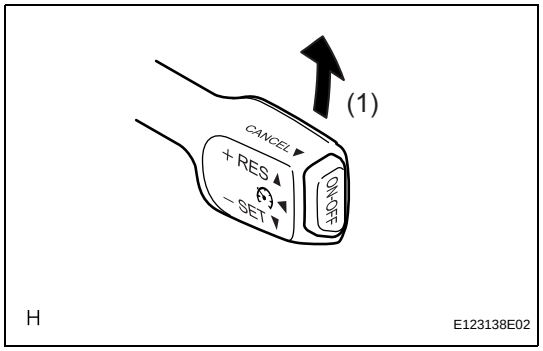

5. INSPECT ' RES (RESUME)' FUNCTION

(a) Set a desired speed as in step 1.
(1) After cancelling the cruise control according to any of the above operations except (5), push up the switch lever to "+/RES" at a speed of 25 mph (40 km/h) or higher.
(2) Check that the vehicle resumes the previously set speed.
HINT:
The 'RES' function does not resume the set speed when the vehicle speed decreases to below 25 mph (40 km/h).

PROBLEM SYMPTOMS TABLE

Symptom	Suspected area	See page
Main switch cannot be turned ON (Indicator light on the combination meter does not come on)	1. Cruise control switch circuit	CC-24
	2. CRUISE MAIN indicator light circuit	CC-28
	3. ECM (1GR-FE)	ES-428
	3. ECM (2TR-FE)	ES-467
Desired speed cannot be set (Indicator light on the combination meter comes on when the main switch is turned ON, but goes off when operating the "SET" function)	1. Cruise control switch circuit	CC-24
	2. ECM (1GR-FE)	ES-428
	2. ECM (2TR-FE)	ES-467
Desired speed cannot be set (Indicator light on the combination comes on when the main switch is turned ON and it remains ON, while operating the "SET" function)	1. Cruise control switch circuit	CC-24
	2. Stop light switch circuit	CC-16
	3. Clutch switch circuit (M/T)	CC-21
	3. Park/neutral position switch circuit (A/T: 1GR-FE)	AT-43
	3. Park/neutral position switch circuit (A/T: 2TR-FE)	AT-34
	4. Combination meter system	ME-20
	5. ECM (1GR-FE)	ES-428
	5. ECM (2TR-FE)	ES-467
While cruise control driving, the set speed is canceled (Indicator light remains ON)	1. Cruise control switch circuit	CC-24
	2. Vehicle speed sensor circuit (1GR-FE)	ES-238
	2. Vehicle speed sensor circuit (2TR-FE)	ES-243
	3. Stop light switch circuit	CC-16
	4. CRUISE MAIN indicator light circuit	CC-28
	5. Clutch switch circuit (M/T)	CC-21
	5. Park/neutral position switch circuit (A/T: 1GR-FE)	AT-43
	5. Park/neutral position switch circuit (A/T: 2TG-FE)	AT-34
	6. ECM (1GR-FE)	ES-428
	6. ECM (2TR-FE)	ES-467
Hunting occurs (Speed is not constant)	1. Vehicle speed sensor circuit (1GR-FE)	ES-238
	1. Vehicle speed sensor circuit (2TR-FE)	ES-243
	2. ECM (1GR-FE)	ES-428
	2. ECM (2TR-FE)	ES-467
Speed setting cannot be canceled ("CANCEL" function failure only)	1. Cruise control switch circuit	CC-24
	2. ECM (1GR-FE)	ES-428
	2. ECM (2TR-FE)	ES-467
DTC is not output, or is output when should not be	1. DLC3 circuit	CC-32
	2. ECM (1GR-FE)	ES-428
	3. ECM (2TR-FE)	ES-467
CRUISE MAIN indicator light does not come on	1. Cruise control switch circuit	CC-24
	2. CRUISE MAIN indicator light circuit	CC-28
	3. ECM (1GR-FE)	ES-428
	3. ECM (2TR-FE)	ES-428
	4. Combination meter assembly	ME-20

TERMINALS OF ECU

1. ECM (1GR-FE)

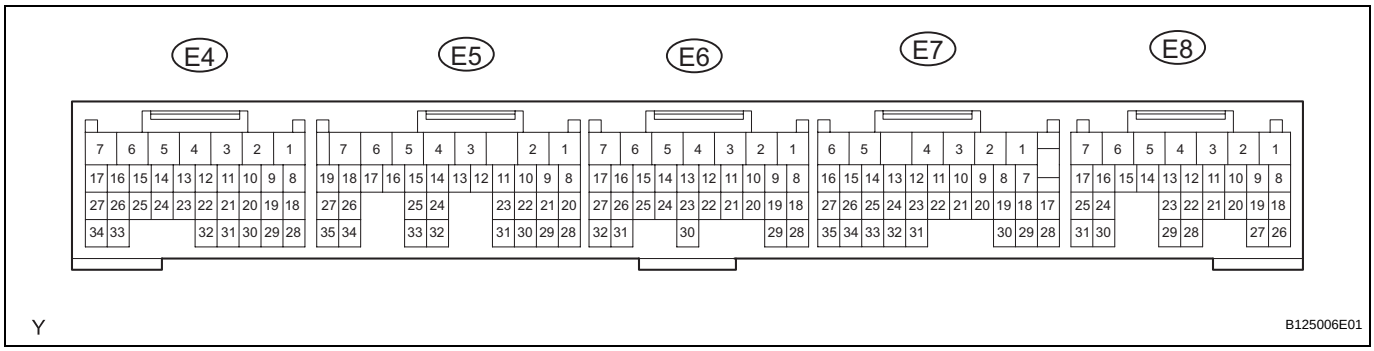

Symbols (Terminals No.)	Wiring Color	Terminal Description	Condition	Specified Condition
TC (E8-23) - E1 (E6-1)	P-B - BR	DTC output signal	Ignition switch ON	10 to 14 V
TC (E8-23) - E1 (E6-1)	P-B - BR	DTC output signal	Ignition switch ON Connect terminals TC and CG of DLC3	Below 2 V
ST1 (E8-16) - E1 (E6-1)	V-W - BR	Cruise cancel input signal	Ignition switch ON Depress brake pedal	Below 1 V
ST1 (E8-16) - E1 (E6-1)	V-W - BR	Cruise cancel input signal	Ignition switch ON Release brake pedal	10 to 14 V
STP (E8-15) - E1 (E6-1)	L - BR	Stop light switch input signal	Depress brake pedal	10 to 14 V
STP (E8-15) - E1 (E6-1)	L - BR	Stop light switch input signal	release brake pedal	Below 1 V
CSS (E7-2) - E1 (E6-1)	BR-W - BR	Cruise control main switch output signal	Ignition switch ON	10 to 14 V
CSS (E7-2) - E1 (E6-1)	BR-W - BR	Cruise control main switch output signal	Ignition switch ON CANCEL switch hold ON	6.6 to 10.1 V
CSS (E7-2) - E1 (E6-1)	BR-W - BR	Cruise control main switch output signal	Ignition switch ON -/SET switch hold ON	4.5 to 7.1 V
CSS (E7-2) - E1 (E6-1)	BR-W - BR	Cruise control main switch output signal	Ignition switch ON +/RES switch hold ON	2.3 to 4 V
CSS (E7-2) - E1 (E6-1)	BR-W - BR	Cruise control main switch output signal	Ignition switch ON MAIN switch hold ON	Below 1 V
E1 (E6-1) - Body ground	BR - Body ground	Ground	Always	Below 1 V
PI (E7-18) - E1 (E6-1)	LG - BR	Cruise main indicator light input signal	Ignition switch ON Cruise control main switch hold ON	0 to 3 V
PI (E7-18) - E1 (E6-1)	LG - BR	Cruise main indicator light input signal	Ignition switch ON Cruise control main switch hold OFF	10 to 14 V
D (E7-21) - E1 (E6-1)	L-B - BR	Clutch switch input signal	Ignition switch ON Depress clutch pedal	Below 1 V
D (E7-21) - E1 (E6-1)	L-B - BR	Clutch switch input signal	Ignition switch ON Release clutch pedal	10 to 14 V

2. ECM (2TR-FE)

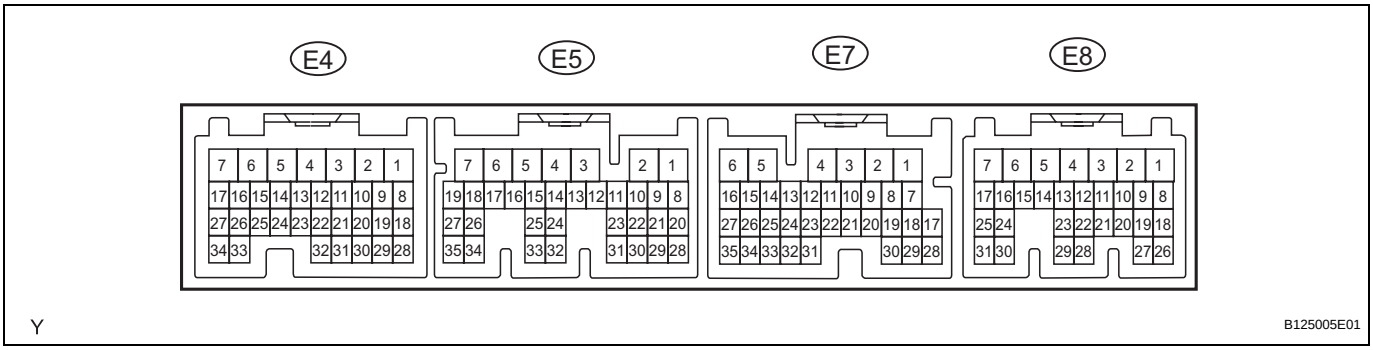

Symbols (Terminals No.)	Wiring Color	Terminal Description	Condition	Specified Condition
TC (E7-17) - E1 (E4-3)	P-B - BR	DTC output signal	Ignition switch ON	10 to 14 V
TC (E7-17) - E1 (E4-3)	P-B - BR	DTC output signal	Ignition switch ON Connect terminals TC and CG of DLC3	Below 2 V
ST1 (E8-16) - E1 (E4-3)	V-W - BR	Cruise cancel input signal	Ignition switch ON Depress brake pedal	Below 1 V
ST1 (E8-16) - E1 (E4-3)	V-W - BR	Cruise cancel input signal	Ignition switch ON Release brake pedal	10 to 14 V
STP (E7-4) - E1 (E4-3)	L - BR	Stop light switch input signal	Depress brake pedal	10 to 14 V
STP (E7-4) - E1 (E4-3)	L - BR	Stop light switch input signal	release brake pedal	Below 1 V
CSS (E7-31) - E1 (E4-3)	BR-W - BR	Cruise control main switch output signal	Ignition switch ON	10 to 14 V
CSS (E7-31) - E1 (E4-3)	BR-W - BR	Cruise control main switch output signal	Ignition switch ON CANCEL switch hold ON	6.6 to 10.1 V
CSS (E7-31) - E1 (E4-3)	BR-W - BR	Cruise control main switch output signal	Ignition switch ON -/SET switch hold ON	4.5 to 7.1 V
CSS (E7-31) - E1 (E4-3)	BR-W - BR	Cruise control main switch output signal	Ignition switch ON +/RES switch hold ON	2.3 to 4 V
CSS (E7-31) - E1 (E4-3)	BR-W - BR	Cruise control main switch output signal	Ignition switch ON MAIN switch hold ON	Below 1 V
E1 (E4-3) - Body ground	BR - Body ground	Ground	Always	Below 1 V
PI (E7-18) - E1 (E4-3)	LG - BR	Cruise main indicator light input signal	Ignition switch ON Cruise control main switch hold ON	0 to 3 V
PI (E7-18) - E1 (E4-3)	LG - BR	Cruise main indicator light input signal	Ignition switch ON Cruise control main switch hold OFF	10 to 14 V
D (E7-21) - E1 (E4-3)	L-B - BR	Clutch switch input signal	Ignition switch ON Depress clutch pedal	Below 1 V
D (E7-21) - E1 (E4-3)	L-B - BR	Clutch switch input signal	Ignition switch ON Release clutch pedal	10 to 14 V

DIAGNOSIS SYSTEM

1. DESCRIPTION

The ECM stores DTCs (Diagnostic Trouble Codes) when trouble occurs on the vehicle. The diagnosis system allows reading of DTCs stored in the ECM when a intelligent tester is connected to the DLC3 (Data Link Connector 3). If the CRUISE MAIN indicator light does not come on after a DTC check, it means that a malfunction has occurred in the cruise control system. Use a intelligent tester or SST to check for DTCs.

2. CHECK DLC3

(a) The ECM uses ISO 9141-2 for data communication. The terminal arrangement of the DLC3 complies with SAE J1962 and matches the ISO 9141-2 format.

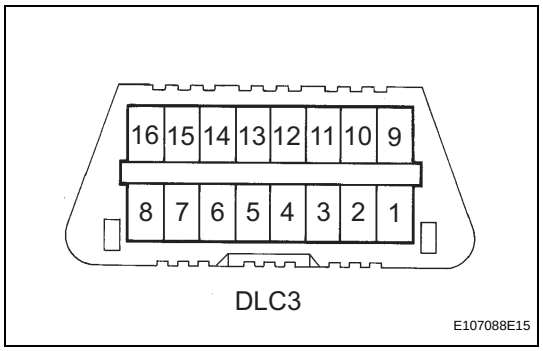

Terminal No.	Tester connection	Condition	Specification
4	Chassis ground - Body Ground	Always	Below 1 Ω
16	Battery positive - Body Ground	Always	9 to 14 V

HINT:

If the intelligent tester display shows "UNABLE TO CONNECT TO VEHICLE" after connecting the tester to the DLC3 and turning the ignition to the ON position, there is a problem in either the vehicle or the tester itself.

- If communication is normal when connecting the tester to another vehicle, inspect the DLC3 on the original vehicle.
- If communication is still not possible when connecting the tester to another vehicle, it suggests the problem exists in the tester. In this case, consult the Service Department listed in the tester's instruction manual.

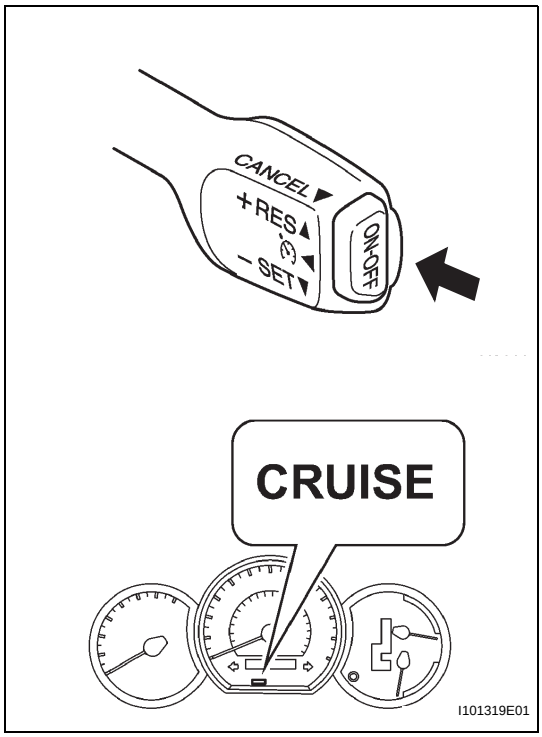

3. CHECK INDICATOR

(a) Turn the ignition switch to the ON position.

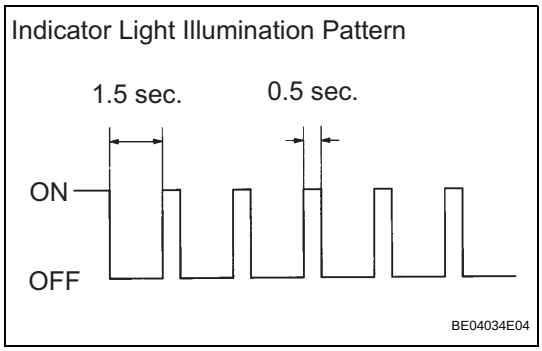

(b) Check that the CRUISE MAIN indicator light comes on when the cruise control main switch ON-OFF button is pushed on, and that the indicator light goes off when the ON-OFF button is pushed off.

HINT:

If there is a problem with the ON/OFF illumination of the indicator light, inspect the cruise main indicator light circuit (See page CC-28).

HINT:

If a malfunction occurs in the vehicle speed sensor, stop light switch assembly or other related parts while cruise control driving, the ECM actuates AUTO CANCEL of the cruise control. Then the CRUISE MAIN indicator light starts to blink, to inform the driver of the malfunction. At the same time, data of the malfunction is stored as a diagnostic trouble code (DTC).

DTC CHECK / CLEAR

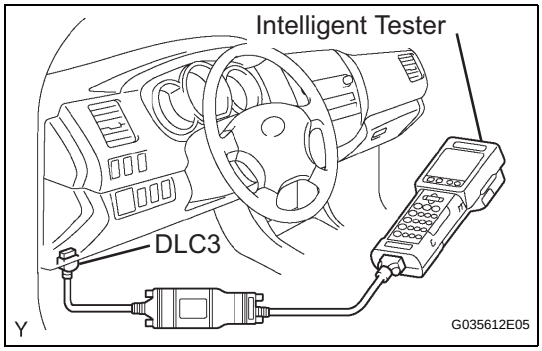

1. DTC CHECK/CLEAR

(a) Check DTCs using the intelligent tester.
  (1) Turn the ignition switch off.
  (2) Connect the intelligent tester to the DLC3.
  (3) Turn the ignition switch to the ON position.
  (4) Read DTCs on the tester screen.

(b) Clear the DTCs using the intelligent tester.
  (1) Turn the ignition switch off.
  (2) Turn the ignition switch to the ON position.
  (3) Clear the DTCs by following the prompts on the tester screen.

  HINT:

  - The intelligent tester has a "Snapshot" function which records the monitored data.

CC

- Refer to the intelligent tester operator's manual for further details.

DATA LIST / ACTIVE TEST

1. READ DATA LIST

(a) While the intelligent tester is connected to the DLC3 with the ignition switch in the ON position, the CRUISE CONTROL data list can be displayed. Follow the prompts on the tester screen to access the data list.

ECM (Cruise control):

Item	Measurement Item / Display (Range)	Normal Condition	Diagnostic Note
VEHICLE SPD	Vehicle speed / min.: 0 mph(0 km/h), max.: 158 mph (255 km/h)	Actual vehicle speed	-
MEMORY SPD	Cruise control memorized speed / min.: 22.5 mph (36 km/h), max.: 125 mph(200 km/h)	Actual stored vehicle speed	-
CRUISE CONTROL	Cruise control system active condition / ON or OFF	ON: Cruise control activated OFF: Cruise control inactivated	-
MAIN SW (MAIN)	Main switch signal (Main CPU) / ON or OFF	ON: Main switch ON (Pushed on) OFF: Main switch OFF (Pushed off)	"3"
MAIN SW (SUB)	Main switch signal (Sub CPU) / ON or OFF	ON: Main switch ON (Pushed on) OFF: Main switch OFF (Pushed off)	"3"
CCS READY M	Cruise control system standby condition (Main CPU) / ON or OFF	ON/OFF: Change ON/OFF each main switch is pushed in	"1"
CCS READY S	Cruise control system standby condition (Sub CPU) / ON or OFF	ON/OFF: Change ON/OFF each main switch is pushed in	"1"
CCS INDICATOR M	Cruise indicator signal (Main CPU) / ON or OFF	ON: "CCS READY" ON OFF: "CCS READY" OFF	"2"
CANCEL SW	CANCEL switch signal / ON or OFF	ON: CANCEL switch ON OFF: CANCEL switch OFF	-
-/SET SW	-/SET switch signal / ON or OFF	ON: SET / COAST switch ON OFF: SET / COAST switch OFF	-
+/SET SW	+/SET switch signal / ON or OFF	ON: RES / ACC switch ON OFF: RES / ACC switch OFF	-
STP LIGHT SW M	Stop light switch signal (Main CPU) / ON or OFF	ON: Brake pedal depressed OFF: Brake pedal released	-
STP LIGHT SW S2	Stop light switch-2 signal (Sub CPU) / ON or OFF	ON: Brake pedal depressed OFF: Brake pedal released	-
STP LIGHT SW S1	Stop light switch-1 signal (Sub CPU) / ON or OFF	ON: Brake pedal depressed OFF: Brake pedal released	-
SHIFT D POS	PNP switch signal (D position) / ON or OFF	ON: Shift lever on D OFF: Shift lever not on D	-

HINT:

- "3" is OK but "1" is NG → ECM failure
- "1" is OK but "2" is NG → DTC output or ECM failure
- "3" is OK but CRUISE indicator does not come on → CRUISE main indicator, wire harness or ECM failure

DIAGNOSTIC TROUBLE CODE CHART

If a trouble code is indicated while checking DTCs, inspect the circuit listed for that code in the table below, and proceed to the applicable page.

DTC No.	Detection Item	Trouble Area	See page
P0500	Vehicle Speed Sensor Circuit Malfunction	Combination meter assembly Vehicle speed sensor Vehicle speed sensor circuit ECM	CC-15
P0503	Vehicle Speed Sensor Circuit Malfunction	Combination meter assembly Veicle speed sensor Vehicle speed sensor circuit ECM	CC-15
P0571	Stop Light Switch Circuit Malfunction	Stop light switch assembly Stop light switch assembly circuit ECM	CC-16
P0607	Input Signal Circuit Malfunction	ECM	CC-20

DTC	P0500	Vehicle Speed Sensor Circuit Malfunction

DTC	P0503	Vehicle Speed Sensor Circuit Malfunction

DESCRIPTION

1GR-FE: (See page ES-238)
2TR-FE: (See page ES-243)

DTC No.	DTC Detection Conditions	Trouble Areas
P0500	This trouble code is output when the vehicle speed signal from the vehicle speed sensor is cut for 0.14 seconds or more while the cruise control is in operation.	• Combination meter assembly • Vehicle speed sensor • Vehicle speed sensor signal circuit • ECM
P0503	Momentary interruption and noise are detected when a rapid change of vehicle speed occurs while the cruise control is in operation.	• Combination meter assembly • Vehicle speed sensor • Vehicle speed sensor signal circuit • ECM

WIRING DIAGRAM

1GR-FE: (See page ES-238)
2TR-FE: (See page ES-243)

1GR-FE: (See page ES-238)
2TR-FE: (See page ES-243)

DTC	P0571	Stop Light Switch Circuit Malfunction

DESCRIPTION

The cruise control system cancels cruising when the ECM detects that the brake pedal is depressed while cruise control driving. The stop light switch assembly sends signals to the ECM according to the brake pedal conditions. When the brake pedal is free, terminal ST1- is the positive (+) battery voltage, and terminal STP voltage is below 1 V. While depressing the brake pedal, terminal ST1- is below 1 V, and STP is positive (+) battery voltage. Under braking, the ECM cancels cruise control as one of the manual cancel functions.

The ECM outputs this trouble code when the voltage of terminals ST1- and STP are both below 1 V for 0.5 seconds or more at the same moment.

The fail-safe function operates to enable normal driving even if there is a malfunction in the stop light signal circuit.

DTC No.	DTC Detected Conditions	Trouble Areas
P0571	ECM detects a malfunction of the stop light switch circuit under both of the following conditions. • Voltage of terminal STP is below 1 V for 0.5 seconds or more. • Voltage of terminal ST1- is below 1 V for 0.5 seconds or more.	• Stop light switch assembly • Stop light switch assembly circuit • ECM

WIRING DIAGRAM

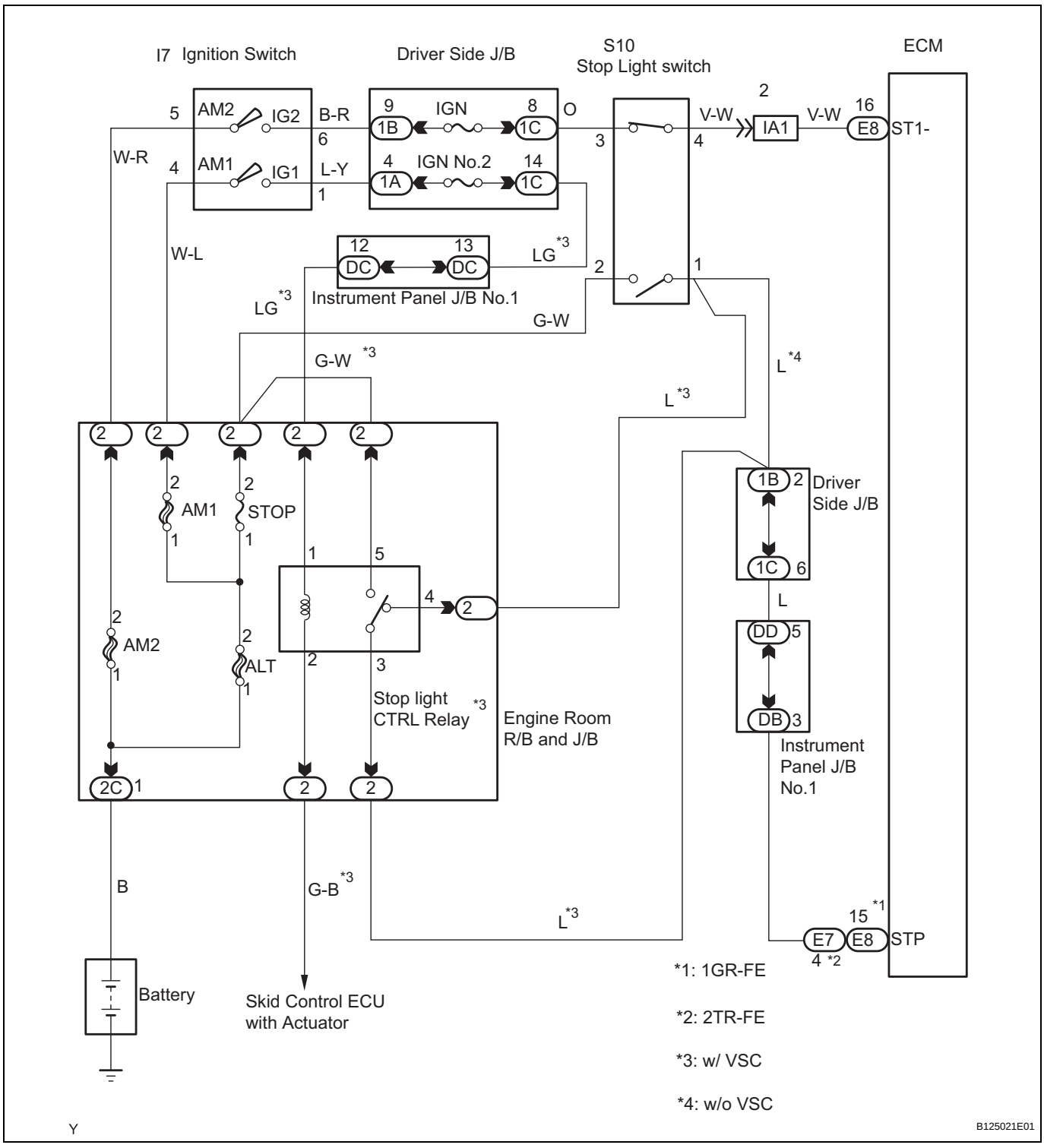

1	INSPECT STOP LIGHT SWITCH OPERATION (FOR STOP LIGHT)

(a) Check that the stop lights come on while the brake pedal is depressed, and go off when the brake pedal is released.

CC

OK

Brake pedal condition	Stop light condition
Depressed	ON
Released	OFF

NG → **INSPECT STOP LIGHT SWITCH CIRCUIT**

OK

2 INSPECT STOP LIGHT SWITCH OPERATION (FOR BACK-UP SIGNAL)

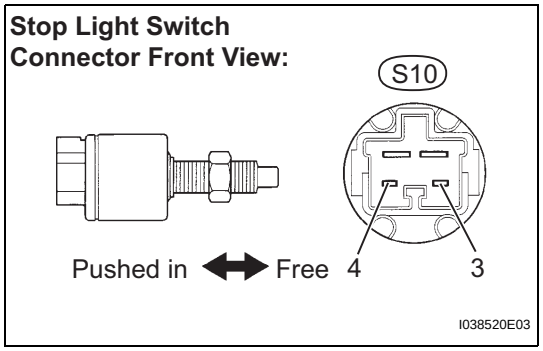

(a) Turn the ignition switch off.
(b) Disconnect the stop light switch assembly connector.
(c) Measure the resistance according to the value(s) in the table below.

Standard Resistance

Tester connection	Switch condition	Stop light condition
S10-3 - S10-4	Switch pin free (Brake pedal depressed)	10 kΩ or higher
S10-3 - S10-4	Switch pin pushed in (Brake pedal released)	Below 1Ω

(d) Reconnect the stop light switch assembly connector.

NG → **REPLACE STOP LIGHT SWITCH ASSEMBLY**

OK

3 INSPECT ECM (STP SIGNAL)

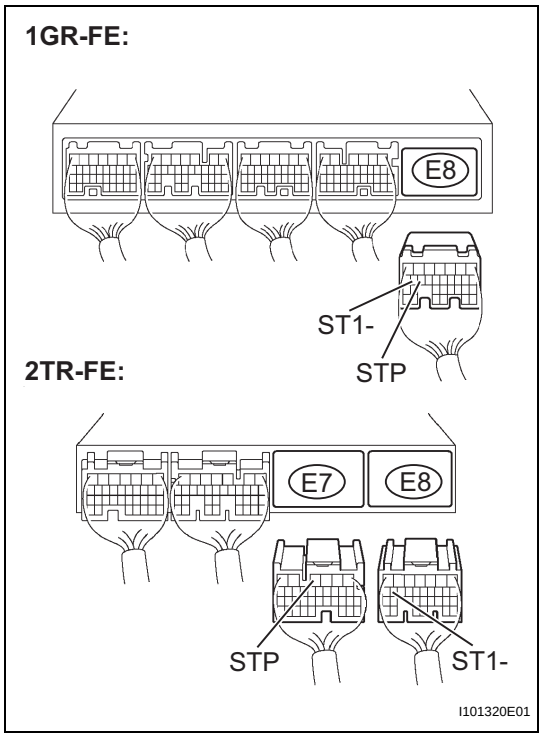

(a) Reconnect the stop light switch assembly connector.
(b) 1GR-FE: Disconnect the E8 ECM connector.
(c) 2TR-FE: Disconnect the E7 and E8 ECM connectors.
(d) Turn the ignition switch to the ON position.
(e) Measure the voltage according to the value(s) in the table below.

Standard Voltage(1GR-FE)

Tester connection	Brake pedal condition	Specification
STP (E8-15) - Body ground	Depressed	10 to 14 V
STP (E8-15) - Body ground	Released	Below 1V

Standard Voltage(2TR-FE)

Tester connection	Brake pedal condition	Specification
STP (E7-4) - Body ground	Depressed	10 to 14 V
STP (E7-4) - Body ground	Released	Below 1V

(f) Measure the voltage according to the value(s) in the table below.

CC

Standard Voltage(1GR-FE)

Tester connection	Brake pedal condition	Specification
ST1 (E8-16) - Body ground	Depressed	Below 1V
ST1 (E8-16) - Body ground	Released	10 to 14 V

Standard Voltage(2TR-FE)

Tester connection	Brake pedal condition	Specification
ST1 (E8-16) - Body ground	Depressed	Below 1V
STP (E8-16) - Body ground	Released	10 to 14 V

(g) Reconnect the ECM connector.

NG → **REPAIR OR REPLACE HARNESS OR CONNECTOR (STOP LIGHT SWITCH ASSEMBLY - ECM)**

OK

REPLACE ECM

DTC	P0607	Input Signal Circuit Malfunction

DESCRIPTION

This DTC indicates the internal abnormalities of the ECM.

DTC No.	DTC Detection condition	Trouble Area
P0607	The ECM has a supervisory CPU and a control ECU inside. When each input STP signal is different for 0.15 seconds or more, this trouble code is output. This trouble code is output after 0.4 seconds has passed from the time the cruise cancel input signal (STP input) is input into the ECM.	ECM

HINT:

When a trouble code is detected, fail-safe continues until the ignition switch is turned off.

1	REPLACE ECM

NEXT

END

Clutch Switch Circuit

DESCRIPTION

Clutch switch circuit inspection is necessary for M/T vehicles.
When the clutch pedal is released, the ECM receives the positive (+) battery voltage through the IG1 No.2 fuse and ignition switch. While the clutch pedal is depressed, the clutch switch assembly sends a signal to terminal D of the ECM. The ECM cancels cruise control when terminal D receives the signal (voltage of below 1 V).

WIRING DIAGRAM

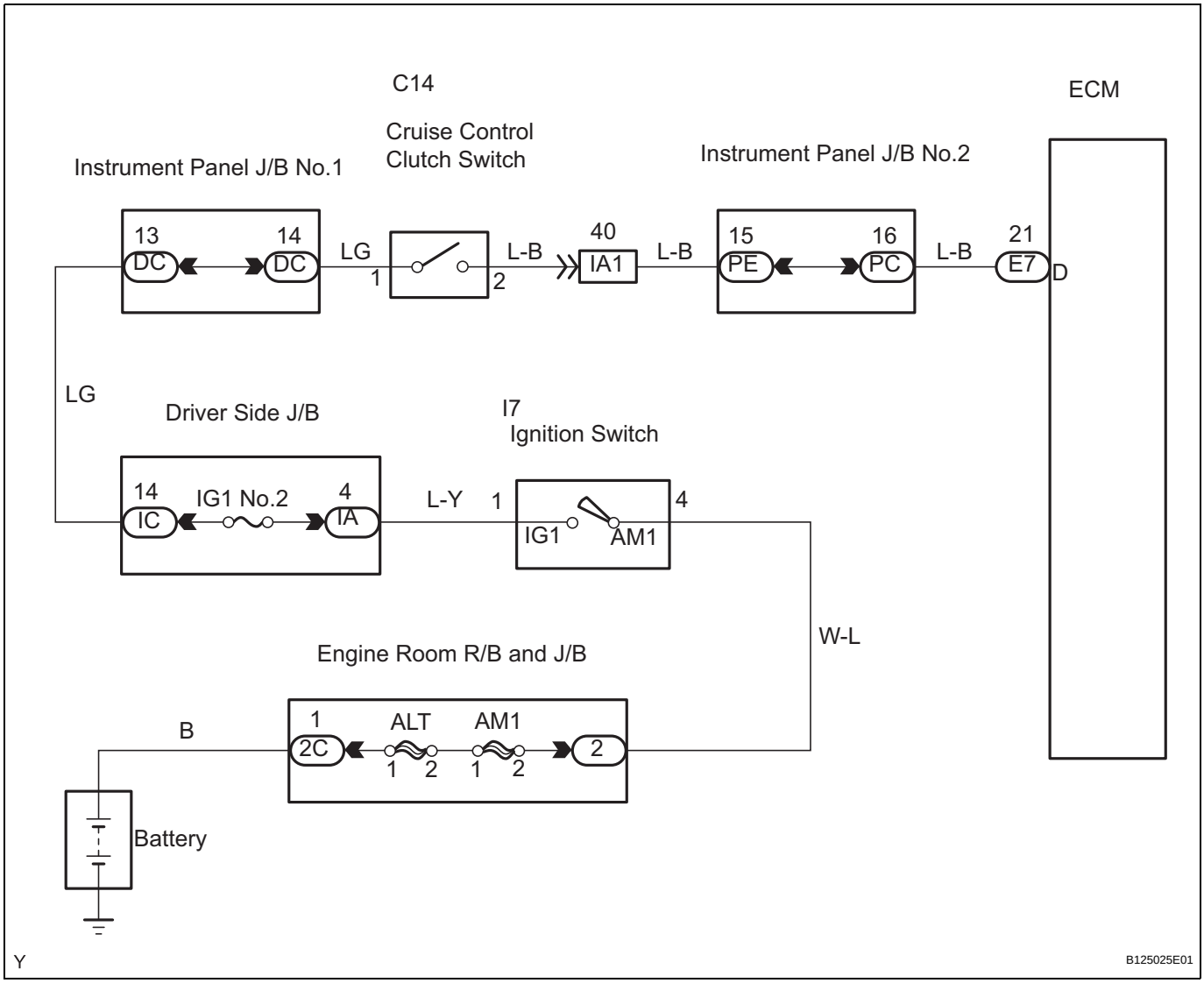

CC

1 CHECK HARNESS AND CONNECTOR (ECM - BATTERY)

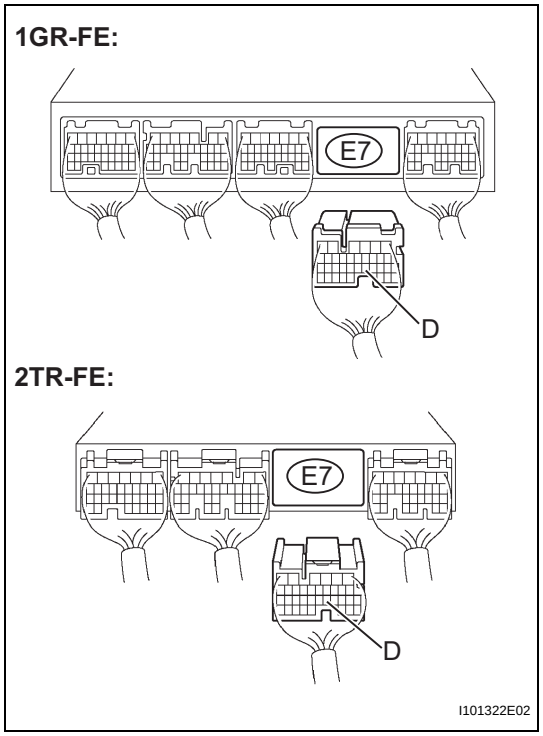

(a) Turn the ignition switch OFF.
(b) Disconnect the E7 ECM connector.
(c) Turn the ignition switch to the ON position.
(d) Measure the voltage according to the value(s) in the table below.

Standard Voltage

Tester connection	Clutch Pedal condition	Specification
D(E7-21) - Body ground	Depressed	Below 1 V
D(E7-21) - Body ground	Released	10 to 14 V

(e) Reconnect the ECM connector.

OK → **PROCEED TO NEXT CIRCUIT INSPECTION SHOWN IN PROBLEM SYMPTOMS TABLE**

NG

2 INSPECT CLUTCH SWITCH ASSEMBLY

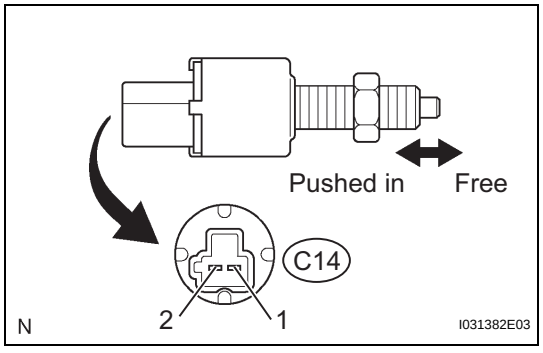

(a) Turn the ignition switch off.
(b) Disconnect the clutch switch C14 connector.
(c) Measure the resistance according to the value(s) in the table below.

Standard Resistance

Tester connection	Clutch Pedal condition	Specification
C14-1 - C14-2	Switch pin free (Clutch pedal depressed)	10 kΩ or higher
C14-1 - C14-2	Switch pin pushed in (Clutch pedal released)	Below 1 Ω

(d) Reconnect the clutch switch connector.

NG → **REPLACE CLUTCH SWITCH ASSEMBLY**

OK

3	CHECK HARNESS AND CONNECTOR (CLUTCH SWITCH ASSEMBLY - BODY GROUND)

1GR-FE:

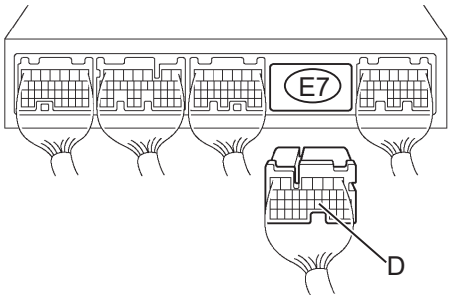

2TR-FE:

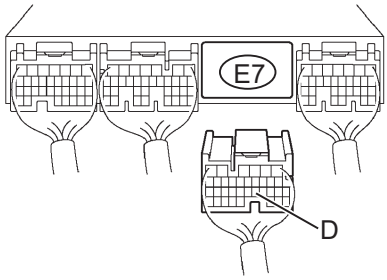

Clutch Switch Connector Front View on Wire Harness Side:

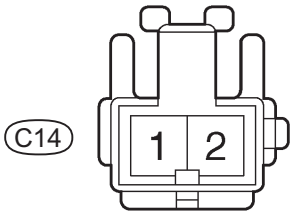

I101323E01

(a) Disconnect the E7 ECM connector.
(b) Disconnect the C14 clutch switch connector.
(c) Measure the resistance according to the value(s) in the table below.

Standard Resistance

Tester connection	Clutch Pedal condition	Specification
C14-2 - Body ground	Always	10 kΩ or higher
C14-2 - D (E7-21)	Always	Below 1 Ω

(d) Reconnect the clutch switch connector.
(e) Reconnect the ECM connector.

NG → **REPAIR OR REPLACE HARNESS OR CONNECTOR (CLUTCH SWITCH ASSEMBLY - ECM)**

OK

CHECK AND REPAIR HARNESS OR CONNECTOR (CLUTCH SWITCH ASSEMBLY - BATTERY)

Cruise Control Switch Circuit

DESCRIPTION

This circuit sends signals to the ECM depending on the cruise control main switch condition.
The battery supplies the positive (+) battery voltage to the cruise control main switch. Then terminal CCS of the ECM receives the voltage as the signal according to the switch condition.

WIRING DIAGRAM

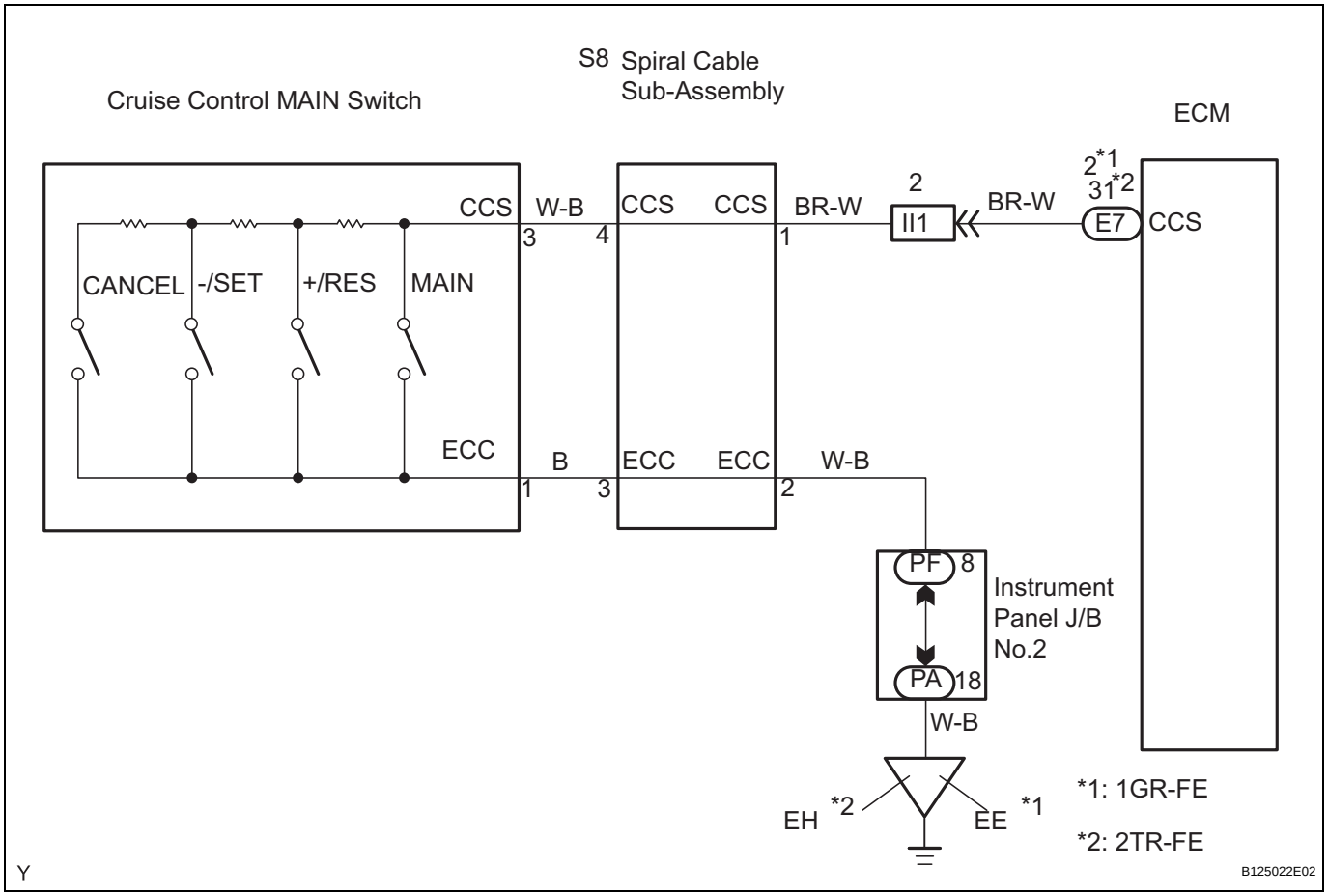

CC

1	INSPECT CRUISE CONTROL MAIN SWITCH

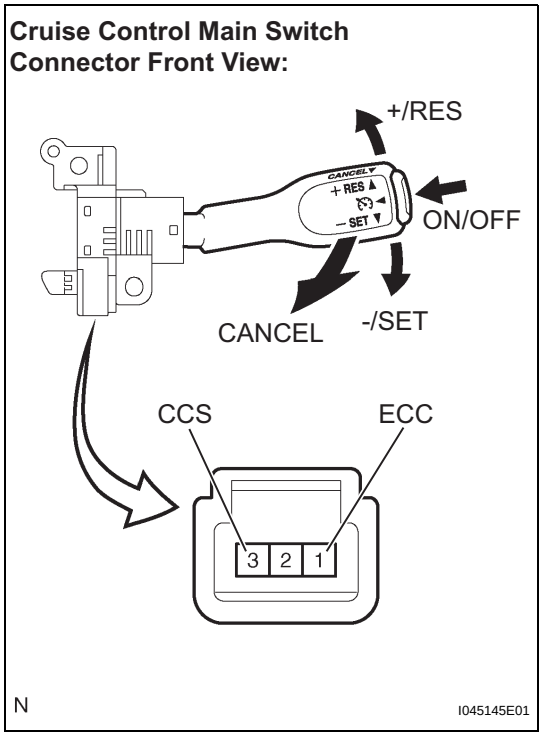

(a) Turn the ignition switch off.
(b) Disconnect the cruise control main switch connector.
(c) Measure the resistance according to the value(s) in the table below.

Standard Resistance

Tester Connection	Switch Condition	Specified Condition
1 - 3	+ / RES	235 to 245 Ω
1 - 3	- / SET	617 to 643 Ω
1 - 3	CANCEL	1,509 to 1,571 Ω
1 - 3	Main Switch OFF	10 kΩ or higher
1 - 3	Main Switch ON	Below 1 Ω

(d) Reconnect the cruise control main switch connector.

NG → REPLACE CRUISE CONTROL MAIN SWITCH

OK

2	CHECK HARNESS AND CONNECTOR (CRUISE CONTROL MAIN SWITCH - SPIRAL CABLE SUB-ASSEMBLY)

(a) Disconnect the spiral cable side connector.

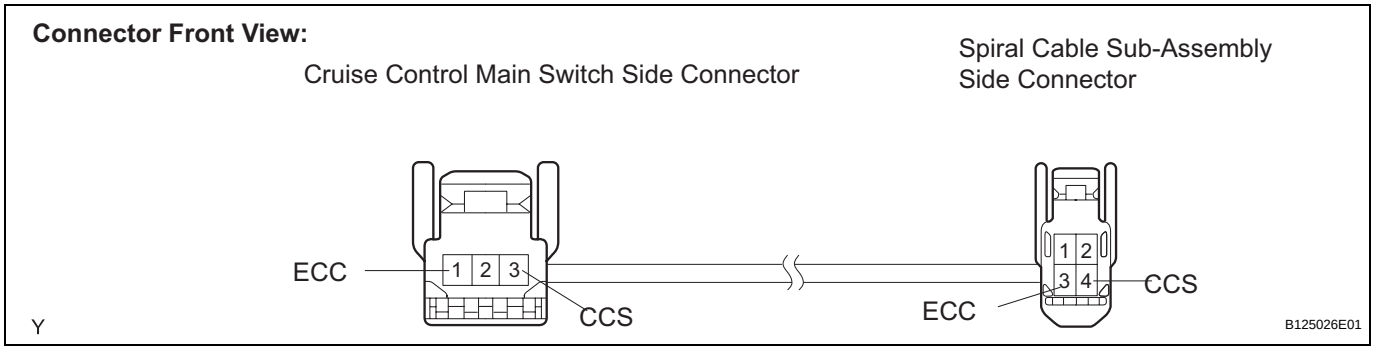

(b) Measure the resistance according to the value(s) in the table below.

Standard Resistance

Tester Connection	Condition	Specified Condition
Terminal 1 (ECC) main switch side - Terminal 3 (ECC) spiral cable side	Always	Below 1 Ω
Terminal 3 (ECC) main switch side - Terminal 4 (ECC) spiral cable side	Always	Below 1 Ω

(c) Reconnect the spiral cable side connector.

CC

NG → **REPAIR OR REPLACE HARNESS OR CONNECTOR**

OK

3 INSPECT SPIRAL CABLE SUB-ASSEMBLY

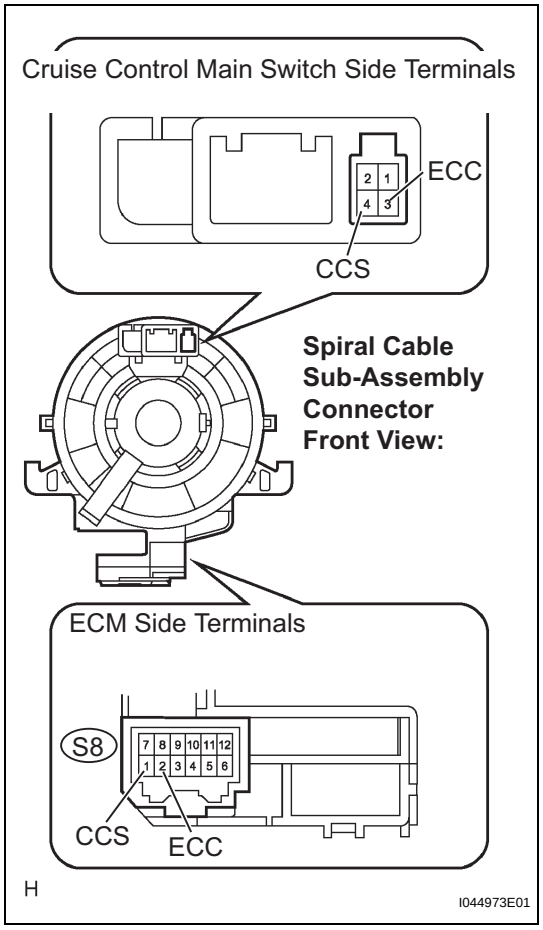

(a) Disconnect the spiral cable connector on the ECM side.
(b) Measure the resistance according to the value(s) in the table below.

Standard Resistance

Tester Connection	Condition	Specified Condition
Terminal 4 (ECC) main switch side - CCS (S8-1)	Always	Below 1 Ω
Terminal 3 (ECC) main switch side - ECC (S8-2)	Always	Below 1 Ω

NG → **REPLACE SPIRAL CABLE SUB-ASSEMBLY**

OK

4 CHECK HARNESS AND CONNECTOR (SPIRAL CABLE SUB-ASSEMBLY - BODY GROUND)

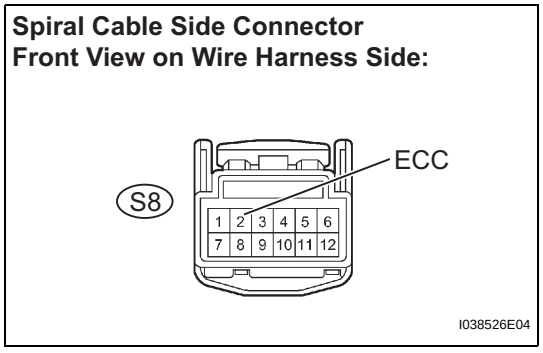

(a) Measure the resistance according to the value(s) in the table below.

Standard Resistance

Tester Connection	Condition	Specified Condition
ECC (S8-2) - Body ground	Always	Below 1 Ω

NG → **REPAIR OR REPLACE HARNESS OR CONNECTOR (SPIRAL CABLE SUB-ASSEMBLY - BODY GROUND)**

OK

CC

5	CHECK HARNESS AND CONNECTOR (SPIRAL CABLE SUB-ASSEMBLY - ECM)

1GR-FE:

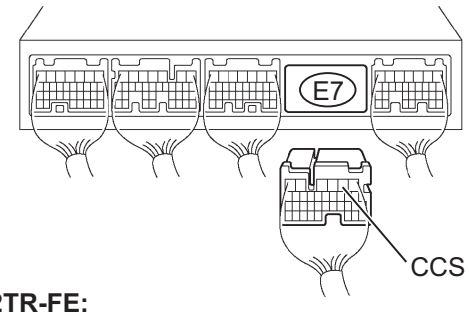

2TR-FE:

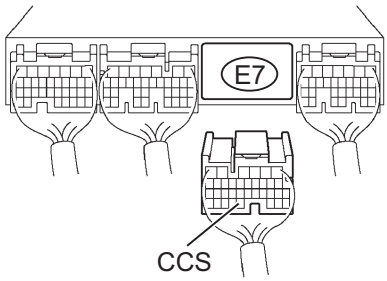

Spiral Cable Side Connector Front View on Wire Harness Side:

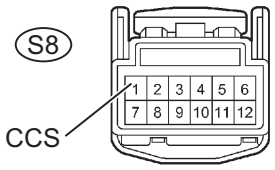

I101321E01

(a) Disconnect the E7 ECM connector.
(b) Measure the resistance according to the value(s) in the table below.

Standard Resistance (1GR-FE)

Tester Connection	Condition	Specified Condition
CCS (E7-2) - CCS (S8-1)	Always	Below 1 Ω
CCS (E7-2) - Body ground	Always	10 kΩ or higher

Standard Resistance (2TR-FE)

Tester Connection	Condition	Specified Condition
CCS (E7-31) - CCS (S8-1)	Always	Below 1 Ω
CCS (E7-31) - Body ground	Always	10 kΩ or higher

(c) Reconnect the ECM connector.

NG → **REPAIR OR REPLACE HARNESS OR CONNECTOR (SPIRAL CABLE SUB-ASSEMBLY - ECM)**

OK

PROCEED TO NEXT CIRCUIT INSPECTION SHOWN IN PROBLEM SYMPTOMS TABLE

Cruise Main Indicator Light Circuit

DESCRIPTION

When the CRUISE CONTROL MAIN switch is turned off, cruise control does not operate.

WIRING DIAGRAM

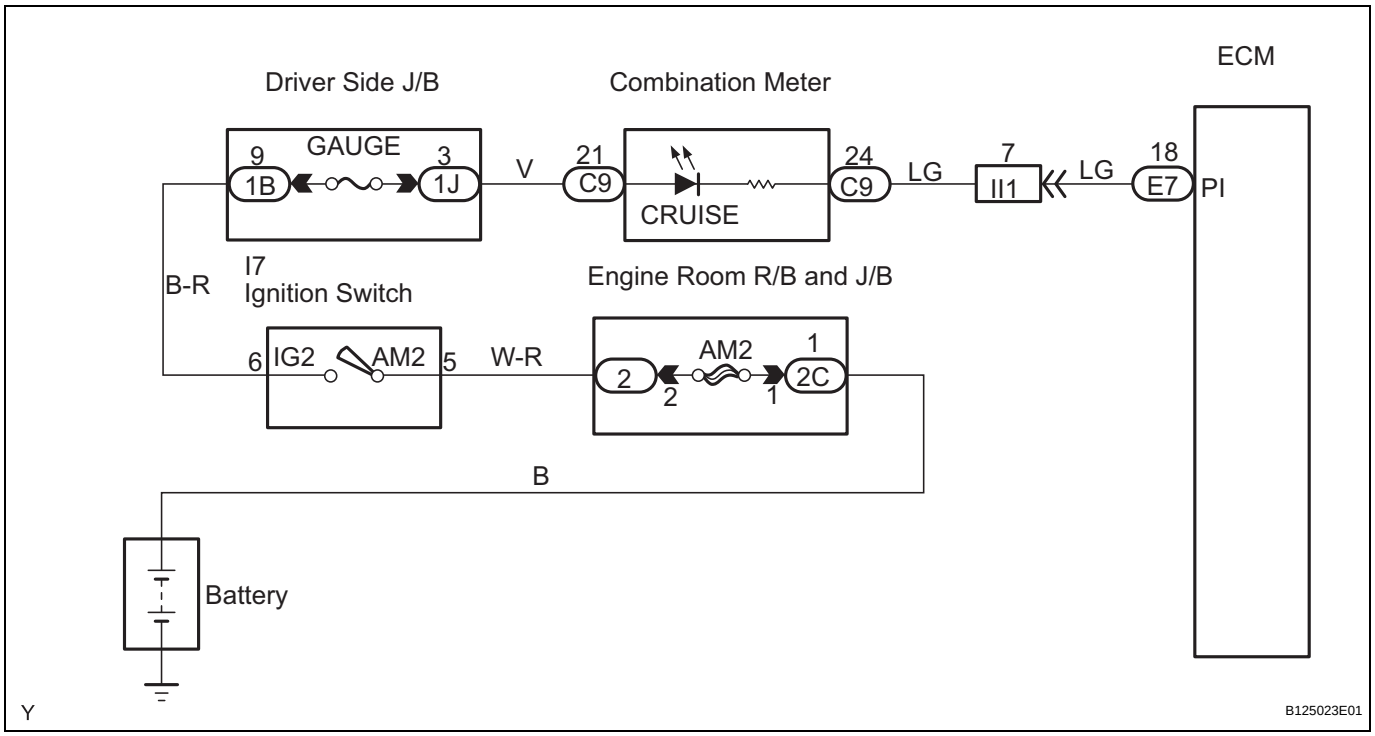

CC

1	CHECK HARNESS AND CONNECTOR (ECM - BATTERY)

1GR-FE:

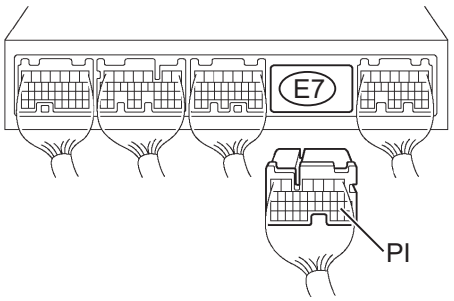

2TR-FE:

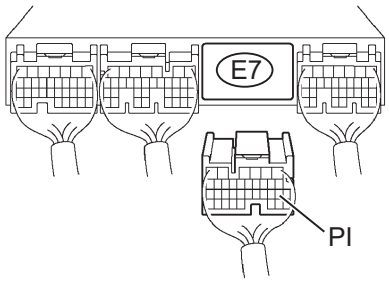

I101322E01

NG

(a) Turn the ignition switch off.
(b) Disconnect the E7 ECM connector.
(c) Measure the voltage according to the value(s) in the table below.

Standard Voltage (1GR-FE)

Tester connection	Condition	Specification
PI (E7-18) - Body ground	Ignition ON	10 to 14 V

Standard Voltage (2TR-FE)

Tester connection	Condition	Specification
PI (E7-18) - Body ground	Ignition ON	10 to 14 V

OK → **PROCEED TO NEXT CIRCUIT INSPECTION SHOWN IN PROBLEM SYMPTOMS TABLE**

2 CHECK HARNESS AND CONNECTOR (COMBINATION METER ASSEMBLY - ECM)

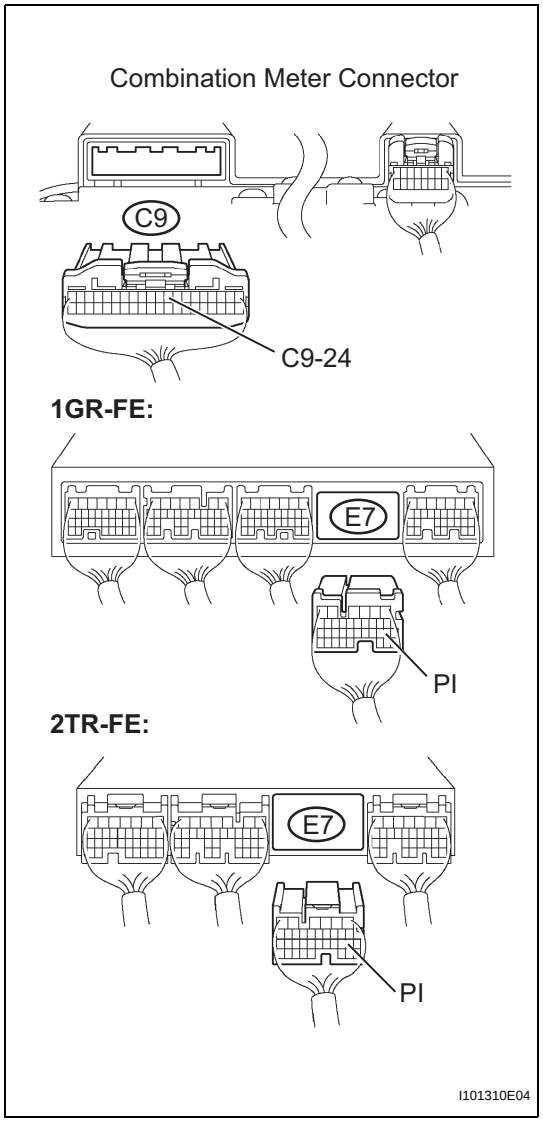

(a) Turn the ignition switch off.
(b) Disconnect the E7 ECM connector.
(c) Disconnect the combination meter C9 connector.
(d) Measure the resistance according to the value(s) in the table below.

Standard Resistance

Tester connection	Condition	Specification
C9-24 - PI (E7-18)	Always	Below 1Ω
C9-24 - Body ground	Always	10 kΩ or higher

(e) Reconnect the combination meter connector.
(f) Reconnect the ECM connector.

NG → **REPAIR OR REPLACE HARNESS OR CONNECTOR (COMBINATION METER ASSEMBLY - ECM)**

OK

3 CHECK HARNESS AND CONNECTOR (COMBINATION METER ASSEMBLY - BATTERY)

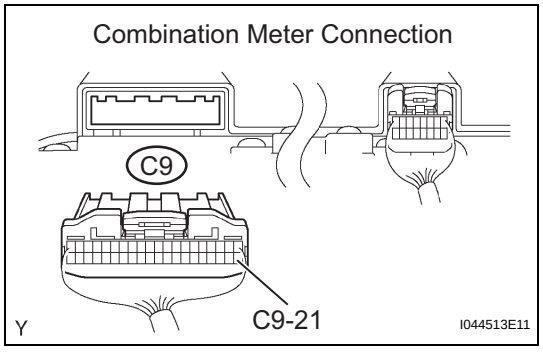

(a) Disconnect the C9 combination meter connector.
(b) Measure the voltage according to the value(s) in the table below.

Standard Voltage

Tester connection	Condition	Specification
C9-21 - Body ground	Ignition ON	10 to 14 V

(c) Reconnect the combination meter connector.

NG → **REPAIR OR REPLACE HARNESS OR CONNECTOR (COMBINATION METER - BATTERY)**

CC

OK

REPLACE COMBINATION METER ASSEMBLY

TC and CG Terminal Circuit

DESCRIPTION

The DLC3 circuit enables reading of Diagnostic Trouble Codes (DTCs) with no intelligent testers by connecting terminals TC and CG of the DLC3 connector.
Stored DTCs are displayed in blinking patterns of the CRUISE MAIN indicator light located on the combination meter.

WIRING DIAGRAM

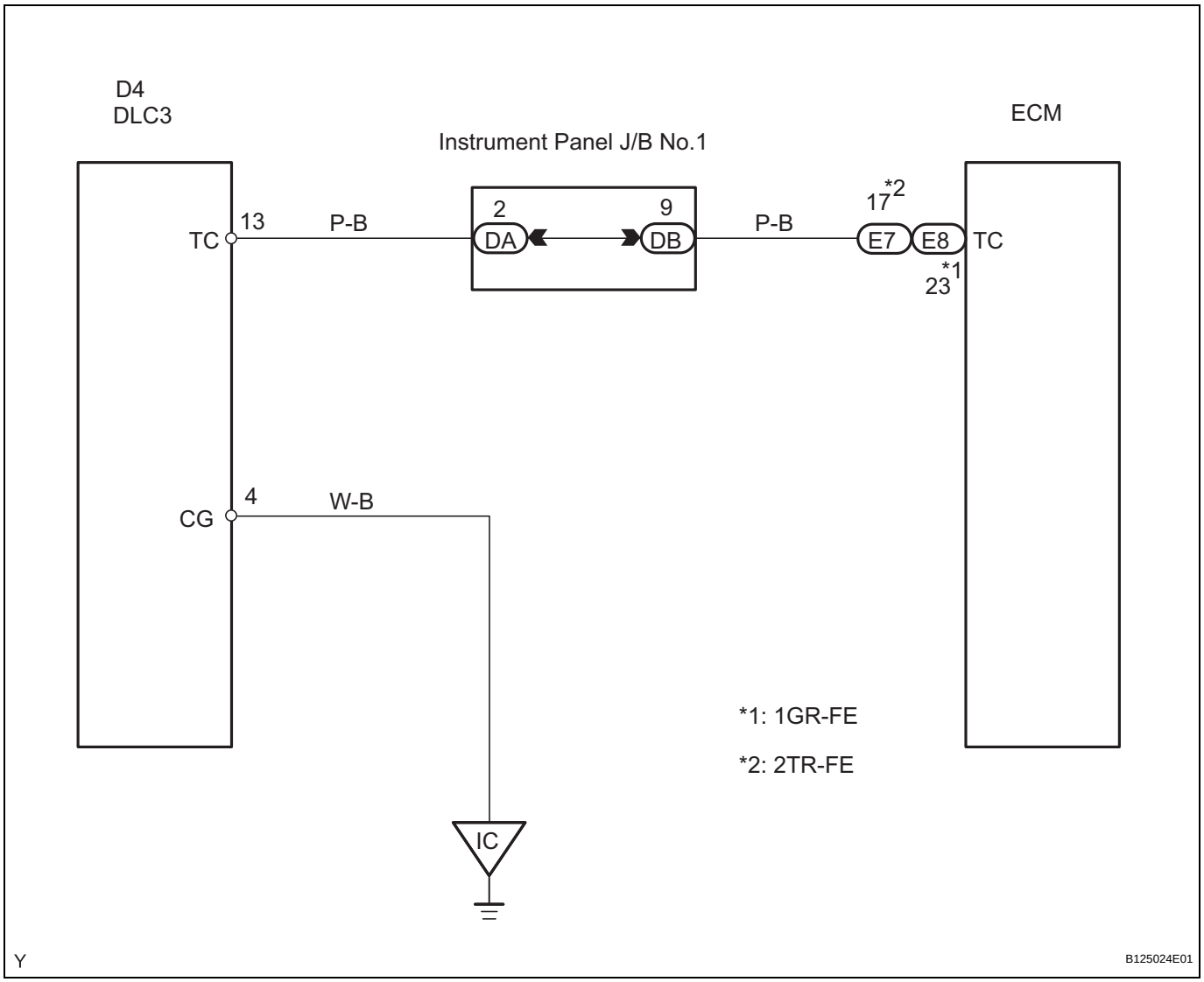

HINT:
When a particular warning light blinks continuously, a ground short in the wiring of terminal TC of the DLC3 or an internal ground short in the relevant ECU is suspected.

1 CHECK HARNESS AND CONNECTOR (TC of DLC3 - ECM)

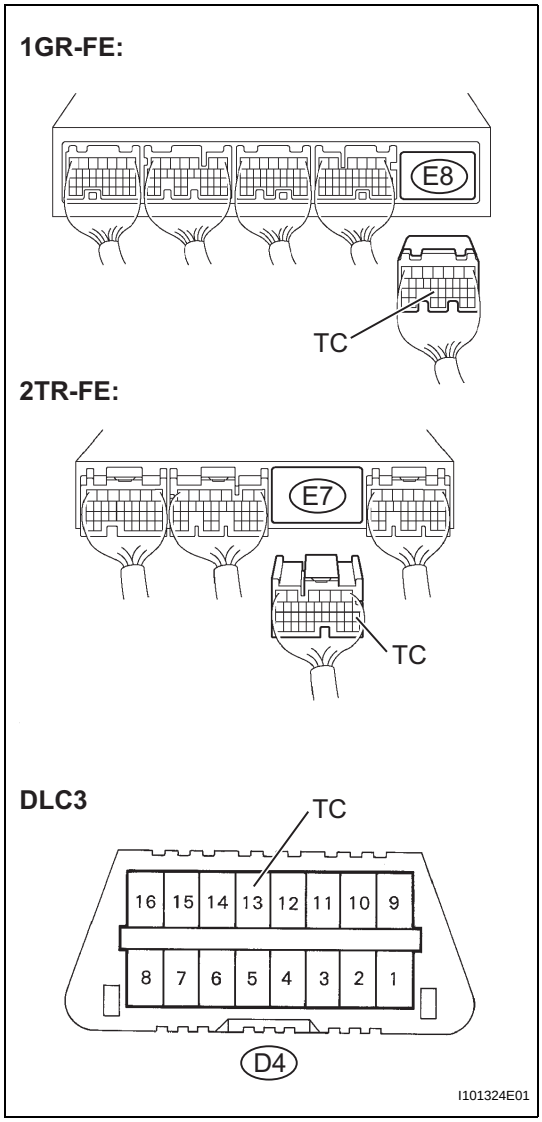

(a) Turn the ignition switch off.
(b) 1GR-FE:
Disconnect the E8 connector of the ECM.
(c) 2TR-FE:
Disconnect the E7 connector of the ECM.
(d) Measure the resistance according to the value(s) in the table below.

Standard Resistance (1GR-FE)

Tester connection	Condition	Specification
TC (D4-13) - TC (E8-23)	Always	Below 1 Ω

Standard Resistance (2TR-FE)

Tester connection	Condition	Specification
TC (D4-13) - TC (E7-17)	Always	Below 1 Ω

(e) Reconnect the ECM connector.

NG → **REPAIR OR REPLACE HARNESS OR CONNECTOR (TC of DLC3 - ECM)**

OK

2 CHECK HARNESS AND CONNECTOR (TC of DLC3 - BODY GROUND)

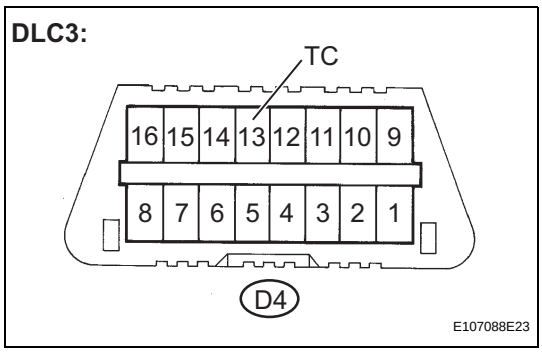

(a) Measure the resistance according to the value(s) in the table below.

Standard Resistance

Tester connection	Condition	Specification
TC (D4-13) - Body ground	Always	10 kΩ or higher

NG → **REPAIR OR REPLACE HARNESS OR CONNECTOR (TC CIRCUIT)**

OK

CC

3	CHECK HARNESS AND CONNECTOR (CG of DLC3 - BODY GROUND)

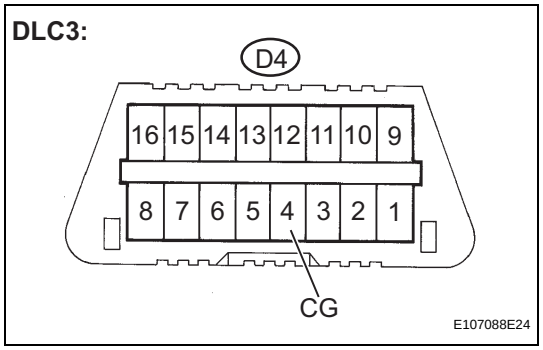

(a) Measure the resistance according to the value(s) in the table below.

Standard Resistance

Tester connection	Condition	Specification
CG (D4-4) - Body ground	Always	Below 1 Ω

NG → **REPAIR OR REPLACE HARNESS OR CONNECTOR (CG of DLC3 - BODY GROUND)**

OK

REPLACE ECM

DATA LIST / ACTIVE TEST

1. DATA LIST

HINT:

By reading the DATA LIST displayed on an intelligent tester, you can check values, including those of the switches, sensors, and actuators, without removing any parts. Reading the DATA LIST as the first step of troubleshooting is one method of shortening diagnostic time.

NOTICE:

In the table below, the values listed under Normal Condition are for reference only. Do not depend solely on these values when determining whether or not a part is faulty.

(a) Warm up the engine.
(b) Turn the ignition switch OFF.
(c) Connect an intelligent tester to the DLC3.
(d) Turn the ignition switch ON.
(e) Turn the tester ON.
(f) Select the following menu items: DIAGNOSIS / ENHANCED OBD II / DATA LIST.
(g) Check the values by referring to the table below.

Intelligent Tester Display	Measurement Item:Range (Display)	Normal Condition *	Diagnostic Note
INJECTOR	Injection period of No. 1 cylinder: Min.: 0 ms, Max.: 32.64 ms	1.6 to 2.4 ms: Idling	-
IGN ADVANCE	Ignition timing advance for No. 1 cylinder/ Min.: -64 deg., Max.: 63.5 deg.	BTDC 7 to 24°: Idling	-
CALC LOAD	Calculated load by ECM: Min.: 0 %, Max.: 100 %	• 11.4 to 16.4 %: Idling • 13.1 to 18.9 %: Running without load (2,500 rpm)	-
VEHICLE LOAD	Vehicle load: Min.: 0 %, Max.: 25,700 %	Actual vehicle load	-
MAF	Air flow rate from MAF meter: Min.: 0 g/sec, Max.: 655 g/sec	3.2 to 4.7 g/sec: Idling 13.1 to 18.9 g/sec: 2,500 rpm	If value approximately 0.0 g/sec: • Mass air flow meter power source circuit open • VG circuit open or short If value 160.0 g/sec or more: • E2G circuit open
ENGINE SPD	Engine speed: Min.: 0 rpm, Max.: 16,383 rpm	650 to 750 rpm: Idling	-
VEHICLE SPD	Vehicle speed: Min.: 0 km/h, Max.: 255 km/h	Actual vehicle speed	Speed indicated on speedometer
COOLANT TEMP	Engine coolant temperature: Min.: -40°C, Max.: 140°C	80 to 100°C (176 to 212°F):After warming up	• If value -40°C (-40°F): sensor circuit open • If value 140°C (284°F) or more: sensor circuit shorted
INTAKE AIR	Intake air temperature: Min.: -40°C, Max.: 140°C	Equivalent to ambient air temperature	• If value -40°C (-40°F): sensor circuit open • If value 140°C (284°F) or more: sensor circuit shorted
AIR-FUEL RATIO	Air-fuel ratio: Min.: 0, Max.: 1.999	0.8 to 1.2: During idling	-
PURGE DENSITY	Learning value of purge density/ Min.: -50 %, Max.: 350 %	-40 to 0 %: Idling	Service data
PURGE FLOW	Purge flow: Min.: 0 %, Max.: 102.4 %	0 to 100 %: Idling	-

Intelligent Tester Display	Measurement Item:Range (Display)	Normal Condition *	Diagnostic Note
EVAP PURGE VSV	EVAP (Purge) VSV control duty: Min.: 0 %, Max.: 100 %	0 to 100 %: During idling	Order signal from ECM
VAPOR PRESS PUMP	Vapor pressure: Min.: 33.853 kPa, Max.: 125.596 kPa	Approximately 100 kPa: Ignition switch ON	EVAP system pressure monitored by canister pressure sensor
VAPOR PRESS CALC	Vapor pressure: (calculated) Min.: -5.632 kPa, Max.: 7,153,264 kPa	Approximately 100 kPa: Ignition switch ON	EVAP system pressure monitored by canister pressure sensor
KNOCK CRRT VAL	Correction learning value of knocking: Min.: -64° CA, Max.: 1,984° CA	0 to 22 °CA: Driving, 44 mph (70 km/h)	Service data
KNOCK FB VAL	Feedback value of knocking: Min.: -64° CA, Max.: 1,984° CA	-22 to 0 °CA Driving, 44 mph (70 km/h)	Service data
CLUTCH	Clutch current Min.: 0 A, Max.: 2.49 A	-	-
ETCS MAG CLUTCH	Electromagnetic clutch: ON or OFF	-	-
EVAP VAPOR PRES	EVAP vapor pressure: Min.: 0 kPa, Max.: 327.675 kPa	Approximately 100 kPa: Ignition switch ON	-
ACCEL POS #1	Absolute Accelerator Pedal Position (APP) No. 1: Min.: 0 %, Max.: 100 %	10 to 22 %: Accelerator pedal released 54 to 86 %: Accelerator pedal fully depressed	-
ACCEL POS #2	Absolute APP No. 2: Min.: 0 %, Max.: 100 %	12 to 42 %: Accelerator pedal released 66 to 98 %: Accelerator pedal fully depressed	-
ACCEL POS #1	APP sensor No. 1 voltage: Min.: 0 V, Max.: 4.98 V	-	ETCS freeze data
ACCEL POS #2	APP sensor No. 2 voltage: Min.: 0 V, Max.: 4.98 V	-	ETCS freeze data
ACCEL POS #1	APP sensor No. 1 voltage: Min.: 0 V, Max.: 5 V	0.5 to 1.1 V: Accelerator pedal released. 2.6 to 4.5t V: Accelerator pedal fully depressed.	-
ACCEL POS #2	APP sensor No. 2 voltage: Min.: 0 V, Max.: 5 V	1.2 to 2.0 V: Accelerator pedal released. 3.4 to 5.0 V: Accelerator pedal fully depressed.	-
ACCEL IDL POS	Whether or not accelerator pedal position sensor detecting idle: ON or OFF	ON: Idling	-
THRTL LEARN VAL	Throttle valve fully closed (learned value): Min.: 0 V, Max.: 5 V	0.4 to 0.8 V	-
ACCEL SSR #1 AD	Accelerator fully closed value No.1 (AD): Min.: 0, Max.: 4.98 V	-	ETCS service data
ACCEL LRN VAL#1	Accelerator fully closed learning value No.1: Min.: 0, Max.: 124.512	-	ETCS service data
ACCEL LRN VAL#2	Accelerator fully closed learning value No.2: Min.: 0, Max.: 124.512	-	ETCS service data
FAIL #1	Whether or not fail safe function executed: ON or OFF	ON: ETCS has failed	-
FAIL #2	Whether or not fail safe function executed: ON or OFF	ON: ETCS has failed	-

Intelligent Tester Display	Measurement Item:Range (Display)	Normal Condition *	Diagnostic Note
ST1	Starter signal: ON or OFF	ON: Cranking	-
SYS GUARD JUDGE	System guard: ON or OFF	-	ETCS service data
OPN MALFUNCTION	Open side malfunction: ON or OFF	-	ETCS service data
THROTTLE POS	Absolute throttle position sensor: Min.: 0 %, Max.: 100 %	• 10 to 24 %: Throttle fully closed • 64 to 96 %: Throttle fully open	Read value with intrusive operation (active test)
THROTTL IDL POS	Whether or not throttle position sensor detecting idle: ON or OFF	ON: Idling	-
THRTL REQ POS	Throttle requirement position: Min.: 0 V, Max.: 5 V	0.5 to 1.0 V: Idling	-
THROTTLE POS	Throttle sensor positioning: Min.: 0 %, Max.: 100 %	0 to 10 %: Idling	Calculated value based on VTA1
THROTTLE POS #2	Throttle sensor positioning #2: Min.: 0 %, Max.: 100 %	-	Calculated value based on VTA2
THROTTLE POS #1	Throttle position sensor No. 1 output voltage: Min.: 0 V, Max.: 4.9 V	-	ETCS freeze data
THROTTLE POS #2	Throttle position sensor No.2 output voltage: Min.: 0 V, Max.: 4.9 V	-	ETCS freeze data
THROTTLE POS #1	Throttle position No. 1: Min.: 0 V, Max.: 5 V	• 0.5 to 1.2 V: Throttle fully closed • 3.2 to 4.8 V: Throttle fully opened	-
THROTTLE POS #2	Throttle position No. 2: Min.: 0 V, Max.: 5 V	• 2.0 to 2.9 V: Throttle fully closed • 4.6 to 5.0 V: Throttle fully open	Read value with intrusive operation (active test)
THRTL COMND VAL	Throttle position command value: Min.: 0 V, Max.: 4.98 V	0.5 to 4.8 V	ETCS service data
THROTTLE SSR #1	Throttle sensor opener position No. 1: Min.: 0 V, Max.: 4.98 V	0.6 to 1.0 V	ETCS service data
THROTTLE SSR #2	Throttle sensor opener position No. 2: Min.: 0 V, Max.: 4.98 V	2.0 to 2.6 V	ETCS service data
THRTL SSR #1 AD	Throttle sensor opener position No.1 (AD): Min.: 0 V, Max.: 4.98 V	0.6 to 0.9 V	ETCS service data
THROTTLE MOT	Throttle motor current: Min.: 0 A, Max.: 80 A	0 to 3.0 A: Idling	-
THROTTLE MOT	Whether or not throttle motor control permitted: ON or OFF	ON: Idling	Read value with ignition switch ON (Do not start engine)
THROTTLE MOT	Throttle motor: Min.: 0 %, Max.: 100 %	0.5 to 40 %: Idling	-
THROTTLE MOT	Throttle motor current: Min.: 0 A, Max.: 19.92 A	0 to 3.0 A: Idling	-
THROTL OPN DUTY	Throttle motor opening duty ratio: Min.: 0 %, Max.: 100 %	0 to 40 %: During idling	When accelerator pedal depressed, duty ratio increased
THROTL CLS DUTY	Throttle motor closed duty ratio: Min.: 0 %, Max.: 100 %	0 to 40 %: During idling	When accelerator pedal released quickly, duty ratio increased
THRTL MOT (OPN)	Throttle motor duty ratio (open): Min.: 0 %, Max.: 100 %	-	ETCS service data

ES

Intelligent Tester Display	Measurement Item:Range (Display)	Normal Condition *	Diagnostic Note
THRTL MOT (CLS)	Throttle motor duty ratio (close): Min.: 0 %, Max.: 100 %	-	ETCS service data
O2S B1 S2	Heated oxygen sensor output voltage for bank 1 sensor 2: Min.: 0 V, Max.: 1.275 V	0.1 to 0.9 V: Driving 44 mph (70 km/h)	Performing INJ VOL or A/F CONTROL function of ACTIVE TEST enables technician to check voltage output of sensor
O2S B2 S2	Heated oxygen sensor output voltage for bank 2 sensor 2: Min.: 0 V, Max.: 1.275 V	0.1 to 0.9 V: Driving 44 mph (70 km/h)	Performing INJ VOL or A/F CONTROL function of ACTIVE TEST enables technician to check voltage output of sensor
AFS B1 S1	A/F sensor output voltage for bank 1 sensor 1: Min.: 0 V, Max.: 7.999 V	2.8 to 3.8 V: Idling	Performing INJ VOL or A/F CONTROL function of ACTIVE TEST enables technician to check voltage output of sensor
AFS B2 S1	A/F sensor output voltage for bank 2 sensor 1: Min.: 0 V, Max.: 7.999 V	2.8 to 3.8 V: Idling	Performing INJ VOL or A/F CONTROL function of ACTIVE TEST enables technician to check voltage output of sensor
TOTAL FT #1	Total fuel trim of bank 1 Average value for fuel trim system of bank 1: Min.: -0.5, Max.: 0.496	-0.2 to 0.2: Idling	-
TOTAL FT #2	Total fuel trim of bank 2 Average value for fuel trim system of bank 2: Min.: -0.5, Max.: 0.496	-0.2 to 0.2: Idling	-
SHORT FT #1	Short-term fuel trim of bank 1: Min.: -100 %, Max.: 99.2%	0 +- 20 %	Short-term fuel compensation used to maintain air-fuel ratio at stoichiometric air-fuel ratio
LONG FT #1	Long-term fuel trim of bank 1: Min.: -100 %, Max.: 99.2 %	0 +- 20 %	Overall fuel compensation carried out in long-term to compensate continual deviation of short-term fuel trim from central value
SHORT FT #2	Short-term fuel trim of bank 2: Min.: -100 %, Max.: 99.2%	0 +- 20 %	Short-term fuel compensation used to maintain air-fuel ratio at stoichiometric air-fuel ratio
LONG FT #2	Long-term fuel trim of bank 2: Min.: -100 %, Max.: 99.2 %	0 +- 20 %	Overall fuel compensation carried out in long-term to compensate continual deviation of short-term fuel trim from central value
FUEL SYS #1	Fuel system status (Bank1): OL or CL or OL DRIVE or OL FAULT or CL FAULT	CL: Idling after warming up	• OL (Open Loop): Has not yet satisfied conditions to go closed loop • CL (Closed Loop): Using heated oxygen sensor as feedback for fuel control • OL DRIVE: Open loop due to driving conditions (fuel enrichment) • OL FAULT: Open loop due to detected system fault • CL FAULT: Closed loop but heated oxygen sensor, which used for fuel control, malfunctioning

Intelligent Tester Display	Measurement Item:Range (Display)	Normal Condition *	Diagnostic Note
FUEL SYS #2	Fuel system status (Bank2): OL or CL or OL DRIVE or OL FAULT or CL FAULT	CL: Idling after warming up	• OL (Open Loop): Has not yet satisfied conditions to go closed loop • CL (Closed Loop): Using heated oxygen sensor as feedback for fuel control. • OL DRIVE: Open loop due to driving conditions (fuel enrichment) • OL FAULT: Open loop due to detected system fault • CL FAULT: Closed loop but heated oxygen sensor, which used for fuel control, malfunctioning
O2FT B1 S2	Short-term fuel trim associated with bank 1 sensor 2: Min.: -100 %, Max.: 99.2 %	-	Same as SHORT FT #1
O2FT B2 S2	Short-term fuel trim associated with bank 2 sensor 2: Min.: -100 %, Max.: 99.2 %	-	Same as SHORT FT #2
AF FT B1 S1	Short-term fuel trim associated with bank 1 sensor 1: Min.: 0, Max.: 1.999	• Value less than 1 (0.000 to 0.999) = Lean • Stoichiometric air-fuel ratio=1 • Value greater than 1 (1.001 to 1.999) = RICH	-
AF FT B2 S1	Short-term fuel trim associated with bank 2 sensor 1: Min.: 0, Max.: 1.999	• Value less than 1 (0.000 to 0.999) = Lean • Stoichiometric air-fuel ratio=1 • Value greater than 1 (1.001 to 1.999) = RICH	-
CAT TEMP B1S1	Catalyst temperature (Bank 1, Sensor 1): Min.: -40, Max.: 6,513.5 °C	-	-
CAT TEMP B2S1	Catalyst temperature (Bank 2, Sensor 1): Min.: -40, Max.: 6,513.5 °C	-	-
CAT TEMP B1S2	Catalyst temperature (Bank 1, Sensor 2): Min.: -40, Max.: 6,513.5 °C	-	-
CAT TEMP B2S2	Catalyst temperature (Bank 2, Sensor 2): Min.: -40, Max.: 6,513.5 °C	-	-
INI COOL TEMP	Initial engine coolant temperature: Min.: -40°C, Max.: 140°C	Coolant temperature when engine started	Service data
INI INTAKE TEMP	Initial intake air temperature: Min.: -40°C, Max.: 140°C	Intake air temperature when engine started	Service data
INJ VOL	Injection volume (cylinder 1): Min.: 0 ml, Max.: 2.048 ml	0 to 0.5 ml	Quantity of fuel injection volume for 10 times
STARTER SIG	Starter signal: ON or OFF	ON: Cranking	-
PS SW	Power steering signal: ON or OFF	ON: Power steering operation	-
PS SIGNAL	Power steering signal (history): ON or OFF	ON: When steering wheel first turned after battery terminals connected	This signal status usually ON until battery terminals disconnected
CTP SW	Closed throttle position switch: ON or OFF	ON: Throttle fully closed OFF: Throttle open	-
A/C SIG	A/C signal: ON or OFF	ON: A/C ON	-

Intelligent Tester Display	Measurement Item:Range (Display)	Normal Condition *	Diagnostic Note
PNP SW [NSW]	PNP switch status: ON or OFF	ON: P or N position	-
ELECT LOAD SIG	Electrical load signal: ON or OFF	ON: Headlights or defogger turned ON	-
STOP LIGHT SW	Stop light switch: ON or OFF	ON: brake pedal depressed	-
+BM	Whether or not electric throttle control system power inputted: ON or OFF	ON: Idling	-
+BM VOLTAGE	+BM voltage: Min.: 0, Max.: 19.92	10 to 15 V: Idling	ETCS service data
BATTERY VOLTAGE	Battery voltage: Min.: 0 V, Max.: 65.535 V	9 to 14 V: Idling	-
ACTUATOR POWER	Actuator power supply: ON or OFF	ON: Idling	ETCS service data
ATM PRESSURE	Atmospheric pressure: Min.: 0 kPa, Max.: 150 kPa	Equivalent to atmospheric pressure (absolute pressure)	-
FUEL PMP SP CTL	Fuel pump speed control status: ON/H or OFF/L	Idling: ON	-
ACIS VSV	ACIS VSV: ON or OFF	-	ON: Open OFF: Closed
ACT VSV	A/C cut status for Active Test: ON or OFF	-	Active Test support data
VVT CTRL B2	VVT control (bank 2) status: ON or OFF	-	Active Test support data
EVAP (Purge) VSV	VSV status for EVAP control: ON or OFF	-	Active Test support data
FUEL PUMP / SPD	Fuel pump/status: ON or OFF	-	Active Test support data
VVT CTRL B1	VVT control (bank 1) status: ON or OFF	-	Active Test support data
VACUUM PUMP	Key-off EVAP system pump status: ON or OFF	-	Active Test support data
FAN MOTOR	Electric fan motor ON or OFF	-	Active Test support data
EVAP VENT VAL	Key-off EVAP system vent valve status: ON or OFF	-	Active Test support data
TC/TE1	TC and TE1 terminal of DLC3: ON or OFF	-	-
VVTL AIM ANGL #1	VVT aim angle (bank 1): Min.: 0 %, Max.: 100 %	0 %: Idling	VVT duty signal value during intrusive operation
VVT CHNG ANGL #1	VVT change angle: Min.: 0°FR, Max.: 60°FR	0 to 5 °FR: Idling	Displacement angle during intrusive operation
VVT OCV DUTY B1	VVT OCV operation duty: Min.: 0 %, Max.: 100 %	0 %: Idling	Requested duty value for intrusive operation
VVTL AIM ANGL #2	VVT aim angle (bank 2): Min.: 0 %, Max.: 100 %	0 %: Idling	VVT duty signal value during intrusive operation
VVT CHNG ANGL #2	VVT change angle (bank 2): Min.: 0°FR, Max.: 60°FR	0 to 5 °FR: Idling	Displacement angle during intrusive operation
VVT OCV DUTY B2	VVT OCV (bank 2) operation duty: Min.: 0 %, Max.: 100 %	0 %: Idling	Requested duty value for intrusive operation
FC IDL	Fuel cut idle: ON or OFF	ON: Fuel cut operation	FC IDL = "ON" when throttle valve fully closed and engine speed over 2,800 rpm

Intelligent Tester Display	Measurement Item:Range (Display)	Normal Condition *	Diagnostic Note
FC TAU	Fuel cut TAU: Fuel cut during very light load: ON or OFF	ON: Fuel cut operating	Fuel cut being performed under very light load to prevent engine combustion from becoming incomplete
IGNITION	Ignition counter: Min.: 0, Max.: 600	0 to 600	-
CYL #1, #2, #3, #4, #5, #6	Misfire ratio of cylinders 1 to 6: Min.: 0, Max.: 255	0 %	This item displayed in only idling
CYL ALL	All cylinders misfire rate: Min.: 0, Max.: 255	0 to 35	-
MISFIRE RPM	Engine RPM for first misfire range: Min.: 0 rpm, Max.: 6,375 rpm	0 rpm: Misfire 0	-
MISFIRE LOAD	Engine load for first misfire range: Min.: 0 g/rev, Max.: 3.98 g/rev	0 g/rev: Misfire 0	-
MISFIRE MARGIN	Margin to detect engine misfire: Min.: -100 %, Max.: 99.22 %	-100 to 99.2 %	Misfire detecting margin
#CODES	#Codes: Min.: 0, Max.: 255	-	Number of detected DTCs
CHECK MODE	Check mode: ON or OFF	ON: Check mode ON	See page ES-41
SPD TEST	Check mode result for vehicle speed sensor: COMPL or INCMPL	-	-
MISFIRE TEST	Check mode result for misfire monitor: COMPL or INCMPL	-	-
OXS2 TEST	Check mode result for HO2 sensor (bank 2) : COMPL or INCMPL	-	-
OXS1 TEST	Check mode result for HO2 sensor (bank 1) : COMPL or INCMPL	-	-
A/F SSR TEST B2	Check mode result for air-fuel ratio sensor (bank 2) : COMPL or INCMPL	-	-
A/F SSR TEST B1	Check mode result for air-fuel ratio sensor (bank 1) : COMPL or INCMPL	-	-
MIL	MIL status: ON or OFF	ON: MIL ON	-
MIL ON RUN DIST	MIL ON Run Distance: Min.: 0 second, Max.: 65,535 seconds	Drive distance after DTC detected	-
MIL ON RUN TIME	Running time from MIL ON: Min.: 0 minute, Max.: 65,535 minutes	Equivalent to running time after MIL ON	-
ENG RUN TIME	Engine run time: Min.: 0 second, Max.: 65,535 seconds	Time after engine start	Service data
TIME DTC CLEAR	Time after DTC cleared: Min.: 0 minute, Max.: 65,535 minutes	Equivalent to time after DTCs erased	-
DIST DTC CLEAR	Distance after DTC cleared: Min.: 0 km/h, Max.: 65,535 km/h	Equivalent to drive distance after DTCs erased	-
WU CYC DTC CLEAR	Warm-up cycle after DTC cleared: Min.: 0, Max.: 255	-	Number of warm-up cycles after DTC cleared

Intelligent Tester Display	Measurement Item:Range (Display)	Normal Condition *	Diagnostic Note
OBD CERT	OBD requirement	OBD2	-
#CARB CODES	Emission related DTCs	-	Number of emission related DTCs
COMP MON	Comprehensive component monitor: NOT AVL or AVAIL	-	-
FUEL MON	Fuel system monitor: NOT AVL or AVAIL	-	-
MISFIRE MON	Misfire monitor: NOT AVL or AVAIL	-	-
O2S (A/FS) MON	O2S (A/FS) monitor: NOT AVL or AVAIL	-	-
O2S (A/FS) MON	O2S (A/FS) monitor: COMPL or INCMPL	-	-
EVAP MON	EVAP monitor: NOT AVL or AVAIL	-	-
EVAP MON	EVAP monitor: COMPL or INCMPL	-	-
CAT MON	Catalyst monitor: COMPL or INCMPL	-	-
CAT MON	Comprehensive component monitor: UNABLE or ENABLE	-	-
CCM ENA	Comprehensive component monitor: UNABLE or ENABLE	-	-
CCM CMPL	Comprehensive component monitor: COMPL or INCMPL	-	-
FUEL ENA	Fuel system monitor: UNABLE or ENABLE	-	-
FUEL CMPL	Fuel system monitor: COMPL or INCMPL	-	-
MISFIRE ENA	Misfire monitor: UNABLE or ENABLE	-	-
MISFIRE CMPL	Misfire monitor: COMPL or INCMPL	-	-
EGR ENA	EGR monitor: UNABLE or ENABLE	-	-
EGR CMPL	EGR monitor: COMPL or INCMPL	-	-
HTR ENA	O2S (A/FS) heater monitor: UNABLE or ENABLE	-	-
HTR CMPL	O2S (A/FS) heater monitor: COMPL or INCMPL	-	-
O2S (A/FS) ENA	O2S (A/FS) monitor: UNABLE or ENABLE	-	-
O2S (A/FS) CMPL	O2S (A/FS) monitor: COMPL or INCMPL	-	-
ACRF ENA	A/C monitor: UNABLE or ENABLE	-	-
ACRF CMPL	A/C monitor: COMPL or INCMPL	-	-
AIR ENA	2nd Air monitor: UNABLE or ENABLE	-	-
AIR CMPL	2nd Air monitor: COMPL or INCMPL	-	-

Intelligent Tester Display	Measurement Item:Range (Display)	Normal Condition *	Diagnostic Note
EVAP ENA	EVAP monitor: UNABLE or ENABLE	-	-
EVAP CMPL	EVAP monitor: COMPL or INCMPL	-	-
HCAT ENA	Heated catalyst monitor: UNABLE or ENABLE	-	-
HCAT CMPL	Heated catalyst monitor: COMPL or INCMPL	-	-
CAT ENA	Catalyst monitor: UNABLE or ENABLE	-	-
CAT CMPL	Catalyst monitor: COMPL or INCMPL	-	-
MODEL CODE	Model code:	-	Identifying model code: GRN2###
ENGINE TYPE	Engine type:	-	Identifying engine type: 1GR
CYLINDER NUMBER	Cylinder number: Min.: 0, Max.: 255	-	Identifying cylinder number: 6
TRANSMISSION	Transmission type:	-	Identifying transmission type: MT, ECT(5AT) or ECT(4AT)
DESTINATION	Destination	-	Identifying destination: A (America)
MODEL YEAR	Model year: Min.: 1900, Max.: 2155	-	Identifying model year: 200#
SYSTEM	System identification	-	Identifying engine system: GASLIN (gasoline engine)

ES

*1: If no idling conditions are specified, the transmission gear selector lever should be in the N or P position, and the A/C switch and all accessory switches should be OFF.

2. ACTIVE TEST

HINT:

Performing an ACTIVE TEST enables components including the relays, VSV (Vacuum Switching Valve), and actuators, to be operated without removing any parts. The ACTIVE TEST can be performed with an intelligent tester. Performing an ACTIVE TEST as the first step of troubleshooting is one method of shortening diagnostic time.

DATA LIST can be displayed during ACTIVE TESTs.

(a) Connect an intelligent tester to the DLC3.
(b) Turn the ignition switch ON.
(c) Turn the tester ON.
(d) Select the following menu items: DIAGNOSIS / ENHANCED OBD II / ACTIVE TEST.
(e) Perform the ACTIVE TEST by referring to the table below.

Intelligent Tester Displays	Test Details	Control Ranges	Diagnostic Notes
INJ VOL	Change injection volume	Between -12.5 % and 24.8 %	• All injectors tested at same time • Perform test at less than 3,000 rpm • Injection volume can be changed in 0.1 % graduations within control range

Intelligent Tester Displays	Test Details	Control Ranges	Diagnostic Notes
A/F CONTROL	Change injection volume	Lower by 12.5 % or increase by 25 %	• Perform test at less than 3,000 rpm • A/F CONTROL enables checking and graphing of A/F (Air Fuel Ratio) sensor and Heated Oxygen (HO2) sensor voltage outputs • To conduct test, select following menu items: ACTIVE TEST / A/F CONTROL / USER DATA / AFS B1S1 and O2S B1S2, and press YES and ENTER followed by F4
FUEL PMP SP CTL	Fuel pump speed control	ON (low speed)/OFF (high speed)	-
INTAKE CTL VSV1	ACIS VSV	ON/OFF	-
EVAP VSV (ALONE)	Activate EVAP VSV control	ON/OFF	-
VVT CTRL B1	Turn on and off OCV (Oil Control Valve)	ON/OFF	• Engine stalls or idles roughly when OCV turned ON • Normal engine running or idling when OCV off
VVT CTRL B2	Turn on and off OCV (Oil Control Valve)	ON/OFF	• Engine stalls or idles roughly when OCV turned ON • Normal engine running or idling when OCV off
A/C CUT SIG	Control A/C cut signal	ON/OFF	-
FUEL PUMP/SPD	Activate fuel pump (C/OPN Relay)	ON/OFF	-
TC/TE1	Turn on and off TC and TE1 connection	ON/OFF	• ON: TC and TE1 connected • OFF: TC and TE1 disconnected
FC IDL PROHBT	Prohibit idling fuel cut control	ON/OFF	-
ETCS OPEN SLOW	Throttle actuator	ON: throttle valve opens slowly	Test possible when following conditions met: • Ignition switch ON • Engine does not start • Fully depressing accelerator pedal (APP: 58 degrees or more)
ETCS CLOSE SLOW	Throttle actuator	ON: throttle valve closes slowly	Same as above
ETCS OPEN FAST	Throttle actuator	ON: throttle valve opens fast	Same as above
ETCS CLOSE FAST	Throttle actuator	ON: throttle valve closes fast	Same as above
FUEL CUT #1	Cylinder #1 injector fuel cut	ON/OFF	Test possible during vehicle stopping and engine idling.
FUEL CUT #2	Cylinder #2 injector fuel cut	ON/OFF	Same as above
FUEL CUT #3	Cylinder #3 injector fuel cut	ON/OFF	Same as above
FUEL CUT #4	Cylinder #4 injector fuel cut	ON/OFF	Same as above
FUEL CUT #5	Cylinder #5 injector fuel cut	ON/OFF	Same as above
FUEL CUT #6	Cylinder #6 injector fuel cut	ON/OFF	Same as above
VVT B1	Control the VVT (bank 1)	-128 to 127 % This value added to present OCV control duty 100 %: Maximum advance -100 % : Maximum retard	Engine stall or rough idle when VVT actuator operated by 100 %. Test possible during idle.
VVT B2	Control the VVT (bank 2)	Between -128 % and 127 %	Same as above
VACUUM PUMP	Leak detection pump	ON/OFF	-
VENT VALVE	Vent valve	ON/OFF	-

3. SYSTEM CHECK

HINT:

Performing a SYSTEM CHECK enables the system, which consists of multiple actuators, to be operated without removing any parts. In addition, it can show whether or not any DTCs are set, and can detect potential malfunctions in the system. The SYSTEM CHECK can be performed with an intelligent tester.

(a) Connect an intelligent tester to the DLC3.
(b) Turn the ignition switch ON.
(c) Turn the tester ON.
(d) Select the following menu items: DIAGNOSIS / ENHANCED OBD II / SYSTEM CHECK.
(e) Perform the SYSTEM CHECK by referring to the table below.

Intelligent Tester Displays	Test Details	Recommended Fuel Temperatures	Diagnostic Notes
EVAP SYS CHECK (AUTO OPERATION)	Perform 5 steps in order to operate EVAP key-off monitor automatically	35°C (95°F) or less	• If no DTCs in PENDING CODE after performing this test, system functioning normally • Refer to EVAP Inspection Procedure (See page ES-351)
EVAP SYS CHECK (MANUAL OPERATION)	Perform 5 steps in order to operate EVAP key-off monitor manually	35°C (95°F) or less	• Used to detect malfunctioning parts • Refer to EVAP Inspection Procedure (See page ES-351)

DTC	P0010	Camshaft Position "A" Actuator Circuit (Bank 1)

DTC	P0020	Camshaft Position "A" Actuator Circuit (Bank 2)

HINT:
This DTC relates to the Oil Control Valve (OCV).

DESCRIPTION

ES

The Variable Valve Timing (VVT) system includes the ECM, OCV and VVT controller. The ECM sends a target duty-cycle control signal to the OCV. This control signal regulates the oil pressure supplied to the VVT controller. Camshaft timing control is performed according to engine operating conditions such as the intake air volume, throttle valve position and engine coolant temperature.
The ECM controls the OCV, based on the signals transmitted by several sensors. The VVT controller regulates the intake camshaft angle using oil pressure through the OCV. As a result, the relative positions of the camshaft and crankshaft are optimized, the engine torque and fuel economy improve, and the exhaust emissions decrease under overall driving conditions. The ECM detects the actual intake valve timing using signals from the camshaft and crankshaft position sensors, and performs feedback control. This is how the target intake valve timing is verified by the ECM.

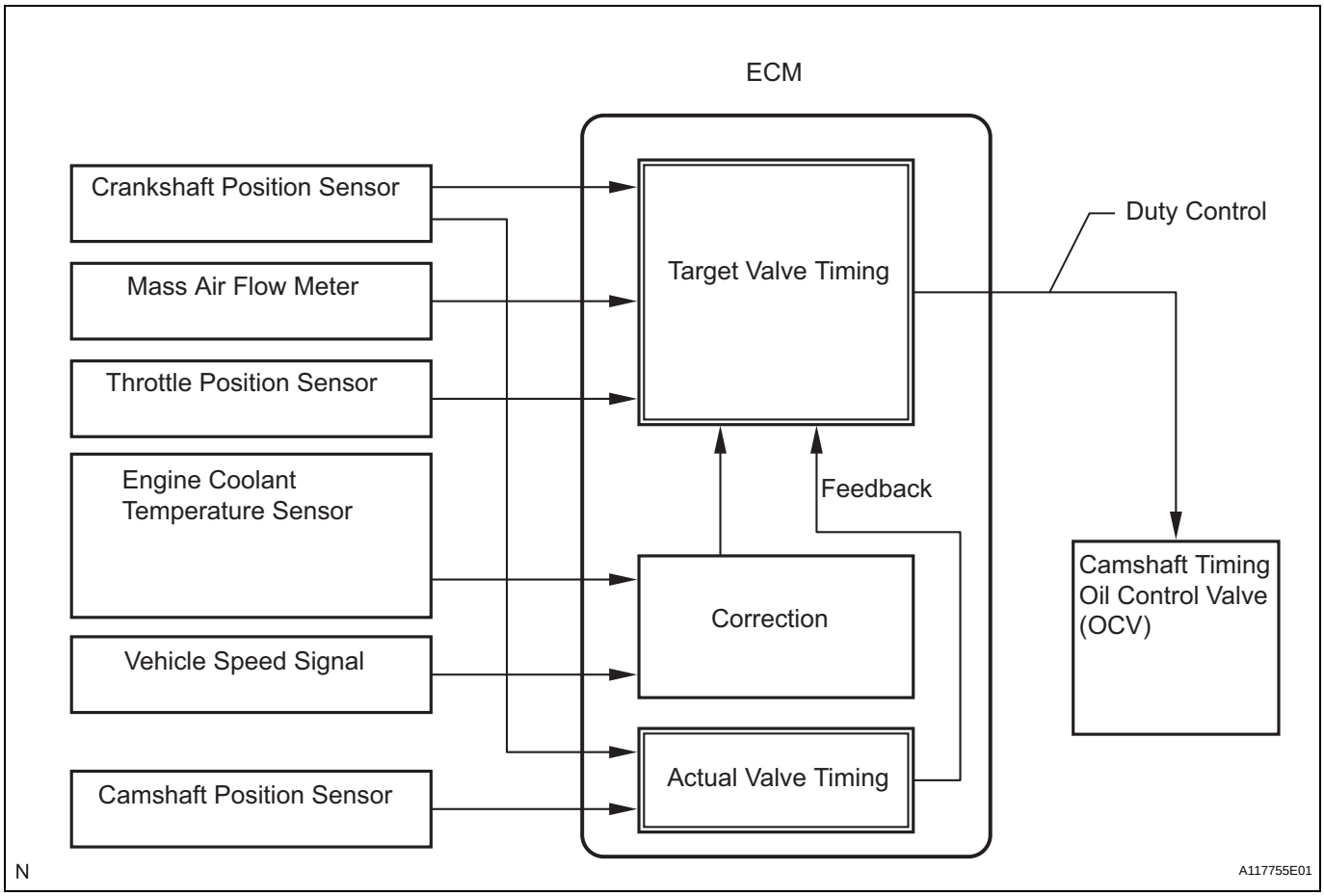

DTC No.	DTC Detection Conditions	Trouble Areas
P0010	Open or short in OCV (bank 1) circuit (1 trip detection logic)	• Open or short in OCV (bank 1) circuit • OCV (bank 1) • ECM

DTC No.	DTC Detection Conditions	Trouble Areas
P0020	Open or short in OCV (bank 2) circuit (1 trip detection logic)	• Open or short in OCV (bank 2) circuit • OCV (bank 2) • ECM

MONITOR DESCRIPTION

The ECM optimizes the valve timing using the VVT system to control the intake camshaft. The VVT system includes the ECM, the OCV and the VVT controller. The ECM sends a target duty-cycle control signal to the OCV. This control signal regulates the oil pressure supplied to the VVT controller. The VVT controller can advance or retard the intake camshaft.
After the ECM sends the target duty-cycle signal to the OCV, the ECM monitors the OCV current to establish an actual duty-cycle. The ECM determines the existence of a malfunction and sets the DTC when the actual duty-cycle ratio varies from the target duty-cycle ratio.

MONITOR STRATEGY

Related DTCs	P0010: VVT OCV (bank 1) open/short P0020: VVT OCV (bank 2) open/short
Required Sensors/Components (Main)	VVT OCV (Variable Valve Timing Oil Control Valve)
Required Sensors/Components (Related)	-
Frequency of Operation	Continuous
Duration	1 second
MIL Operation	Immediate
Sequence of Operation	None

TYPICAL ENABLING CONDITIONS

Monitor runs whenever following DTCs not present	None
All of the following conditions are met	-
Ignition switch	ON
Starter	OFF
Time after ignition switch OFF to ON	0.5 seconds or more

TYPICAL MALFUNCTION THRESHOLDS

One of the following conditions is met	-
A. All of the following conditions are met	-
a. Battery voltage	11 V or more, and less than 13 V
b. Target duty ratio	Less than 70 %
c. Output signal duty ratio	100 % or more
B. All of the following conditions are met	-
a. Battery voltage	13 V or more
b. Target duty ratio	Less than 80 %
c. Output signal duty ratio	100 % or more
C. All of the following conditions are met	-
a. Current cut status	Not cut
b. Output signal duty ratio	3 % or less

COMPONENT OPERATING RANGE

VVT OCV duty ratio	More than 3 %, and Less than 100 %

WIRING DIAGRAM

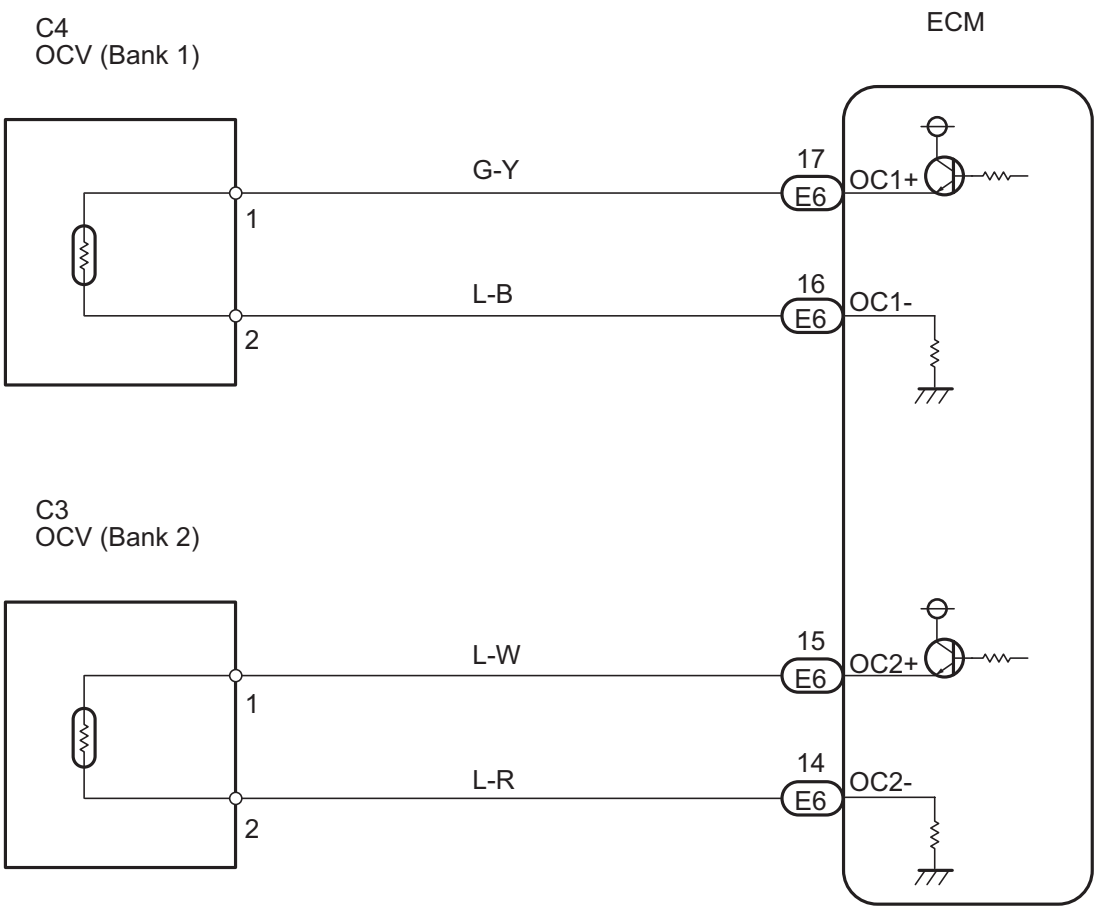

HINT:
- If DTC P0010 is displayed, check the bank 1 VVT system circuit.
- Bank 1 refers to the bank that include cylinder No. 1.
- If DTC P0020 is displayed, check the bank 2 VVT system circuit.
- Bank 2 refers to the bank that does not includes cylinder No. 1.
- Read freeze frame data using an intelligent tester. Freeze frame data record the engine condition when malfunctions are detected. When troubleshooting, freeze frame data can help determine if the vehicle was moving or stationary, if the engine was warmed up or not, if the air-fuel ratio was lean or rich, and other data, from the time the malfunction occurred.

1	PERFORM ACTIVE TEST USING INTELLIGENT TESTER (OPERATE OCV)

(a) Connect an intelligent tester to the DLC3.
(b) Start the engine and turn the tester ON.
(c) Warm up the engine.
(d) Select the following menu items: DIAGNOSIS / ENHANCED OBD II / ACTIVE TEST / VVT CTRL B1 or VVT CTRL B2.

(e) Check the engine speed while operating the Oil Control Valve (OCV) using the tester.

OK

Tester Operations	Specified Conditions
OCV OFF	Normal engine speed
OCV ON	Engine idles roughly or stalls (soon after OCV switched from OFF to ON)

OK → **CHECK FOR INTERMITTENT PROBLEMS**

NG

2 INSPECT CAMSHAFT TIMING OIL CONTROL VALVE ASSEMBLY (OCV SIGNAL)

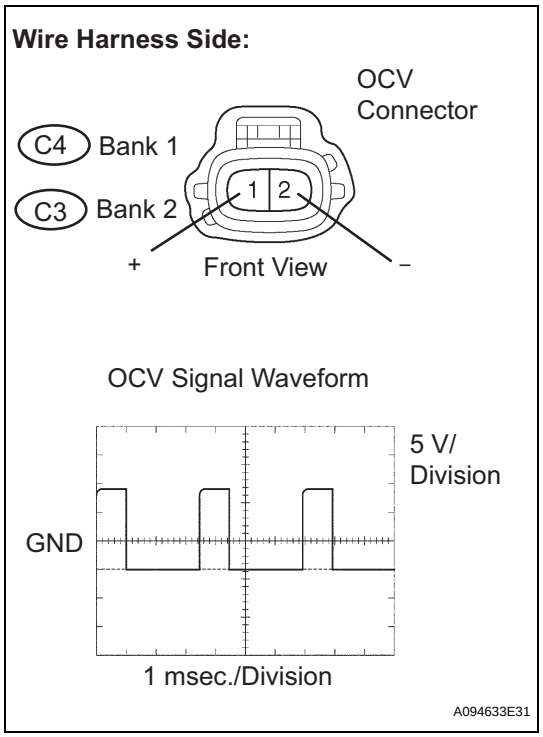

(a) Disconnect the C4 or C3 OCV connector.
(b) While idling, check the waveform between the terminals of the C4 or C3 OCV connector using an oscilloscope.
Standard

Tester Connections	Specified Conditions
+ (C4-1) - - (C4-2)	Correct waveform shown
+ (C3-1) - - (C3-2)	

(c) Reconnect the OCV connector.

OK → **REPLACE CAMSHAFT TIMING OIL CONTROL VALVE ASSEMBLY**

NG

ES

3	INSPECT ECM (OCV SIGNAL)

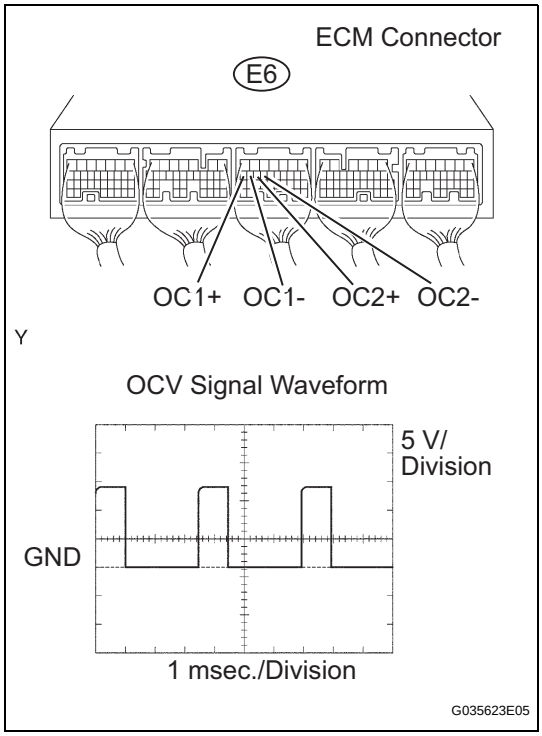

(a) Inspect the ECM using an oscilloscope.
(b) While idling, check the waveform between the terminals of the E6 ECM connector.

Standard

Tester Connections	Specified Conditions
OC1+ (E6-17) - OC1- (E6-16)	Correct waveform as shown in illustration
OC2+ (E6-15) - OC2- (E6-14)	

NG → **REPLACE ECM**

OK

REPAIR OR REPLACE HARNESS OR CONNECTOR

ES

DTC	P0011	Camshaft Position "A" - Timing Over-Advanced or System Performance (Bank 1)

DTC	P0012	Camshaft Position "A" - Timing Over-Retarded (Bank 1)

DTC	P0021	Camshaft Position "A" - Timing Over-Advanced or System Performance (Bank 2)

DTC	P0022	Camshaft Position "A" - Timing Over-Retarded (Bank 2)

HINT:
If DTC P0011, P0012, P0021 or P0022 is present, check the VVT (Variable Valve Timing) system.

DESCRIPTION

Refer to DTC P0010 (See page ES-66).

DTC No.	DTC Detection Conditions	Trouble Areas
P0011 P0021	Advanced cam timing: With warm engine and engine speed of between 500 rpm and 4,000 rpm, all conditions (a), (b) and (c) met (1 trip detection logic) (a) Difference between target and actual intake valve timings more than 5°CA (Crankshaft Angle) for 4.5 seconds (b) Current intake valve timing fixed (timing changes less than 5°CA in 5 seconds) (c) Variations in VVT controller timing more than 19°CA of maximum delayed timing (advanced)	• Valve timing • Oil control valve (OCV) • OCV filter • Camshaft timing gear assembly • ECM
P0012 P0022	Retarded cam timing: With warm engine and engine speed of between 500 rpm and 4,000 rpm, all conditions (a), (b) and (c) met (2 trip detection logic) (a) Difference between target and actual intake valve timings more than 5°CA (Crankshaft Angle) for 4.5 seconds (b) Current intake valve timing fixed (timing changes less than 5°CA in 5 seconds) (c) Variations in VVT controller timing 19°CA or less of maximum delayed timing (retarded)	

MONITOR DESCRIPTION

The ECM optimizes the intake valve timing using the VVT (Variable Valve Timing) system to control the intake camshaft. The VVT system includes the ECM, the Oil Control Valve (OCV) and the VVT controller. The ECM sends a target duty-cycle control signal to the OCV. This control signal regulates the oil pressure supplied to the VVT controller. The VVT controller can advance or retard the intake camshaft. If the difference between the target and actual intake valve timings is large, and changes in actual intake valve timing are small, the ECM interprets this as the VVT controller stuck malfunction and sets a DTC.
Example:
A DTC is set when the following conditions 1), 2) and 3) are met:
1) The difference between the target and actual intake valve timings is more than 5°CA (Crankshaft Angle) and the condition continues for more than 4.5 seconds.
2) It takes 5 seconds or more to change the valve timing by 5°CA.
3) After above conditions 1) and 2) are met, the OCV is forcibly activated 63 times or more.
DTCs P0011 and P0021 (Advanced Cam Timing) are subject to 1 trip detection logic.

DTCs P0012 and P0022 (Retarded Cam Timing) are subject to 2 trip detection logic.
These DTCs indicate that the VVT controller cannot operate properly due to OCV malfunctions or the presence of foreign objects in the OCV.
The monitor will not run unless the following conditions are met:

- The engine is warm (the engine coolant temperature is 75°C [167°F] or more).
- The vehicle has been driven at more than 40 mph (64 km/h) for 3 minutes.
- The engine has idled for 3 minutes.

MONITOR STRATEGY

Related DTCs	P0011: Advanced camshaft timing (bank 1) P0012: Retard camshaft timing (bank 1) P0021: Advanced camshaft timing (bank 2) P0022: Retard camshaft timing (bank 2)
Required Sensors/Components (Main)	VVT OCV and VVT Actuator
Required Sensors/Components (Related)	Crankshaft position sensor, Camshaft position sensor and Engine coolant temperature sensor
Frequency of Operation	Once per driving cycle
Duration	Within 10 seconds
MIL Operation	P0011 and P0021: Immediate P0012 and P0022: 2 driving cycles
Sequence of Operation	None

TYPICAL ENABLING CONDITIONS

Monitor runs whenever following DTCs not present	P0100 - P0103 (MAF sensor) P0115 - P0118 (ECT sensor) P0125 (Insufficient ECT for closed loop) P0335 (CKP sensor) P0340 (CMP sensor) P0351 - P0356 (igniter)
Battery voltage	11 V or more
Throttle position learning	Completed
Engine RPM	500 to 4,000 rpm
Engine coolant temperature	75 to 100°C (167 to 212°F)

TYPICAL MALFUNCTION THRESHOLDS

OCV activation	9.5 seconds or more
Response of valve timing	1 sec/°CA or more (valve timing does not change)

If the difference between the target and actual camshaft timings is greater than the specified value, the ECM operates the VVT actuator.
Then, the ECM monitors the camshaft timing change for 5 seconds.

WIRING DIAGRAM

Refer to DTC P0010 (See page ES-68).

HINT:

Abnormal bank	Advanced timing over (Valve timing is out of specified range)	Retarded timing over (Valve timing is out of specified range)
Bank 1	P0011	P0012
Bank 2	P0021	P0022

- If DTC P0011 or P0012 is displayed, check the bank 1 VVT system circuit.
- Bank 1 refers to the bank that includes cylinder No. 1.

- If DTC P0021 or P0022 is displayed, check the bank 2 VVT system circuit.
- Bank 2 refers to the bank that does not include cylinder No. 1.
- Read freeze frame data using an intelligent tester. Freeze frame data record the engine condition when malfunctions are detected. When troubleshooting, freeze frame data can help determine if the vehicle was moving or stationary, if the engine was warmed up or not, if the air-fuel ratio was lean or rich, and other data, from the time the malfunction occurred.

1	CHECK ANY OTHER DTCS OUTPUT (IN ADDITION TO DTC P0011, P0012, P0021 OR P0022)

(a) Connect an intelligent tester to the DLC3.
(b) Turn the ignition switch ON and turn the tester ON.
(c) Select the following menu items: DIAGNOSIS / ENHANCED OBD II / DTC INFO / CURRENT CODES.
(d) Read DTCs.

Result

Display (DTC Output)	Proceed to
P0011, P0012, P0021 or P0022	A
P0011, P0012, P0021 or P0022 and other DTCs	B

HINT:
If any DTCs other than P0011, P0012, P0021 or P0022 are output, troubleshoot those DTCs first.

B → GO TO DTC CHART

A

2	PREFORM ACTIVE TEST USING INTELLIGENT TESTER (OPERATE OCV)

(a) Connect an intelligent tester to the DLC3.
(b) Start the engine and turn the tester ON.
(c) Warm up the engine.
(d) Select the following menu items: DIAGNOSIS / ENHANCED OBD II / ACTIVE TEST / VVT CTRL B1.
(e) Check the engine speed while operating the Oil Control Valve (OCV) using the tester.

OK

Tester Operations	Specified Conditions
OCV OFF	Normal engine speed
OCV ON	Engine idles roughly or stalls (soon after OCV switched from OFF to ON)

NG → Go to step 4

OK

3	CHECK WHETHER DTC OUTPUT RECURS (DTC P0011, P0012, P0021 OR P0022)

(a) Connect an intelligent tester to the DLC3.
(b) Turn the ignition switch ON and turn the tester ON.
(c) Clear DTCs (See page ES-38).
(d) Start the engine and warm it up.

(e) Switch the ECM from normal mode to check mode using the tester (See page ES-41).
(f) Drive the vehicle for more than 10 minutes.
(g) Read DTCs using the tester.
OK:
No DTC output.

OK → **END**

NG

4 CHECK VALVE TIMING (CHECK FOR LOOSE AND JUMPED TEETH ON TIMING CHAIN)

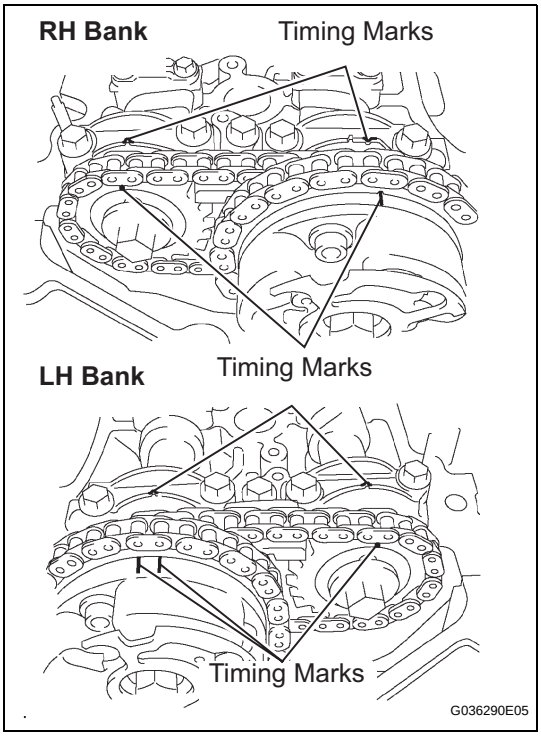

(a) Remove the cylinder head cover (See page EM-57 or EM-74).
(b) Turn the crankshaft pulley, and align its groove with the timing mark "0" of the timing chain cover.
(c) Check that the timing marks of the camshaft timing gears are aligned with the timing marks of the bearing cap as shown in the illustration.
If not, turn the crankshaft 1 revolution (360°), then align the marks as above.
OK:
Timing marks on camshaft timing gears are aligned as shown in the illustration.
(d) Reinstall the cylinder head cover (See page EM-57 or EM-74).

NG → **ADJUST VALVE TIMING**

OK

5 INSPECT CAMSHAFT TIMING OIL CONTROL VALVE ASSEMBLY (OCV)

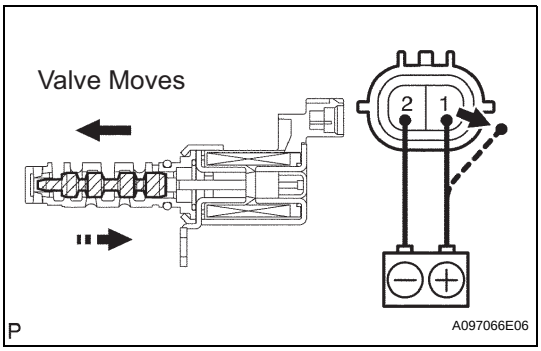

(a) Remove the OCV.
(b) Measure the resistance between the terminals of the OCV.
Standard resistance:
6.9 to 7.9 Ω at 20°C (68°F)
(c) Apply the positive battery voltage to terminal 1 and negative battery voltage to terminal 2. Check the valve operation.
OK:
Valve moves quickly.
(d) Reinstall the OCV.

NG → **REPLACE CAMSHAFT TIMING OIL CONTROL VALVE ASSEMBLY**

OK

6	INSPECT OIL CONTROL VALVE FILTER

OK:
Filter is not clogged.

NG → **CLEAN OIL CONTROL VALVE FILTER**

OK

7	REPLACE CAMSHAFT TIMING GEAR ASSEMBLY

ES

NEXT

8	CHECK IF DTC OUTPUT RECURS

(a) Connect an intelligent tester to the DLC3.
(b) Turn the ignition switch ON and turn the tester ON.
(c) Clear DTCs (See page ES-38).
(d) Start the engine and warm it up.
(e) Switch the ECM from normal mode to check mode using the tester (See page ES-41).
(f) Drive the vehicle for more than 10 minutes.
(g) Confirm that no DTC is set using the tester.
Standard:
No DTC output.
HINT:
DTC P0011, P0012, P0021 or P0022 is output when foreign objects in engine oil are caught in some parts of the system. These codes will stay registered even if the system returns to normal after a short time. These foreign objects are then captured by the oil filter, thus eliminating the source of the problem.

OK → **SYSTEM OK**

NG

REPLACE ECM

DTC	P0016	Crankshaft Position - Camshaft Position Correlation (Bank 1 Sensor A)

DTC	P0018	Crankshaft Position - Camshaft Position Correlation (Bank 2 Sensor A)

DESCRIPTION

Refer to DTC P0335 (See page ES-182).

DTC No.	DTC Detection Conditions	Trouble Areas
P0016	Deviations in crankshaft and camshaft position sensor1 signals (2 trip detection logic)	• Mechanical system (Timing chain has jumped tooth or chain stretched) • ECM
P0018	Deviations in crankshaft and camshaft position sensor2 signals (2 trip detection logic)	

ES

MONITOR DESCRIPTION

The ECM optimizes the valve timing by using the VVT (Variable Valve Timing) system to control the intake camshaft. The VVT system includes the ECM, the Oil Control Valve (OCV) and the VVT controller.
The ECM sends a target duty-cycle control signal to the OCV. This control signal regulates the oil pressure supplied to the VVT controller. The VVT controller can advance or retard the intake camshaft.
The ECM calibrates the intake valve timing by setting the intake camshaft to the most retarded angle while the engine is idling. The ECM closes the OCV to retard the cam. The ECM stores this value as the VVT learning value. When the difference between the target and actual intake valve timings is 5°CA (Crankshaft Angle) or less, the ECM stores it.
If the VVT learning value matches the following conditions, the ECM determines the existence of a malfunction in the VVT system, and sets the DTC.

- VVT learning value: Less than 22.5°CA, or more than 45.2°CA.
- Above condition continues for 18 seconds or more.

This DTC indicates that the intake camshaft has been installed toward the crankshaft at an incorrect angle, caused by factors such as the timing chain having jumped a tooth.
This monitor begins to run after the engine has idled for 5 minutes.

MONITOR STRATEGY

Related DTCs	P0016: Camshaft Timing Misalignment at idling
Required Sensors/Components (Main)	VVT actuator
Required Sensors/Components (Related)	Camshaft position sensor, Crankshaft position sensor
Frequency of Operation	Once per driving cycle
Duration	Within 1 minute
MIL Operation	2 driving cycles
Sequence of Operation	None

TYPICAL ENABLING CONDITIONS

Monitor runs whenever following DTCs not present	P0011 (VVT system 1 - advance) P0012 (VVT system 1 - retard) P0021 (VVT system 2 - advance) P0022 (VVT system 2 - retard) P0115 - P0118 (ECT sensor)
Engine RPM	500 to 1,000 rpm

TYPICAL MALFUNCTION THRESHOLDS

Duration of following condition	18 seconds or more
Valve timing when camshaft retarded maximum	Less than 22.5 CA°, or more than 45.2 CA°

WIRING DIAGRAM

Refer to DTC P0335 (See page ES-184).

HINT:
Read freeze frame data using an intelligent tester. Freeze frame data record the engine condition when malfunctions are detected. When troubleshooting, freeze frame data can help determine if the vehicle was moving or stationary, if the engine was warmed up or not, if the air-fuel ratio was lean or rich, and other data, from the time the malfunction occurred.

ES

1	CHECK VALVE TIMING (CHECK FOR LOOSE AND A JUMPED TOOTH OF TIMING CHAIN)

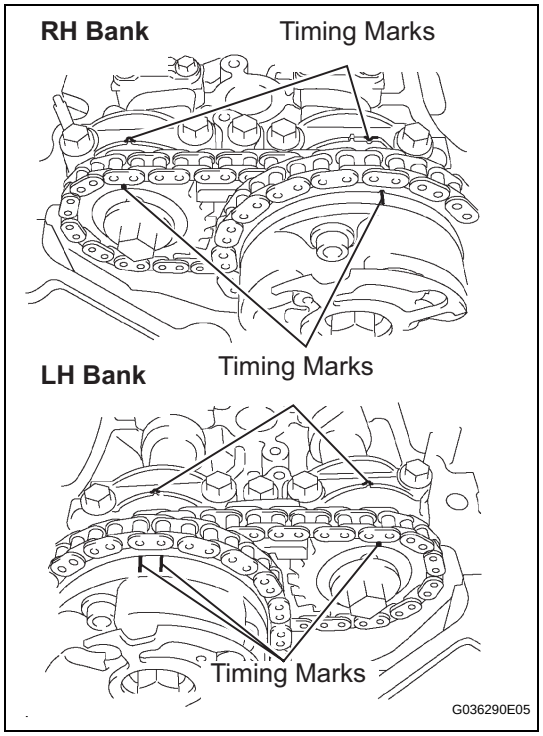

(a) Remove the cylinder head cover (See page EM-25(For 2WD), EM-46(For 4WD)).
(b) Turn the crankshaft pulley, and align its groove with the timing mark "0" of the timing chain cover.
(c) Check that the timing marks of the camshaft timing gears are aligned with the timing marks of the bearing cap as shown in the illustration.
If not, turn the crankshaft 1 revolution (360°) and align the marks as above.
OK:
Timing marks on camshaft timing gears are aligned as shown in illustration.
(d) Reinstall the cylinder head cover.

NG → **ADJUST VALVE TIMING (REPAIR OR REPLACE TIMING CHAIN)**

OK

REPLACE ECM

DTC	P0031	Oxygen (A/F) Sensor Heater Control Circuit Low (Bank 1 Sensor 1)
DTC	P0032	Oxygen (A/F) Sensor Heater Control Circuit High (Bank 1 Sensor 1)
DTC	P0051	Oxygen (A/F) Sensor Heater Control Circuit Low (Bank 2 Sensor 1)
DTC	P0052	Oxygen (A/F) Sensor Heater Control Circuit High (Bank 2 Sensor 1)

ES

HINT:
- Although the DTC titles say the oxygen sensor, these DTCs relate to the Air-Fuel Ratio (A/F) sensor.
- Sensor 1 refers to the sensor mounted in front of the Three-Way Catalytic Converter (TWC) and located near the engine assembly.

DESCRIPTION

Refer to DTC P2195 (See page ES-304).
HINT:
- When any of these DTCs are set, the ECM enters fail-safe mode. The ECM turns off the A/F sensor heater in fail-safe mode. Fail-safe mode continues until the ignition switch is turned OFF.
- The ECM provides a pulse width modulated control circuit to adjust the current through the heater. The A/F sensor heater circuit uses a relay on the +B side of the circuit.

Reference (Bank 1 Sensor 1 System Diagram)

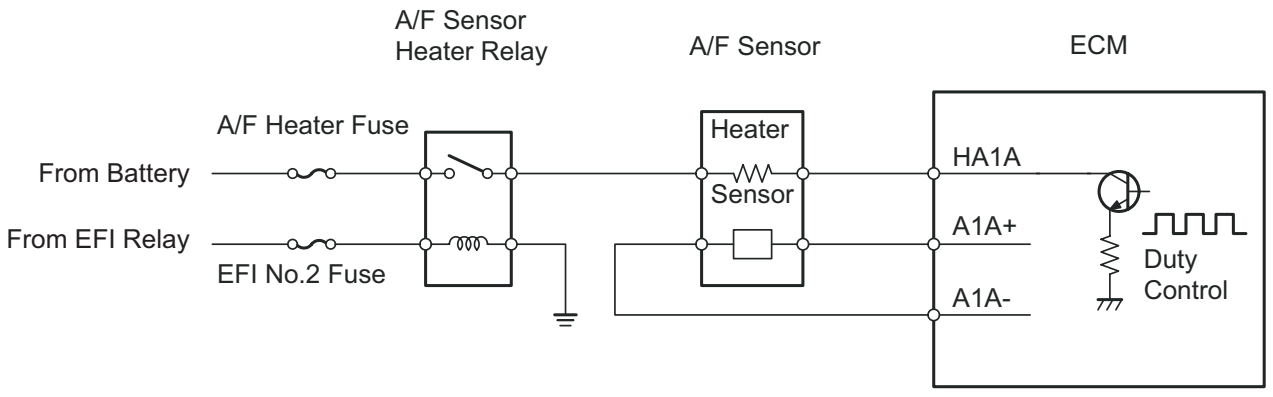

DTC No.	DTC Detection Conditions	Trouble Areas
P0031 P0051	Air-Fuel Ratio (A/F) sensor heater current less than 0.8 A (1 trip detection logic)	• Open in A/F sensor heater circuit • A/F sensor heater • A/F sensor heater relay • ECM

DTC No.	DTC Detection Conditions	Trouble Areas
P0032 P0052	Air-Fuel Ratio (A/F) sensor heater current more than 10 A (1 trip detection logic)	• Short in A/F sensor heater circuit • A/F sensor heater • A/F sensor heater relay • ECM

HINT:
- Bank 1 refers to the bank that includes cylinder No. 1.
- Bank 2 refers to the bank that does not include cylinder No. 1.
- Sensor 1 refers to the sensor closest to the engine assembly.
- Sensor 2 refers to the sensor farthest away from the engine assembly.

MONITOR DESCRIPTION

The ECM uses information from the Air-Fuel Ratio (A/F) sensor to regulate the air-fuel ratio and keep it close to the stoichiometric level. This maximizes the ability of the Three-Way Catalytic Converter (TWC) to purify the exhaust gases.
The A/F sensor detects oxygen levels in the exhaust gas and transmits the information to the ECM. The inner surface of the sensor element is exposed to the outside air. The outer surface of the sensor element is exposed to the exhaust gas. The sensor element is made of platinum coated zirconia and includes an integrated heating element.
The zirconia element generates a small voltage when there is a large difference in the oxygen concentrations between the exhaust gas and outside air. The platinum coating amplifies this voltage generation.
The A/F sensor is more efficient when heated. When the exhaust gas temperature is low, the sensor cannot generate useful voltage signals without supplementary heating. The ECM regulates the supplementary heating using a duty-cycle approach to adjust the average current in the sensor heater element. If the heater current is outside the normal range, the signal transmitted by the A/F sensor will be inaccurate, as a result, the ECM will be unable to regulate air-fuel ratio properly.
When the current in the A/F sensor heater is outside the normal operating range, the ECM interprets this as a malfunction in the sensor heater and sets a DTC.
Example:
The ECM sets DTC P0032 or P0052 when the current in the A/F sensor heater is more than 10 A. Conversely, when the heater current is less than 0.8 A, DTC P0031 or P0051 is set.

MONITOR STRATEGY

Related DTCs	P0031: A/F sensor heater (bank 1) open/short (Low electrical current) P0032: A/F sensor heater (bank 1) open/short (High electrical current) P0051: A/F sensor heater (bank 2) open/short (Low electrical current) P0052: A/F sensor heater (bank 2) open/short (High electrical current)
Required Sensors/Components (Main)	A/F sensor heater (bank 1 and 2)
Required Sensors/Components (Related)	-
Frequency of Operation	Continuous
Duration	10 seconds
MIL Operation	Immediate
Sequence of Operation	None

TYPICAL ENABLING CONDITIONS

All:

Monitor runs whenever following DTCs not present	None

P0031 and P0051:

Battery voltage	10.5 V or more
A/F sensor heater duty-cycle ratio	50 % or more
Time after engine start	10 seconds or more

P0032 and P0052:

Time after engine start	10 seconds or more

TYPICAL MALFUNCTION THRESHOLDS

P0031 and P0051:

A/F sensor heater current	Less than 0.8 A

P0032 and P0052:

A/F sensor heater current	More than 10 A

COMPONENT OPERATING RANGE

ES

A/F sensor heater current	1.8 to 3.4 A at 20°C (68°F)

WIRING DIAGRAM

Refer to DTC P2195 (See page ES-309).

HINT:
Read freeze frame data using an intelligent tester. Freeze frame data record the engine condition when malfunctions are detected. When troubleshooting, freeze frame data can help determine if the vehicle was moving or stationary, if the engine was warmed up or not, if the air-fuel ratio was lean or rich, and other data, from the time the malfunction occurred.

1 INSPECT AIR FUEL RATIO SENSOR (HEATER RESISTANCE)

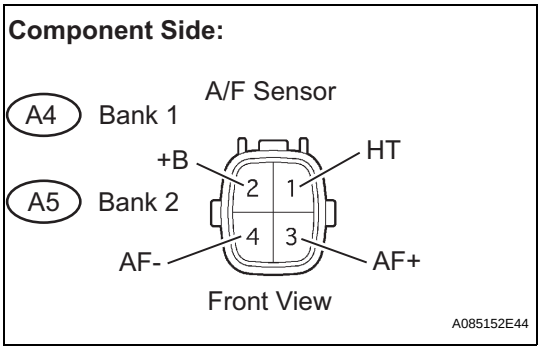

(a) Disconnect the A4 or A5 A/F sensor connector.
(b) Measure the resistance between the terminals of the A/F sensor connector.
Standard Resistance

Tester Connections	Specified Conditions
HT (1) - +B (2)	1.8 to 3.4 Ω at 20°C (68°F)
HT (1) - AF- (4)	10 kΩ or higher

(c) Reconnect the A/F sensor connector.

NG → REPLACE AIR FUEL RATIO SENSOR

OK

2 INSPECT AIR FUEL RATIO SENSOR HEATER RELAY

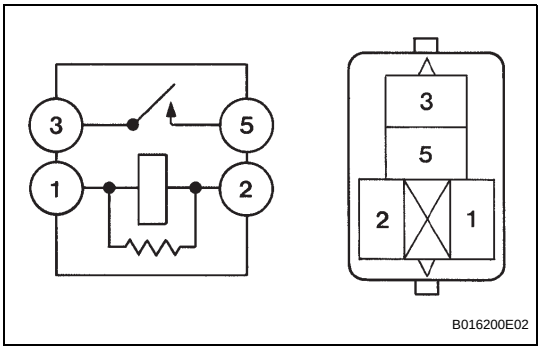

(a) Remove the A/F sensor heater relay from the engine room relay block.
(b) Check the A/F sensor heater relay resistance.
Standard Resistance

Tester Connections	Specified Conditions
3 - 5	10 kΩ or higher
3 - 5	Below 1 Ω (when battery voltage applied to terminals 1 and 2)

(c) Reinstall the A/F sensor heater relay.

NG → REPLACE AIR FUEL RATIO SENSOR HEATER RELAY

OK

3 INSPECT ECM (HA1A OR HA2A VOLTAGE)

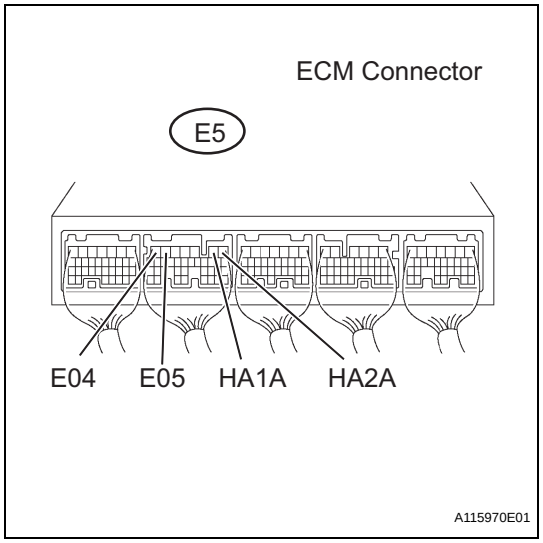

(a) Turn the ignition switch ON.
(b) Measure the voltage between the terminals of the E5 ECM connector.

Standard Voltage

Tester Connections	Specified Conditions
HA1A (E5-2) - E04 (E5-7)	9 to 14 V
HA2A (E5-1) - E05 (E5-6)	

HINT:
- The HA1A means the A/F sensor bank 1 sensor 1.
- The HA2A means the A/F sensor bank 2 sensor 1.

OK → REPLACE ECM

NG

4 CHECK HARNESS AND CONNECTOR (A/F SENSOR - ECM, A/F SENSOR - A/F SENSOR HEATER RELAY)

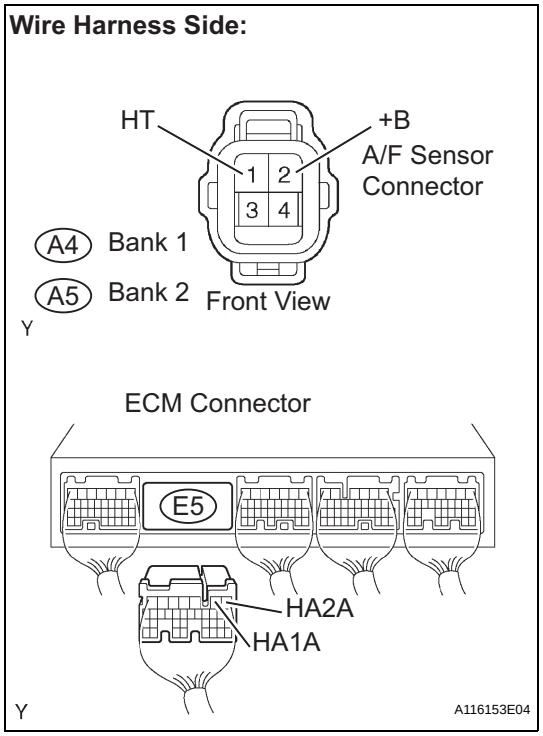

(a) Check the harness and the connector between the ECM and the A/F sensor.
  (1) Disconnect the A4 or A5 A/F sensor connector.
  (2) Disconnect the E5 ECM connector.
  (3) Check the resistance.

Standard Resistance (Check for open)

Tester Connections	Specified Conditions
HT (A4-1) - HA1A (E5-2)	Below 1 Ω
HT (A5-1) - HA2A (E5-1)	

Standard Resistance (Check for short)

Tester Connections	Specified Conditions
HT (A4-1) or HA1A (E5-2) - Body ground	10 kΩ or higher
HT (A5-1) or HA2A (E5-1) - Body ground	

  (4) Reconnect the A/F sensor connector.
  (5) Reconnect the ECM connector.

(b) Check the harness and the connector between the A/F sensor and A/F sensor heater relay.
  (1) Disconnect the A4 or A5 A/F sensor connector.
  (2) Remove the A/F sensor heater relay from the engine room relay block.

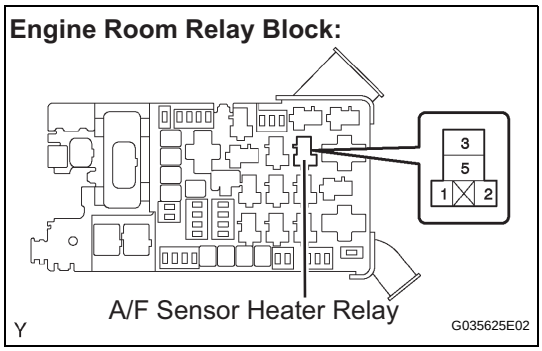

(3) Check the resistance.

Standard Resistance (Check for open)

Tester Connections	Specified Conditions
+B (A4-2) - A/F sensor heater relay (3)	Below 1 Ω
+B (A5-2) - A/F sensor heater relay (3)	

Standard Resistance (Check for short)

Tester Connections	Specified Conditions
+B (A4-2) or A/F sensor heater relay (3) - Body ground	10 kΩ or higher
+B (A5-2) or A/F sensor heater relay (3) - Body ground	

(4) Reconnect the A/F sensor connector.
(5) Reinstall the A/F sensor heater relay.

NG → **REPAIR OR REPLACE HARNESS OR CONNECTOR**

OK

REPLACE ECM

DTC	P0037	Oxygen Sensor Heater Control Circuit Low (Bank 1 Sensor 2)
DTC	P0038	Oxygen Sensor Heater Control Circuit High (Bank 1 Sensor 2)
DTC	P0057	Oxygen Sensor Heater Control Circuit Low (Bank 2 Sensor 2)
DTC	P0058	Oxygen Sensor Heater Control Circuit High (Bank 2 Sensor 2)

ES

HINT:
Sensor 2 refers to the sensor mounted behind the Three-Way Catalytic Converter (TWC) and located far from the engine assembly.

DESCRIPTION

Refer to DTC P0136 (See page ES-128).
HINT:

- When any of these DTCs are set, the ECM enters fail-safe mode. The ECM turns off the Heated Oxygen (HO2) sensor heater in fail-safe mode. Fail-safe mode continues until the ignition switch is turned OFF.
- The ECM provides a pulse width modulated control circuit to adjust the current through the heater. The HO2 sensor heater circuit uses a relay on the B+ side of the circuit.

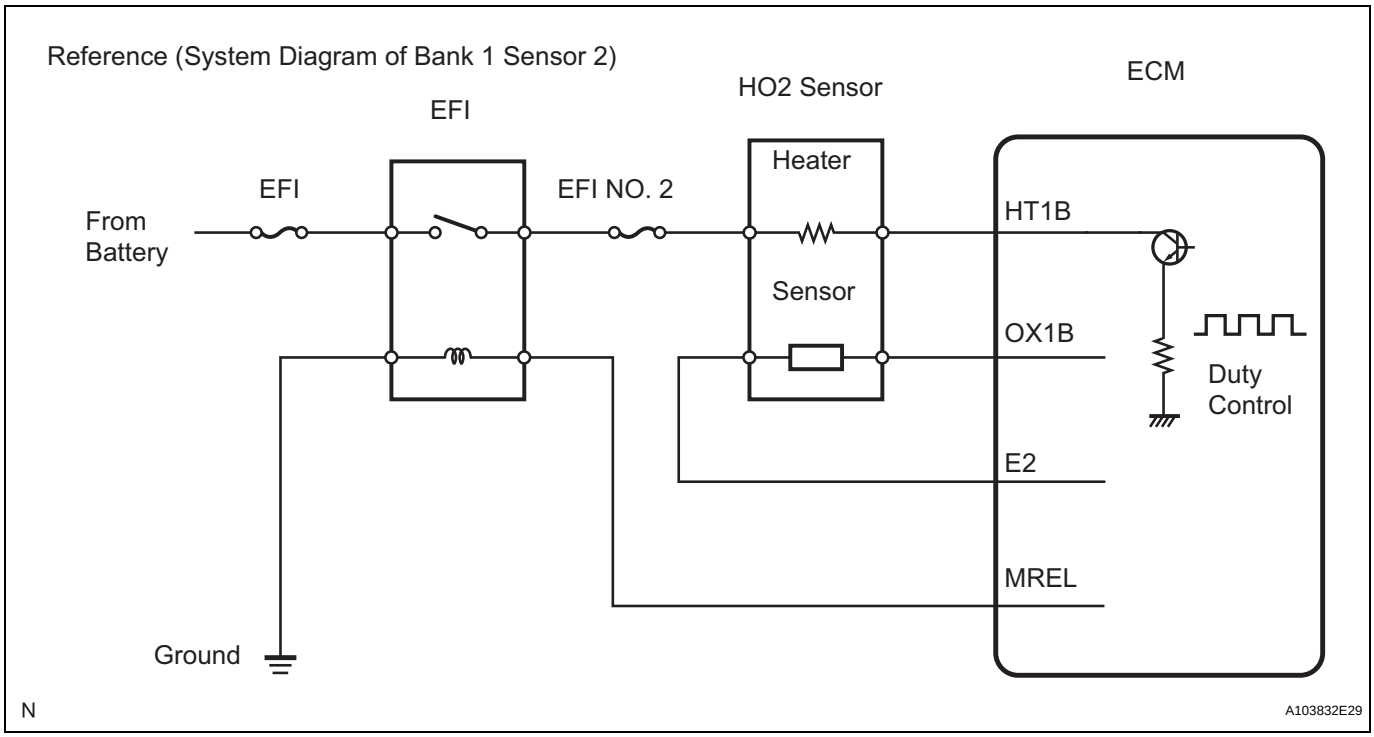

DTC No.	DTC Detection Conditions	Trouble Areas
P0037 P0057	Heated Oxygen (HO2) sensor heater current less than 0.3 A (1 trip detection logic)	• Open in HO2 sensor heater circuit • HO2 sensor heater • EFI relay • ECM

DTC No.	DTC Detection Conditions	Trouble Areas
P0038 P0058	Heated Oxygen (HO2) sensor heater current more than 2 A (1 trip detection logic)	• Short in HO2 sensor heater circuit • HO2 sensor heater • EFI relay • ECM

HINT:
- Bank 1 refers to the bank that includes cylinder No. 1.
- Bank 2 refers to the bank that does not include cylinder No. 1.
- Sensor 1 refers to the sensor closest to the engine assembly.
- Sensor 2 refers to the sensor farthest away from the engine assembly.

MONITOR DESCRIPTION

ES

The sensing portion of the Heated Oxygen (HO2) sensor has a zirconia element which is used to detect the oxygen concentration in the exhaust gas. If the zirconia element is at the appropriate temperature, and the difference between the oxygen concentrations surrounding the inside and outside surfaces of the sensor is large, the zirconia element generates voltage signals. In order to increase the oxygen concentration detecting capacity of the zirconia element, the ECM supplements the heat from the exhaust with heat from a heating element inside the sensor. When the current in the sensor heater is outside the standard operating range, the ECM interprets this as a malfunction in the sensor heater and sets a DTC.
Example:
The ECM sets DTC P0038 or P0058 when the current in the HO2 sensor heater is more than 2 A. Conversely, when the heater current is less than 0.3 A, DTC P0037 or P0057 is set.

MONITOR STRATEGY

Related DTCs	P0037: Heated oxygen sensor heater (bank 1) open/short (Low electrical current) P0038: Heated oxygen sensor heater (bank 1) open/short (High electrical current) P0057: Heated oxygen sensor heater (bank 2) open/short (Low electrical current) P0058: Heated oxygen sensor heater (bank 2) open/short (High electrical current)
Required Sensors/ Components (Main)	Heated oxygen sensor heater (bank 1 and 2)
Required Sensors/ Components (Related)	Vehicle speed sensor
Frequency of Operation	Continuous
Duration	P0037 and P0057: 0.5 seconds P0038 and P0058: 0.3 seconds
MIL Operation	Immediate
Sequence of Operation	None

TYPICAL ENABLING CONDITIONS

All:

Monitor runs whenever following DTCs not present	None
Battery voltage	10.5 V or more
Engine	Running
Starter	OFF
Catalyst intrusive monitoring	Not operating
Intrusive heating	Not operating

P0037 and P0057 (Low current):

When the following conditions are met	0.5 seconds or more
(a) Following conditions are met	-
Learned heater current during heater OFF	Completed
Intrusive heating	Not operating
Heating is OFF	Less than 0.1 seconds
Heater current	Less than 0.3 A
Intrusive heating for high current monitor	Not operating

(b) Following condition are met	-
Time after heaters are OFF	1 seconds or more

P0038 and P0058 (High current):

When the following conditions are met	0.3 seconds or more
(a) Following conditions are met	-
Learned heater current during heater OFF	Completed
Intrusive heating	Not operating
Heating is OFF	Less than 0.1 seconds
Heater current	2 A or more
(b) Following condition is met	-
Time after heaters are OFF	1 seconds or more

TYPICAL MALFUNCTION THRESHOLDS

P0037 and P0057 (Low current):

Following conditions are met	-
Heater	ON
Heater current	Less than 0.3 A
Intrusive heating	Operating

P0038 and P0058 (High current):

Either A or B is met	-
A. Following conditions are met	With intrusive heating
Heater	ON
Heater current	2 A or more
B. Following conditions are met	Without intrusive heating
Intrusive heating of learned heater current	Operating
Learned heater current during heater OFF	Operating
Heater current	More than 2 A

COMPONENT OPERATING RANGE

Heated Oxygen (HO2) sensor heater current	0.4 to 1 A (when engine idles, HO2 sensor warmed up and battery voltage 11 to 14 V)

WIRING DIAGRAM

Refer to DTC P0136 (See page ES-135).

HINT:

- If other DTCs relating to different systems that have terminal E2 as the ground terminal are output simultaneously, terminal E2 may have an open circuit.
- Read freeze frame data using an intelligent tester. Freeze frame data record the engine condition when malfunctions are detected. When troubleshooting, freeze frame data can help determine if the vehicle was moving or stationary, if the engine was warmed up or not, if the air-fuel ratio was lean or rich, and other data, from the time the malfunction occurred.

1 INSPECT HEATED OXYGEN SENSOR (HEATER RESISTANCE)

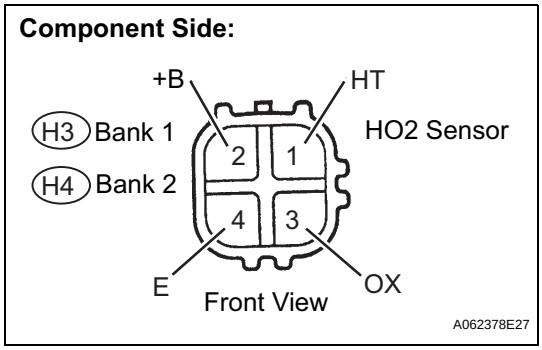

(a) Disconnect the H3 or H4 Heated Oxygen (HO2) sensor connector.
(b) Measure the resistance between the terminals of the HO2 sensor connector.
Standard Resistance (Bank 1, 2 sensor 2)

Tester Connections	Specified Conditions
HT (1) - +B (2)	11 to 16 Ω at 20°C (68°F)
HT (1) - E (4)	10 kΩ or higher

(c) Reconnect the HO2 sensor connector.

NG → REPLACE HEATED OXYGEN SENSOR

OK

2 INSPECT EFI RELAY

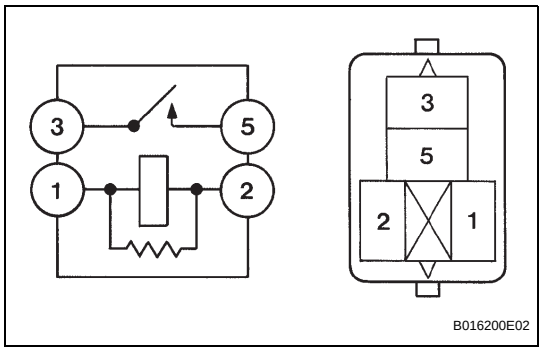

(a) Remove the EFI relay from the engine room relay block.
(b) Check the EFI relay resistance.
Standard Resistance

Terminal Connections	Specified Conditions
3-5	10 kΩ or higher
3-5	Below 1 Ω (when battery voltage applied to terminals 1 and 2)

(c) Reinstall the EFI relay.

NG → REPLACE EFI RELAY

OK

3 INSPECT ECM (HT1B OR HT2B VOLTAGE)

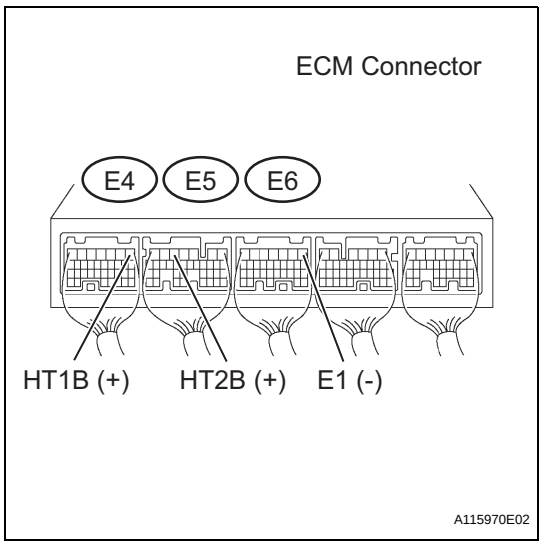

(a) Turn the ignition switch ON.
(b) Measure the voltage between the terminals of the E4, E5 and E6 ECM connectors.
Standard Voltage

Terminal Connections	Specified Conditions
HT1B (E4-1) - E1 (E6-1)	9 to 14 V
HT2B (E5-5) - E1 (E6-1)	

HINT:
- The HT1B means the heated oxygen sensor bank 1 sensor 2.
- The HT2B means the heated oxygen sensor bank 2 sensor 2.

OK → REPLACE ECM

NG

4	CHECK HARNESS AND CONNECTOR (HO2 SENSOR - ECM, HO2 SENSOR - EFI RELAY)

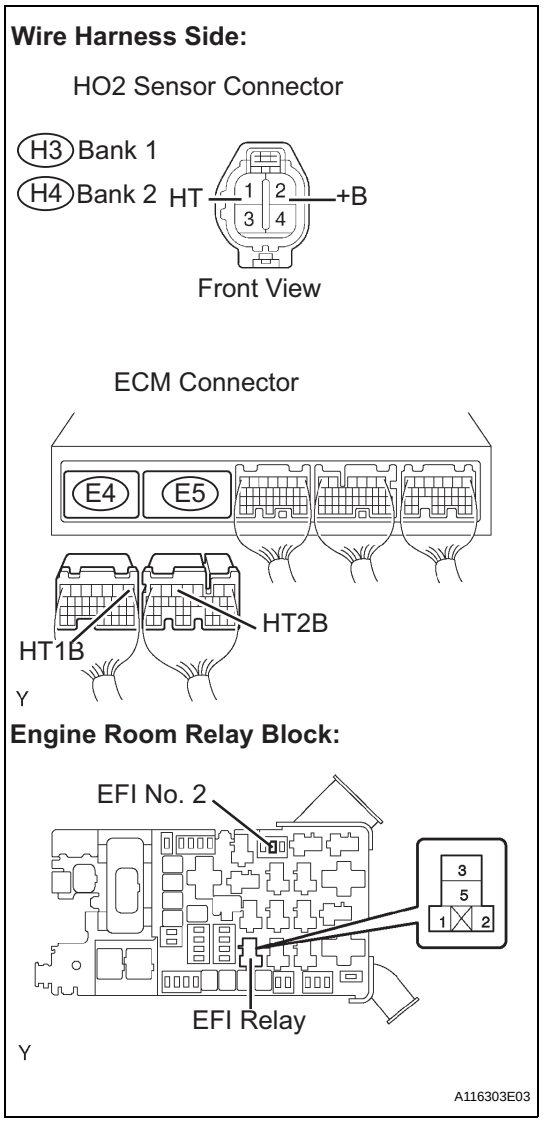

(a) Check the harness and connector between the ECM and HO2 sensor.
  (1) Disconnect the H3 or H4 HO2 sensor connector.
  (2) Disconnect the E4 or E5 ECM connector.
  (3) Check the resistance.

Standard Resistance (Check for open)

Terminal Connections	Specified Conditions
HT (H3-1) - HT1B (E4-1)	Below 1 Ω
HT (H4-1) - HT2B (E5-5)	

Standard Resistance (Check for short)

Terminal Connections	Specified Conditions
HT (H3-1) or HT1B (E4-1) - Body ground	10 kΩ or higher
HT (H4-1) or HT2B (E5-5) - Body ground	

  (4) Reconnect the HO2 sensor connector.
  (5) Reconnect the ECM connector.

(b) Check the harness and connector between the HO2 sensor and EFI relay.
  (1) Inspect the EFI No. 2 fuse.
    • Remove the EFI No. 2 fuse from the engine room relay block.
    • Check the EFI No. 2 fuse resistance.

Standard Resistance:
Below 1 Ω

    • Reinstall the EFI No. 2 fuse.
  (2) Disconnect the H3 or H4 HO2 sensor connector.
  (3) Remove the EFI relay from the engine room relay block.
  (4) Check the resistance.

Standard Resistance (Check for open)

Terminal Connections	Specified Conditions
+B (H3-2) - EFI relay (3)	Below 1 Ω
+B (H4-2) - EFI relay (3)	

Standard Resistance (Check for short)

Terminal Connections	Specified Conditions
+B (H3-2) or EFI relay (3) - Body ground	10 kΩ or higher
+B (H4-2) or EFI relay (3) - Body ground	

  (5) Reconnect the HO2 sensor connector.
  (6) Reinstall the EFI relay.

NG → **REPAIR OR REPLACE HARNESS OR CONNECTOR**

OK

REPLACE ECM

DTC	P0100	Mass or Volume Air Flow Circuit

DTC	P0102	Mass or Volume Air Flow Circuit Low Input

DTC	P0103	Mass or Volume Air Flow Circuit High Input

DESCRIPTION

The Mass Air Flow (MAF) meter is a sensor that measures the amount of air flowing through the throttle valve.

The ECM uses this information to determine the fuel injection time and to provide appropriate air-fuel ratio.

Inside the MAF meter, there is a heated platinum wire which is exposed to the flow of intake air.

By applying a specific electrical current to the wire, the ECM heats it to a given temperature. The flow of incoming air cools both the wire and an internal thermistor, affecting their resistance. To maintain a constant current value, the ECM varies the voltage applied to these components in the MAF meter. The voltage level is proportional to the airflow through the sensor, and the ECM uses it to calculate the intake air volume.

The circuit is constructed so that the platinum hot wire and the temperature sensor provide a bridge circuit, and the power transistor is controlled so that the potentials of A and B remain equal to maintain the predetermined temperature.

HINT:

When any of these DTCs are set, the ECM enters fail-safe mode. During fail-safe mode, the ignition timing is calculated by the ECM, according to the engine RPM and throttle valve position. Fail-safe mode continues until a pass condition is detected.

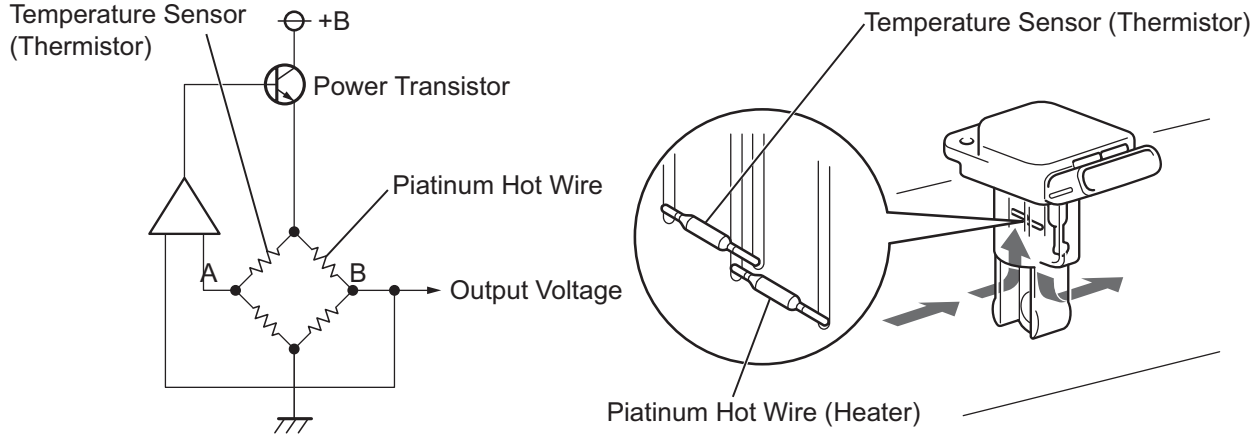

DTC No.	DTC Detection Conditions	Trouble Areas
P0100	Open or short in Mass Air Flow (MAF) meter circuit for 3 seconds (1 trip detection logic)	• Open or short in MAF meter circuit • MAF meter • ECM
P0102	Open in Mass Air Flow (MAF) meter circuit for 3 seconds (1 trip detection logic)	• Open in MAF meter circuit • Short in ground circuit • MAF meter • ECM
P0103	Short in Mass Air Flow (MAF) meter circuit for 3 seconds (1 trip detection logic)	• Short in MAF meter circuit (+B circuit) • MAF meter • ECM

HINT:
When any of these DTCs are set, check the air-flow rate by selecting the following menu items on an intelligent tester: DIAGNOSIS / ENHANCED OBD II / DATA LIST / PRIMARY / MAF.

Mass Air Flow Rate (g/sec)	Malfunctions
Approximately 0.0	• Open in Mass Air Flow (MAF) meter power source circuit • Open or short in VG circuit
271.0 or more	• Open in EVG circuit

MONITOR DESCRIPTION

If there is a defect in the MAF meter or an open or short circuit, the voltage level deviates from the normal operating range. The ECM interprets this deviation as a malfunction in the MAF meter and sets a DTC.
Example:
When the sensor voltage output remains less than 0.2 V, or more than 4.9 V, for more than 3 seconds, the ECM sets a DTC.
If the malfunction is not repaired successfully, a DTC is set 3 seconds after the engine is next started.

MONITOR STRATEGY

Related DTCs	P0100: Mass air flow meter range check (Fluctuating) P0102: Mass air flow meter range check (Low voltage) P0103: Mass air flow meter range check (High voltage)
Required Sensors/Components (Main)	MAF meter
Required Sensors/Components (Related)	Crankshaft position sensor
Frequency of Operation	Continuous
Duration	3 seconds
MIL Operation	Immediate: Engine RPM less than 4,000 rpm 2 driving cycles: Engine RPM 4,000 rpm or more
Sequence of Operation	None

TYPICAL ENABLING CONDITIONS

Monitor runs whenever following DTCs not present	None

TYPICAL MALFUNCTION THRESHOLDS

P0100:

Mass air flow meter voltage	Less than 0.2 V or more than 4.9 V

P0102:

Mass air flow meter voltage	Less than 0.2 V

P0103:

Mass air flow meter voltage	More than 4.9 V

COMPONENT OPERATING RANGE

Mass air flow meter voltage	Between 0.4 V and 2.2 V

WIRING DIAGRAM

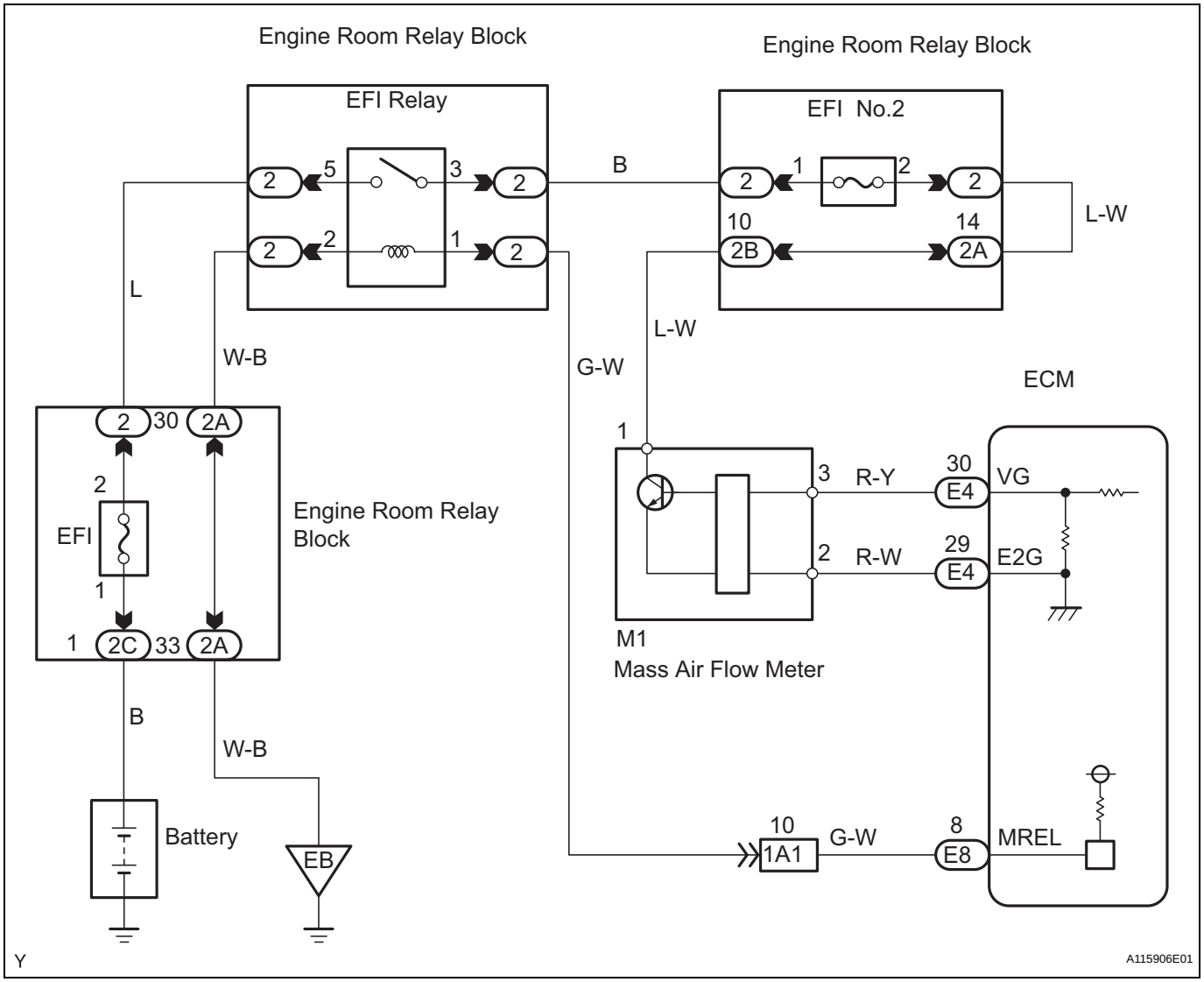

HINT:
Read freeze frame data using an intelligent tester. Freeze frame data record the engine condition when malfunctions are detected. When troubleshooting, freeze frame data can help determine if the vehicle was moving or stationary, if the engine was warmed up or not, if the air-fuel ratio was lean or rich, and other data, from the time the malfunction occurred.

1	READ VALUE USING INTELLIGENT TESTER (MASS AIR FLOW RATE)

(a) Connect an intelligent tester to the DLC3.
(b) Start the engine.
(c) Turn the tester ON.
(d) Select the following menu items: DIAGNOSIS / ENHANCED OBD II / DATA LIST / PRIMARY / MAF.
(e) Read the values displayed on the tester.

Result

Mass Air Flow Rate (g/sec)	Proceed to
0.0	A
271.0 or more	B

Mass Air Flow Rate (g/sec)	Proceed to
Between 1.0 and 270.0 (*1)	C

*1: The value must be changed when the throttle valve is open or closed.

B → Go to step 6

C → CHECK FOR INTERMITTENT PROBLEMS

A

ES

2 INSPECT MASS AIR FLOW METER (POWER SOURCE VOLTAGE)

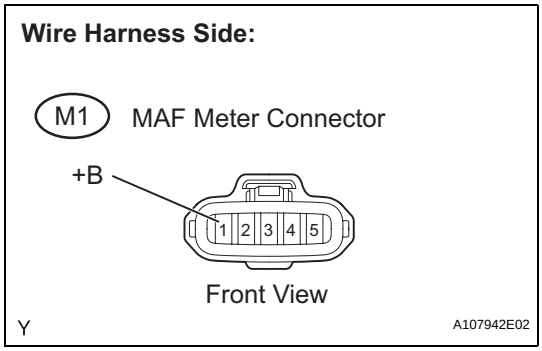

(a) Disconnect the M1 Mass Air Flow (MAF) meter connector.
(b) Turn the ignition switch ON.
(c) Measure the voltage between the terminal of the wire harness side connector and body ground.
Standard Voltage

Tester Connections	Specified Conditions
+B (M1-1) - Body ground	9 to 14 V

(d) Reconnect the MAF meter connector.

NG → Go to step 5

OK

3 INSPECT ECM (VG VOLTAGE)

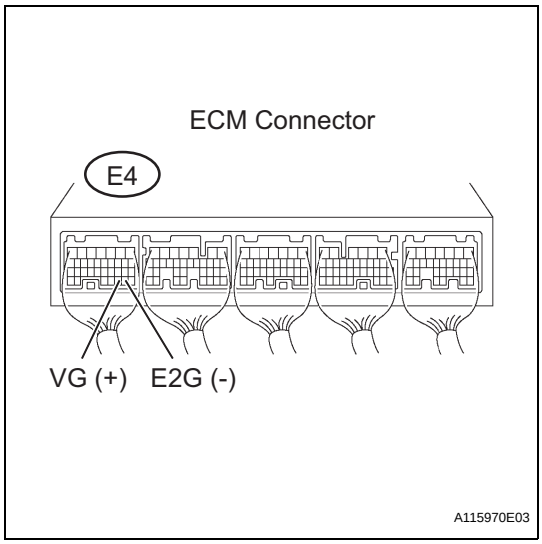

(a) Start the engine.
(b) Measure the voltage between the terminals of the E4 ECM connector.
HINT:
The transmission gear selector lever should be in the P or N position and the A/C switch should be turned OFF.
Standard Voltage

Tester Connections	Conditions	Specified Conditions
VG (E4-30) - E2G (E4-29)	Engine idling	0.5 to 3.0 V

OK → REPLACE ECM

NG

4	CHECK HARNESS AND CONNECTOR (MASS AIR FLOW METER - ECM)

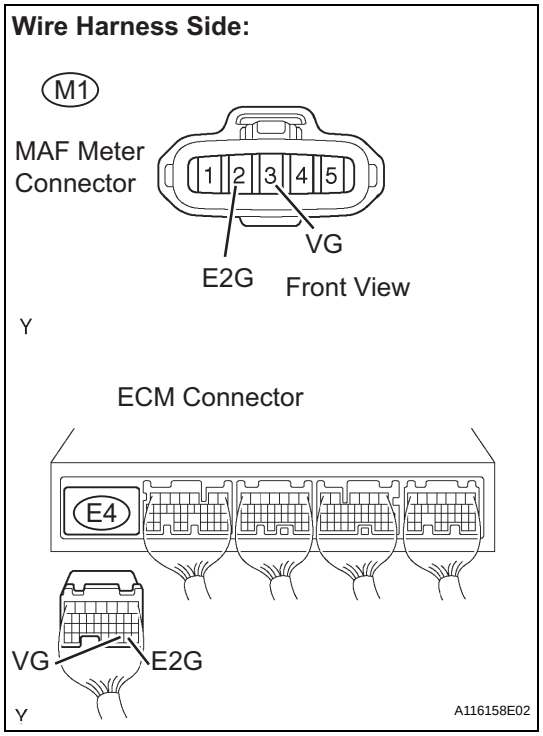

(a) Disconnect the M1 MAF meter connector.
(b) Disconnect the E4 ECM connector.
(c) Check the resistance.

Standard Resistance (Check for open)

Tester Connections	Specified Conditions
VG (M1-3) - VG (E4-30)	Below 1 Ω
E2G (M1-2) - E2G (E4-29)	

Standard Resistance (Check for short)

Tester Connections	Specified Conditions
VG (M1-3) or VG (E4-30) - Body ground	10 kΩ or higher

(d) Reconnect the MAF meter connector.
(e) Reconnect the ECM connector.

NG → **REPAIR OR REPLACE HARNESS OR CONNECTOR**

OK

REPLACE MASS AIR FLOW METER

ES

5	CHECK HARNESS AND CONNECTOR (MASS AIR FLOW METER - EFI RELAY)

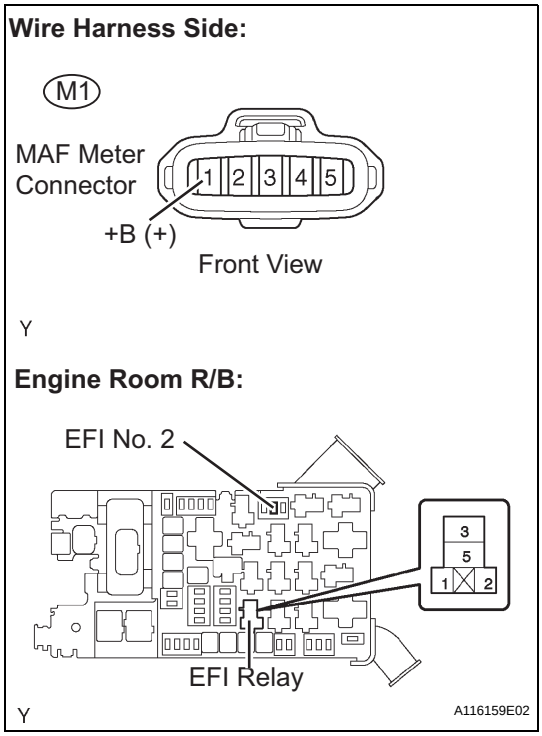

(a) Inspect the EFI NO. 2 fuse.
  (1) Remove the EFI NO. 2 fuse from the engine room relay block.
  (2) Check the EFI NO. 2 fuse resistance.
    Standard Resistance:
    Below 1 Ω
  (3) Reinstall the EFI NO. 2 fuse.
(b) Disconnect the M1 MAF meter connector.
(c) Remove the EFI relay from the engine room relay block.
(d) Check the resistance.

Standard Resistance (Check for open)

Tester Connections	Specified Conditions
+B (M1-1) - EFI relay (3)	Below 1 Ω

Standard Resistance (Check for short)

Tester Connections	Specified Conditions
+B (M1-1) or EFI relay (3) - Body ground	10 kΩ or higher

(e) Reconnect the MAF meter connector.
(f) Reinstall the EFI relay.

NG → **REPAIR OR REPLACE HARNESS OR CONNECTOR**

OK

CHECK ECM POWER SOURCE CIRCUIT

6	INSPECT ECM (SENSOR GROUND)

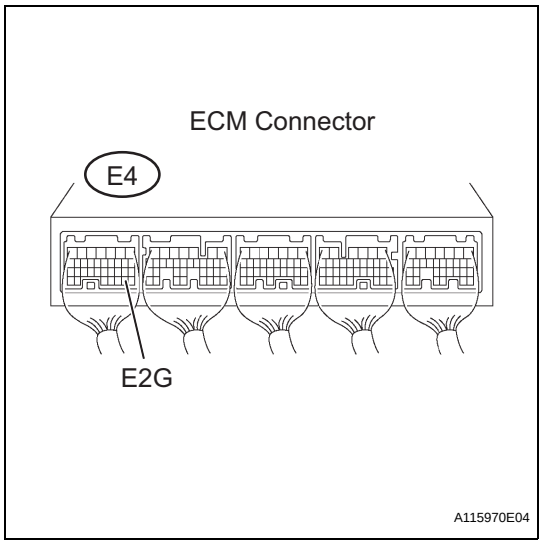

(a) Check the resistance.

Standard Resistance

Tester Connections	Specified Conditions
E2G (E4-29) - Body ground	Below 1 Ω

NG → **REPLACE ECM**

OK

7	CHECK HARNESS AND CONNECTOR (MASS AIR FLOW METER - ECM)

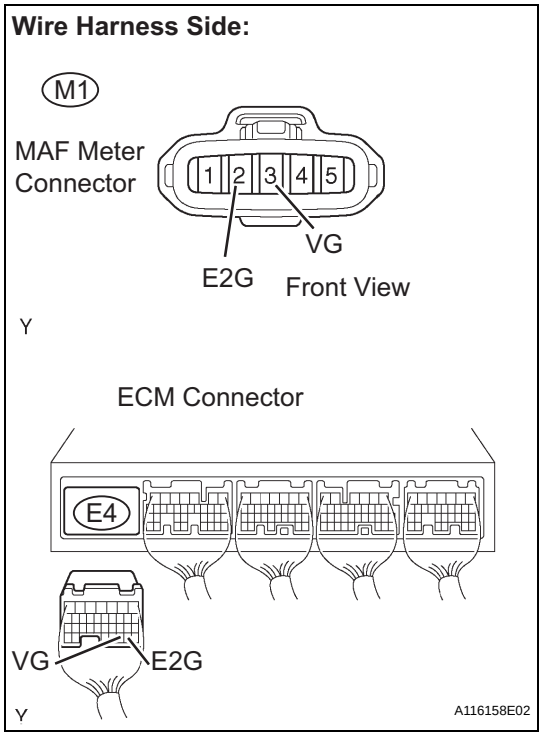

(a) Disconnect the M1 MAF meter connector.
(b) Disconnect the E4 ECM connector.
(c) Check the resistance.

Standard Resistance (Check for open)

Tester Connections	Specified Conditions
VG (M1-3) - VG (E4-30)	Below 1 Ω
E2G (M1-2) - E2G (E4-29)	

Standard Resistance (Check for short)

Tester Connections	Specified Conditions
VG (M1-3) or VG (E4-30) - Body ground	10 kΩ or higher

(d) Reconnect the MAF meter connector.
(e) Reconnect the ECM connector.

NG → **REPAIR OR REPLACE HARNESS OR CONNECTOR**

OK

REPLACE MASS AIR FLOW METER

ES

DTC	P0101	Mass or Volume Air Flow Circuit Range / Performance Problem

DESCRIPTION

Refer to DTC P0100 (See page ES-89).

DTC No.	DTC Detection Conditions	Trouble Areas
P0101	• High voltage: Conditions (a), (b) and (c) continue for more than 10 seconds (2 trip detection logic) (a) Engine speed less than 2,000 rpm (b) Engine coolant temperature 70°C (158°F) or higher (c) Voltage output of Mass Air Flow (MAF) meter more than 2.2 V (varies with Throttle Position [TP] sensor voltage) • Low voltage: Conditions (a) and (b) continue for more than 10 seconds (2 trip detection logic) (a) Engine speed more than 300 rpm (b) Voltage output of MAF meter less than 0.83 V (varies with TP sensor voltage)	• MAF meter

MONITOR DESCRIPTION

The MAF meter is a sensor that measures the amount of air flowing through the throttle valve. The ECM uses this information to determine the fuel injection time and to provide an appropriate air-fuel ratio. Inside the MAF meter, there is a heated platinum wire which is exposed to the flow of intake air. By applying a specific electrical current to the wire, the ECM heats it to a specific temperature. The flow of incoming air cools both the wire and an internal thermistor, affecting their resistance. To maintain a constant current value, the ECM varies the voltage applied to these components of the MAF meter. The voltage level is proportional to the airflow through the sensor, and the ECM uses it to calculate the intake air volume.

If there is a defect in the sensor, or an open or short in the circuit, the voltage level deviates from the normal operating range. The ECM interprets this deviation as a malfunction in the MAF meter and sets the DTC.

Example:

If the voltage is more than 2.2 V, or less than 0.83 V while idling, the ECM determines that there is a malfunction in the MAF meter and sets the DTC.

MONITOR STRATEGY

Related DTCs	P0101: Mass air flow meter rationality
Required Sensors/Components (Main)	Mass air flow meter
Required Sensors/Components (Related)	Crankshaft position sensor, engine coolant temperature sensor and throttle position sensor
Frequency of Operation	Continuous
Duration	10 seconds
MIL Operation	2 driving cycles
Sequence of Operation	None

TYPICAL ENABLING CONDITIONS

Monitor runs whenever following DTCs not present	P0115 - P0118 (ECT sensor) P0120 - P0223, P2135 (TP sensor) P0125 (insufficient ECT for closed loop) P0335 (CKP sensor) P0340 (CMP sensor)

Mass Air Flow Meter Rationality (High Voltage):

Engine speed	Less than 2,000 rpm
Engine coolant temperature	70°C (158°F) or more
Mass air flow meter voltage	4.9 V or less

Mass Air Flow Meter Rationality (Low Voltage):

Engine speed	More than 300 rpm
Mass air flow meter voltage	0.2 V or more
Fuel cut	OFF

TYPICAL MALFUNCTION THRESHOLDS

Mass Air Flow Meter Rationality (High Voltage):

Mass air flow meter voltage	More than 2.2 V (varies with throttle position sensor voltage)

Mass Air Flow Meter Rationality (Low Voltage):

Mass air flow meter voltage	Less than 0.83 V (varies with throttle position sensor voltage)

WIRING DIAGRAM

Refer to DTC P0100 (See page ES-91).

HINT:
Read freeze frame data using an intelligent tester. Freeze frame data record the engine condition when malfunctions are detected. When troubleshooting, freeze frame data can help determine if the vehicle was moving or stationary, if the engine was warmed up or not, if the air-fuel ratio was lean or rich, and other data, from the time the malfunction occurred.

1	CHECK ANY OTHER DTCS OUTPUT (IN ADDITION TO DTC P0101)

(a) Connect an intelligent tester to the DLC3.
(b) Turn the ignition switch ON.
(c) Turn the tester ON.
(d) Select the following menu items: DIAGNOSIS / ENHANCED OBD II / DTC INFO / CURRENT CODES.
(e) Read DTCs.

Result

Display (DTC Output)	Proceed To
P0101 and other DTCs	A
P0101	B

HINT:
If any DTCs other than P0101 are output, troubleshoot those DTCs first.

B → REPLACE MASS AIR FLOW METER

A → GO TO DTC CHART

DTC	P0110	Intake Air Temperature Circuit

DTC	P0112	Intake Air Temperature Circuit Low Input

DTC	P0113	Intake Air Temperature Circuit High Input

DESCRIPTION

(Figure 1)

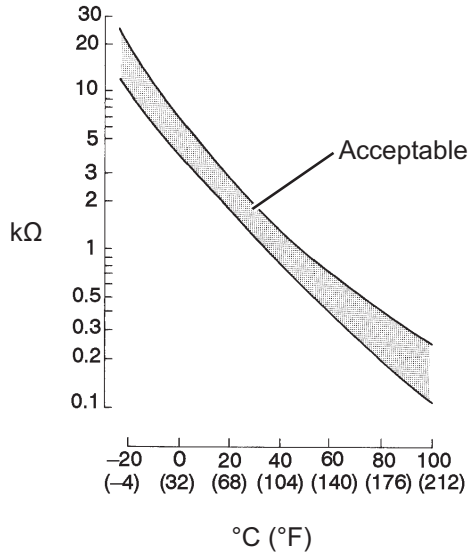

The Intake Air Temperature (IAT) sensor, mounted on the Mass Air Flow (MAF) meter, monitors the IAT. The IAT sensor has a built in thermistor with a resistance that varies according to the temperature of the intake air. When the IAT is low, the resistance of the thermistor increases. When the temperature is high, the resistance drops. These variations in resistance are transmitted to the ECM as voltage changes (see Fig. 1).

The IAT sensor is powered by a 5 V supply from the THA terminal of the ECM, via resistor R.

Resistor R and the IAT sensor are connected in series. When the resistance value of the IAT sensor changes, according to changes in the IAT, the voltage at terminal THA also varies.

Based on this signal, the ECM increases the fuel injection volume when the engine is cold to improve drivability.

HINT:

When any of DTCs P0110, P0112 and P0113 are set, the ECM enters fail-safe mode. During fail-safe mode, the IAT is estimated to be 20°C (68°F) by the ECM. Fail-safe mode continues until a pass condition is detected.

DTC No.	Proceed To	DTC Detection Conditions	Trouble Areas
P0110	Step 1	Open or short in Intake Air Temperature (IAT) sensor circuit for 0.5 seconds (1 trip detection logic)	• Open or short in IAT sensor circuit • IAT sensor (built into MAF meter) • ECM
P0112	Step 4	Short in Intake Air Temperature (IAT) sensor circuit for 0.5 seconds (1 trip detection logic)	• Short in IAT sensor circuit • IAT sensor (built into MAF meter) • ECM
P0113	Step 2	Open in Intake Air Temperature (IAT) sensor circuit for 0.5 seconds (1 trip detection logic)	• Open in IAT sensor circuit • IAT sensor (built into MAF meter) • ECM

HINT:
When any of these DTCs are set, check the IAT by selecting the following menu items on an intelligent tester: DIAGNOSIS / ENHANCED OBD II / DATA LIST / PRIMARY / INTAKE AIR.

Temperature Displayed	Malfunctions
-40°C (-40°F)	Open circuit
140°C (284°F) or higher	Short circuit

MONITOR DESCRIPTION

The ECM monitors the sensor voltage and uses this value to calculate the Intake Air Temperature (IAT). When the sensor output voltage deviates from the normal operating range, the ECM interprets this as a malfunction in the IAT sensor and sets a DTC.
Example:
If the sensor voltage output is more than 4.91 V for 0.5 seconds or more, the ECM determines that there is an open in the IAT sensor circuit, and sets DTC P0113. Conversely, if the voltage output is less than 0.18 V for 0.5 seconds or more, the ECM determines that there is a short in the sensor circuit, and sets DTC P0112.
If the malfunction is not repaired successfully, a DTC is set 0.5 seconds after the engine is next started.

ES

MONITOR STRATEGY

Related DTCs	P0110: Intake air temperature sensor open/short (Fluctuating) P0112: Intake air temperature sensor short (Low electrical resistance) P0113: Intake air temperature sensor open (High electrical resistance)
Required Sensors/Components (Main)	Intake Air Temperature (IAT) sensor
Required sensors/Components (Related)	-
Frequency of Operation	Continuous
Duration	0.5 seconds
MIL Operation	Immediate
Sequence of Operation	None

TYPICAL ENABLING CONDITIONS

Monitor runs whenever following DTCs not present	None

TYPICAL MALFUNCTION THRESHOLDS

P0110:

Intake air temperature sensor voltage	Less than 0.18 V, or more than 4.91 V

P0112:

Intake air temperature sensor voltage	Less than 0.18 V

P0113:

Intake air temperature sensor voltage	More than 4.91 V

COMPONENT OPERATING RANGE

Intake air temperature sensor voltage	0.18 V to 4.91 V

WIRING DIAGRAM

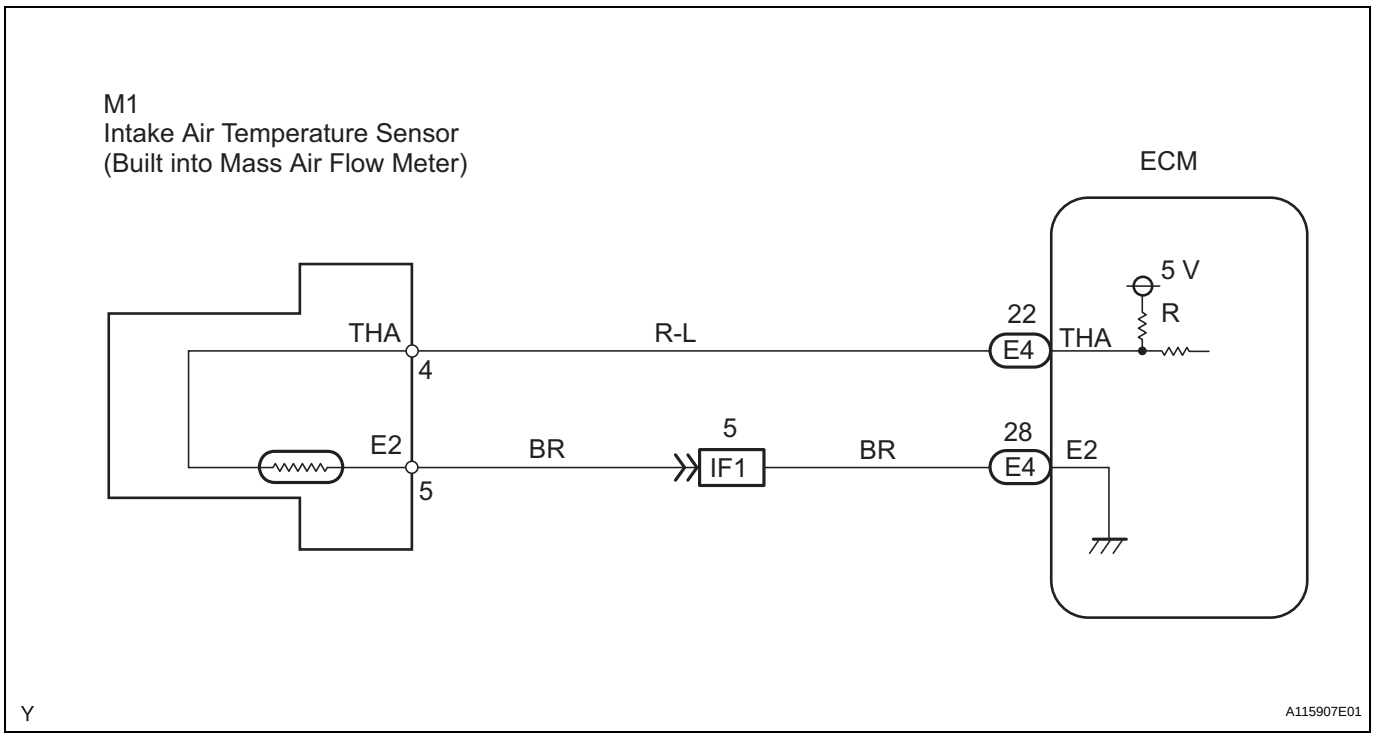

HINT:
- If other DTCs relating to different systems that have terminal E2 as the ground terminal are output simultaneously, terminal E2 may have an open circuit.
- Read freeze frame data using an intelligent tester. Freeze frame data record the engine condition when malfunctions are detected. When troubleshooting, freeze frame data can help determine if the vehicle was moving or stationary, if the engine was warmed up or not, if the air-fuel ratio was lean or rich, and other data, from the time the malfunction occurred.

1	READ VALUE OF INTELLIGENT TESTER (INTAKE AIR TEMPERATURE)

(a) Connect an intelligent tester to the DLC3.
(b) Turn the ignition switch ON.
(c) Turn the tester ON.
(d) Select the following menu items: DIAGNOSIS / ENHANCED OBD II / DATA LIST / PRIMARY / INTAKE AIR.
(e) Read the value displayed on the tester.
Standard:
Same as actual Intake Air Temperature (IAT).

Result

Temperature Displayed	Proceed To
-40°C (-40°F)	A
140°C (284°F) or higher	B
Same as actual IAT	C

HINT:
- If there is an open circuit, the intelligent tester indicates -40°C (-40°F).
- If there is a short circuit, the intelligent tester indicates 140°C (284°F) or higher.

B	Go to step 4
C	CHECK FOR INTERMITTENT PROBLEMS

A

2 **READ VALUE OF INTELLIGENT TESTER (CHECK FOR OPEN IN WIRE HARNESS)**

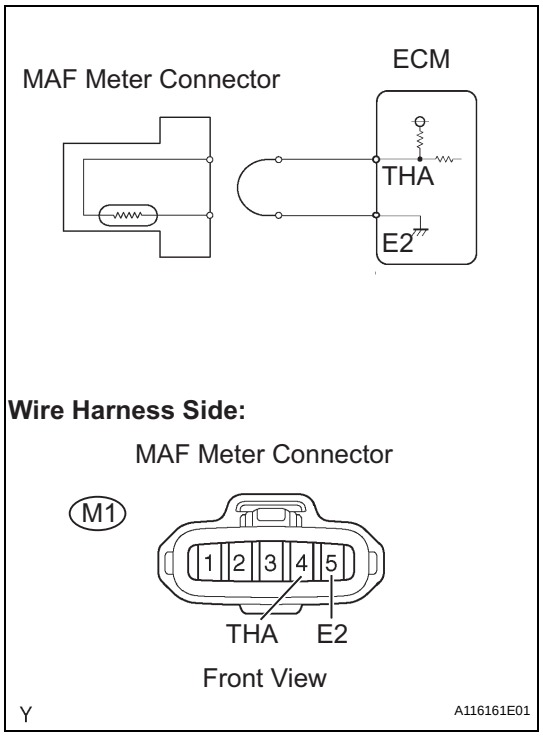

(a) Disconnect the M1 Mass Air Flow (MAF) meter connector.
(b) Connect terminals THA and E2 of the MAF meter wire harness side connector.
(c) Connect an intelligent tester to the DLC3.
(d) Turn the ignition switch ON.
(e) Turn the tester ON.
(f) Select the following menu items: DIAGNOSIS / ENHANCED OBD II / DATA LIST / PRIMARY / INTAKE AIR.
(g) Read the value displayed on the tester.
Standard:
140°C (284°F) or higher
(h) Reconnect the MAF meter connector.

OK	CONFIRM GOOD CONNECTION TO SENSOR. IF OK, REPLACE MASS AIR FLOW METER

NG

ES

3	READ VALUE OF INTELLIGENT TESTER (CHECK FOR OPEN IN ECM)

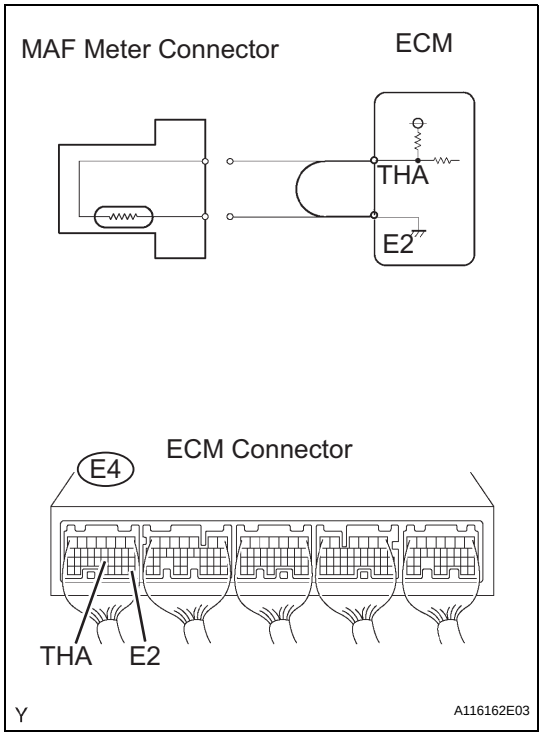

(a) Disconnect the M1 MAF meter connector.
(b) Connect terminals THA and E2 of the E4 ECM connector.
HINT:
Before checking, do visual and contact pressure checks on the ECM connector.
(c) Connect an intelligent tester to the DLC3.
(d) Turn the ignition switch ON.
(e) Turn the tester ON.
(f) Select the following menu items: DIAGNOSIS / ENHANCED OBD II / DATA LIST / PRIMARY / INTAKE AIR.
(g) Read the value displayed on the tester.
Standard:
140°C (284°F) or higher.
(h) Reconnect the MAF meter connector.

OK → **REPAIR OR REPLACE HARNESS OR CONNECTOR**

NG

CONFIRM GOOD CONNECTION TO ECM. IF OK, REPLACE ECM

4	READ VALUE OF INTELLIGENT TESTER (CHECK FOR SHORT IN WIRE HARNESS)

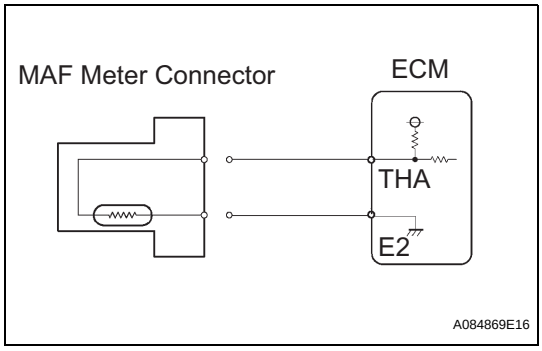

(a) Disconnect the M1 MAF meter connector.
(b) Connect an intelligent tester to the DLC3.
(c) Turn the ignition switch ON.
(d) Turn the tester ON.
(e) Select the following menu items: DIAGNOSIS / ENHANCED OBD II / DATA LIST / PRIMARY / INTAKE AIR.
(f) Read the value displayed on the tester.
Standard:
-40°C (-40°F)
(g) Reconnect the MAF meter connector.

OK → **REPLACE MASS AIR FLOW METER**

NG

5	READ VALUE OF INTELLIGENT TESTER (CHECK FOR SHORT ECM)

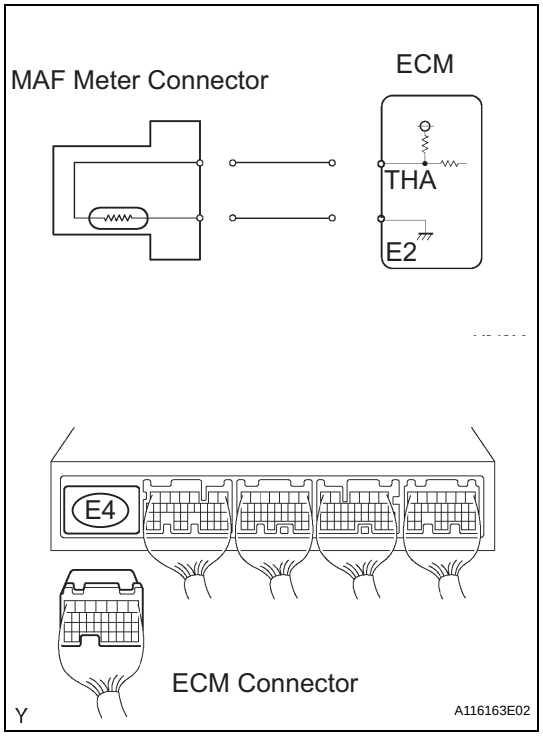

(a) Disconnect the E4 ECM connector.
(b) Connect an intelligent tester to the DLC3.
(c) Turn the ignition switch ON.
(d) Turn the tester ON.
(e) Select the following menu items: DIAGNOSIS / ENHANCED OBD II / DATA LIST / PRIMARY / INTAKE AIR.
(f) Read the value displayed on the tester.
Standard:
-40°C (-40°F)
(g) Reconnect the ECM connector.

OK → **REPAIR OR REPLACE HARNESS OR CONNECTOR**

NG

REPLACE ECM

ES

DTC	P0115	Engine Coolant Temperature Circuit

DTC	P0117	Engine Coolant Temperature Circuit Low Input

DTC	P0118	Engine Coolant Temperature Circuit High Input

DESCRIPTION

A thermistor is built into the Engine Coolant Temperature (ECT) sensor, of which the resistance value varies according to the ECT.
The structure of the sensor and its connection to the ECM are the same as those of the Intake Air Temperature (IAT) sensor.

ES

HINT:
When any of DTCs P0115, P0117 and P0118 are set, the ECM enters fail-safe mode. During fail-safe mode, the ECT is estimated to be 80°C (176°F) by the ECM. Fail-safe mode continues until a pass condition is detected.

DTC No.	Proceed To	DTC Detection Conditions	Trouble Areas
P0115	Step 1	Open or short in Engine Coolant Temperature (ECT) sensor circuit for 0.5 seconds (1 trip detection logic)	• Open or short in ECT sensor circuit • ECT sensor • ECM
P0117	Step 4	Short in Engine Coolant Temperature (ECT) sensor circuit for 0.5 seconds (1 trip detection logic)	• Short in ECT sensor circuit • ECT sensor • ECM
P0118	Step 2	Open in Engine Coolant Temperature (ECT) sensor circuit for 0.5 seconds (1 trip detection logic)	• Open in ECT sensor circuit • ECT sensor • ECM

HINT:
When any of these DTCs are set, check the ECT by selecting the following menu items on an intelligent tester: DIAGNOSIS / ENHANCED OBD II / DATA LIST / PRIMARY / COOLANT TEMP.

Temperature Displayed	Malfunctions
-40°C (-40°F)	Open circuit
140°C (284°F) or higher	Short circuit

MONITOR DESCRIPTION

The Engine Coolant Temperature (ECT) sensor is used to monitor the ECT. The ECT sensor has a thermistor with a resistance that varies according to the temperature of the engine coolant. When the coolant temperature is low, the resistance in the thermistor increases. When the temperature is high, the resistance drops.
These variations in resistance are reflected in the voltage output from the sensor. The ECM monitors the sensor voltage and uses this value to calculate the ECT. When the sensor output voltage deviates from the normal operating range, the ECM interprets this as a fault in the ECT sensor and sets a DTC.
Example:
If the sensor voltage output is more than 4.91 V for 0.5 seconds or more, the ECM determines that there is an open in the ECT sensor circuit, and sets DTC P0118. Conversely, if the voltage output is less than 0.14 V for 0.5 seconds or more, the ECM determines that there is a short in the sensor circuit, and sets DTC P0117.
If the malfunction is not repaired successfully, a DTC is set 0.5 seconds after the engine is next started.

MONITOR STRATEGY

Related DTCs	P0115: Engine coolant temperature sensor open/short (Fluctuating) P0117: Engine coolant temperature sensor short (Low electrical resistance) P0118: Engine coolant temperature sensor open (High electrical resistance)

Required Sensors/Components (Main)	Engine coolant temperature sensor
Required Sensors/Components (Related)	-
Frequency of Operation	Continuous
Duration	0.5 seconds
MIL Operation	Immediate
Sequence of Operation	None

TYPICAL ENABLING CONDITIONS

Monitor runs whenever following DTCs not present	None

TYPICAL MALFUNCTION THRESHOLDS

P0115:

Engine coolant temperature sensor voltage	Less than 0.14 V, or more than 4.91 V

P0117:

Engine coolant temperature sensor voltage	Less than 0.14 V

P0118:

Engine coolant temperature sensor voltage	More than 4.91 V

COMPONENT OPERATING RANGE

Engine coolant temperature sensor voltage	0.14 V to 4.91 V

WIRING DIAGRAM

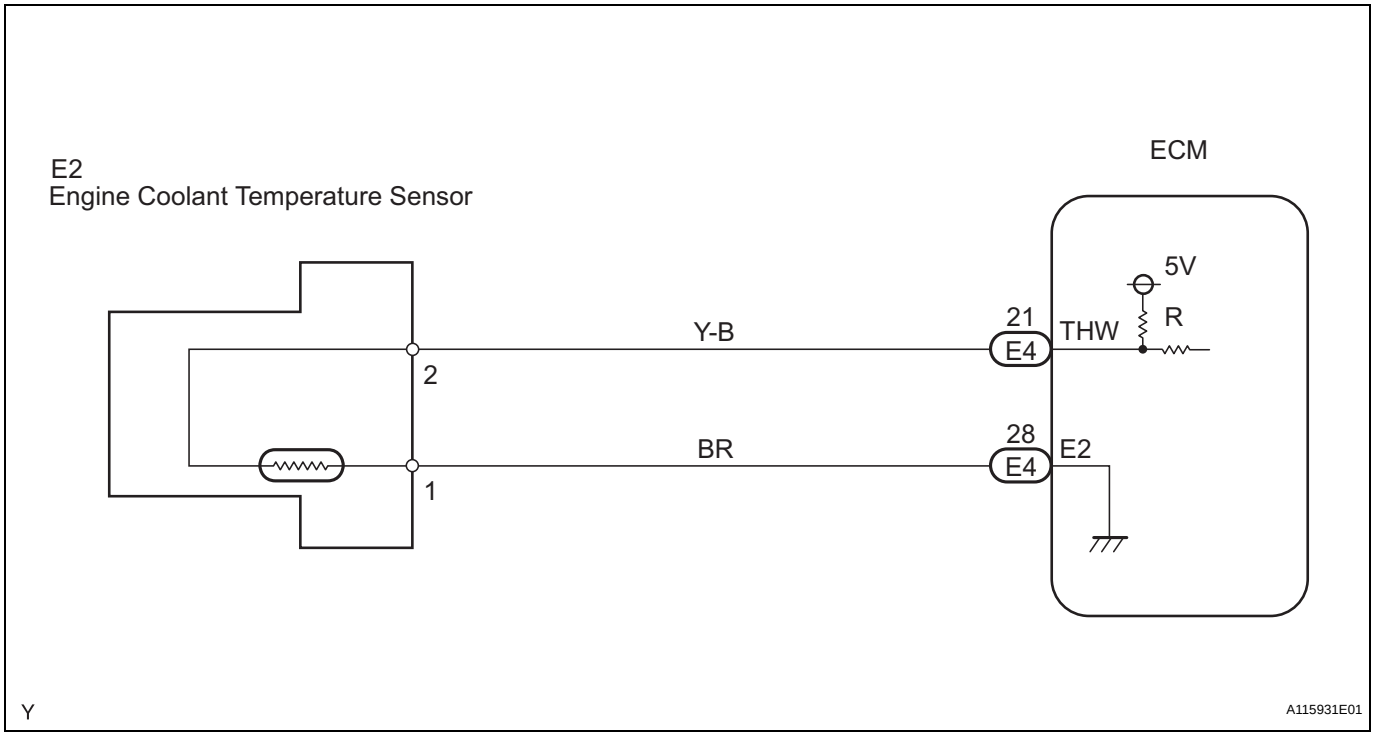

HINT:

- If other DTCs relating to different systems that have terminal E2 as the ground terminal are output simultaneously, terminal E2 may have an open circuit.

- Read freeze frame data using an intelligent tester. Freeze frame data record the engine condition when malfunctions are detected. When troubleshooting, freeze frame data can help determine if the vehicle was moving or stationary, if the engine was warmed up or not, if the air-fuel ratio was lean or rich, and other data, from the time the malfunction occurred.

1	READ VALUE OF INTELLIGENT TESTER (ENGINE COOLANT TEMPERATURE)

(a) Connect an intelligent tester to the DLC3.
(b) Turn the ignition switch ON.
(c) Turn the tester ON.
(d) Select the following menu items: DIAGNOSIS / ENHANCED OBD II / DATA LIST / PRIMARY / COOLANT TEMP.
(e) Read the value displayed on the tester.
Standard:
Between 80°C and 97°C (176°F and 207°F) with warm engine.

ES

Result

Temperature Displayed	Proceed To
-40°C (-40°F)	A
140°C (284°F) or higher	B
Between 80°C and 97°C (176°F and 207°F)	C

HINT:
- If there is an open circuit, the intelligent tester indicates -40°C (-40°F).
- If there is a short circuit, the intelligent tester indicates 140°C (284°F) or higher.

B → **Go to step 4**

C → **CHECK FOR INTERMITTENT PROBLEMS**

A

2	READ VALUE OF INTELLIGENT TESTER (CHECK FOR OPEN IN WIRE HARNESS)

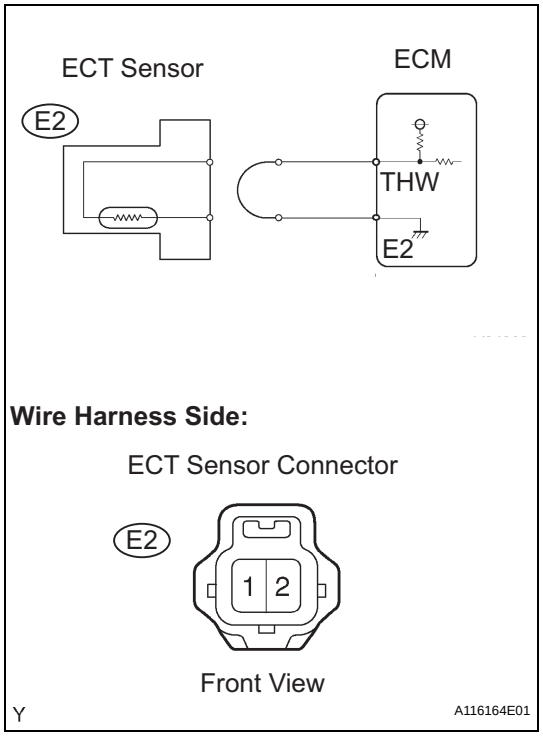

(a) Disconnect the E2 Engine Coolant Temperature (ECT) sensor connector.
(b) Connect terminals 1 and 2 of the ECT sensor connector on the wire harness side.
(c) Connect an intelligent tester to the DLC3.
(d) Turn the ignition switch ON.
(e) Turn the tester ON.
(f) Select the following menu items: DIAGNOSIS / ENHANCED OBD II / DATA LIST / PRIMARY / COOLANT TEMP.
(g) Read the value displayed on the tester.
Standard:
140°C (284°F) or higher
(h) Reconnect the ECT sensor connector.

OK → **CONFIRM GOOD CONNECTION TO SENSOR. IF OK, REPLACE ENGINE COOLANT TEMPERATURE SENSOR**

NG

3	READ VALUE OF INTELLIGENT TESTER (CHECK FOR OPEN IN ECM)

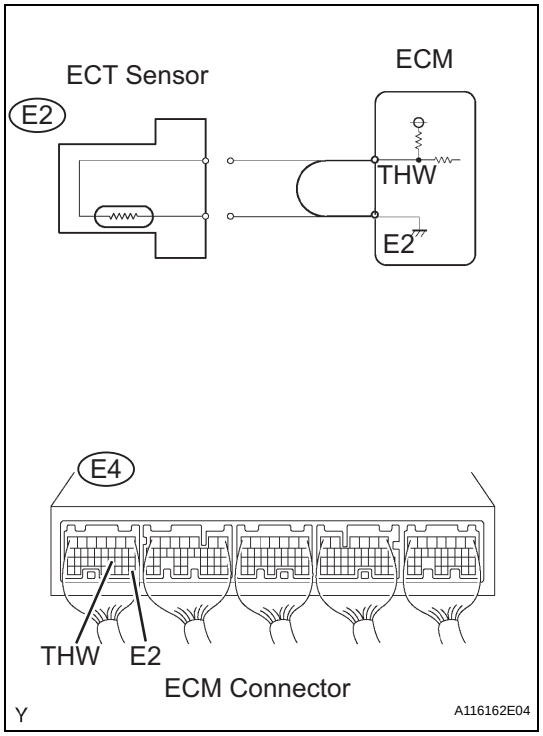

(a) Disconnect the E2 ECT sensor connector.
(b) Connect terminals THW and E2 of the E4 ECM connector.
HINT:
Before checking, do visual and contact pressure checks on the ECM connector.
(c) Connect an intelligent tester to the DLC3.
(d) Turn the ignition switch ON.
(e) Turn the tester ON.
(f) Select the following menu items: DIAGNOSIS / ENHANCED OBD II / DATA LIST / PRIMARY / COOLANT TEMP.
(g) Read the value displayed on the tester.
Standard:
140°C (284°F) or higher
(h) Reconnect the ECT sensor connector.

OK → **REPAIR OR REPLACE HARNESS OR CONNECTOR**

ES

NG

CONFIRM GOOD CONNECTION TO ECM. IF OK, REPLACE ECM

4 READ VALUE OF INTELLIGENT TESTER (CHECK FOR SHORT IN WIRE HARNESS)

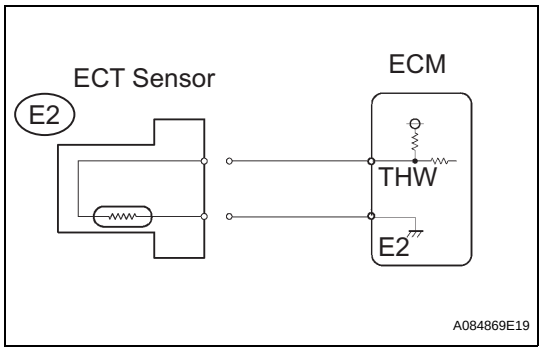

(a) Disconnect the E2 ECT sensor connector.
(b) Connect an intelligent tester to the DLC3.
(c) Turn the ignition switch ON.
(d) Turn the tester ON.
(e) Select the following menu items: DIAGNOSIS / ENHANCED OBD II / DATA LIST / PRIMARY / COOLANT TEMP.
(f) Read the value displayed on the tester.
Standard:
-40°C (-40°F)
(g) Reconnect the ECT sensor connector.

OK → **REPLACE ENGINE COOLANT TEMPERATURE SENSOR**

NG

5 READ VALUE OF INTELLIGENT TESTER (CHECK FOR SHORT IN ECM)

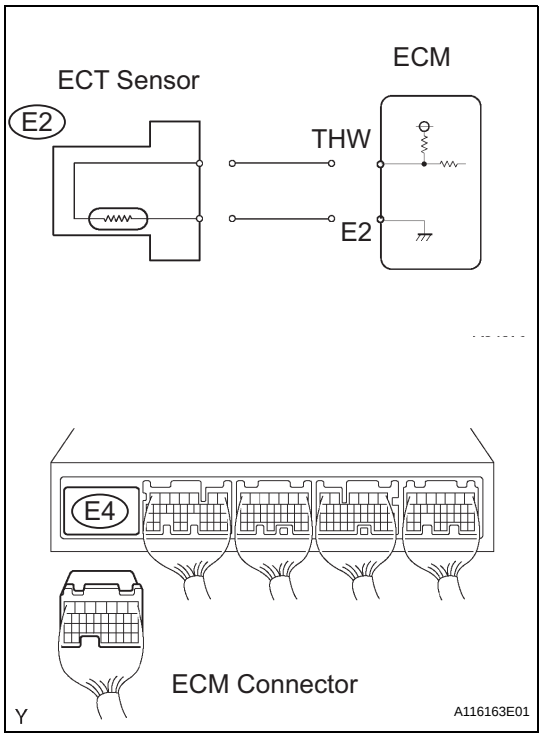

(a) Disconnect the E4 ECM connector.
(b) Connect an intelligent tester to the DLC3.
(c) Turn the ignition switch ON.
(d) Turn the tester ON.
(e) Select the following menu items: DIAGNOSIS / ENHANCED OBD II / DATA LIST / PRIMARY / COOLANT TEMP.
(f) Read the value displayed on the tester.
Standard:
-40°C (-40°F)
(g) Reconnect the ECM connector.

OK → **REPAIR OR REPLACE HARNESS OR CONNECTOR**

NG

REPLACE ECM

DTC	P0116	Engine Coolant Temperature Circuit Range / Performance Problem

DESCRIPTION

Refer to DTC P0115 (See page ES-104).

DTC No.	DTC Detection Conditions	Trouble Areas
P0116	Case 1: Engine Coolant Temperature (ECT) between 35°C and 60°C (95°F and 140°F) when engine started, and conditions (a) and (b) met (2 trip detection logic) (a) Vehicle driven at varying speeds (accelerated and decelerated) (b) ECT remains within 3°C (5.4°F) of initial ECT Case 2: ECT more than 60°C (140°F) when engine started, and conditions (a) and (b) met (6 trip detection logic) (a) Vehicle driven at varying speeds (accelerated and decelerated) (b) ECT measurements remain within 1°C (1.8°F) of initial ECT on 6 successive occasions	• ECT sensor

ES

MONITOR DESCRIPTION

The ECT sensor is used to monitor the ECT. The ECT sensor has a built-in thermistor with a resistance that varies according to the temperature of the engine coolant. When the ECT is low, the resistance of the thermistor increases. When the temperature is high, the resistance drops. These variations in the resistance are reflected in the voltage output from the ECT sensor.
The ECM monitors the sensor voltage and uses this value to calculate the ECT. If the sensor voltage output deviates from the normal operating range, the ECM interprets this deviation as a malfunction in the ECT sensor and sets the DTC.
Examples:

- Upon starting the engine, the ECT is between 35°C and 60°C (95°F and 140°F). If after driving for 250 seconds, the ECT remains within 3°C (5.4°F) of the starting temperature, the DTC is set (2 trip detection logic).
- Upon starting the engine, the ECT is over 60°C (140°F). If after driving for 250 seconds, the ECM remains within 1°C (1.8°F) of the starting temperature, the DTC is set (6 trip detection logic).

MONITOR STRATEGY

Related DTCs	P0116: Engine coolant temperature sensor output stuck at low engine coolant temperature P0116: Engine coolant temperature sensor output stuck at high engine coolant temperature
Required Sensors/Components (Main)	Engine coolant temperature (ECT) sensor
Required Sensors/Components (Related)	Crankshaft position sensor, intake air temperature sensor and mass air flow meter
Frequency of Operation	Continuous
Duration	250 seconds or more
MIL Operation	2 driving cycles: ECT sensor output stuck at low engine coolant temperature 6 driving cycles: ECT sensor output stuck at high engine coolant temperature
Sequence of Operation	None

TYPICAL ENABLING CONDITIONS

Engine Coolant Temperature Sensor Output Stuck at Low Engine Coolant Temperature:

Monitor runs whenever following DTCs not present	P0100 to P0103: Mass air flow meter
Cumulative idle off period	250 seconds or more
Speed increase by 18.6 mph (30 km/h) or more	10 times or more
Engine coolant temperature at engine start	35 to 60°C (95 to 140°F)
Intake air temperature at engine start	-6.7°C (20°F) or more

Engine Coolant Temperature Sensor Output Stuck at High Engine Coolant Temperature:

Monitor runs whenever following DTCs not present	P0100 to P0103: Mass air flow meter
Engine coolant temperature at engine start	60°C (140°F) or more
Intake air temperature at engine start	-6.7°C (20°F) or more
Stop and go*1	Once or more
Steady driving and stop*2	Once or more
Engine running time after engine start	0.3 seconds or more

*1: The vehicle is stopped for 20 seconds or more and accelerated to more than 43.5 mph (70 km/h) within 40 seconds.

*2: Following these steps: 1) the vehicle is driven at 40.4 mph (65 km/h) or more for 30 seconds or more and the vehicle speed reaches 43.5 mph (70 km/h); 2) the vehicle is decelerated from 40.4 mph (65 km/h) to 1.86 mph (3 km/h) or less within 35 seconds; and 3) the vehicle is stopped for 10 seconds.

ES

TYPICAL MALFUNCTION THRESHOLDS

Engine Coolant Temperature Sensor Output Stuck at Low Engine Coolant Temperature:

Variation of engine coolant temperature	Less than 3°C (5.4°F)

Engine Coolant Temperature Sensor Output Stuck at High Engine Coolant Temperature:

Variation of engine coolant temperature	1°C (1.8°F) or less

COMPONENT OPERATING RANGE

Engine coolant temperature	Varies with actual engine coolant temperature

WIRING DIAGRAM

Refer to DTC P0115 (See page ES-105).

HINT:

- If any of DTCs P0115, P0117, P0118 or P0125 are set simultaneously with DTC P0116, the ECT sensor may have an open or a short circuit. Troubleshoot those DTCs first.
- Read freeze frame data using an intelligent tester. Freeze frame data record the engine condition when malfunctions are detected. When troubleshooting, freeze frame data can help determine if the vehicle was moving or stationary, if the engine was warmed up or not, if the airfuel ratio was lean or rich, and other data, from the time the malfunction occurred.

1	**CHECK ANY OTHER DTCS OUTPUT (IN ADDITION TO DTC P0116)**

(a) Connect an intelligent tester to the DLC3.
(b) Turn the ignition switch ON.
(c) Turn the tester ON.
(d) Enter the following menus: DIAGNOSIS / ENHANCED II / DTC INFO / CURRENT CODES.
(e) Read the DTC.

Result

Display (DTC output)	Proceed to
P0116	A
P0116 and other DTCs	B

B → **GO TO DTC CHART**

A

2	INSPECT THERMOSTAT (WATER INLET WITH THERMOSTAT)

(a) Remove the thermostat (See page CO-9).
(b) Check the valve opening temperature of the thermostat.
Standard:
80 to 84°C (176 to 183°F)
HINT:
In addition to the above check, confirm that the valve is completely closed when the temperature is below the standard.
(c) Reinstall the thermostat (See page CO-9).

NG → **REPLACE THERMOSTAT**

OK

REPLACE ENGINE COOLANT TEMPERATURE SENSOR

DTC	P0120	Throttle / Pedal Position Sensor / Switch "A" Circuit
DTC	P0122	Throttle / Pedal Position Sensor / Switch "A" Circuit Low Input
DTC	P0123	Throttle / Pedal Position Sensor / Switch "A" Circuit High Input
DTC	P0220	Throttle / Pedal Position Sensor / Switch "B" Circuit
DTC	P0222	Throttle / Pedal Position Sensor / Switch "B" Circuit Low Input
DTC	P0223	Throttle / Pedal Position Sensor / Switch "B" Circuit High Input
DTC	P2135	Throttle / Pedal Position Sensor / Switch "A" / "B" Voltage Correlation

ES

HINT:
These DTCs relate to the Throttle Position (TP) sensor.

DESCRIPTION

This ETCS (Electronic Throttle Control System) does not use a throttle cable. The Throttle Position (TP) sensor is mounted on the throttle body, and detects the opening angle of the throttle valve. This sensor is a non-contact type, and uses Hall-effect elements, in order to yield accurate signals, even in extreme driving conditions, such as at high speeds as well as very low speeds.
The TP sensor has two sensor circuits which each transmits a signal, VTA1 and VTA2. VTA1 is used to detect the throttle valve angle and VTA2 is used to detect malfunctions in VTA1. The sensor signal voltages vary between 0 V and 5 V in proportion to the throttle valve opening angle, and are transmitted to the VTA terminals of the ECM.
As the valve closes, the sensor output voltage decreases and as the valve opens, the sensor output voltage increases. The ECM calculates the throttle valve opening angle according to these signals and controls the throttle actuator in response to driver inputs. These signals are also used in calculations such as air-fuel ratio correction, power increase correction and fuel-cut control.

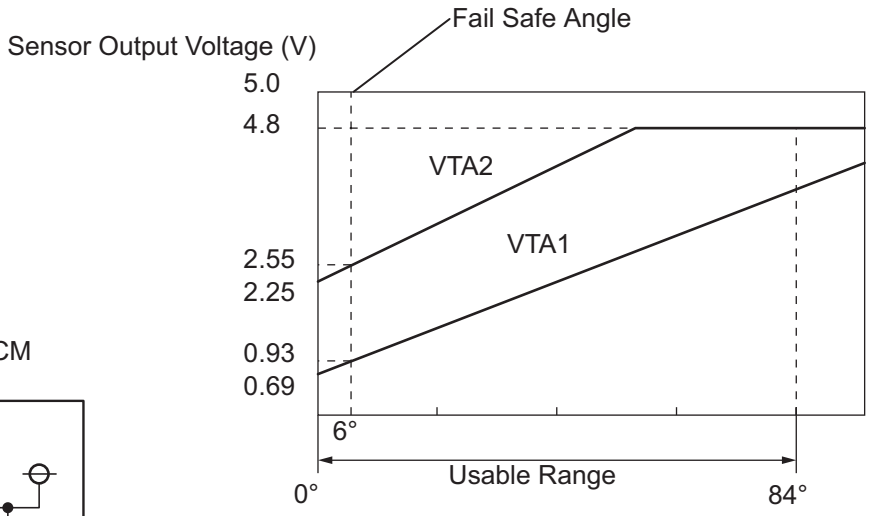

Throttle Position Sensor

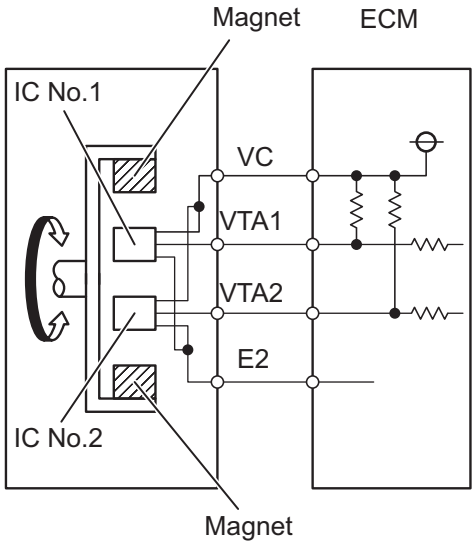

Note:
The throttle Valve opening angle detected by the sensor terminal VTA1 is expressed as percentages.

Between 10 % and 24 %: Throttle valve fully closed

Between 66 % and 96 %: Throttle valve fully open

Approximately 19 %: Fail-safe angle (6°)

Y

A115896E01

DTC No.	DTC Detection Conditions	Trouble Areas
P0120	Output voltage of VTA1 quickly fluctuates beyond lower and upper malfunction thresholds for 2 seconds (1 trip detection logic)	• Throttle Position (TP) sensor (built into throttle body) • ECM
P0122	Output voltage of VTA1 0.2 V or less for 2 seconds (1 trip detection logic)	• TP sensor (built into throttle body) • Short in VTA1 circuit • Open in VC circuit • ECM
P0123	Output voltage of VTA1 4.535 V or more for 2 seconds (1 trip detection logic)	• TP sensor (built into throttle body) • Open in VTA1 circuit • Open in E2 circuit • Short between VC and VTA1 circuits • ECM
P0220	Output voltage of VTA2 quickly fluctuates beyond lower and upper malfunction thresholds for 2 seconds (1 trip detection logic)	• TP sensor (built into throttle body) • ECM

DTC No.	DTC Detection Conditions	Trouble Areas
P0222	Output voltage of VTA2 1.75 V or less for 2 seconds (1 trip detection logic)	• TP sensor (built into throttle body) • Short in VTA2 circuit • Open in VC circuit • ECM
P0223	Output voltage of VTA2 4.8 V or more, and VTA1 between 0.2 V and 2.02 V, for 2 seconds (1 trip detection logic)	• TP sensor (built into throttle body) • Open in VTA2 circuit • Open in E2 circuit • Short between VC and VTA2 circuits • ECM
P2135	Either condition (a) or (b) met (1 trip detection logic) (a) Difference between output voltages of VTA1 and VTA2 0.02 V or less for 0.5 seconds or more (b) Output voltage of VTA1 0.2 V or less, and VTA2 1.75 V or less, for 0.4 seconds or more	• Short between VTA1 and VTA2 circuits • TP sensor (built into throttle body) • ECM

ES

HINT:

- When any of these DTCs are set, check the throttle valve opening angle by selecting the following menu items on an intelligent tester: DIAGNOSIS / ENHANCED OBD II / DATA LIST / ETCS / THROTTLE POS AND THROTTLE POS #2.
- THROTTLE POS denotes the VTA1 signal (expressed in percentages), and THROTTLE POS #2 denotes the VTA2 signal (expressed in voltages).

Reference (Normal Condition)

Tester Display	Accelerator Pedal Fully Released	Accelerator Pedal Fully Depressed
THROTTLE POS	**10 to 24 %**	**64 to 96 %**
THROTTLE POS #2	**2.1 to 3.1 V**	**4.5 to 5.0 V**

MONITOR DESCRIPTION

The ECM uses the Throttle Position (TP) sensor to monitor the throttle valve opening angle. There are several checks that the ECM performs to confirm the proper operation of the TP sensor.

- A specific voltage difference is expected between the sensor terminals, VTA1 and VTA2, for each throttle valve opening angle. If the difference between VTA1 and VTA2 is incorrect, the ECM interprets this as a malfunction in the sensor, and sets a DTC.
- VTA1 and VTA2 each have a specific voltage range. If VTA1 or VTA2 is outside the normal operating range, the ECM interprets this as a malfunction in the sensor, and sets a DTC.
- VTA1 and VTA2 should never be close to the same voltage level. If VTA1 is within 0.02 V of VTA2, the ECM determines that there is a short circuit in the sensor, and sets a DTC.

If the malfunction is not repaired successfully, a DTC is set 2 seconds after the engine is next started.

MONITOR STRATEGY

Related DTCs	P0120: Throttle position sensor 1 range check (Fluctuating) P0122: Throttle position sensor 1 range check (Low voltage) P0123: Throttle position sensor 1 range check (High voltage) P0220: Throttle position sensor 2 range check (Fluctuating) P0222: Throttle position sensor 2 range check (Low voltage) P0223: Throttle position sensor 2 range check (High voltage) P2135: Throttle position sensor range check (Correlation)
Required Sensors/Components (Main)	Throttle position sensor
Required Sensors/Components (Related)	-
Frequency of Operation	Continuous
Duration	2 seconds: P0120, P0122, P0123, P0220, P0222 and P0223 (Accelerator pedal ON) 10 seconds: P0120, P0122, P0123, P0220, P0222 and P0223 (Accelerator pedal OFF) Within 0.5 seconds: P2135
MIL Operation	Immediate
Sequence of Operation	None

TYPICAL ENABLING CONDITIONS

Monitor runs whenever following DTCs not present	None

TYPICAL MALFUNCTION THRESHOLDS

P0120:

VTA1 voltage	0.2 V or less, or 4.535 V or more

P0122:

VTA1 voltage	0.2 V or less

P0123:

VTA1 voltage	4.8 V or more

P0220:

VTA2 voltage	1.75 V or less, or 4.8 V or more

P0222:

VTA2 voltage	1.75 V or less

P0223:

VTA2 voltage when VTA1 0.2 V or more	4.8 V or more

P2135:

Either of following conditions A or B met:	-
Condition A	-
Difference between VTA1 and VTA2 voltages	0.02 V or less
Condition B	-
VTA1 voltage	0.2 V or less
VTA2 voltage	1.75 V or less

COMPONENT OPERATING RANGE

VTA1 voltage	0.69 to 4.05 V
VTA2 voltage	2.25 to 4.8 V

FAIL-SAFE

When any of these DTCs, as well as other DTCs relating to ETCS (Electronic Throttle Control System) malfunctions, are set, the ECM enters fail-safe mode. During fail-safe mode, the ECM cuts the current to the throttle actuator off, and the throttle valve is returned to a 6° throttle angle by the return spring. The ECM then adjusts the engine output by controlling the fuel injection (intermittent fuel-cut) and ignition timing, in accordance with the accelerator pedal opening angle, to allow the vehicle to continue at a minimal speed.

If the accelerator pedal is depressed firmly and gently, the vehicle can be driven slowly.

Fail-safe mode continues until a pass condition is detected, and the ignition switch is then turned OFF.

WIRING DIAGRAM

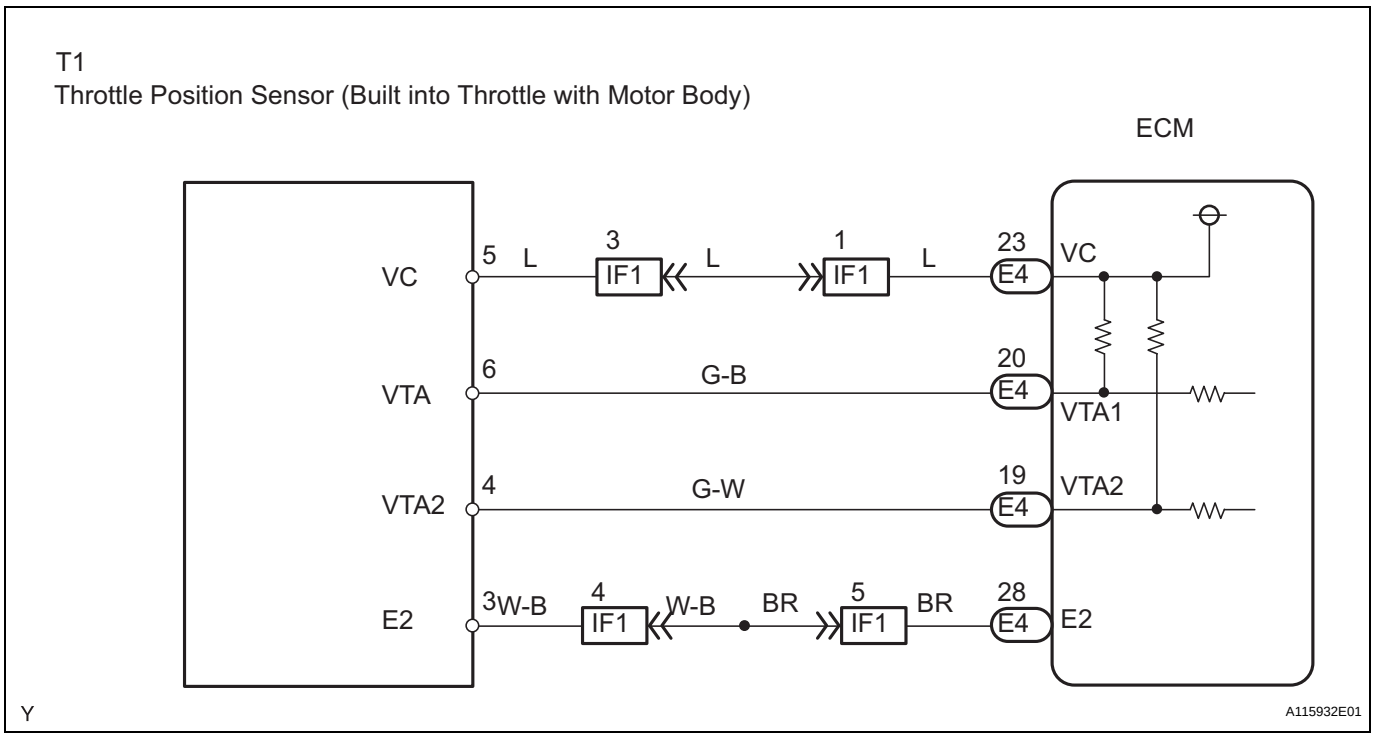

HINT:

- If other DTCs relating to different systems that have terminal E2 as the ground terminal are output simultaneously, terminal E2 may have an open circuit.
- Read freeze frame data using an intelligent tester. Freeze frame data record the engine condition when malfunctions are detected. When troubleshooting, freeze frame data can help determine if the vehicle was moving or stationary, if the engine was warmed up or not, if the air-fuel ratio was lean or rich, and other data, from the time the malfunction occurred.

1	READ VALUE OF INTELLIGENT TESTER (THROTTLE POS AND THROTTLE POS #2)

(a) Connect an intelligent tester to the DLC3.
(b) Turn the ignition switch ON and turn the tester ON.
(c) Select the following menu items: DIAGNOSIS / ENHANCED OBD II / DATA LIST / ETCS / THROTTLE POS and THROTTLE POS #2.
(d) Check the values displayed on the tester.

Result

TP#1 (VTA1) When AP Released	TP#2 (VTA2) When AP Released	TP#1 (VTA1) When AP Depressed	TP#2 (VTA2) When AP Depressed	Trouble Areas	Proceed To
0 %	Between 0 V and 0.2 V	0 %	Between 0 V and 0.2 V	VC circuit open	A
100 %	Between 4.5 V and 5.0 V	100 %	Between 4.5 V and 5.0 V	E2 circuit open	A
0 % or 100 %	Between 2.1 V and 3.1 V (Fail-safe)	0 % or 100 %	Between 2.1 V and 3.1 V (Fail-safe)	VTA1 circuit open or ground short	A
Approx 19 % (Fail-safe)	Between 0 V and 0.2 V or 4.5 V and 5.0 V	Between 10 % and 24 % (Fail-safe)	Between 0 V and 0.2 V or 4.5 V and 5.0 V	VTA2 circuit open or ground short	A

TP#1 (VTA1) When AP Released	TP#2 (VTA2) When AP Released	TP#1 (VTA1) When AP Depressed	TP#2 (VTA2) When AP Depressed	Trouble Areas	Proceed To
Between 10 % and 24 %	Between 2.1 V and 3.1 V	Between 64 % and 96 % (Not fail-safe)	Between 4.5 V and 5.0 V (Not fail-safe)	TP sensor circuit normal	B

HINT:
- TP#1 denotes THROTTLE POS, and TP#2 denotes THROTTLE POS#2.
- AP denotes Accelerator Pedal.
- VTA1 is expressed as percentages, and VTA2 is expressed as voltages.

B → **Go to step 5**

A

2 CHECK HARNESS AND CONNECTOR (THROTTLE POSITION SENSOR - ECM)

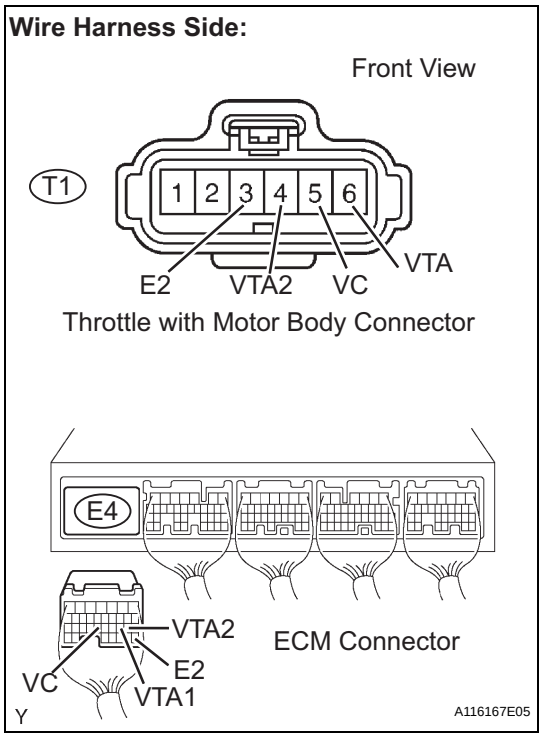

(a) Disconnect the T1 throttle with motor body connector.
(b) Disconnect the E4 ECM connector.
(c) Check the resistance.

Standard Resistance (Check for open)

Tester Connections	Specified Conditions
VC (T1-5) - VC (E4-23)	Below 1 Ω
VTA (T1-6) - VTA1 (E4-20)	
VTA2 (T1-4) - VTA2 (E4-19)	
E2 (T1-3) - E2 (E4-28)	

Standard Resistance (Check for short)

Tester Connections	Specified Conditions
VC (T1-5) or VC (E4-23) - Body ground	10 kΩ or higher
VTA (T1-6) or VTA1 (E4-20) - Body ground	
VTA2 (T1-4) or VTA2 (E4-19) - Body ground	

(d) Reconnect the throttle with motor body connector.
(e) Reconnect the ECM connector.

NG → **REPAIR OR REPLACE HARNESS OR CONNECTOR**

OK

3	INSPECT ECM (VC VOLTAGE)

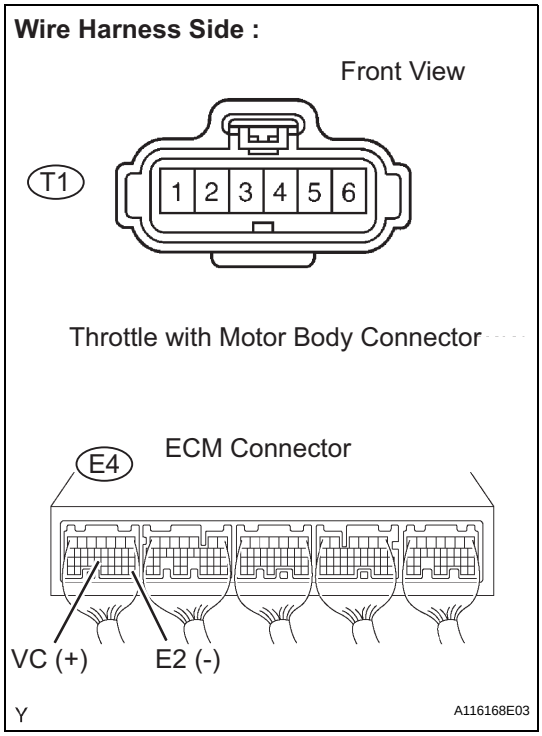

(a) Disconnect the T1 throttle with motor body connector.
(b) Turn the ignition switch ON.
(c) Measure the voltage between the terminals of the E4 ECM connector.

Standard Voltage

Tester Connections	Specified Conditions
VC (E4-23) - E2 (E4-28)	4.5 to 5.0 V

(d) Reconnect the throttle with motor body connector.

NG → REPLACE ECM

OK

4	REPLACE THROTTLE WITH MOTOR BODY ASSEMBLY

NEXT

5	CHECK WHETHER DTC OUTPUT RECURS (THROTTLE POSITION SENSOR DTCS)

(a) Connect an intelligent tester to the DLC3.
(b) Turn the ignition switch ON and turn the tester ON.
(c) Clear DTCs (See page ES-38).
(d) Start the engine.
(e) Allow the engine to idle for 15 seconds or more.
(f) Select the following menu items: DIAGNOSIS / ENHANCED OBD II / DTC INFO / CURRENT CODES.
(g) Read DTCs.

Result

Display (DTC Output)	Proceed To
P0120, P0122, P0123, P0220, P0222, P0223 and/or P2135	A
No output	B

B → SYSTEM OK

A

REPLACE ECM

DTC	P0121	Throttle / Pedal Position Sensor / Switch "A" Circuit Range / Performance Problem

HINT:
This DTC relates to the Throttle Position (TP) sensor.

DESCRIPTION

Refer to DTC P0120 (See page ES-112).

DTC No.	DTC Detection Conditions	Trouble Areas
P0121	Difference between VTA1 and VTA2 voltages less than 0.8 V, or more than 1.6 V for 2 seconds (1 trip detection logic)	• TP sensor (built into throttle body)

ES

MONITOR DESCRIPTION

The ECM uses the TP sensor to monitor the throttle valve opening angle.
This sensor transmits two signals: VTA1 and VTA2. VTA1 is used to detect the throttle opening angle and VTA2 is used to detect malfunctions in VTA1. The ECM performs several checks to confirm the proper operation of the TP sensor and VTA1.
For each throttle opening angle, a specific voltage difference is expected between the outputs of VTA1 and VTA2. If the voltage output difference between the two signals deviates from the normal operating range, the ECM interprets this as a malfunction of the TP sensor. The ECM illuminates the MIL and sets the DTC.
If the malfunction is not repaired successfully, the DTC is set 2 seconds after the engine is next started.

MONITOR STRATEGY

Related DTCs	P0121: TP sensor rationality
Required Sensors/Components (Main)	TP sensor
Required Sensors/Components (Related)	-
Frequency of Operation	Continuous
Duration	Within 2 seconds
MIL Operation	Immediate
Sequence of Operation	None

TYPICAL ENABLING CONDITIONS

Either of following conditions A or B is met	-
A. Ignition switch	ON
B. Electric throttle motor power	ON
TP sensor malfunction (P0120, P0122, P0123, P0220, P0222, P0223, P2135)	Not detected

TYPICAL MALFUNCTION THRESHOLDS

Either of following conditions is met	-
"Difference of TP sensor voltage between VTA1 and VTA2 x 0.8"	Higher than 1.6 V
"Difference of TP sensor voltage between VTA1 and VTA2 x 0.8"	Lower than 0.8 V

FAIL-SAFE

When this DTC, as well as other DTCs relating to ETCS (Electronic Throttle Control System) malfunctions, is set, the ECM enters fail-safe mode. During fail-safe mode, the ECM cuts the current to the throttle actuator off, and the throttle valve is returned to a 6° throttle angle by the return spring. The ECM then adjusts the engine output by controlling the fuel injection (intermittent fuel-cut) and ignition timing, in accordance with the accelerator pedal opening angle, to allow the vehicle to continue at a minimal speed. If the accelerator pedal is depressed firmly and gently, the vehicle can be driven slowly. Fail-safe mode continues until a pass condition is detected, and the ignition switch is then turned OFF.

HINT:
Read freeze frame data using an intelligent tester. Freeze frame data record the engine condition when malfunctions are detected. When troubleshooting, freeze frame data can help determine if the vehicle was moving or stationary, if the engine was warmed up or not, if the air-fuel ratio was lean or rich, and other data, from the time the malfunction occurred.

ES

1	CHECK ANY OTHER DTCS OUTPUT (IN ADDITION TO DTC P0121)

(a) Connect an intelligent tester to the DLC3.
(b) Turn the ignition switch ON.
(c) Turn the tester ON.
(d) Enter the following menus: DIAGNOSIS / ENHANCED II / DTC INFO / CURRENT CODES.
(e) Read the DTC.

Result

Display (DTC output)	Proceed to
P0121	A
P0121 and other DTCs	B

B → GO TO DTC CHART

A → REPLACE THROTTLE BODY ASSEMBLY

DTC	P0125	Insufficient Coolant Temperature for Closed Loop Fuel Control

DESCRIPTION

Refer to DTC P0115 (See page ES-104).

DTC No.	DTC Detection Conditions	Trouble Areas
P0125	Engine coolant temperature (ECT) does not reach closed-loop enabling temperature for 20 minutes (this period varies with engine start ECT) (2 trip detection logic)	• Cooling system • Engine coolant temperature sensor • Thermostat

MONITOR DESCRIPTION

The resistance of the ECT sensor varies in proportion to the actual ECT. The ECM supplies a constant voltage to the sensor and monitors the signal output voltage of the sensor. The signal voltage output varies according to the changing resistance of the sensor. After the engine is started, the ECT is monitored through this signal. If the ECT sensor indicates that the engine is not yet warm enough for closed-loop fuel control, despite a specified period of time having elapsed since the engine was started, the ECM interprets this as a malfunction in the sensor or cooling system and sets the DTC.
Example:
The ECT is 0°C (32°F) at engine start. After 5 minutes running time, the ECT sensor still indicates that the engine is not warm enough to begin closed-loop fuel (air-fuel ratio feedback) control. The ECM interprets this as a malfunction in the sensor or cooling system and sets the DTC.

MONITOR STRATEGY

Related DTCs	P0125: Insufficient engine coolant temperature for closed-loop fuel control
Required Sensors/Components (Main)	Thermostat, cooling system
Required Sensors/Components (Related)	Engine coolant temperature sensor and mass air flow meter
Frequency of Operation	Continuous
Duration	56 seconds: Closed-loop enable temperature - 8.34°C (15°F) or more 98 seconds: Closed-loop enable temperature - 19.45 to - 8.34°C (35 to 15°F) 1200 seconds: Less than closed-loop enable temperature - 19.45°C (35°F)
MIL Operation	2 driving cycles
Sequence of Operation	P0100 - P0103 (MAF sensor) P0110 - P0113 (IAT sensor) P0115 - P0118 (ECT sensor)

TYPICAL ENABLING CONDITIONS

All

Monitor runs whenever following DTCs not present	P0100 - P0103 (MAF meter) P0110 - P0113 (IAT sensor) P0115 - P0118 (ECT sensor)

Case 1

Engine coolant temperature or intake air temperature at engine start	"Closed-loop enabling temperature - 8.34°C (15°F)" or more
Engine	Running
Fuel cut	OFF

Case 2

Engine coolant temperature or intake air temperature at engine start	Between "Closed-loop enabling temperature - 19.45°C (35°F)" and "Closed-loop enabling temperature - 8.34°C (15°F)"
Engine	Running
Fuel cut	OFF

Case 3

Engine coolant temperature or intake air temperature at engine start	Lower than "Closed-loop enabling temperature - 19.45°C (35°F)"
Engine	Running
Fuel cut	OFF
Idle	OFF

TYPICAL MALFUNCTION THRESHOLDS

Engine coolant temperature	Lower than closed-loop enabling temperature

WIRING DIAGRAM

Refer to DTC P0115 (See page ES-105).

ES

HINT:

- If any of DTCs P0115, P0116, P0117 or P0118 are set simultaneously with DTC P0125, the Engine Coolant Temperature (ECT) sensor may have an open or a short circuit. Troubleshoot those DTCs first.
- Read freeze frame data using an intelligent tester. Freeze frame data record the engine condition when malfunctions are detected. When troubleshooting, freeze frame data can help determine if the vehicle was moving or stationary, if the engine was warmed up or not, if the air-fuel ratio was lean or rich, and other data, from the time the malfunction occurred.

1	CHECK ANY OTHER DTCS OUTPUT (IN ADDITION TO DTC P0125)

(a) Connect an intelligent tester to the DLC3.
(b) Turn the ignition switch ON.
(c) Turn the tester ON.
(d) Select the following menu items: DIAGNOSIS / ENHANCED OBD II / DTC INFO / CURRENT CODES.
(e) Read DTCs.

Result

Display (DTC Output)	Proceed to
P0125	A
P0125 and other DTCs	B

HINT:
If any DTCs other than P0125 are output, troubleshoot those DTCs first.

B → GO TO DTC CHART

A

2	INSPECT W/THERMOSTAT WATER INLET SUB-ASSEMBLY (THERMOSTAT)

(a) Remove the w/ thermostat water inlet sub-assembly (See page CO-9).
(b) Check the valve opening temperature of the thermostat.
Standard:
80° to 84°C (176° to 183°F)

HINT:
In addition to the above check, confirm that the valve is completely closed when the temperature is below the standard.

(c) Reinstall the w/ thermostat water inlet sub-assembly (See page CO-9).

NG → **REPLACE W/THERMOSTAT WATER INLET SUB-ASSEMBLY**

OK

ES

3	CHECK COOLING SYSTEM

(a) Check for defects in the cooling system that might cause the system to be too cold, such as abnormal radiator fan operation or any modifications.

NG → **REPAIR OR REPLACE COOLING SYSTEM**

OK

REPLACE ENGINE COOLANT TEMPERATURE SENSOR

DTC	P0128	Coolant Thermostat (Coolant Temperature Below Thermostat Regulating Temperature)

HINT:
This DTC relates to the thermostat.

DESCRIPTION

This DTC is set when the Engine Coolant Temperature (ECT) does not reach 75°C (167°F) despite sufficient engine warm-up time.

DTC No.	DTC Detection Conditions	Trouble Areas
P0128	Conditions (a), (b) and (c) are met for 5 seconds (2 rip detection logic) (a) Cold start (b) Engine warmed up (c) ECT less than 75°C (167°F)	• Thermostat • Cooling system • ECT sensor • ECM

ES

MONITOR DESCRIPTION

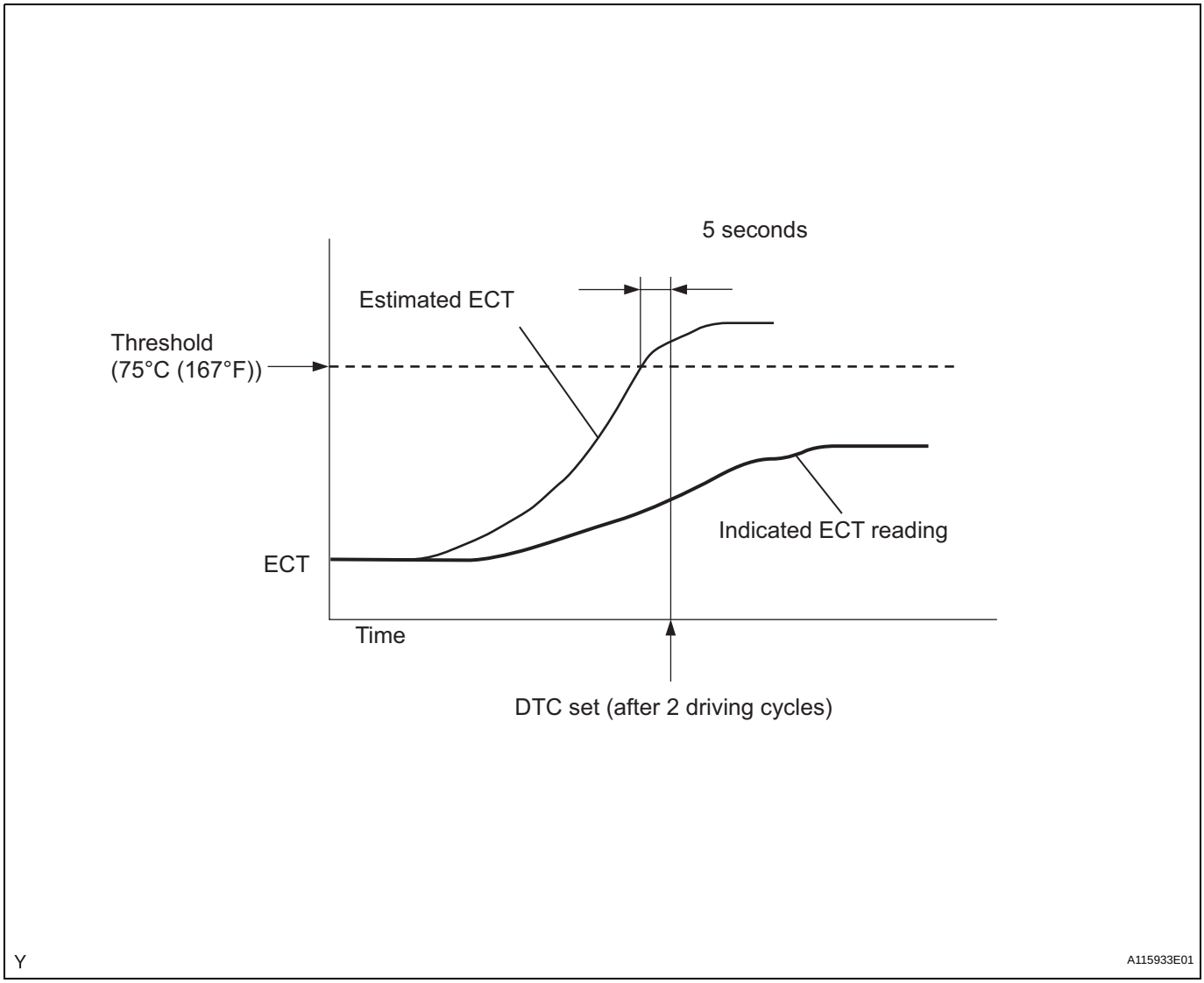

The ECM estimates the ECT based on the starting temperature, engine loads, and engine speeds. The ECM then compares the estimated temperature with the actual ECT. When the estimated ECT reaches 75°C (167°F), the ECM checks the actual ECT. If the actual ECT is less than 75°C (167°F), the ECM interprets this as a malfunction in the thermostat or the engine cooling system and sets the DTC.

MONITOR STRATEGY

Related DTCs	P0128: Coolant Thermostat
Required Sensors/Components (Main)	Thermostat
Required Sensors/Components (Related)	Engine Coolant Temperature (ECT) sensor, Intake Air Temperature (IAT) sensor, Vehicle speed sensor
Frequency of Operation	Once per driving cycle
Duration	900 seconds
MIL Operation	2 driving cycles
Sequence of Operation	None

ES

TYPICAL ENABLING CONDITIONS

Monitor runs whenever following DTCs not present	P0010, P0020 (OCV Bank 1, 2) P0011 (VVT System 1 - Advance) P0012 (VVT System 1 - Retard) P0021 (VVT System 2 - Advance) P0022 (VVT System 2 - Retard) P0031, P0032, P0051, P0052 (A/F sensor heater - Sensor 1) P0100 - P0103 (MAF meter) P0110 - P0113 (IAT sensor) P0115 - P0118 (ECT sensor) P0125 (Insufficient ECT for closed loop) P0171, P0172 (Fuel system) P0300 - P0306 (Misfire) P0335 (CKP sensor) P0340 (CMP sensor) P0351 - P0356 (igniter) P0500 (VSS) P2196, P2198 (A/F sensor - rationality) P2A00, P2A03 (A/F sensor - slow response)
Battery voltage	11 V or more
Throttle valve position learning	Completed
Either of following conditions 1 or 2 met:	-
1. All of following conditions met:	-
(a) ECT at engine start - IAT at engine start	-15° to 7°C (5° to 45°F)
(b) ECT at engine start	-10° to 56°C (14° to 133°F)
(c) IAT at engine start	-10° to 56°C (14° to 133°F)
2. All of following conditions met:	-
(a) ECT at engine start - IAT at engine start	More than 7°C (45°F)
(b) ECT at engine start	56°C (133°F) or less
(c) IAT at engine start	-10°C (14°F) or more
Accumulated time with 80 mph (128 km/h) or more of vehicle speed	Less than 20 seconds
Malfunction/Pass determination during this trip	Not yet

TYPICAL MALFUNCTION THRESHOLDS

Duration that following conditions A and B met	5 seconds or more
A. Simulated ECT	75°C (167°F) or more
B. ECT sensor output	Less than 75°C (167°F)

HINT:
Read freeze frame data using an intelligent tester. Freeze frame data record the engine condition when malfunctions are detected. When troubleshooting, freeze frame data can help determine if the vehicle was moving or stationary, if the engine was warmed up or not, if the air-fuel ratio was lean or rich, and other data, from the time the malfunction occurred.

1	CHECK ANY OTHER DTC OUTPUT (IN ADDITION TO DTC P0128)

(a) Connect an intelligent tester to the DLC3.
(b) Turn the ignition switch ON.
(c) Turn the tester ON.
(d) Select the following menu items: DIAGNOSIS / ENHANCED OBD II / DTC INFO / CURRENT CODES.
(e) Read the DTC.

Result

Display (DTC Output)	Proceed to
P0128	A
P0128 and other DTCs	B

HINT:
If any DTCs other than P0128 are output, troubleshoot those DTCs first.

B → GO TO DTC CHART

A

2	CHECK COOLING SYSTEM

(a) Check for defects in the cooling system that might cause the system to be too cold, such as abnormal radiator fan operation or any modifications.

NG → REPAIR OR REPLACE COOLING SYSTEM

OK

3	INSPECT W/THERMOSTAT WATER INLET SUB-ASSEMBLY (THERMOSTAT)

(a) Remove the w/ thermostat water inlet sub-assembly (See page CO-9).
(b) Check the valve opening temperature of the thermostat.
Standard:
80° to 84°C (176° to 183°F)
HINT:
In addition to the above check, confirm that the valve is completely closed when the temperature is below the standard.
(c) Reinstall the w/ thermostat water inlet sub-assembly (See page CO-9).

NG → REPLACE THERMOSTAT

OK

REPLACE ECM

DTC	P0136	Oxygen Sensor Circuit Malfunction (Bank 1 Sensor 2)
DTC	P0137	Oxygen Sensor Circuit Low Voltage (Bank 1 Sensor 2)
DTC	P0138	Oxygen Sensor Circuit High Voltage (Bank 1 Sensor 2)
DTC	P0156	Oxygen Sensor Circuit Malfunction (Bank 2 Sensor 2)
DTC	P0157	Oxygen Sensor Circuit Low Voltage (Bank 2 Sensor 2)
DTC	P0158	Oxygen Sensor Circuit High Voltage (Bank 2 Sensor 2)

HINT:
Sensor 2 refers to the sensor mounted behind the Three-Way Catalytic Converter (TWC) and located far from the engine assembly.

DESCRIPTION

In order to obtain a high purification rate of the carbon monoxide (CO), hydrocarbon (HC) and nitrogen oxide (NOx) components in the exhaust gas, a TWC (Three-Way Catalytic Converter) is used. For the most efficient use of the TWC, the air-fuel ratio must be precisely controlled so that it is always close to the stoichiometric air-fuel level. For the purpose of helping the ECM to deliver accurate air-fuel ratio control, a Heated Oxygen (HO2) sensor is used.
The HO2 sensor is located behind the TWC, and detects the oxygen concentration in the exhaust gas. Since the sensor is integrated with the heater that heats the sensing portion, it is possible to detect the oxygen concentration even when the intake air volume is low (the exhaust gas temperature is low).
When the air-fuel ratio becomes lean, the oxygen concentration in the exhaust gas is rich. The HO2 sensor informs the ECM that the post-TWC air-fuel ratio is lean (low voltage, i.e. less than 0.45 V).
Conversely, when the air-fuel ratio is richer than the stoichiometric air-fuel level, the oxygen concentration in the exhaust gas becomes lean. The HO2 sensor informs the ECM that the post-TWC air-fuel ratio is rich (high voltage, i.e. more than 0.45 V). The HO2 sensor has the property of changing its output voltage drastically when the air-fuel ratio is close to the stoichiometric level.
The ECM uses the supplementary information from the HO2 sensor to determine whether the air-fuel ratio after the TWC is rich or lean, and adjusts the fuel injection time accordingly. Thus, if the HO2 sensor is working improperly due to internal malfunctions, the ECM is unable to compensate for deviations in the primary air-fuel ratio control.

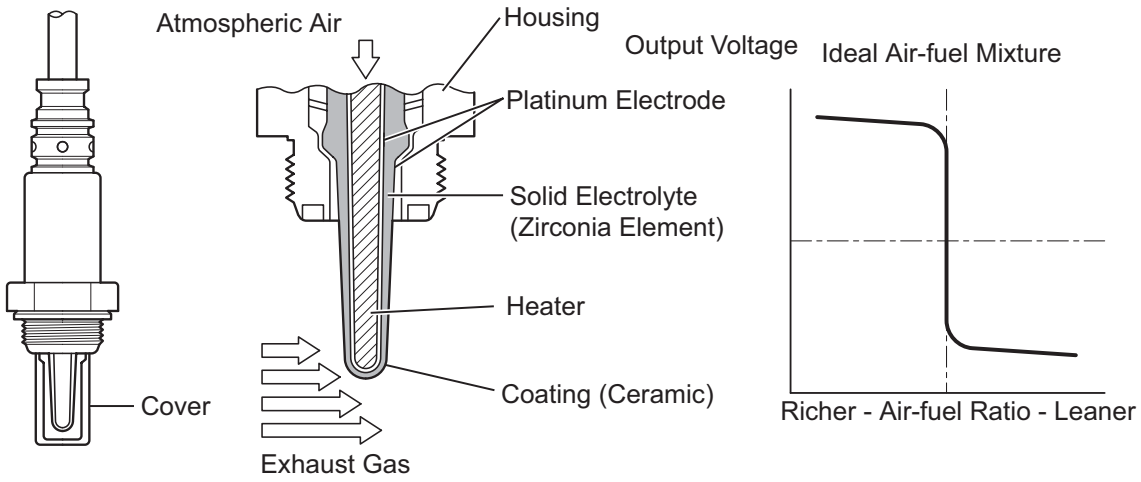

P

A115539E03

ES

DTC No.	DTC Detection Conditions	Trouble Areas
P0136 P0156	• Abnormal voltage output: During active air-fuel ratio control, following conditions (a) and (b) met for certain period of time (2 trip detection logic) (a) Heated Oxygen (HO2) sensor voltage does not decrease to less than 0.21 V (b) HO2 sensor voltage does not increase to more than 0.59 V • Low impedance: Sensor impedance less than 5 Ω for more than 30 seconds when ECM presumes sensor to being warmed up and operating normally (2 trip detection logic)	• Open or short in HO2 sensor (bank 1, 2 sensor 2) circuit • HO2 sensor (bank 1, 2 sensor 2) • HO2 sensor heater (bank 1, 2 sensor 2) • Air-Fuel Ratio (A/F) sensor (bank 1, 2 sensor 1) • EFI relay • Gas leakage from exhaust system
P0137 P0157	• Low voltage (open): During active air-fuel ratio control, following conditions (a) and (b) met for certain period of time (2 trip detection logic) (a) HO2 sensor voltage output less than 0.21 V (b) Target air-fuel ratio rich • High impedance: Sensor impedance 15 kΩ or more for more than 90 seconds when ECM presumes sensor to being warmed up and operating normally (2 trip detection logic)	• Open in HO2 sensor (bank 1, 2 sensor 2) circuit • HO2 sensor (bank 1, 2 sensor 2) • HO2 sensor heater (bank 1, 2 sensor 2) • EFI relay • Gas leakage from exhaust system
P0138 P0158	• High voltage (short): During active air-fuel ratio control, following conditions (a) and (b) met for certain period of time (2 trip detection logic) (a) HO2 sensor voltage output 0.59 V or more (b) Target air-fuel ratio lean • Extremely high voltage (short): HO2 sensor voltage output exceeds 1.2 V for more than 10 seconds (2 trip detection logic)	• Short in HO2 sensor (bank 1, 2 sensor 2) circuit • HO2 sensor (bank 1, 2 sensor 2) • ECM internal circuit malfunction

MONITOR DESCRIPTION

1. Active Air-Fuel Ratio Control

The ECM usually performs air-fuel ratio feedback control so that the Air-Fuel Ratio (A/F) sensor output indicates a near stoichiometric air-fuel level. This vehicle includes active air-fuel ratio control in addition to regular air-fuel ratio control. The ECM performs active air-fuel ratio control to detect any deterioration in the Three-Way Catalytic Converter (TWC) and Heated Oxygen (HO2) sensor malfunctions (refer to the diagram below).

Active air-fuel ratio control is performed for approximately 15 to 20 seconds while driving with a warm engine. During active air-fuel ratio control, the air-fuel ratio is forcibly regulated to become lean or rich by the ECM. If the ECM detects a malfunction, one of the following DTCs is set: DTC P0136 or P0156 (abnormal voltage output), P0137 or P0157 (open circuit) or P0138 or P0158 (short circuit).

2. Abnormal Voltage Output of HO2 Sensor (DTCs P0136 and P0156)

ES

While the ECM is performing active air-fuel ratio control, the air-fuel ratio is forcibly regulated to become rich or lean. If the sensor is not functioning properly, the voltage output variation is small. For example, when the HO2 sensor voltage does not decrease to less than 0.21 V and does not increase to more than 0.59 V during active air-fuel ratio control, the ECM determines that the sensor voltage output is abnormal and sets DTCs P0136 and P0156.

HO2 SENSOR CIRCUIT MALFUNCTION (P0136 and P0156: ABNORMAL VOLTAGE)

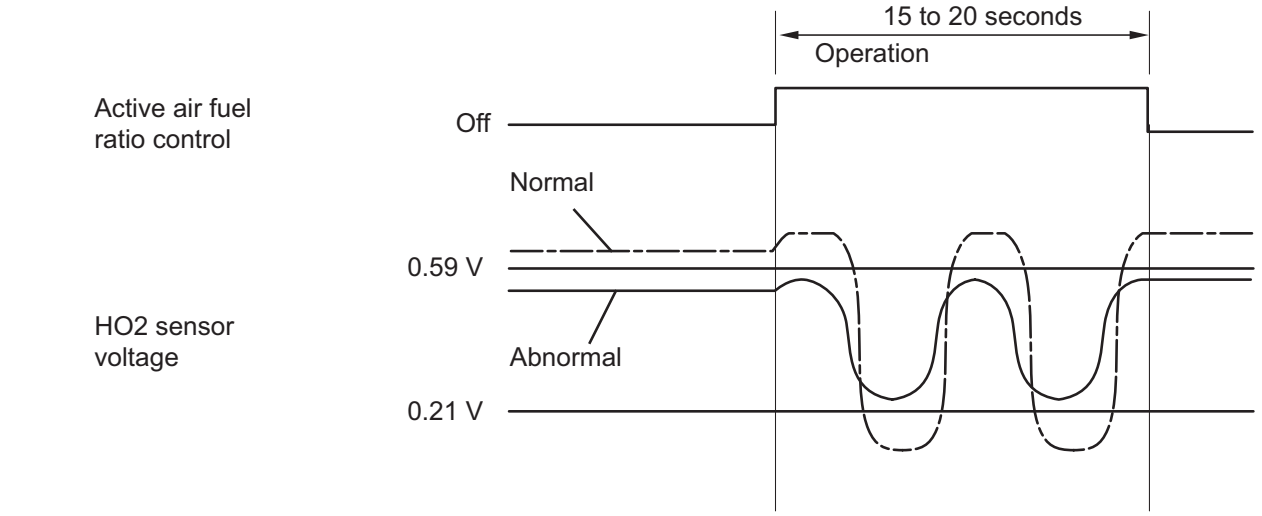

Y

A115540E01

3. Open or Short in Heated Oxygen (HO2) Sensor Circuit (DTCs P0137 and P0157 or P0138 and P0158)

During active air-fuel ratio control, the ECM calculates the Oxygen Storage Capacity (OSC)* of the Three-Way Catalytic Converter (TWC) by forcibly regulating the air-fuel ratio to become rich or lean. If the HO2 sensor has an open or short, or the voltage output of the sensor noticeably decreases, the OSC indicates an extraordinarily high value. Even if the ECM attempts to continue regulating the air-fuel ratio to become rich or lean, the HO2 sensor output does not change.

While performing active air-fuel ratio control, when the target air-fuel ratio is rich and the HO2 sensor voltage output is 0.21 V or less (lean), the ECM interprets this as an abnormally low sensor output voltage and sets DTC P0137 or P0157. When the target air-fuel ratio is lean and the voltage output is 0.59 V or more (rich) during active air-fuel ratio control, the ECM determines that the sensor voltage output is abnormally high, and sets DTC P0138 or P0158.

HINT:

DTC P0138 or P0158 is also set if the HO2 sensor voltage output is more than 1.2 V for 10 seconds or more.

*: The TWC has the capability to store oxygen. The OSC and the emission purification capacity of the TWC are mutually related. The ECM determines whether the catalyst has deteriorated, based on the calculated OSC value (See page ES-203).

HO2 SENSOR CIRCUIT LOW VOLTAGE (P0137 and P0157: OPEN)

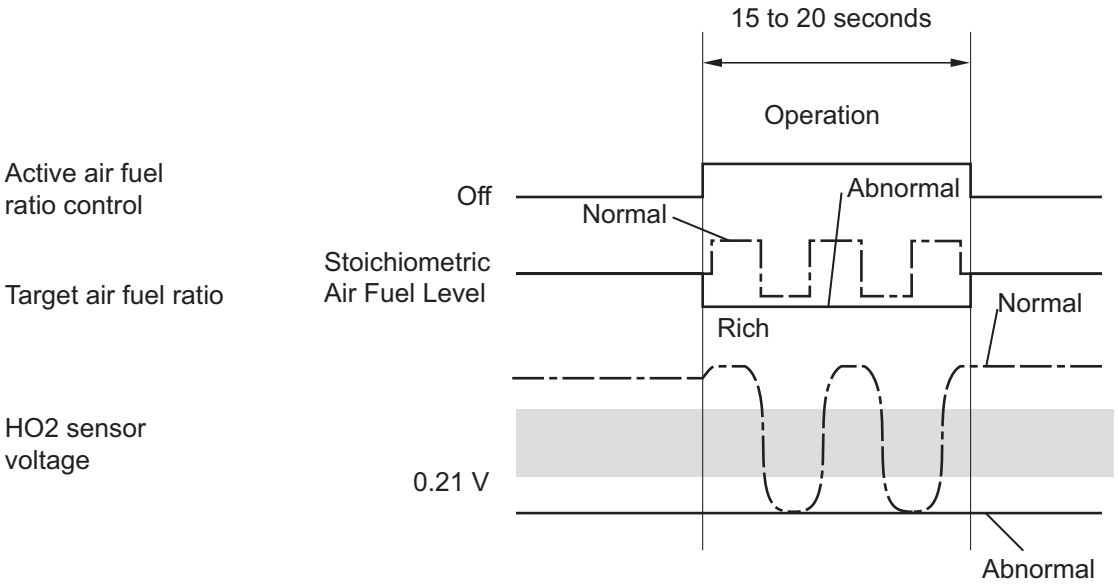

HO2 SENSOR CIRCUIT HIGH VOLTAGE (P0138 and P0158: SHORT)

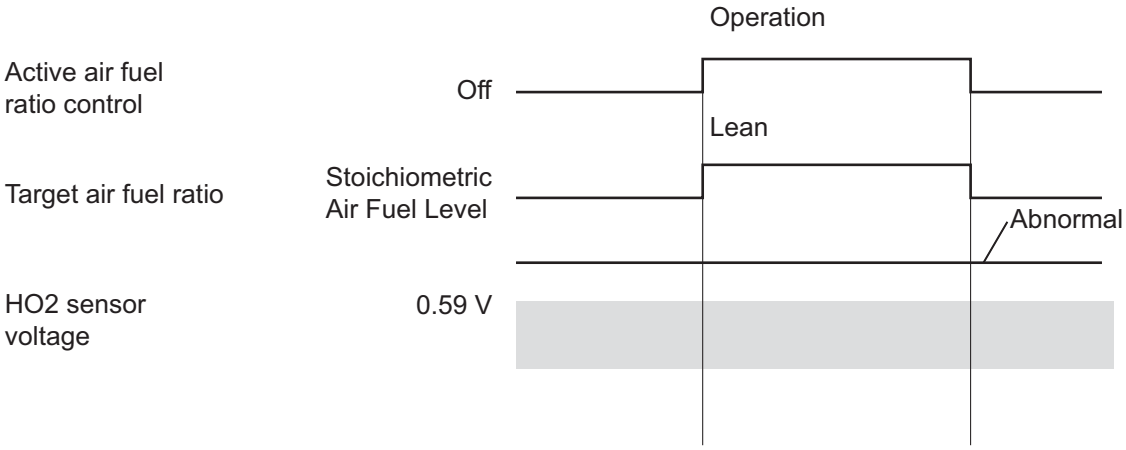

Y

A115541E01

ES

Relationship between element temperature and impedance:

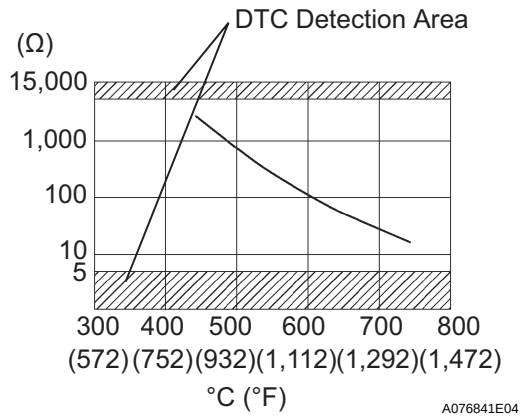

4. High or Low Impedance of Heated Oxygen (HO2) Sensor (DTCs P0136 and P0156 or P0137 and P0157)

During normal air-fuel ratio feedback control, there are small variations in the exhaust gas oxygen concentration. In order to continuously monitor the slight variation of the HO2 sensor signal while the engine is running, the impedance* of the sensor is measured by the ECM. The ECM determines that there is a malfunction in the sensor when the measured impedance deviates from the standard range.

*: The effective resistance in an alternating current electrical circuit.

HINT:

- The impedance cannot be measured using an ohmmeter.
- DTCs P0136 and P0156 indicate the deterioration of the HO2 sensor. The ECM sets the DTCs by calculating the impedance of the sensor when the typical enabling conditions are satisfied (2 driving cycle).
- DTCs P0137 and P0157 indicate an open or short circuit in the HO2 sensor (2 driving cycle). The ECM sets the DTCs when the impedance of the sensor exceeds the threshold 15 kΩ.

MONITOR STRATEGY

Related DTCs	P0136: Heated oxygen sensor output voltage (Output voltage) (bank 1) P0136: Heated oxygen sensor impedance (Low) (bank 1) P0137: Heated oxygen sensor output voltage (Low voltage) (bank 1) P0137: Heated oxygen sensor impedance (High) (bank 1) P0138: Heated oxygen sensor output voltage (High voltage) (bank 1) P0138: Heated oxygen sensor output voltage (Extremely high) (bank 1) P0156: Heated oxygen sensor output voltage (Output voltage) (bank 2) P0156: Heated oxygen sensor impedance (Low) (bank 2) P0157: Heated oxygen sensor output voltage (Low voltage) (bank 2) P0157: Heated oxygen sensor impedance (High) (bank 2) P0158: Heated oxygen sensor output voltage (High voltage) (bank 2) P0158: Heated oxygen sensor impedance (Extremely high) (bank 2)
Required Sensors/Components (Main)	Heated oxygen sensor
Required Sensors/Components (Related)	Crankshaft position sensor, engine coolant temperature sensor, mass air flow meter and throttle position sensor
Frequency of Operation	Once per driving cycle: Active air-fuel ratio control detection Continuous: Others
Duration	20 seconds: Heated oxygen sensor output (Output voltage, High voltage, Low voltage) 30 seconds: Heated oxygen sensor impedance (Low) 90 seconds: Heated oxygen sensor impedance (High) 10 seconds: Heated oxygen sensor voltage (Extremely high)
MIL Operation	2 driving cycles
Sequence of Operation	None

TYPICAL ENABLING CONDITIONS
All:

Monitor runs whenever following DTCs not present	P0031, P0032, P0051, P0052 (A/F sensor heater - Sensor 1) P0037, P0038, P0057, P0058 (O2 sensor heater - Sensor 2) P0100 - P0103 (MAF meter) P0110 - P0113 (IAT sensor) P0115 - P0118 (ECT sensor) P0120 - P0223, P2135 (TP sensor) P0125 (Insufficient ECT for closed loop) P0171, P0172 (Fuel system) P0300 - P0306 (Misfire) P0335 (CKP sensor) P0340 (CMP sensor) P0500 (VSS) P2196, P2198 (A/F sensor - rationality) P2A00, P2A03 (A/F sensor - slow response)

ES

Heated Oxygen Sensor Output Voltage (Output Voltage, High Voltage and Low Voltage):

Active air-fuel ratio control	Executing
Active air-fuel ratio control begins when all of following conditions met:	-
Battery voltage	11 V or more
Engine coolant temperature	75 °C (167°F) or more
Idling	OFF
Engine RPM	Less than 3,200 rpm
A/F sensor status	Activated
Fuel system status	closed loop
Fuel cut	OFF (for 10 seconds or more)
Engine load	10 to 70 %
Shift position	4 th or more

Heated Oxygen Sensor Impedance (Low):

Battery voltage	11 V or more
Estimated sensor temperature	Less than 700°C (1,292°F)
ECM monitor	Completed
DTC P0606	Not set

Heated Oxygen Sensor Impedance (High):

Battery voltage	11 V or more
Estimated sensor temperature	520°C (968°F) or more
ECM monitor	Completed
DTC P0606	Not set

Heated Oxygen Sensor Output Voltage (Extremely High):

Battery voltage	11 V or more
Time after engine start	2 seconds or more

TYPICAL MALFUNCTION THRESHOLDS
Heated Oxygen Sensor Output Voltage (Output voltage):

Either of following conditions met:	1 or 2
1. All of following conditions (a), (b) and (c) met	-
(a) Commanded air-fuel ratio	14.3 or less
(b) Rear HO2 sensor voltage	0.21 to 0.59 V
(c) OSC (Oxygen Storage Capacity of Catalyst)	2.5 g or more
2. All of following conditions (d), (e) and (f) met	-
(d) Commanded air-fuel ratio	14.9 or more

(e) Rear HO2 sensor voltage	0.21 to 0.59 V
(f) OSC	2.5 g or more

Heated Oxygen Sensor Output Voltage (Low output voltage):

All of following conditions (a), (b) and (c) met	-
(a) Commanded air-fuel ratio	14.3 or less
(b) Rear HO2 sensor voltage	Less than 0.21 V
(c) OSC (Oxygen Storage Capacity of Catalyst)	2.5 g or more

Heated Oxygen Sensor Output Voltage (High output voltage):

All of following conditions (a), (b) and (c) met	-
(a) Commanded air-fuel ratio	14.9 or more
(b) Rear HO2 sensor voltage	More than 0.59 V
(c) OSC (Oxygen Storage Capacity of Catalyst)	2.5 g or more

ES

Heated Oxygen Sensor Impedance (Low):

Duration of following condition met	30 seconds or more
Heated oxygen sensor impedance	Less than 5 Ω

Heated Oxygen Sensor Impedance (High):

Duration of following condition met	90 seconds or more
Heated oxygen sensor impedance	15 kΩ or more

Heated Oxygen Sensor Output Voltage (Extremely High):

Duration of following condition met	10 seconds or more
Heated oxygen sensor voltage	1.2 V or more

COMPONENT OPERATING RANGE

Duration of following condition met	30 seconds or more
Heated oxygen sensor voltage	Varies between 0.1 V and 0.9 V

MONITOR RESULT

Detailed information on Checking Monitor Status (See page ES-19).

WIRING DIAGRAM

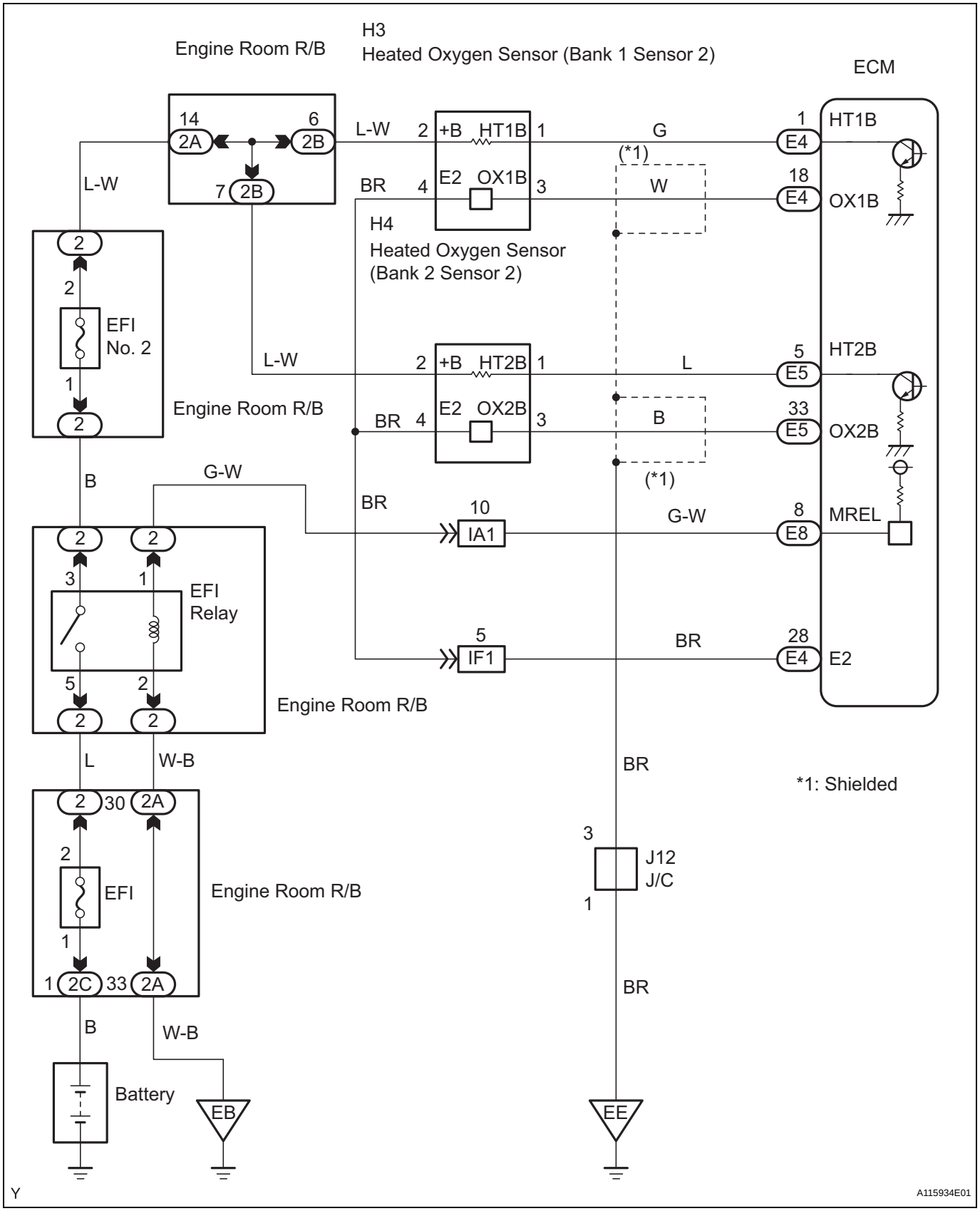

CONFIRMATION DRIVING PATTERN

HINT:

- This confirmation driving pattern is used in the "PERFORM CONFIRMATION DRIVING PATTERN" procedure of the following diagnostic troubleshooting procedure.
- Performing this confirmation driving pattern will activate the Heated Oxygen (HO2) sensor monitor. (The catalyst monitor is performed simultaneously.) This is very useful for verifying the completion of a repair.

NOTICE:

This test will not be completed if the vehicle is driven under absolutely constant speed conditions such as with cruise control activated.

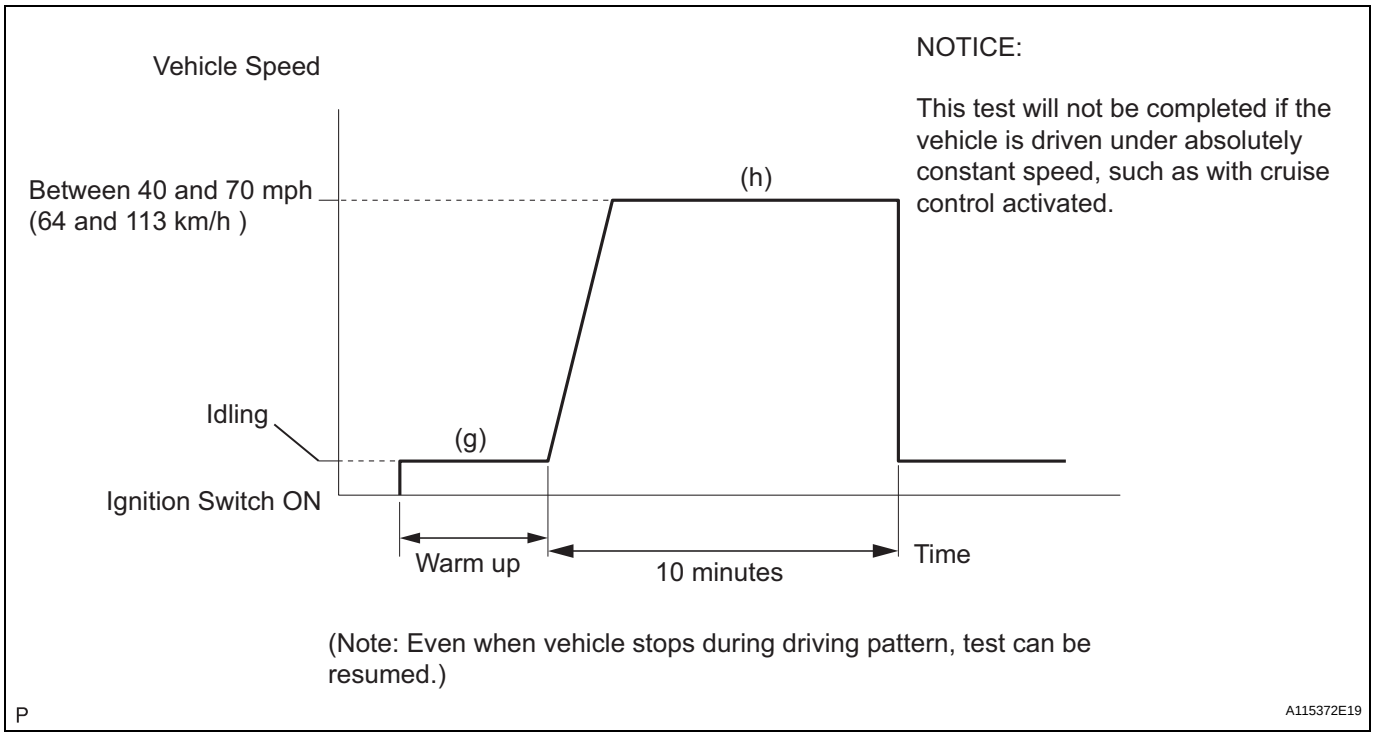

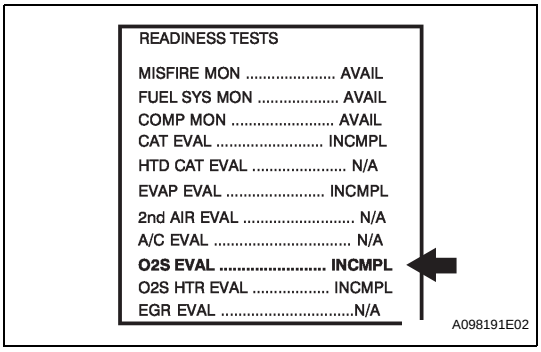

(a) Connect an intelligent tester to the DLC3.
(b) Turn the ignition switch ON.
(c) Turn the tester ON.
(d) Clear DTCs (See page ES-38).
(e) Select the following menu items: DIAGNOSIS / CARB OBD II / READINESS TESTS.
(f) Check that O2S EVAL is INCMPL (incomplete).
(g) Start the engine and warm it up.
(h) Drive the vehicle at between 40 mph and 70 mph (64 km/h and 113 km/h) for at least 10 minutes.
(i) Note the state of the Readiness Tests items. Those items will change to COMPL (complete) as O2S EVAL monitor operates.

(j) Select the following menu items: DIAGNOSIS / ENHANCED OBD II / DTC INFO / PENDING CODES and check if any DTCs (any pending DTCs) are set.
HINT:
If O2S EVAL does not change to COMPL, and any pending DTCs fail to set, extend the driving time.

HINT:
Intelligent tester only:
Malfunctioning areas can be identified by performing the A/F CONTROL function provided in the ACTIVE TEST. The A/F CONTROL function can help to determine whether the Air-Fuel Ratio (A/F) sensor, Heated Oxygen (HO2) sensor and other potential trouble areas are malfunctioning.
The following instructions describe how to conduct the A/F CONTROL operation using an intelligent tester.
(1) Connect an intelligent tester to the DLC3.
(2) Start the engine and turn the tester ON.
(3) Warm up the engine at an engine speed of 2,500 rpm for approximately 90 seconds.
(4) Select the following menu items: DIAGNOSIS / ENHANCED OBD II / ACTIVE TEST / A/F CONTROL.
(5) Perform the A/F CONTROL operation with the engine in an idling condition (press the RIGHT or LEFT button to change the fuel injection volume).
(6) Monitor the voltage outputs of the A/F and HO2 sensors (AFS B1S1 and O2S B1S2 or AFS B2S1 and O2S B2S2) displayed on the tester.
HINT:
- The A/F CONTROL operation lowers the fuel injection volume by 12.5 % or increases the injection volume by 25 %.
- Each sensor reacts in accordance with increases and decreases in the fuel injection volume.

Standard

Tester Display (Sensor)	Injection Volumes	Status	Voltages
AFS B1S1 or AFS B2S1 (A/F)	+25 %	Rich	Less than 3.0
AFS B1S1 or AFS B2S1 (A/F)	-12.5 %	Lean	More than 3.35
O2S B1S2 or O2S B2S2 (HO2)	+25 %	Rich	More than 0.55
O2S B1S2 or O2S B2S2 (HO2)	-12.5 %	Lean	Less than 0.4

NOTICE:
The Air-Fuel Ratio (A/F) sensor has an output delay of a few seconds and the Heated Oxygen (HO2) sensor has a maximum output delay of approximately 20 seconds.

Case	A/F Sensor (Sensor 1) Output Voltage		HO2 Sensor (Sensor 2) Output Voltage		Main Suspected Trouble Areas
1	Injection Volume +25 % -12.5 %		Injection Volume +25 % -12.5 %		-
	Output Voltage More than 3.35 V Less than 3.0 V		Output Voltage More than 0.55 V Less than 0.4 V		
2	Injection Volume +25 % -12.5 %		Injection Volume +25 % -12.5 %		• A/F sensor • A/F sensor heater • A/F sensor circuit
	Output Voltage Almost no reaction	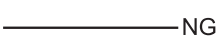	Output Voltage More than 0.55 V Less than 0.4 V		

Case	A/F Sensor (Sensor 1) Output Voltage		HO2 Sensor (Sensor 2) Output Voltage		Main Suspected Trouble Areas
3	Injection Volume +25 % -12.5 %		Injection Volume +25 % -12.5 %		• HO2 sensor • HO2 sensor heater • HO2 sensor circuit
	Output Voltage More than 3.35 V Less than 3.0 V		Output Voltage Almost no reaction		
4	Injection volume +25 % -12.5 %		Injection Volume +25 % -12.5 %		• Injector • Fuel pressure • Gas leakage from exhaust system (Air-fuel ratio extremely lean or rich)
	Output Voltage Almost no reaction		Output Voltage Almost no reaction		

ES

- Following the A/F CONTROL procedure enables technicians to check and graph the voltage outputs of both the A/F and HO2 sensors.
- To display the graph, select the following menu items on the tester: DIAGNOSIS / ENHANCED OBD II / ACTIVE TEST / A/F CONTROL / USER DATA / AFS B1S1 and O2S B1S2 or AFS B2S1 and O2S B2S2, and press the YES button and then the ENTER button followed by the F4 button.

HINT:

- If other DTCs relating to different systems that have terminal E2 as the ground terminal are output simultaneously, terminal E2 may have an open circuit.
- Read freeze frame data using an intelligent tester. Freeze frame data record the engine condition when malfunctions are detected. When troubleshooting, freeze frame data can help determine if the vehicle was moving or stationary, if the engine was warmed up or not, if the air-fuel ratio was lean or rich, and other data, from the time the malfunction occurred.
- If the OX1B wire from the ECM connector is short-circuited to the +B wire, DTC P0136 will be set.
- If the OX2B wire from the ECM connector is short-circuited to the +B wire, DTC P0156 will be set.

1	CHECK ANY OTHER DTCS OUTPUT

(a) Connect an intelligent tester to the DLC3.
(b) Turn the ignition switch ON and turn the tester ON.
(c) Select the following menu items: DIAGNOSIS / ENHANCED OBD II / DTC INFO / CURRENT CODES.
(d) Read DTCs.

Result

Display (DTC Output)	Proceed To
P0138 or P0158	A
P0137 or P0157	B
P0136 or P0156	C

B → Go to step 14

C → Go to step 7

A

2	READ VALUE OF INTELLIGENT TESTER (OUTPUT VOLTAGE OF HEATED OXYGEN SENSOR)

(a) Connect an intelligent tester to the DLC3.
(b) Turn the ignition switch ON and turn the tester ON.
(c) Select the following menu items: DIAGNOSIS / ENHANCED OBD II / DATA LIST / PRIMARY / O2S B1S2 or O2S B2S2.
(d) Allow the engine to idle.
(e) Read the Heated Oxygen (HO2) sensor output voltage while idling.

Result

HO2 Sensor Output Voltages	Proceed To
More than 1.2 V	A
Less than 1.0 V	B

B → Go to step 5

A

3	CHECK HARNESS AND CONNECTOR (CHECK FOR SHORT)

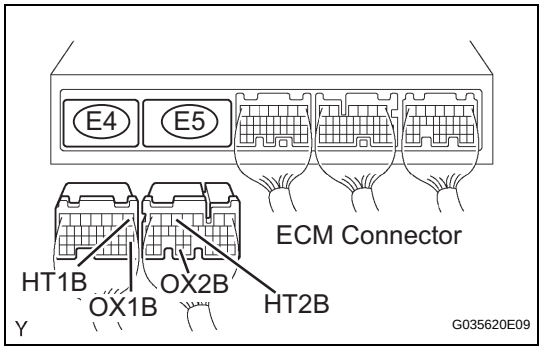

(a) Turn the ignition switch OFF and wait for 5 minutes.
(b) Disconnect the E4 or E5 ECM connector.
(c) Check the resistance.
Standard Resistance

Tester Connections	Specified Conditions
HT1B (E4-1) - OX1B (E4-18)	10 kΩ or higher
HT2B (E5-5) - OX2B (E5-33)	

(d) Reconnect the ECM connector.

NG → Go to step 4

OK

REPLACE ECM

4	INSPECT HEATED OXYGEN SENSOR (CHECK FOR SHORT)

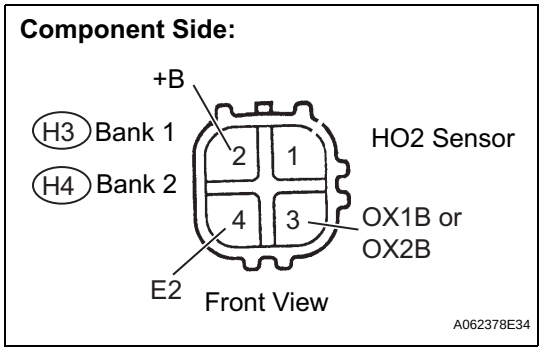

(a) Disconnect the H3 or H4 HO2 sensor connector.
(b) Check the resistance.
Standard Resistance

Tester Connections	Specified Conditions
+B (2) - E2 (4)	10 kΩ or higher
+B (2) - OX1B or OX2B (3)	

(c) Reconnect the HO2 sensor connector.

NG → REPLACE HEATED OXYGEN SENSOR

OK

REPAIR OR REPLACE HARNESS OR CONNECTOR

5	PERFORM CONFIRMATION DRIVING PATTERN

NEXT

ES

6	CHECK WHETHER DTC OUTPUT RECURS (DTC P0138 or P0158)

(a) Connect an intelligent tester to the DLC3.
(b) Turn the ignition switch ON and turn the tester ON.
(c) Select the following menu items: DIAGNOSIS / ENHANCED OBD II / DTC INFO / CURRENT CODES.
(d) Read DTCs.

Result

Display (DTC Output)	Proceed To
P0138 or P0158	A
No output	B

B → **CHECK FOR INTERMITTENT PROBLEMS**

A

REPLACE HEATED OXYGEN SENSOR

7	READ VALUE OF INTELLIGENT TESTER (OUTPUT VOLTAGE OF HEATED OXYGEN SENSOR)

(a) Connect an intelligent tester to the DLC3.
(b) Turn the ignition switch ON and turn the tester ON.
(c) Start the engine.
(d) Select the following menu items: DIAGNOSIS / ENHANCED OBD II / DATA LIST / PRIMARY / O2S B1S2 or O2S B2S2.
(e) After warming up the engine, run the engine at an engine speed of 2,500 rpm for 3 minutes.
(f) Read the output voltage of the HO2 sensor when the engine rpm is suddenly increased.
HINT:
Quickly accelerate the engine to 4,000 rpm 3 times using the accelerator pedal.
Standard:
Fluctuates between 0.4 V or less and 0.5 V or more.

NG → **Go to step 14**

OK

8	PERFORM CONFIRMATION DRIVING PATTERN

NEXT

9	CHECK WHETHER DTC OUTPUT RECURS (DTC P0136 or P0156)

(a) Connect an intelligent tester to the DLC3.
(b) Turn the ignition switch ON and turn the tester ON.
(c) Select the following menu items: DIAGNOSIS / ENHANCED OBD II / DTC INFO / CURRENT CODES.
(d) Read DTCs.

ES

Result

Display (DTC Output)	Proceed To
P0136 or P0156	A
No output	B

B → CHECK FOR INTERMITTENT PROBLEMS

A

10	REPLACE HEATED OXYGEN SENSOR

NEXT

11	PERFORM CONFIRMATION DRIVING PATTERN

NEXT

12	CHECK WHETHER DTC OUTPUT RECURS (DTC P0136 or P0156)

(a) Connect an intelligent tester to the DLC3.
(b) Turn the ignition switch ON and turn the tester ON.
(c) Select the following menu items: DIAGNOSIS / ENHANCED OBD II / DTC INFO / CURRENT CODES.
(d) Read DTCs.

Result

Display (DTC Output)	Proceed To
P0136 or P0156	A
No output	B

B → REPAIR COMPLETED

A

13	PERFORM ACTIVE TEST USING INTELLIGENT TESTER (INJECTION VOLUME)

(a) Connect an intelligent tester to the DLC3.
(b) Start the engine and turn the tester ON.
(c) Warm up the engine.
(d) Select the following menu items: DIAGNOSIS / ENHANCED OBD II / ACTIVE TEST / INJ VOL.
(e) Change the fuel injection volume using the tester, monitoring the voltage output of Air-Fuel Ratio (A/F) and HO2 sensors displayed on the tester.
HINT:
- Change the fuel injection volume within the range of -12 % and +12 %. The injection volume can be changed in 1 % graduations within the range.
- The A/F sensor is displayed as AFS B1S1 or AFS B2S1, and the HO2 sensor is displayed as O2S B1S2 or O2S B2S2, on intelligent testers.

ES

Result

Tester Display (Sensor)	Voltage Variations	Proceed To
AFS B1S1 (A/F) AFS B2S1 (A/F)	Alternates between more and less than 3.3 V	OK
AFS B1S1 (A/F) AFS B2S1 (A/F)	Remains at more than 3.3 V	NG
AFS B1S1 (A/F) AFS B2S1 (A/F)	Remains at less than 3.3 V	NG

HINT:
A normal HO2 sensor voltage (O2S B1S2 or O2S B2S2) reacts in accordance with increases and decreases in fuel injection volumes. When the A/F sensor voltage remains at either less or more than 3.3 V despite the HO2 sensor indicating a normal reaction, the A/F sensor is malfunctioning.

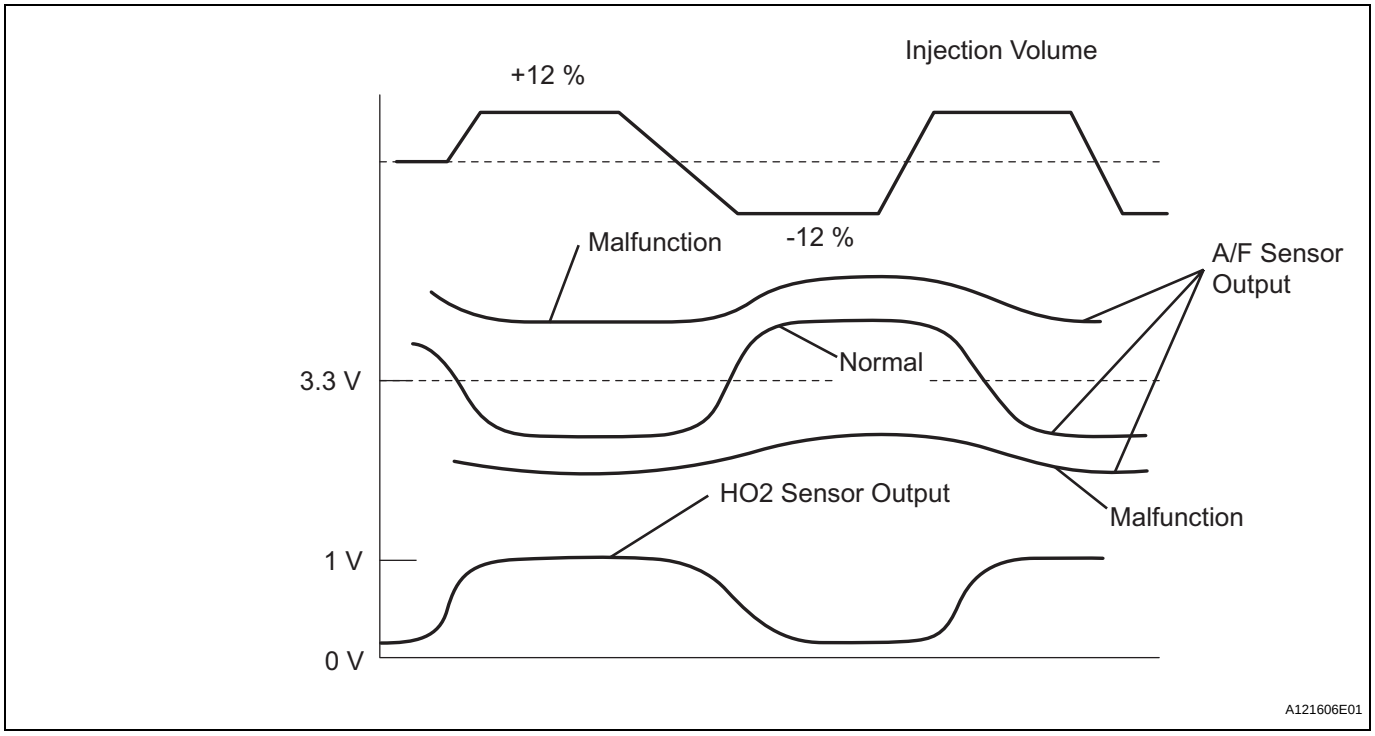

NG → **REPLACE AIR FUEL RATIO SENSOR**

OK

CHECK AND REPAIR EXTREMELY RICH OR LEAN ACTUAL AIR FUEL RATIO (INJECTOR, FUEL PRESSURE, GAS LEAKAGE FROM EXHAUST SYSTEM, ETC.)

14 CHECK EXHAUST GAS LEAKAGE

OK:
No gas leakage.

NG → **REPAIR OR REPLACE EXHAUST GAS LEAKAGE POINT**

OK

15 INSPECT HEATED OXYGEN SENSOR (HEATER RESISTANCE)

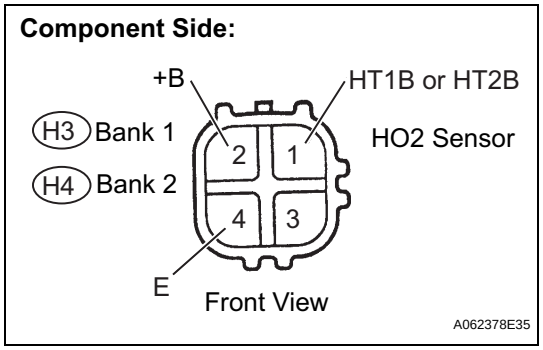

(a) Disconnect the H3 or H4 HO2 sensor connector.
(b) Measure the resistance between the terminals of the HO2 sensor connector.
Standard Resistance

Tester Connections	Specified Conditions
HT1B or HT2B (1) - +B (2)	11 to 16 Ω at 20°C (68°F)
HT1B or HT2B (1) - E2 (4)	10 kΩ or higher

(c) Reconnect the HO2 sensor connector.

NG → **REPLACE HEATED OXYGEN SENSOR**

OK

16 INSPECT EFI RELAY

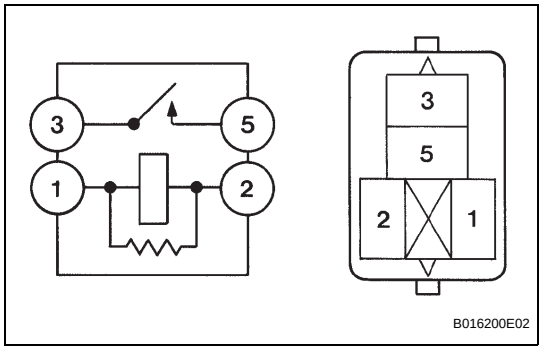

(a) Remove the EFI relay from the engine room R/B.
(b) Check the EFI relay resistance.

Standard Resistance

Terminal Connections	Specified Conditions
3 - 5	10 kΩ or higher
3 - 5	Below 1 Ω (when battery voltage applied to terminals 1 and 2)

(c) Reinstall the EFI relay.

NG → REPLACE EFI RELAY

OK

17 CHECK HARNESS AND CONNECTOR (HEATED OXYGEN SENSOR - ECM)

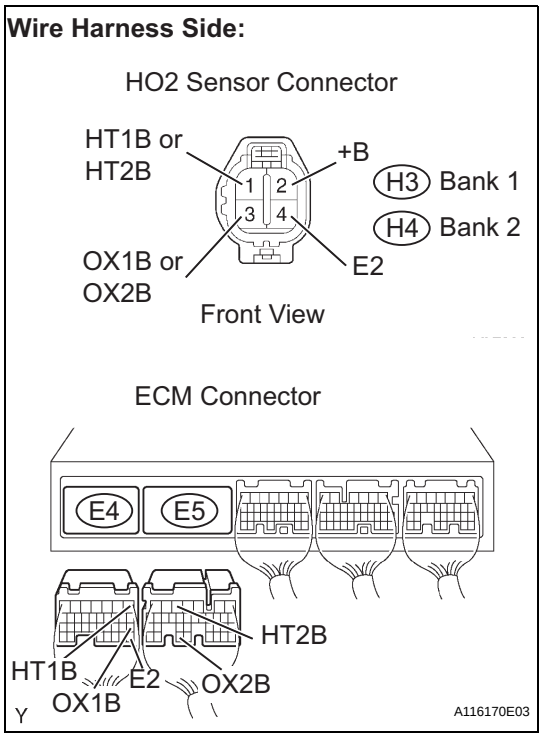

(a) Disconnect the H3 or H4 HO2 sensor connector.
(b) Turn the ignition switch ON.
(c) Measure the voltage between the +B terminal of the HO2 sensor connector and body ground.

Standard Voltage

Terminal Connections	Specified Conditions
+B (H3-2) - Body ground	9 to 14 V
+B (H4-2) - Body ground	

(d) Turn the ignition switch OFF.
(e) Disconnect the E4 and E5 ECM connectors.
(f) Check the resistance.

Standard Resistance (Check for open)

Terminal Connections	Specified Conditions
HT1B (H3-1) - HT1B (E4-1)	Below 1 Ω
OX1B (H3-3) - OX1B (E4-18)	
E2 (H3-4) - E2 (E4-28)	
HT2B (H4-1) - HT2B (E5-5)	
OX2B (H4-3) - OX2B (E5-33)	
E2 (H4-4) - E2 (E4-28)	

Standard Resistance (Check for short)

Terminal Connections	Specified Conditions
HT1B (H3-1) or HT1B (E4-1) - Body ground	10 kΩ or higher
OX1B (H3-3) or OX1B (E4-18) - Body ground	
HT2B (H4-1) or HT2B (E5-5) - Body ground	
OX2B (H4-3) or OX2B (E5-33) - Body ground	

(g) Reconnect the HO2 sensor connector.
(h) Reconnect the ECM connectors.

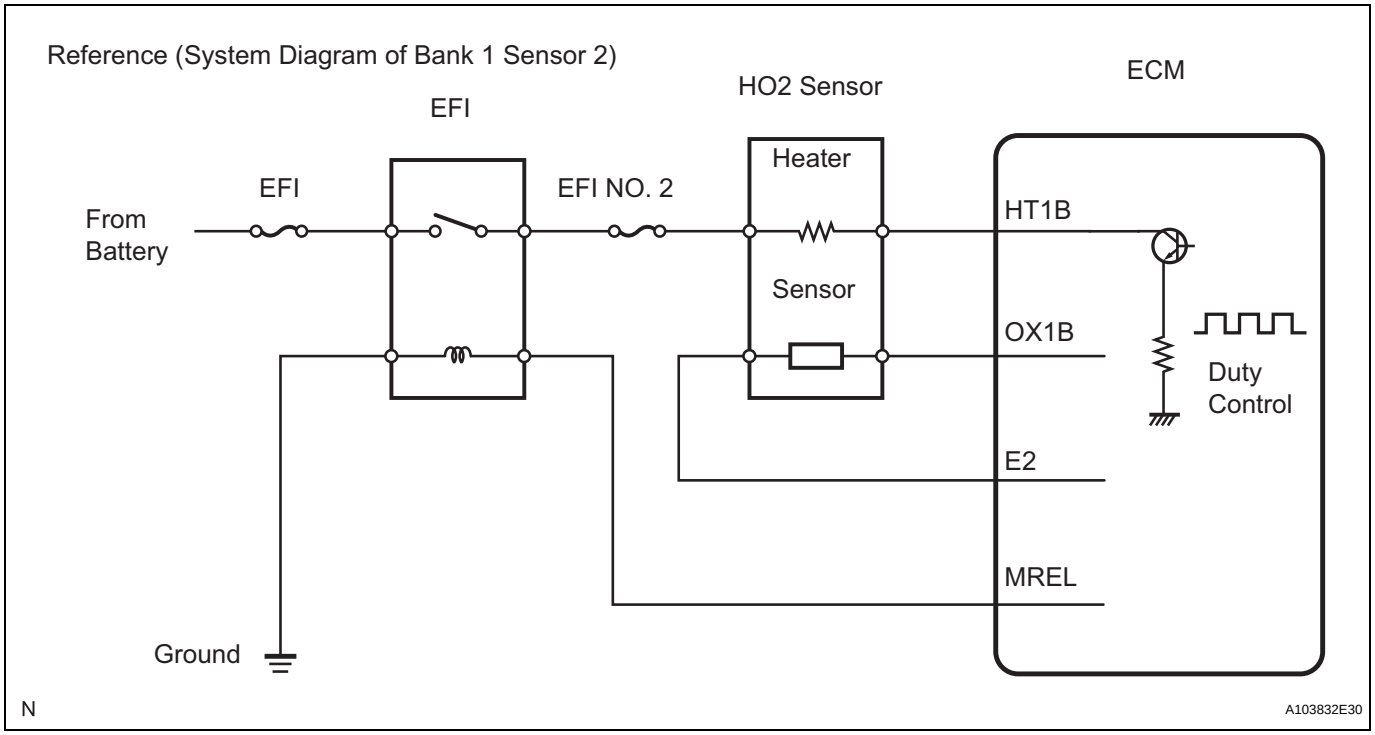

ES

NG → **REPAIR OR REPLACE HARNESS OR CONNECTOR**

OK

REPLACE HEATED OXYGEN SENSOR

DTC	P0171	System Too Lean (Bank 1)

DTC	P0172	System Too Rich (Bank 1)

DTC	P0174	System Too Lean (Bank 2)

DTC	P0175	System Too Rich (Bank 2)

DESCRIPTION

ES

The fuel trim is related to the feedback compensation value, not to the basic injection time. The fuel trim consists of both the short-term and long-term fuel trims.

The short-term fuel trim is fuel compensation that is used to constantly maintain the air-fuel ratio at stoichiometric levels. The signal from the Air-Fuel Ratio (A/F) sensor indicates whether the air-fuel ratio is rich or lean compared to the stoichiometric ratio. This triggers a reduction in the fuel injection volume if the air-fuel ratio is rich and an increase in the fuel injection volume if it is lean.

Factors such as individual engine differences, wear over time and changes in operating environment cause short-term fuel trim to vary from the central value. The long-term fuel trim, which controls overall fuel compensation, compensates for long-term deviations in the fuel trim from the central value caused by the short- term fuel trim compensation.

If both the short-term and long-term fuel trims are lean or rich beyond predetermined values, it is interpreted as a malfunction, and the ECM illuminates the MIL and sets a DTC.

DTC No.	DTC Detection Conditions	Trouble Areas
P0171 P0174	With warm engine and stable air-fuel ratio feedback, fuel trim considerably in error to lean side (2 trip detection logic)	• Air induction system • Injector blockage • Mass Air Flow (MAF) meter • Engine Coolant Temperature (ECT) sensor • Fuel pressure • Gas leakage from exhaust system • Open or short in A/F sensor (bank 1, 2 sensor 1) circuit • A/F sensor (bank 1, 2 sensor 1) • A/F sensor heater (bank 1, 2 sensor 1) • A/F sensor heater relay • A/F sensor heater and A/F sensor heater relay circuits • PCV valve and hose • PCV hose connections • ECM
P0172 P0175	With warm engine and stable air-fuel ratio feedback, fuel trim considerably in error to rich side (2 trip detection logic)	• Injector leakage or blockage • MAF meter • ECT sensor • Ignition system • Fuel pressure • Gas leakage from exhaust system • Open or short in A/F sensor (bank 1, 2 sensor 1) circuit • A/F sensor (bank 1, 2 sensor 1) • A/F sensor heater (bank 1, 2 sensor 1) • A/F sensor heater relay • A/F sensor heater and A/F sensor heater relay circuits • ECM

HINT:

- When DTC P0171 or P0174 is set, the actual air-fuel ratio is on the lean side. When DTC P0172 or P0175 is set, the actual air-fuel ratio is on the rich side.
- If the vehicle runs out of fuel, the air-fuel ratio is lean and DTC P0171 or P0174 may be set. The MIL is then illuminated.
- When the total of the short-term and long-term fuel trim values is within the malfunction threshold (and the engine coolant temperature is more than 75°C [167°F]), the system is functioning normally.

MONITOR DESCRIPTION

Under closed-loop fuel control, fuel injection volumes that deviate from those estimated by the ECM cause changes in the long-term fuel trim compensation value. The long-term fuel trim is adjusted when there are persistent deviations in the short-term fuel trim values. Deviations from the ECM's estimated fuel injection volumes also affect the average fuel trim learning value, which is a combination of the average short-term fuel trim (fuel feedback compensation value) and the average long-term fuel trim (learning value of the air- fuel ratio). If the average fuel trim learning value exceeds the malfunction thresholds, the ECM interprets this a fault in the fuel system and sets a DTC.
Example:
The average fuel trim learning value is more than +35 % or less than -35 %, the ECM interprets this as a fuel system malfunction.

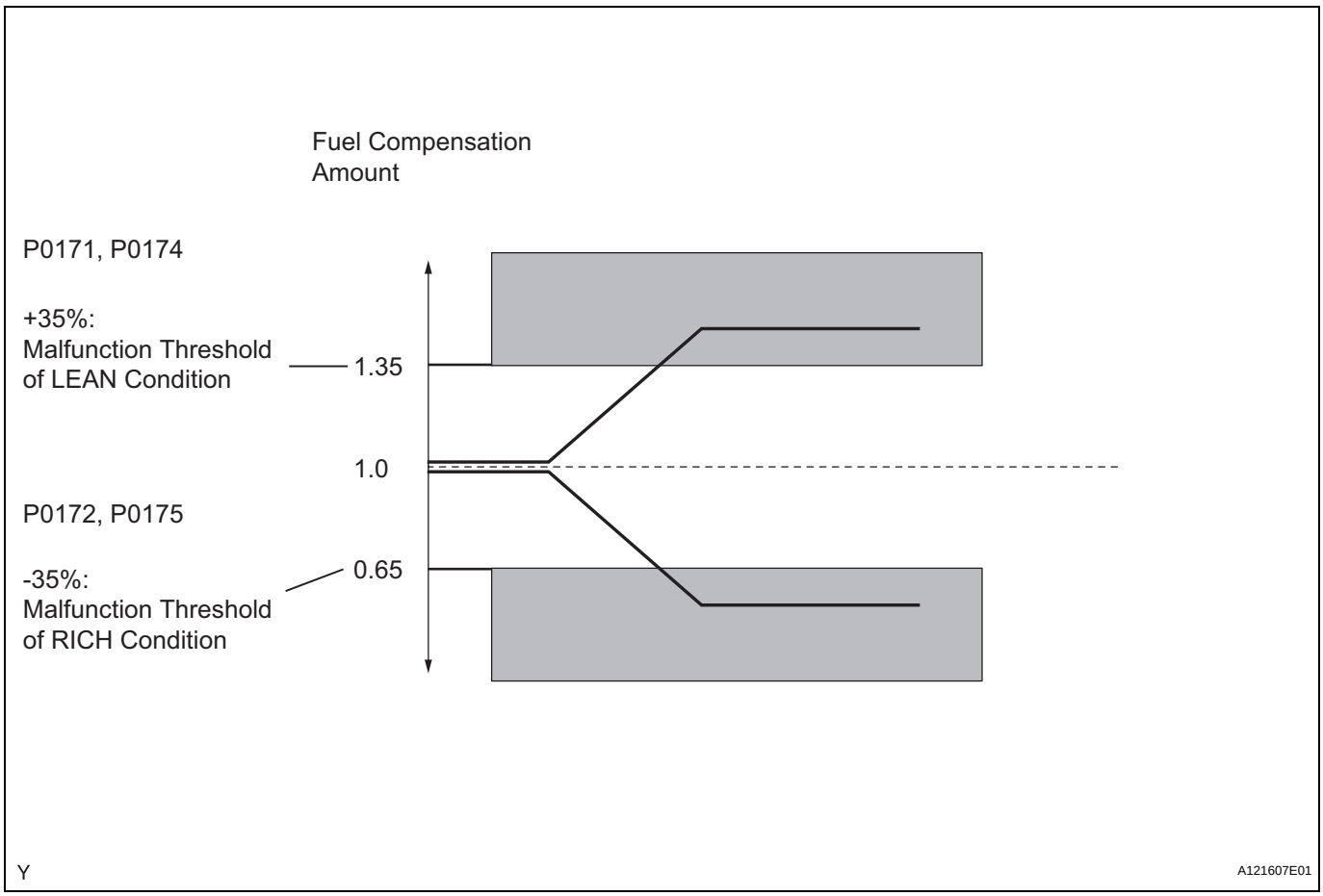

MONITOR STRATEGY

Related DTCs	P0171: Fuel trim Lean (bank 1) P0172: Fuel trim Rich (bank 1) P0174: Fuel trim Lean (bank 2) P0175: Fuel trim Rich (bank 2)
Required Sensors/Components (Main)	Fuel system
Required Sensors/Components (Related)	A/F sensor, Mass air flow meter, Crankshaft position sensor
Frequency of Operation	Continuous
Duration	Within 10 seconds
MIL Operation	2 driving cycles
Sequence of Operation	None

TYPICAL ENABLING CONDITIONS

Fuel-trim:

Monitor runs whenever following DTCs not present	P0010, P0020 (OCV Bank 1, 2) P0011 (VVT System 1 - Advance) P0012 (VVT System 1 - Retard) P0021 (VVT System 2 - Advance) P0022 (VVT System 2 - Retard) P0031, P0032, P0051, P0052 (A/F sensor heater - Sensor 1) P0100 - P0103 (MAF meter) P0115 - P0118 (ECT sensor) P0120 - P0223, P2135 (TP sensor) P0125 (Insufficient ECT for closed loop) P0335 (CKP sensor) P0340 (CMP sensor) P0351 - P0356 (Igniter) P0500 (VSS)
Fuel system status	Closed-loop
Battery voltage	11 V or more
Throttle position learning	Completed
Either of following conditions 1 or 2 set	-
1. Engine RPM	Below 1,100 rpm
2. Intake air amount per revolution	0.22 g/rev or more
Catalyst monitor	No executed

TYPICAL MALFUNCTION THRESHOLDS

Fuel-trim:

Purge-cut	Executing
Either of following conditions 1 or 2 met	-
1. Average between short-term fuel trim and long-term fuel trim	35 % or more at 80°C (176°F) of ECT
2. Average between short-term fuel trim and long-term fuel trim	-35 % or less at 80°C (176°F) of ECT

WIRING DIAGRAM

Refer to DTC P2195 (See page ES-309).

HINT:
Intelligent tester only:
Malfunctioning areas can be identified by performing the A/F CONTROL function provided in the ACTIVE TEST. The A/F CONTROL function can help to determine whether the Air-Fuel Ratio (A/F) sensor, Heated Oxygen (HO2) sensor and other potential trouble areas are malfunctioning.
The following instructions describe how to conduct the A/F CONTROL operation using an intelligent tester.
(1) Connect an intelligent tester to the DLC3.
(2) Start the engine and turn the tester ON.
(3) Warm up the engine at an engine speed of 2,500 rpm for approximately 90 seconds.
(4) Select the following menu items: DIAGNOSIS / ENHANCED OBD II / ACTIVE TEST / A/F CONTROL.
(5) Perform the A/F CONTROL operation with the engine in an idling condition (press the RIGHT or LEFT button to change the fuel injection volume).
(6) Monitor the voltage outputs of the A/F and HO2 sensors (AFS B1S1 and O2S B1S2 or AFS B2S1 and O2S B2S2) displayed on the tester.
HINT:

- The A/F CONTROL operation lowers the fuel injection volume by 12.5 % or increases the injection volume by 25 %.

- Each sensor reacts in accordance with increases and decreases in the fuel injection volume.

Standard

Tester Display (Sensor)	Injection Volumes	Status	Voltages
AFS B1S1 or AFS B2S1 (A/F)	+25 %	Rich	Less than 3.0
AFS B1S1 or AFS B2S1 (A/F)	-12.5 %	Lean	More than 3.35
O2S B1S2 or O2S B2S2 (HO2)	+25 %	Rich	More than 0.55
O2S B1S2 or O2S B2S2 (HO2)	-12.5 %	Lean	Less than 0.4

NOTICE:
The Air-Fuel Ratio (A/F) sensor has an output delay of a few seconds and the Heated Oxygen (HO2) sensor has a maximum output delay of approximately 20 seconds.

ES

Case	A/F Sensor (Sensor 1) Output Voltage		HO2 Sensor (Sensor 2) Output Voltage		Main Suspected Trouble Areas
1	Injection volume +25 % -12.5 %		Injection volume +25 % -12.5 %		-
	Output voltage More than 3.35 V Less than 3.0 V		Output voltage More than 0.55 V Less than 0.4 V		
2	Injection volume +25 % -12.5 %		Injection volume +25 % -12.5 %		• A/F sensor • A/F sensor heater • A/F sensor circuit
	Output voltage Almost no reaction		Output voltage More than 0.55 V Less than 0.4 V		
3	Injection volume +25 % -12.5 %		Injection volume +25 % -12.5 %		• HO2 sensor • HO2 sensor heater • HO2 sensor circuit
	Output voltage More than 3.35 V Less than 3.0 V		Output voltage Almost no reaction	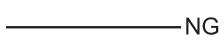	
4	Injection volume +25 % -12.5 %		Injection volume +25 % -12.5 %		• Injector • Fuel pressure • Gas leakage from exhaust system (Air-fuel ratio extremely lean or rich)
	Output voltage Almost no reaction	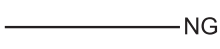	Output voltage Almost no reaction	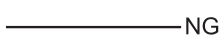	

- Following the A/F CONTROL procedure enables technicians to check and graph the voltage outputs of both the A/F and HO2 sensors.
- To display the graph, select the following menu items on the tester: DIAGNOSIS / ENHANCED OBD II / ACTIVE TEST / A/F CONTROL / USER DATA / AFS B1S1 and O2S B1S2 or AFS B2S1 and O2S B2S2, and press the YES button and then the ENTER button followed by the F4 button.

HINT:

- Read freeze frame data using an intelligent tester. Freeze frame data record the engine condition when malfunctions are detected. When troubleshooting, freeze frame data can help determine if the vehicle was moving or stationary, if the engine was warmed up or not, if the air-fuel ratio was lean or rich, and other data, from the time the malfunction occurred.

- A low A/F sensor voltage could be caused by a rich air-fuel mixture. Check for conditions that would cause the engine to run rich.
- A high A/F sensor voltage could be caused by a lean air-fuel mixture. Check for conditions that would cause the engine to run lean.

1	CHECK ANY OTHER DTCS OUTPUT (IN ADDITION TO DTC P0171, P0172, P0174 OR P0175)

(a) Connect an intelligent tester to the DLC3.
(b) Turn the ignition switch ON and turn the tester ON.
(c) Select the following menu items: DIAGNOSIS / ENHANCED OBD II / DTC INFO / CURRENT CODES.
(d) Read DTCs.

ES

Result

Display (DTC output)	Proceed To
P0171, P0172, P0174 or P0175	A
P0171, P0172, P0174 or P0175 and other DTCs	B

HINT:
If any DTCs other than P0171, P0172, P0174 or P0175 are output, troubleshoot those DTCs first.

B → **GO TO DTC CHART**

A

2	CHECK PCV HOSE CONNECTIONS

OK:
PCV hose is connected correctly and is not damaged.

NG → **REPAIR OR REPLACE PCV HOSE**

OK

3	CHECK AIR INDUCTION SYSTEM

(a) Check the air induction system for vacuum leakage.
OK:
No leakage from air induction system.

NG → **REPAIR OR REPLACE AIR INDUCTION SYSTEM**

OK

4	PERFORM ACTIVE TEST USING INTELLIGENT TESTER (A/F CONTROL)

(a) Connect an intelligent tester to the DLC3.
(b) Start the engine and turn the tester ON.
(c) Warm up the engine at an engine speed of 2,500 rpm for approximately 90 seconds.
(d) Select the following menu items: DIAGNOSIS / ENHANCED OBD II / ACTIVE TEST / A/F CONTROL.

(e) Perform the A/F CONTROL operation with the engine in an idling condition (press the RIGHT or LEFT button to change the fuel injection volume).

(f) Monitor the voltage outputs of A/F and HO2 sensors (AFS B1S1 and O2S B1S2 or AFS B2S1 and O2S B2S2) displayed on the tester.
HINT:
- The A/F CONTROL operation lowers the fuel injection volume by 12.5 % or increases the injection volume by 25 %.
- Each sensor reacts in accordance with increases and decreases in the fuel injection volume.

Standard

Tester Display (Sensor)	Injection Volumes	Status	Voltages
AFS B1S1 or AFS B2S1 (A/F)	+25 %	Rich	Less than 3.0
AFS B1S1 or AFS B2S1 (A/F)	-12.5 %	Lean	More than 3.35
O2S B1S2 or O2S B2S2 (HO2)	+25 %	Rich	More than 0.55
O2S B1S2 or O2S B2S2 (HO2)	-12.5 %	Lean	Less than 0.4

Result:

Status AFS B1S1 or AFS B2S1	Status O2S B1S2 or O2S B2S2	A/F Condition and A/F Sensor Condition	Misfires	Suspected Trouble Areas	Proceed To
Lean/Rich	Lean/Rich	Normal	-	-	C
Lean	Lean	Actual air-fuel ratio lean	May occur	• PCV valve and hose • PCV hose connections • Injector blockage • Gas leakage from exhaust system • Air induction system • Fuel pressure • Mass Air Flow (MAF) meter • Engine Coolant Temperature (ECT) sensor	A
Rich	Rich	Actual air-fuel ratio rich	-	• Injector blockage or blockage • Gas leakage from exhaust system • Ignition system • Fuel pressure • MAF meter • ECT sensor	
Lean	Lean/Rich	A/F sensor malfunction	-	• A/F sensor	B
Rich	Lean/Rich	A/F sensor malfunction	-	• A/F sensor	

Lean: During A/F CONTROL, the A/F sensor output voltage (AFS) is consistently more than 3.35 V, and the HO2 sensor output voltage (O2S) is consistently less than 0.4 V.
Rich: During A/F CONTROL, the AFS is consistently less than 3.0 V, and the O2S is consistently more than 0.55 V.
Lean/Rich: During A/F CONTROL of the ACTIVE TEST, the output voltage of the heated oxygen sensor alternates correctly.

B	**Go to step 11**

C → Go to step 15

A

5	READ VALUE OF INTELLIGENT TESTER (COOLANT TEMP)

(a) Connect an intelligent tester to the DLC3.
(b) Turn the ignition switch ON and turn the tester ON.
(c) Select the following menu items: DIAGNOSIS / ENHANCED OBD II / DATA LIST / PRIMARY / COOLANT TEMP.
(d) Read the COOLANT TEMP twice, when the engine is both cold and warmed up.
Standard:
With cold engine: Same as ambient air temperature.
With warm engine: Between 80°C and 100°C (176°C and 212°F).

NG → **REPLACE ENGINE COOLANT TEMPERATURE SENSOR**

OK

6	READ VALUE OF INTELLIGENT TESTER (MAF)

(a) Connect an intelligent tester to the DLC3.
(b) Turn the ignition switch ON and turn the tester ON.
(c) Select the following menu items: DIAGNOSIS / ENHANCED OBD II / DATA LIST / PRIMARY / MAF and COOLANT TEMP.
(d) Allow the engine to idle until the COOLANT TEMP reaches 75°C (167°F) or more.
(e) Read the MAF with the engine in an idling condition and at an engine speed of 2,500 rpm.
Standard:
MAF while engine idling: Between 3.2 g/sec and 4.7 g/sec (shift position: N, A/C: OFF).
MAF at engine speed of 2,500 rpm: Between 13.1 g/sec and 18.9 g/sec (shift position: N, A/C: OFF).

NG → **REPLACE MASS AIR FLOW METER**

OK

7	CHECK FUEL PRESSURE

(a) Check the fuel pressure (See page FU-6).

NG → **REPAIR OR REPLACE FUEL SYSTEM**

OK

8	CHECK EXHAUST GAS LEAKAGE

OK:
No gas leakage.

NG → **REPAIR OR REPLACE EXHAUST SYSTEM**

OK

9	CHECK SPARK AND IGNITION

HINT:
If the spark plugs or ignition system malfunctions, engine misfire may occur. The misfire count can be read using an intelligent tester. Select the following menu items: DIAGNOSIS / ENHANCED OBD II / DATA LIST / PRIMARY / CYL #1 (to CYL #6).

NG → **REPAIR OR REPLACE IGNITION SYSTEM**

OK

10	INSPECT FUEL INJECTOR ASSEMBLY (INJECTION AND VOLUME)

HINT:
If the injectors malfunction, engine misfire may occur. The misfire count can be read using an intelligent tester. Select the following menu items: DIAGNOSIS / ENHANCED OBD II / DATA LIST / PRIMARY / CYL #1 (to CYL #6).

NG → **REPLACE FUEL INJECTOR ASSEMBLY**

OK

11	INSPECT AIR FUEL RATIO SENSOR (HEATER RESISTANCE)

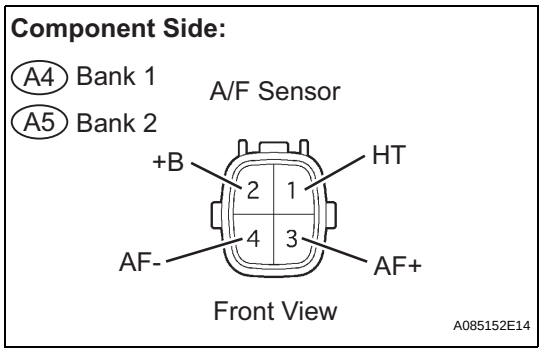

(a) Disconnect the A4 or A5 A/F sensor connector.
(b) Measure the resistance between the terminals of the A/F sensor connector.
Standard Resistance

Tester Connections	Specified Conditions
HT (1) - +B (2)	1.8 Ω to 3.4 Ω at 20°C (68°F)
HT (1) - AF- (4)	10 kΩ or higher

(c) Reconnect the A/F sensor connector.

NG → **REPLACE AIR FUEL RATIO SENSOR**

OK

12 INSPECT AIR FUEL RATIO SENSOR HEATER RELAY

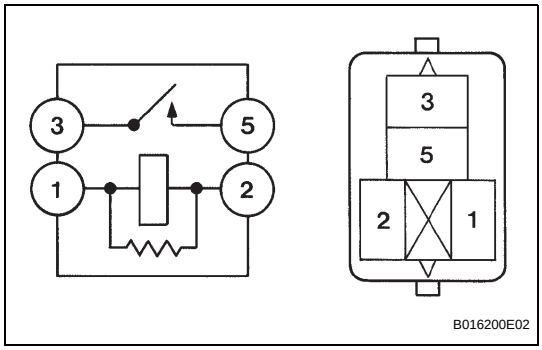

(a) Remove the A/F sensor heater relay from the engine room R/B.
(b) Check the A/F sensor heater relay resistance.

Standard Resistance

Tester Connections	Specified Conditions
3 - 5	10 kΩ or higher
3 - 5	Below 1 Ω (when battery voltage applied to terminals 1 and 2)

(c) Reinstall the A/F sensor heater relay.

NG → **REPLACE AIR FUEL RATIO SENSOR HEATER RELAY**

OK

13 CHECK HARNESS AND CONNECTOR (A/F SENSOR - ECM)

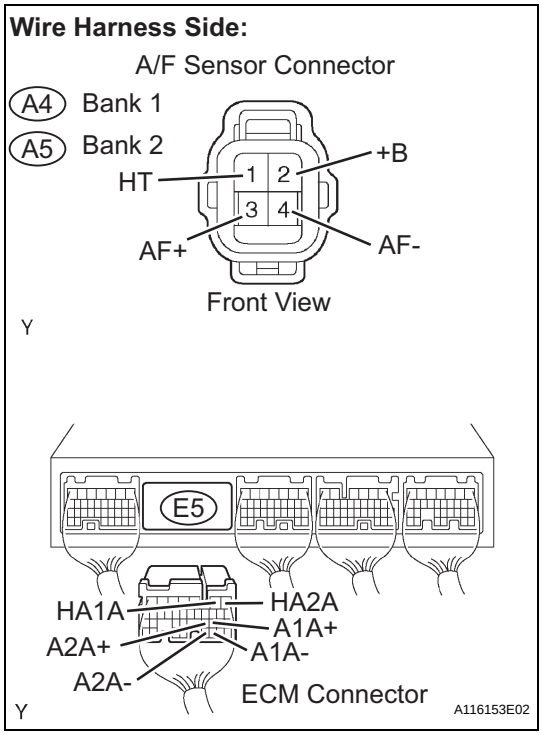

(a) Disconnect the A4 or A5 A/F sensor connector.
(b) Turn the ignition switch ON.
(c) Measure the voltage between the +B terminal of the A/F sensor connector and body ground.

Standard Voltage

Tester Connections	Specified Conditions
+B (A4-2) - Body ground	9 to 14 V
+B (A5-2) - Body ground	

(d) Turn the ignition switch OFF.
(e) Disconnect the E5 ECM connector.
(f) Check the resistance.

Standard Resistance (Check for open)

Tester Connections	Specified Conditions
HT (A4-1) - HA1A (E5-2)	Below 1 Ω
AF+ (A4-3) - A1A+ (E5-22)	
AF- (A4-4) - A1A- (E5-30)	
HT (A5-1) - HA2A (E5-1)	
AF+ (A5-3) - A2A+ (E5-23)	
AF- (A5-4) - A2A- (E5-31)	

Standard Resistance (Check for short)

Tester Connections	Specified Conditions
HT (A4-1) or HA1A (E5-2) - Body ground	10 kΩ or higher
AF+ (A4-3) or A1A+ (E5-22) - Body ground	
AF- (A4-4) or A1A- (E5-30) - Body ground	
HT (A5-1) or HA2A (E5-1) - Body ground	
AF+ (A5-3) or A2A+ (E5-23) - Body ground	
AF- (A5-4) or A2A- (E5-31) - Body ground	

(g) Reconnect the ECM connector.
(h) Reconnect the A/F sensor connector.

Reference (Bank 1 Sensor 1 System Diagram)

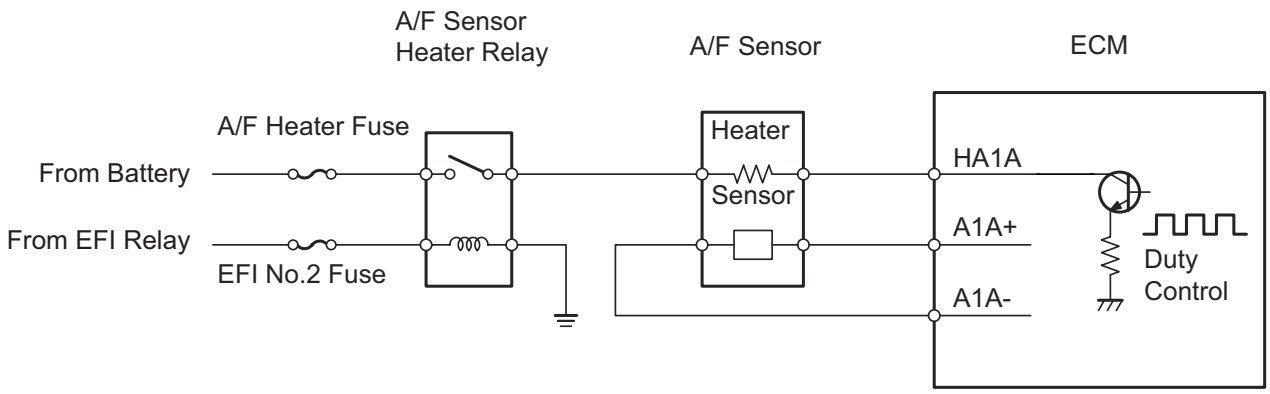

A115897E03

ES

NG → **REPAIR OR REPLACE HARNESS OR CONNECTOR**

OK

14	REPLACE AIR FUEL RATIO SENSOR

(a) Replace the A/F sensor (See page EC-17).

NEXT

15	PERFORM CONFIRMATION DRIVING PATTERN

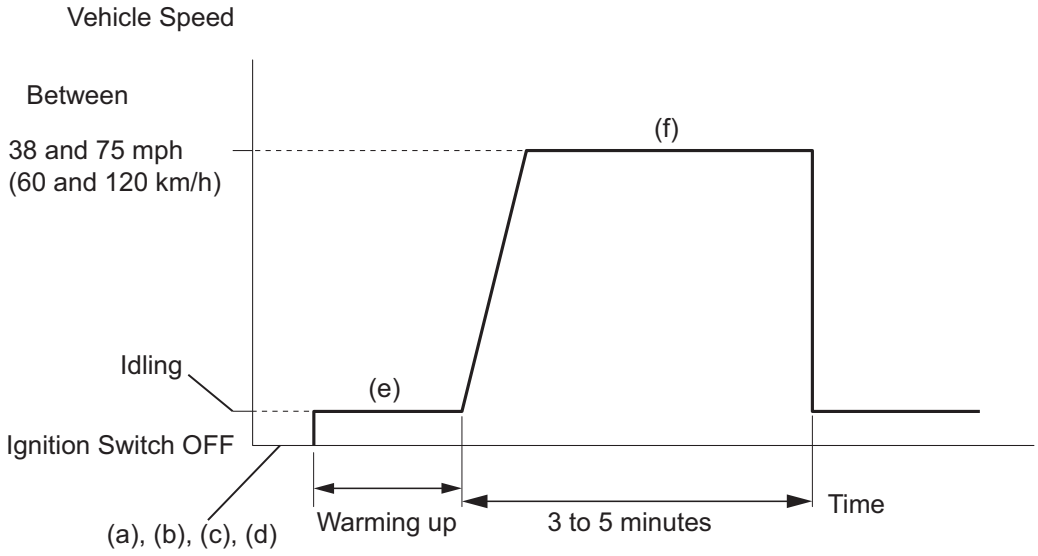

(a) Connect an intelligent tester to the DLC3.
(b) Turn the ignition switch ON and turn the tester ON.
(c) Clear DTCs (See page ES-38).
(d) Switch the ECM from normal mode to check mode using the tester (See page ES-41).
(e) Start the engine and warm it up with all the accessories switched OFF.
(f) Drive the vehicle at between 38 mph and 75 mph (60 km/h and 120 km/h) and at an engine speed of between 1,400 rpm and 3,200 rpm for 3 to 5 minutes.
HINT:
If the system is still malfunctioning, the MIL will be illuminated during step (f).
NOTICE:
If the conditions in this test are not strictly followed, no malfunction will be detected.

NEXT

16	CHECK WHETHER DTC OUTPUT RECURS (DTC P0171, P0172, P0174 OR P0175)

(a) Connect an intelligent tester to the DLC3.
(b) Turn the ignition switch ON and turn the tester ON.
(c) Select the following menu items: DIAGNOSIS / ENHANCED OBD II / DTC INFO / CURRENT CODES.
(d) Read DTCS.

Result

Display (DTC output)	Proceed To
No output	A
P0171, P0172, P0174 or P0175	B

B → Go to step 5

A

END

DTC	P0230	Fuel Pump Primary Circuit

DESCRIPTION

As shown in the illustration, when the engine is cranked, current flows from terminal ST1 of the ignition switch into the ECM and the ST (starter) relay coil and also current flows to terminal STA of the ECM (STA signal).

When the STA signal and NE signal are input to the ECM, Tr1 (power transistor 1) is turned ON, current flows to the coil of the circuit opening relay, the relay switches on, power is supplied to the fuel pump, and the fuel pump operates.

While the NE signal is generated (engine running), the ECM keeps the Tr1 ON (circuit opening relay ON) and the fuel pump also keeps operating.

The fuel pump speed is controlled at two levels (high speed or low speed) by engine condition (starting, light load, heavy load). When the engine starts (STA ON), Tr2 (power transistor 2) in the ECM is OFF, so the fuel pump relay closes and positive battery voltage is applied directly to the fuel pump. The fuel pump operates at high speed.

During idling or under light loads, Tr2 goes ON, and then power is supplied to the fuel pump via the fuel pump resistor. The fuel pump operates at low speed.

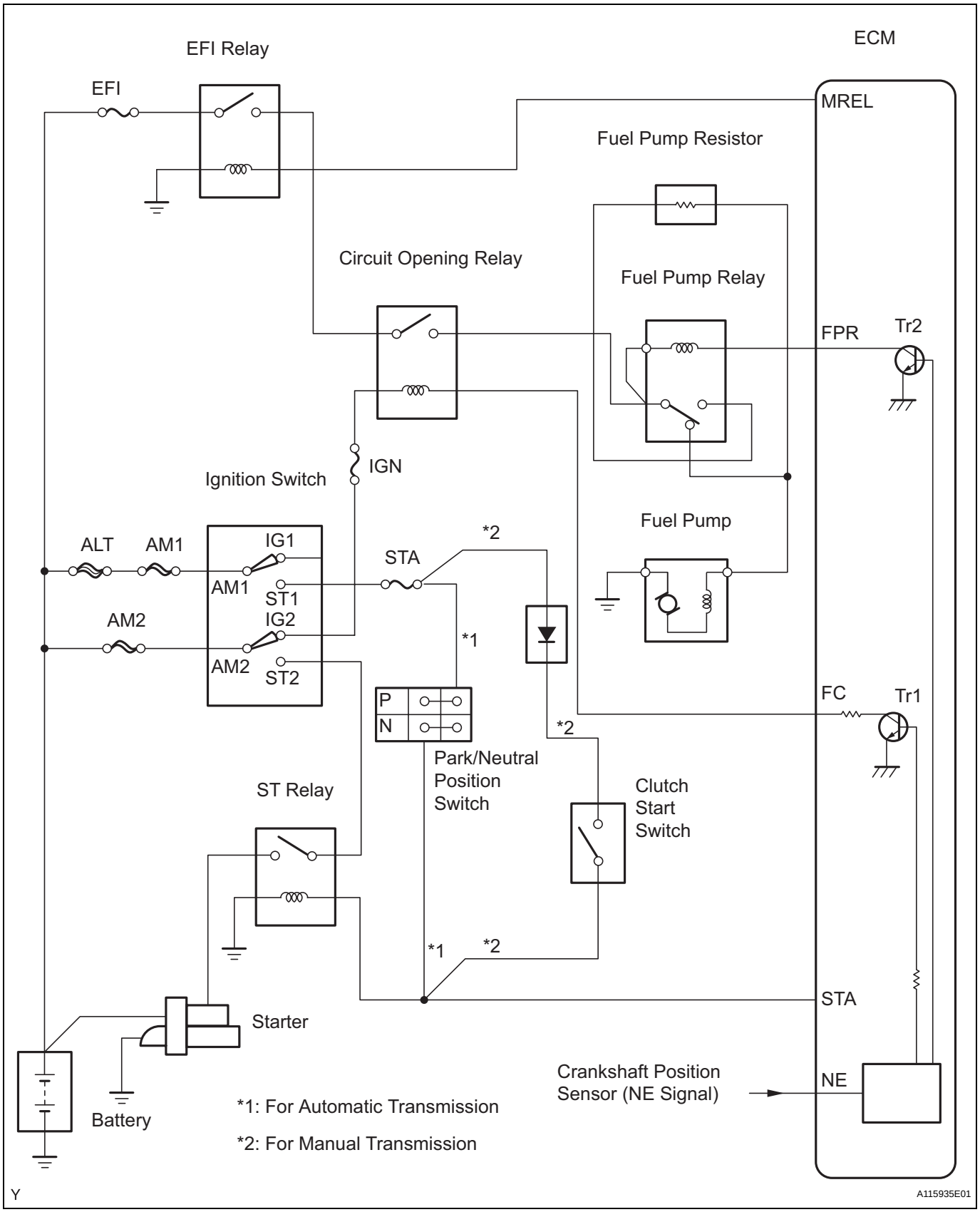

DTC No	DTC Detection Condition	Trouble Areas
P0230	Open or short in fuel pump relay circuit (1 trip detection logic)	• Open or short in fuel pump relay circuit • Fuel pump relay • ECM

WIRING DIAGRAM

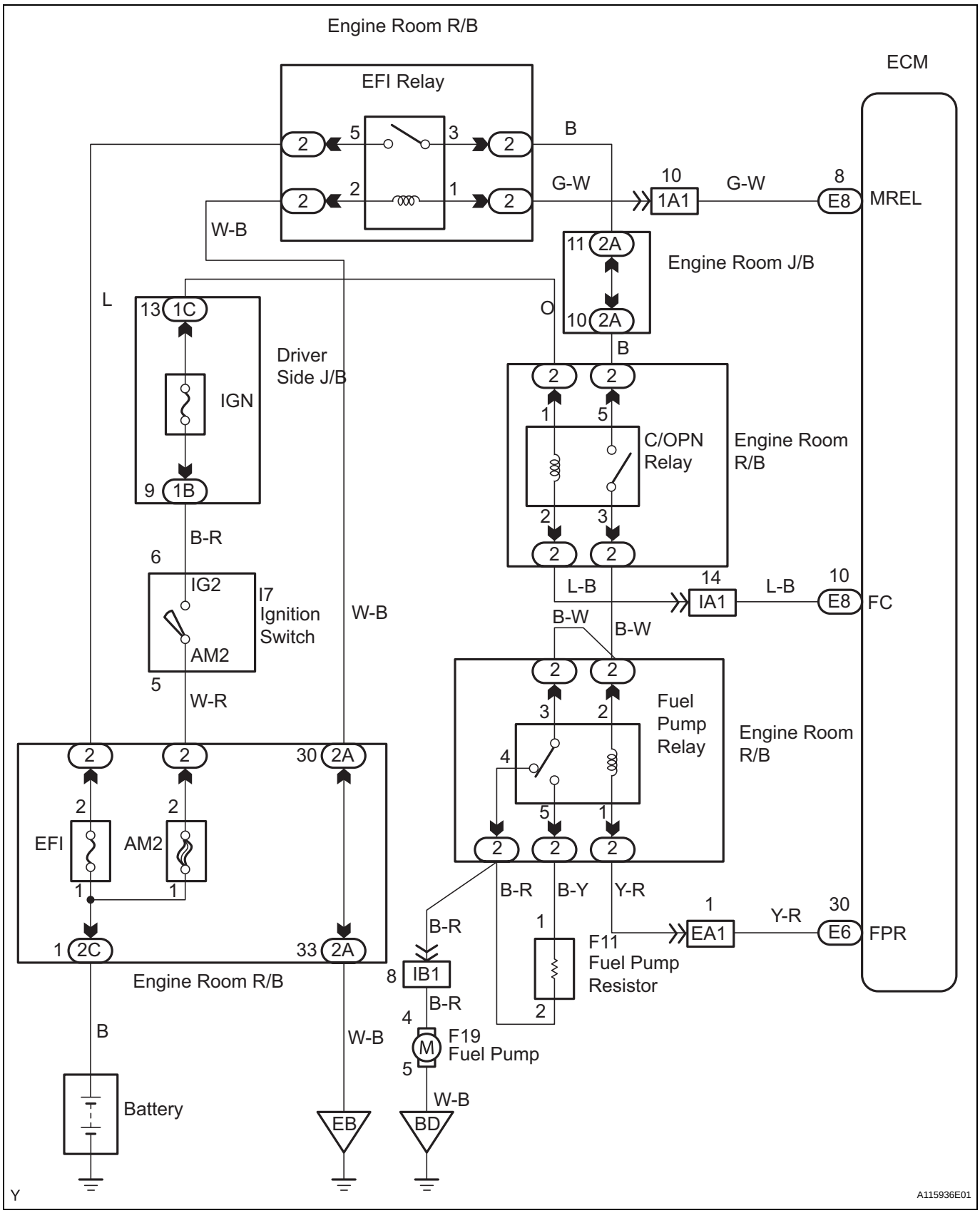

HINT:
This DTC chart is on the premise that the engine is started normally. If the engine is difficult to start, proceed to the problem symptoms table (See page ES-28).

HINT:
Read freeze frame data using an intelligent tester. Freeze frame data record the engine condition when malfunctions are detected. When troubleshooting, freeze frame data can help determine if the vehicle was moving or stationary, if the engine was warmed up or not, if the air-fuel ratio was lean or rich, and other data, from the time the malfunction occurred.

1 CHECK ECM (FPR VOLTAGE)

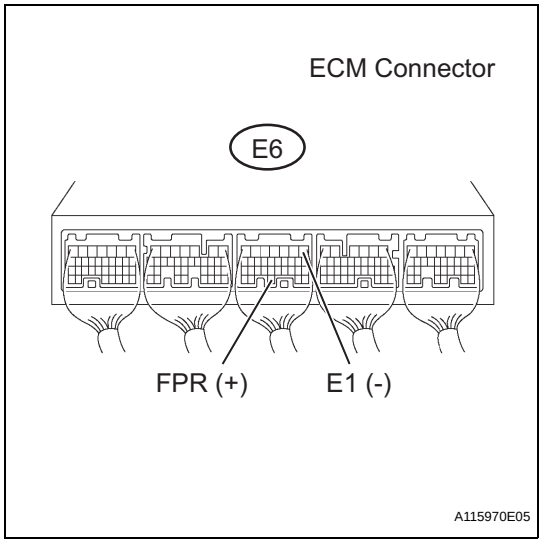

(a) Measure the voltage between the terminals of the E6 ECM connector.
Standard Voltage

Tester Connections	Conditions	Specified Conditions
FPR (E6-30) - E1 (E6-1)	STA signal ON	9 to 14 V
FPR (E6-30) - E1 (E6-1)	STA signal OFF	0 to 3 V

NG → **REPLACE ECM**

OK

2 INSPECT FUEL PUMP RELAY ASSEMBLY

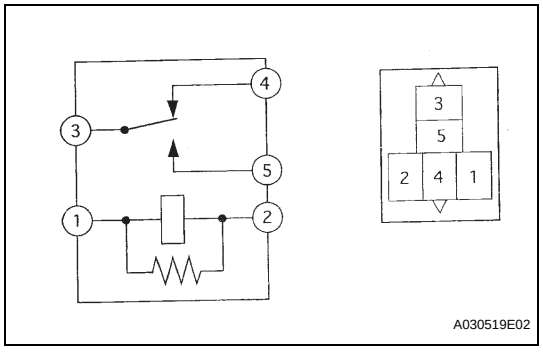

(a) Remove the fuel pump relay from the engine room R/B.
(b) Check the fuel pump relay resistance.
Standard Resistance

Tester Connections	Specified Conditions
3 - 4	Below 1 Ω
3 - 5	10 kΩ or higher
3 - 4	10 kΩ or higher (when battery voltage applied to terminals 1 and 2)
3 - 5	Below 1 Ω (when battery voltage applied to terminals 1 and 2)

(c) Reinstall the fuel pump relay.

NG → **REPLACE FUEL PUMP RELAY ASSEMBLY**

OK

3	CHECK HARNESS AND CONNECTOR (F/PMP RELAY - ECM)

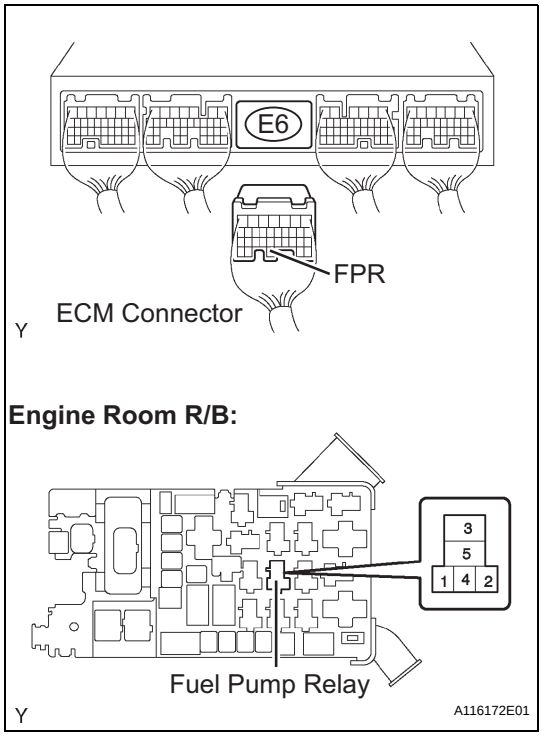

(a) Remove the fuel pump relay from the engine room R/B.
(b) Disconnect the E6 ECM connector.
(c) Check the resistance.

Standard Resistance (Check for open)

Tester Connections	Specified Conditions
Fuel pump relay (1) - FPR (E6-30)	Below 1 Ω

Standard Resistance (Check for short)

Tester Connections	Specified Conditions
Fuel pump relay (1) or FPR (E6-30) - Body ground	10 kΩ or higher

(d) Reinstall the fuel pump relay.
(e) Reconnect the ECM connector.

NG → **REPAIR OR REPLACE HARNESS OR CONNECTOR**

OK

REPLACE ECM

DTC	P0300	Random / Multiple Cylinder Misfire Detected

DTC	P0301	Cylinder 1 Misfire Detected

DTC	P0302	Cylinder 2 Misfire Detected

DTC	P0303	Cylinder 3 Misfire Detected

DTC	P0304	Cylinder 4 Misfire Detected

DTC	P0305	Cylinder 5 Misfire Detected

DTC	P0306	Cylinder 6 Misfire Detected

DESCRIPTION

When the engine misfires, high concentrations of hydrocarbons (HC) enter the exhaust gas. Extremely high HC concentration levels can cause increase in exhaust emission levels. High concentrations of HC can also cause increases in the Three-Way Catalytic Converter (TWC) temperature, which may cause damage to the TWC. To prevent this increase in emissions and to limit the possibility of thermal damage, the ECM monitors the misfire rate. When the temperature of the TWC reaches the point of thermal degradation, the ECM blinks the MIL. To monitor misfires, the ECM uses both the Camshaft Position (CMP) sensor and the Crankshaft Position (CKP) sensor. The CMP sensor is used to identify any misfiring cylinders and the CKP sensor is used to measure variations in the crankshaft rotation speed. Misfires are counted when the crankshaft rotation speed variations exceed predetermined thresholds. If the misfire exceeds the threshold levels, and could cause emission deterioration, the ECM illuminates the MIL and sets a DTC.

DTC No.	DTC Detection Conditions	Trouble Areas
P0300	Simultaneous misfiring of several cylinders detected (2 trip detection logic)	• Open or short in engine wire harness • Connector connection • Vacuum hose connections • Ignition system • Injector • Fuel pressure • Mass Air Flow (MAF) meter • Engine Coolant Temperature (ECT) sensor • Compression pressure • Valve clearance • Valve timing • PCV valve and hose • PCV hose connections • Air induction system • ECM
P0301 P0302 P0303 P0304 P0305 P0306	Misfiring of specific cylinder detected (2 trip detection logic)	

HINT:

When DTCs for misfiring cylinders are randomly set, but DTC P0300 is not set, it indicates that misfires have been detected in different cylinders at different times. DTC P0300 is only set when several misfiring cylinders are detected at the same time.

Reference: Inspection using an oscilloscope.

With the engine idling, check the waveform between terminals #10 to #60 and E1 of the ECM connectors.

Items	Contents
Terminals	#10 to #60 - E01
Equipment Settings	20 V/Division, 100 or 1 ms/Division

Items	Contents
Conditions	Idling

HINT:
The correct waveform is as shown.

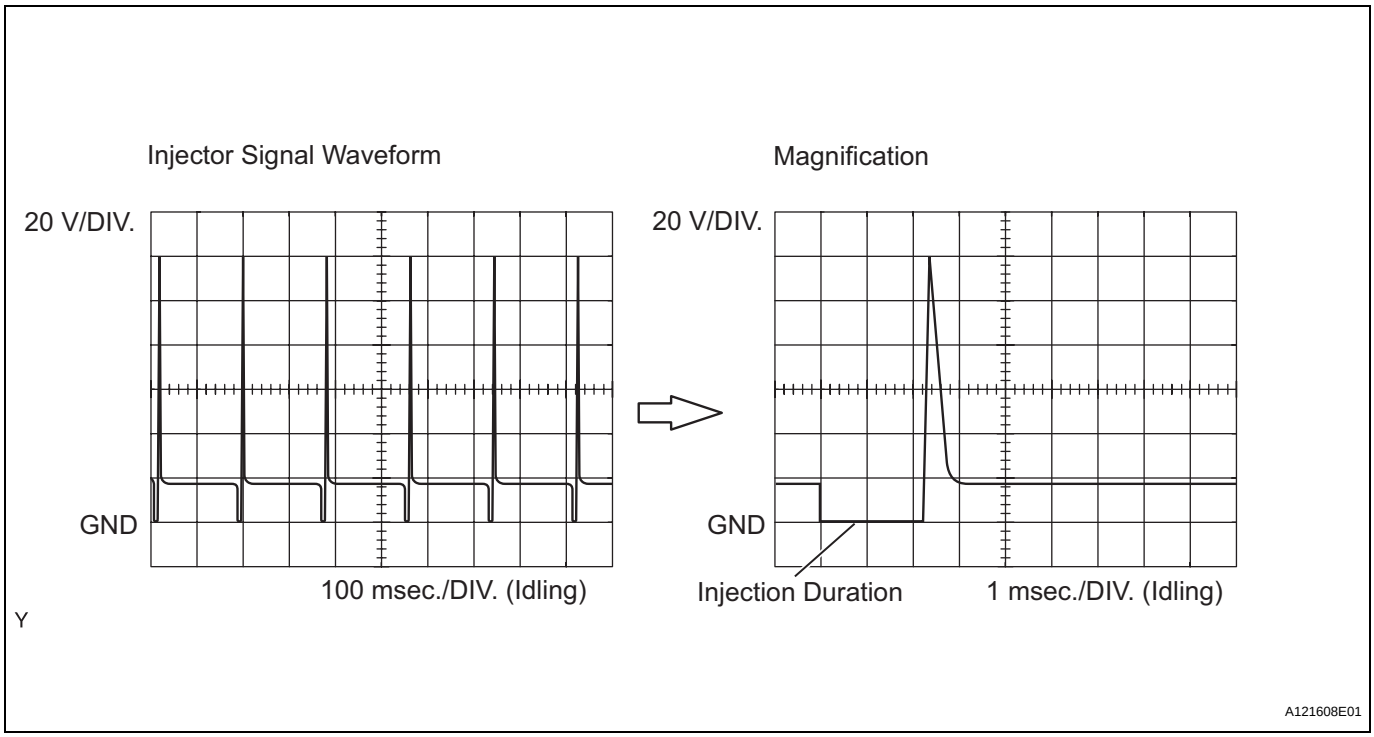

MONITOR DESCRIPTION

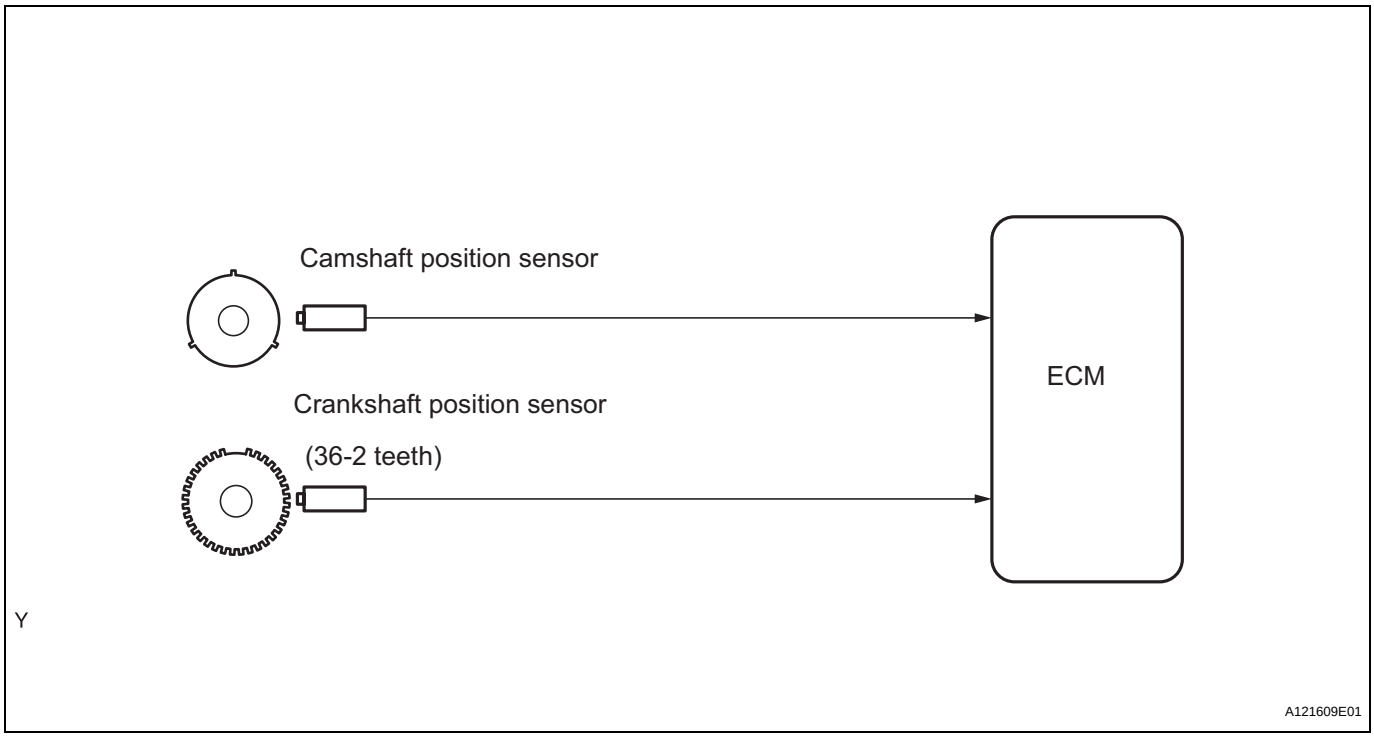

The ECM illuminates the MIL and sets a DTC when either one of the following conditions, which could cause emission deterioration, is detected (2 trip detection logic).

- Within the first 1,000 crankshaft revolutions of the engine starting, an excessive misfiring rate (approximately 20 to 50 misfires per 1,000 crankshaft revolutions) occurs once.

- After the first 1,000 crankshaft revolutions, an excessive misfiring rate (approximately 20 to 50 misfires per 1,000 crankshaft revolutions) occurs 4 times in sequential crankshaft revolutions.

The ECM flashes the MIL and sets a DTC when either one of the following conditions, which could cause the Three-Way Catalytic Converter (TWC) damage, is detected (2 trip detection logic).

- In every 200 crankshaft revolutions at a high engine rpm, the threshold misfiring percentage is recorded once.
- In every 200 crankshaft revolutions at a normal engine rpm, the threshold misfiring percentage is recorded 3 times.

MONITOR STRATEGY

Related DTCs	P0300: Multiple cylinder misfire P0301: Cylinder 1 misfire P0302: Cylinder 2 misfire P0303: Cylinder 3 misfire P0304: Cylinder 4 misfire P0305: Cylinder 5 misfire P0306: Cylinder 6 misfire
Required Sensors/Components (Main)	Injector, Ignition coil, Spark plug
Required Sensors/Components (Related)	Crankshaft, Camshaft, Engine coolant temperature and Intake air temperature sensors and Mass air flow meter
Frequency of Operation	Continuous
Duration	1,000 to 4,000 crankshaft revolutions: Emission related misfire 200 to 600 crankshaft revolutions: Catalyst damaged misfire
MIL Operation	2 driving cycles: Emission related misfire MIL flashes immediately: Catalyst damaged misfire
Sequence of Operation	None

TYPICAL ENABLING CONDITIONS

Misfire:

Monitor runs whenever following DTCs not present	P0100 - P0103 (MAF meter) P0110 - P0113 (IAT sensor) P0115 - P0118 (ECT sensor) P0120 - P0223, P2135 (TP sensor) P0125 (Insufficient ECT for closed loop) P0327 - P0333 (knock sensor) P0335 (CKP sensor) P0340 (CMP sensor) P0500 (VSS)
Battery voltage	8 V or more
Throttle position learning	Completed
VVT system	Not operated by scan tool
Engine RPM	Manual Transmission: 450 to 5,400 rpm Automatic Transmission: 400 to 5,400 rpm
Both of following conditions 1 and 2 met	-
1. Engine Coolant Temperature (ECT)	-10°C (14°F) or more
2. Either of following conditions (a) or (b) met	-
(a) ECT at engine start	More than -7°C (19°F)
(b) ECT	More than 20°C (68°F)
Fuel cut	OFF

Monitor period of emission-related-misfire:

First 1,000 revolutions after engine start, or check mode	Crankshaft 1,000 revolutions
Except above	Crankshaft 1,000 revolutions x 4

Monitor period of catalyst-damaged-misfire (MIL blinks):

All of following conditions 1, 2 and 3 met	Crankshaft 200 revolutions

1. Driving cycles	1st
2. Check mode	OFF
3. Engine RPM	Less than 2,800 rpm
Except above	Crankshaft 200 revolutions x 3

TYPICAL MALFUNCTION THRESHOLDS

Monitor period of emission-related-misfire:

Misfire rate	2.9 % or more (Manual transmission) 2 % or more (Automatic transmission)
Either of following conditions (a) or (b) met	-
(a) First 1,000 revolutions after engine start or check mode	Crankshaft 1,000 revolutions
(b) Except above	Crankshaft 1,000 revolutions x 4

Monitor period of catalyst-damage-misfire (MIL blinks):

Number of misfires per 200 revolutions	77 or more (varies with intake air amount and RPM)
Either of following conditions (a) or (b) met	-
(a) All of following conditions A, B and C met	Crankshaft 200 revolutions x 3
A. Driving cycles	1st
B. Check mode	OFF
C. Engine RPM	Below 2,800 rpm
(b) Except above	Crankshaft 200 revolutions

MONITOR RESULT

Detailed information on Checking Monitor Status (See page ES-19).

WIRING DIAGRAM

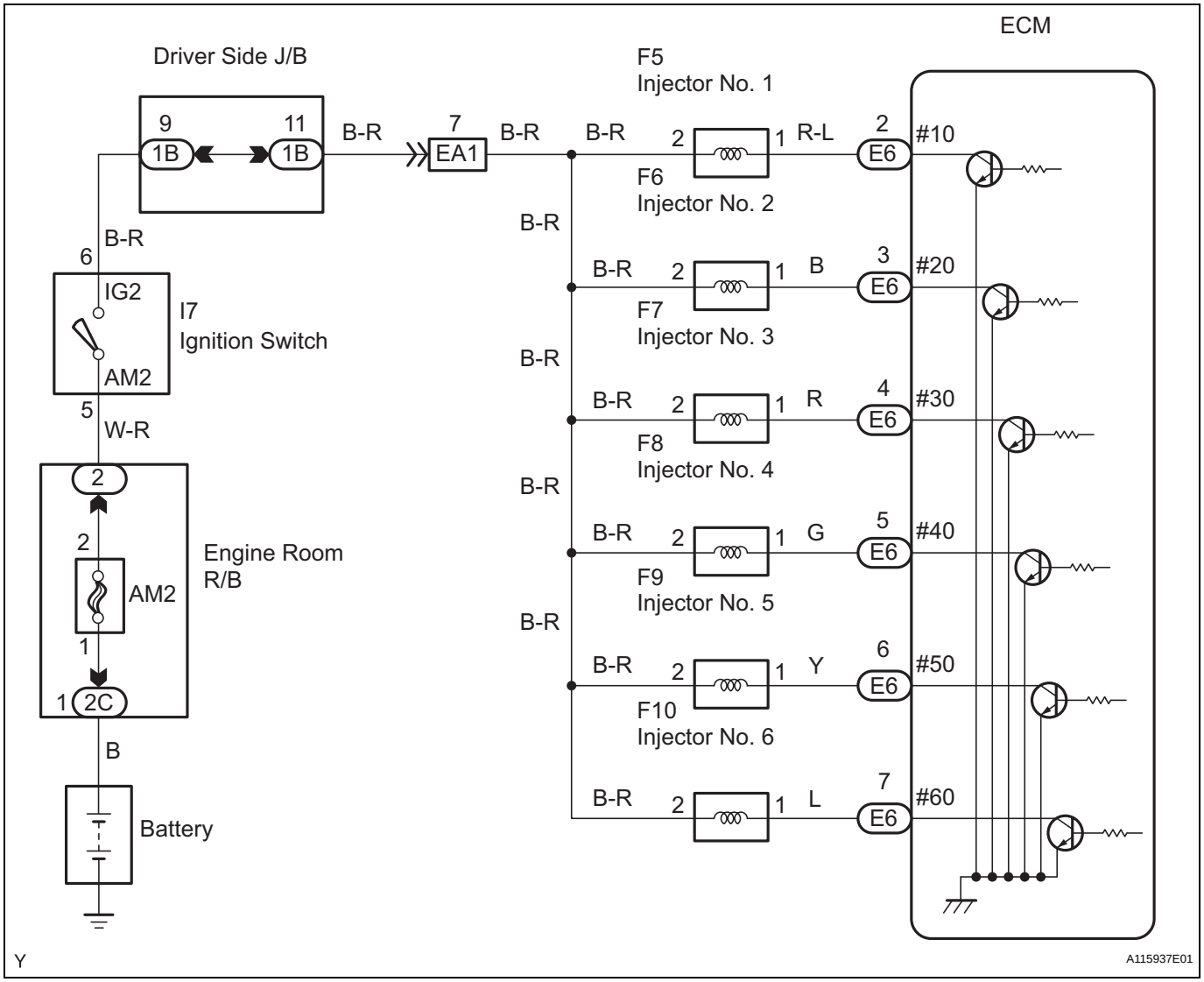

CONFIRMATION DRIVING PATTERN

(a) Connect an intelligent tester to the DLC3.
(b) Turn the ignition switch ON.
(c) Turn the tester ON.
(d) Record the DTC(s) and freeze frame data.
(e) Using the tester, switch the ECM from normal mode to check mode (See page ES-41).
(f) Read the misfire counts of each cylinder (CYL #1 to #6) with the engine in an idling condition. If any misfire count is displayed, skip the following confirmation driving pattern.
(g) Drive the vehicle several times with the conditions, such as engine rpm and engine load, shown in MISFIRE RPM and MISFIRE LOAD in the DATA LIST.
HINT:
In order to store misfire DTCs, it is necessary to drive the vehicle for the period of time shown in the table below, with the MISFIRE RPM and MISFIRE LOAD in the DATA LIST.

Engine RPM	Duration
Idling	3.5 minutes or more
1,000	3 minutes or more
2,000	1.5 minutes or more
3,000	1 minute or more

(h) Check whether misfires have occurred by checking DTCs and freeze frame data.
HINT:
Do not turn the ignition switch OFF until the stored DTC(s) and freeze frame data have been recorded. When the ECM returns to normal mode (default), the stored DTC(s), freeze frame data and other data will be erased.
(i) Record the DTC(s), freeze frame data and misfire counts.
(j) Turn the ignition switch OFF and wait for at least 5 seconds.

HINT:
- If any DTCs other than the misfire DTCs are output, troubleshoot those DTCs first.
- Read freeze frame data using an intelligent tester. Freeze frame data record the engine conditions when malfunctions are detected. When troubleshooting, freeze frame data can help determine if the vehicle was moving or stationary, if the engine was warmed up or not, if the air-fuel ratio was lean or rich, and other data, from the time the malfunction occurred.
- If the misfire does not recur when the vehicle is brought to the workshop, reproduce the conditions stored in the freeze frame data.
- The misfire still cannot be reproduced even though the conditions stored in the freeze frame data have been duplicated, one of the following factors is considered to be a possible cause of the problem:
  (1) The fuel tank is low full.
  (2) Improper fuel is used.
  (3) The spark plugs have been contaminated.
  (4) The problem is complex.
- After finishing repairs, check the misfire counts of the cylinders (CYL #1, #2, #3, #4, #5 and #6).
- Be sure to confirm that no misfiring cylinder DTCs are set again by conducting the confirmation driving pattern, after repairs.
- For 6 and 8 cylinder engines, the ECM intentionally does not set the specific misfiring cylinder DTCs at high engine RPM. If misfires occur only in high engine RPM areas, only DTC P0300 is set.
  In the event of DTC P0300 being present, perform the following operations:
  (1) Clear DTCs (See page ES-38).
  (2) Start the engine and conduct the confirmation driving pattern.
  (3) Read the misfiring rates of each cylinder or DTC(s) using the tester.
  (4) Repair the cylinder(s) that has a high misfiring rate or is indicated by the DTC.
  (5) After finishing repairs, conduct the confirmation driving pattern again, in order to verify that DTC P0300 is not set.
- When one of SHORT FT #1, LONG FT #1, SHORT FT #2 or LONG FT #2 in the freeze frame data is outside the range of +-20 %, the air-fuel ratio may be rich (-20 % or less) or lean (+20 % or more).
- When the COOLANT TEMP in the freeze frame data is less than 75°C (167°F), the misfires have occurred only while warming up the engine.

1	CHECK ANY OTHER DTCS OUTPUT (IN ADDITION TO MISFIRE DTCS)

(a) Connect an intelligent tester to the DLC3.
(b) Turn the ignition switch ON.
(c) Turn the tester ON.
(d) Select the following menu items: DIAGNOSIS / ENHANCED OBD II / DTC INFO / CURRENT CODES.
(e) Read DTCs.

Result

Display (DTC output)	Proceed To
P0300, P0301, P0302, P0303, P0304, P0305 and/or P0306	A
P0300, P0301, P0302, P0303, P0304, P0305 and/or P0306 and other DTCs	B

HINT:
If any DTCs other than P0300, P0301, P0302, P0303, P0304, P0305 and P0306 are output, troubleshoot those DTCs first.

B → GO TO DTC CHART

A

2 READ VALUE OF INTELLIGENT TESTER (MISFIRE RPM AND MISFIRE LOAD)

(a) Connect an intelligent tester to the DLC3.
(b) Turn the ignition switch ON and turn the tester ON.
(c) Select the following menu items: DIAGNOSIS / ENHANCED OBD II / DATA LIST / MISFIRE / MISFIRE RPM and MISFIRE LOAD.
(d) Read and note the MISFIRE RPM and MISFIRE LOAD (engine load) values.
HINT:
The MISFIRE RPM and MISFIRE LOAD indicate the vehicle conditions under which the misfire occurred.

NEXT

3 CHECK PCV HOSE CONNECTIONS

OK:
PCV hose is connected correctly and is not damaged.

NG → REPAIR OR REPLACE PCV HOSE

OK

4 CHECK MISFIRE COUNT (CYL #1, #2, #3, #4, #5 AND #6)

(a) Connect an intelligent tester to the DLC3.
(b) Turn the ignition switch ON.
(c) Turn the tester ON.
(d) Clear DTCs (See page ES-38).
(e) Select the following menu items: DIAGNOSIS / ENHANCED OBD II / DATA LIST / MISFIRE / CYL #1, #2, #3, #4, #5 and #6.
(f) Allow the engine to idle.
(g) Read each value of CYL #1 to #6 displayed on the tester.
If no misfire counts occur in any cylinders, perform the following operations:
  (1) Shift the gear selector lever to the D position.
  (2) Repeat steps (e) to (g) above.
  (3) Check the CYL #1 to #6.
  (4) If misfire counts are still not displayed, perform steps (h) and (i) and then check the misfire counts again.
(h) Drive the vehicle with the MISFIRE RPM and MISFIRE LOAD noted in step 2.

ES

(i) Read the CYL #1 to #6 or DTCs displayed on the tester.

Result

Misfire count	Proceed To
One or two cylinders have misfire counts	A
Three cylinders or more have misfire counts	B

B → **Go to step 13**

A

5 CHECK SPARK PLUG

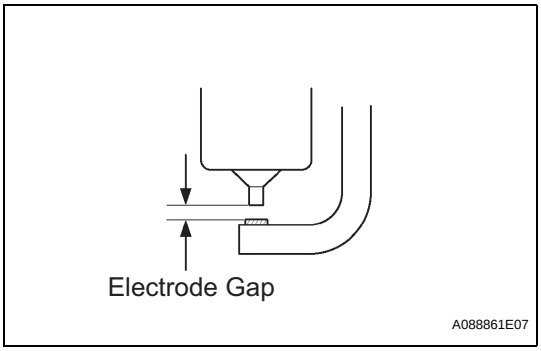

(a) Remove the ignition coil and the spark plug of the misfiring cylinder.
(b) Measure the spark plug electrode gap.
Standard:
Between 1.0 mm and 1.1 mm (0.039 in. and 0.043 in.)
(c) Check the electrode for carbon deposits.
Recommended spark plug

Manufactures	Products
DENSO	K20HR-U11
NGK	LFR6C-11

NOTICE:
If the electrode gap is larger than standard, replace the spark plug. Do not adjust the electrode gap.
(d) Reinstall the ignition coil and the spark plug.

NG → **REPLACE SPARK PLUG**

OK

6 CHECK SPARKS AND IGNITION

(a) Disconnect the injector connectors, in order to prevent the engine from starting.
(b) Install the spark plug to the ignition coil.
(c) Attach the spark plug assembly to the cylinder head cover.
(d) Crank the engine for less than 2 seconds and check the spark.
OK:
Sparks jump across electrode gap
(e) Reconnect the injector connectors.

NG → **Go to step 8**

OK

7	CHECK CYLINDER COMPRESSION PRESSURE OF MISFIRING CYLINDER

(a) Measure the cylinder compression pressure of the misfiring cylinder.

OK → **Go to step 9**

NG

REPAIR OR REPLACE MALFUNCTION PARTS

ES

8	CHANGE NORMAL SPARK PLUG AND CHECK SPARK OF MISFIRING CYLINDER

(a) Change the installed spark plug to a spark plug that functions normally.

(b) Perform a spark test.

CAUTION:
Always disconnect each injector connector.
NOTICE:
Do not crank the engine for more than 2 seconds.

(1) Install the spark plug to the ignition coil and connect the ignition coil connector.
(2) Disconnect the injector connector.
(3) Ground the spark plug.
(4) Check if sparks occur while the engine is being cranked.

OK:
Sparks jump across electrode gap.

NG → **REPLACE IGNITION COIL ASSEMBLY THEN CONFIRM THAT THERE IS NO MISFIRE**

OK

REPLACE SPARK PLUG

9	INSPECT ECM TERMINAL OF MISFIRING CYLINDER (#10,#20,#30,#40.#50 AND/OR #60 VOLTAGE)

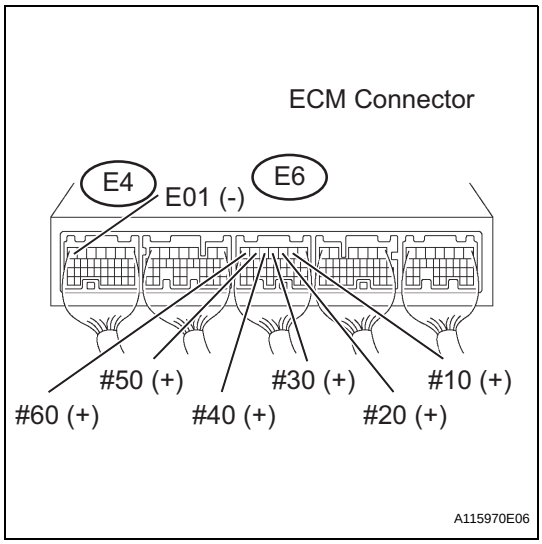

(a) Turn the ignition switch ON.
(b) Measure the voltage between the terminals of the E6 and E4 ECM connectors.

Standard Voltage

Tester Connections	Specified Conditions
#10 (E6-2) - E01 (E4-7)	9 to 14 V
#20 (E6-3) - E01 (E4-7)	
#30 (E6-4) - E01 (E4-7)	
#40 (E6-5) - E01 (E4-7)	
#50 (E6-6) - E01 (E4-7)	
#60 (E6-7) - E01 (E4-7)	

OK → Go to step 11

NG

10	CHECK HARNESS AND CONNECTOR (INJECTOR - ECM)

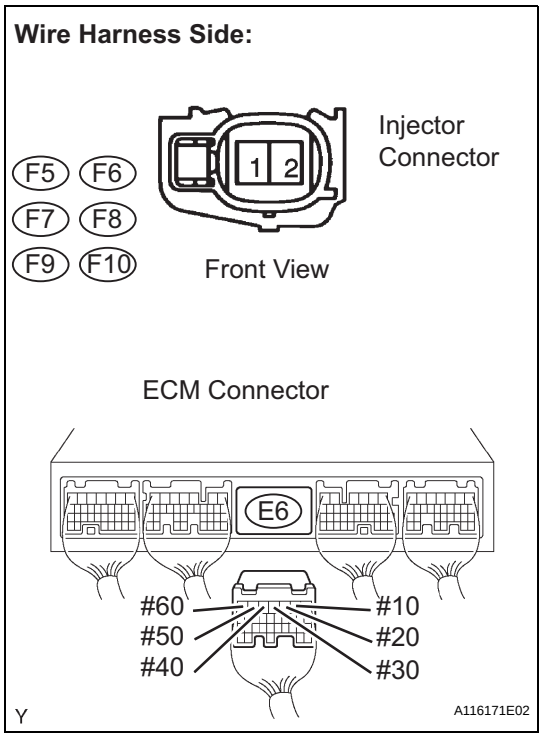

(a) Disconnect the injector connector (of the misfiring cylinder).
(b) Disconnect the E6 ECM connector.
(c) Turn the ignition switch ON.
(d) Measure the resistance and voltage between the injector and the ECM connector terminals.

Standard (Cylinder No. 1)

Tester Connections	Specified Conditions
F5-2 - Ground	11 to 14 V
F5-1 - Ground	10 kΩ or higher
F5-1 - #10 (E6-2)	Below 1 Ω

Standard (Cylinder No. 2)

Tester Connections	Specified Conditions
F6-2 - Ground	11 to 14 V
F6-1 - Ground	10 kΩ or higher
F6-1 - #20 (E6-3)	Below 1 Ω

Standard (Cylinder No. 3)

Tester Connections	Specified Conditions
F7-2 - Ground	11 to 14 V
F7-1 - Ground	10 kΩ or higher
F7-1 - #30 (E6-4)	Below 1 Ω

Standard (Cylinder No. 4)

Tester Connections	Specified Conditions
F8-2 - Ground	11 to 14 V
F8-1 - Ground	10 kΩ or higher

Tester Connections	Specified Conditions
F8-1 - #40 (E6-5)	Below 1 Ω

Standard (Cylinder No. 5)

Tester Connections	Specified Conditions
F9-2 - Ground	11 to 14 V
F9-1 - Ground	10 kΩ or higher
F9-1 - #50 (E6-6)	Below 1 Ω

Standard (Cylinder No. 6)

Tester Connections	Specified Conditions
F10-2 - Ground	11 to 14 V
F10-1 - Ground	10 kΩ or higher
F10-1 - #60 (E6-7)	Below 1 Ω

(e) Reconnect the injector connector.
(f) Reconnect the ECM connector.

NG → **REPAIR OR REPLACE HARNESS OR CONNECTOR**

OK

11 CHECK FUEL INJECTOR OF MISFIRING CYLINDER

(a) Check the injector injection (whether fuel volume is high or low, and whether injection pattern is poor).

NG → **REPLACE FUEL INJECTOR ASSEMBLY**

OK

12 CHECK VALVE CLEARANCE OF MISFIRING CYLINDER

NG → **ADJUST VALVE CLEARANCE**

OK

13 CHECK AIR INDUCTION SYSTEM

(a) Check the air induction system for vacuum leakage.
OK:
No leakage from air induction system.

NG → **REPAIR OR REPLACE AIR INDUCTION SYSTEM**

OK

14	CHECK VALVE TIMING

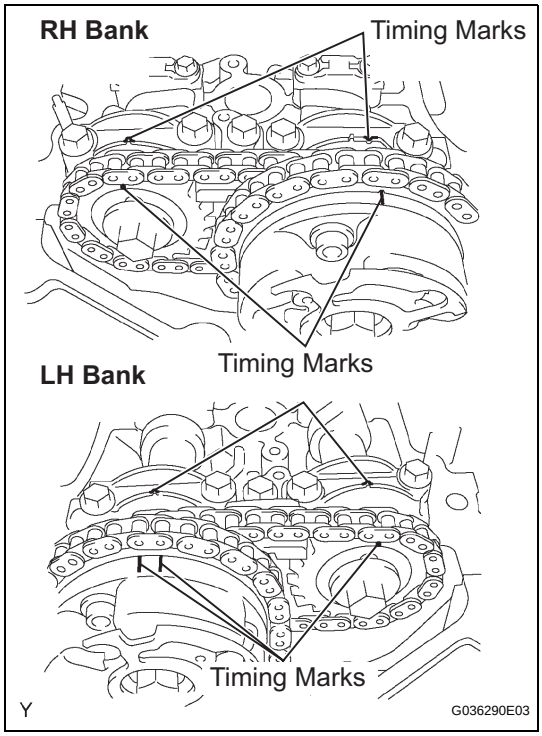

(a) Remove the cylinder head cover.
(b) Turn the crankshaft pulley, and align its groove with the timing mark "0" of the timing chain cover.
(c) Check that the timing marks of the camshaft timing gears are aligned with the timing marks of the bearing cap as shown in the illustration.
If not, turn the crankshaft 1 revolution (360°) and align the marks as above.
OK:
Timing marks on camshaft timing gears are aligned as shown in illustration.
(d) Reinstall the cylinder head cover.

NG → **ADJUST VALVE TIMING**

OK

15	CHECK FUEL PRESSURE

(a) Check the fuel pressure (See page FU-6).

NG → **CHECK AND REPLACE FUEL PUMP, PRESSURE REGULATOR, FUEL PIPE LINE AND FILTER**

OK

16	READ VALUE OF INTELLIGENT TESTER (COOLANT TEMP)

(a) Connect an intelligent tester to the DLC3.
(b) Turn the ignition switch ON.
(c) Turn the tester ON.
(d) Select the following menu items: DIAGNOSIS / ENHANCED OBD II / DATA LIST / PRIMARY / COOLANT TEMP.
(e) Read the COOLANT TEMP twice, when the engine is both cold and warmed up.
Standard:
With cold engine: Same as ambient air temperature.
With warm engine: Between 80°C and 100°C (176°F and 212°F).

NG → REPLACE ENGINE COOLANT TEMPERATURE SENSOR

OK

17	READ VALUE OF INTELLIGENT TESTER (MAF)

(a) Connect an intelligent tester to the DLC3.
(b) Turn the ignition switch ON.
(c) Turn the tester ON.
(d) Select the following menu items: DIAGNOSIS / ENHANCED OBD II / DATA LIST / PRIMARY / MAF and COOLANT TEMP.
(e) Allow the engine to idle until the COOLANT TEMP reaches 75°C (167°F) or more.
(f) Read the MAF with the engine in an idling condition and at an engine speed of 2,500 rpm.
Standard:
MAF while engine idling: Between 3.2 g/sec and 4.7 g/sec (shift position: N, A/C: OFF).
MAF at engine speed of 2,500 rpm: Between 13.1 g/sec and 18.9 g/sec (shift position: N, A/C: OFF).

NG → REPLACE MASS AIR FLOW METER

OK

CHECK FOR INTERMITTENT PROBLEMS

DTC	P0327	Knock Sensor 1 Circuit Low Input (Bank 1 or Single Sensor)

DTC	P0328	Knock Sensor 1 Circuit High Input (Bank 1 or Single Sensor)

DTC	P0332	Knock Sensor 2 Circuit Low Input (Bank 2)

DTC	P0333	Knock Sensor 2 Circuit High Input (Bank 2)

ES

DESCRIPTION

A flat type knock sensor (non-resonant type) has a structure that can detect vibrations over a wide band of frequencies: between approximately 6 kHz and 15 kHz.
Knock sensors are fitted onto the engine block to detect engine knocking.
The knock sensor contains a piezoelectric element which generates a voltage when it becomes deformed. The voltage is generated when the engine block vibrates due to knocking. Any occurrence of engine knocking can be suppressed by delaying the ignition timing.

DTC No.	DTC Detection Conditions	Trouble Areas
P0327 P0332	Output voltage of knock sensor 1 or 2 is 0.5 V or less (1 trip detection logic)	• Short in knock sensor 1 or 2 circuit • Knock sensor 1 or 2 • ECM
P0328 P0333	Output voltage of knock sensor 1 or 2 is 4.5 V or more (1 trip detection logic)	• Open in knock sensor 1 or 2 circuit • Knock sensor 1 or 2 • ECM

HINT:
When any of DTCs P0327, P0328, P0332 and P0333 are set, the ECM enters fail-safe mode. During fail-safe mode, the ignition timing is delayed to its maximum retardation. Fail-safe mode continues until the ignition switch is turned OFF.

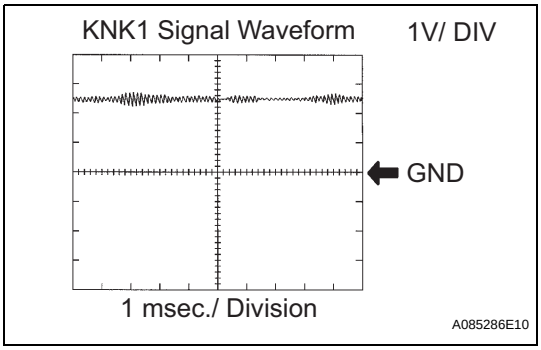

Reference: Inspection using an oscilloscope
The correct waveform is as shown.

Items	Contents
Terminals	KNK1 - EKNK or KNK2 - EKN2
Equipment Settings	0.01 to 10 V/Division, 0.01 to 10 msec./Division
Conditions	Keep engine speed at 4,000 rpm with warm engine

MONITOR DESCRIPTION

If the output voltage transmitted by the knock sensor remains low or high for more than 1 second, the ECM interprets this as a malfunction in the sensor circuit, and sets a DTC.
The monitor for DTCs P0327 and P0328 begins to run when 5 seconds have elapsed since the engine was started.
If the malfunction is not repaired successfully, any of DTC P0327, P0328, P0332 or P0333 is set 5 seconds after the engine is next started.

MONITOR STRATEGY

Related DTCs	P0327: Knock sensor (Bank 1) open/short (Low voltage) P0328: Knock sensor (Bank 1) open/short (High voltage) P0332: Knock sensor (Bank 2) open/short (Low voltage) P0333: Knock sensor (Bank 2) open/short (High voltage)
Required Sensors/Components (Main)	Knock sensor (Bank 1 and 2)
Required Sensors/Components (Related)	-
Frequency of Operation	Continuous
Duration	1 second
MIL Operation	Immediate
Sequence of Operation	None

TYPICAL ENABLING CONDITIONS

Monitor runs whenever following DTCs not present	None
Battery voltage	10.5 V or more
Time after engine start	5 seconds or more

TYPICAL MALFUNCTION THRESHOLDS

Knock Sensor Range Check (Low voltage) P0327 and P0332:

Knock sensor voltage	Less than 0.5 V

Knock Sensor Range Check (High voltage) P0328 and P0333:

Knock sensor voltage	More than 4.5 V

WIRING DIAGRAM

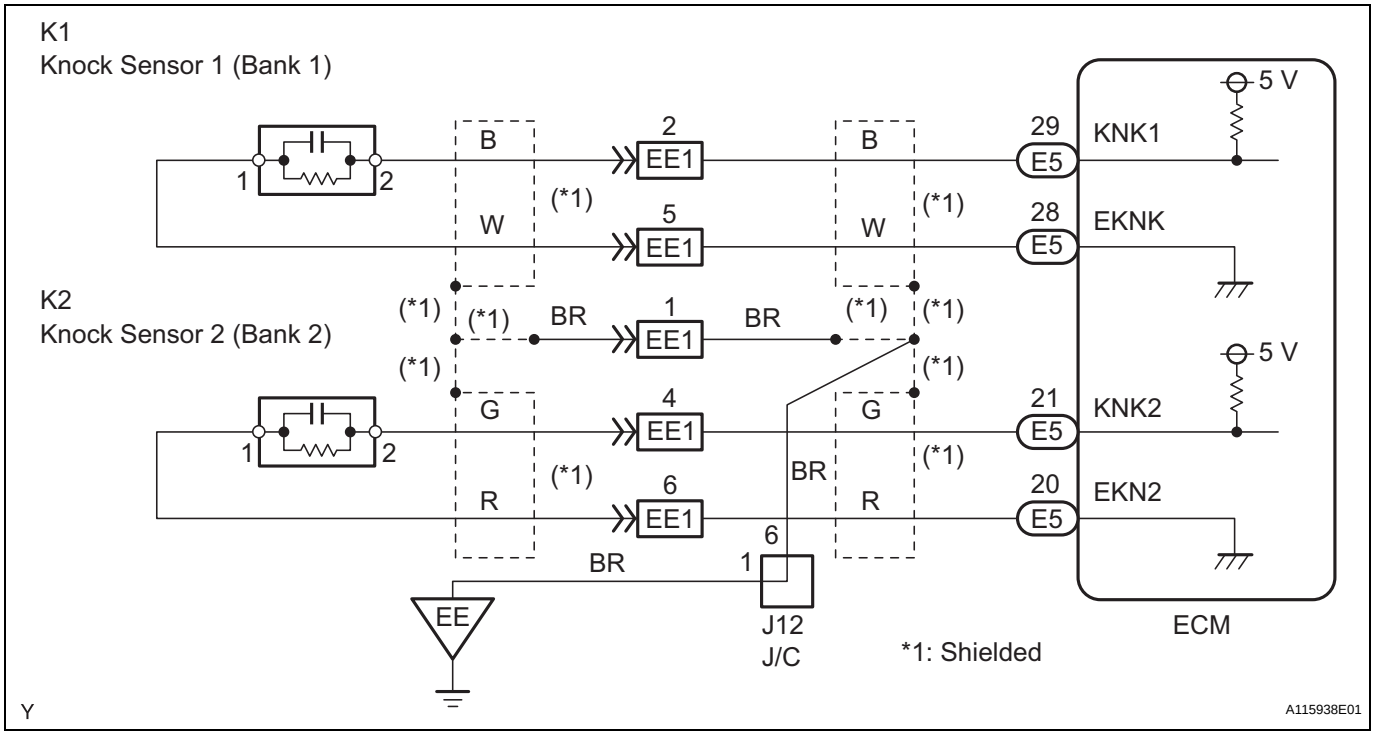

HINT:

- DTCs P0327 and P0328 are for the bank 1 knock sensor circuit.
- DTCs P0332 and P0333 are for the bank 2 knock sensor circuit.
- Read freeze frame data using an intelligent tester. Freeze frame data record the engine condition when malfunctions are detected. When troubleshooting, freeze frame data can help determine if the vehicle was moving or stationary, if the engine was warmed up or not, if the air-fuel ratio was lean or rich, and other data, from the time the malfunction occurred.

1	READ OUTPUT DTC (CHECK KNOCK SENSOR CIRCUIT)

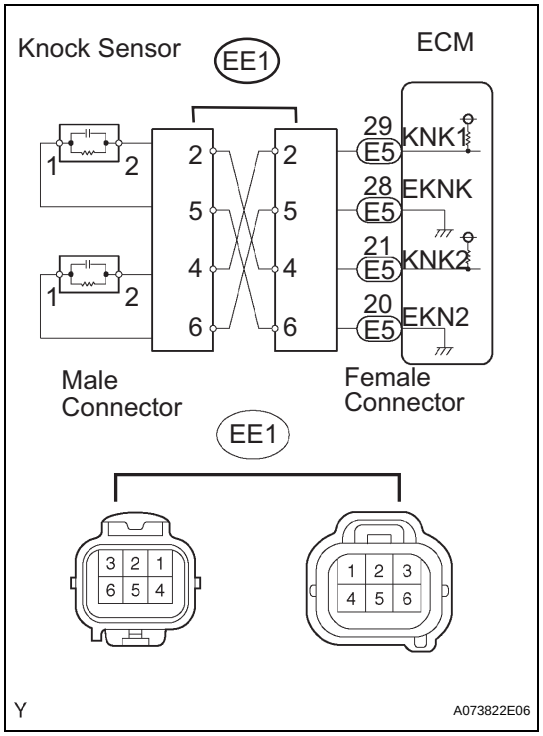

(a) Disconnect the EE1 connector.
(b) Using lead wires, connect the connectors as follows.

Male Connector - Female Connector
Terminal 2 - Terminal 4
Terminal 5 - Terminal 6
Terminal 4 - Terminal 2
Terminal 6 - Terminal 5

(c) Warm up the engine.
(d) Run the engine at 3,000 rpm for 10 seconds or more.
(e) Connect an intelligent tester to the DLC3.
(f) Turn the ignition switch ON and turn the tester ON.
(g) Select the item: DIAGNOSIS / ENHANCED OBD II / DTC INFO / CURRENT CODES.
(h) Read DTCs.

Result

Display	Proceed to
DTCs same as when vehicle brought in P0327, P0328 → P0327, P0328 or P0332, P0333 → P0332, P0333	**A**
DTCs different from when vehicle brought in P0327, P0328 → P0332, P0333 or P0332, P0333 → P0327, P0328	**B**

(i) Reconnect the EE1 connector.

B → **Go to step 4**

A

2	CHECK HARNESS AND CONNECTOR (CONNECTOR - ECM)

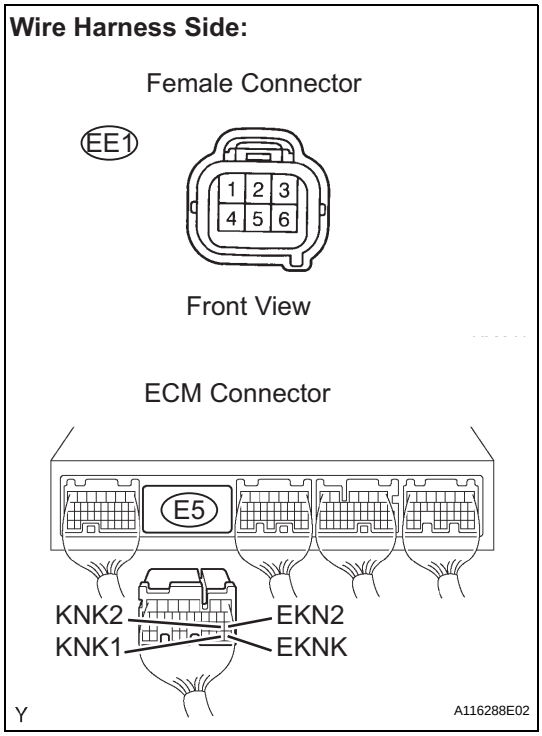

(a) Disconnect the EE1 connector.
(b) Disconnect the E5 ECM connector.
(c) Check the resistance.

Standard Resistance (Check for open)

Tester Connections	Specified Conditions
EE1 female connector 2 - KNK1 (E5-29)	Below 1 Ω
EE1 female connector 5 - EKNK (E5-28)	
EE1 female connector 4 - KNK2 (E5-21)	
EE1 female connector 6 - EKN2 (E5-20)	

Standard Resistance (Check for short)

Tester Connections	Specified Conditions
EE1 female connector 2 or KNK1 (E5-29) - Body ground	10 kΩ or higher
EE1 female connector 5 or EKNK (E5-28) - Body ground	
EE1 female connector 4 or KNK2 (E5-21) - Body ground	
EE1 female connector 6 or EKN2 (E5-20) - Body ground	

(d) Reconnect the EE1 connector.
(e) Reconnect the ECM connector.

NG → REPAIR OR REPLACE HARNESS OR CONNECTOR

OK

3	INSPECT ECM

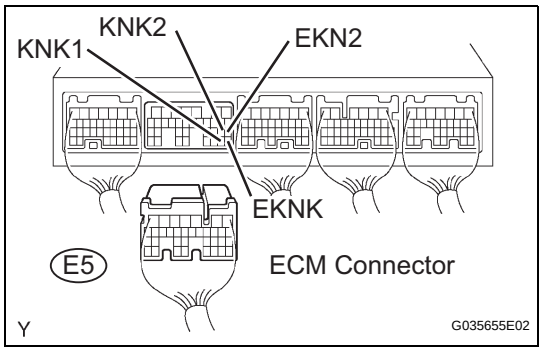

(a) Disconnect the E5 ECM connector.
(b) Turn the ignition switch ON.
(c) Measure the voltage between the ECM terminals.

Standard Voltage

Tester Connections	Specified Conditions
KNK1 (E5-29) - EKNK (E5-28)	4.5 to 5.5 V
KNK2 (E5-21) - EKN2 (E5-20)	

(d) Reconnect the ECM connector.

NG → REPLACE ECM

OK

CHECK FOR INTERMITTENT PROBLEMS

4 INSPECT KNOCK SENSOR

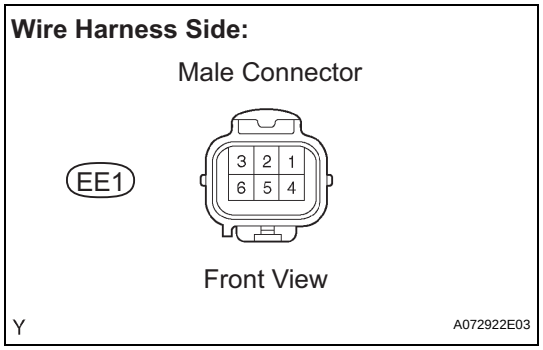

(a) Disconnect the EE1 connector.
(b) Check the resistance between the terminals of the EE1 male connector.

Standard Resistance

Tester Connections	Specified Conditions
EE1 male connector 2 - 5	120 to 280 kΩ
EE1 male connector 4 - 6	

(c) Reconnect the EE1connector.

OK → **CHECK FOR INTERMITTENT PROBLEMS**

NG

5 CHECK HARNESS AND CONNECTOR (CONNECTOR - KNOCK SENSOR)

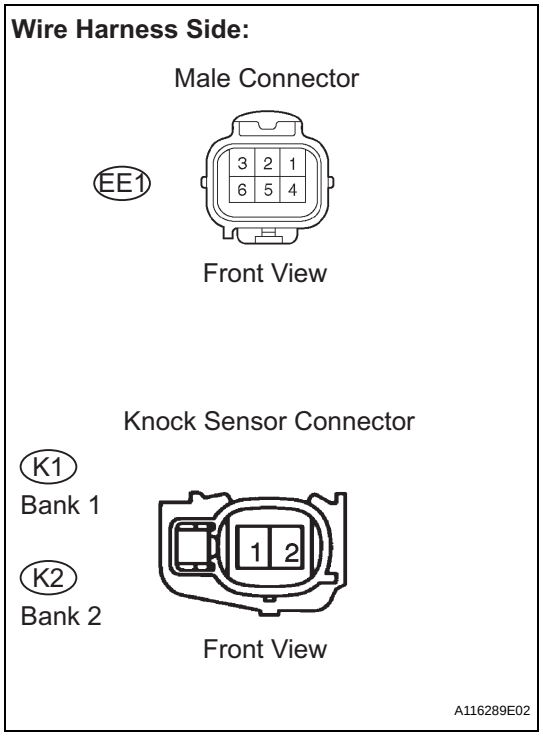

HINT:
- If DTC P0327 or P0328 has changed to P0332 or P0333, check the knock sensor circuit on the right bank side.
- If DTC P0332 or P0333 has changed to P0327 or P0328, check the knock sensor circuit on the left bank side.

(a) Disconnect the EE1 connector.
(b) Disconnect the K1 and K2 knock sensor connectors.
(c) Check the resistance.

Standard Resistance (Check for open)

Tester Connections	Specified Conditions
EE1 male connector 2 - K1-2	Below 1 Ω
EE1 male connector 5 - K1-1	
EE1 male connector 4 - K2-2	
EE1 male connector 6 - K2-1	

Standard Resistance (Check for short)

Tester Connections	Specified Conditions
EE1 male connector 2 or K1-2 - Body ground	10 kΩ or higher
EE1 male connector 5 or K1-1 - Body ground	
EE1 male connector 4 or K2-2 - Body ground	
EE1 male connector 6 or K2-1 - Body ground	

(d) Reconnect the EE1 connector.
(e) Reconnect the knock sensor connector.

NG → **REPAIR OR REPLACE HARNESS OR CONNECTOR**

OK

REPLACE KNOCK SENSOR

DTC	P0335	Crankshaft Position Sensor "A" Circuit

DTC	P0339	Crankshaft Position Sensor "A" Circuit Intermittent

DESCRIPTION

The Crankshaft Position (CKP) sensor system consists of a CKP sensor plate and a pickup coil. The sensor plate has 34 teeth and is installed on the crankshaft. The pickup coil is made of an iron core and a magnet.

The sensor plate rotates and, as each tooth passes through the pickup coil, a pulse signal is created. The pickup coil generates 34 signals per engine revolution. Based on these signals, the ECM calculates the crankshaft position and engine RPM. Using these calculations, the fuel injection time and ignition timing are controlled.

ES

DTC No.	DTC Detection Conditions	Trouble Areas
P0335	• No CKP sensor signal to ECM while cranking (1 trip detection logic) • No CKP sensor signal to ECM at engine speed of 600 rpm or more (1 trip detection logic)	• Open or short in CKP sensor circuit • CKP sensor • Sensor plate (CKP sensor plate) • ECM
P0339	Under conditions (a), (b) and (c), no CKP sensor signal to ECM for 0.05 seconds or more (1 trip detection logic) (a) Engine speed 1,000 rpm or more (b) Starter signal OFF (c) 3 seconds or more have lapsed since starter signal switched from ON to OFF	

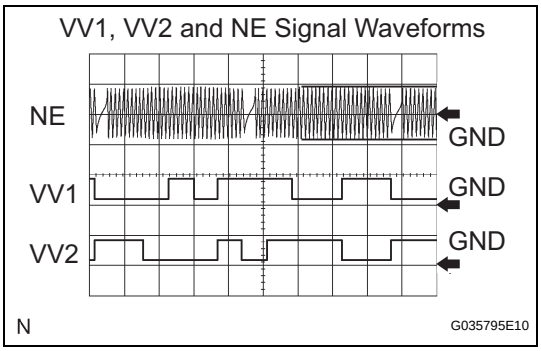

Reference: Inspection using an oscilloscope

HINT:

- The correct waveform is shown above.
- VV1+ and VV2+ stand for the VVT sensor signal, and NE+ stands for the CKP sensor signal.

Items	Contents
Terminals	VV1+ - VV1- VV2+ - VV2- NE+ - NE-
Equipment Settings	5 V/DIV, 20msec./DIV.
Conditions	Cranking or idling

MONITOR DESCRIPTION

If there is no signal from the CKP sensor despite the engine revolving, the ECM interprets this as a malfunction of the sensor.

If the malfunction is not repaired successfully, a DTC is set 10 seconds after the engine is next started.

MONITOR STRATEGY

Related DTCs	P0335: Crankshaft position sensor range check during cranking P0335: Crankshaft position sensor range check during engine running
Required Sensors/Components (Main)	Crankshaft Position (CKP) sensor
Required Sensors/Components (Related)	-
Frequency of Operation	Continuous
Duration	Conditions met for 3 times: CKP sensor range check during cranking 0.016 seconds: CKP sensor range check during engine running
MIL Operation	Immediate
Sequence of Operation	None

TYPICAL ENABLING CONDITIONS

All:

Monitor runs whenever following DTCs not present	None

Case 1:

Time after starter OFF to ON	0.3 seconds or more
Number of camshaft position sensor signal pulse	6 times
Battery voltage	7 V or more
Ignition switch	ON

Case 2:

Starter	OFF
Engine RPM	600 rpm or more
Time after starter from ON to OFF	3 seconds or more

TYPICAL MALFUNCTION THRESHOLDS

Case 1:

Number of CKP sensor signal pulse	132 or less, or 174 or more

Case 2:

Engine speed signal	No signal

COMPONENT OPERATING RANGE

CKP sensor	• CKP sensor output voltage fluctuates while crankshaft revolving • 34 CKP sensor signals per crankshaft revolution

WIRING DIAGRAM

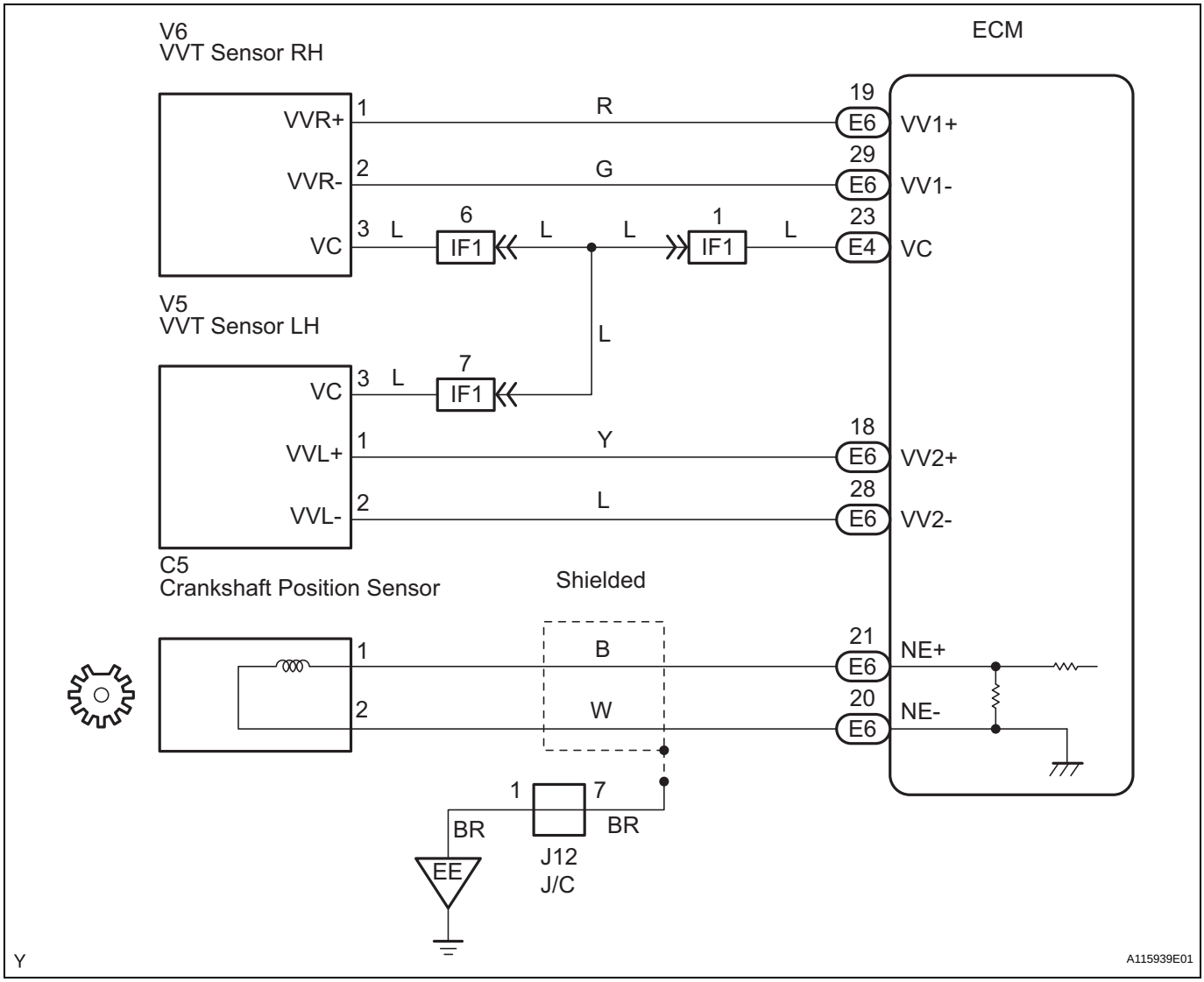

HINT:

- If no problem is found by this diagnostic troubleshooting procedure, troubleshoot the engine mechanical systems.
- Check the engine speed. The engine speed can be checked by using an intelligent tester. To check, follow the operation below:
  (a) Connect an intelligent tester to the DLC3.
  (b) Start the engine.
  (c) Turn the tester ON
  (d) Select the following menu items: DIAGNOSIS / ENHANCED OBD II / DATA LIST / PRIMARY / ENGINE SPD.
  The engine speed may be indicated as zero despite the engine revolving normally. This is caused by a lack of NE signals from the Crankshaft Position (CKP) sensor. Alternatively, the engine speed may be indicated as lower than the actual engine speed, if the CKP sensor voltage output is insufficient.
- Read freeze frame data using an intelligent tester. Freeze frame data record the engine condition when malfunctions are detected. When troubleshooting, freeze frame data can help determine if the vehicle was moving or stationary, if the engine was warmed up or not, if the air-fuel ratio was lean or rich, and other data, from the time the malfunction occurred.

1 INSPECT CRANKSHAFT POSITION SENSOR (RESISTANCE)

Component Side:

Crankshaft Position Sensor

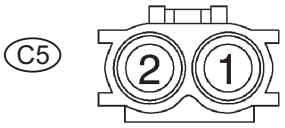

Front View

A078431E04

(a) Disconnect the C5 Crankshaft Position (CKP) sensor connector.
(b) Measure the resistance between terminals 1 and 2.

Standard Resistance

Tester Connections	Specified Conditions
1 - 2	1,630 Ω to 2,740 Ω at cold
1 - 2	2,065 Ω to 3,225 Ω at hot

HINT:
Terms cold and hot refer to the temperature of the coils.
Cold means approximately -10° to 50°C (14° to 122°F).
Hot means approximately 50° to 100°C (122° to 212°F).

(c) Reconnect the CKP sensor connector.

NG → **REPLACE CRANKSHAFT POSITION SENSOR**

OK

2 CHECK HARNESS AND CONNECTOR (CRANKSHAFT POSITION SENSOR - ECM)

Crankshaft Position Sensor Connector

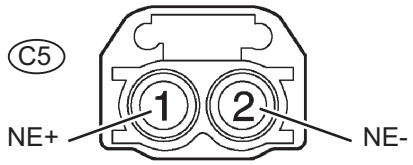

Front View

Wire Harness Side:

ECM Connector

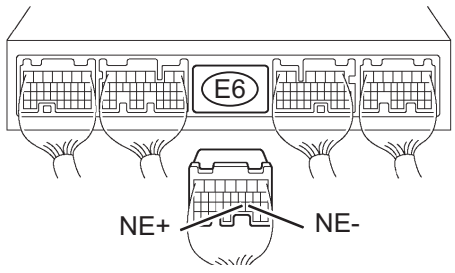

Y

A116290E02

(a) Disconnect the C5 CKP sensor connector.
(b) Disconnect the E6 ECM connector.
(c) Check the resistance.

Standard Resistance (Check for open)

Tester Connections	Specified Conditions
NE+ (C5-1) - NE+ (E6-21)	Below 1 Ω
NE- (C5-2) - NE- (E6-20)	

Standard Resistance (Check for short)

Tester Connections	Specified Conditions
NE+ (C5-1) or NE+ (E6-21) - Body ground	10 kΩ or higher
NE- (C5-2) or NE- (E6-20) - Body ground	

(d) Reconnect the ECM connector.
(e) Reconnect the CKP sensor connector.

NG → **REPAIR OR REPLACE HARNESS OR CONNECTOR**

OK

3	CHECK SENSOR INSTALLATION (CRANKSHAFT POSITION SENSOR)

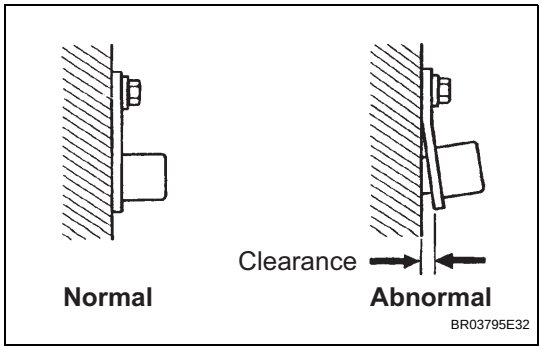

(a) Check the CKP sensor installation.
OK:
Sensor is installed correctly.

NG → **TIGHTEN SENSOR**

ES

OK

4	CHECK CRANKSHAFT POSITION SENSOR PLATE (TEETH OF SENSOR PLATE(CRANKSHAFT))

(a) Check the teeth of the sensor plate.
OK:
Sensor plate does not have any cracks or deformation.

NG → **REPLACE CRANKSHAFT POSITION SENSOR PLATE**

OK

REPLACE ECM

DTC	P0340	Camshaft Position Sensor "A" Circuit (Bank 1 or Single Sensor)
DTC	P0342	Camshaft Position Sensor "A" Circuit Low Input (Bank 1 or Single Sensor)
DTC	P0343	Camshaft Position Sensor "A" Circuit High Input (Bank 1 or Single Sensor)
DTC	P0345	Camshaft Position Sensor "A" Circuit (Bank 2)
DTC	P0347	Camshaft Position Sensor "A" Circuit Low Input (Bank 2)
DTC	P0348	Camshaft Position Sensor "A" Circuit High Input (Bank 2)

DESCRIPTION

The Variable Valve Timing (VVT) sensor (VV signal) consists of a magnet, iron core and pickup coil. The VV signal plate has 3 teeth on its outer circumference and is installed on the camshaft timing pulley. When the camshafts rotate, the protrusion on the signal plate and the air gap on the pickup coil change, causing fluctuations in the magnetic field and generating a voltage in the pickup coil.

This sensor monitors a timing rotor located on the camshaft and is used to detect the camshaft angle by the ECM. The camshaft rotation synchronizes with the crankshaft rotation, and this sensor communicates the rotation of the camshaft timing rotor as a pulse signal to the ECM. Based on this signal, the ECM controls fuel injection time and ignition timing.

DTC No.	DTC Detection Conditions	Trouble Areas
P0340 P0345	• Input voltage to ECM remains 0.3 V or less, or 4.7 V or higher for more than 5 seconds, when 2 or more seconds have elapsed after turning ignition switch ON (2 trip detection logic) • No VVT sensor signal to ECM during cranking (1 trip detection logic)	• Open or short in VVT sensor circuit • VVT sensor • Camshaft timing pulley • Jumped tooth of timing chain • ECM
P0342 P0347	Output voltage of VVT sensor 0.3 V or less for 5 seconds (1 trip detection logic)	
P0343 P0348	Output voltage of VVT sensor 4.7 V or more for 5 seconds (1 trip detection logic)	

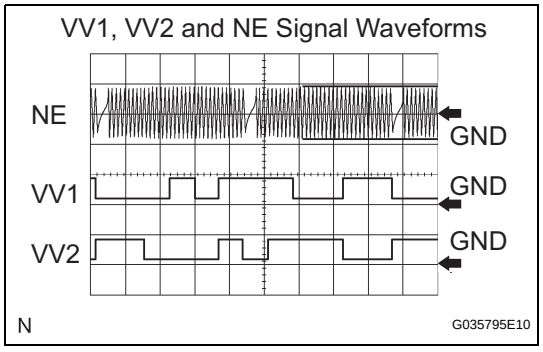

Reference: Inspection using an oscilloscope
HINT:
- The correct waveform is shown above.
- VV1+ and VV2+ stand for the VVT sensor signal, and NE+ stands for the CKP sensor signal.

Items	Contents
Terminals	NE+ - NE- VV1+ - VV1- VV2+ - VV2-
Equipment Settings	5V/Division, 20ms/Division
Conditions	Cranking or idling

MONITOR DESCRIPTION

If no signal is transmitted by the VVT sensor despite the engine revolving, or the rotations of the camshaft and the crankshaft are not synchronized, the ECM interprets this as a malfunction of the sensor.

MONITOR STRATEGY

Related DTCs	P0340: VVT sensor (Bank 1) open/short P0340: VVT position/Crankshaft position misalignment (Bank 1) P0342: VVT position sensor (Bank 1) range check (low voltage) P0343: VVT position sensor (Bank 1) range check (hign voltage) P0345: VVT sensor (Bank 2) open/short P0345: VVT position/Crankshaft position misalignment (Bank 2) P0347: VVT position sensor (Bank 2) range check (low voltage) P0348: VVT position sensor (Bank 2) range check (hign voltage)
Required Sensors/Components (Main)	VVT position sensors (Banks 1 and 2)
Required Sensors/Components (Related)	Crankshaft position sensor
Frequency of Operation	Continuous
Duration	4 seconds: P0340 (Camshaft position sensor range check), P0345 (VVT sensor range check (While starting engine)) 5 seconds: Others
MIL Operation	2 driving cycles: P0340 (Camshaft position sensor range check), P0345 (VVT sensor range check (While starting engine)) Immediate: Others
Sequence of Operation	None

TYPICAL ENABLING CONDITIONS

All:

Monitor runs whenever following DTCs not present	None

Camshaft Position Sensor Range Check:

Starter	ON and not starter ON again
Minimum battery voltage while starter ON	Less than 11V

Camshaft Position/Crankshaft Position Misalignment:

Engine RPM	600 rpm or more
Starter	OFF

Camshaft Position Sensor Range Check (Fluctuating, Low voltage, High voltage):

Starter	OFF
Ignition switch ON and time after ignition switch is OFF to ON	2 seconds or more

VVT sensor range check (While starting engine):

Starter	ON
Battery voltage while starter ON once at least	Less than 11 V

VVT sensor range check (After starting engine):

Engine RPM	600 rpm or more
Starter	OFF
Battery voltage	8 V or more
Ignition switch	ON

VVT sensor range check (Fluctuating, Low voltage, High voltage):

Starter	OFF
Ignition switch ON and time after ignition switch is OFF to ON	2 seconds or more
Battery voltage	8 V or more

ES

TYPICAL MALFUNCTION THRESHOLDS

Camshaft Position Sensor Range Check:

Camshaft position signal	No signal

Camshaft Position/Crankshaft Position Misalignment:

Camshaft position and crankshaft position phase	Mis-aligned

Camshaft Position Sensor Range Check (Fluctuating):

Camshaft position position voltage	Less than 0.3 V, or more than 4.7 V

Camshaft Position Sensor Range Check (Low voltage):

Camshaft position position voltage	Less than 0.3 V

Camshaft Position Sensor Range Check (High voltage):

Camshaft position position voltage	More than 4.7 V

VVT sensor range check (While starting engine):

VVT sensor signal	No signal

VVT sensor range check (After starting engine):

VVT sensor signal	No signal

VVT sensor range check (Fluctuating):

VVT sensor voltage	Less than 0.3 V, or more than 4.7 V

VVT sensor range check (Low voltage):

VVT sensor voltage	Less than 0.3 V

VVT sensor range check (High voltage):

VVT sensor voltage	More than 4.7 V

COMPONENT OPERATING RANGE

VVT sensor voltage	0.3 to 4.7 V

WIRING DIAGRAM

Refer to DTC P0335 (See page ES-184).

HINT:
Read freeze frame data using an intelligent tester. Freeze frame data records the engine conditions when a malfunction is detected. When troubleshooting, freeze frame data can help determine if the vehicle was running or stopped, if the engine was warmed up or not, if the air-fuel ratio was lean or rich, and other data from the time the malfunction occurred.

1 CHECK ECM TERMINAL VOLTAGE

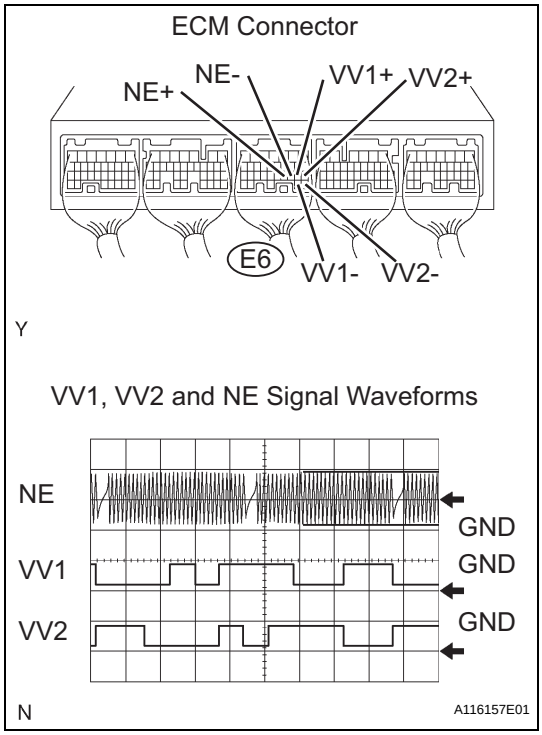

(a) Inspect the ECM using an oscilloscope.
(1) While the engine is idling, check the waveform between the terminals of the ECM connector.
Standard

Tester Connections	Specified Conditions
VV1+ (E6-19) - VV1- (E6-29)	Correct waveform as shown in illustration
VV2+ (E6-18) - VV2- (E6-28)	
NE+ (E6-21) - NE- (E6-20)	

NG → **REPLACE VVT SENSOR**

OK

2 CHECK VVT SENSOR (SENSOR POWER SOURCE)

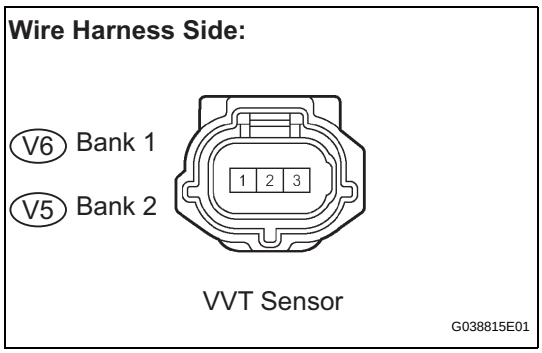

(a) Disconnect the V6 or V5 VVT sensor connector.
(b) Measure the voltage between the terminals of the VVT sensor.
Standard Voltage

Tester Connection	Specified Condition
3 - Body ground	4.5 to 5.0 V

(c) Reconnect the VVT sensor connector.

NG → **REPAIR OR REPLACE HARNESS OR CONNECTOR**

OK

3	CHECK HARNESS AND CONNECTOR (VVT SENSOR - ECM)

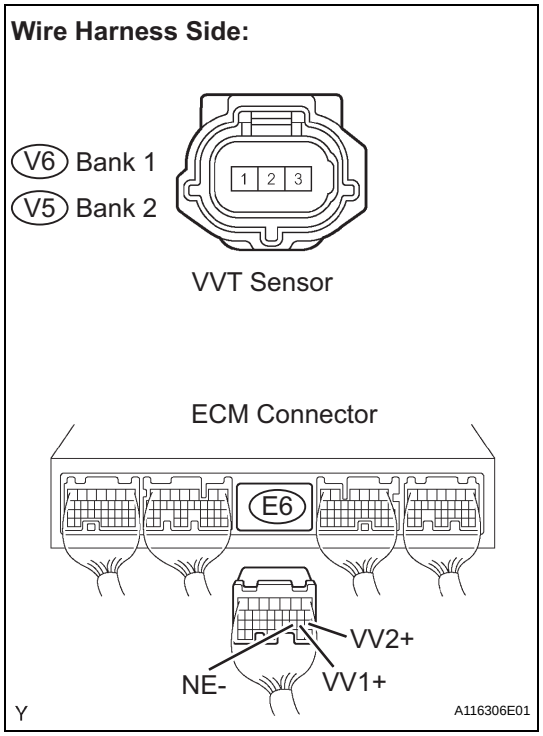

(a) Disconnect the V5 or V6 VVT sensor connector.
(b) Disconnect the E6 ECM connector.
(c) Check the resistance.

Standard Resistance (Check for open)

Tester Connections	Specified Conditions
VVT sensor (V6-1) - VV1+ (E6-19)	Below 1 Ω
VVT sensor (V5-1) - VV2+ (E6-18)	
VVT sensor (V6-2) - VV1- (E6-29)	
VVT sensor (V5-2) - VV2- (E6-28)	

Standard Resistance (Check for short)

Tester Connections	Specified Conditions
VVT sensor (V6-1) or VV1+ (E6-19) - Body ground	10 kΩ or higher
VVT sensor (V5-1) or VV2+ (E6-18) - Body ground	
VVT sensor (V6-2) or VV1- (E6-29) - Body ground	
VVT sensor (V5-2) or VV2- (E6-28) - Body ground	

(d) Reconnect the VVT sensor connector.
(e) Reconnect the ECM connector.

NG → **REPAIR OR REPLACE HARNESS OR CONNECTOR**

OK ↓

4	CHECK SENSOR INSTALLATION (VVT SENSOR)

NG → **TIGHTEN SENSOR**

OK ↓

5	CHECK CAMSHAFT TIMING GEAR ASSEMBLY (TEETH PLATE)

(a) Check the teeth of the signal plate.

OK:

Sensor plate teeth do not have any cracks or deformation.

NG → **REPLACE CAMSHAFT TIMING GEAR ASSEMBLY**

OK ↓

REPLACE ECM

DTC	P0351	Ignition Coil "A" Primary / Secondary Circuit
DTC	P0352	Ignition Coil "B" Primary / Secondary Circuit
DTC	P0353	Ignition Coil "C" Primary / Secondary Circuit
DTC	P0354	Ignition Coil "D" Primary / Secondary Circuit
DTC	P0355	Ignition Coil "E" Primary / Secondary Circuit
DTC	P0356	Ignition Coil "F" Primary / Secondary Circuit

HINT:
- These DTCs indicate malfunctions relating to the primary circuit.
- If DTC P0351 is set, check No. 1 ignition coil with igniter circuit.
- If DTC P0352 is set, check No. 2 ignition coil with igniter circuit.
- If DTC P0353 is set, check No. 3 ignition coil with igniter circuit.
- If DTC P0354 is set, check No. 4 ignition coil with igniter circuit.
- If DTC P0355 is set, check No. 5 ignition coil with igniter circuit.
- If DTC P0356 is set, check No. 6 ignition coil with igniter circuit.

DESCRIPTION

A Direct Ignition System (DIS) is used on this vehicle.
The DIS is a 1-cylinder ignition system in which each cylinder is ignited by one ignition coil and one spark plug is connected to the end of each secondary wiring. A powerful voltage, generated in the secondary wiring, is applied directly to each spark plug. The sparks of the spark plugs pass from the center electrodes to the ground electrodes.
The ECM determines the ignition timing and transmits the ignition (IGT) signals to each cylinder. Using the IGT signal, the ECM turns the power transistor inside the igniter on and off. The power transistor, in turn, switches on and off the current to the primary coil. When the current to the primary coil is cut off, a powerful voltage is generated in the secondary coil. This voltage is applied to the spark plugs, causing them to spark inside the cylinders. As the ECM cuts the current to the primary coil, the igniter sends back an ignition confirmation (IGF) signal to the ECM, for each cylinder ignition.

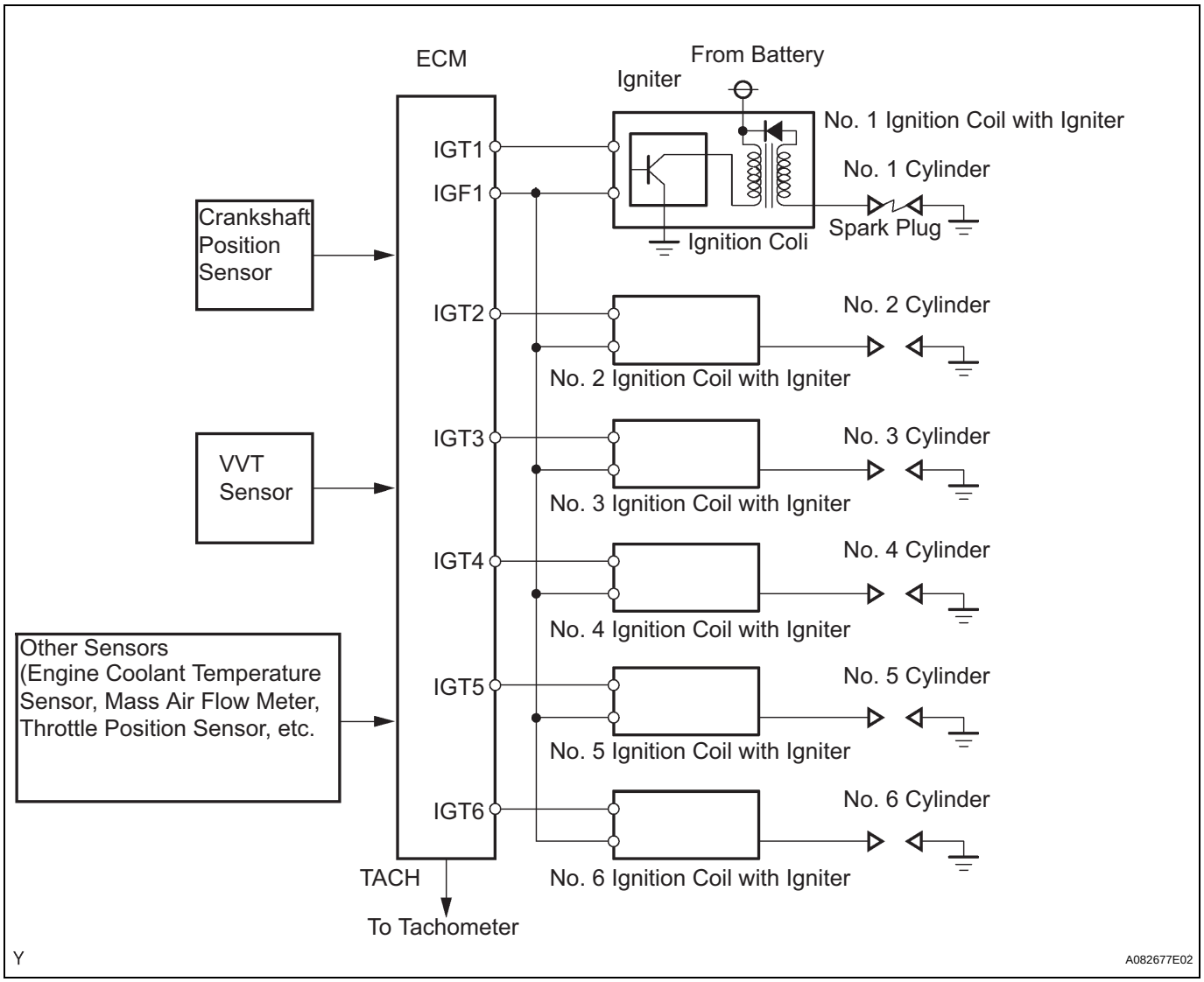

DTC No.	DTC Detection Conditions	Trouble Areas
P0351 P0352 P0353 P0354 P0355 P0356	No IGF signal to ECM while engine running (1 trip detection logic)	• Ignition system • Open or short in IGF1 or IGT circuit (1 to 6) between ignition coil with igniter and ECM • No. 1 to No. 6 ignition coils with igniters • ECM

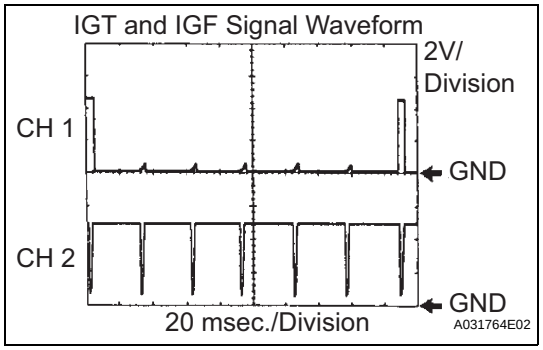

Reference: Inspection using an oscilloscope
While cranking or idling, check the waveform between terminals IGT(1 to 6) and E1, and IGF1 and E1 of the ECM connector.

Items	Contents
Terminals	CH1: IGT1, IGT2, IGT3, IGT4, IGT5, IGT6 - E1 CH2: IGF1 - E1
Equipment Settings	2 V/Division, 20 ms/Division
Conditions	Cranking or idling

MONITOR DESCRIPTION

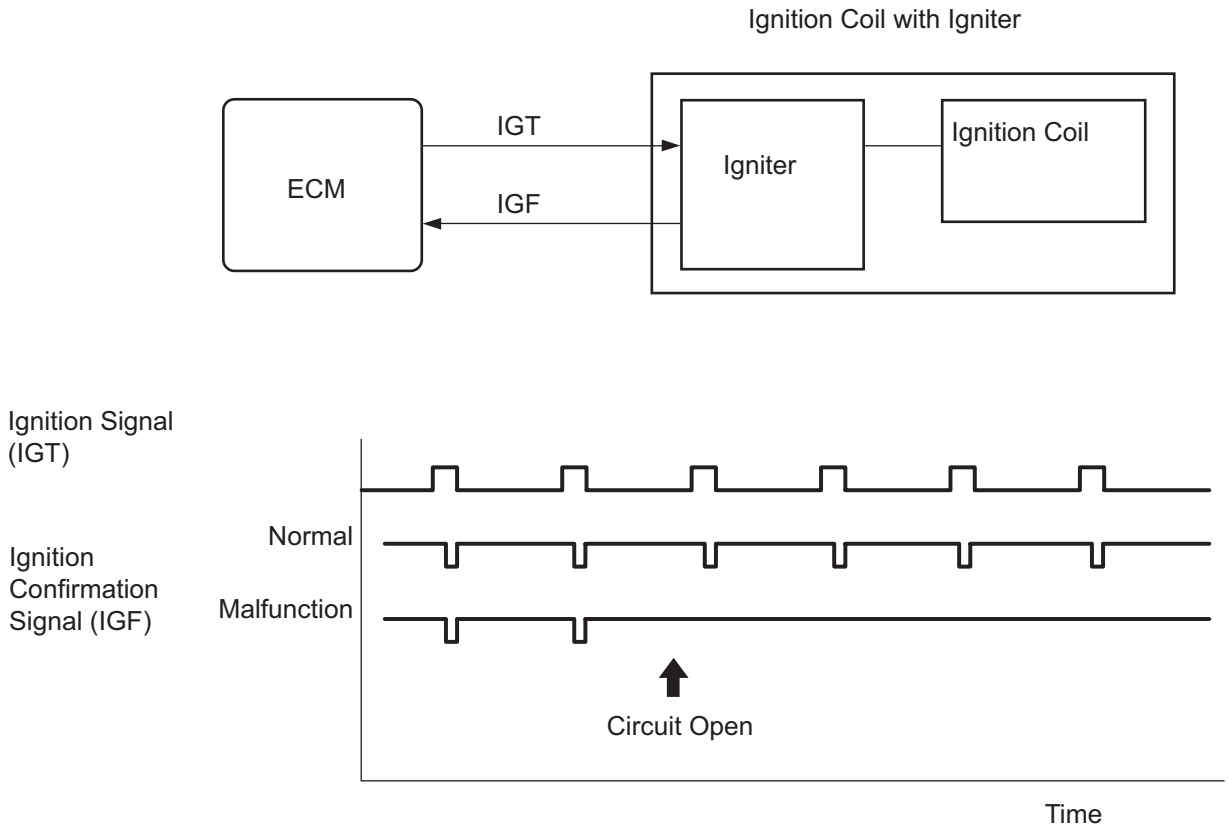

Y

A115898E01

If the ECM does not receive any IGF signals despite transmitting the IGT signal, it interprets this as a fault in the igniter and sets a DTC.
If the malfunction is not repaired successfully, a DTC is set 1second after the engine is next started.

MONITOR STRATEGY

Related DTCs	P0351: Igniter (Cylinder 1) malfunction P0352: Igniter (Cylinder 2) malfunction P0353: Igniter (Cylinder 3) malfunction P0354: Igniter (Cylinder 4) malfunction P0355: Igniter (Cylinder 5) malfunction P0356: Igniter (Cylinder 6) malfunction

Required Sensors/Components (Main)	Igniter (Cylinder 1 to 6)
Required Sensors/Components (Related)	Crankshaft position sensor
Frequency of Operation	Continuous
Duration	0.256 seconds and 4 sparks
MIL Operation	Immediate
Sequence of Operation	None

TYPICAL ENABLING CONDITIONS

Monitor runs whenever following DTCs not present	None
Either of following conditions 1 or 2 met	-
1. Following conditions (a) and (b) met:	-
(a) Engine RPM	500 rpm or less
(b) Battery voltage	6 V or more
2. Following conditions (a) and (b) met:	-
(a) Engine RPM	More than 500 rpm
(b) Battery voltage	10 V or more
(c) Number of sparks after CPU is reset	5 sparks or more

TYPICAL MALFUNCTION THRESHOLDS

Ignition signal fail count	More than 2 times
Ignition signal fail count is on the right:	When IGF does not return despite sending IGT.

COMPONENT OPERATING RANGE

IGF signal	Igniter transmits IGF signal when it receives IGT signal from ECM

WIRING DIAGRAM

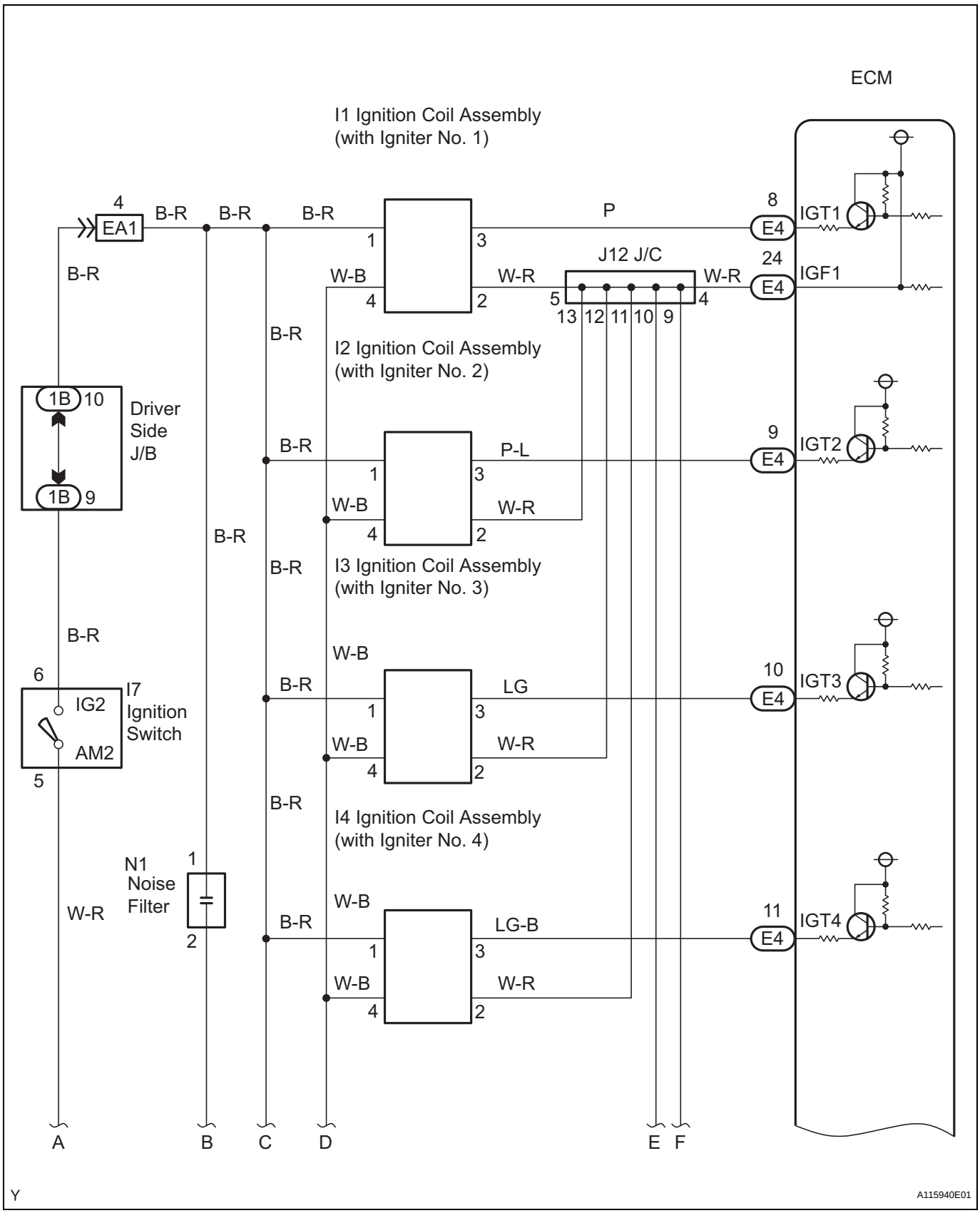

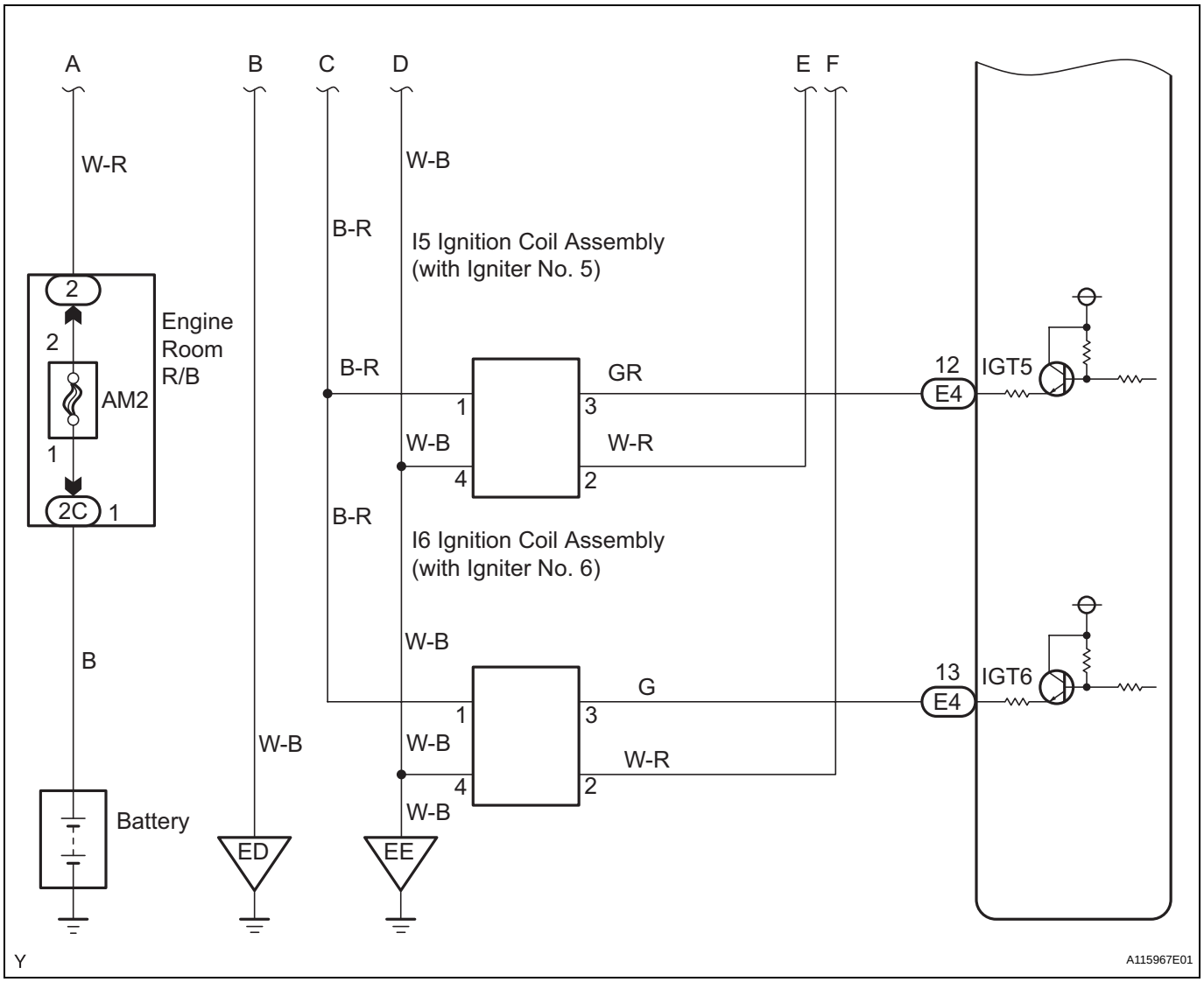

ES

HINT:
Read freeze frame data using an intelligent tester. Freeze frame data record the engine condition when malfunctions are detected. When troubleshooting, freeze frame data can help determine if the vehicle was moving or stationary, if the engine was warmed up or not, if the air-fuel ratio was lean or rich, and other data, from the time the malfunction occurred.

1	CHECK SPARK PLUG AND SPARK OF MISFIRING CYLINDER

(a) Check the spark plug and sparks of the misfiring cylinder (See page IG-3).

NG → Go to step 4

OK

2	CHECK HARNESS AND CONNECTOR (IGNITION COIL ASSEMBLY - ECM (IGF1 SIGNAL TERMINAL))

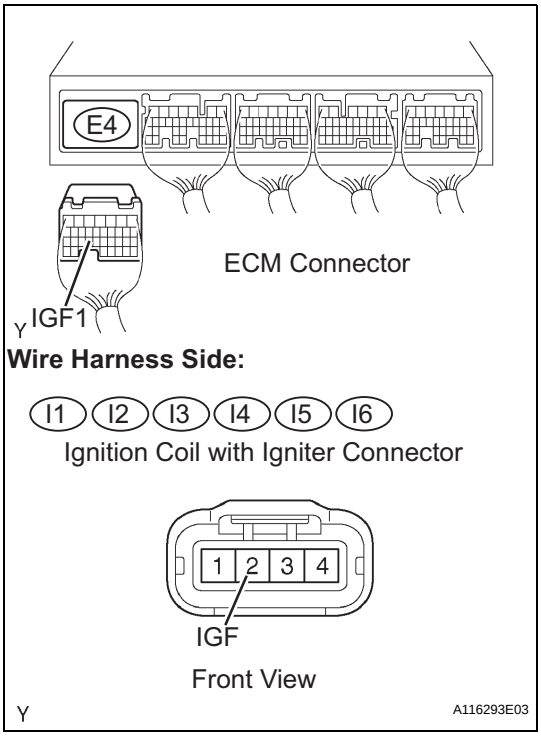

(a) Disconnect the I1, I2, I3, I4, I5 or I6 ignition coil with igniter connector.
(b) Disconnect the E4 ECM connector.
(c) Check the resistance.

Standard Resistance (Check for open)

Tester Connections	Specified Conditions
IGF (I1-2) - IGF1 (E4-24)	Below 1 Ω
IGF (I2-2) - IGF1 (E4-24)	
IGF (I3-2) - IGF1 (E4-24)	
IGF (I4-2) - IGF1 (E4-24)	
IGF (I5-2) - IGF1 (E4-24)	
IGF (I6-2) - IGF1 (E4-24)	

Standard Resistance (Check for short)

Tester Connections	Specified Conditions
IGF (I1-2) or IGF1 (E4-24) - Body ground	10 kΩ or higher
IGF (I2-2) or IGF1 (E4-24) - Body ground	
IGF (I3-2) or IGF1 (E4-24) - Body ground	
IGF (I4-2) or IGF1 (E4-24) - Body ground	
IGF (I5-2) or IGF1 (E4-24) - Body ground	
IGF (I6-2) or IGF1 (E4-24) - Body ground	

(d) Reconnect the ECM connector.
(e) Reconnect the ignition coil with igniter connector.

NG → **REPAIR OR REPLACE HARNESS OR CONNECTOR**

OK

3	INSPECT ECM (IGF1 VOLTAGE)

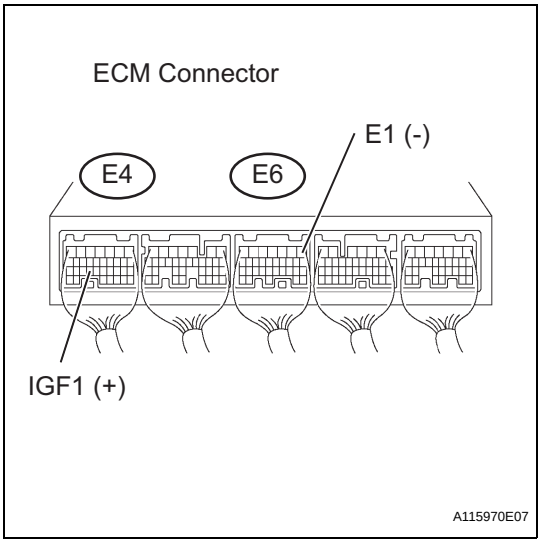

(a) Disconnect the ignition coil connector.
(b) Turn the ignition switch ON.
(c) Measure the voltage between the terminals of the E4 and E6 ECM connectors.

Standard Voltage

Tester Connection	Specified Condition
IGF1 (E4-24) - E1 (E6-1)	4.5 to 5.5 V

(d) Reconnect the ignition coil connector.

NG → **REPLACE ECM**

OK

REPLACE IGNITION COIL ASSEMBLY

4	CHECK HARNESS AND CONNECTOR (IGNITION COIL ASSEMBLY - ECM (IGT SIGNAL TERMINAL))

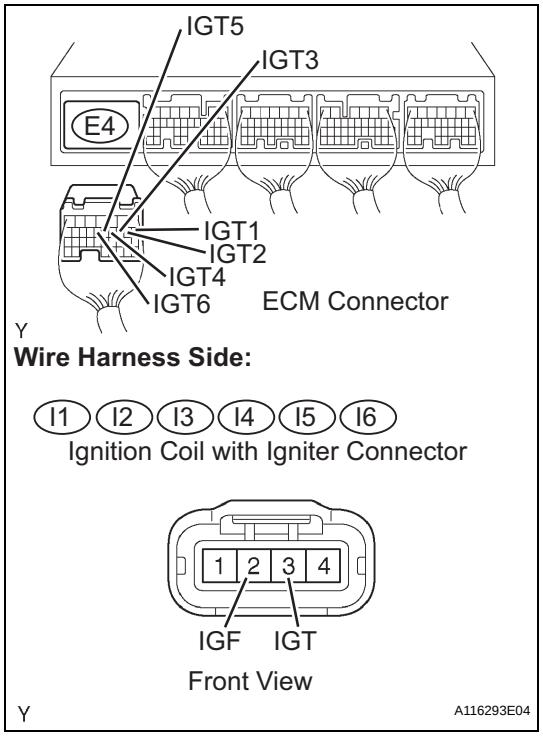

(a) Disconnect the I1, I2, I3, I4, I5 or I6 ignition coil with igniter connector.
(b) Disconnect the E4 ECM connector.
(c) Check the resistance.

Standard Resistance (Check for open)

Tester Connections	Specified Conditions
IGT (I1-3) - IGT1 (E4-8)	Below 1 Ω
IGT (I2-3) - IGT2 (E4-9)	
IGT (I3-3) - IGT3 (E4-10)	
IGT (I4-3) - IGT4 (E4-11)	
IGT (I5-3) - IGT5 (E4-12)	
IGT (I6-3) - IGT6 (E4-13)	

Standard Resistance (Check for short)

Tester Connections	Specified Conditions
IGT (I1-3) or IGT1 (E4-8) - Body ground	10 kΩ or higher
IGT (I2-3) or IGT2 (E4-9) - Body ground	
IGT (I3-3) or IGT3 (E4-10) - Body ground	
IGT (I4-3) or IGT4 (E4-11) - Body ground	
IGT (I5-3) or IGT5 (E4-12) - Body ground	
IGT (I6-3) or IGT6 (E4-13) - Body ground	

(d) Reconnect the ECM connector.
(e) Reconnect the ignition coil with igniter connector.

NG → **REPAIR OR REPLACE HARNESS OR CONNECTOR**

OK

ES

5	INSPECT ECM (IGT1, IGT2, IGT3, IGT4, IGT5, OR IGT6 VOLTAGE)

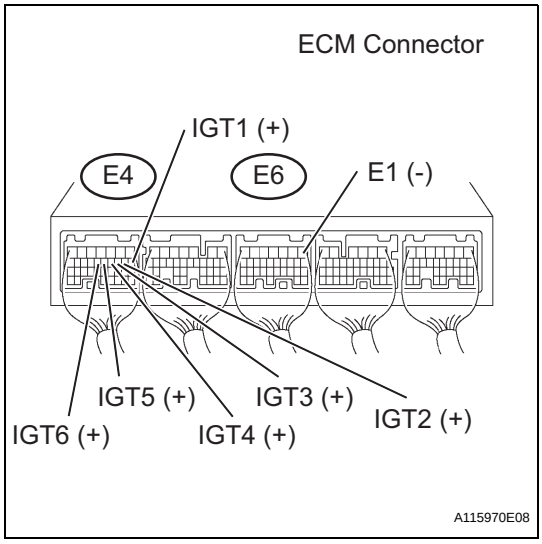

(a) Measure the voltage between the terminals of the E4 and E6 ECM connectors.

Standard Voltage

Tester Connections	Specified Conditions
IGT1 (E4-8) - E1 (E6-1)	0.1 to 4.5 V
IGT2 (E4-9) - E1 (E6-1)	
IGT3 (E4-10) - E1 (E6-1)	
IGT4 (E4-11) - E1 (E6-1)	
IGT5 (E4-12) - E1 (E6-1)	
IGT6 (E4-13) - E1 (E6-1)	

NG → **REPLACE ECM**

OK

6	INSPECT ECM (IGT1, IGT2, IGT3, IGT4, IGT5, OR IGT6 VOLTAGE)

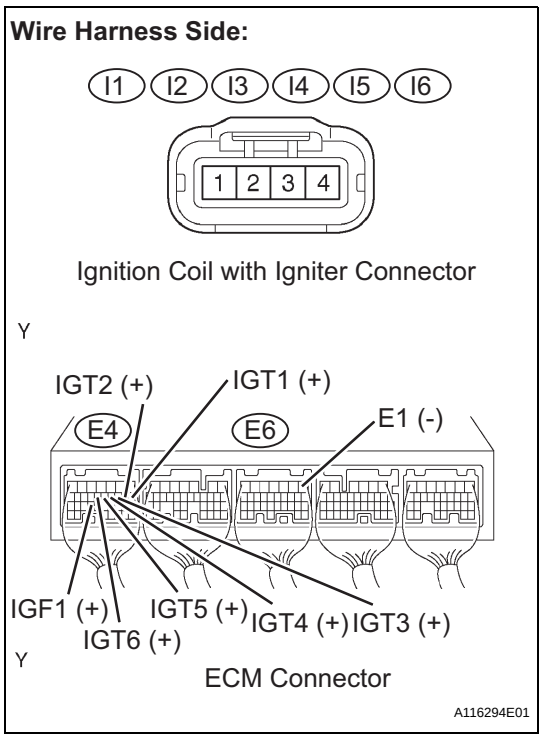

(a) Disconnect the I1, I2, I3, I4, I5 or I6 ignition coil connector.

(b) Measure the voltage between the terminals of the E4 and E6 ECM connectors.

Standard Voltage

Tester Connections	Specified Conditions
IGT1 (E4-8) - E1 (E6-1)	4.5 V or more
IGT2 (E4-9) - E1 (E6-1)	
IGT3 (E4-10) - E1 (E6-1)	
IGT4 (E4-11) - E1 (E6-1)	
IGT5 (E4-12) - E1 (E6-1)	
IGT6 (E4-13) - E1 (E6-1)	

(c) Reconnect the ignition coil connector.

NG → **Go to step 8**

OK

7 INSPECT IGNITION COIL ASSEMBLY (POWER SOURCE)

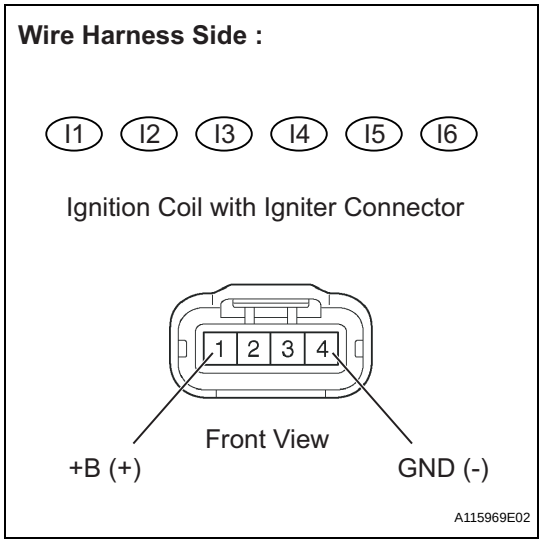

(a) Disconnect the I1, I2, I3, I4, I5 or I6 ignition coil with igniter connector.

(b) Check the resistance.

Standard Resistance (Check for open)

Tester Connections	Specified Conditions
GND (I1-4) - Body ground	Below 1 Ω
GND (I2-4) - Body ground	
GND (I3-4) - Body ground	
GND (I4-4) - Body ground	
GND (I5-4) - Body ground	
GND (I6-4) - Body ground	

(c) Turn the ignition switch ON.

(d) Measure the voltage between the terminals of the wire harness side connector.

Standard Voltage

Tester Connections	Specified Conditions
+B (I1-1) - GND (I1-4)	9 to 14 V
+B (I2-1) - GND (I2-4)	
+B (I3-1) - GND (I3-4)	
+B (I4-1) - GND (I4-4)	
+B (I5-1) - GND (I5-4)	
+B (I6-1) - GND (I6-4)	

(e) Reconnect the ignition coil with igniter connector.

OK → **REPLACE IGNITION COIL ASSEMBLY**

NG

ES

8	CHECK HARNESS AND CONNECTOR (IGNITION COIL ASSEMBLY - IGNITION SWITCH)

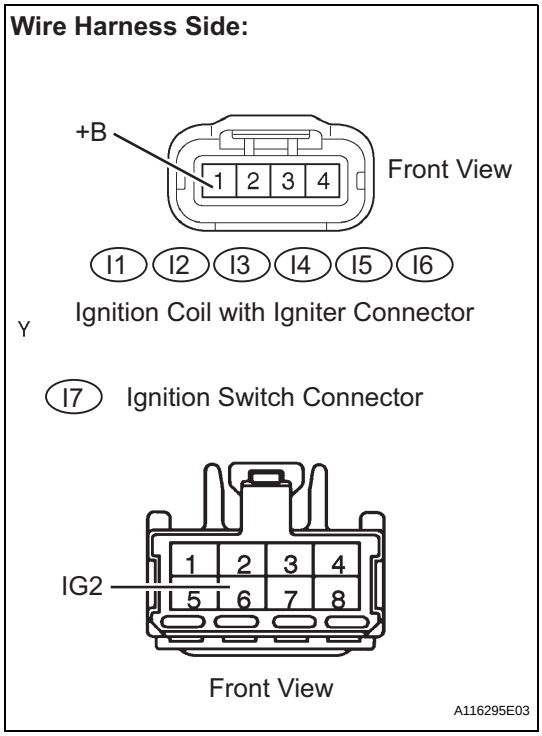

(a) Disconnect the I1, I2, I3, I4, I5 or I6 ignition coil with igniter connector.
(b) Disconnect the I7 ignition switch connector.
(c) Check the resistance.

Standard Resistance (Check for open)

Tester Connections	Specified Conditions
+B (I1-1) - IG2 (I7-6)	Below 1 Ω
+B (I2-1) - IG2 (I7-6)	
+B (I3-1) - IG2 (I7-6)	
+B (I4-1) - IG2 (I7-6)	
+B (I5-1) - IG2 (I7-6)	
+B (I6-1) - IG2 (I7-6)	

Standard Resistance (Check for short)

Tester Connections	Specified Conditions
+B (I1-1) or IG2 (I7-6) - Body ground	10 kΩ or higher
+B (I2-1) or IG2 (I7-6) - Body ground	
+B (I3-1) or IG2 (I7-6) - Body ground	
+B (I4-1) or IG2 (I7-6) - Body ground	
+B (I5-1) or IG2 (I7-6) - Body ground	
+B (I6-1) or IG2 (I7-6) - Body ground	

(d) Reconnect the ignition coil with igniter connector.
(e) Reconnect the ignition switch connector.

NG → **REPAIR OR REPLACE HARNESS OR CONNECTOR**

OK

REPLACE IGNITION COIL ASSEMBLY

DTC	P0420	Catalyst System Efficiency Below Threshold (Bank 1)

DTC	P0430	Catalyst System Efficiency Below Threshold (Bank 2)

MONITOR DESCRIPTION

The ECM uses sensors mounted in front of and behind the Three-Way Catalytic Converter (TWC) to monitor its efficiency.

The first sensor, the Air-Fuel Ratio (A/F) sensor, sends pre-catalyst information to the ECM. The second sensor, the Heated Oxygen (HO2) sensor, sends post-catalyst information to the ECM.

In order to detect any deterioration in the TWC, the ECM calculates the Oxygen Storage Capacity (OSC) of the TWC. This calculation is based on the voltage output of the HO2 sensor while performing active air-fuel ratio control, rather than the conventional detecting method, which uses the locus ratio.

The OSC value is an indication of the oxygen storage capacity of the TWC. When the vehicle is being driven with a warm engine, active air-fuel ratio control is performed for approximately 15 to 20 seconds. When it is performed, the ECM deliberately sets the air-fuel ratio to lean or rich levels. If a rich-lean cycle of the HO2 sensor is long, the OSC becomes greater. There is a direct correlation between the OSCs of the HO2 sensor and the TWC.

The ECM uses the OSC value to determine the state of the TWC. If any deterioration has occurred, it illuminates the MIL and sets a DTC.

DTC No.	DTC Detection Conditions	Trouble Areas
P0420	OSC value smaller than standard value under active air-fuel ratio control (2 trip detection logic)	• Gas leakage from exhaust system • A/F sensor (bank 1 sensor 1) • HO2 sensor (bank 1 sensor 2) • Exhaust manifold (TWC)
P0430	OSC value smaller than standard value under active air-fuel ratio control (2 trip detection logic)	• Gas leakage from exhaust system • A/F sensor (bank 2 sensor 1) • HO2 sensor (bank 2 sensor 2) • Exhaust manifold (TWC)

HINT:

- Bank 1 refers to the bank that includes cylinder No. 1.
- Bank 2 refers to the bank that does not include cylinder No. 1.
- Sensor 1 refers to the sensor closest to the engine assembly.
- Sensor 2 refers to the sensor farthest away from the engine assembly.

MONITOR STRATEGY

Related DTCs	P0420: Catalyst Deterioration P0430: Catalyst Deterioration
Required Sensors/Components (Main)	A/F sensor and heated oxygen sensor
Required Sensors/Components (Related)	Intake air temperature sensor, mass air flow meter, crankshaft position sensor and engine coolant temperature sensor
Frequency of Operation	Once per driving cycle
Duration	30 seconds or more
MIL Operation	2 driving cycles
Sequence of Operation	None

TYPICAL ENABLING CONDITIONS

Monitor runs whenever following DTCs not present	P0011 (VVT System 1 - Advance) P0012 (VVT System 1 - Retard) P0021 (VVT System 2 - Advance) P0022 (VVT System 2 - Retard) P0031, P0032, P0051, P0052 (A/F sensor heater - Sensor 1) P0037, P0038, P0057, P0058 (HO2 sensor Heater - Sensor 2) P0100 - P0103 (MAF meter) P0115 - P0118 (ECT sensor) P0120 - P0223, P2135 (TP sensor) P0125 (Insufficient ECT for closed loop) P0136, P0156 (HO2 Sensor - Sensor 2) P0171, P0172 (Fuel system) P0300 - P0306 (Misfire) P0335 (CKP sensor) P0340 (CMP sensor) P0351 - P0356 (Ignitor) P0500 (VSS) P2196, P2198 (A/F sensor - rationality) P2A00, P2A03 (A/F sensor - slow response)
Battery voltage	11 V or more
IAT	-10°C (14°F) or more
Engine coolant temperature sensor	75°C (167°F) or more
Atmospheric pressure coefficient	0.75 or more
Delay time after IDCE ON	Less than 5 seconds
Engine RPM	Less than 3,200 rpm
A/F sensor status	Activated
Fuel system status	Closed loop
Delay time after fuel cut	10 seconds or more
Engine load	10 to 70 %
All of the following conditions are met	Condition 1, 2 and 3
1. Mass air flow rate	5 to 70 g/sec
2. Front catalyst temperature (estimated)	650 to 840°C (1,202 to 1,544°F)
3. Rear catalyst temperature (estimated)	100 to 900°C (212 to 1,652°F)

TYPICAL MALFUNCTION THRESHOLDS

Oxygen Storage Capacity (OSC) of Three-Way Catalytic Converter (TWC)	Less than 0.04 g

MONITOR RESULT

Detailed information on Checking Monitor Status (See page ES-19).

CONDITIONING FOR SENSOR TESTING

HINT:

Perform the operation with the engine speeds and time durations described below prior to checking the waveforms of the A/F and HO2 sensors. This is in order to activate the sensors sufficiently to obtain the appropriate inspection results.

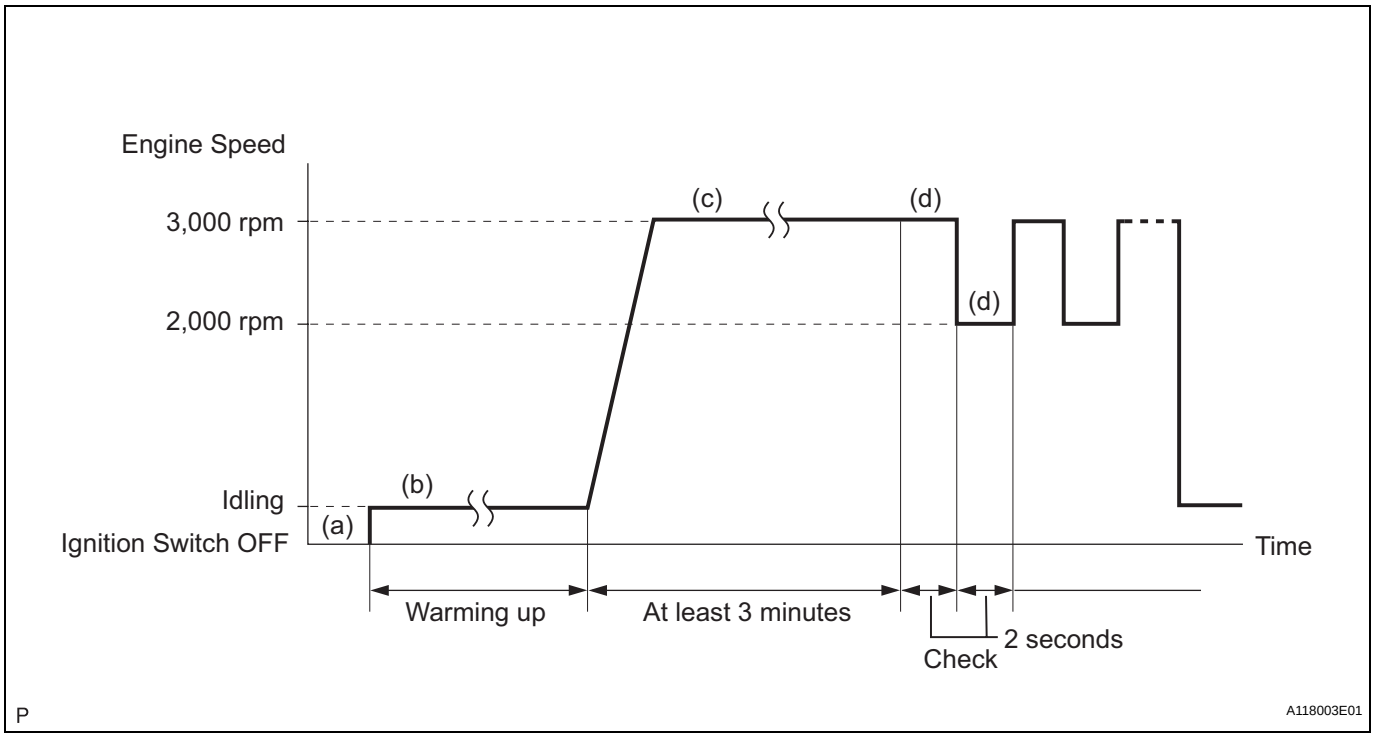

(a) Connect an intelligent tester to the DLC3.
(b) Start the engine and warm it up with all the accessories switched OFF, until the engine coolant temperature stabilizes.
(c) Run the engine at an engine speed of between 2,500 rpm and 3,000 rpm for at least 3 minutes.
(d) While running the engine at 3,000 rpm for 2 seconds and 2,000 rpm for 2 seconds, check the waveforms of the A/F and HO2 sensors using the tester.
HINT:

- If either of the voltage outputs of the Air-Fuel Ratio (A/F) or Heated Oxygen (HO2) sensor does not fluctuate, or either of the sensors makes a noise, the sensor may be malfunctioning.
- If the voltage outputs of both the sensors remain lean or rich, the air-fuel ratio may be extremely lean or rich. In such cases, perform the following A/F CONTROL using an intelligent tester.
- If the Three-Way Catalytic Converter (TWC) has deteriorated, the HO2 sensor (located behind the TWC) voltage output fluctuates up and down frequently, even under normal driving conditions (active air-fuel ratio control is not performed).

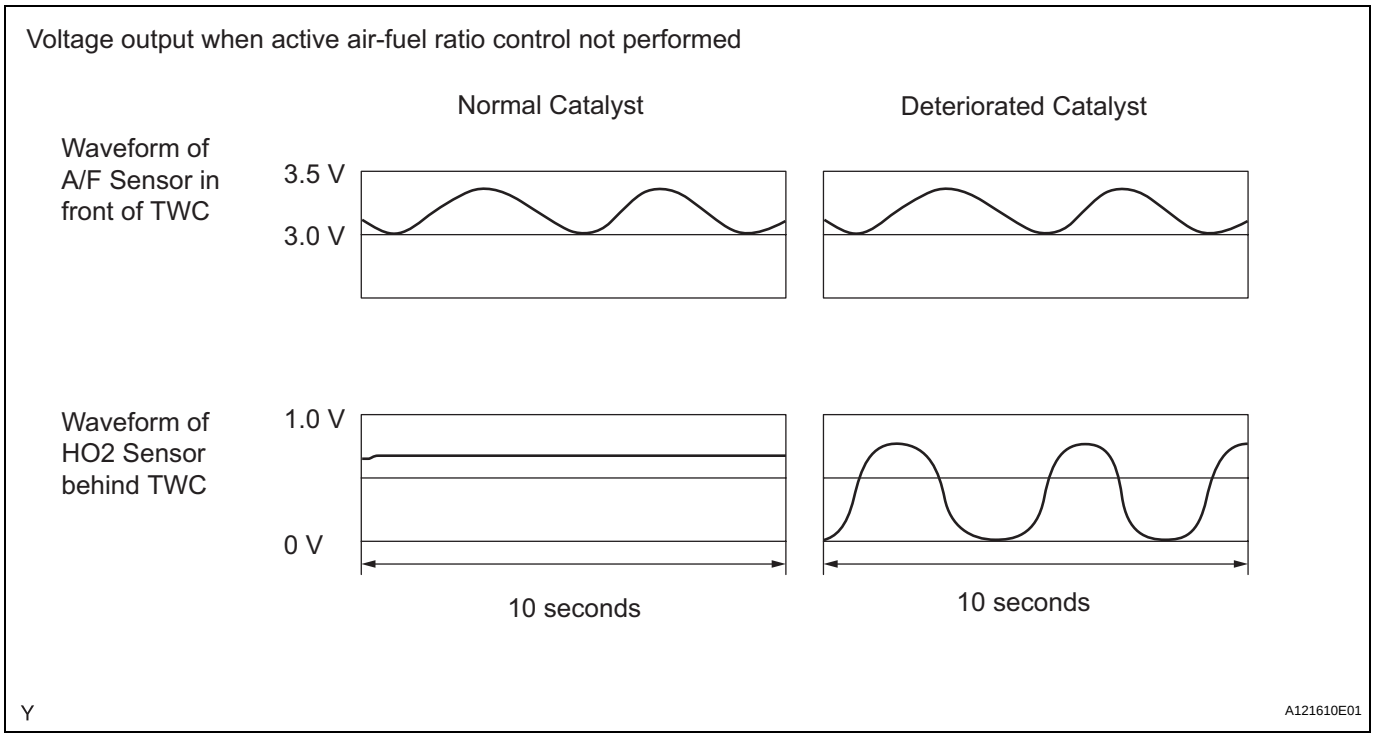

CONDITIONING FOR SENSOR TESTING

HINT:
Intelligent tester only:
Malfunctioning areas can be identified by performing the A/F CONTROL function provided in the ACTIVE TEST. The A/F CONTROL function can help to determine whether the Air-Fuel Ratio (A/F) sensor, Heated Oxygen (HO2) sensor and other potential trouble areas are malfunctioning.
The following instructions describe how to conduct the A/F CONTROL operation using an intelligent tester.
(1) Connect an intelligent tester to the DLC3.
(2) Start the engine and turn the tester ON.
(3) Warm up the engine at an engine speed of 2,500 rpm for approximately 90 seconds.
(4) Select the following menu items: DIAGNOSIS / ENHANCED OBD II / ACTIVE TEST / A/F CONTROL.
(5) Perform the A/F CONTROL operation with the engine in an idling condition (press the RIGHT or LEFT button to change the fuel injection volume).
(6) Monitor the voltage outputs of the A/F and HO2 sensors (AFS B1S1 and O2S B1S2 or AFS B2S1 and O2S B2S2) displayed on the tester.
HINT:

- The A/F CONTROL operation lowers the fuel injection volume by 12.5 % or increases the injection volume by 25 %.
- Each sensor reacts in accordance with increases and decreases in the fuel injection volume.

Standard

Tester Display (Sensor)	Injection Volumes	Status	Voltages
AFS B1S1 or AFS B2S1 (A/F)	+25 %	Rich	Less than 3.0
AFS B1S1 or AFS B2S1 (A/F)	-12.5 %	Lean	More than 3.35
O2S B1S2 or O2S B2S2 (HO2)	+25 %	Rich	More than 0.55
O2S B1S2 or O2S B2S2 (HO2)	-12.5 %	Lean	Less than 0.4

NOTICE:
The Air-Fuel Ratio (A/F) sensor has an output delay of a few seconds and the Heated Oxygen (HO2) sensor has a maximum output delay of approximately 20 seconds.

Case	A/F Sensor (Sensor 1) Output Voltage		HO2 Sensor (Sensor 2) Output Voltage		Main Suspected Trouble Areas
1	Injection volume +25 % -12.5 %		Injection volume +25 % -12.5 %		-
	Output voltage More than 3.35 V Less than 3.0 V		Output voltage More than 0.55 V Less than 0.4 V		
2	Injection volume +25 % -12.5 %		Injection volume +25 % -12.5 %		• A/F sensor • A/F sensor heater • A/F sensor circuit
	Output voltage Almost no reaction		Output voltage More than 0.55 V Less than 0.4 V		
3	Injection volume +25 % -12.5 %		Injection volume +25 % -12.5 %		• HO2 sensor • HO2 sensor heater • HO2 sensor circuit
	Output voltage More than 3.35 V Less than 3.0 V		Output voltage Almost no reaction		
4	Injection volume +25 % -12.5 %		Injection volume +25 % -12.5 %		• Injector • Fuel pressure • Gas leakage from exhaust system (Air-fuel ratio extremely lean or rich)
	Output voltage Almost no reaction		Output voltage Almost no reaction		

- Following the A/F CONTROL procedure enables technicians to check and graph the voltage outputs of both the A/F and HO2 sensors.
- To display the graph, select the following menu items on the tester: DIAGNOSIS / ENHANCED OBD II / ACTIVE TEST / A/F CONTROL / USER DATA / AFS B1S1 and O2S B1S2 or AFS B2S1 and O2S B2S2, and press the YES button and then the ENTER button followed by the F4 button.

HINT:
Read freeze frame data using an intelligent tester. Freeze frame data record the engine condition when malfunctions are detected. When troubleshooting, freeze frame data can help determine if the vehicle was moving or stationary, if the engine was warmed up or not, if the air-fuel ratio was lean or rich, and other data, from the time the malfunction occurred.

1	CHECK ANY OTHER DTCS OUTPUT (IN ADDITION TO DTC P0420 AND/OR P0430)

(a) Connect an intelligent tester to the DLC3.
(b) Turn the ignition switch ON and turn the tester ON.
(c) Select the following menu items: DIAGNOSIS / ENHANCED OBD II / DTC INFO / CURRENT CODES.
(d) Read DTCs.

Result

Display (DTC Output)	Proceed To
P0420 and/or P0430	A

Display (DTC Output)	Proceed To
P0420 and/or P0430 and other DTCs	B

HINT:
If any DTCs other than P0420 or P0430 are output, troubleshoot those DTCs first.

B → GO TO DTC CHART

A

2 PERFORM ACTIVE TEST USING INTELLIGENT TESTER (A/F CONTROL)

ES

(a) Connect an intelligent tester to the DLC3.
(b) Start the engine and turn the tester ON.
(c) Warm up the engine at an engine speed of 2,500 rpm for approximately 90 seconds.
(d) Select the following menu items: DIAGNOSIS / ENHANCED OBD II / ACTIVE TEST / A/F CONTROL.
(e) Perform the A/F CONTROL operation with the engine in an idling condition (press the RIGHT or LEFT button to change the fuel injection volume).
(f) Monitor the voltage outputs of the A/F and HO2 sensors (AFS B1S1 and O2S B1S2 or AFS B2S1 and O2S B2S2) displayed on the tester.
HINT:
- The A/F CONTROL operation lowers the fuel injection volume by 12.5 % or increases the injection volume by 25 %.
- Each sensor reacts in accordance with increases and decreases in the fuel injection volume.

Standard

Tester Display (Sensor)	Injection Volumes	Status	Voltages
AFS B1S1 or AFS B2S1 (A/F)	+25 %	Rich	Less than 3.0
AFS B1S1 or AFS B2S1 (A/F)	-12.5 %	Lean	More than 3.35
O2S B1S2 or O2S B2S2 (HO2)	+25 %	Rich	More than 0.55
O2S B1S2 or O2S B2S2 (HO2)	-12.5 %	Lean	Less than 0.4

Result

Status AFS B1S1 or AFS B2S1	Status O2S B1S2 or O2S B2S2	A/F Condition and A/F and HO2 Sensors Conditions	Misfires	Main Suspected Trouble Areas	Proceed To
Lean/Rich	Lean/Rich	Normal	-	• Three-Way Catalytic Converter (TWC) • Gas leakage from exhaust system	A
Lean	Lean/Rich	A/F sensor malfunction	-	• A/F sensor	B
Rich	Lean/Rich	A/F sensor malfunction	-	• A/F sensor	
Lean/Rich	Lean	HO2 sensor malfunction	-	• HO2 sensor • Gas leakage from exhaust system	C
Lean/Rich	Rich	HO2 sensor malfunction	-	• HO2 sensor • Gas leakage from exhaust system	

Status AFS B1S1 or AFS B2S1	Status O2S B1S2 or O2S B2S2	A/F Condition and A/F and HO2 Sensors Conditions	Misfires	Main Suspected Trouble Areas	Proceed To
Lean	Lean	Actual air-fuel ratio lean	May occur	• Extremely rich or lean actual air-fuel ratio • Gas leakage from exhaust system	A
Rich	Rich	Actual air-fuel ratio rich	-	• Extremely rich or lean actual air-fuel ratio • Gas leakage from exhaust system	

Lean: During A/F CONTROL, the A/F sensor output voltage (AFS) is consistently more than 3.35 V, and the HO2 sensor output voltage (O2S) is consistently less than 0.4 V.
Rich: During A/F CONTROL, the AFS is consistently less than 3.0 V, and the O2S is consistently more than 0.55 V.
Lean/Rich: During A/F CONTROL of the ACTIVE TEST, the output voltage of the HO2 sensor alternates correctly.

ES

B → **CHECK AND REPLACE AIR FUEL RATIO SENSOR**

C → **CHECK AND REPLACE HEATED OXYGEN SENSOR, AND CHECK AND REPAIR EXHAUST GAS LEAKAGE**

A

3 CHECK FOR EXHAUST GAS LEAKAGE

OK:
No gas leakage.

NG → **REPAIR OR REPLACE EXHAUST GAS LEAKAGE POINT**

OK

REPLACE THREE-WAY CATALYTIC CONVERTER

DTC	P043E	Evaporative Emission System Reference Orifice Clog Up

DTC	P043F	Evaporative Emission System Reference Orifice High Flow

DTC SUMMARY

DTCs	Monitoring Items	Malfunction Detection Conditions	Trouble Areas	Detection Timings	Detection Logics
P043E	Reference orifice clogged	Leak detection pump creates negative pressure through reference orifice, and EVAP system pressure measured to determine 0.02 inch leak criterion. 0.02 inch leak criterion measured at start and at end of leak check. If system pressure lower than -4.85 kPa (-36.38 mmHg)*, ECM determines that reference orifice has clogging malfunction.	• Canister pump module • Connector/wire harness (Canister pump module - ECM) • ECM • Leakage from EVAP system	While ignition switch OFF	2 trips
P043F	Reference orifice high-flow	Leak detection pump creates negative pressure through reference orifice, and EVAP system pressure measured to determine 0.02 inch leak criterion. 0.02 inch leak criterion generated at start and at end of leak check. If system pressure higher than -1.06 kPa (-7.95 mmHg)*, ECM determines that reference orifice has high-flow malfunction.			

*: The threshold values vary according to the atmospheric pressure measured at the beginning of the EVAP system monitor. The values described in the table above are based on an atmospheric pressure of 100 kPa (750.1 mmHg) (absolute pressure).
HINT:
The reference orifice is located inside the canister pump module.

DESCRIPTION

The circuit description can be found in the EVAP System (See page ES-351).

Refer to the EVAP System (See page ES-351).

MONITOR DESCRIPTION

5 hours* after the ignition switch is turned OFF, the electric leak detection pump creates negative pressure (vacuum) in the EVAP (Evaporative Emission) system. The ECM monitors for leaks and actuator malfunctions based on the EVAP pressure.
HINT:
*: If the engine coolant temperature is not below 35°C (95°F) 5 hours after the ignition switch is turned off, the monitor check starts 2 hours later. If it is still not below 35°C (95°F) 7 hours after the ignition switch is turned off, the monitor check starts 2.5 hours later.

Sequence	Operations	Descriptions	Duration
-	ECM activation	Activated by soak timer, 5 hours (7 or 9.5 hours) after ignition switch turned OFF.	-
A	Atmospheric pressure measurement	Vent valve turned OFF (vent) and EVAP system pressure measured by ECM in order to register atmospheric pressure. If pressure in EVAP system not between 70 kPa and 110 kPa (525 mmHg and 825 mmHg), ECM cancels EVAP system monitor.	10 seconds

Sequence	Operations	Descriptions	Duration
B	First 0.02 inch leak criterion measurement	In order to determine 0.02 inch leak criterion, leak detection pump creates negative pressure (vacuum) through reference orifice and then ECM checks if leak detection pump and vent valve operate normally.	60 seconds
C	EVAP system pressure measurement	Vent valve turned ON (closed) to shut EVAP system. Negative pressure (vacuum) created in EVAP system, and EVAP system pressure then measured. Write down measured value as they will be used in leak check. If EVAP pressure does not stabilize within 15 minutes, ECM cancels EVAP system monitor.	15 minutes*
D	Purge VSV monitor	Purge VSV opened and then EVAP system pressure measured by ECM. Large increase indicates normal.	10 seconds
E	Second 0.02 inch leak criterion measurement	After second 0.02 inch leak criterion measurement, leak check performed by comparing first and second 0.02 inch leak criterion. If stabilized system pressure higher than second 0.02 inch leak criterion, ECM determines that EVAP system leaking.	60 seconds
F	Final check	Atmospheric pressure measured and then monitoring result recorded by ECM.	-

ES

* If only a small amount of fuel is in the fuel tank, it takes longer for the EVAP pressure to stabilize.

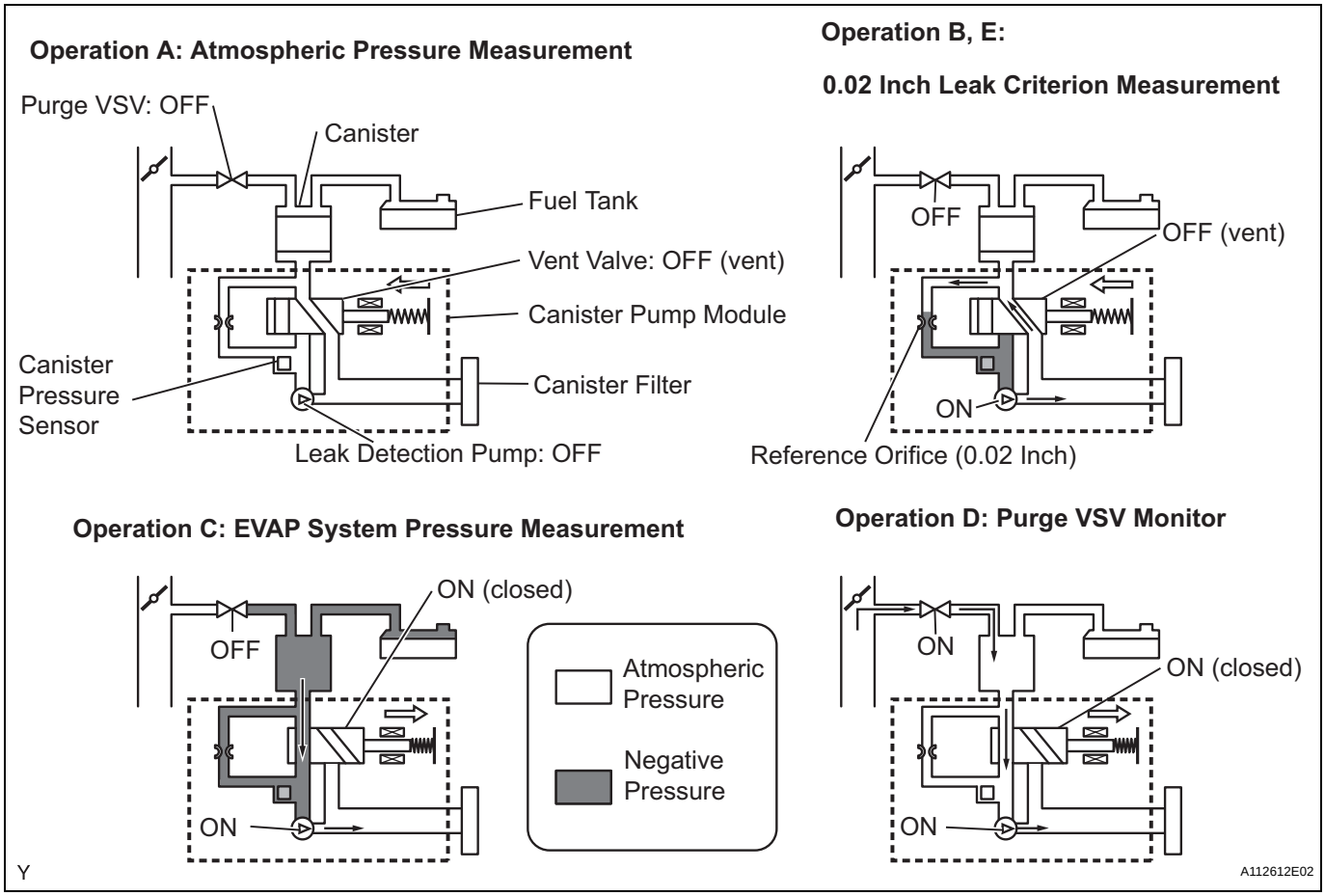

1. P043E: Reference orifice clogged
   In operation B, the leak detection pump creates negative pressure (vacuum) through the reference orifice. The EVAP system pressure is then measured by the ECM, using the canister pressure sensor, to determine the 0.02 inch leak criterion. If the pressure is lower than -4.85 kPa (-36.38 mmHg)*, the ECM interprets this as a clog malfunction in the reference orifice, and stops the EVAP (Evaporative Emission) system monitor. The ECM then illuminates the MIL and sets the DTC (2 trip detection logic).
   *: The threshold varies according to the atmospheric pressure measured in operation A. The value described above is based on an atmospheric pressure of 100 kPa (750.1 mmHg): absolute pressure.

EVAP Pressure when Reference Orifice Clogged:

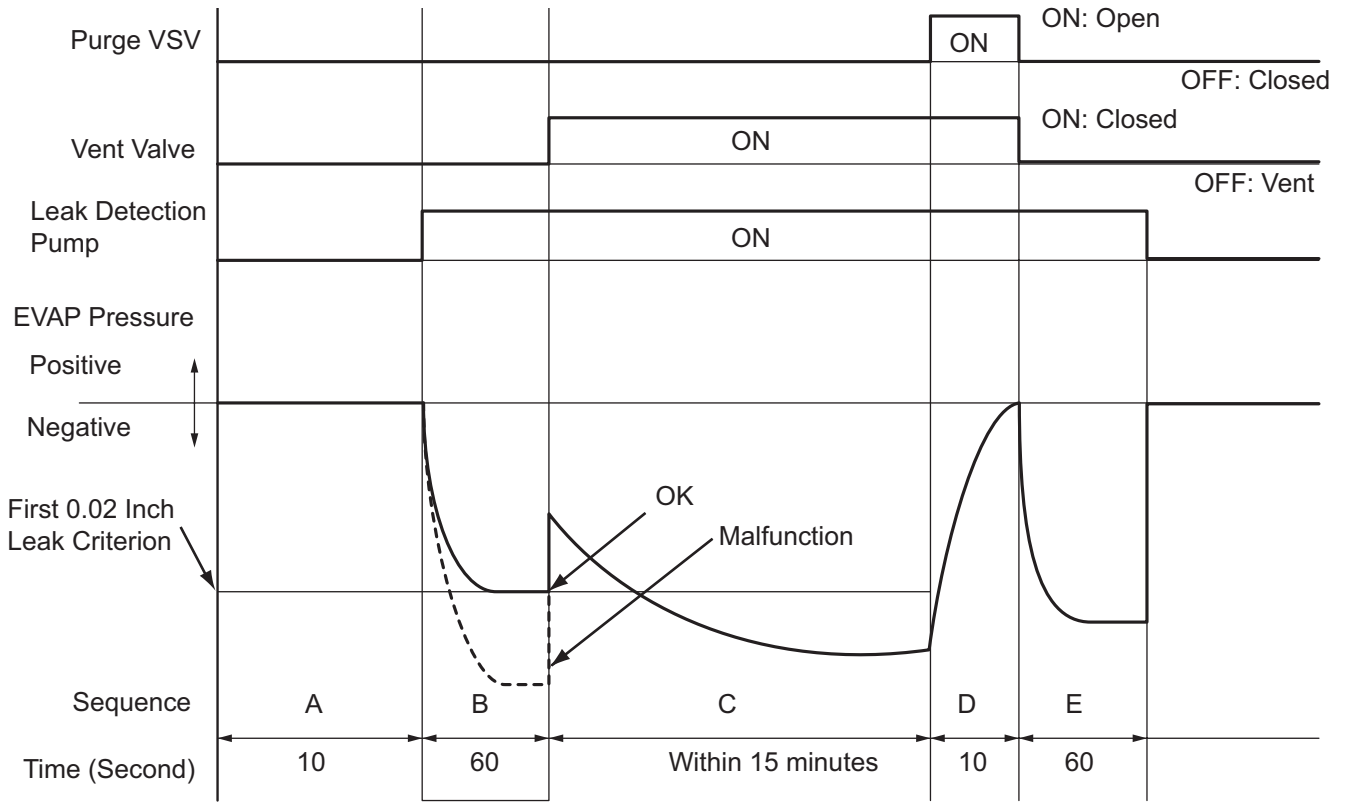

2. P043F: Reference orifice high-flow
In operation B, the leak detection pump creates negative pressure (vacuum) through the reference orifice. The EVAP system pressure is then measured by the ECM using the canister pressure sensor to determine the 0.02 inch leak criterion. If the pressure is higher than -1.06 kPa (-7.95 mmHg)*, the ECM interprets this as a high-flow malfunction in the reference orifice, and stops the EVAP system monitor. The ECM then illuminates the MIL and sets the DTC (2 trip detection logic).
*: The threshold varies according to the atmospheric pressure measured in operation A. The value described above is based on a atmospheric pressure of 100 kPa (750.1 mmHg): absolute pressure.

EVAP Pressure when Reference Orifice High-flow Malfunction:

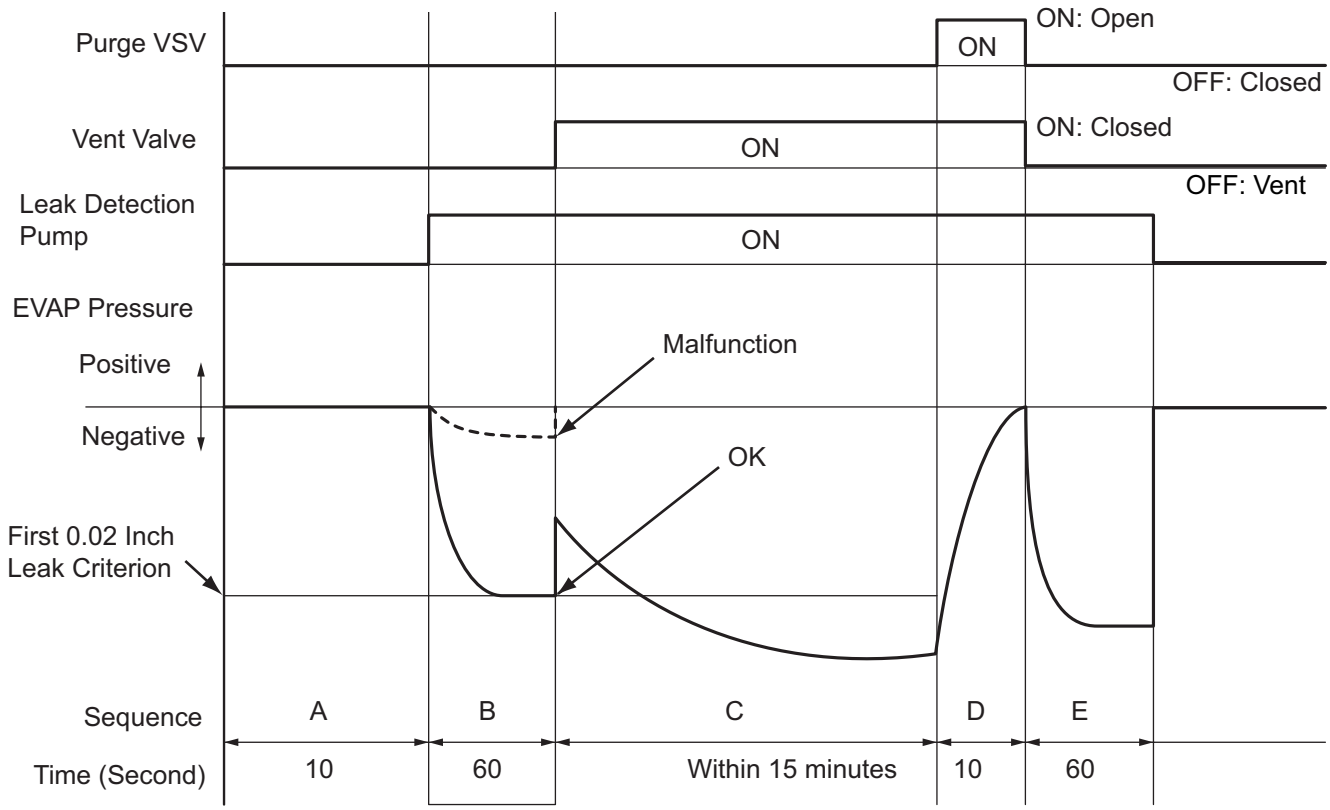

MONITOR STRATEGY

Required Sensors/Components	Canister pump module
Frequency of Operation	Once per driving cycle
Duration	Within 15 minutes (varies with amount of fuel in tank)
MIL Operation	2 driving cycles
Sequence of Operation	None

TYPICAL ENABLING CONDITIONS

Monitor runs whenever these DTCs not present	None
EVAP key-off monitor runs when all of following conditions met	-
Atmospheric pressure	525 to 825 mmHg (70 to 110 kPa)
Battery voltage	10.5 V or more
Vehicle speed	Below 2.5 mph (4 km/h)
Ignition switch	OFF
Engine condition	Not running

Fuel tank pressure sensor malfunction (P0450, P0452 and/or P0453)	Not detected
Purge VSV	Not operated by scan tool
Vent valve	Not operated by scan tool
Leak detection pump	Not operated by scan tool
Both of following conditions met before IG switch OFF	Conditions 1 and 2
1. Duration that vehicle driven	5 minutes or more
2. Purge flow	Executed
ECT	4.4° to 35°C (40° to 95°F)
IAT	4.4° to 35°C (40° to 95°F)

Example of restart time

First time	7 hours
Second time	9 hours and 30 minutes

ES

1. Key-off monitor sequence is 1 to 8

1. Atmospheric pressure

Next sequence is run if following condition set	-
Atmospheric pressure change for 10 sec.	Less than 2.25 mmHg (0.3 kPa) for 1 second

2. First 0.02 inch leak criterion

Next sequence is run if all of following conditions set	Conditions 1, 2 and 3
1. Fuel tank pressure when 4 seconds after 0.02 inch leak criterion measurement began	-7.5 mmHg (-1 kPa) or less
2. 0.02 inch leak criterion	-33.38 to -7.93 mmHg (-4.85 to -1.057 kPa)
3. 0.02 inch leak criterion	Saturated within 55 seconds

3. Vent valve stuck closed check

Next sequence is run if following condition set	-
Fuel tank pressure change for 10 seconds after vent valve ON (closed)	2.25 mmHg (0.3 kPa) or more

4. Vacuum introduction

Next sequence is run if both of following condition set	-
1. Vacuum introduction time	12 minutes or less
2. Fuel tank pressure	Fuel tank pressure was standard

5. Purge VSV stuck closed check

Next sequence is run if following condition set	-
Fuel tank pressure change for 10 seconds after purge VSV ON (open)	2.25 mmHg (0.3 kPa) or more

6. Second 0.02 inch leak criterion measurement

Next sequence is run if all of following conditions set	Conditions 1, 2, 3 and 4
1. Fuel tank pressure when 4 seconds after 0.02 inch leak criterion measurement began	-7.5 mmHg (-1 kPa) or less
2. 0.02 inch leak criterion	-36.4 to -7.92 mmHg (-4.85 to -1.057 kPa)
3. 0.02 inch leak criterion	Saturated within 55 seconds
4. 0.02 inch leak criterion difference between first and second	5.25 mmHg (0.7 kPa) or less

7. Leak check

Next sequence is run if following condition set	-
Arrival pressure when vacuum introduced for EVAP system	Leak detection criteria or less

8. Atmospheric pressure

Monitor is complete if following	-
Atmospheric pressure difference between sequences 1 and 8	2.25 mmHg (0.3 kPa) or less

TYPICAL MALFUNCTION THRESHOLDS

One of following conditions met	-
Fuel tank pressure when 4 seconds after 0.02 inch leak criterion measurement began	More than -7.5 mmHg (-1 kPa)
0.02 inch leak criterion	Less than -36.4 mmHg (-4.85 kPa)
0.02 inch leak criterion	-7.9 mmHg (-1.057 kPa) or more
0.02 inch leak criterion	Not saturated
0.02 inch leak criterion difference between first and second	5.3 mmHg (0.7 kPa) or more

"Saturated" indicates that the EVAP pressure change is less than 0.75 mmHg (0.1 kPa) in 30 seconds.

MONITOR RESULT

Detailed information on Checking Monitor Status (See page ES-19).

DTC	P0441	Evaporative Emission Control System Incorrect Purge Flow

DTC SUMMARY

DTCs	Monitoring Items	Malfunction Detection Conditions	Trouble Areas	Detection Timings	Detection Logic
P0441	Purge VSV (Vacuum Switching Valve) stuck open	Leak detection pump creates negative pressure (vacuum) in EVAP system and EVAP system pressure measured. 0.02 inch leak criterion measured at start and at end of leak check. If stabilized pressure higher than [second 0.02 inch leak criterion x 0.2], ECM determines that purge VSV stuck open	• Purge VSV • Connector/wire harness (Purge VSV - ECM) • ECM • Canister pump module • Leakage from EVAP system	While ignition Switch OFF	2 trip
	Purge VSV stuck closed	After EVAP leak check performed, purge VSV turned ON (open), and atmospheric air introduced into EVAP system. 0.02 inch leak criterion measured at start and at end of leak check. If pressure does not return to near atmospheric pressure, ECM determines that purge VSV stuck closed	• Purge VSV • Connector/wire harness (Purge VSV - ECM) • ECM • Canister pump module • Leakage from EVAP system	While ignition Switch OFF	2 trip
	Purge flow	While engine running, following conditions successively met: • Negative pressure not created in EVAP system when purge VSV turned ON (open) • EVAP system pressure change less than 0.5 kPa (3.75 mmHg) when vent valve turned ON (closed) • Atmospheric pressure change before and after purge flow monitor less than 0.1 kPa (0.75 mmHg)	• Purge VSV • Connector/wire harness (Purge VSV - ECM) • Leakage from EVAP line (Purge VSV - Intake manifold) • ECM	While engine running	2 trip

DESCRIPTION

The circuit description can be found in the EVAP System (See page ES-351).

Refer to the EVAP System (See page ES-351).

MONITOR DESCRIPTION

The two monitors, Key-Off and Purge Flow, are used to detect malfunctions relating to DTC P0441. The Key-Off monitor is initiated by the ECM internal timer, known as the soak timer, 5 hours* after the ignition switch is turned OFF. The purge flow monitor runs while the engine is running.

1. KEY-OFF MONITOR

5 hours* after the ignition switch is turned OFF, the electric leak detection pump creates negative pressure (vacuum) in the EVAP (Evaporative Emission) system. The ECM monitors for leaks and actuator malfunctions based on the EVAP pressure.

HINT:

*: If the engine coolant temperature is not below 35°C (95°F) 5 hours after the ignition switch is turned off, the monitor check starts 2 hours later. If it is still not below 35°C (95°F) 7 hours after the ignition switch is turned off, the monitor check starts 2.5 hours later.

Sequence	Operation	Descriptions	Duration
-	ECM activation	Activated by soak timer, 5 hours (7 or 9.5 hours) after ignition switch turned OFF.	-

Sequence	Operation	Descriptions	Duration
A	Atmospheric pressure measurement	Vent valve turned OFF (vent) and EVAP system pressure measured by ECM in order to register atmospheric pressure. If pressure in EVAP system not between 70 kPa and 110 kPa (525 mmHg and 825 mmHg), ECM cancels EVAP system monitor.	10 seconds
B	First 0.02 inch leak criterion measurement	In order to determine 0.02 inch leak criterion, leak detection pump creates negative pressure (vacuum) through reference orifice and then ECM checks if leak detection pump and vent valve operate normally.	60 seconds
C	EVAP system pressure measurement	Vent valve turned ON (closed) to shut EVAP system. Negative pressure (vacuum) created in EVAP system, and EVAP system pressure then measured. Write down measured value as they will be used in leak check. If EVAP pressure does not stabilize within 15 minutes, ECM cancels EVAP system monitor.	15 minutes*
D	Purge VSV monitor	Purge VSV opened and then EVAP system pressure measured by ECM. Large increase indicates normal.	10 seconds
E	Second 0.02 inch leak criterion measurement	After second 0.02 inch leak criterion measurement, leak check performed by comparing first and second 0.02 inch leak criterion. If stabilized system pressure higher than second 0.02 inch leak criterion, ECM determines that EVAP system leaking.	60 seconds
F	Final check	Atmospheric pressure measured and then monitoring result recorded by ECM.	-

* If only a small amount of fuel is in the fuel tank, it takes longer for the EVAP pressure to stabilize.

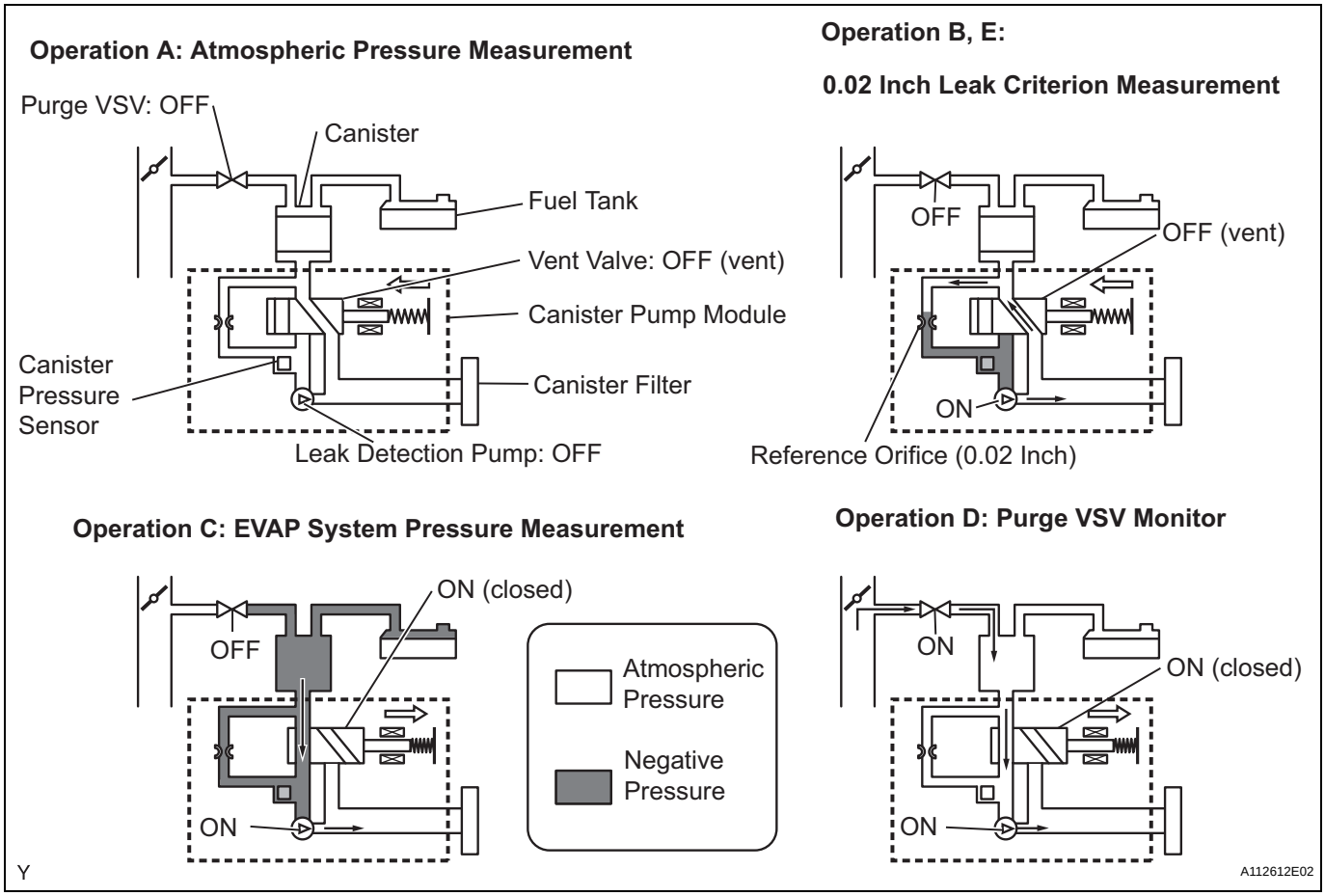

1. Purge VSV stuck open
   In operation C, the leak detection pump creates negative pressure (vacuum) in the EVAP (Evaporative Emission) system. The EVAP system pressure is then measured by the ECM using the canister pressure sensor. If the stabilized system pressure is higher than [second 0.02 inch leak criterion x 0.2], the ECM interprets this as the purge VSV (Vacuum Switching Valve) being stuck open. The ECM illuminates the MIL and sets the DTC (2 trip detection logic).

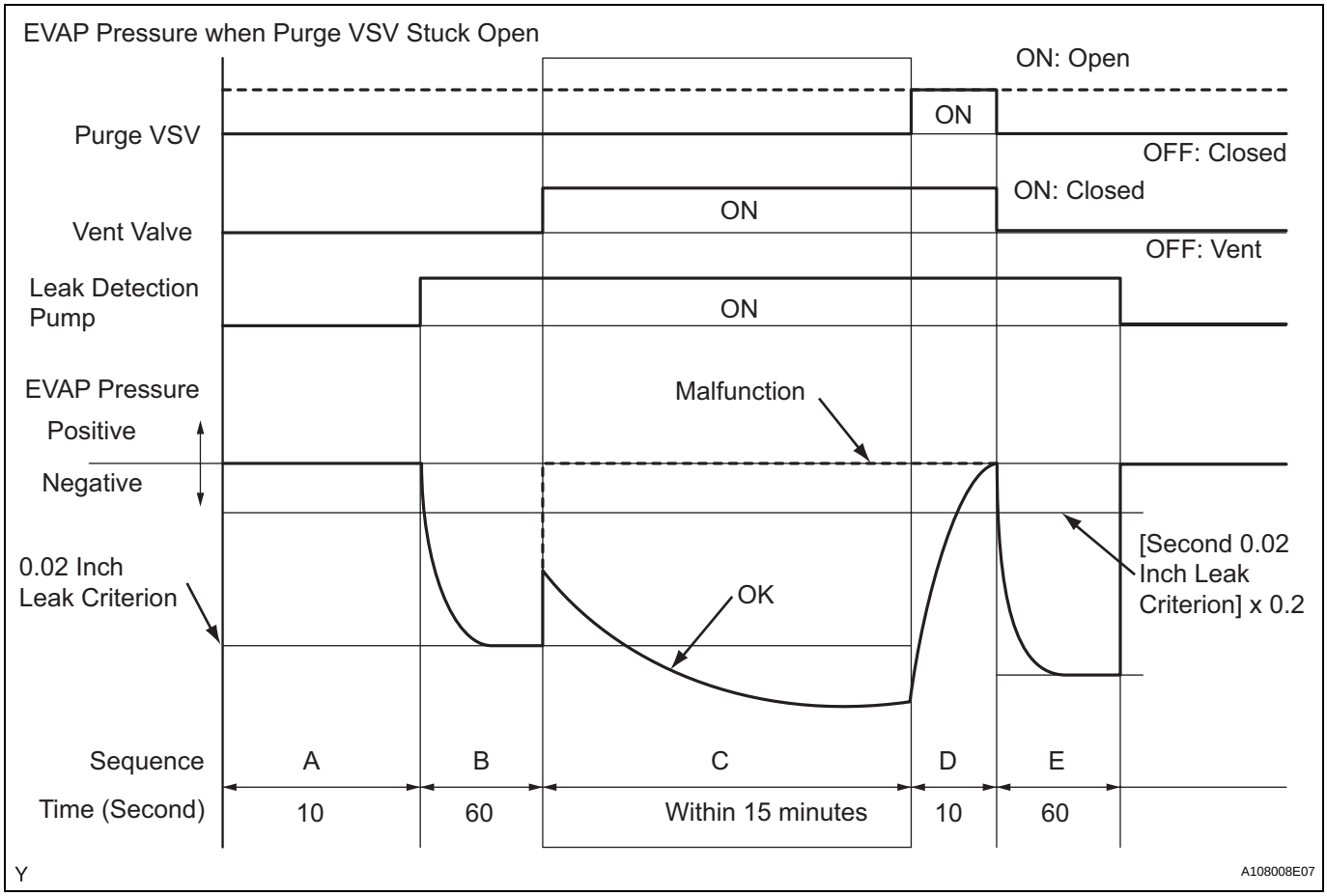

2. Purge VSV stuck closed
In operation D, the canister pressure sensor measures the EVAP (Evaporative Emission) system pressure. Pressure measurement for the purge VSV monitor is begun when the purge VSV is turned ON (open) after the EVAP leak check. When the measured pressure indicates an increase of 0.3 kPa (2.25 mmHg) or more, the purge VSV is functioning normally. If the pressure does not increase, the ECM interprets this as the being stuck closed. The ECM illuminates the MIL and sets the DTC (2 trip detection logic).

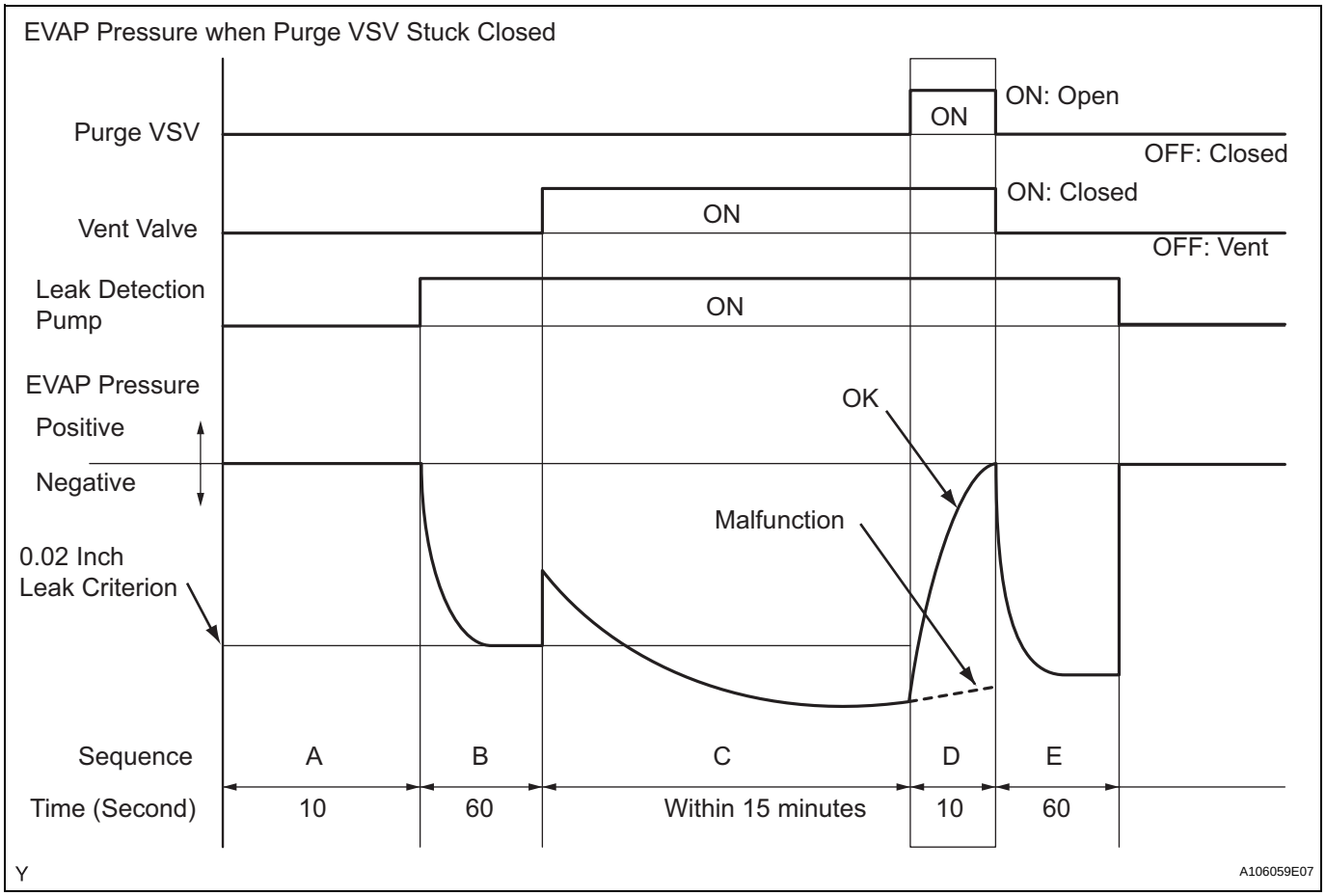

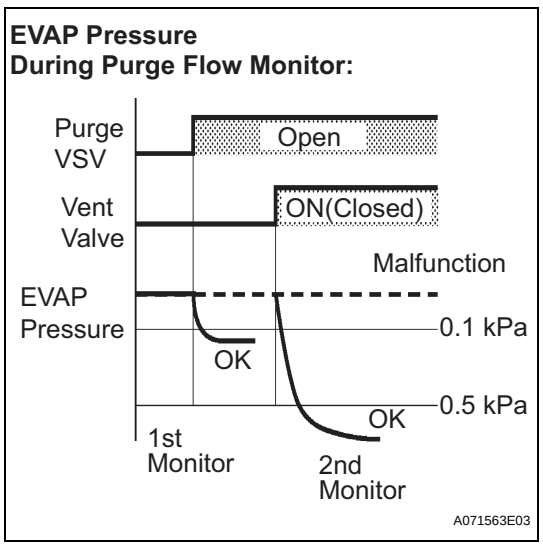

2. PURGE FLOW MONITOR

The purge flow monitor consists of the two step monitors. The 1st monitor is conducted every time and the 2nd monitor is activated if necessary.

- The 1st monitor
  While the engine is running and the purge VSV (Vacuum Switching Valve) is ON (open), the ECM monitors the purge flow by measuring the EVAP pressure change. If negative pressure is not created, the ECM begins the 2nd monitor.
- The 2nd monitor
  The vent valve is turned ON (closed) and the EVAP pressure is then measured. If the variation in the pressure is less than 0.5 kPa (3.75 mmHg), the ECM interprets this as the purge VSV being stuck closed, and illuminates the MIL and sets DTC P0441 (2 trip detection logic).

Atmospheric pressure check:
In order to ensure reliable malfunction detection, the variation between the atmospheric pressures, before and after conduction of the purge flow monitor, is measured by the ECM.

OBD II MONITOR SPECIFICATIONS

1. Key-off Monitor

Monitor Strategy

Required Sensors/Components	Purge VSV and canister pump module
Frequency of Operation	Once per driving cycle
Duration	Within 15 minutes (varies with fuel in tank)
MIL Operation	2 driving cycles
Sequence of Operation	None

TYPICAL ENABLING CONDITIONS

EVAP key-off monitor runs when all of following conditions met	-
Atmospheric pressure	70 to 110 kPa (525 to 825 mmHg)
Battery voltage	10.5 V or higher
Vehicle speed	4 km/h (2.5 mph) or less
Ignition switch	OFF
EVAP control system pressure sensor	Not detected
Purge VSV	Not operated by scan tool
Vent valve	Not operated by scan tool
Leak detection pump	Not operated by scan tool
Both of the following conditions 1 and 2 are met before key off	-
1. Duration that vehicle has been driven	5 minutes or more
2. EVAP purge operation	Performed
ECT	4.4 to 35°C (40 to 95°F)
IAT	4.4 to 35°C (40 to 95°F)

Example of restart time

First time	7 hours
Second time	9 hours and 30 minutes

2. Key-off monitor sequence 1 to 8

1. Atmospheric pressure measurement

Next sequence is run if the following condition set	-
Atmospheric pressure change	Less than 2.25 mmHg (0.3 kPa) for 1 second

2. First 0.02 inch leak criterion measurement

Next sequence is run if the following conditions set	Conditions 1, 2 and 3
1. EVAP pressure just after 0.02 inch leak criterion measurement start	-7.5 mmHg (-1 kPa) or less
2. 0.02 inch leak criterion	-33.38 to -7.93 mmHg (-4.85 to 1.057 kPa)
3. 0.02 inch leak criterion	Saturated within 55 seconds

3. Vent valve stuck closed check

Next sequence is run if the following condition set	-
EVAP pressure change after vent valve is ON	2.25 mmHg (0.3 kPa) or more

4. Vacuum introduction

Next sequence is run if the following condition set	-
Vacuum introduction time	12 minutes or less

5. Purge VSV stuck closed check

Next sequence is run if the following condition set	-
EVAP pressure change after purge VSV is open	2.25 mmHg (0.3 kPa) or more

6. Second 0.02 inch leak criterion measurement

Next sequence is run if the following conditions set	Conditions 1, 2, 3 and 4
1. EVAP pressure just after 0.02 inch leak criterion measurement	-7.5 mmHg (-1 kPa) or less
2. 0.02 inch leak criterion	-36.4 to -7.92 mmHg (-4.85 to -1.057 kPa)
3. 0.02 inch leak criterion	Saturated within 55 seconds
4. 0.02 inch leak criterion difference between first and second	5.25 mmHg (0.7 kPa) or less

7. Leak check

Next sequence is run if the following condition set	-
EVAP pressure when vacuum introduction is complete	Leak detection criteria or less

8. Atmospheric pressure measurement

EVAP monitor is complete if the following condition set	-
Atmospheric pressure difference between sequences 1 and 8	2.25 mmHg (0.3 kPa) or less

Typical Malfunction Thresholds

Purge VSV stuck open	-
FTP when vacuum introduction complete	Higher than reference pressure x 0.2
Purge VSV stuck closed	-
FTP change for 10 seconds after purge VSV ON (open)	Less than 0.3 kPa (2.25 mmHg)

"Saturated" indicates that the EVAP pressure change is less than 0.1 kPa (0.75 mmHg) in 30 seconds.

OBD II MONITOR SPECIFICATIONS

1. Purge Flow Monitor

Monitor Strategy

Required Sensors/Components	Purge VSV and canister pump module
Frequency of Operation	Once per driving cycle
Duration	Within 10 minutes (varies with fuel in tank)
MIL Operation	2 driving cycles
Sequence of Operation	None

TYPICAL ENABLING CONDITIONS

Monitor runs whenever following DTC not present	None
Engine	Running
ECT	4.4°C (40°F) or more
IAT	4.4°C (40°F) or more
EVAP control system pressure sensor	Not detected
Purge VSV	Not detected by scan tool
EVAP system check	Not detected by scan tool
Battery voltage	10 V or higher
Purge duty cycle	8% or more

2. TYPICAL MALFUNCTION THRESHOLDS

Purge Flow Monitor:

Both of the following conditions are met	Conditions 1 or 2
1. FTP change when purge operation started	Less than 0.1 kPa (0.75 mmHg)
2. FTP change during purge operation when vent valve closed	Less than 0.5 kPa (3.75 mmHg)

MONITOR RESULT

Detailed information on Checking Monitor Status (See page ES-19).

DTC	P0450	Evaporative Emission Control System Pressure Sensor / Switch

DTC	P0451	Evaporative Emission Control System Pressure Sensor Range / Performance

DTC	P0452	Evaporative Emission Control System Pressure Sensor / Switch Low Input

DTC	P0453	Evaporative Emission Control System Pressure Sensor / Switch High Input

DTC SUMMARY

DTC	Monitoring Items	Malfunction Detection Conditions	Trouble Areas	Detection Timings	Detection logic
P0450	Canister pressure sensor voltage abnormal fluctuation	Sensor output voltage rapidly fluctuates beyond upper and lower malfunction thresholds for 0.5 seconds.	• Canister pump module • ECM	• EVAP monitoring (ignition OFF) • Ignition ON	1 trip
P0451	Canister pressure sensor noise	Sensor output voltage fluctuates frequently in certain time period.	• Canister pump module • Connector/wire harness (Canister pump module - ECM) • ECM	• EVAP monitoring (ignition OFF) • Engine running	2 trip
	Canister pressure sensor voltage fixed	Sensor output voltage does not vary in certain time period.	• Canister pump module • Connector/wire harness (Canister pump module - ECM) • ECM	• EVAP monitoring (ignition OFF)	2 trip
P0452	Canister pressure sensor voltage low	Sensor output voltage less than 0.45 V for 0.5 seconds.	• Canister pump module • Connector/wire harness (Canister pump module - ECM) • ECM	• Ignition ON • EVAP monitoring (ignition OFF)	1 trip
P0453	Canister pressure sensor voltage high	Sensor output voltage more than 4.9 V for 0.5 seconds.	• Canister pump module • Connector/wire harness (Canister pump module - ECM) • ECM	• Ignition ON • EVAP monitoring (ignition OFF)	1 trip

HINT:
The canister pressure sensor is built into the canister pump module.

DESCRIPTION

The circuit description can be found in the EVAP System (See page ES-351).

MONITOR DESCRIPTION

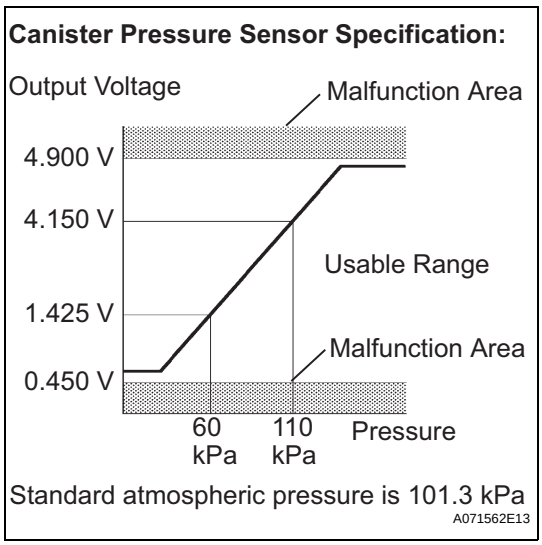

(a) DTC P0450: Canister pressure sensor voltage abnormal fluctuation
If the canister pressure sensor voltage output rapidly fluctuates between less than 0.45 V and more than 4.9 V, the ECM interprets this as an open or short circuit malfunction in the canister pressure sensor or its circuit, and stops the EVAP (Evaporative Emission) system monitor. The ECM then illuminates the MIL and sets the DTC (1 trip detection logic).
(b) DTC P0451: Canister pressure sensor noise or stuck
If the canister pressure sensor voltage output fluctuates rapidly for 10 seconds, the ECM stops the EVAP system monitor. The ECM interprets this as noise from the canister pressure sensor, and stops the EVAP system monitor. The ECM then illuminates the MIL and sets the DTC.
Alternatively, if the sensor voltage output does not change for 10 seconds, the ECM interprets this as the sensor being stuck, and stops the monitor. The ECM then illuminates the MIL and sets the DTC (Both the malfunctions are detected by 2 trip detection logic).
(c) DTC P0452: Canister pressure sensor voltage low
If the canister pressure sensor voltage output is below 0.45 V, the ECM interprets this as an open or short circuit malfunction in the canister pressure sensor or its circuit, and stops the EVAP system monitor. The ECM then illuminates the MIL and sets the DTC (1 trip detection logic).
(d) DTC P0453: Canister pressure sensor voltage high
If the canister pressure sensor voltage output is 4.9 V or more, the ECM interprets this as an open or short circuit malfunction in the canister pressure sensor or its circuit, and stops the EVAP system monitor. The ECM then illuminates the MIL and sets the DTC (1 trip detection logic).

MONITOR STRATEGY

Required Sensors/Components	Canister pump module
Frequency of Operation	Once per driving cycle: P0451 sensor stuck Continuous: P0451 sensor noise, P0450, P0452 and P0453
Duration	-
MIL Operation	Immediate: P0450, P0452 and P0453 2 driving cycles: P0451
Sequence of Operation	None

TYPICAL ENABLING CONDITIONS

P0451 (Noise monitor):

Monitor runs whenever these DTCs not present	None
Atmospheric pressure (absolute pressure)	70 kPa (525 mmHg) or more, less than 110 kPa (825 mmHg)
Battery voltage	10.5 V or more

Intake air temperature	4.4° to 35°C (40° to 95°F)
Either of following conditions met	A or B
A. Engine	Running
B. Soak time (ignition switch OFF time)	5 hours

Example of restart time

First time	7 hours
Second time	9 hours and 30 minutes

P0451 (Fixed monitor):

Monitor runs whenever these DTCs not present	None
Atmospheric pressure	Less than 70 kPa (525 mmHg), or 110 kPa (825 mmHg) or more
Battery voltage	10.5 V or more
Intake air temperature	4.4° to 35°C (40° to 95°F)
Soak time (ignition switch OFF time)	5 hours

ES

Example of restart time

First time	7 hours
Second time	9 hours and 30 minutes

P0450, P0452 and P0453:

Monitor runs whenever these DTCs not present	None
Either of following conditions met	(a) or (b)
(a) Ignition switch	ON
(b) Soak timer	ON

TYPICAL MALFUNCTION THRESHOLDS

P0450: Canister pressure sensor chattering

EVAP pressure	Less than 42.1 kPa (317 mmHg), or more than 123.8 kPa (928.5 mmHg)

P0451: Canister pressure sensor noise

Pressure variation indicated by canister pressure sensor in 10 seconds	More than +-0.3 kPa (+-2.25 mmHg) 10 times

P0451: Canister pressure sensor voltage fixed

0.02 inch leak criterion variation indicated by canister pressure sensor in 10 seconds	Less than 0.65 kPa (4.87 mmHg)

P0452: Canister pressure sensor low voltage

EVAP pressure	Less than 42.1 kPa (317 mmHg)

P0453: Canister pressure sensor high voltage

EVAP pressure	More than 123.8 kPa (928.5 mmHg)

WIRING DIAGRAM

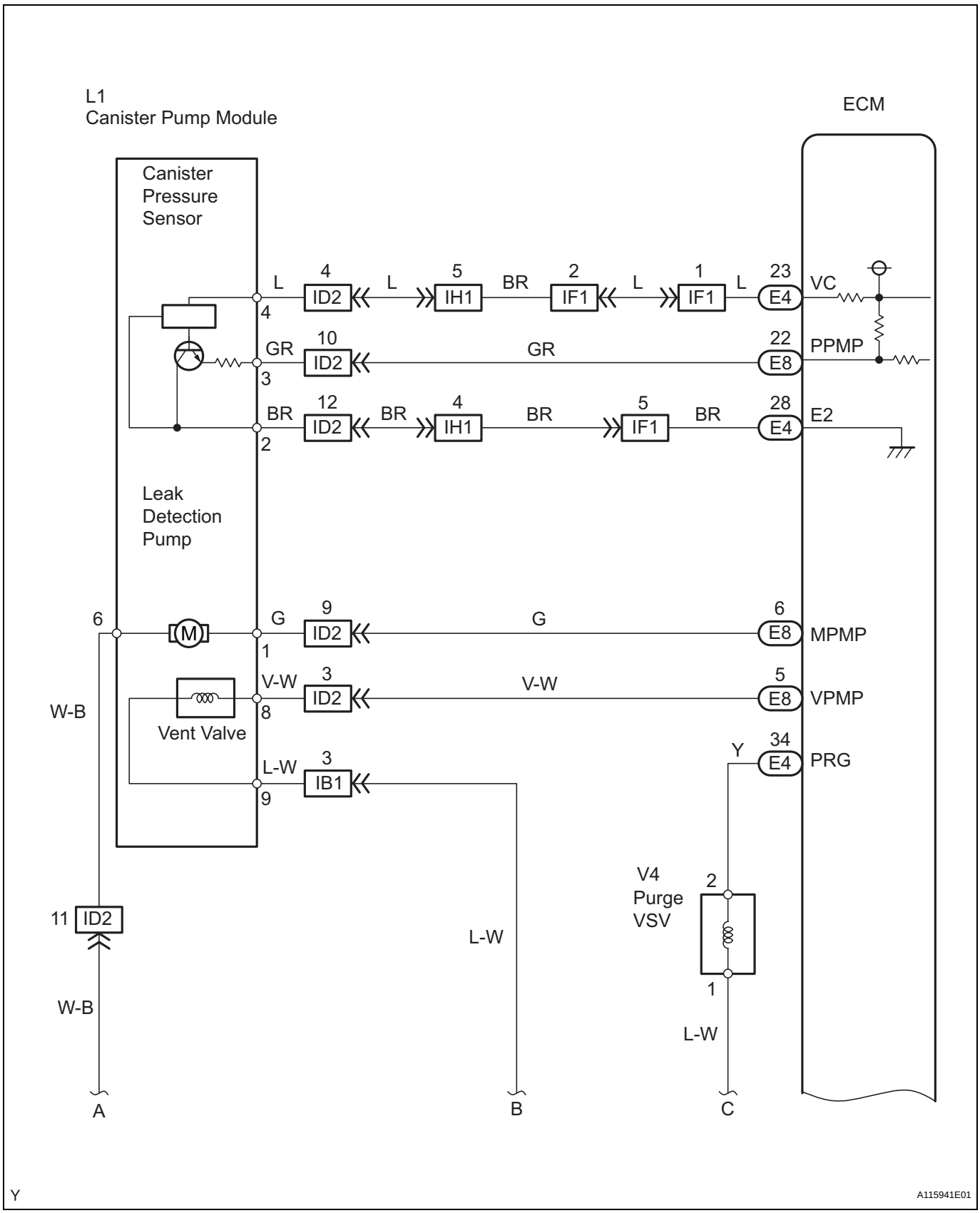

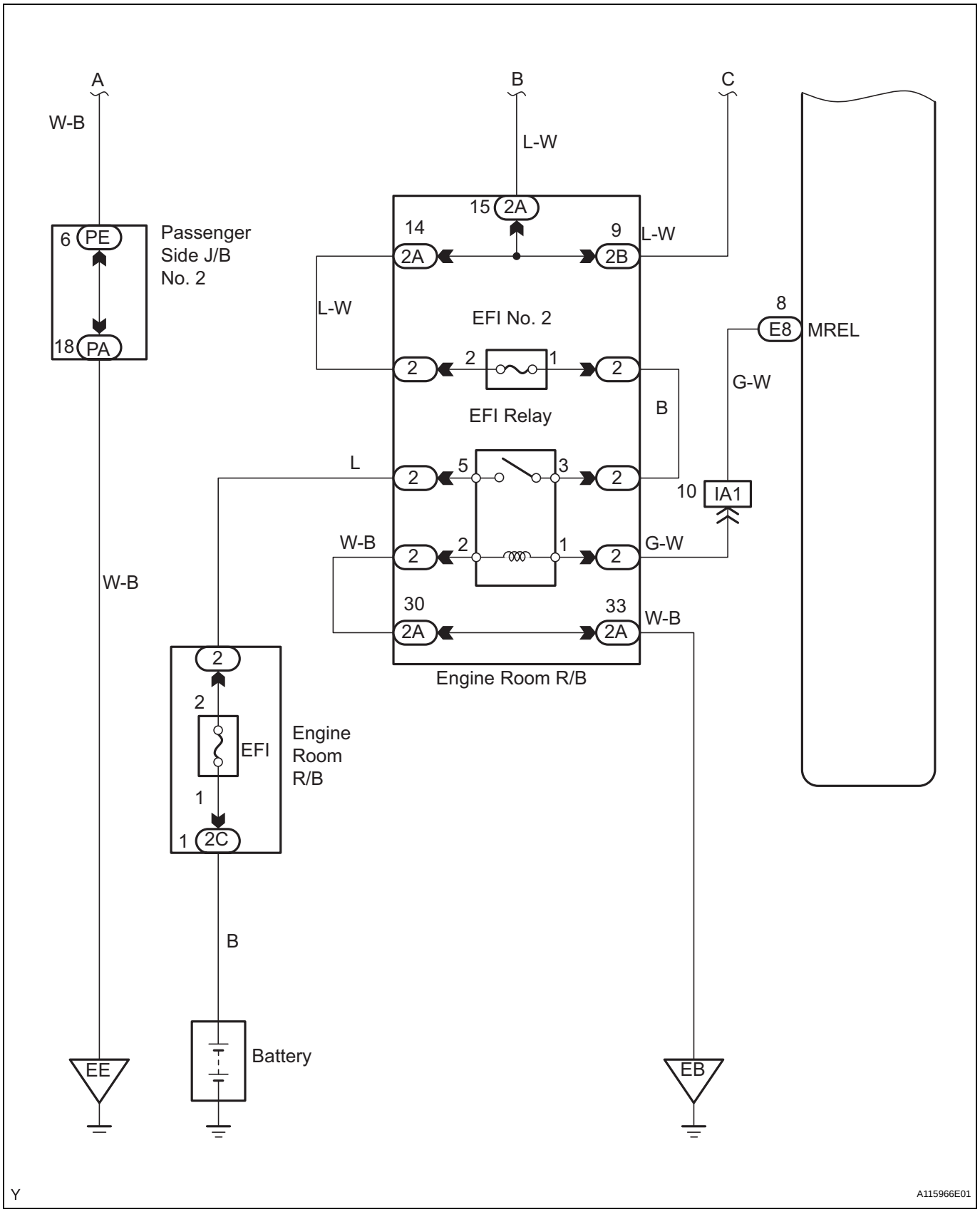

NOTICE:

- **When a vehicle is brought into the workshop, leave it as it is. Do not change the vehicle condition. For example, do not tighten the fuel cap.**
- **Do not disassemble the canister pump module.**

- **An intelligent tester is required to conduct the following diagnostic troubleshooting procedure.**

1	CONFIRM DTC AND EVAP PRESSURE

(a) Connect an intelligent tester to the DLC3.
(b) Turn the ignition switch ON (do not start the engine).
(c) Turn the tester ON.
(d) Select the following menu items: DIAGNOSIS / ENHANCED OBD II / DTC INFO / CURRENT CODES.
(e) Read DTCs.
(f) Select the following menu items: DIAGNOSIS / ENHANCED OBD II / DATA LIST / PRIMARY / VAPOR PRESS.
(g) Read the EVAP (Evaporative Emission) pressure displayed on the tester.

ES

Result

Display (DTC Output)	Test Results	Suspected Trouble Areas	Proceed to
P0451	-	• Canister pressure sensor	C
P0452	Less than 45 kPa (430 mmHg)	• Wire harness/connector (ECM - canister pressure sensor) • Canister pressure sensor • Short in ECM circuit	A
P0453	More than 120 kPa (900 mmHg)	• Wire harness/connector (ECM - canister pressure sensor) • Canister pressure sensor • Open in ECM circuit	B

B → Go to step 4

C → GO TO EVAP INSPECTION PROCEDURE

A

2	CHECK HARNESS AND CONNECTOR (CANISTER PUMP MODULE - ECM)

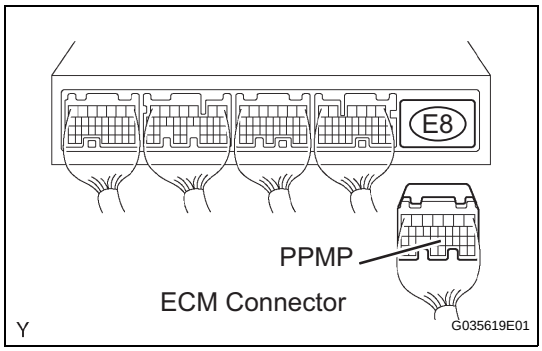

(a) Turn the ignition switch OFF.
(b) Disconnect the E8 ECM connector.
(c) Measure the resistance between the PPMP terminal of the ECM connector and the body ground.

Result

Test Results	Suspected Trouble Areas	Proceed To
10 Ω or less	• Wire harness/connector (ECM - canister pressure sensor) • Short in canister pressure sensor circuit	A
10 kΩ or more	• Wire harness/connector (ECM - canister pressure sensor) • Short in ECM circuit	B

(d) Reconnect the ECM connector.

B → Go to step 7

A

3	CHECK HARNESS AND CONNECTOR (CANISTER PUMP MODULE - ECM)

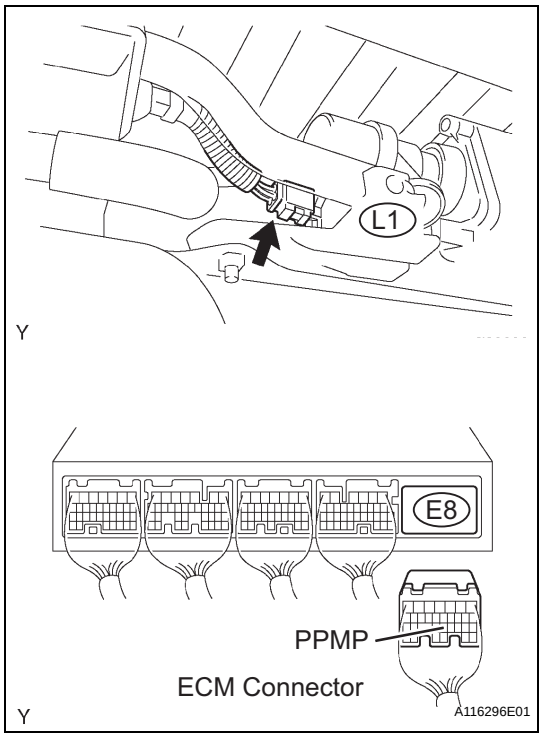

(a) Disconnect the L1 canister connector.
(b) Disconnect the E8 ECM connector.
(c) Check the resistance between the PPMP terminal of the ECM connector and the body ground.

ES

Result

Test Results	Suspected Trouble Areas	Proceed To
10 kΩ or more	• Short in canister pressure sensor circuit	A
10 Ω or less	• Short in wire harness/connector (ECM - canister pressure sensor)	B

(d) Reconnect the canister connector.
(e) Reconnect the ECM connector.

A → Go to step 5

B → Go to step 6

4	CHECK HARNESS AND CONNECTOR (CANISTER PUMP MODULE - ECM)

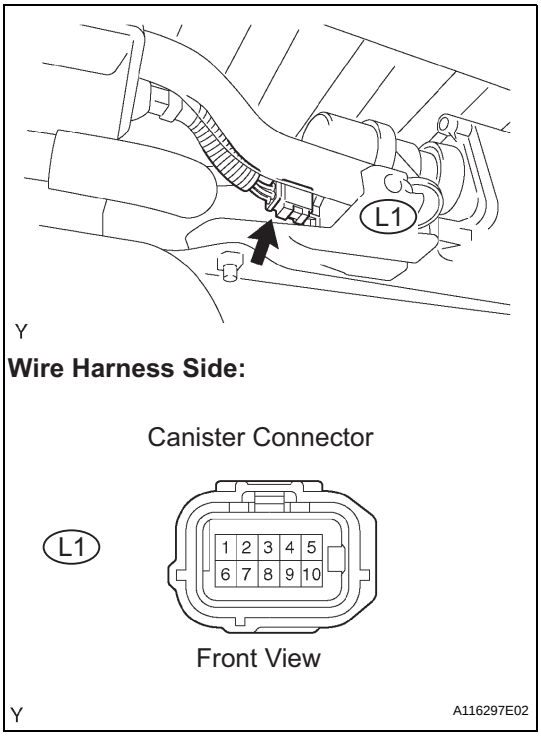

(a) Disconnect the L1 canister connector.
(b) Turn the ignition switch ON.
(c) Measure the voltage and resistance of the L1 canister connector.

Standard

Tester Connections	Specified Conditions
L1-4 - Body ground	Between 4.5 V and 5.5 V
L1-3 - Body ground	
L1-2 - Body ground	100 Ω or less

Result

Test Results	Suspected Trouble Areas	Proceed To
Voltage and resistance within standard ranges	• Open in canister pressure sensor circuit	A
Voltage and resistance outside standard ranges	• Open in wire harness/connector (ECM - canister pressure sensor)	B

(d) Reconnect the canister connector.

A	Go to step 5
B	Go to step 6

5	REPLACE CANISTER ASSEMBLY

(a) Replace the canister assembly (See page EC-9).

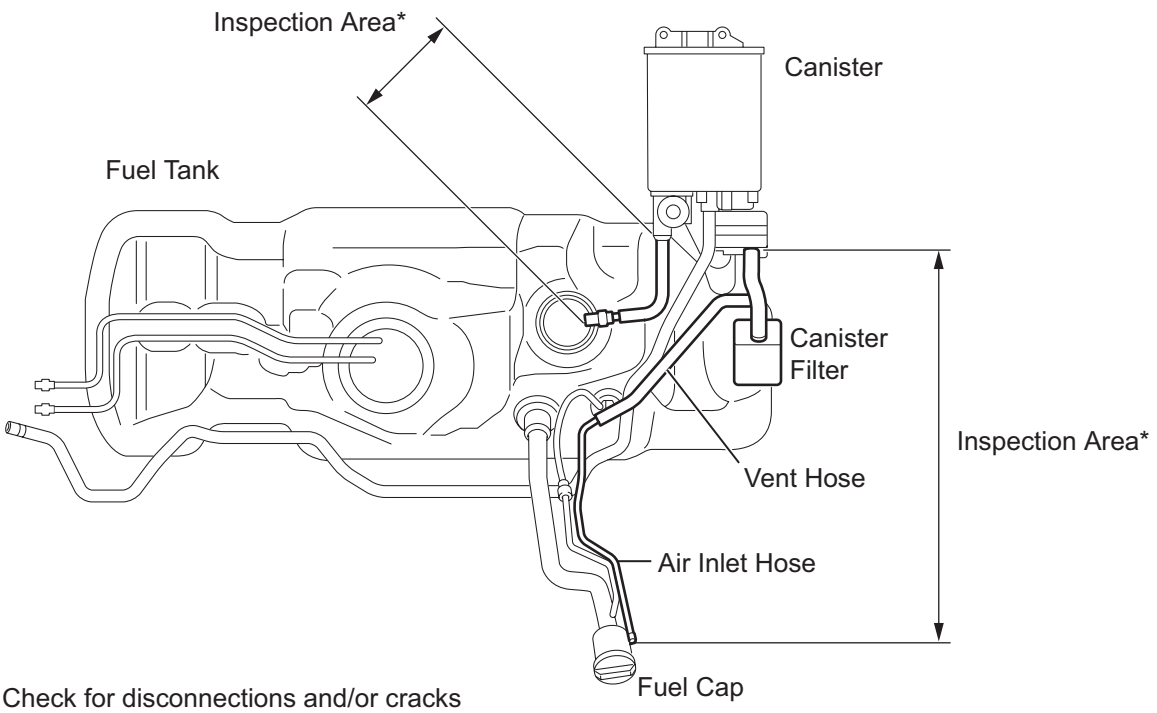

NOTICE:
When replacing the canister, check the canister pump module interior and related pipes for water, fuel or other liquids. If liquids are present, check for disconnections and/or cracks in the following: 1) the pipe from the air inlet port to the canister pump module;2) the canister filter; and 3) the fuel tank vent hose.

NEXT	Go to step 8

6	REPAIR OR REPLACE HARNESS AND CONNECTOR

HINT:
If the exhaust tail pipe has been removed, go to the next step before reinstalling it.

NEXT	Go to step 8

7	REPLACE ECM

NEXT	Go to step 8

8	CHECK WHETHER DTC OUTPUT RECURS (AFTER REPAIR)

(a) Connect an intelligent tester to the DLC3.
(b) Turn the ignition switch ON and turn the tester ON.
(c) Wait for at least 60 seconds.
(d) Select the following menu items: DIAGNOSIS / ENHANCED OBD II / DTC INFO / PENDING CODES.
HINT:
If no pending DTC is displayed on the tester, the repair has been successfully completed.

NEXT

COMPLETED

DTC	P0455	Evaporative Emission Control System Leak Detected (Gross Leak)

DTC	P0456	Evaporative Emission Control System Leak Detected (Very Small Leak)

DTC SUMMARY

DTC	Monitoring Items	Malfunction Detection Conditions	Trouble Areas	Detection Timings	Detection logic
P0455	EVAP gross leak	Leak detection pump creates negative pressure (vacuum) in EVAP system and EVAP system pressure measured. 0.02 inch leak criterion measured at start and at end of leak check. If stabilized pressure higher than [second 0.02 inch leak criterion x 0.2], ECM determines that EVAP system has large leakage.	• Fuel cap (loose) • Leakage from EVAP line (Canister - Fuel tank) • Leakage from EVAP line (Purge VSV - Canister) • Canister pump module • Leakage from fuel tank • Leakage from canister	While ignition switch OFF	2 trip
P0456	EVAP small leak	Leak detection pump creates negative pressure (vacuum) in EVAP system and EVAP system pressure measured. 0.02 inch leak criterion measured at start and at end of leak check. If stabilized pressure higher than second 0.02 inch leak criterion, ECM determines that EVAP system has small leakage.	Same above	While ignition switch OFF	2 trip

ES

DESCRIPTION

The circuit description can be found in the EVAP System (See page ES-351).

Refer to the EVAP System (See page ES-351).

MONITOR DESCRIPTION

5 hours* after the ignition switch is turned OFF, the electric leak detection pump creates negative pressure (vacuum) in the EVAP (Evaporative Emission) system. The ECM monitors for leaks and actuator malfunctions based on the EVAP pressure.
HINT:
*: If the engine coolant temperature is not below 35°C (95°F) 5 hours after the ignition switch is turned off, the monitor check starts 2 hours later. If it is still not below 35°C (95°F) 7 hours after the ignition switch is turned off, the monitor check starts 2.5 hours later.

Sequence	Operations	Descriptions	Duration
-	ECM activation	Activated by soak timer, 5 hours (7 or 9.5 hours) after ignition switch turned OFF.	-
A	Atmospheric pressure measurement	Vent valve turned OFF (vent) and EVAP system pressure measured by ECM in order to register atmospheric pressure. If pressure in EVAP system not between 70 kPa and 110 kPa (525 mmHg and 825 mmHg), ECM cancels EVAP system monitor.	10 seconds
B	First 0.02 inch leak criterion measurement	In order to determine 0.02 inch leak criterion, leak detection pump creates negative pressure (vacuum) through reference orifice and then ECM checks if leak detection pump and vent valve operate normally.	60 seconds
C	EVAP system pressure measurement	Vent valve turned ON (closed) to shut EVAP system. Negative pressure (vacuum) created in EVAP system, and EVAP system pressure then measured. Write down measured value as they will be used in leak check. If EVAP pressure does not stabilize within 15 minutes, ECM cancels EVAP system monitor.	15 minutes*

Sequence	Operations	Descriptions	Duration
D	Purge VSV monitor	Purge VSV opened and then EVAP system pressure measured by ECM. Large increase indicates normal.	10 seconds
E	Second 0.02 inch leak criterion measurement	After second 0.02 inch leak criterion measurement, leak check performed by comparing first and second 0.02 inch leak criterion. If stabilized system pressure higher than second 0.02 inch leak criterion, ECM determines that EVAP system leaking.	60 seconds
F	Final check	Atmospheric pressure measured and then monitoring result recorded by ECM.	-

* If only a small amount of fuel is in the fuel tank, it takes longer for the EVAP pressure to stabilize.

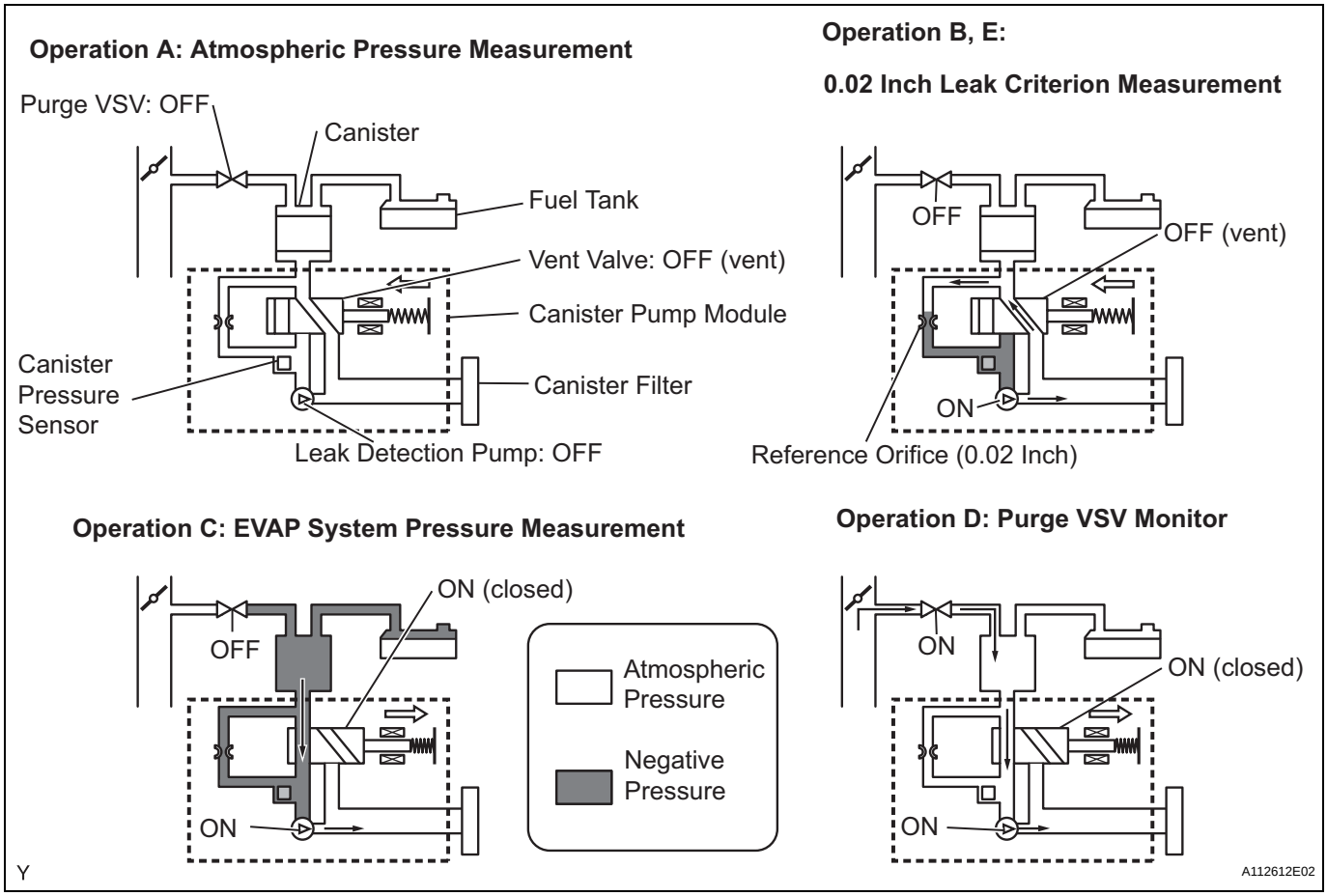

1. P0455: EVAP (Evaporative Emission) gross leak
   In operation C, the leak detection pump creates negative pressure (vacuum) in the EVAP system and the EVAP system pressure is measured. If the stabilized system pressure is higher than [second 0.02 inch leak criterion x 0.2] (near atmospheric pressure), the ECM determines that the EVAP system has a large leakage, illuminates the MIL and sets the DTC (2 trip detection logic).

2. P0456: EVAP very small leak
   In operation C, the leak detection pump creates negative pressure (vacuum) in the EVAP system and the EVAP system pressure is measured. If the stabilized system pressure is higher than second 0.02 inch leak criterion, the ECM determines that the EVAP system has a small leakage, illuminates the MIL and sets the DTC (2 trip detection logic).

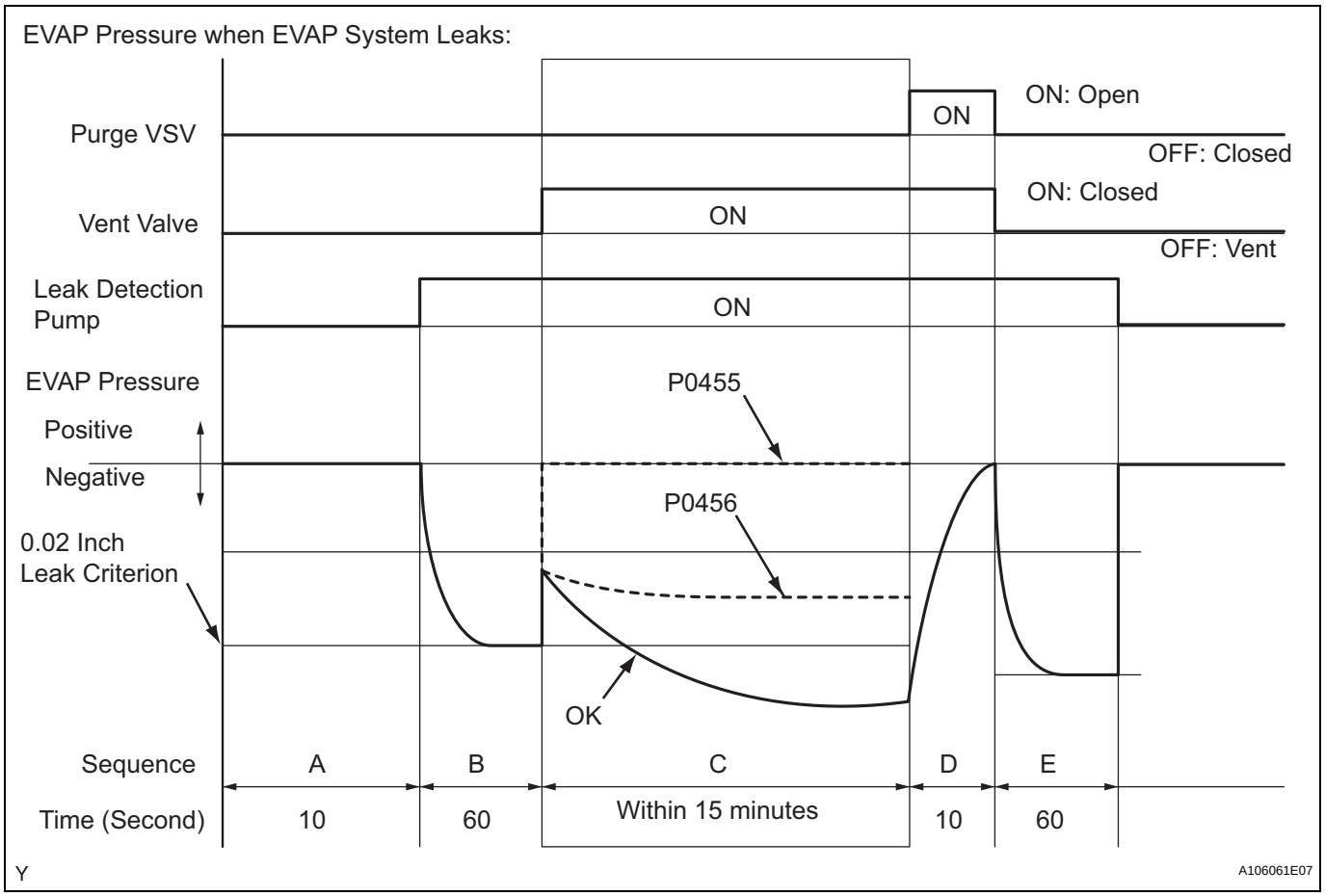

MONITOR STRATEGY

Required Sensors/Components	Purge VSV and canister pump module
Frequency of Operation	Once per driving cycle
Duration	Within 15 minutes (varies with amount of fuel in tank)
MIL Operation	2 driving cycles
Sequence of Operation	None

TYPICAL ENABLING CONDITIONS

Monitor runs whenever these DTCs not present	None
EVAP key-off monitor runs when all of following conditions met	-
Atmospheric pressure	525 to 825 mmHg (70 to 110 kPa)
Battery voltage	10.5 V or more
Vehicle speed	Below 2.5 mph (4 km/h)
Ignition switch	OFF
Engine condition	Not running
Fuel tank pressure sensor malfunction (P0450, P0451, P0452 and/or P0453)	Not detected
Purge VSV	Not operated by scan tool
Vent valve	Not operated by scan tool

Leak detection pump	Not operated by scan tool
Both of following conditions met before IG switch OFF	Conditions 1 and 2
1. Duration that vehicle driven	5 min. or more
2. Purge flow	Executed
ECT	4.4° to 35°C (40° to 95°F)
IAT	4.4° to 35°C (40° to 95°F)

1. Key-off monitor sequence 1 to 8

1. Atmospheric pressure

Next sequence is run if following condition set	-
Atmospheric pressure change for 10 seconds	Less than 2.25 mmHg (0.3 kPa) for 1 seconds

2. First 0.02 inch leak criterion

Next sequence is run if all of following conditions set	Conditions 1, 2 and 3
1. FTP when 4 seconds after 0.02 inch leak criterion measurement	-7.5 mmHg (-1 kPa) or less
2. 0.02 inch leak criterion	-36.28 to -7.93 mmHg (-4.85 to -1.057 kPa)
3. 0.02 inch leak criterion	Saturated within 55 seconds

3. Vent valve stuck closed check

Next sequence is run if following condition set	-
Fuel tank pressure change for 10 seconds after vent valve ON (closed)	2.25 mmHg (0.3 kPa) or more

4. Vacuum introduction

Next sequence is run if both of following conditions set	-
1. Vacuum introduction time	Saturated within 12 minutes
2. Fuel tank pressure	Fuel tank pressure was standard

5. Purge VSV stuck closed check

Next sequence is run if following condition set	-
Fuel tank pressure change for 10 seconds after purge VSV ON (open)	2.25 mmHg (0.3 kPa) or more

6. Second 0.02 inch leak criterion measurement

Next sequence is run if all of following conditions set	Conditions 1, 2, 3 and 4
1. Fuel tank pressure when 4 sec. after 0.02 inch leak criterion measurement	-7.5 mmHg (-1 kPa) or less
2. 0.02 inch leak criterion	-36.4 to -7.92 mmHg (-4.85 to -1.057 kPa)
3. 0.02 inch leak criterion	Saturated within 55 seconds
4. 0.02 inch leak criterion difference between first and second	5.25 mmHg (0.7 kPa) or less

7. Leak check

Next sequence is run if following condition set	-
Fuel tank pressure when vacuum introduction was complete	Second 0.02 inch leak criterion or less

8. Atmospheric pressure

Monitor is complete if following conditions set	-
Atmospheric pressure difference between sequences 1 and 8	2.25 mmHg (0.3 kPa) or less

TYPICAL MALFUNCTION THRESHOLDS

P0455: EVAP gross leak

Fuel tank pressure when vacuum introduction complete	Higher than 0.02 inch leak criterion x 0.2

P0456: EVAP small leak

Fuel tank pressure when vacuum introduction complete	Between 1 and 2
Condition 1	Higher than second 0.02 inch leak criterion

Condition 2	Lower than 0.02 inch leak criterion x 0.2
Atmospheric pressure (absolute pressure)	70 kPa (525 mmHg) or more, and less than 110 kPa (825 mmHg)

"Saturated" indicates that the EVAP pressure change is less than 0.1 kPa (0.75 mmHg) in 30 seconds.

MONITOR RESULT

Detailed information on Checking Monitor Status (See page ES-19).

DTC	P0500	Vehicle Speed Sensor "A"

DESCRIPTION

Automatic Transaxle Models:
Vehicles, which are equipped with ABS (Anti-lock Brake System), detect the vehicle speed using the skid control ECU and wheel speed sensor. The wheel speed sensor monitors the wheel rotation speed and sends a signal to the skid control ECU. The skid control ECU converts the wheel speed signal into a 4-pulse signal and transmits it to the ECM via the combination meter. The ECM determines the vehicle speed based on the frequency of the pulse signal.

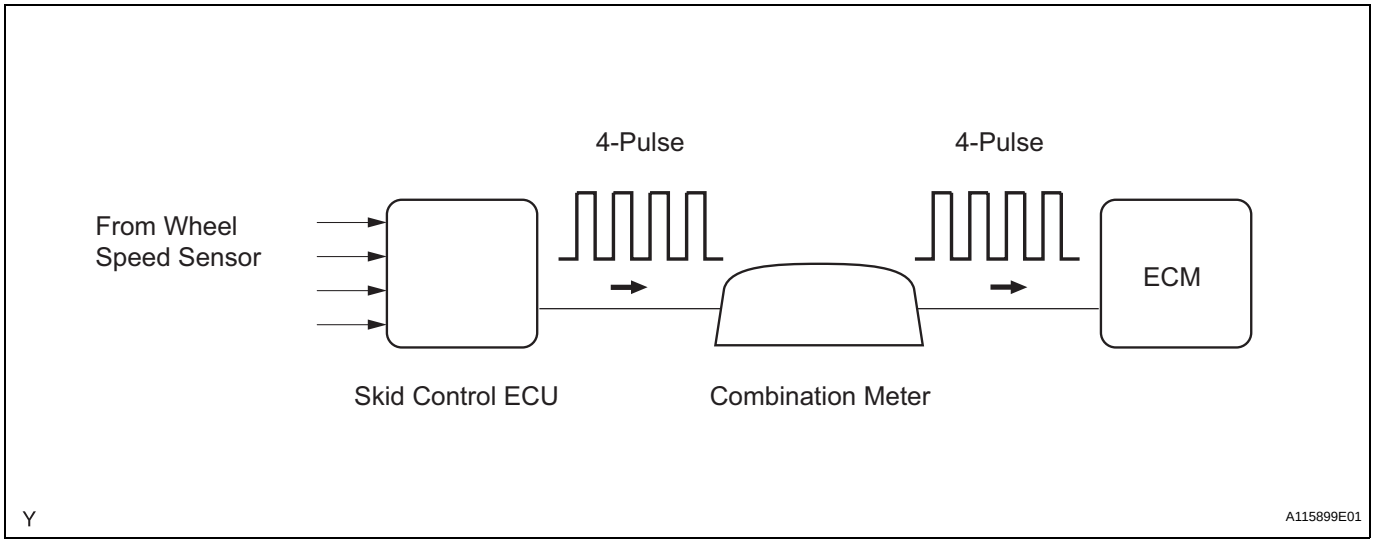

Manual Transaxle Models:
Vehicles, which are equipped with manual transaxle, detect the vehicle speed using the No. 1 vehicle speed sensor. The No. 1 vehicle speed sensor transmits a 4-pulse signal for every revolution of the rotor shaft, which is rotated by the transaxle or transfer output shaft via the driven gear. The 4-pulse signal is converted into a more precise rectangular waveform by the waveform shaping circuit inside the combination meter. The signal is then transmitted to the ECM. The ECM determines the vehicle speed based on the frequency of the pulse signal.

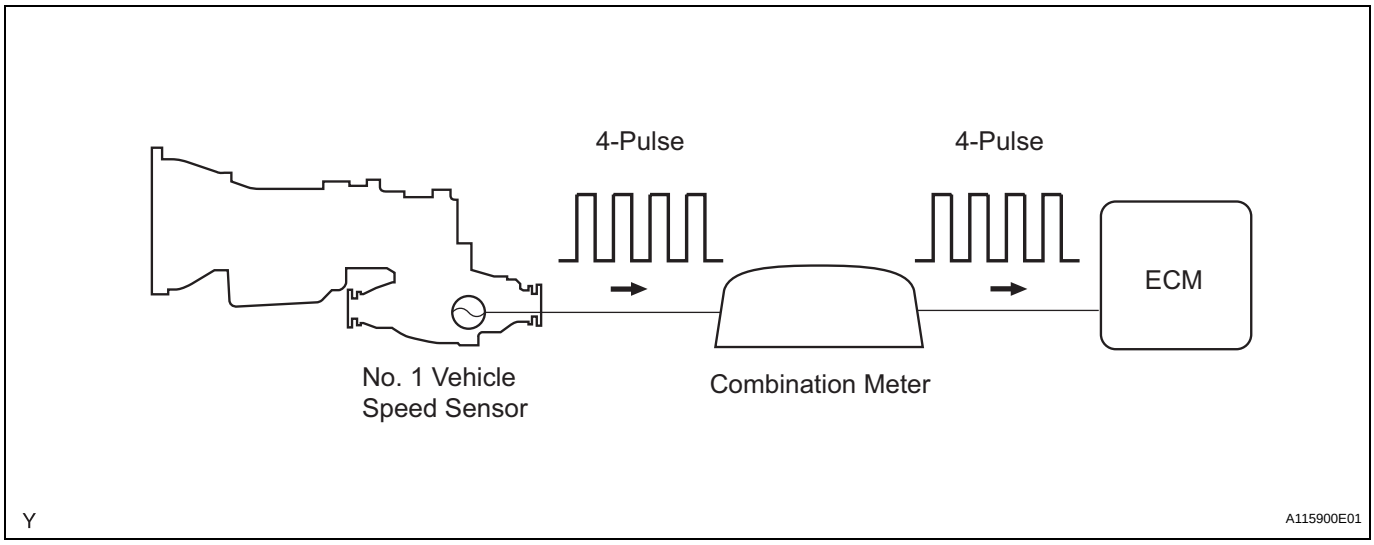

DTC No.	DTC Detection Conditions	Trouble Areas
P0500	ECM detects following conditions simultaneously 500 times (1 trip detection logic) • No SP1 (speed sensor) signal while ECM detects SP2 (No. 2 speed sensor) signal • Vehicle speed 6 mph (9 km/h) or more for 4 seconds • Park/Neutral position switch OFF (shift lever other than P and N positions) • Transfer lever in other than N position (4WD)	• Open or short in speed signal circuit • Combination meter • ECM • Skid control ECU

MONITOR DESCRIPTION

Automatic Transaxle Models:
The ECM assumes that the vehicle is being driven, while the vehicle speed sensor signal is being transmitted by the combination meter. If there is no signal from the combination meter, despite the ECM detecting the speed signal from the speed sensor No. 2, the ECM interprets this as a malfunction in the speed signal circuit. The ECM then illuminates the MIL and sets a DTC.
Manual Transaxle Models:
The ECM assumes that the vehicle is being driven, when the indicated engine speed is more than 2,000 rpm and the engine load calculated by the ECM is more than certain level. If there is no signal from the vehicle speed sensor, despite these conditions being met, the ECM interprets this as a malfunction in the speed signal circuit. The ECM then illuminates the MIL and sets a DTC.

ES

MONITOR STRATEGY

Related DTCs	P0500: Vehicle speed sensor "A" pulse input error
Required Sensors/Components (Main)	Vehicle Speed Sensor (VSS), Combination meter and Skid control ECU
Required Sensors/Components (Related)	Park/neutral Position (PNP) switch, Engine Coolant Temperature (ECT) sensor, Crankshaft Position (CKP) sensor and Mass Air Flow (MAF) meter
Frequency of Operation	Continuous
Duration	8 seconds: Manual transmission Conditions met 500 times: Automatic transmission
MIL Operation	Immediate: Manual transmission 2 driving cycles: Automatic transmission
Sequence of Operation	None

TYPICAL ENABLING CONDITIONS

Monitor runs whenever following DTCs not present	None

Manual Transmission:

Engine coolant temperature	70°C (158°F) or more
Engine speed	2,000 to 6,800 rpm
Fuel cut at high engine speed	Not executing
Engine load	38.5 % at 2,000 rpm 40 % at 3,600 rpm 43.5 % at 5,200 rpm 50 % at 6,800 rpm

Automatic Transmission:

Time after following conditions met:	4 seconds or more
Ignition switch	ON
Park/neutral position switch	OFF
Vehicle speed	5.59 mph (9 km/h) or more
Time after ignition switch OFF to ON	More than 0.5 seconds

TYPICAL MALFUNCTION THRESHOLDS

Vehicle speed sensor signal	No pulse input

WIRING DIAGRAM

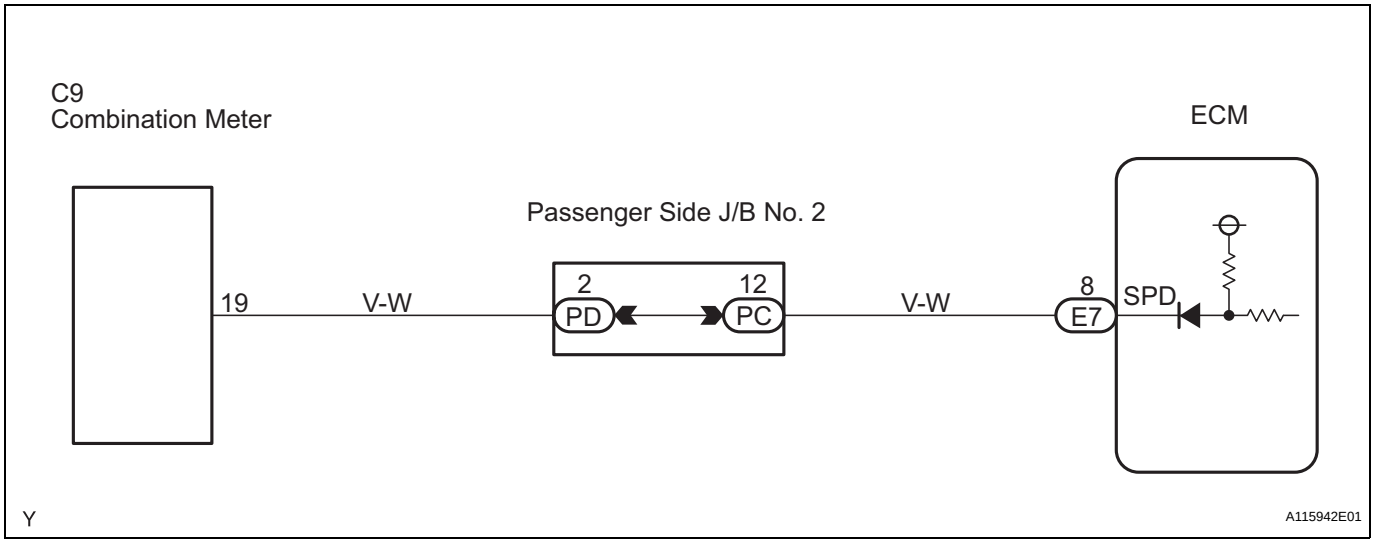

HINT:
Read freeze frame data using an intelligent tester. Freeze frame data record the engine condition when malfunctions are detected. When troubleshooting, freeze frame data can help determine if the vehicle was moving or stationary, if the engine was warmed up or not, if the air-fuel ratio was lean or rich, and other data, from the time the malfunction occurred.

1	**CHECK OPERATION OF SPEEDOMETER**

(a) Drive the vehicle and check if the operation of the speedometer in the combination meter is normal.
HINT:
The vehicle speed sensor is operating normally if the speedometer reading is normal.

NG → **CHECK SPEEDOMETER CIRCUIT**

OK

2	INSPECT ECM (SPD VOLTAGE)

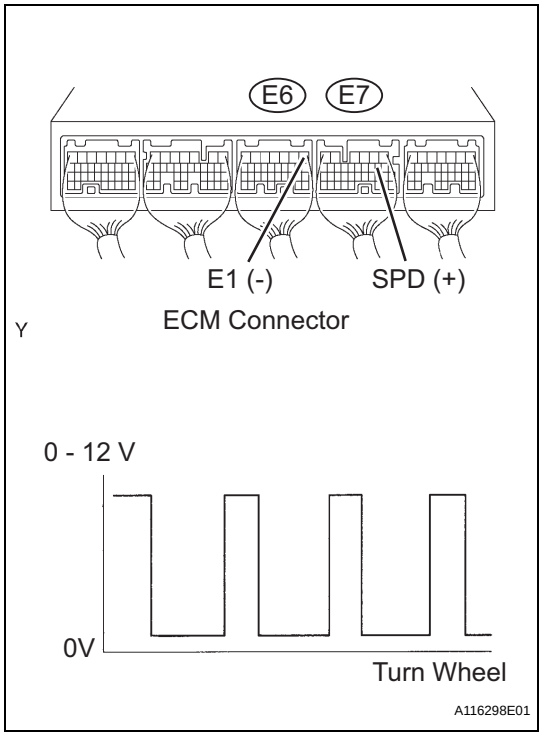

(a) Shift the transmission gear selector lever to the neutral position.
(b) Jack up the vehicle.
(c) Turn the ignition switch ON.
(d) Check the voltage between the terminals of the E6 and E7 ECM connectors as the wheel is turned slowly.

Standard

Tester Connections	Specified Conditions
SPD (E7-8) - E1 (E6-1)	Voltage generated intermittently

HINT:
The output voltage should fluctuate up and down similarly to the diagram on the left when the wheel is turned slowly.

NG → **REPAIR OR REPLACE HARNESS OR CONNECTOR**

OK

REPLACE ECM

ES

DTC	P0504	Brake Switch "A" / "B" Correlation

DESCRIPTION

The stop light switch is a duplex system that transmits two signals: STP and ST1-. These two signals are used by the ECM to monitor whether or not the brake system is working properly. If the signals, which indicate the brake pedal is being depressed and released, are detected simultaneously, the ECM interprets this as a malfunction in the stop light switch and sets the DTC.

HINT:

The normal conditions are as shown in the table below. The signals can be read using an intelligent tester.

Signals	Brake Pedal Released	In Transition	Brake Pedal Depressed
STP	OFF	ON	ON
ST1-	ON	ON	OFF

ES

DTC No.	DTC Detection Conditions	Trouble Areas
P0504	Conditions (a), (b) and (c) continue for 0.5 seconds or more (1 trip detection logic) (a) Ignition switch ON (b) Brake pedal released (c) STP signal OFF when ST1- signal OFF	• Short in stop light switch signal circuit • STOP fuse • Stop light switch • ECM

WIRING DIAGRAM

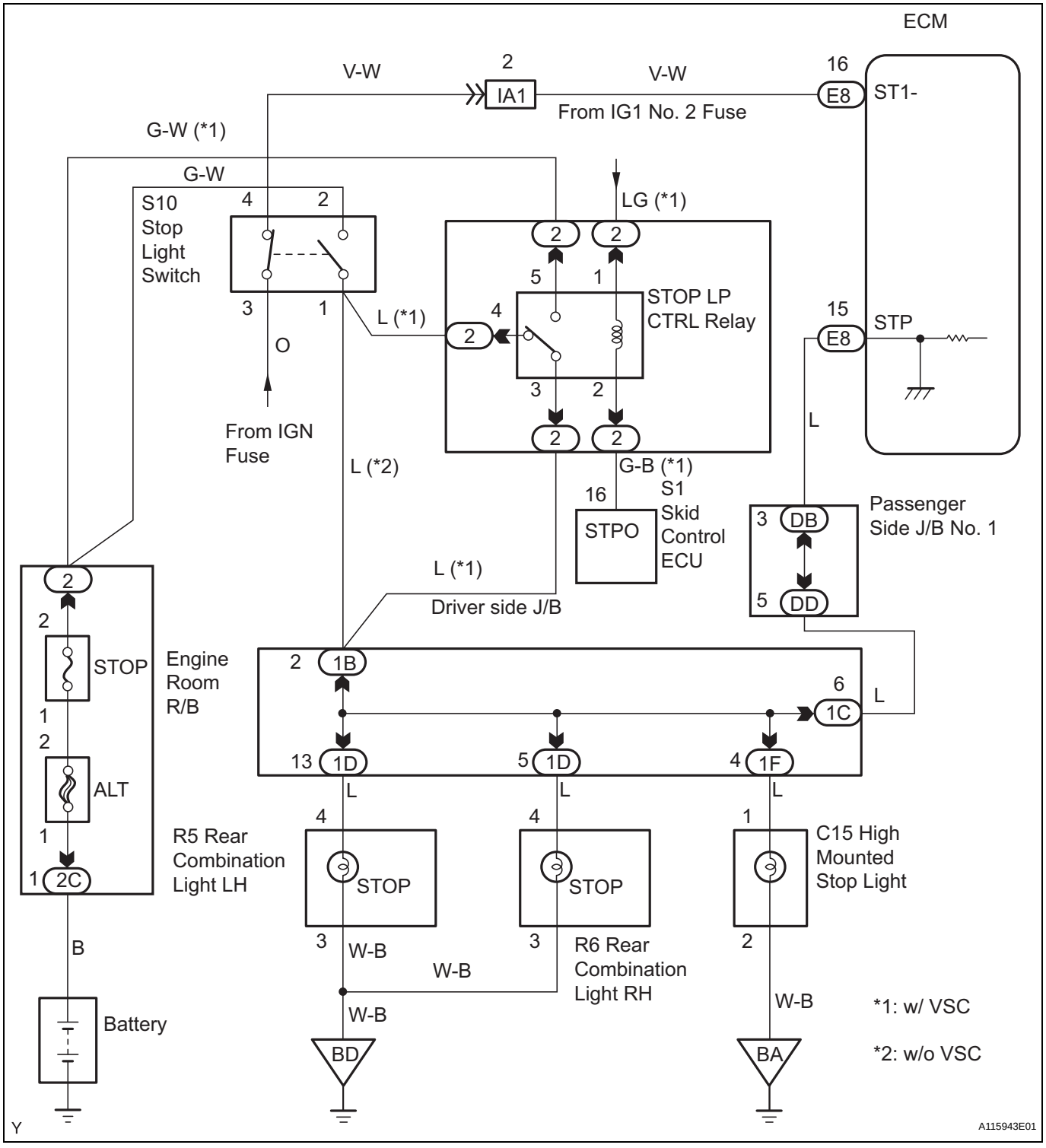

HINT:
Read freeze frame data using an intelligent tester. Freeze frame data record the engine condition when malfunctions are detected. When troubleshooting, freeze frame data can help determine if the vehicle was moving or stationary, if the engine was warmed up or not, if the air-fuel ratio was lean or rich, and other data, from the time the malfunction occurred.

1	CHECK OPERATION OF STOP LIGHT

(a) Check whether the stop lights turn on and off normally when the brake pedal is depressed and released.
OK:
Stop lights turn ON when brake pedal is depressed.

NG → **REPAIR OR REPLACE STOP LIGHT SWITCH CIRCUIT**

OK

ES

2	INSPECT STOP LIGHT SWITCH ASSEMBLY

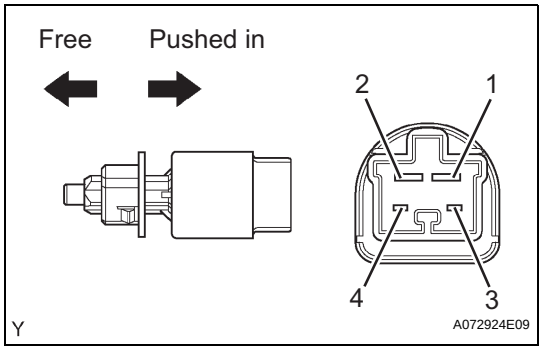

(a) Remove the stop light switch assembly.
(b) Check the resistance.
Standard Resistance

Switch Positions	Tester Connections	Specified Conditions
Switch pin free	1 - 2	Below 1 Ω
Switch pin free	3 - 4	10 kΩ or higher
Switch pin pushed in	1 - 2	10 kΩ or higher
Switch pin pushed in	3 - 4	Below 1 Ω

(c) Reinstall the stop light switch assembly.

NG → **REPLACE STOP LIGHT SWITCH ASSEMBLY**

OK

3	READ VALUE OF INTELLIGENT TESTER (STP SIGNAL AND ST1 - VOLTAGE)

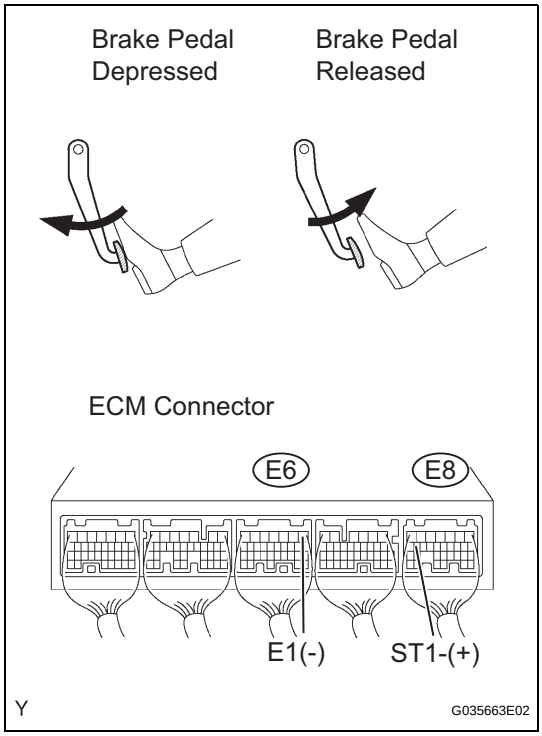

(a) Connect an intelligent tester to the DLC3.
(b) Turn the ignition switch ON and turn the tester ON.
(c) Select the following menu items: DIAGNOSIS / ENHANCED OBD II / DATA LIST / PRIMARY / STOP LIGHT SW.
(d) Check the STP signal when the brake pedal is depressed and released.
Standard

Brake Pedal Operations	Specified Conditions
Depressed	STP signal ON
Released	STP signal OFF

(e) Measure the voltage between the terminals of the E8 and E6 ECM connectors.
Standard Voltage

Tester Connections	Brake Pedal Operations	Specified Conditions
ST1 - (E8-16) - E1 (E6-1)	Depressed	Below 1.5 V
ST1 - (E8-16) - E1 (E6-1)	Released	7.5 to 14 V

OK → **CHECK FOR INTERMITTENT PROBLEMS**

NG

4	CHECK HARNESS AND CONNECTOR (STOP LIGHT SWITCH - ECM)

Wire Harness Side:

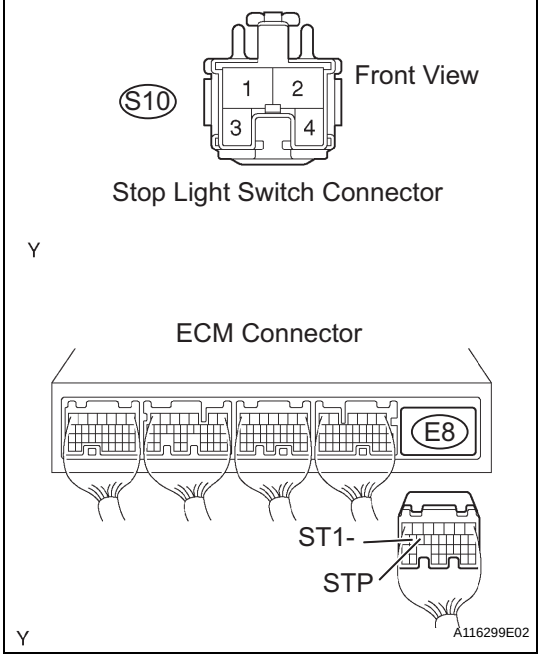

(a) Disconnect the S10 stop light switch connector.
(b) Disconnect the E8 ECM connector.
(c) Check the resistance.

Standard Resistance (Check for open)

Tester Connections	Specified Conditions
Stop light switch (S10-1) - STP (E8-15)	Below 1 Ω
Stop light switch (S10-4) - ST1- (E8-16)	

Standard Resistance (Check for short)

Tester Connections	Specified Conditions
Stop light switch (S10-1) or STP (E8-15) - Body ground	10 kΩ or higher
Stop light switch (S10-4) or ST1- (E8-16) - Body ground	

(d) Reconnect the stop light switch connector.
(e) Reconnect the ECM connector.

NG → **REPAIR OR REPLACE HARNESS OR CONNECTOR**

ES

OK

REPLACE ECM

DTC	P0505	Idle Control System Malfunction

DESCRIPTION

The idling speed is controlled by the ETCS (Electronic Throttle Control System). The ETCS is comprised of: 1) the one valve type throttle body; 2) the throttle actuator, which operates the throttle valve; 3) the Throttle Position (TP) sensor, which detects the opening angle of the throttle valve; 4) the Accelerator Pedal Position (APP) sensor, which detects the accelerator pedal position; and 5) the ECM, which controls the ETCS. Based on the target idling speed, the ECM controls the throttle actuator to provide the proper throttle valve opening angle.

DTC No.	DTC Detection Conditions	Trouble Areas
P0505	Idling speed continues to vary greatly from target idling speed (2 trip detection logic)	• ETCS • Air induction system • PCV hose connection • ECM

ES

MONITOR DESCRIPTION

The ECM monitors the idling speed and idling air flow volume to conduct Idle Speed Control (ISC). The ECM determines that the ISC system is malfunctioning if the following conditions apply:

- The learned idling air flow volume remains at the maximum or minimum volume 5 times or more during a drive cycle.
- While driving at 6 mph (10 km/h) or more, the actual engine idling speed varies from the target idling speed by between 100 rpm and 200 rpm, 5 times or more during a drive cycle.

Example:

If the actual idling speed varies from the target idling speed by more than 200 rpm* 5 times during a drive cycle, the ECM illuminates the MIL and sets the DTC.

*: Threshold idling speed varies with engine load.

Example

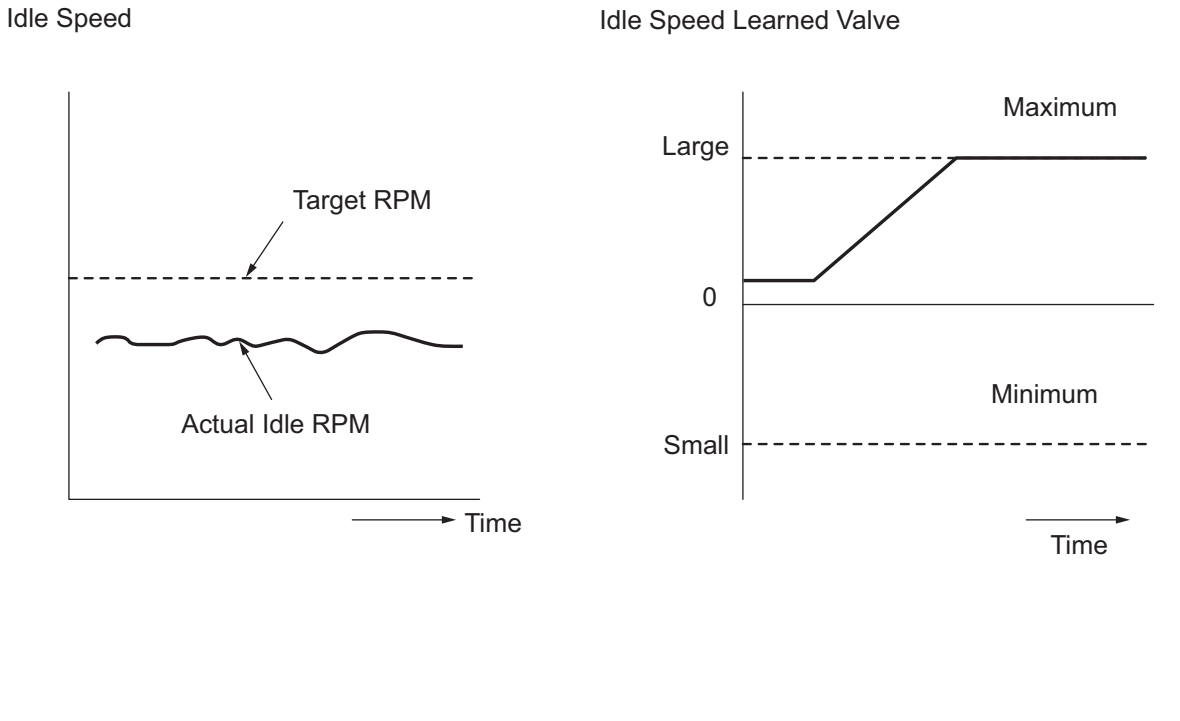

Y A121611E01

ES

MONITOR STRATEGY

Related DTCs	P0505: ISC Function
Required Sensors/Components (Main)	ETCS
Required Sensors/Components (Related)	Crankshaft position sensor, Engine coolant temperature sensor, and Vehicle speed sensor
Frequency of Operation	Continuous
Duration	10 minutes
MIL Operation	2 driving cycles
Sequence of Operation	None

TYPICAL ENABLING CONDITIONS

Functional check:

Monitor runs whenever following DTCs not present	None
Engine	Running

TYPICAL MALFUNCTION THRESHOLDS

Functional check:

Either of following conditions 1 or 2 met	-
1. Frequency that following conditions (a) and (b) met	5 times or more
(a) Engine RPM - target engine RPM (A/C OFF and NSW OFF)	Below -100 rpm, or 150 rpm or more
(b) ISC feedback correction amount	-0.17 L/sec or less, or 2.08 L/sec or more
2. Frequency that following conditions (c) and (d) met	Once
(c) Engine RPM - target engine RPM (A/C OFF and NSW OFF)	Below -100 rpm, or 150 rpm or more
(d) ISC airflow rate (learning value)	1.3 L/sec. or less, or 8.5 L/sec. or more

HINT:

- The following conditions may also cause DTC P0505 to be set:
  (1) The floor carpet overlapping slightly onto the accelerator pedal, causing the accelerator pedal to be slightly depressed and therefore the throttle valve position to be slightly open.
  (2) The accelerator pedal being not fully released.
- Read freeze frame data using an intelligent tester. Freeze frame data record the engine condition when malfunctions are detected. When troubleshooting, freeze frame data can help determine if the vehicle was moving or stationary, if the engine was warmed up or not, if the air-fuel ratio was lean or rich, and other data, from the time the malfunction occurred.

ES

1 CHECK ANY OTHER DTCS OUTPUT (IN ADDITION TO DTC P0505)

(a) Connect an intelligent tester to the DLC3.
(b) Turn the ignition switch ON.
(c) Turn the tester ON.
(d) Select the following menu items: DIAGNOSIS / ENHANCED OBD II / DTC INFO / CURRENT CODES.
(e) Read DTCs.

Result

Display (DTC Output)	Proceed To
P0505	A
P0505 and other DTCs	B

HINT:
If any DTCs other than P0505 are output, troubleshoot those DTCs first.

B → **GO TO DTC CHART**

A

2 CHECK PCV HOSE CONNECTIONS

OK:
PCV hose is connected correctly and is not damaged.

NG → **REPAIR OR REPLACE PCV HOSE**

OK

3 CHECK AIR INDUCTION SYSTEM

(a) Check the air induction system for vacuum leakage.
OK:
No leakage from air induction system.

NG → **REPAIR OR REPLACE AIR INDUCTION SYSTEM**

OK

4	CHECK THROTTLE VALVE

(a) Check the throttle valve condition.

NG → **REPLACE THROTTLE W/MOTOR BODY ASSEMBLY**

OK

REPLACE ECM

DTC	P050A	Cold Start Idle Air Control System Performance

DTC	P050B	Cold Start Ignition Timing Performance

DESCRIPTION

The Electronic Throttle Control System (ETCS) controls the engine idling speed. The ETCS operates the throttle actuator to open and close the throttle valve, and adjusts the intake air amount to achieve the target idling speed.
In addition, the ECM retards the ignition timing and the ETCS increases the intake air amount to quickly increase the catalyst temperature at cold start to reduce emissions.

ES

DTC No.	DTC Detection Conditions	Trouble Areas
P050A	Accumulated intake air amount during 10 seconds of idling after cold start, less than threshold (2 trip detection logic)	• Throttle body assembly • Mass air flow meter • Air induction system • PCV hose connections • VVT system • Air cleaner filter element • ECM
P050B	Ignition timing retard value insufficient for 5 seconds or more during 10 seconds of P050A monitoring duration at cold start (2 trip detection logic)	

MONITOR DESCRIPTION

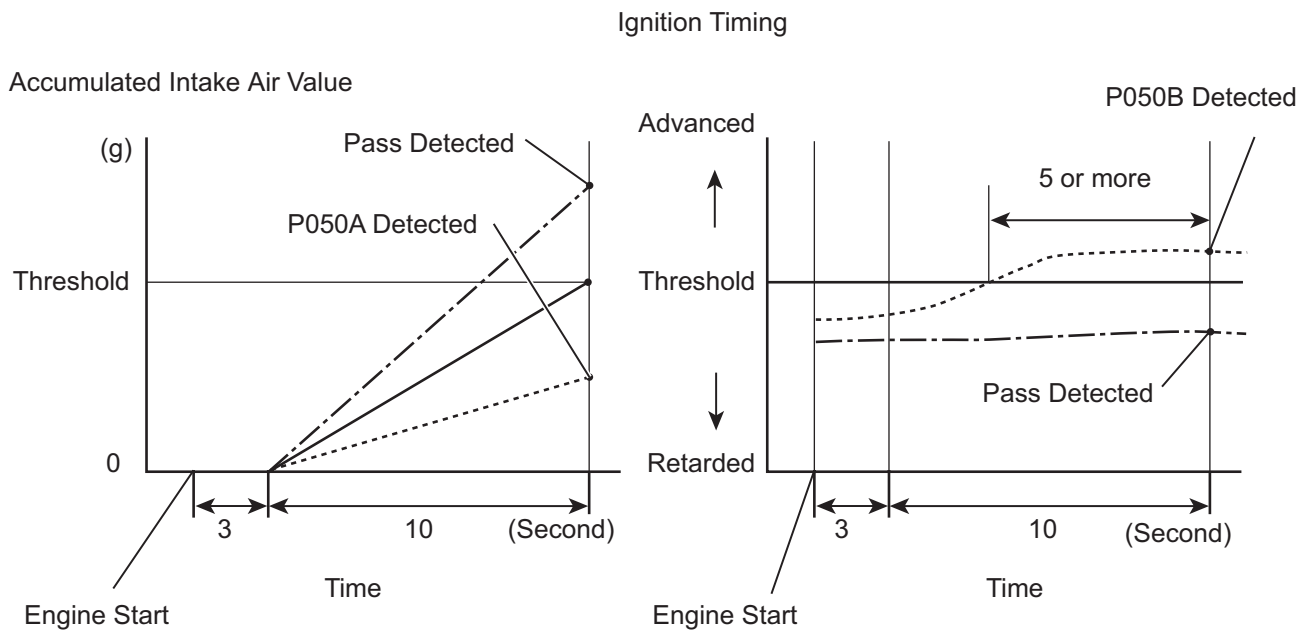

The ECM monitors the intake air amount during idling and the ignition timing.
When the Engine Coolant Temperature (ECT) is between -10°C and 50 °C (14°F and 122°F), the ECM calculates the idling intake air amount for 10 seconds, beginning 3 seconds after the engine starts.
When the accumulated value is below the threshold, the ECM interprets this as a malfunction in the Idle Speed Control (ISC) system at cold start.

The ECM also monitors the ignition timing at cold start, and judges it to be incorrect when it is advanced to the same value for a warm engine for 5 seconds or more of the 10 second monitoring period.
Example:
P050A is detected when all conditions below are met (2 trip detection logic).
1. The ECT is between -10°C and 50°C (14°F and 122°F) when the engine starts.
2. The engine idles for 13 seconds after engine start.
3. The accumulated intake air amount is below the threshold.

The ECM sets the DTC and illuminates the MIL 13 seconds after the engine is next started.

NOTICE:

When the negative battery terminal is disconnected during inspection or repairs, the ISC learning values are cleared. The ISC learning must be performed by warming up the engine and idling for 5 minutes with the ECT at 75°C (167°F) or more because DTCs cannot be detected with the ISC learning values cleared.

MONITOR STRATEGY

Related DTCs	P050A: Idle speed control problem at cold P050B: Idle ignition timing problem at cold
Required Sensors/Components (Main)	Mass air flow meter
Required Sensors/Components (Related)	Engine Coolant Temperature (ECT) sensor, Throttle position sensor, Vehicle speed sensor
Frequency of Operation	Once per driving cycle
Duration	10 seconds
MIL Operation	2 driving cycles
Sequence of Operation	None

TYPICAL ENABLING CONDITIONS

P050A:

Battery voltage	8 V or more
Time after engine start	3 seconds or more
Starter	OFF
ECT at engine start	-10°C (14°F) or more
ECT	-10°C to 50°C (14°F to 122°F)
Engine idling time	3 seconds or more
Fuel-cut	OFF
Vehicle speed	Less than 1.875 mph (3 km/h)
Time after shift position changed (Automatic Transmission)	1 second or more
Atmospheric pressure	76 kPa (570 mmHg) or more

P050B:

Battery voltage	8 V or more
Time after engine start	3 seconds or more
Starter	OFF
ECT at engine start	-10°C (14°F) or more
ECT	-10°C to 50°C (14°F to 122°F)
Engine idling time	3 seconds or more
Fuel-cut	OFF
Vehicle speed	Less than 1.875 mph (3 km/h)

TYPICAL MALFUNCTION THRESHOLDS

P050A:

Accumulated air flow amount (Manual Transmission)	Varies with ECT (Example: Less than 42.5 g)
Accumulated air flow amount (Automatic Transmission)	Varies with ECT (Example: Less than 47.5 g)

P050B:

Accumulated time when ignition timing retard value insufficient	5 seconds or more

HINT:
Read freeze frame data using an intelligent tester. Freeze frame data record the engine condition when malfunctions are detected. When troubleshooting, freeze frame data can help determine if the vehicle was moving or stationary, if the engine was warmed up or not, if the air-fuel ratio was lean or rich, and other data, from the time the malfunction occurred.

ES

1	CHECK ANY OTHER DTCS OUTPUT (IN ADDITION TO DTC P050A AND/OR P050B)

(a) Connect an intelligent tester to the DLC3.
(b) Turn the ignition switch ON.
(c) Turn the tester ON.
(d) Select the following menu items: DIAGNOSIS / ENHANCED OBD II / DTC INFO / CURRENT CODES.
(e) Read the DTCs.

Result

Display (DTC Output)	Proceed To
P050A and/or P050B	A
P050A and/or P050B and other DTCs	B

HINT:
If any DTCs other than P050A and P050B are output, troubleshoot those DTCs first.

B → GO TO DTC CHART

A

2	READ VALUE OF INTELLIGENT TESTER (FUEL TRIM)

HINT:
Calculate the total fuel trim values to check the characteristic deviation of the mass air flow meter.
(a) Connect an intelligent tester to the DLC3.
(b) Turn the ignition switch ON.
(c) Turn the tester ON.
(d) Select the following menu items: DIAGNOSIS / ENHANCED OBD II / DATA LIST / PRIMARY / SHORT FT #1 and LONG FT #1.
(e) Read the values displayed on the tester.
(f) Add together the SHORT FT #1 and LONG FT #1 values to obtain the total FUEL TRIM.

OK:
Total of the SHORT FT #1 and LONG FT #1 values is between -20 % and 20 %.

OK → **Go to step 14**

NG

3	PERFORM ACTIVE TEST USING INTELLIGENT TESTER (PURGE VSV)

(a) Connect the intelligent tester to the DLC3.
(b) Turn the ignition switch to ON.
(c) Turn the tester ON.
(d) Select the following menu items: DIAGNOSIS / ENHANCED OBD II / ACTIVE TEST / EVAP VSV.
(e) Disconnect the hose (connected to the canister) from the purge VSV.
(f) Start the engine.
(g) Using the tester, turn off the purge VSV (EVAP VSV: OFF).
(h) Use your finger to confirm that the purge VSV has no suction.
OK:
Purge VSV has no suction.
(i) Using the tester, turn on the purge VSV (EVAP VSV: ON).
(j) Use your finger to confirm that the purge VSV has suction.
OK:
Purge VSV has suction.

NG → **Go to step 9**

OK

4	PERFORM ACTIVE TEST USING INTELLIGENT TESTER (OPERATE OCV)

(a) Connect the intelligent tester to the DLC3.
(b) Start the engine and turn the tester ON.
(c) Warm up the engine.
(d) Select the following menu items: DIAGNOSIS / ENHANCED OBD II / ACTIVE TEST / VVT CTRL B1.

NG → **Go to step 10**

OK

5	CHECK PCV HOSE CONNECTIONS

OK:
PCV hose is connected correctly and is not damaged.

NG → **Go to step 11**

OK

6	CHECK AIR INDUCTION SYSTEM

(a) Check the air induction system for vacuum leakage.
OK:
No leakage from air induction system.

NG → **Go to step 12**

OK

ES

7	CHECK AIR CLEANER FILTER ELEMENT SUB-ASSEMBLY

NEXT → **Go to step 13**

OK

8	REPLACE MASS AIR FLOW METER

NEXT → **Go to step 19**

9	REPLACE PURGE VSV

NEXT → **Go to step 19**

10	CHECK AND REPAIR VVT SYSTEM

NEXT → **Go to step 19**

11	REPAIR OR REPLACE PCV HOSE

NEXT → **Go to step 19**

12	REPAIR OR REPLACE AIR INDUCTION SYSTEM

NEXT → **Go to step 19**

13	REPLACE AIR CLEANER FILTER ELEMENT SUB-ASSEMBLY

NEXT → **Go to step 19**

14	READ VALUE OF INTELLIGENT TESTER (ENGINE SPD)

NG → Go to step 17

OK

15	CHECK THROTTLE VALVE

(a) Check for deposits around the throttle valve and throttle valve condition.

OK:

No deposits around the throttle valve and throttle valve moves smoothly

NG → Go to step 18

OK

16	REPLACE ECM

NEXT → Go to step 19

17	REPAIR OR REPLACE CRANKSHAFT POSITION SENSOR CIRCUIT

NEXT → Go to step 19

18	REPAIR OR REPLACE THROTTLE BODY ASSEMBLY

NEXT → Go to step 19

19	CHECK WHETHER DTC OUTPUT RECURS (DTC P050A AND/OR P050B)

NOTICE:

In this operation, the engine must be cold (the same level as the engine coolant temperature recorded in the freeze frame data).

(a) Connect an intelligent tester to the DLC3.
(b) Turn the ignition switch to ON.
(c) Turn the tester ON.
(d) Clear DTCs (See page ES-38).
(e) Switch the ECM from normal mode to check mode using the tester (See page ES-41).
(f) Start the engine to idle for a minute.

OK:

Stable fast idling.

(g) Read DTCs.

OK:
No DTC output.

NEXT

END

DTC	P0560	System Voltage

DESCRIPTION

The battery supplies electricity to the ECM even when the ignition switch is in the OFF position. This power allows the ECM to store data such as DTC history, freeze frame data and fuel trim values. If the battery voltage falls below a minimum level, these memories are cleared and the ECM determines that there is a malfunction in the power supply circuit. When the engine is next started, the ECM illuminates the MIL and sets the DTC.

DTC No.	DTC Detection Conditions	Trouble Areas
P0560	Open in ECM back up power source circuit (1 trip detection logic)	• Open in back up power source circuit • EFI fuse • ECM

HINT:
If DTC P0560 is set, the ECM does not store other DTCs.

MONITOR STRATEGY

Related DTCs	P0560: ECM system voltage
Required Sensors/Components (Main)	ECM
Required Sensors/Components (Related)	-
Frequency of Operation	Continuous
Duration	3 seconds
MIL Operation	Immediate (MIL illuminated after next engine start)
Sequence of Operation	None

TYPICAL ENABLING CONDITIONS

Monitor runs whenever following DTCs not present	None
Stand-by RAM	Initialized

TYPICAL MALFUNCTION THRESHOLDS

ECM power source	Less than 3.5 V

WIRING DIAGRAM

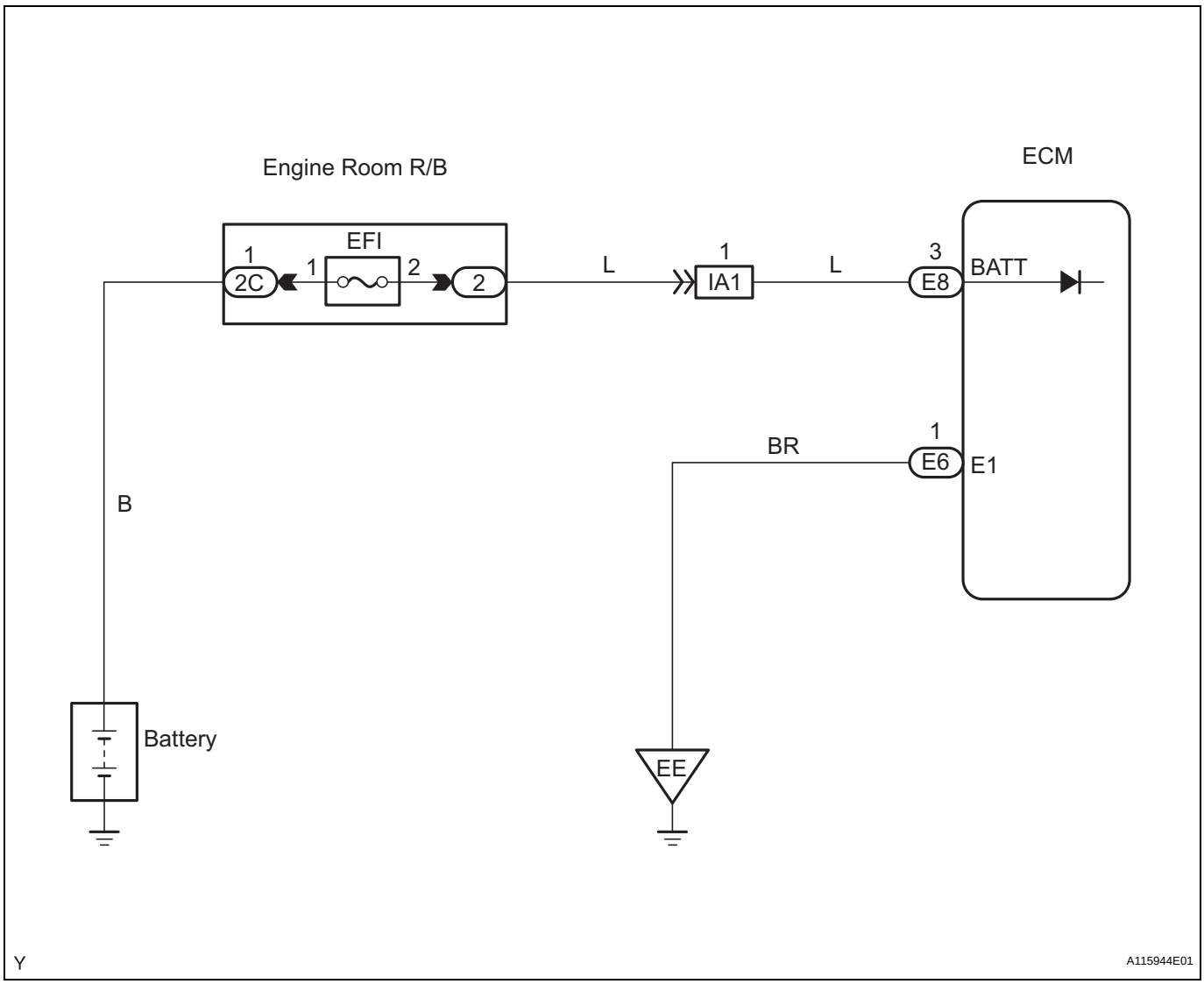

ES

HINT:
Read freeze frame data using an intelligent tester. Freeze frame data record the engine condition when malfunctions are detected. When troubleshooting, freeze frame data can help determine if the vehicle was moving or stationary, if the engine was warmed up or not, if the air-fuel ratio was lean or rich, and other data, from the time the malfunction occurred.

1	CHECK FUSE (EFI FUSE)

Engine Room R/B:

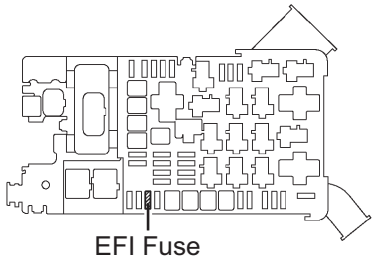

(a) Remove the EFI fuse from the engine room R/B.
(b) Check the resistance.
Standard Resistance:
Below 1 Ω
(c) Reinstall the EFI fuse.

NG → **CHECK FOR SHORT IN ALL HARNESSES AND COMPONENTS CONNECTED TO FUSE**

OK

2 INSPECT ECM (BATT VOLTAGE)

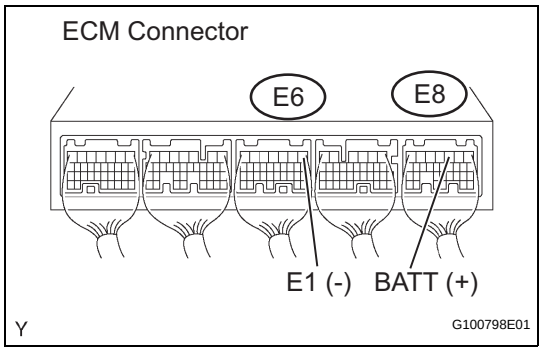

(a) Measure the voltage between the terminals of the E8 and E6 ECM connectors.

Standard Voltage

Tester Connections	Specified Conditions
BATT (E8-3) - E1 (E6-1)	9 to 14 V

NG → **Go to step 3**

OK

REPLACE ECM

3 CHECK HARNESS AND CONNECTOR (ECM - EFI FUSE, EFI FUSE - BATTERY)

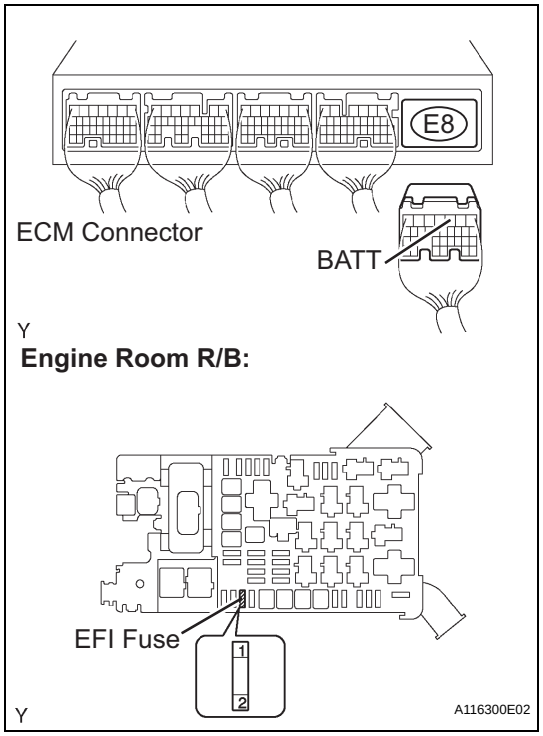

(a) Check the harness and the connector between the EFI fuse and ECM.
   (1) Remove the EFI fuse from the engine room R/B.
   (2) Disconnect the E8 ECM connector.
   (3) Check the resistance.

Standard Resistance (Check for open)

Tester Connections	Specified Conditions
EFI fuse (2) - BATT (E8-3)	Below 1 Ω

Standard Resistance (Check for short)

Tester Connections	Specified Conditions
EFI fuse (2) or BATT (E8-3) - Body ground	10 kΩ or higher

   (4) Reconnect the ECM connector.
   (5) Reinstall the EFI fuse.

(b) Check the harness and the connector between the EFI fuse and battery.
   (1) Remove the EFI fuse from the engine room R/B.
   (2) Disconnect the positive battery terminal.
   (3) Check the resistance.

Standard Resistance (Check for open)

Tester Connections	Specified Conditions
Battery positive terminal - EFI fuse (1)	Below 1 Ω

Standard Resistance (Check for short)

Tester Connections	Specified Conditions
Battery positive terminal or EFI fuse (1) - Body ground	10 kΩ or higher

   (4) Reconnect the positive battery terminal.

ES

(5) Reinstall the EFI fuse.

NG → **REPAIR OR REPLACE HARNESS OR CONNECTOR**

OK ↓

4	INSPECT BATTERY

(a) Check that the battery is not depleted.

NG → **REPLACE BATTERY**

OK ↓

CHECK AND REPLACE ENGINE ROOM RELAY BLOCK

DTC	P0604	Internal Control Module Random Access Memory (RAM) Error

DTC	P0606	ECM / PCM Processor

DTC	P0607	Control Module Performance

DTC	P0657	Actuator Supply Voltage Circuit / Open

DESCRIPTION

The ECM continuously monitors its own internal memory status, internal circuits, and output signals transmitted to the throttle actuator. This self-check insures that the ECM is functioning properly. If any malfunction is detected, the ECM sets the appropriate DTC and illuminates the MIL.
The ECM memory status is diagnosed by internal mirroring of the main CPU and the sub CPU to detect Random Access Memory (RAM) errors. The two CPUs also perform continuous mutual monitoring. The ECM illuminates the MIL and sets a DTC if: 1) outputs from the two CPUs are different or deviate from the standards, 2) the signals sent to the throttle actuator deviate from the standards, 3) a malfunction is found in the throttle actuator supply voltage, and 4) any other ECM malfunction is found.

DTC No.	DTC Detection Conditions	Trouble Areas
P0604 P0606 P0607 P0657	ECM internal error (1 trip detection logic)	ECM

MONITOR STRATEGY

Related DTCs	P0604: ECM RAM error P0606: ECM range check P0607: ECM CPU malfunction P0657: ETCS power supply
Required Sensors/Components (Main)	ECM
Required Sensors/Components (Related)	-
Frequency of Operation	Continuous
Duration	P0604: 6 times or more P0606: Within 16 seconds P0607 and P0657: Within 1 second
MIL Operation	Immediate
Sequence of Operation	None

TYPICAL ENABLING CONDITIONS

Monitor runs whenever following DTCs not present	None

TYPICAL MALFUNCTION THRESHOLDS

ECM RAM errors (P0604):

RAM mirror check	fail

ECM CPU range check (P0606):

Either of following conditions met:	-
Difference between throttle valve position of main CPU and throttle valve position of sub CPU	0.3 V or more
Difference between accelerator pedal position of main CPU and accelerator pedal position of sub CPU	0.3 V or more

ECM CPU malfunction (P0607):

Either A or B met	-
A. Following conditions met	
CPU reset	1 time or more
Learned TP - learned APP	0.4 V or more
Throttle actuator	OFF
B. CPU reset	2 times or more

Electronic throttle control system power supply function of ECM malfunctions (P0657):

ETCS (Electronic Throttle Control System) power supply when ignition switch turned ON	7 V or more

ES

Read freeze frame data using an intelligent tester. Freeze frame data record the engine condition when malfunctions are detected. When troubleshooting, freeze frame data can help determine if the vehicle was moving or stationary, if the engine was warmed up or not, if the air-fuel ratio was lean or rich, and other data, from the time the malfunction occurred.

1	CHECK ANY OTHER DTCS OUTPUT (IN ADDITION TO DTC P0604/P0606/P0607/P0657)

(a) Connect an intelligent tester to the DLC3.
(b) Turn the ignition switch ON.
(c) Turn the tester ON.
(d) Enter the following menus: DIAGNOSIS / ENHANCED II / DTC INFO / CURRENT CODES.
(e) Read the DTC.

Result

Display (DTC output)	Proceed to
P0604, P0606, P0607, P0657	A
No output DTC	B

B → GO TO DTC CHART

A

REPLACE ECM

DTC	P0617	Starter Relay Circuit High

DESCRIPTION

While the engine is being cranked, the positive battery voltage is applied to terminal STA of the ECM. If the ECM detects the Starter Control (STA) signal while the vehicle is being driven, it determines that there is a malfunction in the STA circuit. The ECM then illuminates the MIL and sets the DTC.
This monitor runs when the vehicle is driven at 12.4 mph (20 km/h) for over 20 seconds.

DTC No.	DTC Detection Conditions	Trouble Areas
P0617	When conditions (a), (b) and (c) met, positive (+B) battery voltage 10.5 V or more applied to ECM for 20 seconds (1 trip detection logic) (a) Vehicle speed more than 12.4 mph (20 km/h) (b) Engine speed more than 1,000 rpm (c) STA signal ON	• Park/Neutral Position (PNP) switch (A/T*) • Clutch start switch (M/T*) • Starter relay circuit • Ignition switch • ECM

*: A/T denotes Automatic Transmission models and M/T denotes Manual Transmission models.

MONITOR STRATEGY

Related DTCs	P0617: Starter signal
Required Sensors/Components (Main)	STARTER relay, PNP switch, Clutch start switch and Ignition switch
Required Sensors/Components (Related)	Vehicle Speed Sensor (VSS), Crankshaft Position (CKP) sensor
Frequency of Operation	Continuous
Duration	20 seconds
MIL Operation	Immediate
Sequence of Operation	None

TYPICAL ENABLING CONDITIONS

Monitor runs whenever following DTCs not present	None
Battery voltage	10.5 V or more
Vehicle speed	12.4 mph (20 km/h) or more
Engine speed	1,000 rpm or more

TYPICAL MALFUNCTION THRESHOLDS

Starter signal	ON

WIRING DIAGRAM

For Manual Transaxle Models:

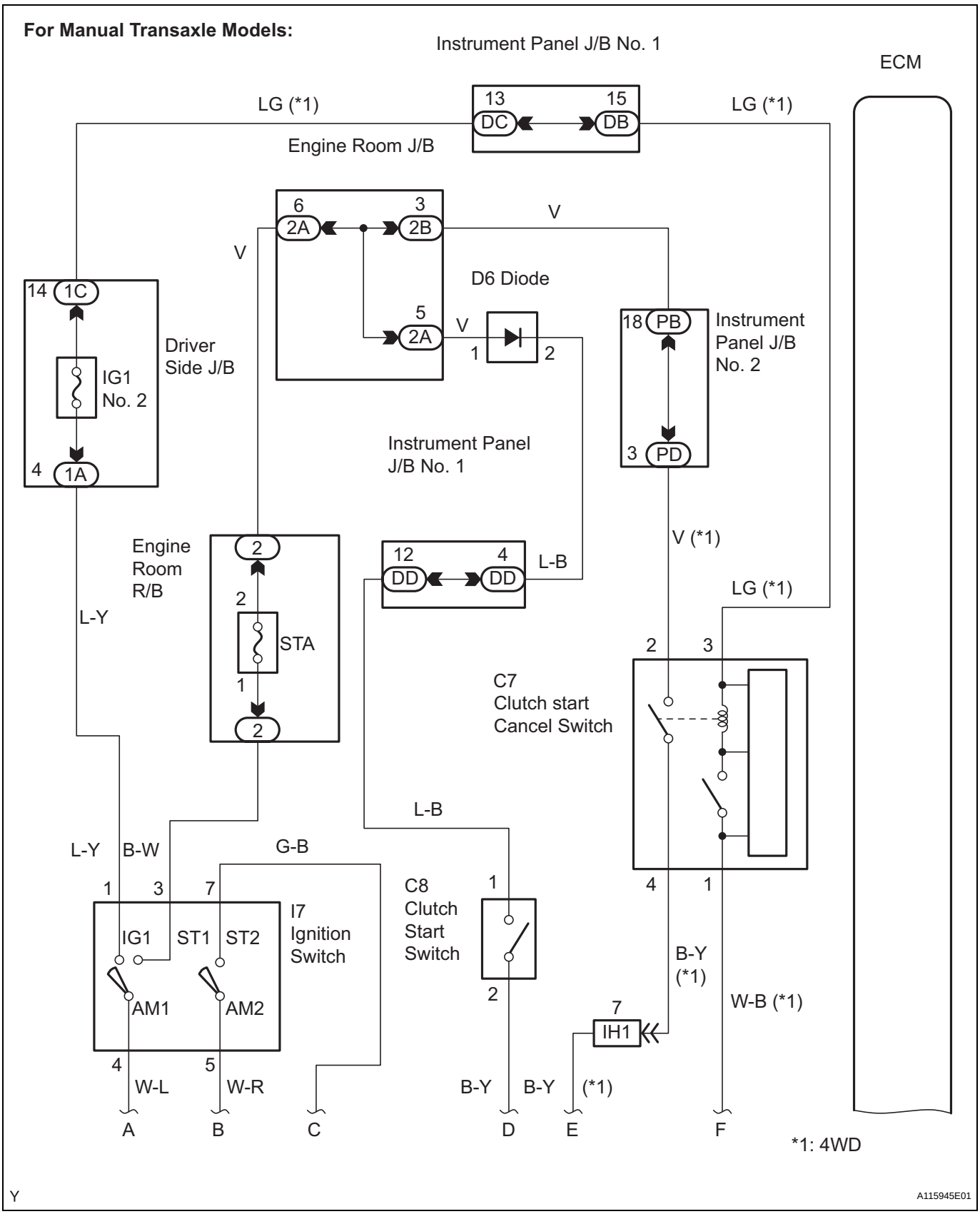

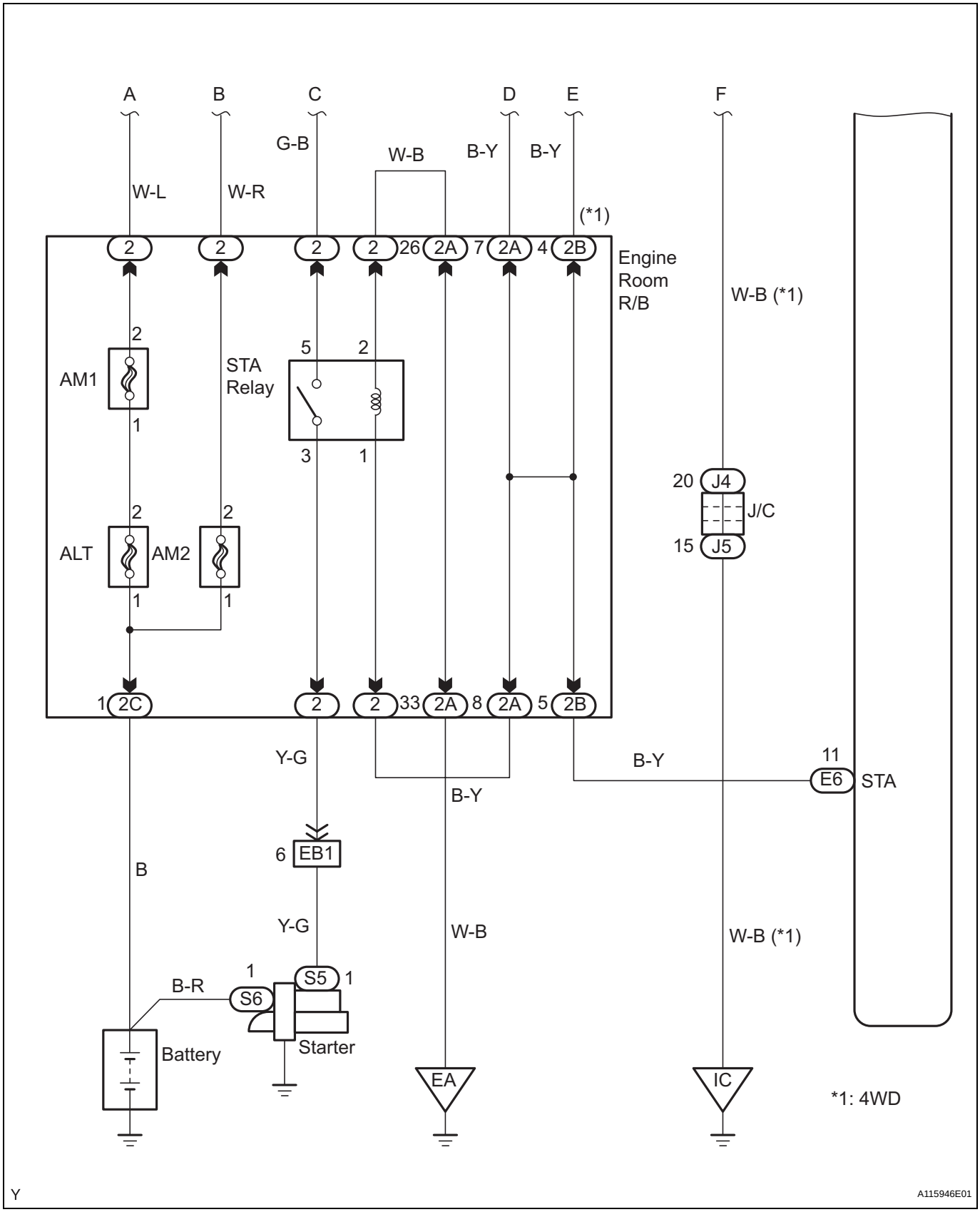
A
B
C
D
E
F
G-B
W-B
B-Y
B-Y
W-L
W-R
(*1)
2
2
2
2
26
2A
7
2A
4
2B
Engine Room R/B
W-B (*1)
2
AM1
1
STA Relay
5
2
3
1
20
J4
J/C
15
J5
2
2
ALT
AM2
1
1
1
2C
2
2
33
2A
8
2A
5
2B
Y-G
B-Y
11
E6
STA
B-Y
6
EB1
B
Y-G
W-B
W-B (*1)
1
S5
1
B-R
S6
Battery
Starter
EA
IC
*1: 4WD
Y
A115946E01

ES

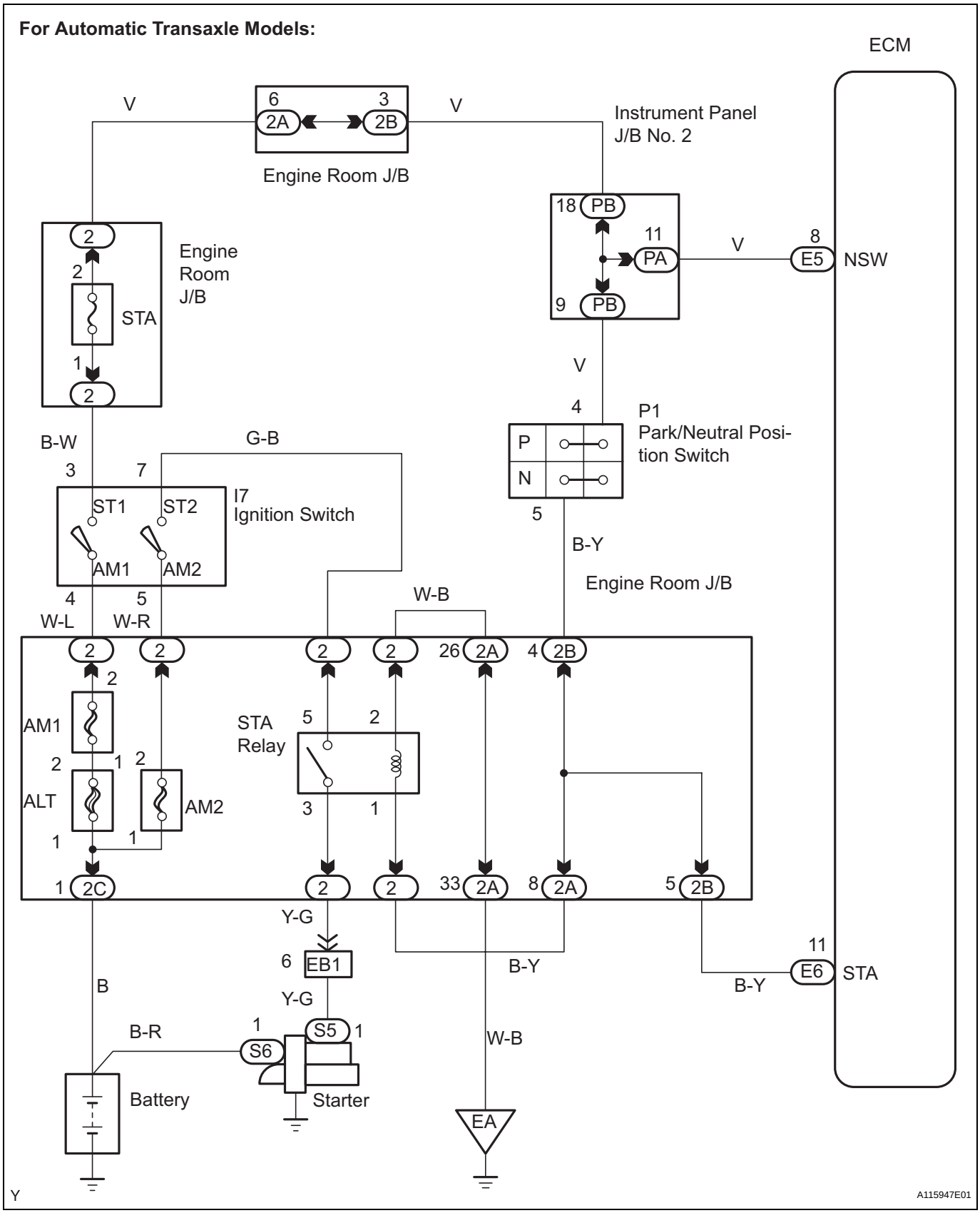

HINT:

- The following troubleshooting flowchart is based on the premise that the engine is cranked normally. If the engine will not crank, proceed to the problem symptoms table (See page ES-28).

- Read freeze frame data using an intelligent tester. Freeze frame data record the engine condition when malfunctions are detected. When troubleshooting, freeze frame data can help determine if the vehicle was moving or stationary, if the engine was warmed up or not, if the air-fuel ratio was lean or rich, and other data, from the time the malfunction occurred.

1 READ VALUE OF INTELLIGENT TESTER (STARTER SIGNAL)

(a) Connect an intelligent tester to the DLC3.
(b) Turn the ignition switch ON and turn the tester ON.
(c) Select the following menu items: DIAGNOSIS / ENHANCED OBD II / DATA LIST / PRIMARY / STARTER SIG.
(d) Check the value displayed on the tester when the ignition switch is turned to ON and START positions.

OK

Ignition Switch Positions	ON	START
STARTER SIG	OFF	ON

OK → REPLACE ECM

NG

2 INSPECT PARK/NEUTRAL POSITION SWITCH OR CLUTCH START SWITCH

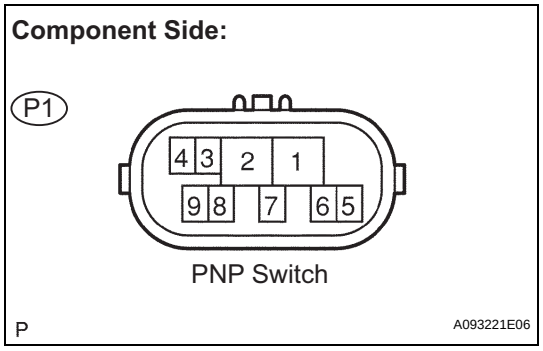

(a) Inspect the Park/Neutral Position (PNP) switch (For Automatic Transmission models).
(1) Disconnect the P1 PNP switch connector.
(2) Check the resistance when the transmission gear selector lever is moved to each position.

Standard Resistance

Gear Selector Lever Positions	Tester Connections	Specified Conditions
P	2 - 6, 4 - 5	Below 1 Ω
R	1 - 2	
N	2 - 9, 4 - 5	
D	2 - 7	
2	2 - 3	
L	2 - 8	

(3) Reconnect the PNP switch connector.

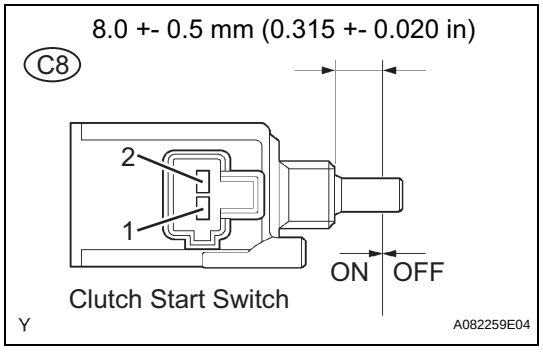

(b) Inspect the clutch start switch (For Manual Transmission models).
(1) Disconnect the C8 clutch start switch connector.
(2) Check the resistance when the clutch start switch is ON and OFF.

Standard Resistance

Ignition Switch Positions	Tester Connections	Specified Conditions
ON (pushed)	1 - 2	Below 1 Ω
OFF (free)	1 - 2	10 kΩ or higher

(3) Reconnect the clutch start switch connector.

NG → REPLACE PARK / NEUTRAL POSITION SWITCH ASSEMBLY (THEN CHECK CRANKING HOLDING FUNCTION CIRCUIT)

OK

3 READ VALUE OF INTELLIGENT TESTER (STARTER SIGNAL)

(a) Connect an intelligent tester to the DLC3.
(b) Turn the ignition switch ON and turn the tester ON.
(c) Select the following menu items: DIAGNOSIS / ENHANCED OBD II / DATA LIST / PRIMARY / STARTER SIG.
(d) Check the value displayed on the tester when the ignition switch is turned to ON and START positions.

OK

Ignition Switch Positions	ON	START
STARTER SIG	OFF	ON

OK → SYSTEM OK

NG

4 INSPECT IGNITION OR STARTER SWITCH ASSEMBLY

Component Side:

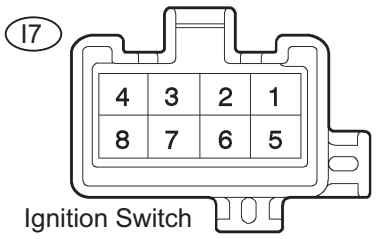

(a) Disconnect the I7 ignition switch connector.
(b) Check the resistance.

Standard Resistance

Ignition Switch Positions	Tester Connections	Specified Conditions
LOCK	All Terminals	10 kΩ or higher
ACC	2 - 4	Below 1 Ω
ON	1 - 2, 1 - 4, 5 - 6	
START	1 - 3, 1 - 4, 3 - 4, 5 - 6, 5 - 7, 6 - 7	

(c) Reconnect the ignition switch connector.

NG → REPLACE IGNITION OR STARTER SWITCH ASSEMBLY

OK

5 READ VALUE OF INTELLIGENT TESTER (STARTER SIGNAL)

(a) Connect an intelligent tester to the DLC3.
(b) Turn the ignition switch ON and turn the tester ON.
(c) Select the following menu items: DIAGNOSIS / ENHANCED OBD II / DATA LIST / PRIMARY / STARTER SIG.
(d) Check the value displayed on the tester when the ignition switch is turned to ON and START positions.

OK

Ignition Switch Positions	ON	START
STARTER SIG	OFF	ON

OK → SYSTEM OK

NG

REPAIR OR REPLACE HARNESS OR CONNECTOR

DTC	P0630	VIN not Programmed or Mismatch - ECM / PCM

DESCRIPTION

DTC P0630 is set when the Vehicle Identification Number (VIN) is not stored in the Engine Control Module (ECM) or the input VIN is not accurate. Input the VIN with an intelligent tester.

DTC No.	DTC Detection Conditions	Trouble Areas
P0630	• VIN not stored in ECM • Input VIN in ECM not accurate	• ECM

MONITOR STRATEGY

Related DTCs	P0630: VIN not programmed
Required Sensors/Components (Main)	ECM
Required Sensors/Components (Related)	-
Frequency of Operation	Continuous
Duration	0.5 seconds
MIL Operation	Immediate
Sequence of Operation	None

TYPICAL ENABLING CONDITIONS

Battery voltage	8 V or more
Ignition switch	ON
Starter	OFF

TYPICAL MALFUNCTION THRESHOLDS

VIN code	Not programmed

COMPONENT OPERATING RANGE

VIN code	Programmed

1	READ CURRENT DTC

(a) Connect an intelligent tester to the DLC3.
(b) Turn the ignition switch ON and turn the tester ON.
(c) Select the following menu items: DIAGNOSIS / ENHANCED OBD II / DTC INFO / CURRENT CODES.
(d) Read DTCs.

Result

Display (DTC Output)	Proceed To
P0630	**A**
P0630 and other DTCs	**B**

If any DTCs other than P0630 are output, troubleshoot those DTCs first.

NOTICE:
If P0630 is set, the VIN must be input to the ECM using an intelligent tester. However, all DTCs are cleared automatically by the tester when inputting the VIN. If DTCs other than P0630 are set, check them first.

B	GO TO DTC CHART

A

2	INPUT VIN WITH INTELLIGENT TESTER

NEXT

END

DTC	P0724	Brake Switch "B" Circuit High

DESCRIPTION

The purpose of this circuit is to prevent the engine from stalling, while driving in lock-up condition, when brakes are suddenly applied.
When the brake pedal is depressed, this switch sends a signals to the ECM. Then the ECM cancels the operation of the lock-up clutch while braking is in progress.

DTC No.	DTC Detection Conditions	Trouble Areas
P0724	The stop light switch remains ON even when the vehicle repeats 5 cycles of STOP (less than 1.86 mph (3 km/h)) and GO (18.65 mph (30 km/h)or more) (2 trip detection logic)	• Short in stop light switch signal circuit • Stop light switch • ECM

ES

MONITOR DESCRIPTION

This DTC indicates that the stop light switch remains ON. When the stop light switch remains ON during "stop and go" driving, the ECM interprets this as a fault in the stop light switch and the MIL comes on and the ECM stores the DTC. The vehicle must stop (less than 1.86 mph (3 km/h)) and go (18.65 mph (30 km/h) or more) 5 times during 2 driving cycles, in order to detect a malfunction.

MONITOR STRATEGY

Related DTCs	P0724: Stop light switch/Range check/Rationality
Required sensors/Components (Main)	Stop light switch
Required sensors/Components (Related)	Speed sensor
Frequency of Operation	Continuous
Duration	5 times
MIL Operation	2 driving cycles
Sequence of Operation	None

TYPICAL ENABLING CONDITIONS

The stop light switch remains ON during GO and STOP 5 times.
GO and STOP are defined as follows;

Monitor will run whenever following DTCs not present	None
GO: Vehicle speed	18.65 mph (30 km/h) or more
STOP: Vehicle speed	Less than 1.86 mph (3 km/h)

TYPICAL MALFUNCTION THRESHOLDS

Stop light switch status	Stuck ON

WIRING DIAGRAM

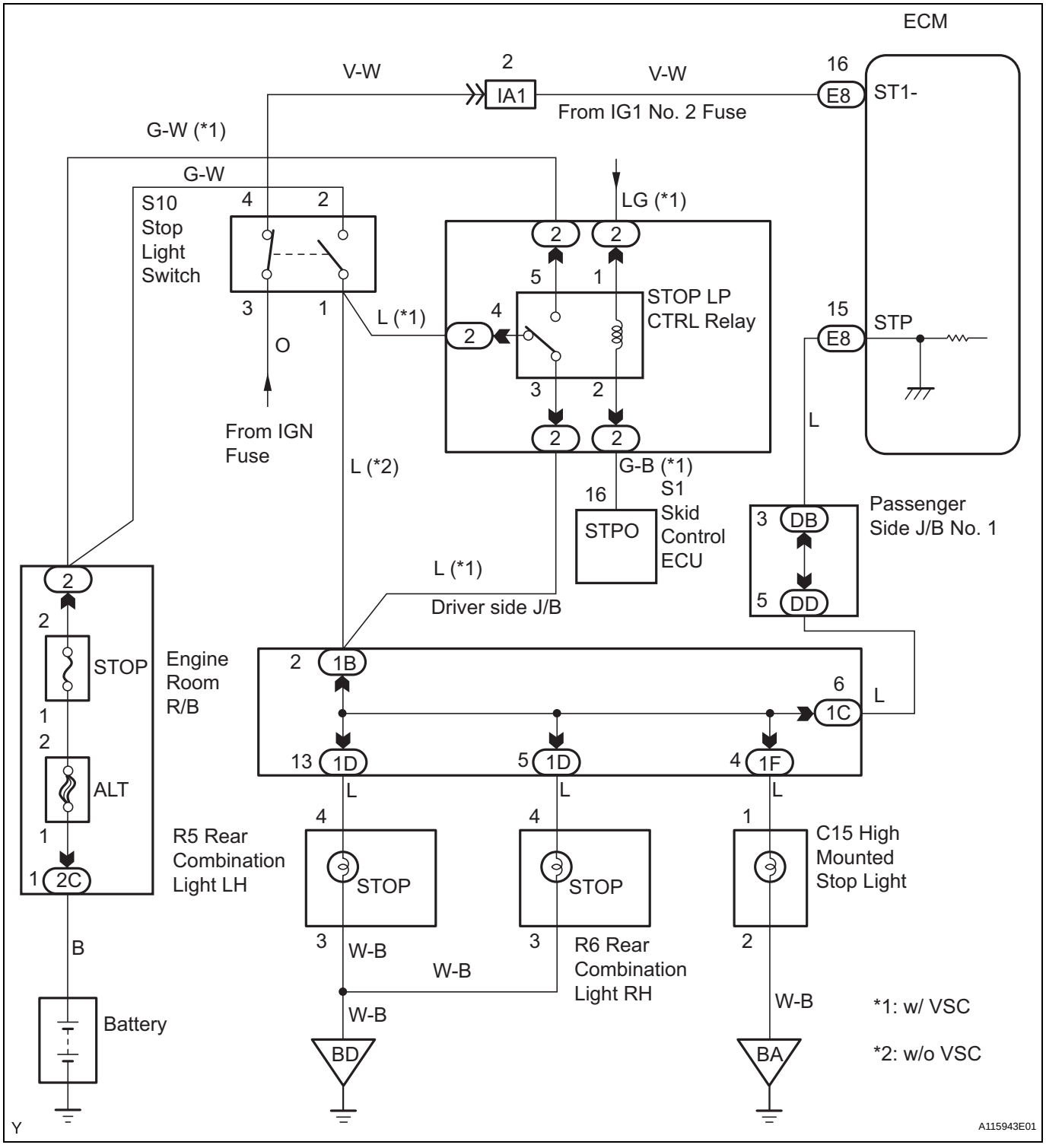

HINT:
Read freeze frame data using an intelligent tester. Freeze frame data record the engine condition when malfunctions are detected. When troubleshooting, freeze frame data can help determine if the vehicle was moving or stationary, if the engine was warmed up or not, if the air-fuel ratio was lean or rich, and other data, from the time the malfunction occurred.

1	READ VALUE OF INTELLIGENT TESTER (STOP LIGHT SW)

(a) Connect an intelligent tester to the DLC3.
(b) Turn the ignition switch ON and turn the tester ON.
(c) Select the following menu items: DIAGNOSIS / ENHANCED OBD II / DATA LIST / PRIMARY / STOP LIGHT SW.
(d) Read the values displayed on the tester.

OK

Item	Measurement Item: Range (display)	Normal Condition
STOP LIGHT SW	Stop light switch status: ON or OFF	• ON: Brake pedal is depressed • OFF: Brake pedal is released

ES

OK → CHECK FOR INTERMITTENT PROBLEMS

NG

2	INSPECT STOP LIGHT SWITCH ASSEMBLY (See page ES-250)

NG → REPLACE STOP LIGHT SWITCH ASSEMBLY

OK

3	CHECK HARNESS AND CONNECTOR (STOP LIGHT SWITCH - ECM) (See page ES-251)

NG → REPAIR OR REPLACE HARNESS OR CONNECTOR

OK

REPLACE ECM

DTC	P1500	AC Inverter Malfunction

DESCRIPTION

This vehicle is equipped with a voltage inverter, which supplies power to various electrical appliances. When the main switch of the voltage inverter is turned ON, the inverter relay turns ON, and the inverter then converts the 12 V Direct Current (DC) of the battery into an 115 V Alternating Current (AC). The voltage inverter can output a maximum of 400W from an outlet.
When the AC 115 V is output, a load is applied to the engine. The ECM controls the engine idling speed according to the vehicle speed and engine load. A speed signal is input to the inverter and an idle-up signal is transmitted to the ECM.

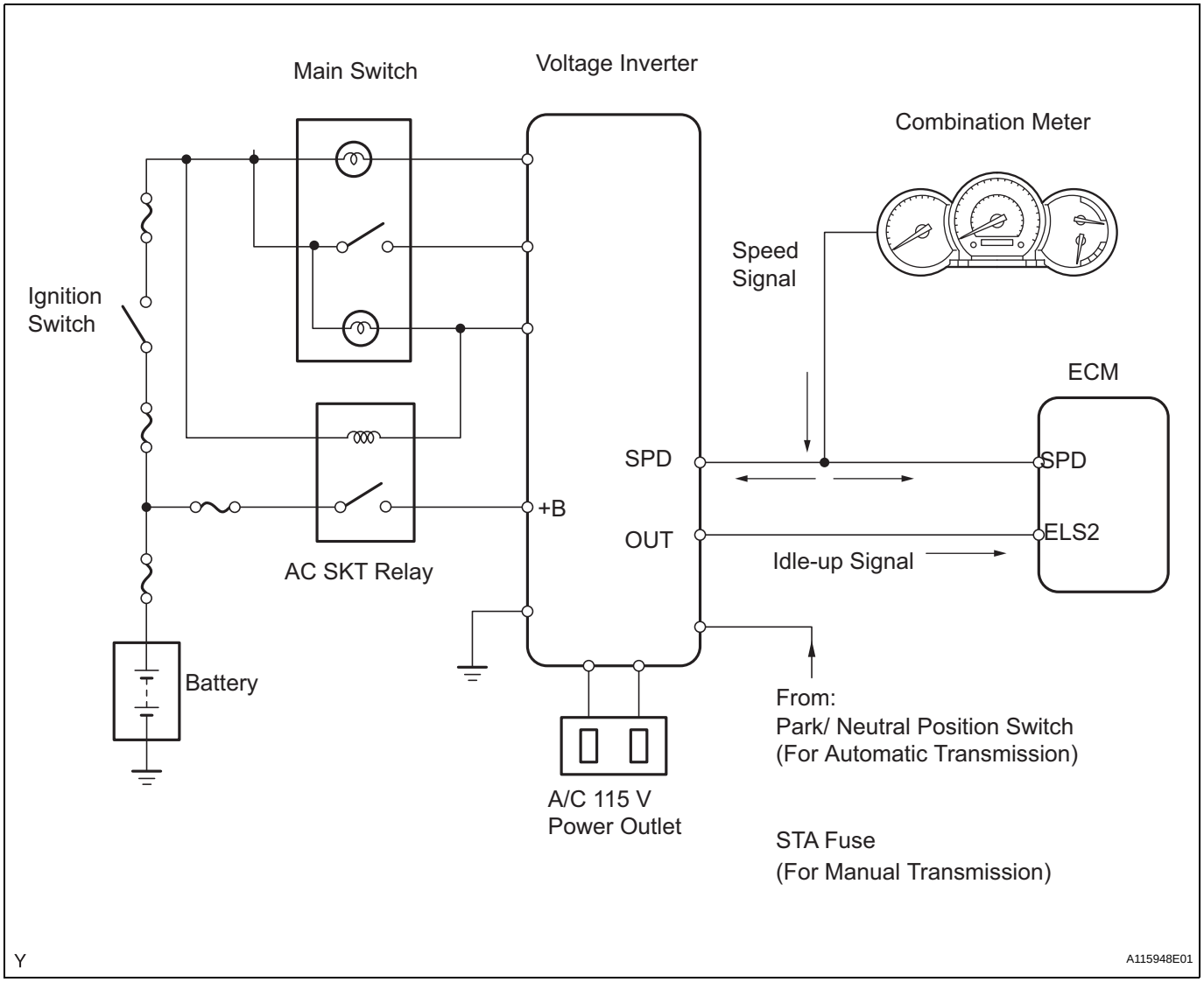

DTC No.	DTC Detection Conditions	Trouble Areas
P1500	While vehicle running, idle-up signal input to ECM for 10 seconds	• Open or short in speed signal circuit • Short between idle-up signal and +B circuits • Voltage inverter • ECM

MONITOR DESCRIPTION

While the engine is idling, the ECM performs idle-up according to the power supply of the inverter to stabilize the engine idling speed.

When the vehicle is stationary and the inverter input exceeds 8.3 A, the inverter sends an idle-up signal from the OUT terminal of the inverter to the ELS2 terminal of the ECM.
If the idle-up signal is input into the ECM for 10 seconds while the vehicle is running, the ECM interprets this as a malfunction in the inverter circuit and sets the DTC.

MONITOR STRATEGY

Related DTCs	P1500: Voltage inverter performance
Required Sensors/Components (Main)	Voltage inverter
Required Sensors/Components (Related)	-
Frequency of Operation	Continuous
Duration	10 seconds
MIL Operation	2 driving cycles
Sequence of Operation	None

ES

TYPICAL ENABLING CONDITIONS

Monitor runs whenever following DTCs not present	None
Vehicle speed	3.11 mph (5 km/h) or more
Battery voltage	8 V or more
Ignition switch	ON
Starter	OFF

TYPICAL MALFUNCTION THRESHOLDS

Electric load signal 2	ON

WIRING DIAGRAM

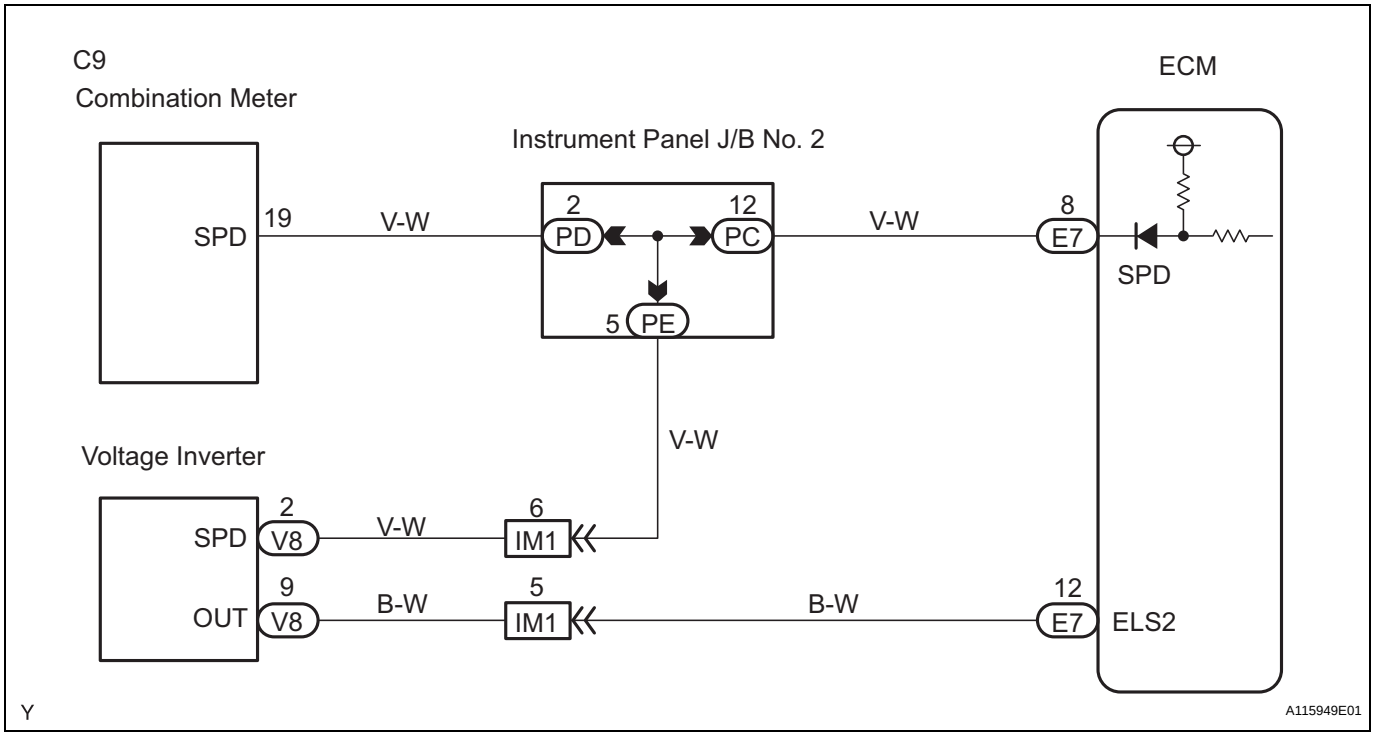

1	CHECK ANY OTHER DTCS OUTPUT (IN ADDITION TO DTC P1500)

(a) Connect an intelligent tester to the DLC3.
(b) Turn the ignition switch ON and turn the tester ON.
(c) Select the following menu items: DIAGNOSIS / ENHANCED OBD II / DTC INFO / CURRENT CODES.
(d) Read DTCs.

Result

Display (DTC output)	Proceed To
P1500	A
P1500 and other DTCs	B

ES

HINT:
If any DTCs other than P1500 are output, troubleshoot those DTCs first.

NG → **GO TO DTC CHART**

OK

2	INSPECT VOLTAGE INVERTER ASSEMBLY (SPD SIGNAL)

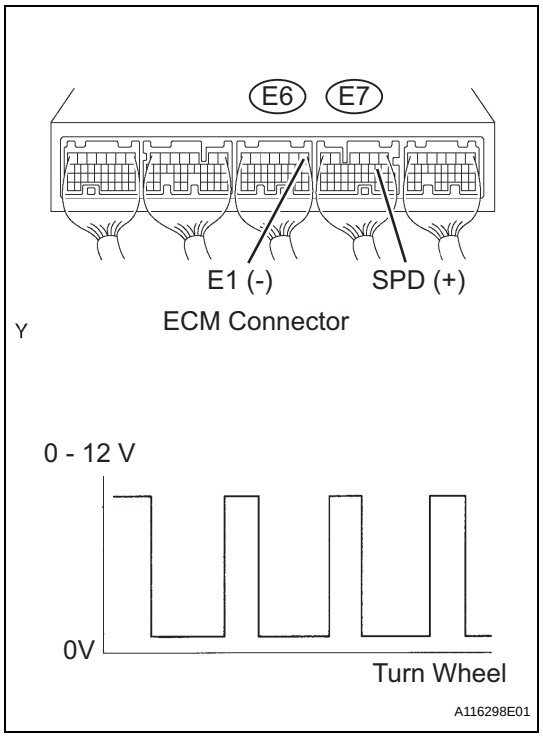

(a) Shift the transmission gear selector lever to the neutral position.
(b) Jack up the vehicle.
(c) Turn the ignition switch ON.
(d) Check the voltage between the terminals of the ECM connectors as the wheel is turned slowly.

Standard

Tester Connections	Specified Conditions
SPD (E7-8) - E1 (E6-1)	Voltage generated intermittently

HINT:
The output voltage should fluctuate up and down similarly to the diagram on the left when the wheel is turned slowly.

NG → **REPAIR OR REPLACE HARNESS OR CONNECTOR**

OK

3 **INSPECT ECM**

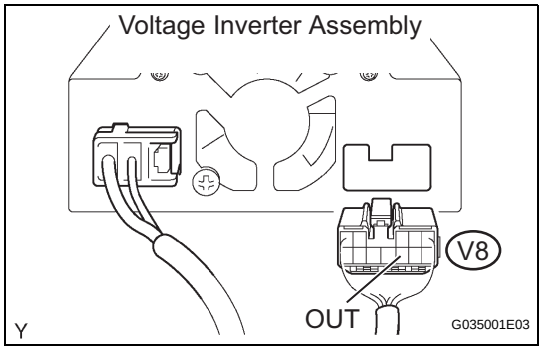

(a) Disconnect the V8 inverter connector.
(b) Start the engine.
(c) Measure the voltage between the OUT terminal of inverter and the body ground.
Standard Voltage

Tester Connections	Specified Conditions
OUT (V8-9) - Body ground	1 V or less

(d) Reconnect the inverter connector.

OK → **REPLACE VOLTAGE INVERTER ASSEMBLY**

NG

4 **CHECK HARNESS AND CONNECTOR (ECM - INVERTER, INVERTER - POWER SOURCE)**

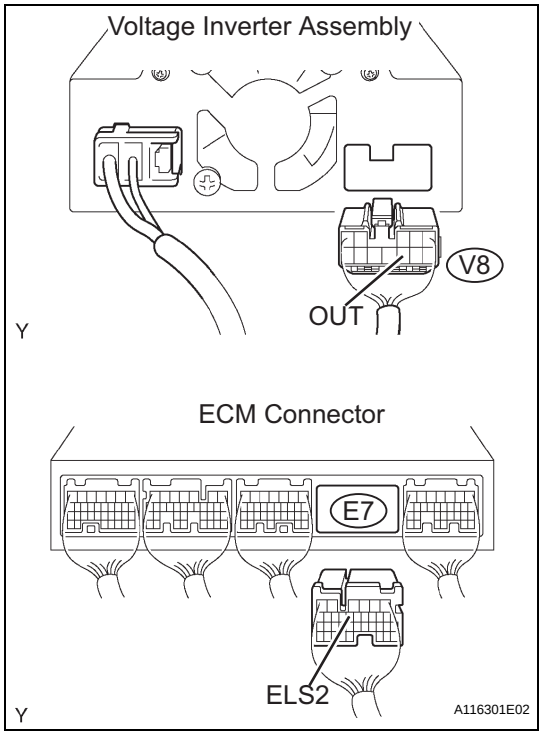

(a) Disconnect the V8 inverter connector.
(b) Disconnect the E7 ECM connector.
(c) Turn the ignition switch ON.
(d) Measure the voltage between the terminals of the wire harness side connectors and body ground.
Standard Voltage (Check for short in idling up signal circuit)

Tester Connections	Specified Conditions
OUT (V8-9) - Body ground	1 V or less
ELS2 (E7-12) - Body ground	

(e) Reconnect the inverter connector and the ECM connector.

NG → **REPAIR OR REPLACE HARNESS OR CONNECTOR**

OK

REPLACE ECM

DTC	P2102	Throttle Actuator Control Motor Circuit Low

DTC	P2103	Throttle Actuator Control Motor Circuit High

SYSTEM DESCRIPTION

The throttle actuator is operated by the ECM and opens and closes the throttle valve using gears.
The opening angle of the throttle valve is detected by the Throttle Position (TP) sensor, which is mounted on the throttle body. The TP sensor provides feedback to the ECM. This feedback allows the ECM to appropriately control the throttle actuator and monitor the throttle opening angle as the ECM responds to driver inputs.
HINT:
This ETCS (Electronic Throttle Control System) does not use a throttle cable.

ES

DTC No.	DTC Detection Conditions	Trouble Areas
P2102	Conditions (a) and (b) continue for 2.0 seconds (1 trip detection logic) (a) Throttle actuator duty ratio 80 % or more (b) Throttle actuator current 0.5 A or less	• Open in throttle actuator circuit • Throttle actuator • ECM
P2103	Throttle actuator current 7 A or more for 0.6 seconds (1 trip detection logic)	• Short in throttle actuator circuit • Throttle actuator • Throttle valve • Throttle body assembly • ECM

MONITOR DESCRIPTION

The ECM monitors the electrical current through the electronic actuator, and detects malfunctions and open circuits in the throttle actuator based on this value. If the current is outside the standard range, the ECM determines that there is a malfunction in the throttle actuator. In addition, if the throttle valve does not function properly (for example, stuck on), the ECM determines that there is a malfunction. The ECM then illuminates the MIL and sets a DTC.
Example:
When the electrical current is more than 10 A, or less than 0.5 A and the throttle actuator duty ratio exceeds 80 %, the ECM interprets this as the current being outside the standard range, and illuminates the MIL and sets a DTC.
If the malfunction is not repaired successfully, a DTC is set when the engine is quickly revved to a high rpm several times after the engine has idled for 5 seconds after engine start.

MONITOR STRATEGY

Related DTCs	P2102: Throttle actuator current (low current) P2103: Throttle actuator current (high current)
Required Sensors/Components (Main)	Throttle actuator (throttle body)
Required Sensors/Components (Related)	None
Frequency of Operation	Continuous
Duration	P2102: 2 seconds P2103: 0.1 seconds or 0.6 seconds
MIL Operation	Immediate
Sequence of Operation	None

TYPICAL ENABLING CONDITIONS

Monitor runs whenever following DTCs not present	None

P2102:

Electronic throttle actuator	ON
Electronic throttle actuator drive duty	80 % or more

Electronic throttle actuator power supply voltage	8 V or more
Motor current change during latest 0.016 sec	Less than 0.2 A

P2103:

Electronic throttle actuator	ON
Either of the following conditions 1 or 2 met:	-
1. Electronic throttle actuator power supply voltage	8 V or more
2. Electronic throttle actuator power	ON
Battery voltage	8 V or more
Starter	OFF

TYPICAL MALFUNCTION THRESHOLDS

ES

P2102:

Motor current	Less than 0.5 A

P2103:

Hybrid IC diagnosis signal	Fail
Hybrid IC current limitter port	Fail

FAIL-SAFE

When either of these DTCs, as well as other DTCs relating to ETCS (Electronic Throttle Control System) malfunctions, is set, the ECM enters fail-safe mode. During fail-safe mode, the ECM cuts the current to the throttle actuator off, and the throttle valve is returned to a 6° throttle angle by the return spring. The ECM then adjusts the engine output by controlling the fuel injection (intermittent fuel-cut) and ignition timing, in accordance with the accelerator pedal opening angle, to allow the vehicle to continue at a minimal speed. If the accelerator pedal is depressed firmly and gently, the vehicle can be driven slowly. Fail-safe mode continues until a pass condition is detected, and the ignition switch is then turned OFF.

WIRING DIAGRAM

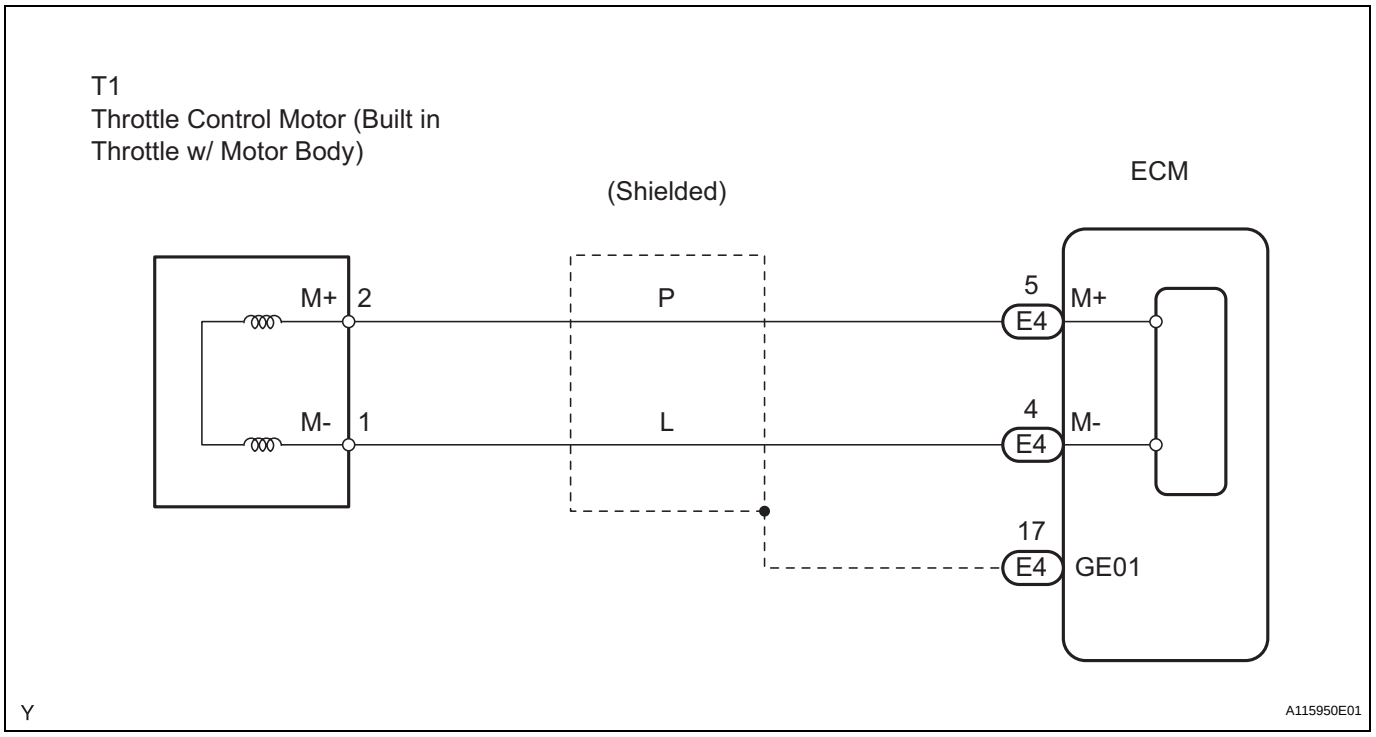

HINT:

- Read freeze frame data using an intelligent tester. Freeze frame data record the engine condition when malfunctions are detected. When troubleshooting, freeze frame data can help determine if the vehicle was moving or stationary, if the engine was warmed up or not, if the air-fuel ratio was lean or rich, and other data, from the time the malfunction occurred.
- The throttle actuator current (THROTTLE MOT) and the throttle actuator duty ratio (THROTTLE OPN / THROTTLE CLS) can be read using an intelligent tester. However the ECM shuts off the throttle actuator current when the ETCS malfunctions.

1 INSPECT THROTTLE W/MOTOR BODY ASSEMBLY (RESISTANCE OF THROTTLE CONTROL MOTOR)

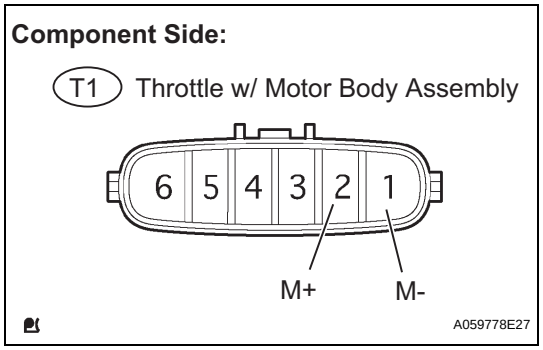

(a) Disconnect the T1 throttle w/ motor body connector.
(b) Measure the resistance between the terminals of the throttle control motor.

Standard Resistance

Tester Connections	Specified Conditions
M+ (T1-2) - M- (T1-1)	0.3 to 100 Ω at 20°C (68°F)

(c) Reconnect the throttle w/ motor body connector.

NG → **REPLACE THROTTLE W/MOTOR BODY ASSEMBLY**

OK

2 CHECK HARNESS AND CONNECTOR (THROTTLE CONTROL MOTOR - ECM)

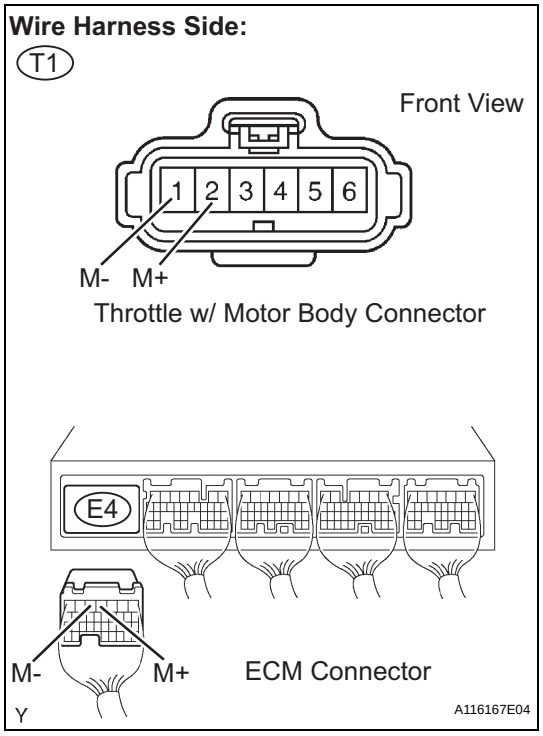

(a) Disconnect the T1 throttle w/ motor body connector.
(b) Disconnect the E4 ECM connector.
(c) Check the resistance.

Standard Resistance (Check for open)

Tester Connections	Specified Conditions
M+ (T1-2) - M+ (E4-5)	Below 1 Ω
M- (T1-1) - M- (E4-4)	

Standard Resistance (Check for short)

Tester Connections	Specified Conditions
M+ (T1-2) or M+ (E4-5) - Body ground	10 kΩ or higher
M- (T1-1) or M- (E4-4) - Body ground	

(d) Reconnect the throttle w/ motor body connector.
(e) Reconnect the ECM connector.

NG → **REPAIR OR REPLACE HARNESS OR CONNECTOR**

OK

3	INSPECT THROTTLE W/MOTOR BODY ASSEMBLY

(a) Check for foreign objects between the throttle valve and the housing.

NG → **REMOVE FOREIGN OBJECT AND CLEAN THROTTLE BODY**

OK

4	INSPECT THROTTLE VALVE

(a) Check if the throttle valve opens and closes smoothly.

NG → **REPLACE THROTTLE W/MOTOR BODY ASSEMBLY**

OK

REPLACE ECM

DTC	P2111	Throttle Actuator Control System - Stuck Open

DTC	P2112	Throttle Actuator Control System - Stuck Closed

SYSTEM DESCRIPTION

The throttle actuator is operated by the ECM, and opens and closes the throttle valve using gears. The opening angle of the throttle valve is detected by the Throttle Position (TP) sensor, which is mounted on the throttle body. The TP sensor provides feedback to the ECM in order that it can control the throttle actuator, and therefore the throttle valve, appropriately in response to driver inputs.
HINT:
This ETCS (Electronic Throttle Control System) does not use a throttle cable.

DTC No.	DTC Detection Conditions	Trouble Areas
P2111	ECM signals throttle actuator to close, but stuck (1 trip detection logic)	• Throttle actuator • Throttle body assembly • Throttle valve
P2112	ECM signals throttle actuator to open, but stuck (1 trip detection logic)	

MONITOR DESCRIPTION

The ECM determines that there is a malfunction in the ETCS when the throttle valve remains at a fixed angle despite a high drive current from the ECM. The ECM illuminates the MIL and sets a DTC.
If the malfunction is not repaired successfully, a DTC is set when the accelerator pedal is fully depressed and released quickly (to fully open and close the throttle valve) after the engine is next started.

MONITOR STRATEGY

Related DTCs	P2111: Throttle actuator stuck open P2112: Throttle actuator stuck closed
Required Sensors/Components (Main)	Throttle actuator
Required Sensors/Components (Related)	-
Frequency of Operation	Continuous
Duration	0.5 seconds
MIL Operation	Immediate
Sequence of Operation	None

TYPICAL ENABLING CONDITIONS

ALL:

Monitor runs whenever following DTCs not present	None

P2111 (Throttle actuator stuck open):

All of following conditions met	-
System guard*	ON
Throttle motor current	2 A or more
Throttle motor close duty	80 % or more

P2112 (Throttle actuator stuck closed):

All of following conditions met	-
System guard*	ON
Throttle motor current	2 A or more
Throttle motor open duty	80 % or more
* System guard set when following conditions met	-
Throttle motor	ON

Motor duty calculation	Executing
TPS fail determination	Fail determined
Motor current-cut operation	Not executing
Actuator power supply voltage	4 V or more
Motor fail determination	Fail determined

TYPICAL MALFUNCTION THRESHOLDS

P2111 (Throttle actuator stuck open):

TP sensor voltage change for 0.016 seconds	Less than 0.1 V for 0.5 seconds or more

P2112 (Throttle actuator stuck closed):

TP sensor voltage change for 0.016 seconds	Less than 0.1 V for 0.5 seconds or more

ES

FAIL-SAFE

When either of these DTCs, as well as other DTCs relating to ETCS (Electronic Throttle Control System) malfunctions, is set, the ECM enters fail-safe mode. During fail-safe mode, the ECM cuts the current to the throttle actuator off, and the throttle valve is returned to a 6° throttle angle by the return spring. The ECM then adjusts the engine output by controlling the fuel injection (intermittent fuel-cut) and ignition timing, in accordance with the accelerator pedal opening angle, to allow the vehicle to continue at a minimal speed.
If the accelerator pedal is depressed firmly and gently, the vehicle can be driven slowly.
Fail-safe mode continues until a pass condition is detected, and the ignition switch is then turned OFF.

WIRING DIAGRAM

Refer to DTC P2102 (See page ES-280).

HINT:
Read freeze frame data using an intelligent tester. Freeze frame data record the engine condition when malfunctions are detected. When troubleshooting, freeze frame data can help determine if the vehicle was moving or stationary, if the engine was warmed up or not, if the air-fuel ratio was lean or rich, and other data, from the time the malfunction occurred.

1	CHECK ANY OTHER DTCS OUTPUT (IN ADDITION TO DTC P2111 or P2112)

(a) Connect an intelligent tester to the DLC3.
(b) Turn the ignition switch ON.
(c) Turn the tester ON.
(d) Select the following menu items: DIAGNOSIS / ENHANCED OBD II / DTC INFO / CURRENT CODES.
(e) Read DTCs.

Result

Display (DTC Output)	Proceed To
P2111 or P2112	A
P2111 or P2112 and other DTCs	B

HINT:
If any DTCs other than P2111 or P2112 are output, troubleshoot those DTCs first.

B	GO TO DTC CHART

A

2	INSPECT THROTTLE W/MOTOR BODY ASSEMBLY (VISUALLY CHECK THROTTLE VALVE)

(a) Check for contamination between the throttle valve and the housing. If necessary, clean the throttle body. And check that the throttle valve moves smoothly.
OK:
Throttle valve is not contaminated with foreign objects and moves smoothly.

NG → **REPLACE THROTTLE W/MOTOR BODY ASSEMBLY**

ES

OK

3	CHECK WHETHER DTC OUTPUT RECURS (DTC P2111 OR P2112)

(a) Connect an intelligent tester to the DLC3.
(b) Turn the ignition switch ON.
(c) Turn the tester ON.
(d) Clear DTCs (See page ES-38).
(e) Start the engine, and fully depress and release the accelerator pedal quickly (to fully open and close the throttle valve).
(f) Select the following menu items: DIAGNOSIS / ENHANCED OBD II / DTC INFO / CURRENT CODES.
(g) Read DTCs.

Result

Display (DTC Output)	Proceed To
No DTC	A
P2111 or P2112	B

B → **REPLACE ECM**

A

CHECK FOR INTERMITTENT PROBLEMS

DTC	P2118	Throttle Actuator Control Motor Current Range / Performance

DESCRIPTION

The ETCS (Electronic Throttle Control System) has a dedicated power supply circuit. The voltage (+BM) is monitored and when it is low (less than 4 V), the ECM determines that there is a malfunction in the ETCS and cuts off the current to the throttle actuator.
When the voltage becomes unstable, the ETCS itself becomes unstable. For this reason, when the voltage is low, the current to the throttle actuator is cut. If repairs are made and the system returns to normal, turn the ignition switch OFF. The ECM then allows the current to flow to the throttle actuator so that it can be restarted.

ES

HINT:
The ETCS does not use a throttle cable.

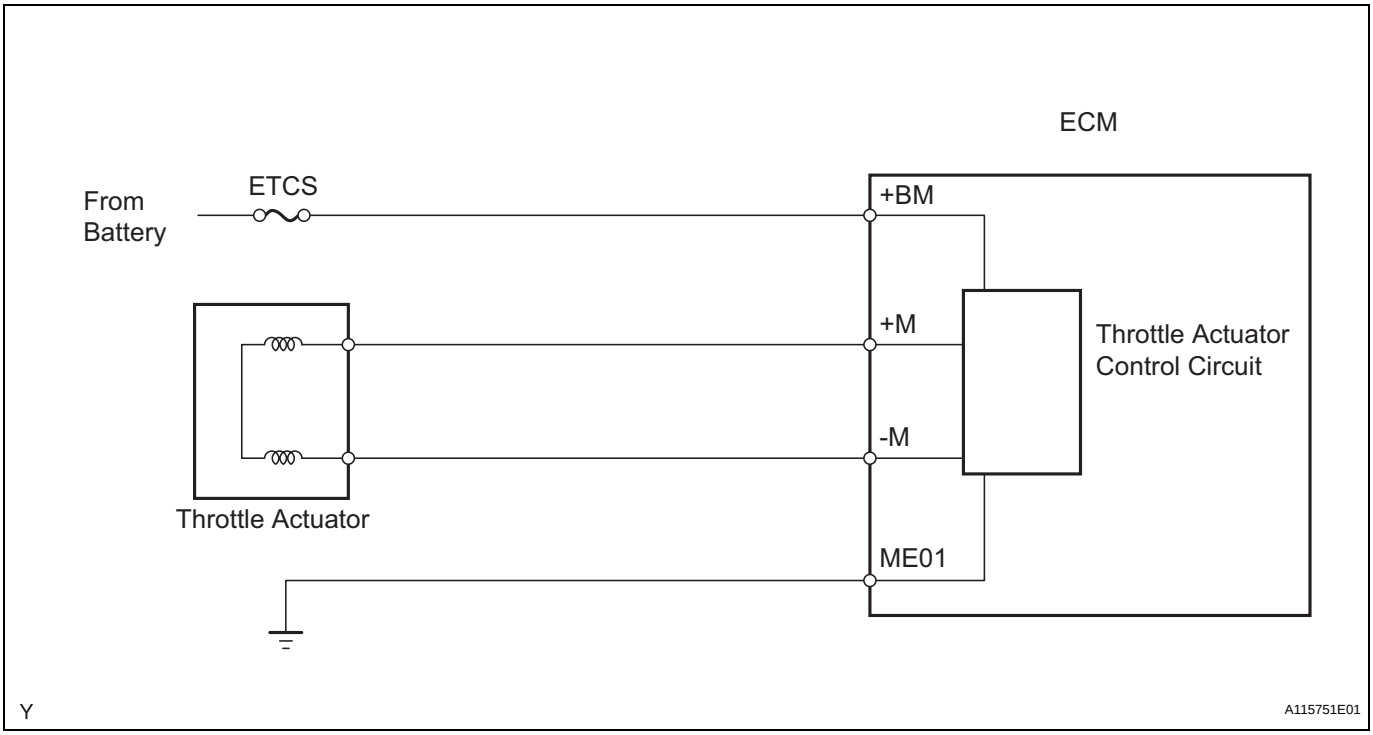

DTC No.	DTC Detection Conditions	Trouble Areas
P2118	Open in ETCS power source (+BM) circuit (1 trip detection logic)	• Open in ETCS power source circuit • ETCS fuse • ECM

MONITOR DESCRIPTION

The ECM monitors the battery supply voltage applied to the throttle actuator.
When the power supply voltage (+BM) drops to below 4 V for 0.8 seconds or more, the ECM interprets this as an open in the power supply circuit (+BM). The ECM illuminates the MIL and sets the DTC.
If the malfunction is not repaired successfully, the DTC is set 5 seconds after the engine is next started.

MONITOR STRATEGY

Related DTCs	P2118: Throttle actuator power supply
Required Sensors/Components (Main)	Throttle actuator, throttle valve, ETCS fuse
Required Sensors/Components (Related)	None
Frequency of Operation	Continuous
Duration	0.8 seconds

MIL Operation	Immediate
Sequence of Operation	None

TYPICAL ENABLING CONDITIONS

Monitor runs whenever following DTCs not present	None
Electronic throttle actuator power	ON
Battery voltage	8 V or more

TYPICAL MALFUNCTION THRESHOLDS

Electronic throttle actuator power supply voltage (+BM)	Less than 4 V

COMPONENT OPERATING RANGE

Throttle actuator power supply voltage	9 to 14 V

FAIL-SAFE

When this DTC, as well as other DTCs relating to ETCS (Electronic Throttle Control System) malfunctions, is set, the ECM enters fail-safe mode. During fail-safe mode, the ECM cuts the current to the throttle actuator off, and the throttle valve is returned to a 6° throttle angle by the return spring. The ECM then adjusts the engine output by controlling the fuel injection (intermittent fuel-cut) and ignition timing, in accordance with the accelerator pedal opening angle, to allow the vehicle to continue at a minimal speed. If the accelerator pedal is depressed firmly and gently, the vehicle can be driven slowly. Fail-safe mode continues until a pass condition is detected, and the ignition switch is then turned OFF.

WIRING DIAGRAM

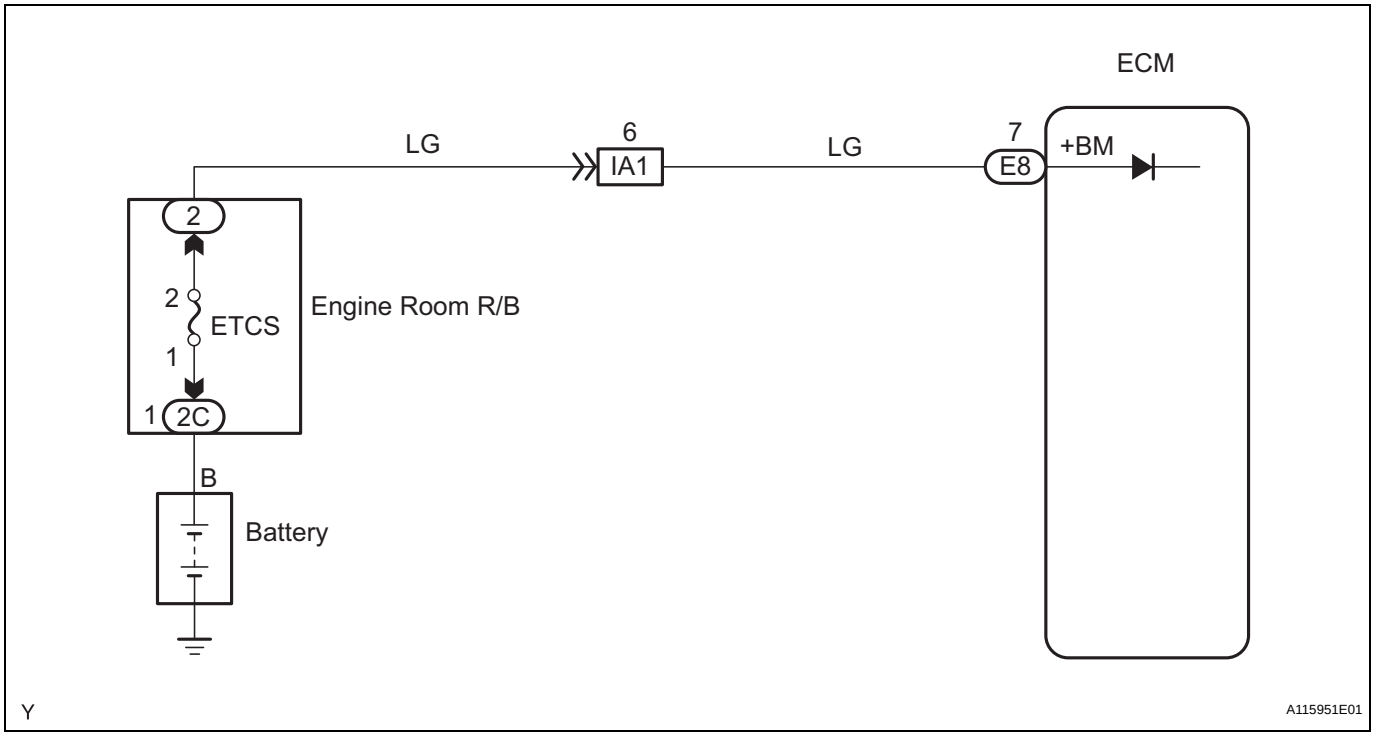

HINT:
Read freeze frame data using an intelligent tester. Freeze frame data record the engine condition when malfunctions are detected. When troubleshooting, freeze frame data can help determine if the vehicle was moving or stationary, if the engine was warmed up or not, if the air-fuel ratio was lean or rich, and other data, from the time the malfunction occurred.

1 CHECK FUSE (ETCS FUSE)

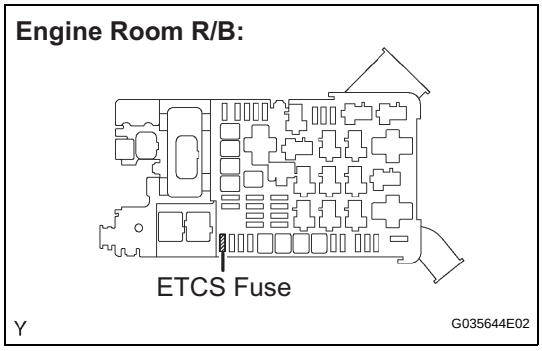

(a) Remove the ETCS fuse from the engine room R/B.
(b) Check the ETCS fuse resistance.
Standard resistance:
Below 1 Ω
(c) Reinstall the ETCS fuse.

NG → **CHECK FOR SHORT IN ALL HARNESS AND COMPONENTS CONNECTED TO FUSE**

OK

2 INSPECT ECM (+BM VOLTAGE)

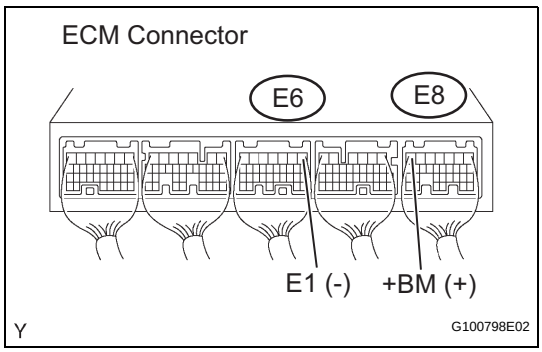

(a) Measure the voltage between the terminals of the E8 and E6 ECM connectors.
Standard Voltage

Tester Connections	Specified Conditions
+BM (E8-7) - E1 (E6-1)	9 to 14 V

OK → **CHECK FOR INTERMITTENT PROBLEMS**

NG

3	CHECK HARNESS AND CONNECTOR (ECM - ETCS FUSE, ETCS FUSE - BATTERY)

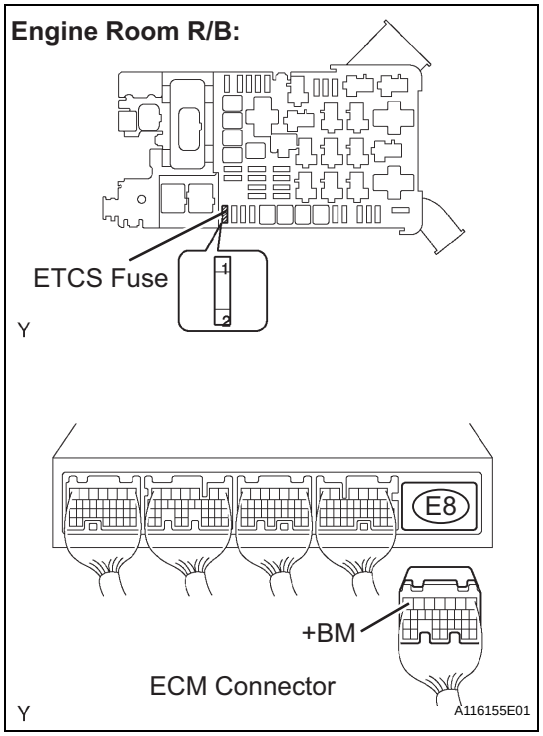

(a) Check the harness and connector between the ETCS fuse and ECM.
  (1) Remove the ETCS fuse from the engine room R/B.
  (2) Disconnect the E8 ECM connector.
  (3) Check the resistance.

Standard Resistance (Check for open)

Tester Connections	Specified Conditions
ETCS fuse (2) - +BM (E8-7)	Below 1 Ω

Standard Resistance (Check for short)

Tester Connections	Specified Conditions
ETCS fuse (2) or +BM (E8-7) - Body ground	10 kΩ or higher

  (4) Reinstall the ETCS fuse.
  (5) Reconnect the ECM connector.

(b) Check the harness and connector between the ETCS fuse and positive battery cable.
  (1) Remove the ETCS fuse from the engine room R/B.
  (2) Disconnect the positive battery cable.
  (3) Check the resistance.

Standard Resistance (Check for open)

Tester Connections	Specified Conditions
Positive battery cable - ETCS fuse (1)	Below 1 Ω

Standard Resistance (Check for short)

Tester Connections	Specified Conditions
Positive battery cable or ETCS fuse (1) - Body ground	10 kΩ or higher

  (4) Reinstall the ETCS fuse.
  (5) Reconnect the positive battery cable.

NG → **REPAIR OR REPLACE HARNESS OR CONNECTOR**

OK

REPLACE ECM

ES

DTC	P2119	Throttle Actuator Control Throttle Body Range / Performance

SYSTEM DESCRIPTION

The Electronic Throttle Control System (ETCS) is composed of the throttle actuator, Throttle Position (TP) sensor, Accelerator Pedal Position (APP) sensor, and ECM. The ECM operates the throttle actuator to regulate the throttle valve in response to driver inputs. The TP sensor detects the opening angle of the throttle valve, and provides the ECM with feedback so that the throttle valve can be appropriately controlled by the ECM.

DTC No.	DTC Detection Conditions	Trouble Areas
P2119	Throttle valve opening angle continues to vary greatly from target opening angle (1 trip detection logic)	• ETCS • ECM

ES

MONITOR DESCRIPTION

The ECM determines the actual opening angle of the throttle valve from the TP sensor signal. The actual opening angle is compared to the target opening angle commanded by the ECM. If the difference between these two values is outside the standard range, the ECM interprets this as a malfunction in the ETCS. The ECM then illuminates the MIL and sets the DTC.
If the malfunction is not repaired successfully, the DTC is set when the accelerator pedal is quickly released (to close the throttle valve) after the engine speed reaches 5,000 rpm by the accelerator pedal being fully depressed (fully open the throttle valve).

MONITOR STRATEGY

Related DTCs	P2119: ETCS malfunction
Required Sensors/Components (Main)	Throttle actuator
Required Sensors/Components (Related)	-
Frequency of Operation	Continuous
Duration	1 second
MIL Operation	Immediate
Sequence of Operation	None

TYPICAL ENABLING CONDITIONS

Monitor runs whenever following DTCs not present	None
System guard*	ON
*System guard set when following conditions met	-
Throttle motor	ON
Motor duty calculation	Executing
TPS fail determination	Fail determined
Motor current-cut operation	Not executing
Actuator power supply	4 V or more
Motor fail determination	Fail determined

TYPICAL MALFUNCTION THRESHOLDS

Either of following conditions A or B met	-
A. Commanded closed TP - current closed TP	0.3 V or more for 1 second
B. Commanded open TP - current open TP	0.3 V or more for 0.6 seconds

FAIL-SAFE

When this DTC, as well as other DTCs relating to ETCS (Electronic Throttle Control System) malfunctions, is set, the ECM enters fail-safe mode. During fail-safe mode, the ECM cuts the current to the throttle actuator off, and the throttle valve is returned to a 6° throttle angle by the return spring. The ECM then adjusts the engine output by controlling the fuel injection (intermittent fuel-cut) and ignition timing, in accordance with the accelerator pedal opening angle, to allow the vehicle to continue at a minimal speed. If the accelerator pedal is depressed firmly and gently, the vehicle can be driven slowly. Fail-safe mode continues until a pass condition is detected, and the ignition switch is then turned OFF.

WIRING DIAGRAM

Refer to DTC P2102 (See page ES-280).

HINT:
Read freeze frame data using an intelligent tester. Freeze frame data record the engine condition when malfunctions are detected. When troubleshooting, freeze frame data can help determine if the vehicle was moving or stationary, if the engine was warmed up or not, if the air-fuel ratio was lean or rich, and other data, from the time the malfunction occurred.

ES

1	CHECK ANY OTHER DTCS OUTPUT (IN ADDITION TO DTC P2119)

(a) Connect an intelligent tester to the DLC3.
(b) Turn the ignition switch ON.
(c) Turn the tester ON.
(d) Select the following menu items: DIAGNOSIS / ENHANCED OBD II / DTC INFO / CURRENT CODES.
(e) Read DTCs.

Result

Display (DTC Output)	Proceed To
P2119	A
P2119 and other DTCs	B

HINT:
If any DTCs other than P2119 are output, troubleshoot those DTCs first.

B → GO TO DTC CHART

A

2	CHECK WHETHER DTC OUTPUT RECURS (DTC P2119)

(a) Connect an intelligent tester to the DLC3.
(b) Turn the ignition switch ON.
(c) Turn the tester ON.
(d) Clear DTCs (See page ES-38).
(e) Allow the engine to idle for 15 seconds.
CAUTION:
Exercise extreme care and take precautions at steps (f) and (g) below. Failure to do so may result in the vehicle unexpectedly rolling away.
(f) Securely apply the parking brake and move the gear selector lever to the D position.

(g) While depressing the brake pedal securely, fully depress the accelerator pedal for 5 seconds.
(h) Select the following menu items: DIAGNOSIS / ENHANCED OBD II / DTC INFO / CURRENT CODES.
(i) Read DTCs.
HINT:
The voltage output of the throttle position sensor can be checked during step (g) using an intelligent tester. Variations in the voltage output indicate that the throttle actuator is in operation. To check the voltage output using an intelligent tester, select the following menu items: DIAGNOSIS / ENHANCED OBD II / DATA LIST / PRIMARY / THROTTLE POS #1.
OK:
No DTC output.

NG → **REPLACE THROTTLE W/MOTOR BODY ASSEMBLY**

OK

NORMAL

DTC	P2120	Throttle / Pedal Position Sensor / Switch "D" Circuit
DTC	P2122	Throttle / Pedal Position Sensor / Switch "D" Circuit Low Input
DTC	P2123	Throttle / Pedal Position Sensor / Switch "D" Circuit High Input
DTC	P2125	Throttle / Pedal Position Sensor / Switch "E" Circuit
DTC	P2127	Throttle / Pedal Position Sensor / Switch "E" Circuit Low Input
DTC	P2128	Throttle / Pedal Position Sensor / Switch "E" Circuit High Input
DTC	P2138	Throttle / Pedal Position Sensor / Switch "D" / "E" Voltage Correlation

HINT:
These DTCs relate to the Accelerator Pedal Position (APP) sensor.

DESCRIPTION

HINT:
This ETCS (Electronic Throttle Control System) does not use a throttle cable.
The Accelerator Pedal Position (APP) sensor is mounted on the accelerator pedal bracket and has 2 sensor circuits: VPA (main) and VPA2 (sub). This sensor is a non-contact type, and uses Hall-effect elements, in order to yield accurate signals, even in extreme driving conditions, such as at high speeds as well as very low speeds. The voltage, which is applied to terminals VPA and VPA2 of the ECM, varies between 0 V and 5 V in proportion to the operating angle of the accelerator pedal (throttle valve). A signal from VPA indicates the actual accelerator pedal opening angle (throttle valve opening angle) and is used for engine control. A signal from VPA2 conveys the status of the VPA circuit and is used to check the APP sensor itself.
The ECM monitors the actual accelerator pedal opening angle (throttle valve opening angle) through the signals from VPA and VPA2, and controls the throttle actuator according to these signals.

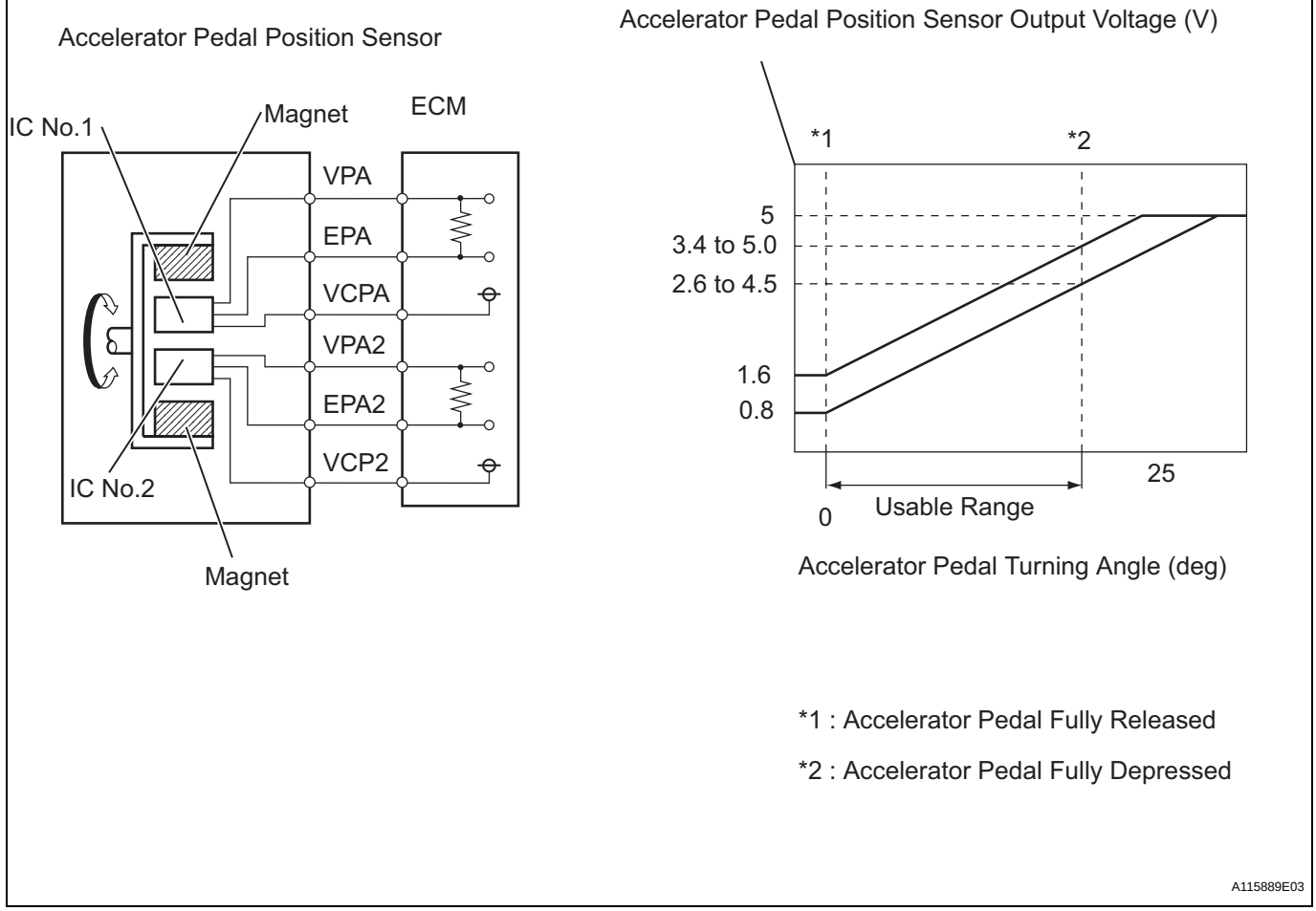

DTC No.	DTC Detection Conditions	Trouble Areas
P2120	VPA fluctuates rapidly beyond upper and lower malfunction thresholds for 0.5 seconds or more (1 trip detection logic)	• Accelerator Pedal Position (APP) sensor • ECM
P2122	VPA 0.4 V or less for 0.5 seconds or more when accelerator pedal fully released (1 trip detection logic)	• APP sensor • Open in VCP1 circuit • Open or ground short in VPA circuit • ECM
P2123	VPA 4.8 V or more for 2.0 seconds or more (1 trip detection logic)	• APP sensor • Open in EPA circuit • ECM
P2125	VPA2 fluctuates rapidly beyond upper and lower malfunction thresholds for 0.5 seconds or more (1 trip detection logic)	• APP sensor • ECM
P2127	VPA2 1.2 V or less for 0.5 seconds or more when accelerator pedal fully released (1 trip detection logic)	• APP sensor • Open in VCP2 circuit • Open or ground short in VPA2 circuit • ECM
P2128	Conditions (a) and (b) continue for 2.0 seconds or more (1 trip detection logic) (a) VPA2 4.8 V or more (b) VPA between 0.4 V and 3.45 V	• APP sensor • Open in EPA2 circuit • ECM
P2138	Condition (a) or (b) continues for 2.0 seconds or more (1 trip detection logic) (a) Difference between VPA and VPA2 0.02 V or less (b) VPA 0.4 V or less and VPA2 1.2 V or less	• Short between VPA and VPA2 circuits • APP sensor • ECM

HINT:
When any of these DTCs are set, check the APP sensor voltage by selecting the following menu items on an intelligent tester: DIAGNOSIS / ENHANCED OBD II / DATA LIST / PRIMARY / ACCEL POS #1 and ACCEL POS #2.

Trouble Areas	ACCEL POS #1 When AP Released	ACCEL POS #2 When AP Released	ACCEL POS #1 When AP Depressed	ACCEL POS #2 When AP Depressed
VCP circuit open	0 to 0.2 V	0 to 0.2 V	0 to 0.2 V	0 to 0.2 V
Open or ground short in VPA circuit	0 to 0.2 V	1.2 to 2.0 V	0 to 0.2 V	3.4 to 5.0 V
Open or ground short in VPA2 circuit	0.5 to 1.1 V	0 to 0.2 V	2.6 to 4.5 V	0 to 0.2 V
EPA circuit open	4.5 to 5.0 V	4.5 to 5.0 V	4.5 to 5.0 V	4.5 to 5.0 V
Normal condition	0.5 to 1.1 V	1.2 to 2.0 V	2.6 to 4.5 V	3.4 to 5.0 V

HINT:
- Accelerator pedal positions are expressed as voltages.
- AP denotes for Accelerator Pedal.

ES

MONITOR DESCRIPTION

When either of the output voltages of VPA or VPA2 deviates from the standard range, or the difference between the output voltages of the 2 sensor circuits is less than the threshold, the ECM determines that there is a malfunction in the APP sensor. The ECM then illuminates the MIL and sets a DTC.
Example:
When the output voltage of VPA drops to below 0.4 V for more than 0.5 seconds when the accelerator pedal is fully depressed, DTC P2122 is set.
If the malfunction is not repaired successfully, a DTC is set 2 seconds after the engine is next started.

MONITOR STRATEGY

Related DTCs	P2120: Accelerator Pedal Position (APP) sensor 1 range check (fluctuating) P2122: APP sensor 1 range check (low voltage) P2123: APP sensor 1 range check (high voltage) P2125: APP sensor 2 range check (fluctuating) P2127: APP sensor 2 range check (low voltage) P2128: APP sensor 2 range check (high voltage) P2138: APP sensor range check (correlation)
Required Sensors/Components (Main)	APP sensor
Required Sensors/Components (Related)	-
Frequency of Operation	Continuous
Duration	0.5 seconds: P2120, P2122, P2125 and P2127 2.0 seconds: P2123, P2128 and P2138
MIL Operation	Immediate
Sequence of Operation	None

TYPICAL ENABLING CONDITIONS

Monitor runs whenever following DTCs not present	None
Ignition switch	ON
Electronic throttle actuator power	ON

TYPICAL MALFUNCTION THRESHOLDS

P2120:

Either of the following conditions is met:	Condition 1 or 2
1. VPA1 voltage when VPA2 voltage is V or more	0.4 V or less
2. VPA1 voltage	4.8 V or more

P2122:

VPA1 voltage when VPA2 voltage is 0.04 V or more	0.4 V or less

P2123:

VPA1 voltage	4.8 V or more

P2125:

Either of the following conditions is met:	Condition 1 or2
1. VPA2 voltage when VPA1 is 0.04 V or more	1.2 V or less
2. VPA2 voltage when VPA1 is 0.4 to 3.45 V	4.8 V or more

P2127:

VPA2 voltage when VPA1 0.04 V or more	1.2 V or less

P2128:

VPA2 voltage when VPA1 0.4 to 3.45 V	4.8 V or more

P2138:

Either of following conditions A or B met:	-
Condition A	-
Difference between VPA1 and VPA 2 voltages	0.02 V or less
Condition B	-
VPA1 voltage	0.4 V or less
VPA2 voltage	1.2 V or less

COMPONENT OPERATING RANGE

VPA1 voltage	0.4 V to 4.8 V
VPA2 voltage	1.2 V to 4.8 V

FAIL-SAFE

When any of DTCs P2120, P2121, P2122, P2123, P2125, P2127, P2128 and P2138 are set, the ECM enters fail-safe mode. If either of the 2 sensor circuits malfunctions, the ECM uses the remaining circuit to calculate the accelerator pedal position to allow the vehicle to continue driving. If both of the circuits malfunction, the ECM regards the accelerator pedal as being released. As a result, the throttle valve is closed and the engine idles.
Fail-safe mode continues until a pass condition is detected, and the ignition switch is turned OFF.

WIRING DIAGRAM

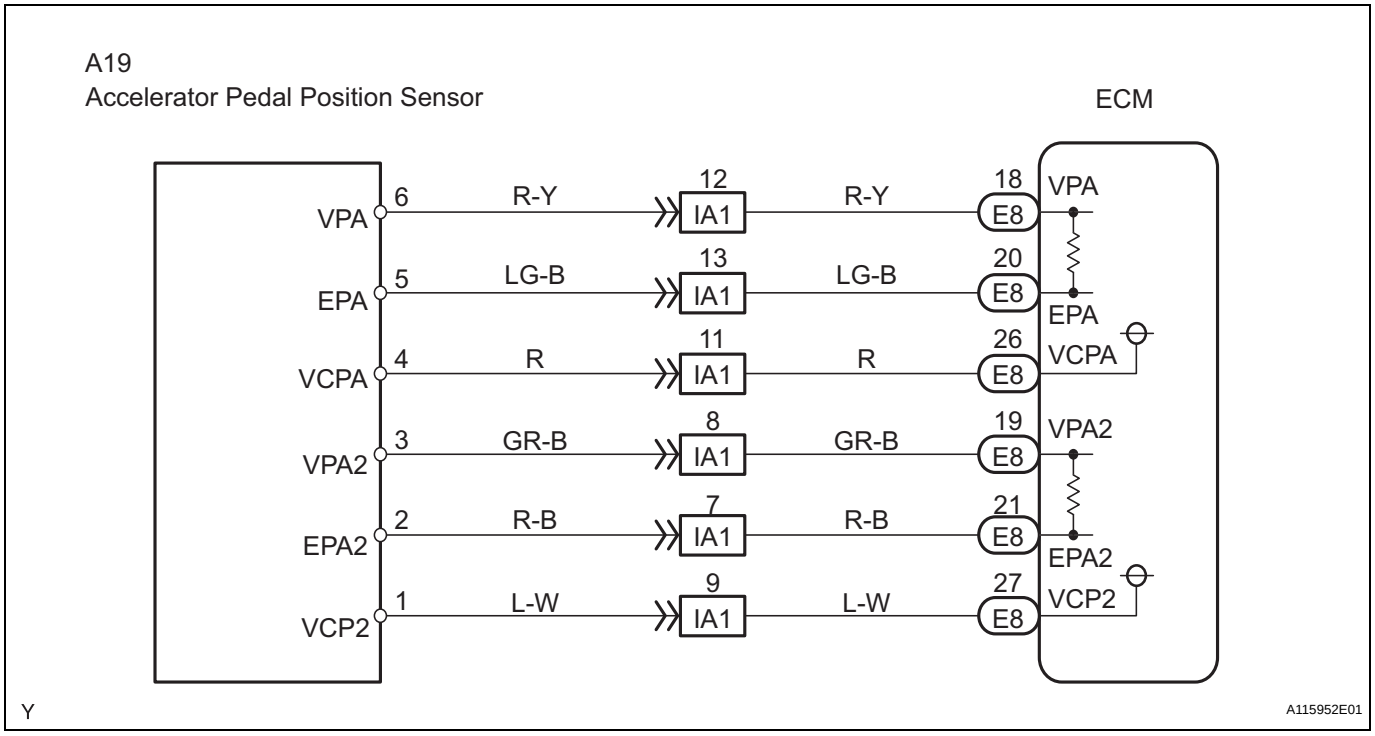

HINT:
Read freeze frame data using an intelligent tester. Freeze frame data record the engine condition when malfunctions are detected. When troubleshooting, freeze frame data can help determine if the vehicle was moving or stationary, if the engine was warmed up or not, if the air-fuel ratio was lean or rich, and other data, from the time the malfunction occurred.

1	READ VALUE OF INTELLIGENT TESTER (ACCEL POS #1 AND ACCEL POS #2)

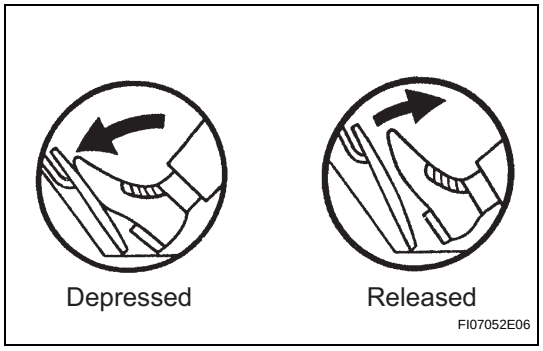

(a) Connect an intelligent tester to the DLC3.
(b) Turn the ignition switch ON and turn the tester ON.
(c) Select the following menu items: DIAGNOSIS / ENHANCED OBD II / DATA LIST / ALL / ACCEL POS #1 and ACCEL POS #2.
(d) Read the value displayed on the tester.
Standard Voltage

Accelerator Pedal Operations	ACCEL POS #1 (AP#1)	ACCEL POS #2 (AP#2)
Released	0.5 to 1.1 V	1.2 to 2.0 V
Depressed	2.6 to 4.5 V	3.4 to 5.0 V

OK → **Go to step 5**

NG

2	CHECK HARNESS AND CONNECTOR (ACCELERATOR PEDAL POSITION SENSOR - ECM)

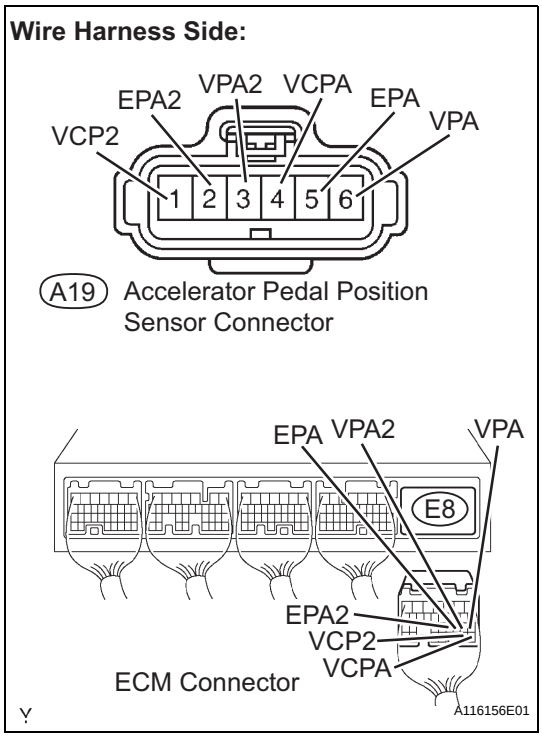

(a) Disconnect the A19 Accelerator Pedal Position (APP) sensor connector.
(b) Disconnect the E8 ECM connector.
(c) Check the resistance.

Standard Resistance (Check for open)

Tester Connections	Specified Conditions
VPA (A19-6) - VPA (E8-18)	Below 1 Ω
EPA (A19-5) - EPA (E8-20)	
VCPA (A19-4) - VCPA (E8-26)	
VPA2 (A19-3) - VPA2 (E8-19)	
EPA2 (A19-2) - EPA2 (E8-21)	
VCP2 (A19-1) - VCP2 (E8-27)	

Standard Resistance (Check for short)

Tester Connections	Specified Conditions
VPA (A19-6) or VPA (E8-18) - Body ground	10 kΩ or higher
EPA (A19-5) or EPA (E8-20) - Body ground	
VCPA (A19-4) or VCPA (E8-26) - Body ground	
VPA2 (A19-3) or VPA2 (E8-19) - Body ground	
EPA2 (A19-2) or EPA2 (E8-21) - Body ground	
VCP2 (A19-1) or VCP2 (E8-27) - Body ground	

(d) Reconnect the APP sensor connector.
(e) Reconnect the ECM connector.

NG → **REPAIR OR REPLACE HARNESS OR CONNECTOR**

OK

3	INSPECT ECM (VCPA AND VCP2 VOLTAGE)

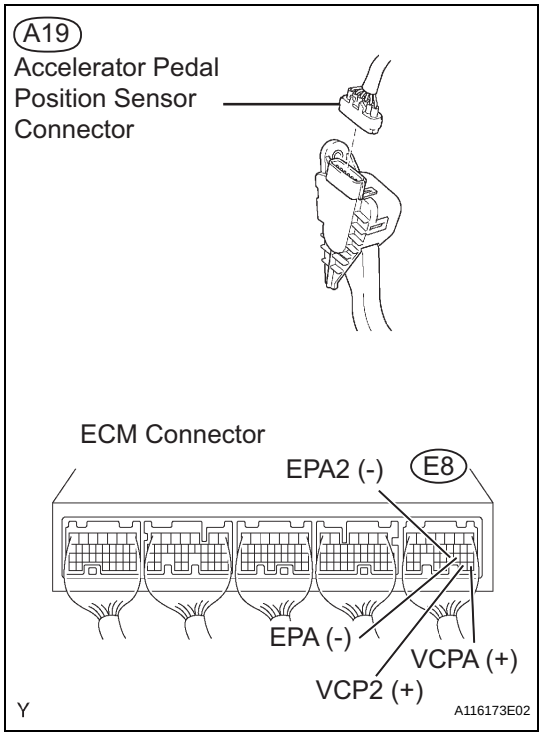

(a) Disconnect the A19 APP sensor connector.
(b) Turn the ignition switch ON.
(c) Measure the voltage between the terminals of the E8 ECM connector.

Standard Voltage

Tester Connections	Specified Conditions
VCPA (E8-26) - EPA (E8-20)	4.5 to 5.0 V
VCP2 (E8-27) - EPA2 (E8-21)	

(d) Reconnect the APP sensor connector.

ES

NG → REPLACE ECM

OK

4	REPLACE ACCELERATOR PEDAL ROD ASSEMBLY

NEXT

5	CHECK WHETHER DTC OUTPUT RECURS (ACCELERATOR PEDAL POSITION SENSOR DTCS)

(a) Connect an intelligent tester to the DLC3.
(b) Turn the ignition switch ON and turn the tester ON.
(c) Clear DTCs (See page ES-38).
(d) Start the engine.
(e) Allow the engine to idle for 15 seconds.
(f) Select the following menu items: DIAGNOSIS / ENHANCED OBD II / DTC INFO / CURRENT CODES.
(g) Read DTCs.

Result

Display (DTC Output)	Proceed To
P2120, P2122, P2123, P2125, P2127, P2128 and/or P2138	A
No output	B

B → SYSTEM OK

A

REPLACE ECM

DTC	P2121	Throttle / Pedal Position Sensor / Switch "D" Circuit Range / Performance

HINT:
This DTC relates to the Accelerator Pedal Position (APP) sensor.

DESCRIPTION

Refer to DTC P2120 (See page ES-293).

DTC No.	DTC Detection Conditions	Trouble Areas
P2121	Difference between VPA and VPA2 less than 0.4 V, or more than 1.2 V for 0.5 seconds (1 trip detection logic)	• Accelerator position sensor • ECM

ES

MONITOR DESCRIPTION

The accelerator pedal position sensor is mounted on the accelerator pedal bracket. The accelerator pedal position sensor has 2 sensor elements and 2 signal outputs: VPA and VPA2. VPA is used to detect the actual accelerator pedal angle (used for engine control) and VPA2 is used to detect malfunctions in VPA. When the difference between the voltage outputs of VPA and VPA2 deviates from the standard, the ECM determines that the accelerator pedal position sensor is a malfunctioning. The ECM turns on the MIL and the DTC is set.

MONITOR STRATEGY

Related DTCs	P2121: Accelerator pedal position (APP) sensor rationality
Required Sensors/Components (Main)	APP sensor
Required Sensors/Components (Related)	-
Frequency of Operation	Continuous
Duration	0.5 seconds
MIL Operation	Immediate
Sequence of Operation	None

TYPICAL ENABLING CONDITIONS

Monitor runs whenever following DTCs not present	None
Either of following conditions 1 or 2 met:	-
1. Ignition switch	ON
2. Throttle actuator power	ON

TYPICAL MALFUNCTION THRESHOLDS

Difference between VPA voltage (learned value) and VPA2 voltage (learned value)	Less than 0.4 V, or more than 1.2 V

FAIL-SAFE

The accelerator pedal position sensor has two (main and sub) sensor circuits. If a malfunction occurs in either of the sensor circuits, the ECM detects the abnormal signal voltage difference between the two sensor circuits and switches to limp mode. In limp mode, the functioning circuit is used to calculate the accelerator pedal opening angle to allow the vehicle to continue driving. If both circuits malfunction, the ECM regards the opening angle of the accelerator pedal as being fully closed. In this case, the throttle valve remains closed as if the engine is idling.
If a pass condition is detected and then the ignition switch is turned OFF, the fail-safe operation stops and the system returns to a normal condition.

WIRING DIAGRAM

Refer to DTC P2120 (See page ES-297).

HINT:
Read freeze frame data using an intelligent tester. Freeze frame data record the engine condition when malfunctions are detected. When troubleshooting, freeze frame data can help determine if the vehicle was moving or stationary, if the engine was warmed up or not, if the air-fuel ratio was lean or rich, and other data, from the time the malfunction occurred.

1	READ VALUE OF INTELLIGENT TESTER (ACCEL POS #1 AND ACCEL POS #2)

ES

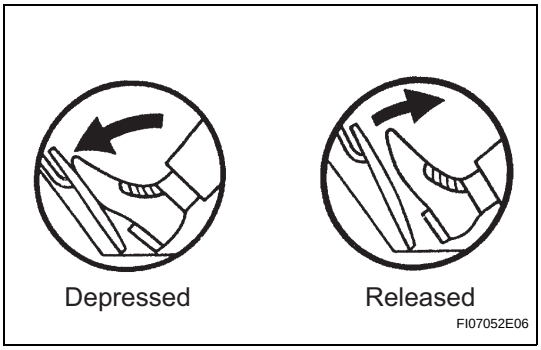

(a) Connect an intelligent tester to the DLC3.
(b) Turn the ignition switch ON and turn the tester ON.
(c) Select the following menu items: DIAGNOSIS / ENHANCED OBD II / DATA LIST / ALL / ACCEL POS #1 and ACCEL POS #2.
(d) Read the values displayed on the tester.

Standard Voltage

Accelerator Pedal Operations	ACCEL POS #1 (AP#1)	ACCEL POS #2 (AP#2)
Released	0.5 to 1.1 V	1.2 to 2.0 V
Depressed	2.6 to 4.5 V	3.4 to 5.0 V

OK → Go to step 3

NG

2	CHECK HARNESS AND CONNECTOR (ACCELERATOR PEDAL POSITION SENSOR - ECM)

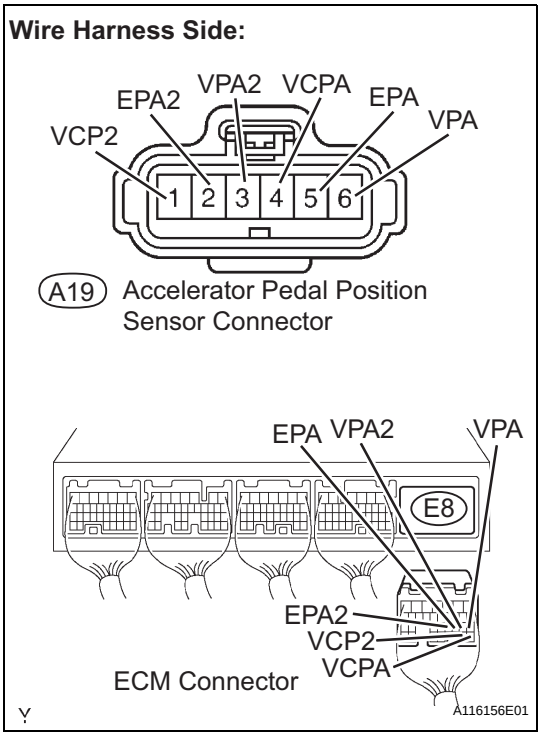

(a) Disconnect the A19 Accelerator Pedal Position (APP) sensor connector.
(b) Disconnect the E8 ECM connector.
(c) Check the resistance.

Standard Resistance (Check for open)

Tester Connections	Specified Conditions
VPA (A19-6) - VPA (E8-18)	Below 1 Ω
EPA (A19-5) - EPA (E8-20)	
VCPA (A19-4) - VCPA (E8-26)	
VPA2 (A19-3) - VPA2 (E8-19)	
EPA2 (A19-2) - EPA2 (E8-21)	
VCP2 (A19-1) - VCP2 (E8-27)	

Standard Resistance (Check for short)

Tester Connections	Specified Conditions
VPA (A19-6) or VPA (E8-18) - Body ground	10 kΩ or higher
EPA (A19-5) or EPA (E8-20) - Body ground	
VCPA (A19-4) or VCPA (E8-26) - Body ground	
VPA2 (A19-3) or VPA2 (E8-19) - Body ground	
EPA2 (A19-2) or EPA2 (E8-21) - Body ground	
VCP2 (A19-1) or VCP2 (E8-27) - Body ground	

(d) Reconnect the APP sensor connector.
(e) Reconnect the ECM connector.

NG → **REPAIR OR REPLACE HARNESS OR CONNECTOR**

OK

3	REPLACE ACCELERATOR PEDAL ROD ASSEMBLY

NEXT

ES

4	CHECK WHETHER DTC OUTPUT RECURS (ACCELERATOR PEDAL POSITION SENSOR DTCS)

(a) Connect an intelligent tester to the DLC3.
(b) Turn the ignition switch ON and turn the tester ON.
(c) Clear DTCs (See page ES-38).
(d) Start the engine.
(e) Allow the engine to idle for 15 seconds.
(f) Select the following menu items: DIAGNOSIS / ENHANCED OBD II / DTC INFO / CURRENT CODES.
(g) Read DTCs.

Result

Display (DTC Output)	Proceed To
P2121	A
No output	B

B → **SYSTEM OK**

A

REPLACE ECM

DTC	P2195	Oxygen (A/F) Sensor Signal Stuck Lean (Bank 1 Sensor 1)
DTC	P2196	Oxygen (A/F) Sensor Signal Stuck Rich (Bank 1 Sensor 1)
DTC	P2197	Oxygen (A/F) Sensor Signal Stuck Lean (Bank 2 Sensor 1)
DTC	P2198	Oxygen (A/F) Sensor Signal Stuck Rich (Bank 2 Sensor 1)

ES

HINT:
- Although the DTC titles say oxygen sensor, these DTCs relate to the Air-Fuel Ratio (A/F) sensor.
- Sensor 1 refers to the sensor mounted in front of the Three-Way Catalytic Converter (TWC) and located near the engine assembly.

DESCRIPTION

The A/F sensor generates a voltage* that corresponds to the actual air-fuel ratio. This sensor voltage is used to provide the ECM with feedback so that it can control the air-fuel ratio. The ECM determines the deviation from the stoichiometric air-fuel ratio level, and regulates the fuel injection time. If the A/F sensor malfunctions, the ECM is unable to control the air-fuel ratio accurately.

The A/F sensor is the planar type and is integrated with the heater, which heats the solid electrolyte (zirconia element). This heater is controlled by the ECM. When the intake air volume is low (the exhaust gas temperature is low), a current flows into the heater to heat the sensor, in order to facilitate accurate oxygen concentration detection. In addition, the sensor and heater portions are narrower than the conventional type. The heat generated by the heater is conducted to the solid electrolyte though the alumina, therefore the sensor activation is accelerated.

In order to obtain a high purification rate of the carbon monoxide (CO), hydrocarbon (HC) and nitrogen oxide (NOx) components in the exhaust gas, a TWC is used. For the most efficient use of the TWC, the air-fuel ratio must be precisely controlled so that it is always close to the stoichiometric level.

*: Value changes inside the ECM. Since the A/F sensor is the current output element, a current is converted in to a voltage inside the ECM. Any measurements taken at the A/F sensor or ECM connectors will show a constant voltage.

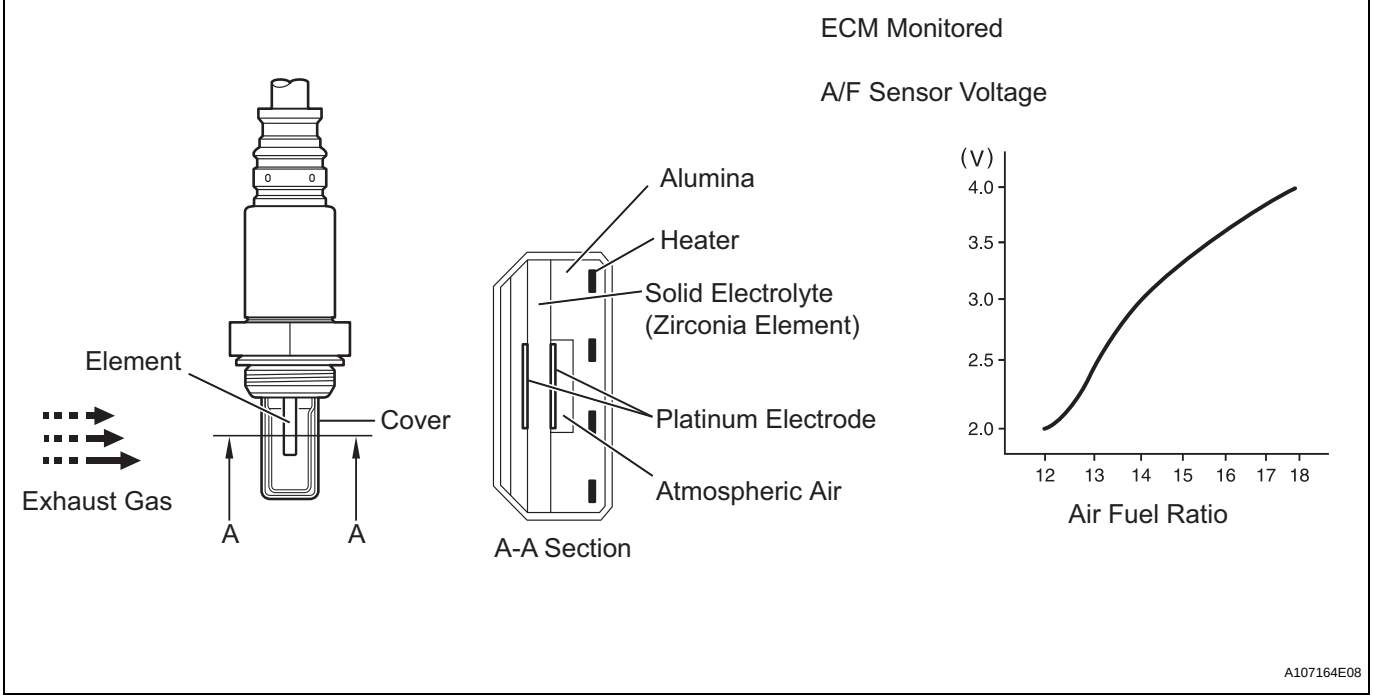

DTC No.	DTC Detection Conditions	Trouble Areas
P2195 P2197	Conditions (a) and (b) continue for 10 seconds or more (2 trip detection logic) (a) Air-Fuel Ratio (A/F) sensor voltage more than 3.8 V (b) Heated Oxygen (HO2) sensor voltage 0.15 V or more	• Open or short in A/F sensor (bank 1, 2 sensor 1) circuit • A/F sensor (bank 1, 2 sensor 1) • A/F sensor (bank 1, 2 sensor 1) heater • A/F sensor heater relay • A/F sensor heater and relay circuits • Air induction system • Fuel pressure • Injector • ECM
P2195 P2197	While fuel-cut operation performed (during vehicle deceleration), air-furl ratio (A/F) sensor current 3.6 mA or more for 3 seconds (2 trip detection logic)	• A/F sensor • ECM
P2196 P2198	Conditions (a) and (b) continue for 10 seconds or more (2 trip detection logic) (a) A/F sensor voltage less than 2.8 V (b) HO2 sensor voltage less than 0.6 V	• Open or short in A/F sensor (bank 1, 2 sensor 1) circuit • A/F sensor (bank 1, 2 sensor 1) • A/F sensor (bank 1, 2 sensor 1) heater • A/F sensor heater relay • A/F sensor heater and relay circuits • Air induction system • Fuel pressure • Injector • ECM
P2196 P2198	While fuel-cut operation performed (during vehicle deceleration), air-furl ratio (A/F) sensor current less than 1.57 mA for 3 seconds (2 trip detection logic)	• A/F sensor • ECM

HINT:

- DTCs P2195 and P2196 indicate malfunctions related to bank 1 A/F sensor circuit.
- DTCs P2197 and P2198 indicate malfunctions related to bank 2 A/F sensor circuit.
- Bank 1 refers to the bank that includes cylinder No. 1.
- Bank 2 refers to the bank that includes cylinder No. 2.
- When any of these DTCs are set, check the A/F sensor voltage output by selecting the following menu items on an intelligent tester: DIAGNOSIS / ENHANCED OBD II / DATA LIST / PRIMARY / AFS B1S1 or AFS B2S1.
- Short-term fuel trim values can also be read using an intelligent tester.

ES

- The ECM regulates the voltages at the A1A+, A2A+, A1A- and A2A- terminals of the ECM to a constant level. Therefore, the A/F sensor voltage output cannot be confirmed without using an intelligent tester.
- If a A/F sensor malfunction is detected, the ECM sets a DTC.

MONITOR DESCRIPTION

Sensor voltage detection monitor

Under the air-fuel ratio feedback control, if the A/F sensor voltage output indicates rich or lean for a certain period of time, the ECM determines that there is a malfunction in the A/F sensor. The ECM illuminates the MIL and sets a DTC.

Example:

If the A/F sensor voltage output is less than 2.8 V (very rich condition) for 10 seconds, despite the HO2 sensor voltage output being less than 0.6 V, the ECM sets DTC P2196. Alternatively, if the A/F sensor voltage output is more than 3.8 V (very lean condition) for 10 seconds, despite the HO2 sensor voltage output being 0.15 V or more, DTC P2195 is set.

ES

Sensor current detection monitor

A rich air-fuel mixture causes a low A/F sensor current, and a lean air-fuel mixture causes a high A/F sensor current. Therefore, the sensor output becomes low during acceleration, and it becomes high during deceleration with the throttle valve fully closed. The ECM monitors the A/F sensor current during fuel-cut and detects any abnormal current values.

If the A/F sensor output is 3.6 mA or more for more than 3 seconds of cumulative time, the ECM interprets this as a malfunction in the A/F sensor and sets DTC P2195 (high-side stuck). If the A/F sensor output is 1.57 mA or less for more than 3 seconds of cumulative time, the ECM sets DTC P2196 (low-side stuck).

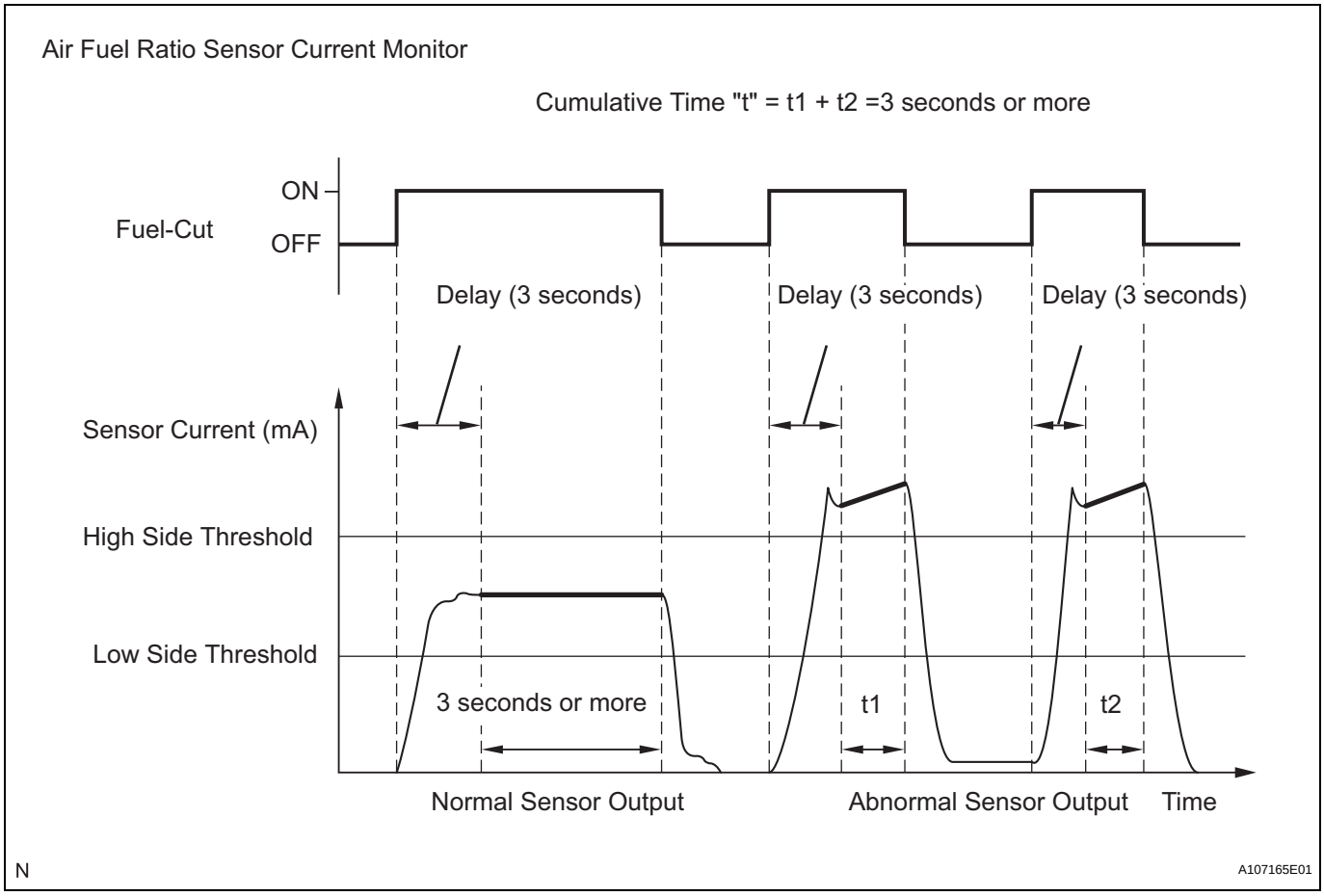

MONITOR STRATEGY

Related DTCs	P2195: A/F sensor (Bank 1) signal stuck lean P2196: A/F sensor (Bank 1) signal stuck rich P2197: A/F sensor (Bank 2) signal stuck lean P2198: A/F sensor (Bank 2) signal stuck rich
Required Sensors/Components (Main)	A/F sensor
Required Sensors/Components (Related)	HO2 sensor
Frequency of Operation	Continuous
Duration	10 seconds
MIL Operation	2 driving cycles
Sequence of Operation	None

TYPICAL ENABLING CONDITIONS

ALL

The monitor will run whenever these DTCs are not present	P0031, P0032, P0051, P0052 (A/F sensor heater - Sensor 1) P0037, P0038, P0057, P0058 (O2 Sensor heater - Sensor 2) P0100 - P0103 (MAF meter) P0110 - P0113 (IAT sensor) P0115 - P0118 (ECT sensor) P0120 - P0223, P2135 (TP sensor) P0125 (Insufficient ECT for closed loop) P0136, P0156 (O2 Sensor - Sensor 2) P0171, P0172 (Fuel system) P0300 - P0306 (Misfire) P0335 (CKP sensor) P0340, P0341 (CMP sensor) P0500 (VSS)

Sensor voltage detection monitor (Lean side malfunction P2195, P2197):

Time while all of following conditions met	2 seconds or more
Rear HO2 sensor voltage	0.15 V or more
Time after engine start	30 seconds or more
A/F sensor status	Activated
Fuel system status	Closed-loop
Engine	Running

Sensor voltage detection monitor (Rich side malfunction P2196, P2198):

Time while all of following conditions met	2 seconds or more
Rear HO2 sensor voltage	Below 0.6 V
Time after engine start	30 seconds or more
A/F sensor status	Activated
Fuel system status	Closed-loop
Engine	Running

Sensor Current detection monitor (P2195, P2196, P2197 P2198):

Battery voltage	11 V or more
Atmospheric pressure	570 mmHg or higher
Air-fuel ratio sensor status	Activated
Pass/Malfunction determination in this driving cycle	Not determined
Engine coolant temperature	75°C (167°F) or more
Continuous time of fuel cut	3 to 10 seconds

TYPICAL MALFUNCTION THRESHOLDS

Sensor voltage detection monitor (Lean side malfunction P2195, P2197):

A/F sensor voltage	More than 3.8 V

Sensor voltage detection monitor (Rich side malfunction P2196, P2198):

A/F sensor voltage	Less than 2.8 V

Sensor current detection monitor (High side malfunction P2195, P2197):

Following condition met for:	3 seconds or more
Air-fuel ratio sensor current during fuel cut	3.6 mA or more

Sensor current detection monitor (Rich side malfunction P2196, P2198):

Following condition met for:	3 seconds or more
Air-fuel ratio sensor current during fuel cut	Less than 1.57 mA

MONITOR RESULT

Detailed information on Checking Monitor Status (See page ES-19).

WIRING DIAGRAM

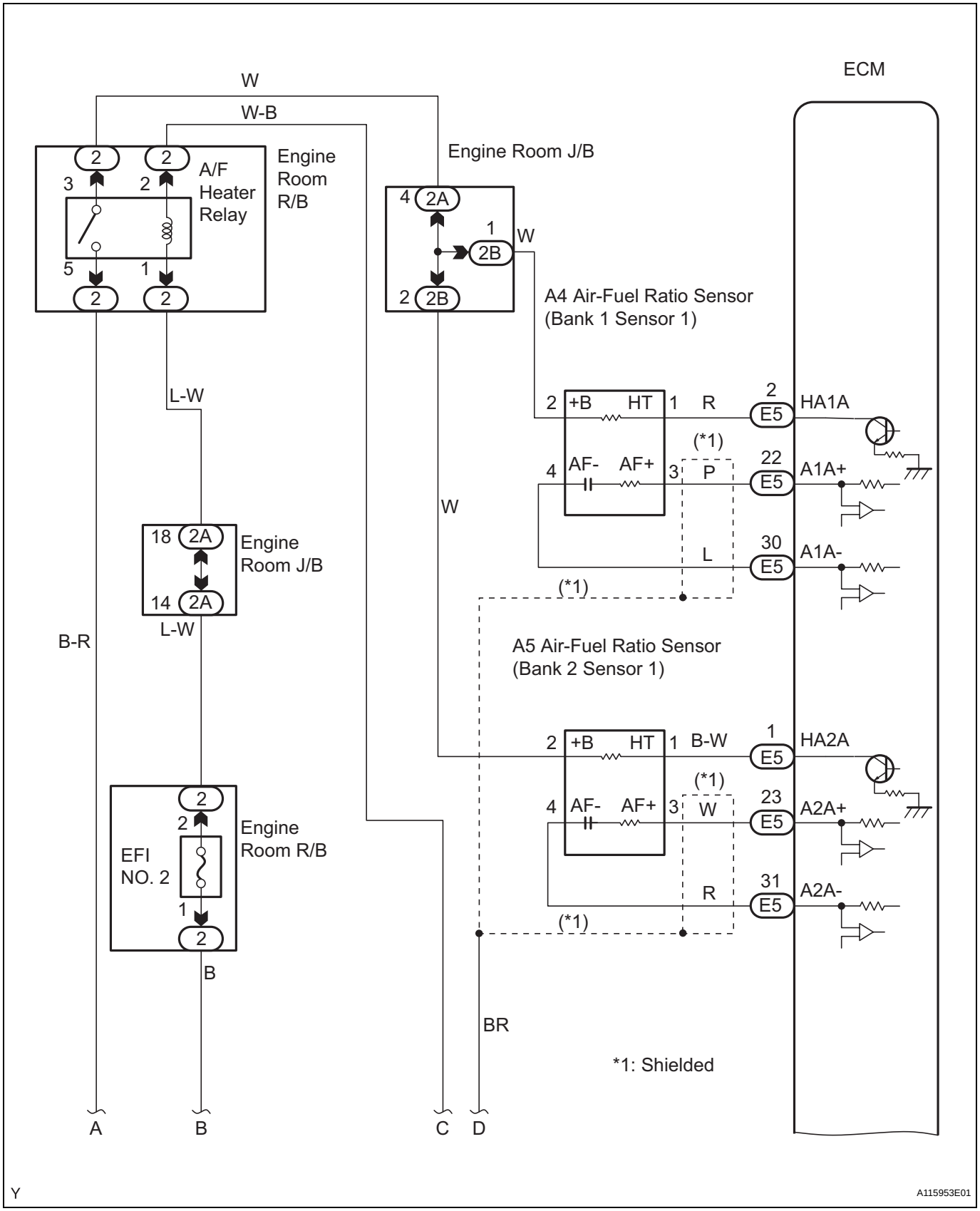

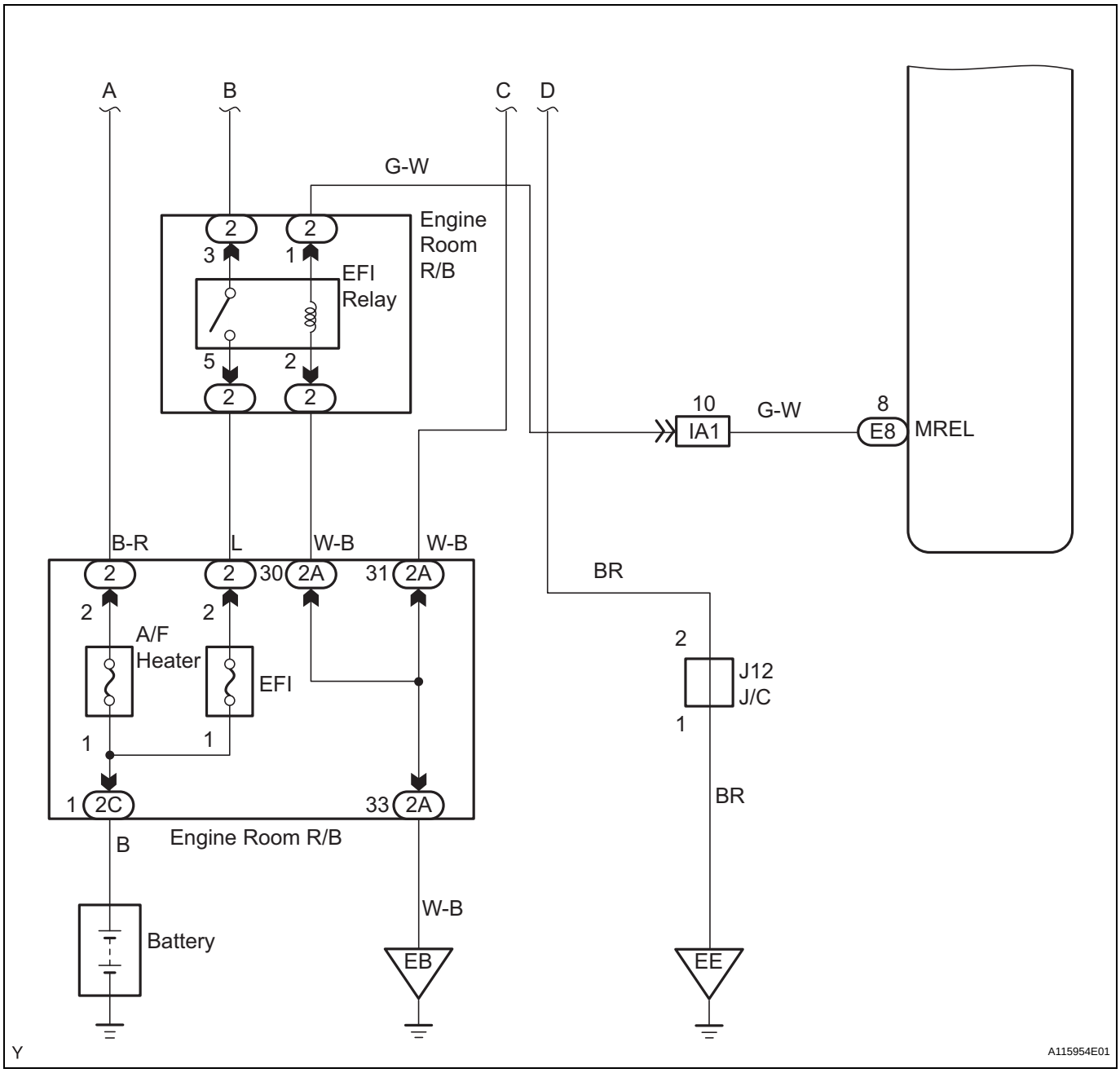

CONFIRMATION DRIVING PATTERN

This confirmation driving pattern is used in the "PERFORM CONFIRMATION DRIVING PATTERN" procedure of the following diagnostic troubleshooting procedure.

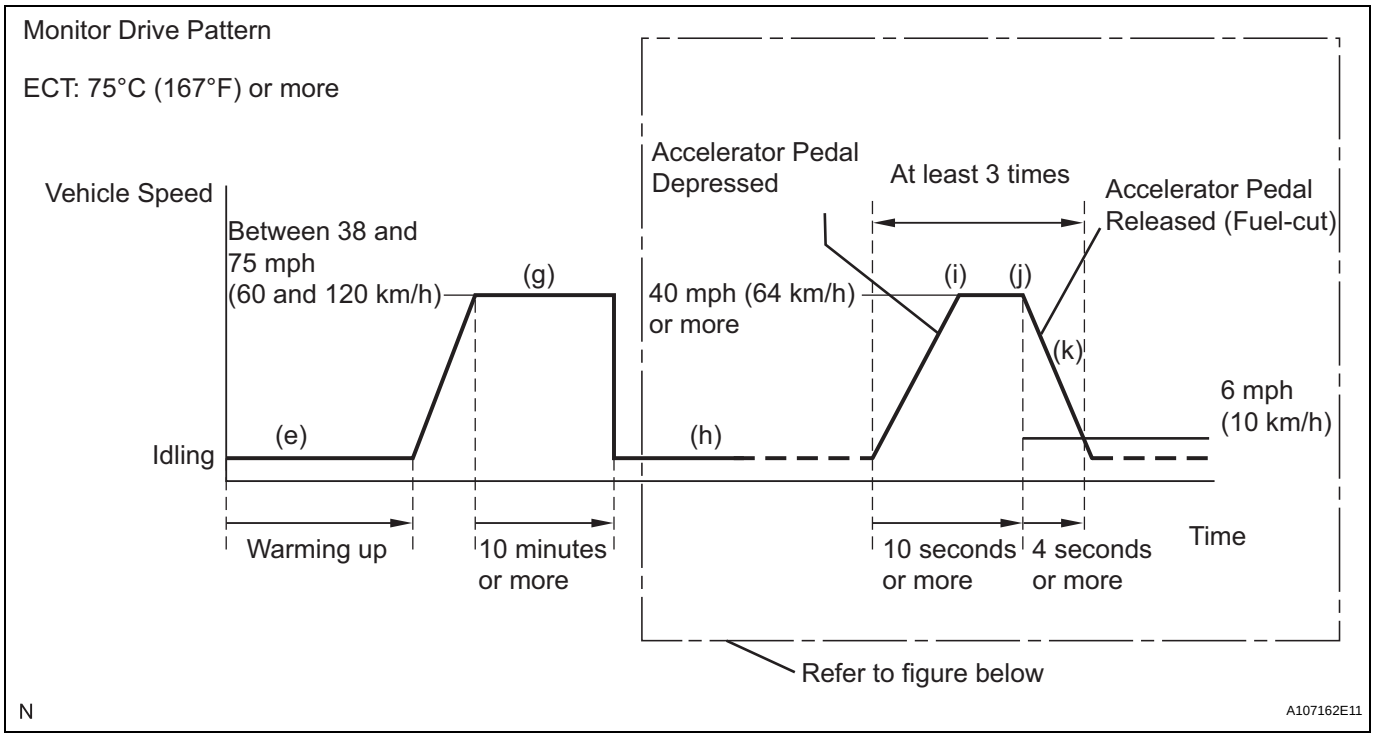

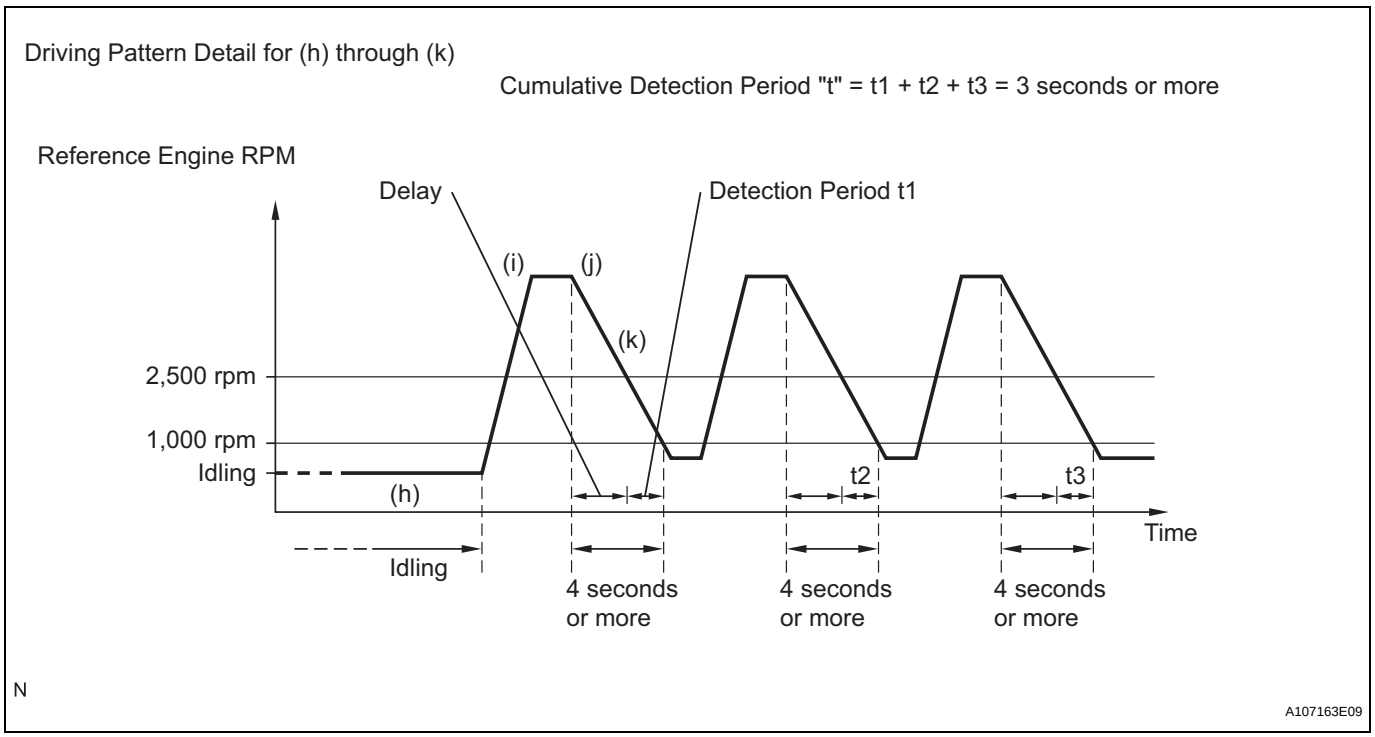

(a) Connect an intelligent tester to the DLC3.
(b) Turn the ignition switch ON.
(c) Turn the tester ON.
(d) Clear DTCs (See page ES-38).
(e) Start the engine, and warm it up until the ECT reaches 75°C (167°F) or higher.
(f) Select the following menu items to check the fuel-cut status: DIAGNOSIS / ENHANCED OBD II / DATA LIST / USER DATA / FC IDLE.
(g) Drive the vehicle at between 38 mph (60 km/h) and 75 mph (120 km/h) for at least 10 minutes.
(h) Change the transmission to 2nd gear.

(i) Drive the vehicle at proper vehicle speed to perform fuel-cut operation (refer to the following HINT).
HINT:
Fuel-cut is performed when the following conditions are met:
- Accelerator pedal fully released.
- Engine speed is 2,500 rpm or more (fuel injection returns at 1,000 rpm).

(j) Accelerate the vehicle to 40 mph (64 km/h) or more by depressing the accelerator pedal for at least 10 seconds.
(k) Soon after performing step (j) above, release the accelerator pedal for at least 4 seconds without depressing the brake pedal, in order to execute fuel-cut control.
(l) Allow the vehicle to decelerate until the vehicle speed declines to less than 6 mph (10 km/h).
(m) Repeat steps from (h) through (k) above at least 3 times in one driving cycle.
HINT:
Completion of all A/F sensor monitors is required to change the value in TEST RESULT.

ES

CAUTION:
Strictly observe posted speed limits, traffic laws, and road conditions when performing these drive patterns.

HINT:
Malfunctioning areas can be identified by performing the A/F CONTROL function provided in the ACTIVE TEST. The A/F CONTROL function can help to determine whether the Air-Fuel Ratio (A/F) sensor, Heated Oxygen (HO2) sensor and other potential trouble areas are malfunctioning.
The following instructions describe how to conduct the A/F CONTROL operation using an intelligent tester.
(1) Connect an intelligent tester to the DLC3.
(2) Start the engine and turn the tester ON.
(3) Warm up the engine at an engine speed of 2,500 rpm for approximately 90 seconds.
(4) Select the following menu items: DIAGNOSIS / ENHANCED OBD II / ACTIVE TEST / A/F CONTROL.
(5) Perform the A/F CONTROL operation with the engine in an idling condition (press the RIGHT or LEFT button to change the fuel injection volume).
(6) Monitor the voltage outputs of the A/F and HO2 sensors (AFS B1S1 and O2S B1S2 or AFS B2S1 and O2S B2S2) displayed on the tester.
HINT:
- The A/F CONTROL operation lowers the fuel injection volume by 12.5 % or increases the injection volume by 25 %.
- Each sensor reacts in accordance with increases and decreases in the fuel injection volume.

Standard

Tester Display (Sensor)	Injection Volumes	Status	Voltages
AFS B1S1 or AFS B2S1 (A/F)	+25 %	Rich	Less than 3.0
AFS B1S1 or AFS B2S1 (A/F)	-12.5 %	Lean	More than 3.35
O2S B1S2 or O2S B2S2 (HO2)	+25 %	Rich	More than 0.55
O2S B1S2 or O2S B2S2 (HO2)	-12.5 %	Lean	Less than 0.4

NOTICE:
The Air-Fuel Ratio (A/F) sensor has an output delay of a few seconds and the Heated Oxygen (HO2) sensor has a maximum output delay of approximately 20 seconds.

Case	A/F Sensor (Sensor 1) Output Voltage		HO2 Sensor (Sensor 2) Output Voltage		Main Suspected Trouble Areas
1	Injection volume +25 % -12.5 %		Injection volume +25 % -12.5 %		-
	Output voltage More than 3.35 V Less than 3.0 V		Output voltage More than 0.55 V Less than 0.4 V		
2	Injection volume +25 % -12.5 %		Injection volume +25 % -12.5 %		• A/F sensor • A/F sensor heater • A/F sensor circuit
	Output voltage Almost no reaction		Output voltage More than 0.55 V Less than 0.4 V		
3	Injection volume +25 % -12.5 %		Injection volume +25 % -12.5 %		• HO2 sensor • HO2 sensor heater • HO2 sensor circuit
	Output voltage More than 3.35 V Less than 3.0 V		Output voltage Almost no reaction	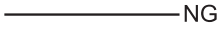	
4	Injection volume +25 % -12.5 %		Injection volume +25 % -12.5 %		• Injector • Fuel pressure • Gas leakage from exhaust system (Air-fuel ratio extremely lean or rich)
	Output voltage Almost no reaction		Output voltage Almost no reaction	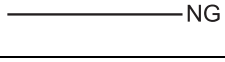	

- Following the A/F CONTROL procedure enables technicians to check and graph the voltage outputs of both the A/F and HO2 sensors.
- To display the graph, select the following menu items on the tester: DIAGNOSIS / ENHANCED OBD II / ACTIVE TEST / A/F CONTROL / USER DATA / AFS B1S1 and O2S B1S2 or AFS B2S1 and O2S B2S2, and press the YES button and then the ENTER button followed by the F4 button.

HINT:

- Read freeze frame data using an intelligent tester. Freeze frame data record the engine condition when malfunctions are detected. When troubleshooting, freeze frame data can help determine if the vehicle was moving or stationary, if the engine was warmed up or not, if the air-fuel ratio was lean or rich, and other data, from the time the malfunction occurred.
- A low A/F sensor voltage could be caused by a rich air-fuel mixture. Check for conditions that would cause the engine to run rich.
- A high A/F sensor voltage could be caused by a lean air-fuel mixture. Check for conditions that would cause the engine to run lean.

1	CHECK ANY OTHER DTCS OUTPUT (IN ADDITION TO P2195, P2196, P2197 OR P2198)

(a) Connect an intelligent tester to the DLC3.
(b) Turn the ignition switch ON.
(c) Turn the tester ON.
(d) Select the following menu items: DIAGNOSIS / ENHANCED OBD II / DTC INFO / CURRENT CODES.
(e) Read DTCs.

ES

Result

Display (DTC Output)	Proceed To
P2195, P2196, P2197 or P2198	A
P2195, P2196, P2197 or P2198 and other DTCs	B

HINT:
If any DTCs other than P2195, P2196, P2197 or P2198 are output, troubleshoot those DTCs first.

B → **GO TO DTC CHART**

A

ES

2 READ VALUE OF INTELLIGENT TESTER (TEST VALUE OF A/F SENSOR)

(a) Connect an intelligent tester to the DLC3.
(b) Turn the ignition switch ON and turn the tester ON.
(c) Clear DTCs (See page ES-38).
(d) Allow the vehicle to drive in accordance with the drive pattern described in the CONFIRMATION DRIVING PATTERN.
(e) Select the following menu items on the tester: DIAGNOSIS / ENHANCED OBD II / MONITOR INFO / MONITOR STATUS.
(f) Check that the status of O2S MON is COMPL.
If the status is still INCMPL, drive the vehicle according to the driving pattern again.
HINT:
- AVAIL indicates that the component has not been monitored yet.
- COMPL indicates that the component is functioning normally.
- INCMPL indicates that the component is malfunctioning.

(g) Select the following menu items: DIAGNOSIS / ENHANCED OBD II / MONITOR INFO / TEST RESULT / RANGE B1S1, then press the ENTER button.
(h) Check the test value of the A/F sensor output current during fuel-cut.

Result

Test Value	Proceed To
Within normal range (1.57 mA or more, and less than 3.6 mA)	A
Outside normal range (Less than 1.57 mA, or 3.6 mA or more)	B

B → **Go to step 20**

A

3 READ VALUE OF INTELLIGENT TESTER (OUTPUT VOLTAGE OF A/F SENSOR)

(a) Connect an intelligent tester to the DLC3.
(b) Start the engine.
(c) Turn the tester ON.

(d) Warm up the Air-Fuel Ratio (A/F) sensor at an engine speed of 2,500 rpm for 90 seconds.
(e) Select the following menu items: DIAGNOSIS / ENHANCED OBD II / SNAPSHOT / MANUAL SNAPSHOT / USER DATA / AFS B1S1 or AFS B2S1 and ENGINE SPD.
(f) Check the A/F sensor voltage three times, when the engine is in each of the following conditions:
  (1) While idling (check for at least 30 seconds)
  (2) At an engine speed of approximately 2,500 rpm (without any sudden changes in engine speed)
  (3) Raise the engine speed to 4,000 rpm and then quickly release the accelerator pedal so that the throttle valve is fully closed.

ES

Standard

Conditions	A/F Sensor Voltage Variations	Reference
(1) and (2)	Changes at approximately 3.3 V	Between 3.1 V and 3.5 V
(3)	Increases to 3.8 V or more	This occurs during engine deceleration (when fuel-cut performed)

HINT:
For more information, see the diagrams below.

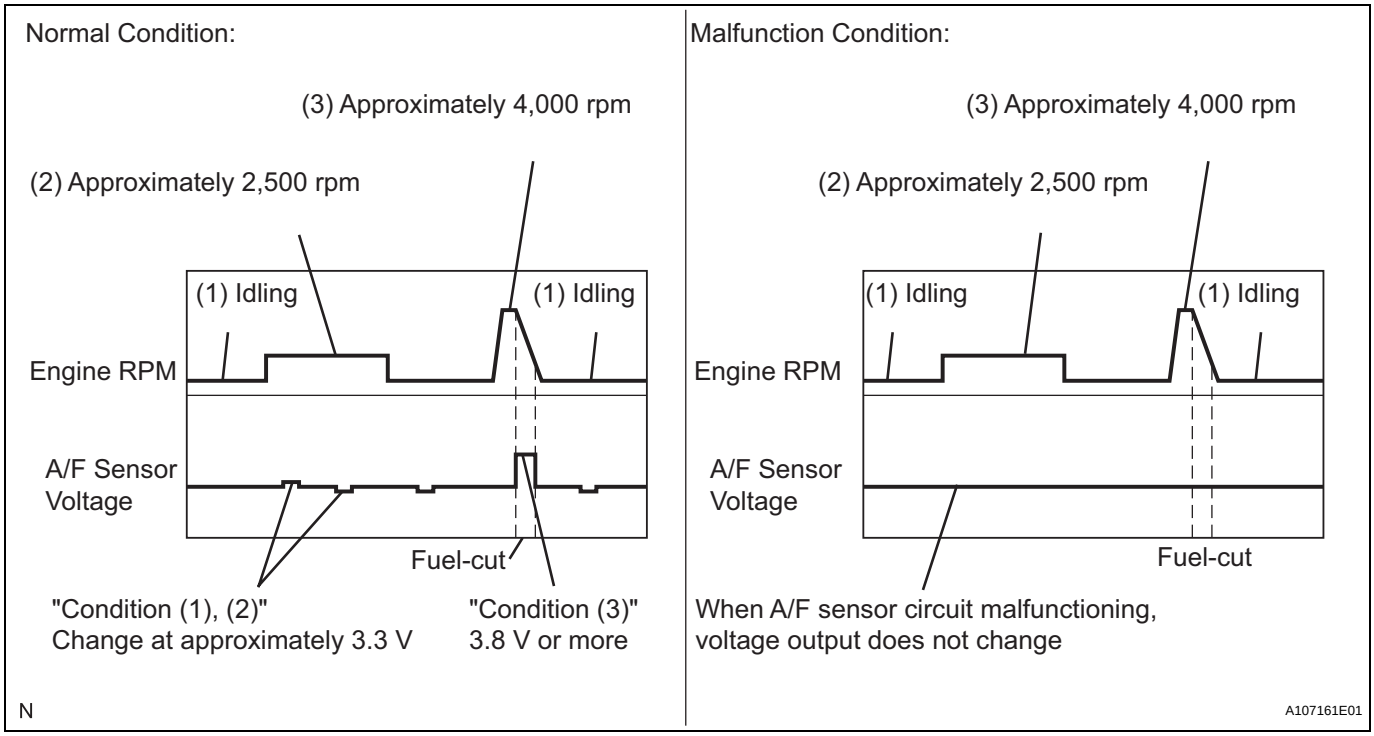

HINT:
- If the output voltage of the A/F sensor remains at approximately 3.3 V (see Malfunction Condition diagram) under any conditions, including those above, the A/F sensor may have an open circuit. (This will also happen if the A/F sensor heater has an open circuit.)
- If the output voltage of the A/F sensor remains at either approximately 3.8 V or more, or 2.8 V or less (see Malfunction Condition diagram) under any conditions, including those above, the A/F sensor may have a short circuit.

- The ECM stops fuel injection (fuel cut) during engine deceleration. This causes a lean condition and results in a momentary increase in the A/F sensor output voltage.
- The ECM must establish a closed throttle valve position learning value to perform fuel cut. If the battery terminal has been reconnected, the vehicle must be driven over 10 mph (16 km/h) to allow the ECM to learn the closed throttle valve position.
- When the vehicle is driven:
  The output voltage of the A/F sensor may be below 2.8 V during fuel enrichment. For the vehicle, this translates to a sudden increase in speed with the accelerator pedal fully depressed when trying to overtake another vehicle. The A/F sensor is functioning normally.
- The A/F sensor is a current output element; therefore, the current is converted into a voltage inside the ECM. Measuring the voltage at the connectors of the A/F sensor or ECM will show a constant voltage result.

NG → **Go to step 10**

OK

4	PERFORM CONFIRMATION DRIVING PATTERN

NEXT

5	CHECK WHETHER DTC OUTPUT RECURS (DTC P2195, P2196, P2197 OR P2198)

(a) Connect an intelligent tester to the DLC3.
(b) Turn the ignition switch ON and the tester ON.
(c) Select the following menu items: DIAGNOSIS / ENHANCED OBD II / DTC INFO / PENDING CODES.
(d) Read DTCs.

Result

Display (DTC Output)	Proceed To
P2195, P2196, P2197 or P2198	A
No output	B

B → **Go to step 9**

A

6	REPLACE AIR FUEL RATIO SENSOR

NEXT

7	PERFORM CONFIRMATION DRIVING PATTERN

NEXT

8	CHECK WHETHER DTC OUTPUT RECURS (DTC P2195, P2196, P2197 OR P2198)

(a) Connect an intelligent tester to the DLC3.
(b) Turn the ignition switch ON and the tester ON.
(c) Select the following menu items: DIAGNOSIS / ENHANCED OBD II / DTC INFO / PENDING CODES.
(d) Read DTCs.

ES

Result

Display (DTC Output)	Proceed To
No output	A
P2195, P2196, P2197 or P2198	B

B → **REPLACE ECM AND PERFORM CONFIRMATION DRIVING PATTERN**

A

9	CONFIRM WHETHER VEHICLE HAS RUN OUT OF FUEL IN PAST

NO → **CHECK FOR INTERMITTENT PROBLEMS**

YES

DTC CAUSED BY RUNNING OUT OF FUEL

10	INSPECT AIR FUEL RATIO SENSOR (HEATER RESISTANCE)

Component Side:

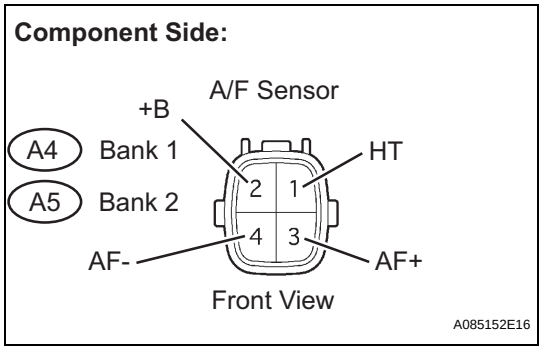

(a) Disconnect the A4 or A5 A/F sensor connector.
(b) Measure the resistance between the terminals of the A/F sensor connector.

Standard Resistance

Tester Connections	Specified Conditions
HT (1) - +B (2)	1.8 to 3.4 Ω at 20°C (68°F)
HT (1) - AF- (4)	10 kΩ or higher

(c) Reconnect the A/F sensor connector.

NG → **REPLACE AIR FUEL RATIO SENSOR**

OK

11 INSPECT AIR FUEL RATIO SENSOR HEATER RELAY

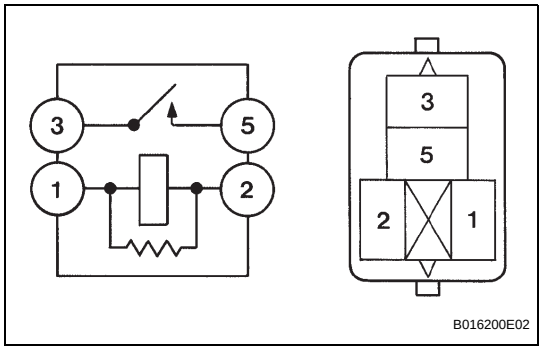

(a) Remove the A/F sensor heater relay from the engine room R/B.
(b) Check the A/F sensor heater relay resistance.

Standard Resistance

Tester Connections	Specified Conditions
3 - 5	10 kΩ or higher
3 - 5	Below 1 Ω (when battery voltage applied to terminals 1 and 2)

(c) Reinstall the A/F sensor heater relay.

NG → **REPLACE AIR FUEL RATIO SENSOR HEATER RELAY**

OK

12 CHECK HARNESS AND CONNECTOR (A/F SENSOR - ECM)

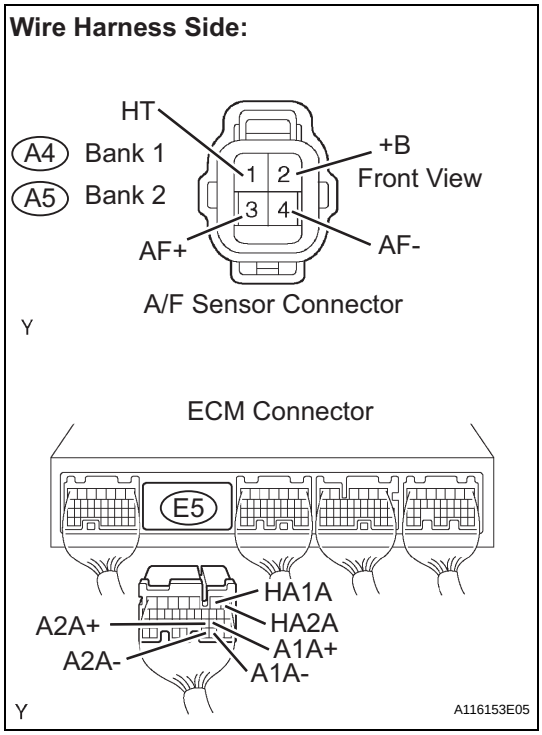

(a) Disconnect the A4 or A5 A/F sensor connector.
(b) Turn the ignition switch ON.
(c) Measure the voltage between the +B terminal of the A/F sensor connector and body ground.

Standard Voltage

Tester Connections	Specified Conditions
+B (A4-2) - Body ground	9 to 14 V
+B (A5-2) - Body ground	

(d) Turn the ignition switch OFF.
(e) Disconnect the E5 ECM connector.
(f) Check the resistance.

Standard Resistance (Check for open)

Tester Connections	Specified Conditions
HT (A4-1) - HA1A (E5-2)	Below 1 Ω
AF+ (A4-3) - A1A+ (E5-22)	
AF- (A4-4) - A1A- (E5-30)	
HT (A5-1) - HA2A (E5-1)	
AF+ (A5-3) - A2A+ (E5-23)	
AF- (A5-4) - A2A- (E5-31)	

Standard Resistance (Check for short)

Tester Connections	Specified Conditions
HT (A4-1) or HA1A (E5-2) - Body ground	10 kΩ or higher
AF+ (A4-3) or A1A+ (E5-22) - Body ground	
AF- (A4-4) or A1A- (E5-30) - Body ground	
HT (A5-1) or HA2A (E5-1) - Body ground	
AF+ (A5-3) or A2A+ (E5-23) - Body ground	
AF- (A5-4) or A2A- (E5-31) - Body ground	

(g) Reconnect the ECM connector.
(h) Reconnect the A/F sensor connector.

Reference (Bank 1 Sensor 1 System Diagram)

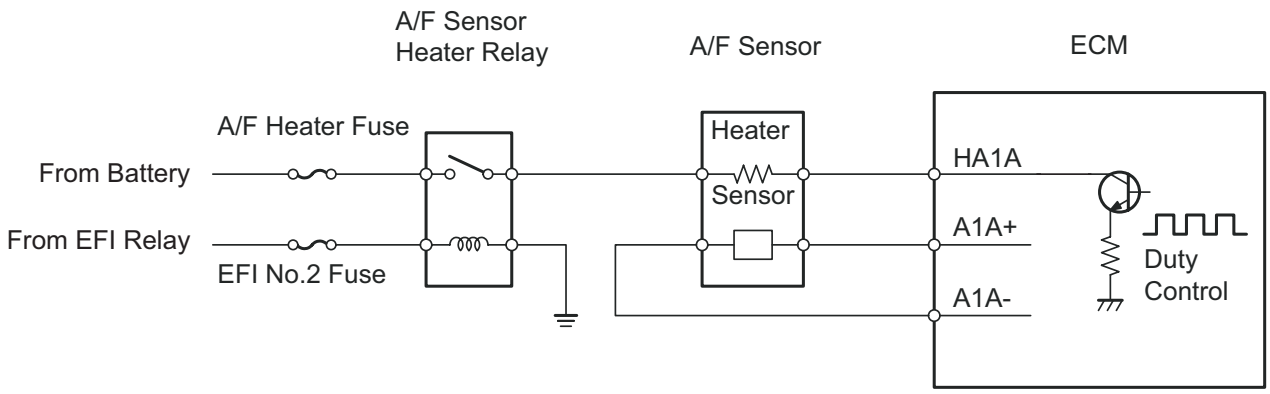

A115897E02

NG → **REPAIR OR REPLACE HARNESS OR CONNECTOR**

OK

13	CHECK AIR INDUCTION SYSTEM

(a) Check the air induction system for vacuum leakage.
OK:
No leakage from air induction system.

NG → **REPAIR OR REPLACE AIR INDUCTION SYSTEM**

OK

14	CHECK FUEL PRESSURE

(a) Check the fuel pressure.

NG → **REPAIR OR REPLACE FUEL SYSTEM**

OK

15	INSPECT FUEL INJECTOR ASSEMBLY

(a) Check the injector injection (whether fuel volume is high or low, and whether injection pattern is poor).

NG → **REPLACE FUEL INJECTOR ASSEMBLY**

ES

OK

16	REPLACE AIR FUEL RATIO SENSOR

NEXT

17	PERFORM CONFIRMATION DRIVING PATTERN

NEXT

ES

18	CHECK WHETHER DTC OUTPUT RECURS (DTC P2195, P2196, P2197 OR P2198)

(a) Connect an intelligent tester to the DLC3.
(b) Turn the ignition switch ON and the tester ON.
(c) Select the following menu items: DIAGNOSIS / ENHANCED OBD II / DTC INFO / PENDING CODES.
(d) Read DTCs.

Result

Display (DTC Output)	Proceed To
No output	A
P2195, P2196, P2197 or P2198	B

B → REPAIR OR REPLACE ECM AND PERFORM CONFIRMATION DRIVING PATTERN

A

19	CONFIRM WHETHER VEHICLE HAS RUN OUT OF FUEL IN PAST

NO → CHECK FOR INTERMITTENT PROBLEMS

YES

DTC CAUSED BY RUNNING OUT OF FUEL

20	REPLACE AIR FUEL RATIO SENSOR

NEXT

21	PERFORM CONFIRMATION DRIVING PATTERN

NEXT

22	CHECK WHETHER DTC OUTPUT RECURS (DTC P2195, P2196, P2197 OR P2198)

(a) Connect an intelligent tester to the DLC3.
(b) Turn the ignition switch ON and turn the tester ON.
(c) Select the following menu items: DIAGNOSIS / ENHANCED OBD II / DTC INFO / PENDING CODES.
(d) Read DTCs.

Result

Display (DTC Output)	Proceed To
No output	A
P2195, P2196, P2197 or P2198 (A/F sensor pending DTCs)	B

B → REPLACE ECM

A → END

DTC	P2238	Oxygen (A/F) Sensor Pumping Current Circuit Low (Bank 1 Sensor 1)
DTC	P2239	Oxygen (A/F) Sensor Pumping Current Circuit High (Bank 1 Sensor 1)
DTC	P2241	Oxygen (A/F) Sensor Pumping Current Circuit Low (Bank 2 Sensor 1)
DTC	P2242	Oxygen (A/F) Sensor Pumping Current Circuit High (Bank 2 Sensor 1)
DTC	P2252	Oxygen (A/F) Sensor Reference Ground Circuit Low (Bank 1 Sensor 1)
DTC	P2253	Oxygen (A/F) Sensor Reference Ground Circuit High (Bank 1 Sensor 1)
DTC	P2255	Oxygen (A/F) Sensor Reference Ground Circuit Low (Bank 2 Sensor 1)
DTC	P2256	Oxygen (A/F) Sensor Reference Ground Circuit High (Bank 2 Sensor 1)

HINT:
- Although the DTC titles say oxygen sensor, these DTCs relate to the Air-Fuel Ratio (A/F) sensor.
- Sensor 1 refers to the sensor mounted in front of the Three-Way Catalytic Converter (TWC) and located near the engine assembly.

DESCRIPTION

Refer to DTC P2195 (See page ES-304).

DTC No.	DTC Detection Conditions	Trouble Areas
P2238 P2241	• Case 1: Condition (a) or (b) continues for 5.0 seconds or more (2 trip detection logic) (a) AF+ voltage 0.5 V or less (b) (AF+) - (AF-) = 0.1 V or less • Case 2: A/F sensor admittance: Less than 0.022 1/Ω (2 trip detection logic)	• Open or short in A/F sensor (bank 1, 2 sensor 1) circuit • A/F sensor (bank 1, 2 sensor 1) • A/F sensor heater • A/F sensor heater relay • A/F sensor heater and relay circuits • ECM
P2239 P2242	AF+ voltage more than 4.5 V for 5.0 seconds or more (2 trip detection logic)	
P2252 P2255	AF- voltage 0.5 V or less for 5.0 seconds or more (2 trip detection logic)	
P2253 P2256	AF- voltage more than 4.5 V for 5.0 seconds or more (2 trip detection logic)	

HINT:
- DTC P2238, P2239, P2252 and P2253 indicate malfunctions related to the bank 1 A/F sensor circuit.

- DTC P2241, P2242, P2255 and P2256 indicate malfunctions related to the bank 2 A/F sensor circuit.
- Bank 1 refers to the bank that includes cylinder No. 1.
- Bank 2 refers to the bank that includes cylinder No. 2.

MONITOR DESCRIPTION

The Air-Fuel Ratio (A/F) sensor varies its output voltage in proportion to the air-fuel ratio. If the A/F sensor impedance (alternating current resistance) or voltage output deviates greatly from the standard range, the ECM determines that there is an open or short malfunction in the A/F sensor circuit.

MONITOR STRATEGY

Related DTCs	P2238: A/F sensor (Bank 1) open circuit between AF+ and AF- P2238: A/F sensor (Bank 1) short circuit between AF+ and AF- P2238: A/F sensor (Bank 1) short circuit between AF+ and GND P2239: A/F sensor (Bank 1) short circuit between AF+ and +B P2241: A/F sensor (Bank 2) open circuit between AF+ and AF- P2241: A/F sensor (Bank 2) short circuit between AF+ and AF- P2241: A/F sensor (Bank 2) short circuit between AF+ and GND P2242: A/F sensor (Bank 2) short circuit between AF+ and +B P2252: A/F sensor (Bank 1) short circuit between AF- and GND P2253: A/F sensor (Bank 1) short circuit between AF- and +B P2255: A/F sensor (Bank 2) short circuit between AF- and GND P2256: A/F sensor (Bank 2) short circuit between AF- and +B
Required Sensors/Components (Main)	A/F sensor
Required Sensors/Components (Related)	Engine Coolant Temperature (ECT) sensor, Crankshaft position sensor
Frequency of Operation	Once per driving cycle
Duration	10 seconds: A/F sensor open circuit between AF+ and AF- 5 seconds: Others
MIL Operation	2 driving cycles
Sequence of Operation	None

TYPICAL ENABLING CONDITIONS

Monitor runs whenever following DTCs not present	None

P2238 and P2241 (open circuit between AF+ and AF-):

AF+ terminal voltage	0.5 to 4.5 V
AF- terminal voltage	0.5 to 4.5 V
Difference between AF+ and AF- terminal voltages	0.1 to 0.8 V
ECT	20°C (68°F) or more
Engine condition	Running
Fuel-cut	OFF
A/F sensor heater	ON
Battery voltage	11 V or more
Ignition switch	ON
Time after ignition switch is OFF to ON	5 seconds or more

Others:

Battery voltage	11 V or more
Ignition switch	ON
Time after ignition switch is OFF to ON	5 seconds or more

TYPICAL MALFUNCTION THRESHOLDS

P2238 and P2241 (Open circuit between AF+ and AF-):

A/F sensor admittance	Below 0.022 1/Ω

P2238 and P2241 (Short circuit between AF+ and GND):

AF+ terminal voltage	0.5 V or less

P2238 and P2241 (Short circuit between AF+ and AF-):

Difference between AF+ and AF- terminal voltages	0.1 V or less

P2239 and P2242 (Short circuit between AF+ and +B):

AF+ terminal voltage	More than 4.5 V

P2252 and P2255 (Short circuit between AF- and GND):

AF- terminal voltage	0.5 V or less

P2253 and P2256 (Short circuit between AF- and +B):

AF- terminal voltage	More than 4.5 V

ES

WIRING DIAGRAM

Refer to DTC P2195 (See page ES-309).

HINT:
Intelligent tester only:
Malfunctioning areas can be identified by performing the A/F CONTROL function provided in the ACTIVE TEST. The A/F CONTROL function can help to determine whether the Air-Fuel Ratio (A/F) sensor, Heated Oxygen (HO2) sensor and other potential trouble areas are malfunctioning.
The following instructions describe how to conduct the A/F CONTROL operation using an intelligent tester.
(1) Connect an intelligent tester to the DLC3.
(2) Start the engine and turn the tester ON.
(3) Warm up the engine at an engine speed of 2,500 rpm for approximately 90 seconds.
(4) Select the following menu items: DIAGNOSIS / ENHANCED OBD II / ACTIVE TEST / A/F CONTROL.
(5) Perform the A/F CONTROL operation with the engine in an idling condition (press the RIGHT or LEFT button to change the fuel injection volume).
(6) Monitor the voltage outputs of the A/F and HO2 sensors (AFS B1S1 and O2S B1S2 or AFS B2S1 and O2S B2S2) displayed on the tester.
HINT:

- The A/F CONTROL operation lowers the fuel injection volume by 12.5 % or increases the injection volume by 25 %.
- Each sensor reacts in accordance with increases and decreases in the fuel injection volume.

Standard

Tester Display (Sensor)	Injection Volumes	Status	Voltages
AFS B1S1 or AFS B2S1 (A/F)	+25 %	Rich	Less than 3.0
AFS B1S1 or AFS B2S1 (A/F)	-12.5 %	Lean	More than 3.35
O2S B1S2 or O2S B2S2 (HO2)	+25 %	Rich	More than 0.55
O2S B1S2 or O2S B2S2 (HO2)	-12.5 %	Lean	Less than 0.4

NOTICE:
The Air-Fuel Ratio (A/F) sensor has an output delay of a few seconds and the Heated Oxygen (HO2) sensor has a maximum output delay of approximately 20 seconds.

Case	A/F Sensor (Sensor 1) Output Voltage		HO2 Sensor (Sensor 2) Output Voltage		Main Suspected Trouble Areas
1	Injection volume +25 % -12.5 %		Injection volume +25 % -12.5 %		-
	Output voltage More than 3.35 V Less than 3.0 V		Output voltage More than 0.55 V Less than 0.4 V		
2	Injection volume +25 % -12.5 %		Injection volume +25 % -12.5 %		• A/F sensor • A/F sensor heater • A/F sensor circuit
	Output voltage Almost no reaction		Output voltage More than 0.55 V Less than 0.4 V		
3	Injection volume +25 % -12.5 %		Injection volume +25 % -12.5 %		• HO2 sensor • HO2 sensor heater • HO2 sensor circuit
	Output voltage More than 3.35 V Less than 3.0 V		Output voltage Almost no reaction		
4	Injection volume +25 % -12.5 %		Injection volume +25 % -12.5 %		• Injector • Fuel pressure • Gas leakage from exhaust system (Air-fuel ratio extremely lean or rich)
	Output voltage Almost no reaction		Output voltage Almost no reaction		

- Following the A/F CONTROL procedure enables technicians to check and graph the voltage outputs of both the A/F and HO2 sensors.
- To display the graph, select the following menu items on the tester: DIAGNOSIS / ENHANCED OBD II / ACTIVE TEST / A/F CONTROL / USER DATA / AFS B1S1 and O2S B1S2 or AFS B2S1 and O2S B2S2, and press the YES button and then the ENTER button followed by the F4 button.

HINT:

Read freeze frame data using an intelligent tester. Freeze frame data record the engine condition when malfunctions are detected. When troubleshooting, freeze frame data can help determine if the vehicle was moving or stationary, if the engine was warmed up or not, if the air-fuel ratio was lean or rich, and other data, from the time the malfunction occurred.

1 INSPECT AIR FUEL RATIO SENSOR (HEATER RESISTANCE)

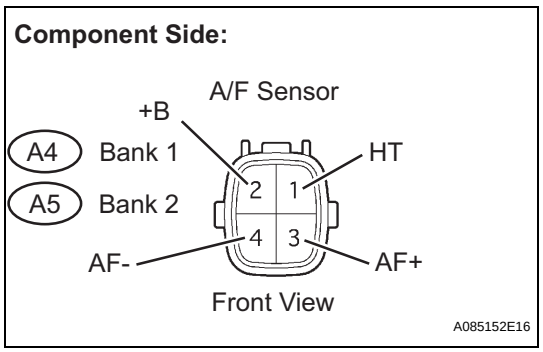

(a) Disconnect the A4 or A5 A/F sensor connector.

(b) Measure the resistance between the terminals of the A/F sensor connector.

Standard Resistance

Tester Connections	Specified Conditions
HT (1) - +B (2)	1.8 to 3.4 Ω at 20°C (68°F)
HT (1) - AF- (4)	10 kΩ or higher

(c) Reconnect the A/F sensor connector.

NG → REPLACE AIR FUEL RATIO SENSOR

OK

2 INSPECT AIR FUEL RATIO SENSOR HEATER RELAY

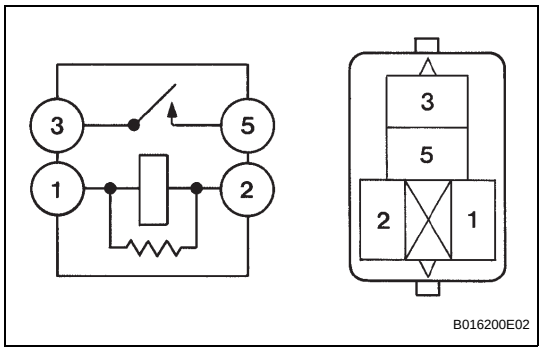

(a) Remove the A/F sensor heater relay from the engine room R/B.
(b) Check the A/F sensor heater relay resistance.
Standard Resistance

Tester Connections	Specified Conditions
3 - 5	10 kΩ or higher
3 - 5	Below 1 Ω (when battery voltage applied to terminals 1 and 2)

(c) Reinstall the A/F sensor heater relay.

NG → REPLACE AIR FUEL RATIO SENSOR HEATER RELAY

OK

3 CHECK HARNESS AND CONNECTOR (A/F SENSOR - ECM)

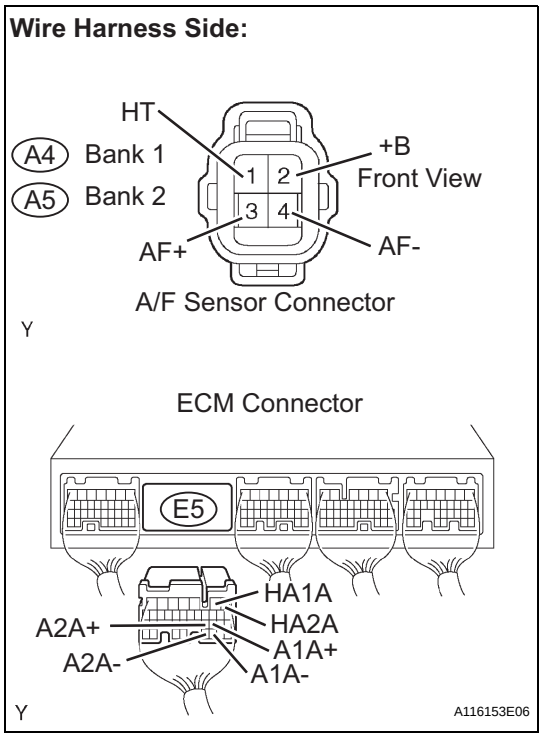

(a) Disconnect the A4 or A5 A/F sensor connector.
(b) Turn the ignition switch ON.
(c) Measure the voltage between the +B terminal of the A/F sensor connector and body ground.
Standard Voltage

Tester Connections	Specified Conditions
+B (A4-2) - Body ground	9 to 14 V
+B (A5-2) - Body ground	

(d) Turn the ignition switch OFF.
(e) Disconnect the E5 ECM connector.
(f) Check the resistance.
Standard Resistance (Check for open)

Tester Connections	Specified Conditions
HT (A4-1) - HA1A (E5-2)	Below 1 Ω
AF+ (A4-3) - A1A+ (E5-22)	
AF- (A4-4) - A1A- (E5-30)	
HT (A5-1) - HA2A (E5-1)	
AF+ (A5-3) - A2A+ (E5-23)	
AF- (A5-4) - A2A- (E5-31)	

Standard Resistance (Check for short)

Tester Connections	Specified Conditions
HT (A4-1) or HA1A (E5-2) - Body ground	10 kΩ or higher
AF+ (A4-3) or A1A+ (E5-22) - Body ground	
AF- (A4-4) or A1A- (E5-30) - Body ground	
HT (A5-1) or HA2A (E5-1) - Body ground	
AF+ (A5-3) or A2A+ (E5-23) - Body ground	
AF- (A5-4) or A2A- (E5-31) - Body ground	

(g) Reconnect the ECM connector.
(h) Reconnect the A/F sensor connector.

Reference (Bank 1 Sensor 1 System Diagram)

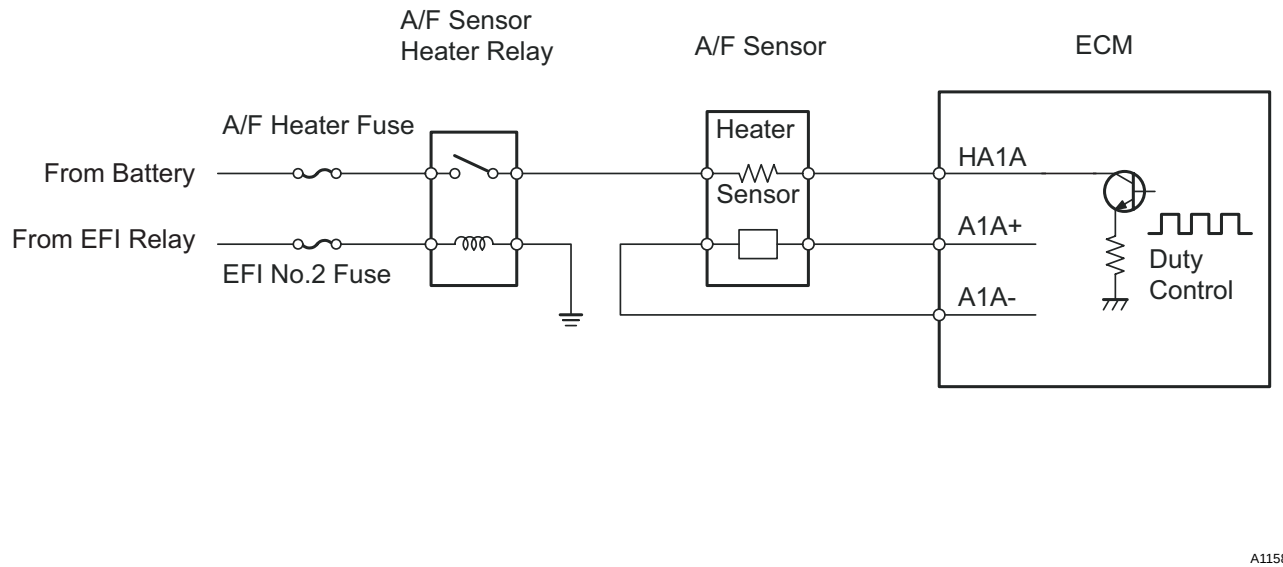

ES

NG → **REPAIR OR REPLACE HARNESS OR CONNECTOR**

OK

REPLACE ECM

DTC	P2401	Evaporative Emission System Leak Detection Pump Control Circuit Low

DTC	P2402	Evaporative Emission System Leak Detection Pump Control Circuit High

DTC SUMMARY

DTCs	Monitoring Items	Malfunction Detection Conditions	Trouble Areas	Detection Timings	Detection Logic
P2401	Leak detection pump stuck OFF	Leak detection pump creates negative pressure through reference orifice, and EVAP system pressure measured to determine leak criterion. 0.02 inch leak criterion is measured at start and at end of leak check. If system pressure higher than -1.06 kPa (-7.95 mmHg)*, or lower than -4.85 kPa (-36.38 mmHg)*, ECM determines that leak detection pump stuck OFF.	• Canister pump module • Connector/wire harness (Canister pump module - ECM) • ECM • Leakage from EVAP system	While ignition switch OFF	2 trip
P2402	Leak detection pump stuck ON	Leak detection pump creates negative pressure through reference orifice, and EVAP system pressure measured to determine leak criterion. If system pressure higher than -1.06 kPa (-7.95 mmHg)*, or lower than -4.85 kPa (-36.38 mmHg)*, ECM determines that leak detection pump stuck ON.	• Canister pump module • Connector/wire harness (Canister pump module - ECM) • ECM	While ignition switch OFF	2 trip

*: The threshold values vary according to the atmospheric pressure measured in operation A. The values described in the table above are based on an atmospheric pressure of 100 kPa (750.1 mmHg).
HINT:
The leak detection pump is built into the canister pump module.

DESCRIPTION

The circuit description can be found in the EVAP System (See page ES-351).

Refer to the EVAP System (See page ES-351).

MONITOR DESCRIPTION

5 hours* after the ignition switch is turned OFF, the electric leak detection pump creates negative pressure (vacuum) in the EVAP (Evaporative Emission) system. The ECM monitors for leaks and actuator malfunctions based on the EVAP pressure.
HINT:
*: If the engine coolant temperature is not below 35°C (95°F) 5 hours after the ignition switch is turned off, the monitor check starts 2 hours later. If it is still not below 35°C (95°F) 7 hours after the ignition switch is turned off, the monitor check starts 2.5 hours later.

Sequence	Operations	Descriptions	Duration
-	ECM activation	Activated by soak timer, 5 hours (7 or 9.5 hours) after ignition switch turned OFF.	-
A	Atmospheric pressure measurement	Vent valve turned OFF (vent) and EVAP system pressure measured by ECM in order to register atmospheric pressure. If pressure in EVAP system not between 70 kPa and 110 kPa (525 mmHg and 825 mmHg), ECM cancels EVAP system monitor.	10 seconds
B	First 0.02 inch leak criterion measurement	In order to determine 0.02 inch leak criterion, leak detection pump creates negative pressure (vacuum) through reference orifice and then ECM checks if leak detection pump and vent valve operate normally.	60 seconds

Sequence	Operations	Descriptions	Duration
C	EVAP system pressure measurement	Vent valve turned ON (closed) to shut EVAP system. Negative pressure (vacuum) created in EVAP system, and EVAP system pressure then measured. Write down measured value as it will be used in leak check. If EVAP pressure does not stabilize within 15 minutes, ECM cancels EVAP system monitor.	15 minutes*
D	Purge VSV monitor	Purge VSV opened and then EVAP system pressure measured by ECM. Large increase indicates normal.	10 seconds
E	Second 0.02 inch leak criterion measurement	After second 0.02 inch leak criterion measurement, leak check performed by comparing first and second 0.02 inch leak criterions. If stabilized system pressure higher than second 0.02 inch leak criterion, ECM determines that EVAP system leaking.	60 seconds
F	Final check	Atmospheric pressure measured and then monitoring result recorded by ECM.	-

* If only a small amount of fuel is in the fuel tank, it takes longer for the EVAP pressure to stabilize.

ES

Operation A: Atmospheric Pressure Measurement

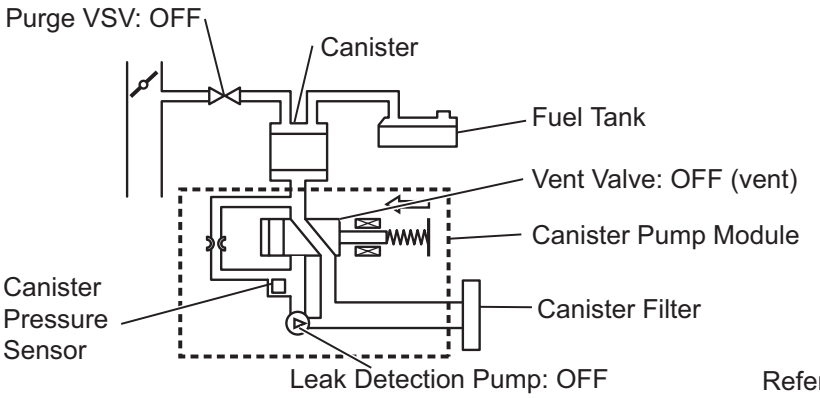

Operation B, E:

0.02 Inch Leak Criterion Measurement

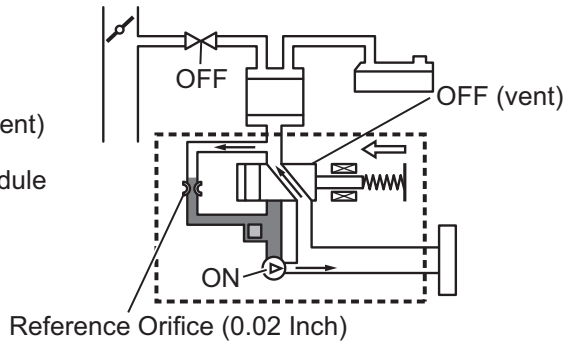

Operation C: EVAP System Pressure Measurement

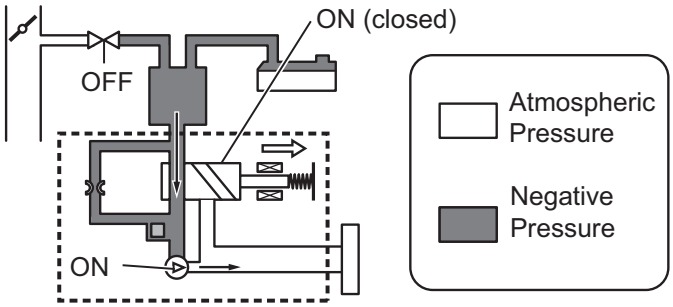

Operation D: Purge VSV Monitor

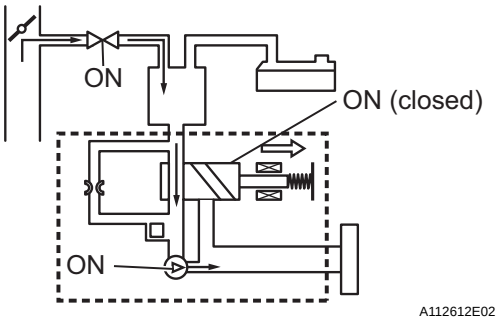

Y

A112612E02

1. P2401: Leak detection pump stuck OFF
   In operation B, the leak detection pump creates negative pressure (a vacuum) through the reference orifice. The EVAP (Evaporative Emission) system pressure is then measured by the ECM, using the canister pressure sensor, to determine the 0.02 inch leak criterion. If the pressure is higher than -1.06 kPa (-7.95 mmHg)*, or lower than -4.85 kPa (-36.38 mmHg)*, the ECM interprets this as the leak detection pump being stuck OFF (not operating). The ECM illuminates the MIL and sets the DTC (2 trip detection logic).
   *: The thresholds vary according to the atmospheric pressure measured in operation A. The values described above are based on an atmospheric pressure of 100 kPa (750.1 mmHg): absolute pressure.

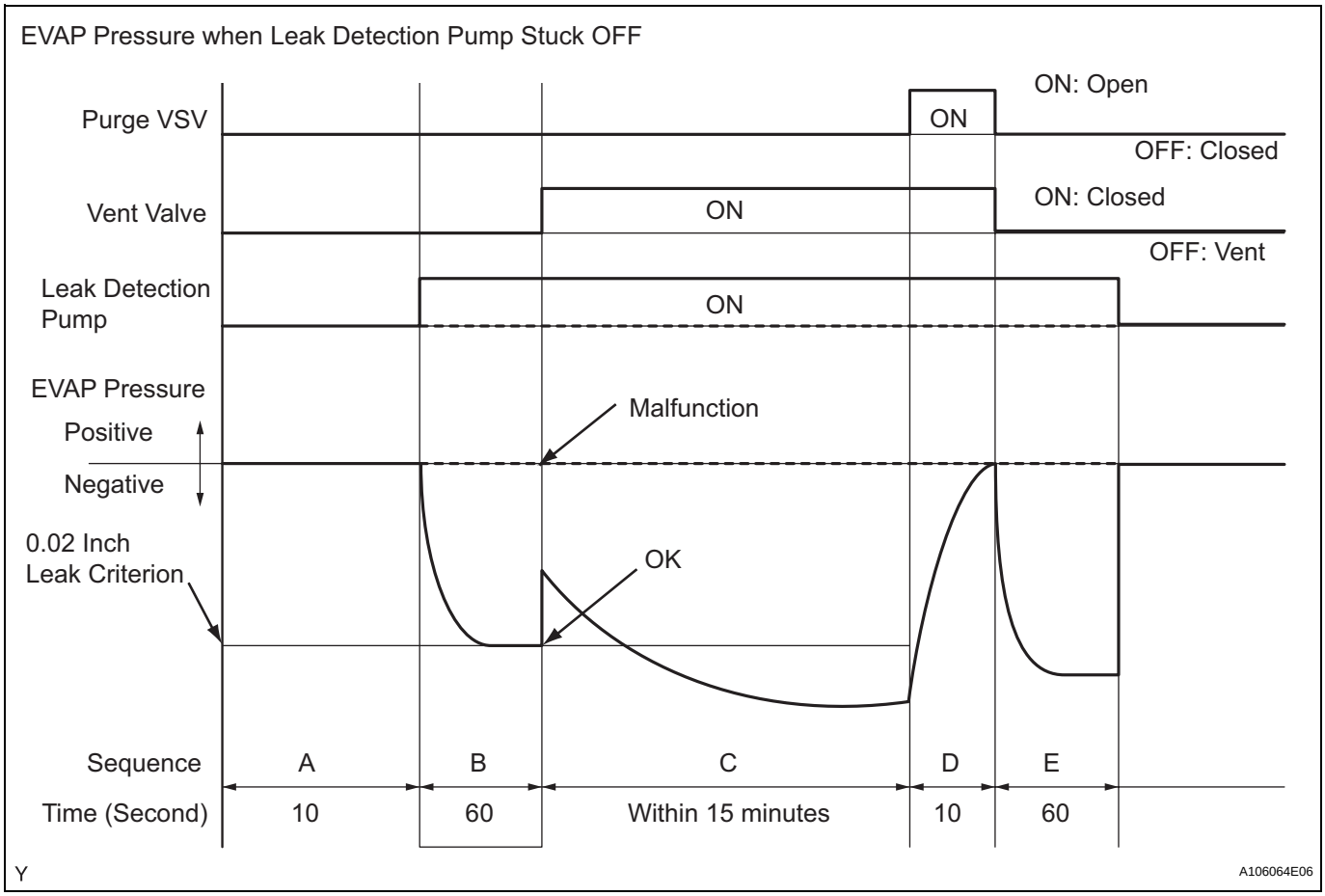

2. P2402: Leak detection pump stuck ON
In operation B, the leak detection pump creates negative pressure (a vacuum) through the reference orifice. The EVAP (Evaporative Emission) system pressure is then measured by the ECM, using the canister pressure sensor, to determine the 0.02 inch leak criterion. If the pressure is higher than -1.06 kPa (-7.95 mmHg)*, or lower than -4.85 kPa (-36.38 mmHg)*, the ECM interprets this as the leak detection pump being stuck ON (remaining ON all the time). The ECM illuminates the MIL and sets the DTC (2 trip detection logic).
*: The thresholds vary according to the atmospheric pressure measured in operation A. The values described above are based on an atmospheric pressure of 100 kPa (750.1 mmHg): absolute pressure.

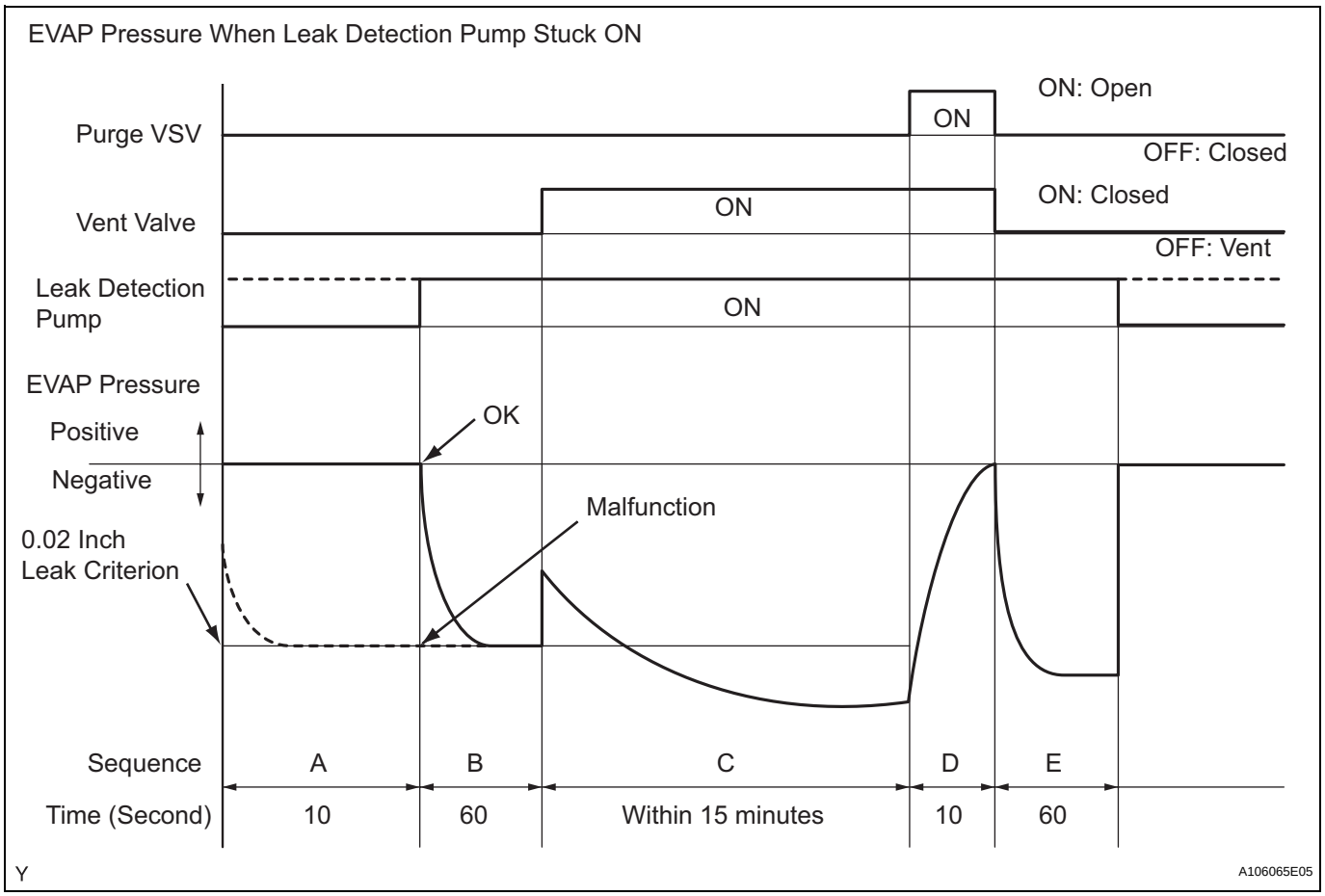

HINT:
The detection logic of DTCs P2401 and P2402 is the same because in both cases the 0.02 inch leak criterion measured in operation B is compared to the atmospheric pressure registered in operation A. The ECM calculates the difference between these pressures by deducting [the 0.02 inch leak criterion] from [the stored atmospheric pressure], and uses this to monitor the EVAP system pressure change.

MONITOR STRATEGY

Required Sensors/Components	Purge VSV and canister pump module
Frequency of Operation	Once per driving cycle
Duration	Within 15 minutes (varies with amount of fuel in tank)
MIL Operation	2 driving cycles
Sequence of Operation	None

TYPICAL ENABLING CONDITIONS

Monitor runs whenever following DTCs not present	None

EVAP key-off monitor runs when all of following conditions met	-
Atmospheric pressure	525 to 825 mmHg (70 to 110 kPa)
Battery voltage	10.5 V or more
Vehicle speed	Below 2.5 mph (4 km/h)
Ignition switch	OFF
Engine condition	Not running
Fuel tank pressure sensor malfunction (P0450, P0451, P0452 and/or P0453)	Not detected
Purge VSV	Not operated by scan tool
Vent valve	Not operated by scan tool
Leak detection pump	Not operated by scan tool
Both of following conditions met before IG switch OFF	Conditions 1 and 2
1. Duration that vehicle driven	5 minutes or more
2. Purge flow	Executed
ECT	4.4° to 35°C (40° to 95°F)
IAT	4.4° to 35°C (40° to 95°F)

1. Key-off monitor sequence is 1 to 8

1. Atmospheric pressure

Next sequence is run if following condition set	-
Atmospheric pressure change for 10 seconds	Less than 2.25 mmHg (0.3 kPa) for 1 second

2. First 0.02 inch leak criterion

Next sequence is run if all of following conditions set	Conditions 1, 2 and 3
1. Fuel tank pressure when 4 seconds after 0.02 inch leak criterion measurement	-7.5 mmHg (-1 kPa) or less
2. 0.02 inch leak criterion	-36.38 to -7.93 mmHg (-4.85 to -1.057 kPa)
3. 0.02 inch leak criterion	Saturated within 55 seconds

3. Vent valve stuck closed check

Next sequence is run if following condition set	-
Fuel tank pressure change for 10 seconds after vent valve ON (closed)	2.25 mmHg (0.3 kPa) or more

4. Vacuum introduction and leak

Next sequence is run if both of following conditions set	-
1. Vacuum introduction time	Saturated within 12 minutes
2. Fuel tank pressure	Fuel tank pressure was standard

5. Purge VSV stuck closed check

Next sequence is run if following condition set	-
Fuel tank pressure change for 10 seconds after purge VSV ON (open)	2.25 mmHg (0.3 kPa) or more

6. Second 0.02 inch leak criterion measurement

Next sequence is run if all of following conditions set	Conditions 1, 2, 3 and 4
1. Fuel tank pressure when 4 seconds after 0.02 inch leak criterion measurement	-7.5 mmHg (-1 kPa) or less
2. 0.02 inch leak criterion	-36.4 to -7.92 mmHg (-4.85 to -1.057 kPa)
3. 0.02 inch leak criterion	Saturated within 55 seconds
4. 0.02 inch leak criterion difference between first and second	5.25 mmHg (0.7 kPa) or less

7. Leak check

Next sequence is run if following condition set	-
Fuel tank pressure when vacuum introduction was complete	Second 0.02 inch leak criterion or less

8. Atmospheric pressure

Monitor is complete if following condition set	-
Atmospheric pressure difference between sequences 1 and 8	2.25 mmHg (0.3 kPa) or less

TYPICAL MALFUNCTION THRESHOLDS

One of following conditions met	-
Fuel tank pressure when 4 seconds after 0.02 inch leak criterion measurement began	More than -7.5 mmHg (-1 kPa)
0.02 inch leak criterion	Less than -36.4 mmHg (-4.85 kPa)
0.02 inch leak criterion	-7.9 mmHg (-1.057 kPa) or more
0.02 inch leak criterion	Not saturated
0.02 inch leak criterion difference between first and second	5.2 mmHg (0.7 kPa) or more

"Saturated" indicates that the EVAP pressure change is less than 0.75 mmHg (0.1 kPa) in 30 seconds.

MONITOR RESULT

Detailed information on Checking Monitor Status (See page ES-19).

DTC	P2419	Evaporative Emission System Switching Valve Control Circuit Low

DTC	P2420	Evaporative Emission System Switching Valve Control Circuit High

DTC SUMMARY

DTCs	Monitoring Items	Malfunction Detection Conditions	Trouble Areas	Detection Timings	Detection Logic
P2419	Vent valve stuck closed	Leak detection pump creates negative pressure through reference orifice and EVAP system pressure measured to determine leak criterion. If system pressure higher than -1.06 kPa (-7.95 mmHg)* 4 seconds after leak detection pump turned ON, ECM determines that vent valve stuck closed.	• Canister pump module • Connector/wire harness (Canister pump module - ECM) • ECM	While ignition switch OFF	2 trip
P2420	Vent valve stuck open (vent)	Leak detection pump creates negative pressure through reference orifice and EVAP system pressure measured to determine leak criterion. 0.02 inch leak criterion measured at start and at end of leak check. If system pressure does not increase by more than 0.3 kPa (2.25 mmHg) within 10 seconds when vent valve turned ON, ECM determines that vent valve stuck closed.	• Canister pump module • Connector/wire harness (Canister pump module - ECM) • ECM • Leakage from EVAP system	While ignition switch OFF	2 trip

*: The threshold value varies according to the atmospheric pressure measured in operation A. The value described above is based on an atmospheric pressure of 100 kPa (750.1 mmHg): absolute pressure.
HINT:
The vent valve is built into the canister pump module.

DESCRIPTION

The circuit description can be found in the EVAP System (See page ES-351).

Refer to the EVAP System (See page ES-351).

MONITOR DESCRIPTION

5 hours* after the ignition switch is turned OFF, the electric leak detection pump creates negative pressure (vacuum) in the EVAP (Evaporative Emission) system. The ECM monitors for leaks and actuator malfunctions based on the EVAP pressure.
HINT:
*: If the engine coolant temperature is not below 35°C (95°F) 5 hours after the ignition switch is turned off, the monitor check starts 2 hours later. If it is still not below 35°C (95°F) 7 hours after the ignition switch is turned off, the monitor check starts 2.5 hours later.

Sequence	Operations	Descriptions	Duration
-	ECM activation	Activated by soak timer, 5 hours (7 or 9.5 hours) after ignition switch turned OFF.	-
A	Atmospheric pressure measurement	Vent valve turned OFF (vent) and EVAP system pressure measured by ECM in order to register atmospheric pressure. If pressure in EVAP system not between 70 kPa and 110 kPa (525 mmHg and 825 mmHg), ECM cancels EVAP system monitor.	10 seconds

Sequence	Operations	Descriptions	Duration
B	First 0.02 inch leak criterion measurement	In order to determine 0.02 inch leak criterion, leak detection pump creates negative pressure (vacuum) through reference orifice and then ECM checks if leak detection pump and vent valve operate normally.	60 seconds
C	EVAP system pressure measurement	Vent valve turned ON (closed) to shut EVAP system. Negative pressure (vacuum) created in EVAP system, and EVAP system pressure then measured. Write down measured value as they will be used in leak check. If EVAP pressure does not stabilize within 15 minutes, ECM cancels EVAP system monitor.	15 minutes*
D	Purge VSV monitor	Purge VSV opened and then EVAP system pressure measured by ECM. Large increase indicates normal.	10 seconds
E	Second 0.02 inch leak criterion measurement	After second 0.02 inch leak criterion measurement, leak check performed by comparing first and second 0.02 inch leak criterions. If stabilized system pressure higher than second 0.02 inch leak criterion, ECM determines that EVAP system leaking.	60 seconds
F	Final check	Atmospheric pressure measured and then monitoring result recorded by ECM.	-

ES

* If only a small amount of fuel is in the fuel tank, it takes longer for the EVAP pressure to stabilize.

Operation A: Atmospheric Pressure Measurement

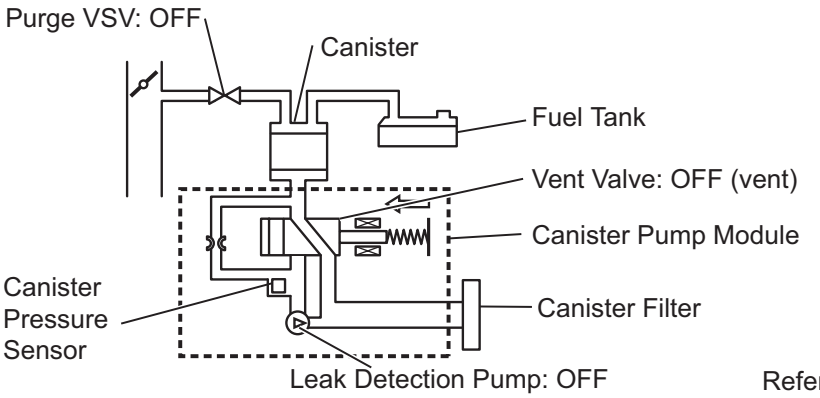

Operation B, E:

0.02 Inch Leak Criterion Measurement

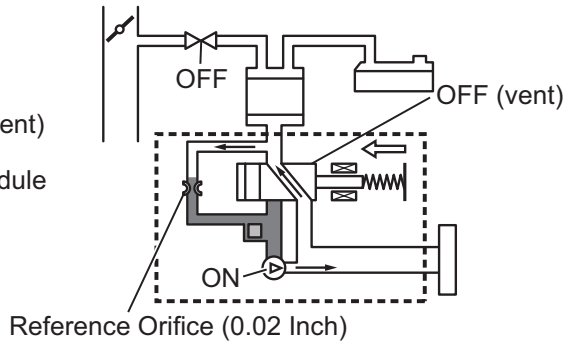

Operation C: EVAP System Pressure Measurement

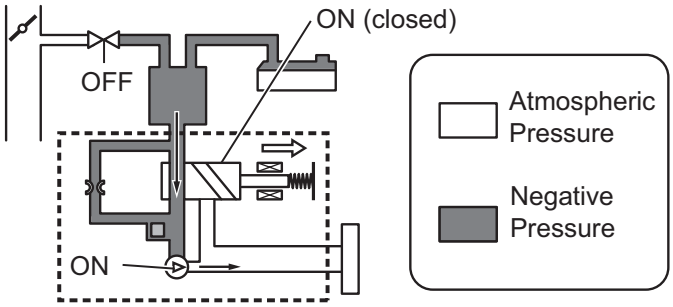

Operation D: Purge VSV Monitor

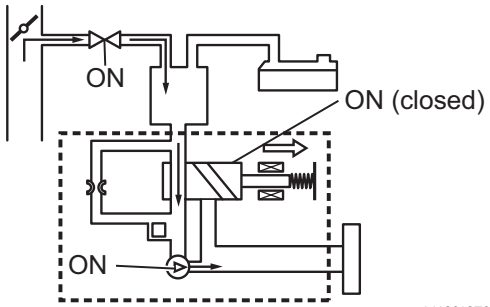

Y

A112612E02

1. P2419: Vent valve stuck closed
   In operation B, the leak detection pump creates negative pressure (a vacuum) through the reference orifice. The EVAP (Evaporative Emission) system pressure is then measured by the ECM, using the canister pressure sensor, to determine the 0.02 inch leak criterion. If the pressure exceeds -1.06 kPa (-7.95 mmHg)* 4 seconds after the leak detection pump is turned ON, the ECM interprets this as the vent valve being stuck closed. The ECM illuminates the MIL and sets the DTC (2 trip detection logic).
   *: The threshold varies according to the atmospheric pressure measured in operation A. The value described above is based on an atmospheric pressure of 100 kPa (750.1 mmHg): absolute pressure.

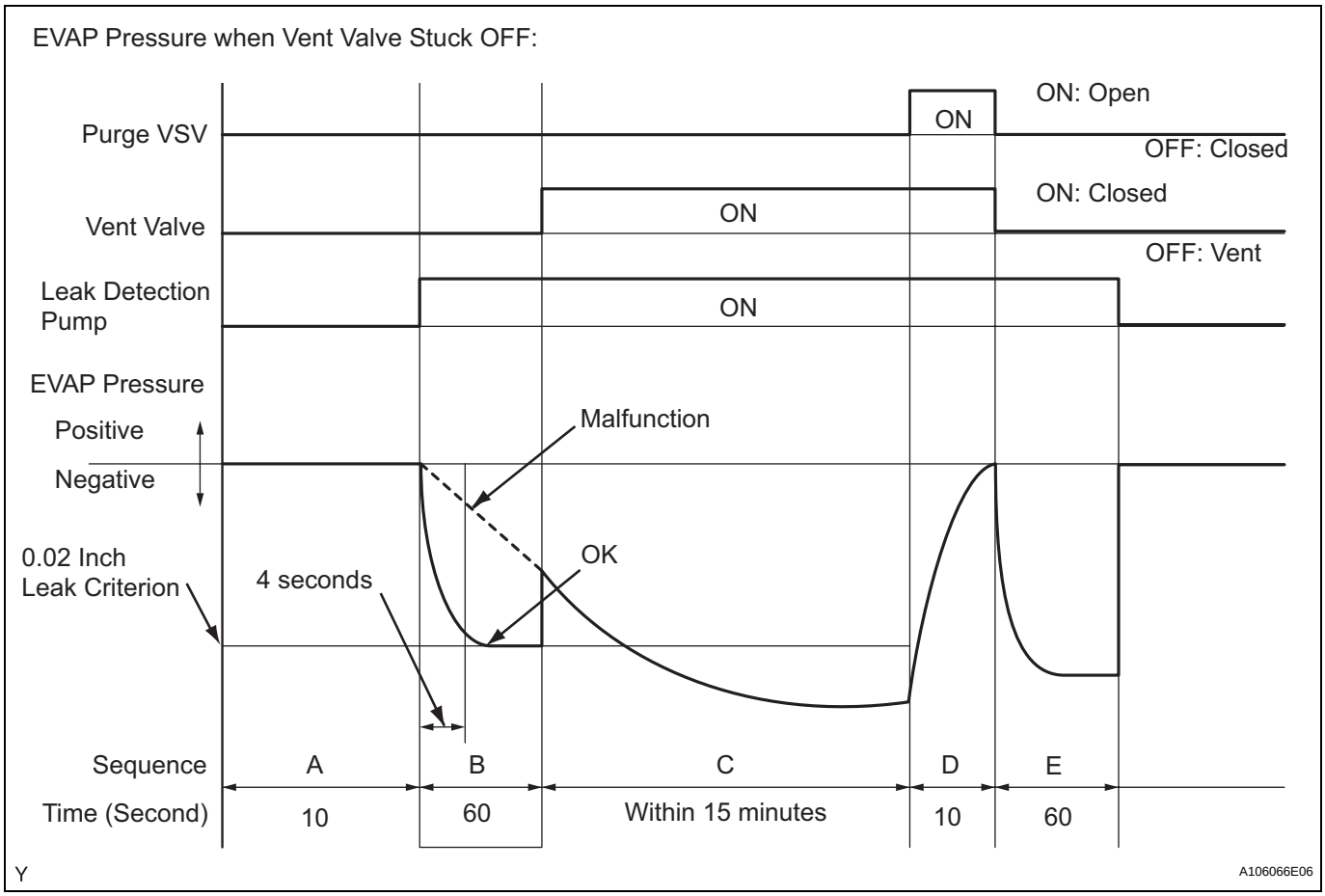

2. P2420: Vent valve stuck open (vent)
   In operation C, the vent valve turns ON (closes) and the EVAP (Evaporative Emission) system pressure is then measured by the ECM, using the canister pressure sensor, to conduct an EVAP leak check. If the pressure does not increase when the vent valve is open, the ECM interprets this as the vent valve being stuck open. The ECM illuminates the MIL and sets the DTC.

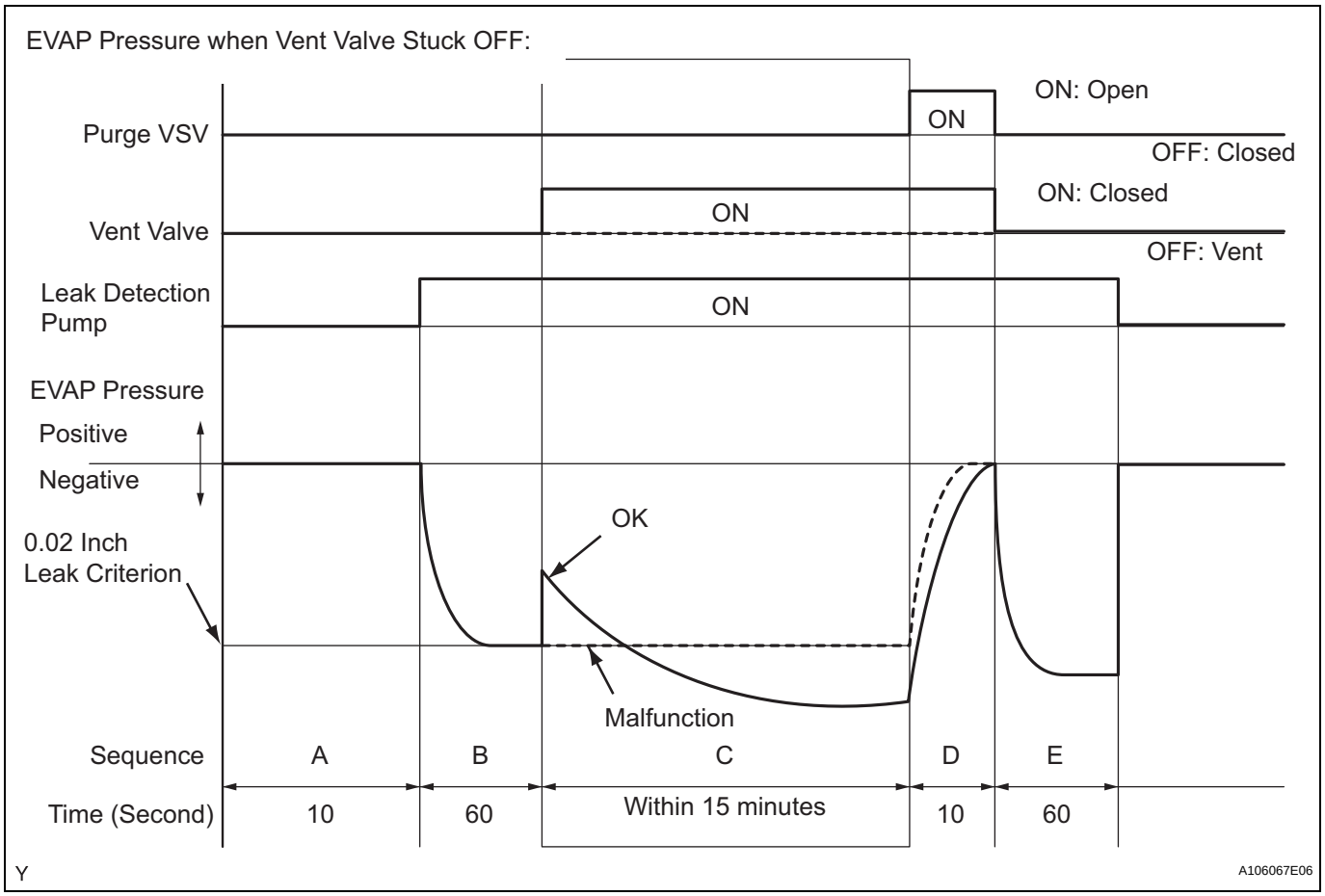

MONITOR STRATEGY

Required Sensors/Components	Purge VSV and canister pump module
Frequency of Operation	Once per driving cycle
Duration	Within 15 minutes (varies with amount of fuel in tank)
MIL Operation	2 driving cycles
Sequence of Operation	None

TYPICAL ENABLING CONDITIONS

Monitor runs whenever following DTCs not present	None
EVAP key-off monitor runs when all of following conditions met	-
Atmospheric pressure	525 to 825 mmHg (70 to 110 kPa)
Battery voltage	10.5 V or more
Vehicle speed	Below 2.5 mph (4 km/h)
Ignition switch	OFF
Engine condition	Not running
Fuel tank pressure sensor malfunction (P0450, P0451, P0452 and/or P0453)	Not detected
Purge VSV	Not operated by scan tool
Vent valve	Not operated by scan tool

Leak detection pump	Not operated by scan tool
Both of following conditions met before IG switch OFF	Conditions 1 and 2
1. Duration that vehicle driven	5 minutes or more
2. Purge flow	Executed
ECT	4.4° to 35°C (40° to 95°F)
IAT	4.4° to 35°C (40° to 95°F)

1. Key-off monitor sequence 1to 8

1. Atmospheric pressure

Next sequence is run if following condition set	-
Atmospheric pressure change for 10 seconds	Less than 2.25 mmHg (0.3 kPa) for 1 second

2. First 0.02 inch leak criterion

Next sequence is run if all of following conditions set	Conditions 1, 2 and 3
1. Fuel tank pressure when 4 seconds after 0.02 inch leak criterion measurement	-7.5 mmHg (-1 kPa) or less
2. 0.02 inch leak criterion	-36.38 to -7.93 mmHg (-4.85 to -1.057 kPa)
3. 0.02 inch leak criterion	Saturated within 55 seconds

3. Vent valve stuck closed check

Next sequence is run if following condition set	-
Fuel tank pressure change for 10 seconds after vent valve ON (closed)	2.25 mmHg (0.3 kPa) or more

4. Vacuum introduction and leak

Next sequence is run if both of following conditions set	-
1. Vacuum introduction time	Saturated within 55 seconds
2. Fuel tank pressure	Fuel tank pressure was standard

5. Purge VSV stuck closed check

Next sequence is run if following condition set	-
Fuel tank pressure change for 10 seconds after purge VSV ON (open)	2.25 mmHg (0.3 kPa) or more

6. Second 0.02 inch leak criterion measurement

Next sequence is run if all of following conditions set	Conditions 1, 2, 3 and 4
1. Fuel tank pressure when 4 seconds after 0.02 inch leak criterion measurement	-7.5 mmHg (-1 kPa) or less
2. 0.02 inch leak criterion	-36.4 to -7.92 mmHg (-4.85 to -1.057 kPa)
3. 0.02 inch leak criterion	Saturated within 55 seconds
4. 0.02 inch leak criterion difference between first and second	5.25 mmHg (0.7 kPa) or less

7. Leak check

Next sequence is run if following condition set	-
Fuel tank pressure when vacuum introduction was complete	Second 0.02 inch leak criterion or less

8. Atmospheric pressure

Monitor is complete if following condition set	-
Atmospheric pressure difference between sequences 1 and 8	2.25 mmHg (0.3 kPa) or less

TYPICAL MALFUNCTION THRESHOLDS

1. P2419: Vent valve stuck closed. "Saturated" indicates that the EVAP pressure change is less than 0.1 kPa (0.75 mmHg) in 30 seconds.

One of following condition set	-
EVAP pressure just after 0.02 inch leak criterion measurement start	-1 kPa (-7.5 mmHg) or higher
0.02 inch leak criterion	Less than -4.85 kPa (-36.38 mmHg)

0.02 inch leak criterion	-1.1 kPa (-8.3 mmHg) or more
0.02 inch leak criterion	Not saturated within 55 seconds
Difference between first 0.02 inch leak criterion and second 0.02 inch leak criterion	0.7 kPa (5.25 mmHg) or more

2. P2420: Vent valve stuck open (vent)

EVAP pressure change after EVAP canister vent valve is ON	Less than 0.3 kPa (2.25 mmHg)

MONITOR RESULT

Detailed information on Checking Monitor Status (See page ES-19).

DTC	P2610	ECM / PCM Internal Engine Off Timer Performance

DTC SUMMARY

DTC	Monitoring Items	Malfunction Detection Conditions	Trouble Areas	Detection Timings	Detection Logic
P2610	Soak timer (built into ECM)	ECM internal malfunction	ECM	Engine running	2 trip

DESCRIPTION

ES

To ensure the accuracy of the EVAP (Evaporative Emission) monitor values, the soak timer, which is built into the ECM, measures 5 hours (+-15 minutes) from when the ignition switch is turned OFF, before the monitor is run. This allows the fuel to cool down, which stabilizes the fuel tank pressure. When 5 hours have elapsed, the ECM turns on.

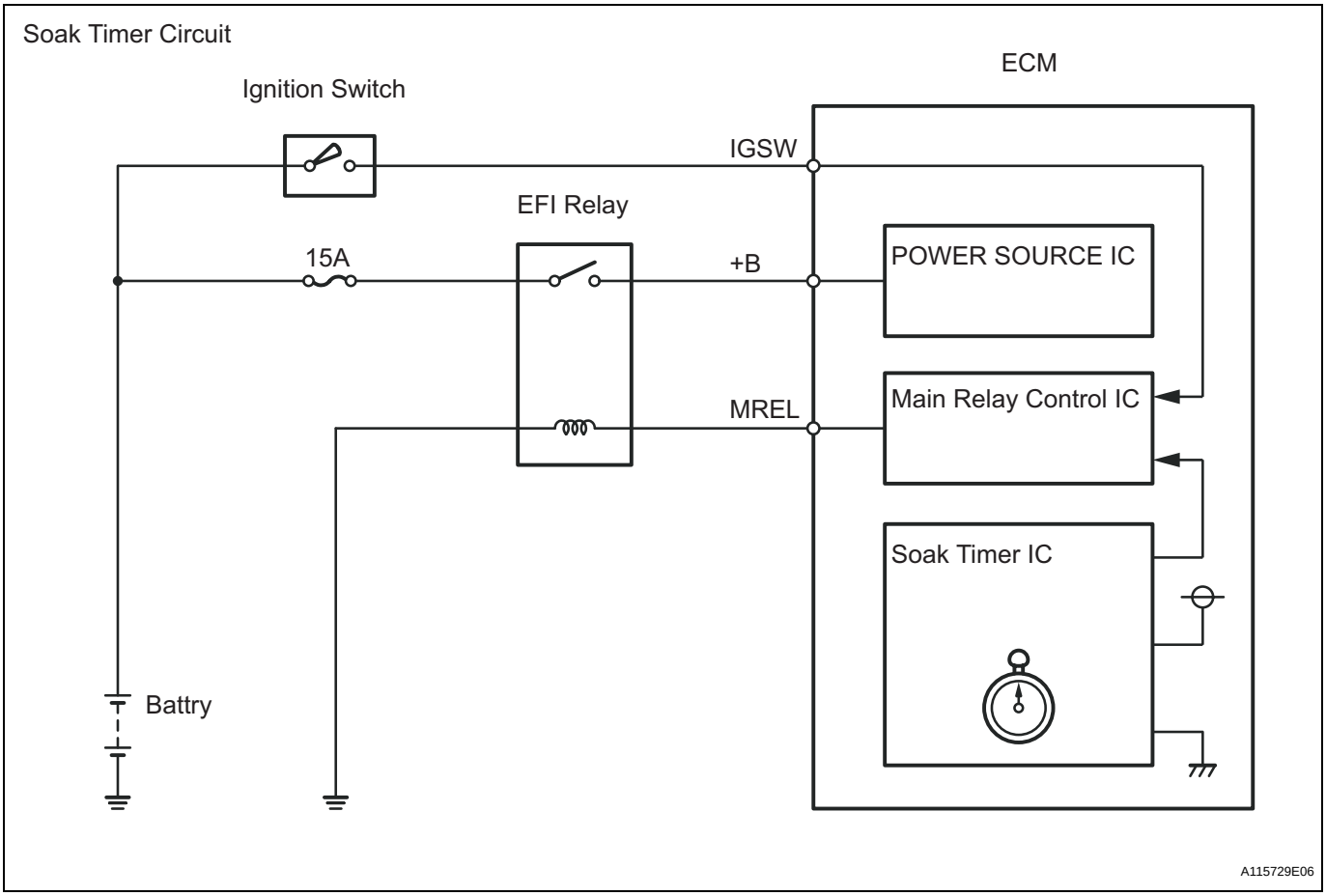

MONITOR DESCRIPTION

5 hours after the ignition switch is turned OFF, the soak timer activates the ECM to begin the EVAP system monitor. While the engine is running, the ECM monitors the synchronization of the soak timer and the CPU clock. If these two are not synchronized, the ECM interprets this as a malfunction, illuminates the MIL and sets the DTC (2 trip detection logic).

MONITOR STRATEGY

Required Sensors/Components	ECM
Frequency of Operation	Once per driving cycle

Duration	10 minutes
MIL Operation	2 driving cycles
Sequence of Operation	None

TYPICAL ENABLING CONDITIONS

Monitor runs whenever following DTC not present	None
Ignition switch	ON
Engine	Running
Battery voltage	8 V or more
Starter	OFF

TYPICAL MALFUNCTION THRESHOLDS

Soak timer measurement when ECM CPU clock counts 10 minutes	Less than 7 minutes, or more than 13 minutes

HINT:
- DTC P2610 is set if an internal ECM problem is detected. Diagnostic procedures are not required. ECM replacement is required.
- Read freeze frame data using an intelligent tester. Freeze frame data record the engine condition when malfunctions are detected. When troubleshooting, freeze frame data can help determine if the vehicle was moving or stationary, if the engine was warmed up or not, if the air-fuel ratio was lean or rich, and other data, from the time the malfunction occurred.

1	**REPLACE ECM**

NEXT

2	**CHECK WHETHER DTC OUTPUT RECURS**

(a) Connect an intelligent tester to the DLC3.
(b) Turn the ignition switch ON.
(c) Clear DTCs (See page ES-38).
(d) Start the engine and wait for 10 minutes or more.
(e) Select the following menu items: DIAGNOSIS / ENHANCED OBD II / DTC / INFO / PENDING CODEs.
(f) If no pending DTC is displayed, the repair has been successfully completed.

NEXT

END

DTC	P2A00	A/F Sensor Circuit Slow Response (Bank 1 Sensor 1)

DTC	P2A03	A/F Sensor Circuit Slow Response (Bank 2 Sensor 1)

HINT:
- DTC P2A00 indicates malfunctions related to the bank 1 A/F sensor.
- DTC P2A03 indicates malfunctions related to the bank 2 A/F sensor.
- Bank 1 refers to the bank that includes cylinder No. 1.
- Bank 2 refers to the bank that includes cylinder No. 2.
- Sensor 1 refers to the sensor mounted in front of the Three-Way Catalytic Converter (TWC) and located near the engine assembly.

ES

DESCRIPTION

Refer to DTC P2195 (See page ES-304).

DTC No.	DTC Detection Conditions	Trouble Areas
P2A00 P2A03	Calculated value for air-fuel ratio (A/F) sensor response rate deterioration level is less than threshold	• Open or short in A/F sensor (bank 1, 2 sensor 1) circuit • A/F sensor • ECM

MONITOR DESCRIPTION

After engine is warmed up, the ECM performs air-fuel ratio feedback control to maintain the air-fuel ratio at the stoichiometric level. In addition, active A/F ratio control is performed for approximately 10 seconds after preconditions are met in order to measure the A/F sensor response rate. During active A/F ratio control, the ECM forcibly increases and decreases the injection volume a certain amount, based on the stoichiometric air-fuel ratio learned during normal air-fuel ratio control, and measures the A/F sensor response rate. The ECM receives a signal from the A/F sensor while performing active A/F ratio control and uses it to calculate the A/F sensor response rate deterioration level.
If the value for A/F sensor response rate deterioration level is less than the threshold, the ECM interprets this as a malfunction and sets the DTC.

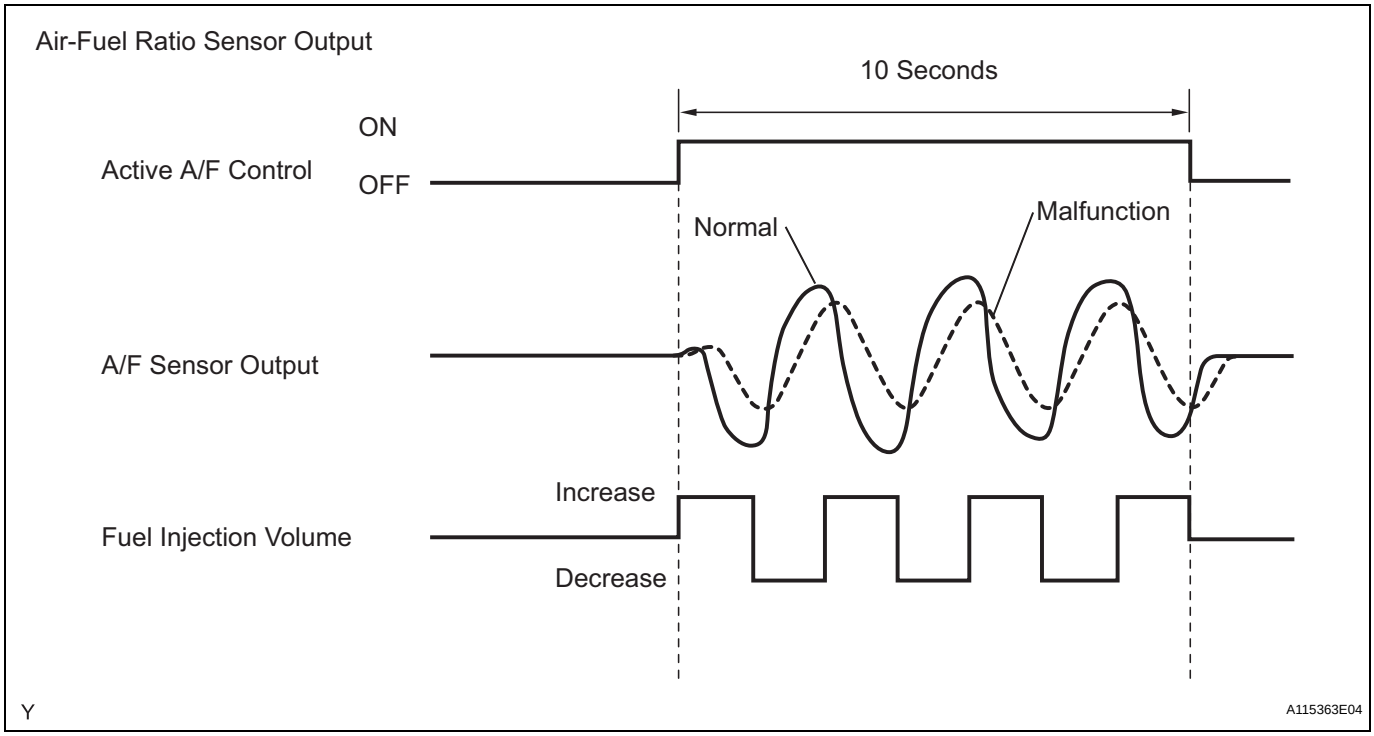

CONFIRMATION DRIVING PATTERN

HINT:

Performing this confirmation pattern will activate the A/F sensor response monitor.

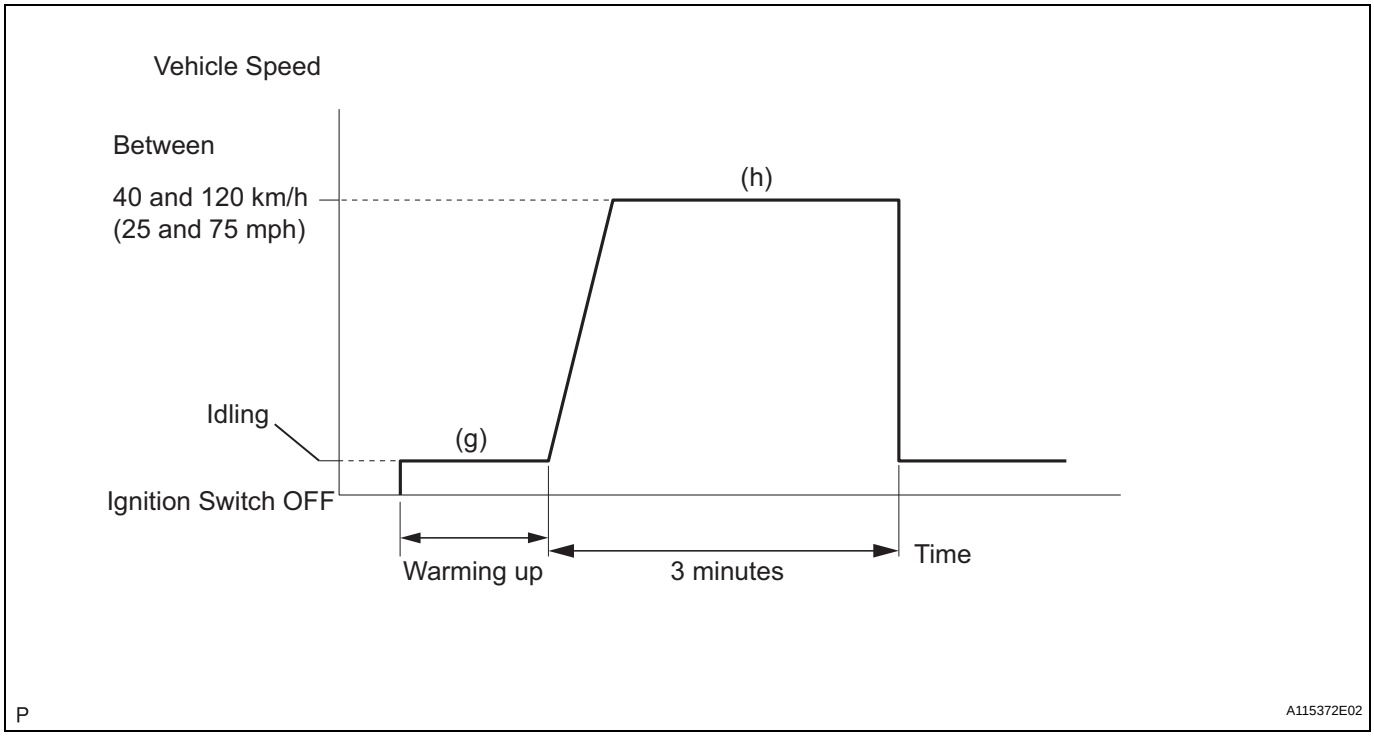

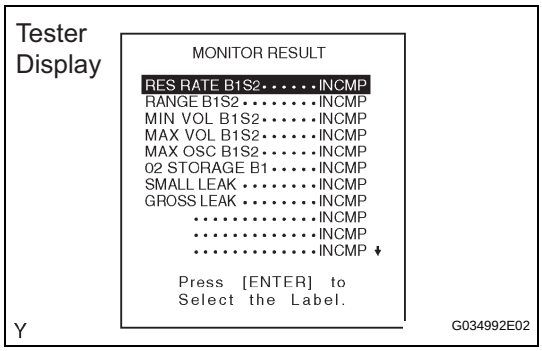

(a) Connect an intelligent tester to the DLC3.
(b) Turn the ignition switch ON.
(c) Turn the tester ON.
(d) Clear DTCs (See page ES-38).
(e) Select the following menu items: DIAGNOSIS /ENHANCED OBD II / MONITOR INFO / MONITOR RESULT.
(f) Check that AFS B1 is INCOMPL.
(g) Start the engine and warm it up.
(h) Drive the vehicle at between 25 mph and 75 mph (40 km/h and 120 km/h) for 3 minutes. However, the vehicle should be driven at a constant speed.
(i) Check the monitor result values on an intelligent tester by selecting the following menu items: DIAGNOSIS / ENHANCED OBD II / MONITOR INFO / TEST RESULT.
(j) If the values indicated on the tester do not change, perform READINESS MONITOR DRIVE PATTERN for the A/F sensor and the heated oxygen sensor (See page ES-23).
HINT:
Completion of all A/F sensor monitors is required to change the value in TEST RESULT.
(k) Note the value of the Monitor Result.
(l) Select the following menu items: DIAGNOSIS / ENHANCED OBD II / DTC INFO / PENDING CODES.
(m) Check if any DTCs (any pending DTCs) are set.

MONITOR STRATEGY

Related DTCs	P2A00: A/F sensor (Bank 1) slow response P2A03: A/F sensor (Bank 2) slow response
Required Sensors/Components (Main)	A/F sensor
Required Sensors/Components (Related)	Vehicle speed sensor, Crankshaft position sensor
Frequency of Operation	Once per driving cycle
Duration	10 to 15 seconds
MIL Operation	2 driving cycles
Sequence of Operation	None

TYPICAL ENABLING CONDITIONS

Monitor runs whenever following DTCs not present	P0031, P0032, P0051, P0052 (A/F sensor heater - Sensor 1) P0100 - P0103 (MAF meter) P0110 - P0113 (IAT sensor) P0115 - P0118 (ECT sensor) P0120 - P0223, P2135 (TP sensor) P0125 (Insufficient ECT for Closed Loop) P0171, P0172 (Fuel system) P0300 - P0306 (Misfire) P0335 (CKP sensor) P0340, P0341 (CMP sensor) P0442 - P0456 (EVAP system) P0500 (VSS) P2196, P2198 (A/F sensor - rationality)

A/F sensor active control	Executing
Engine coolant temperature	75°C (167°F) or more
Battery voltage	11 V or more
Malfunction determination in this driving cycle	Not yet
Fuel-cut	OFF
Engine RPM	Less than 4,000 rpm
A/F sensor status	Activated
Delay time after fuel-cut ended	5 seconds or more
Engine load	10 to 70 %
Estimated catalyst temperature	500 to 800°C (932 to 1,472°F)
Shift position	2 or more
Intake air amount	3 to 10.5 g/sec

TYPICAL MALFUNCTION THRESHOLDS

Response rate deterioration level	Less than 0.2 V

MONITOR RESULT

Detailed information on Checking Monitor Status (See page ES-19).

WIRING DIAGRAM

Refer to DTC P2195 (See page ES-309).

HINT:
Malfunctioning areas can be identified by performing the A/F CONTROL function provided in the ACTIVE TEST. The A/F CONTROL function can help to determine whether the Air-Fuel Ratio (A/F) sensor, Heated Oxygen (HO2) sensor and other potential trouble areas are malfunctioning.
The following instructions describe how to conduct the A/F CONTROL operation using an intelligent tester.
(1) Connect an intelligent tester to the DLC3.
(2) Start the engine and turn the tester ON.
(3) Warm up the engine at an engine speed of 2,500 rpm for approximately 90 seconds.
(4) Select the following menu items: DIAGNOSIS / ENHANCED OBD II / ACTIVE TEST / A/F CONTROL.
(5) Perform the A/F CONTROL operation with the engine in an idling condition (press the RIGHT or LEFT button to change the fuel injection volume).
(6) Monitor the voltage outputs of the A/F and HO2 sensors (AFS B1S1 and O2S B1S2 or AFS B2S1 and O2S B2S2) displayed on the tester.
HINT:

- The A/F CONTROL operation lowers the fuel injection volume by 12.5 % or increases the injection volume by 25 %.
- Each sensor reacts in accordance with increases and decreases in the fuel injection volume.

Standard

Tester Display (Sensor)	Injection Volumes	Status	Voltages
AFS B1S1 or AFS B2S1 (A/F)	+25 %	Rich	Less than 3.0
AFS B1S1 or AFS B2S1 (A/F)	-12.5 %	Lean	More than 3.35
O2S B1S2 or O2S B2S2 (HO2)	+25 %	Rich	More than 0.55
O2S B1S2 or O2S B2S2 (HO2)	-12.5 %	Lean	Less than 0.4

NOTICE:
The Air-Fuel Ratio (A/F) sensor has an output delay of a few seconds and the Heated Oxygen (HO2) sensor has a maximum output delay of approximately 20 seconds.

Case	A/F Sensor (Sensor 1) Output Voltage		HO2 Sensor (Sensor 2) Output Voltage		Main Suspected Trouble Area
1	Injection volume +25 % -12.5 %		Injection volume +25 % -12.5 %		-
	Output voltage More than 3.35 V Less than 3.0 V		Output voltage More than 0.55 V Less than 0.4 V		
2	Injection volume +25 % -12.5 %		Injection volume +25 % -12.5 %		• A/F sensor • A/F sensor heater • A/F sensor circuit
	Output voltage Almost no reaction		Output voltage More than 0.55 V Less than 0.4 V		
3	Injection volume +25 % -12.5 %		Injection volume +25 % -12.5 %		• HO2 sensor • HO2 sensor heater • HO2 sensor circuit
	Output voltage More than 3.35 V Less than 3.0 V		Output voltage Almost no reaction		
4	Injection volume +25 % -12.5 %		Injection volume +25 % -12.5 %		• Injector • Fuel pressure • Gas leakage from exhaust system (Air-fuel ratio extremely lean or rich)
	Output voltage Almost no reaction		Output voltage Almost no reaction		

- To display the graph, select the following menu items on the tester: DIAGNOSIS / ENHANCED OBD II / ACTIVE TEST / A/F CONTROL / USER DATA / AFS B1S1 and O2S B1S2 or AFS B2S1 and O2S B2S2, and press the YES button and then the ENTER button followed by the F4 button.
- Following the A/F CONTROL procedure enables technicians to check and graph the voltage outputs of both the A/F and HO2 sensors.

HINT:

- DTC P2A00 or P2A03 may be also set, when the air-fuel ratio is stuck rich or lean.
- A low A/F sensor voltage could be caused by a rich air-fuel mixture. Check for conditions that would cause the engine to run rich.
- A high A/F sensor voltage could be caused by a lean air-fuel mixture. Check for conditions that would cause the engine to run lean.
- Read freeze frame data using an intelligent tester. Freeze frame data record the engine condition when malfunctions are detected. When troubleshooting, freeze frame data can help determine if the vehicle was moving or stationary, if the engine was warmed up or not, if the air-fuel ratio was lean or rich, and other data, from the time the malfunction occurred.

1	CHECK ANY OTHER DTCS OUTPUT (IN ADDITION TO DTC P2A00 AND/OR P2A03)

(a) Connect an intelligent tester to the DLC3.
(b) Turn the ignition switch ON.
(c) Turn the tester ON.

(d) Select the following menu items: DIAGNOSIS / ENHANCED OBD II / DTC INFO / CURRENT CODES.
(e) Read DTCs.

Result

Display (DTC Output)	Proceed To
P2A00 and/or P2A03	A
P2A00 and/or P2A03 and other DTCs	B

HINT:
If any DTCs other than P2A00 or P2A03 are output, troubleshoot those DTCs first.

B → **GO TO DTC CHART**

A

2 INSPECT AIR FUEL RATIO SENSOR (HEATER RESISTANCE)

Component Side:

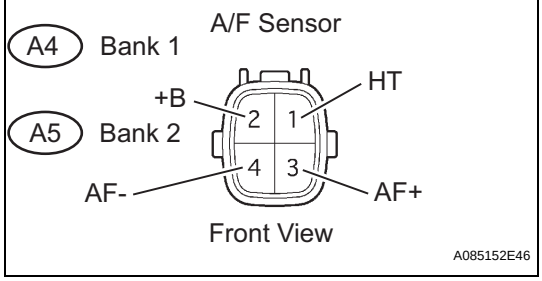

(a) Disconnect the A4 or A5 A/F sensor connector.
(b) Measure the resistance between the terminals of the A/F sensor connector.
Standard Resistance

Tester Connections	Specified Conditions
HT (1) - +B (2)	1.8 to 3.4 Ω at 20°C (68°F)
HT (1) - AF- (4)	10 kΩ or higher

(c) Reconnect the A/F sensor connector.

NG → **REPLACE AIR FUEL RATIO SENSOR**

OK

ES

3	CHECK HARNESS AND CONNECTOR (A/F SENSOR - ECM)

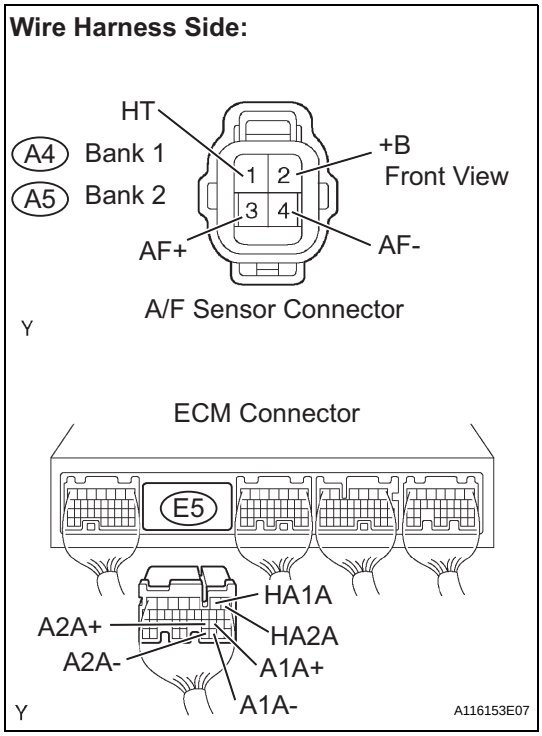

(a) Disconnect the A4 or A5 A/F sensor connector.
(b) Turn the ignition switch ON.
(c) Measure the voltage between the +B terminal of the A/F sensor connector and body ground.

Standard Voltage

Tester Connections	Specified Conditions
+B (A4-2) - Body ground	9 to 14 V
+B (A5-2) - Body ground	

(d) Turn the ignition switch OFF.
(e) Disconnect the E5 ECM connector.
(f) Check the resistance.

Standard Resistance (Check for open)

Tester Connections	Specified Conditions
HT (A4-1) - HA1A (E5-2)	Below 1 Ω
AF+ (A4-3) - A1A+ (E5-22)	
AF- (A4-4) - A1A- (E5-30)	
HT (A5-1) - HA2A (E5-1)	
AF+ (A5-3) - A2A+ (E5-23)	
AF- (A5-4) - A2A- (E5-31)	

Standard Resistance (Check for short)

Tester Connections	Specified Conditions
HT (A4-1) or HA1A (E5-2) - Body ground	10 kΩ or higher
AF+ (A4-3) or A1A+ (E5-22) - Body ground	
AF- (A4-4) or A1A- (E5-30) - Body ground	
HT (A5-1) or HA2A (E5-1) - Body ground	
AF+ (A5-3) or A2A+ (E5-23) - Body ground	
AF- (A5-4) or A2A- (E5-31) - Body ground	

(g) Reconnect the ECM connector.
(h) Reconnect the A/F sensor connector.

ES

Reference (Bank 1 Sensor 1 System Diagram)

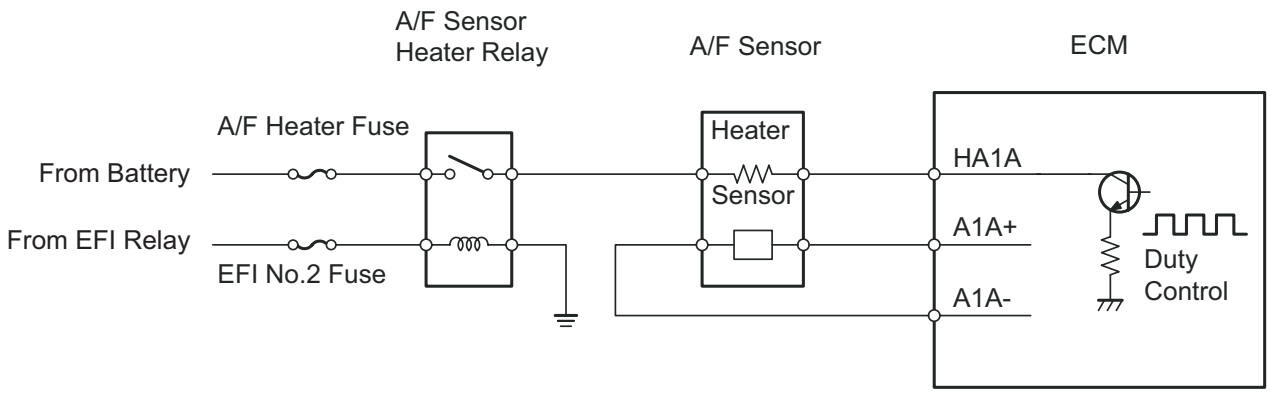

ES

NG → **REPAIR OR REPLACE HARNESS OR CONNECTOR**

OK

4	PERFORM CONFIRMATION DRIVING PATTERN

NEXT

5	CHECK WHETHER DTC OUTPUT RECURS (DTC P2A00 AND/OR P2A03)

(a) Connect an intelligent tester to the DLC3.
(b) Turn the ignition switch ON and turn the tester ON.
(c) Select the following menu items: DIAGNOSIS / ENHANCED OBD II / DTC INFO / CURRENT CODES.
(d) Read DTCs.

Result

Display (DTC Output)	Proceed To
P2A00 and/or P2A03	A
No output	B

B → **CHECK FOR INTERMITTENT PROBLEMS**

A

6	REPLACE AIR FUEL RATIO SENSOR

NEXT

7	PERFORM CONFIRMATION DRIVING PATTERN

NEXT

ES

8	CHECK WHETHER DTC OUTPUT RECURS (DTC P2A00 AND/OR P2A03)

(a) Connect an intelligent tester to the DLC3.
(b) Turn the ignition switch ON and turn the tester ON.
(c) Select the following menu items: DIAGNOSIS / ENHANCED OBD II / DTC INFO / CURRENT CODES.
(d) Read DTCs.

Result

Display (DTC Output)	Proceed To
No output	A
P2A00 and/or P2A03	B

B → CHECK EXTREMLY RICH OR LEAN ACTUAL AIR FUEL RATIO (REFER TO DTC P0171 PROCEDURE)

A

END

EVAP System

RELATED DTCS

DTCs	Monitoring Items	See Page
P043E	Reference orifice clogged (built into canister pump module)	ES-210
P043F	Reference orifice high-flow (built into canister pump module)	
P0441	• Purge VSV (Vacuum Switching Valve) stuck closed • Purge VSV stuck open • Purge flow	ES-216
P0450	Canister pressure sensor (built into canister pump module) voltage abnormal fluctuation	ES-223
P0451	• Canister pressure sensor (built into canister pump module) noise • Canister pressure sensor fixed (built into canister pump module)	
P0452	Canister pressure sensor (built into canister pump module) voltage low	
P0453	Canister pressure sensor (built into canister pump module) voltage high	
P0455	EVAP gross leak	ES-233
P0456	EVAP small leak	
P2401	Leak detection pump stuck OFF (built into canister pump module)	ES-328
P2402	Leak detection pump stuck ON (built into canister pump module)	
P2419	Vent valve stuck ON (closed) (built into canister pump module)	ES-334
P2420	Vent valve stuck OFF (vent) (built into canister pump module)	
P2610	Soak timer (built into ECM)	ES-340

If any EVAP system DTCs are set, the malfunctioning area can be determined using the table below.

DTCs / Malfunctioning Areas	P043E P043F	P0441	P0450	P0451	P0452	P0453	P0455	P0456	P2401 P2402	P2419	P2420
Reference orifice clogged	●								●	●	
Reference orifice high-flow	●								●	●	
Purge VSV stuck open		●					●				
Purge VSV stuck closed		●									
Canister pressure sensor fixed				●							
Canister pressure sensor noise				●							
Canister pressure sensor low output			●		●						
Canister pressure sensor high output			●			●					
Gross leak		●					●				
Small leak								●			
Leak detection pump stuck OFF	●								●	●	
Leak detection pump stuck ON	●								●	●	
Vent valve stuck closed	●								●	●	
Vent valve stuck open (vent)											●

Y

A106731E14

NOTICE:
If the 0.02 inch leak criterion difference between the first and second checks is greater than the specification, the DTCs corresponding to the leak criterion (P043E, P043F, P2401, P2402 and P2419) will be all stored.

DESCRIPTION

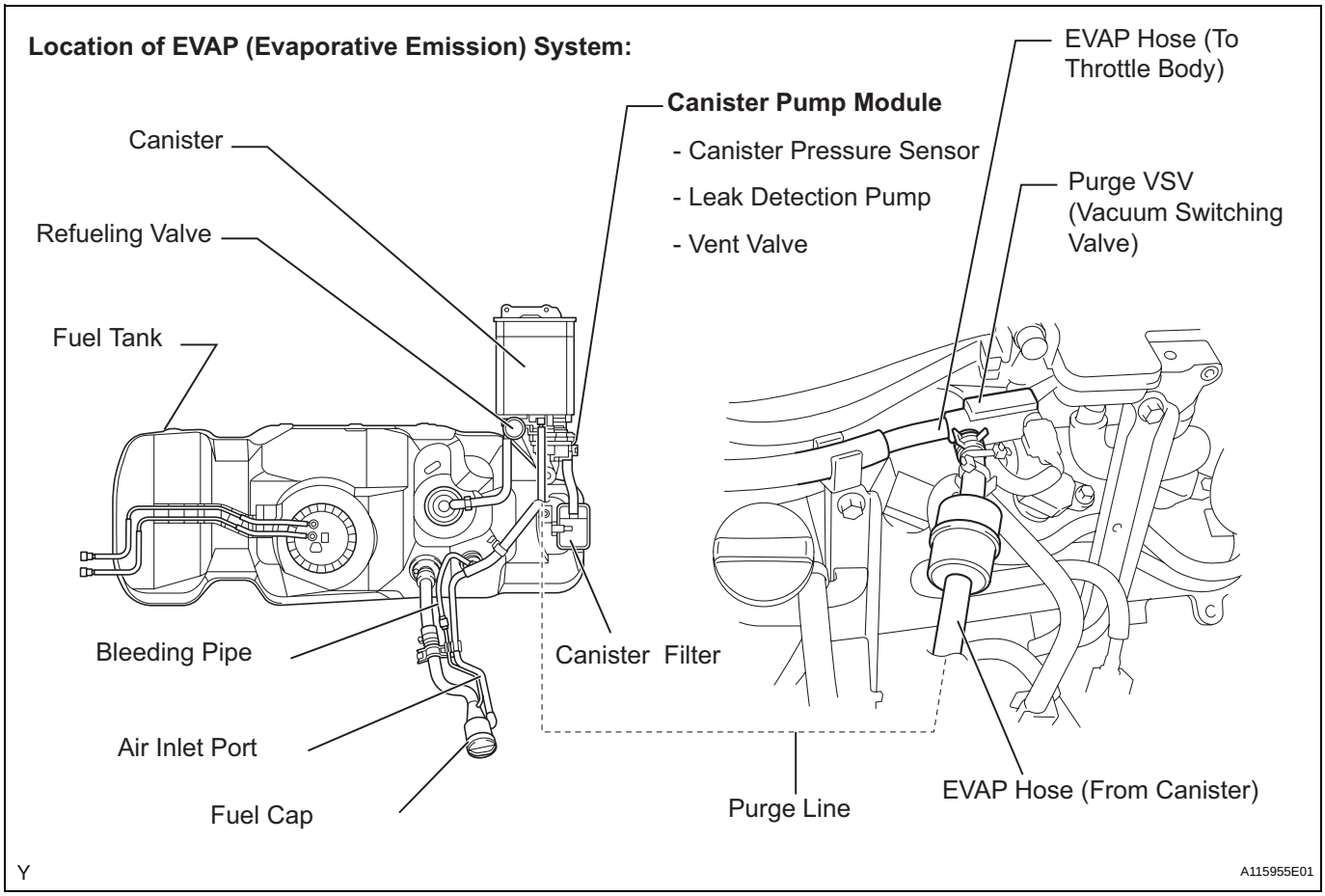

NOTICE:
The canister is located near the fuel tank, underneath the body.

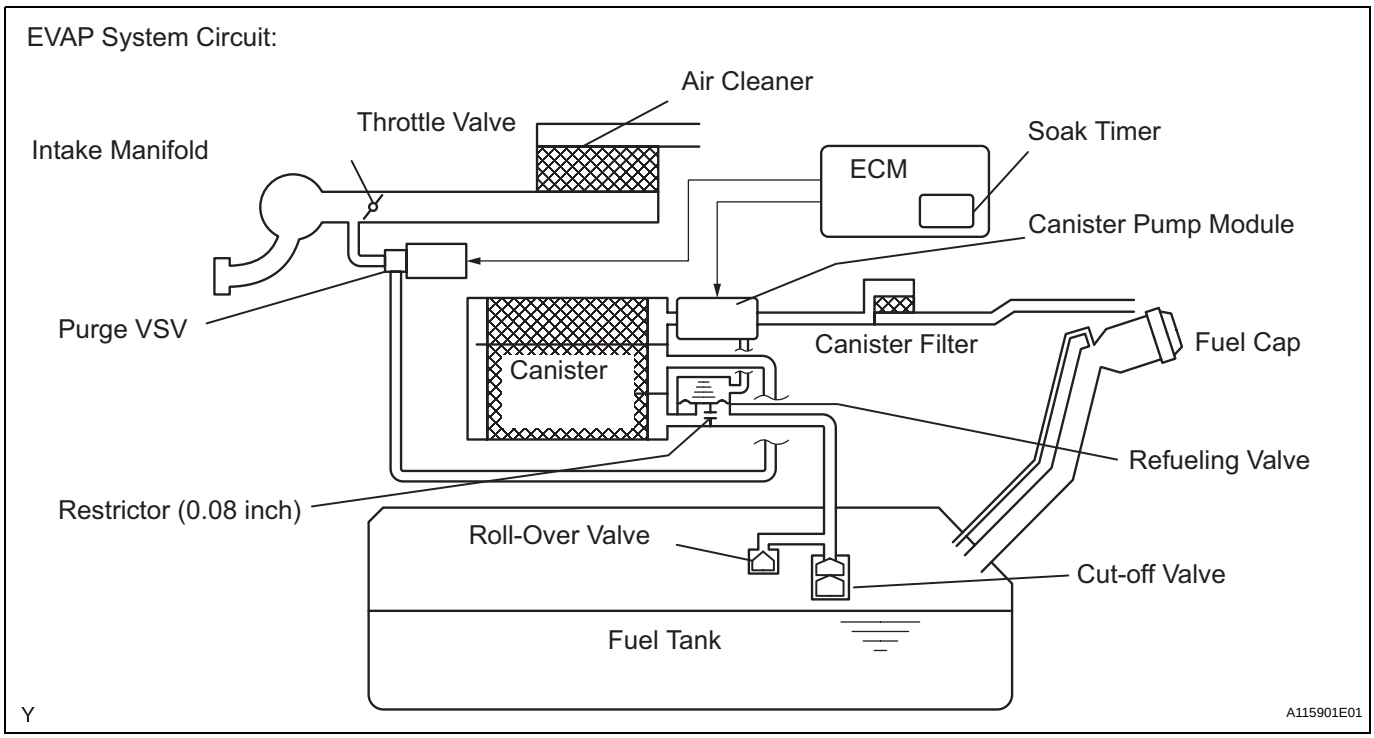

NOTICE:
In this vehicle's EVAP system, turning ON the vent valve does not seal off the EVAP system. To check for leaks in the EVAP system, disconnect the air inlet vent hose and apply pressure from the atmosphere side of the canister.

While the engine is running, if a predetermined condition (closed-loop etc.) is met, the purge VSV is opened by the ECM and stored fuel vapors in the canister are purged to the intake manifold. The ECM changes the duty cycle ratio of the purge VSV to control purge flow volume.

The purge flow volume is also determined by the intake manifold pressure. Atmospheric pressure is allowed into the canister through the vent valve to ensure that the purge flow is maintained when the negative pressure (vacuum) is applied to the canister.

The following two monitors run to confirm appropriate EVAP system operation.

1. Key-off monitor

This monitor checks for EVAP (Evaporative Emission) system leaks and canister pump module malfunctions. The monitor starts 5 hours* after the ignition switch is turned OFF. More than 5 hours are required to allow enough time for the fuel to cool down to stabilize the fuel tank pressure, thus making the EVAP system monitor more accurate.

The electric leak detection pump creates negative pressure (vacuum) in the EVAP system and the pressure is measured. Finally, the ECM monitors for leaks from the EVAP system, and malfunctions in both the canister pump module and purge VSV, based on the EVAP pressure.

HINT:

*: If the engine coolant temperature is not below 35°C (95°F) 5 hours after the ignition switch is turned off, the monitor check starts 2 hours later. If it is still not below 35°C (95°F) 7 hours after the ignition switch is turned off, the monitor check starts 2.5 hours later.

2. Purge flow monitor

The purge flow monitor consists of the two monitors. The 1st monitor is always conducted every time and the 2nd monitor is activated if necessary.

- The 1st monitor
  While the engine is running and the purge VSV (Vacuum Switching Valve) is ON (open), the ECM monitors the purge flow by measuring the EVAP pressure change. If negative pressure is not created, the ECM begins the 2nd monitor.
- The 2nd monitor
  The vent valve is turned OFF (open) and the EVAP pressure is then measured. If the variation in the pressure is less than 0.5 kPa (3.75 mmHg), the ECM interprets this as the purge VSV being stuck closed, and illuminates the MIL and sets DTC P0441 (2 trip detection logic).

Atmospheric pressure check:

In order to ensure reliable malfunction detection, the variation between the atmospheric pressures, before and after conduction of the purge flow monitor, is measured by the ECM.

EVAP Purge Flow:

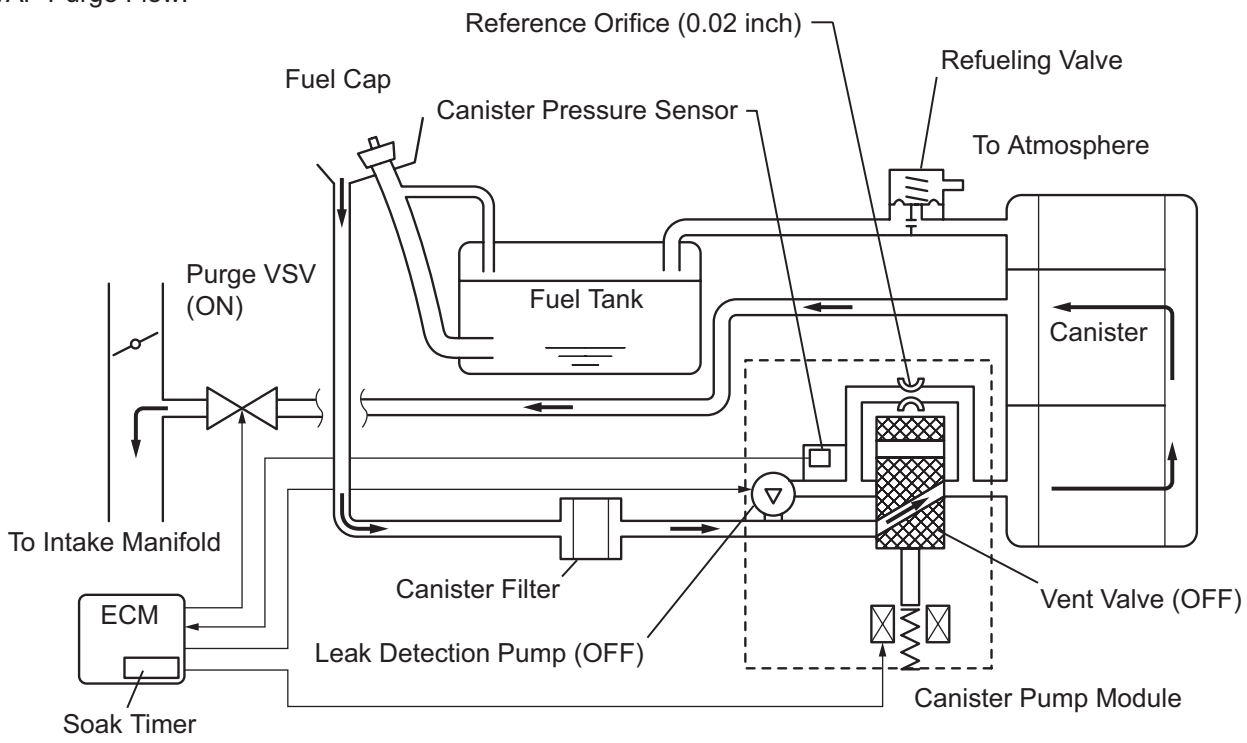

Y

A122571E01

Components	Operations
Canister	Contains activated charcoal to absorb EVAP (Evaporative Emissions) generated in fuel tank.
Cut-off valve	Located in fuel tank. Valve floats and closes when fuel tank 100 % full.
Purge VSV (Vacuum Switching Valve)	Opens or closes line between canister and intake manifold. ECM uses purge VSV to control EVAP purge flow. In order to discharge EVAP absorbed by canister to intake manifold, ECM opens purge VSV. EVAP discharge volume to intake manifold controlled by purge VSV duty cycle ratio (current-carrying time). (Open: ON, Close: OFF)
Refueling valve	Controls EVAP pressure from fuel tank to canister. Valve consists of diaphragm, spring and restrictor (diameter: 0.08 inch). When fuel vapor and pressure inside fuel tank increase, valve opens. While EVAP purged, valve closes and restrictor prevents large amount of vacuum from affecting pressure in fuel tank. Valve opened while refueling. When valve open, adding fuel into fuel tank possible.
Roll-over valve	Located in fuel tank. Valve closes by its own weight when vehicle overturns to prevent fuel from spilling out.
Soak timer	Built into ECM. To ensure accurate EVAP monitor, measures 5 hours (+-15 min) after ignition switch turned OFF. This allows fuel to cool down, stabilizing fuel tank pressure. When approx 5 hours elapsed, ECM activates (refer to fig. 3).
Canister pump module	Consists of (a) to (d) below. Canister pump module cannot be disassembled.
(a) Vent valve	Vents and closes EVAP system. When ECM turns valve ON, EVAP system closed. When, ECM turns valve OFF, EVAP system vented. Negative pressure (vacuum) created in EVAP system to check for EVAP leaks by closing purge VSV, turning on vent valve (closed) and operating leak detection pump (refer to fig. 1).
(b) Canister pressure sensor	Indicates pressure as voltages. ECM supplies regulated 5 V to canister pressure sensor, and uses feedback from sensor to monitor EVAP system pressure (refer to fig. 2).
(c) Leak detection pump	Creates negative pressure (vacuum) in EVAP system for leak check.
(d) Reference orifice	Has opening with 0.02 inch diameter. Vacuum produced through orifice by closing purge VSV, turning off vent valve and operating leak detection pump, to monitor 0.02 inch leak criterion. 0.02 inch leak criterion indicates small leak of EVAP.

Canister Pump Module (fig. 1):

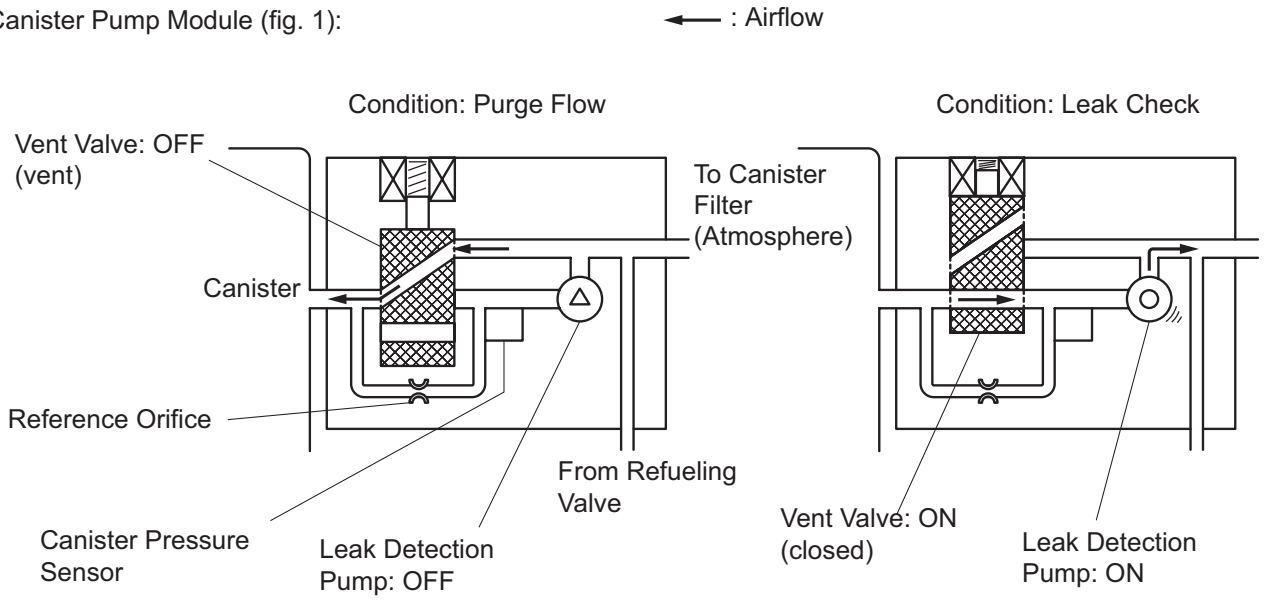

Y

A115902E01

Canister Pressure Sensor Specification (fig. 2):

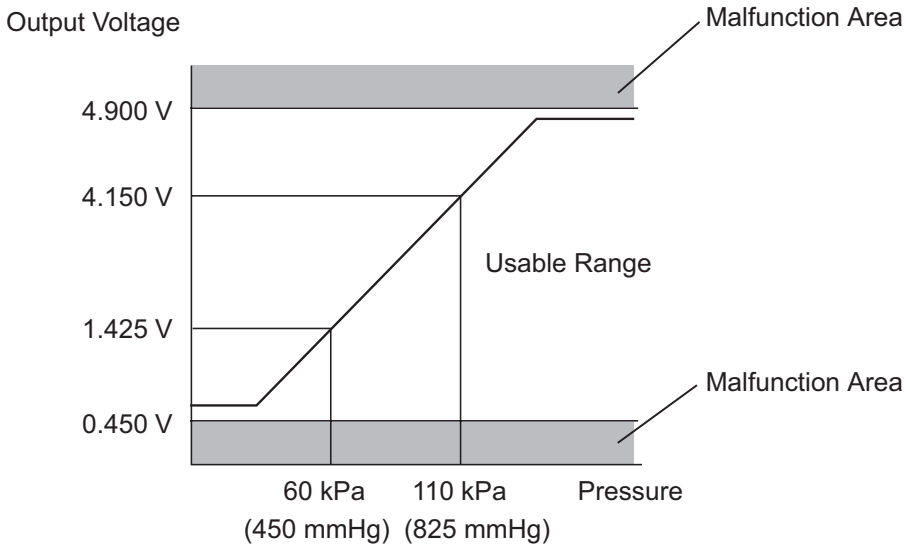

HINT:

Standard atmospheric pressure is 101.3 kPa (760 mmHg)

A115543E07

Soak Timer Circuit (fig.3)

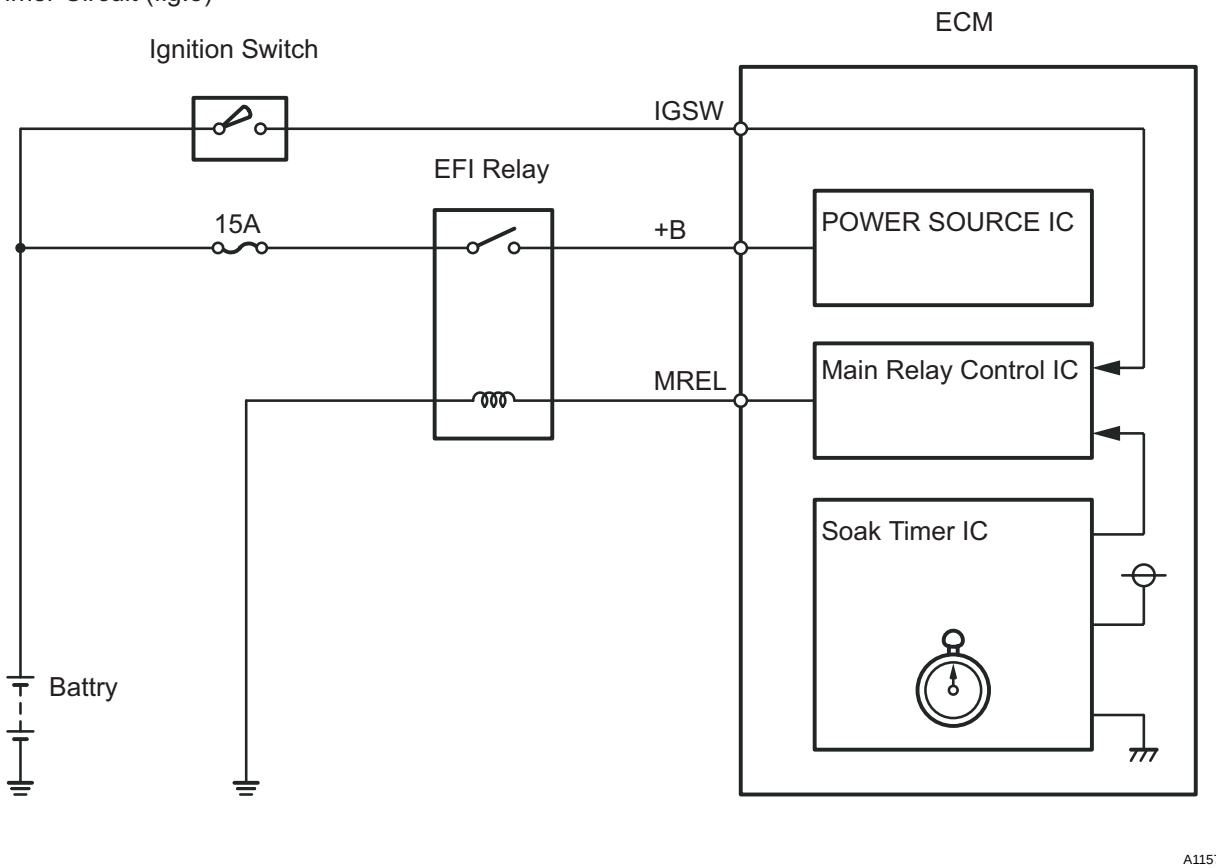

WIRING DIAGRAM

Refer to DTC P0450 (See page ES-226).

NOTICE:

An intelligent tester is required to conduct the following diagnostic troubleshooting procedure.

HINT:

- Using an intelligent tester monitor results enables the EVAP (Evaporative Emission) system to be confirmed.
- Read freeze frame data using an intelligent tester. Freeze frame data record the engine condition when malfunctions are detected. When troubleshooting, freeze frame data can help determine if the vehicle was moving or stationary, if the engine was warmed up or not, if the air-fuel ratio was lean or rich, and other data, from the time the malfunction occurred.

1	**CONFIRM DTC**

(a) Turn the ignition switch OFF and wait for 10 seconds.
(b) Turn the ignition switch ON.
(c) Turn the ignition switch OFF and wait for 10 seconds.
(d) Connect an intelligent tester to the DLC3.
(e) Turn the ignition switch ON and turn the tester ON.
(f) Select the following menu items: DIAGNOSIS / ENHANCED OBD II / DTC INFO / CURRENT CODES.
(g) Confirm DTCs and freeze frame data.
If any EVAP system DTCs are set, the malfunctioning area can be determined using the table below.

DTCs / Malfunctioning Areas	P043E P043F	P0441	P0450	P0451	P0452	P0453	P0455	P0456	P2401 P2402	P2419	P2420
Reference orifice clogged	●								●	●	
Reference orifice high-flow	●								●	●	
Purge VSV stuck open		●					●				
Purge VSV stuck closed		●									
Canister pressure sensor stuck				●							
Canister pressure sensor noise				●							
Canister pressure sensor low output			●		●						
Canister pressure sensor high output			●			●					
Gross leak		●					●				
Small leak								●			
Leak detection pump stuck OFF	●								●	●	
Leak detection pump stuck ON	●								●	●	
Vent valve stuck closed	●								●	●	
Vent valve stuck open (vent)											●

Y

A106731E06

ES

NOTICE:
If the 0.02 inch leak criterion difference between the first and second checks is greater than the specification, the DTCs corresponding to the leak criterion (P043E, P043F, P2401, P2402 and P2419) will be all stored.

NEXT

2	PERFORM EVAP SYSTEM CHECK (AUTO OPERATION)

NOTICE:
- **The EVAP SYSTEM CHECK (AUTO OPERATION) consists of five steps performed automatically by the intelligent tester. It takes a maximum of approximately 18 minutes.**
- **Do not perform the EVAP SYSTEM CHECK when the fuel tank is more than 90 % full because the cut-off valve may be closed and making the leak check of the fuel tank unavailable.**
- **Do not run the engine in this step.**

- **When the temperature of the fuel is 35°C(95°F) or more, a large amount of vapor forms and any check results become inaccurate. When performing the EVAP SYSTEM CHECK, keep the temperature below 35°C (95°F).**

(a) Clear DTCs (See page ES-38).
(b) Select the following menu items: DIAGNOSIS / ENHANCED OBD II / SYSTEM CHECK / EVAP SYS CHECK / AUTO OPERATION.
(c) After the EVAP SYSTEM CHECK is completed, check for pending DTCs by selecting the following menu items: DIAGNOSIS / ENHANCED OBD II / DTC INFO / PENDING CODES.
HINT:
If no pending DTC is displayed, perform the MONITOR CONFIRMATION (see "Diagnostic Help" menu). After this confirmation, check for pending DTCs. If no DTC is displayed, the EVAP system is normal.

ES

NEXT

3	PERFORM EVAP SYSTEM CHECK (MANUAL OPERATION)

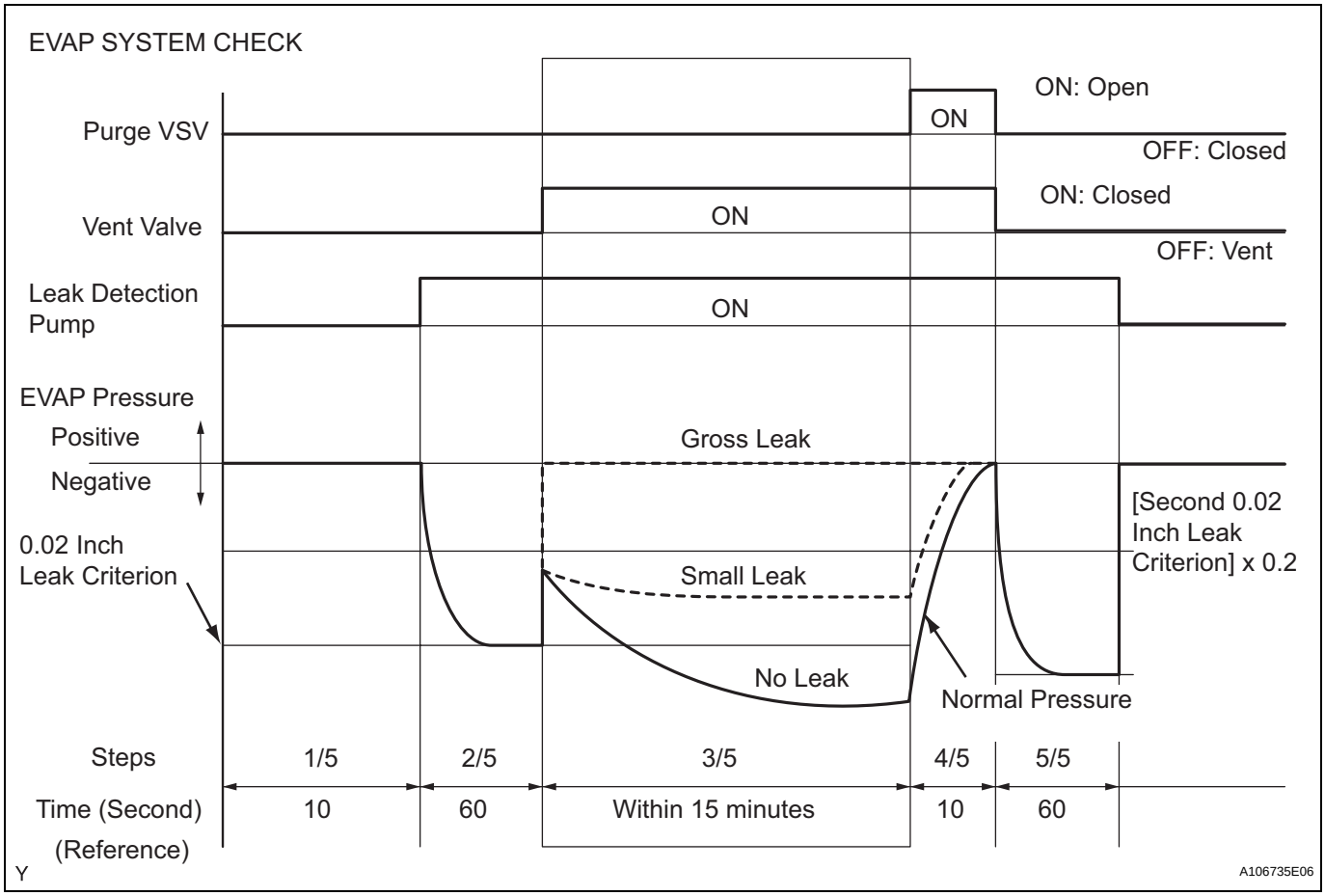

NOTICE:

- **In the EVAP SYSTEM CHECK (MANUAL OPERATION), the series of 5 EVAP SYSTEM CHECK steps are performed manually by the intelligent tester.**

- **Do not perform the EVAP SYSTEM CHECK when the fuel tank is more than 90 % full because the cut-off valve may be closed and making the leak check of the fuel tank unavailable.**
- **Do not run the engine in this step.**
- **When the temperature of the fuel is 35°C(95°F) or more, a large amount of vapor forms and any check results become inaccurate. When performing the EVAP SYSTEM CHECK, keep the temperature below 35°C (95°F).**

(a) Clear DTCs (See page ES-38).

(b) Select the following menu items: DIAGNOSIS / ENHANCED OBD II / SYSTEM CHECK / EVAP SYS CHECK / MANUAL OPERATION.

ES

NEXT

4	PERFORM EVAP SYSTEM CHECK (STEP 1/5)

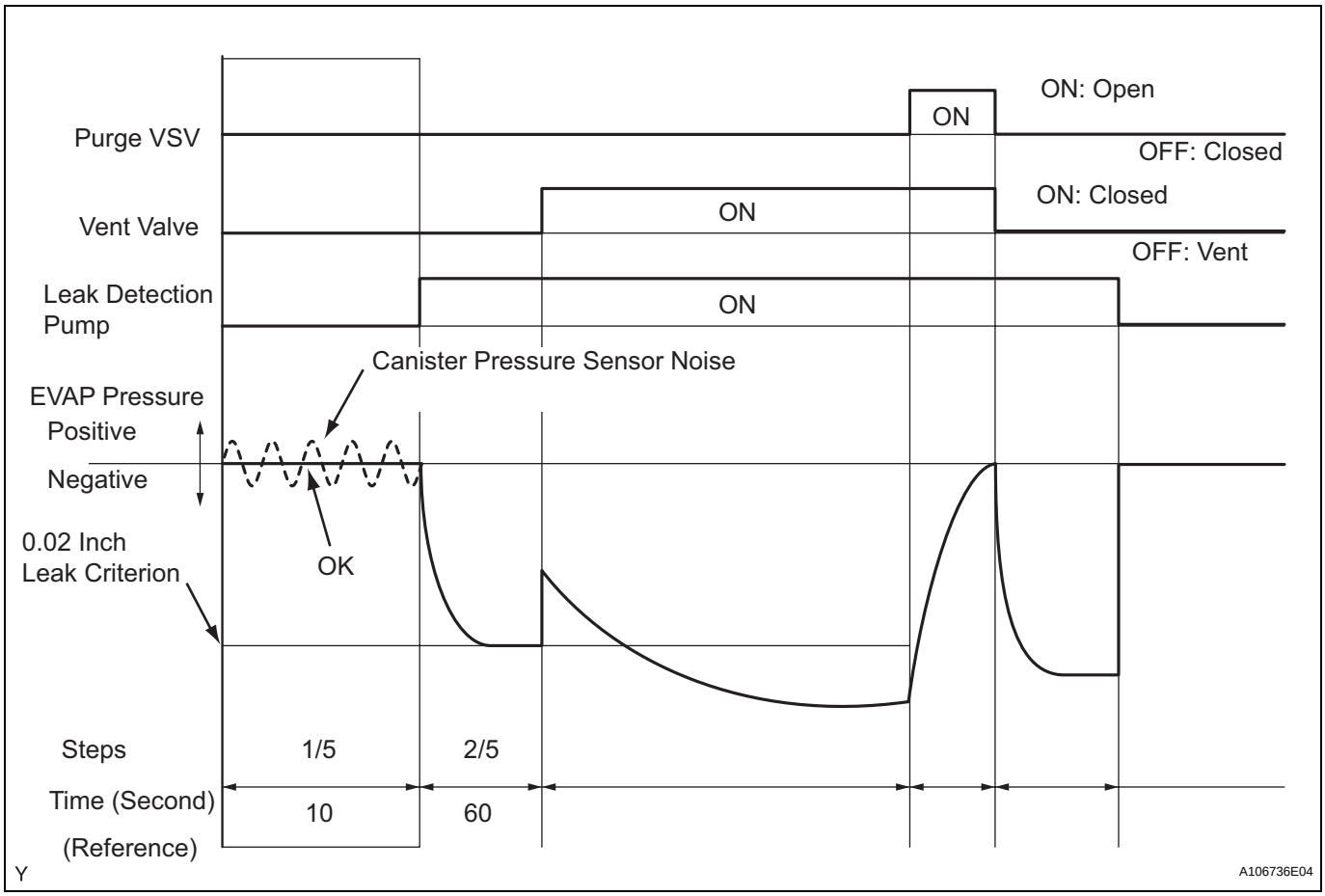

(a) Check the EVAP pressure in step 1/5.

Result

DTCs*	Test Results	Suspected Trouble Areas	Proceed To
-	Virtually no variation in EVAP pressure	Not yet determined	A
P0451	EVAP pressure fluctuates by +-0.3 kPa (2.25 mmHg) or more	Canister pressure sensor noise	B

*: These DTCs are already present in the ECM when the vehicle arrives and are confirmed in step 1.

B → Go to step 30

A

5	PERFORM EVAP SYSTEM CHECK (STEP 1/5 TO 2/5)

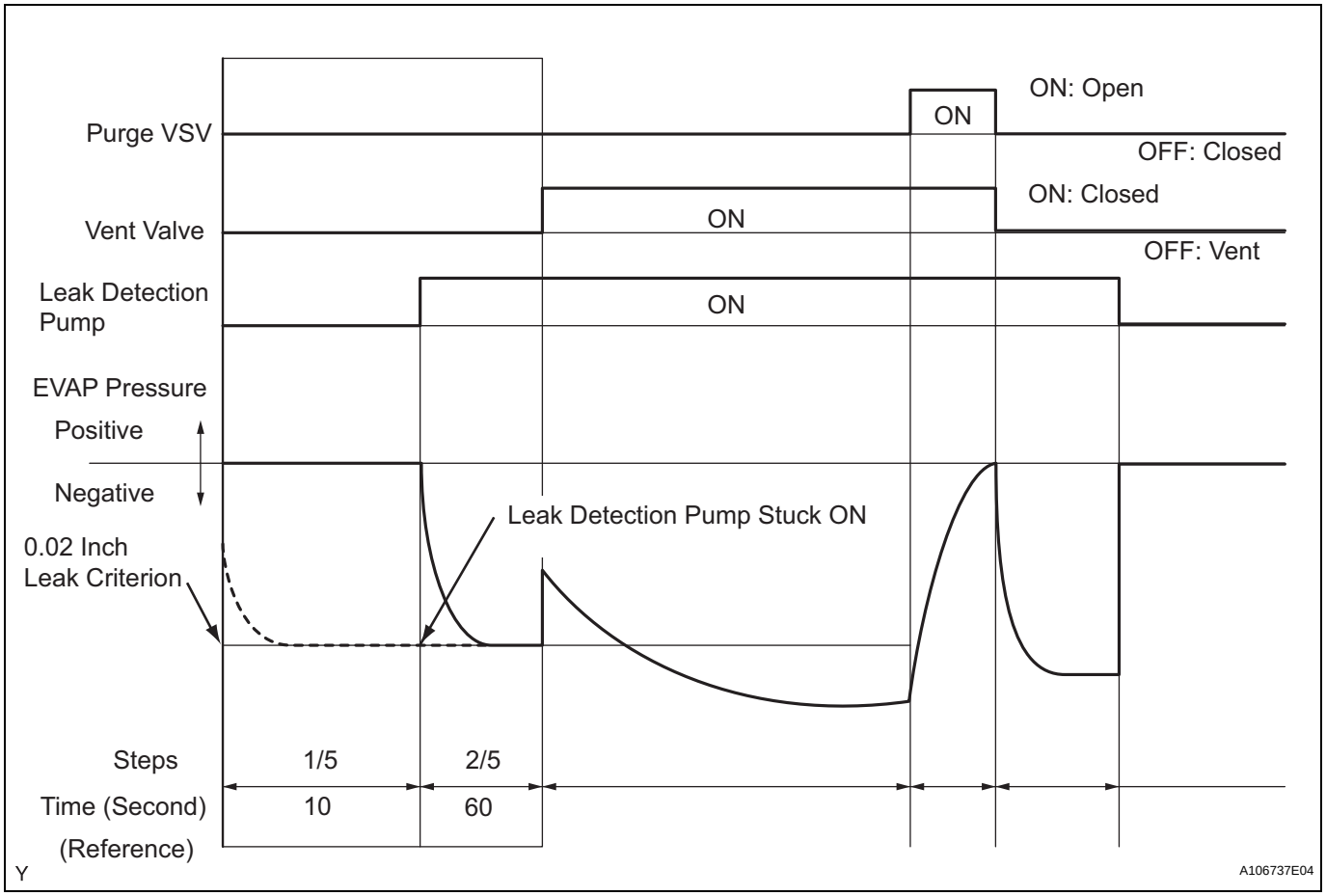

(a) Check the EVAP pressure in steps 1/5 and 2/5.

Result

DTCs*	Test Results	Suspected Trouble Areas	Proceed To
-	Virtually no variation in EVAP pressure during step 1/5. Then decreases to 0.02 inch leak criterion*	Not yet determined	A
P2402	Small difference between EVAP pressures during steps 1/5 and 2/5	Leak detection pump stuck ON	B

*: These DTCs are already present in the ECM when the vehicle arrives and are confirmed in step 1.
HINT:
The first 0.02 inch leak criterion is the value determined in step 2/5.

B → Go to step 23

A

6	PERFORM EVAP SYSTEM CHECK (STEP 2/5)

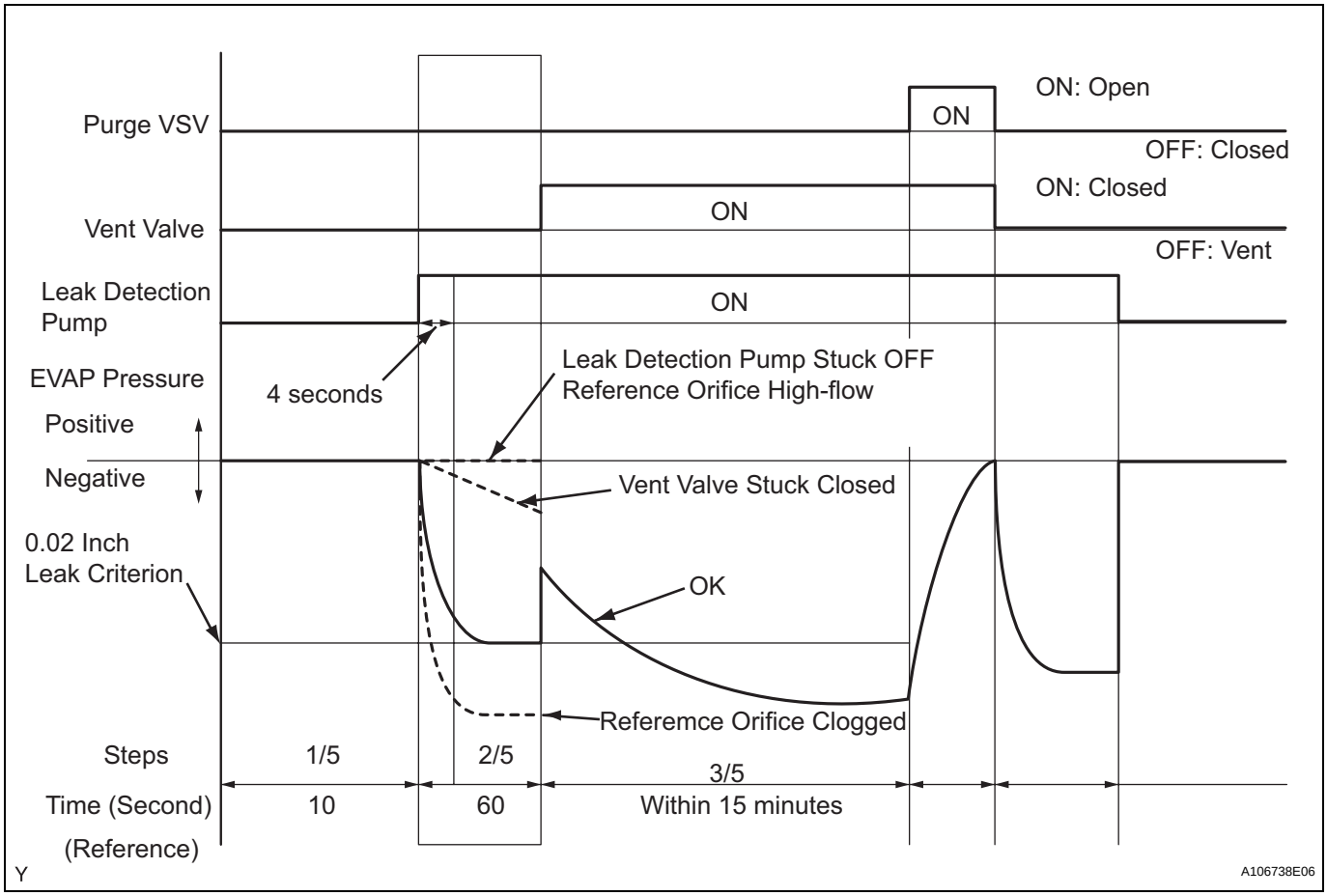

HINT:
Make a note of the pressures checked in steps (a) and (b) below.
(a) Check the EVAP pressure 4 seconds after the leak detection pump is activated*.
(b) Check the EVAP pressure again when it has stabilized. This pressure is the 0.02 inch leak criterion.
*: The leak detection pump begins to operate as step 1/5 is proceeded to step 2/5.

Result

DTCs*	Test Results	Suspected Trouble Areas	Proceed To
-	EVAP pressure in step (b) between -4.85 kPa and -1.06 kPa (-36.38 mmHg and -7.95 mmHg)	Not yet determined	A
P043F and P2401	EVAP pressure in step (b) -1.06 kPa (-7.95 mmHg) or more	• Reference orifice high-flow • Leak detection pump stuck OFF	B
P043E	EVAP pressure in step (b) below -4.85 kPa (-36.38 mmHg)	Reference orifice clogged	C
P2419	EVAP pressure in step (a) more than -1.06 kPa (-7.95 mmHg)	Vent valve stuck closed	D

*: These DTCs are already present in the ECM when the vehicle arrives and are confirmed in step 1.

B	Go to step 11
C	Go to step 30
D	Go to step 19

A

7	PERFORM EVAP SYSTEM CHECK (STEP 2/5 TO 3/5)

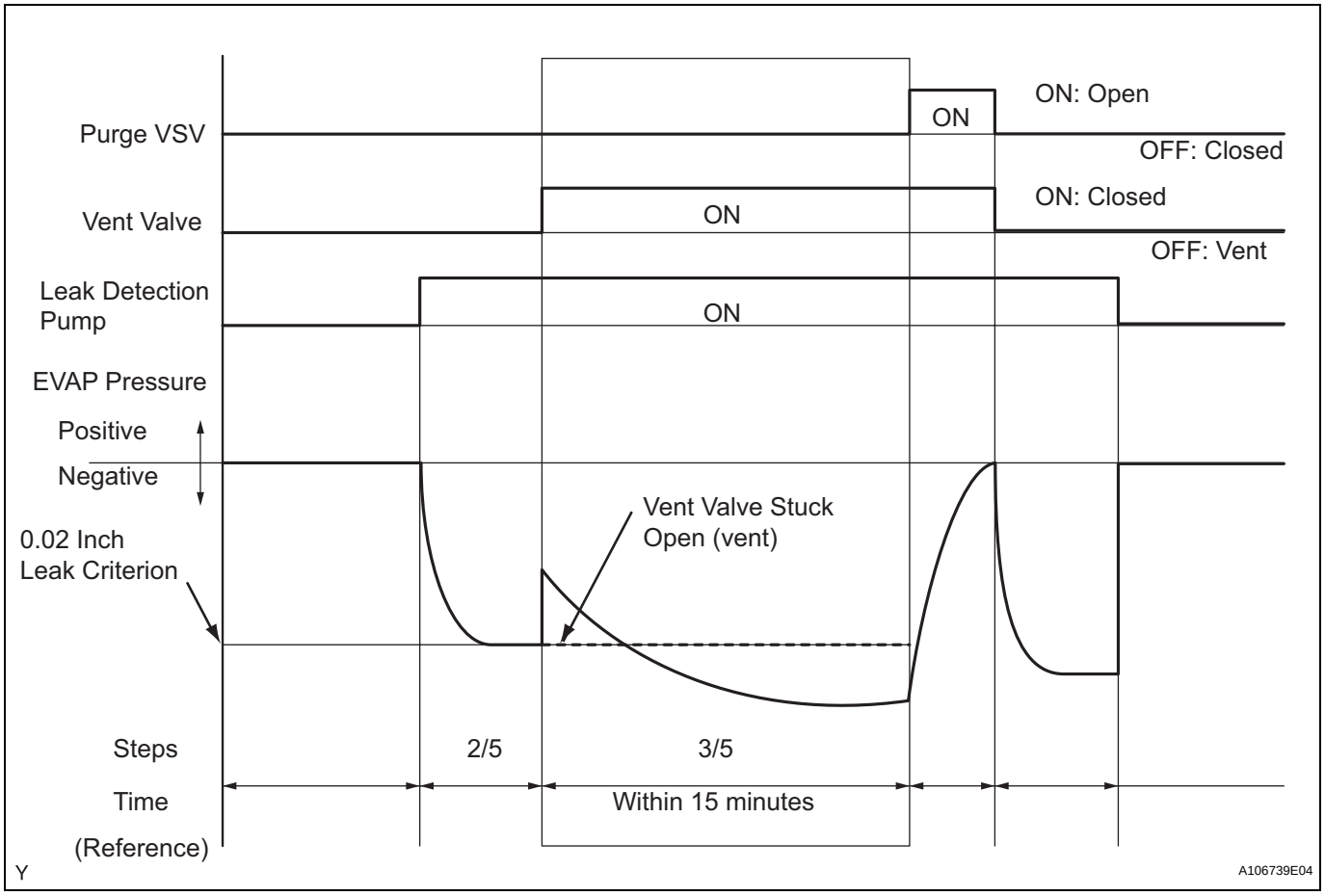

(a) Check the EVAP pressure increase in step 3/5.

Result

DTCs*	Test Results	Suspected Trouble Areas	Proceed To
-	EVAP pressure increases by 0.3 kPa (2.25 mmHg) or more within 10 seconds of proceeding from step 2/5 to step 3/5	Not yet determined	A
P2420	No variation in EVAP pressure despite proceeding from step 2/5 to step 3/5	Vent valve stuck open (vent)	B
P0451	No variation in EVAP pressure during steps 1/5 through 3/5	Canister pressure sensor malfunction stuck	C

*: These DTCs are already present in the ECM when the vehicle arrives and are confirmed in step 1.

B	Go to step 20

C → Go to step 30

A

8	PERFORM EVAP SYSTEM CHECK (STEP 3/5)

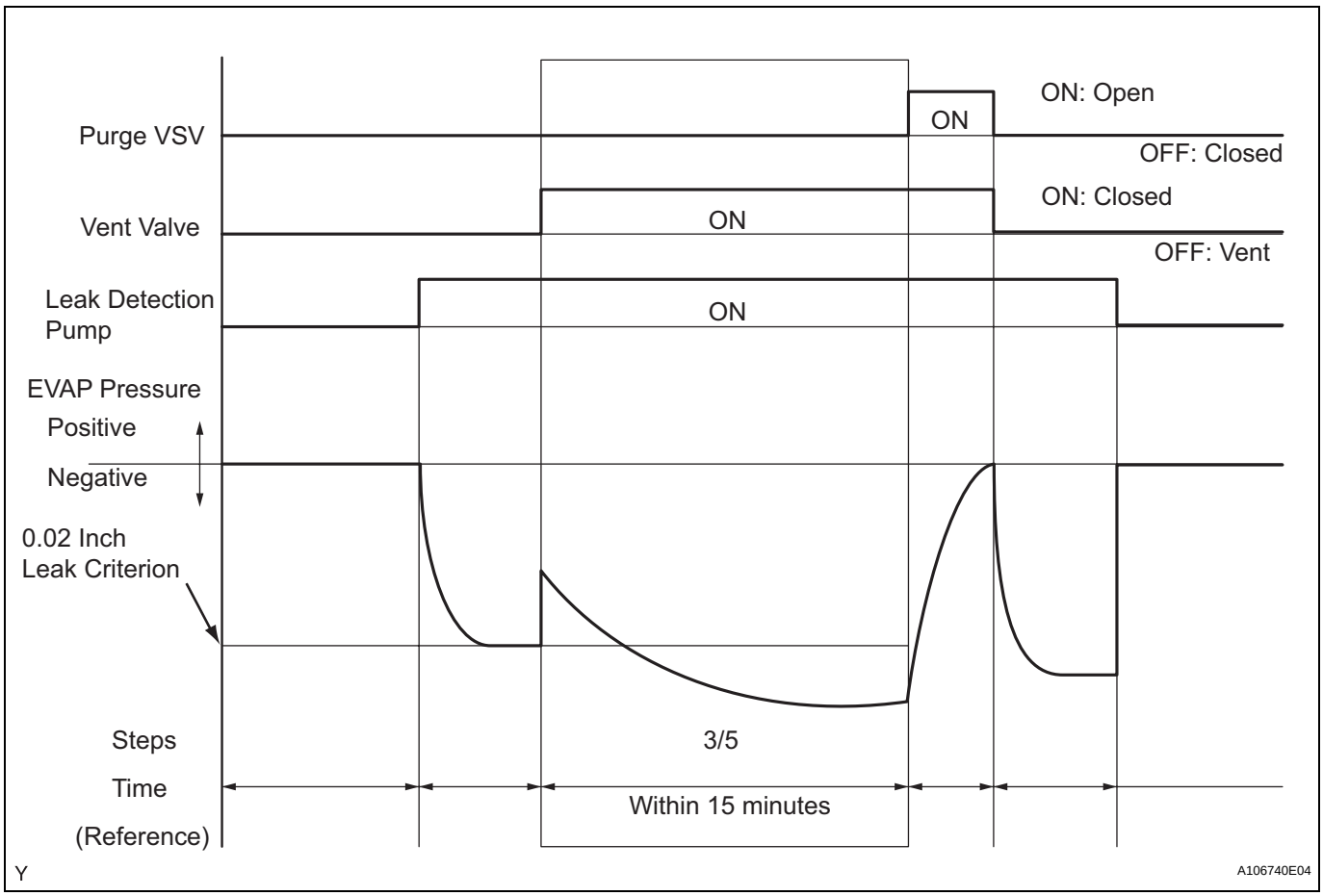

(a) Wait until the EVAP pressure change is less than 0.1 kPa (0.75 mmHg) for 30 seconds.
(b) Measure the EVAP pressure and record it.
HINT:
A few minutes are required for the EVAP pressure to become saturated. When there is little fuel in the fuel tank, it takes up to 15 minutes (900 seconds).

NEXT

9	PERFORM EVAP SYSTEM CHECK (STEP 4/5)

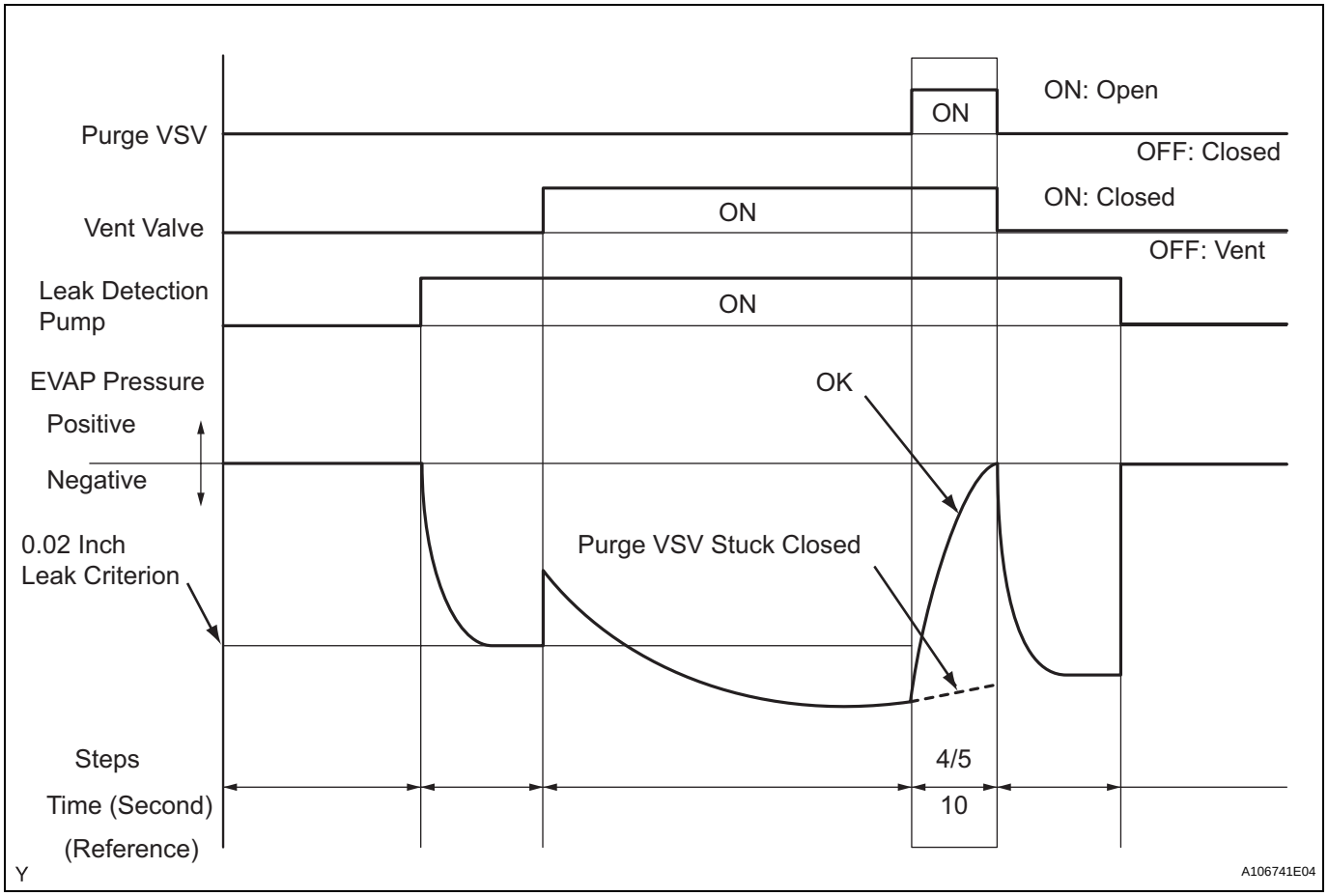

(a) Check the EVAP pressure in step 4/5.

Result

DTCs*	Test Results	Suspected Trouble Areas	Proceed To
-	EVAP pressure increases by 0.3 kPa (2.25 mmHg) or more within 10 seconds of proceeding from step 3/5 to step 4/5	Not yet determined	A
P0441	EVAP pressure increases by 0.3 kPa (2.25 mmHg) or more within 10 seconds of proceeding from step 3/5 to step 4/5	Problems in EVAP hose between purge VSV and intake manifold	B
P0441	Variation in EVAP pressure less than 0.3 kPa (2.25 mmHg) for 10 seconds, after proceeding from step 3/5 to step 4/5	Purge VSV stuck closed	C

*: These DTCs are already present in the ECM when the vehicle arrives and are confirmed in step 1.

B → Go to step 15

C → Go to step 12

A

10	PERFORM EVAP SYSTEM CHECK (STEP 5/5)

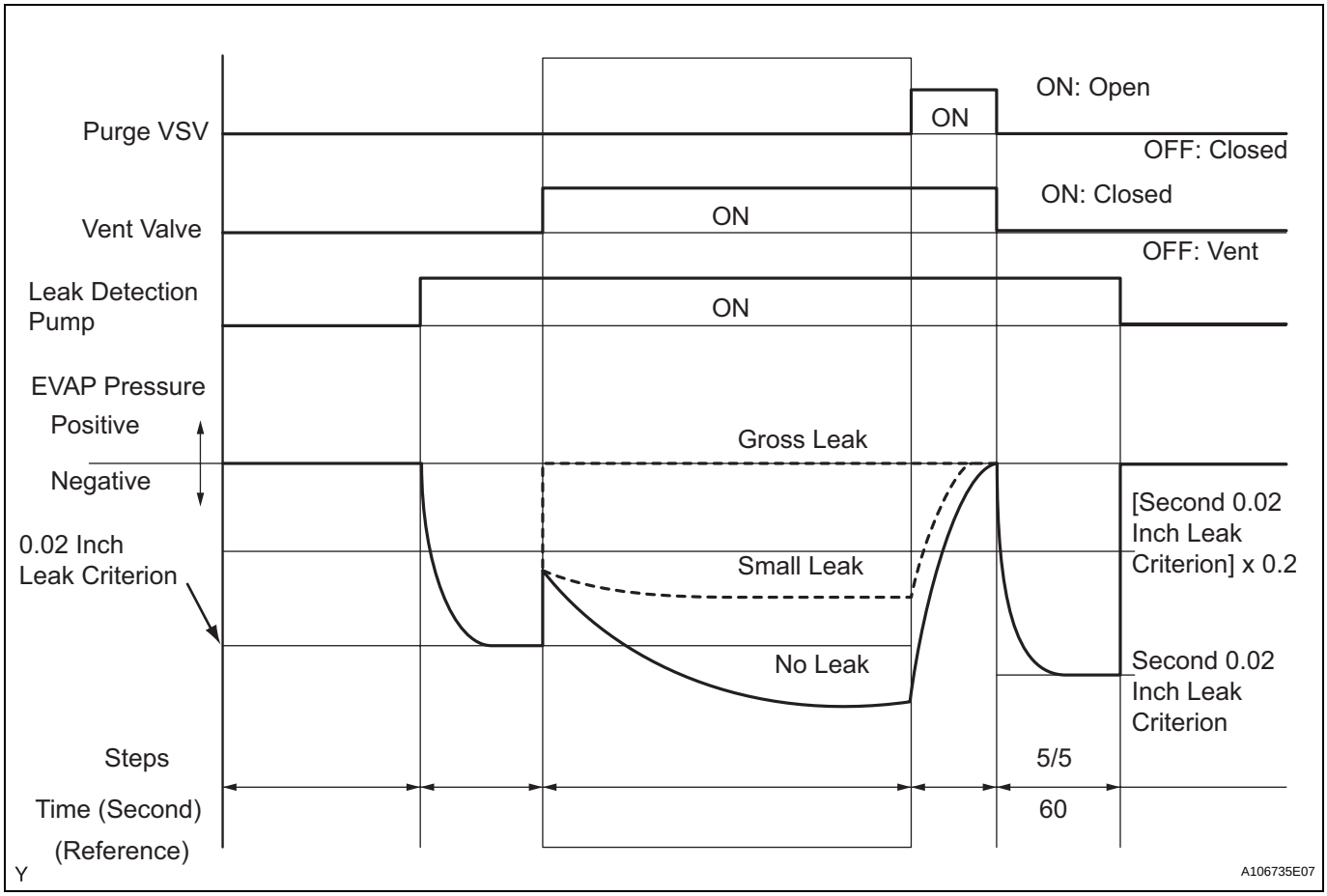

(a) Check the EVAP pressure in step 5/5.
(b) Compare the EVAP pressure in step 3/5 and the second 0.02 inch leak criterion (step 5/5).

Result

DTCs*	Test Results	Suspected Trouble Areas	Proceed To
-	EVAP pressure (step 3/5) lower than second 0.02 inch leak criterion (step 5/5)	Not yet determined (no leakage from EVAP system)	A
P0441 and P0455	EVAP pressure (step 3/5) higher than [second 0.02 inch leak criterion (step 5/5) x 0.2]	• Purge VSV stuck open • EVAP gross leak	B
P0456	EVAP pressure (step 3/5) higher than second 0.02 inch leak criterion (step 5/5)	EVAP small leak	B

*: These DTCs are already present in the ECM when the vehicle arrives and are confirmed in step 1.

A	Go to step 36
B	Go to step 12

11	PERFORM EVAP SYSTEM CHECK (STEP 3/5)

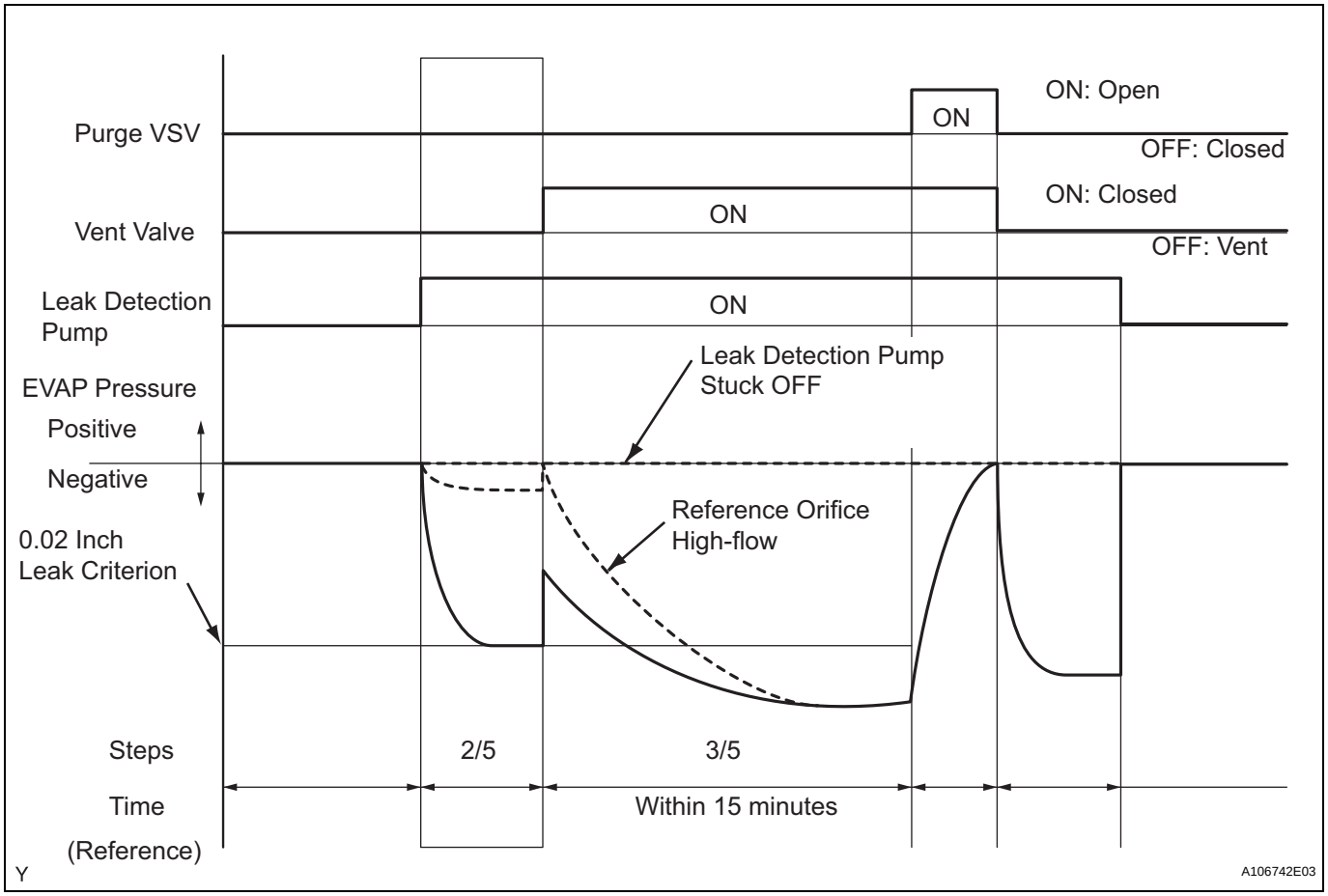

(a) Check the EVAP pressure in step 3/5.

Result

DTCs*	Test Results	Suspected Trouble Areas	Proceed To
P043F	EVAP pressure less than [0.02 inch leak criterion] measured at 2/5	Reference orifice high-flow	A
P2401	EVAP pressure almost same as [0.02 inch leak criterion] measured at 2/5	Leak detection pump stuck OFF	B

*: These DTCs are already present in the ECM when the vehicle arrives and are confirmed in step 1.
HINT:
The first 0.02 inch leak criterion is the value determined in step 2/5.

A	Go to step 30
B	Go to step 23

12	PERFORM ACTIVE TEST USING INTELLIGENT TESTER (PURGE VSV)

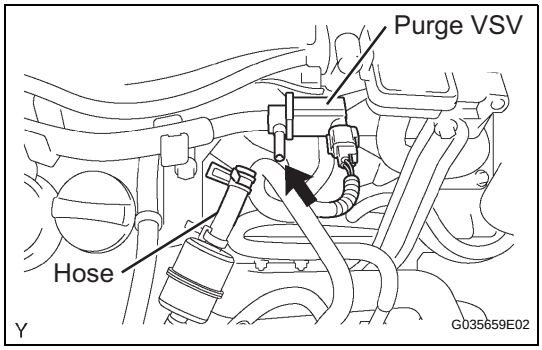

(a) Select the following menu items: DIAGNOSIS / ENHANCED OBD II/ ACTIVE TEST / EVAP VSV.
(b) Disconnect the hose (connected to the canister) from the purge VSV.
(c) Start the engine.
(d) Using the tester, turn off the purge VSV (EVAP VSV: OFF).
(e) Use your finger to confirm that the purge VSV has no suction.
(f) Using the tester, turn on the purge VSV (EVAP VSV: ON).
(g) Use your finger to confirm that the purge VSV has suction.

Result

Test Results	Suspected Trouble Areas	Proceed To
No suction when purge VSV turned OFF, and suction applied when turned ON	Purge VSV normal	A
Suction applied when purge VSV turned OFF	Purge VSV stuck open	B
No suction when purge VSV turned ON	• Purge VSV stuck closed • Problems with EVAP hose between purge VSV and throttle body	C

(h) Reconnect the hose.

B → **Go to step 14**

C → **Go to step 15**

A

13	CHECK FUEL CAP ASSEMBLY

(a) Check that the fuel cap is correctly installed and confirm the fuel cap meets OEM specifications.
(b) Confirm that the fuel cap is tightened until a few click sounds are heard.
HINT:
If an EVAP tester is available, check the fuel cap using the tester.
(1) Remove the fuel cap and install it onto a fuel cap adaptor.
(2) Connect an EVAP tester pump hose to the adaptor, and pressurize the cap to 3.2 to 3.7 kPa (24 to 28 mmHg) using an EVAP tester pump.
(3) Seal the adaptor and wait for 2 minutes.
(4) Check the pressure. If the pressure is 2 kPa (15 mmHg) or more, the fuel cap is normal.
(5) Reinstall the fuel cap.

Result

Test Results	Suspected Trouble Areas	Proceed To
Fuel cap correctly installed	-	A

Test Results	Suspected Trouble Areas	Proceed To
Fuel cap loose	• Fuel cap improperly installed • Defective fuel cap • Fuel cap does not meet OEM specifications	B
No fuel cap	-	C

A → Go to step 29

B → Go to step 27

C → Go to step 28

14 INSPECT VACUUM SWITCHING VALVE ASSEMBLY NO.1

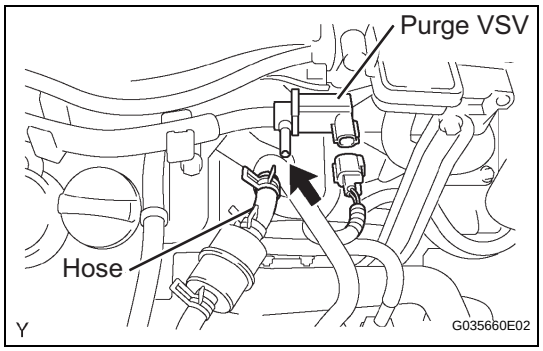

(a) Turn the ignition switch OFF.
(b) Disconnect the B19 purge VSV connector.
(c) Disconnect the hose (connected to the canister) from the purge VSV.
(d) Start the engine.
(e) Use your finger to confirm that the purge VSV has no suction.

Result

Test Results	Suspected Trouble Areas	Proceed To
No suction	ECM	A
Suction applied	Purge VSV	B

(f) Reconnect the purge VSV connector.
(g) Reconnect the hose.

A → Go to step 35

B → Go to step 31

15 CHECK EVAP HOSE (PURGE VSV - THROTTLE BODY)

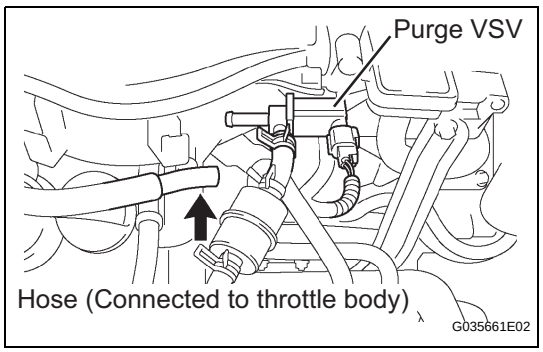

(a) Disconnect the hose (connected to the throttle body) from the purge VSV.
(b) Start the engine.
(c) Use your finger to confirm that the hose has suction.

Result

Test Results	Suspected Trouble Areas	Proceed To
Suction applied	EVAP hose between purge VSV and throttle body normal	A

Test Results	Suspected Trouble Areas	Proceed To
No suction	• Throttle body • EVAP hose between purge VSV and throttle body	B

(d) Reconnect the hose.

B → Go to step 26

A

16 INSPECT VACUUM SWITCHING VALVE ASSEMBLY NO.1 (PURGE VSV)

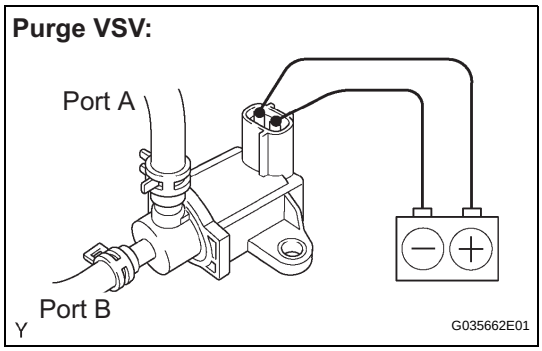

(a) Remove the purge VSV.
(b) Apply battery voltage to the terminals of the purge VSV.
(c) Using an air gun, confirm that air flows from port A to port B.

Result

Test Results	Suspected Trouble Areas	Proceed To
Air flows	Purge VSV normal	A
No air flow	Purge VSV	B

(d) Reinstall the purge VSV.

B → Go to step 31

A

17 CHECK HARNESS AND CONNECTOR (POWER SOURCE OF PURGE VSV)

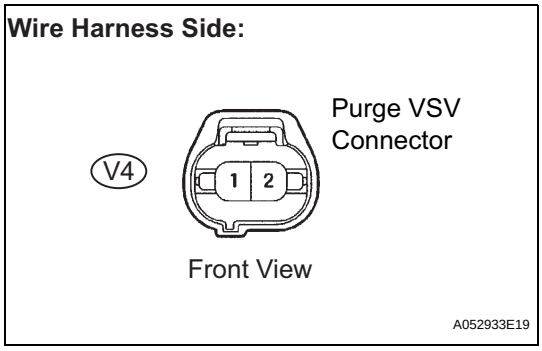

(a) Disconnect the V4 purge VSV connector.
(b) Turn the ignition switch ON.
(c) Measure the voltage between terminal 1 of the purge VSV connector and the body ground.

Result

Test Results	Suspected Trouble Areas	Proceed To
Between 11 V and 14 V	Normal	A
Other than result above	Wire harness or connectors between purge VSV and ECM	B

(d) Reconnect the purge VSV connector.

B → Go to step 32

A

18 CHECK HARNESS AND CONNECTOR (PURGE VSV - ECM)

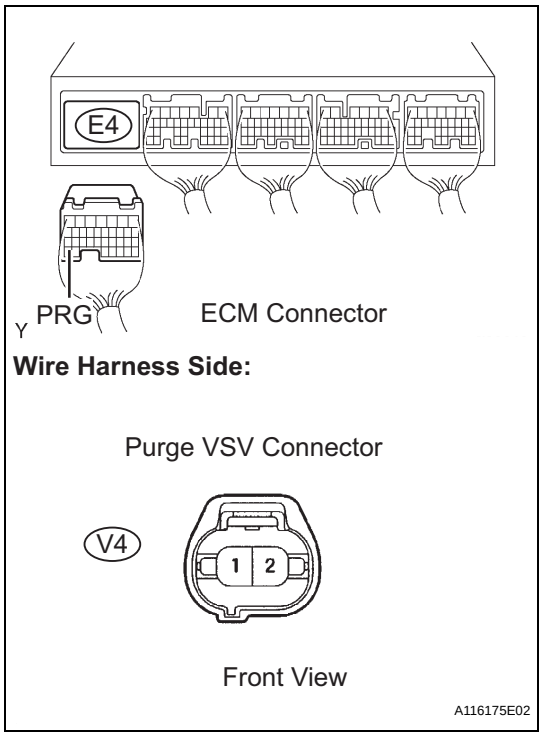

(a) Disconnect the E4 ECM connector and the V4 purge VSV connector.
(b) Check the resistance.
Standard Resistance

Tester Connections	Specified Conditions
E4-34 (PRG) - V4-2	Below 1 Ω
E4-34 (PRG) - Body ground	10 kΩ or higher
V4-2 - Body ground	10 kΩ or higher

(c) Reconnect the purge VSV connector.
(d) Reconnect the ECM connector.

OK	Go to step 35
NG	Go to step 32

ES

19 PERFORM ACTIVE TEST USING INTELLIGENT TESTER (FOR VENT VALVE)

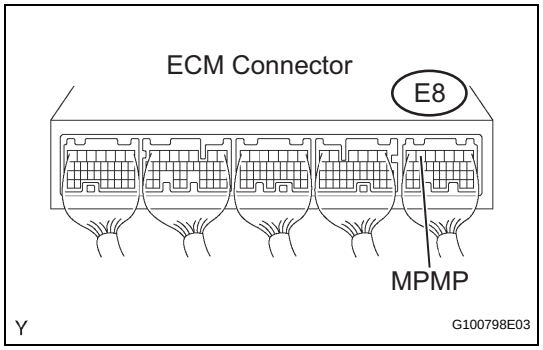

(a) Connect an intelligent tester to the DLC3.
(b) Turn the ignition switch ON and turn the tester ON.
(c) Select the following menu items: DIAGNOSIS / ENHANCED OBD II / ACTIVE TEST / VENT VALVE (ALONE).
(d) Measure the voltage between terminal VPMP of the ECM connector and the body ground when the vent valve is turned ON (close) and OFF (vent) using the tester.

Result

Test Results	Suspected Trouble Areas	Proceed To
Between 9 V and 14 V when OFF Below 3 V when ON	Vent valve	A
Below 3 V when OFF and ON	ECM	B

A	Go to step 22
B	Go to step 35

20	PERFORM ACTIVE TEST USING INTELLIGENT TESTER (FOR VENT VALVE)

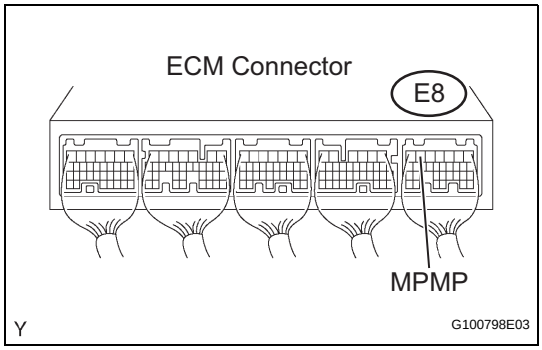

(a) Connect an intelligent tester to the DLC3.
(b) Turn the ignition switch ON and turn the tester ON.
(c) Select the following menu items: DIAGNOSIS / ENHANCED OBD II / ACTIVE TEST / VENT VALVE (ALONE).
(d) Measure the voltage between terminal VPMP of the ECM connector and the body ground when the vent valve is turned ON (close) and OFF (vent) using the tester.

ES

Result

Test Results	Suspected Trouble Areas	Proceed To
Below 3 V when OFF and ON	Power source of vent valve	A
Between 9 V and 14 V when OFF Below 3 V when ON	Vent valve	B
Between 9 V and 14 V when OFF and ON	ECM	C

B → Go to step 22

C → Go to step 35

A

21	INSPECT CANISTER PUMP MODULE (POWER SOURCE FOR VENT VALVE)

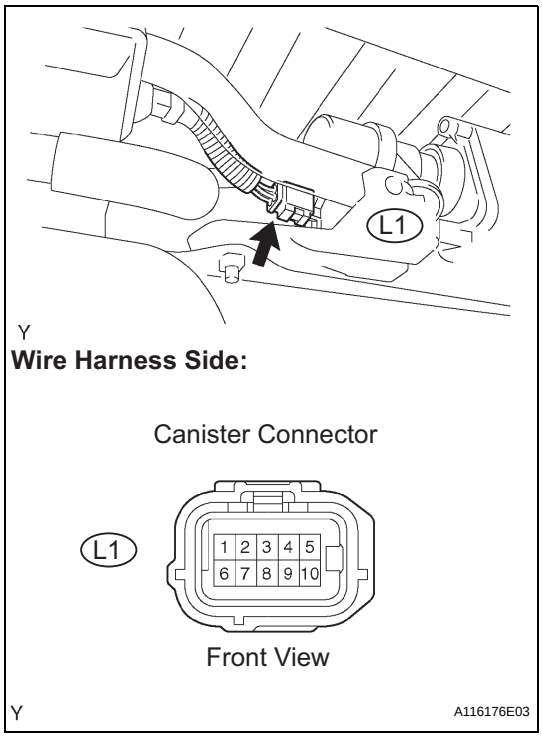

(a) Turn the ignition switch OFF.
(b) Disconnect the L1 canister connector.
(c) Turn the ignition switch ON.
(d) Measure the voltage between terminal 9 of the canister connector and the body ground.

Result

Test Results	Suspected Trouble Areas	Proceed To
Between 9 V and 14 V	Normal	A
Between 0 V and 3 V	Power source wire harness of vent valve	B

(e) Reconnect the canister connector.

B → **Go to step 32**

A

22 INSPECT CANISTER PUMP MODULE (VENT VALVE OPERATION)

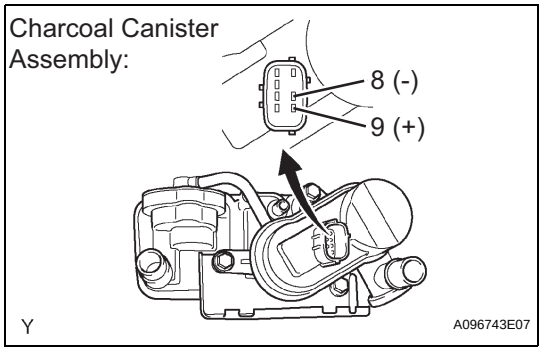

(a) Turn the ignition switch OFF.
(b) Disconnect the L1 canister connector.
(c) Apply the battery voltage to terminals 9 and 8 of the canister pump module.
(d) Touch the canister pump module to confirm the vent valve operation.

Result

Test Results	Suspected Trouble Areas	Proceed To
Operating	Wire harness between vent valve and ECM	A
Not operating	Vent valve	B

(e) Reconnect the canister connector.

A → **Go to step 32**

B → **Go to step 30**

23 PERFORM ACTIVE TEST USING INTELLIGENT TESTER (FOR CANISTER PUMP MODULE (LEAK DETECTION PUMP))

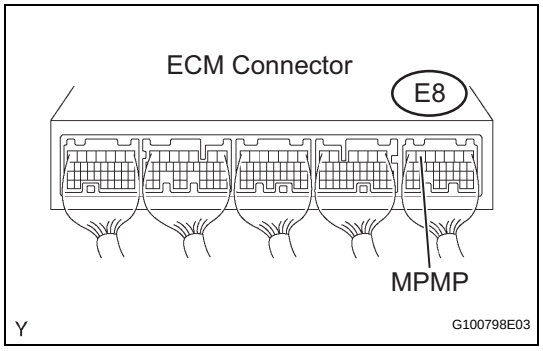

(a) Connect an intelligent tester to the DLC3.
(b) Turn the ignition switch ON and turn the tester ON.
(c) Select the following menu items: DIAGNOSIS / ENHANCED OBD II / ACTIVE TEST / VACUUM PUMP.
(d) Measure the voltage between terminal MPMP of the ECM connector and the body ground when the leak detection pump is turned ON and OFF using the tester.

Result

Test Results	Suspected Trouble Areas	Proceed To
Between 0 V and 3 V when OFF Between 9 V and 14 V when ON	ECM normal	A
Between 9 V and 14 V when OFF Between 0 V and 3 V when ON	ECM	B

B → Go to step 35

A

24 CHECK HARNESS AND CONNECTOR (CANISTER PUMP MODULE - ECM)

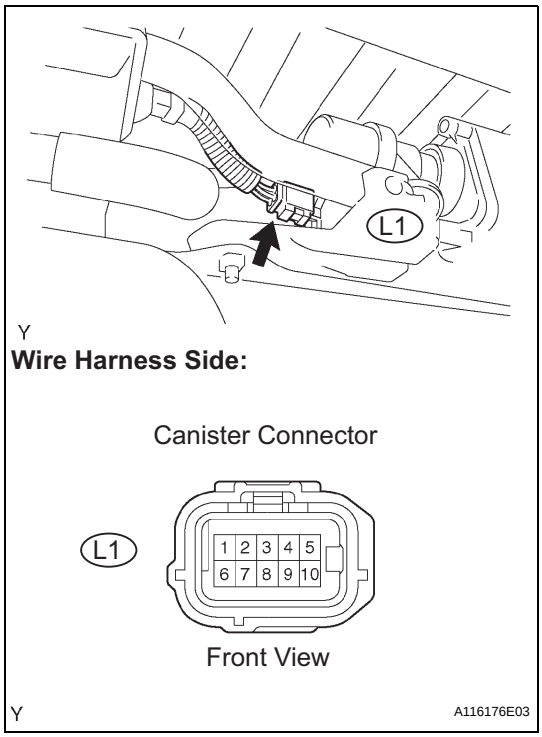

(a) Connect an intelligent tester to the DLC3.
(b) Turn the ignition switch OFF.
(c) Disconnect the L1 canister connector.
(d) Turn the ignition switch ON and turn the tester ON.
(e) On the intelligent tester, select the following menu items: DIAGNOSIS / ENHANCED OBD II / ACTIVE TEST / VACUUM PUMP.
(f) Turn the leak detection pump ON.
(g) Measure the voltage between terminal 1 of the canister connector and the body ground.

Result

Test Results	Suspected Trouble Areas	Proceed To
Between 9 V and 14 V	Normal	A
Between 0 V and 3 V	Wire harness between ECM and leak detection pump	B

(h) Reconnect the canister connector.

B → Go to step 32

A

25 CHECK HARNESS AND CONNECTOR (CANISTER PUMP MODULE - GROUND)

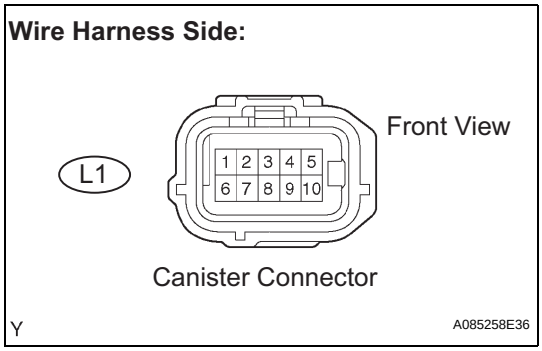

(a) Disconnect the L1 canister connector.
(b) Turn the ignition switch OFF.
(c) Check the resistance between terminal 6 of the canister connector and the body ground.

Result

Test Results	Suspected Trouble Areas	Proceed To
Below 1 Ω	Leak detection pump	A
10 kΩ or more	Wire harness between leak detection pump and body ground	B

(d) Reconnect the canister connector.

A	Go to step 30
B	Go to step 32

26 INSPECT THROTTLE W/MOTOR BODY ASSEMBLY (EVAP PURGE PORT)

ES

(a) Stop the engine.
(b) Disconnect the EVAP hose from the throttle body.
(c) Start the engine.
(d) Use your finger to confirm that the port of the throttle body has suction.

Result

Test Results	Suspected Trouble Areas	Proceed To
Suction applied	EVAP hose between throttle body and purge VSV	A
No suction	Throttle body	B

(e) Reconnect the EVAP hose.

A	Go to step 33
B	Go to step 34

27 CORRECTLY REINSTALL OR REPLACE FUEL CAP ASSEMBLY

HINT:
- When reinstalling the fuel cap, tighten it until a few click sounds are heard.
- When replacing the fuel cap, use a fuel cap that meets OEM specifications, and install it until a few click sounds are heard.

NEXT	Go to step 37

28 REPLACE FUEL CAP ASSEMBLY

HINT:
When installing the fuel cap, tighten it until a few click sounds are heard.

NEXT	Go to step 37

29 REPAIR LOCATE EVAP LEAK

(a) Reinstall the fuel cap.
(b) Disconnect the vent hose.

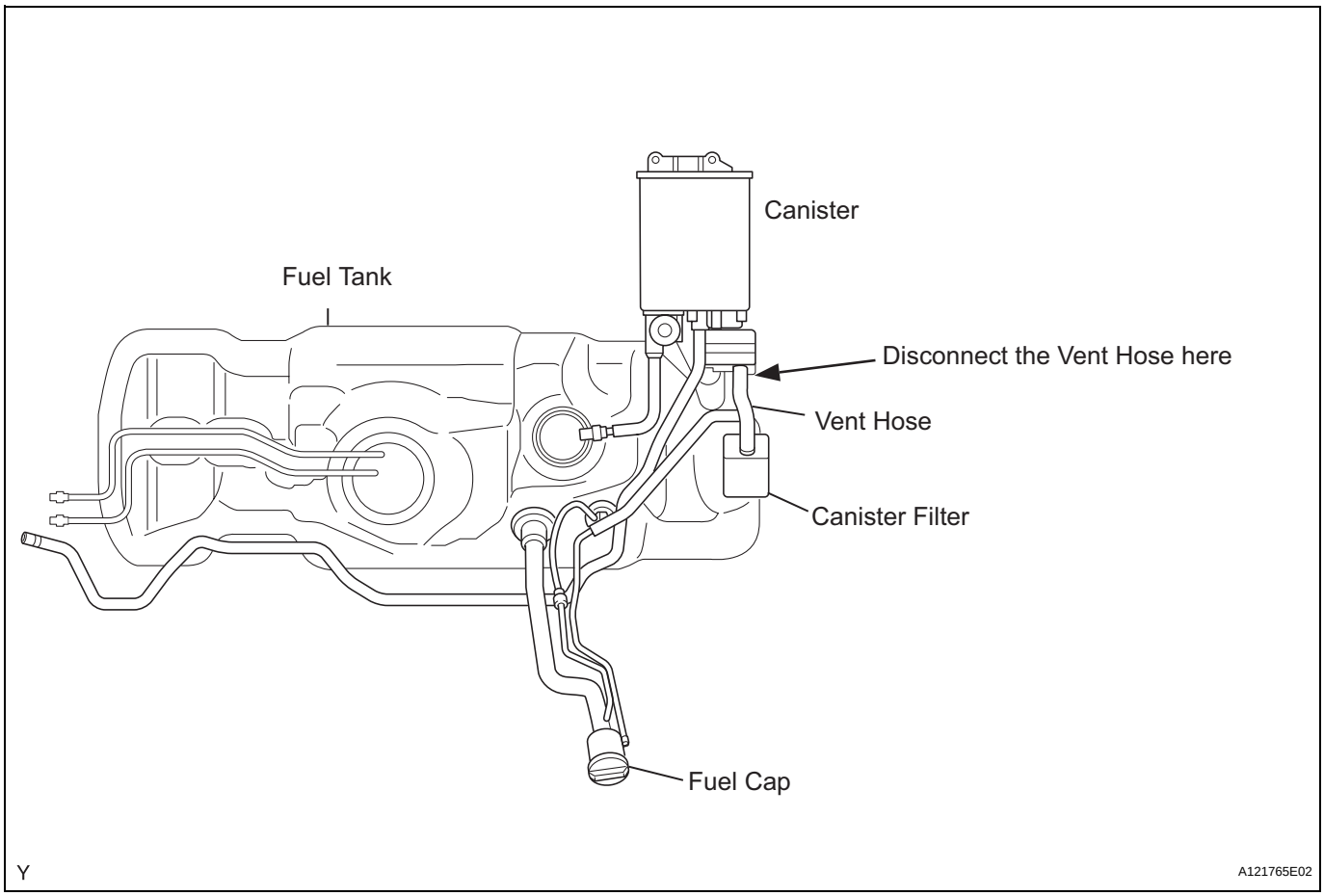

(c) Connect the EVAP pressure tester tool to the canister with the adapter.

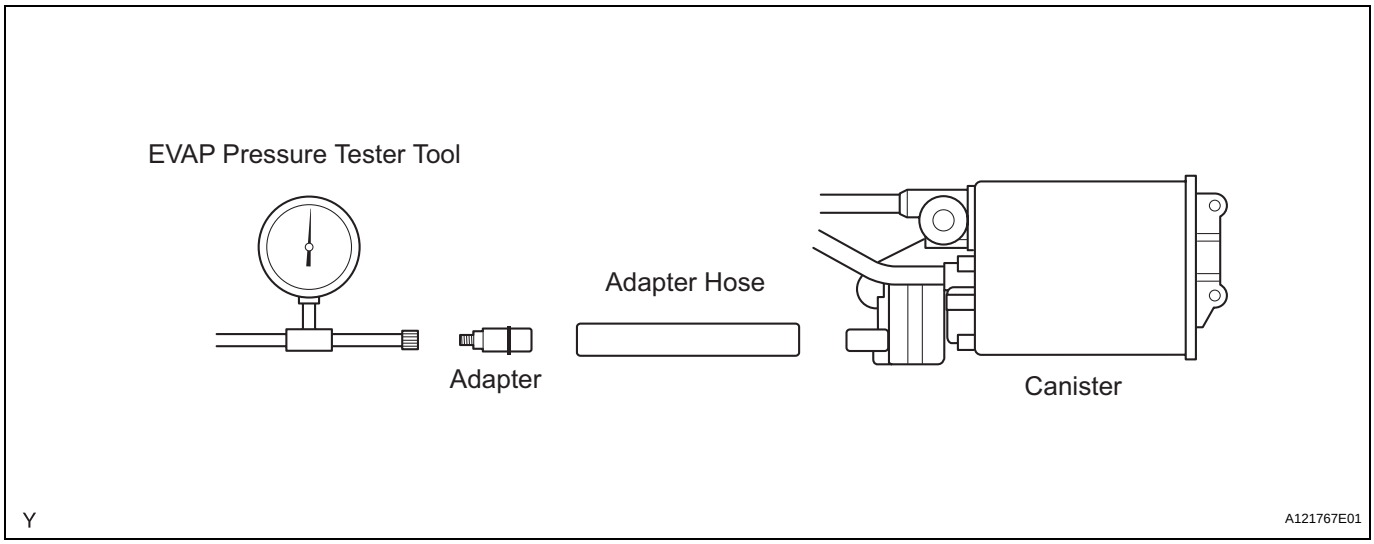

(d) Pressurize the EVAP system to 3.2 to 3.7 kPa (24 to 28 mmHg).
(e) Apply soapy water to the piping and connecting parts of the EVAP system.
(f) Look for areas where bubbles appear. This indicates leak point.
(g) Repair or replace the leak point.

HINT:
Disconnect the hose between the canister and the fuel tank from the canister. Block the canister side and conduct an inspection. In this way, the fuel tank can be excluded as an area suspected of causing fuel leaks.

NEXT	Go to step 37

30	REPLACE CANISTER ASSEMBLY

(a) Replace the canister assembly (See page EC-9).

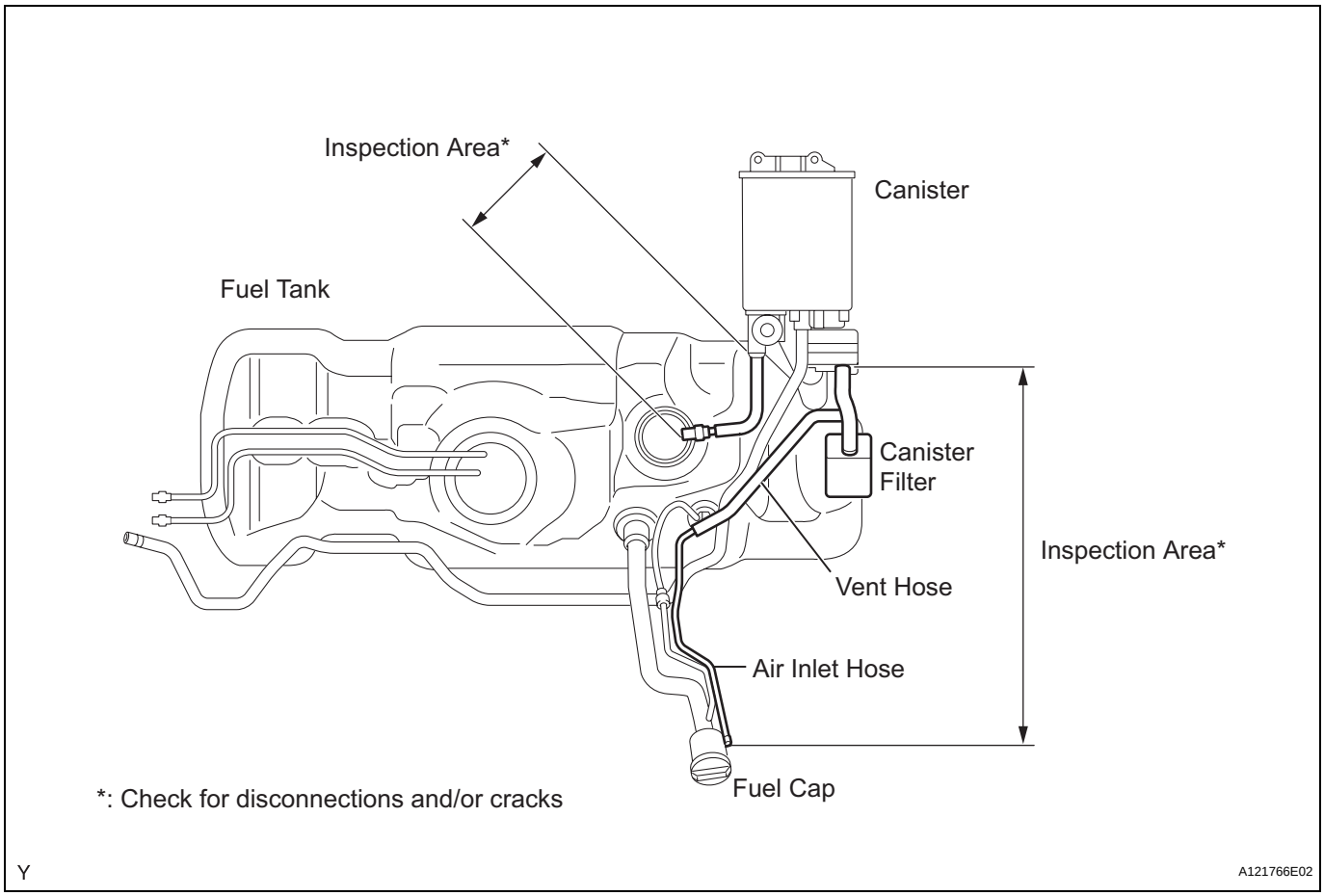

NOTICE:
When replacing the canister, check the canister pump module interior and related pipes for water, fuel or other liquids. If liquids are present, check for disconnections and/or cracks in the following: 1) the pipe from the air inlet port to the canister pump module: 2) the canister filter; and 3) the fuel tank vent hose.

NEXT	Go to step 37

31	REPLACE VACUUM SWITCHING VALVE ASSEMBLY NO.1 (PURGE VSV)

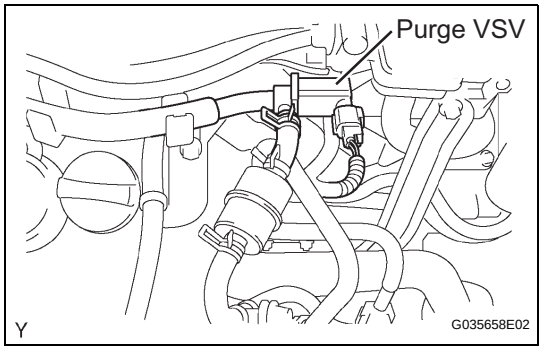

(a) Disconnect the connector and the hoses from the purge VSV.
(b) Remove the purge VSV.
(c) Install a new purge VSV.
(d) Reconnect the connector and hoses.

NEXT → Go to step 37

ES

32	REPAIR OR REPLACE HARNESS AND CONNECTOR

NEXT → Go to step 37

33	REPLACE EVAP HOSE (THROTTLE BODY - PURGE VSV)

NEXT → Go to step 37

34	INSPECT THROTTLE W/MOTOR BODY ASSEMBLY

(a) Remove the throttle body (See page ES-414).
(b) Check that the EVAP purge port of the throttle body is not clogged. If necessary, replace the throttle body.

NEXT → Go to step 37

35	REPLACE ECM

(a) Replace the ECM (See page ES-428).

NEXT → Go to step 37

36	REPAIR OR REPLACE PARTS AND COMPONENTS INDICATED BY OUTPUT DTCS

(a) Repair the malfunctioning areas indicated by the DTCs that had been confirmed when the vehicle was brought in.

NEXT → Go to step 37

37	PERFORM EVAP SYSTEM CHECK (AUTO OPERATION)

NOTICE:

- **In the EVAP SYSTEM CHECK (AUTO OPERATION), the series of 5 EVAP SYSTEM CHECK steps is performed automatically. It takes a maximum of approximately 18 minutes.**
- **Do not perform the EVAP SYSTEM CHECK when the fuel tank is more than 90 % full because the cut-off valve may be closed and making the leak check of the fuel tank unavailable.**
- **Do not run the engine in this step.**
- **When the temperature of the fuel is 35°C (95°F) or more, a large amount of vapor forms and any check results become inaccurate. When performing an EVAP SYSTEM CHECK, keep the temperature below 35°C (95°F).**

(a) Clear DTCs (See page ES-38).

(b) Select the following menu items: DIAGNOSIS / ENHANCED OBD II / SYSTEM CHECK / EVAP SYS CHECK / AUTO OPERATION.

(c) After the SYSTEM CHECK is completed, check for pending DTCs by selecting the following menu items: DIAGNOSIS / ENHANCED OBD II / DTC INFO / PENDING CODES.
HINT:
If no pending DTC is found, the repair has been successfully completed.

NEXT

COMPLETED

CONFIRMATION DRIVING PATTERN

HINT:
After a repair, check the Monitor Status by performing the Key-Off Monitor Confirmation and Purge Flow Monitor Confirmation described below.

1. Key-off monitor confirmation

(a) Preconditions
The monitor will not run unless:
- The vehicle has been driven for 10 minutes or more (in a city area or on a free way)
- The fuel tank is less than 90 % full
- The altitude is less than 8,000 ft (2,400 m)
- The Engine Coolant Temperature (ECT) is between 4.4°C to 35°C (40°F to 95°F)
- The Intake Air Temperature (IAT) is between 4.4°C to 35°C (40°F to 95°F)
- The vehicle remains stationary (the vehicle speed is 0 mph [0 km/h])

(b) Monitor Conditions
1. Allow the engine to idle for at least 5 minutes.
2. Turn the ignition switch OFF and wait for 6 hours (8 or 10.5 hours).
HINT:
Do not start the engine until checking MONITOR STATUS. If the engine is started, the steps described above must be repeated.

(c) Monitor Status
1. Connect an intelligent tester to the DLC3.
2. Turn the ignition switch ON and turn the tester ON.
3. Select the following menu items: DIAGNOSIS / ENHANCED OBD II / MONITOR STATUS.
4. Check the Monitor Status displayed on the tester.
HINT:
If INCMP is displayed, the monitor is not completed. Make sure that the preconditions have been met, and perform the Monitor Conditions again.

2. Purge flow monitor confirmation (P0441)

HINT:
Perform this monitor confirmation after the Key-Off Monitor Confirmation shows COMPL (complete).

(a) Preconditions
The monitor will not run unless:
- The vehicle has been driven for 10 minutes or more (in a city area or on a free way)
- The ECT is between 4.4°C to 35°C (40°F to 95°F)
- The IAT is between 4.4°C to 35°C (40°F to 95°F)

(b) Monitor Conditions
1. Release the pressure from the fuel tank by removing and reinstalling the fuel cap.
2. Warm the engine up until the ECT reaches more than 75°C (167°F).
3. Increase the engine speed to 3,000 rpm once.
4. Allow the engine to idle and turn A/C ON for 1 minute.

(c) Monitor Status
1. Turn the ignition switch OFF (where ON or the engine is running).
2. Connect an intelligent tester to the DLC3.
3. Turn the ignition switch ON and turn the tester ON.
4. Select the following menu items: DIAGNOSIS / ENHANCED OBD II / MONITOR STATUS.
5. Check the Monitor Status displayed on the tester.
HINT:
If INCMP is displayed, the monitor is not completed. Make sure that the preconditions have been met, and perform the Monitor Conditions again.

MONITOR RESULT

Detailed information on Checking Monitor Status (See page ES-38).

The test value and test limit information are described as shown in the following table. This information is included under MONITOR RESULT in the emissions-related DTC sections:
- MID (Monitor Identification Data) is assigned to each emissions-related component.
- TID (Test Identification Data) is assigned to each test value.
- Scaling is used to calculate the test value indicated on generic OBD II scan tools.

Thermostat

MID	TID	Scaling	Description of Test Value	Minimum Test Limit	Maximum Test Limit
$3D	$C9	Multiply by 0.001 [kPa]	Test value for small leak (P0456) Refer to pressure D*	Minimum test limit for small leak	Maximum test limit for small leak
$3D	$CA	Multiply by 0.001 [kPa]	Test value for gross leak (P0455) Refer to pressure E*	Minimum test limit for gross leak	Maximum test limit for gross leak
$3D	$CB	Multiply by 0.001 [kPa]	Test value for leak detection pump stuck OFF (P2401) Refer to pressure A*	Minimum test limit for leak detection pump stuck OFF	Maximum test limit for leak detection pump stuck OFF
$3D	$CD	Multiply by 0.001 [kPa]	Test value for leak detection pump stuck ON (P2402) Refer to pressure A*	Minimum test limit for leak detection pump stuck ON	Maximum test limit for leak detection pump stuck ON
$3D	$CE	Multiply by 0.001 [kPa]	Test value for vent valve stuck OFF (vent) (P2420) Refer to pressure C*	Minimum test limit for vent valve stuck ON	Maximum test limit for vent valve stuck ON

MID	TID	Scaling	Description of Test Value	Minimum Test Limit	Maximum Test Limit
$3D	$CF	Multiply by 0.001 [kPa]	Test value for vent valve stuck ON (P2419) Refer to pressure A*	Minimum test limit for vent valve stuck OFF	Maximum test limit for vent valve stuck OFF
$3D	$D0	Multiply by 0.001 [kPa]	Test value for reference orifice low flow (P043E) Refer to pressure B*	Minimum test limit for reference orifice low flow	Maximum test limit for reference orifice low flow
$3D	$D1	Multiply by 0.001 [kPa]	Test value for reference orifice high flow (P043F) Refer to pressure A*	Minimum test limit for reference orifice high flow	Maximum test limit for reference orifice high flow
$3D	$D4	Multiply by 0.001 [kPa]	Test value for purge VSV stuck closed (P0441) Refer to pressure F*	Minimum test limit for purge VSV stuck closed	Maximum test limit for purge VSV stuck closed
$3D	$D5	Multiply by 0.001 [kPa]	Test value for purge VSV stuck open (P0441) Refer to pressure E*	Minimum test limit for purge VSV stuck open	Maximum test limit for purge VSV stuck open
$3D	$D7	Multiply by 0.001 [kPa]	Test value for purge flow (P0441) Refer to pressure G*	Minimum test limit for purge flow	Maximum test limit for purge flow

* Pressures A to G are indicated as shown in the diagram below.

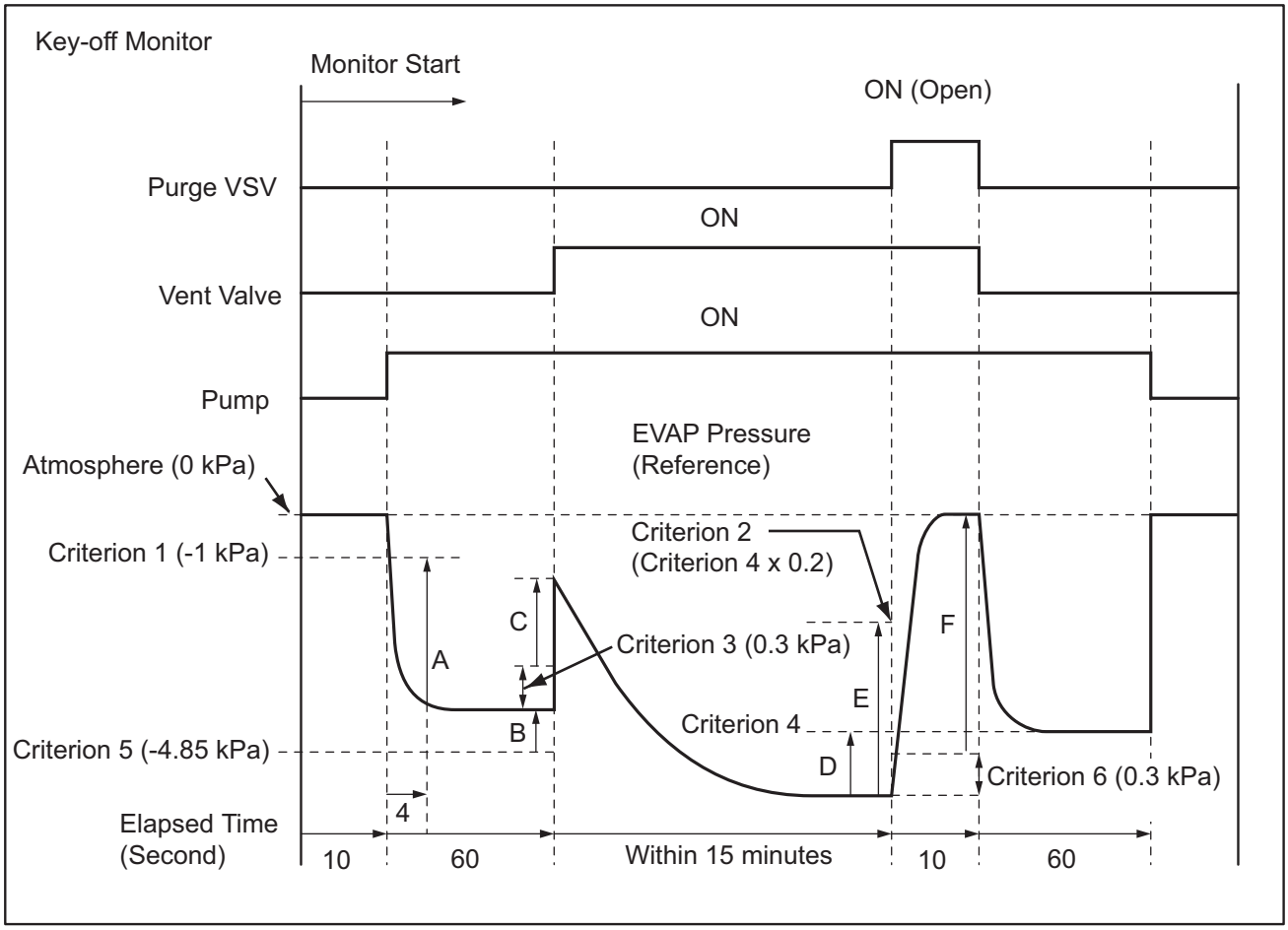

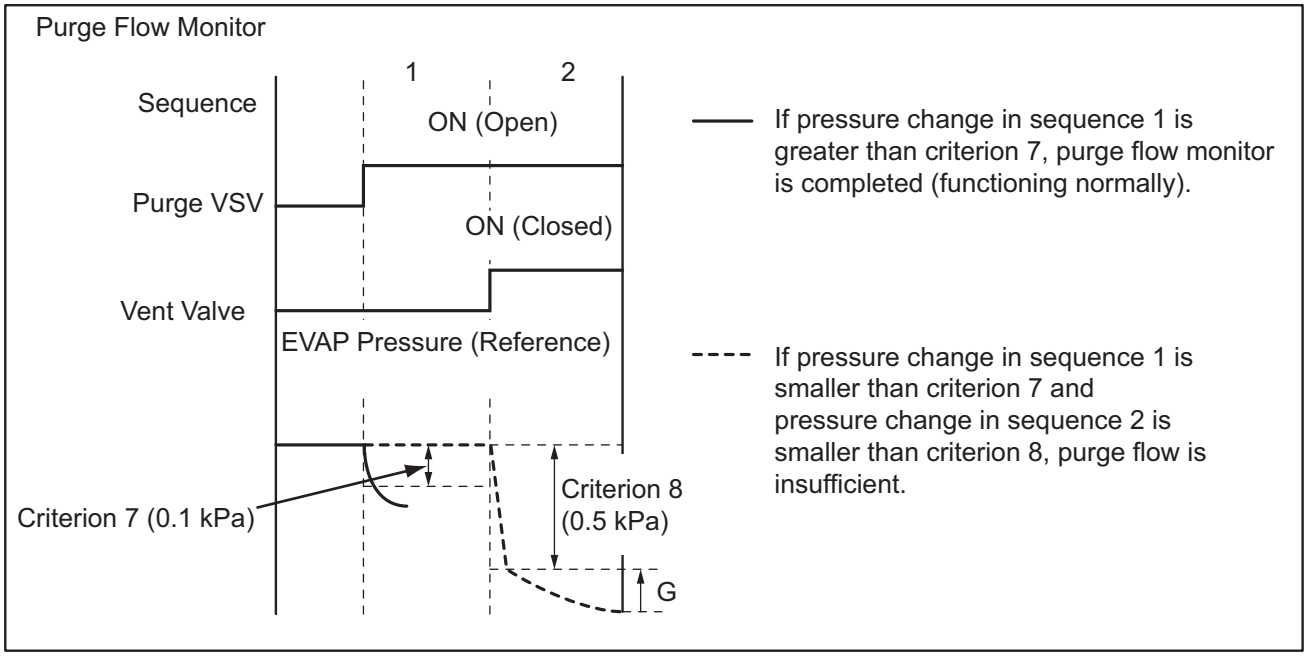

Y

A106747E08

ECM Power Source Circuit

DESCRIPTION

When the ignition switch is turned ON, the battery voltage is applied to terminal IGSW of the ECM. The ECM MREL output signal causes a current to flow to the coil, closing the contacts of the EFI relay and supplying power to terminal +B of the ECM.
If the ignition switch is turned OFF, the ECM holds the EFI relay ON for a maximum of 2 seconds to allow for the initial setting of the throttle valve.

WIRING DIAGRAM

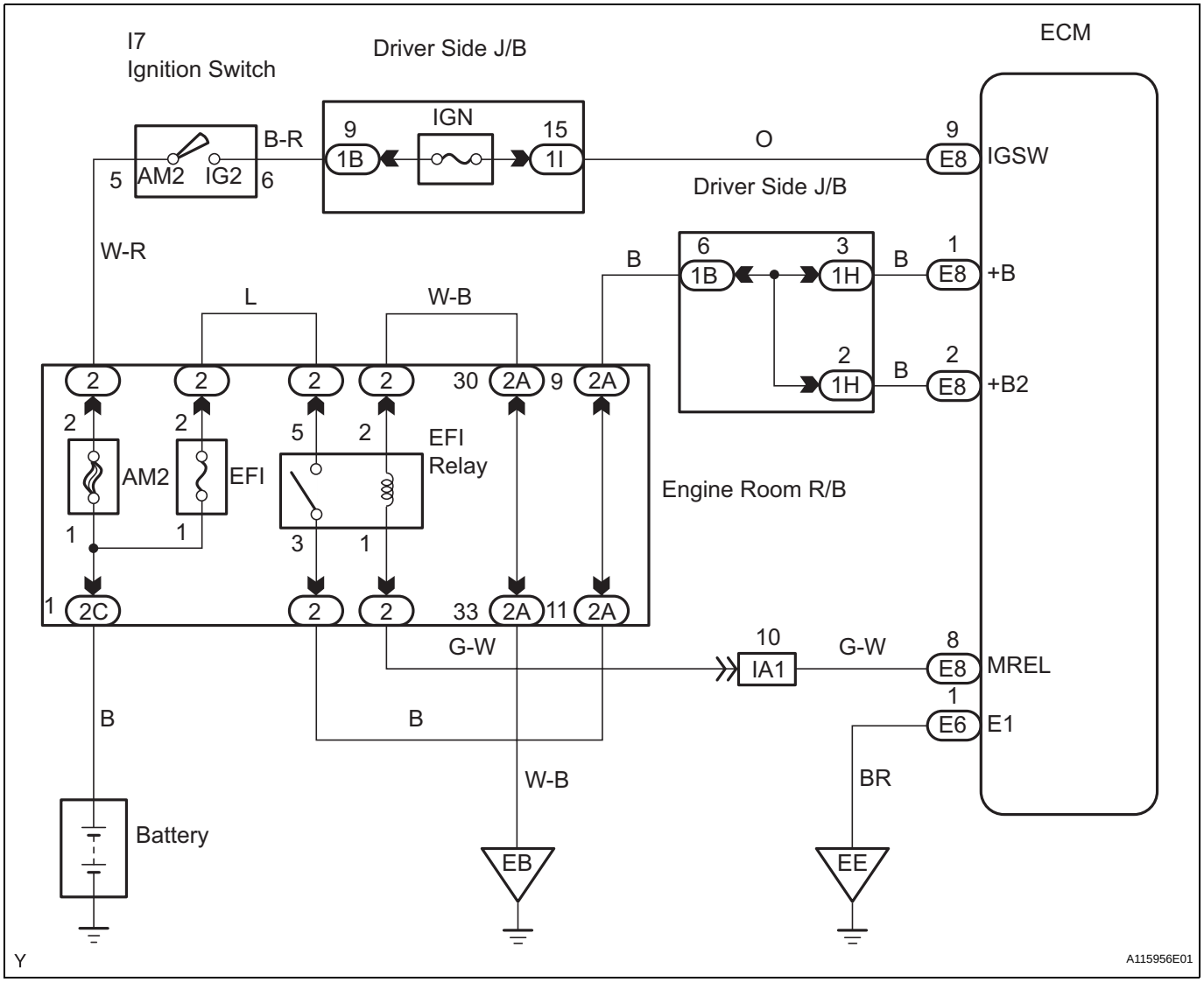

1 **INSPECT ECM (+B VOLTAGE)**

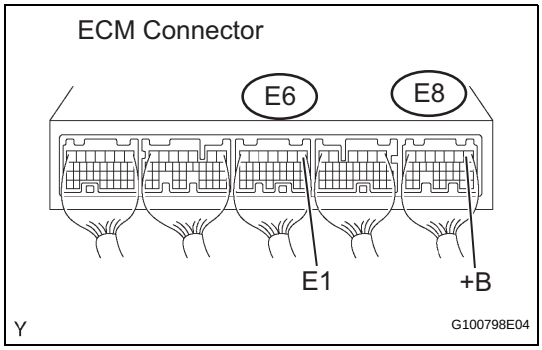

(a) Turn the ignition switch ON.
(b) Measure the voltage between the terminals of the E8 and E6 ECM connectors.
Standard Voltage

Tester Connections	Specified Conditions
+B (E8-1) - E1 (E6-1)	9 to 14 V

OK → **PROCEED TO NEXT CIRCUIT INSPECTION SHOWN ON PROBLEM SYMPTOMS TABLE**

NG

2 **CHECK HARNESS AND CONNECTOR (ECM - BODY GROUND)**

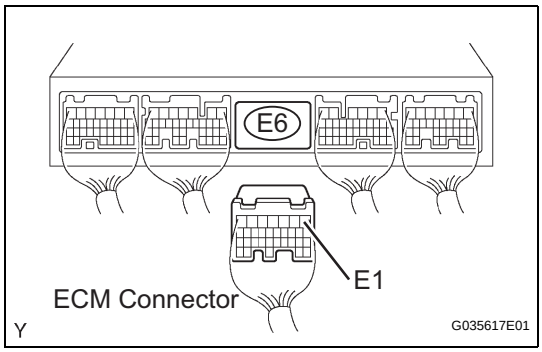

(a) Disconnect the E6 ECM connector.
(b) Check the resistance.
Standard Resistance (Check for open)

Tester Connections	Specified Conditions
E1 (E6-1) - Body ground	Below 1 Ω

(c) Reconnect the ECM connector.

NG → **REPAIR OR REPLACE HARNESS OR CONNECTOR**

OK

3 **INSPECT ECM (IGSW VOLTAGE)**

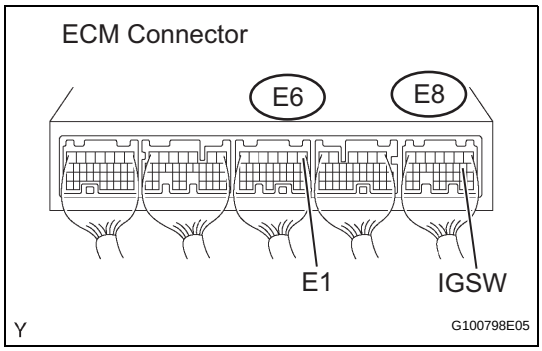

(a) Turn the ignition switch ON.
(b) Measure the voltage between the terminals of the E8 and E6 ECM connectors.
Standard Voltage

Tester Connections	Specified Conditions
IGSW (E8-9) - E1 (E6-1)	9 to 14 V

OK → **Go to step 6**

NG

ES

4 CHECK FUSE (IGN FUSE)

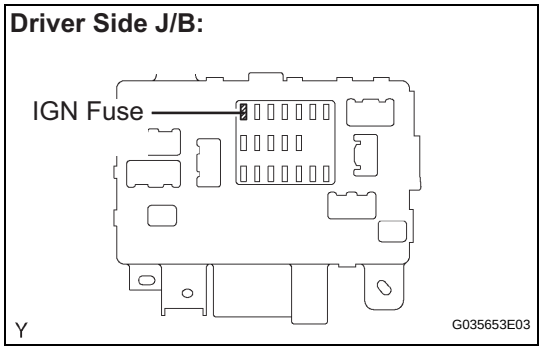

(a) Remove the IGN fuse from the driver side J/B.
(b) Check the IGN fuse resistance.
Standard Resistance:
Below 1 Ω
(c) Reinstall the IGN fuse.

NG → **CHECK FOR SHORT IN ALL HARNESSES AND COMPONENTS CONNECTED TO FUSE**

OK

5 INSPECT IGNITION OR STARTER SWITCH ASSEMBLY

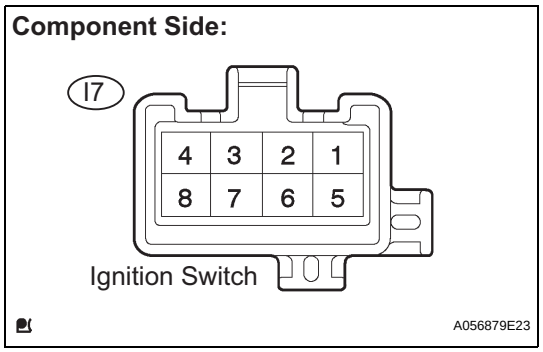

(a) Disconnect the I7 ignition switch connector.
(b) Check the resistance.
Standard Resistance

Ignition Switch Positions	Tester Connections	Specified Conditions
LOCK	All Terminals	10 kΩ or higher
ACC	2-4	Below 1 Ω
ON	1-2, 1-4, 5-6	
START	1-3, 1-4, 3-4, 5-6, 5-7, 6-7	

(c) Reconnect the ignition switch connector.

NG → **REPLACE IGNITION OR STARTER SWITCH ASSEMBLY**

OK

CHECK AND REPLACE HARNESS AND CONNECTOR (BATTERY - IGNITION SWITCH, IGNITION SWITCH - ECM)

6 INSPECT ECM (MREL VOLTAGE)

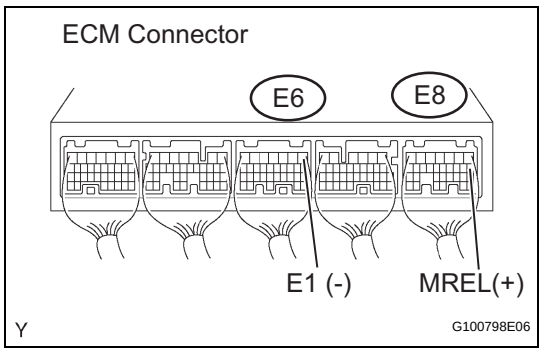

(a) Turn the ignition switch ON.
(b) Measure the voltage between the terminals of the E6 and E8 ECM connectors.
Standard Voltage

Tester Connections	Specified Conditions
MREL (E8-8) - E1 (E6-1)	9 to 14 V

NG → **REPLACE ECM**

ES

OK

7	CHECK FUSE (EFI FUSE)

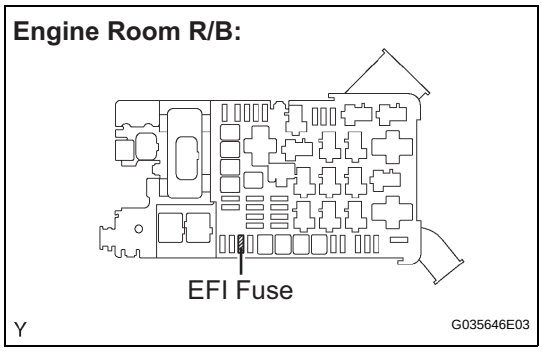

(a) Remove the EFI fuse from the engine room R/B.
(b) Check the EFI fuse resistance.
Standard Resistance:
Below 1 Ω
(c) Reinstall the EFI fuse.

NG → **CHECK FOR SHORT IN ALL HARNESSES AND COMPONENTS CONNECTED TO FUSE**

ES

OK

8	INSPECT EFI RELAY

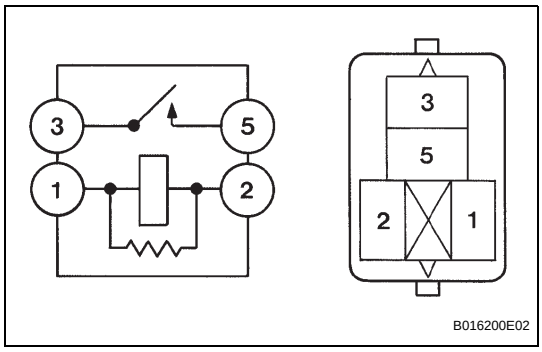

(a) Remove the EFI relay from the engine room R/B.
(b) Check the EFI relay resistance.
Standard Resistance

Tester Connections	Specified Conditions
3 - 5	10 kΩ or higher
3 - 5	Below 1 Ω (when battery voltage applied to terminals 1 and 2)

(c) Reinstall the EFI relay.

NG → **REPLACE EFI RELAY**

OK

9	CHECK HARNESS AND CONNECTOR (EFI RELAY- ECM, EFI RELAY - BODY GROUND)

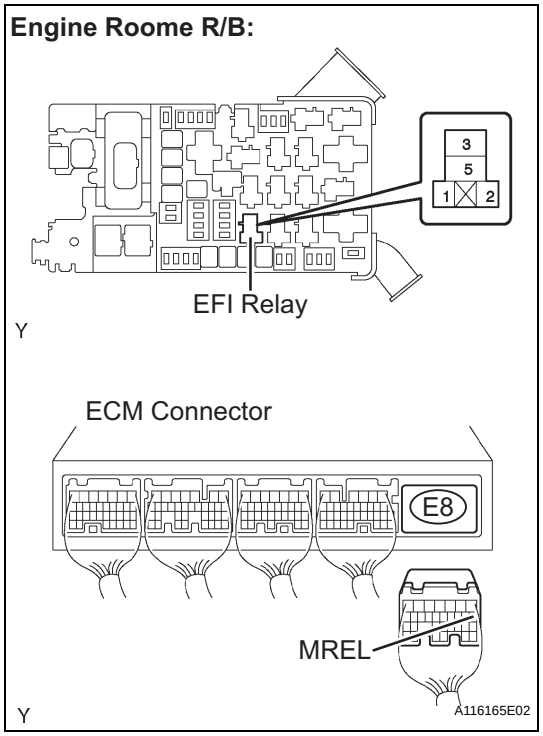

(a) Check the harness and connector between the EFI relay and ECM.
  (1) Remove the EFI relay from the engine room R/B.
  (2) Disconnect the E8 ECM connector.
  (3) Check the resistance.

Standard Resistance (Check for open)

Tester Connections	Specified Conditions
EFI relay (1) - MREL (E8-8)	Below 1 Ω

Standard Resistance (Check for short)

Tester Connections	Specified Conditions
EFI relay (1) or MREL (E8-8) - Body ground	10 kΩ or higher

  (4) Reinstall the EFI relay.
  (5) Reconnect the ECM connector.

(b) Check the harness and connector between the EFI relay and body ground.
  (1) Remove the EFI relay from the engine room R/B.
  (2) Check the resistance.

Standard Resistance (Check for open)

Tester Connections	Specified Conditions
EFI relay (2) - Body ground	Below 1 Ω

  (3) Reinstall the EFI relay.

NG → **REPAIR OR REPLACE HARNESS OR CONNECTOR**

OK

CHECK AND REPAIR HARNESS AND CONNECTOR (TERMINAL +B OF ECM - BATTERY POSITIVE TERMINAL)

ES

VC Output Circuit

DESCRIPTION

The ECM constantly generates 5 V power from the battery voltage supplied to the +B (BATT) terminal to operate the microprocessor. The ECM also provides this power to the sensors through the VC output circuit.

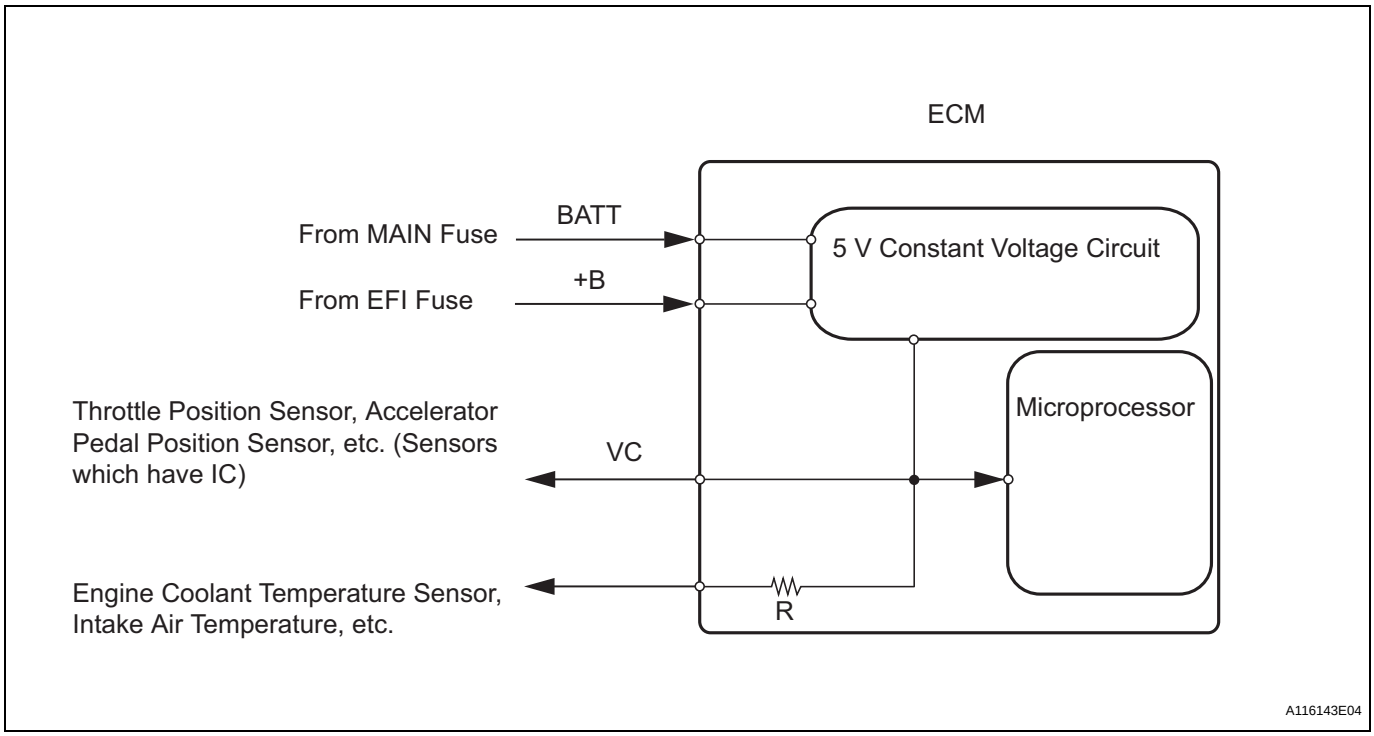

When the VC circuit is short-circuited, the microprocessor in the ECM and sensors that are supplied power through the VC circuit are inactivated because the power is not supplied from the VC circuit. Under this condition, the system does not start up and the MIL does not illuminate even if the system malfunctions.

HINT:

Under normal conditions, the MIL is illuminated for several seconds when the ignition switch is first turned ON. The MIL goes off when the engine is started.

WIRING DIAGRAM

Refer to the following pages.

- Throttle position sensor circuit (See page ES-112).
- Canister pump module circuit (See page ES-351).
- Accelerator pedal circuit (See page ES-293).

1	**CHECK MIL**

(a) Check that the Malfunction Indicator Lamp (MIL) lights up when turning the ignition switch ON.

OK:

MIL lights up

OK	**SYSTEM OK**

NG

2 CHECK CONNECTION BETWEEN INTELLIGENT TESTER AND ECM

(a) Connect an intelligent tester to the DLC3.
(b) Turn the ignition switch ON and turn the tester ON.
(c) Check the communication between an intelligent tester and ECM.

Result

Result	Proceed to
Communication is possible	A
Communication is not possible	B

A → **GO TO MIL CIRCUIT**

B

3 CHECK MIL (THROTTLE BODY)

(a) Disconnect the throttle body connector.
(b) Turn the ignition switch ON.
(c) Check the MIL.

Result

Result	Proceed to
MIL illuminates	A
MIL does not illuminate	B

(d) Reconnect the throttle body connector.

A → **REPLACE THROTTLE BODY**

B

4 CHECK MIL (ACCELERATOR PEDAL)

(a) Disconnect the accelerator pedal connector.
(b) Turn the ignition switch ON.
(c) Check the MIL.

Result

Result	Proceed to
MIL illuminates	A
MIL does not illuminate	B

(d) Reconnect the accelerator pedal connector.

A → **REPLACE ACCELERATOR PEDAL ASSEMBLY**

B

ES

5	CHECK MIL (CANISTER PUMP MODULE)

(a) Disconnect the canister pump module connector.
(b) Turn the ignition switch ON.
(c) Check the MIL.

Result

Result	Proceed to
MIL illuminates	A
MIL does not illuminate	B

(d) Reconnect the canister pump module connector.

ES

A → **REPLACE CHARCOAL CANISTER ASSEMBLY**

B

6	CHECK HARNESS AND CONNECTOR

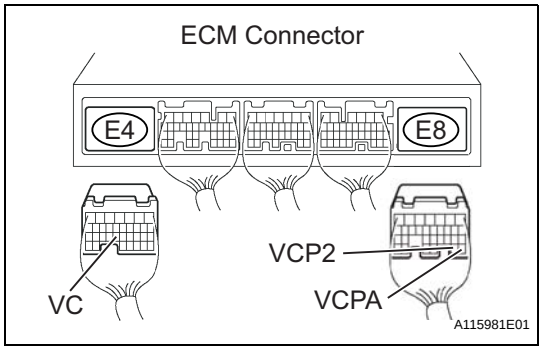

(a) Disconnect the throttle body connector.
(b) Disconnect the accelerator pedal connector.
(c) Disconnect the canister pump module connector.
(d) Disconnect the ECM connector.
(e) Measure the resistance of the wire harness side connector.

Standard Resistance (check for short)

Tester Connection	Specified Condition
VC (E4-23) - Body ground	10 kΩ or higher
VCPA (E8-26) - Body ground	
VCP2 (E8-27) - Body ground	

(f) Reconnect the throttle body connector.
(g) Reconnect the accelerator pedal connector.
(h) Reconnect the canister pump module connector.
(i) Reconnect the ECM connector.

NG → **REPAIR OR REPLACE HARNESS OR CONNECTOR**

OK

REPLACE ECM

Fuel Pump Control Circuit

DESCRIPTION

Refer to DTC P0230 (See page ES-158).

WIRING DIAGRAM

Refer to DTC P0230 (See page ES-160).

1	CHECK FUEL PUMP OPERATION

(a) Check if there is pressure in the fuel inlet hose.
HINT:
If there is fuel pressure, you will hear the sound of fuel flowing.

OK → **Go to step 10**

NG

2	PERFORM ACTIVE TEST USING INTELLIGENT TESTER (OPERATE CIRCUIT OPENING RELAY)

(a) Connect an intelligent tester to the DLC3.
(b) Turn the ignition switch ON and turn the tester ON.
(c) Select the following menu items: DIAGNOSIS / ENHANCED OBD II / ACTIVE TEST / FUEL PUMP/ SPD.
(d) Check whether operating sounds can be heard while operating the relay using the tester.
OK:
Operating sounds can be heard from relay.

OK → **Go to step 5**

NG

3	INSPECT CIRCUIT OPENING RELAY

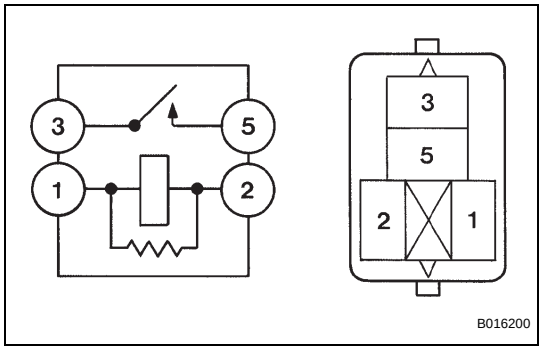

(a) Remove the circuit opening relay from the engine room R/B.
(b) Check the circuit opening relay resistance.
Standard Resistance

Tester Connections	Specified Conditions
3 - 5	10 kΩ or higher
3 - 5	Below 1 Ω (when battery voltage applied to terminals 1 and 2)

(c) Reinstall the circuit opening relay.

NG → **REPLACE CIRCUIT OPENING RELAY**

OK

4	INSPECT ECM (FC VOLTAGE)

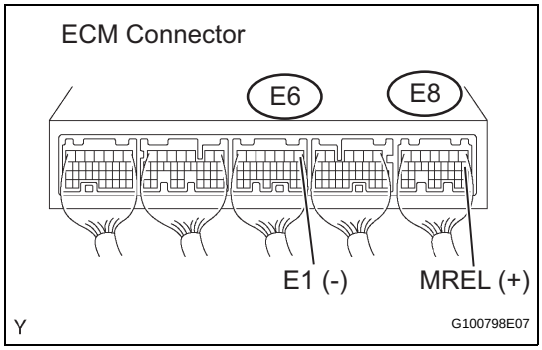

(a) Turn the ignition switch ON.
(b) Measure the voltage between the terminals of the E8 and E6 ECM connectors.

Standard Voltage

Tester Connections	Specified Conditions
FC (E8-10) - E1 (E6-1)	9 to 14 V

OK → REPLACE ECM

NG

CHECK AND REPLACE HARNESS AND CONNECTOR (ECM - CIRCUIT OPENING RELAY - IGNITION)

5	INSPECT ECM POWER SOURCE CIRCUIT

NG → REPAIR OR REPLACE HARNESS OR CONNECTOR

OK

6	INSPECT FUEL PUMP RELAY ASSEMBLY

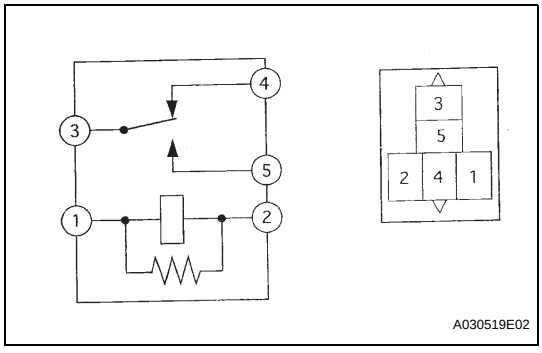

(a) Remove the fuel pump relay from the engine room R/B.
(b) Check the fuel pump relay resistance.

Standard Resistance

Tester Connections	Specified Conditions
3 - 4	Below 1 Ω
3 - 5	10 kΩ or higher
3 - 4	10 kΩ or higher (when battery voltage applied to terminals 1 and 2)
3 - 5	Below 1 Ω (when battery voltage applied to terminals 1 and 2)

(c) Reinstall the fuel pump relay.

NG → REPLACE FUEL PUMP RELAY ASSEMBLY

OK

7	INSPECT FUEL PUMP ASSEMBLY

Component Side:

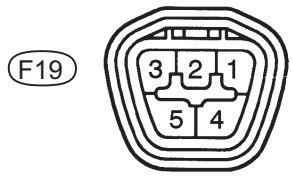

Fuel Pump

A074356E09

(a) Inspect the fuel pump resistance.
  (1) Measure the resistance between terminals 4 and 5.
  Standard Resistance:
  0.2 to 3.0 Ω at 20°C (68°F)

(b) Inspect the fuel pump operation.
  (1) Apply battery voltage to both terminals. Check that the pump operates.
  NOTICE:
  - **These tests must be done quickly (within 10 seconds) to prevent the coil from burning out.**
  - **Keep the fuel pump as far away from the battery as possible.**
  - **Always do the switching at the battery side.**

NG → **REPLACE FUEL PUMP ASSEMBLY**

OK

8	CHECK HARNESS AND CONNECTOR (FUEL PUMP - FUEL PUMP RELAY, FUEL PUMP - BODY GROUND)

Wire Harness Side:

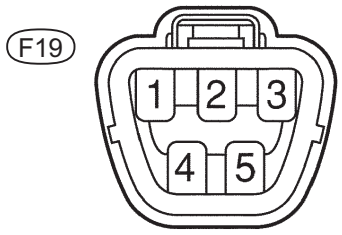

P

Fuel Pump Connector

Engine Room R/B:

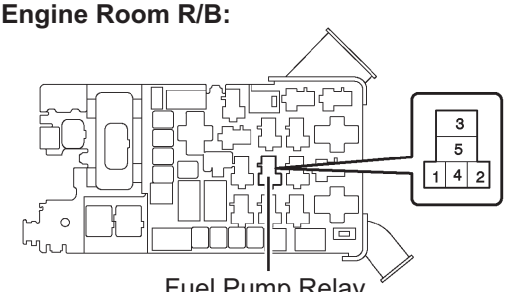

Fuel Pump Relay

Y

A116166E01

(a) Check the harness and connector between the fuel pump and fuel pump relay.
  (1) Disconnect the F19 fuel pump connector.
  (2) Remove the fuel pump relay from the engine room R/B.
  (3) Check the resistance.
  Standard Resistance (Check for open)

Tester Connections	Specified Conditions
Fuel pump (F19-4) - Fuel pump relay (4)	Below 1 Ω

Standard Resistance (Check for short)

Tester Connections	Specified Conditions
Fuel pump (F19-4) or Fuel pump relay (4) - Body ground	10 kΩ or higher

  (4) Reconnect the fuel pump connector.
  (5) Reinstall the fuel pump relay.

(b) Check the harness and connector between the fuel pump and body ground.
  (1) Disconnect the fuel pump connector.
  (2) Check the resistance.
  Standard Resistance (Check for open)

Tester Connections	Specified Conditions
Fuel pump (F19-5) - Body ground	Below 1 Ω

  (3) Reconnect the fuel pump connector.

NG → **REPAIR OR REPLACE HARNESS OR CONNECTOR**

OK

9	CHECK HARNESS AND CONNECTOR (CIRCUIT OPENING RELAY - FUEL PUMP RELAY)

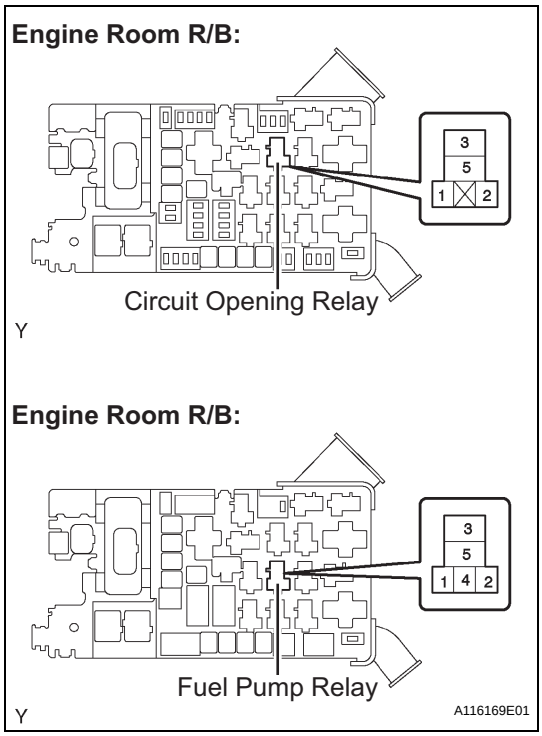

(a) Remove the circuit opening relay from the engine room R/B.
(b) Remove the fuel pump relay from the engine room R/B.
(c) Check the resistance.

Standard Resistance (Check for open)

Tester Connections	Specified Conditions
Circuit opening relay (3) - Fuel pump relay (3)	Below 1 Ω

Standard Resistance (Check for short)

Tester Connections	Specified Conditions
Circuit opening relay (3) or Fuel pump relay (3) - Body ground	10 kΩ or higher

(d) Reinstall the circuit opening relay.
(e) Reinstall the fuel pump relay.

NG → REPAIR OR REPLACE HARNESS OR CONNECTOR

OK

CHECK AND REPAIR HARNESS AND CONNECTOR (EFI RELAY - CIRCUIT OPENING RELAY)

10	INSPECT FUEL PUMP RELAY ASSEMBLY

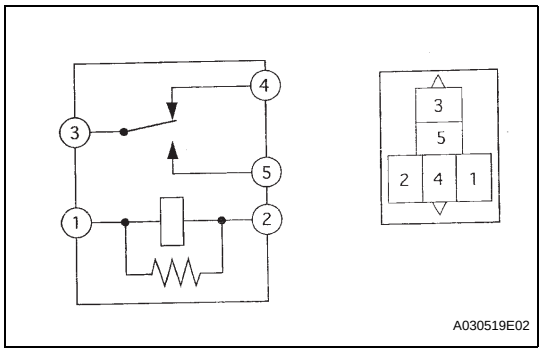

(a) Remove the fuel pump relay from the engine room R/B.
(b) Check the fuel pump relay resistance.

Standard Resistance

Tester Connections	Specified Conditions
3 - 4	Below 1 Ω
3 - 5	10 kΩ or higher
3 - 4	10 kΩ or higher (when battery voltage applied to terminals 1 and 2)
3 - 5	Below 1 Ω (when battery voltage applied to terminals 1 and 2)

(c) Reinstall the fuel pump relay.

NG → REPLACE FUEL PUMP RELAY ASSEMBLY

OK

11	INSPECT FUEL PUMP RESISTER (RESISTANCE)

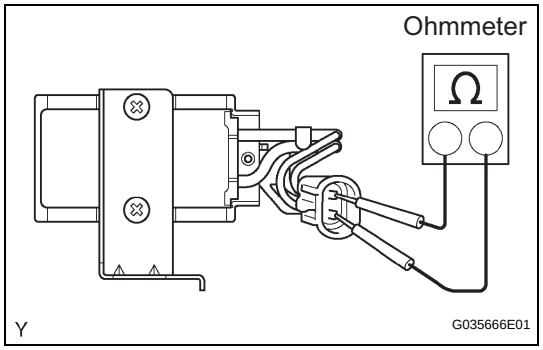

(a) Inspect the fuel pump resistor resistance.
  (1) Measure the resistance.
    Standard Resistance:
    0.70 to 0.76 Ω at 20°C (68°F)

NG → **REPLACE FUEL PUMP RESISTER**

OK

12	CHECK HARNESS AND CONNECTOR (FUEL PUMP RELAY - FUEL PUMP RESISTOR - FUEL PUMP)

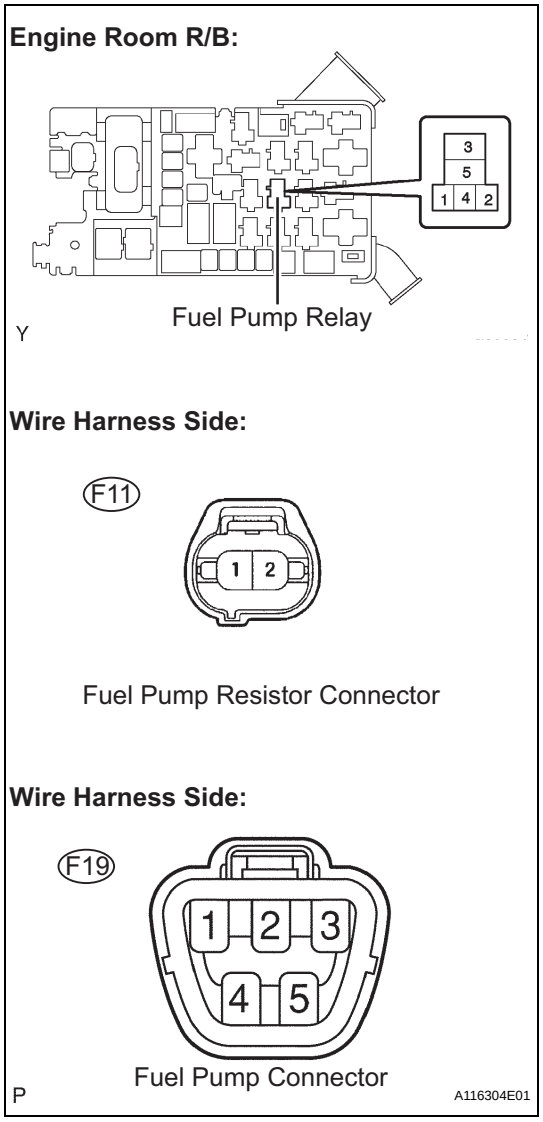

(a) Check the harness and connector between the fuel pump relay and fuel pump resistor.
  (1) Remove the fuel pump relay from the engine room R/B.
  (2) Disconnect the F11 fuel pump resistor connector.
  (3) Check the resistance.
    Standard Resistance (Check for open)

Tester Connections	Specified Conditions
Fuel pump relay (5) - Fuel pump resistor (F11-1)	Below 1 Ω

Standard Resistance (Check for short)

Tester Connections	Specified Conditions
Fuel pump relay (5) or Fuel pump resistor (F11-1) - Body ground	10 kΩ or higher

  (4) Reinstall the fuel pump relay.
  (5) Reconnect the fuel pump resistor connector.

(b) Check the harness and connector between the fuel pump resistor and fuel pump.
  (1) Disconnect the F11 fuel pump resistor connector.
  (2) Disconnect the fuel pump connector.
  (3) Check the resistance.
    Standard Resistance (Check for open)

Tester Connections	Specified Conditions
Fuel pump resistor (F11-2) - Fuel pump (F19-4)	Below 1 Ω

Standard Resistance (Check for short)

Tester Connections	Specified Conditions
Fuel pump resistor (F11-2) or Fuel pump (F19-4) - Body ground	10 kΩ or higher

  (4) Reconnect the fuel pump resistor connector.
  (5) Reconnect the fuel pump connector.

NG → PROCEED TO NEXT CIRCUIT INSPECTION SHOWN ON PROBLEM SYMPTOMS TABLE

NG

REPAIR OR REPLACE HARNESS OR CONNECTOR

ACIS Control Circuit

DESCRIPTION

This circuit opens and closes the Intake Air Control Valve (IACV) in response to changes in the engine load in order to increase the intake efficiency (ACIS: Acoustic Control Induction System).
When the engine speed is between 2,200 rpm and 4,100 rpm and the throttle valve opening angle is 60° or more, the ECM supplies current to the VSV (ON status), to close the IACV. Under other conditions, the VSV is usually OFF and the IACV is open.

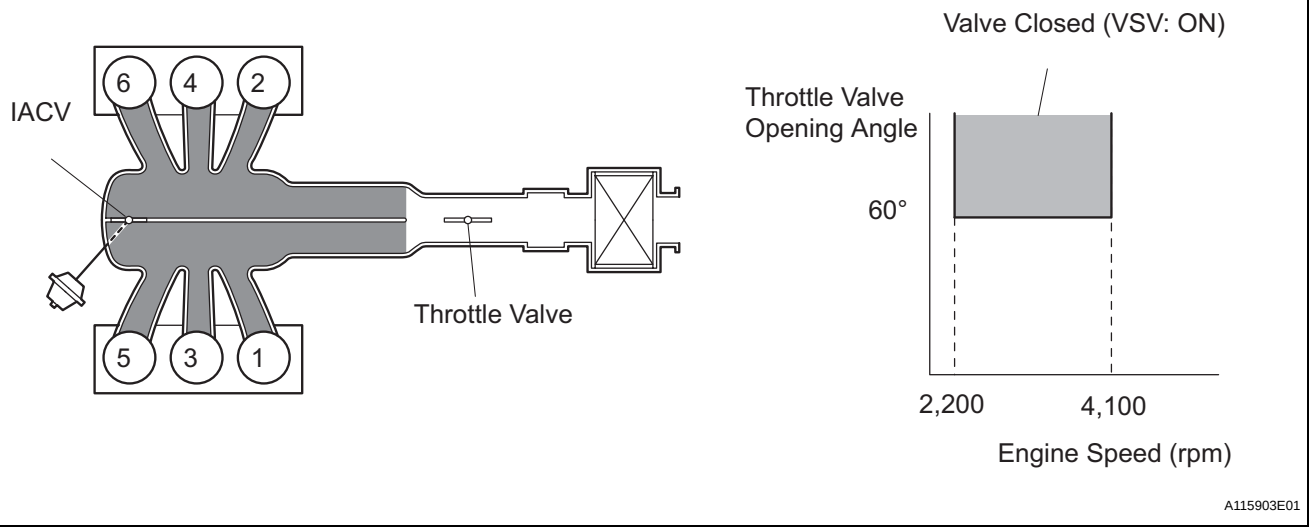

WIRING DIAGRAM

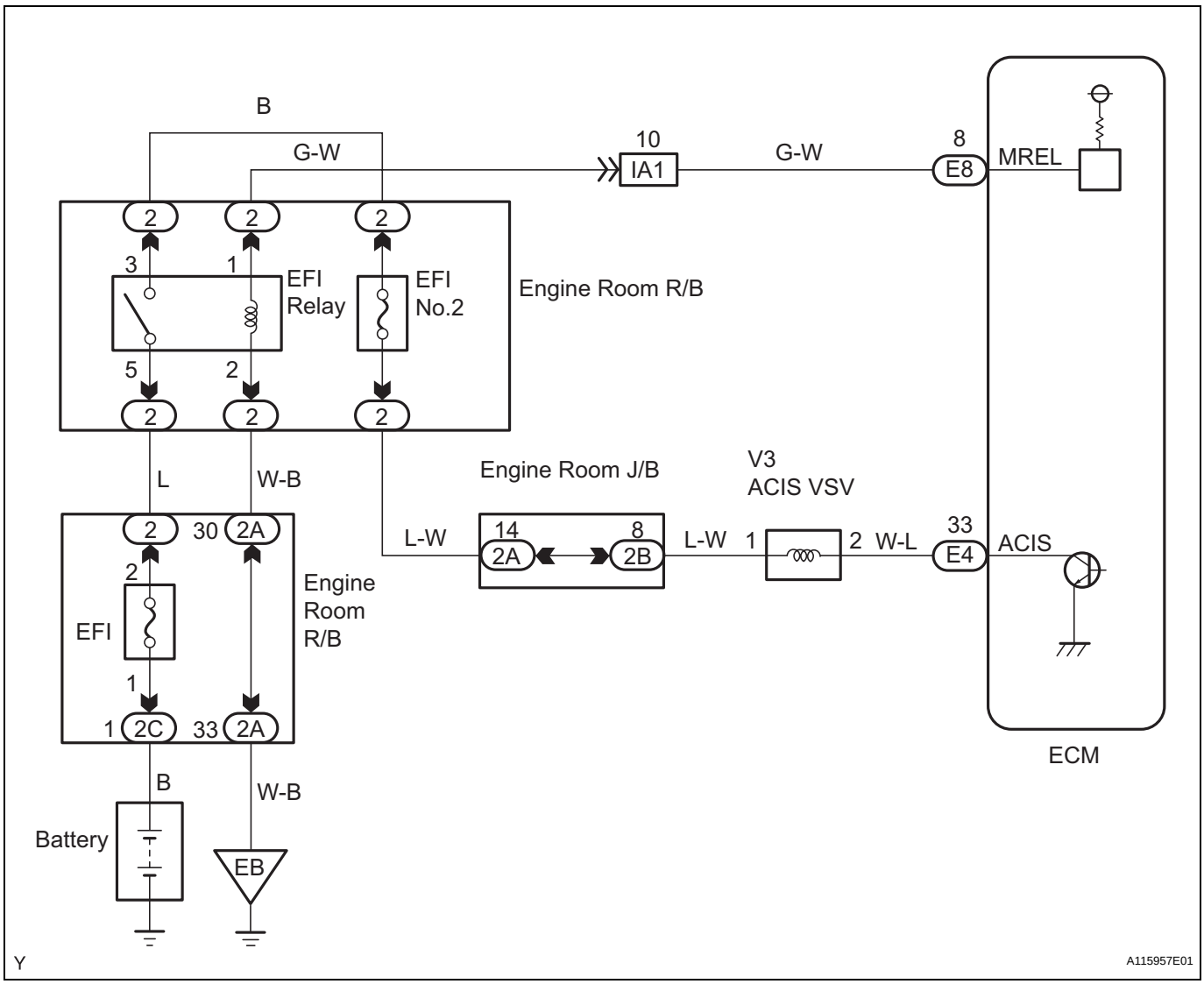

1	PERFORM ACTIVE TEST USING INTELLIGENT TESTER (OPERATE VSV FOR ACIS)

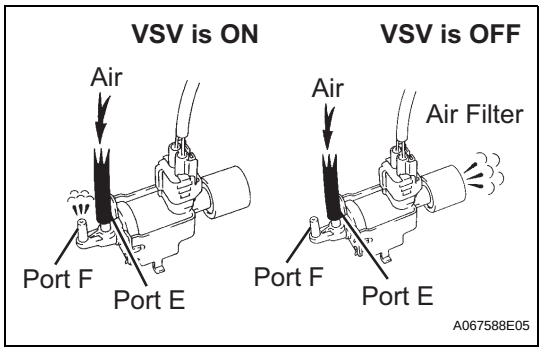

(a) Disconnect the vacuum hose.
(b) Connect an intelligent tester to the DLC3.
(c) Turn the ignition switch ON and turn the tester ON.
(d) Select the following menu items: DIAGNOSIS / ENHANCED OBD II / ACTIVE TEST / INTAKE CTL VSV1. Operate the VSV for ACIS.
(e) Check the VSV operation when it is operated using an intelligent tester.

OK

Tester Operations	Specified Conditions
VSV ON	Air from port E flows out through port F
VSV OFF	Air from port E flows out through air filter

(f) Reconnect the vacuum hose.

OK	Go to step 4

NG

2	CHECK VSV FOR ACIS (OPERATION)

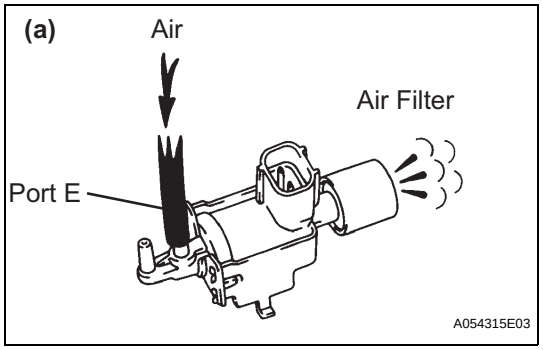

(a) Check that air flows from port E to the air filter.

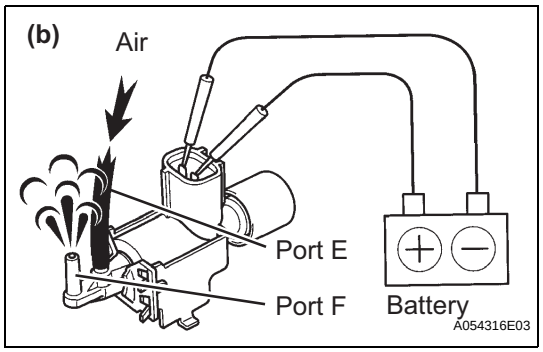

(b) Apply positive battery voltage across the terminals.
(c) Check that air flows from port E to port F.

NG → REPLACE VSV FOR ACIS

OK

ES

3	CHECK HARNESS AND CONNECTOR (VSV FOR ACIS - ECM, VSV FOR ACIS - EFI RELAY)

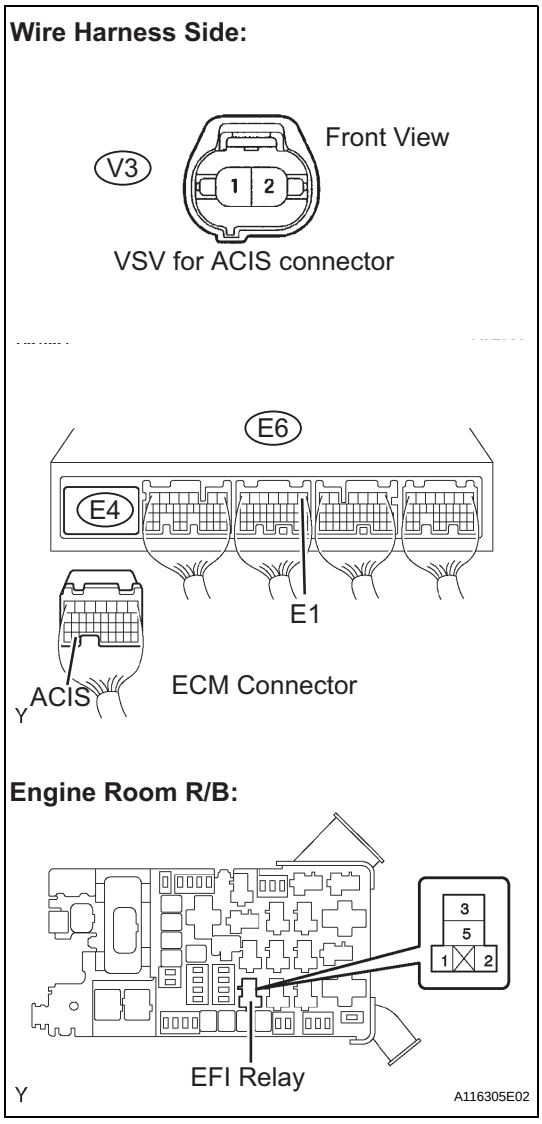

(a) Check the wire harness and connectors between the VSV for ACIS and ECM.
  (1) Disconnect the V3 VSV for ACIS connector.
  (2) Disconnect the E4 ECM connector.
  (3) Check the resistance.

Standard Resistance (Check for open)

Tester Connections	Specified Conditions
VSV for ACIS (V3-2) - ACIS (E4-33)	Below 1 Ω

Standard Resistance (Check for short)

Tester Connections	Specified Conditions
VSV for ACIS (V3-2) or ACIS (E4-33) - E1 (E6-1)	10 kΩ or higher

  (4) Reconnect the VSV for ACIS connector.
  (5) Reconnect the ECM connector.

(b) Check the wire harness between the VSV for ACIS and EFI relay.
  (1) Disconnect the V3 VSV for ACIS connector.
  (2) Remove the EFI relay from the engine room R/B.
  (3) Check the resistance.

Standard Resistance (Check for open)

Tester Connections	Specified Conditions
VSV for ACIS (V3-1) - EFI relay terminal 3 of R/B	Below 1 Ω

  (4) Reconnect the VSV for ACIS connector.
  (5) Reinstall the EFI relay.

NG → **REPAIR OR REPLACE HARNESS OR CONNECTOR**

OK

4	CHECK VACUUM HOSES (INTAKE MANIFOLD - INTAKE AIR CONTROL VALVE, INTAKE AIR CONTR)

(a) Check that the vacuum hose is connected correctly.
(b) Check the vacuum hose for looseness and disconnection.
(c) Check the vacuum hose for cracks, holes and damage.

NG → **REPAIR OR REPLACE VACUUM HOSES**

OK

5	INSPECT INTAKE AIR CONTROL VALVE (INTAKE AIR SURGE TANK)

NG → REPLACE INTAKE AIR CONTROL VALVE (INTAKE AIR SURGE TANK)

OK

REPLACE ECM

MIL Circuit

DESCRIPTION

The MIL (Malfunction Indicator Lamp) is used to indicate vehicle malfunction detections by the ECM.
By turning the ignition switch ON, power is supplied to the MIL circuit, and the ECM provides the circuit ground which illuminates the MIL.
The MIL operation can be checked visually: When the ignition switch is first turned ON, the MIL should be illuminated and should then turn OFF. If the MIL remains illuminated or is not illuminated, conduct the following troubleshooting procedure using an intelligent tester.

WIRING DIAGRAM

ES

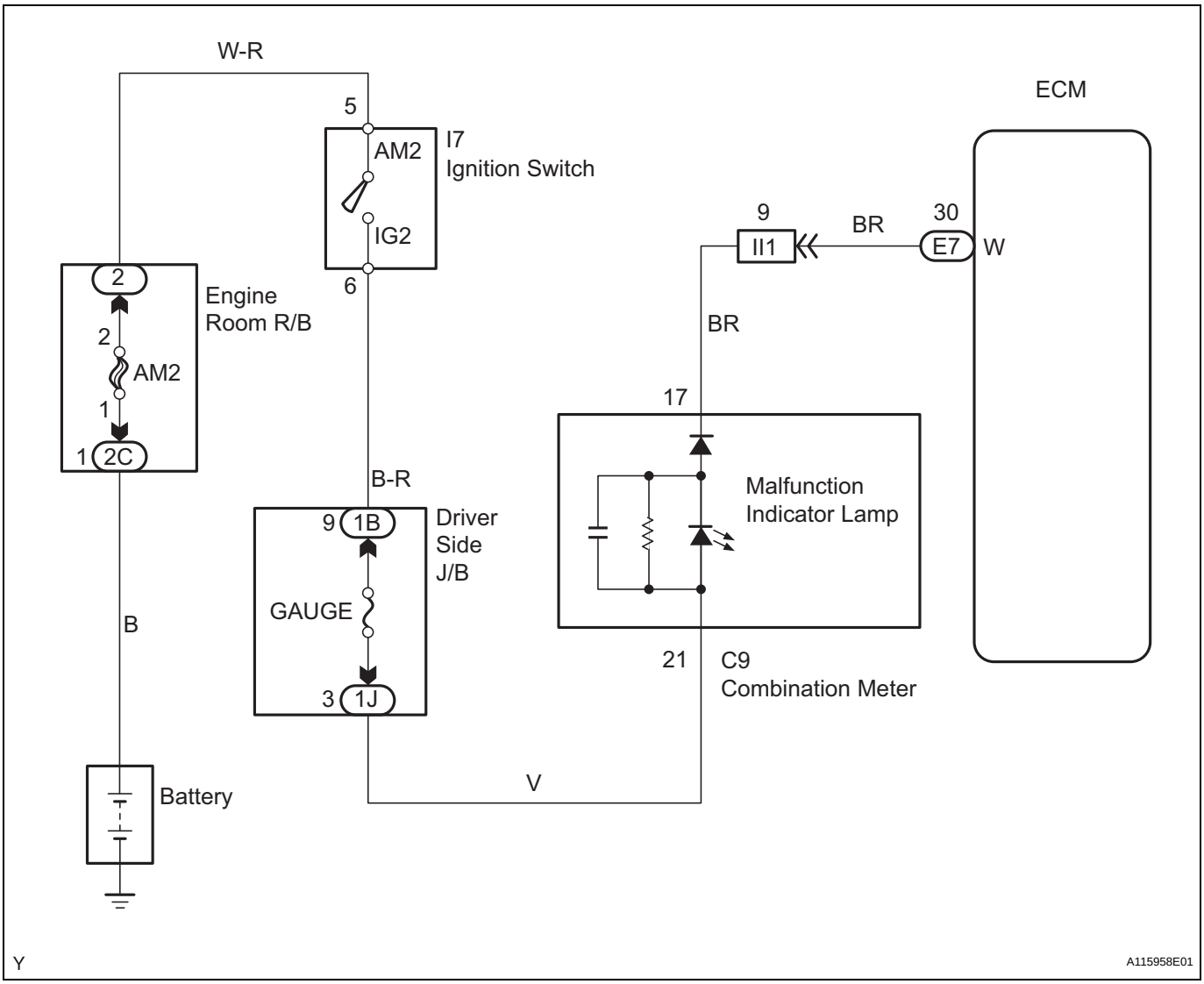

1	CHECK THAT MIL IS ILLUMINATED

(a) Perform troubleshooting in accordance with the chart below.

Result

MIL Condition	Proceed To
MIL remains ON	A
MIL does not illuminate	B

B → **Go to step 4**

A

2 CHECK WHETHER MIL TURNS OFF

(a) Connect an intelligent tester to the DLC3.
(b) Turn the ignition switch ON.
(c) Turn the tester ON.
(d) Check whether any DTCs have been stored (See page ES-38). Note them down if necessary.
(e) Clear DTCs (See page ES-38).
(f) Check if the MIL turns off.
OK:
MIL should turn off.

OK → **REPAIR CIRCUIT INDICATED BY OUTPUT DTC**

NG

3 CHECK HARNESS AND CONNECTOR (CHECK FOR SHORT IN WIRE HARNESS)

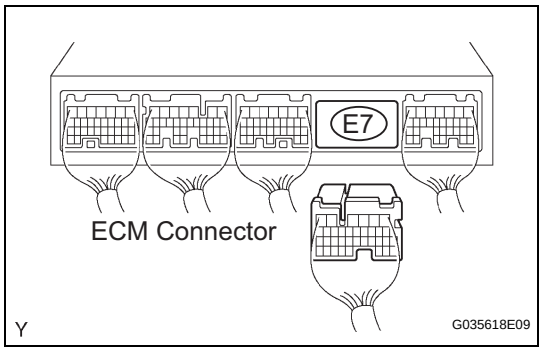

(a) Disconnect the E7 ECM connector.
(b) Turn the ignition switch ON.
(c) Check that MIL is not illuminated.
OK:
MIL is not illuminated.
(d) Reconnect the ECM connector.

OK → **REPLACE ECM**

NG

CHECK AND REPAIR HARNESS AND CONNECTOR (COMBINATION METER - ECM)

4 CHECK THAT MIL IS ILLUMINATED

(a) Check if the MIL is illuminated when the ignition switch is turns ON.
OK:
MIL should be illuminated.

OK → **SYSTEM OK**

NG

5	CHECK THAT ENGINE STARTS

(a) Turn the ignition switch ON.
(b) Start the engine.
Result

Result	Proceed To
Engine starts	A
Engine does not start*	B

HINT:
*: An intelligent tester cannot communicate with the ECM.

B → GO TO VC OUTPUT CIRCUIT

A

6	INSPECT COMBINATION METER ASSEMBLY (MIL CIRCUIT)

(a) See the combination meter troubleshooting procedure (See page ME-65).

NG → REPAIR OR REPLACE BULB OR COMBINATION METER ASSEMBLY

OK

CHECK AND REPAIR HARNESS AND CONNECTOR (COMBINATION METER - ECM)

REMOVAL

1. **DISCONNECT CABLE FROM NEGATIVE BATTERY TERMINAL**
2. **REMOVE V-BANK COVER (See page ES-414)**
3. **REMOVE MASS AIR FLOW METER**
   (a) Disconnect the connector.
   (b) Remove the 2 screws, then remove the mass air flow meter.

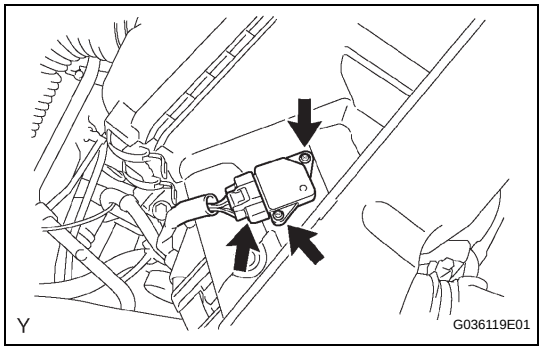

INSTALLATION

1. **INSTALL MASS AIR FLOW METER**
2. **INSTALL V-BANK COVER (See page ES-416)**
3. **CONNECT CABLE TO NEGATIVE BATTERY TERMINAL**
   Torque: 3.9 N*m (40 kgf*cm, 35 in.*lbf)

INSTALLATION

1. **INSTALL CAMSHAFT TIMING OIL CONTROL VALVE ASSEMBLY**
   (a) Install the 2 camshaft timing oil control valves with the 2 bolts.
   Torque: 9.0 N*m (92 kgf*cm, 80 in.*lbf)
   (b) Connect the 2 connectors.
2. **INSTALL INTAKE AIR SURGE TANK (See page FU-17)**
3. **INSTALL AIR CLEANER ASSEMBLY (See page ES-416)**
4. **CONNECT CABLE TO NEGATIVE BATTERY TERMINAL**
   Torque: 3.9 N*m (40 kgf*cm, 35 in.*lbf)
5. **ADD ENGINE COOLANT (See page CO-3)**
6. **CHECK FOR ENGINE COOLANT LEAKAGE (See page CO-4)**
7. **INSTALL V-BANK COVER (See page ES-416)**

REMOVAL

1. **DISCONNECT CABLE FROM NEGATIVE BATTERY TERMINAL**
2. **DRAIN ENGINE COOLANT (See page CO-3)**
3. **REMOVE V-BANK COVER**
   (a) Remove the 2 nuts, then remove the V-bank cover.

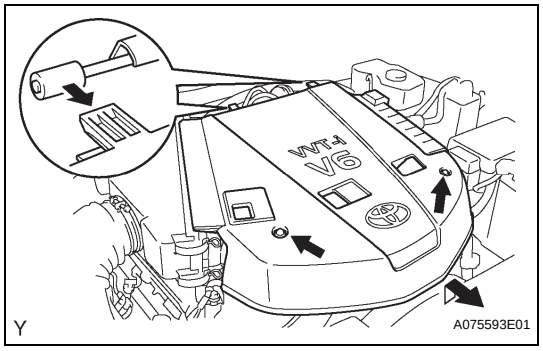

4. **REMOVE AIR CLEANER ASSEMBLY**
   (a) Disconnect the ventilation hose No. 2.

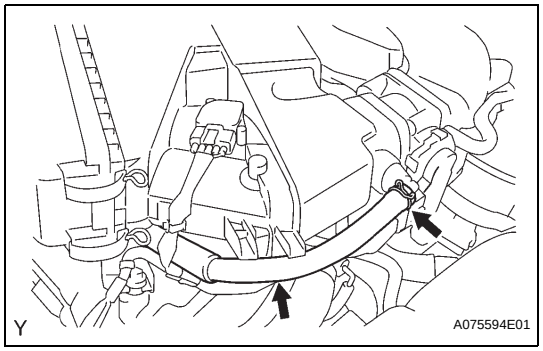

   (b) Disconnect the vacuum hose.
   (c) Disconnect the mass air flow meter connector.
   (d) Remove the 2 wire harness clamps.

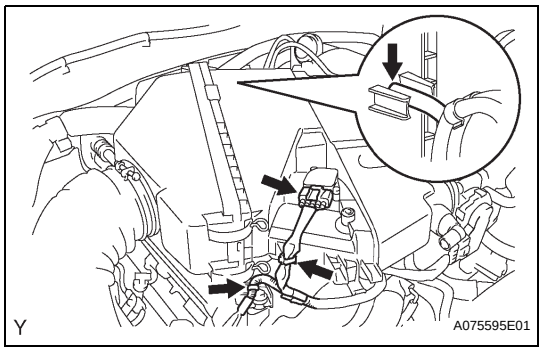

   (e) Loosen the 2 hose clamps.
   (f) Remove the 2 bolts, then remove the air cleaner.

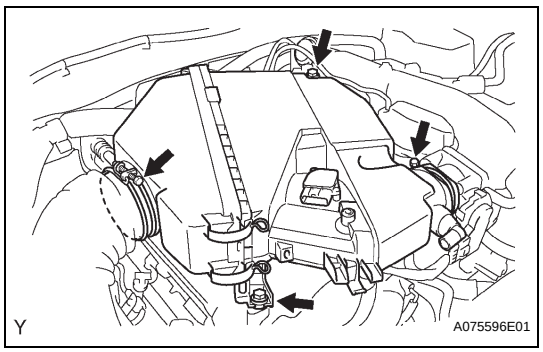

ES

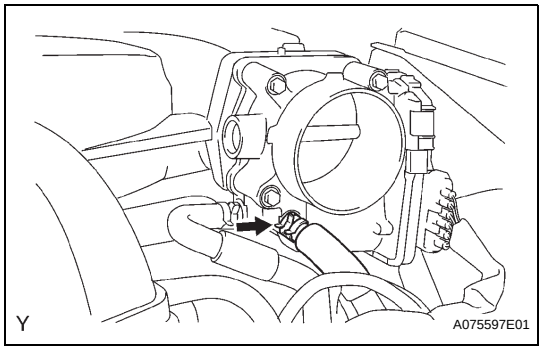

5. REMOVE THROTTLE WITH MOTOR BODY ASSEMBLY

(a) Disconnect the water by-pass hose No. 5.

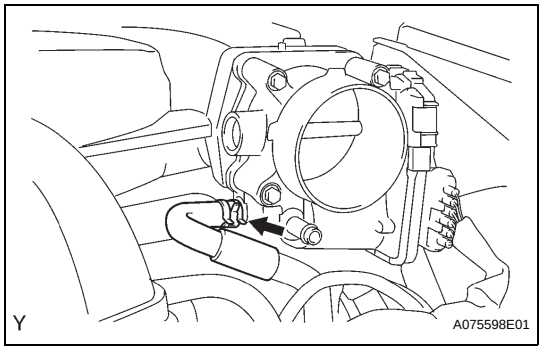

(b) Disconnect the water by-pass hose No. 4.

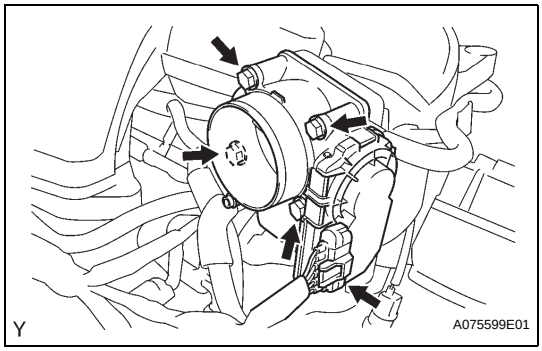

(c) Disconnect the throttle motor connector.

(d) Remove the 4 bolts, then remove the throttle w/ motor body and gasket.

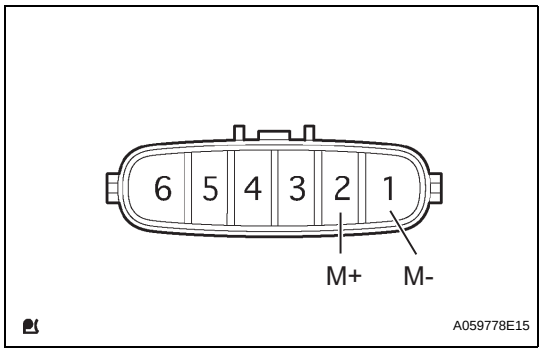

INSPECTION

1. INSPECT THROTTLE WITH MOTOR BODY ASSEMBLY

(a) Check the resistance.

(1) Using an ohmmeter, measure the resistance between the terminals.

Standard

Tester Connection	Specified Condition
1 (M-) - 2 (M+)	0.3 to 100 Ω at 20°C (68°F)

If the result is not as specified, replace the throttle with motor body assembly.

INSTALLATION

1. **INSTALL THROTTLE WITH MOTOR BODY ASSEMBLY**
   (a) Install a new gasket and the throttle with motor body with the 4 bolts.
   Torque: 11 N*m (112 kgf*cm, 9 ft.*lbf)
   (b) Connect the throttle motor connector.
   (c) Connect the water by-pass hose No. 4.
   (d) Connect the water by-pass hose No. 5.
2. **INSTALL AIR CLEANER ASSEMBLY**
   (a) Install the air cleaner with the 2 bolts.
   Torque: 8.0 N*m (82 kgf*cm, 71 in.*lbf)
   (b) Connect the ventilation hose No. 2.
3. **CONNECT CABLE TO NEGATIVE BATTERY TERMINAL**
   Torque: 3.9 N*m (40 kgf*cm, 35 in.*lbf)
4. **ADD ENGINE COOLANT (See page CO-3)**
5. **CHECK FOR ENGINE COOLANT LEAKAGE (See page CO-4)**
6. **INSTALL V-BANK COVER**
   (a) Install the V-bank cover with the 2 nuts.
   Torque: 7.5 N*m (76 kgf*cm, 66 in.*lbf)

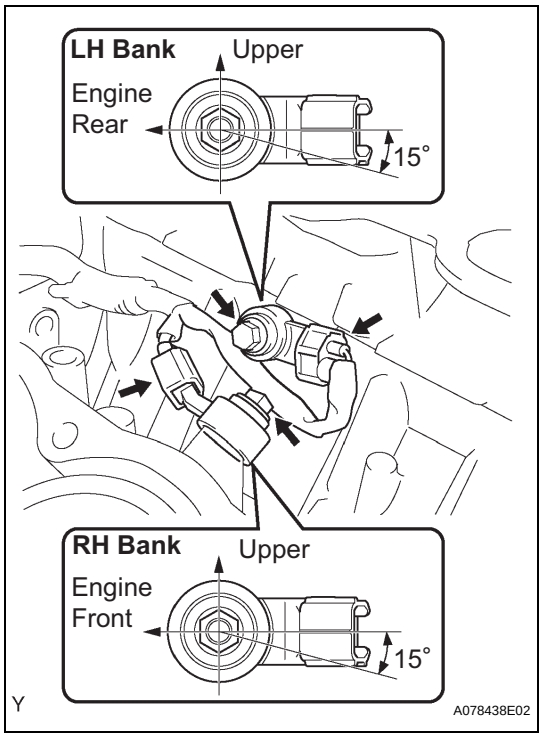

INSTALLATION

1. **INSTALL KNOCK SENSOR**
   (a) Install the 2 knock sensors with the 2 bolts as shown in the illustration.
   Torque: 20 N*m (204 kgf*cm, 15 ft.*lbf)
   (b) Connect the 2 knock sensor connectors.
2. **INSTALL WATER OUTLET PIPE NO.1**
   (a) Install the water outlet pipe with the 3 bolts.
   Torque: 9.0 N*m (92 kgf*cm, 80 in.*lbf)
   (b) Install the 4 wire harness clamps.
3. **CONNECT HEATER WATER INLET HOSE**
4. **INSPECT CYLINDER HEAD SET BOLT (See page EM-95)**
5. **INSTALL CYLINDER HEAD SUB-ASSEMBLY (See page EM-96)**
6. **INSTALL CAMSHAFT BEARING NO.2**
7. **INSTALL CAMSHAFTS (See page EM-97)**
8. **INSTALL CHAIN TENSIONER ASSEMBLY NO.2 (See page EM-98)**
9. **INSTALL CAMSHAFT TIMING GEARS AND NO.2 CHAIN (RH BANK) (See page EM-99)**
10. **INSTALL CHAIN VIBRATION DAMPER NO.1 (See page EM-142)**
11. **INSTALL WATER BY-PASS JOINT RR (See page EM-99)**
12. **INSTALL INTAKE MANIFOLD (See page EM-99)**
13. **INSTALL EXHAUST MANIFOLD SUB-ASSEMBLY RH (See page EM-99)**
14. **INSTALL MANIFOLD STAY (See page EM-100)**
15. **INSTALL EXHAUST PIPE ASSEMBLY FRONT (See page EX-3)**
16. **INSTALL EXHAUST FRONT PIPE ASSEMBLY NO.2 (See page EX-3)**
17. **INSTALL COOL AIR INLET NO.1**
    (a) Install the cool air inlet with the 2 bolts.
    Torque: 12 N*m (122 kgf*cm, 9.0 ft.*lbf)
18. **INSTALL CHAIN TENSIONER SLIPPER**
19. **INSTALL CHAIN TENSIONER ASSEMBLY NO.1 (See page EM-48)**
20. **INSTALL CHAIN SUB-ASSEMBLY (See page EM-27)**
21. **INSTALL TIMING CHAIN OR BELT COVER SUB-ASSEMBLY**
    (See page LU-20)

22. **INSTALL ENGINE ASSEMBLY**
(See page EM-190)
23. **INSTALL BATTERY**
24. **ADD ENGINE COOLANT (See page CO-3)**
25. **ADD ENGINE OIL (See page LU-5)**
26. **CHECK FOR ENGINE COOLANT LEAKAGE (See page CO-4)**
27. **CHECK FOR ENGINE OIL LEAKAGE**
28. **CHECK FOR FUEL LEAKAGE**
29. **CHECK FOR EXHAUST GAS LEAKAGE**
30. **INSPECT IGNITION TIMING (See page EM-1)**
31. **INSPECT ENGINE IDLING SPEED (See page EM-2)**
32. **INSPECT CO/HC (See page EM-3)**

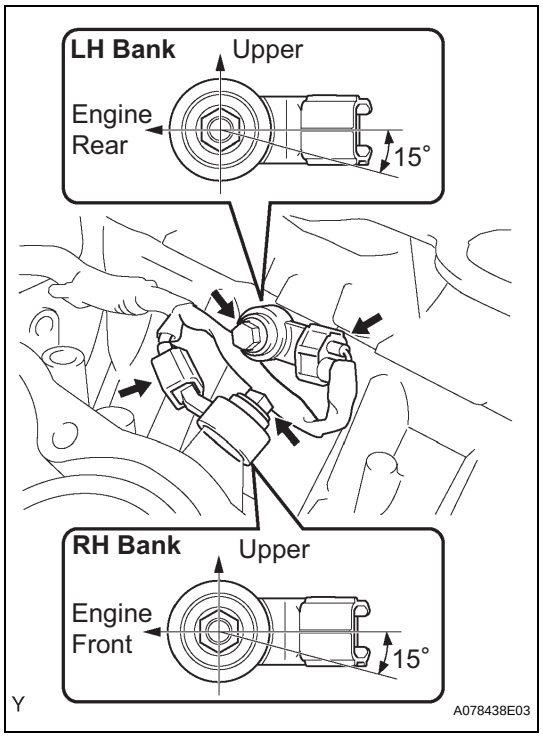

INSTALLATION

1. **INSTALL KNOCK CONTROL SENSOR**
   (a) Install the 2 knock sensors with the 2 bolts as shown in the illustration.
   Torque: 20 N*m (204 kgf*cm, 15 ft.*lbf)
   (b) Connect the 2 knock sensor connectors.
2. **INSTALL WATER OUTLET PIPE NO.1**
   (a) Install the water outlet pipe with the 3 bolts.
   Torque: 9.0 N*m (92 kgf*cm, 80 in.*lbf)
   (b) Install the 4 wire harness clamps.
3. **CONNECT HEATER WATER INLET HOSE**
4. **INSPECT CYLINDER HEAD SET BOLT (See page EM-117)**
5. **INSTALL CYLINDER HEAD SUB-ASSEMBLY (See page EM-118)**
6. **INSTALL CAMSHAFT BEARING NO.2**
7. **INSTALL CAMSHAFTS (See page EM-119)**
8. **INSTALL CHAIN TENSIONER ASSEMBLY NO.2 (See page EM-120)**
9. **INSTALL CAMSHAFT TIMING GEARS AND NO.2 CHAIN (RH BANK) (See page EM-121)**
10. **INSTALL CHAIN VIBRATION DAMPER NO.1 (See page EM-164)**
11. **INSTALL WATER BY-PASS JOINT RR (See page EM-121)**
12. **INSTALL INTAKE MANIFOLD (See page EM-121)**
13. **CONNECT FUEL PIPE SUB-ASSEMBLY NO.2 (See page FU-17)**
14. **CONNECT FUEL PIPE SUB-ASSEMBLY NO.1 (See page FU-17)**
15. **INSTALL EXHAUST MANIFOLD SUB-ASSEMBLY RH (See page EM-122)**
16. **INSTALL MANIFOLD STAY**
    (a) Install the 2 manifold stays with the 6 bolts.
    Torque: 40 N*m (408 kgf*cm, 30 ft.*lbf)
17. **INSTALL EXHAUST PIPE ASSEMBLY FRONT (See page EX-3)**
18. **INSTALL EXHAUST FRONT PIPE ASSEMBLY NO.2 (See page EX-3)**
19. **INSTALL COOL AIR INLET NO.1**
    (a) Install the cool air inlet with the 2 bolts.
20. **INSTALL CHAIN TENSIONER SLIPPER**
21. **INSTALL CHAIN TENSIONER ASSEMBLY NO.1 (See page EM-48)**

22. **INSTALL CHAIN SUB-ASSEMBLY (See page EM-48)**
23. **INSTALL TIMING CHAIN OR BELT COVER SUB-ASSEMBLY**
    (See page LU-38)
24. **INSTALL DIFFERENTIAL CARRIER ASSEMBLY FRONT (for 4WD)**
    (See page DF-38)
25. **INSTALL POWER STEERING LINK ASSEMBLY**
    (See page PS-67)
26. **INSTALL BATTERY**
27. **ADD ENGINE OIL (See page LU-5)**
28. **ADD ENGINE COOLANT (See page CO-3)**
29. **ADD DIFFERENTIAL OIL (for 4WD)**
30. **INSPECT DIFFERENTIAL OIL (for 4WD) (See page DF-8)**
31. **ADD POWER STEERING FLUID (See page PS-3)**
32. **BLEED POWER STEERING FLUID (See page PS-2)**
33. **CHECK FOR ENGINE OIL LEAKAGE**
34. **CHECK FOR ENGINE COOLANT LEAKAGE (See page CO-4)**
35. **CHECK FOR FUEL LEAKAGE**
36. **CHECK FOR EXHAUST GAS LEAKAGE**
37. **CHECK POWER STEERING FLUID LEAKAGE**
38. **INSPECT AND ADJUST FRONT WHEEL ALIGNMENT**
    (See page SP-7)
39. **INSTALL V-BANK COVER (See page ES-416)**
40. **INSPECT IGNITION TIMING (See page EM-1)**
41. **INSPECT ENGINE IDLING SPEED (See page EM-2)**
42. **INSPECT CO/HC (See page EM-3)**
43. **INSPECT COMPRESSION (See page EM-2)**

ADJUSTMENT

1. VEHICLE PREPARATION FOR HEADLIGHT AIM ADJUSTMENT

(a) Prepare the vehicle:
- Ensure that there is no damage or deformation to the body around the headlights.
- Fill the fuel tank.
- Make sure that the oil is filled to the specified level.
- Make sure that the coolant is filled to the specified level.
- Inflate the tires to the appropriate pressure.
- Place the spare tire, tools, and jack in their original positions.
- Unload the trunk.
- Sit a person of average weight (68 kg, 150 lb) in the driver side seat.

2. PREPARATION FOR HEADLIGHT AIMING (for Using a Tester)

(a) Prepare the vehicle for headlight aim check.

(b) Perform adjustment in accordance with the headlight tester instructions.

3. PREPARATION FOR HEADLIGHT AIMING (for Using a Screen)

(a) Prepare the vehicle according to the following conditions:
- Place the vehicle in a location that is dark enough to clearly observe the cutoff line. The cutoff line is a distinct line, below which light from the headlights can be observed and above which it cannot.
- Place the vehicle at a 90° angle to the wall.
- Keep a 7.62 m (25 ft) distance between the center of the headlight bulb and the wall.
- Place the vehicle on a level surface.
- Bounce the vehicle up and down to settle the suspension.

NOTICE:
A distance of 7.62 m (25 ft) between the vehicle (center of the headlight bulb) and the wall is necessary for proper aim adjustment. If unavailable to secure a distance of 7.62 m (25 ft), secure a distance of exactly 3 m (9.84 ft) to check and adjust the headlight aim. (Since the target zone will change with the distance, follow the instructions shown in the illustration.)

(b) Prepare a piece of thick white paper (approximately 2 m (6.6 ft) (height) x 4 m (13.1 ft) (width)) to use as a screen.

(c) Draw a vertical line down the center of screen (V line).

(d) Set the screen as shown in the illustration.

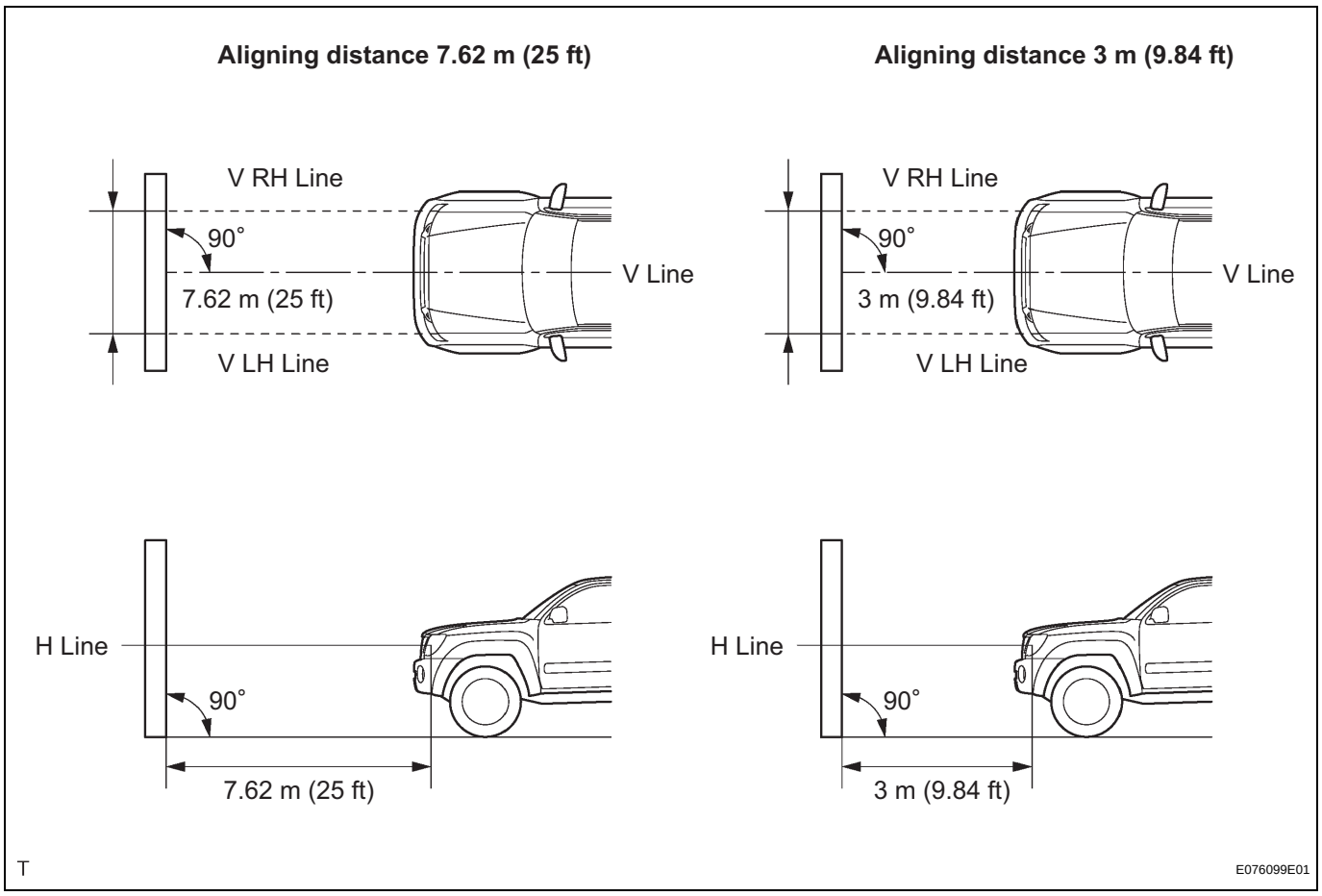

HINT:
- Stand the screen perpendicular to the ground.
- Align the V line on the screen with the center of the vehicle.

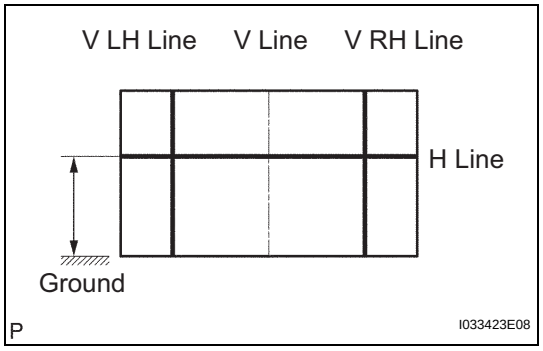

(e) Draw base lines (H line, V LH, V RH lines) on the screen as shown in the illustration.
HINT:
- The base lines differ for "low-beam inspection" and "high-beam inspection".
- Follow the same procedures as for "high-beam inspection".
- Mark the headlight bulb center marks on the screen. If the center mark cannot be observed on the headlight, use the center of the headlight bulb or the manufacturer name marked on the headlight as the center mark.

(1) H Line (Headlight height):
Draw a horizontal line across the screen so that it passes through the center marks. The H line should be at the same height as the headlight bulb center marks of the low-beam headlights.

(2) V LH Line, V RH Line (Center mark position of left-hand (LH) and right-hand (RH) headlights):
Draw two vertical lines so that they intersect the H line at each center mark (aligned with the center of the low-beam headlight bulbs).

4. HEADLIGHT AIMING INSPECTION

(a) Cover the headlight or disconnect the connector of the headlight on the opposite side to prevent light from the headlight not being inspected from affecting headlight aiming inspection.
NOTICE:
Do not keep the headlight covered for more than 3 minutes. The headlight lens is made of synthetic resin, and may easily melt or be damaged due to heat.

(b) Start the engine.
NOTICE:
Engine rpm must be 1,500 or more.

(c) Turn on the headlight and make sure that the cutoff line falls within the specified area, as shown in the illustration.

Aligning distance 7.62 m (25 ft):

Low Beam:

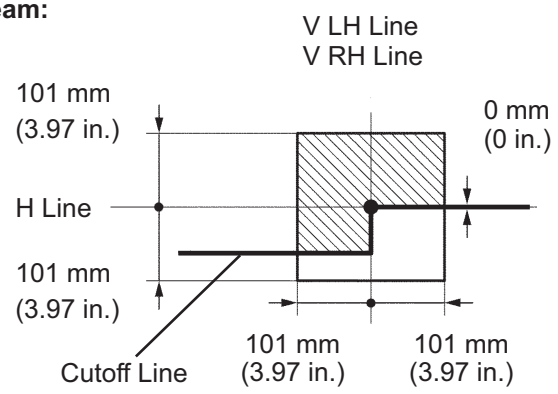

High Beam:

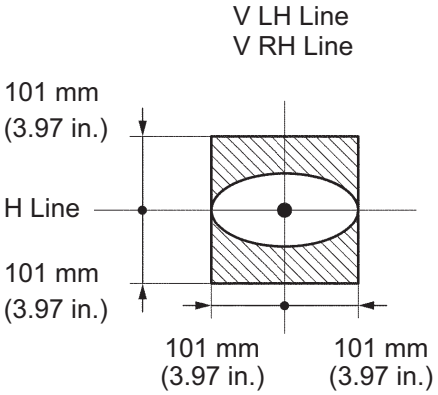

Aligning distance 3 m (9.84 ft):

Low Beam:

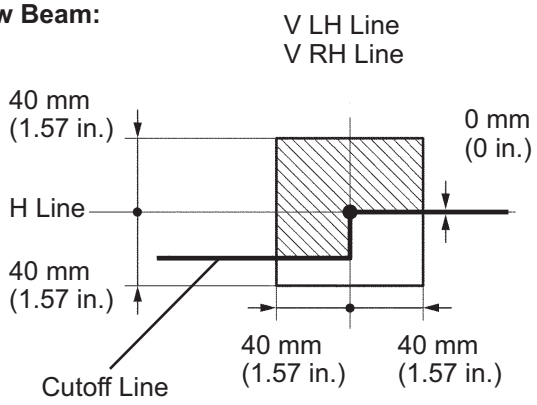

High Beam:

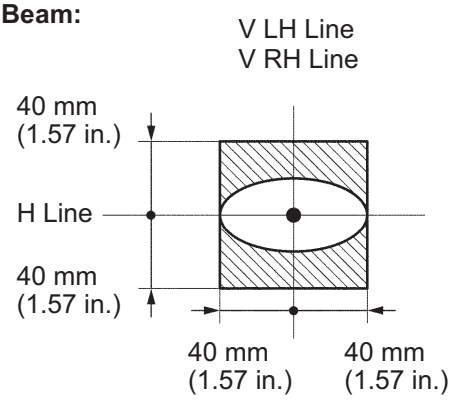

E113067E01

HINT:

- Alignment distance is 7.62 m (25 ft):
  The cutoff line is 101 mm (3.97 in.) above and below the H line as well as to the left and right of the V line with low-beam (SAEJ599).

- Alignment distance is 3 m (9.84 ft):
  The cutoff line is 40 mm (1.57 in.) above and below the H line as well as to the left and right of the V line with low-beam (SAEJ599).
- Alignment distance is 7.62 m (25 ft):
  The cutoff line is 101 mm (3.97 in.) above and below the H line as well as to the left and right of the V line with high-beam (SAEJ599).
- Alignment distance is 3 m (9.84 ft):
  The cutoff line is 40 mm (1.57 in.) above and below the H line as well as to the left and right of the V line with high-beam (SAEJ599).
- Alignment distance is 7.62 m (25 ft):
  The cutoff line is 0 mm (0 in.) below the H line with low-beam.
- Alignment distance is 3 m (9.84 ft):
  The cutoff line is 0 mm (0 in.) below the H line with low-beam.

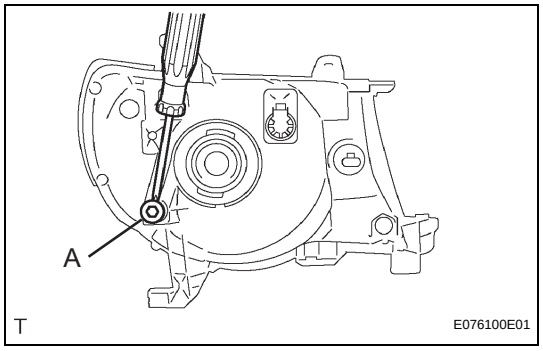

5. HEADLIGHT AIMING ADJUSTMENT

(a) Adjust the aim vertically:
Adjust the headlight aim into the specified range by turning aiming screw A with a screwdriver.
NOTICE:
The final turn of the aiming screw should be made in the clockwise direction. If the screw is tightened excessively, loosen it and then retighten it, so that the final turn of the screw is in the clockwise direction.

(b) Perform low-beam aim adjustment.
HINT:
The headlight aim moves up when turning the aiming screw clockwise, and moves down when turning the aiming screw counterclockwise.

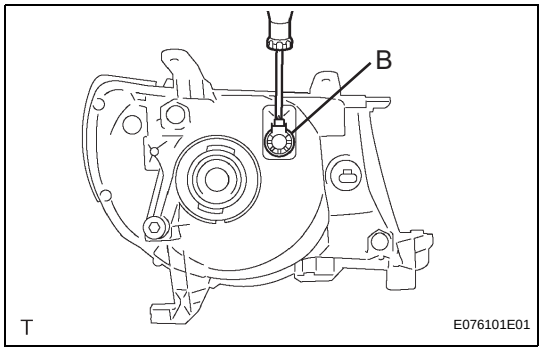

(c) Adjust the aim horizontally:
Adjust the headlight aim into the specified range by turning aiming screw B with a screwdriver.
NOTICE:
The final turn of the aiming screw should be made in the clockwise direction. If the screw is tightened excessively, loosen it and then retighten it, so that the final turn of the screw is in the clockwise direction.

INSTALLATION

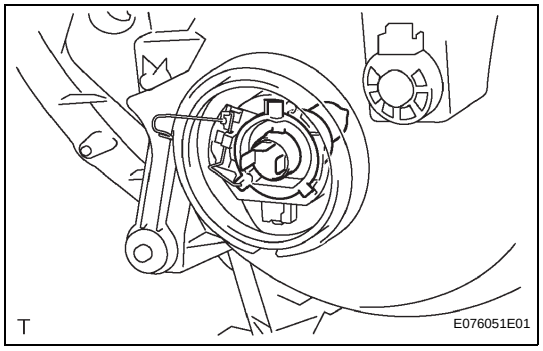

1. INSTALL NO. 1 HEADLIGHT, BULB

(a) Install the No. 1 headlight bulb.

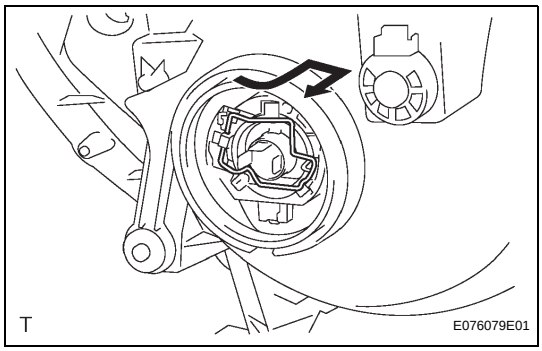

(b) Lock the set spring by moving it in the direction indicated by the arrow in the illustration.

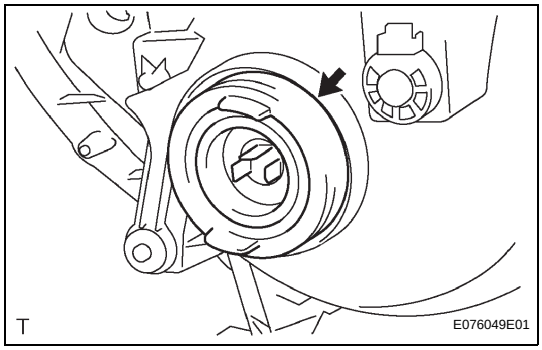

(c) Install the socket cover.

2. INSTALL CLEARANCE LIGHT BULB

(a) Install the clearance light bulb into the light socket.

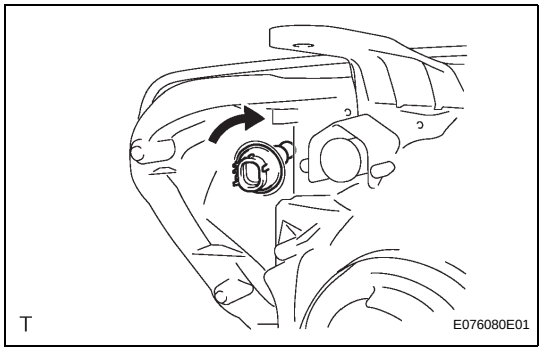

(b) To install the clearance light bulb socket and bulb, turn them in the direction indicated by the arrow in the illustration.

3. INSTALL FRONT TURN SIGNAL LIGHT BULB

(a) Install the front turn signal light bulb into the light socket.

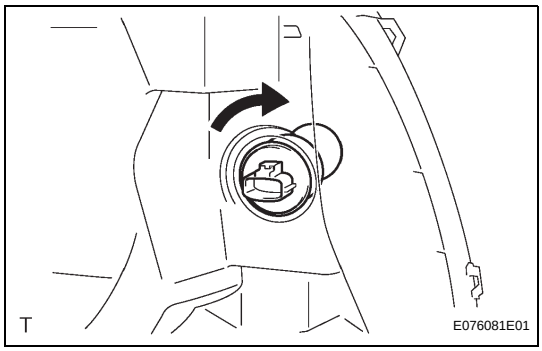

(b) To install the front turn signal light bulb socket and bulb, turn them in the direction indicated by the arrow in the illustration.

4. INSTALL HEADLIGHT ASSEMBLY

(a) Connect the 3 connectors.

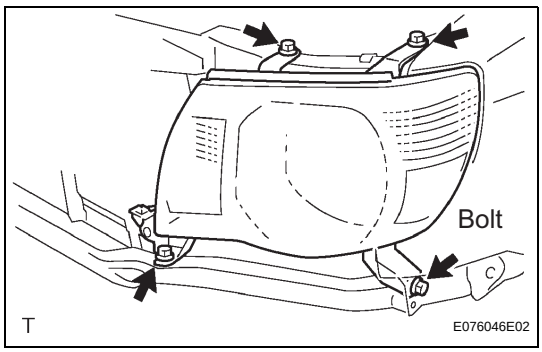

(b) Install the LH headlight assembly with the bolt and 3 screws.
Torque: 2.0 N*m (20 kgf*cm, 17 in.*lbf)

5. INSTALL FRONT BUMPER FILLER (See page ET-9)

6. INSTALL FRONT BUMPER COVER (See page ET-11)

7. INSTALL RADIATOR GRILLE (See page ET-11)

8. CONNECT CABLE TO NEGATIVE BATTERY TERMINAL
Torque: 3.9 N*m (40 kgf*cm, 35 in.*lbf)

9. **VEHICLE PREPARATION FOR HEADLIGHT AIM ADJUSTMENT (See page LI-5)**
10. **PREPARATION FOR HEADLIGHT AIMING (for Using a Tester) (See page LI-5)**
11. **PREPARATION FOR HEADLIGHT AIMING (for Using a Screen) (See page LI-5)**
12. **HEADLIGHT AIMING INSPECTION (See page LI-7)**
13. **HEADLIGHT AIMING ADJUSTMENT (See page LI-9)**

REPAIR

HINT:

- Use the same procedures for the RH and LH.
- The procedures listed below are for the LH side.
- If the area where the headlight unit LH is installed is damaged, the repairs listed below can be performed inexpensively through the use of a repair use bracket. This may only be done if the headlight assembly LH itself is not damaged.

1. **DISCONNECT CABLE FROM NEGATIVE BATTERY TERMINAL**
2. **REMOVE RADIATOR GRILLE (See page ET-4)**
3. **REMOVE FRONT BUMPER COVER (See page ET-4)**
4. **REMOVE FRONT BUMPER FILLER (See page ET-6)**
5. **REMOVE HEADLIGHT ASSEMBLY (See page LI-4)**
6. **INSTALL HEADLIGHT PROTECTOR UPPER RETAINER**

   HINT:

   - If the installation area of the LH headlight assembly is damaged, use the supply bracket for low-cost repair.
   - Ensure that the LH headlight assembly is not damaged.

   (a) Cut off the portion indicated by the shaded portion in the illustration and smooth the surface with sandpaper.

   NOTICE:

   After cutting off the shaded portion, place the LH headlight protector upper retainer LH against the bosses and gradually file away the shaded portion until installation is possible.

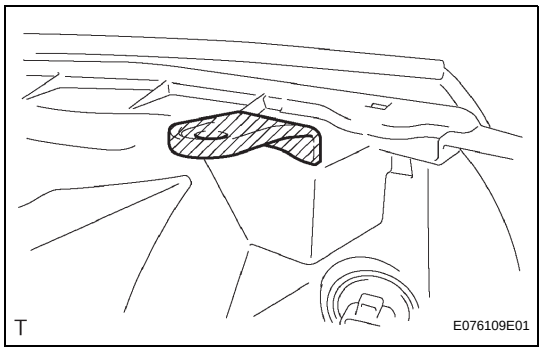

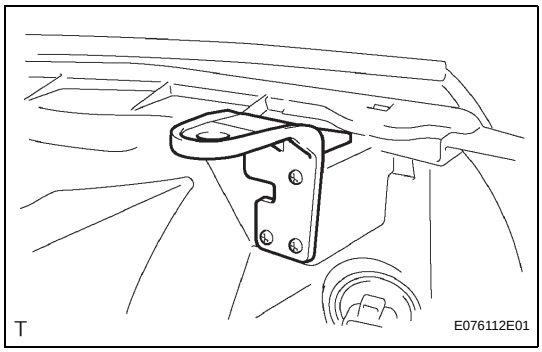

   (b) Install the headlight protector upper retainer LH with the 2 screws.

7. **INSTALL HEADLIGHT PROTECTOR LOWER RETAINER**

   HINT:

   - If the installation area of the LH headlight assembly is damaged, use the supply bracket for low-cost repair.
   - Ensure that the LH headlight assembly is not damaged.

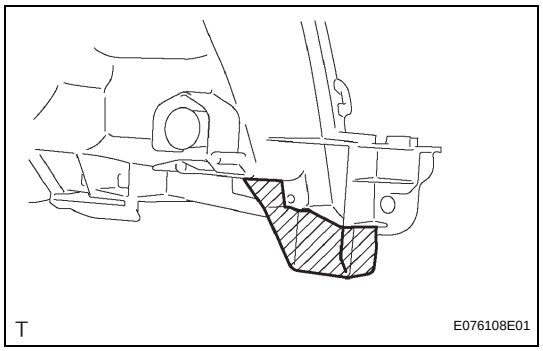

(a) Cut off the portion indicated by the shaded portion in the illustration and smooth the surface with sandpaper.
NOTICE:
After cutting off the shaded portion, place the headlight protector lower retainer LH against the bosses and gradually file away the shaded portion until installation is possible.

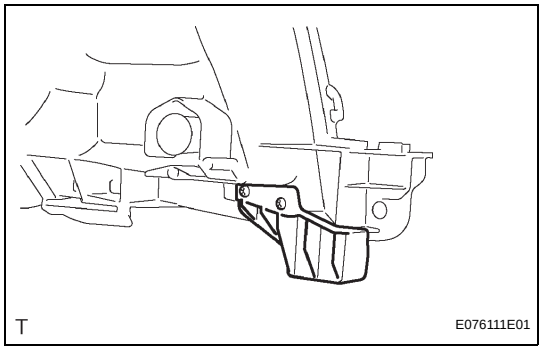

(b) Install the headlight protector lower retainer LH with the 2 screws.

8. INSTALL HEADLIGHT LOWER BRACKET
HINT:
- If the installation area of the LH headlight assembly is damaged, use the supply bracket for low-cost repair.
- Make sure that the LH headlight assembly is not damaged.

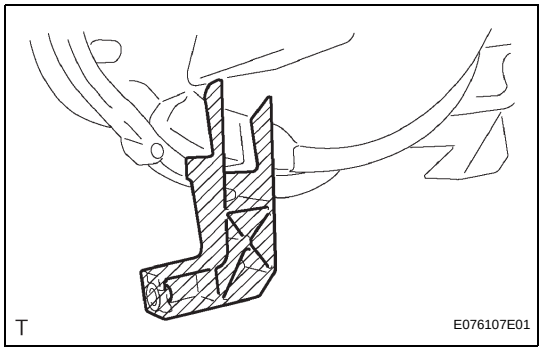

(a) Cut off the portion indicated by the shaded portion in the illustration and smooth the surface with sandpaper.
NOTICE:
After cutting off the shaded portion, place the headlight lower bracket LH against the bosses and gradually file away the shaded portion until installation is possible.

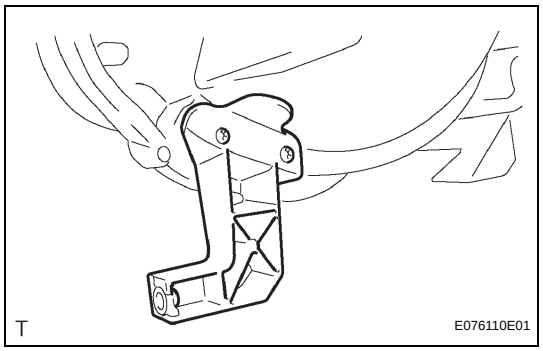

(b) Install the headlight lower bracket LH with the 2 screws.

9. INSTALL HEADLIGHT ASSEMBLY

10. CONNECT CABLE TO NEGATIVE BATTERY TERMINAL
Torque: 3.9 N*m (40 kgf*cm, 35 in.*lbf)

11. INSTALL FRONT BUMPER FILLER (See page ET-9)

12. INSTALL FRONT BUMPER COVER (See page ET-11)

13. INSTALL RADIATOR GRILLE (See page ET-11)

14. VEHICLE PREPARATION FOR HEADLIGHT AIM ADJUSTMENT (See page LI-5)

15. PREPARE FOR HEADLIGHT AIMING (for Using a Tester) (See page LI-5)

16. PREPARE FOR HEADLIGHT AIMING (for Using a Screen) (See page LI-5)

17. HEADLIGHT AIMING INSPECTION (See page LI-7)

18. HEADLIGHT AIMING ADJUSTMENT (See page LI-9)

ADJUSTMENT

1. VEHICLE PREPARATION FOR FOG LIGHT AIM ADJUSTMENT

(a) Prepare the vehicle:

HINT:

- Ensure that there is no damage or deformation to the body around the fog lights.
- Fill the fuel tank.
- Make sure that the oil is filled to the specified level.
- Make sure that the coolant is filled to the specified level.
- Inflate the tires to the appropriate pressure.
- Place the spare tire, tools, and jack in their original positions.
- Unload the trunk.
- Sit a person of average weight (68 kg, 150 lb) in the driver side seat.

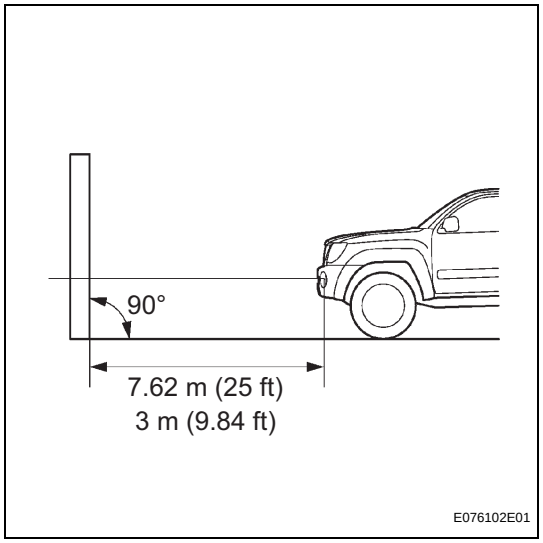

2. PREPARATION FOR FOG LIGHT AIMING

(a) Prepare the vehicle according to the following conditions:

HINT:

- Place the vehicle in a location that is dark enough to clearly observe the cutoff line. The cutoff line is a distinct line, below which light from the headlights can be observed and above which it cannot.
- Place the vehicle at a 90° angle to the wall.
- Keep a 7.62 m (25 ft) distance between the center of the fog light bulb and the wall.
- Place the vehicle on a level surface.
- Bounce the vehicle up and down to settle the suspension.

NOTICE:

A distance of 7.62 m (25 ft) between the vehicle (center of the fog light bulb) and the wall is necessary for proper aim adjustment. If unavailable to secure a distance of 7.62 m (25 ft), secure a distance of exactly 3 m (9.84 ft) to check and adjust the fog light aim. (Since the target zone will change with the distance, follow the instructions shown in the illustration.)

(b) Prepare a piece of thick white paper (approximately 2 m (6.6 ft) (height) x 4 m (13.1 ft) (width)) to use as a screen.

(c) Draw a vertical line down the center of screen (V line).

(d) Set the screen as shown in the illustration.

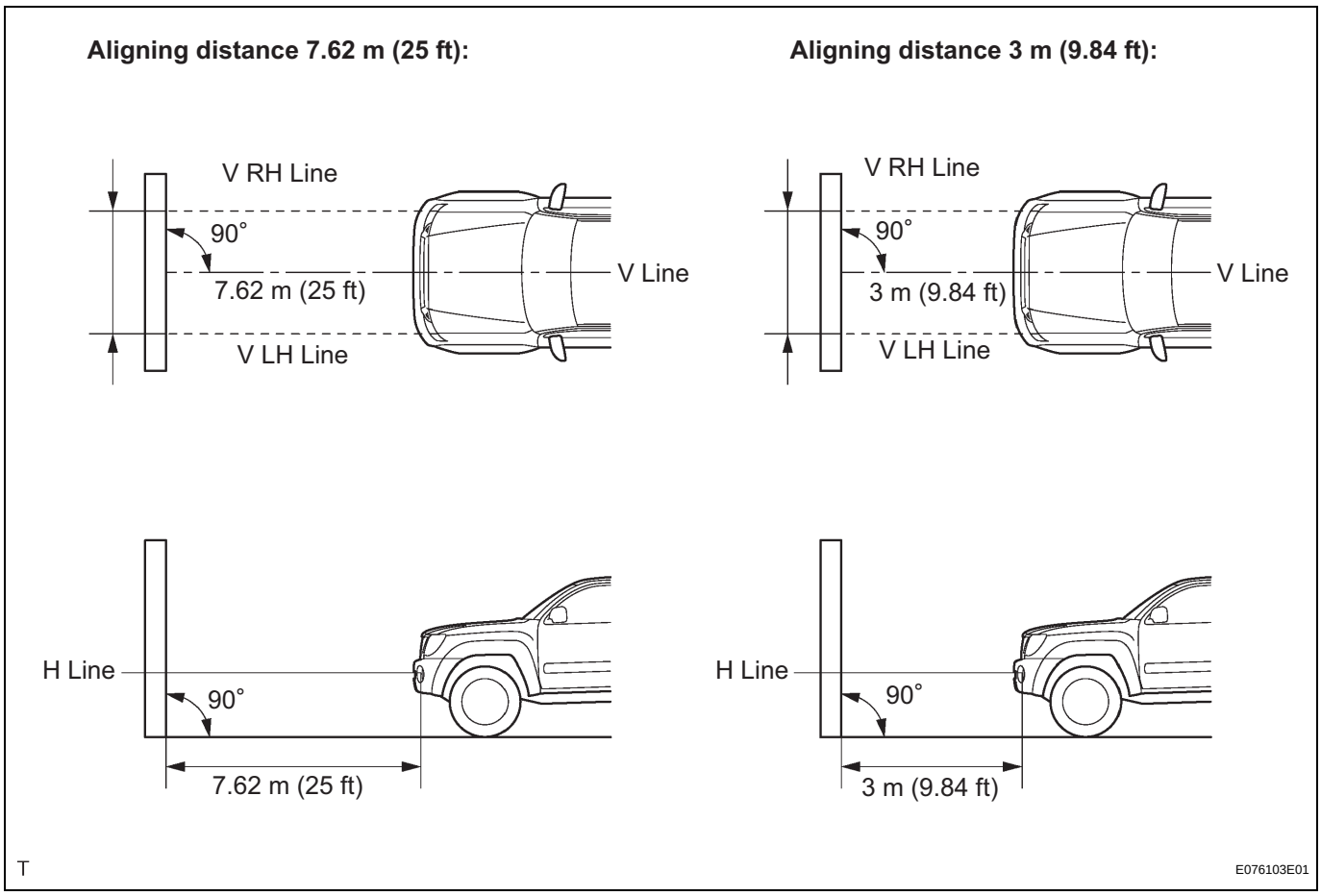

HINT:
- Stand the screen perpendicular to the ground.
- Align the V line on the screen with the center of the vehicle.

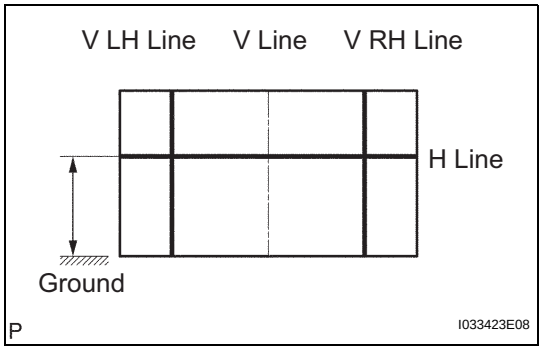

(e) Draw base lines (H line, V LH, V RH lines) on the screen as shown in the illustration.
HINT:
Mark the fog light bulb center marks on the screen. If the center mark cannot be observed on the fog light, use the center of the fog light bulb or the manufacturer's name marked on the fog light as the center mark.
(1) H Line (Fog light height):
Draw a horizontal line across the screen so that it passes through the center marks. The H line should be at the same height as the fog light bulb center marks of the low-beam fog lights.
(2) V LH Line, V RH Line (Center mark position of left-hand (LH) and right-hand (RH) fog lights):
Draw two vertical lines so that they intersect the H line at each center mark.

3. FOG LIGHT AIMING INSPECTION

(a) Cover the fog light or disconnect the connector of the fog light on the opposite side to prevent light from the fog light not being inspected from affecting fog light aiming inspection.

(b) Start the engine.
NOTICE:
Engine rpm must be 1,500 or more.

(c) Turn on the fog light and make sure that the cutoff line falls within the specified area, as shown in the illustration.

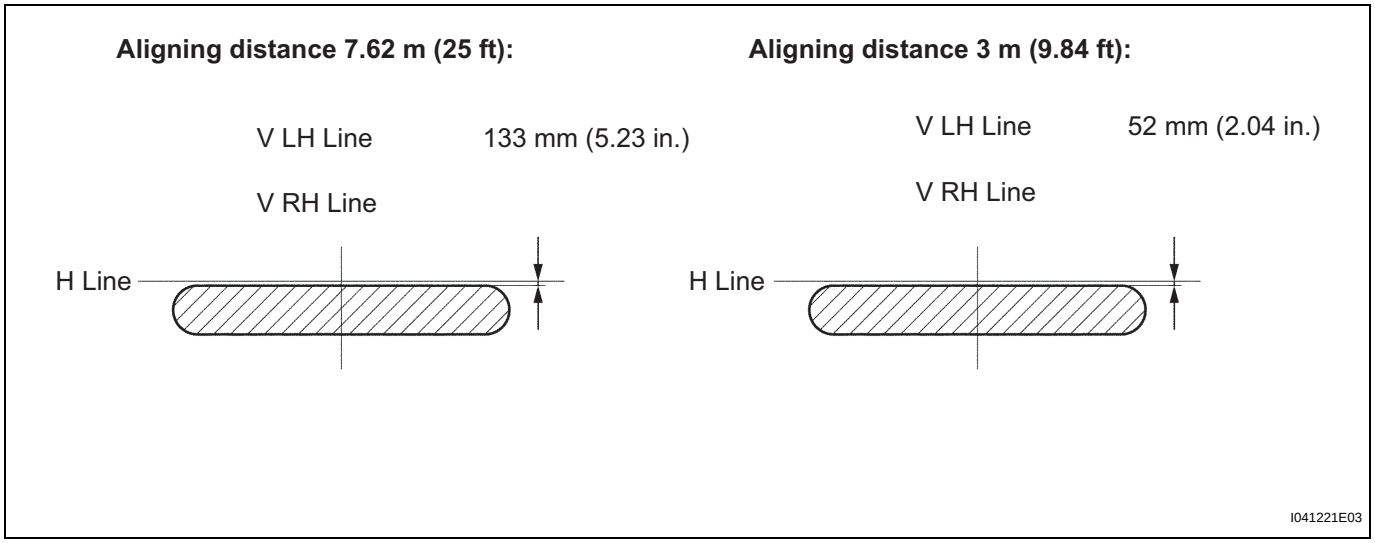

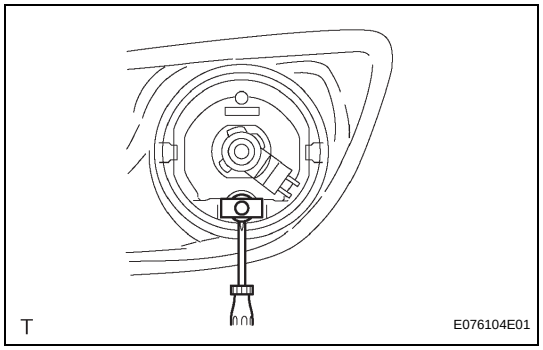

4. FOG LIGHT AIMING ADJUSTMENT

(a) Adjust the fog light aim into the specified range by turning the aiming screw with a screwdriver.
NOTICE:
The final turn of the aiming screw should be made in the clockwise direction. If the screw is tightened excessively, Loosen it and then retighten it, so that the final turn of the screw is in the clockwise direction.

INSTALLATION

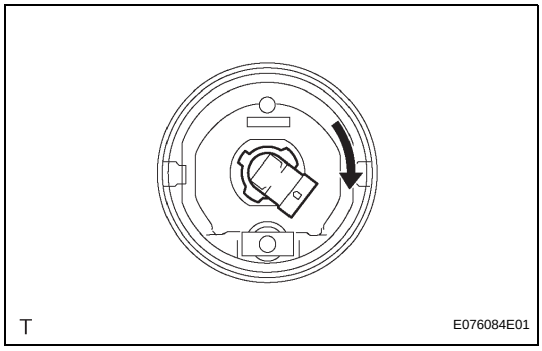

1. INSTALL FOG LIGHT ASSEMBLY

(a) Install the fog light bulb into the light socket.

(b) To install the fog light bulb socket and bulb, turn them in the direction indicated by the arrow in the illustration.

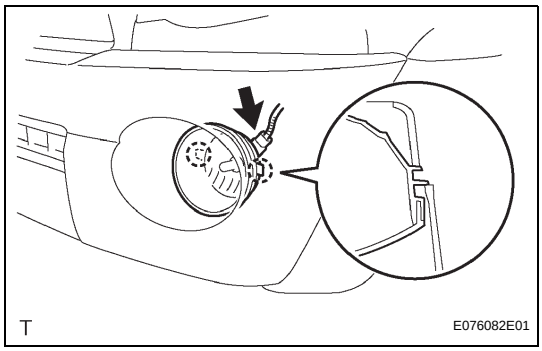

(c) Engage the 2 claws and install the fog light assembly LH.

(d) Connect the connector.

2. CONNECT CABLE TO NEGATIVE BATTERY TERMINAL
Torque: 3.9 N*m (40 kgf*cm, 35 in.*lbf)

3. VEHICLE PREPARATION FOR FOG LIGHT AIM ADJUSTMENT (See page LI-14)

4. PREPARATION FOR FOG LIGHT AIMING (See page LI-14)

5. FOG LIGHT AIMING INSPECTION (See page LI-16)

6. FOG LIGHT AIMING ADJUSTMENT (See page LI-17)

INSTALLATION

1. INSTALL REAR COMBINATION LIGHT ASSEMBLY

(a) Install the 3 light bulbs into the 3 light sockets.

(b) To install the 3 light bulb sockets and 3 bulbs, turn them in the direction indicated by the arrow in the illustration.

(c) Install the wire harness clamp.

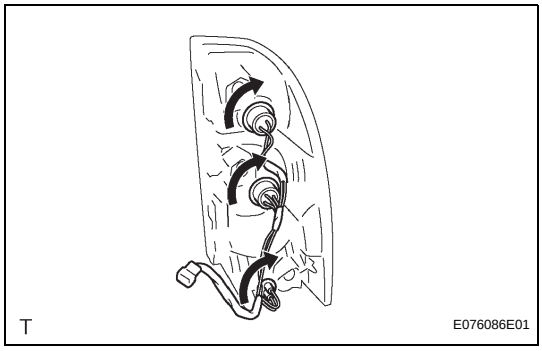

(d) Connect the connector, then install the tail light (rear combination light) assembly LH with the 2 bolts.
Torque: 5.4 N*m (55 kgf*cm, 48 in.*lbf)

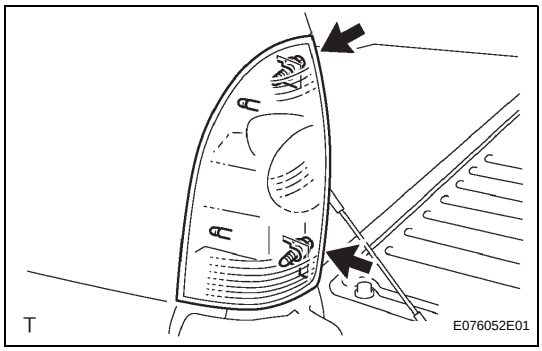

2. CONNECT CABLE TO NEGATIVE BATTERY TERMINAL
Torque: 3.9 N*m (40 kgf*cm, 35 in.*lbf)

INSTALLATION

1. REMOVE LICENSE PLATE LIGHT ASSEMBLY

(a) Install the license plate light bulb into the light socket.

(b) To install the license plate light bulb socket and bulb, turn them in the direction indicated by the arrow in the illustration.

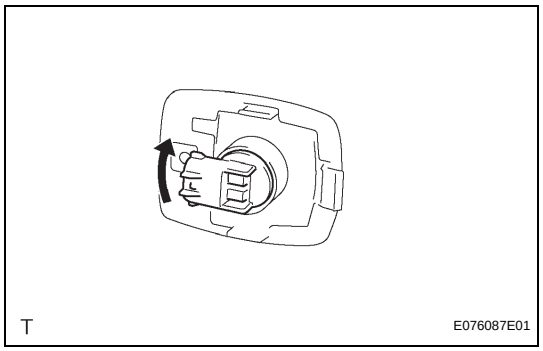

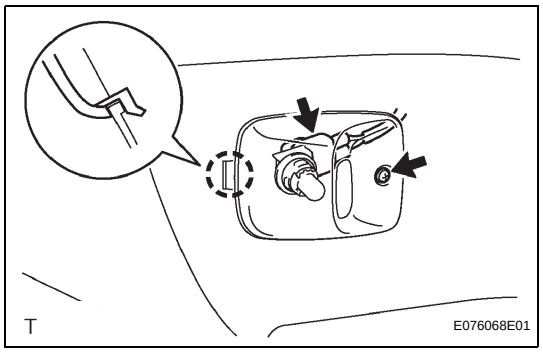

(c) Install the license plate light assembly with the screw.

2. CONNECT CABLE TO NEGATIVE BATTERY TERMINAL

Torque: 3.9 N*m (40 kgf*cm, 35 in.*lbf)

INSTALLATION

1. INSTALL CENTER STOP LIGHT ASSEMBLY

(a) Install the 3 center stop light bulbs into the 3 light sockets.

(b) To install the 3 center stop light sockets and bulbs, turn them in the direction indicated by the arrow in the illustration.

(c) Install the wire harness clamp.

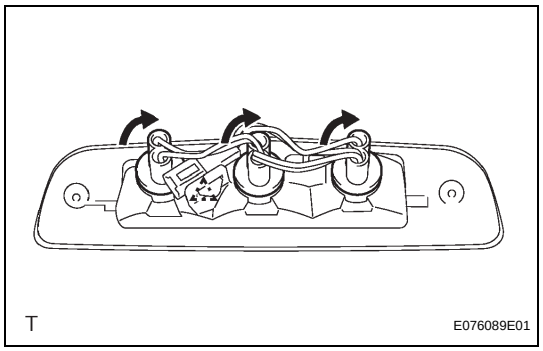

(d) Connect the connector.

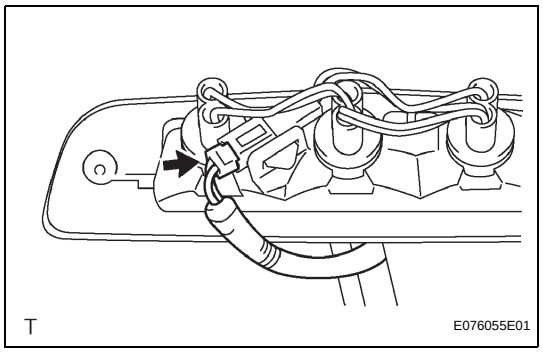

(e) Install the center stop light assembly with the 2 screws.

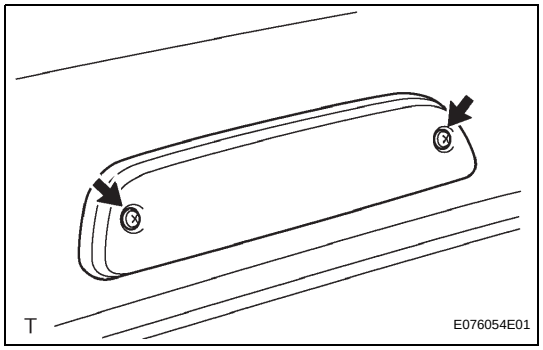

2. CONNECT CABLE TO NEGATIVE BATTERY TERMINAL
Torque: 3.9 N*m (40 kgf*cm, 35 in.*lbf)

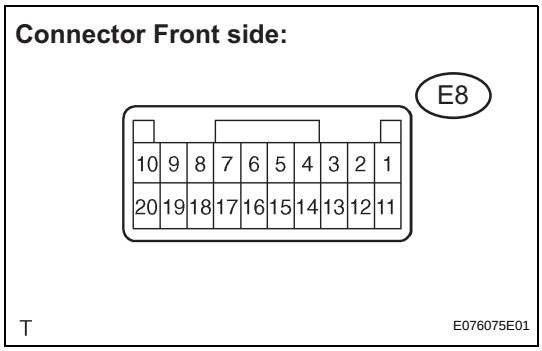

INSPECTION

1. INSPECT HEADLIGHT DIMMER SWITCH ASSEMBLY

(a) Check the resistance of the light control switch.

(1) Measure the resistance using an ohmmeter, and check the results in accordance with the value(s) in the table below.

Standard

Tester Connection	Condition	Specified Condition
-	OFF	10 kΩ or higher
12-18	TAIL	Below 1Ω
12-18-20	HEAD	Below 1Ω

If the result is not as specified, replace the headlight dimmer switch assembly.

(b) Check the resistance of the headlight dimmer switch.

(1) Measure the resistance using an ohmmeter, and check the results in accordance with the value(s) in the table below.

Standard

Tester Connection	Condition	Specified Condition
11-12-17	FLASH	Below 1Ω
12-16	LOW BEAM	Below 1Ω
11-12	HI BEAM	Below 1Ω

If the result is not as specified, replace the headlight dimmer switch assembly.

(c) Check the resistance of the turn signal switch.

(1) Measure the resistance using an ohmmeter, and check the results in accordance with the value(s) in the table below.

Standard

Tester Connection	Condition	Specified Condition
12-13	Right turn	Below 1Ω
-	Neutral	10 kΩ or higher
12-15	Left turn	Below 1Ω

If the result is not as specified, replace the headlight dimmer switch assembly.

INSTALLATION

1. INSTALL HEADLIGHT DIMMER SWITCH ASSEMBLY

(a) Engage the 2 claws and install the headlight dimmer switch assembly as shown in the illustration.

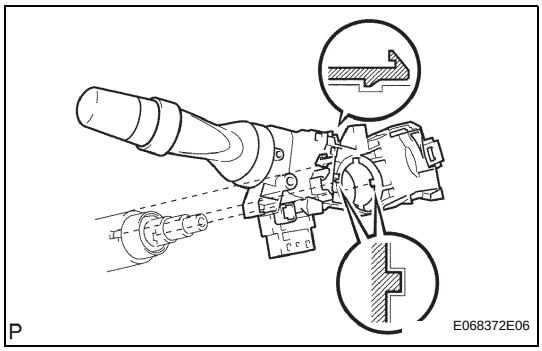

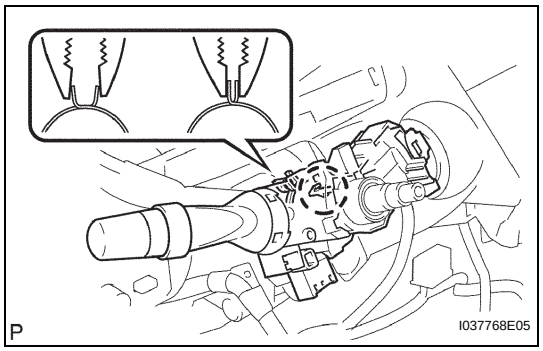

(b) Install the headlight dimmer switch assembly with the clamp.
(c) Connect the connector.

2. **INSTALL WINDSHIELD WIPER SWITCH ASSEMBLY (See page WW-19)**
3. **INSTALL SPIRAL CABLE SUB-ASSEMBLY (See page RS-567)**
4. **INSTALL STEERING COLUMN UPPER COVER (See page SR-18)**
5. **INSTALL STEERING COLUMN LOWER COVER (See page SR-18)**
6. **CENTER SPIRAL CABLE (See page RS-567)**
7. **INSTALL STEERING WHEEL ASSEMBLY (See page SR-18)**
8. **INSPECT STEERING WHEEL CENTER POINT**
9. **INSPECT HORN BUTTON ASSEMBLY**
10. **INSTALL HORN BUTTON ASSEMBLY**
11. **CONNECT CABLE TO NEGATIVE BATTERY TERMINAL**
    Torque: 3.9 N*m (40 kgf*cm, 35 in.*lbf)
12. **INSPECT SRS WARNING LIGHT**
13. **INSTALL NO. 3 STEERING WHEEL LOWER COVER (See page RS-559)**
14. **INSTALL NO. 2 STEERING WHEEL LOWER COVER (See page RS-559)**

REMOVAL

1. DISCONNECT CABLE FROM NEGATIVE BATTERY TERMINAL

2. REMOVE FRONT WIPER ARM HEAD CAP

(a) Using a screwdriver wrapped with protective tape, remove the 2 front wiper arm head caps.

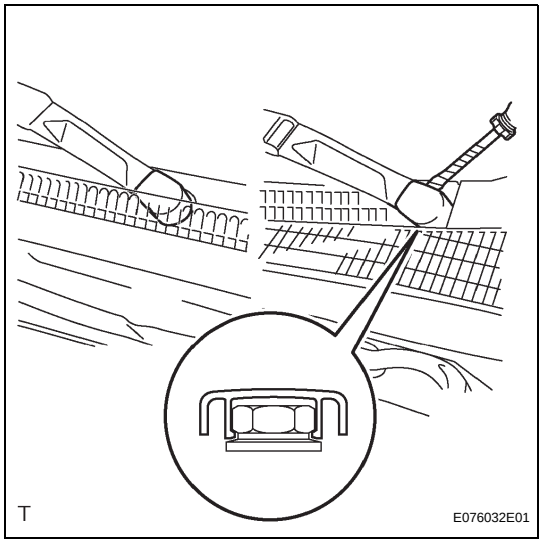

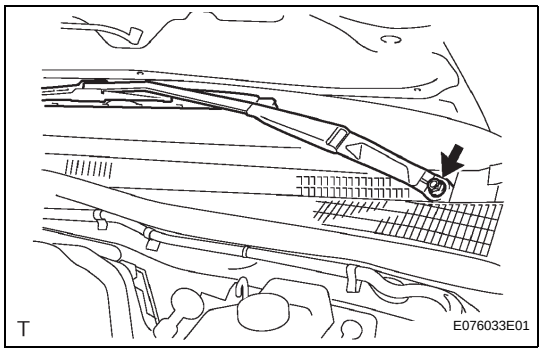

3. REMOVE FRONT WIPER ARM LH

(a) Operate the wiper, then stop the windshield wiper motor assembly at the automatic stop position.
(b) Remove the nut and front wiper arm LH.

4. REMOVE FRONT WIPER ARM RH

HINT:
Perform the same procedure as above on the opposite side.

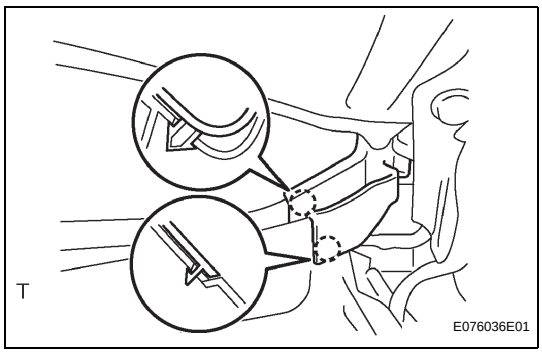

5. REMOVE FRONT FENDER TO COWL SIDE SEAL LH

(a) Disengage the 2 claws and remove the front fender to cowl side seal LH.

6. REMOVE FRONT FENDER TO COWL SIDE SEAL RH

HINT:
Perform the same procedure as above on the opposite side.

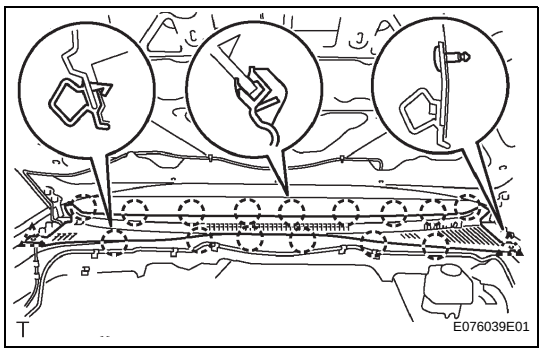

7. REMOVE COWL TOP VENTILATOR LOUVER SUB-ASSEMBLY

(a) Disengage the 2 clips.
(b) Disengage the 15 claws, then remove the cowl top ventilator louver sub-assembly.

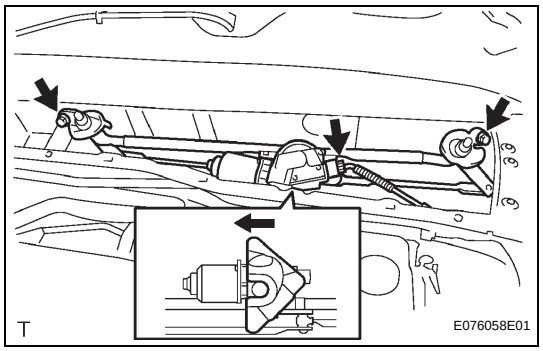

8. REMOVE WINDSHIELD WIPER MOTOR AND LINK

(a) Disconnect the connector, then remove the 2 bolts.

(b) Slide the wiper link assembly to the passenger side seat side. Disengage the meshing of the rubber pin, then remove the windshield wiper motor & link assembly.

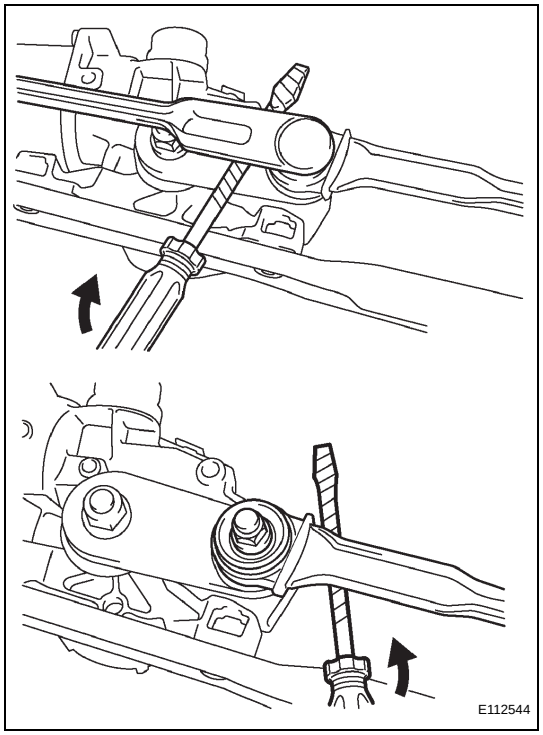

9. REMOVE FRONT WIPER MOTOR

(a) Using a screwdriver wrapped with protective tape, disengage the meshing of the 2 rods at the crank arm pivot of the windshield wiper motor assembly.

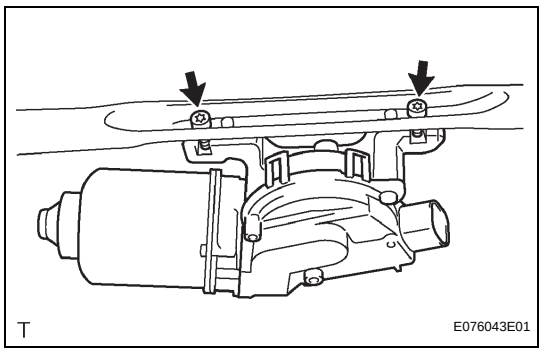

(b) Using a "Torx" socket wrench (T30), remove the 2 screws and windshield wiper motor assembly.

Windshield Wiper Motor Assembly Connector Front View:

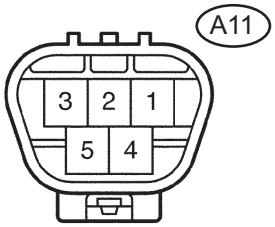

P

E113073E01

INSPECTION

1. INSPECT FRONT WIPER MOTOR

(a) Check the LO operation.

(1) Connect the battery positive (+) lead to terminal 1 (+1) of the connector and the battery negative (-) lead to terminal 5 (E), then check that the windshield wiper motor assembly operates at low speed (LO).
If the motor does not operate, replace the windshield wiper motor assembly.

(b) Check the HI operation.

(1) Connect the battery positive (+) lead to terminal 4 (+2) of the connector and the battery negative (-) lead to terminal 5 (E), then check that the motor operates at high speed (HI).

INSTALLATION

1. INSTALL FRONT WIPER MOTOR

(a) Apply DENSO No. 50 grease to the crank arm pivot of the windshield wiper motor assembly.

(b) Using a "Torx" socket wrench (T30), install the windshield wiper motor assembly with the 2 screws.
Torque: 7.5 N*m (76 kgf*cm, 66 in.*lbf)

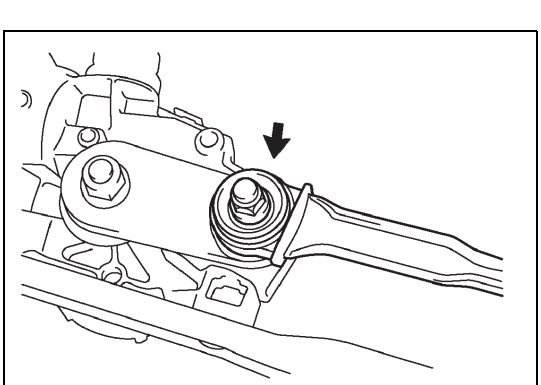

T

E076043E01

(c) Install the 2 rods onto the crank arm pivot of the windshield wiper motor assembly.

E112545

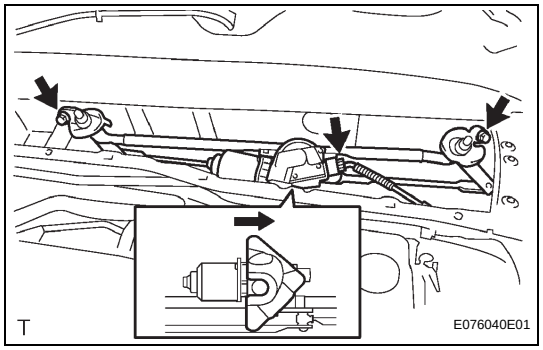

2. INSTALL WINDSHIELD WIPER MOTOR AND LINK

(a) Slide the wiper motor assembly to the driver side seat side as shown in the illustration and engage the rubber pin with the body.

(b) Install the windshield wiper link assembly with the 2 bolts.

Torque: 5.5 N*m (56 kgf*cm, 49 in.*lbf)

(c) Connect the connector.

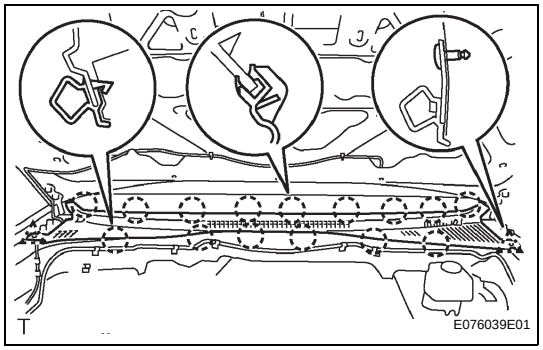

3. INSTALL COWL TOP VENTILATOR LOUVER SUB-ASSEMBLY

(a) Engage the 15 claws and install the cowl top ventilator louver sub-assembly.

(b) Engage the 2 clips

4. INSTALL FRONT FENDER TO COWL SIDE SEAL RH

HINT:

Perform the same procedure as above on the opposite side.

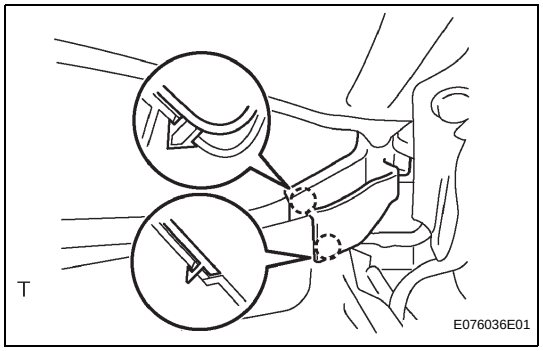

5. INSTALL FRONT FENDER TO COWL SIDE SEAL LH

(a) Engage the 2 claws and install the front fender onto cowl side seal LH.

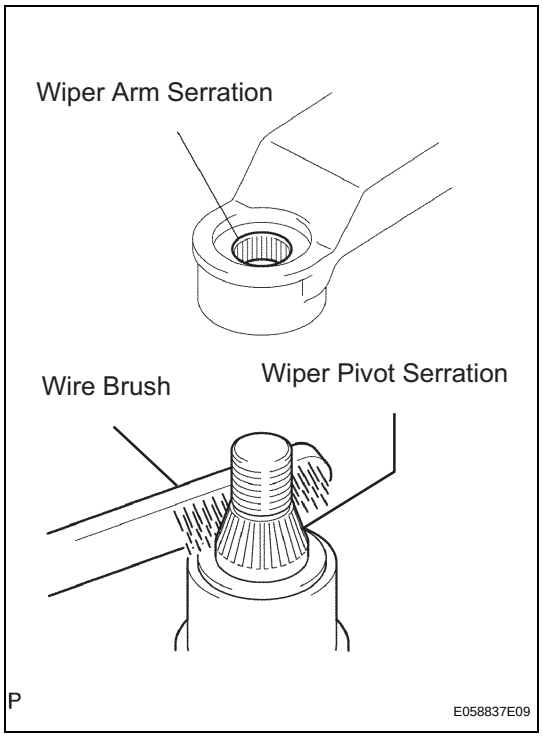

6. INSTALL FRONT WIPER ARM RH

(a) Scrape any metal powder off the serration part of the wiper arm with a round file or equivalent (when reinstalling).

(b) Clean the wiper pivot serration with a wire brush.

(c) Operate the wiper, then stop the windshield wiper motor assembly at the automatic stop position.

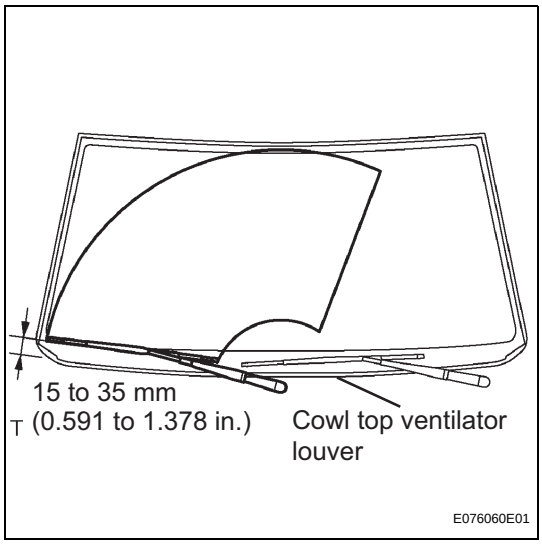

(d) Install the front wiper arm RH onto the position with the nut as shown in the illustration.
Torque: 21 N*m (209 kgf*cm, 15 ft.*lbf)
HINT:
Hold down the arm hinge by hand to fasten the nut.

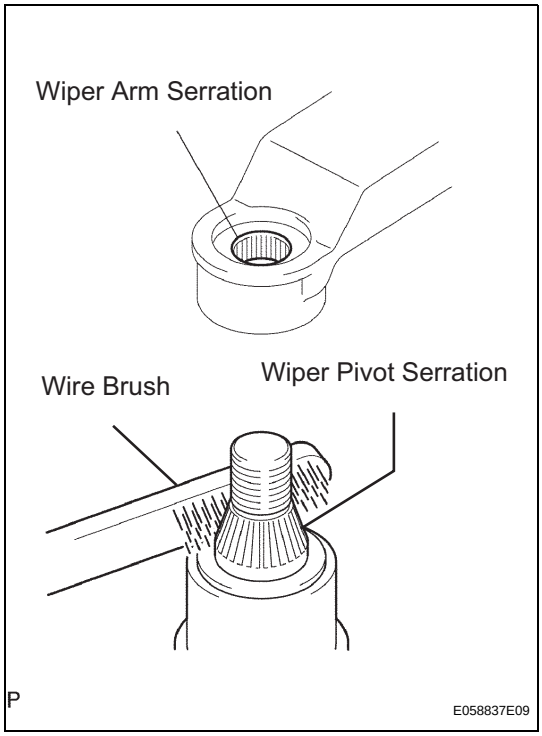

7. INSTALL FRONT WIPER ARM LH

(a) Scrape any metal powder off the serration part of the wiper arm with a round file or equivalent (when reinstalling).

(b) Clean the wiper pivot serration with a wire brush.

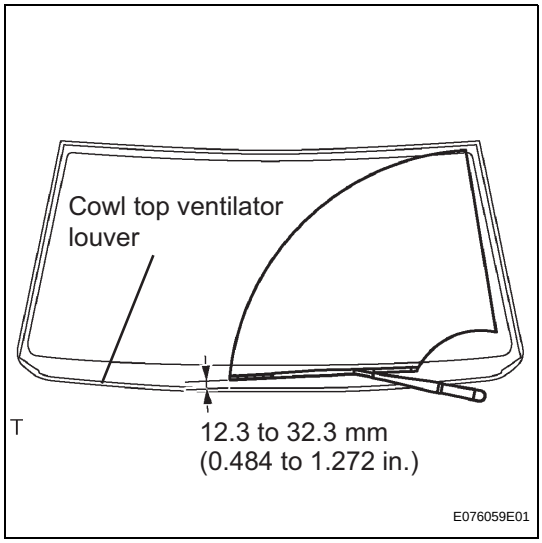

(c) Install the front wiper arm LH onto the position with the nut as shown in the illustration.
Torque: 21 N*m (209 kgf*cm, 15 ft.*lbf)
HINT:
Hold down the arm hinge by hand to fasten the nut.

(d) Operate the front wipers while spraying water or washer fluid on the windshield. Ensure that there is no interference between the blades and pillar.

8. CONNECT CABLE TO NEGATIVE BATTERY TERMINAL
Torque: 3.9 N*m (40 kgf*cm, 35 in.*lbf)

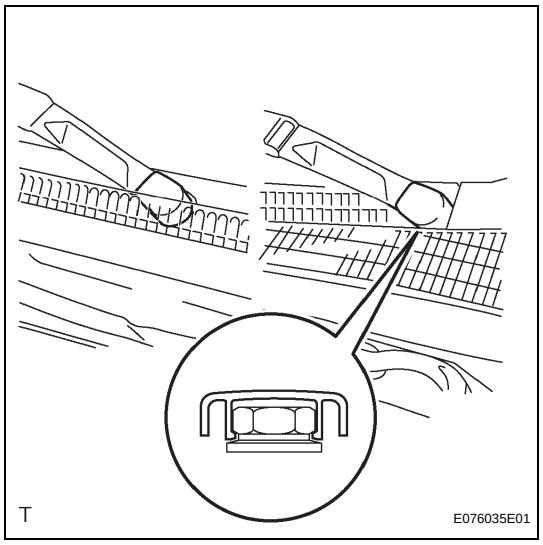

9. INSTALL FRONT WIPER ARM HEAD CAP

(a) Engage the claw and install the 2 front wiper arm head caps.

(3) Connect the voltmeter positive terminal to terminal 3 (+1) of the E7 connector and the voltmeter negative terminal to terminal 2 (EW) of the E11 connector. Turn the washer switch on and off, and check the voltage between terminals 3 (+1) of the E7 connector and 2 (EW) of the E11 connector.

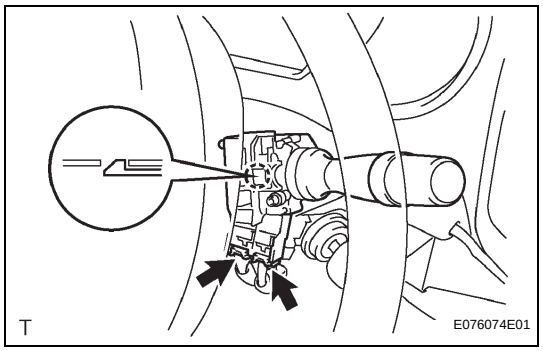

INSTALLATION

1. **INSTALL WIPER SWITCH**
   (a) Engage the claw and install the windshield wiper switch assembly.
   (b) Connect the 2 connectors.
2. **CONNECT CABLE TO NEGATIVE BATTERY TERMINAL**
   Torque: 3.9 N*m (40 kgf*cm, 35 in.*lbf)
3. **INSTALL STEERING COLUMN UPPER COVER (See page SR-18)**
4. **INSTALL STEERING COLUMN LOWER COVER (See page SR-18)**

PROBLEM SYMPTOMS TABLE

Power door lock control system

Symptom	Suspected area	See page
All doors cannot be locked/unlocked simultaneously	DR LOCK fuse	DL-10
	J/B fuse	
	ECU-B fuse	
	ALT fuse	
	Power window regulator master switch assembly	
	Front door lock assembly LH	
	Door control switch aassembly	
	Driver side J/B assembly (multiplex network body ECU)	
	Wire harness	
Key lock-on prevention function does not work properly (manual operation and key-linked lock are available)	Unlock warning switch assembly	DL-29
	Front door courtesy light switch assembly (driver side)	
	Driver side J/B assembly (multiplex network body ECU)	
	Wire harness	

TERMINALS OF ECU

1. CHECK DRIVER SIDE JUNCTION BLOCK ASSEMBLY (MULTIPLEX NETWORK BODY ECU)

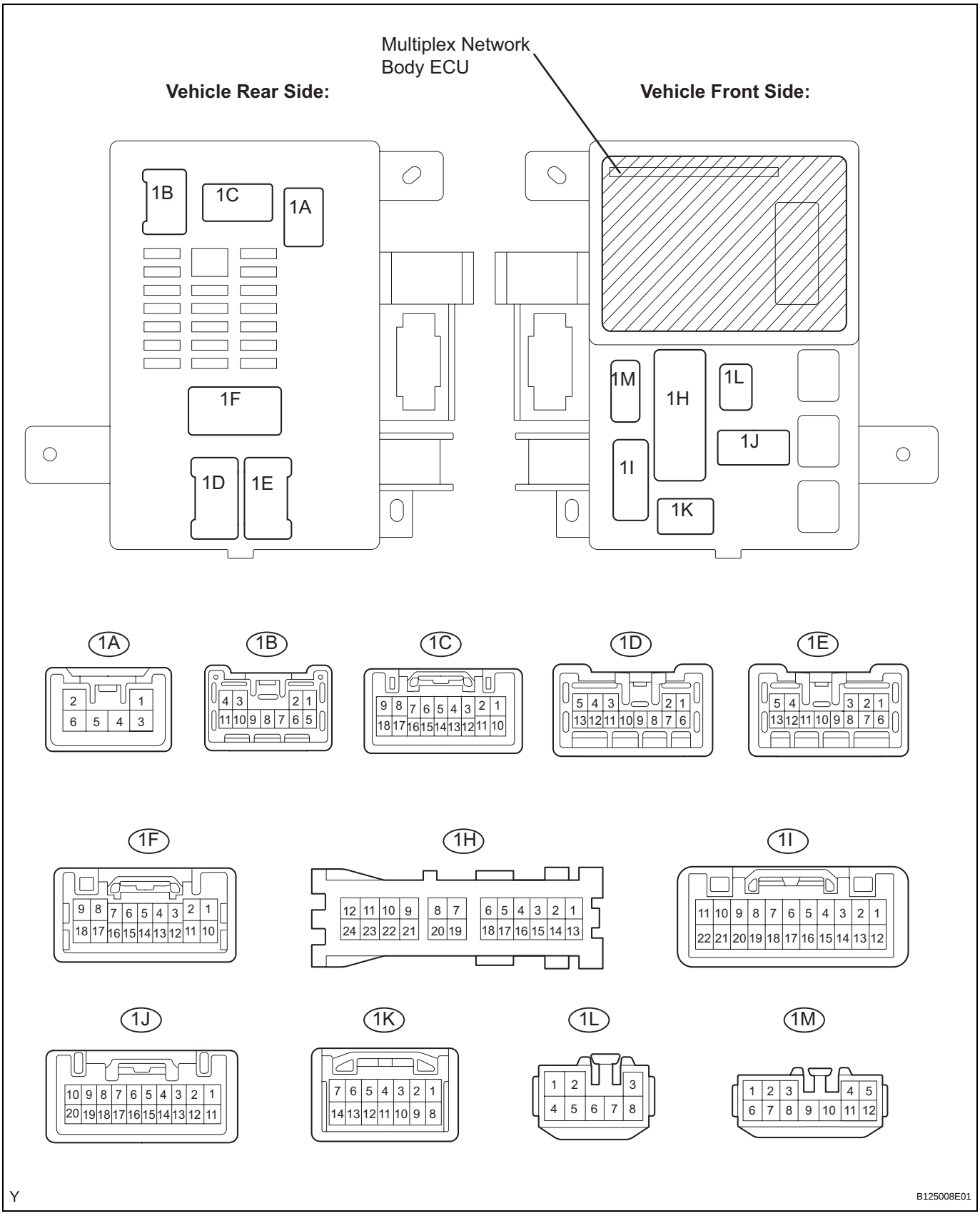

(a) Disconnect the 1A, 1C, 1F, 1H, 1I and 1K driver side J/B connectors.
(b) Disconnect the B5 multiplex network body ECU connectors.
(c) Measure the voltage and resistance of each of the wire harness side connectors.

Standard:

Symbols (Terminal No.)	Wiring Color	Terminal Description	Condition	Specified Condition
ALTB (1A-6) - Body ground	L - Body ground	+B (power system, generator system) power supply	Always	10 to 14 V
ECUB (1C-16) - Body ground	R - Body ground	+B (ECUB) power supply	Always	10 to 14 V
GND (1H-18) - Body ground	W-B - Body ground	Ground	Always	Below 1 Ω
KSW (1K-10) - Body ground	G-B - Body ground	Key unlock warning switch input	No key in ignition key cylinder	10 kΩ or higher
			Key inserted in ignition key cylinder	Below 1 Ω
DCTY (1F-7) - Body ground	G-Y - Body ground	Driver side courtesy switch input	Driver side door closed	10 kΩ or higher
			Driver side door open	Below 1 Ω
PCTY (1I-8) - Body ground	R-B - Body ground	Pssenger side courtesy switch input	Passenger side door closed	10 kΩ or higher
			Passenger side door open	Below 1 Ω
L1 (1I-7) - Body ground L1 (1I-18) - Body ground	L-W - Body ground	Door control switch (master switch and passenger side switch) lock input	Door control switch (master switch or passenger side switch) OFF	10 kΩ or higher
			Door control switch (master switch or passenger side switch) LOCK	Below 1 Ω
UL1 (1I-3) - Body ground UL1 (1I-1) - Body ground	GR - Body ground	Door control switch (master switch and passenger side switch) lock input	Door control switch (master switch or passenger side switch) OFF	10 kΩ or higher
			Door control switch (master switch or passenger side switch) UNLOCK	Below 1 Ω
LSWD (B5-20) - Body ground	W-R - Body ground	Driver side door lock position switch input	Driver side door UNLOCK	10 kΩ or higher
			Driver side door LOCK	Below 1 Ω
LSWP (B5-11) - Body ground	B-W - Body ground	Driver side door lock position switch input	Driver side door UNLOCK	10 kΩ or higher
			Driver side door LOCK	Below 1 Ω
L2 (1I-17) - Body ground	V - Body ground	Driver side door key-linked door lock input	Driver side door key cylinder OFF	10 kΩ or higher
			Driver side door key cylinder LOCK	Below 1 Ω
L2 (1I-4) - Body ground	V - Body ground	Passenger side door key-linked door lock input	Passenger side door key cylinder OFF	10 kΩ or higher
			Passenger side door key cylinder LOCK	Below 1 Ω
UL3 (B5-23) - Body ground	G-B - Body ground	Driver side door key-linked door unlock input	Driver side door key cylinder OFF	10 kΩ or higher
			Driver side door key cylinder UNLOCK	Below 1 Ω

Symbols (Terminal No.)	Wiring Color	Terminal Description	Condition	Specified Condition
UL2 (1I-19) - Body ground	P - Body ground	Passenger side door key-linked door unlock input	Passenger side door key cylinder OFF	10 kΩ or higher
			Passenger side door key cylinder UNLOCK	Below 1 Ω

If the result is not as specified, there may be a malfunction on the wire harness side.

(d) Reconnect the 1A, 1C, 1F, 1H, 1I and 1K J/B connectors.

(e) Reconnect the B5 multiplex network body ECU connectors.

(f) Measure the voltage of the connectors.

Standard:

Symbols (Terminal No.)	Wiring Color	Terminal Description	Condition	Specified Condition
ACT+ (1H-24) - Body ground ACT+ (1H-23) - Body ground ACT+ (1F-1) - Body ground ACT+ (1H-22) - Body ground	L-R - Body ground	Door lock motor LOCK drive output (all doors)	Door control switch (master switch or passenger side switch) or door key cylinder (driver or passenger side) OFF	Below 1 V
			Door control switch (master switch or passenger side switch) or door key cylinder (driver or passenger side) LOCK	10 to 14 V
ACTD (B5-3) - Body ground	L-B - Body ground	Door lock motor UNLOCK drive output (driver side doors)	Door control switch (master switch or passenger side switch) or door key cylinder (driver or passenger side) OFF	Below 1 V
			Door control switch (master switch or passenger side switch) or door key cylinder (driver or passenger side) LOCK	10 to 14 V
ACT- (1H-5) - Body ground ACT- (1F-2) - Body ground ACT- (1H-4) - Body ground	L-B - Body ground	Door lock motor LOCK drive output (passenger and rear LH and rear RH side door)	Door control switch (master switch or passenger side switch) or door key cylinder (driver or passenger side) OFF	Below 1 V
			Door control switch (master switch or passenger side switch) or door key cylinder (driver or passenger side) LOCK	10 to 14 V

If the result is not as specified, the multiplex network body ECU may have a malfunction.

ON-VEHICLE INSPECTION

1. CHECK ELECTRICAL DOOR LOCK OPERATION

(a) Check the basic function.

(1) The door control switch (manual operation): 1) pushing LOCK locks all the doors and 2) pushing UNLOCK unlocks all the doors.

(2) The door key cylinder lock function: turning the driver or passenger side door key cylinder to the LOCK position locks all the doors.

(3) The door key cylinder unlock function: 1) turning the driver or passenger side door key cylinder to the UNLOCK position once unlocks only the driver side door, and 2) turning it to the UNLOCK position again within 3 seconds unlocks all the doors (2-step unlock function).

(b) Check the key lock-in prevention function.

NOTICE:

To prevent the key from being locked in the vehicle, the following inspection should be made with the driver side door window open.

(1) Have the key inserted into the ignition key cylinder.

(2) With the driver side door open, turn the driver side door lock knob to the LOCK position and check that all the doors unlock immediately.

(3) With the driver side door open, push LOCK on the door control switch (manual operation) and check that all the doors unlock immediately.

(4) With the driver side door open, turn the driver side door lock knob to the LOCK position, hold it for 2 seconds or more and then close the driver side door. Check that all the doors unlock.

(c) Check the security function.

(1) Close all the doors and leave the driver side door window open so that the door control switch can be operated from outside the vehicle.

(2) Pull out the key, open the driver side door and then close and lock the door without using the key. Check that pushing UNLOCK on the door control switch (manual operation) from outside the vehicle does not unlock the doors.

(3) Pull out the key, close and lock the driver side door by key operation. Check that pushing UNLOCK on the door control switch (manual operation) from outside the vehicle does not unlock the doors.

(4) Pull out the key, close the driver side door and lock the door by wireless door lock operation. Check that pushing UNLOCK on the door control switch (manual operation) from outside the vehicle does not unlock the doors.
HINT:
Check that the security function is canceled when any of the following conditions are met:
- The ignition switch is turned ON.
- The driver side door is unlocked using the key.
- UNLOCK on the door control switch (manual operation) is pushed after the door control knob is turned to the UNLOCK position manually.
- The doors are unlocked with wireless operation.

(d) Check the illumination function.
(1) Set the room light switch to the DOOR position.
(2) With all doors locked, check that all the doors unlock when the driver side door lock cylinder is turned to the UNLOCK position using the key. At the same time, the room light should turn ON.
(3) Check that the room light turns off in approximately 15 seconds if the doors have not been opened.

All Doors cannot be Locked / Unlocked Simultaneously

DESCRIPTION

The multiplex network body ECU activates the door lock motors with switch signals from the master switch, door control switch and driver/passenger side door key cylinder.

WIRING DIAGRAM

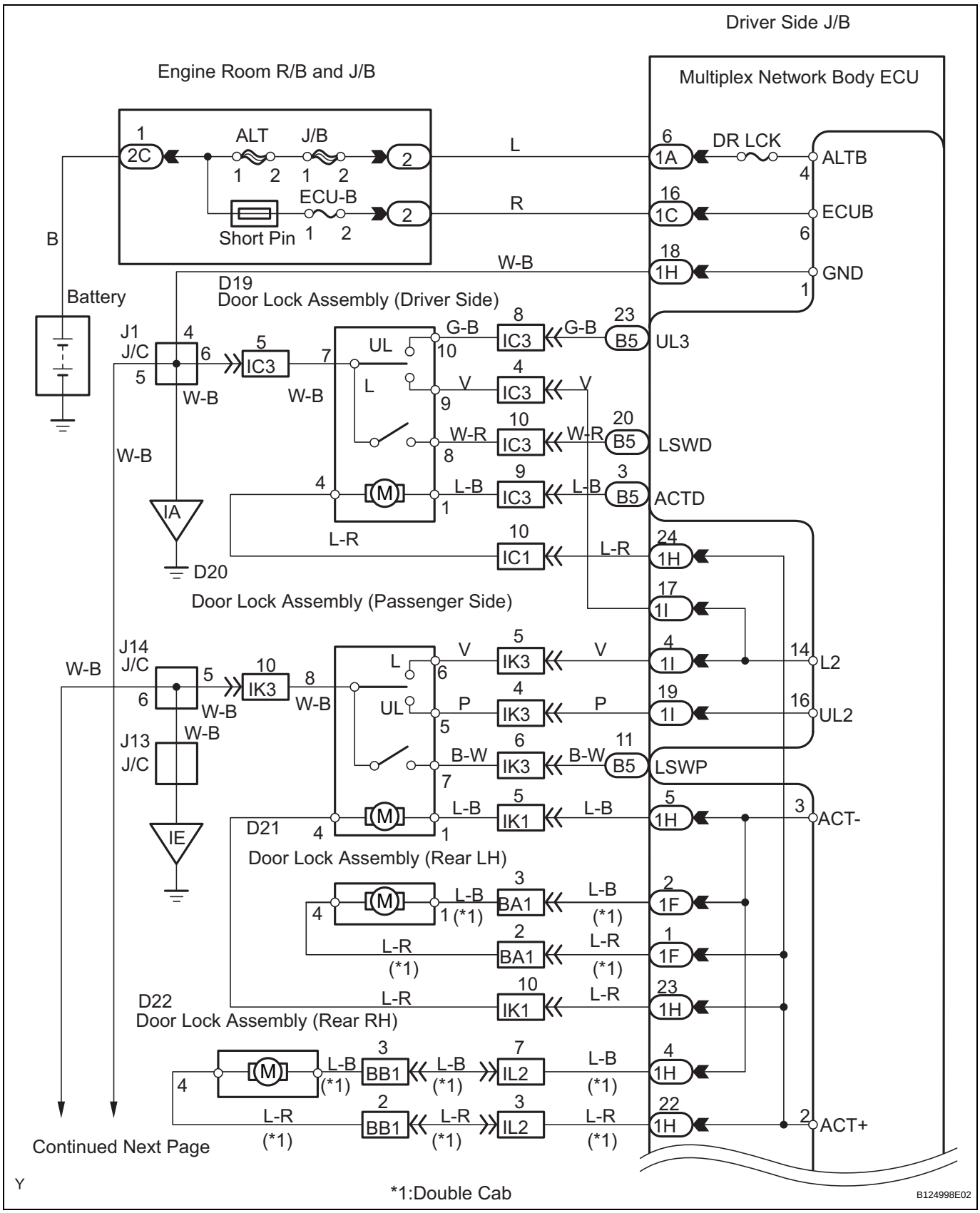

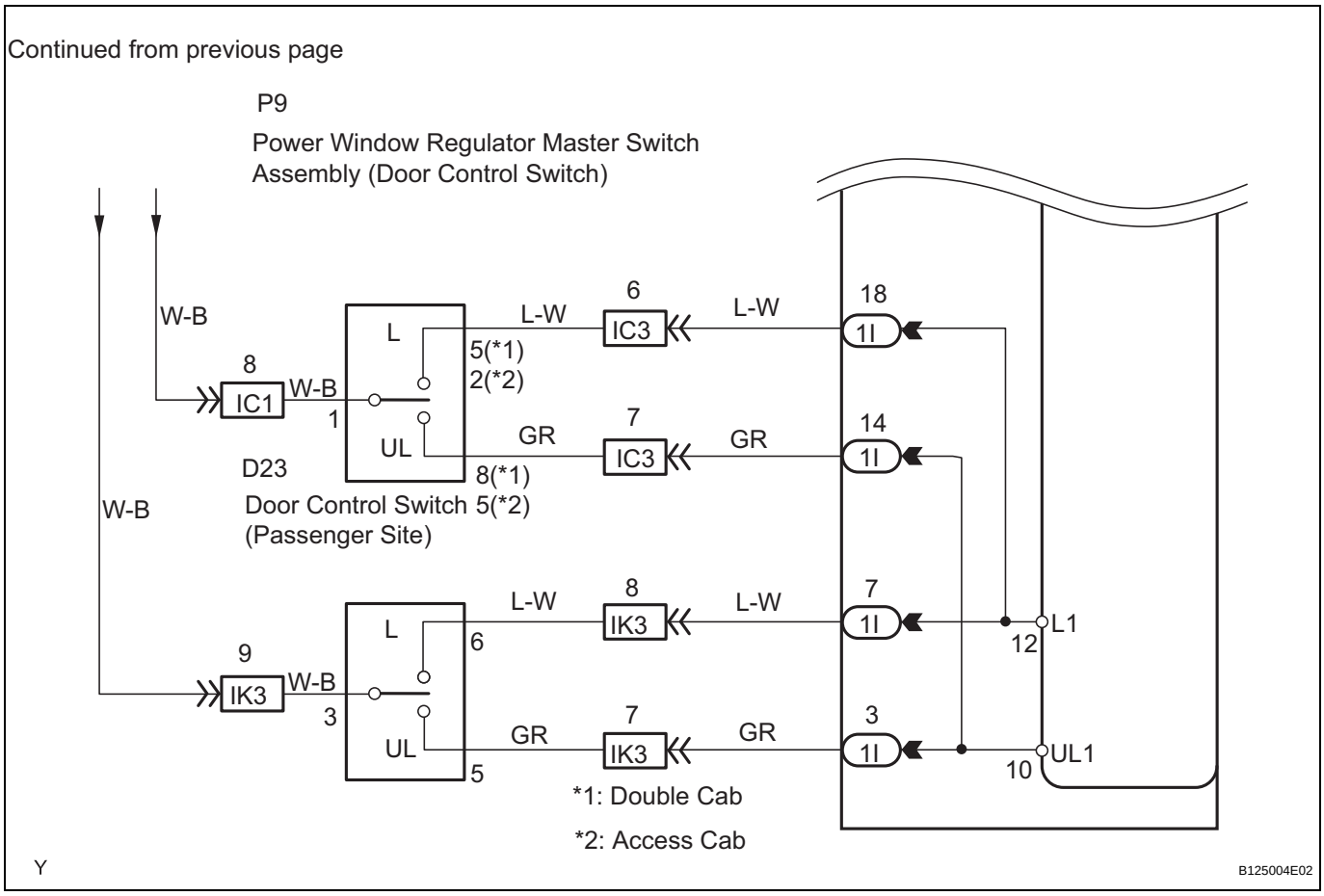

1	INSPECT ALL DOORS LOCK/UNLOCK OPERATION

All the doors can be locked/unlocked simultaneously using the following items:

- Door control switch on the master switch (switch operation)
- Door control switch on the front passenger side (switch operation)
- Door key cylinder linked with driver and passenger side door lock (key operation)

If all the doors cannot be locked/unlocked simultaneously, proceed to the next step according to the malfunctioning part shown in the table below.

Result:

Malfunctioning Part	Proceed to
Driver side doors	A
Passenger side doors	B
All items are malfunctioning	C

B	**Go to step 3**
C	**Go to step 14**

DL

A

2 INSPECT DRIVER SIDE DOORS LOCK/UNLOCK OPERATION

Malfunctioning Part	Proceed to
Door control switch on master switch	A
Driver side door key cylinder	B
Door control switch on master switch and driver side door key cylinder	C

A → **Go to step 4**

B → **Go to step 6**

C → **Go to step 9**

3 INSPECT PASSENGER SIDE DOORS LOCK/UNLOCK OPERATION

Malfunctioning Part	Proceed to
Door control switch on passenger side switch	A
Passenger side door key cylinder	B
Door control switch on passenger side and passenger side door key cylinder	C

A → **Go to step 16**

B → **Go to step 18**

C → **Go to step 21**

4	**INSPECT POWER WINDOW REGULATOR MASTER SWITCH ASSEMBLY (DOOR CONTROL SWITCH)**

Component Side (Double Cab):

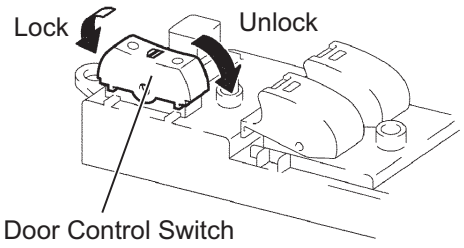

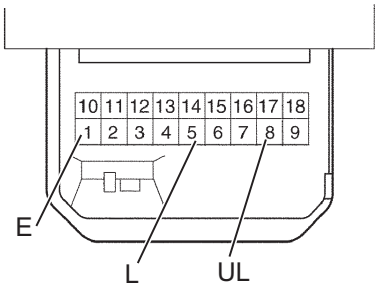

Component Side (Access Cab):

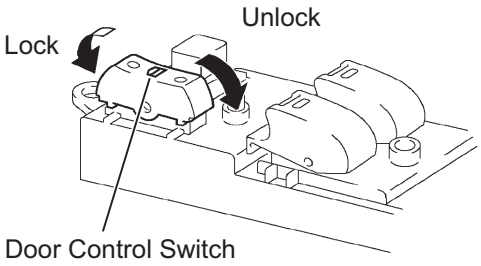

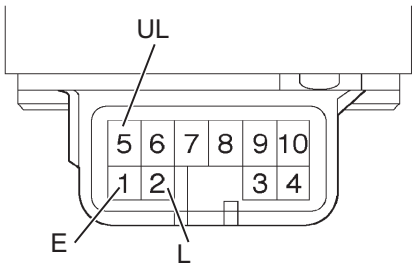

Y

B128473E01

(a) Remove the power window regulator master switch assembly.

(b) Measure the resistance of the door control switch.

Standard (Double cab)

Tester Connection	Switch Condition	Specified Condition
1 (E) - 5 (L)	Lock	Below 1 Ω
1 (E) - 5 (L) 1 (E) - 8 (UL)	OFF	10 kΩ or higher
1 (E) - 8 (UL)	Unlock	Below 1 Ω

Standard (Access cab)

Tester Connection	Switch Condition	Specified Condition
1 (E) - 2 (L)	Lock	Below 1 Ω
1 (E) - 2 (L) 1 (E) - 5 (UL)	OFF	10 kΩ or higher
1 (E) - 5 (UL)	Unlock	Below 1 Ω

(c) Reinstall the power window regulator master switch assembly.

NG → **REPLACE POWER WINDOW REGULATOR MASTER SWITCH ASSEMBLY**

OK

5	CHECK HARNESS AND CONNECTOR (MASTER SWITCH (SWITCH) - DRIVER SIDE J/B AND BODY GROUND)

Wire Harness Side (Double Cab):

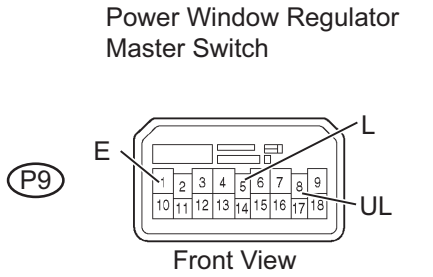

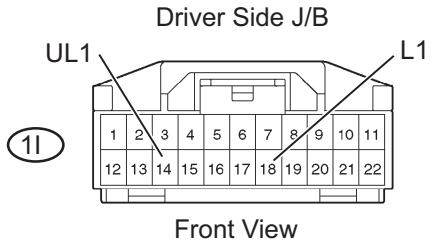

Wire Harness Side (Access Cab):

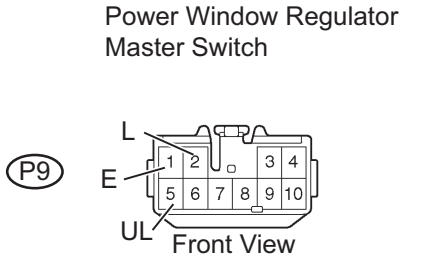

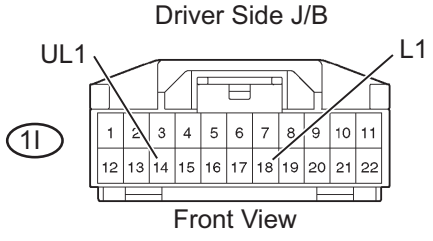

Y

B128474E01

(a) Disconnect the P9 power window regulator master switch connector.
(b) Disconnect the 1I driver side J/B connector.
(c) Measure the resistance.

Standard (Double cab)

Tester Connection	Specified Condition
P9-5 (L) - 1I-18 (L1)	Below 1 Ω
P9-8 (UL) - 1I-14 (UL1)	Below 1 Ω
P9-1 (E) - Body ground	Below 1 Ω
P9-5 (L) or 1I-18 (L1) - Body ground	10 kΩ or higher
P9-8 (UL) or 1I-14 (UL1) - Body ground	10 kΩ or higher

Standard (Access cab)

Tester Connection	Specified Condition
P9-2 (L) - 1I-18 (L1)	Below 1 Ω
P9-5 (UL) - 1I-14 (UL1)	Below 1 Ω
P9-1 (E) - Body ground	Below 1 Ω
P9-2 (L) or 1I-18 (L1) - Body ground	10 kΩ or higher
P9-5 (UL) or 1I-14 (UL1) - Body ground	10 kΩ or higher

(d) Reconnect the power window regulator master switch connector.
(e) Reconnect the driver side J/B connector.

NG → **REPAIR OR REPLACE HARNESS OR CONNECTOR**

OK

REPLACE DRIVER SIDE JUNCTION BLOCK

6 INSPECT FRONT DOOR LOCK ASSEMBLY LH (DOOR LOCK MOTOR)

Component Side:

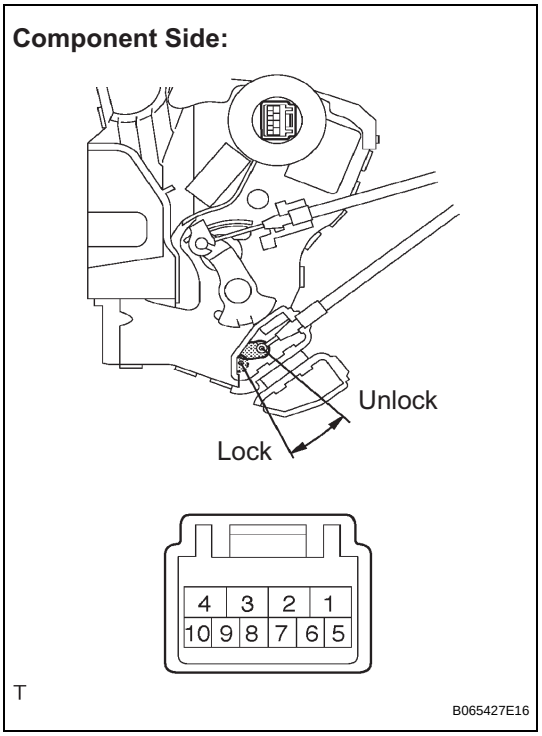

(a) Apply battery voltage to the door lock and check operation of the door lock motor.
NOTICE:
Do not apply battery voltage to any terminals except terminals 1 and 4.
OK

Terminal No	Specified Condition
Battery positive (+) → Terminal 4 Battery negative (-) → Terminal 1	Lock
Battery positive (+) → Terminal 1 Battery negative (-) → Terminal 4	Unlock

NG → **REPLACE FRONT DOOR LOCK ASSEMBLY LH**

OK

7 INSPECT FRONT DOOR LOCK ASSEMBLY LH (DOOR LOCK AND UNLOCK SWITCH AND POSITION SWITCH)

Component Side:

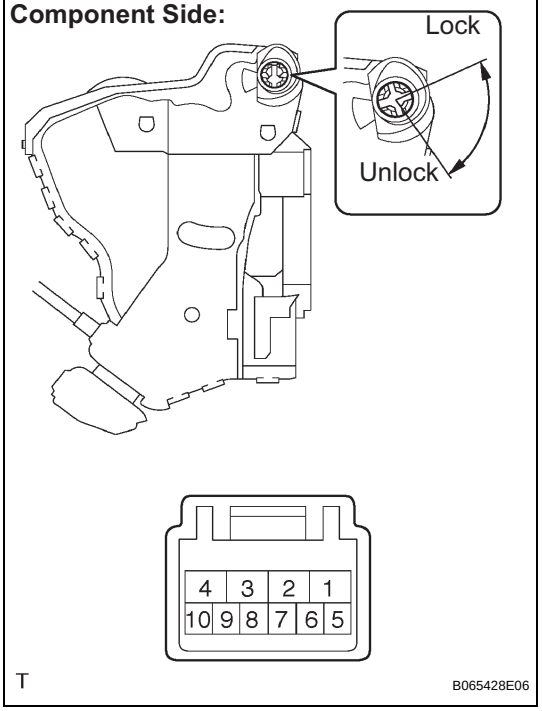

(a) Measure the resistance of the door lock and unlock switch and position switch.
Standard (Door lock and unlock switch)

Tester Connection	Door Lock Condition	Specified Condition
7 - 9	Lock	Below 1 Ω
7 - 9, 7 - 10	OFF	10 kΩ or higher
7 - 10	Unlock	Below 1 Ω

Standard (Position switch)

Tester Connection	Door Lock Condition	Specified Condition
7 - 8	Lock	10 kΩ or higher
7 - 8	Unlock	Below 1 Ω

NG → **REPLACE FRONT DOOR LOCK ASSEMBLY LH**

DL

OK

8	**CHECK HARNESS AND CONNECTOR (FRONT DOOR LOCK LH - ECU, DRIVER SIDE J/B AND BODY GROUND)**

Wire Harness Side:

Front Door Lock Assembly LH

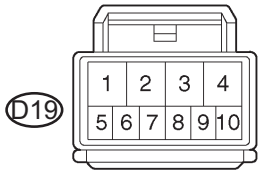

Front View

Multiplex Network Body ECU

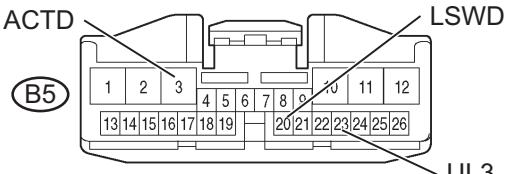

Front View

Driver Side J/B

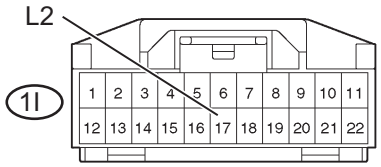

Driver Side J/B

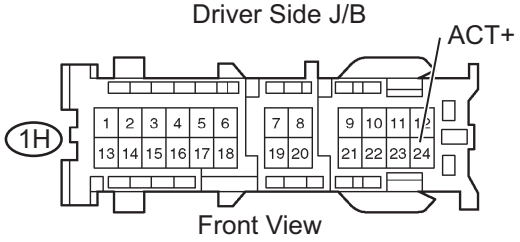

Front View

T

B088348E01

(a) Disconnect the D19 front door lock connector.
(b) Disconnect the B5 multiplex network body ECU connector.
(c) Disconnect the 1H and 1I driver side J/B connectors.
(d) Measure the resistance.

Standard

Tester Connection	Specified Condition
D19-4 - 1H-24 (ACT+)	Below 1 Ω
D19-1 - B5-3 (ACTD)	Below 1 Ω
D19-9 - 1I-17 (L2)	Below 1 Ω
D19-10 - B5-23 (UL3)	Below 1 Ω
D19-8 - B5-20 (LSWD)	Below 1 Ω
D19-7 - Body ground	Below 1 Ω
D19-4 or 1H-24 (ACT+) - Body ground	10 kΩ or higher
D19-1 or B5-3 (ACTD) - Body ground	10 kΩ or higher
D19-9 or 1I-17 (L2) - Body ground	10 kΩ or higher
D19-10 or B5-23 (UL3) - Body ground	10 kΩ or higher
D19-8 or B5-20 (LSWD) - Body ground	10 kΩ or higher

(e) Reconnect the front door lock connector.
(f) Reconnect the multiplex network body ECU connector.
(g) Reconnect the driver side J/B connectors.

NG → **REPAIR OR REPLACE HARNESS OR CONNECTOR**

OK

REPLACE DRIVER SIDE JUNCTION BLOCK (MULTIPLEX NETWORK BODY ECU)

DL

9 INSPECT FRONT DOOR LOCK ASSEMBLY LH (DOOR LOCK MOTOR)

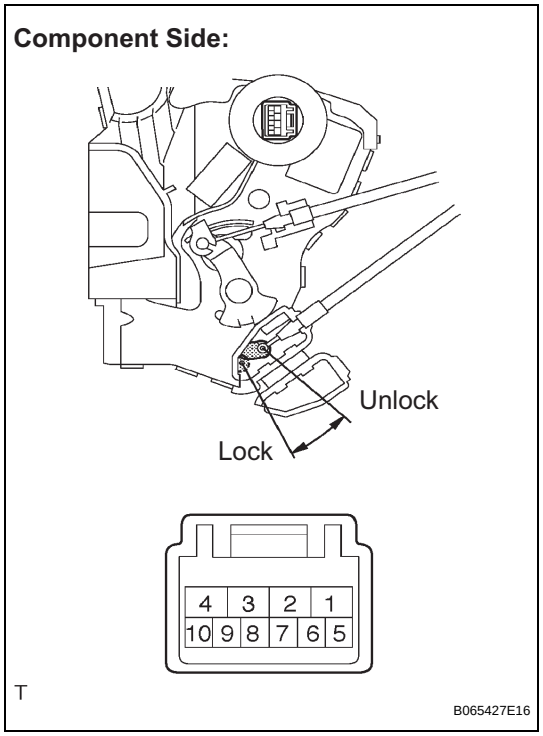

(a) Apply battery voltage to the door lock and check operation of the door lock motor.
NOTICE:
Do not apply battery voltage to any terminals except terminals 1 and 4
OK

Terminal No	Specified Condition
Battery positive (+) → Terminal 4 Battery negative (-) → Terminal 1	Lock
Battery positive (+) → Terminal 1 Battery negative (-) → Terminal 4	Unlock

NG → **REPLACE FRONT DOOR LOCK ASSEMBLY LH**

OK

10 INSPECT FRONT DOOR LOCK ASSEMBLY LH (DOOR LOCK AND UNLOCK SWITCH AND POSITION SWITCH)

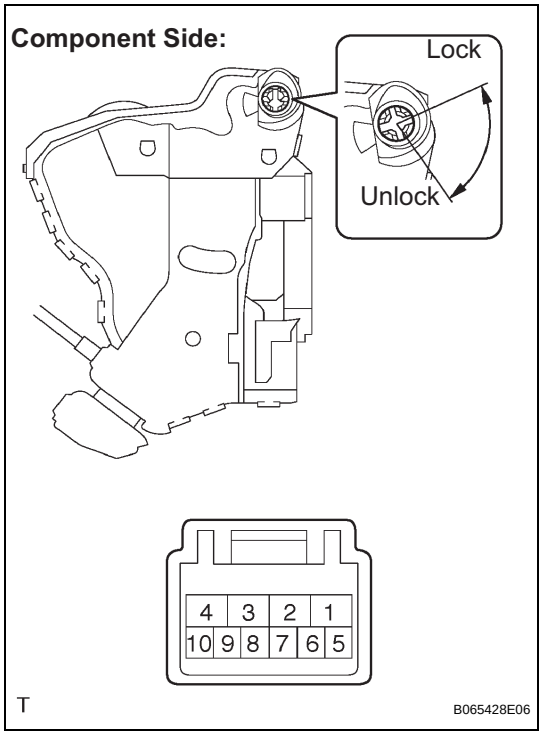

(a) Measure the resistance of the door lock and unlock switch and position switch.
Standard (Door lock and unlock switch)

Tester Connection	Door Lock Condition	Specified Condition
7 - 9	Lock	Below 1 Ω
7 - 9 7 - 10	OFF	10 kΩ or higher
7 - 10	Unlock	Below 1 Ω

Standard (Position switch)

Tester Connection	Door Lock Condition	Specified Condition
7 - 8	Lock	10 kΩ or higher
7 - 8	Unlock	Below 1 Ω

NG → **REPLACE FRONT DOOR LOCK ASSEMBLY LH**

DL

OK

11	CHECK HARNESS AND CONNECTOR (FRONT DOOR LOCK LH - ECU, DRIVER SIDE J/B AND BODY GROUND)

Wire Harness Side:

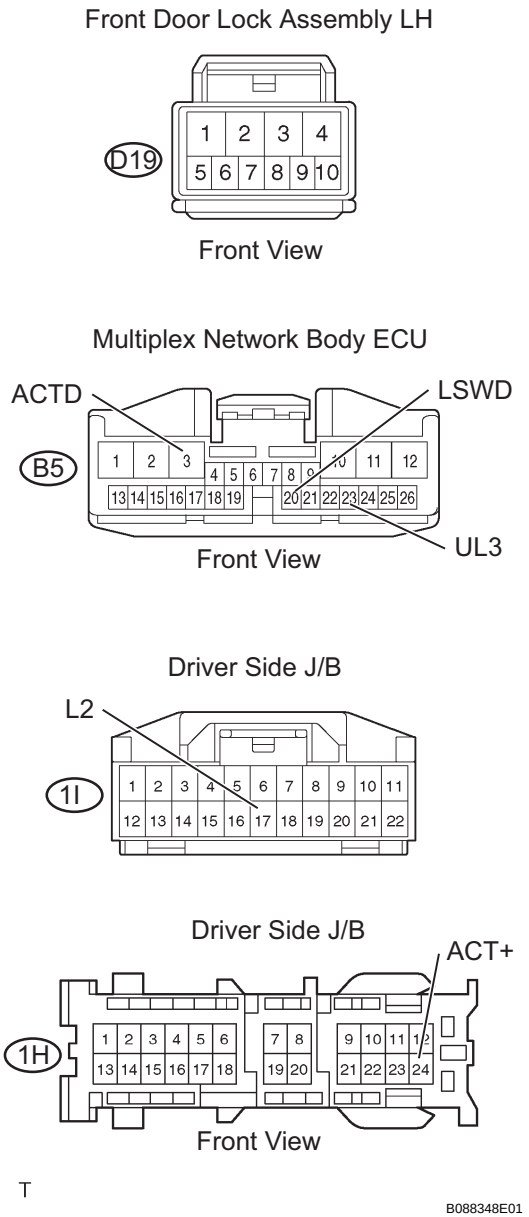

(a) Disconnect the D19 front door lock connector.
(b) Disconnect the B5 multiplex network body ECU connector.
(c) Disconnect the 1H and 1I driver side J/B connectors.
(d) Measure the resistance of the wire harness side connectors.

Standard

Tester Connection	Specified Condition
D19-4 - 1H-24 (ACT+)	Below 1 Ω
D19-1 - B5-3 (ACTD)	Below 1 Ω
D19-9 - 1I-17 (L2)	Below 1 Ω
D19-10 - B5-23 (UL3)	Below 1 Ω
D19-8 - B5-20 (LSWD)	Below 1 Ω
D19-7 - Body ground	Below 1 Ω
D19-4 or 1H-24 (ACT+) - Body ground	10 kΩ or higher
D19-1 or B5-3 (ACTD) - Body ground	10 kΩ or higher
D19-9 or 1I-17 (L2) - Body ground	10 kΩ or higher
D19-10 or B5-23 (UL3) - Body ground	10 kΩ or higher
D19-8 or B5-20 (LSWD) - Body ground	10 kΩ or higher

(e) Reconnect the front door lock connector.
(f) Reconnect the multiplex network body ECU connector.
(g) Reconnect the driver side J/B connectors.

NG → **REPAIR OR REPLACE HARNESS OR CONNECTOR**

OK

12	**INSPECT POWER WINDOW REGULATOR MASTER SWITCH ASSEMBLY (DOOR CONTROL SWITCH)**

Component Side (Double Cab):

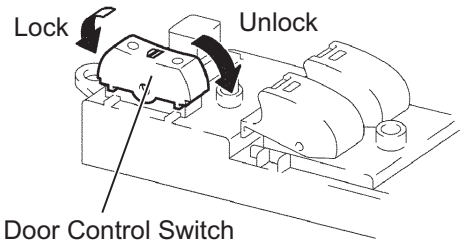

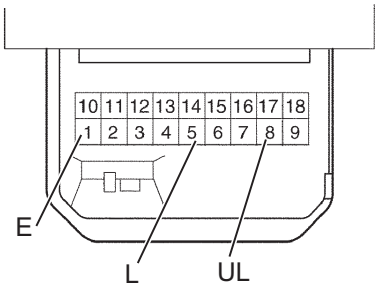

Component Side (Access Cab):

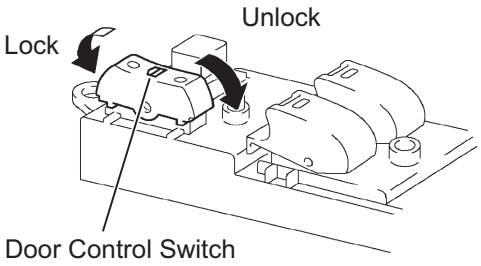

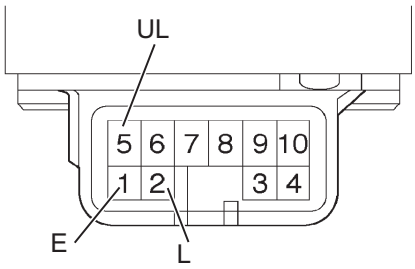

Y

B128473E01

OK

(a) Remove the power window regulator master switch assembly.

(b) Measure the resistance of the door control switch.

Standard (Double cab)

Tester Connection	Switch Condition	Specified Condition
1 (E) - 5 (L)	Lock	Below 1 Ω
1 (E) - 5 (L) 1 (E) - 8 (UL)	OFF	10 kΩ or higher
1 (E) - 8 (UL)	Unlock	Below 1 Ω

Standard (Access cab)

Tester Connection	Switch Condition	Specified Condition
1 (E) - 2 (L)	Lock	Below 1 Ω
1 (E) - 2 (L) 1 (E) - 5 (UL)	OFF	10 kΩ or higher
1 (E) - 5 (UL)	Unlock	Below 1 Ω

(c) Reinstall the power window regulator master switch assembly.

NG → **REPLACE POWER WINDOW REGULATOR MASTER SWITCH ASSEMBLY**

DL

13	CHECK HARNESS AND CONNECTOR (MASTER SWITCH (SWITCH) - DRIVER SIDE J/B AND BODY GROUND)

Wire Harness Side (Double Cab):

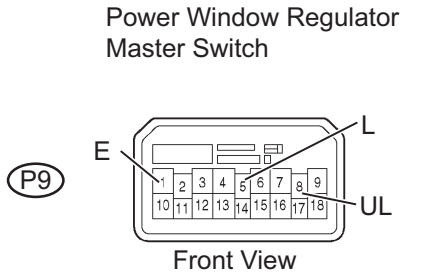

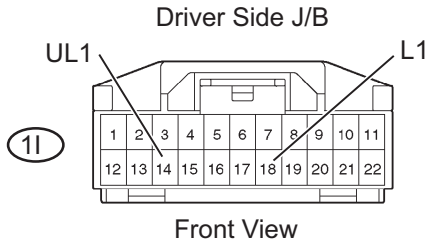

Wire Harness Side (Access Cab):

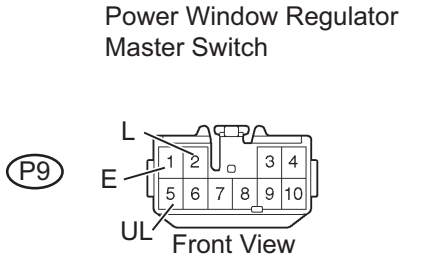

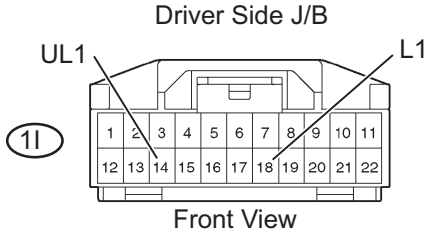

Y

B128474E01

(a) Disconnect the P9 power window regulator master switch connector.
(b) Disconnect the 1I driver side J/B connector.
(c) Measure the resistance.

Standard (Double cab)

Tester Connection	Specified Condition
P9-5 (L) - 1I-18 (L1)	Below 1 Ω
P9-8 (UL) - 1I-14 (UL1)	Below 1 Ω
P9-1 (E) - Body ground	Below 1 Ω
P9-5 (L) or 1I-18 (L1) - Body ground	10 kΩ or higher
P9-8 (UL) or 1I-14 (UL1) - Body ground	10 kΩ or higher

Standard (Access cab)

Tester Connection	Specified Condition
P9-2 (L) - 1I-18 (L1)	Below 1 Ω
P9-5 (UL) - 1I-14 (UL1)	Below 1 Ω
P9-1 (E) - Body ground	Below 1 Ω
P9-2 (L) or 1I-18 (L1) - Body ground	10 kΩ or higher
P9-5 (UL) or 1I-14 (UL1) - Body ground	10 kΩ or higher

(d) Reconnect the power window regulator master switch connector.
(e) Reconnect the driver side J/B connector.

NG → **REPAIR OR REPLACE HARNESS OR CONNECTOR**

OK

REPLACE DRIVER SIDE JUNCTION BLOCK

14	INSPECT FUSE (DR LCK, J/B, ECU-B, ALT)

(a) Remove the DR LCK fuse from the driver side J/B.
(b) Remove the J/B, ECU-B and ALT fuses from the engine room R/B.
(c) Measure the resistance of the fuse.
Standard:
Below 1 Ω
(d) Reinstall the DR LCK fuse.
(e) Reinstall the J/B, ECU-B and ALT fuses.

NG → **REPLACE FUSE**

OK

15	CHECK HARNESS AND CONNECTOR (DRIVER SIDE J/B ASSEMBLY - BODY GROUND)

(a) Disconnect the 1A, 1C, and 1H driver side J/B connectors.
(b) Measure the voltage and resistance.

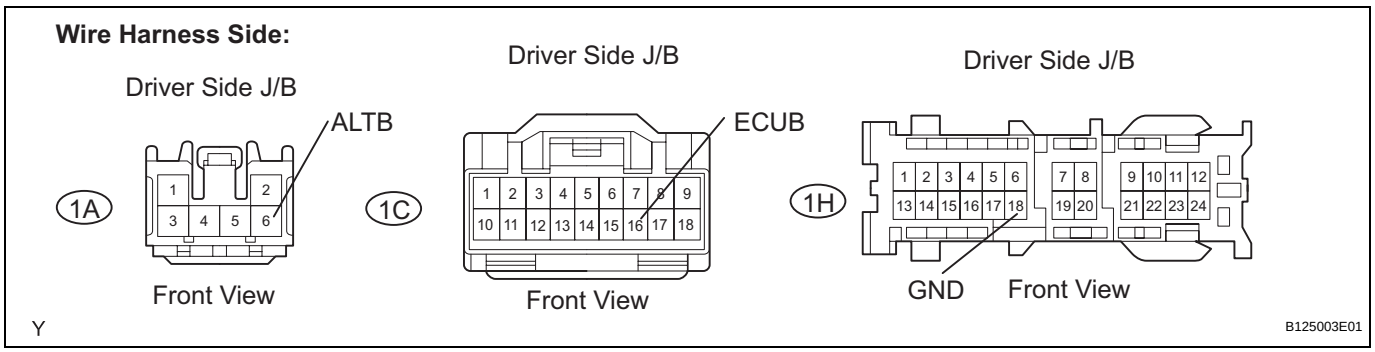

Standard

Tester Connection	Specified Condition
1A-6 (ALTB) - Body ground	10 to 14 V
1H-18 (GND) - Body ground	Below 1 Ω
1C-16 (ECUB) - Body ground	10 to 14 V

(c) Reconnect the driver side J/B connectors.

NG → **REPAIR OR REPLACE HARNESS OR CONNECTOR**

OK

REPLACE DRIVER SIDE JUNCTION BLOCK

16 INSPECT DOOR CONTROL SWITCH ASSEMBLY

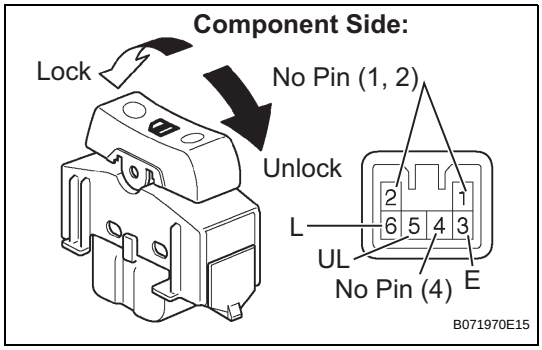

(a) Remove the door control switch (passenger side).
(b) Measure the resistance of the door control switch.
Standard

Tester Connection	Switch Condition	Specified Condition
3 (E) - 6 (L)	Lock	Below 1 Ω
3 (E) - 5 (UL) 3 (E) - 6 (L)	OFF	10 kΩ or higher
3 (E) - 5 (UL)	Unlock	Below 1 Ω

(c) Reinstall the door control switch.

NG → **REPLACE DOOR CONTROL SWITCH ASSEMBLY**

OK

17 CHECK HARNESS AND CONNECTOR (DOOR CONTROL SWITCH - DRIVER SIDE J/B AND BODY GROUND)

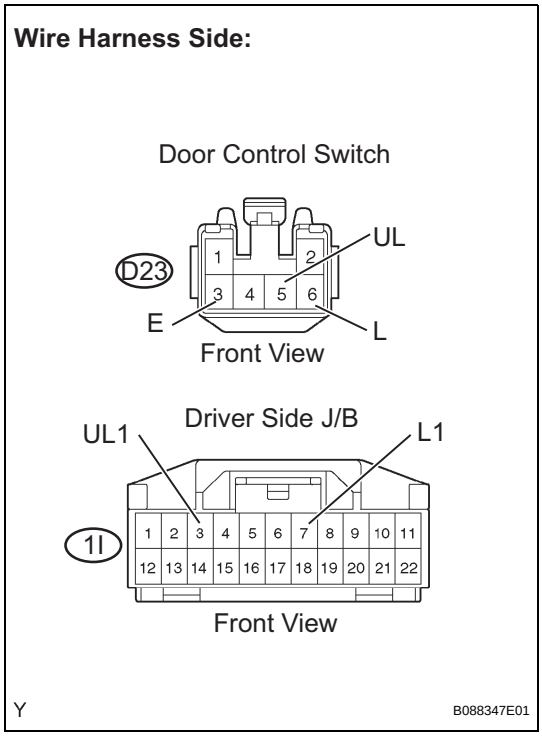

(a) Disconnect the D23 door control switch connector.
(b) Disconnect the 1I driver side J/B connector.
(c) Measure the resistance.
Standard

Tester Connection	Specified Condition
D23-6 (L) - 1I-7 (L1)	Below 1 Ω
D23-5 (UL) - 1I-3 (UL1)	Below 1 Ω
D23-3 (E) - Body ground	Below 1 Ω
D23-6 (L) or 1I-7 (L1) - Body ground	10 kΩ or higher
D23-5 (UL) or 1I-3 (UL1) - Body ground	10 kΩ or higher

(d) Reconnect the door control switch connector.
(e) Reconnect the driver side J/B connector.

NG → **REPAIR OR REPLACE HARNESS OR CONNECTOR**

OK

REPLACE DRIVER SIDE JUNCTION BLOCK

18 INSPECT FRONT DOOR LOCK ASSEMBLY RH (DOOR LOCK MOTOR)

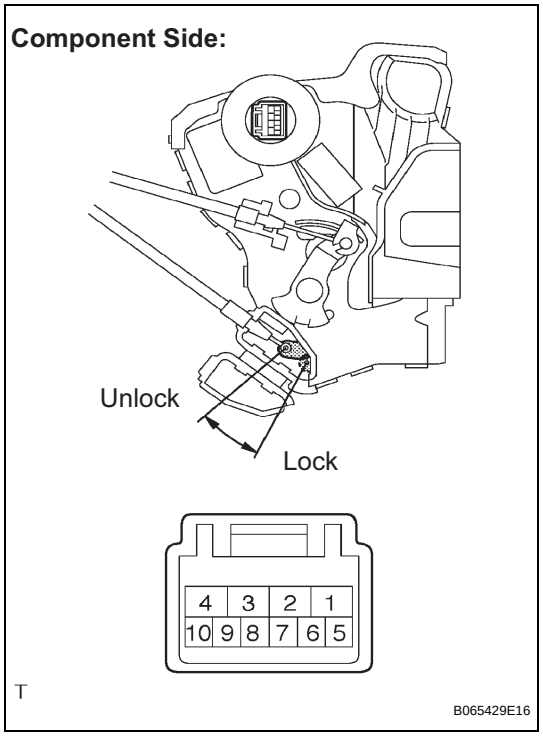

(a) Apply battery voltage to the door lock and check operation of the door lock motor.
NOTICE:
Do not apply battery voltage to any terminals except terminals 1 and 4.
OK

Terminal No	Specified Condition
Battery positive (+) → Terminal 4 Battery negative (-) → Terminal 1	Lock
Battery positive (+) → Terminal 1 Battery negative (-) → Terminal 4	Unlock

NG → **REPLACE FRONT DOOR LOCK ASSEMBLY RH**

OK

19 INSPECT FRONT DOOR LOWER FRAME BRACKET GARNISH RH (DOOR LOCK AND UNLOCK SWITCH AND POSITION SWITCH)

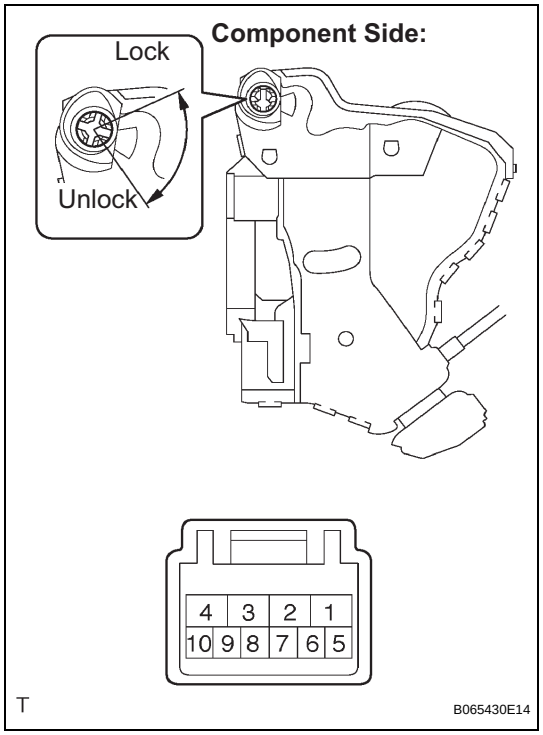

(a) Measure the resistance of the door lock and unlock switch and position switch.
Standard (Door lock and unlock switch)

Tester Connection	Door Lock Condition	Specified Condition
6 -8	Lock	Below 1 Ω
5 - 8, 6 - 8	OFF	10 kΩ or higher
5 - 8	Unlock	Below 1 Ω

Standard (Position switch)

Tester Connection	Door Lock Condition	Specified Condition
7 - 8	Lock	10 kΩ or higher
7 - 8	Unlock	Below 1 Ω

NG → **REPLACE FRONT DOOR LOCK ASSEMBLY RH**

DL

OK

20	CHECK HARNESS AND CONNECTOR (FRONT DOOR LOCK RH - ECU, DRIVER SIDE J/B AND BODY GROUND)

Wire Harness Side:

Front Door Lock Assembly RH

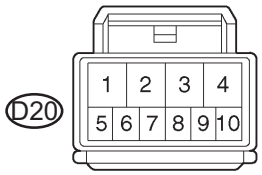

Front View

Multiplex Network Body ECU

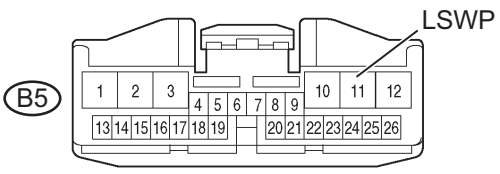

Front View

Driver Side J/B

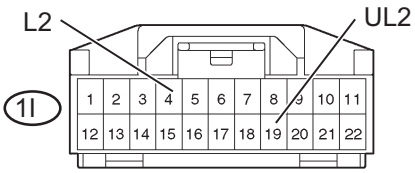

Driver Side J/B

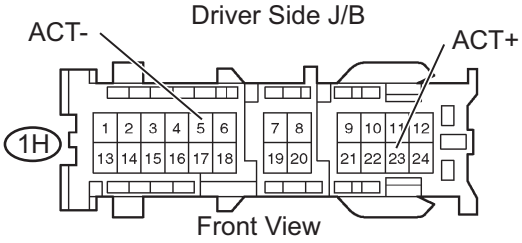

Front View

T

B088348E02

(a) Disconnect the D20 front door lock connector.
(b) Disconnect the B5 multiplex network body ECU connector.
(c) Disconnect the 1H and 1I driver side J/B connectors.
(d) Measure the resistance.

Standard

Tester Connection	Specified Condition
D20-4 - 1H-23 (ACT+)	Below 1 Ω
D20-1 - 1H-5 (ACT-)	Below 1 Ω
D20-6 - 1I-4 (L2)	Below 1 Ω
D20-5 - 1I-19 (UL2)	Below 1 Ω
D20-7 - B5-11 (LSWP)	Below 1 Ω
D20-8 - Body ground	Below 1 Ω
D20-4 or 1H-23 (ACT+) - Body ground	10 kΩ or higher
D20-1 or 1H-5 (ACT-) - Body ground	10 kΩ or higher
D20-6 or 1I-4 (L2) - Body ground	10 kΩ or higher
D20-5 or 1I-19 (UL2) - Body ground	10 kΩ or higher
D20-7 or B5-11 (LSWP) - Body ground	10 kΩ or higher

(e) Reconnect the front door lock connector.
(f) Reconnect the multiplex network body ECU connector.
(g) Reconnect the driver side J/B connectors.

NG → **REPAIR OR REPLACE HARNESS OR CONNECTOR**

OK

REPLACE DRIVER SIDE JUNCTION BLOCK (MULTIPLEX NETWORK BODY ECU)

21 INSPECT FRONT DOOR LOCK ASSEMBLY RH (DOOR LOCK MOTOR)

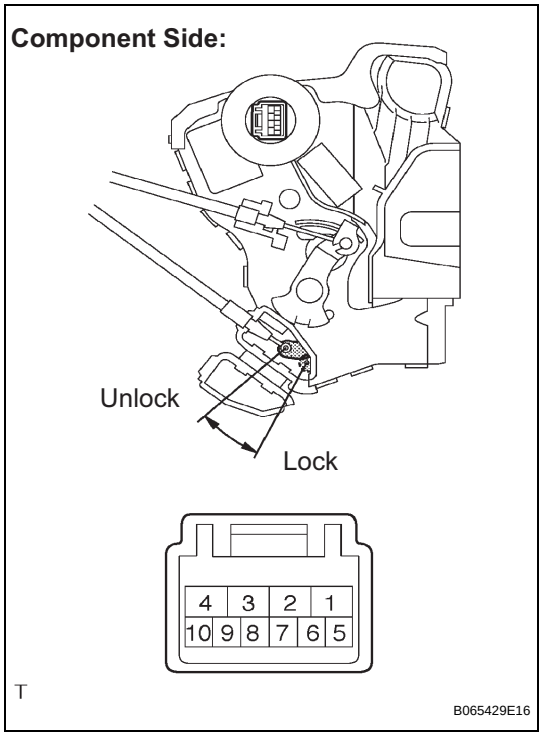

(a) Apply battery voltage to the door lock and check operation of the door lock motor.
NOTICE:
Do not apply battery voltage to any terminals except terminals 1 and 4.
OK

Terminal No	Specified Condition
Battery positive (+) → Terminal 4 Battery negative (-) → Terminal 1	Lock
Battery positive (+) → Terminal 1 Battery negative (-) → Terminal 4	Unlock

NG → **REPLACE FRONT DOOR LOCK ASSEMBLY RH**

OK

22 INSPECT FRONT DOOR LOCK ASSEMBLY RH (DOOR LOCK AND UNLOCK SWITCH AND POSITION SWITCH)

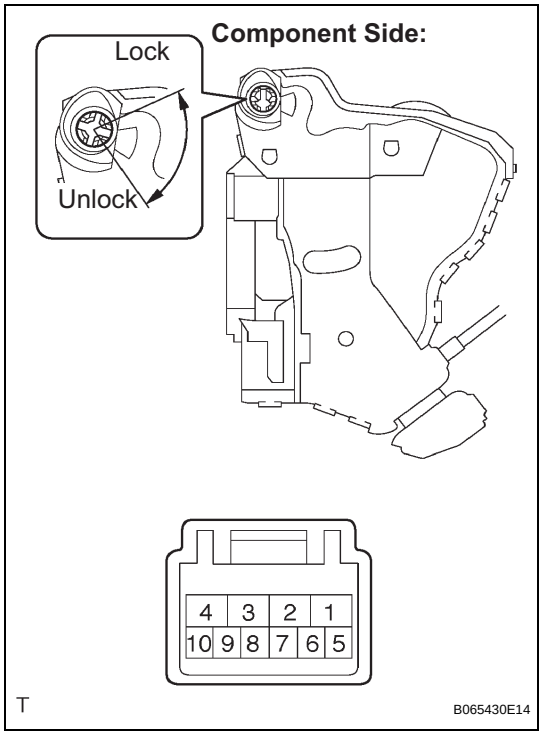

(a) Measure the resistance of the door lock and unlock switch and position switch.
Standard (Door lock and unlock switch)

Tester Connection	Door Lock Condition	Specified Condition
6 -8	Lock	Below 1 Ω
5 - 8, 6 - 8	OFF	10 kΩ or higher
5 - 8	Unlock	Below 1 Ω

Standard (Position switch)

Tester Connection	Door Lock Condition	Specified Condition
7 - 8	Lock	10 kΩ or higher
7 - 8	Unlock	Below 1 Ω

NG → **REPLACE FRONT DOOR LOCK ASSEMBLY RH**

DL

OK

23	CHECK HARNESS AND CONNECTOR (FRONT DOOR LOCK RH - ECU, DRIVER SIDE J/B AND BODY GROUND)

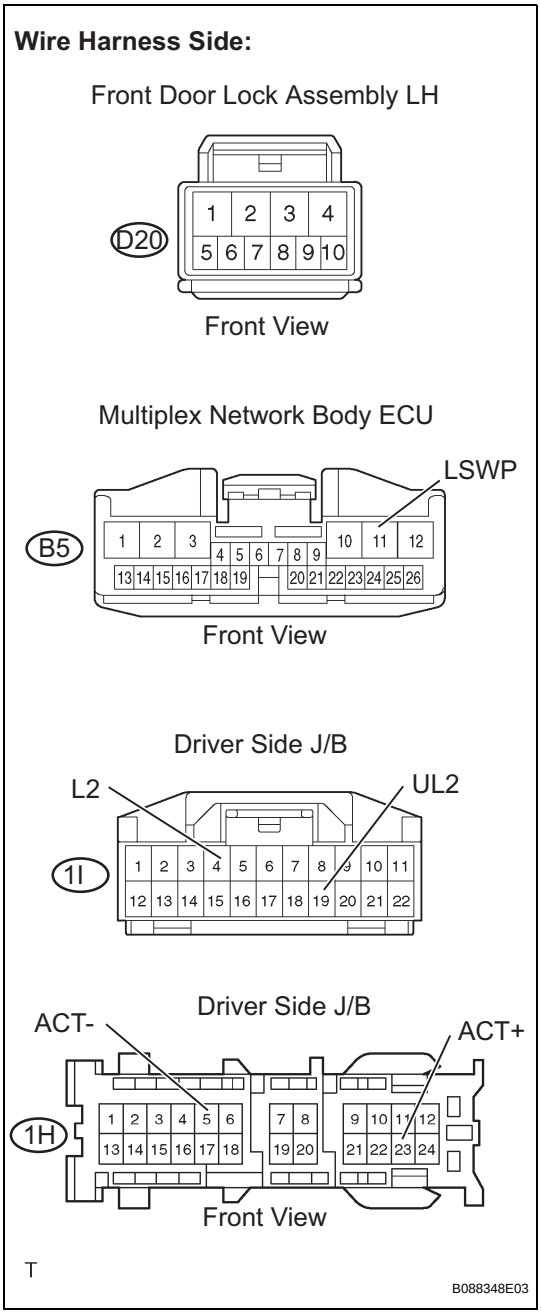

(a) Disconnect the D20 front door lock connector.
(b) Disconnect the B5 multiplex network body ECU connector.
(c) Disconnect the 1H and 1I driver side J/B connectors.
(d) Measure the resistance.

Standard

Tester Connection	Specified Condition
D20-4 - 1H-23 (ACT+)	Below 1 Ω
D20-1 - 1H-5 (ACT-)	Below 1 Ω
D20-6 - 1I-4 (L2)	Below 1 Ω
D20-5 - 1I-19 (UL2)	Below 1 Ω
D20-7 - B5-11 (LSWP)	Below 1 Ω
D20-8 - Body ground	Below 1 Ω
D20-4 or 1H-23 (ACT+) - Body ground	10 kΩ or higher
D20-1 or 1H-5 (ACT-) - Body ground	10 kΩ or higher
D20-6 or 1I-4 (L2) - Body ground	10 kΩ or higher
D20-5 or 1I-19 (UL2) - Body ground	10 kΩ or higher
D20-7 or B5-11 (LSWP) - Body ground	10 kΩ or higher

(e) Reconnect the front door lock connector.
(f) Reconnect the multiplex network body ECU connector.
(g) Reconnect the driver side J/B connectors.

NG → **REPAIR OR REPLACE HARNESS OR CONNECTOR**

OK

24 INSPECT DOOR CONTROL SWITCH ASSEMBLY

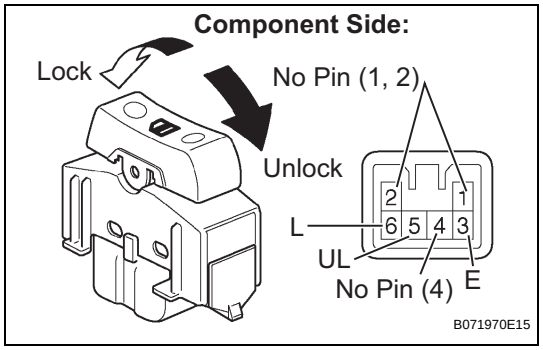

(a) Remove the door control switch (passenger side).
(b) Measure the resistance of the door control switch.
Standard

Tester Connection	Switch Condition	Specified Condition
3 (E) - 6 (L)	Lock	Below 1 Ω
3 (E) - 5 (UL) 3 (E) - 6 (L)	OFF	10 kΩ or higher
3 (E) - 5 (UL)	Unlock	Below 1 Ω

(c) Reinstall the door control switch.

NG → **REPLACE DOOR CONTROL SWITCH ASSEMBLY**

OK

25 CHECK HARNESS AND CONNECTOR (DOOR CONTROL SWITCH - DRIVER SIDE J/B AND BODY GROUND)

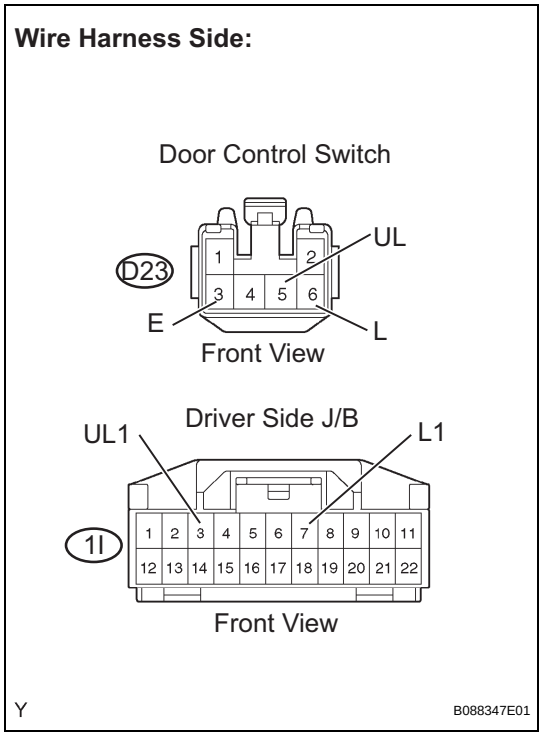

(a) Disconnect the D23 door control switch connector.
(b) Disconnect the 1I driver side J/B connector.
(c) Measure the resistance.
Standard

Tester Connection	Specified Condition
D23-6 (L) - 1I-7 (L1)	Below 1 Ω
D23-5 (UL) - 1I-3 (UL1)	Below 1 Ω
D23-3 (E) - Body ground	Below 1 Ω
D23-6 (L) or 1I-7 (L1) - Body ground	10 kΩ or higher
D23-5 (UL) or 1I-3 (UL1) - Body ground	10 kΩ or higher

(d) Reconnect the door control switch connector.
(e) Reconnect the driver side J/B connector.

NG → **REPAIR OR REPLACE HARNESS OR CONNECTOR**

OK

REPLACE DRIVER SIDE JUNCTION BLOCK

Key Lock-in Prevention Function does not Work Properly

DESCRIPTION

To prevent the key from being locked in the vehicle, the multiplex network body ECU prevents the doors from being locked by monitoring 2 switches: 1) the unlock warning switch, which turns ON when the key is inserted into the ignition key cylinder; and 2) the driver side courtesy light switch, which turns ON when the driver side door is opened.

WIRING DIAGRAM

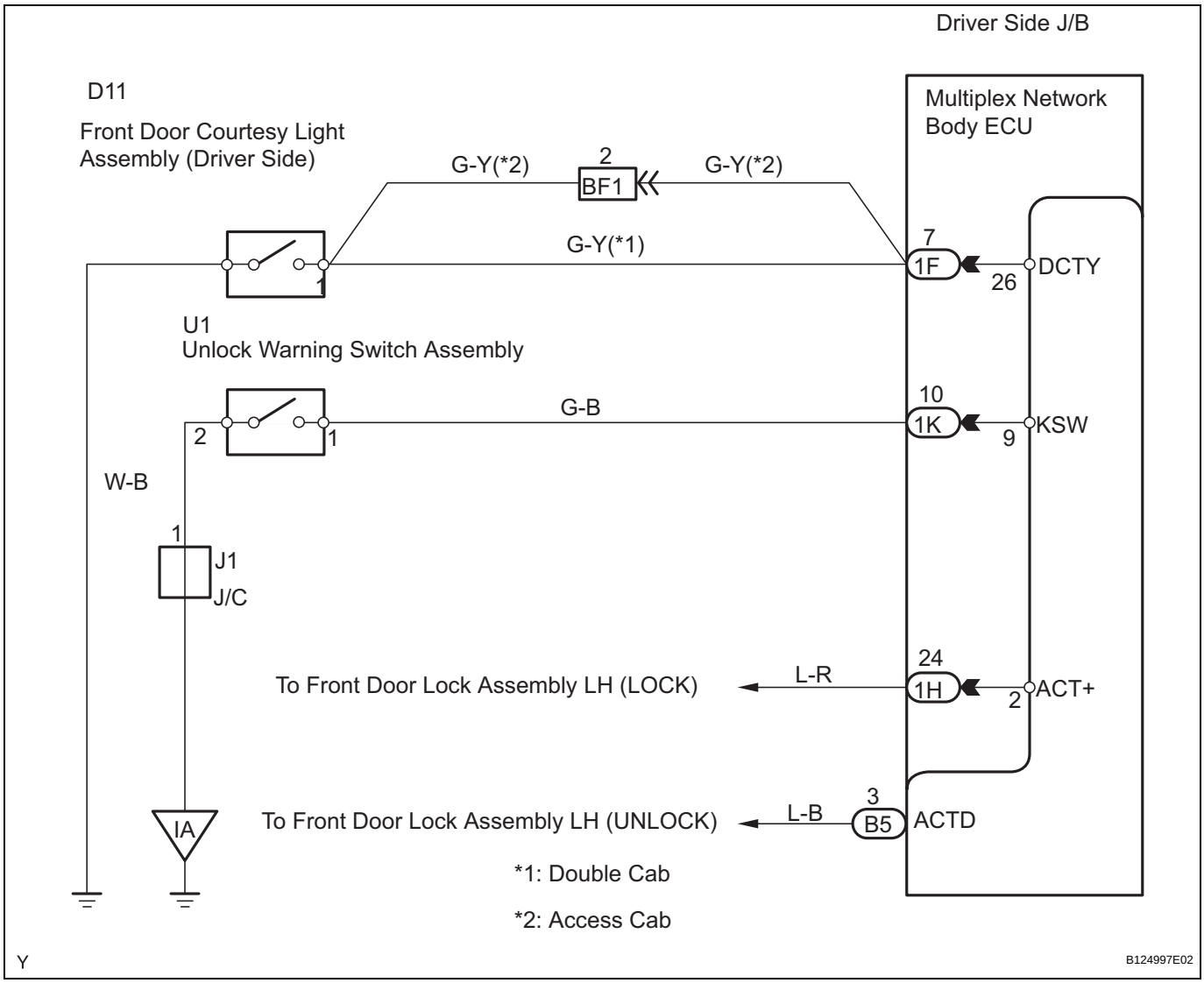

1 CHECK HARNESS AND CONNECTOR (DRIVER SIDE JUNCTION BLOCK - BODY GROUND)

Wire Harness Side:

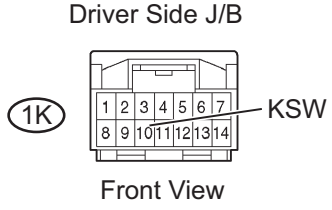

B063404E02

(a) Disconnect the 1K driver side J/B connector.
(b) Measure the resistance.
Standard

Tester Connection	Connection	Specified Condition
1K-10 (KSW) - Body ground	No key in ignition key cylinder	10 kΩ or higher
1K-10 (KSW) - Body ground	Key inserted in ignition key cylinder	Below 1 Ω

(c) Reconnect the driver side J/B connector.

OK → **Go to step 4**

NG

2 INSPECT UNLOCK WARNING SWITCH ASSEMBLY

Component Side:

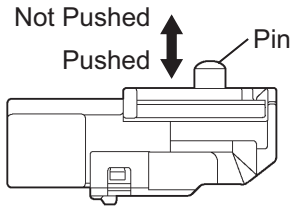

Unlock Warning Switch Assembly (Driver Side)

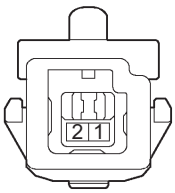

Y

I044492E01

(a) Remove the unlock warning switch.
(b) Measure the resistance.
Standard

Tester Connection	Switch Connection	Specified Condition
1 - 2	Not pushed	10 kΩ or higher
1 - 2	Pushed	Below 1 Ω

(c) Reinstall the unlock warning switch.

NG → **REPLACE UNLOCK WARNING SWITCH ASSEMBLY**

OK

3	CHECK HARNESS AND CONNECTOR (SWITCH ASSEMBLY - DRIVER SIDE J/B ASSEMBLY AND BODY GROUND)

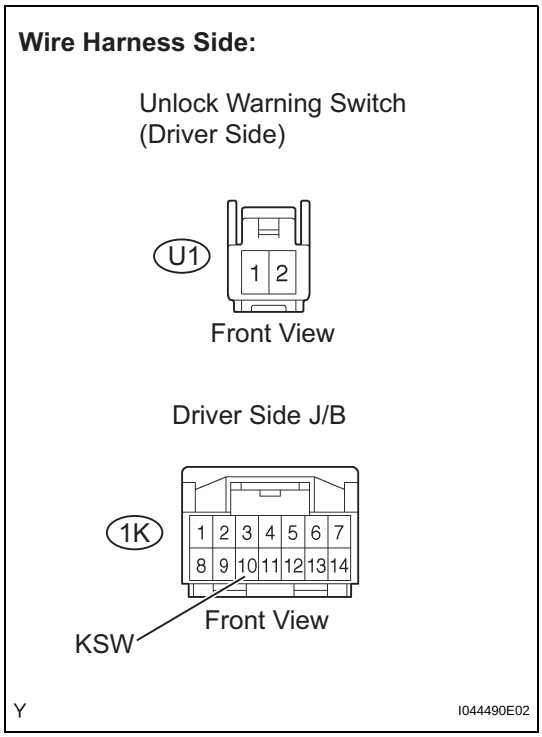

(a) Disconnect the U1 unlock warning switch connector.
(b) Disconnect the 1K driver side J/B connector.
(c) Measure the resistance of the wire harness side connectors.

Standard

Tester Connection	Specified Condition
U1-1 - 1K-10 (KSW)	Below 1 Ω
U1-2 - Body ground	Below 1 Ω

(d) Reconnect the unlock warning switch connector.
(e) Reconnect the driver side J/B connector.

NG → **REPAIR OR REPLACE HARNESS OR CONNECTOR**

OK

4	CHECK FRONT DOOR COURTESY LIGHT SWITCH ASSEMBLY (DRIVER SIDE)

(a) Move the room light switch to the DOOR position and open the driver side door. Check that the room light turns ON.

OK:

Room light turns ON.

OK → **REPLACE DRIVER SIDE JUNCTION BLOCK ASSEMBLY**

NG

5	INSPECT FRONT DOOR COURTESY LIGHT SWITCH ASSEMBLY (DRIVER SIDE)

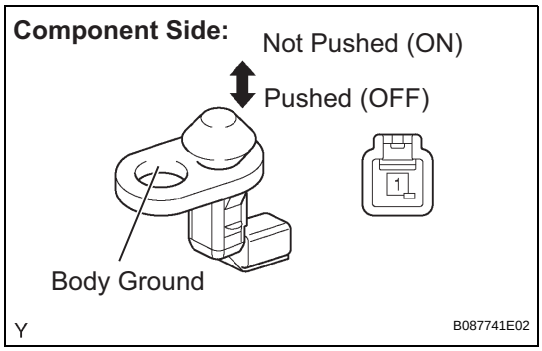

(a) Remove the front door courtesy light switch assembly.
(b) Measure the resistance of the switch.

Standard

Tester Connection	Switch Condition	Specified Condition
1 - Body ground	Not pushed (ON)	Below 1 Ω
1 - Body ground	Pushed (OFF)	10 kΩ or higher

(c) Reinstall the front door courtesy light switch assembly.

DL

NG → **REPLACE FRONT DOOR COURTESY LIGHT SWITCH ASSEMBLY**

OK

6	**CHECK HARNESS AND CONNECTOR (SWITCH ASSEMBLY (DRIVER SIDE) - DRIVER SIDE J/B ASSEMBLY)**

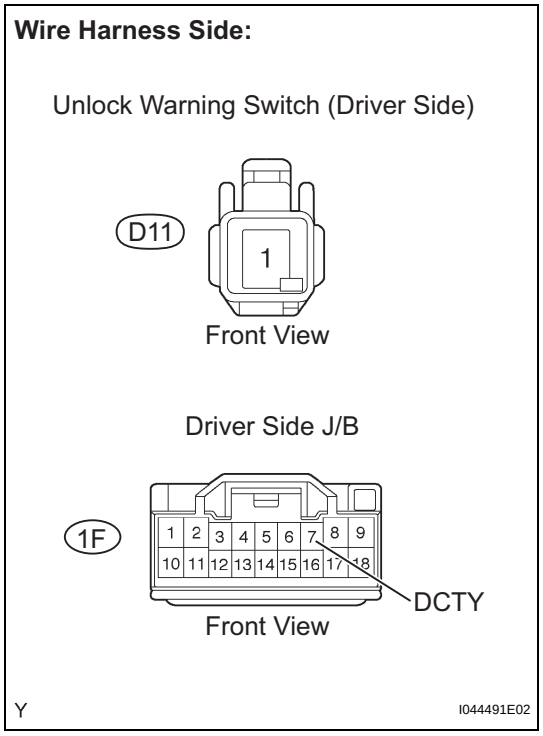

(a) Disconnect the D11 front door courtesy light switch connector.
(b) Disconnect the 1F driver side J/B connector.
(c) Measure the resistance.

Standard

Tester Connection	Specified Condition
D11-1 - 1F-7 (DCTY)	Below 1 Ω

(d) Reconnect the front door courtesy light switch connector.
(e) Reconnect the driver side J/B connector.

NG → **REPAIR OR REPLACE HARNESS OR CONNECTOR**

OK

REPLACE DRIVER SIDE JUNCTION BLOCK

SYSTEM DESCRIPTION

1. WIRELESS DOOR CONTROL SYSTEM DESCRIPTION

(a) This system locks and unlocks the vehicle's doors remotely. The wireless control system has the following features:

- The door control receiver performs the code identification process and the multiplex network body ECU operates the door lock control. A serial data link is provided for communication between the door control receiver and the multiplex network body ECU.
- A key-holder type transmitter is used and it contains the following 3 switches: the door lock switch, door unlock switch and panic switch.

(b) The wireless door lock control system has the following functions:

Function	Outline
All doors lock operation	Pressing LOCK switch locks all doors.
All doors unlock operation (2-step unlock operation)	Pressing UNLOCK switch once unlocks driver side door. Pressing UNLOCK switch again within 3 seconds unlocks remaining doors.
Answer-back operation	Hazard warning lights flash once when doors are locked, and flash twice when doors are unlocked. These flashes indicate that operation has been completed.
Panic alarm operation	Holding down PANIC switch sets off theft deterrent alarm, which consists of sounding horn, flashing headlights, taillights and hazard warning lights and turning room light on.
Automatic lock function	If no doors are opened within 30 seconds of being unlocked by wireless door lock remote control, all doors lock again automatically.
Repeat function	If a door is not locked in response to locking operation of transmitter, multiplex network body ECU outputs lock signal after 1 second.
Illumination entry function	With all doors locked, pressing UNLOCK switch causes room light to illuminate simultaneously with unlocking operation.
Security function	Sends signal as rolling code.
Transmitter recognition code registration function	Enables registering (writing and storing) of 4 different transmitter recognition codes in EERPOM, which is built into multiplex network body ECU.

HOW TO PROCEED WITH TROUBLESHOOTING

HINT:

- The wireless door lock control system troubleshooting procedures are based on the premise that the power door lock system is operating normally. Check the power door lock system first before troubleshooting the wireless door lock control system.
- Use these procedures to troubleshoot the wireless door lock control system.
- *: Use the intelligent tester.

1 **VEHICLE BROUGHT TO WORKSHOP**

NEXT

2 **CUSTOMER PROBLEM ANALYSIS CHECK AND SYMPTOM CHECK**

NEXT

3 **PROBLEM SYMPTOMS TABLE***

Result	Proceed to
Fault is not listed in problem symptoms table	A
Fault is listed in problem symptoms table	B

B → **Go to step 5**

A

4 **OVERALL ANALYSIS AND TROUBLESHOOTING**

(a) Terminals of ECU (See page DL-42)
(b) On-vehicle Inspection (See page DL-43)

NEXT

5 **ADJUSTMENT, REPAIR OR REPLACEMENT**

NEXT

6	**CONFIRMATION TEST**

NEXT

END

REGISTRATION

1. REGISTER RECOGNITION CODES

HINT:

- Recognition code registration is necessary when the door control transmitter or the door control receiver is replaced with a new one.
- Add Mode is used to register new recognition codes while retaining the previously registered codes. This mode is used when new transmitters are added. If the number of registered codes exceeds 4, the previously registered codes will be erased in order, starting from the first registered code.
- Rewrite Mode is used to erase all the previously registered recognition codes in order to register new recognition codes. This mode is used when the transmitter or the door control receiver is replaced with a new one.
- Confirmation Mode is used to confirm how many recognition codes have already been registered before any additional recognition codes are registered.
- Prohibition Mode is used to erase all the registered codes and disable the wireless door lock function. This mode is used when the transmitters are lost.
- The registration procedure described on the following pages must be performed in order.

(a) Check that the following conditions are met.
- No key in the ignition key cylinder.
- Only driver side door is open.

(b) Insert the key into the ignition key cylinder, and remove it twice within 5 seconds.

(c) Perform the following operations within 40 seconds.
(1) Close and open the driver side door twice.
(2) Insert the key into the ignition key cylinder, then remove it.

(d) Perform the following operations within 40 seconds.
(1) Close and open the driver side door twice.
(2) Insert the key into the ignition key cylinder and close all doors.

(e) Perform the following operations within 40 seconds.
(1) Turn the ignition switch from LOCK to ON and back to LOCK 1 to 5 times at approximately 1 second intervals to select a mode (see the table below).

Number of ON-LOCK operations of ignition switch:

Add Mode ON-LOCK operation: Once

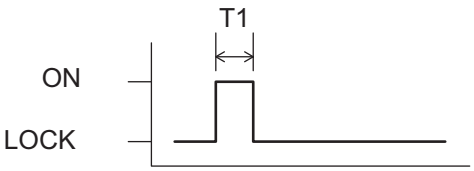

Rewrite Mode ON-LOCK operation: Twice

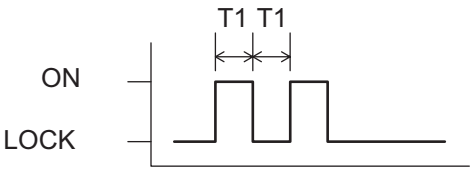

Confirmation Mode ON-LOCK operation: 3 times

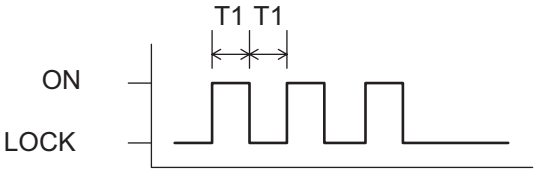

Prohibition Mode ON-LOCK operation: 5 times

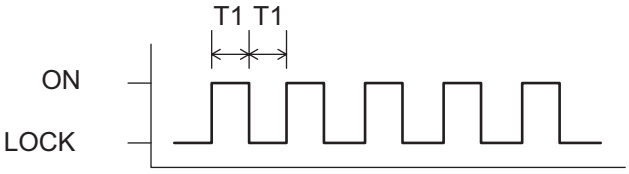

T1: Approximately 1 second

B111914E03

HINT:
If the number of ignition switch ON-LOCK operations is 0, 4, 6 or more, there will be no response (power DOOR LOCK and UNLOCK operation) to show which mode has been selected.

(2) Remove the key from the ignition key cylinder.

(f) The main body ECU automatically performs power door LOCK-UNLOCK operations to indicate which mode has been selected.

Response to mode selection (Power door lock operation):

Add Mode LOCK-UNLOCK operation: Once

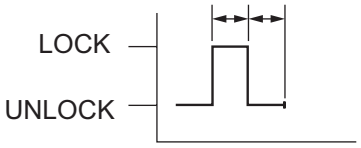

Confirmation Mode LOCK-UNLOCK operation: The number of registerd codes (1 to 5 times)

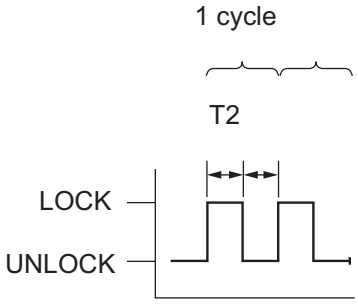

Rewrite Mode LOCK-UNLOCK operation: Twice

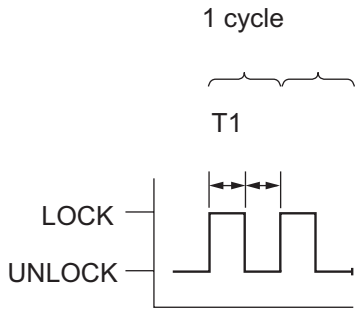

Prohibition Mode LOCK-UNLOCK operation: 5 times

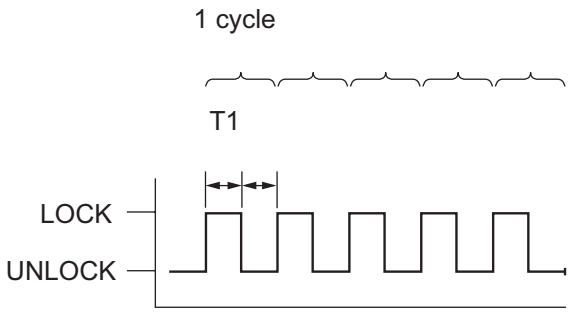

T1: Approximately 1 second T2: Approximately 2 seconds

Y

B106703E01

HINT:

- In Confirmation Mode, LOCK-UNLOCK operation will occur once for each recognition code that has been registered. For example, if 2 recognition codes have been registered, the LOCK-UNLOCK operation will occur twice.
- In Confirmation Mode, if no recognition codes have been registered, LOCK-UNLOCK operation will occur 11 times.
- If Confirmation Mode or Prohibition Mode is selected, the operation ends after the response to the selected mode is completed.

(g) Register a new recognition code (Add Mode or Rewrite Mode) in accordance with the following procedure.
  (1) Within 45 seconds of Add Mode or Rewrite Mode being selected, press the LOCK and UNLOCK switches on the transmitter switch of the key simultaneously for 1.0 to 1.5 seconds. Within 3 seconds of moving your finger away from the switches, press either switch of the key for more than 1.0 second.
  (2) Within 5 seconds of the transmitter switch being released, the LOCK-UNLOCK operation will be automatically performed once if the registration of the recognition code is correctly completed. If the LOCK-UNLOCK operation is performed twice, the registration of the recognition code has failed, so perform the registration procedure from the beginning once again.

Response to registration completion:

LOCK-UNLOCK Occurs Once

Registration of recognition code has been completed.

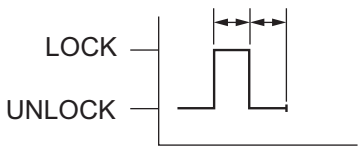

LOCK-UNLOCK Occurs Twice

Registration of recognition code has failed.

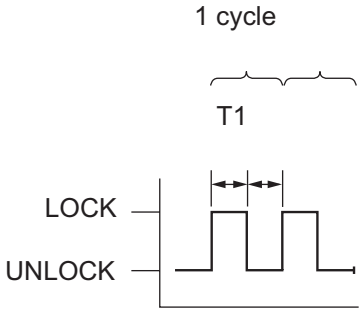

T1: Approximately 1 second

Y

B106704E01

(h) If multiple transmitters need to be registered, repeat the registration of a new recognition code procedure within 45 seconds of the previous registration.
(i) If any of the following conditions is met, the registration mode will end.
  (1) The key is inserted into the ignition key cylinder.
  (2) Any doors are opened.

(3) 45 seconds or more elapse after code registration.

(j) Registration of the recognition codes (Add Mode and Rewrite Mode) is completed.

PROBLEM SYMPTOMS TABLE

Wireless Doorlock Control

Symptom	Suspected area	See page
Only wireless control function is inoperative	Transmitter battery	DL-47
	Door control transmitter	
	Door control receiver	
	Unlock warning switch assembly	
	Wire harness	
	Driver side J/B assembly (Multiplex network body ECU)	
No answer-back (hazard waning light)	Turn signal flasher relay	DL-54
	Wire harness	
	Driver side J/B assembly (Multiplex network body ECU)	

TERMINALS OF ECU

1. CHECK COWL SIDE JUNCTION BLOCK RH ASSEMBLY (MULTIPLEX NETWORK BODY ECU)

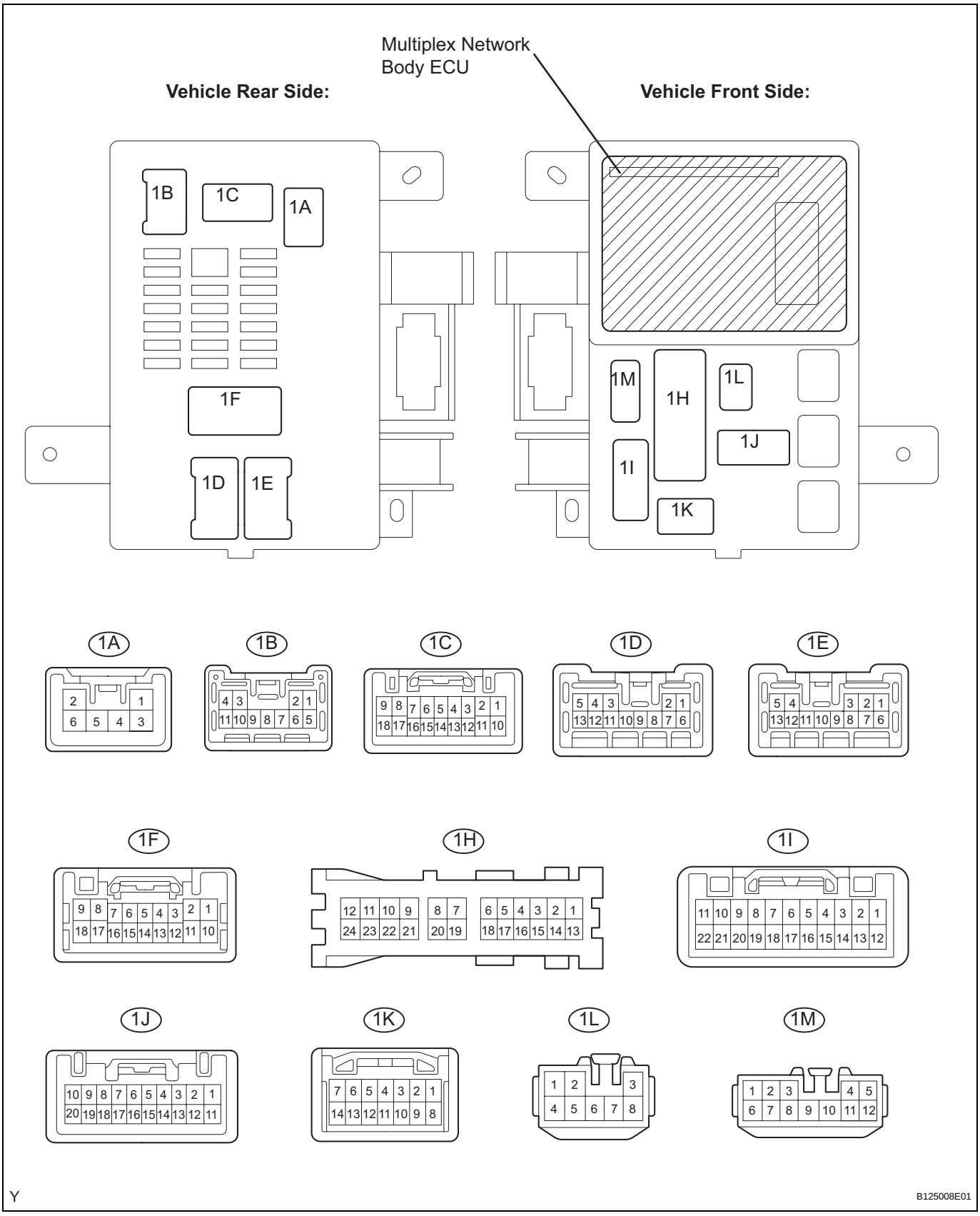

(a) Disconnect the 1A, 1C, 1F, 1H, 1I, 1J, and 1K driver side J/B connectors.
(b) Measure the resistance and voltage of the wire harness side connectors.

Standard:

Symbols (Terminal No.)	Wiring Color	Terminal Description	Condition	Specified Condition
IG (1A-4) - Body ground	L-Y - Body ground	Ignition power supply	Ignition switch OFF	0 V
			Ignition switch ON	10 to 14 V
ECUB (1C-16) - Body ground	R - Body ground	+B (ECUB) power supply	Always	10 to 14 V
ALTB (1A-6) - Body ground	L - Body ground	+B (power system, generator system) power supply	Always	10 to 14 V
KSW (1K-10) - Body ground	G-B - Body ground	Key unlock warning switch input	No key in ignition key cylinder	10 kΩ or higher
			Key inserted in ignition key cylinder	Below 1 Ω
DCTY (1F-7) - Body ground	G-Y - Body ground	Driver side courtesy switch input	Driver side door Closed	10 kΩ or higher
			Driver side door Open	Below 1 Ω
PCTY (1I-8) - Body ground	R-B - Body ground	Passenger side courtesy switch input	Passenger side door Closed	10 kΩ or higher
			Passenger side door Open	Below 1 Ω
RCTY (1F-6) - Body ground	P-B - Body ground	Rear LH side courtesy switch input	Rear LH side door Closed	10 kΩ or higher
			Rear LH side door Open	Below 1 Ω
RCTY (1J-15) - Body ground	P-B - Body ground	Rear LH side courtesy switch input	Rear LH side door Closed	10 kΩ or higher
			Rear LH side door Open	Below 1 Ω
GND (1H-18) - Body ground	W-B - Body ground	Ground	Always	Below 1 Ω

If the result is not as specified, there may be a malfunction on the wire harness side.

(c) Reconnect the driver side J/B connectors.
(d) Measure the voltage of the connectors.

Standard:

Symbols (Terminal No.)	Wiring Color	Terminal Description	Condition	Specified Condition
HAZ (1L-8) - Body ground	W - Body ground	Hazard light drive	Answer-back ON	Pulse generation
			Answer-back OFF	10 to 14 V
RDA (B5-7) - Body ground	L - Body ground	Door control receiver input	No key in ignition key cylinder and all doors closed and transmitter switch OFF	Below 1 V
			No key in ignition key cylinder and all doors closed and transmitter switch ON	Approx. 6 to 7 V

If the result is not as specified, there may be a malfunction on the driver side J/B assembly (multiplex network body ECU).

ON-VEHICLE INSPECTION

1. NOTICES WHEN CHECKING

(a) Wireless door LOCK / UNLOCK function:
The wireless door lock control function operates only when the following 3 conditions are met.
(1) No key is inserted the ignition key cylinder.
(2) All the doors are closed.
(3) The power door lock system is functioning normally.
HINT:
The UNLOCK function operates even when one of the doors is open.

(b) Remote panic function:
This wireless control function operates only when the following condition is met.
(1) The ignition switch is in the LOCK position.
HINT:
The key can be inserted. However the ignition switch must be in the LOCK position.

(c) The wireless transmitter operational area differs depending on the situation.
(1) The operational area differs depending on the user, the way the transmitter is held and the location.
(2) In certain areas, the operational area is reduced due to the vehicle body shape and the influence of the surroundings.
(3) Since the transmitter uses faint electric waves, the operational area may be reduced if noise or strong electric waves occur in the area where the transmitter is used. In some cases, the transmitter may not function.
(4) When the battery weakens, the operational area is reduced or the transmitter may not function.
HINT:
If the transmitter has had prolonged exposure to direct sunlight, such as on the instrument panel, the battery may weaken or other problems may occur.

2. CHECK WIRELESS DOOR LOCK CONTROL SYSTEM

HINT:
- The switches described below transmit signals and are built into the door control transmitter.
- The operational area must be taken into account while checks are being made.

(a) Put the vehicle under conditions that allow the wireless control functions to operate.

(b) Check the basic functions.
(1) Check that all the doors lock when the LOCK switch is pressed.

(2) Check that only the driver side door unlocks when the UNLOCK switch is pressed once, and that the remaining doors unlock when the UNLOCK switch is pressed again within 3 seconds.

(c) Check the chattering prevention function.
(1) Check that pressing a switch causes the switch's operation to occur only once. Also check that when the switch is held down, the operation is not repeated continuously. Then, make sure that when the switch is pressed repetitively at approximately 1 second intervals, the switch's operation occurs each time.

(d) Check the automatic locking function.
(1) Check that if all the doors are unlocked with the UNLOCK switch and none of the doors are opened or locked within approximately 30 seconds, the doors automatically relock.
(2) Check that if all of the doors are unlocked with the UNLOCK switch and a door is opened or locked within approximately 30 seconds, the automatic locking function does not operate.

(e) Check the switch operation fail-safe function.
(1) Check that the doors cannot be locked by a switch while the key is in the ignition key cylinder. However, this does not apply when the system is in recognition code registration mode.

(f) Check the operation stop function when a door is open or not completely closed.
(1) Check that if a door is open or not completely closed, the doors cannot be locked by the LOCK switch.

(g) Check the repeat function.
(1) Check that if the LOCK switch is pressed while the movement of the driver side door control knob (in the unlocked state) is restricted, the repeat function attempts to lock all of the doors again 1 second later.

(h) Check the answer-back function.
(1) When the LOCK switch is pressed, check that the lights flash once simultaneously with the locking of all the doors.
(2) When the UNLOCK switch is pressed once, check that the lights flash twice simultaneously with the unlocking of the driver side door.
(3) When the UNLOCK switch is pressed again within 3 seconds, check that the lights flash twice simultaneously with the unlocking of all the doors.

(i) Check the illuminated entry function.
(1) When all the doors are locked, pressing the UNLOCK switch causes the room light (when the light switch is in the DOOR position) to illuminate simultaneously with the unlock operation.
(2) Check that the room light turns off in approximately 15 seconds if doors have not been opened.

(j) Check the remote panic function.
(1) Check that if the PANIC switch is pushed once, the theft deterrent alarm function sounds the horn, flashes the headlights, taillights and hazzard warning lights and turns the room light on. And, with the theft alarm function active, check that pressing panic or unlock switch on the transmitter causes the horn to stop sounding and the headlights, taillights and hazzard warning lights to stop flashing and the room light to turn off.

3. INSPECT DOOR CONTROL RECEIVER

(a) Disconnect the D7 door control receiver connector.

(b) Measure the voltage and resistance of the wire harness side connector.

Standard Voltage

Tester Connection	Specified Condition
D7-5 (+B) - Body ground	10 to 14 V

Standard Resistance

Tester Connection	Specified Condition
D7-1 (GND) - Body ground	Below 1 Ω

If the result is not as specified, there may be a malfunction on the wire harness side.

Wire Harness Side:

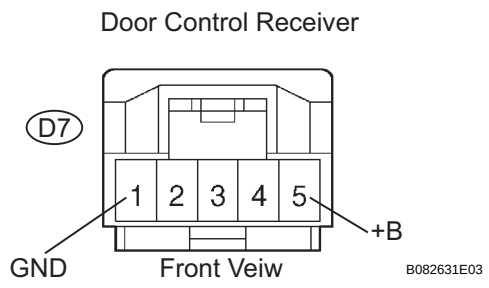

(c) Reconnect the door control receiver connector.

(d) Measure the voltage of the connector.

Standard Voltage

Tester Connection	Condition	Specified Condition
D7-2 (RDA) - Body ground	Each transmitter switch OFF (No key in ignition key cylinder and all doors closed)	Below 1 V
D7-2 (RDA) - Body ground	Each transmitter switch ON (No key in ignition key cylinder and all doors closed)	Alternates between 6 V and 7 V

If the result is not as specified, there may be a malfunction on the receiver.

Component Side:

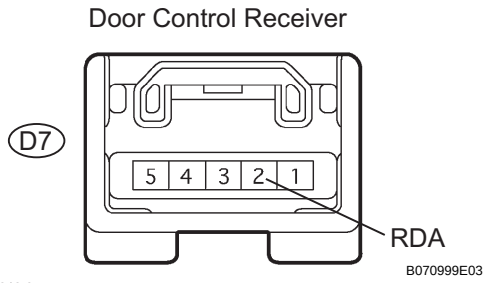

Only Wireless Control Function is Inoperative

DESCRIPTION

The door control receiver receives signals from the transmitter and sends these signals to the multiplex network body ECU. The multiplex network body ECU then controls the door operation by sending LOCK/UNLOCK signals to the appropriate door lock actuator.

WIRING DIAGRAM

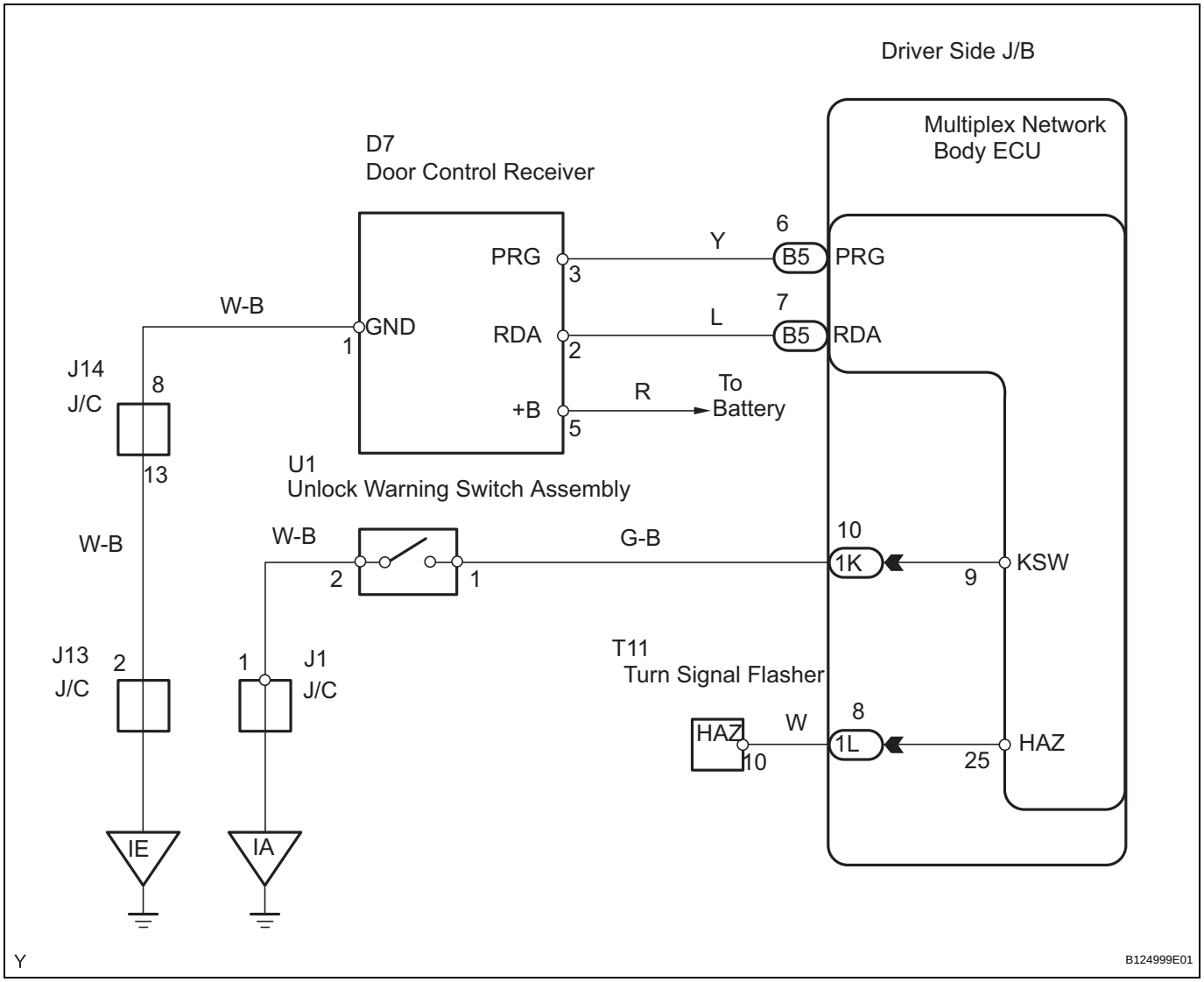

1	CHECK WIRELESS DOOR LOCK CONTROL FUNCTIONS

OK → NORMAL

NG

2	REPLACE TRANSMITTER BATTERY

(a) After replacing the transmitter battery with a new or correctly functioning one, check that the doors can be locked and unlocked by using the transmitter LOCK/UNLOCK switch.
OK:
Doors can be locked and unlocked with transmitter.

OK → **END**

NG

3	CHECK WIRELESS DOOR LOCK FUNCTIONS (STANDARD OPERATION)

(a) Check standard LOCK/UNLOCK switch operation.
NOTICE:
Standardized test procedure: press the transmitter switch for 1 second, directing the beam at the driver side door outside handle from a distance of 1 m (3.28 ft). The transmitter should be pointed directly at the door handle, i.e. at a 90° angle to the vehicle body.

OK → **NORMAL**

NG

4	CONFIRM ROOM LIGHT ON

(a) Check that the room laight comes on.
OK:
Room light comes on.

NG → **REPAIR OR REPLACE ROOM LIGHT ASSEMBLY**

OK

5	SWITCH TO SELF-DIAGNOSTIC MODE

(a) Switch to self-diagnostic mode by operating the ignition key cylinder.
(1) Put the vehicle into its initial condition (See page DL-43), and insert the key into the ignition key cylinder and remove it.
(2) Within 5 seconds of the key being removed (step 1), insert the key into the ignition key cylinder again (ignition key in the LOCK position). Then turn the ignition switch ON and return it to the LOCK position.

(3) Within 30 seconds of the ignition switch being returned to the LOCK position (step 2), perform the following 9 times: turn the ignition switch ON and return it to the LOCK position.
NOTICE:
If the change to self-diagnostic mode has failed, the system returns to normal mode.
HINT:
- Turning the ignition switch ON after step (a)-(3) has been completed ends self-diagnostic mode.
- Do not lock or unlock any doors during self-diagnostic mode.

(b) Check that the system has switched to self-diagnostic mode by checking the blinking frequency of the room light.
OK:
The room light output should be as shown in the timing chart on the left.

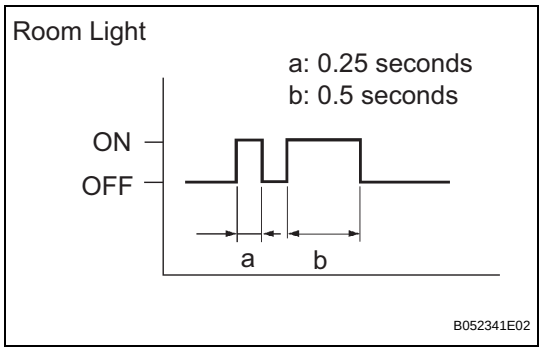

NG → **Go to step 9**

OK

6 CHECK BY SELF-DIAGNOSTIC MODE

(a) Inspect the diagnosis outputs when the door control transmitter switch is held down. The diagnosis outputs can be checked with the outputs of the room light.

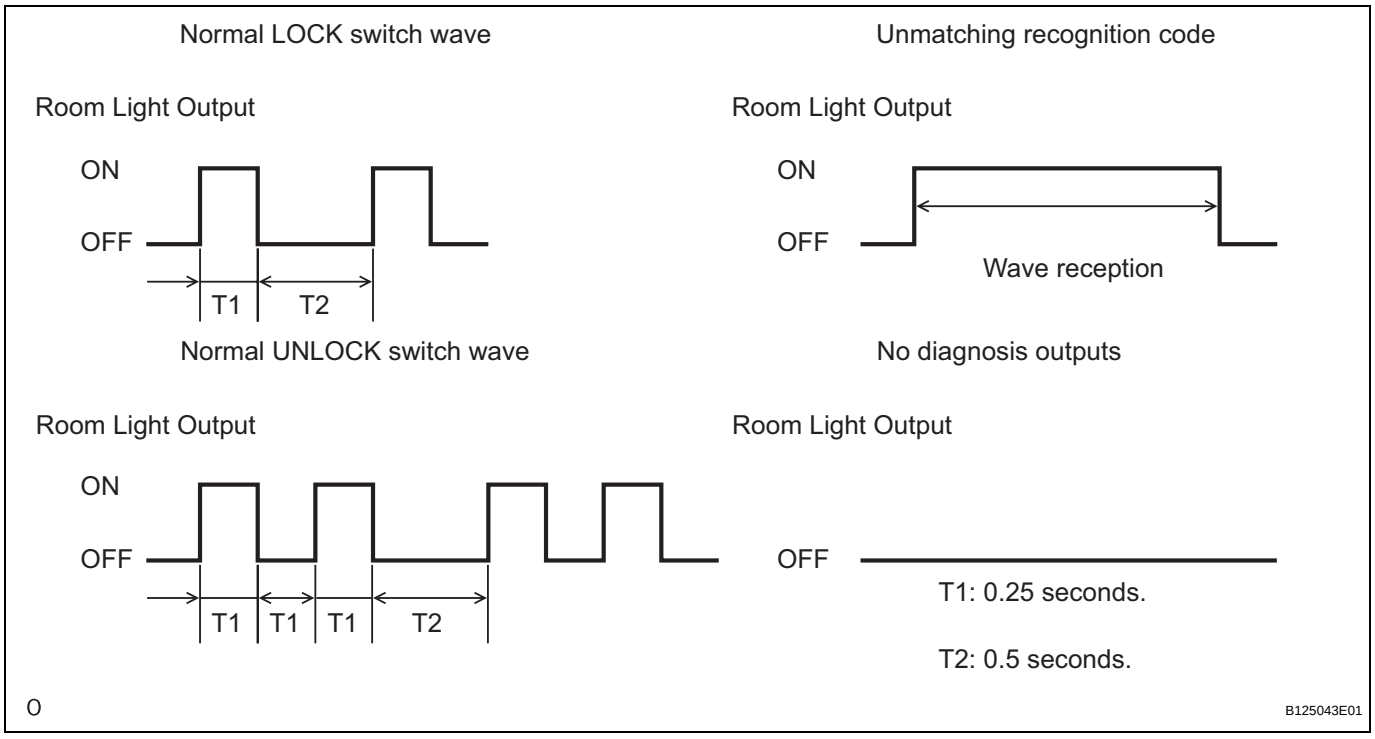

DL

Result

Result	Proceed to
Normal waves (room light blinking) for LOCK and UNLOCK switches are output.	A
An unmatching recognition code is output and room light stays ON.	B
No diagnosis outputs are present and the room light is OFF.	C

B → **REPLACE DRIVER SIDE JUNCTION BLOCK**

C → **Go to step 8**

A

7 REGISTER RECOGNITION CODE

(a) Check that the system can switch to rewrite mode or add mode and a recognition code can be registered.
OK:
Recognition code can be registered.

NG → **Go to step 15**

OK

NORMAL

8 CHECK RESPONSE OF DOOR CONTROL RECEIVER

(a) Prepare a new or correctly functioning door control transmitter switch for the same vehicle model. Press and hold a switch on the transmitter and check that an unmatching recognition code is output.
OK:
Unmatching recognition code is output.

NG → **Go to step 12**

OK

REPLACE DOOR CONTROL TRANSMITTER

9 CONFIRM INPUT METHOD OF SELF-DIAGNOSTIC MODE

Result

Result	Proceed to
The method for changing the system to self-diagnostic mode works.	A
The method for changing the system to self-diagnostic mode does not work.	B

B → **Go to step 5**

A

10 INSPECT UNLOCK WARNING SWITCH ASSEMBLY

Component Side:

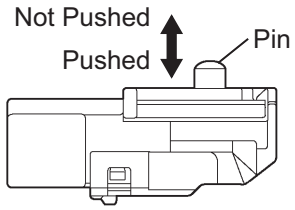

Unlock Warning Switch Assembly (Driver Side)

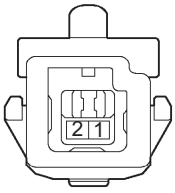

Y I044492E01

(a) Remove the unlock warning switch.
(b) Measure the resistance.
Standard Resistance

Tester Connection	Switch Condition	Specified Condition
1 - 2	Not pushed	10 kΩ or higher
1 - 2	Pushed	Below 10 Ω

(c) Reinstall the unlock warning switch.

NG → **REPLACE UNLOCK WARNING SWITCH ASSEMBLY**

OK

11 CHECK HARNESS AND CONNECTOR (UNLOCK WARNING SWITCH - DRIVER SIDE J/B AND BODY GROUND)

Wire Harness Side:

Unlock Warning Switch

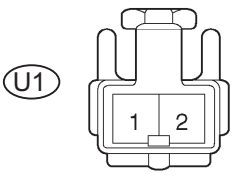

Front View

Driver Side J/B

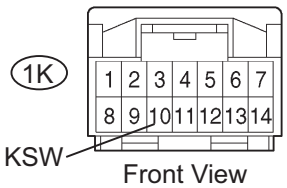

Front View

Y B087976E02

(a) Disconnect the U1 unlock warning switch connector.
(b) Disconnect the 1K driver side J/B connector.
(c) Check the resistance.
Standard Resistance

Tester Connection	Specified Condition
U1-1 - 1K-10 (KSW)	Below 1 Ω
U1-2 - Body ground	Below 1 Ω

(d) Reconnect the unlock warning switch connector.
(e) Reconnect the driver side J/B connector.

NG → **REPAIR OR REPLACE HARNESS OR CONNECTOR**

DL

OK

12	CHECK HARNESS AND CONNECTOR (DOOR CONTROL RECEIVER - BATTERY AND BODY GROUND)

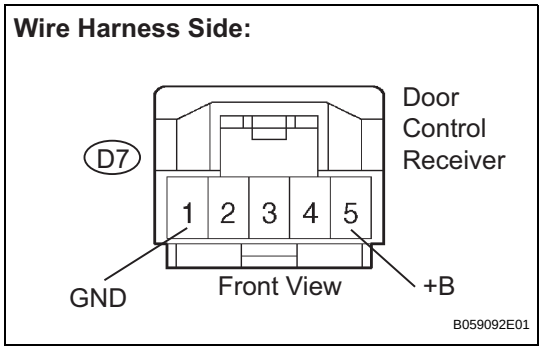

(a) Disconnect the D7 door control receiver connector.
(b) Check the voltage and resistance.
Standard

Tester Connection	Specified Condition
D7-5 (+B) - Body ground	10 to 14 V
D7-1 (GND) - Body ground	Below 1 Ω

(c) Reconnect the door control receiver connector.

NG → **REPAIR OR REPLACE HARNESS OR CONNECTOR**

OK

13	CHECK DOOR CONTROL RECEIVER (OUTPUT)

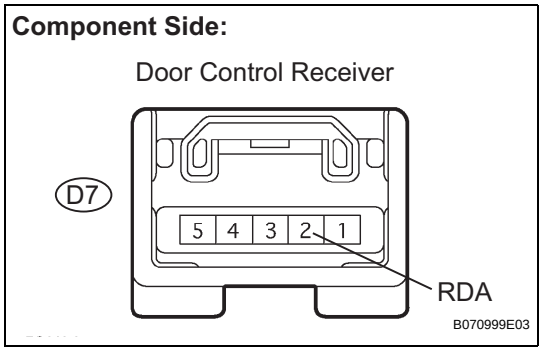

(a) Turn the ignition switch ON.
(b) Measure the voltage of the connector.
Standard Voltage

Tester Connection	Condition	Specified Condition
D7-2 (RDA) - Body ground	Each transmitter switch OFF (No key in ignition key cylinder and all doors closed)	Below 1 V
D7-2 (RDA) - Body ground	Each transmitter switch ON (No key in ignition key cylinder and all doors closed)	Alternates between 6V and 7V

NG → **Go to step 15**

OK

14	CHECK HARNESS AND CONNECTOR (DOOR CONTROL RECEIVER - DRIVER SIDE J/B (ECU AND GROUND))

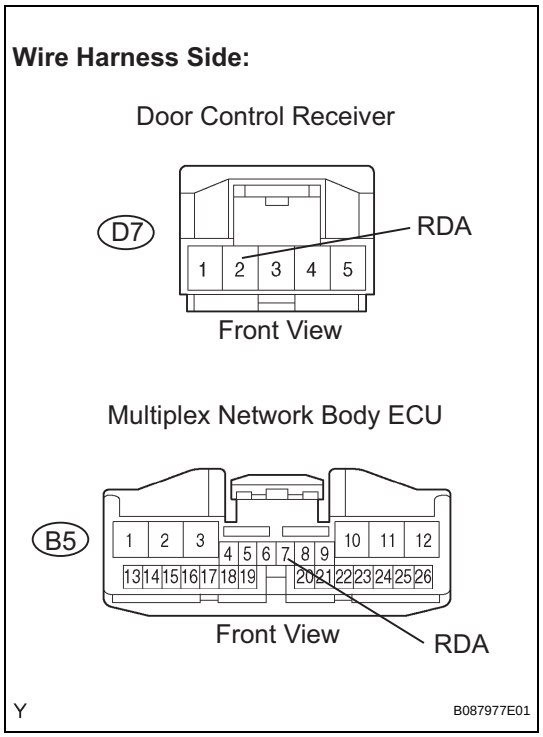

(a) Disconnect the D7 door control receiver connector.
(b) Disconnect the B5 multiplex network body ECU connector.
(c) Check the resistance.

Standard Resistance

Tester Connection	Specified Condition
D7-2 (RDA) - B5-7 (RDA)	Below 1 Ω
D7-2 (RDA) - Body ground	10 kΩ or higher
B5-7 (RDA) - Body ground	10 kΩ or higher

(d) Reconnect the door control receiver connector.
(e) Reconnect the multiplex network body ECU connector.

NG → **REPAIR OR REPLACE HARNESS OR CONNECTOR**

OK

15	REPLACE DOOR CONTROL RECEIVER WITH NORMAL ONE

NG → **REPLACE DRIVER SIDE JUNCTION BLOCK**

OK

REPLACE DOOR CONTROL RECEIVER

No Answer-Back

DESCRIPTION

In some cases, wireless control functions are normal but the hazard warning light answer-back function is not. In such a case, the multiplex network body ECU hazard warning light signal output may be malfunctioning.

WIRING DIAGRAM

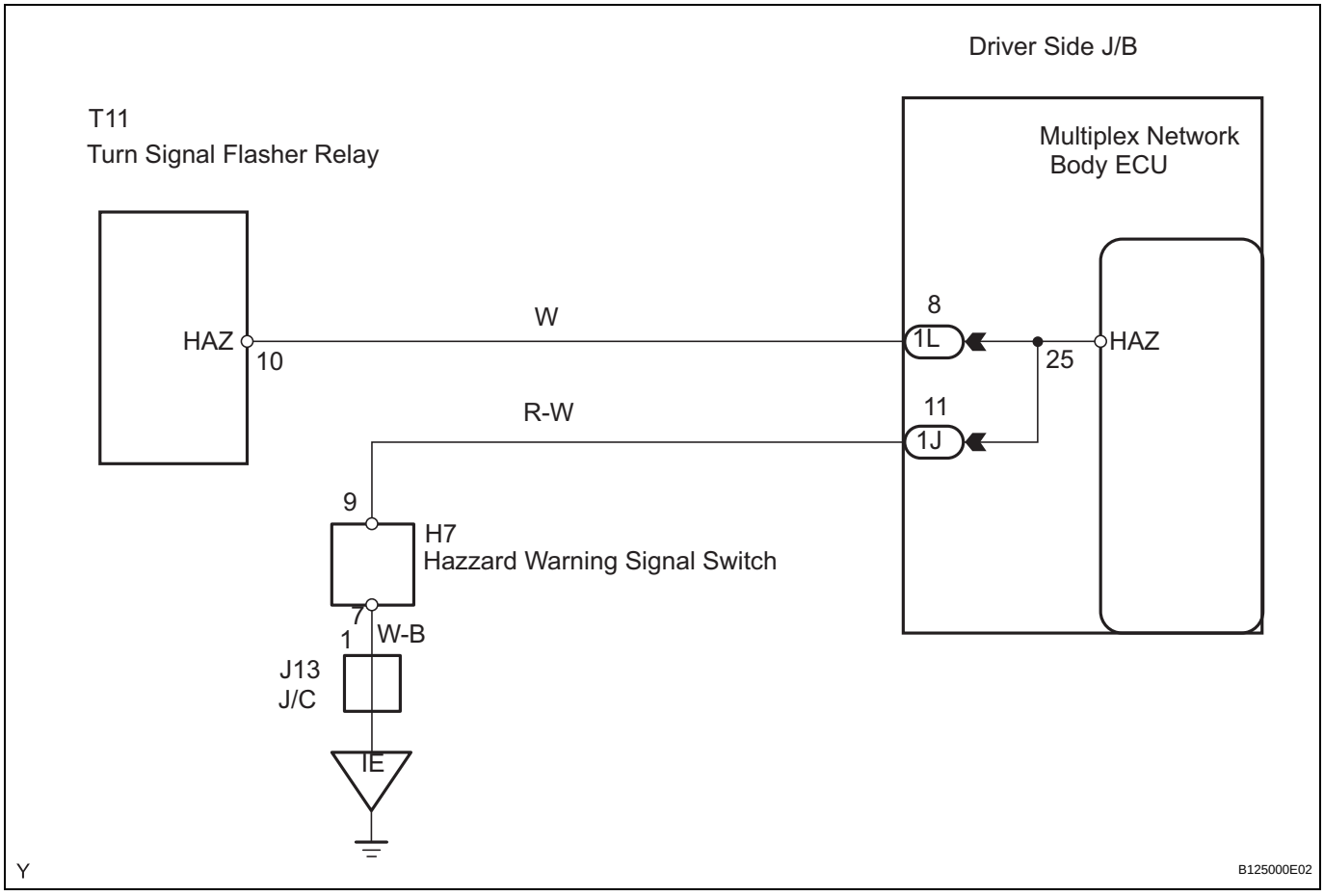

1	CHECK WIRELESS DOOR LOCK FUNCTIONS

(a) Check that the wireless door lock functions by operating the transmitter switch.

HINT:
When the wireless door LOCK/UNLOCK operation functions normally, it can be assumed that the transmitter signal is being properly input to the multiplex network body ECU.

NG → GO TO FLOW CHART

OK

2	CHECK HAZARD WARNING LIGHTS

(a) Check that the hazard warning lights blink when the hazard warning signal switch is pressed.
OK:
Hazard warning lights blink.

NG → **REPAIR OR REPLACE HAZARD WARNING SWITCH ASSEMBLY**

OK

3	CHECK HARNESS AND CONNECTOR (TURN SIGNAL FLASHER RELAY - DRIVER SIDE J/B ASSEMBLY)

Wire Harness Side:

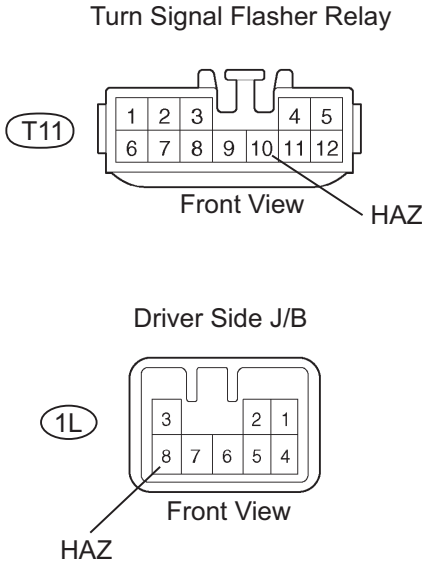

(a) Disconnect the T11 turn signal flasher relay connector.
(b) Disconnect the 1L driver side J/B connector.
(c) Check the resistance.
Standard Rresistance

Tester Connection	Specified Condition
T11-10 (HAZ) - 1L-8 (HAZ)	Below 1 Ω

(d) Reconnect the turn signal flasher relay connector.
(e) Reconnect the driver side J/B connector.

NG → **REPAIR OR REPLACE HARNESS OR CONNECTOR**

OK

REPLACE DRIVER SIDE JUNCTION BLOCK (MULTIPLEX NETWORK BODY ECU)

HOW TO PROCEED WITH TROUBLESHOOTING

1	VEHICLE BROUGHT TO WORKSHOP

NEXT

2	CUSTOMER PROBLEM ANALYSIS

NEXT

3	PROBLEM SYMPTOM CONFIRMATION

NEXT

4	CAN COMMUNICATION SYSTEM CHECK

Result

Result	Proceed to
CAN DTC is not output	A
CAN DTC is output	B

B → PROCEED TO BODY MULTIPLEX COMMUNICATION SYSTEM

A

5	CIRCUIT INSPECTION

NEXT

6	REPAIR OR REPLACE

NEXT

7	CONFIRMATION TEST

NEXT

END

PROBLEM SYMPTOMS TABLE

MALFUNCTION SYSTEM

Symptom	Suspected area	See page
Entire combination meter does not operate	Refer to troubleshooting	ME-26
Operating light control rheostat does not change light brightness	Refer to troubleshooting	ME-60
Warning buzzer does not sound	Refer to troubleshooting	ME-41

METER GAUGES

Symptom	Suspected area	See page
Malfunction in speedometer	Refer to troubleshooting	ME-28
Malfunction in tachometer	Refer to troubleshooting	ME-32
Malfunction in fuel receiver gauge	Refer to troubleshooting	ME-35
Malfunction in water temperature warning light	Refer to troubleshooting	ME-38

WARNING LIGHTS

Symptom	Suspected area	See page
MIL does not come on	ECM (2TR-FE)	ES-10
	ECM (1GR-FE)	ES-10
	Wire Harness or Connector	-
	Combination Meter Assembly	ME-64
Discharge warning light does not come on	ECM (2TR-FE)	ES-10
	ECM (1GR-FE)	ES-10
	Wire Harness or Connector	-
	Combination Meter Assembly	ME-64
Brake warning light does not come on	Brake Oil Level Switch	ME-21
	Wire Harness or Connector	-
	Combination Meter Assembly	ME-64
ABS warning light does not come on	Brake Actuator Assembly (ABS)	BC-5
	Wire Harness or Connector	-
	Combination Meter Assembly	ME-64
SRS warning light does not come on	Center Airbag Sensor Assembly	RS-24
	Wire Harness or Connector	-
	Combination Meter Assembly	ME-64
Open door warning light does not come on	Refer to troubleshooting	DL-3
	Wire Harness or Connector	-
	Combination Meter Assembly	ME-64
Fuel level warning light does not come on	Refer to troubleshooting	-
	Wire Harness or Connector	-
	Combination Meter Assembly	ME-64
Low oil pressure warning light does not come on	Low Oil Pressure Warning Switch	-
	Wire Harness or Connector	-
	Combination Meter Assembly	ME-64
Driver side seat belt warning light dose not operate.	Refer to troubleshooting	ME-47
Passenger side seat belt warning light dose not flash.	Refer to troubleshooting	ME-51
A/T oil temperature warning light does not come on	ECM (2TR-FE)	ES-10
	ECM (1GR-FE)	ES-10
	Wire Harness or Connector	-
	Combination Meter Assembly	ME-64

Symptom	Suspected area	See page
Tail light warning light does not come on	Tail Light	-
	Wire Harness or Connector	-
	Combination Meter Assembly	ME-64
Headlight warning light does not come on	Headlight	-
	Wire Harness or Connector	-
	Combination Meter Assembly	ME-64

INDICATOR LIGHTS

Symptom	Suspected area	See page
Turn indicator light does not come on	Turn Signal Flasher Relay	LI-1
	Wire Harness or Connector	-
	Combination Meter Assembly	ME-64
High beam indicator light does not come on	Headlight Dimmer Switch	LI-29
	Wire Harness or Connector	-
	Combination Meter Assembly	-
CRUISE indicator light does not come on	ECM (2TR-FE)	ES-10
	ECM (1GR-FE)	ES-10
	Cruise Control Main Switch	CC-5
	Wire Harness or Connector	-
	Combination Meter Assembly	ME-64
Rear diff lock indicator light does not come on	4WD Control ECU	BC-5
	Wire Harness or Connector	-
	Combination Meter Assembly	ME-64
4LO indicator light does not come on	4WD Control ECU	BC-5
	Wire Harness or Connector	-
	Combination Meter Assembly	ME-64
4WD indicator light does not come on	4WD Control ECU	BC-5
	Wire Harness or Connector	-
	Combination Meter Assembly	ME-64
DAC indicator light does not come on	4WD Control ECU	BC-5
	Wire Harness or Connector	-
	Combination Meter Assembly	ME-64
Oil maintenance indicator light does not come on	Combination Meter Assembly	ME-64
VSC TRAC indicator light does not come on	Skid Control ECU	BC-96
	Wire Harness or Connector	-
	Combination Meter Assembly	ME-64
VSC OFF indicator light does not come on	Skid Control ECU	BC-96
	Wire Harness or Connector	-
	Combination Meter Assembly	ME-64
SLIP indicator light does not come on	Skid Control ECU	BC-96
	Wire Harness or Connector	-
	Combination Meter Assembly	ME-64
AUTO LSD indicator light does not come on	Skid Control ECU	BC-96
	Wire Harness or Connector	-
	Combination Meter Assembly	ME-64
All buzzers (key reminder, 6M/T, seat belt) do not operate	Refer to troubleshooting	ME-41
	Combination Meter Assembly	ME-64
Tire pressure indicator light does not come on	Tire Pressure Monitor ECU	TW-9
	Wire Harness or Connector	-
	Combination Meter Assembly	ME-64

TERMINALS OF ECU

1. COMBINATION METER ASSEMBLY

Combination Meter:

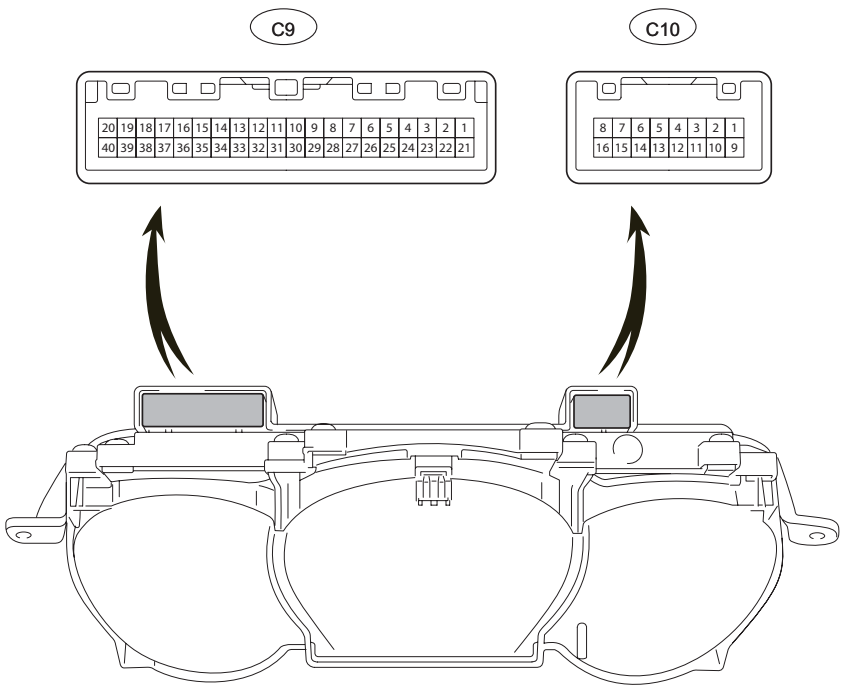

Y

B125019E01

Symbols (Terminals No.)	Wiring Color	Terminal Description	Condition	Specified Condition
+B (C9-1) - Body ground	R - Body ground	Battery	Always	10 to 14 V
SIGNAL EARTH (C9-2) - Body ground	W-B - Body ground	Ground	Always	Below 1 Ω
SPEED SIGNAL (C9-3) - Body ground	W - Body ground	Vehicle speed signal (input)	Ignition switch ON and wheel turning slowly	Pulse generation (See waveform 1)
FUEL EARTH (C9-4) - Body ground	Y-B - Body ground	Ground	Always	Below 1 Ω
SPEED SIGNAL (C9-6) - Body ground	R-Y - Body ground	Vehicle speed signal (input)	Ignition switch ON and wheel turning slowly	Pulse generation (See waveform 1)
TACHO (C9-7) - Body ground	B-W - Body ground	Tachometer signal	Idling	Pulse generation (See waveform 2)
FUEL SENDER (C9-8) - Body ground	O - Body ground	Fuel level signal	Ignition switch ON, fuel level FULL → EMPTY	Below 1 V → 4 to 7 V
TEMP IMPUT (C9-9) - Body ground	GR-B - Body ground	Engine coolant temperature	Ignition switch ON, engine coolant temperature 90°C(194°F)	Pulse generation (See waveform 3)
D-BELT (C9-10) - Body ground	B-O - Body ground	Seat belt condition signal (Driver side)	D-BELT indicator light ON	Below 1 V
			D-BELT indicator light OFF	10 to 14 V
KEY UNLOCK (C9-11) - Body ground	G-B - Body ground	Key switch condition signal	Key inserted	Below 1 V
			Key removed	10 to 14 V
D DOOR INPUT (C9-12) - Body ground	G-Y - Body ground	Driver side door open	Driver side door open	Below 1 V
			Driver side door closed	10 to 14 V

Symbols (Terminals No.)	Wiring Color	Terminal Description	Condition	Specified Condition
CHG- (C9-16) - Body ground	GR - Body ground	Change signal	Ignition switch ON	10 to 14 V
			Ignition switch OFF	Below 1 V
MIL (C9-17) - Body ground	BR - Body ground	MIL signal	MIL ON	Below 1 V
			MIL OFF	10 to 14 V
ALL DOOR INPUT (C9-18) - Body ground	G-W - Body ground	All door condition signal	All doors open	Below 1 V
			All doors closed	10 to 14 V
4P OUT (C9-19) - Body ground	V-W - Body ground	Vehicle speed signal (Input)	Ignition switch ON and wheel turning slowly	Pulse generation (See waveform 1)
ILL- (C9-20) - Body ground	BR-W - Body ground	Ground	Always	Below 1 Ω
IGN+ (C9-21) - Body ground	V - Body ground	Ignition switch signal (ON)	Ignition switch OFF	Below 1 V
			Ignition switch ON	10 to 14 V
TIRE PRESSURE (C9-23) - Body ground	L - Body ground	Tire pressure signal	Tire pressure indicator light ON	6.7 to 12 V
			Tire pressure indicator light OFF	Below 1 V
CRUISE (C9-24) - Body ground	LG - Body ground	Cruise signal	Cruise indicator ON	Below 1 V
			Cruise indicator OFF	10 to 14 V
OIL PRESSURE (C9-25) - Body ground	LG-B - Body ground	Oil pressure signal	Oil pressure warning light ON	Below 1 V
			Oil pressure warning light OFF	10 to 14 V
TURN R (C9-27) - Body ground	L-Y - Body ground	Turn signal R	Ignition switch ON, turn signal RH indicator OFF	Below 1 V
			Ignition switch ON, turn signal RH indicator ON	10 to 14 V
TURN L (C9-28) - Body ground	L-B - Body ground	Turn signal L	Ignition switch ON, turn signal LH indicator OFF	Below 1 V
			Ignition switch ON, turn signal LH indicator ON	10 to 14 V
HEAD (C9-32) - Body ground	R-B - Body ground	HEAD light signal	HEAD warning light ON	Below 1 V
			HEAD warning light OFF	10 to 14 V
AIRBAG (C9-33) - Body ground	B-Y - Body ground	AIRBAG signal	AIRBAG warning light ON	Below 1 V
			AIRBAG warning light OFF	10 to 14 V
AUTO LSD (C9-35) - Body ground	LG-R - Body ground	AUTO LSD signal	AUTO LSD indicator light ON	Below 1 V
			AUTO LSD indicator light OFF	10 to 14 V
SLIP (C9-36) - Body ground	R-W - Body ground	SLIP signal	SLIP warning light ON	Below 1 V
			SLIP warning light OFF	10 to 14 V
VSC OFF (C9-37) - Body ground	L-W - Body ground	VSC OFF signal	VSC OFF indicator ON	Below 1 V
			VSC OFF indicator OFF	10 to 14 V
VSC TRAC (C9-38) - Body ground	Y - Body ground	VSC TRAC signal	VSC TRAC indicator ON	Below 1 V
			VSC TRAC indicator OFF	10 to 14 V
A/T OIL TEMP (C9-39) - Body ground	P - Body ground	A/T oil temperature signal	A/T OIL TEMP warning light ON	Below 1 V
			A/T OIL TEMP warning light OFF	10 to 14 V
ILL+ (C9-40) - Body ground	G - Body ground	Illumination signal	Illumination switch OFF, rheostat maximum	Below 1 V
			Illumination switch ON (wake up), rheostat maximum	10 to 14 V

Symbols (Terminals No.)	Wiring Color	Terminal Description	Condition	Specified Condition
A/T P (C10-1) - Body ground	G-B - Body ground	A/T sift position signal (P)	A/T P indicator OFF	Below 1 V
			A/T P indicator ON	10 to 14 V
A/T R (C10-2) - Body ground	R-W - Body ground	A/T sift position signal (R)	A/T R indicator OFF	Below 1 V
			A/T R indicator ON	10 to 14 V
A/T N (C10-3) - Body ground	L-W - Body ground	A/T sift position signal (N)	A/T N indicator OFF	Below 1 V
			A/T N indicator ON	10 to 14 V
A/T D (C10-4) - Body ground	W - Body ground	A/T sift position signal (D)	A/T D indicator OFF	Below 1 V
			A/T D indicator ON	10 to 14 V
A/T 4 (C10-5) - Body ground	B - Body ground *1 Y - Body ground *2	A/T sift position signal (4)	A/T 4 indicator OFF	Below 1 V
			A/T 4 indicator ON	10 to 14 V
A/T 3 (C10-6) - Body ground	Y - Body ground *1 R-Y - Body ground *2	A/T sift position signal (3)	A/T 3 indicator OFF	Below 1 V
			A/T 3 indicator ON	10 to 14 V
A/T 2 (C10-7) - Body ground	V - Body ground *1 G-Y - Body ground *2	A/T sift position signal (2)	A/T 2 indicator OFF	Below 1 V
			A/T 2 indicator ON	10 to 14 V
A/T L (C10-8) - Body ground	G-Y - Body ground	A/T sift position signal (L)	A/T L indicator OFF	Below 1 V
			A/T L indicator ON	10 to 14 V
ACTIVE ABS (C10-9) - Body ground	O - Body ground	ACTIVE ABS signal	ACTIVE ABS warning light ON	Below 1 V
			ACTIVE ABS warning light OFF	10 to 14 V
ACTIVE BRAKE (C10-10) - Body ground	B-W - Body ground	ACTIVE BRAKE signal	ACTIVE BRAKE warning light ON	Below 1 V
			ACTIVE BRAKE warning light OFF	10 to 14 V
BRAKE LEVEL (C10-11) - Body ground	LG - Body ground	BRAKE signal	BRAKE warning light ON	Below 1 V
			BRAKE warning light OFF	10 to 14 V
BEAM+ (C10-12) - Body ground	P - Body ground	Hi-Beam signal	Hi-Beam OFF	Below 1 V
			Hi-Beam ON	10 to 14 V
DAC (C10-13) - Body ground	L-B - Body ground	DAC TRAC signal	DAC TRAC warning light ON	Below 1 V
			DAC TRAC warning light OFF	10 to 14 V
RR DIFF LOCK (C10-14) - Body ground	L-Y - Body ground	RR DIFF LOCK signal	RR DIFF LOCK warning light ON	Below 1 V
			RR DIFF LOCK warning light OFF	10 to 14 V
4LO (C10-16) - Body ground	BR-W - Body ground	4LO TRAC signal	4LO indicator light ON	Below 1 V
			4LO indicator light OFF	10 to 14 V
4WD (C10-15) - Body ground	R - Body ground	4WD signal	4WD indicator OFF	Below 1 V
			4WD indicator ON	10 to 14 V

*1: 1GR-FE
*2: 2TR-FE

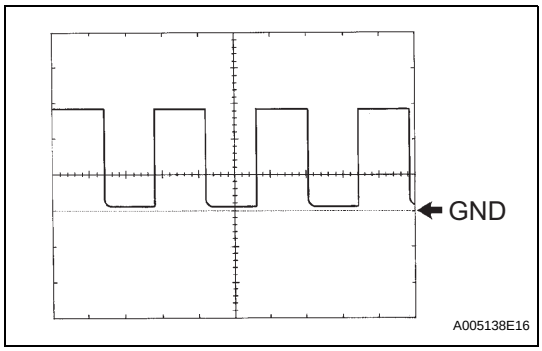

(a) Waveform 1: Using an oscilloscope

Item	Condition
Tool setting	5 V/DIV., 10 ms/DIV
Vehicle condition	Engine idle speed

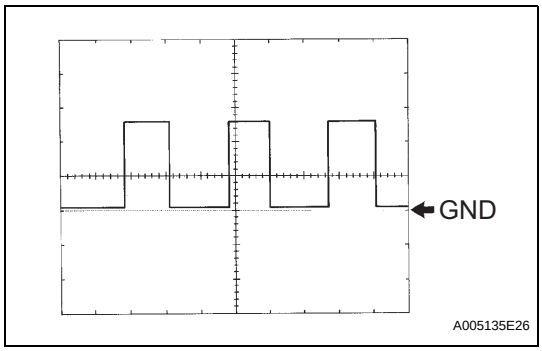

(b) Waveform 2: Using an oscilloscope

Item	Condition
Tool setting	5 V/DIV., 20 ms/DIV
Vehicle condition	Driving at approx. 20 km/h (12 mph)

HINT:
As vehicle speed increases, the cycle of the signal waveform narrows.

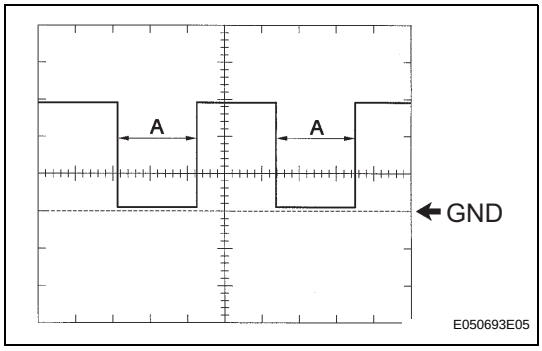

(c) Waveform 3: Using an oscilloscope

Item	Condition
Tool setting	5 V/DIV., 0.1 sec./DIV
Vehicle condition	Ignition switch ON

HINT:
A changes in accordance with the engine coolant temperature.

Coolant temperature	Below 30°C	Approximately 75°C	Above 90°C
A	Approximately 16 ms	Approximately 204 ms	Approximately 262 ms

2. COMBINATION METER INNER CIRCUIT

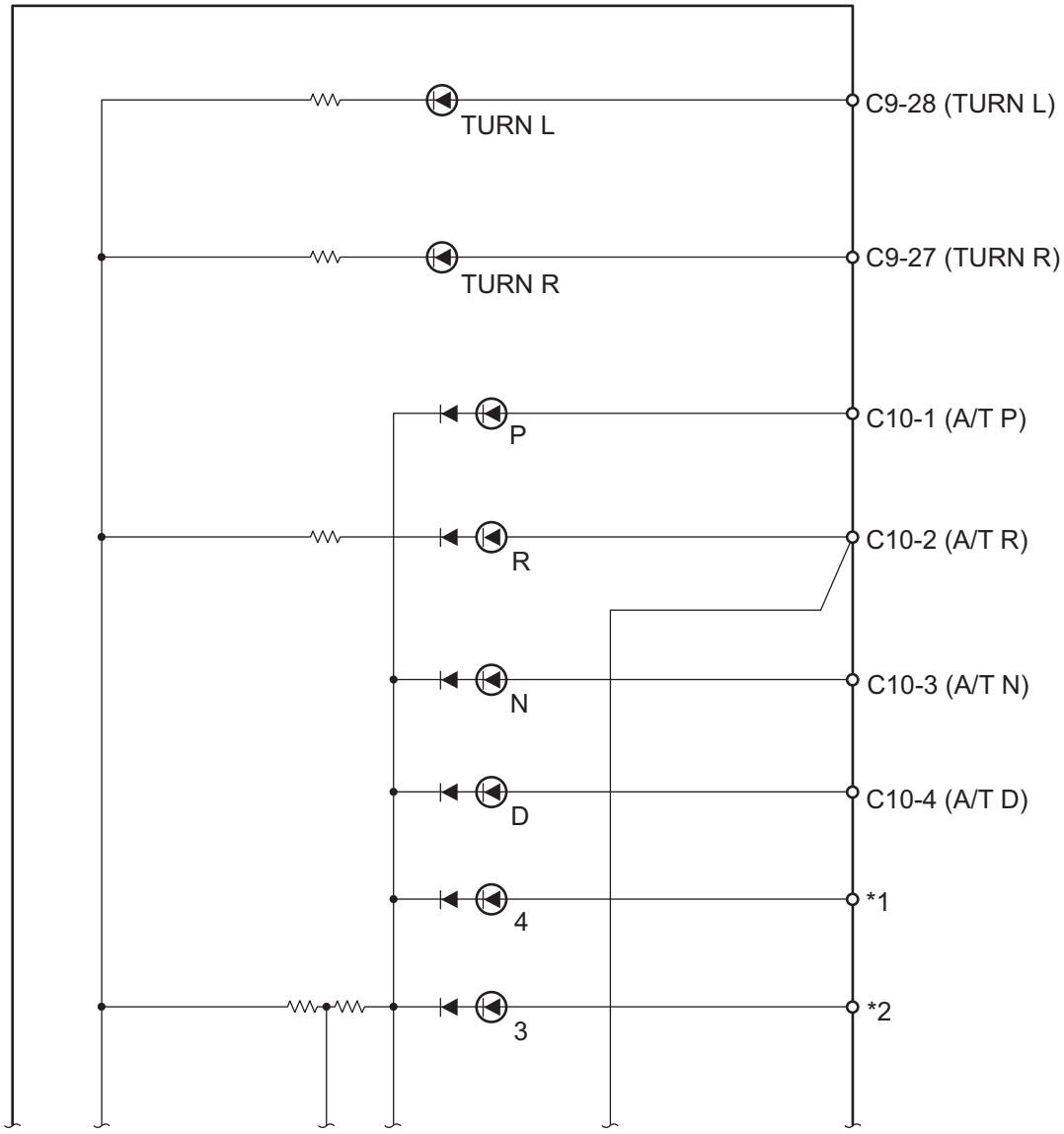

*1: C10-5 (A/T4)(1GR-FE)

*2: C10-6 (A/T3)(1GR-FE), C10-5 (A/T3)(2TR-FE)

B124961E01

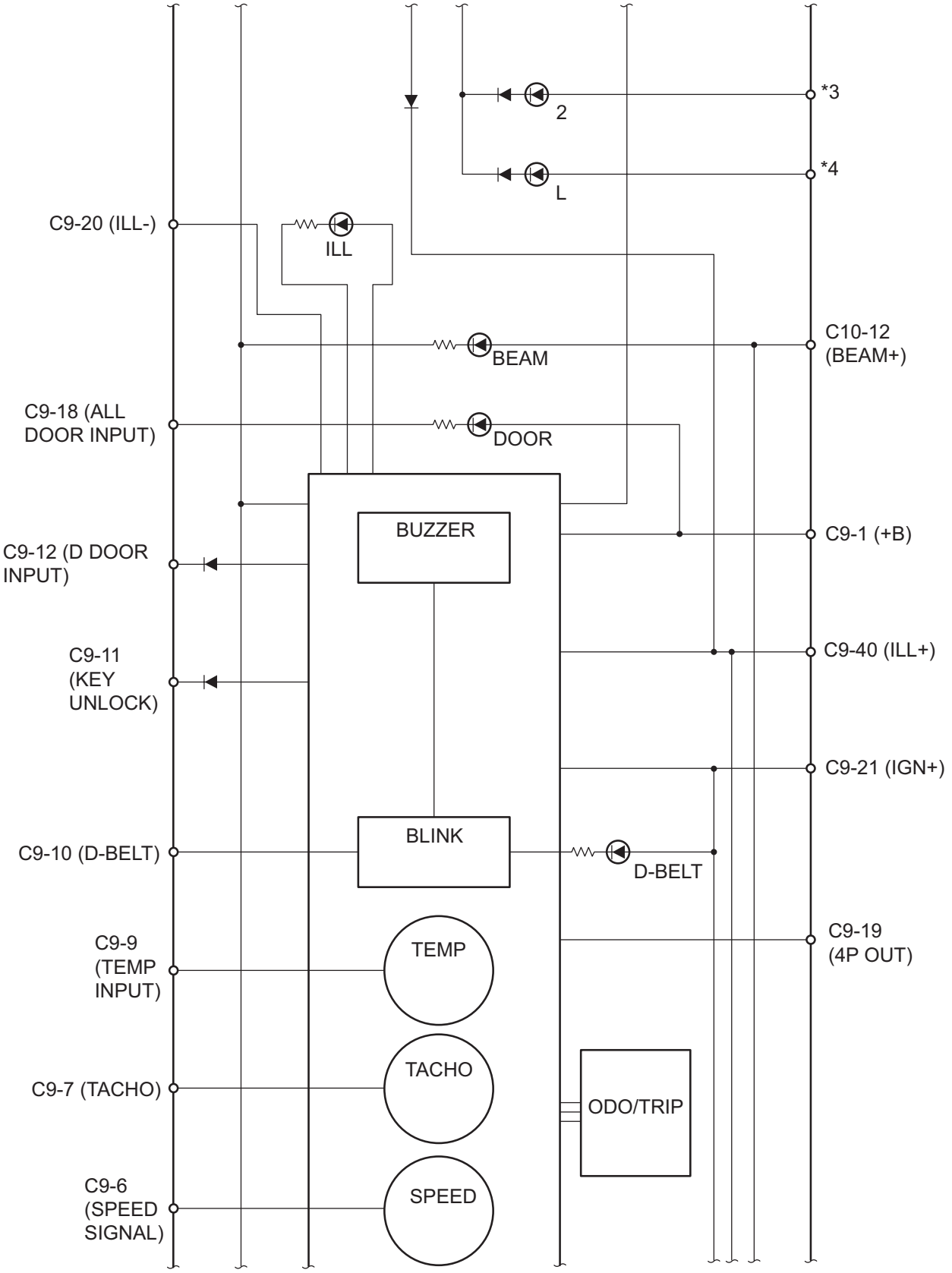

*3: C10-7 (A/T2)(1GR-FE), C10-6 (A/T2)(2TR-FE) *4: C10-8 (A/TL)(1GR-FE), C10-7 (A/TL)(2TR-FE)

B124962E03

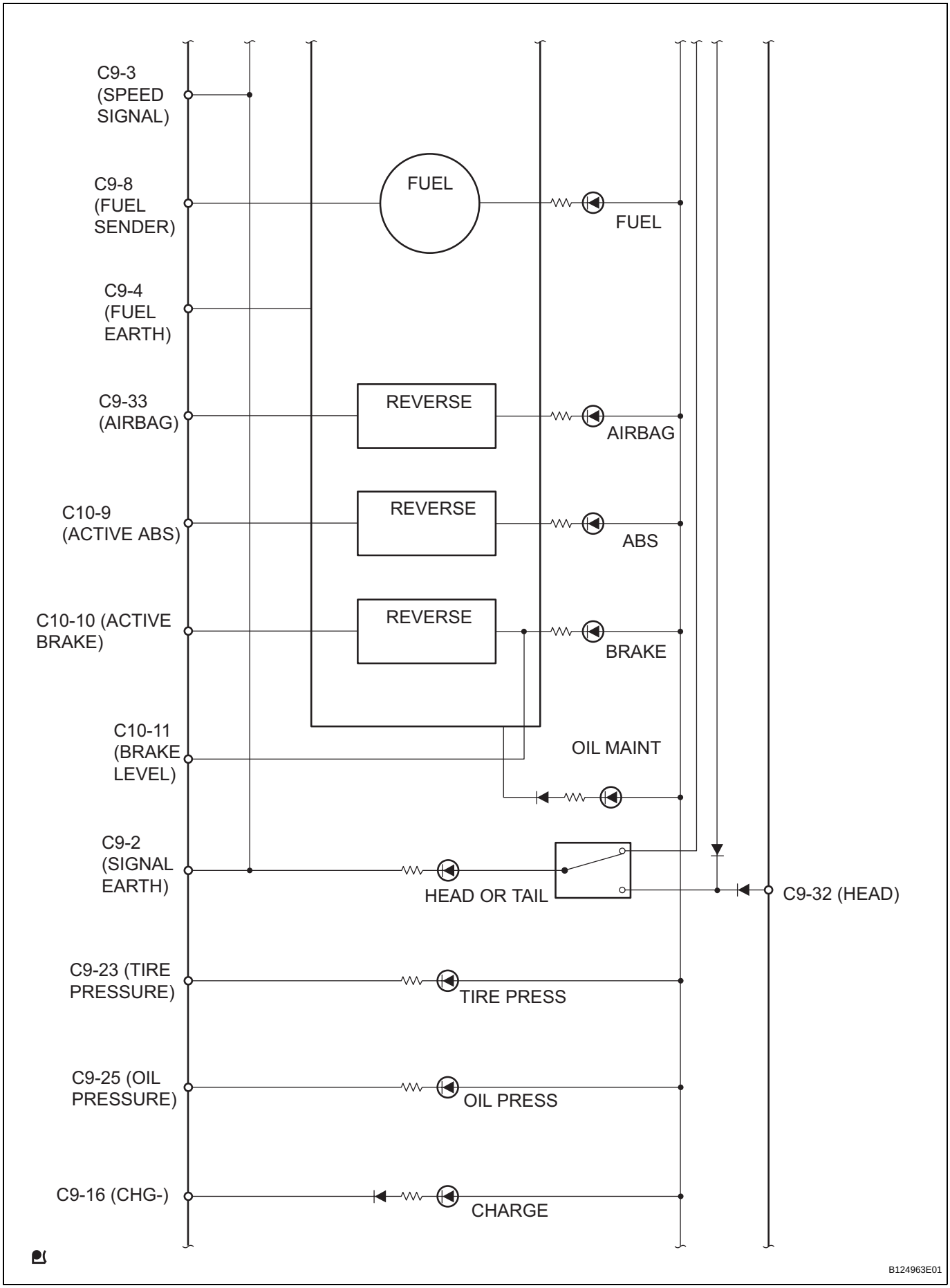
C9-3
(SPEED
SIGNAL)
C9-8
(FUEL
SENDER)
FUEL
FUEL
C9-4
(FUEL
EARTH)
C9-33
(AIRBAG)
REVERSE
AIRBAG
C10-9
(ACTIVE ABS)
REVERSE
ABS
C10-10 (ACTIVE
BRAKE)
REVERSE
BRAKE
C10-11
(BRAKE
LEVEL)
OIL MAINT
C9-2
(SIGNAL
EARTH)
HEAD OR TAIL
C9-32 (HEAD)
C9-23 (TIRE
PRESSURE)
TIRE PRESS
C9-25 (OIL
PRESSURE)
OIL PRESS
C9-16 (CHG-)
CHARGE
B124963E01

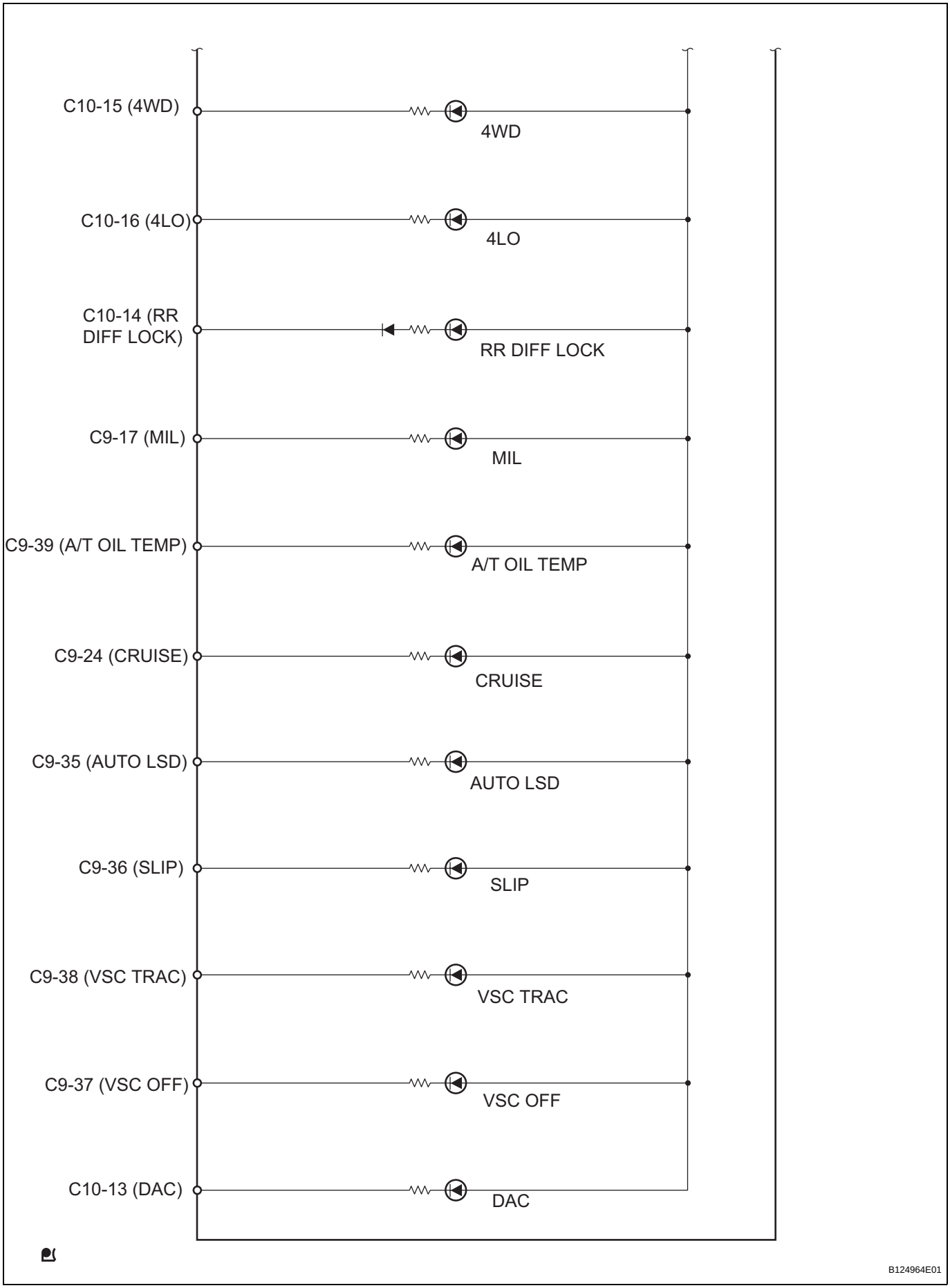
C10-15 (4WD)
4WD
C10-16 (4LO)
4LO
C10-14 (RR DIFF LOCK)
RR DIFF LOCK
C9-17 (MIL)
MIL
C9-39 (A/T OIL TEMP)
A/T OIL TEMP
C9-24 (CRUISE)
CRUISE
C9-35 (AUTO LSD)
AUTO LSD
C9-36 (SLIP)
SLIP
C9-38 (VSC TRAC)
VSC TRAC
C9-37 (VSC OFF)
VSC OFF
C10-13 (DAC)
DAC
B124964E01

Connectors:

Terminal No.		Wire Harness Side
C9	1	ECU-B Fuse
	2	GND
	3	Vehicle Speed Sensor *1
	4	GND
	6	Skid Control ECU *2
	7	ECM
	8	Fuel Sender Gauge
	9	ECM
	10	Driver Seat Buckle Switch
	11	Key Unlock Warning Switch
	12	Multiplex Network Body ECU
	16	Generator (Alternator)
	17	ECM
	18	Multiplex Network Body ECU
	19	4P-OUT (Other Parts)
	20	Light Control Rheostat
	21	Gauge Fuse
	23	Tire Pressure Monitor ECU
	24	ECM
	25	Low Oil Pressure Warning Switch
	27	Flasher Relay
	28	Flasher Relay
	32	HEAD Fuse
	33	Center Airbag Sensor Assembly
	35	Skid Control ECU *6
	36	Skid Control ECU *4
	37	Skid Control ECU *4
	38	Skid Control ECU *4
	39	ECM *2
	40	TAIL Fuse

Terminal No.		Wire Harness Side
C10	1	Park/Neutral Start Switch *2
	2	Park/Neutral Start Switch *2
	3	Park/Neutral Start Switch *2
	4	Park/Neutral Start Switch *2
	5	Park/Neutral Start Switch *2
	6	Park/Neutral Start Switch *2
	7	Park/Neutral Start Switch *2
	8	Park/Neutral Start Switch *2
	9	Skid Control ECU
	10	Skid Control ECU
	11	Brake Fluid Level Warning Switch *3
	12	HEAD Fuse
	13	Skid Control ECU *5
	14	Rear Diff Lock Switch *7
	15	4WD Control ECU
	16	4WD Control ECU

*1: M/T
*2: A/T
*3: w/o VSC
*4: w/ VSC
*5: w/ DAC
*6: w/ AUTO LSD
*7: w/ Rear Diff Lock

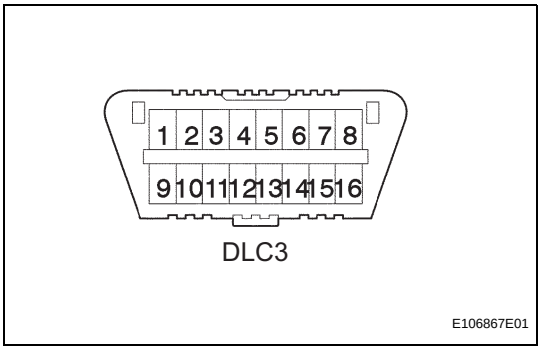

DIAGNOSIS SYSTEM

1. CHECK DLC3

If the result is not as specified, the DLC3 may have a malfunction. Repair or replace the harness and connector.

Tester Connection	Condition	Specified Condition
7 (Bus "+" line) - 5 (Signal ground)	During transmission	Pulse generation
4 (Chassis ground) - Body ground	Always	Below 1 Ω
5 (Signal ground) - Body ground	Always	Below 1 Ω
16 (B+) - Body ground	Always	9 to 14 V

HINT:
If the display shows UNABLE TO CONNECT TO VEHICLE when you have connected the cable of the intelligent tester to the DLC3, turned the ignition switch to the ON position and operated the tester, a problem exists in either the vehicle or tester.

- If communication is normal when the tester is connected to another vehicle, inspect the DLC3 on the original vehicle.
- If communication is still impossible when the tester is connected to another vehicle, the problem is probably with the tester itself. Consult the Service Department listed in the tester's instruction manual.

*1: M/T
*2: A/T
*3: w/o VSC
*4: w/ VSC
*5: w/ DAC
*6: w/ AUTO LSD
*7: w/ Rear Diff Lock

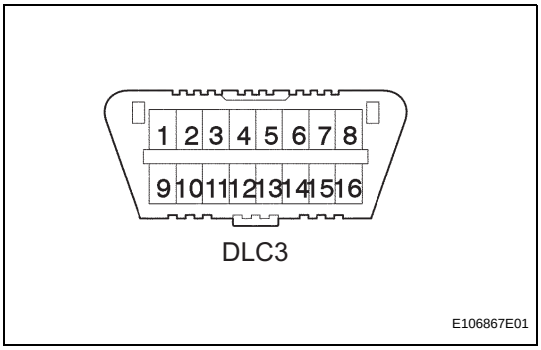

DIAGNOSIS SYSTEM

1. CHECK DLC3

If the result is not as specified, the DLC3 may have a malfunction. Repair or replace the harness and connector.

Tester Connection	Condition	Specified Condition
7 (Bus "+" line) - 5 (Signal ground)	During transmission	Pulse generation
4 (Chassis ground) - Body ground	Always	Below 1 Ω
5 (Signal ground) - Body ground	Always	Below 1 Ω
16 (B+) - Body ground	Always	9 to 14 V

HINT:
If the display shows UNABLE TO CONNECT TO VEHICLE when you have connected the cable of the intelligent tester to the DLC3, turned the ignition switch to the ON position and operated the tester, a problem exists in either the vehicle or tester.

- If communication is normal when the tester is connected to another vehicle, inspect the DLC3 on the original vehicle.
- If communication is still impossible when the tester is connected to another vehicle, the problem is probably with the tester itself. Consult the Service Department listed in the tester's instruction manual.

DATA LIST / ACTIVE TEST

1. DATA LIST

(a) By reading the DATA LIST displayed on the intelligent tester, you can check values, including those of the switches, sensors, actuators without removing any parts. Reading the DATA LIST as the first step of troubleshooting is one method of shortening diagnostic time.
(1) Warm up the engine.
(2) Turn the ignition switch OFF.
(3) Connect the intelligent tester to the DLC3.
(4) Turn the ignition switch to the ON position.
(5) Operate the intelligent tester according to the display and select "DATA LIST".

ECM :

Item	Measurement Item/ Range (Display)	Normal Condition	Diagnostic Note
VEHICLE SPEED	Vehicle speed/ Min.: 0 mph (0 km/h), Max.: 153 mph (255 km/h)	Almost same as actual vehicle speed (When driving)	-
ENGINE SPD	Engine speed/ Min.: 0 rpm, Max.: 16,383 rpm	Almost same as actual engine speed (When engine is running)	-
COOLANT TEMP	Engine coolant temperature / Min.: -40°C (-40°F), Max.: 140°C (284°F)	After warning up: 80 to 95°C (176 to 203°F)	If value is -40°C (-40°F), sensor circuit is open. If value is 140°C (284°F), sensor circuit is shorted.

ON-VEHICLE INSPECTION

1. INSPECT SPEEDOMETER

(a) Check the operation.

(1) Using a speedometer tester, inspect the speedometer for acceptable indication error and check the operation of the odometer.

Reference:
km/h (Canada)

Standard Indication	Acceptable Range
20 km/h	17.5 to 21.5 km/h
40 km/h	38.0 to 42.0 km/h
60 km/h	58.0 to 63.0 km/h
80 km/h	78.0 to 84.0 km/h
100 km/h	98.5 to 104.5 km/h
120 km/h	119.0 to 125.0 km/h
140 km/h	139.0 to 146.0 km/h
160 km/h	159.0 to 167.0 km/h
180 km/h	179.0 to 188.0 km/h
200 km/h	199.0 to 209.0 km/h
220 km/h	219.0 to 230.0 km/h
240 km/h	239.0 to 251.0 km/h

Reference:
mph (U.S.A.)

Standard Indication	Acceptable Range
20 mph	20.0 to 23.0 mph
40 mph	40.0 to 43.5 mph
60 mph	60.0 to 64.0 mph
80 mph	80.0 to 84.5 mph
100 mph	100.0 to 105.0 mph
120 mph	120.0 to 125.5 mph
140 mph	140.0 to 146.0 mph

NOTICE:
Tire wear and excessively high or low tire pressure affect indication errors.

(2) Check the deflection width of the speedometer indicator.

Reference:
Below 0.5 km/h (0.3 mph)

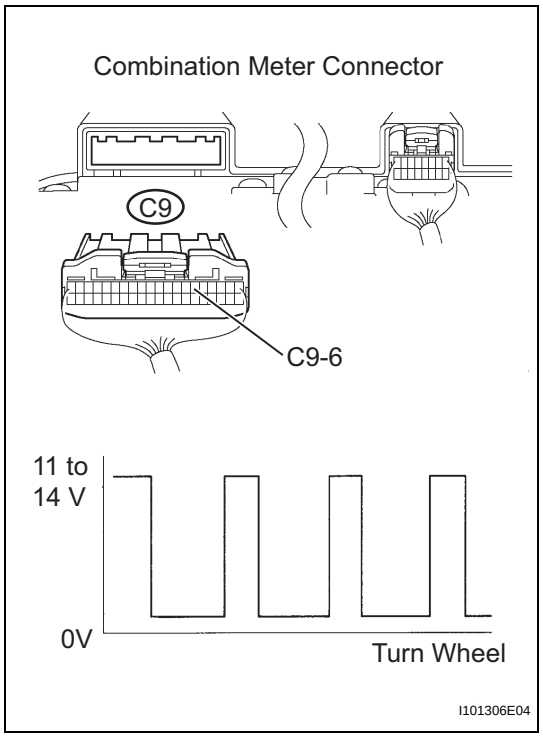

2. INSPECT OUTPUT OF VEHICLE SPEED

(a) Shift the transmission gear selector lever to the neutral position.
(b) Jack up the vehicle.
(c) Turn the ignition switch to ON.
(d) Check the voltage while the wheel is turning slowly.
Standard

Tester Connections	Specified Conditions
C9-6 - Body ground	Voltage generated intermittently

HINT:
The output voltage should fluctuate up and down as shown in the diagram on the left when the wheel is turning slowly.

3. INSPECT TACHOMETER

(a) Check the operation.
(1) Connect the tune-up test tachometer and start the engine.
NOTICE:
- **Reversing the connection of the tachometer will damage the transistors and the insides of the diodes.**
- **When removing or installing the tachometer, be careful not to drop or strike it.**

(2) Compare the result of the test with the standard indication.
DC 13.5 V, at 25°C (77°F)

Reference

Standard Indication (USA) (RPM) Standard Indication (CANADA) (r/min)	1GR-FE: Acceptable Range (USA) (RPM) Acceptable Range (CANADA) (r/min) Data in ( ) are for reference	2TR-FE Acceptable Range (USA) (RPM) Acceptable Range (CANADA) (r/min) Data in ( ) are for reference
700	630 to 770	630 to 770
1,000	(900 to 1,100)	(900 to 1,100)
2,000	(1,850 to 2,150)	(1,850 to 2,150)
3,000	2,800 to 3,200	2,800 to 3,200
4,000	(3,800 to 4,200)	(3,800 to 4,200)
5,000	4,800 to 5,100	4,800 to 5,200
6,000	(5,750 to 6,250)	(5,750 to 6,250)

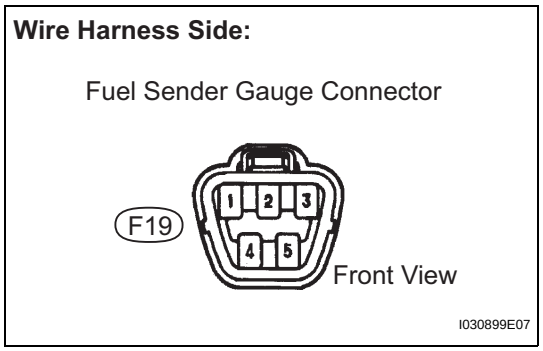

4. INSPECT FUEL RECEIVER GAUGE

(a) Disconnect the fuel sender gauge connector.
(b) Turn the ignition switch to the ON position, then check the position of the receiver gauge needle.
OK:
Needle position is on (EMPTY).
(c) Connect terminals 2 and 3 on the wire harness side connector of the fuel sender gauge.
(d) Turn the ignition switch to the ON position, then check the position of the receiver gauge needle.
OK:
Needle position is on (FULL).
(e) Reconnect the fuel sender gauge connector.

5. INSPECT FUEL LEVEL WARNING LIGHT

(a) Disconnect the fuel sender gauge connector.

(b) Turn the ignition switch to the ON position, then check that the fuel level needle indicates EMPTY and the fuel level warning light comes on.

OK:

Fuel level warning light comes on.

(c) Reconnect the fuel sender gauge connector.

6. INSPECT LOW ENGINE OIL PRESSURE WARNING LIGHT

(a) Disconnect the low oil pressure switch connector.

(b) Turn the ignition switch to the ON position.

(c) Ground the terminal of the wire harness side connector, then check the low oil pressure warning light.

OK:

Low oil pressure warning light comes on.

(d) Reconnect the low oil pressure switch connector.

7. INSPECT BRAKE WARNING LIGHT

(a) Inspect the parking brake warning light.

(1) Disconnect the parking brake switch connector.

(2) Turn the ignition switch to the ON position.

(3) Ground the terminal of the wire harness side connector, then check the parking brake warning light.

OK:

Brake warning light comes on.

(4) Reconnect the parking brake switch connector.

(b) Inspect the brake fluid level warning light.

(1) Disconnect the brake fluid level warning switch connector.

(2) Turn the ignition switch to the ON position.

(3) Connect a terminal to the other terminal of the wire harness side connector, then check the brake fluid level warning switch.

OK:

Brake warning light comes on.

(4) Reconnect the brake fluid level warning switch connector.

8. INSPECT BRAKE FLUID LEVEL WARNING SWITCH

(a) Remove the reservoir tank cap and strainer.

(b) Disconnect the brake fluid level warning switch connector.

(c) Measure the resistance between the terminals.

Standard Resistance:

Float up (switch off): 10 kΩ or higher

(d) Use a syphon or a similar tool, to take fluid out of the reservoir tank.

(e) Measure the resistance between the terminals.

Standard Resistance:

Float down (switch on): Below 1 Ω

(f) Pour the fluid back in the reservoir tank.

(g) Reconnect the brake fluid level warning switch connector.
(h) Reinstall the reservoir tank cap and strainer.

9. INSPECT WASHER FLUID LEVEL WARNING SWITCH

(a) Disconnect the washer level warning switch connector.
(b) Turn the ignition switch to the ON position.
(c) Ground the terminal of the wire harness side connector, then check the washer level warning light.
OK:
Washer level warning light comes on.
(d) Reconnect the washer level warning switch connector.

10. MAINTENANCE LIQUID RESETTING PROCEDURE

Indicator Condition

State	Condition	Specified State
Blinking	**The vehicle has run 4,500 miles since the previous setting**	**The indicator blinks for 15 seconds after the ignition switch is turned to the ON position (including 3 seconds for a valve check).**
Continuously Illuminated	**The vehicle has run 5,000 miles since the previous setting**	**The indicator is continuously illuminated after the ignition switch is turned to the ON position.**

(a) Turn the ignition switch to the ON position.
(b) Set the ODO/TRIP indication to ODO.
(c) While pressing the reset switch, turn the ignition switch OFF and ON again.
(d) Press the reset switch for more than 5 seconds. (The oil maintenance indicator illuminates for 3 seconds, and then flashes in accordance with the distance run*.)
HINT:
- *: If the distance run is less than 4,500 mile, the indicator turns off. If the distance run is between 4,500 mile and 4999 miles, the indicator flashes for 2 seconds.
- If the distance run is more than 5,000 mile, the indicator turns off. If the reset switch is not pressed for at least 5 seconds, the reset procedure fails.
- The ODO/TRIP indicator indicates as follows while the reset switch is pressed for 5 seconds.

ODO/TRIP Indication:

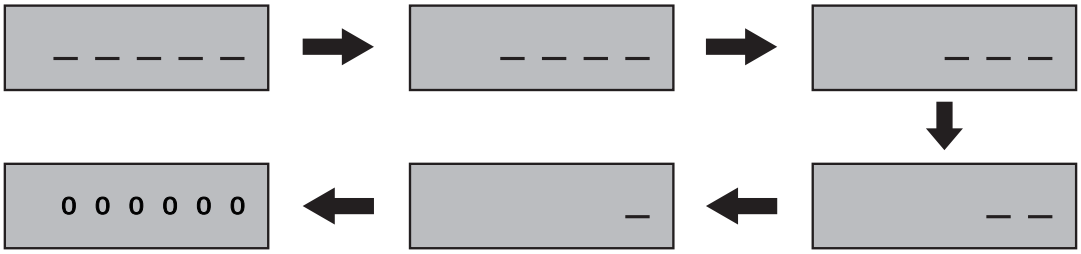

Y

B125032E01

Entire Combination Meter does not Operate

WIRING DIAGRAM

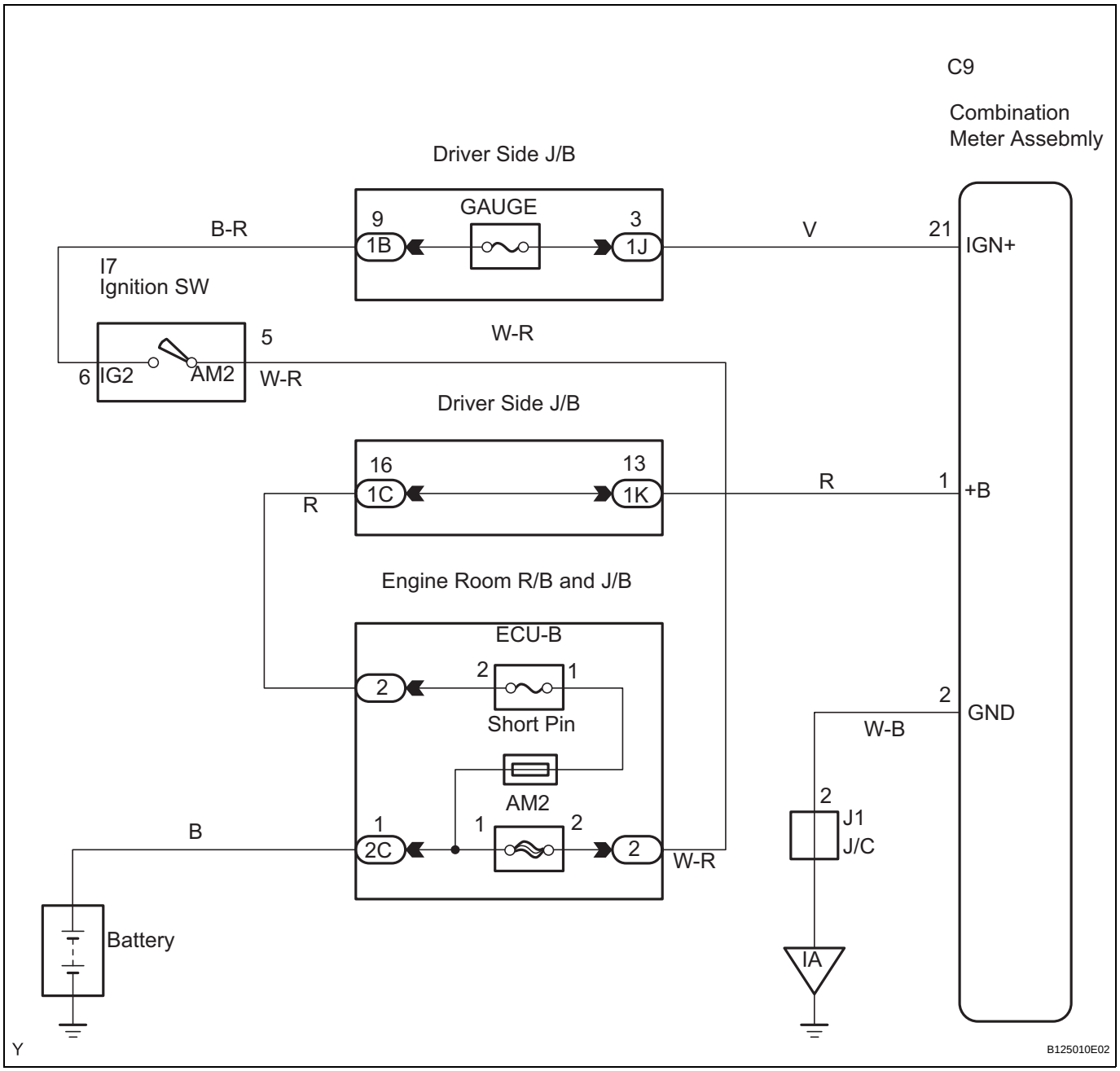

1	CHECK FUSE

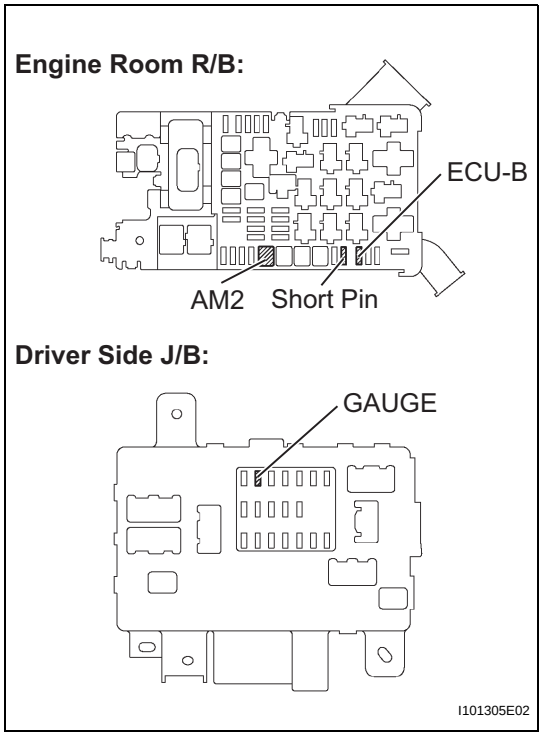

(a) Remove the ECU-B fuse, AM2 fuse and short pin from the engine room R/B.
(b) Remove the GAUGE fuse from the driver side J/B.
(c) Measure the resistance.
Standard Resistance:
Below 1 Ω
(d) Reinstall the fuses and short pin.

NG → **INSPECT FOR SHORT CIRCUIT IN HARNESS AND ALL COMPONENTS CONNECTED TO FUSE**

OK

2	INSPECT COMBINATION METER ASSEMBLY

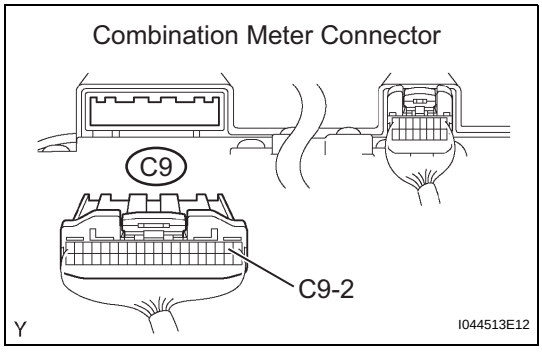

(a) Disconnect the C9 combination meter connector.
(b) Measure the resistance.
Standard Resistance

Tester Connection	Condition	Specified Condition
C9-2 - Body ground	Always	Below 1 Ω

(c) Measure the voltage.
Standard Voltage

Tester Connection	Condition	Specified Condition
C9-1 - Body ground	Always	10 to 14 V
C9-21 - Body ground	Ignition switch ON	10 to 14 V

(d) Reconnect the combination meter connector.

NG → **REPAIR OR REPLACE HARNESS OR CONNECTOR**

OK

REPLACE COMBINATION METER ASSEMBLY

Speedometer Malfunction

WIRING DIAGRAM

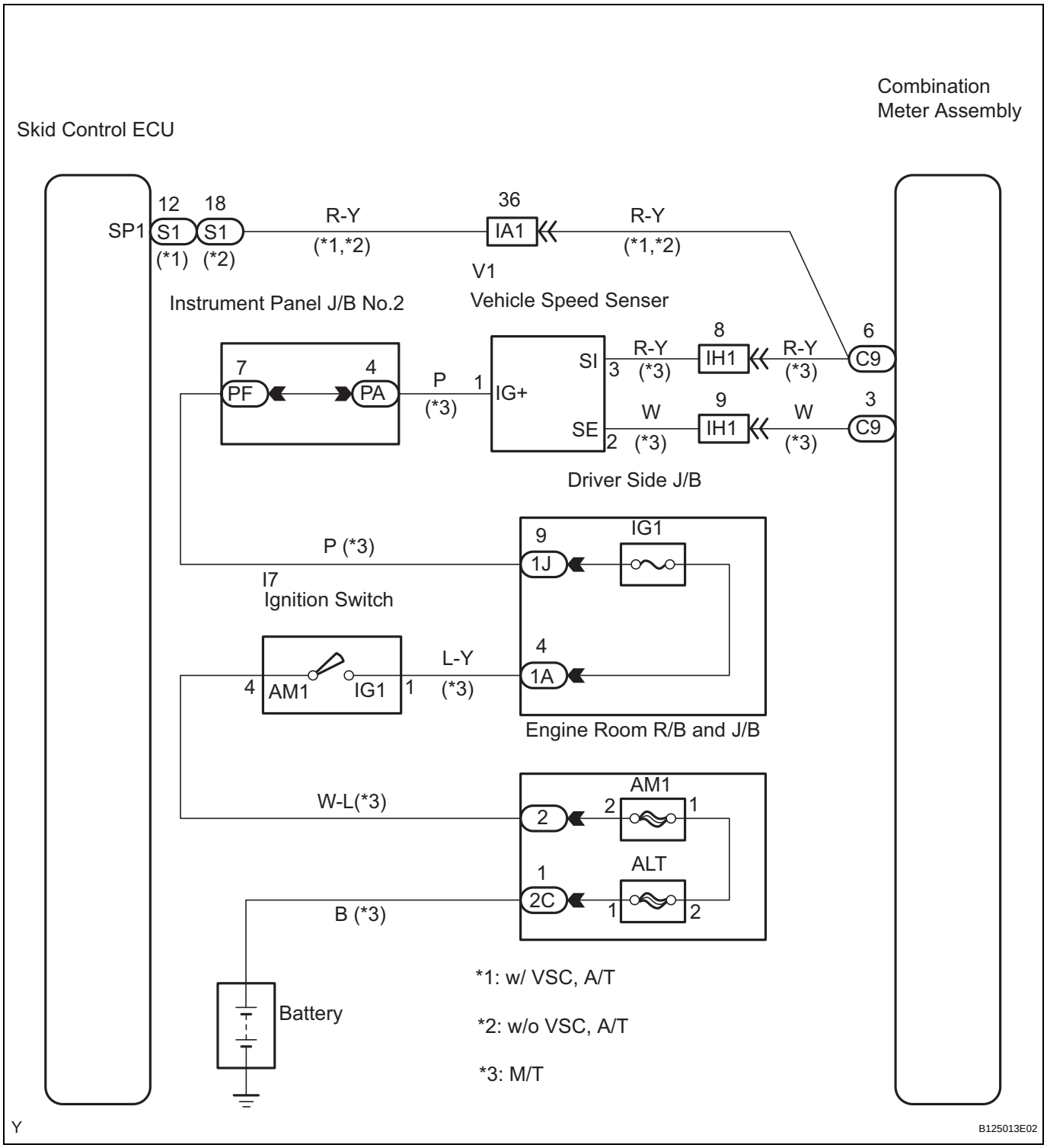

1	READ VALUE OF INTELLIGENT TESTER (VEHICLE SPEED)

(a) Connect an intelligent tester to the DLC3.
(b) Turn the ignition switch to ON.

ME

(c) Turn the tester ON.
(d) On the tester, select the following menu items: DIAGNOSIS / ENHANCED OBD II / DATA LIST / ALL / VEHICLE SPD.
(e) Read the value displayed on the tester.
OK:
Vehicle speed displayed on the tester is almost the same as the actual vehicle speed.

NG → **GO TO BRAKE CONTROL SYSTEM**

OK

2 INSPECT COMBINATION METER ASSEMBLY

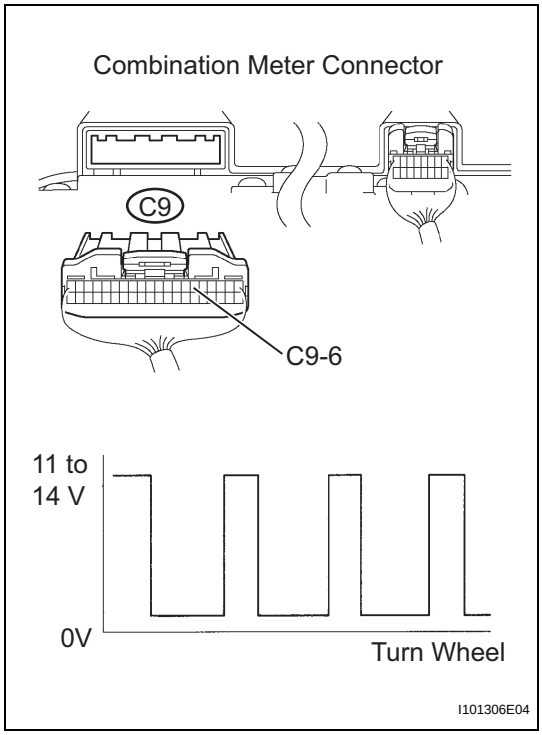

(a) Shift the transmission gear selector lever to the neutral position.
(b) Jack up the vehicle.
(c) Turn the ignition switch to ON.
(d) Check the voltage while the wheel is turning slowly.
Standard Voltage

Tester Connection	Specified Condition
C9-6 - Body ground	Voltage generated intermittently

HINT:
The output voltage should fluctuate up and down as shown in the diagram on the left when the wheel is turning slowly.
Result

Result	Proceed to
As shown in the illustration	A
Different from the illustration (A/T)	B
Different from the illustration (M/T)	C

A → **REPLACE COMBINATION METER ASSEMBLY**

C → **Go to step 4**

B

3	**CHECK HARNESS AND CONNECTOR (SKID CONTROL ECU - COMBINATION METER ASSEMBLY)**

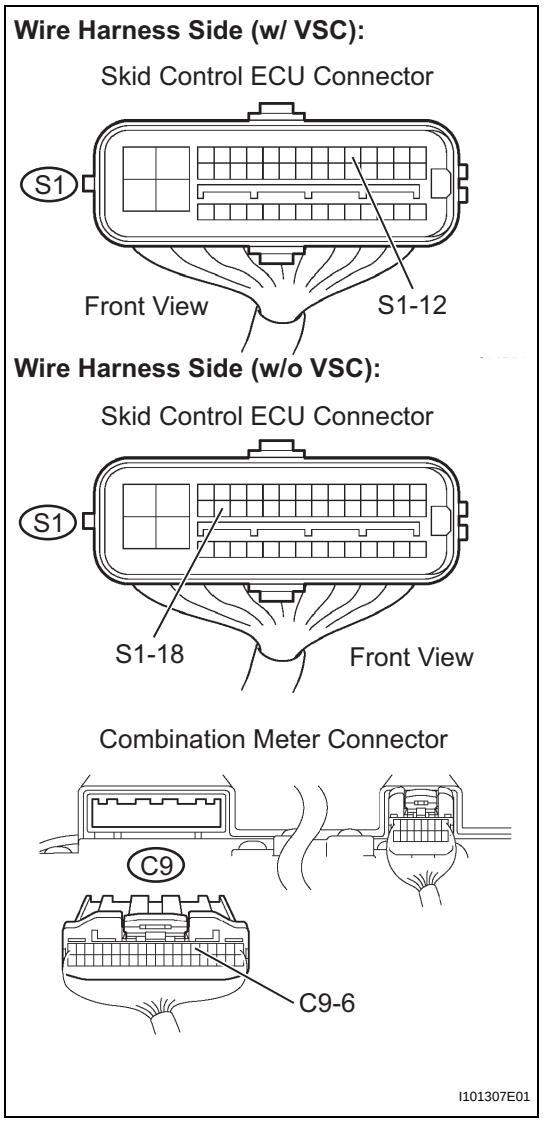

(a) Disconnect the C9 combination meter connector.
(b) With VSC: Disconnect the S1 skid control ECU connector.
(c) Without VSC: Disconnect the S1 combination meter connector.
(d) Measure the resistance.

Standard Resistance:

With VSC

Tester Connection	Specified Condition
S1-12 - C9-6	Below 1 Ω
S1-12 or C9-6 - Body ground	10 kΩ or higher

Without VSC

Tester Connection	Specified Condition
S1-18 - C9-6	Below 1 Ω
S1-18 or C9-6 - Body ground	10 kΩ or higher

(e) Reconnect the skid control ECU connector.
(f) Reconnect the combination meter connector.

NG → **REPAIR OR REPLACE HARNESS OR CONNECTOR**

OK

GO TO BRAKE CONTROL SYSTEM

4	**CHECK HARNESS AND CONNECTOR (VEHICLE SPEED SENSOR - COMBINATION METER ASSEMBLY)**

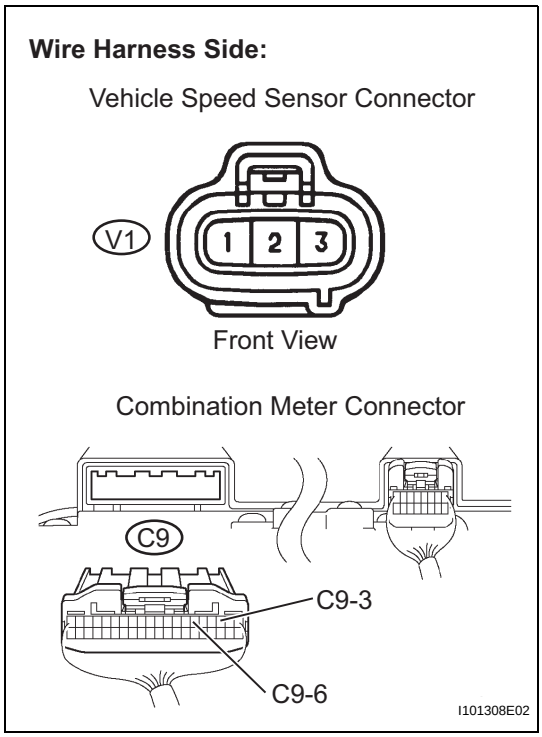

(a) Disconnect the C9 combination meter connector.
(b) Disconnect the V1 vehicle speed sensor connector.
(c) Measure the resistance.

Standard Resistance

Tester Connection	Specified Condition
C9-6 - V1-3	Below 1 Ω
C9-3 - V1-2	Below 1 Ω
C9-6 or V1-3 - Body ground	10 kΩ or higher
C9-6 or V1-3 - Body ground	10 kΩ or higher

(d) Measure the voltage.

Standard Voltage

Tester Connection	Condition	Specified Condition
V1-1 - Body ground	Ignition switch OFF → ON	Below 1 V → 10 to 14 V

(e) Reconnect the vehicle speed sensor connector.
(f) Reconnect the combination meter connector.

NG → **REPAIR OR REPLACE HARNESS OR CONNECTOR**

OK

REPLACE COMBINATION METER ASSEMBLY

Tachometer Malfunction

WIRING DIAGRAM

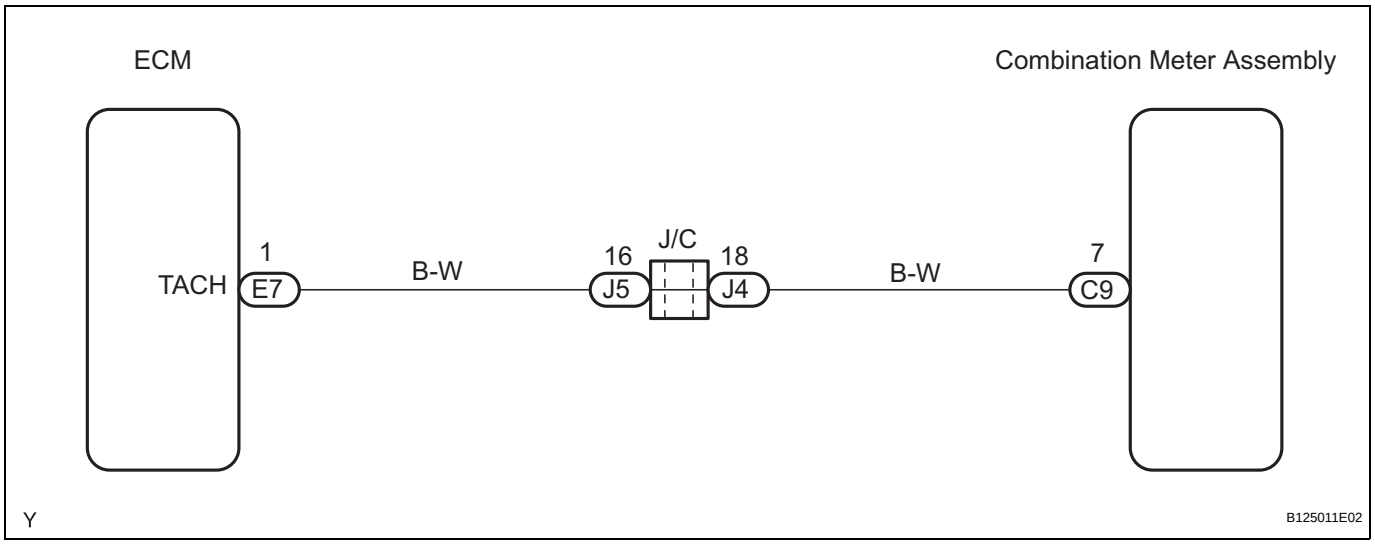

1	READ VALUE OF INTELLIGENT TESTER (ENGINE SPEED)

(a) Connect an intelligent tester to the DLC3.
(b) Turn the ignition switch to ON.
(c) Turn the tester ON.
(d) On the tester, select the following menu items: DIAGNOSIS / ENHANCED OBD II / DATA LIST / ALL / ENGINE SPD.
(e) Read the value displayed on the tester.
OK:
Engine speed displayed on the tester is almost the same as the actual engine speed.

NG → **GO TO ENGINE CONTROL SYSTEM**

OK

2	INSPECT COMBINATION METER ASSEMBLY

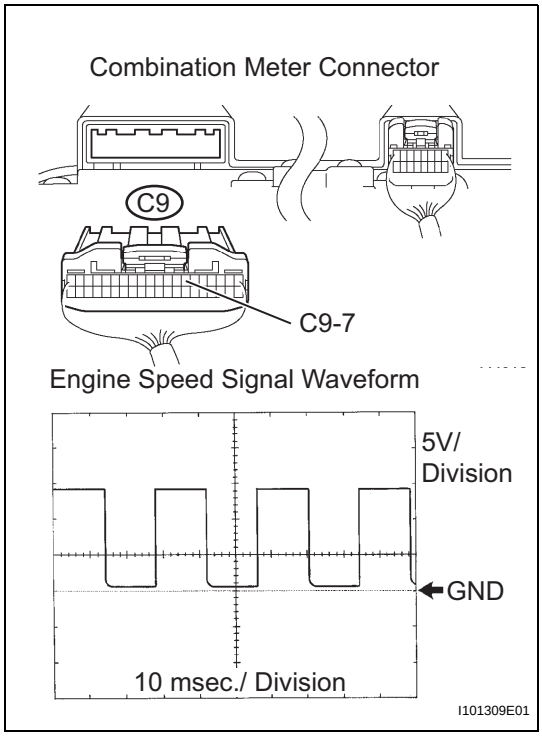

(a) Inspect the combination meter using an oscilloscope.
(b) While the engine is running, check the waveform between the terminals of the C9 combination meter connector and body ground.

Standard

Tester Connection	Specified Condition
C9-7 - Body ground	Correct waveform shown

OK → **REPLACE COMBINATION METER ASSEMBLY**

NG

3	CHECK HARNESS AND CONNECTOR (COMBINATION METER ASSEMBLY - ECM)

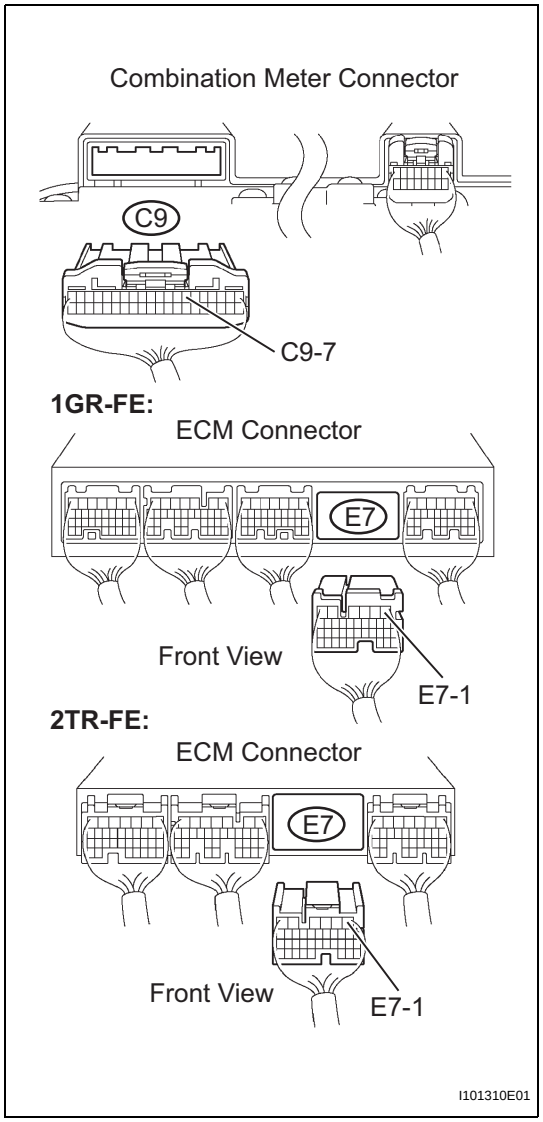

(a) Disconnect the C9 combination meter connector.
(b) Disconnect the E7 ECM connector.
(c) Measure the resistance.

Standard Resistance

Tester Connection	Specified Condition
C9-7 - E7-1	Below 1 Ω
C9-7 or E7-1 - Body ground	10 kΩ or higher

(d) Reconnect the ECM connector.
(e) Reconnect the combination meter connector.

NG → **REPAIR OR REPLACE HARNESS OR CONNECTOR**

OK

REPLACE ECM

Fuel Gauge Malfunction

WIRING DIAGRAM

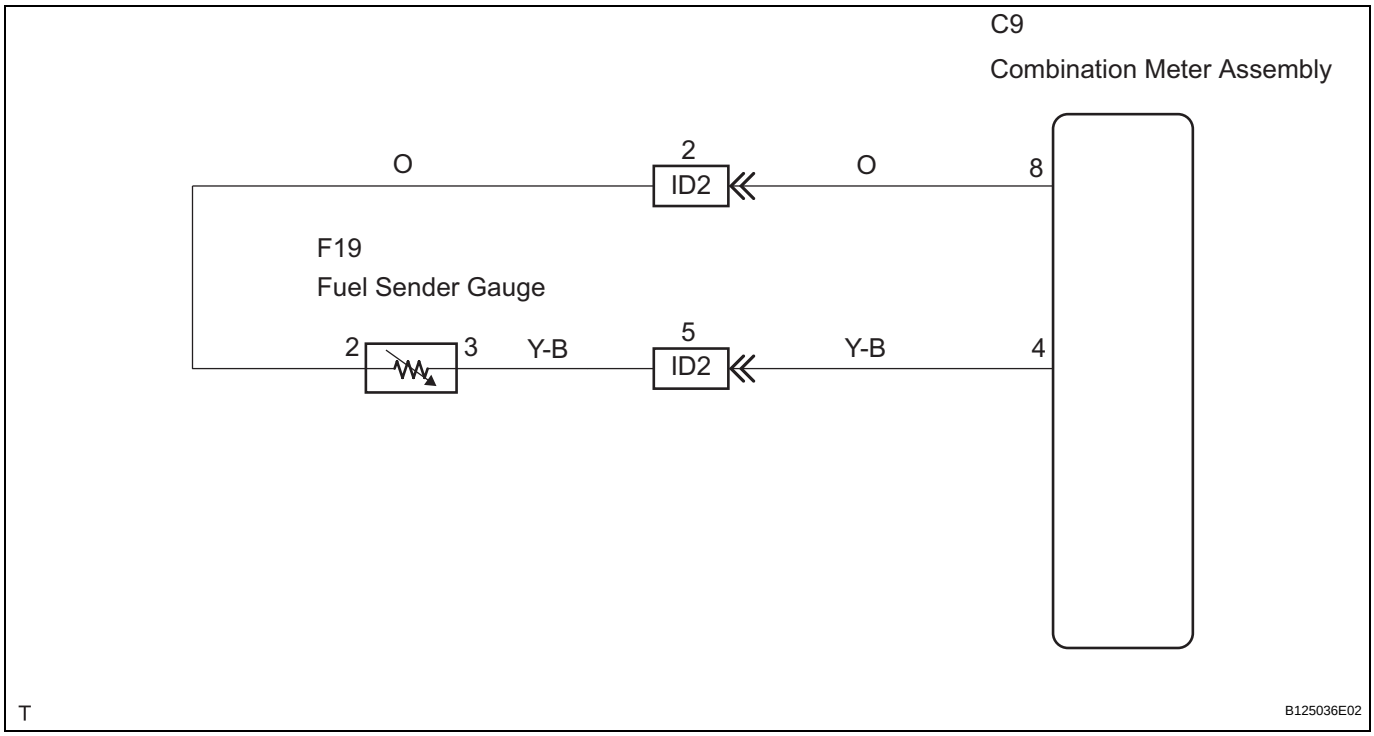

1 CHECK HARNESS AND CONNECTOR

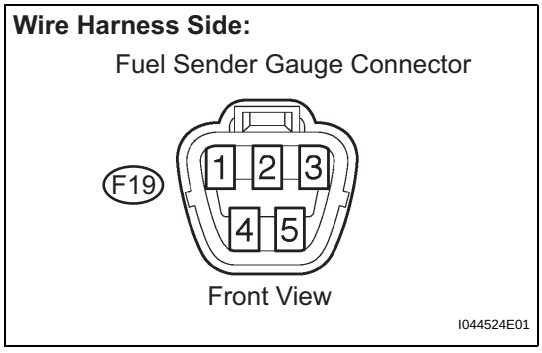

(a) Disconnect the F19 fuel sender gauge connector.
(b) Check the meter indicator conditions.
Standard

Wire Connection	Condition	Specified Condition
2 - 3	Short circuit (Ignition switch ON)	Fuel gauge indicates "F" or more (Combination meter)

(c) Measure the voltage.
Standard Voltage

Tester Connection	Condition	Specified Condition
2 - Body ground	Ignition switch ON	4 to 7 V

NOTICE:
- **Perform the check quickly (shorter than 10 seconds).**
- **Keep the battery as far away from the fuel pump as possible.**
- **Always do the switching at the battery side.**

(d) Reconnect the fuel sender gauge connector.

NG → **Go to step 3**

OK

ME

2 INSPECT FUEL SENDER GAUGE ASSEMBLY

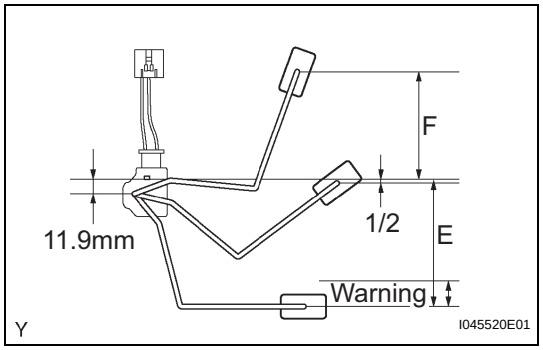

(a) Remove the fuel sender gauge assembly.
(b) Check that the float position is between E and F.
(c) Measure the resistance between terminals 2 and 3 of the fuel sender gauge connector.

Standard Resistance

Float Level	Float Position (mm (in.))	Specified Condition
F	81.5 (3.21) to 86.5 (3.41)	5.0 to 6.0 Ω
1/2	3.4 (0.13)	59.0 Ω
Warning	80.4 (3.17)	98.8 Ω
E	97.9 (3.85) to 102.9 (4.05)	107.5 to 112.5 Ω

(d) Reinstall the fuel sender gauge assembly.

NG → **REPLACE FUEL SENDER GAUGE ASSEMBLY**

OK

REPLACE COMBINATION METER ASSEMBLY

3 CHECK HARNESS AND CONNECTOR (FUEL SENDER GAUGE - COMBINATION METER ASSEMBLY)

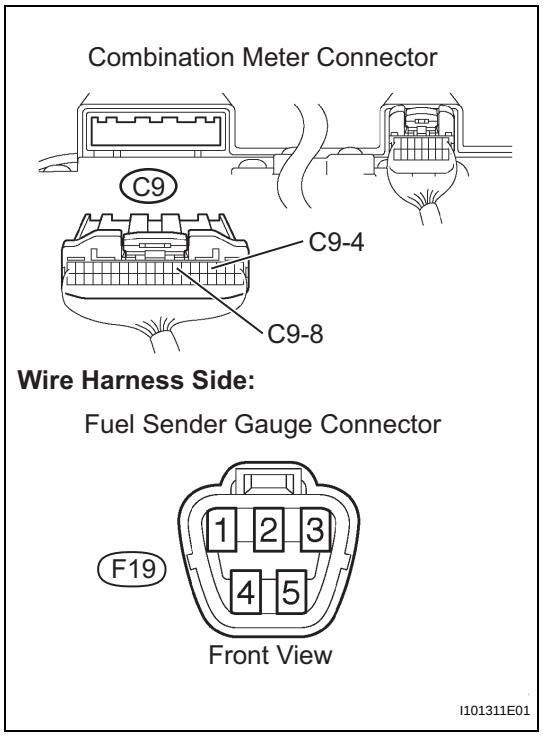

(a) Disconnect the C9 combination meter connector.
(b) Disconnect the F19 fuel sender gauge connector.
(c) Measure the resistance.

Standard Resistance

Tester Connection	Specified Condition
C9-4 - F19-3	Below 1 Ω
C9-8 - F19-2	Below 1 Ω
C9-4 or F19-3 - Body ground	10 kΩ or higher
C9-8 or F19-2 - Body ground	10 kΩ or higher

(d) Reconnect the fuel sender gauge connector.
(e) Reconnect the combination meter connector.

NG → **REPAIR OR REPLACE HARNESS OR CONNECTOR**

OK

REPLACE COMBINATION METER ASSEMBLY

Malfunction in Water Temperature Warning Light

WIRING DIAGRAM

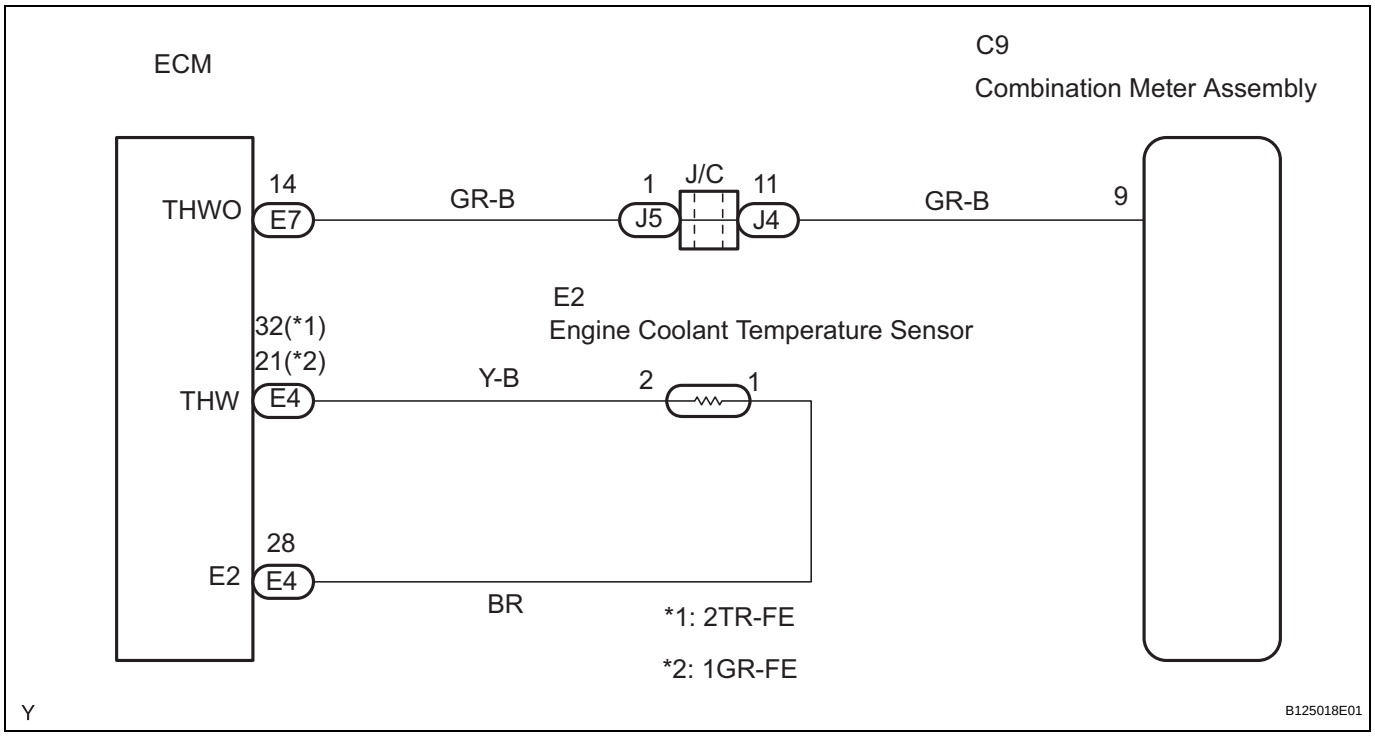

HINT:

- Start the inspection from step 1 when using an intelligent tester and start from step 2 when not using an intelligent tester.
- If there is an open or short in the engine coolant temperature sensor circuit, the ECM outputs DTCs. Troubleshoot those DTCs by following the SFI System.
  2TR-FE: (See page ES-10)
  1GR-FE: (See page ES-10)

1	READ VALUE OF INTELLIGENT TESTER (ENGINE COOLANT TEMPERATURE)

(a) Connect an intelligent tester to the DLC3.
(b) Turn the ignition switch to ON.
(c) Turn the tester ON.
(d) On the tester, select the following menu items: DIAGNOSIS / ENHANCED OBD II / DATA LIST / ALL / COOLANT TEMP.
(e) Read the value displayed on the tester.
Standard:
Between 80°C and 97°C (176°F and 207°F) with the engine warmed up.

NG → **GO TO ENGINE CONTROL SYSTEM**

OK

2 INSPECT COMBINATION METER ASSEMBLY

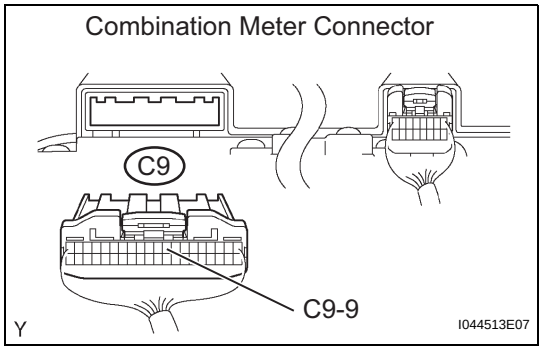

(a) Disconnect the C9 combination meter connector.
(b) Measure the voltage.
Standard Voltage

Tester Condition	Condition	Specified Condition
C9-9 - Body ground	Ignition switch ON, Coolant temperature is 90°C (194°F)	10 to 14 V

(c) Reconnect the combination meter connector.

OK → **REPLACE COMBINATION METER ASSEMBLY**

NG

3 CHECK HARNESS AND CONNECTOR (COMBINATION METER ASSEMBLY - ECM)

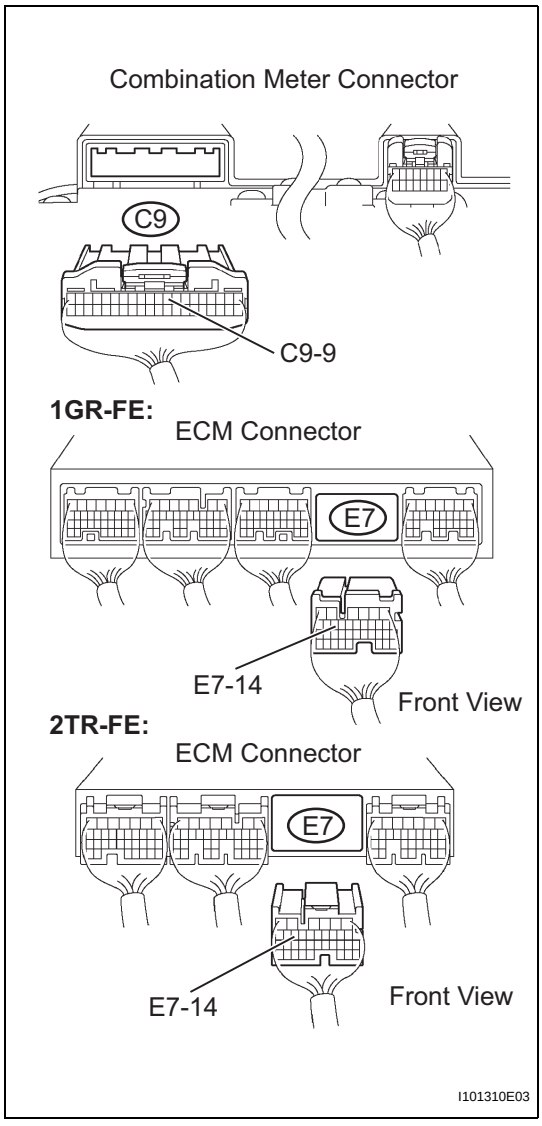

(a) Disconnect the C9 combination meter connector.
(b) Disconnect the E7 ECM connector.
(c) Measure the resistance.
Standard Resistance

Tester Connection	Specified Condition
C9-9 - E7-14	Below 1 Ω
C9-9 or E7-14 - Body ground	10 kΩ or higher

(d) Reconnect the ECM connector.
(e) Reconnect the combination meter connector.

NG → **REPAIR OR REPLACE HARNESS OR CONNECTOR**

OK

REPLACE ECM

Warning Buzzer does not Sound

WIRING DIAGRAM

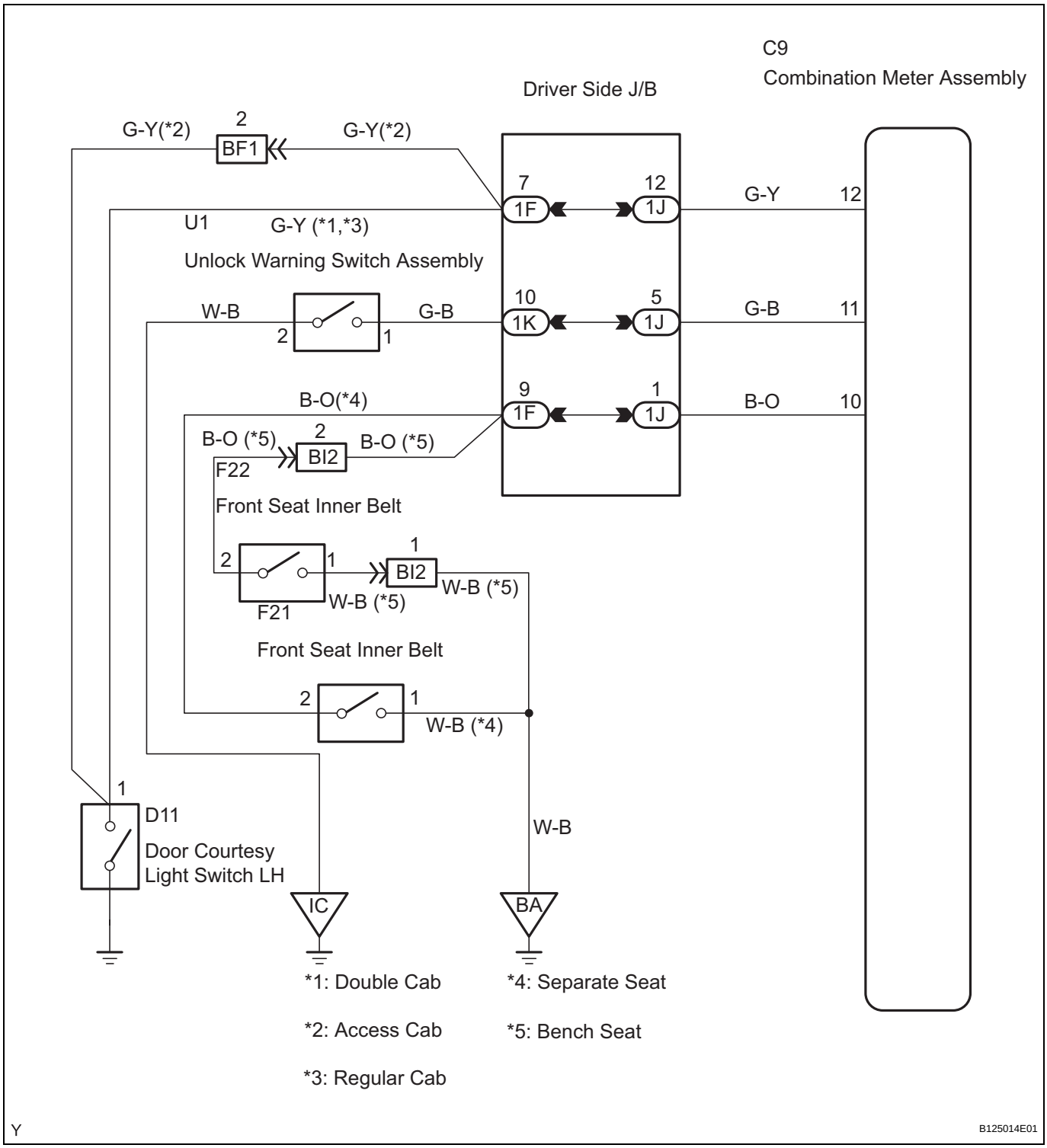

1	CHECK BUZZER

(a) Operate the buzzers and check that the buzzers for seat belt warning, key reminder warning and light reminder warning sound normally.

No warning buzzers sound.	A
Seat belt warning does not sound. (Bench seat)	B
Seat belt warning does not sound. (Separate seat)	C
Key reminder warning does not sound.	D

HINT:
Key reminder buzzer: Ignition switch is off, key is inserted, door is open.
Seat belt buzzer: Ignition switch is on, seat belt is unfastened.

A → **REPLACE COMBINATION METER ASSEMBLY**

C → **Go to step 4**

D → **Go to step 6**

B

2	INSPECT FRONT SEAT INNER BELT ASSEMBLY (DRIVER SIDE)

Component Side:

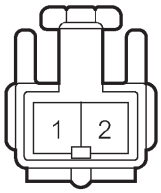

Front Seat Inner Belt Assembly (Driver Side)

I045519E01

(a) Disconnect the F22 front seat inner belt assembly (driver side) connector.
(b) Measure the resistance.
Standard Resistance

Tester Connection	Condition	Specified Condition
1 - 2	Seat belt fastened	10 kΩ or higher
1 - 2	Seat belt unfastened	Below 1 Ω

(c) Reconnect the front seat inner belt assembly (driver side) connector.

NG → **REPLACE FRONT SEAT INNER BELT ASSEMBLY (DRIVER SIDE)**

OK

3	CHECK HARNESS AND CONNECTOR (FRONT SEAT INNER BELT (DRIVER SIDE) - COMBINATION METER)

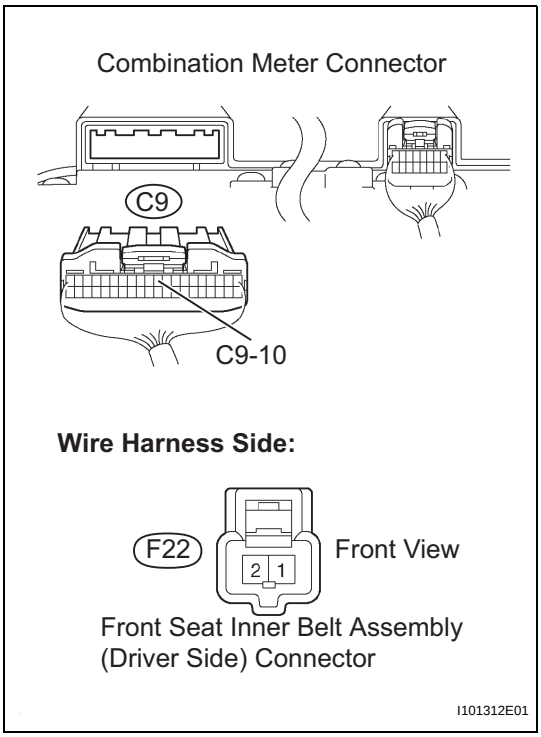

(a) Disconnect the C9 combination meter connector.
(b) Disconnect the F22 front seat inner belt assembly (driver side) connector.
(c) Measure the resistance.
Standard Resistance

Tester Connection	Specified Condition
C9-10 - F22-2	Below 1 Ω
C9-10 or F22-2 - Body ground	10 kΩ or higher

(d) Reconnect the front seat inner belt assembly (driver side) connector.
(e) Reconnect the combination meter connector.

NG → **REPAIR OR REPLACE HARNESS OR CONNECTOR**

OK

REPLACE COMBINATION METER ASSEMBLY

4	INSPECT FRONT SEAT INNER BELT ASSEMBLY (DRIVER SIDE)

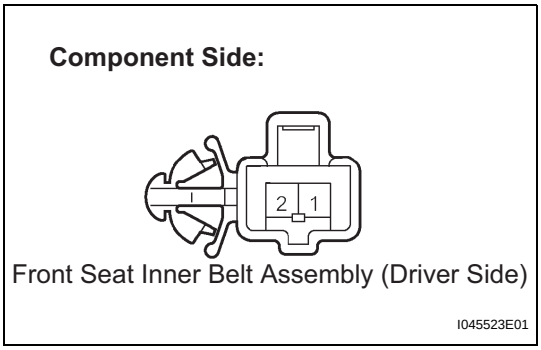

(a) Disconnect the F21 front seat inner belt assembly (driver side) connector.
(b) Measure the resistance.
Standard Resistance

Tester Connection	Condition	Specified Condition
1 - 2	Seat belt fastened	10 kΩ or higher
1 - 2	Seat belt unfastened	Below 1 Ω

(c) Reconnect the front seat inner belt assembly (driver side) connector.

NG → **REPLACE FRONT SEAT INNER BELT ASSEMBLY (DRIVER SIDE)**

OK

5 CHECK HARNESS AND CONNECTOR (FRONT SEAT INNER BELT (DRIVER SIDE) - COMBINATION METER)

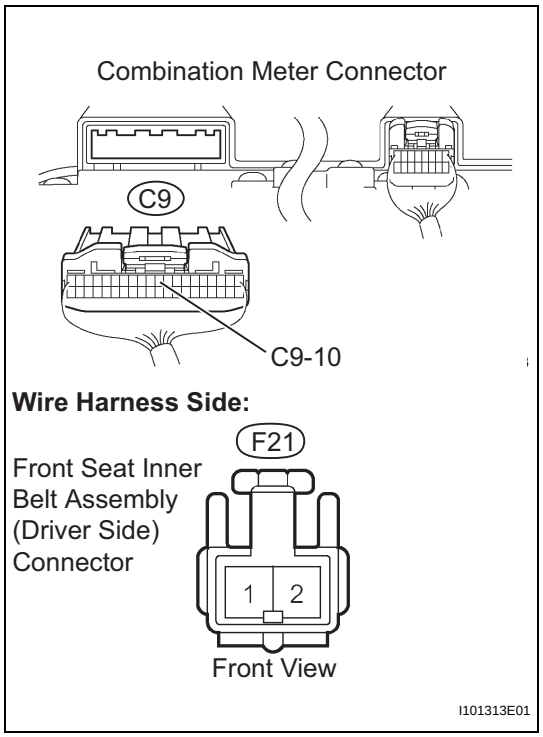

(a) Disconnect the C9 combination meter connector.
(b) Disconnect the F21 front seat inner belt assembly (driver side) connector.
(c) Measure the resistance.

Standard Resistance

Tester Connection	Specified Condition
C9-10 - F21-2	Below 1 Ω
C9-10 or F21-2 - Body ground	10 kΩ or higher

(d) Reconnect the front seat inner belt assembly (driver side) connector.
(e) Reconnect the combination meter connector.

NG → **REPAIR OR REPLACE HARNESS OR CONNECTOR**

OK

REPLACE COMBINATION METER ASSEMBLY

6 INSPECT COMBINATION METER ASSEMBLY

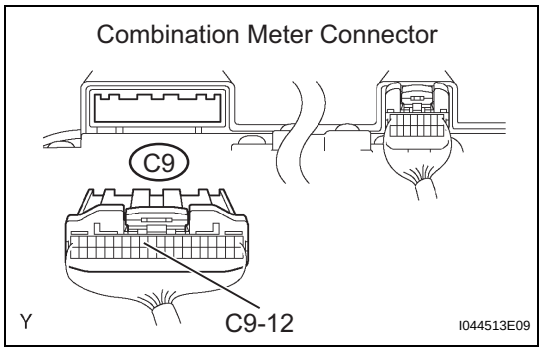

(a) Disconnect the C9 combination meter connector.
(b) Measure the resistance.

Standard Resistance

Tester Connection	Condition	Specified Condition
C9-12 - Body ground	Driver side door closed	10 kΩ or higher
C9-12 - Body ground	Driver side door open	Below 1 Ω

(c) Reconnect the combination meter connector.

OK → **REPLACE COMBINATION METER ASSEMBLY**

NG

7	INSPECT UNLOCK WARNING SWITCH ASSEMBLY

Component Side:

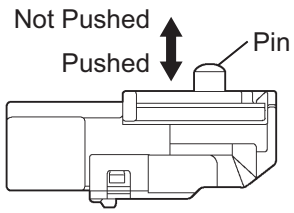

Unlock Warning Switch Assembly
(Driver Side)

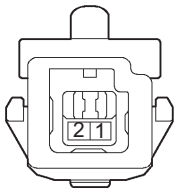

Y I044492E01

(a) Remove the U1 unlock warning switch assembly.
(b) Measure the resistance.
Standard Resistance

Tester Connection	Switch Condition	Specified Condition
1 - 2	Not pushed	10 kΩ or higher
1 - 2	Pushed	Below 1 Ω

(c) Reinstall the unlock warning switch assembly.

NG → **REPLACE UNLOCK WARNING SWITCH ASSEMBLY**

OK

8	CHECK HARNESS AND CONNECTOR (SWITCH (DRIVER SIDE) - J/B (BODY ECU) AND BODY GROUND)

Wire Harness Side:

Unlock Warning Switch Connector
(Driver Side)

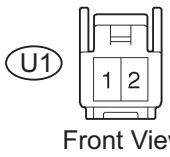

Front View

Driver Side J/B Connector

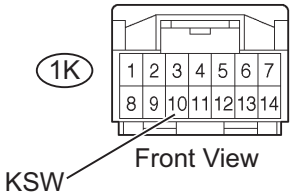

Front View

Y I044490E01

(a) Disconnect the U1 unlock warning switch assembly connector.
(b) Disconnect the 1K driver side J/B connector.
(c) Measure the resistance.
Standard Resistance

Tester Connection	Specified Condition
(U1-1) - KSW (1K-10)	Below 1 Ω
(U1-2) - Body ground	Below 1 Ω

(d) Reconnect the unlock warning switch assembly connector.
(e) Reconnect the driver side J/B connector.

NG → **REPAIR OR REPLACE HARNESS OR CONNECTOR**

OK

9	INSPECT FRONT DOOR COURTESY LIGHT SWITCH ASSEMBLY (DRIVER SIDE)

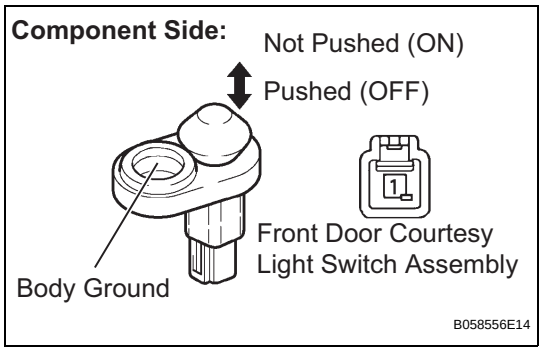

(a) Remove the front door courtesy light switch assembly.
(b) Measure the resistance.
Standard Resistance

Tester Connection	Condition	Specified Condition
1 - Body ground	Not pushed (ON)	Below 1 Ω
1 - Body ground	Pushed (OFF)	10 kΩ or higher

(c) Reinstall the front door courtesy light switch assembly.

NG → **REPLACE FRONT DOOR COURTESY LIGHT SWITCH ASSEMBLY**

OK

10	CHECK HARNESS AND CONNECTOR (FRONT DOOR COURTESY LIGHT SWITCH LH - BODY ECU)

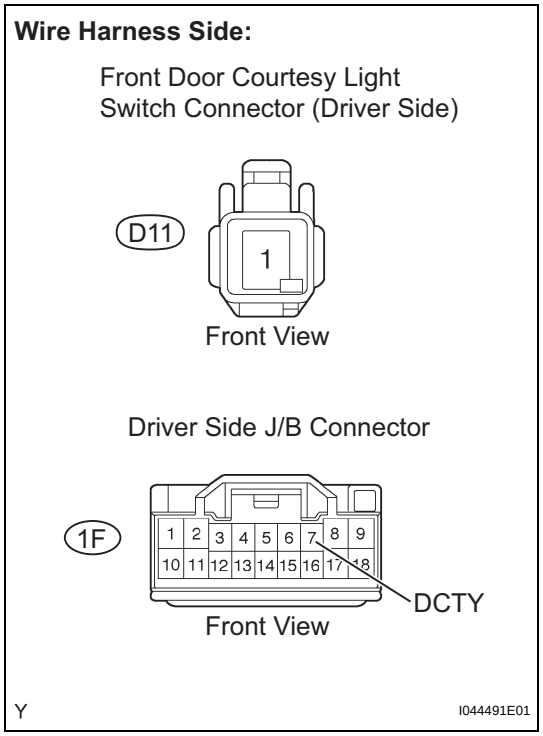

(a) Disconnect the D11 front door courtesy light switch assembly connector.
(b) Disconnect the 1F driver side J/B connector.
(c) Measure the resistance.
Standard Resistance

Tester Connection	Specified Condition
(D11-1) - DCTY (1F-7)	Below 1 Ω

(d) Reconnect the front door courtesy light switch assembly connector.
(e) Reconnect the driver side J/B connector.

NG → **REPAIR OR REPLACE HARNESS OR CONNECTOR**

OK

REPLACE COMBINATION METER ASSEMBLY

HOW TO PROCEED WITH TROUBLESHOOTING

1	VEHICLE BROUGHT TO WORKSHOP

NEXT

2	CUSTOMER PROBLEM ANALYSIS

(a) Interview and confirm the trouble.
  (1) Confirm the symptom of the trouble.

NEXT

3	BASIC INSPECTION

(a) Conduct basic inspection.
  (1) Check the battery voltage.
    Standard:
    11 to 14 V
(b) Check the power supply to the radio receiver assembly.
  (1) Turn the ignition switch to the ACC position.
  (2) Check whether or not the display appears on the radio receiver assembly.

Result	Proceed To
Display appears	A
Display does not appears	B

B → **PROCEED TO PROBLEM SYMPTOMS TABLE**

A

4	DTC CHECK

A → **DTC OUTPUT (Go to step 5)**

B → **DTC NOT OUTPUT (Go to step 6)**

5	DTC CHART

NEXT → **GO TO STEP 7**

6	**PROBLEM SYMPTOMS TABLE**

NEXT

AV

7	**CIRCUIT INSPECTION AND PART INSPECTION**

NEXT

8	**IDENTIFICATION OF PROBLEM**

NEXT

9	**CONFIRMATION TEST**

NEXT

END

IDENTIFICATION OF NOISE SOURCE

1. Radio Description

(a) Radio frequency band

(1) The radio wave bands used in radio broadcasting are as follows:

Frequency	30 kHz	300 kHz	3 MHz	30 MHz	300 MHz
Designation	LF	MF	HF	VHF	
Radio Wave		AM ⟷		FM ⟷	
Modulation		Amplitude modulation		Frequency modulation	

LF: Low frequency MF: Medium frequency HF: High frequency VHF: Very high frequency

E108734E02

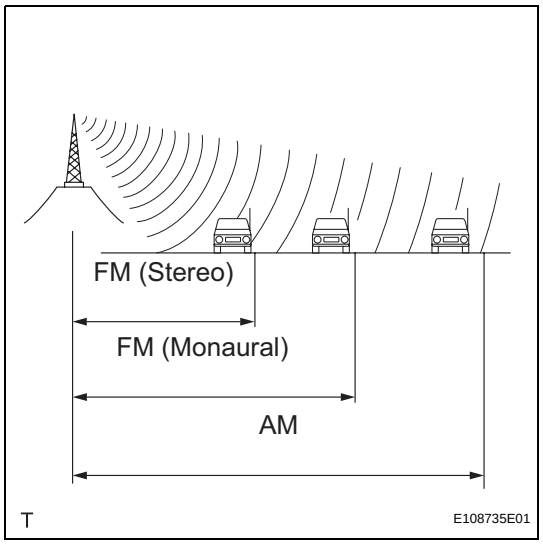

(b) Service area

(1) There is a great difference in the size of the service areas for AM and FM broadcasting. Sometimes an FM stereo broadcast cannot be received even though AM can be received very clearly.
FM stereo has a smaller service area, ant it also picks up static and other types of interference (noise) easily.

(c) Radio reception problems

HINT:
Besides the problem of static, there are other problems, such as phasing, multipath and fade-out. These problems are caused not by electrical noise but by the nature of the radio waves themselves.

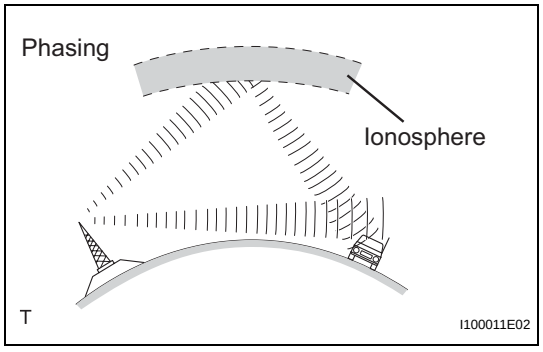

(1) Phasing

Besides electrical interference, AM broadcasts are also susceptible to other types of interference, especially at night. This is because AM radio waves bounce off the ionosphere at night. These radio waves then interfere with the signals that reach the vehicle's antenna directly from the same transmitter. This type of interference is called phasing.

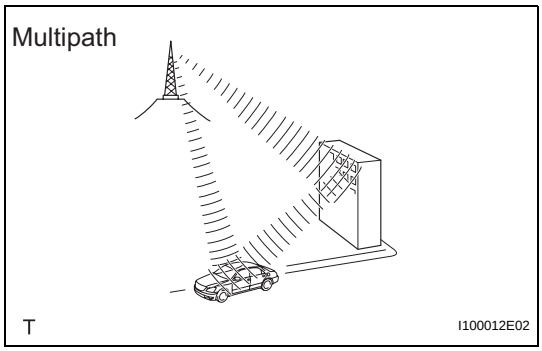

(2) Multipath
Interference caused by reflection of radio waves against obstructions is called multipath. Multipath occurs when radio signals emitted from the broadcast transmitter antenna are reflected against tall buildings or mountains and interfere with other signals which are received directly.

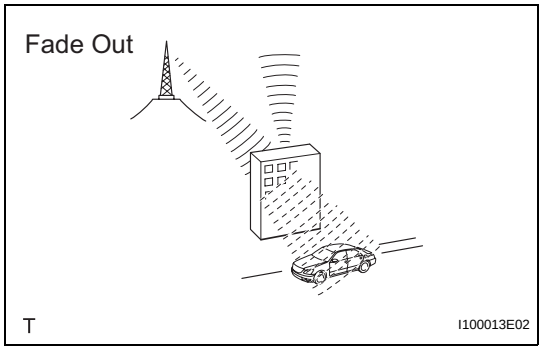

(3) Fade-out
FM radio waves tend to be reflected against obstructions such as tall buildings or mountains because FM frequency is higher than AM. For this reason, FM signals often seem to gradually disappear or fade away as the vehicle goes behind those obstructions. This phenomenon is called fade-out.

(d) Noise problem
It is very important for technicians to clearly understand a customer's complaint about noise. Use the following table to diagnose the phenomena.

Radio Wave	Condition in Which Noise Occurs	Probable Cause
AM	Noise occurs in a specified area	Strong possibility of foreign noise
	Noise occurs when listening to faint broadcasting	The same program may be broadcasted from some local stations. If the program is the same, one of those may be tuned in.
	Noise occurs only at night	Strong possibility of an interfering beat from a distant broadcast.
FM	Noise occurs at a specific place while driving	Strong possibility of multipath noise and phasing noise caused by changes of FM frequency.

HINT:
If the condition when the noise occurs is not described above, find out the cause based on the reception problems. Refer to the description about multipath and phasing mentioned previously.

(e) Identify the conditions under which the noise occurs, and check the noise filter on the relevant part.

Conditions under Which Noise Occurs	Noise Type
Noise increases when the accelerator pedal is depressed, but stops when the engine is stopped.	Generator noise
Noise occurs during A/C or heater operation.	Blower motor noise
Noise occurs when the vehicle accelerates rapidly on an unpaved road or after the ignition switch is turned on.	Fuel pump noise
Noise occurs when the horn switch is pressed and released or when pressed and held.	Horn noise
Quiet noise occurs while the engine is running, but stops when the engine is stopped.	Ignition noise
Noise occurs synchronously with the blink of the turn signal.	Flasher noise
Noise occurs during window washer operation.	Washer noise
Noise occurs while the engine is running, and continues even after the engine is stopped.	Engine coolant temperature sensor noise

Conditions under Which Noise Occurs	Noise Type
Noise occurs during wiper operation.	Wiper noise
Noise occurs when the brake pedal is depressed.	Stop light switch noise
Others	Start electricity stored on the vehicle

Reference:

- First ensure that the noise is not coming from the outside. Failure to do so makes noise source detection difficult and may lead to a misdiagnosis.
- Noise should be removed in descending order of loudness.
- Tuning the radio so that no station is received makes the noise more noticeable, making recognition of the phenomenon easier.

PROBLEM SYMPTOMS TABLE

HINT:
Inspect the fuse and relay before confirming the suspected area as shown in the table below.

AV

Radio receiver assembly

Symptom	Suspected area	See page
Pressing power switch does not start system	1. Power source circuit (radio receiver assembly)	AV-64
	2. Radio receiver assembly	AV-69
Radio receiver cannot be dimmed at night	1. Illumination circuit	AV-40
	2. Radio receiver assembly	AV-69
No sound can be heard (Separate amplifier)	1. Power source circuit (radio receiver assembly)	AV-64
	2. Power source circuit (stereo component amplifier assembly)	AV-66
	3. AMP sound signal circuit	AV-58
	4. Speaker circuit	AV-47
	5. AVC-LAN circuit	AV-62
	6. AMP mute signal circuit	AV-56
	7. Stereo component amplifier assembly	AV-90
	8. Radio receiver assembly	AV-69
No sound can be heard (Build-in amplifier)	1. Power source circuit (radio receiver assembly)	AV-64
	2. Speaker circuit	AV-47
	3. Radio receiver assembly	AV-69
Sound quality is bad in all modes (volume is too low) (Separate amplifier)	1. Power source circuit (radio receiver assembly)	AV-64
	2. Power source circuit (stereo component amplifier assembly)	AV-66
	3. Speaker circuit	AV-47
	4. AMP sound signal circuit	AV-58
	5. Sound quality is bad in all modes (volume is too low)	AV-28
Sound quality is bad in all modes (volume is too low) Built-in amplifier	1. Power source circuit (radio receiver assembly)	AV-64
	2. Speaker circuit	AV-47
	3. Sound quality is bad in all modes (volume is too low)	AV-28
Noise occurs	Noise occurs	AV-27
Radio broadcast cannot be received (bad reception)	Radio broadcast cannot be received (bad reception)	AV-35
CD cannot be inserted or is ejected immediately after insertion	1. Power source circuit (radio receiver assembly)	AV-64
	2. CD cannot be inserted or is ejected immediately after insertion	AV-31
CD cannot be eject	1. Power source circuit (radio receiver assembly)	AV-64
	2. CD cannot be ejected	AV-30
Sound quality is bad only when playing CD (volume is too low)	Sound quality is bad only when playing CD (volume is too low)	AV-29
CD sound skips	CD sound skips	AV-33

Steering pad switch

Symptom	Suspected area	See page
Audio system cannot be operated with steering pad switch	1. Steering pad switch circuit	AV-37
	2. Radio receiver assembly	AV-69

TERMINALS OF ECU

1. RADIO RECEIVER ASSEMBLY (SEPARATE AMPLIFIER)

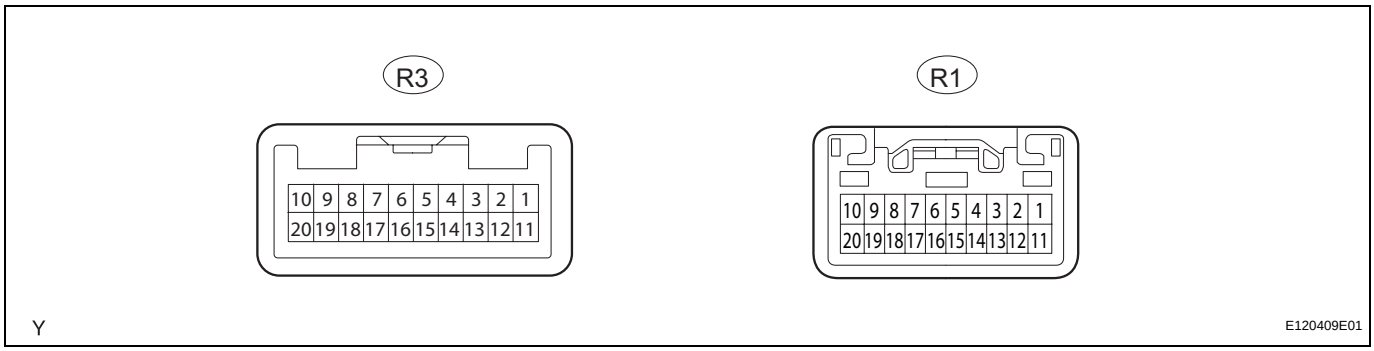

Symbols (Terminal No.)	Wiring Color	Terminal Description	Condition	Specification
SWG (R3-6) - Body ground	W-R - Body ground	Steering pad switch ground	Always	Below 1 Ω
SW1 (R3-7) - GND (R1-20)	V-W - BR	Steering pad switch signal	Steering pad switch not operating	4 V or more
			Seek+ switch pushed	Approx. 0.5 V
			Seek- switch pushed	Approx. 0.9 V
			VOL+ switch pushed	Approx. 2.0 V
			VOL- switch pushed	Approx. 3.4 V
SW2 (R3-8) - GND (R1-20)	Y-B - BR	Steering pad switch signal	Steering pad switch not operating	4 V or more
			MODE switch pushed	Below 2.5 V
B (R1-1) - GND (R1-20)	L-Y - BR	Battery	Always	10 to 14 V
TX+ (R1-5) - GND (R1-20)	O - BR	AVC-LAN communication signal	Ignition switch ACC	2 to 3 V
MUTE (R1-7) - GND (R1-20)	V - BR	Mute signal	Audio system is playing	Above 3.5 V
			Audio system is playing	Below 1 V
R+ (R1-8) - GND (R1-20)	B - BR	Sound signal (Right)	Audio system is playing	Waveform synchronized with sounds is output.
L+ (R1-9) - GND (R1-20)	R - BR	Sound signal (Left)	Audio system is playing	Waveform synchronized with sounds is output.
SGND (R1-10) - Body ground	Shielded - Body ground	Shielded ground	Always	Below 1 Ω
ACC (R1-11) - GND (R1-20)	GR - BR	Accessory (ON)	Ignition switch OFF	Below 1 V
			Ignition switch ON	10 to 14 V
TX- (R1-15) - GND (R1-20)	R-W - BR	AVC-LAN communication signal	Ignition switch ACC	2 to 3 V
R- (R1-18) - GND (R1-20)	W - BR	Sound signal (Right)	Audio system is playing	Waveform synchronized with sounds is output
L- (R1-19) - GND (R1-20)	G - BR	Sound signal (Left)	Audio system is playing	Waveform synchronized with sounds is output
GND (R1-20) - Body ground	BR - Body ground	Ground	Always	Below 1 Ω

2. RADIO RECEIVER ASSEMBLY (BUILT-IN AMPLIFIER)



Y

E120410E01

Symbols (Terminal No.)	Wiring Color	Terminal Description	Condition	Specification
SWG (R3-6) - Body ground	W-R - Body ground	Steering pad switch ground	Always	Below 1 Ω
SW1 (R3-7) - GND (R1-7)	V-W - BR	Steering pad switch signal	Steering pad switch not operating	4 V or more
			Seek+ switch pushed	Approx. 0.5 V
			Seek- switch pushed	Approx. 0.9 V
			VOL+ switch pushed	Approx. 2.0 V
			VOL- switch pushed	Approx. 3.4 V
SW2 (R3-8) - GND (R1-7)	Y-B - BR	Steering pad switch signal	Steering pad switch not operating	4 V or more
			MODE switch pushed	Below 2.5 V
FR+ (R1-1) - GND (R1-7)	LG - BR	Sound signal (Front right)	Audio system is playing	Waveform synchronized with sounds is output
FL+ (R1-2) - GND (R1-7)	P - BR	Sound signal (Front left)	Audio system is playing	Waveform synchronized with sounds is output
ACC (R1-3) - GND (R1-7)	GR - BR	Accessory (ON)	Ignition switch OFF	Below 1 V
			Ignition switch ON	10 to 14 V
B (R1-4) - GND (R1-7)	L-Y - BR	Battery	Always	10 to 14 V
FR- (R1-5) - GND (R1-7)	L - BR	Sound signal (Front right)	Audio system is playing	Waveform synchronized with sounds is output.
FL- (R1-6) - GND (R1-7)	V - BR	Sound signal (Front left)	Audio system is playing	Waveform synchronized with sounds is output.
GND (R1-7) - Body ground	BR - Body ground	Ground	Always	Below 1 Ω
RR+ (R2-1) - GND (R1-7)	R - BR	Sound signal (Rear right)	Audio system is playing	Waveform synchronized with sounds is output.
RL+ (R2-2) - GND (R1-7)	B - BR	Sound signal (Rear left)	Audio system is playing	Waveform synchronized with sounds is output.
RR- (R2-3) - GND (R1-7)	W - BR	Sound signal (Rear right)	Audio system is playing	Waveform synchronized with sounds is output.
RL- (R2-6) - GND (R1-7)	Y - BR	Sound signal (Rear left)	Audio system is playing	Waveform synchronized with sounds is output.

3. STEREO COMPONENT AMPLIFIER ASSEMBLY

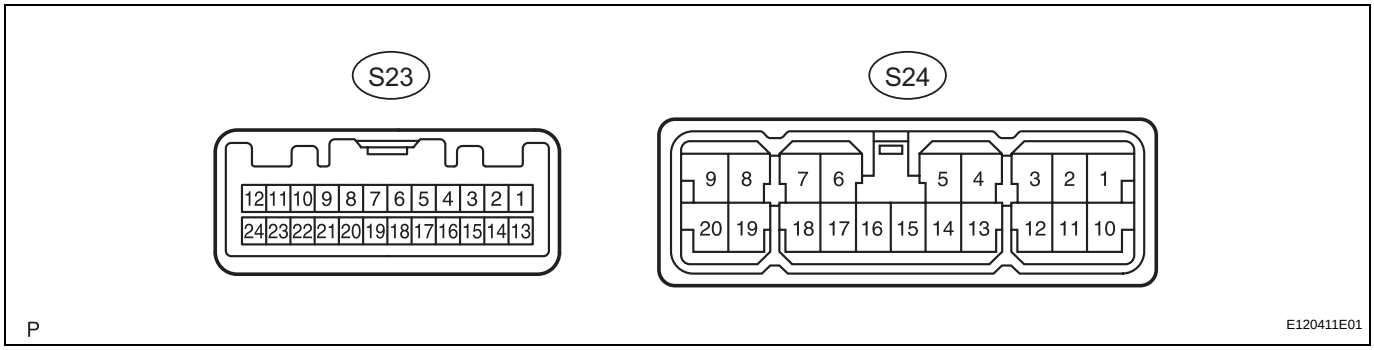

Symbols (Terminal No.)	Wiring Color	Terminal Description	Condition	Specified Condition
+B (S24-1) - GND (S24-15)	W-L - BR	Battery	Always	10 to 14 V
WFR+ (S24-3) - GND (S24-15)	L-B - BR	Sound signal (Woofer)	Audio system is playing	Waveform synchronized with sounds is output
WFL+ (S24-2) - GND (S24-15)	BR - BR	Sound signal (Woofer)	Audio system is playing	Waveform synchronized with sounds is output
RL+ (S24-4) - GND (S24-15)	B - BR	Sound signal (Rear left)	Audio system is playing	Waveform synchronized with sounds is output
RR+ (S24-5) - GND (S24-15)	R - BR	Sound signal (Rear right)	Audio system is playing	Waveform synchronized with sounds is output
FL+ (S24-6) - GND (S24-15)	P - BR	Sound signal (Front left)	Audio system is playing	Waveform synchronized with sounds is output
FR+ (S24-7) - GND (S24-15)	LG - BR	Sound signal (Front right)	Audio system is playing	Waveform synchronized with sounds is output
+B2 (S24-10) - GND (S24-15)	W-L - BR	Battery	Always	10 to 14 V
WFR- (S24-12) - GND (S24-15)	L-R - BR	Sound signal (Woofer)	Audio system is playing	Waveform synchronized with sounds is output
WFL- (S24-11) - GND (S24-15)	G-W - BR	Sound signal (Woofer)	Audio system is playing	Waveform synchronized with sounds is output
RL- (S24-13) - GND (S24-15)	Y - BR	Sound signal (Rear left)	Audio system is playing	Waveform synchronized with sounds is output
RR- (S24-14) - GND (S24-15)	W - BR	Sound signal (Rear right)	Audio system is playing	Waveform synchronized with sounds is output
GND (S24-15) - Body ground	BR - Body ground	Ground	Always	Below 1 Ω
E (S24-16) - Body ground	BR - Body ground	Ground	Always	Below 1 Ω
FL- (S24-17) - GND (S24-15)	V - BR	Sound signal (Front left)	Audio system is playing	Waveform synchronized with sounds is output
FR- (S24-18) - GND (S24-15)	L - BR	Sound signal (Front right)	Audio system is playing	Waveform synchronized with sounds is output
MUTE (S23-1) - GND (S24-15)	V - BR	Mute signal from radio receiver	Audio system is playing	Above 3.5 V
			Audio system is changing	Below 1 V
L- (S23-2) - GND (S24-15)	G - BR	Sound signal (Left)	Audio system is playing	Waveform synchronized with sounds is output
L+ (S23-3) - GND (S24-15)	R - BR	Sound signal (Left)	Audio system is playing	Waveform synchronized with sounds is output
R- (S23-4) - GND (S24-15)	W - BR	Sound signal (Right)	Audio system is playing	Waveform synchronized with sounds is output
R+ (S23-5) - GND (S24-15)	B - BR	Sound signal (Right)	Audio system is playing	Waveform synchronized with sounds is output
SGND (S23-6) - Body ground	Shield - Body ground	Shielded ground	Always	Below 1 Ω
TX- (S23-7) - GND (S24-15)	R-W - BR	AVC-LAN communication signal	Ignition switch ACC	2 to 3 V
TX+ (S23-8) - GND (S24-15)	O - BR	AVC-LAN communication signal	Ignition switch ACC	2 to 3 V

Symbols (Terminal No.)	Wiring Color	Terminal Description	Condition	Specified Condition
ACC (S23-12) - GND (S23-15)	GR - BR	Accessory (ON)	Ignition switch OFF	Below 1 V
			Ignition switch ON	10 to 14 V

DTC CHECK / CLEAR

1. DIAGNOSTIC CHECK

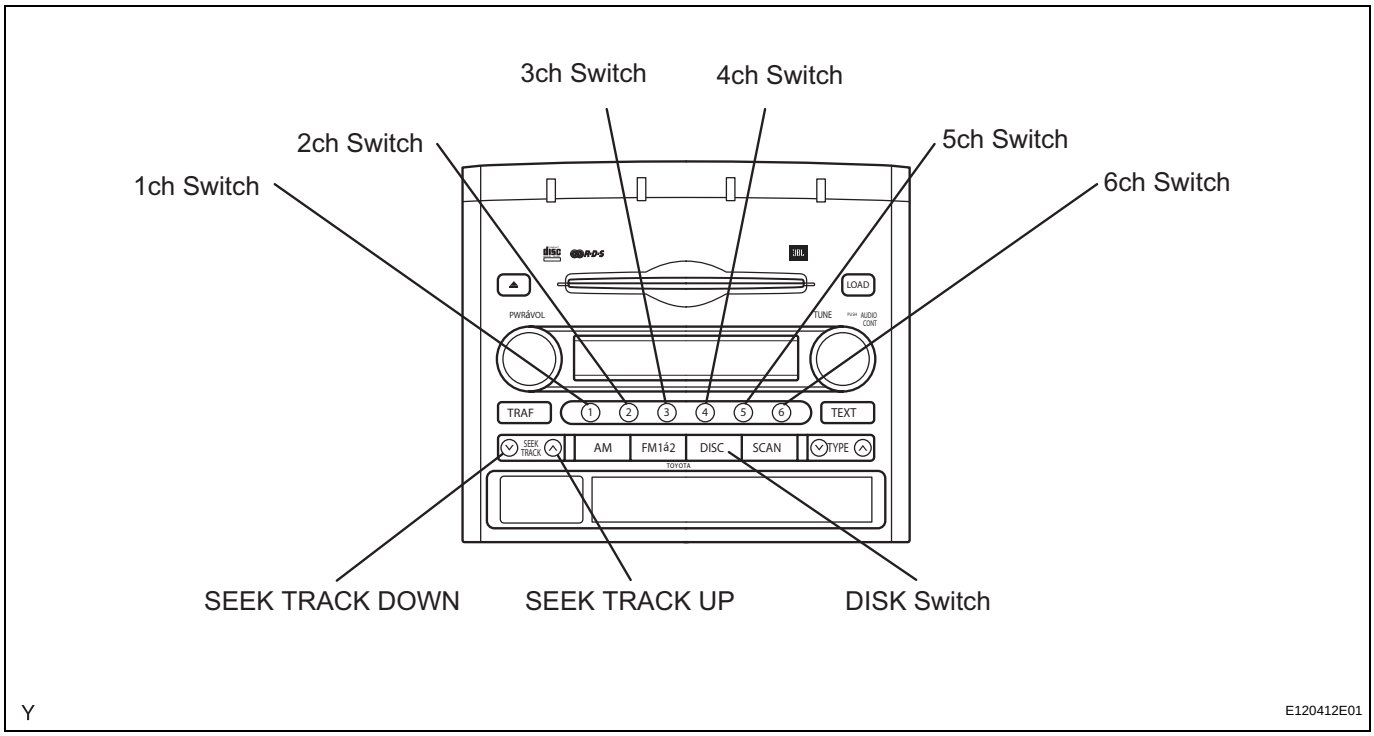

(a) Start diagnostic mode (All elements come on during SW check mode).
  (1) Turn off the audio system and turn the ignition switch to the ACC position. While pressing the preset switches 1ch and 6ch at the same time, press the DISC switch 3 times.
  (2) Reference:
    - When the system enters diagnostic mode, a beep sound is emitted 3 times and all the elements come on during SW check mode.
    - It takes approximately 40 seconds to complete the check.
    - Turn on all the elements in the LCD.
    - When pressing the switch, confirm that a beep sound is emitted.

(b) Service check screen.
  (1) Press the SEEK TRACK UP switch to enter the service check screen.
  (2) In service check mode, the system check and the diagnostic memory check are performed, and the check results are displayed by component codes in ascending order (physical address).

Terms	Description
Component code (Physical address)	Three-digit code (in hexadecimal) given to each device comprising AVC-LAN. Corresponding to its function, individual symbol provided.
Logical address	Two-digit code (in hexadecimal) given to each function and device unit in each device comprising AVC-LAN.

AV

Code No. (physical address) List

Code No. physical address	Equipment Name
190	Radio receiver assembly (Audio head unit)
440	Stereo component amplifier assembly

(c) Finish diagnostic mode.
  (1) Press the DISC switch for 2 seconds or more, or turn the ignition switch off.

(d) Service check mode result display (for checking the current and the past system conditions).
  (1) Press the SEEK TRACK UP/DOWN switch to see the check result of each component.

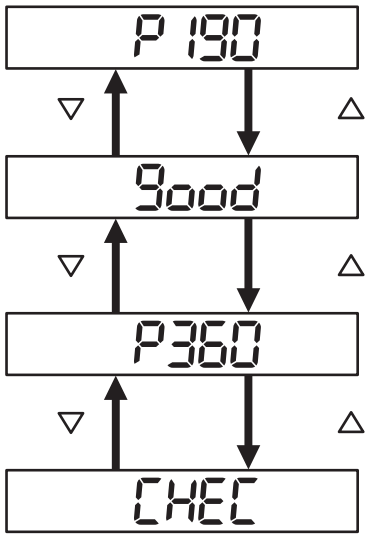

P: indicates physical address

190: physical address

good: indicates that component is normal.

P: indicates physical address

360: physical address

CHEC: indicates that check is needed

△ : SEEK TRACK UP

▽ : SEEK TRACK DOWN

The illustration shows the case that the system has 2 components with the codes 190 and 360,and that one of them (code360) requires a check.
The check result is displayed by a component code in ascending order.The component device code is displayed first, and then the check result follows.

P

E120413E01

The illustration shows the case that the system has 2 components with the codes 190 and 360, and that one of them (code 360) requires a check.
The check result is displayed by a component code in ascending order. The component device code is displayed first, and then the check result follows.

(2) Check the result display.

Display	Original Language	Description	Action to be Taken
good	Good (normal)	No DTCs are detected in either system check mode nor diagnostic memory mode.	-
NCON	No connection	The system recognized the component when it was registered, but the component gives no response to the diagnostic mode ON request.	Check the power source circuit and the communication circuit of the component indicated by the component code (physical address).
ECHN	Exchange	One or more DTCs for Exchange are detected in either system check mode or diagnostic memory mode.	Go to detailed information mode to check the trouble area, referring to the DTC list.
CHEC	Check	When no DTCs are detected for Exchange, one or more DTCs for Check are detected in either system check mode or diagnostic memory mode.	Go to detailed information mode to check the trouble area, referring to the DTC list.
OLD	Old version	Old DTC application is identified and DTC is detected in either system check mode or diagnostic memory mode.	-
NRES	No response	The device gives no response to any one of system check mode ON request, system check result request or diagnostic memory request.	Check the power source circuit and the communication circuit of the component indicated by the component code (physical address).

(3) To perform the service check again, press the preset switch 1 ch.

(e) Detailed information mode (when displaying the DTC for a troubled component)

(1) With CHEC or ECHN being displayed, press the preset switch 2ch to go to detailed information mode.

(2) Press the SEEK TRACK UP/DOWN switch to display the system check result (SYS) and diagnostic memory response (CODE).

AV

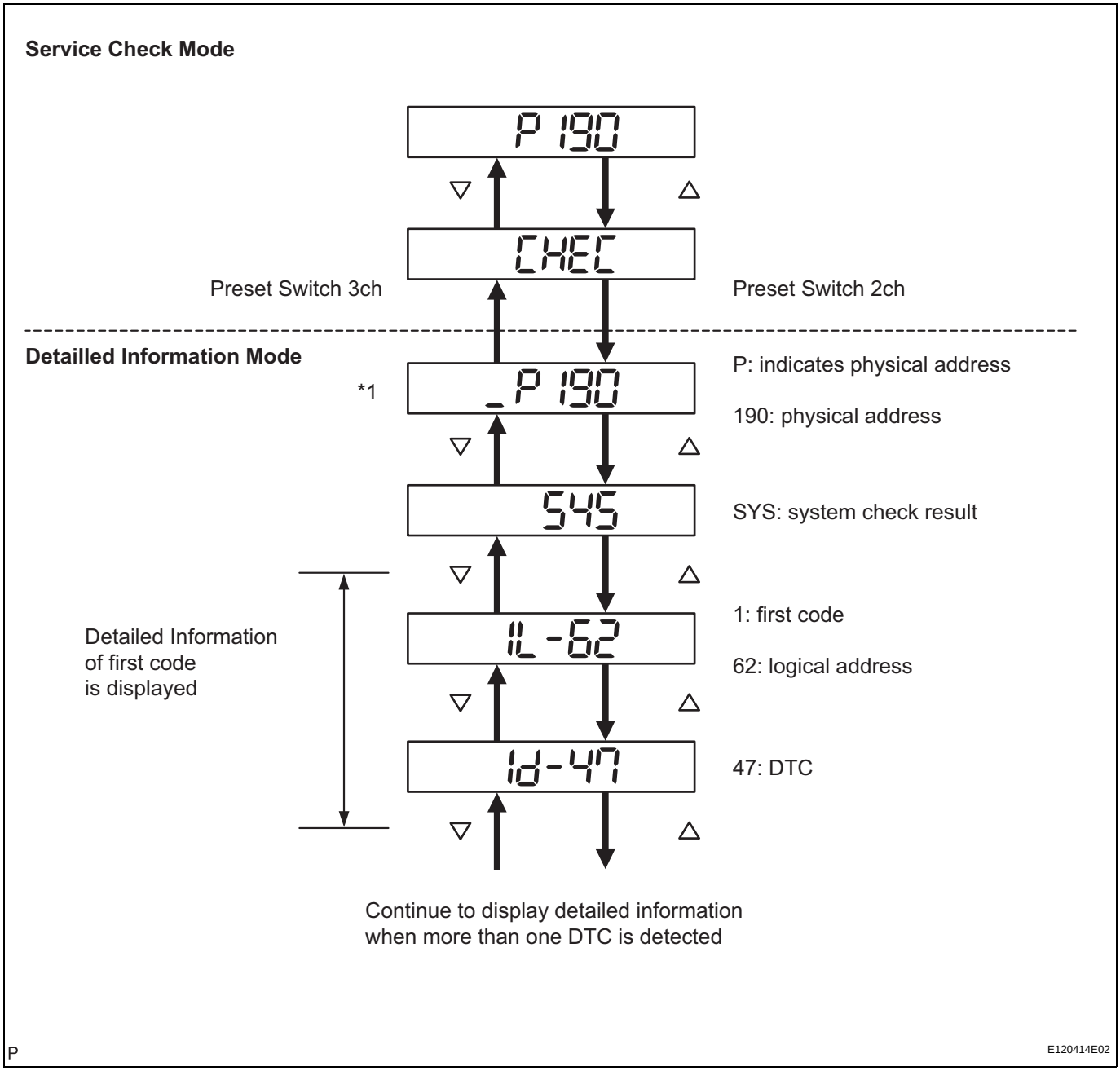

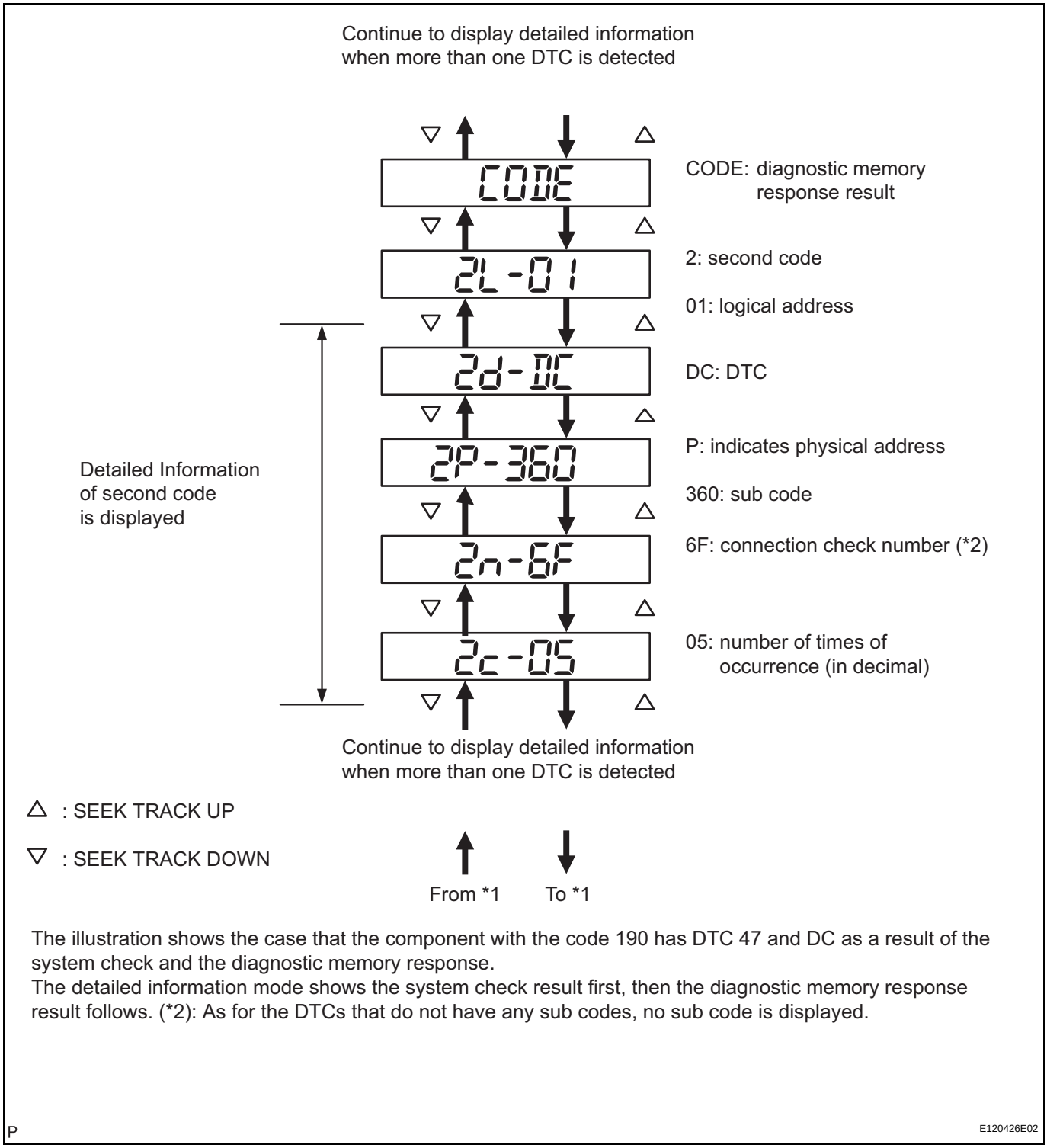

The illustration shows the case that the component with the code 190 has DTC 47 and DC as a result of the system check and the diagnostic memory response.
The detailed information mode shows the system check result first, then the diagnostic memory response result follows. (*2): As for the DTCs that do not have any sub codes, no sub code is displayed.

P

E120426E02

The illustration shows the case that the component with the code 190 has DTC 47 and DC as a result of the system check and the diagnostic memory response.
The detailed information mode shows the system check result first, then the diagnostic memory response result follows. (*2): As for the DTCs that do not have any sub codes, no sub code is displayed.

(3) Displayed items in detailed information mode

Division Code for DTC display	Description	The order of detailed information displayed when the TUNE UP switch is pressed. (The order is reversed when the TUNE DOWN switch is pressed.)
SYS	System check result is displayed.	Logical address → DTC
CODE	Diagnostic memory check result is displayed.	Logical address → DTC → Sub code → Connection confirmation number → The number of times of occurrence

(4) Check the trouble area referring to the DTC list.
(5) To return to the service check mode, press the preset switch 3ch.

2. DTC CLEAR

(a) Clearing an individual DTC memory (when clearing the memory of the DTC detected in the past individually)
(1) Press the preset switch 5ch for 2 seconds or more while ECHN is displayed in service check mode or detailed information mode.
HINT:
- A beep sound is emitted once when the DTC memory is completely cleared.
- When the DTC memory is cleared, only the component code (physical address) is displayed for the target component.
- To check DTCs, press the preset switch 1ch and perform the service check again.

(b) Clearing all the DTC memories (when clearing all the memories of DTCs detected in the past)
(1) Start diagnostic mode after repairing the trouble area.
(2) Press the preset switch 5ch for 2 seconds or more (CLR is displayed at this time).
HINT:
- A beep sound is emitted once when the DTC memories are completely cleared.
- When the DTC memories for all the components are cleared, only the component codes (physical address) are displayed.

(3) Press the preset switch 1ch to perform the service check again, and check that no DTCs are displayed for any component codes (physical address).

(c) Finish diagnostic mode
(1) Press DISC for 2 seconds or more, or turn the ignition switch off.

Noise Occurs

1	CHECK SPEAKER INSTALLATION

(a) Check the speaker installation condition.
  (1) Check that each speaker is securely installed.
    OK:
      The malfunction disappears.

HINT:
The radio is equipped with a noise prevention system that blocks excessively loud noise. If such noise occurs, check that all wiring is proper and that the antenna installation part ground and noise-prevention equipment are installed.

Conditions under Which Noise Occurs	Noise Type
Noise increases when accelerator pedal is depressed, but stops when engine is stopped.	Generator noise
Noise occurs during A/C or heater operation.	Blower motor noise
Noise occurs when vehicle accelerates rapidly on unpaved road or after ignition switch is turned on.	Fuel pump noise
Noise occurs when horn switch is pressed and released or when pressed and held.	Horn noise
Quiet noise occurs while engine is running, but stops when engine is stopped.	Ignition noise
Noise occurs synchronously with blink of turn signal.	Flasher noise
Noise occurs during window washer operation.	Washer noise
Noise occurs while engine is running, and continues even after engine is stopped.	Water temperature sensor noise
Noise occurs during wiper operation.	Wiper noise
Noise occurs when brake pedal is depressed.	Stop light switch noise
Others	Static electricity stored on vehicle

HINT:
- Identify the conditions under which the noise occurs, and check the noise filter on the relevant part.
- First ensure that the noise is not coming from outside. Failure to do so makes noise source detection difficult and may lead to a misdiagnosis.
- Noise should be removed in descending order of loudness.

NG → **INSTALL SPEAKER PROPERLY**

OK

IDENTIFY NOISE SOURCE

Sound Quality is Bad in All Modes

1	**ADJUST SOUND QUALITY**

AV

(a) Adjust the sound quality.
(1) Operate the radio receiver assembly to adjust the sound quality.
OK:
Malfunction disappears.

OK → **SYSTEM IS OK**

NG

2	**REPLACE STEREO COMPONENT AMPLIFIER ASSEMBLY**

(a) Replace the stereo component amplifier assembly and recheck.
OK:
The malfunction disappears.

NG → **REPLACE RADIO RECEIVER ASSEMBLY**

OK

SYSTEM IS OK

Sound Quality is Bad Only when CD is Played (Volume is Too Low)

1	OPERATION USING ANOTHER CD

(a) Replace the CD with another one and recheck.
  (1) Check the installation of the radio receiver assembly.
  OK:
  The malfunction disappears.

NG → **REPLACE RADIO RECEIVER ASSEMBLY**

OK

CD IS FAULTY

CD cannot be Ejected

AV

1	CHECK OPERATION

(a) Press EJECT and check operation.
(1) Press the CD EJECT switch of the radio receiver assembly for 2 seconds or more to see if the CD is ejected.
OK:
The CD is ejected.

HINT:
If the CD is not ejected, bring the vehicle in for repair.
Do not attempt to remove the CD by force.

NG → **REPLACE RADIO RECEIVER ASSEMBLY**

OK

2	OPERATION USING ANOTHER CD

(a) Replace the CD with another and recheck.
(1) Replace the CD with another normal one to see whether the same trouble occurs again.
OK:
The malfunction disappears.

NG → **REPLACE RADIO RECEIVER ASSEMBLY**

OK

CD IS FAULTY

CD cannot be Inserted or is Ejected Right After Insertion

1	CHECK CD

(a) Check whether a normal CD is inserted.
  (1) Make sure that the CD is a normal audio CD, and that there is no deformation, flaw, stain, burr or other defect on the CD.
  OK:
  A normal audio CD is inserted.

HINT:
- Translucent or oddly-shaped CDs cannot be played.
- Computer CD-ROMs (even those with music) and CD-R discs cannot be played.
- Playing an 8 cm CD does not require an adapter.

NG → **CD IS FAULTY**

OK

2	CHECK WHETHER CD IS INSERTED PROPERLY

(a) Check whether the CD is inserted properly.
  (1) Check whether or not the CD is inserted upside down.
  OK:
  Not upside down.

NG → **INSERT CD PROPERLY**

OK

3	CLEAN CD

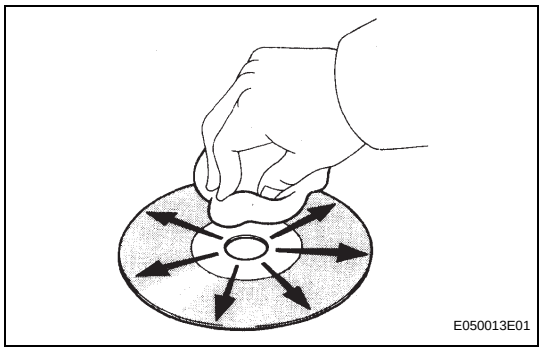

(a) Clean the disc.
  (1) If the disc gets dirty, clean the disc by wiping the surface from the center to the outside, in a radial direction, with a soft cloth as shown in the illustration.
  OK:
  The malfunction disappears.

NOTICE:
Do not use a conventional record cleaner or anti-static preservative.
OK:
Not upside down.

OK → **CD WAS DIRTY**

NG

4	OPERATION USING ANOTHER CD

(a) Replace the CD with another and recheck.
(1) Replace the CD with another normal one to see whether the same trouble occurs again.
OK:
The malfunction disappears.

NG → **REPLACE RADIO RECEIVER ASSEMBLY**

OK

CD IS FAULTY

CD Sound Skips

HINT:
The sound may skip when driving on an unpaved road.

1	CLEAN CD

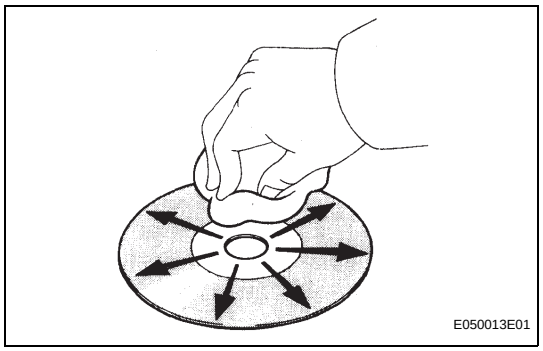

(a) Clean the disc.
(1) If the disc gets dirty, clean the disc by wiping the surface from the center to the outside, in a radial direction, with a soft cloth as shown in the illustration.
NOTICE:
Do not use a conventional record cleaner or anti-static preservative.
OK:
The malfunction disappears.

NG → **CD WAS DIRTY**

OK

2	OPERATION USING ANOTHER CD

(a) Replace the CD with another and recheck.
(1) Replace the CD with another normal one to see whether the same trouble occurs again.
OK:
The malfunction disappears.

NG → **CD IS FAULTY**

OK

3	CHECK RADIO RECEIVER INSTALLATION

(a) Check the radio receiver assembly installation condition.
(1) Check that the radio receiver assembly is installed properly.
OK:
Installed properly.

NG → **INSTALL RADIO RECEIVER PROPERLY**

OK

4	CHECK WHETHER RAPID TEMPERATURE CHANGE OCCURRED IN CABIN

(a) Check whether or not a rapid temperature change occurred in the cabin.
OK:
A rapid temperature change occurred.

HINT:
A rapid temperature change creates condensation inside the CD player, which may prevent CDs from being played.

NG → **REPLACE RADIO RECEIVER ASSEMBLY**

AV

OK

CONDENSATION DUE TO TEMPERATURE CHANGE (LET IT SIT FOR A WHILE BEFORE USING)

Radio Broadcast cannot be Received (Bad Reception)

1	CHECK WHETHER RADIO AUTO-SEARCH FUNCTIONS PROPERLY

(a) Check whether the radio auto-search functions properly.
  (1) Perform the auto-search of the radio and check that it functions normally.
  OK:
  The radio auto-search functions properly.

OK → **REPLACE RADIO RECEIVER ASSEMBLY**

NG

2	CHECK OPTIONAL COMPONENTS

(a) Check the optional component (sun shade film, telephone antenna, etc.).
  (1) Check whether or not any optional component, such as the sunshade film and the telephone antenna, is installed.
  OK:
  An optional component is installed.

OK → **EFFECT FROM OPTIONAL COMPONENTS**

NG

3	CHECK ANTENNA FOR NOISE PRODUCTION

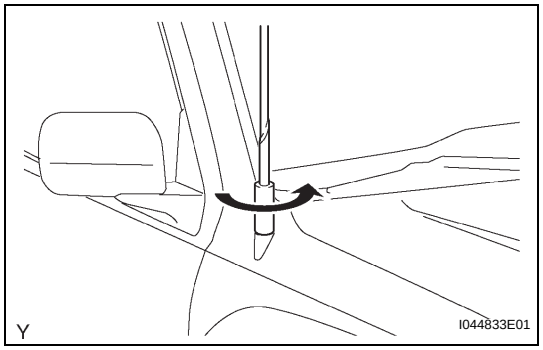

(a) Check for noise with the antenna.
  (1) Remove the pull top antenna pole sub-assembly by turning it in the direction of the arrow as shown in the illustration.
  (2) With the ignition switch ON (ACC), turn on the radio and choose the AM mode.

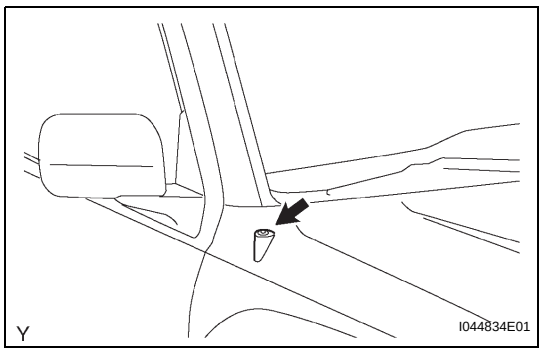

  (3) Place the tip of a screwdriver on the antenna of the antenna assembly, and check that noise is heard from the speaker. Noise occurs.
  OK:
  Noise occurs.

OK → **REPLACE PULL TOP ANTENNA POLE SUB-ASSEMBLY**

NG

4	INSPECT RADIO RECEIVER ASSEMBLY (ANTENNA)

AV

(a) Prepare for the check.
  (1) Remove the antenna plug of the radio receiver assembly.
(b) Check for noise.
  (1) With the radio receiver assembly connector connected, turn the ignition switch to ACC.
  (2) Turn on the radio and choose the AM mode.
  (3) Place a flat-head screwdriver or metal such as a thin wire on the antenna jack of the radio receiver assembly and check that noise is heard from the speaker.

OK:

Noise occurs.

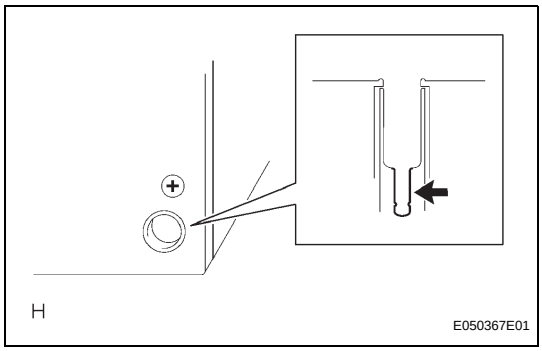

NG → **REPLACE RADIO RECEIVER ASSEMBLY**

OK

REPLACE ANTENNA CORD SUB-ASSEMBLY

Steering Pad Switch Circuit

DESCRIPTION

This circuit sends an operation signal from the steering pad switch to the radio receiver assembly.
If there is an open in the circuit, the audio system cannot be operated by the steering pad switch.
If there is a short in the circuit, the same condition as that when the switch is continuously depressed occurs.
Therefore, the radio receiver assembly cannot be operated by the steering pad switch, and also the radio receiver assembly itself does not function.

WIRING DIAGRAM

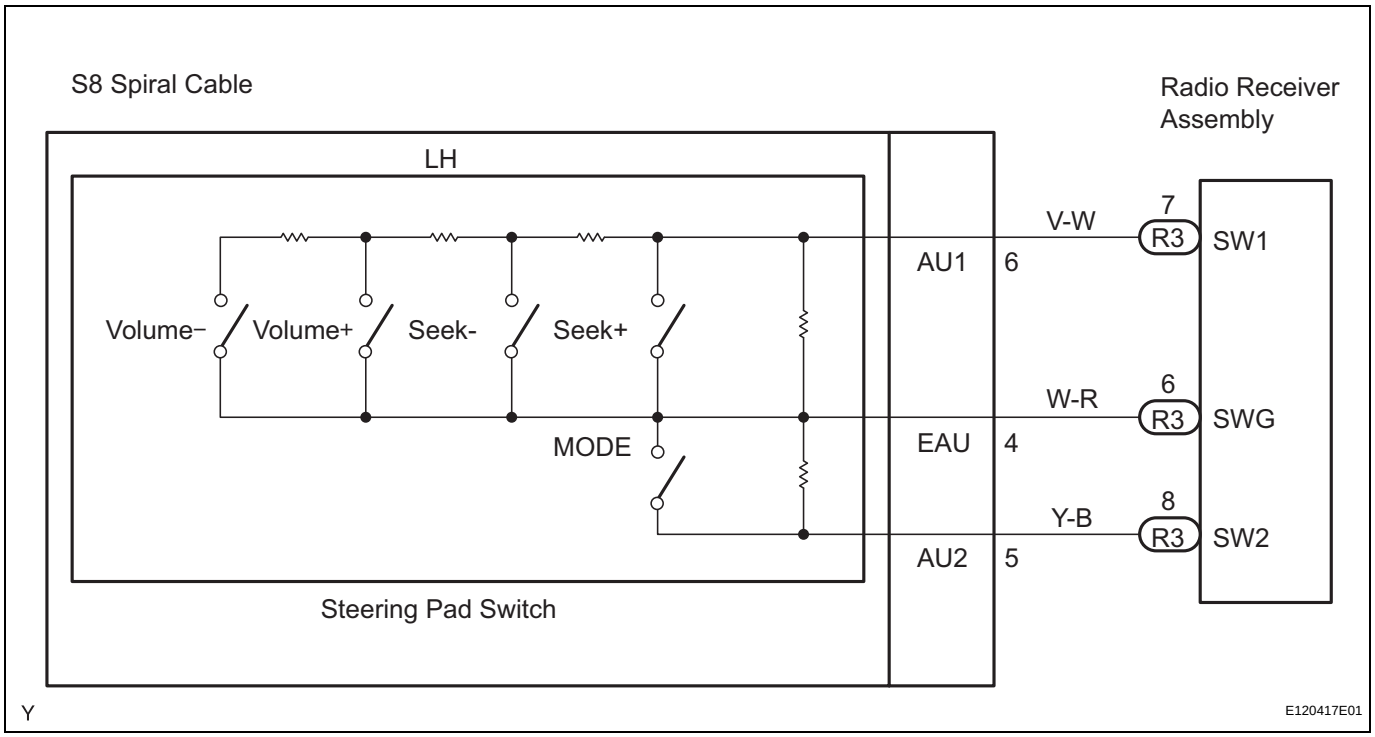

AV

1 INSPECT RADIO RECEIVER ASSEMBLY

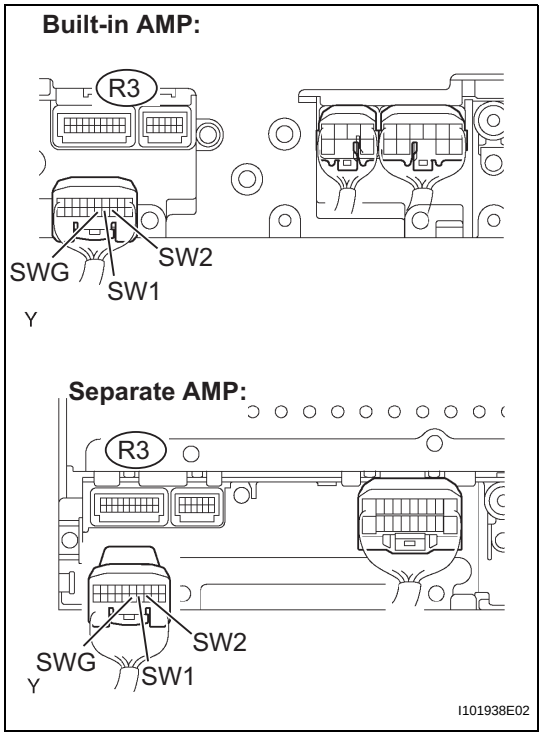

(a) Disconnect the R3 radio receiver assembly connector.
(b) Measure the resistance.

Standard

Tester Connection	Condition	Specified Condition
SW1 (R3-7) - SWG (R3-6)	No switch is pushed	Approx. 100 kΩ
SW1 (R3-7) - SWG (R3-6)	SEEK+ switch is pushed	Approx. 0 Ω
SW1 (R3-7) - SWG (R3-6)	SEEK- switch is pushed	Approx. 0.3 kΩ
SW1 (R3-7) - SWG (R3-6)	VOL+ switch is pushed	Approx. 1 kΩ
SW1 (R3-7) - SWG (R3-6)	VOL- switch is pushed	Approx. 3.1 kΩ
SW2 (R3-8) - SWG (R3-6)	No switch is pushed	Approx. 100 kΩ
SW2 (R3-8) - SWG (R3-6)	MODE switch is pushed	Approx. 0 Ω

OK → **PROCEED TO NEXT CIRCUIT INSPECTION SHOWN IN PROBLEM SYMPTOMS TABLE**

NG

2 INSPECT STEERING PAD SWITCH LH (AU1, AU2, EAU)

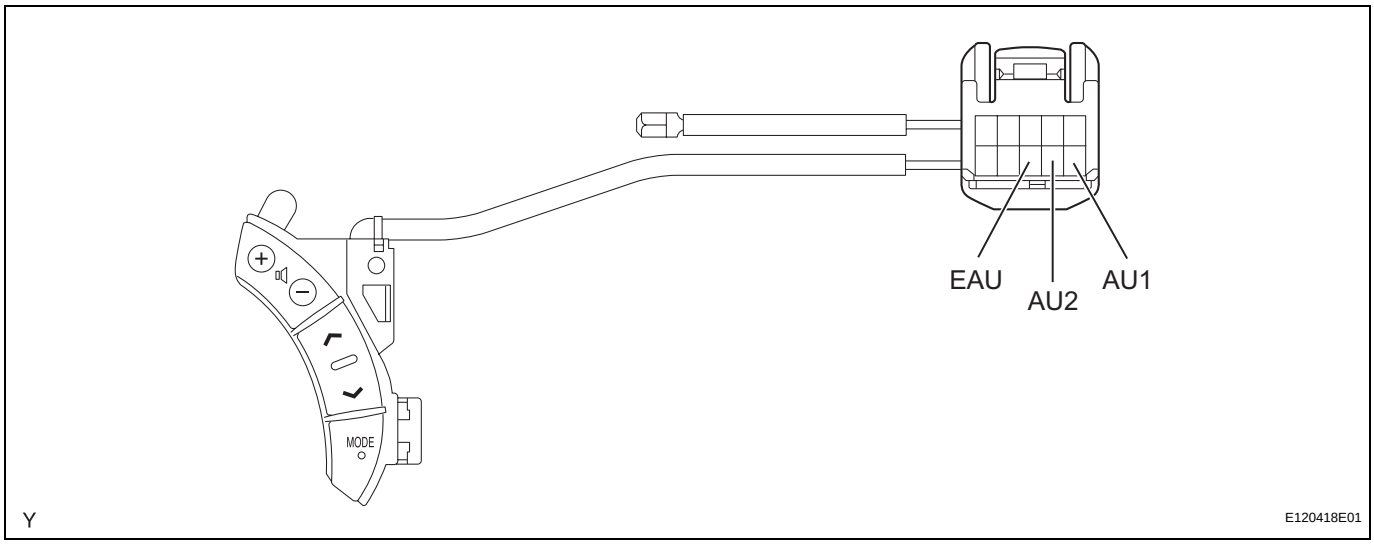

(a) Disconnect the steering pad switch LH connector.
(b) Measure the resistance.

Standard

Tester Connection	Condition	Specified Condition
AU1 - EAU	No switch is pushed	Approx. 100 kΩ
AU1 - EAU	SEEK+ switch is pushed	Approx. 0 Ω
AU1 - EAU	SEEK- switch is pushed	Approx. 0.3 kΩ

Tester Connection	Condition	Specified Condition
AU1 - EAU	VOL+ switch is pushed	Approx. 1 kΩ
AU1 - EAU	VOL- switch is pushed	Approx. 3.1 kΩ
AU2 - EAU	No switch is pushed	Approx. 100 kΩ
AU2 - EAU	MODE switch is pushed	Approx. 0 Ω

NG → **REPLACE STEERING PAD SWITCH LH**

OK

3 CHECK HARNESS AND CONNECTOR (SPIRAL CABLE SUB-ASSEMBLY - RADIO RECEIVER ASSEMBLY)

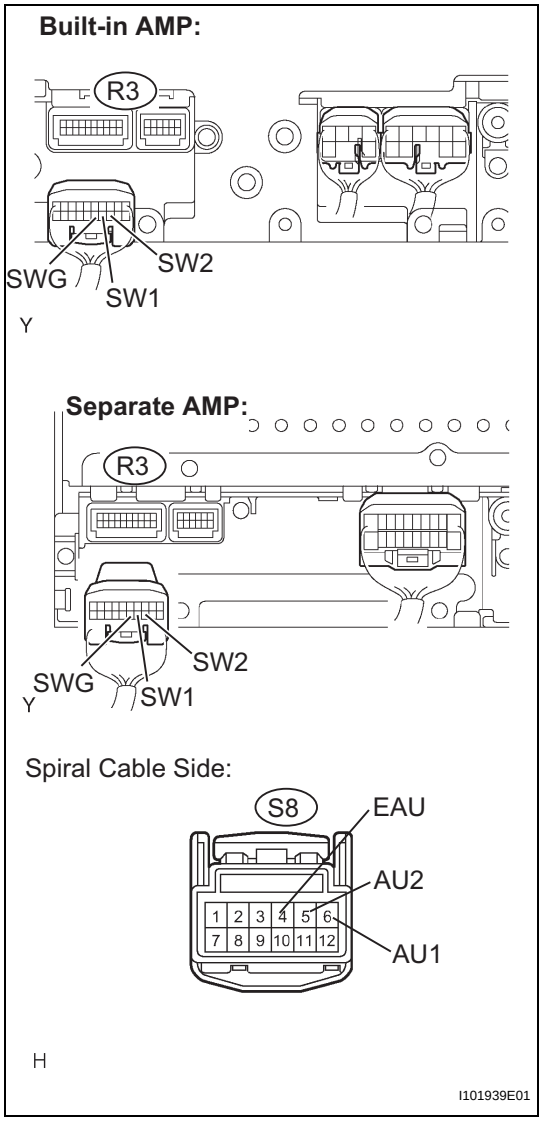

(a) Disconnect the S8 spiral cable sub-assembly connector.
(b) Disconnect the R3 radio receiver assembly connector.
(c) Check the resistance.

Standard

Tester Connection	Specified Condition
SW1 (R3-7) - AU1 (S8-6)	Below 1Ω
SW2 (R3-8) - AU2 (S8-5)	Below 1Ω
SWG (R3-6) - EAU (S8-4)	Below 1Ω
SW1 (R3-7) - Body ground	10 kΩ or higher
SW2 (R3-8) - Body ground	10 kΩ or higher
SWG (R3-6) - Body ground	10 kΩ or higher

NG → **REPAIR OR REPLACE HARNESS AND CONNECTOR**

OK

REPLACE SPIRAL CABLE SUB-ASSEMBLY

INSTALLATION

1. INSTALL WITH HOLDER ANTENNA ASSEMBLY

(a) Tie the string inside the pillar to the new antenna assembly (with holder).

(b) Using the string, fit the antenna assembly (with holder) into the pillar.

(c) Connect the connector and install the 3 clamps.

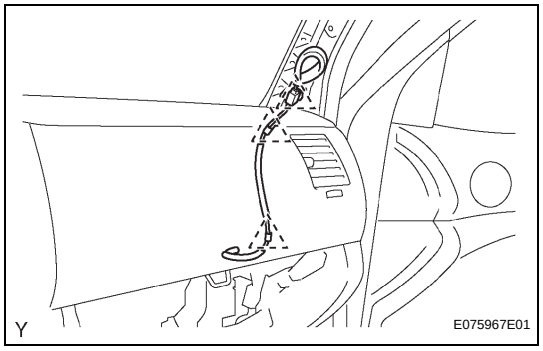

(d) Install the antenna ornament with the nut.

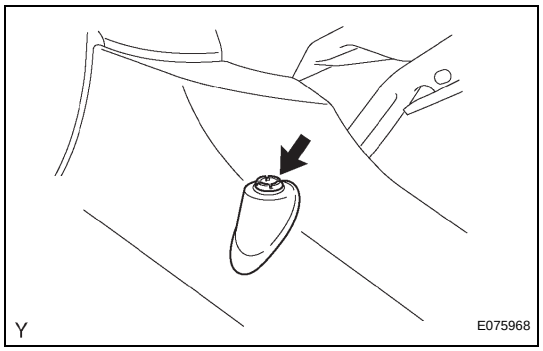

(e) Install the with holder antenna assembly with the bolt.

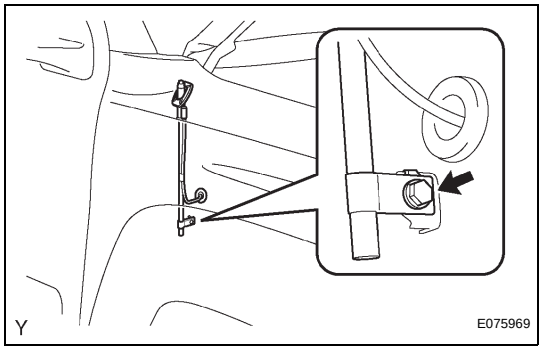

2. INSTALL PULL TOP ANTENNA POLE SUB - ASSEMBLY (See page AV-102)

3. INSTALL FRONT PILLAR GARNISH RH (See page IR-28)

4. INSTALL ASSIST GRIP SUB-ASSEMBLY (See page IR-23)

5. INSTALL INSTRUMENT PANEL LOWER FINISH PANEL SUB-ASSEMBLY RH (See page IP-20)

6. INSTALL GLOVE COMPARTMENT DOOR ASSEMBLY (See page IP-20)

7. CONNECT CABLE TO NEGATIVE BATTERY TERMINAL
Torque: 3.9 N*m (40 kgf*cm, 35 in.*lbf)

AV

INSPECTION

1. INSPECT VOLTAGE INVERTER ASSEMBLY

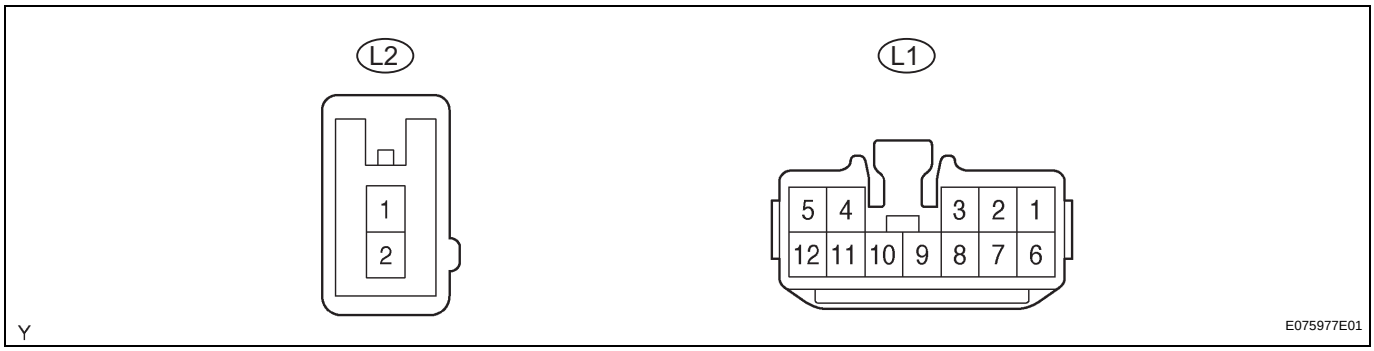

Tester Connection	Condition	Specified Condition
+B(L2-2)-PGND(L2-1)	IG switch ON	10 to 14V
AC1(L1-5)-PGND(L2-1)	IG switch ON, main switch ON	Pulse generation
P/T(L1-1)-Body Ground	Always	Below 1 Ω
AC2(L1-11)-PGND(L2-1)	IG switch ON, main switch ON	Pulse generation

INSTALLATION

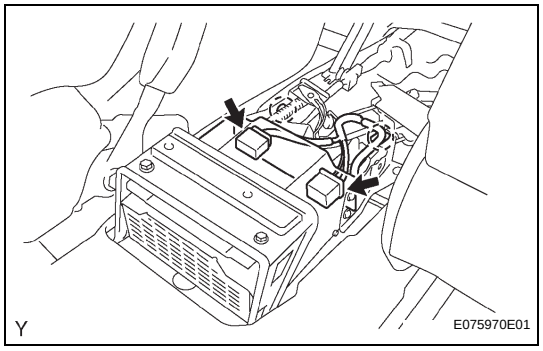

1. INSTALL VOLTAGE INVERTER ASSEMBLY

(a) Connect the 2 connectors and install the 2 wire harness clamps.

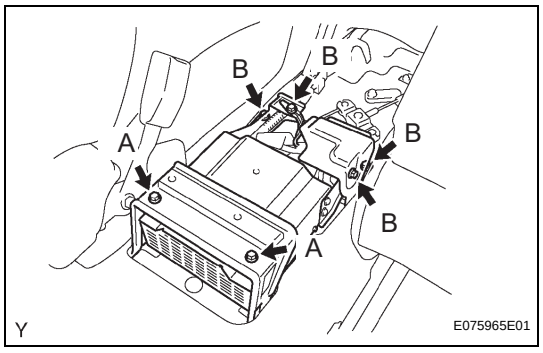

(b) Install the 6 bolts.

Torque: 7.5 N*m (76 kgf*cm, 66 in.*lbf) for bolt A

Torque: 15 N*m (153 kgf*cm, 11 ft.*lbf) for bolt B

2. INSTALL REAR CONSOLE BOX ASSEMBLY (See page IP-24)

3. INSTALL CONSOLE UPPER REAR PANEL SUB-ASSEMBLY (See page IP-25)

4. CONNECT CABLE TO NEGATIVE BATTERY TERMINAL

Torque: 3.9 N*m (40 kgf*cm, 35 in.*lbf)

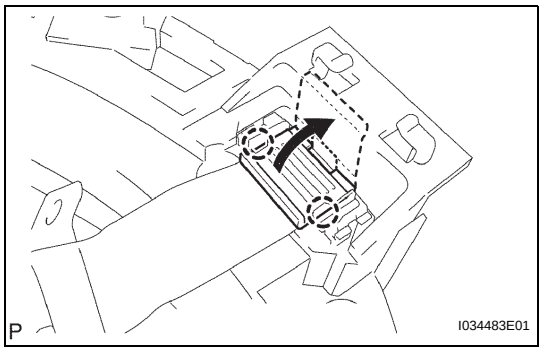

(e) Disengage the 2 claws and open the latch on the top of the connector as shown in the illustration.

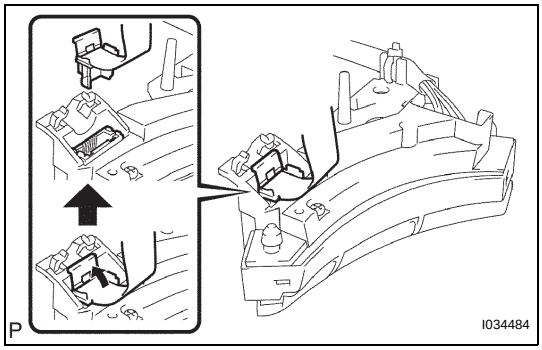

(f) Pull out the connector while pinching the latch with fingers and disconnect the steering pad switch cable from the steering pad switch LH.

INSTALLATION

1. INSTALL STEERING PAD SWITCH LH

(a) Install the steering pad switch cable onto the steering pad switch LH while holding the connector cover.

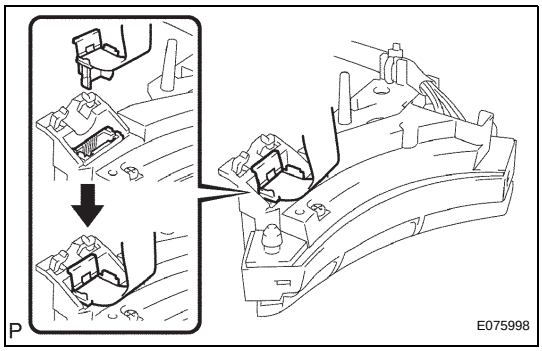

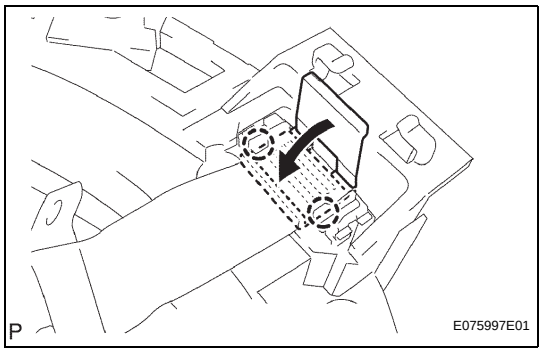

(b) Hold the connector cover down to engage the 2claws as shown in the illustration.

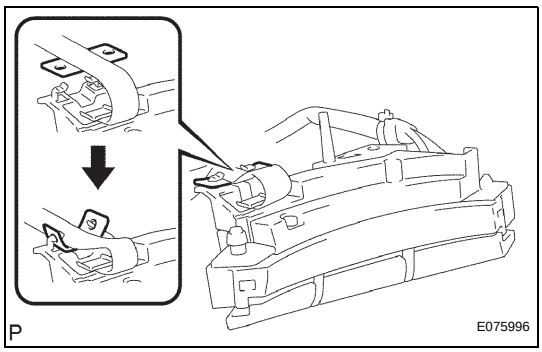

(c) Install the tab of the steering pad switch cable onto the steering pad switch LH as shown in the illustration.

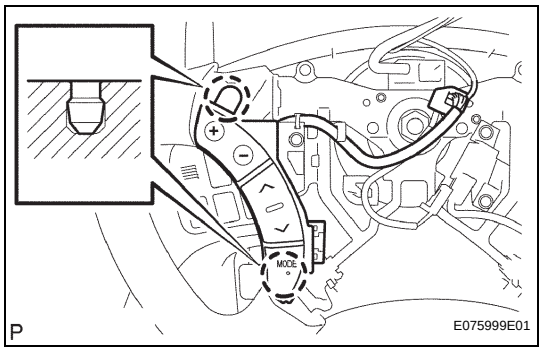

(d) Engage the 2 pins and install the steering pad switch LH.

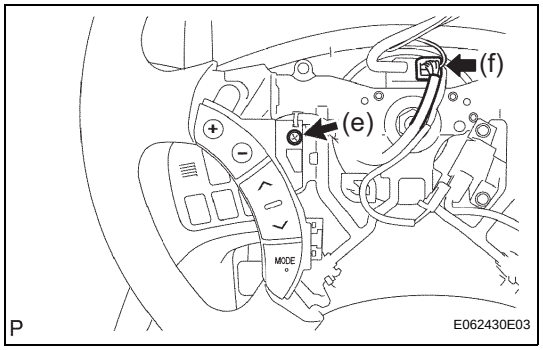

(e) Install the screw.
(f) Connect the connector.

2. **INSTALL HORN BUTTON ASSEMBLY (See page RS-558)**
3. **INSTALL NO. 3 LOWER STEERING WHEEL COVER (See page SR-18)**
4. **INSTALL NO. 2 LOWER STEERING WHEEL COVER (See page SR-18)**
5. **CONNECT CABLE TO NEGATIVE BATTERY TERMINAL**
   Torque: 3.9 N*m (40 kgf*cm, 35 in.*lbf)
6. **INSPECT HORN BUTTON ASSEMBLY (See page RS-557)**
7. **INSPECT SRS WARNING LIGHT (See page SR-18)**

PROBLEM SYMPTOMS TABLE

Symptom	Suspected area	See page
Remote UP / DOWN function does not operate	Power window regulator master switch assembly	WS-11
	Wire harness	
Driver side power window does not operate with power window master switch	D FR P/W fuse	WS-15
	P/W Relay	
	Power window regulator master switch assembly	
	Power window regulator motor assembly (Driver side)	
	Wire harness	
Front passenger side power window does not operate with front power window switch	Power window regulator switch assembly (Passenger side)	WS-20
	Power window regulator motor assembly (Passenger side)	
	Wire harness	
Rear power window LH does not operate with rear power window switch LH	Power window regulator switch assembly (Rear LH)	WS-23
	Power window regulator motor assembly (Rear LH)	
	Wire harness	
Rear power window RH does not operate with rear power window switch RH	Power window regulator switch assembly (Rear RH)	WS-26
	Power window regulator motor assembly (Rear RH)	
	Wire harness	
Power window do not operate at all	D FR P/W fuse	WS-29
	IG1 NO.2 fuse	
	ECU-B fuse	
	AM1 fuse	
	J/B fuse	
	P/W fuse	
	Power window regulator master switch assembly	
	Wire harness	
	Driver side J/B assembly (Multiplex network body ECU)	
Power window can be operated after ignition switch is turned off even if operative conditions are not met	Power window regulator master switch assembly	WS-34
	Front door courtesy light switch	
	Wire harness	
	Driver side J/B assembly (Multiplex network body ECU)	

TERMINALS OF ECU

1. CHECK POWER WINDOW REGULATOR MASTER SWITCH (FOR DOUBLE CAB):

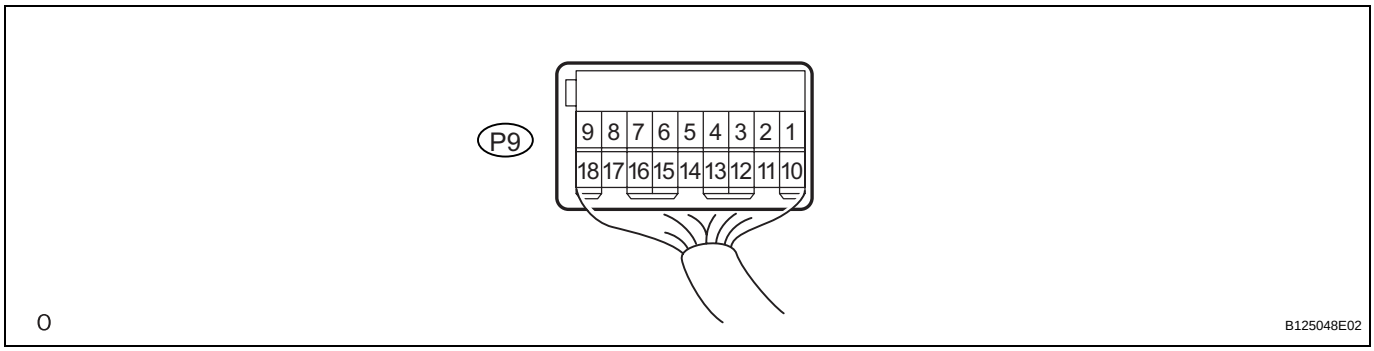

(a) Disconnect the P9 power window regulator master switch connector.
(b) Measure the voltage and resistance of each of the wire harness side connector terminals.

Standard:

Symbol (Terminal No.)	Wiring Color	Terminal Description	Condition	Specified Condition
E (P9-1) - Body ground	W-B - Body ground	Ground	Always	Below 1 Ω
B (P9-7) - E (P9-1)	R - W-B	Regulator motor power supply	Always	10 to 14 V
B (P9-7) - E (P9-1)	R - W-B	Master switch power supply	Ignition switch OFF	0 V
B (P9-7) - E (P9-1)	R - W-B	Master switch power supply	ignition switch ON	10 to 14 V
DU (P9-4) - DD (P9-9)	L - L-B	•Power window motor UP output •Power window motor DOWN output	Always	Below 1 Ω

If the result is not as specified, there may be a malfunction on the wire harness side.
(c) Reconnect the power window regulator master switch connector.
(d) Measure the voltage of the connector terminals.

Symbol (Terminal No.)	Wiring Color	Terminal Description	Condition	Specified Condition
DU (P9-4) - E (P9-1)	L - W-B	Power window motor UP output	Ignition switch ON, driver side power window switch OFF	0 V
DU (P9-4) - E (P9-1)	L - W-B	Power window motor UP output	Ignition switch ON, driver side power window switch UP	10 to 14 V
DD (P9-9) - E (P9-1)	L-B - W-B	Power window motor DOWN output	Ignition switch ON, driver side power window switch OFF	0 V
DD (P9-9) - E (P9-1)	L-B - W-B	Power window motor DOWN output	Ignition switch ON, driver side power window switch DOWN (manual operation)	10 to 14 V
DD (P9-9) - E (P9-1)	L-B - W-B	Power window motor DOWN output	Ignition switch ON, driver side power window fully closed → driver side power window switch DOWN (AUTO operation) → driver side power window fully open	0 V → 10 to 14 V → 0 V

If the result is not as specified, the switch may have a malfunction.

(e) Check the illumination.
   (1) When the ignition switch is turned to ON from OFF with the connector connected, check that the illumination (YELLOW) AUTO lights up.

2. CHECK POWER WINDOW REGULATOR MASTER SWITCH (FOR ACCESS CAB):

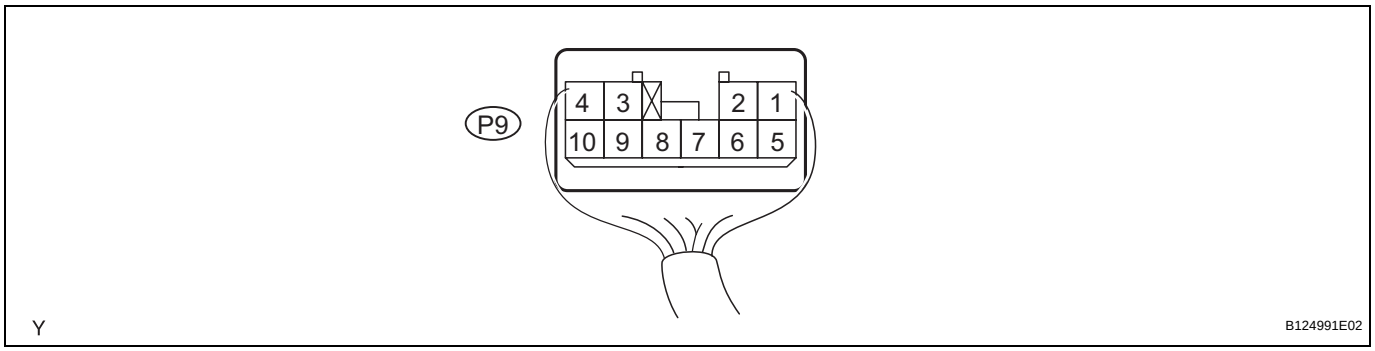

(a) Disconnect the P9 power window regulator master switch connector.
(b) Measure the voltage and resistance of each of the wire harness side connector terminals.

Standard:

Symbol (Terminal No.)	Wiring Color	Terminal Description	Condition	Specified Condition
E (P9-1) - Body ground	W-B - Body ground	Ground	Always	Below 1 Ω
B (P9-9) - E (P9-1)	R - W-B	Regulator motor power	Always	10 to 14 V
B (P9-9) - E (P9-1)	R - W-B	Master switch power supply	Ignition switch OFF	0 V
B (P9-9) - E (P9-1)	R - W-B	Master switch power supply	ignition switch ON	10 to 14 V
DU (P9-3) - DD (P9-4)	L - L-B	•Power window motor UP output •Power window motor DOWN output	Always	Below 1 Ω

If the result is not as specified, there may be a malfunction on the wire harness side.

(c) Reconnect the power window regulator master switch connector.
(d) Measure the voltage of the connector terminals.

Symbol (Terminal No.)	Wiring Color	Terminal Description	Condition	Specified Condition
DU (P9-4) - E (P9-1)	L - W-B	Power window motor UP output	Ignition switch ON, driver side power window switch OFF	0 V
DU (P9-4) - E (P9-1)	L - W-B	Power window motor UP output	Ignition switch ON, driver side power window switch UP	10 to 14 V
DD (P9-9) - E (P9-1)	L-B - W-B	Power window motor DOWN output	Ignition switch ON, driver side power window switch OFF	0 V
DD (P9-9) - E (P9-1)	L-B - W-B	Power window motor DOWN output	Ignition switch ON, driver side power window switch DOWN (manual operation)	10 to 14 V

Symbol (Terminal No.)	Wiring Color	Terminal Description	Condition	Specified Condition
DD (P9-9) - E (P9-1)	L-B - W-B	Power window motor DOWN output	Ignition switch ON, driver side power window fully closed → driver side power window switch DOWN (AUTO operation) → driver side power window fully open	0 V → 10 to 14 V → 0 V

If the result is not as specified, the switch may have a malfunction.

(e) Check the illumination.

(1) When the ignition switch is turned to ON from OFF with the connector connected, check that the illumination (YELLOW) AUTO lights up.

3. CHECK DRIVER SIDE J/B ASSEMBLY (MULTIPLEX NETWORK BODY ECU)

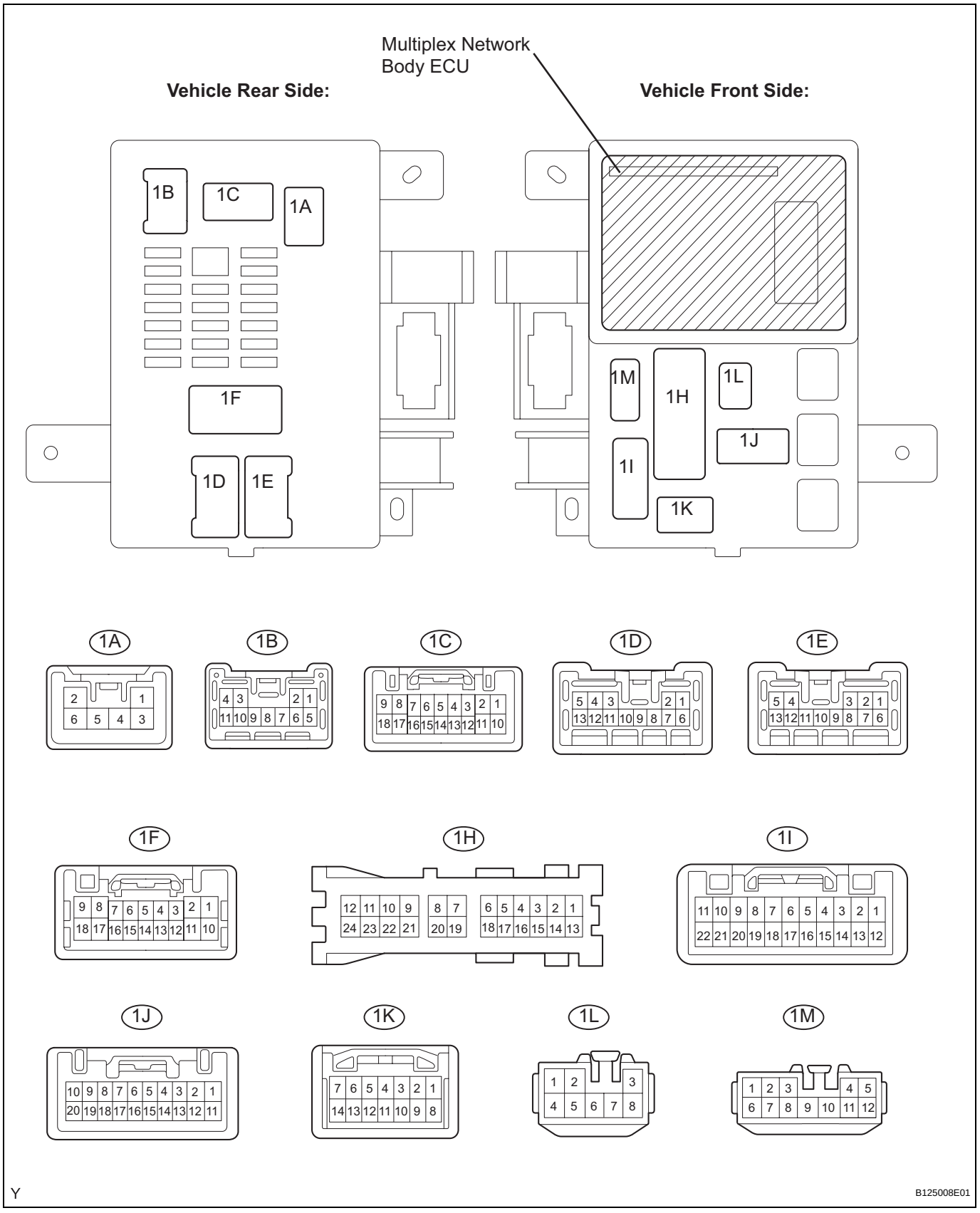

(a) Disconnect the 1A, 1C, 1F, 1H, 1I and 1K driver side J/B connectors.

(b) Measure the voltage and resistance between each terminal of the wire harness side connectors and body ground.

Standard:

Symbol (Terminal No.)	Wiring Color	Terminal Description	Condition	Specified Condition
ECUB (1C-16) - Body ground	R - Body ground	+B (ECUB) power supply	Always	10 to 14 V
ALTB (1A-6) - Body ground	L - Body ground	+B (power system, generator system) power supply	Always	10 to 14 V
PWS (1H-10) - Body ground	W-B - Body ground	PWR Relay ON signal	Ignition switch OFF	0 V
			Ignition switch ON	10 to 14 V
KSW (1K-10) - Body ground	G-B - Body ground	Key unlock warning switch input	No key in ignition key cylinder	10 kΩ or higher
			Key inserted ignition key cylinder	Below 1 Ω
DCTY (1F-7) - Body ground	G-Y - Body ground	Driver side courtesy switch input	Driver side door CLOSED	10 kΩ or higher
			Driver side door OPEN	Below 1 Ω
PCTY (1I-8) - Body ground	R-B - Body ground	Passenger side courtesy switch input	Passenger side door CLOSED	10 kΩ or higher
			Passenger side door OPEN	Below 1 Ω
GND (1H-18) - Body ground	W-B - Body ground	Ground	Always	Below 1 Ω

If the result is not as specified, there may be a malfunction on the wire harness side.

(c) Reconnect the driver side J/B connectors.

(d) Measure the voltage between each terminal of the connector and body ground.

Standard:

Symbol (Terminal No.)	Wiring Color	Terminal Description	Condition	Specified Condition
KSW (1K-10) - Body ground	G-B - Body ground	Key unlock warning switch input	No key in ignition key cylinder	10 to 14 Vr
			Key inserted ignition key cylinder	0 V

If the result is not as specified, the driver side J/B assembly (multiplex network body ground ECU) may have a malfunction.

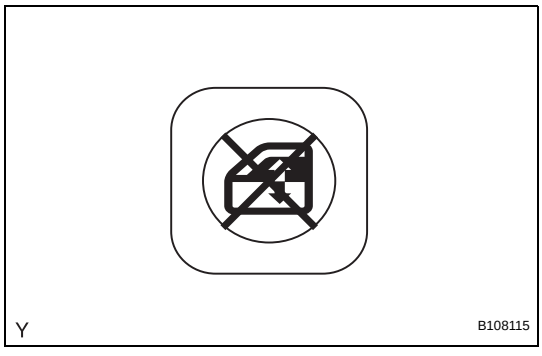

ON-VEHICLE INSPECTION

1. CHECK WINDOW LOCK SWITCH

(a) Check that the passenger side power window and rear door side power window operations are disabled when the window lock switch of the power window regulator master switch assembly is pressed.

(b) Check that the passenger side power window and rear door side power window can be operated when the window lock switch is pressed again.

2. CHECK MANUAL UP/DOWN FUNCTION

(a) Check that the driver side power window operates as follows:

OK:

Condition	Master Switch	Switch Operation	Power Window
Ignition switch ON	Driver side	Pulled up	UP (closes)
Ignition switch ON	Driver side	Pushed halfway down	DOWN (opens)

(b) Check that the power windows, except the driver side power window, operate as follows:

OK:

Condition	Master Switch	Switch Operation	Power Window
• Ignition switch ON • Window lock switch OFF	Front passenger side	Pulled up	UP (closes)
• Ignition switch ON • Window lock switch OFF	Front passenger side	Pushed down	DOWN (opens)
• Ignition switch ON • Window lock switch OFF	Rear LH	Pulled up	UP (closes)
• Ignition switch ON • Window lock switch OFF	Rear LH	Pushed down	DOWN (opens)
• Ignition switch ON • Window lock switch OFF	Rear RH	Pulled up	UP (closes)
• Ignition switch ON • Window lock switch OFF	Rear RH	Pushed down	DOWN (opens)

3. CHECK AUTO DOWN FUNCTION

(a) Check that the driver side power window operates as follows:

OK:

Condition	Master Switch	Switch Operation	Power Window
Ignition switch ON	Driver side	Pushed fully down	AUTO DOWN (fully opens)

(b)

4. CHECK REMOTE UP/DOWN FUNCTION

(a) Check that the power windows except the driver side power window operate as follows:

OK:

Condition	Master Switch	Switch Operation	Power Window
• Ignition switch ON • Window lock switch OFF	Front passenger side	Pulled up	UP (closes)
• Ignition switch ON • Window lock switch OFF	Front passenger side	Pushed down	DOWN (opens)
• Ignition switch ON • Window lock switch OFF	Rear LH	Pulled up	UP (closes)
• Ignition switch ON • Window lock switch OFF	Rear LH	Pushed down	DOWN (opens)
• Ignition switch ON • Window lock switch OFF	Rear RH	Pulled up	UP (closes)
• Ignition switch ON • Window lock switch OFF	Rear RH	Pushed down	DOWN (opens)

Remote Up / Down Function does not Operate

DESCRIPTION

With the ignition switch ON, the power window regulator master switch assembly transmits remote switch signals to the passenger side power window and rear door power window regulator switches. Then, the regulator switches drive the power window regulator motors.

WIRING DIAGRAM

WS

Double Cab:

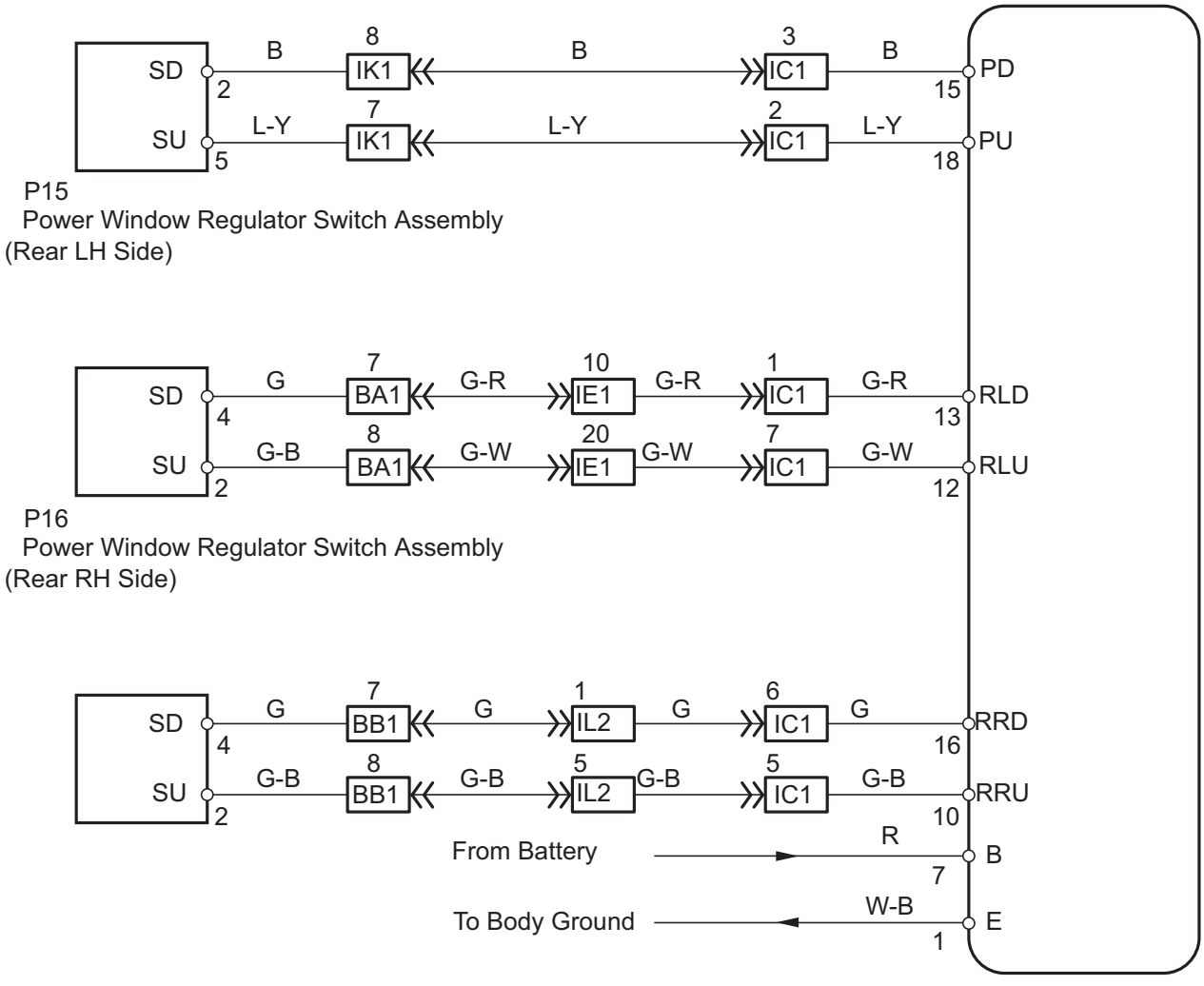

Access Cab:

P14
Power Window Regulator Switch Assembly
(Passenger Side)

P9
Power Window Regulator
Master Switch Assembly

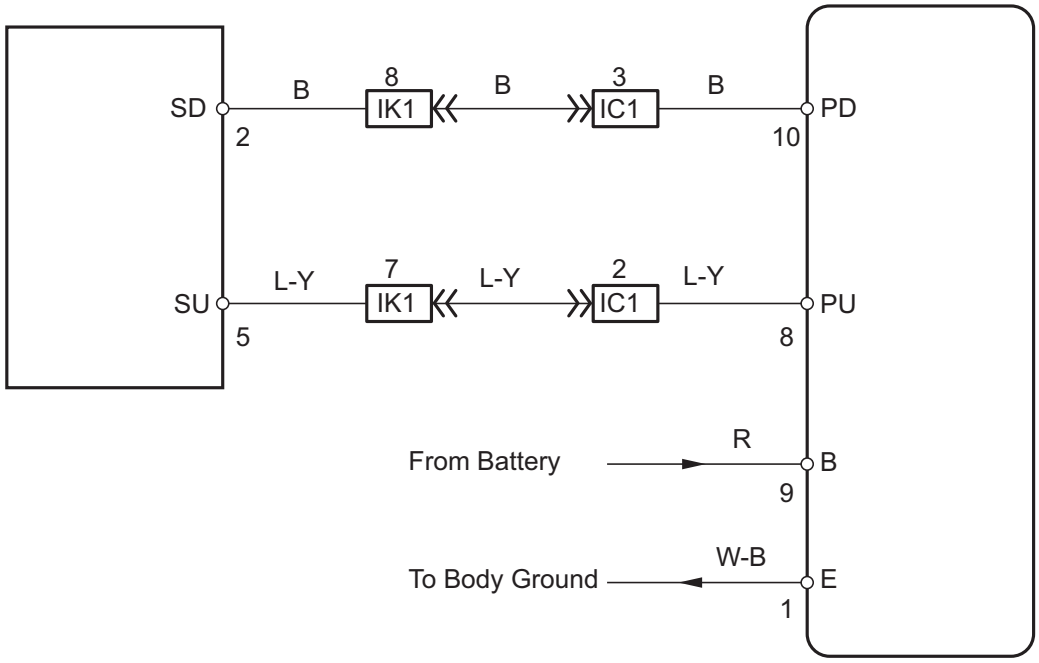

1	CHECK POWER WINDOW LOCK SWITCH

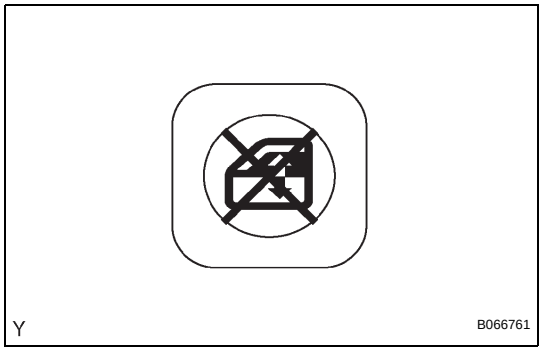

(a) Turn the window lock switch OFF and operate the master switches assembly passenger side and rear door side switches. Check that the remote UP/DOWN function operates normally.
OK:
Remote UP/DOWN function operates normally.

OK	END

NG

2	CHECK MANUAL UP/DOWN FUNCTION

(a) Check that the passenger side and rear door side power window manual UP/DOWN functions operate normally.
OK:
Manual UP/DOWN function operates normally.

NG	OTHER PROBLEM

OK

3 INSPECT POWER WINDOW REGULATOR MASTER SWITCH ASSEMBLY

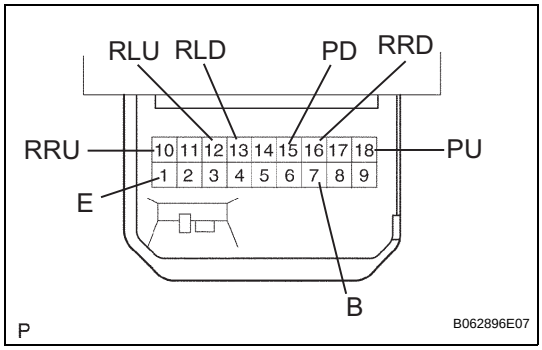

(a) Double cab: Inspect the power window regulator master switch assembly.
  (1) Remove the power window regulator master switch assembly.
  (2) Disconnect the P9 power window regulator master switch connector.
  (3) Measure the resistance between the terminals of the connector when the switch is operated.

Standard (Passenger switch)

Window Lock Switch Condition	Power Window Switch Condition	Tester Condition	Specified Condition
OFF (Normal)	UP	P9-1 (E) - P9-15 (PD) P9-7 (B) - P9-18 (PU)	Below 1Ω
OFF (Normal)	OFF	P9-1 (E) - P9-18 (PU) P9-1 (E) - P9-15 (PD)	Below 1Ω
OFF (Normal)	DOWN	P9-1 (E) - P9-18 (PU) P9-7 (B) - P9-15 (PD)	Below 1Ω
ON (Lock)	UP	P9-7 (B) - P9-18 (PU)	Below 1Ω
ON (Lock)	OFF	P9-17 (PU) - P9-15 (PD)	Below 1Ω
ON (Lock)	DOWN	P9-7 (B) - P9-15 (PD)	Below 1Ω

Standard (Rear LH switch)

Window Lock Switch Condition	Power Window Switch Condition	Tester Condition	Specified Condition
OFF (Normal)	UP	P9-1 (E) - P9-13 (RLD) P9-7 (B) - P9-12 (RLU)	Below 1Ω
OFF (Normal)	OFF	P9-1 (E) - P9-12 (RLU) P9-1 (E) - P9-13 (RLD)	Below 1Ω
OFF (Normal)	DOWN	P9-1 (E) - P9-12 (RLU) P9-7 (B) - P9-13 (RLD)	Below 1Ω
ON (Lock)	UP	P9-7 (B) - P9-12 (RLU)	Below 1Ω
ON (Lock)	OFF	P9-12 (RLU) - P9-13 (RLD)	Below 1Ω
ON (Lock)	DOWN	P9-7 (B) - P9-13 (RLD)	Below 1Ω

Standard (Rear RH switch)

Window Lock Switch Condition	Power Window Switch Condition	Tester Condition	Specified Condition
OFF (Normal)	UP	P9-1 (E) - P9-16 (RRD) P9-7 (B) - P9-10 (RRU)	Below 1Ω
OFF (Normal)	OFF	P9-1 (E) - P9-10 (RRU) P9-1 (E) - P9-16 (RRD)	Below 1Ω
OFF (Normal)	DOWN	P9-1 (E) - P9-10 (RRU) P9-7 (B) - P9-16 (RRD)	Below 1Ω
ON (Lock)	UP	P9-7 (B) - P9-10 (RRU)	Below 1Ω
ON (Lock)	OFF	P9-10 (RRU) - P9-16 (RRD)	Below 1Ω
ON (Lock)	DOWN	P9-7 (B) - P9-16 (RRD)	Below 1Ω

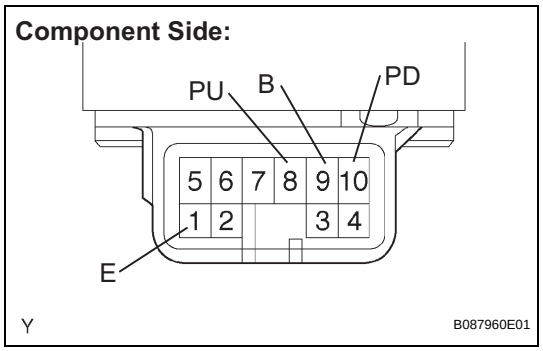

(4) Reconnect the power window regulator master switch connector.
(5) Reinstall the power window regulator master switch assembly.

(b) Access cab: Inspect the power window regulator master switch assembly.
(1) Remove the power window regulator master switch assembly.
(2) Disconnect the P9 power window regulator master switch connector.
(3) Measure the resistance between the terminals of the connector when the switch is operated.

WS

Standard (Passenger switch)

Window Lock Switch Condition	Power Window Switch Condition	Tester Condition	Specified Condition
OFF (Normal)	UP	P9-1 (E) - P9-10 (PD) P9-7 (B) - P9-8 (PU)	Below 1Ω
OFF (Normal)	OFF	P9-1 (E) - P9-8 (PU) P9-1 (E) - P9-10 (PD)	Below 1Ω
OFF (Normal)	DOWN	P9-1 (E) - P9-8 (PU) P9-7 (B) - P9-10 (PD)	Below 1Ω
ON (Lock)	UP	P9-9 (B) - P9-8 (PU)	Below 1Ω
ON (Lock)	OFF	P9-8 (PU) - P9-10 (PD)	Below 1Ω
ON (Lock)	DOWN	P9-9 (B) - P9-10 (PD)	Below 1Ω

(4) Reconnect the power window regulator master switch connector.
(5) Reinstall the power window regulator master switch assembly.

NG → **REPLACE POWER WINDOW REGULATOR MASTER SWITCH ASSEMBLY**

OK →

REPAIR OR REPLACE HARNESS OR CONNECTOR (WINDOW REGULATOR MASTER SWITCH - EACH REGULATOR SWITCH)

Driver Side Power Window does not Operate with Power Window Master Switch

DESCRIPTION

If the manual UP/DOWN function does not operate, the power window regulator master switch assembly, the power window regulator motor assembly or the wire harness may be malfunctioning.

WIRING DIAGRAM

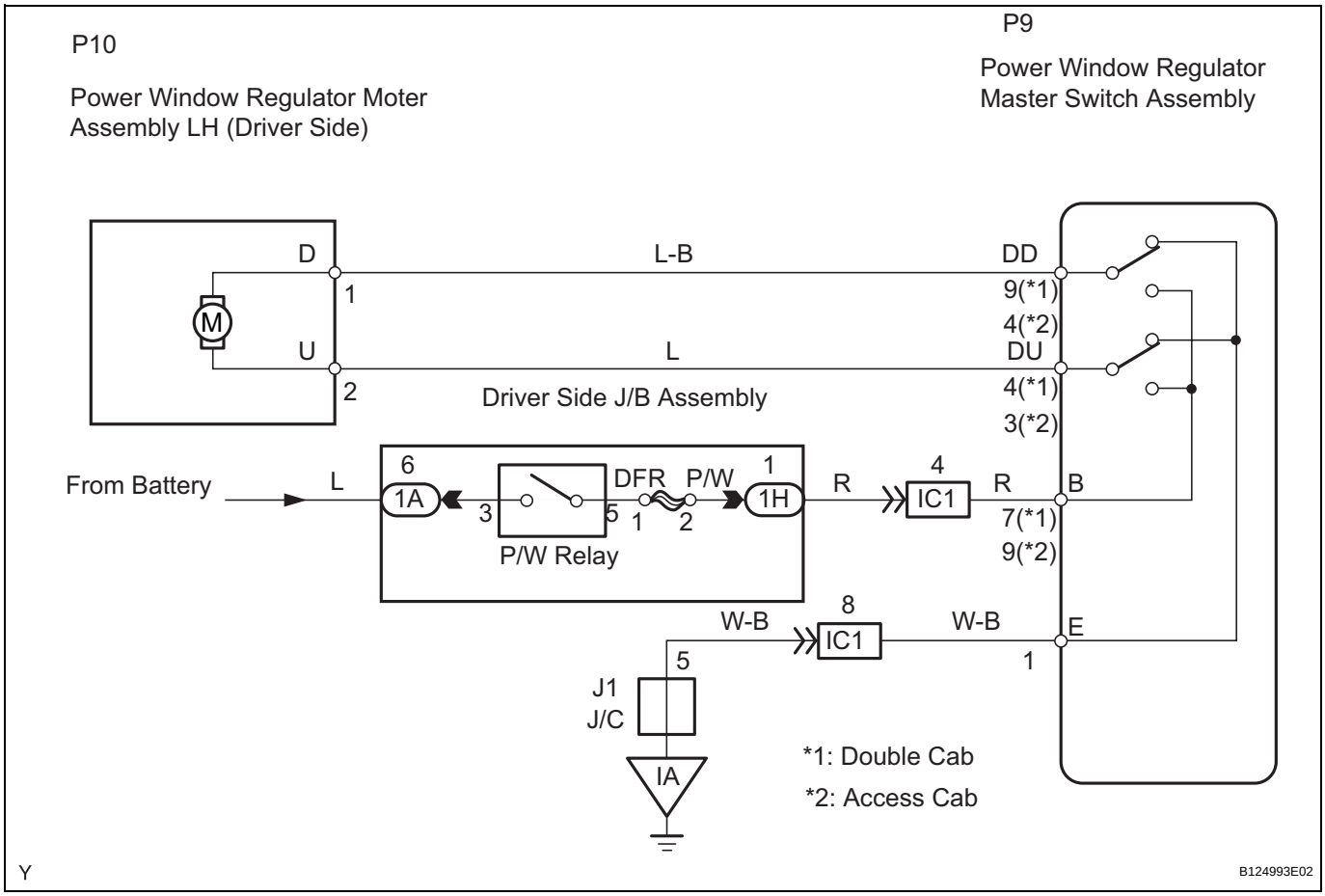

1	INSPECT FUSE (D FR P/W)

(a) Remove the D FR P/W fuse from the driver side J/B.
(b) Check the resistance.
Standard Resistance:
Below 1 Ω
(c) Reinstall the D FR P/W fuse.

NG → **REPLACE FUSE**

OK

2	CHECK POWER WINDOW REGULATOR MASTER SWITCH ASSEMBLY

(a) Turn the ignition switch to ON.

Wire Harness Side (Double Cab):

Power Window Regulator
Master Switch Assembly

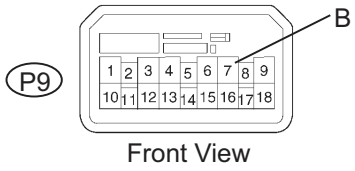

Wire Harness Side (Access Cab):

Power Window Regulator Master Switch

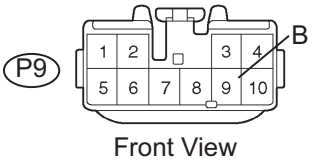

Y

B126370E02

(b) Measure the voltage.

Standard Voltage (Double cab)

Tester Connection	Condition	Specified Condition
P9-7 (B) - Body ground	Ignition switch ON	10 to 14 V

Standard Voltage (Access cab)

Tester Connection	Condition	Specified Condition
P9-9 (B) - Body ground	Ignition switch ON	10 to 14 V

NG → **REPAIR OR REPLACE HARNESS OR CONNECTOR (DRIVER SIDE J/B - REGULATOR MASTER SWITCH)**

OK

3 CHECK POWER WINDOW REGULATOR MOTOR ASSEMBLY LH

(a) Disconnect the P9 power window regulator master switch connector.
(b) Using a service wire, connect the terminals according to the table below.
(c) Turn the ignition switch to ON.
(d) Check the operation of the power window regulator motor assembly LH.

Wire Harness Side (Double Cab):

Power Window Regulator
Master Switch Assembly

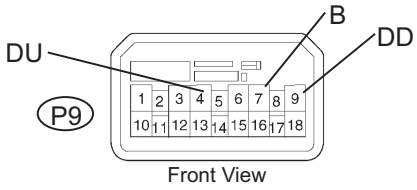

Wire Harness Side (Access Cab):

Power Window Regulator Master Switch

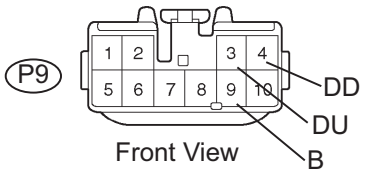

Y

B126370E03

OK (Double cab)

Wire Connection	Specified Condition
P9-4 (DU) - P9-7 (B) P9-9 (DD) - Body ground	Power window moves UP
P9-4 (DU) - Body ground P9-7 (B) - P9-9 (DD)	Power window moves DOWN

OK (Access cab)

Wire Connection	Specified Condition
P9-3 (DU) - P9-9 (B) P9-4 (DD) - Body ground	Power window moves UP
P9-3 (DU) - Body ground P9-9 (B) - P9-4 (DD))	Power window moves DOWN

(e) Reconnect the power window regulator master switch connector.

OK → **REPLACE POWER WINDOW REGULATOR MASTER SWITCH ASSEMBLY**

WS

NG

4	INSPECT POWER WINDOW REGULATOR MASTER SWITCH ASSEMBLY (SWITCH OPERATION)

Component Side (Double Cab):

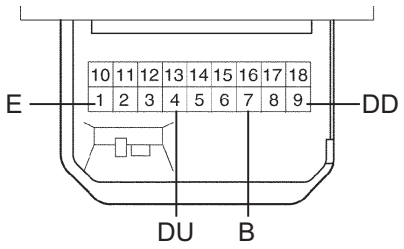

Component Side (Access Cab):

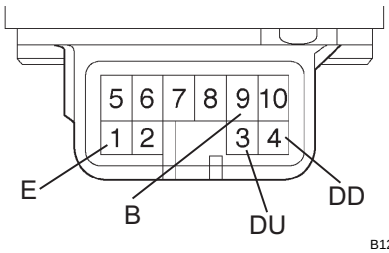

B126368E01

(a) Remove the power window regulator master switch.
(b) Disconnect the P9 power window regulator master switch connector.
(c) Measure the resistance between the terminals of the connector when the switch is operated.

Standard (Double cab)

Tester Connection	AUTO Switch	Specified Condition
P9-1 (E) - P9-9 (DD) P9-4 (DU) - P9-7 (B)	UP	Below 1 Ω
P9-1 (E) - P9-4 (DU) P9-1 (E) - P9-9 (DD)	OFF	Below 1 Ω
P9-1 (E) - P9-4 (DU) P9-7 (B) - P9-9 (DD)	DOWN	Below 1 Ω

Standard (Access cab)

Tester Connection	AUTO Switch	Specified Condition
P9-1 (E) - P9-4 (DD) P9-3 (DU) - P9-9 (B)	UP	Below 1 Ω
P9-1 (E) - P9-3 (DU) P9-1 (E) - P9-4 (DD)	OFF	Below 1 Ω
P9-1 (E) - P9-3 (DU) P9-9 (B) - P9-4 (DD)	DOWN	Below 1 Ω

(d) Reconnect the power window regulator master switch connector.
(e) Reinstall the power window regulator master switch.

NG → REPLACE POWER WINDOW REGULATOR MASTER SWITCH ASSEMBLY

OK

5	CHECK HARNESS AND CONNECTOR (REGULATOR MASTER SWITCH - REGULATOR MOTOR AND BODY GROUND)

(a) Disconnect the P9 power window regulator master switch connector.
(b) Disconnect the P10 power window regulator motor connector.

Wire Harness Side (Double Cab):

Power Window Regulator Master Switch

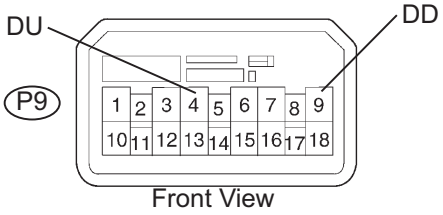

Power Window Regulator Motor Assembly LH (Driver Side)

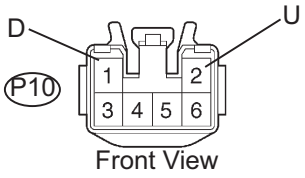

Wire Harness Side (Access Cab):

Power Window Regulator Master Switch

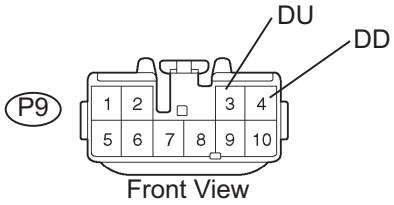

Power Window Regulator Motor Assembly LH (Driver Side)

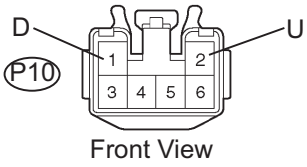

B126367E01

(c) Measure the resistance.

Standard (Double cab)

Tester Connection	Specified Condition
P9-9 (DD) - P10-1 (D)	Below 1 Ω
P9-4 (DU) - P10-2 (U)	Below 1 Ω
P9-9 (DD) - Body ground	10 kΩ or higher
P9-4 (DU) - Body ground	10 kΩ or higher

Standard (Access cab)

Tester Connection	Specified Condition
P9-4 (DD) - P10-1 (D)	Below 1 Ω
P9-3 (DU) - P10-2 (U)	Below 1 Ω
P9-4 (DD) - Body ground	10 kΩ or higher
P9-3 (DU) - Body ground	10 kΩ or higher

(d) Reconnect the power window regulator master switch connector.

(e) Reconnect the power window regulator motor connector.

NG → **REPAIR OR REPLACE HARNESS OR CONNECTOR**

OK

6	INSPECT POWER WINDOW REGULATOR MOTOR ASSEMBLY LH

(a) Remove the power window regulator motor.

(b) Apply battery voltage to connector terminals 1 and 2.

WS

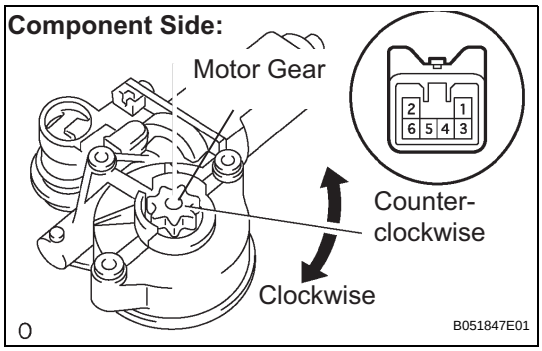

(c) Check that the motor smoothly rotates.
NOTICE:
Do not apply battery voltage to any terminals except terminals 1 and 2.
OK

Terminal No.	Specified Condition
Battery positive (+) → 2 Battery negative (-) → 1	Motor gear rotates clockwise
Battery positive (+) → 1 Battery negative (-) → 2	Motor gear rotates counterclockwise

(d) Reinstall the power window regulator motor.

NG → **REPLACE POWER WINDOW REGULATOR MOTOR ASSEMBLY LH**

OK

REPAIR OR REPLACE HARNESS OR CONNECTOR (MASTER SWITCH - REGULATOR SWITCH)

WS

Front Passenger Side Power Window does not Operate with Front Passenger Side Power Window Switch

DESCRIPTION

If the passenger side manual UP/DOWN function does not operate, the power window regulator motor assembly, the power window regulator switch assembly or the wire harness may be malfunctioning.

WIRING DIAGRAM

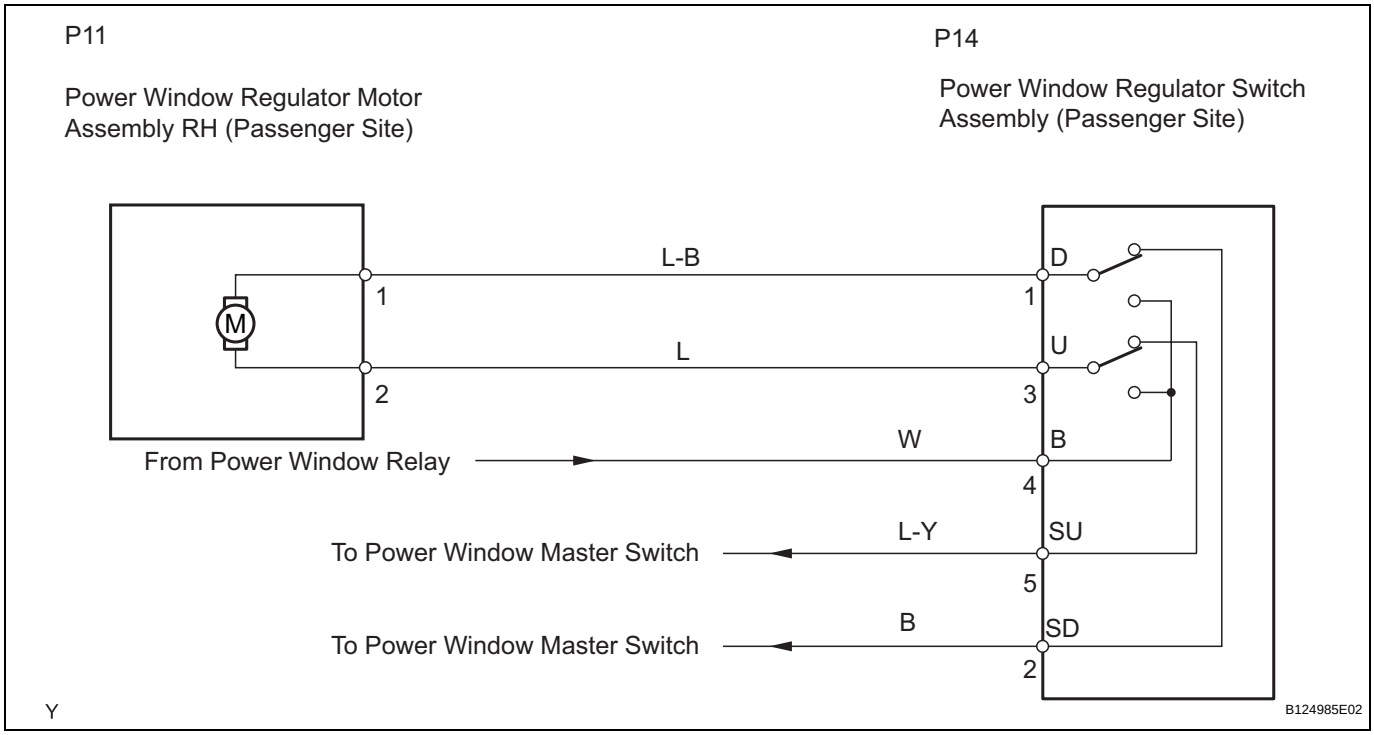

1	CHECK POWER WINDOW REGULATOR SWITCH ASSEMBLY (B VOLTAGE)

Wire Harness Side:

Power Window Regulator Switch Assembly (Passenger Side)

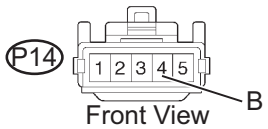

B062901E04

(a) Disconnect the P14 power window regulator switch connector.
(b) Turn the ignition switch ON.
(c) Measure the voltage.

Standard

Tester Connection	Condition	Specified Condition
P14-4 (B) - Body ground	Ignition switch ON	10 to 14 V

(d) Reconnect the power window regulator switch connector.

NG → **REPAIR OR REPLACE HARNESS OR CONNECTOR (DRIVER SIDE J/B - REGULATOR SWITCH)**

OK

2	INSPECT POWER WINDOW REGULATOR SWITCH ASSEMBLY (SWITCH OPERATION)

Component Side:

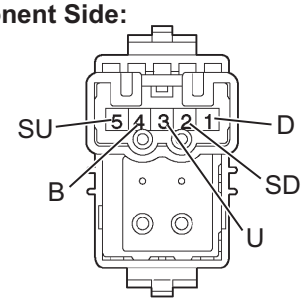

(a) Remove the power window regulator switch.
(b) Disconnect the P14 power window regulator switch connector.
(c) Measure the resistance between the terminals of the connector when the switch is operated.

Standard

Tester Connection	Regulator Switch	Specified Condition
P14-1 (D) - P14-2 (SD) P14-3 (U) - P14-4 (B)	UP	Below 1 Ω
P14-1 (D) - P14-2 (SD) P14-3 (U) - P14-5 (SU)	OFF	Below 1 Ω
P14-1 (D) - P14-4 (B) P14-3 (U) - P14-5 (SU)	DOWN	Below 1 Ω

(d) Reconnect the power window regulator switch connector.
(e) Reinstall the power window regulator switch.

NG → **REPLACE POWER WINDOW REGULATOR SWITCH ASSEMBLY**

OK

3	CHECK HARNESS AND CONNECTOR (REGULATOR SWITCH - REGULATOR MOTOR AND BODY GROUND)

Wire Harness Side:

Power Window Regulator Switch Assembly (Passenger Side)

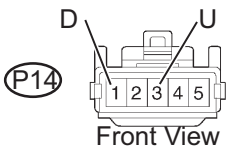

Power Window Regulator Motor Assembly RH (Passenger Side)

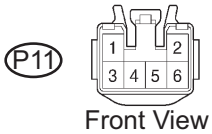

B063164E05

(a) Disconnect the P14 power window regulator switch connector.
(b) Disconnect the P11 power window regulator motor connector.
(c) Measure the resistance.

Standard

Tester Connection	Specified Condition
P14-1 (D) - P11-1	Below 1 Ω
P14-3 (U) - P11-2	Below 1 Ω
P14-1 (D) - Body ground	10 kΩ or higher
P14-3 (U) - Body ground	10 kΩ or higher

(d) Reconnect the power window regulator switch connector.
(e) Reconnect the power window regulator motor connector.

NG → **REPAIR OR REPLACE HARNESS OR CONNECTOR**

OK

4	**INSPECT POWER WINDOW REGULATOR MOTOR ASSEMBLY RH**

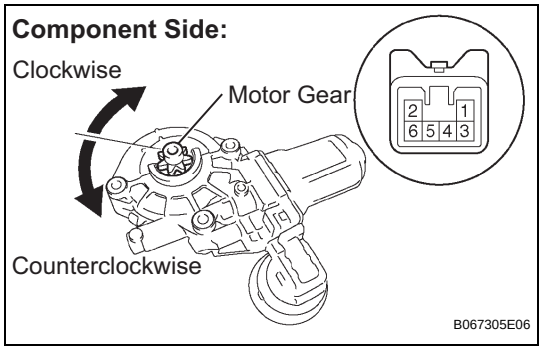

(a) Remove the power window regulator motor.
(b) Apply battery voltage to connector terminals 1 and 2.
(c) Check that the motor smoothly rotates.
NOTICE:
Do not apply battery voltage to any terminals except terminals 1 and 2.
OK

Terminal No.	Specified Condition
Battery positive (+) → 1 Battery negative (-) → 2	Motor gear rotates clockwise
Battery positive (+) → 2 Battery negative (-) → 1	Motor gear rotates counterclockwise

(d) Reinstall the power window regulator motor.

NG → **REPLACE POWER WINDOW REGULATOR MOTOR ASSEMBLY RH**

OK

REPAIR OR REPLACE HARNESS OR CONNECTOR (MASTER SWITCH - REGULATOR SWITCH)

Rear Power Window LH does not Operate with Rear Power Window Switch LH

DESCRIPTION

If the rear LH side manual UP/DOWN function does not operate, the power window regulator motor assembly, the power window regulator switch assembly or the wire harness may be malfunctioning.

WIRING DIAGRAM

WS

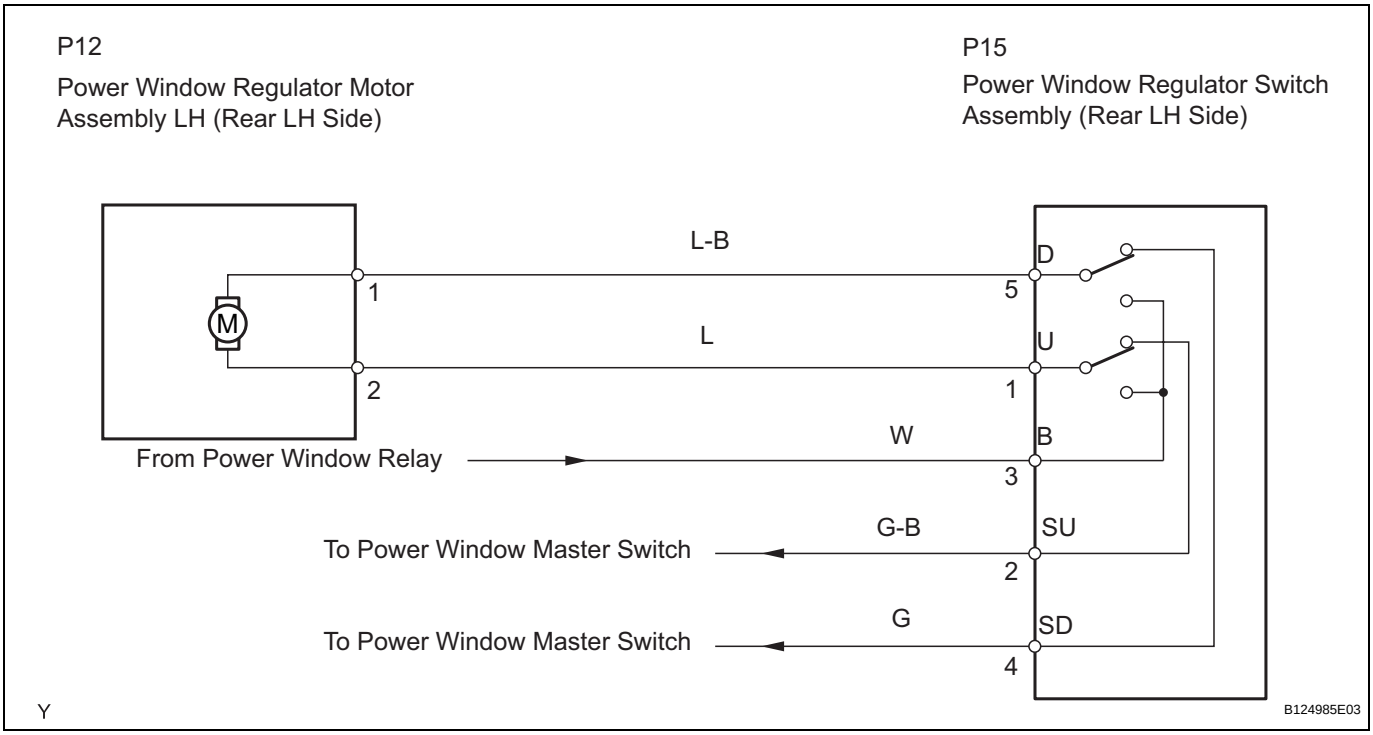

1	CHECK REAR POWER WINDOW REGULATOR SWITCH ASSEMBLY (B VOLTAGE)

Wire Harness Side:

Power Window Regulator Switch Assembly (Rear LH Side)

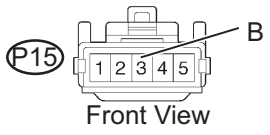

B062901E05

(a) Disconnect the P15 power window regulator switch connector.
(b) Turn the ignition switch ON.
(c) Measure the voltage.

Standard

Tester Connection	Condition	Specified Condition
P15-3 (B) - Body ground	Ignition switch ON	10 to 14 V

(d) Reconnect the power window regulator switch connector.

NG → **REPAIR OR REPLACE HARNESS OR CONNECTOR (DRIVER SIDE J/B - REGULATOR SWITCH)**

OK

2	**INSPECT POWER WINDOW REGULATOR SWITCH ASSEMBLY (REAR LH) (SWITCH OPERATION)**

Component Side:

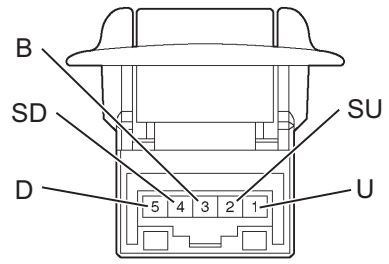

(a) Remove the power window regulator switch.
(b) Disconnect the P15 power window regulator switch connector.
(c) Measure the resistance between the terminals of the connector when the switch is operated.
Standard

Tester Connection	Regulator Switch	Specified Condition
P15-5 (D) - P15-4 (SD) P15-1 (U) - P15-3 (B)	UP	Below 1 Ω
P15-5 (D) - P15-4 (SD) P15-1 (U) - P15-2 (SU)	OFF	Below 1 Ω
P15-5 (D) - P15-3 (B) P15-1 (U) - P15-2 (SU)	DOWN	Below 1 Ω

(d) Reconnect the power window regulator switch connector.
(e) Reinstall the power window regulator switch.

NG → **REPLACE REAR POWER WINDOW REGULATOR SWITCH ASSEMBLY**

OK

3	**CHECK HARNESS AND CONNECTOR (REGULATOR SWITCH - REGULATOR MOTOR AND BODY GROUND)**

Wire Harness Side:

Power Window Regulator Switch Assembly (Rear LH Side)

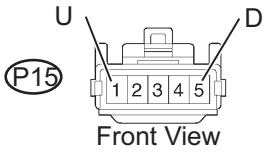

Power Window Regulator Motor Assembly LH (Rear LH Side)



(a) Disconnect the P15 power window regulator switch connector.
(b) Disconnect the P12 power window regulator motor connector.
(c) Measure the resistance.
Standard

Tester Connection	Specified Condition
P15-5 (D) - P12-1	Below 1 Ω
P15-1 (U) - P12-2	Below 1 Ω
P15-5 (D) - Body ground	10 kΩ or higher
P15-1 (U) - Body ground	10 kΩ or higher

(d) Reconnect the power window regulator switch connector.
(e) Reconnect the power window regulator motor connector.

NG → **REPAIR OR REPLACE HARNESS OR CONNECTOR**

OK

WS

4	INSPECT POWER WINDOW REGULATOR MOTOR ASSEMBLY (REAR LH)

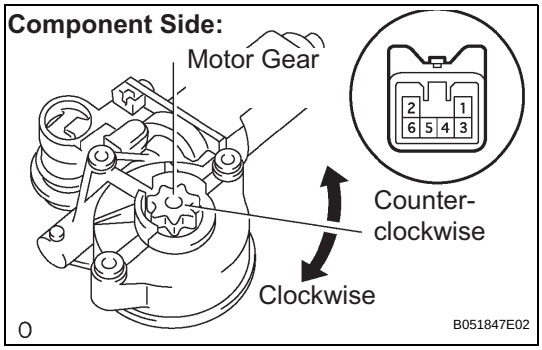

(a) Remove the power window regulator motor.
(b) Apply battery voltage to connector terminals 1 and 2.
(c) Check that the motor smoothly rotates.
NOTICE:
Do not apply battery voltage to any terminals except terminals 1 and 2.
OK

Terminal No.	Specified Condition
Battery positive (+) → 2 Battery negative (-) → 1	Motor gear rotates clockwise
Battery positive (+) → 1 Battery negative (-) → 2	Motor gear rotates counterclockwise

(d) Reinstall the power window regulator motor.

NG → **REPLACE POWER WINDOW REGULATOR MOTOR ASSEMBLY (REAR LH)**

OK

REPAIR OR REPLACE HARNESS OR CONNECTOR (MASTER SWITCH - REGULATOR SWITCH)

Rear Power Window RH does not Operate with Rear Power Window Switch RH

DESCRIPTION

If the rear RH side manual UP/DOWN function does not operate, the power window regulator motor assembly, the power window regulator switch assembly or the wire harness may be malfunctioning.

WIRING DIAGRAM

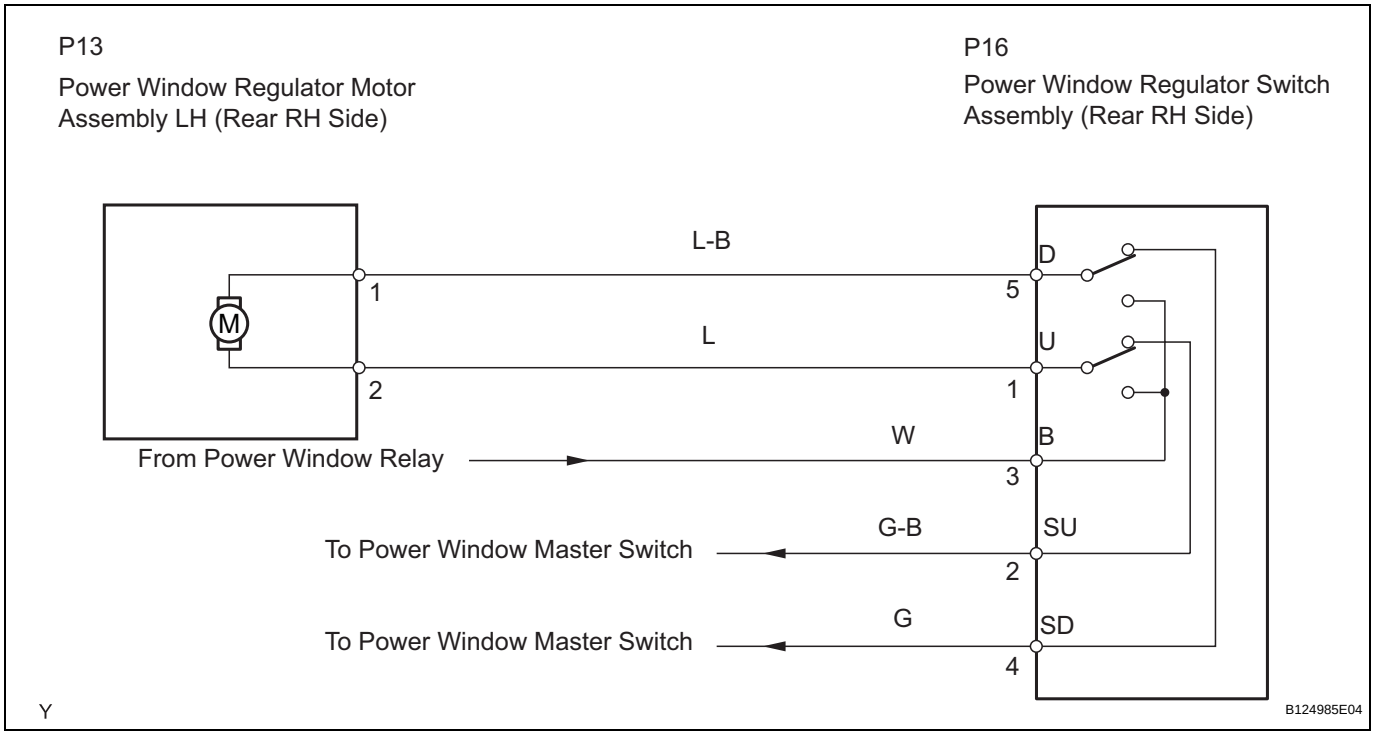

1	CHECK REAR POWER WINDOW REGULATOR SWITCH ASSEMBLY (B VOLTAGE)

Wire Harness Side:

Power Window Regulator Switch Assembly (Rear RH Side)

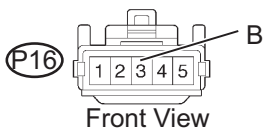

(a) Disconnect the P16 power window regulator switch connector.
(b) Turn the ignition switch ON.
(c) Measure the voltage.

Standard

Tester Connection	Condition	Specified Condition
P16-3 (B) - Body ground	Ignition switch ON	10 to 14 V

(d) Reconnect the power window regulator switch connector.

NG → **REPAIR OR REPLACE HARNESS OR CONNECTOR (DRIVER SIDE J/B - REGULATOR SWITCH)**

OK

2	INSPECT REAR POWER WINDOW REGULATOR SWITCH ASSEMBLY (SWITCH OPERATION)

Component Side:

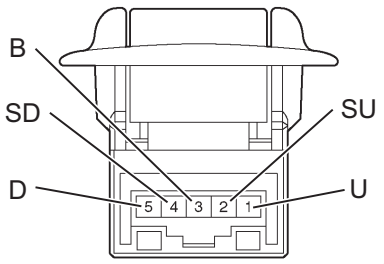

(a) Remove the power window regulator switch.
(b) Disconnect the P16 power window regulator switch connector.
(c) Measure the resistance between the terminals of the connector when the switch is operated.

Standard

Tester Connection	Regulator Switch	Specified Condition
P16-5 (D) - P16-4 (SD) P16-1 (U) - P16-3 (B)	UP	Below 1 Ω
P16-5 (D) - P16-4 (SD) P16-1 (U) - P16-2 (SU)	OFF	Below 1 Ω
P16-1 (D) - P16-3 (B) P16-1 (U) - P16-2 (SU)	DOWN	Below 1 Ω

(d) Reconnect the power window regulator switch connector.
(e) Reinstall the power window regulator switch.

NG → **REPLACE REAR POWER WINDOW REGULATOR SWITCH ASSEMBLY**

OK

3	CHECK HARNESS AND CONNECTOR (REGULATOR SWITCH - REGULATOR MOTOR AND BODY GROUND)

Wire Harness Side:

Power Window Regulator Switch Assembly (Rear RH Side)

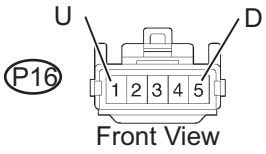

Power Window Regulator Motor Assembly RH (Rear RH Side)

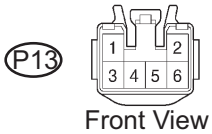

B063164E04

(a) Disconnect the P16 power window regulator switch connector.
(b) Disconnect the P13 power window regulator motor connector.
(c) Measure the resistance.

Standard

Tester Connection	Specified Condition
P16-5 (D) - P13-1	Below 1 Ω
P16-1 (U) - P13-2	Below 1 Ω
P16-5 (D) - Body ground	10 kΩ or higher
P16-1 (U) - Body ground	10 kΩ or higher

(d) Reconnect the power window regulator switch connector.
(e) Reconnect the power window regulator motor connector.

NG → **REPAIR OR REPLACE HARNESS OR CONNECTOR**

OK

4	**INSPECT POWER WINDOW REGULATOR MOTOR ASSEMBLY (REAR RH)**

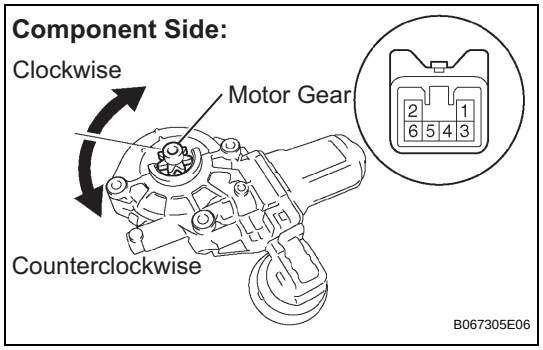

(a) Remove the power window regulator motor.
(b) Apply battery voltage to connector terminals 1 and 2.
(c) Check that the motor smoothly rotates.
NOTICE:
Do not apply battery voltage to any terminals except terminals 1 and 2.
OK

Terminal No.	Specified Condition
Battery positive (+) → 1 Battery negative (-) → 2	Motor gear rotates clockwise
Battery positive (+) → 2 Battery negative (-) → 1	Motor gear rotates counterclockwise

(d) Reinstall the power window regulator motor.

NG → **REPLACE POWER WINDOW REGULATOR MOTOR ASSEMBLY (REAR RH)**

OK

REPAIR OR REPLACE HARNESS OR CONNECTOR (REGULATOR MASTER SWITCH - REGULATOR SWITCH)

WS

Power Windows do not Operate at All

DESCRIPTION

If none of the door windows operate, there may be a failure in the supply of power to the power window regulator master switch assembly, or the power window regulator master switch itself may be malfunctioning.

WIRING DIAGRAM

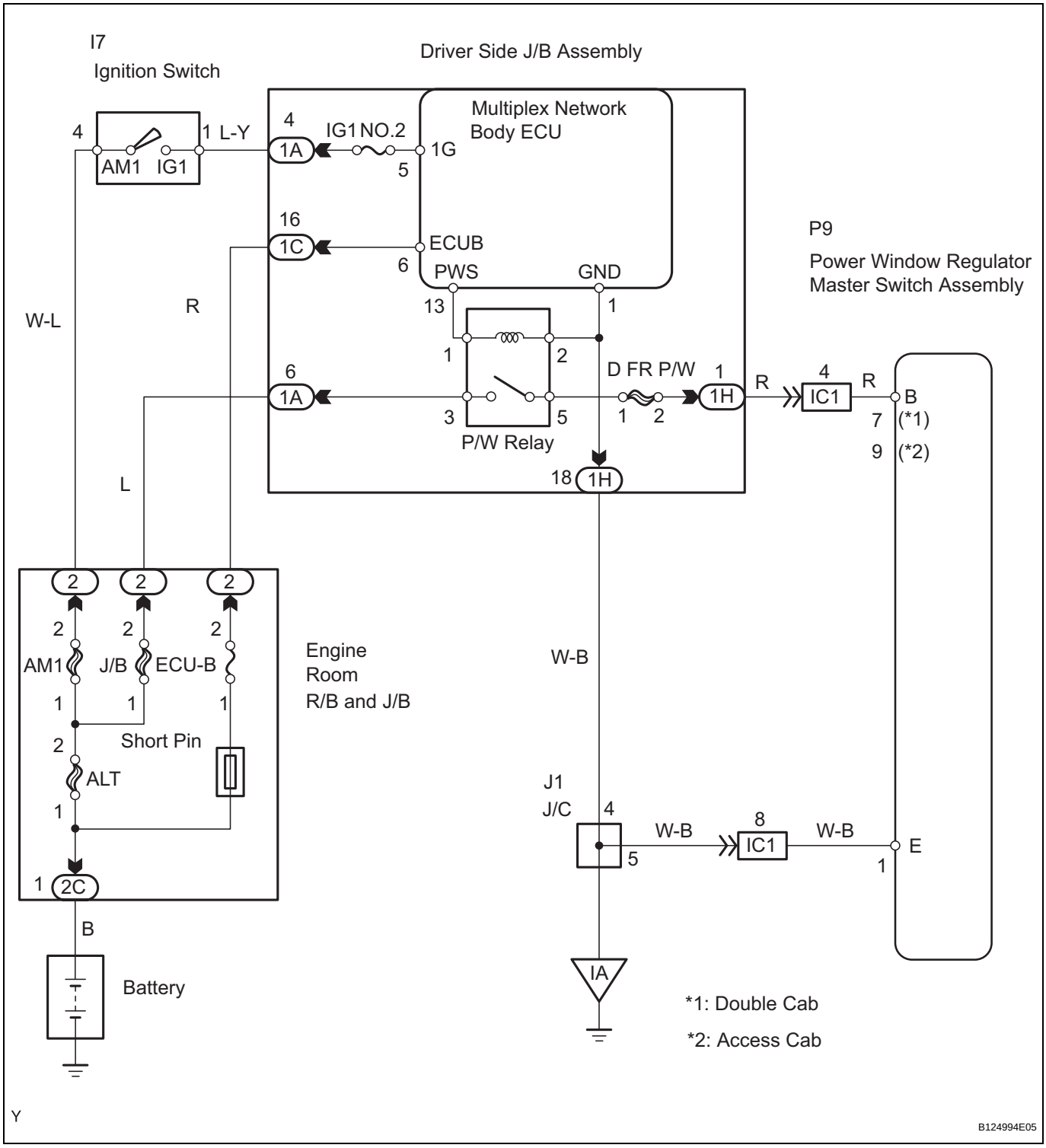

1	**INSPECT FUSE (D FR P/W, IG1 NO.2, ECU-B, AM1, J/B)**

(a) Remove the D FR P/W and IG1 No.2 fuses from the driver side J/B.
(b) Remove the ECU-B, AM1 and J/B fuses from the engine room R/B.
(c) Measure the resistance.
Standard resistance:
Below 1 Ω
(d) Reinstall the D FR P/W and IG1 No.2 fuses.
(e) Reinstall the ECU-B, AM1 and J/B fuses.

NG → **REPLACE FUSE**

OK

2	**INSPECT RELAY (P/W)**

P/W Relay:

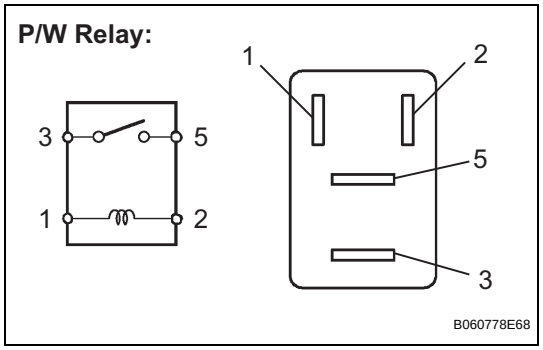

(a) Remove the P/W relay from the driver side J/B.
(b) Measure the resistance.
Standard voltage

Tester Connection	Specified Condition
3 - 5	10 kΩ or higher
3 - 5	Below 1 Ω (when battery voltage is applied to terminals 1 and 2)

(c) Reinstall the P/W relay.

NG → **REPLACE RELAY**

OK

3	CHECK HARNESS AND CONNECTOR (FOR POWER SOURCE OF DRIVER SIDE J/B ASSEMBLY)

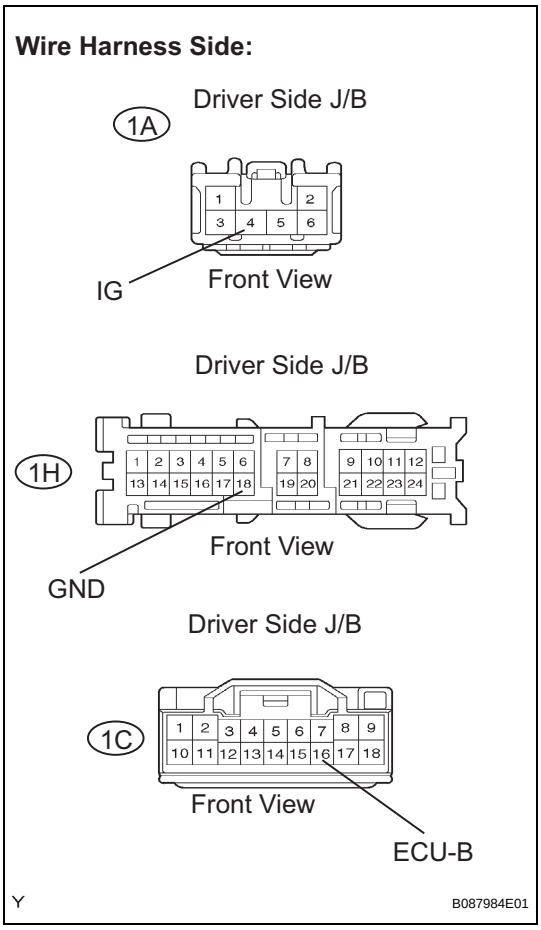

(a) Disconnect the 1A,1C, and 1H driver side J/B connectors.

(b) Measure the voltage and resistance.

Standard voltage

Tester Connection	Condition	Specified Condition
1A-6 - Body ground	Constant	10 to 14 V
1C-16 (ECU-B) - Body ground	Constant	10 to 14 V
1A-4 (IG) - Body ground	Ignition switch ON	10 to 14 V

Standard resistance

Tester Connection	Condition	Specified Condition
1H-18 (GND) - Body ground	Constant	Below 1 Ω

(c) Reconnect the driver side J/B connectors.

NG → **REPAIR OR REPLACE HARNESS OR CONNECTOR**

OK

4	CHECK HARNESS AND CONNECTOR (POWER WINDOW REGULATOR MASTER SWITCH ASSEMBLY - BODY GROUND)

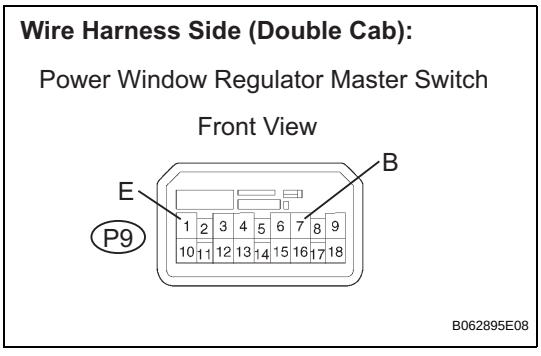

(a) Disconnect the P9 power window regulator master switch connector.

(b) Measure the voltage or resistance.

Standard voltage:

Double cab

Tester Connection	Condition	Specified Condition
P9-7 (B) - Body ground	Ignition switch ON	10 to 14 V

Access cab

Tester Connection	Condition	Specified Condition
P9-9 (B) - Body ground	Ignition switch ON	10 to 14 V

Standard resistance:

Double cab

Tester Connection	Condition	Specified Condition
P9-1 (E) - Body ground	Constant	Below 1 Ω

Access cab

Tester Connection	Condition	Specified Condition
P9-1 (E) - Body ground	Constant	Below 1 Ω

Wire Harness Side (Access Cab):

Power Window Regulator Master Switch

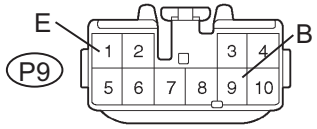

Front View

Y B087982E01

(c) Reconnect the power window regulator master switch connector.

OK → **REPLACE POWER WINDOW REGULATOR MASTER SWITCH ASSEMBLY**

NG

5 CHECK HARNESS AND CONNECTOR (DRIVER SIDE J/B - POWER WINDOW REGULATOR MASTER SWITCH)

Wire Harness Side (Double Cab):

Power Window Regulator Master Switch

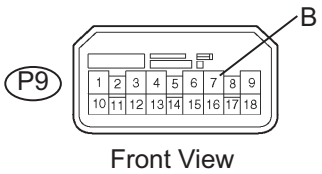

Front View

Driver Side J/B

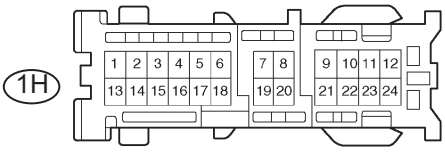

Front View

Y B087985E01

(a) Disconnect the 1H driver side J/B connectors.
(b) Disconnect the P9 power window regulator master switch connector.
(c) Measure the resistance.

Standard resistance (Double cab)

Tester Connection	Specified Condition
1H-1 - P9-7 (B)	Below 1 Ω

Standard resistance (Access cab)

Tester Connection	Specified Condition
1H-1 - P9-9 (B)	Below 1 Ω

(d) Reconnect the driver side J/B connector.

WS

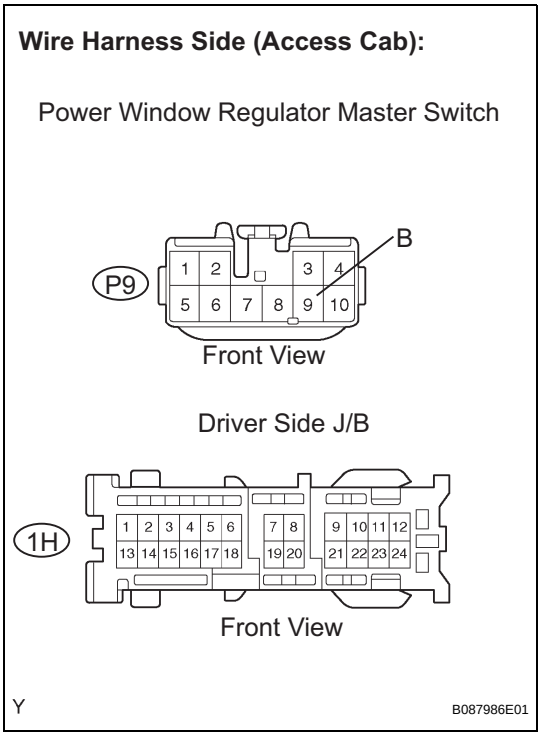

(e) Reconnect the power window regulator master switch connector.

NG → **REPAIR OR REPLACE HARNESS OR CONNECTOR**

OK

REPLACE DRIVER SIDE JUNCTION BLOCK

Power Window can be Operated After Ignition Switch is Turned OFF Even if Operative Conditions are not Met

DESCRIPTION

The multiplex network body ECU keeps power supplied to the power window regulator master switch assembly and the regulator switch for 43 seconds after the ignition switch is turned OFF. However, if either front door is opened, if a signal from any of the front door courtesy light switches is input to the ECU during this period, or if 43 seconds pass with no action being taken, the body ECU cuts power to the master switch assembly.

WIRING DIAGRAM

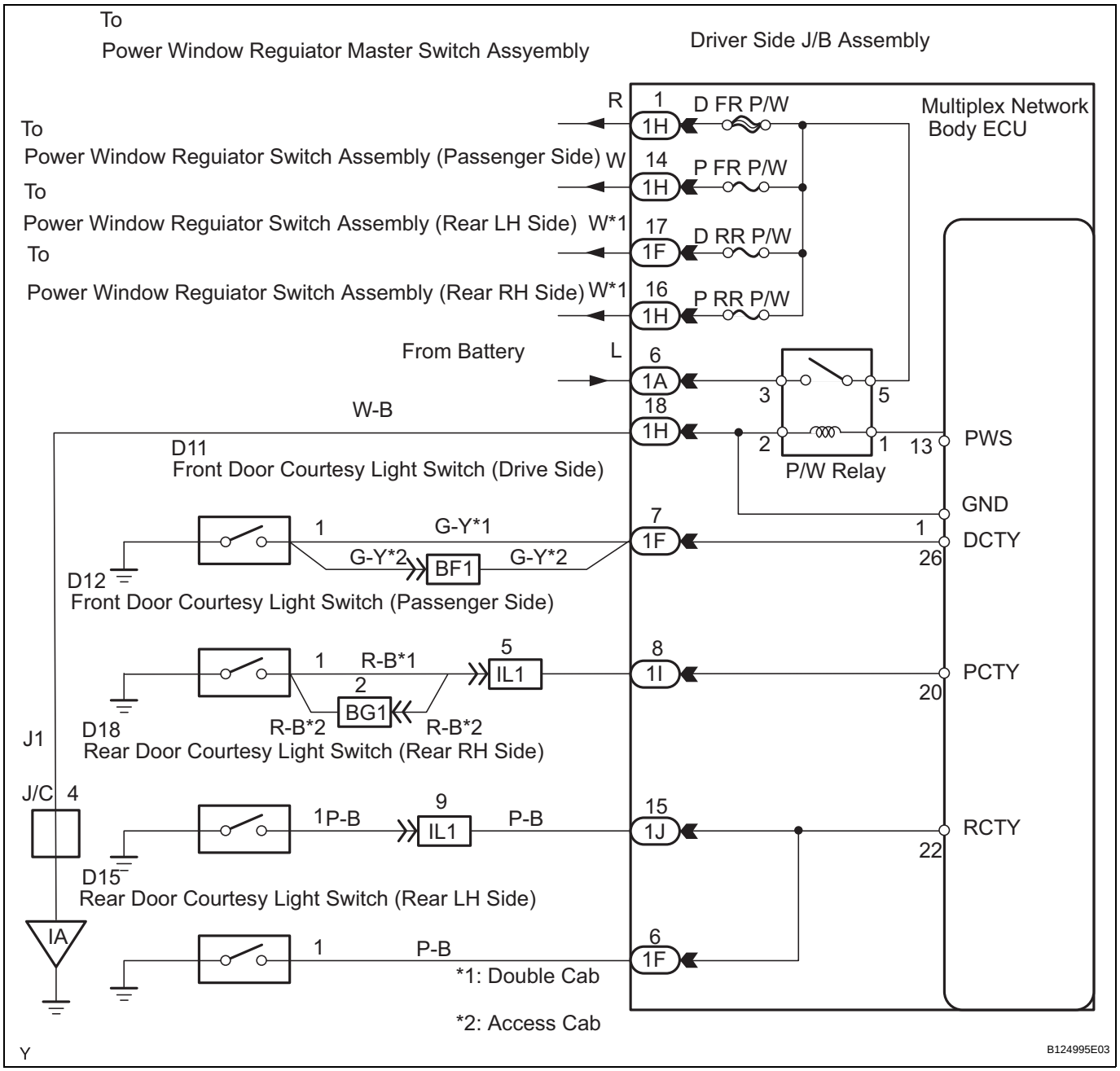

1	CHECK OPERATION FUNCTION AFTER IGNITION SWITCH IS TURNED OFF

(a) After the ignition switch is turned OFF:
  (1) Either front door is opened within 43 seconds but the power window can still operate. Proceed to A.
  (2) 43 seconds pass and the power window can still operate. Proceed to B.

B → **REPLACE POWER WINDOW REGULATOR SWITCH ASSEMBLY**

WS

A

2	INSPECT FRONT DOOR COURTESY LIGHT SWITCH ASSEMBLY

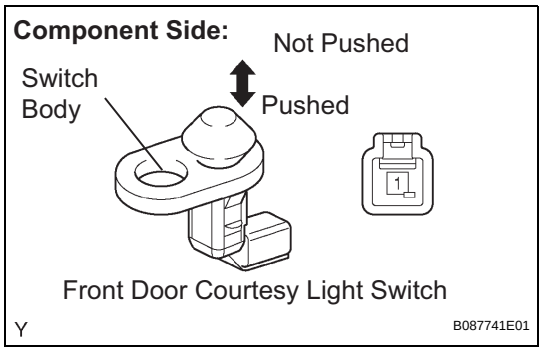

(a) Remove the front door courtesy light switch.
(b) Measure the switch resistance.

Standard resistance

Tester Connection	Condition	Specified Condition
1 - Switch body	Switch pushed	10 kΩ or higher
1 - Switch body	Switch not pushed	Below 1 Ω

(c) Reinstall the front door courtesy light switch.

NG → **REPLACE FRONT DOOR COURTESY LIGHT SWITCH ASSEMBLY**

OK

3	**CHECK HARNESS AND CONNECTOR (FRONT DOOR COURTESY LIGHT SWITCH - DRIVER SIDE J/B (ECU))**

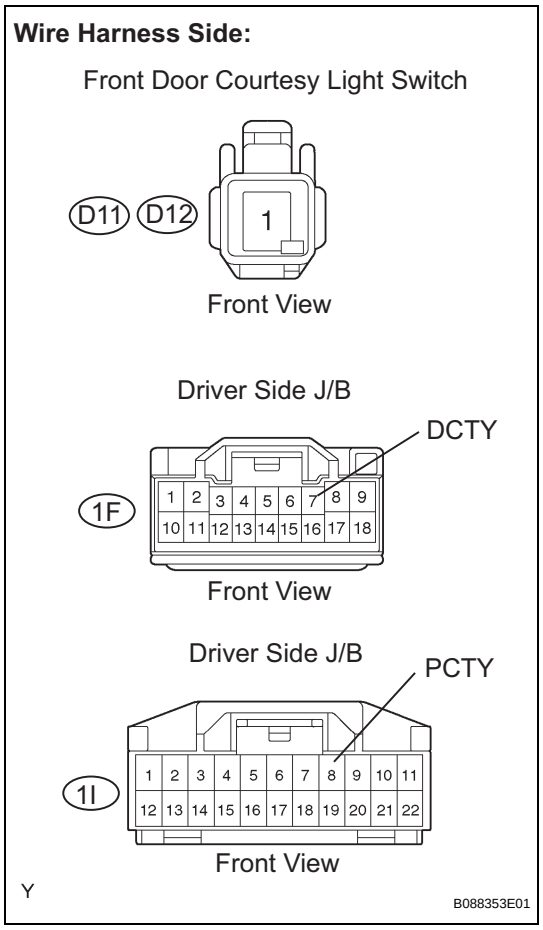

(a) Disconnect the D11 and D12 front door courtesy light switch connector.
(b) Disconnect the 1F and 1I driver side J/B connector.
(c) Measure the resistance.
Standard resistance

Tester Connection	Specified Condition
D11-1 - DCTY (1F-7)	Below 1 Ω
D12-1 - PCTY (1I-8)	Below 1 Ω

(d) Reconnect the front door courtesy light switch connector.
(e) Reconnect the driver side J/B connector.

NG → **REPAIR OR REPLACE HARNESS OR CONNECTOR**

OK

REPLACE DRIVER SIDE JUNCTION BLOCK (MULTIPLEX NETWORK BODY ECU)

WS

REMOVAL

1. **DISCONNECT CABLE FROM NEGATIVE BATTERY TERMINAL**
2. **REMOVE FRONT WIPER ARM HEAD CAP (See page WW-7)**
3. **REMOVE FRONT WIPER ARM LH (See page WW-8)**
4. **REMOVE FRONT WIPER ARM RH (See page WW-8)**
5. **REMOVE FRONT FENDER TO COWL SIDE SEAL LH (See page WW-8)**
6. **REMOVE FRONT FENDER TO COWL SIDE SEAL RH**
   HINT:
   Follow the same procedures as for the fender to cowl side seal LH.
7. **REMOVE COWL TOP VENTILATOR LOUVER SUB-ASSEMBLY (See page WW-8)**
8. **REMOVE INNER REAR VIEW MIRROR ASSEMBLY (See page MI-4)**
9. **REMOVE FRONT DOOR OPENING TRIM WEATHERSTRIP LH**
   (a) Separate the front door opening trim weatherstrip to the extent which allows the removal of the front pillar garnish.
10. **REMOVE FRONT DOOR OPENING TRIM WEATHERSTRIP RH**
    HINT:
    Follow the same procedures as for the front door opening trim weatherstrip LH.
11. **REMOVE FRONT PILLAR GARNISH LH (for Regular Cab) (See page IR-41)**
12. **REMOVE FRONT PILLAR GARNISH LH (for Access Cab) (See page IR-62)**
13. **REMOVE FRONT PILLAR GARNISH LH (for Double Cab) (See page IR-13)**
14. **REMOVE FRONT PILLAR GARNISH RH (for Regular Cab)**
    HINT:
    Follow the same procedures as for the front pillar garnish LH.
15. **REMOVE FRONT PILLAR GARNISH RH (for Access Cab)**
    HINT:
    Follow the same procedures as for the front pillar garnish LH.

16. **REMOVE FRONT PILLAR GARNISH RH (for Double Cab)**
HINT:
Follow the same procedures as for the front pillar garnish LH.

17. **REMOVE ROOF CONSOLE BOX ASSEMBLY (for Access Cab) (See page IR-66)**

18. **REMOVE ROOF CONSOLE BOX ASSEMBLY (for Double Cab) (See page IR-18)**

19. **REMOVE ASSIST GRIP PLUG (w/ Curtain Shield Airbag) (See page IR-19)**

20. **REMOVE ASSIST GRIP SUB-ASSEMBLY (for Double Cab) (See page IR-18)**

21. **REMOVE VISOR ASSEMBLY LH (for Regular Cab) (See page IR-45)**

22. **REMOVE VISOR ASSEMBLY LH (for Access Cab) (See page IR-67)**

23. **REMOVE VISOR ASSEMBLY RH (for Double Cab) (See page IR-19)**

24. **REMOVE VISOR ASSEMBLY RH (for Regular Cab)**
HINT:
Follow the same procedures as for the LH visor.

25. **REMOVE VISOR ASSEMBLY RH (for Access Cab)**
HINT:
Follow the same procedures as for the LH visor.

26. **REMOVE VISOR ASSEMBLY RH (for Double Cab)**
HINT:
Follow the same procedures as for the LH visor.

27. **REMOVE VISOR HOLDER (for Regular Cab) (See page IR-45)**

28. **REMOVE VISOR HOLDER (for Access Cab) (See page IR-67)**

29. **REMOVE VISOR HOLDER (for Double Cab) (See page IR-19)**

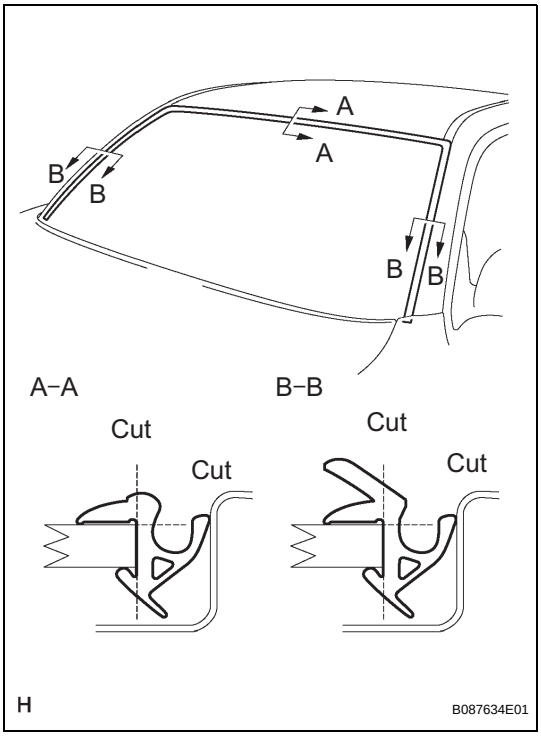

30. REMOVE WINDSHIELD UPPER MOLDING OUTER

(a) Using a knife, cut off the windshield upper moulding outer, as shown in the illustration.
NOTICE:
Be careful not to damage the vehicle body with the knife.

(b) Remove the windshield upper moulding outer.
HINT:
Make a partial cut in the windshield upper moulding outer. Then pull and remove it by hand.

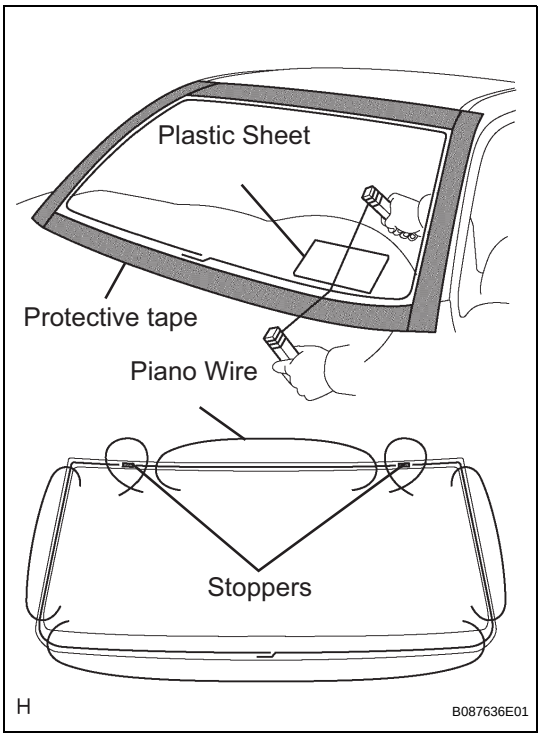

31. REMOVE WINDSHIELD GLASS

(a) Apply protective tape to the outer circumference of the windshield glass, as shown in the illustration.

(b) From the interior, insert piano wires between the vehicle body and windshield glass, as shown in the illustration.

(c) Tie objects that can serve as handles (for example, wooden blocks) to all wire ends.
NOTICE:
- **When separating the windshield glass from the vehicle, be careful not to damage the vehicle's paint or exterior/interior ornaments.**
- **To prevent the safety pad from being scratched when removing the windshield glass, place a plastic sheet between the piano wire and safety pad.**

(d) Cut through the adhesive by pulling the piano wire around the windshield glass.

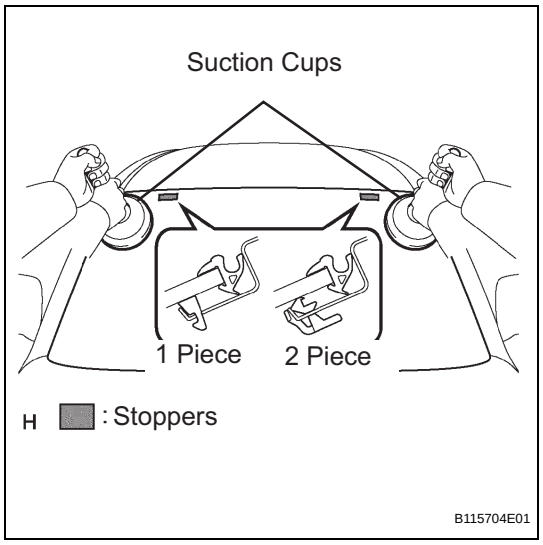

(e) Disengage the 2 stoppers.
(f) Using suction cups, remove the windshield glass.
NOTICE:
Leave as much adhesive on the vehicle body as possible when removing the windshield glass.

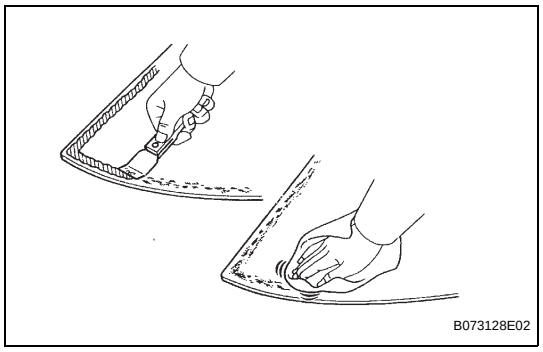

INSTALLATION

1. CLEAN WINDSHIELD GLASS

(a) Using a scraper, remove the damaged stoppers, dam and adhesive stuck to the windshield glass.
(b) Clean the outer circumference of the windshield glass with white gasoline.
NOTICE:
- **Do not touch the windshield glass surface after cleaning it.**
- **Even if using a new windshield glass, clean the windshield glass with white gasoline.**

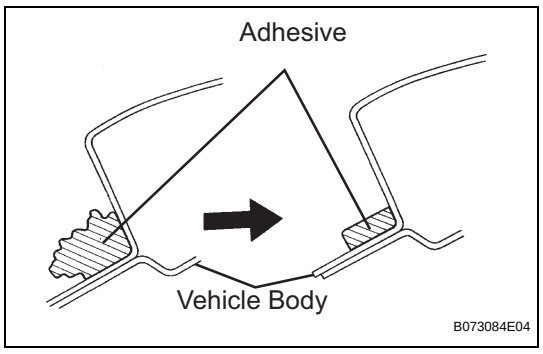

2. CLEAN VEHICLE BODY

(a) Clean and shape the contact surface of the vehicle body.
(1) Using a knife, cut away any rough adhesive on the contact surface of the vehicle body to ensure the appropriate surface shape.
NOTICE:
Be careful not to damage the vehicle body.
HINT:
Leave as much adhesive on the vehicle body as possible.
(2) Clean the contact surface of the vehicle body with a shop rag saturated with cleaner.
HINT:
Even if all the adhesive has been removed, clean the vehicle body.

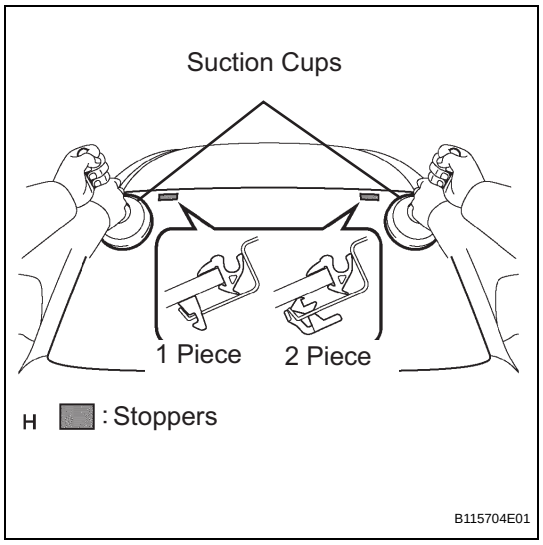

(e) Disengage the 2 stoppers.
(f) Using suction cups, remove the windshield glass.
NOTICE:
Leave as much adhesive on the vehicle body as possible when removing the windshield glass.

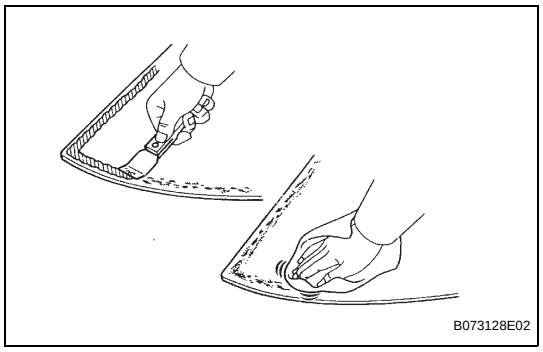

INSTALLATION

1. CLEAN WINDSHIELD GLASS

(a) Using a scraper, remove the damaged stoppers, dam and adhesive stuck to the windshield glass.
(b) Clean the outer circumference of the windshield glass with white gasoline.
NOTICE:
- **Do not touch the windshield glass surface after cleaning it.**
- **Even if using a new windshield glass, clean the windshield glass with white gasoline.**

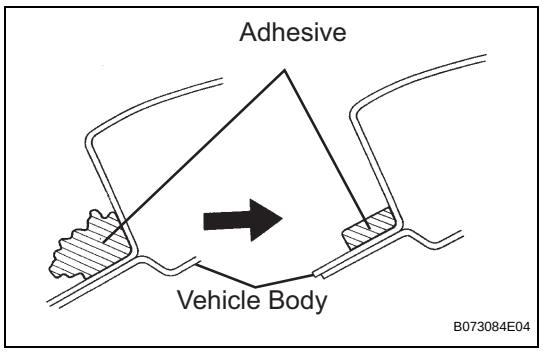

2. CLEAN VEHICLE BODY

(a) Clean and shape the contact surface of the vehicle body.
(1) Using a knife, cut away any rough adhesive on the contact surface of the vehicle body to ensure the appropriate surface shape.
NOTICE:
Be careful not to damage the vehicle body.
HINT:
Leave as much adhesive on the vehicle body as possible.
(2) Clean the contact surface of the vehicle body with a shop rag saturated with cleaner.
HINT:
Even if all the adhesive has been removed, clean the vehicle body.

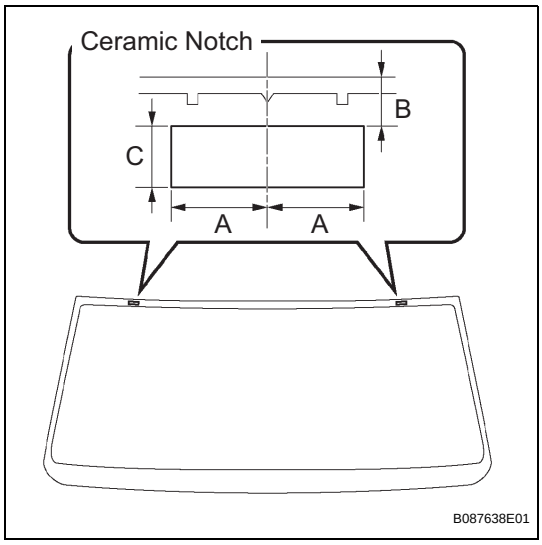

3. INSTALL NO. 2 WINDSHIELD GLASS STOPPER

(a) Apply Primer G to the installation part of the stoppers.

NOTICE:

- **Allow the primer to dry for 3 minutes or more.**
- **Throw away any leftover Primer G.**
- **Do not apply too much Primer G.**

(b) Install 2 new stoppers onto the windshield glass, as shown in the illustration.

Specification

Area	Measurement
A	40 mm (1.575 in.)
B	9.4 mm (0.37 in.)
C	12.5 mm (0.482 in.)

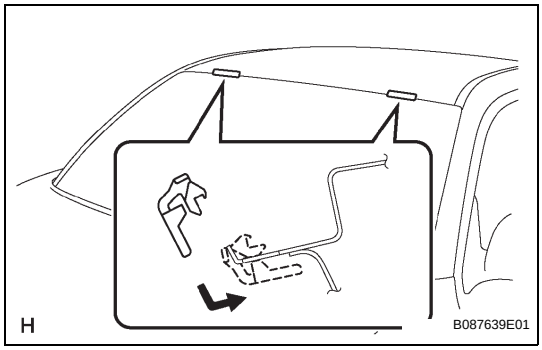

4. INSTALL NO. 1 WINDSHIELD GLASS STOPPER

(a) Install 2 new stoppers onto the vehicle body, as shown in the illustration.

5. INSTALL WINDSHIELD GLASS ADHESIVE DAM

(a) Apply Primer G to the illustration part of the dam.

NOTICE:

- **Allow the primer to dry for 3 minutes or more.**
- **Throw away any leftover Primer G.**
- **Do not apply too much Primer G.**

WS

(b) Install 3 new dams. Install the 3 new dams by applying double-sided tape all the way around the windshield glass except where the stoppers are installed, as shown in the illustration.

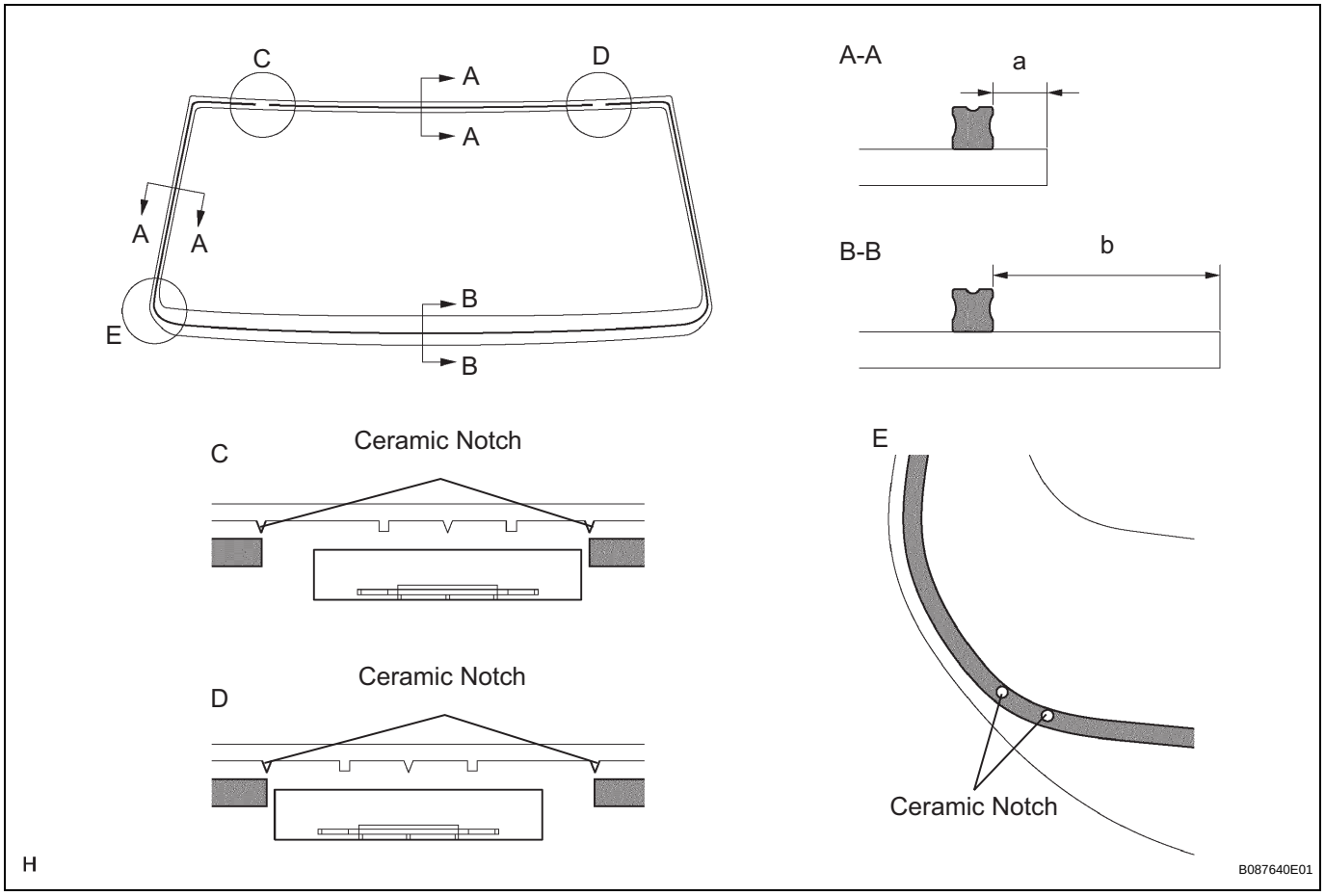

Specification

Area	Measurement
a	7.0 mm (0.276 in.)
b	30.9 mm (1.217 in.)

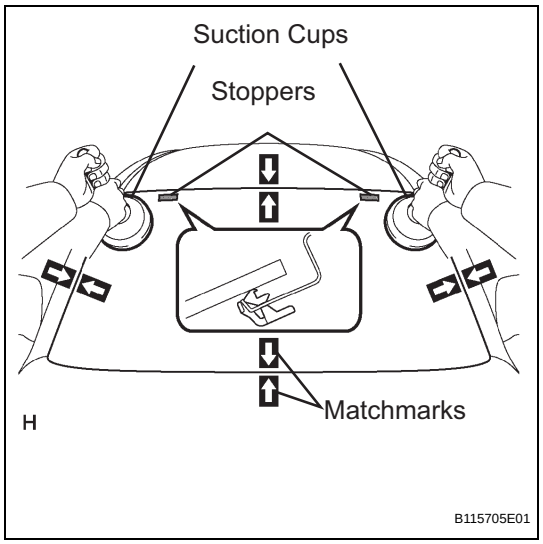

6. INSTALL WINDSHIELD GLASS

(a) Position the windshield glass.

(1) Using suction cups, place the windshield glass in the correct position.

(2) Check that the whole contact surface of the windshield glass rim is perfectly even.

(3) Place matchmarks over the windshield glass and vehicle body.

NOTICE:

Check that the stoppers are attached to the vehicle body correctly.

HINT:

When reusing the windshield glass, check and correct the matchmark positions.

(4) Using suction cups, remove the windshield glass.

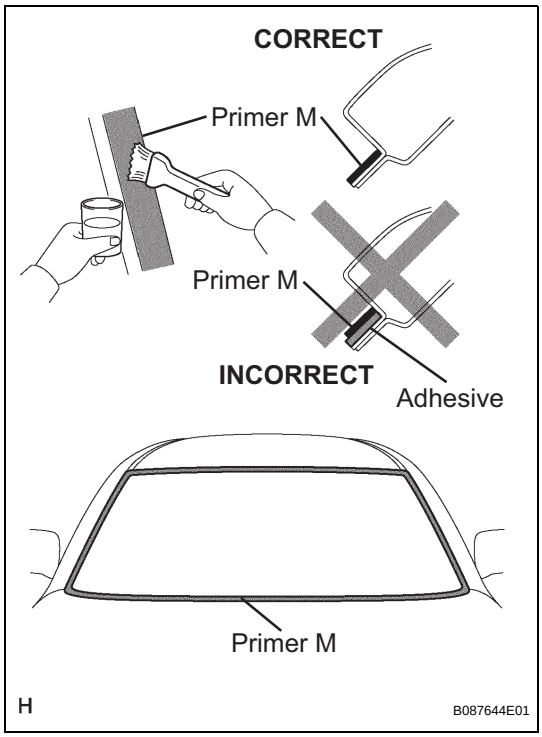

(b) Using a brush, apply Primer M to the exposed part of the vehicle body.
NOTICE:
- **Allow the primer to dry for 3 minutes or more.**
- **Do not apply Primer M to the adhesive.**
- **Throw away any leftover Primer M.**
- **Do not apply too much Primer M.**

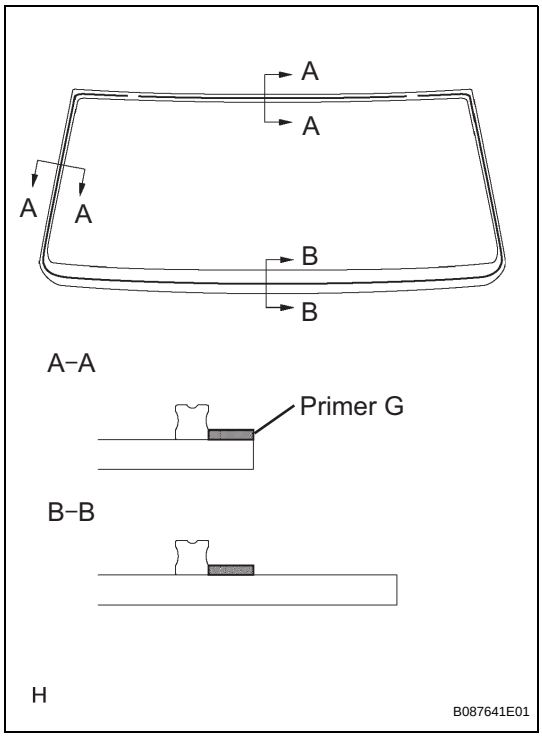

(c) Using a brush or sponge, apply Primer G to the edge of the windshield glass and contact surface.
NOTICE:
- **Allow the primer to dry for 3 minutes or more.**
- **Throw away any leftover Primer G.**
- **Do not apply too much Primer G.**

HINT:
If Primer G is applied to any areas other than that which is specified, wipe off the primer with a clean shop rag before it dries.

WS

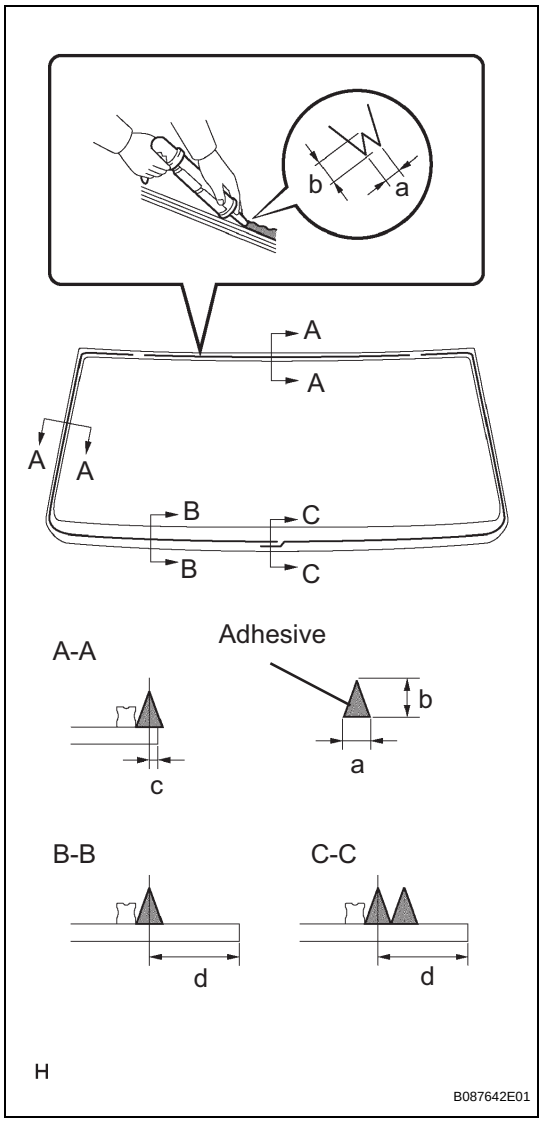

(d) Apply adhesive.
Adhesive:
Part No. 08850-00801 or equivalent
(1) Cut off the tip of the cartridge nozzle, as shown in the illustration.
HINT:
After cutting off the tip, use all adhesive within the times indicated in the table bellow.
Usage time frame

Temperature	Usage Time Frame
35°C (95°F)	15 minutes
20°C (68°F)	1 hour 40 minutes
5°C (41°F)	8 hours

(2) Load the sealer gun with the cartridge.
(3) Apply adhesive to the windshield glass as shown in the illustration.
Specification

Area	Measurement
a	8 mm (0.315 in.)
b	12 mm (0.472 in.)
c	3 mm (0.118 in.)
d	26.9 mm (1.059 in.)

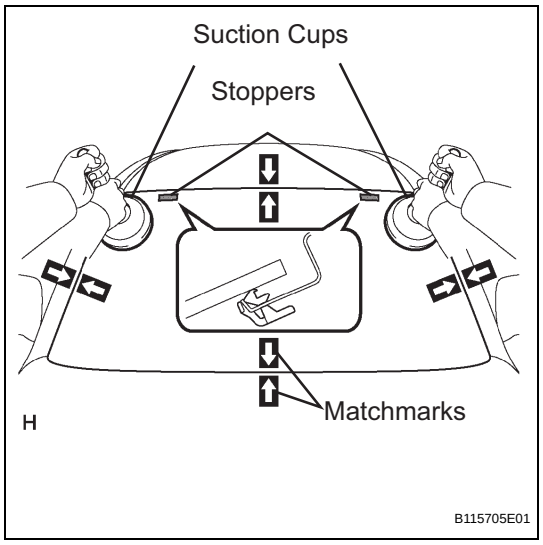

(e) Install the windshield glass onto the vehicle body.
(1) Using suction cups, position the windshield glass so that the matchmarks are aligned. Press it in gently along the rim
NOTICE:
- **Allow the primer to dry for 3 minutes or more.**
- **Check that the stoppers are attached to the vehicle body correctly.**
- **Check that the vehicle body and windshield glass have a small gap between them.**

(2) Lightly press the front surface of the windshield glass to ensure that the windshield glass is securely fitted to the vehicle body.

WS

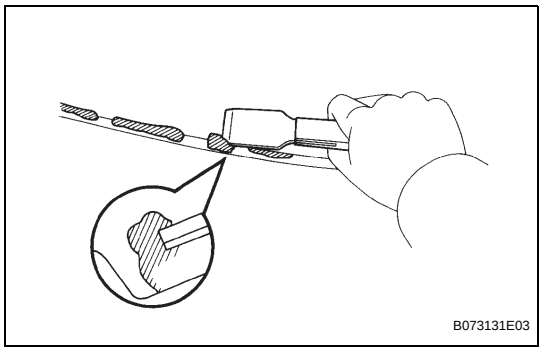

(3) Using a scraper, remove any excessive or protruding adhesive.
HINT:
Apply adhesive to the windshield glass rim.

WS

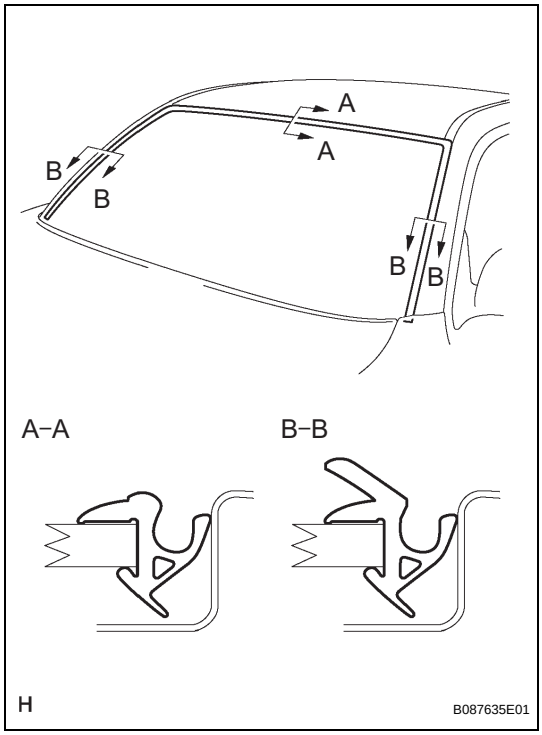

7. INSTALL WINDSHIELD UPPER MOULDING OUTER

(a) Using a brush or sponge, apply Primer G to the edge of the windshield glass and contact surface.
NOTICE:
- **Allow the primer to dry for 3 minutes or more.**
- **Throw away any leftover Primer G.**
- **Do not apply too mush Primer G.**

(b) Install the windshield upper moulding outer before the adhesive dries.
NOTICE:
Do not drive vehicle for the amount of time indicated in the table below.
Minimum time

Temperature	Minimum time prior to driving vehicle
35°C (95°F)	1 hour 30 minutes
20°C (68°F)	5 hours
5°C (41°F)	24 hours

8. INSTALL COWL TOP VENTILATOR LOUVER SUB-ASSEMBLY (See page WW-10)

9. INSTALL FRONT FENDER TO COWL SIDE SEAL LH (See page WW-11)

10. INSTALL FRONT FENDER TO COWL SIDE SEAL RH
HINT:
Follow the same procedures as for the fender to cowl side seal LH.

11. INSTALL FRONT WIPER ARM LH (See page WW-12)

12. INSTALL FRONT WIPER ARM RH (See page WW-11)

13. INSTALL FRONT WIPER ARM HEAD CAP (See page WW-12)

14. CHECK FOR LEAKAGE AND REPAIR

(a) Conduct a leak test after the adhesive has completely hardened.

(b) Seal any leakage with auto glass sealer.

15. INSTALL VISOR HOLDER (for Regular Cab) (See page IR-47)

16. INSTALL VISOR HOLDER (for Access Cab) (See page IR-70)

17. **INSTALL VISOR HOLDER (for Double Cab) (See page IR-22)**
18. **INSTALL VISOR ASSEMBLY LH (for Regular Cab) (See page IR-48)**
19. **INSTALL VISOR ASSEMBLY LH (for Access Cab) (See page IR-70)**
20. **INSTALL VISOR ASSEMBLY LH (for Double Cab) (See page IR-22)**
21. **INSTALL VISOR ASSEMBLY RH (for Regular Cab)**
    HINT:
    Follow the same procedures as for the LH visor.
22. **REMOVE VISOR ASSEMBLY RH (for Access Cab)**
    HINT:
    Follow the same procedures as for the LH visor.
23. **REMOVE VISOR ASSEMBLY RH (for Double Cab)**
    HINT:
    Follow the same procedures as for the LH visor.
24. **INSTALL ASSIST GRIP PLUG (w/ Curtain Shield Airbag) (See page IR-23)**
25. **INSTALL ASSIST GRIP SUB-ASSEMBLY (for Double Cab) (See page IR-23)**
26. **INSTALL ROOF CONSOLE BOX ASSEMBLY (for Access Cab) (See page IR-70)**
27. **INSTALL ROOF CONSOLE BOX ASSEMBLY (for Double Cab) (See page IR-23)**
28. **INSTALL FRONT PILLAR GARNISH LH (for Regular Cab) (See page IR-51)**
29. **INSTALL FRONT PILLAR GARNISH LH (for Access Cab) (See page IR-74)**
30. **INSTALL FRONT PILLAR GARNISH LH (for Double Cab) (See page IR-28)**
31. **INSTALL FRONT PILLAR GARNISH RH (for Regular Cab)**
    HINT:
    Follow the same procedures as for the front pillar garnish LH.
32. **REMOVE FRONT PILLAR GARNISH RH (for Access Cab)**
    HINT:
    Follow the same procedures as for the front pillar garnish LH.
33. **REMOVE FRONT PILLAR GARNISH RH (for Double Cab)**
    HINT:
    Follow the same procedures as for the front pillar garnish LH.

34. INSTALL FRONT DOOR OPENING TRIM WEATHERSTRIP LH

(a) Install the front door opening trim weatherstrip.

35. INSTALL FRONT DOOR OPENING TRIM WEATHERSTRIP RH

HINT:

Follow the same procedures as for the front opening trim weatherstrip LH.

36. INSTALL INNER REAR VIEW MIRROR ASSEMBLY (See page MI-5)

37. CONNECT CABLE TO NEGATIVE BATTERY TERMINAL

Torque: 3.9 N*m (40 kgf*cm, 35 in.*lbf)

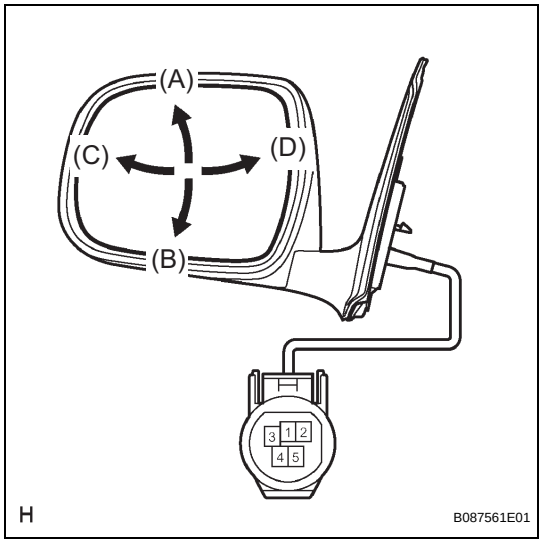

INSPECTION

1. INSPECT OUTER REAR VIEW MIRROR ASSEMBLY LH

(a) Check the operation.

(1) Apply battery voltage to the terminals and check the operation of the mirror face, as shown in the table and illustration.

Standard

Measurement Condition	Mirror Operation
Battery positive (+) - 3 (MV) Battery negative (-) - 1 (M+)	Turns upward (A)
Battery positive (+) - 1 (M+) Battery negative (-) - 3 (MV)	Turns downward (B)
Battery positive (+) - 2 (MH) Battery negative (-) - 1 (M+)	Turns left (C)
Battery positive (+) - 1 (M+) Battery negative (-) - 2 (MH)	Turns right (D)

If the result is not as specified, replace the outer rear view mirror.

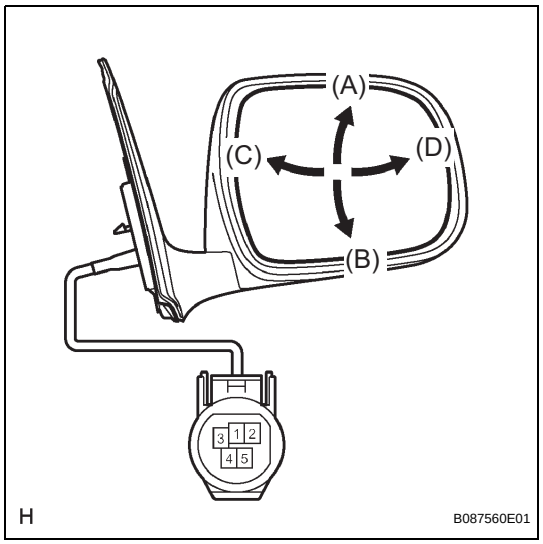

2. INSPECT OUTER REAR VIEW MIRROR ASSEMBLY RH

(a) Check the operation.

(1) Apply battery voltage to the terminals and check the operation of the mirror face, as shown in the table and illustration.

Standard

Measurement Condition	Mirror Operation
Battery positive (+) - 3 (MV) Battery negative (-) - 1 (M+)	Turns upward (A)
Battery positive (+) - 1 (M+) Battery negative (-) - 3 (MV)	Turns downward (B)
Battery positive (+) - 2 (MH) Battery negative (-) - 1 (M+)	Turns left (C)
Battery positive (+) - 1 (M+) Battery negative (-) - 2 (MH)	Turns right (D)

If the result is not as specified, replace the outer rear view mirror.

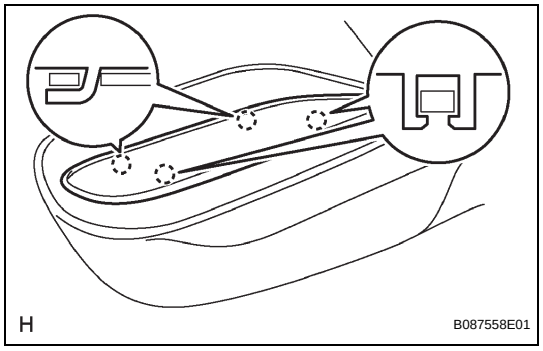

INSTALLATION

1. REMOVE OUTER REAR VIEW MIRROR

(a) Engage the 2 claws into the outer rear view mirror.

(b) Engage the 2 claws and install the outer rear view mirror.

MI

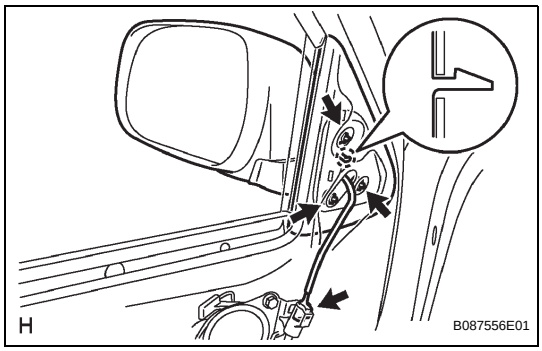

2. **REMOVE OUTER REAR VIEW MIRROR ASSEMBLY**
   (a) Engage the claw and install the outer rear view mirror.
   (b) Tighten the 3 nuts.
   Torque: 8.0 N*m (80 kgf*cm, 71 in.*lbf)
   (c) Connect the outer rear view mirror connector (w/ Power Mirror).
3. **REMOVE FRONT DOOR TRIM PANEL ASSEMBLY (w/ Power Window) (See page ED-29)**
4. **REMOVE FRONT DOOR TRIM PANEL ASSEMBLY (w/ o Power Window) (See page ED-48)**
5. **REMOVE POWER WINDOW REGULATOR MASTER SWITCH ASSEMBLY (for Double Cab) (See page ED-30)**
6. **REMOVE POWER WINDOW REGULATOR MASTER SWITCH ASSEMBLY (for Access Cab) (See page ED-30)**
7. **REMOVE FRONT DOOR WINDOW REGULATOR HANDLE ASSEMBLY (See page ED-49)**
8. **REMOVE FRONT DOOR LOWER FRAME BRACKET GARNISH (w/ Power Window) (See page ED-30)**
9. **REMOVE FRONT DOOR LOWER FRAME BRACKET GARNISH (w/o Power Window) (See page ED-49)**
10. **CONNECT CABLE TO NEGATIVE BATTERY TERMINAL**
    Torque: 3.9 N*m (40 kgf*cm, 35 in.*lbf)

MI

INSTALLATION

1. **INSTALL INSTRUMENT PANEL CUSHION**

2. **INSTALL NO. 1 INSTRUMENT PANEL PIN**
   (a) Install the 4 No. 1 instrument panel pins with the 4 screws <D>.

3. **INSTALL ANTENNA CORD SUB-ASSEMBLY (See page AV-95)**

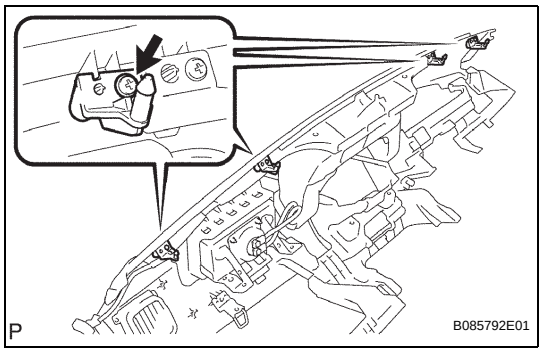

4. **INSTALL INSTRUMENT PANEL CENTER BRACKET SUB-ASSEMBLY**
   (a) Install the instrument panel center bracket sub-assembly with the screw <D>.

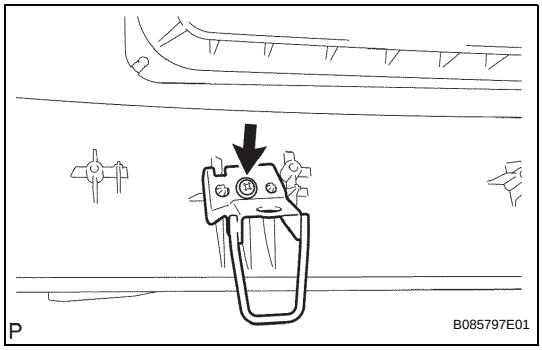

5. **INSTALL NO.1 INSTRUMENT PANEL REGISTER ASSEMBLY**
   (a) Install the instrument panel register with the 4 screws <D> with the fins closed.

6. **INSTALL FRONT PASSENGER AIRBAG ASSEMBLY**

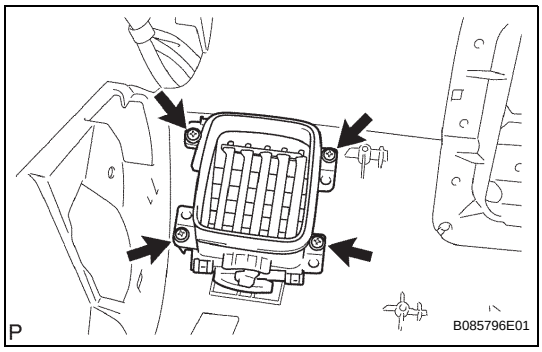

7. **INSTALL DOOR CONTROL RECEIVER**
   (a) Install the door control receiver with the 2 screws <D>.

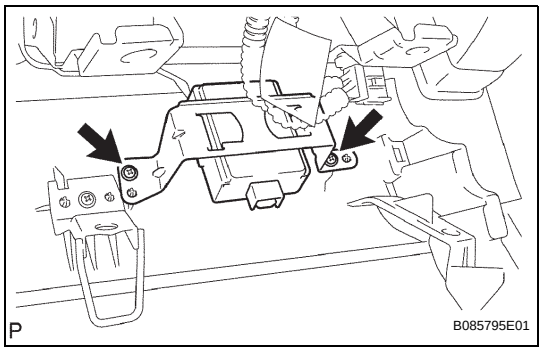

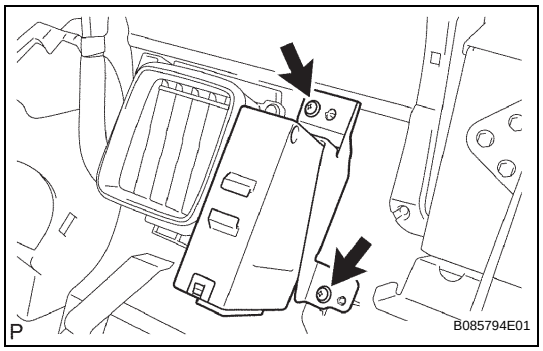

8. INSTALL FOUR WHEEL DRIVE CONTROL ECU

(a) Install the four wheel drive control ECU with the 2 screws <D>.
Torque: 1.2 N*m (12 kgf*cm, 11 in.*lbf)

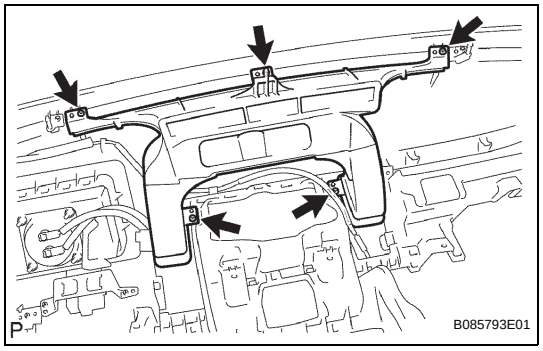

9. INSTALL DEFROSTER NOZZLE ASSEMBLY W/ NO.2 HEATER TO REGISTER DUCT

(a) Install the defroster nozzle w/ No. 2 heater to register duct with the 5 screws <D>.

10. INSTALL INSTRUMENT PANEL SUB-ASSEMBLY W/ PASSENGER AIRBAG ASSEMBLY

(a) Install the instrument panel sub-assembly w/ passenger air bag assembly with the 8 bolts and nut.
Torque: 20 N*m (205 kgf*cm, 15 ft.*lbf) for bolt <C>

(b) Engage the 5 clamps and connect the 4 connectors.

IP

(c) Remove the protective tape from the steering column cover upper and steering wheel sub-assembly.

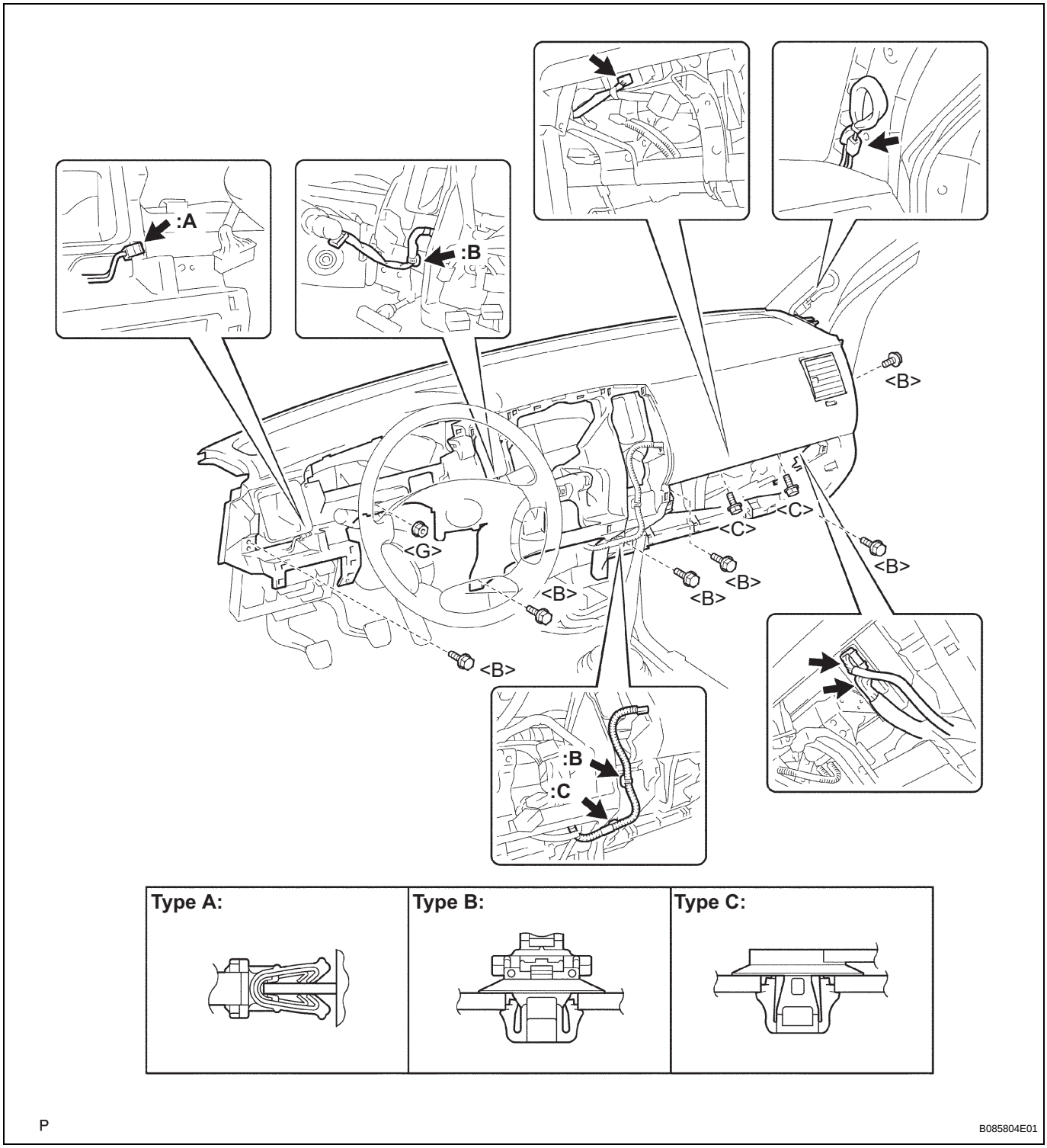

11. CONNECT PASSENGER AIRBAG CONNECTOR

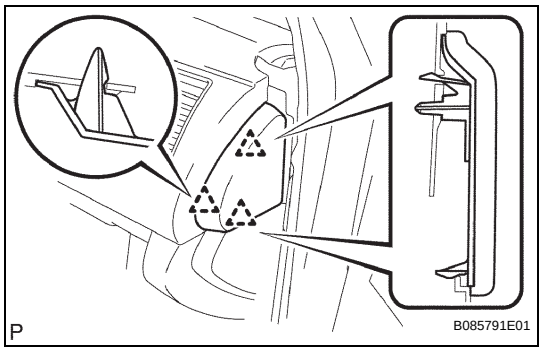

12. INSTALL INSTRUMENT SIDE PANEL RH

(a) Engage the 3 claws and install the instrument side RH.

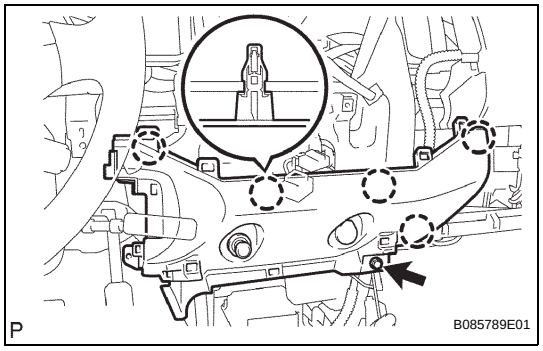

13. INSTALL INSTRUMENT LOWER COVER SUB-ASSEMBLY

(a) Connect the 2 connectors.
(b) Engage the 5 clips and install the instrument lower cover.
(c) Install the bolt <B>.

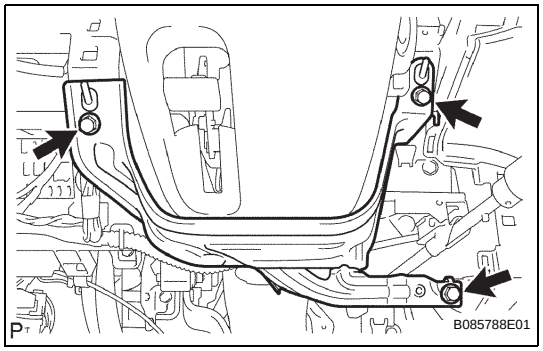

14. INSTALL LOWER INSTRUMENT PANEL LH

(a) Install the lower instrument panel LH with the 3 bolts <B>.

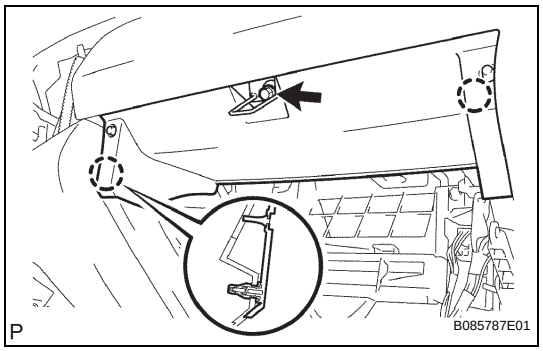

15. INSTALL INSTRUMENT PANEL LOWER FINISH PANEL SUB-ASSEMBLY RH

(a) Engage the 2 clips and install the instrument panel lower finish panel sub-assembly RH.
(b) Install the bolt <B>.

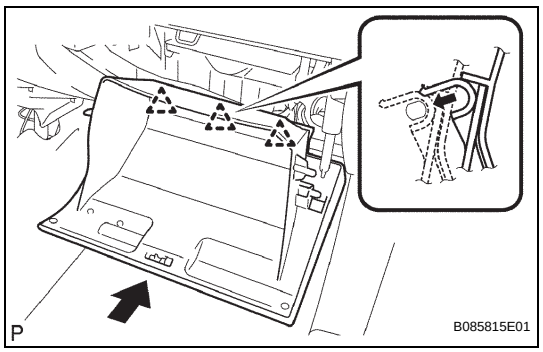

16. INSTALL GLOVE COMPARTMENT DOOR ASSEMBLY

(a) Install the glow compartment door assembly with 3 hinges, holding it horizontal.

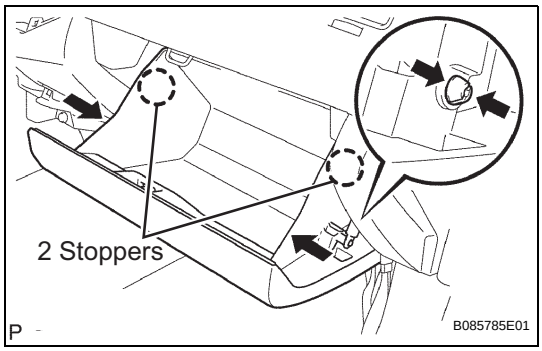

(b) Slightly deform the upper part of the glove compartment door assembly, and install the glove compartment door assembly.
(c) Install the glove compartment door stopper onto the glove compartment door.

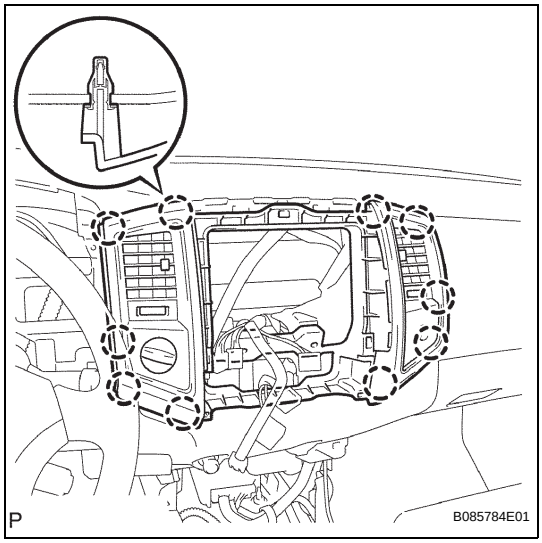

17. INSTALL INSTRUMENT CLUSTER CENTER FINISH PANEL SUB-ASSEMBLY

(a) Engage the 10 clips and install the instrument cluster center finish panel sub-assembly.

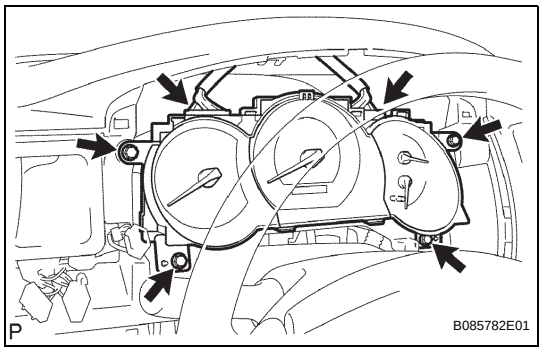

18. INSTALL COMBINATION METER ASSEMBLY

(a) Connect the 2 connectors.
(b) Install the combination meter assembly with the 4 screws <E>.
Torque: 7.0 N*m (71 kgf*cm, 62 in.*lbf)

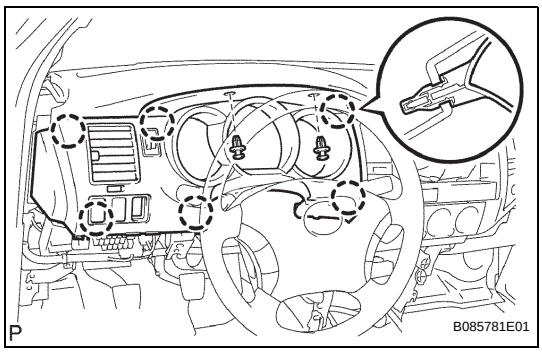

19. INSTALL INSTRUMENT CLUSTER FINISH PANEL SUB-ASSEMBLY

(a) Connect the connectors.
(b) Engage the 6 clips and install the instrument cluster finish panel sub-assembly.
(c) Install the 2 clips.

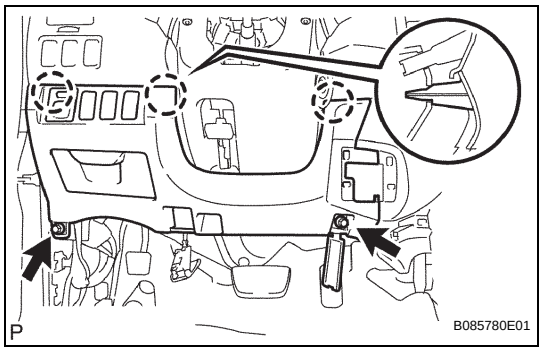

20. INSTALL LOWER NO. 1 INSTRUMENT PANEL FINISH PANEL

(a) Connect the connectors.
(b) Engage the 3 clips and install the lower NO. 1 instrument panel finish panel sub-assembly.
(c) Install the 2 bolts <B>.

21. CONNECT HOOD LOCK CONTROL LEVER SUB-ASSEMBLY (See page ED-8)

22. INSTALL RADIO RECEIVER ASSEMBLY (See page AV-70)

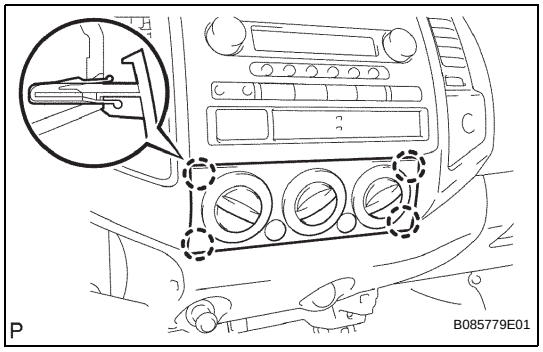

23. INSTALL AIR CONDITIONING CONTROL ASSEMBLY

(a) Connect the 2 connectors.
(b) Engage the 4 clips and install the air conditioning control assembly.

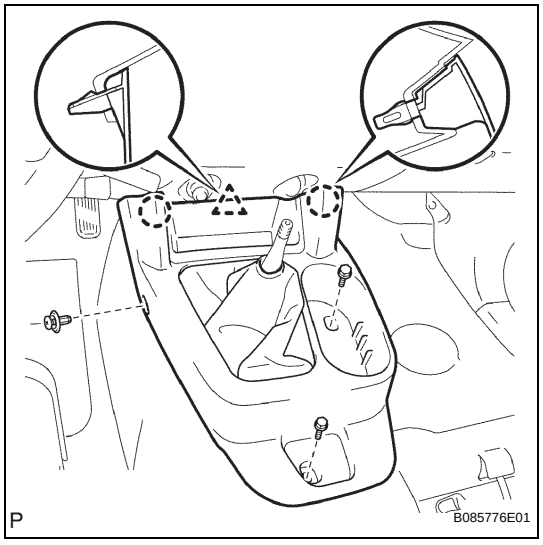

24. INSTALL FRONT CONSOLE BOX (for Manual Transmission on Bench Seat Type)

(a) Engage the 2 clips and claw, and install the front console box.
(b) Install the clip and 2 bolts <A>.

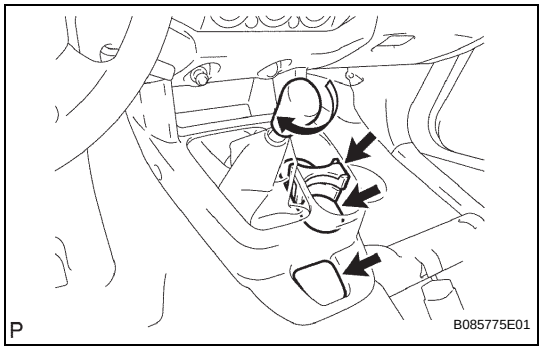

(c) Install the No. 2 box bottom mat.
(d) Install the instrument panel cup holder.
(e) Install the box bottom mat.
(f) Install the shift knob.

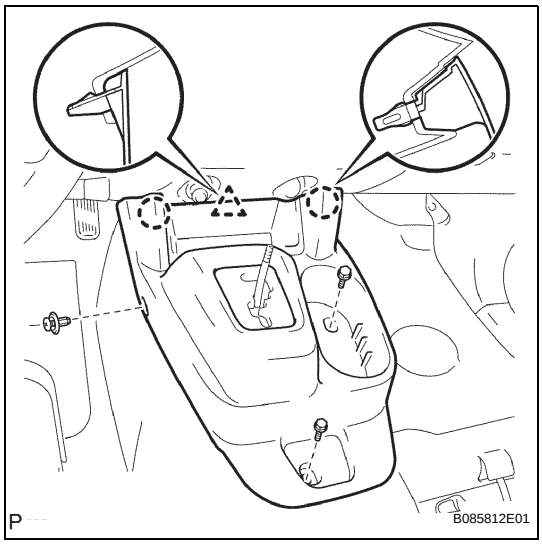

25. INSTALL FRONT CONSOLE BOX (for Automatic Transmission on Bench Seat Type)

(a) Engage the 2 clips and claw, and install the front console box.
(b) Install the clip and 2 bolts <A>.

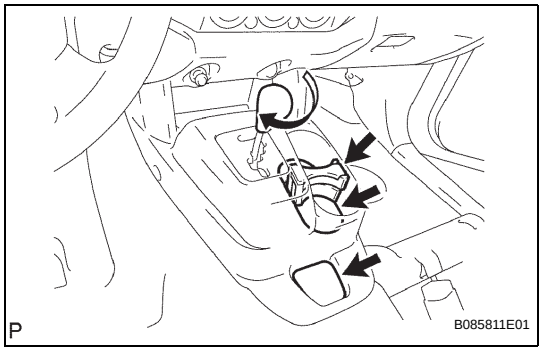

(c) Install the No. 2 box bottom mat.
(d) Install the instrument panel cup holder.
(e) Install the box bottom mat.
(f) Install the shift knob.

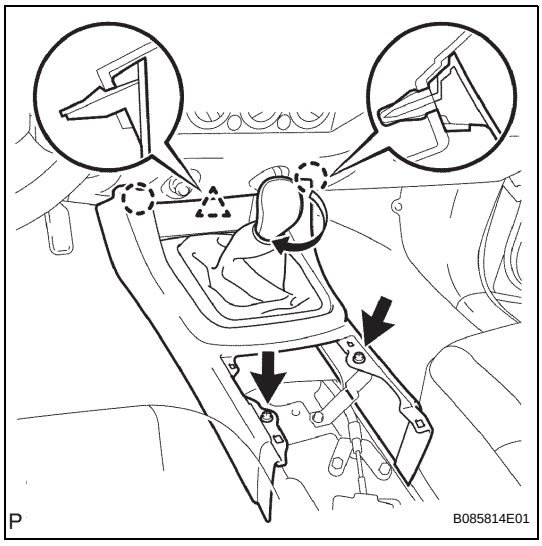

26. INSTALL FRONT CONSOLE BOX (for Manual Transmission on Separate Seat Type)

(a) Engage the 2 clips and claw, and install the front console box.
(b) Install the 2 screws <F>.
(c) Install the shift knob.

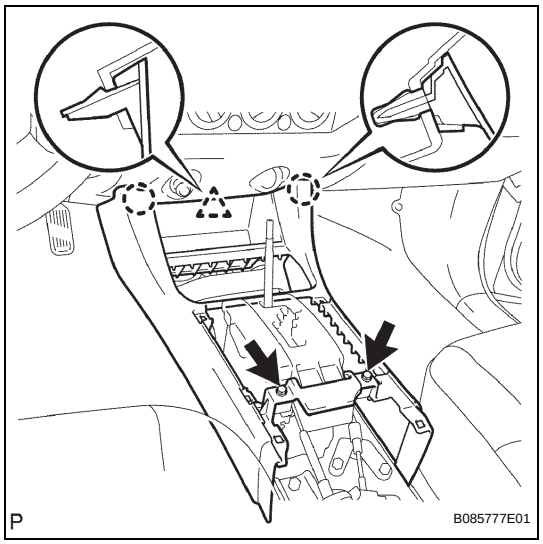

27. INSTALL FRONT CONSOLE BOX (for Automatic Transmission on Separate Seat Type)

(a) Engage the 2 clips and claw, and install the front console box.

(b) Install the 2 screws <F>.

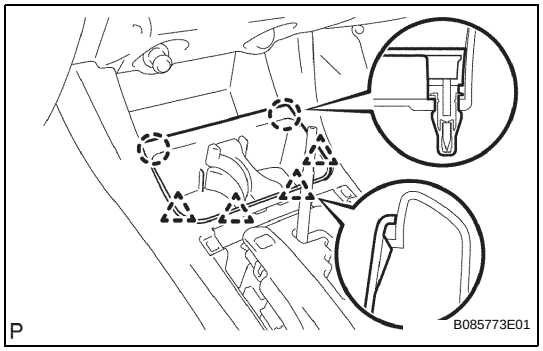

28. INSTALL INSTRUMENT PANEL CUP HOLDER TRAY (for Automatic Transmission on Separate Seat Type)

(a) Engage the 2 clips and 4 claws, and install the instrument panel cup holder tray.

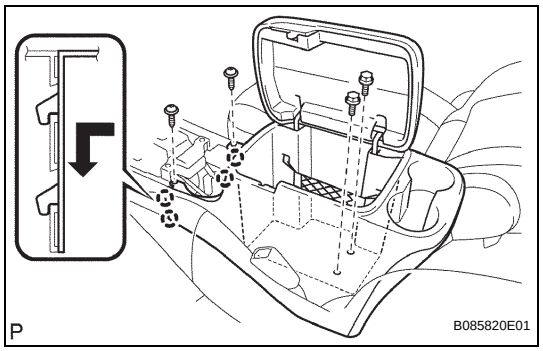

29. INSTALL REAR CONSOLE BOX ASSEMBLY (for Separate Seat Type)

(a) Engage the 4 claws and install the console box rear.

(b) Install the 2 screws <F> and 2 bolts <B>.

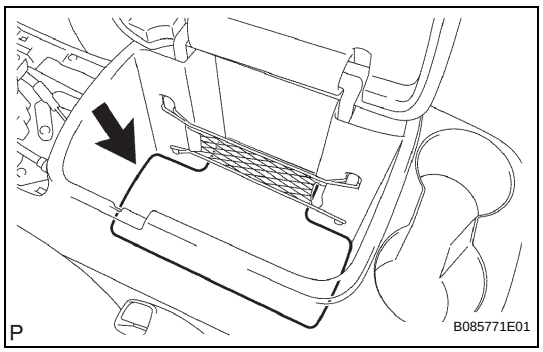

(c) Install the console box carpet.

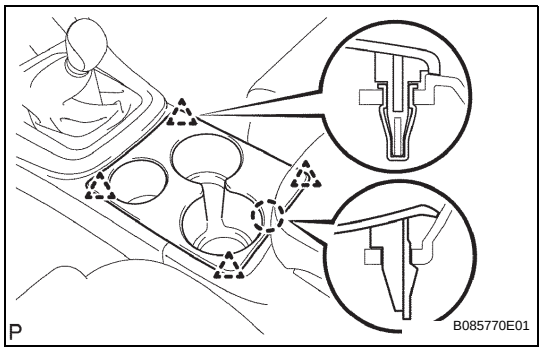

30. **INSTALL CONSOLE UPPER REAR PANEL SUB-ASSEMBLY (for Manual Transmission on Separate Seat Type)**
    (a) Engage the 4 clips and claw, and remove the console upper panel sub-assembly.

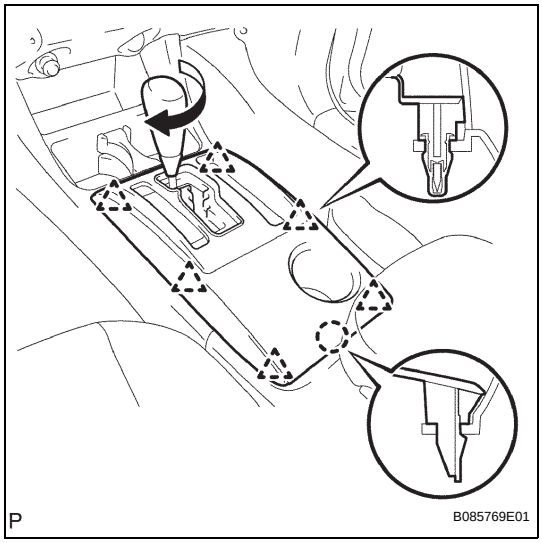

31. **INSTALL CONSOLE UPPER REAR PANEL SUB-ASSEMBLY (for Automatic Transmission on Separate Seat Type)**
    (a) Engage the 6 clips and claw, and remove the console upper rear panel.
    (b) Install the shift knob.

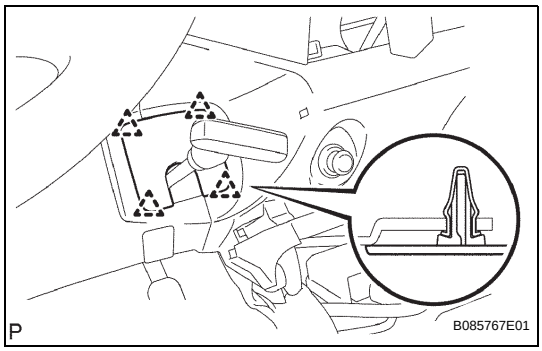

32. **INSTALL INSTRUMENT PANEL HOLE COVER (for Lever Type Parking Brake)**
    (a) Engage the 4 clips and install the instrument panel hole cover.

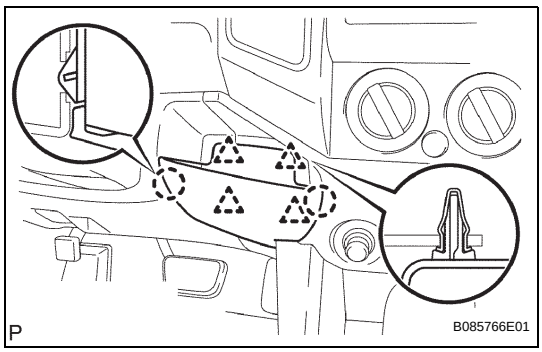

33. **INSTALL INSTRUMENT PANEL UNDER TRAY (for Pedal Type Parking Brake)**
    (a) Engage the 4 clips and 2 claws, and install the instrument panel under tray.

34. **INSTALL FRONT PILLAR GARNISH LH (for Regular Cab) (See page IR-51)**

35. **INSTALL FRONT PILLAR GARNISH LH (for Access Cab) (See page IR-74)**

36. **INSTALL FRONT PILLAR GARNISH LH (for Double Cab) (See page IR-28)**

37. **INSTALL FRONT PILLAR GARNISH RH (for Regular Cab) (See page IR-52)**

38. **INSTALL FRONT PILLAR GARNISH RH (for Access Cab) (See page IR-74)**

39. **INSTALL FRONT PILLAR GARNISH RH (for Double Cab) (See page IR-28)**
40. **INSTALL FRONT DOOR OPENING TRIM WEATHERSTRIP LH**
41. **INSTALL FRONT DOOR OPENING TRIM WEATHERSTRIP RH**
42. **INSTALL COWL SIDE TRIM BOARD LH (for Regular Cab) (See page IR-52)**
43. **INSTALL COWL SIDE TRIM BOARD LH (for Access Cab) (See page IR-75)**
44. **INSTALL COWL SIDE TRIM BOARD LH (for Double Cab) (See page IR-29)**
45. **INSTALL COWL SIDE TRIM BOARD RH (for Regular Cab) (See page IR-52)**
46. **INSTALL COWL SIDE TRIM BOARD RH (for Access Cab) (See page IR-75)**
47. **INSTALL COWL SIDE TRIM BOARD RH (for Double Cab) (See page IR-29)**
48. **INSTALL FRONT DOOR SCUFF PLATE LH (for Regular Cab) (See page IR-52)**
49. **INSTALL FRONT DOOR SCUFF PLATE LH (for Access Cab) (See page IR-75)**
50. **INSTALL FRONT DOOR SCUFF PLATE LH (for Double Cab) (See page IR-29)**
51. **INSTALL FRONT DOOR SCUFF PLATE RH (for Regular Cab) (See page IR-52)**
52. **INSTALL FRONT DOOR SCUFF PLATE RH (for Access Cab) (See page IR-75)**
53. **INSTALL FRONT DOOR SCUFF PLATE RH (for Double Cab) (See page IR-29)**
54. **INSTALL FRONT FLOOR FOOTREST (See page IR-1)**
55. **CONNECT CABLE TO NEGATIVE BATTERY TERMINAL**
    Torque: 3.9 N*m (40 kgf*cm, 35 in.*lbf)
56. **INSPECT SRS WARNING LIGHT**
    (See page RS-28)

IP

DATA LIST / ACTIVE TEST

1. DATA LIST

HINT:

By reading the DATA LIST displayed on a intelligent tester, you can check values, including those of the switches, sensors, and actuators, without removing any parts. Reading the DATA LIST as the first step of troubleshooting is one method of shortening diagnostic time.

NOTICE:

In the table below, the values listed under Normal Conditions are for reference only. Do not depend solely on these values when determining whether or not a part is faulty.

(a) Warm up the engine.
(b) Turn the ignition switch to OFF
(c) Connect a intelligent tester to the DLC3.
(d) Turn the ignition switch to ON.
(e) Turn the tester ON.
(f) Select the following menu items: DIAGNOSIS / ENHANCED OBD II / DATA LIST.
(g) Check the values by referring to the table below.

Intelligent Tester Display	Measurement Item: Range (Display)	Normal Condition *	Diagnostic Note
INJECTOR	Injection period of No. 1 cylinder: Min.: 0 ms, Max.: 32.64 ms	1.8 to 3.8 ms: Idling	-
IGN ADVANCE	Ignition timing advance for No. 1 cylinder: Min.: -64 deg., Max.: 63.5 deg.	BTDC 4 to 17°: Idling	-
CALC LOAD	Calculated load by ECM: Min.: 0 %, Max.: 100 %	• 11 to 26 %: Idling • 12 to 27 %: Running without load (2,500 rpm)	-
VEHICLE LOAD	Vehicle load: Min.: 0 %, Max.: 25700 %	Actual vehicle load	-
MAF	Air flow rate from MAF meter: Min.: 0 g/sec, Max.: 655.35 g/sec	2.0 to 4.5 g/sec: Idling	If value approximately 0.0 g/sec: • Mass air flow meter power source circuit open • VG circuit open or short If value 160.0 g/sec or more: • E2G circuit open
ENGINE SPD	Engine speed: Min.: 0 rpm, Max.: 16,383.75 rpm	650 +- 50 rpm: Idling	-
VEHICLE SPD	Vehicle speed: Min.: 0 km/h, Max.: 255 km/h	Actual vehicle speed	Speed indicated on speedometer
COOLANT TEMP	Engine coolant temperature: Min.: -40°C, Max.: 140°C	80 to 100°C (176 to 212°F): After warming up	• If value -40°C (-40°F): sensor circuit open • If value 140°C (284°F): sensor circuit shorted
INTAKE AIR	Intake air temperature: Min.: -40°C, Max.: 140°C	Equivalent to ambient air temperature	• If value -40°C (-40°F): sensor circuit open • If value 140°C (284°F): sensor circuit shorted
SECONDARY AIR	Secondary air injection system status: ON or OFF	ON: Secondary air system operation	-
AIR-FUEL RATIO	Air-fuel ratio: Min.: 0, Max.: 1.999	0.8 to 1.2: Idling	-

Intelligent Tester Display	Measurement Item: Range (Display)	Normal Condition *	Diagnostic Note
PURGE DENSITY	Learning value of purge density: Min.: -50, Max.: 350	-40 to 0 %: Idling	Service data
PURGE FLOW	Purge flow: Min.: 0 %, Max.: 102.4 %	0 to 100 %: Idling	-
EVAP PURGE VSV	EVAP (Purge) VSV control duty: Min.: 0 %, Max.: 100 %	0 to 100 %: During idling	Order signal from ECM
VAPOR PRESS	Vapor pressure: Min.: 33.853 kPa, Max.: 125.596 kPa	Approximately 100 kPa: Ignition switch ON	EVAP system pressure monitored by canister pressure sensor
VAPOR PRESS CALC	Calculated EVAP system pressure: Min.: -5.632 kPa, Max.: 715.264 kPa	Approximately 100 kPa: Ignition switch ON	-
KNOCK CRRT VAL	Correction learning value of knocking: Min.: -64 °CA, Max.: 1,984 °CA	0 to 19 °CA: Driving, 44 mph (70 km/h)	Service data
KNOCK FB VAL	Feedback value of knocking: Min.: -64 °CA, Max.: 1,984 °CA	-19 to 0 °CA Driving, 44 mph (70 km/h)	Service data
EVAP VAPOR PRES	EVAP vapor pressure: Min.: 0 kPa, Max.: 327.675 kPa	Approximately 100 kPa: Ignition switch ON	-
ACCEL POS #1	Absolute No. 1 Accelerator Pedal Position (APP): Min.: 0 %, Max.: 100 %	10 to 22 %: Accelerator pedal released 54 to 86 %: Accelerator pedal fully depressed	-
ACCEL POS #2	Absolute No. 2 APP: Min.: 0 %, Max.: 100 %	12 to 42 %: Accelerator pedal released 66 to 98 %: Accelerator pedal fully depressed	-
ACCEL POS #1	No. 1 APP sensor voltage: Min.: 0 V, Max.: 4.98 V	-	ETCS freeze data
ACCEL POS #2	No. 2 APP sensor voltage: Min.: 0 V, Max.: 4.98 V	-	ETCS freeze data
ACCEL POS #1	No. 1 APP sensor voltage: Min.: 0 V, Max.: 5 V	0.5 to 1.1 V: accelerator pedal released 2.6 to 4.5 V: or pedal fully depressed	-
ACCEL POS #2	No. 2 APP sensor voltage: Min.: 0 V, Max.: 5 V	1.2 to 2.0 V: accelerator pedal released 3.4 to 5.3 V: accelerator pedal fully depressed.	-
ACCEL IDL POS	Whether or not accelerator pedal position sensor detecting idle: ON or OFF	ON: Idling	-
THRTL LEARN VAL	Throttle valve fully closed (learned value): Min.: 0 V, Max.: 5 V	0.4 to 0.8 V	-
ACCEL SSR #1 AD	No.1 Accelerator fully closed value (AD): Min.: 0 V, Max.: 4.9804 V	-	ETCS service data
ACCEL LRN VAL#1	No.1 Accelerator fully closed learning value: Min.: 0, Max.: 124.512	-	ETCS service data
ACCEL LRN VAL#2	No.2 Accelerator fully closed learning value: Min.: 0, Max.: 124.512	-	ETCS service data
FAIL #1	Whether or not fail safe function executed: ON or OFF	ON: ETCS has failed	-
FAIL #2	Whether or not fail safe function executed: ON or OFF	ON: ETCS has failed	-
ST1	Starter signal: ON or OFF	ON: Cranking	-

Intelligent Tester Display	Measurement Item: Range (Display)	Normal Condition *	Diagnostic Note
SYSGUARD JUDGE	System guard: ON or OFF	-	ETCS service data
OPN MALFUNCTION	Open side malfunction: ON or OFF	-	ETCS service data
THROTTLE POS	Absolute throttle position sensor: Min.: 0 %, Max.: 100 %	• 10 to 24 %: Throttle fully closed • 64 to 96 %: Throttle fully open	Read value with intrusive operation (active test)
THROTTL IDL POS	Whether or not throttle position sensor detecting idle: ON or OFF	ON: Idling	-
THRTL REQ POS	Throttle requirement position: Min.: 0 V, Max.: 5 V	0.5 to 1.0 V: Idling	-
THROTTLE POS	Throttle sensor positioning: Min.: 0 % Max.: 100 %	0 to 10 %: Idling	Calculated value based on VTA1
THROTTLE POS #2	Throttle sensor positioning #2: Min.: 0 %, Max.: 100 %	-	Calculated value based on VTA2
THROTTLE POS #1	No. 1 Throttle position sensor output voltage: Min.: 0 V, Max.: 4.9 V	-	ETCS freeze data
THROTTLE POS #2	No.2 Throttle position sensor output voltage: Min.: 0 V, Max.: 4.9 V	-	ETCS freeze data
THROTTLE POS #1	No. 1 Throttle position: Min.: 0 V, Max.: 5 V	• 0.5 to 1.2 V: Throttle fully closed • 3.2 to 4.8 V: Throttle fully opened	-
THROTTLE POS #2	No. 2 Throttle position: Min.: 0 V, Max.: 5 V	• 2.0 to 2.9 V: Throttle fully closed • 4.6 to 5.5 V: Throttle fully open	Read value with intrusive operation (active test)
THRTL COMND VAL	Throttle position command value: Min.: 0 V, Max.: 4.9804 V	0.5 to 4.8 V	ETCS service data
THROTTLE SSR #1	No. 1 Throttle sensor opener position: Min.: 0 V, Max.: 4.9804 V	0.6 to 1.0 V	ETCS service data
THROTTLE SSR #2	No. 2 Throttle sensor opener position: Min.: 0 V, Max.: 4.9804 V	2.0 to 2.6 V	ETCS service data
THRTL SSR #1 AD	No.1 Throttle sensor opener position (AD): Min.: 0 V, Max.: 4.9804 V	0.6 to 0.9 V	ETCS service data
THROTTLE MOT	Whether or not throttle motor control permitted: ON or OFF	ON: Idling	Read value with ignition switch ON (Do not start engine)
THROTTLE MOT	Throttle motor current: Min.: 0 A, Max.: 80 A	0 to 3.0 A: Idling	-
THROTTLE MOT	Throttle motor: Min.: 0 % Max.: 100 %	0.5 to 40 %: Idling	-
THROTTLE MOT	Throttle motor current: Min.: 0 A, Max.: 19.92 A	0 to 3.0 A: Idling	-
THROTL OPN DUTY	Throttle motor opening duty ratio: Min.: 0 %, Max.: 100 %	0 to 40 %: Idling	When accelerator pedal depressed, duty ratio increased
THROTL CLS DUTY	Throttle motor closed duty ratio:: Min.: 0 %, Max.: 100 %	0 to 40 %: Idling	When accelerator pedal released quickly, duty ratio increased
THRTL MOT (OPN)	Throttle motor duty ratio (open): Min.: 0 %, Max.: 100 %	-	ETCS service data
THRTL MOT (CLS)	Throttle motor duty ratio (close): Min.: 0 %, Max.: 100 %	-	ETCS service data

Intelligent Tester Display	Measurement Item: Range (Display)	Normal Condition *	Diagnostic Note
O2S B1 S2	Heated oxygen sensor output voltage for bank 1 sensor 2: Min.: 0 V, Max.: 1.275 V	0 to 0.9 V: Driving 44 mph (70 km/h)	Performing INJ VOL or A/F CONTROL function of ACTIVE TEST enables technician to check voltage output of sensor
AFS B1 S1	A/F sensor output voltage for bank 1 sensor 1: Min.: 0 V, Max.: 7.999 V	2.8 to 3.8 V: Idling	Performing INJ VOL or A/F CONTROL function of ACTIVE TEST enables technician to check voltage output of sensor
TOTAL FT #1	Total fuel trim of bank 1 Average value for fuel trim system of bank 1: Min.: -0.5, Max.: 0.496	-0.2 to 0.2: Idling	-
SHORT FT #1	Short-term fuel trim of bank 1: Min.: -100 %, Max.: 99.2%	0 +- 20 %	Short-term fuel compensation used to maintain air-fuel ratio at stoichiometric air-fuel ratio
LONG FT #1	Long-term fuel trim of bank 1: Min.: -100 %, Max.: 99.2 %	0 +- 20 %	Overall fuel compensation carried out in long-term to compensate continual deviation of short-term fuel trim from central value
FUEL SYS #1	Fuel system status (Bank1): OL or CL or OL DRIVE or OL FAULT or CL FAULT	CL: Idling after warming up	• OL (Open Loop): Has not yet satisfied conditions to go closed loop • CL (Closed Loop): Using heated oxygen sensor as feedback for fuel control • OL DRIVE: Open loop due to driving conditions (fuel enrichment) • OL FAULT: Open loop due to detected system fault • CL FAULT: Closed loop but heated oxygen sensor, which used for fuel control malfunctioning
O2FT B1 S2	Short-term fuel trim associated with bank 1 sensor 2: Min.: -100 %, Max.: 99.2 %	-	-
AF FT B1 S1	Short-term fuel trim associated with bank 1 sensor 1: Min.: 0, Max.: 1.999	• Value less than 1 (0.000 to 0.999) = Lean • Stoichiometric air-fuel ratio=1 • Value greater than 1 (1.001 to 1.999) = Rich	-
CAT TEMP B1S1	Catalyst temperature (Bank 1, Sensor 1): Min.: -40, Max.: 6,513.5°C	-	-
CAT TEMP B1S2	Catalyst temperature (Bank 1, Sensor 2): Min.: -40, Max.: 6,513.5°C	-	-
INI COOL TEMP	Initial engine coolant temperature: Min.: -40°C, Max.: 140°C	Engine coolant temperature when engine started	Service data
INI INTAKE TEMP	Initial intake air temperature: Min.: -40°C, Max.: 140°C	Intake air temperature when engine started	Service data
INJ VOL	Injection volume (cylinder 1): Min.: 0 ml, Max.: 2.048 ml	0 to 0.5 ml	Quantity of fuel injection volume for 10 times
AIR PMP PRS(A)	Air pump pressure (absolute): Min.: 0 kPa, Max.: 320 kPa	Atmospheric pressure +2.5 kPa or more: Air pump ON, Air switching valve open Close to atmospheric pressure: Air pump OFF, Air switching valve close	(See page ES-354)

Intelligent Tester Display	Measurement Item: Range (Display)	Normal Condition *	Diagnostic Note
AIR PMP PLS PRS	Air pump pulsation pressure: Min.: 0 kPa, Max.: 639.9 kPa	-	Cumulative pulsation pressure calculated by ECM (See page ES-354)
STARTER SIG	Starter signal: ON or OFF	ON: Cranking	-
PS SW	Power steering signal: ON or OFF	ON: Power steering operation	-
PS SIGNAL	Power steering signal: ON or OFF	ON: When steering wheel first turned after battery terminals connected	This signal status usually ON until battery terminals disconnected
CTP SW	Closed throttle position switch: ON or OFF	• ON: Throttle fully closed • OFF: Throttle open	-
A/C SIG	A/C signal: ON or OFF	ON: A/C ON	-
ELECT LOAD SIG	Electrical load signal: ON or OFF	ON: Headlights or defogger turned ON	-
STOP LIGHT SW	Stop light switch: ON or OFF	ON: Brake pedal depressed.	-
+BM	Whether or not electronic throttle control system power input: ON or OFF	ON: Idling	-
+BM VOLTAGE	+BM voltage: Min.: 0, Max.: 19.92	10 to 15 V: Idling	ETCS service data
BATTERY VOLTAGE	Battery voltage: Min.: 0 V, Max.: 65.535 V	9 to 14 V: Idling	-
ACTUATOR POWER	Actuator power supply: ON or OFF	ON: Idling	ETCS service data
ATM PRESSURE	Atmospheric pressure: Min.: 0 kPa, Max.: 150 kPa	Equivalent to atmospheric pressure (absolute pressure)	-
SECOND AIR VSV	Secondary air injection system status	ON: Secondary air injection system operation	-
ACT VSV	A/C cut status for Active Test: ON or OFF	-	Active Test support data
EVAP (Purge) VSV	VSV status for EVAP control: ON or OFF	-	Active Test support data
FUEL PUMP / SPD	Fuel pump/speed status: ON or OFF	-	Active Test support data
VVT CTRL B1	VVT control status: ON or OFF	-	Active Test support data
VACUUM PUMP	Key-off EVAP system pump status: ON or OFF	-	Active Test support data
EVAP VENT VAL	Key-off EVAP system vent valve status: ON or OFF	-	Active Test support data
TC/TE1	TC and TE1 terminals of DLC3: ON or OFF	-	-
AI STATUS	Secondary air injection system operation prohibition: OK or NG	-	(See page ES-354)
VVTL AIM ANGL #1	VVT aim angle (bank 1): Min.: 0 %, Max.: 100 %	0 %: Idling	VVT duty signal value during intrusive operation
VVT CHNG ANGL #1	VVT change angle: Min.: 0°FR, Max.: 60°FR	0 to 5 °FR: Idling	Displacement angle during intrusive operation
VVT OCV DUTY B1	VVT OCV operation duty: Min.: 0 %, Max.: 100 %	0 %: Idling	Requested duty value for intrusive operation
FC IDL	Fuel cut idle: ON or OFF	ON: Fuel cut operation	FC IDL = "ON" when throttle valve fully closed and engine speed over 2,800 rpm

Intelligent Tester Display	Measurement Item: Range (Display)	Normal Condition *	Diagnostic Note
FC TAU	Fuel cut TAU: Fuel cut during very light load: ON or OFF	ON: Fuel cut operation	Fuel cut being performed under very light load to prevent engine combustion from becoming incomplete
IGNITION	Ignition counter: Min.: 0, Max.: 400	0 to 400	-
CYL #1, #2, #3, #4	Misfire ratio of cylinder 1 to 4: Min.: 0, Max.: 255	0 %	This item displayed in only idling
CYL ALL	All cylinders misfire rate: Min.: 0, Max.: 255	0 to 35	-
MISFIRE RPM	Engine RPM for first misfire range: Min.: 0 rpm, Max.: 6,375 rpm	0 rpm: Misfire 0	-
MISFIRE LOAD	Engine load for first misfire range: Min.: 0 g/rev, Max.: 3.98 g/rev	0 g/rev: Misfire 0	-
MISFIRE MARGIN	Misfire monitoring: MIn.: -100 %, Max.: 99.22 %	-100 to 99.2 %	Misfire detecting margin
#CODES	#Codes: Min.: 0, Max.: 255	-	Number of detected DTCs
CHECK MODE	Check mode: ON or OFF	ON: Check mode ON	(See page ES-43)
SPD TEST	Check mode result for vehicle speed sensor: COMPL or INCOMPL	-	-
AS TEST	Check mode result for secondary air injection system: COMPL or INCOMPL	-	-
MISFIRE TEST	Check mode result for misfire monitor: COMPL or INCOMPL	-	-
OXS1 TEST	Check mode result for HO2 sensor : COMPL or INCOMPL	-	-
A/F SSR TEST B1	Check mode result for air-fuel ratio sensor : COMPL or INCOMPL	-	-
MIL	MIL status: ON or OFF	ON: MIL ON	-
MIL ON RUN DIST	MIL ON Run Distance: Min.: 0 second, Max.: 65,535 seconds	Distance after DTC detected	-
MIL ON RUN TIME	Running time from MIL ON: Min.: 0 minute, Max.: 65,535 minutes	Equivalent to running time after MIL ON	-
ENG RUN TIME	Engine run time: Min.: 0 second, Max.: 65,535 seconds	Time after engine start	Service data
TIME DTC CLEAR	Time after DTC cleared: Min.: 0 minute, Max.: 65,535 minutes	Equivalent to time after DTCs erased	-
DIST DTC CLEAR	Distance after DTC cleared: Min.: 0 km/h, Max.: 65535 km/h	Equivalent to drive distance after DTCs erased	-
WU CYC DTC CLEAR	Warm-up cycle after DTC cleared: Min.: 0, Max.: 255	-	Number of warm-up cycles after DTC cleared
MODEL CODE	Model code:	-	Identifying model code: TRN2###
ENGINE TYPE	Engine type:	-	Identifying engine type: 2TR
CYLINDER NUMBER	Cylinder number: Min.: 0, Max.: 255	-	Identifying cylinder number: 4 or 6
TRANSMISSION	Transmission type:	-	Identifying transmission type: MT, ECT(5AT) or ECT(4AT)

Intelligent Tester Display	Measurement Item: Range (Display)	Normal Condition *	Diagnostic Note
DESTINATION	Destination	-	Identifying destination: A (America)
MODEL YEAR	Model year: Min.: 0, Max.: 255	-	Identifying model year: 200#
SYSTEM	System identification	-	Identifying engine system: GASLIN (gasoline engine)

*1: If no idling conditions are specified, transmission gear selector lever should be in the N or P position, and the A/C switch and all accessory switches should be OFF.

2. ACTIVE TEST

HINT:

Performing an ACTIVE TEST enables components including the relays, VSV (Vacuum Switching Valve), and actuators, to be operated without removing any parts. The ACTIVE TEST can be performed with a intelligent tester. Performing an ACTIVE TEST as the first step of troubleshooting is one method of shortening diagnostic time.

DATA LIST can be displayed during ACTIVE TESTs.

(a) Connect a intelligent tester to the DLC3.
(b) Turn the ignition switch to ON.
(c) Turn the tester ON.
(d) Select the following menu items: DIAGNOSIS / ENHANCED OBD II / ACTIVE TEST.
(e) Perform the ACTIVE TEST by referring to the table below.

ES

Intelligent Tester Displays	Test Details	Control Ranges	Diagnostic Notes
INJ VOL	Change injection volume	Between -12 % and 25 %	• All injectors tested at same time • Perform test at less than 3,000 rpm • Injection volume can be changed in 1 % graduations within control range
A/F CONTROL	Change injection volume	Lower by 12.5 % or increase by 25 %	• Perform test at less than 3,000 rpm • A/F CONTROL enables checking and graphing of A/F (Air Fuel Ratio) sensor and Heated Oxygen (HO2) sensor voltage outputs • To conduct test, select following menu items: ACTIVE TEST / A/F CONTROL / USER DATA / AFS B1S1 and O2S B1S2, and press YES and ENTER followed by F4
EVAP VSV (ALONE)	Activate EVAP VSV control	ON/OFF	-
VVT CTRL B1	Turn on and off OCV (Oil Control Valve)	ON/OFF	• Engine stalls or idles roughly when OCV turned ON • Normal engine running or idling when OCV off
A/C CUT SIG	Control A/C cut signal	ON/OFF	-
FUEL PUMP/SPD	Activate fuel pump (C/OPN Relay)	ON/OFF	-

Intelligent Tester Displays	Test Details	Control Ranges	Diagnostic Notes
TC/TE1	Turn on and off TC and TE1 connection	ON/OFF	• ON: TC and TE1 connected • OFF: TC and TE1 disconnected
FC IDL PROHBT	Prohibit idling fuel cut control	ON/OFF	-
ETCS OPEN SLOW	Throttle actuator	ON: throttle valve opens slowly	Test possible when following conditions met: • Ignition switch ON • Engine does not start • Fully depressing accelerator pedal (APP: 58 degrees or more)
ETCS CLOSE SLOW	Throttle actuator	ON: throttle valve closes slowly	Same as above
ETCS OPEN FAST	Throttle actuator	ON: throttle valve opens fast	Same as above
ETCS CLOSE FAST	Throttle actuator	ON: throttle valve closes fast	Same as above
FUEL CUT #1	Cylinder #1 injector fuel cut	ON/OFF	Test possible during vehicle stopping and engine idling
FUEL CUT #2	Cylinder #2 injector fuel cut	ON/OFF	Same as above
FUEL CUT #3	Cylinder #3 injector fuel cut	ON/OFF	Same as above
FUEL CUT #4	Cylinder #4 injector fuel cut	ON/OFF	Same as above
VVT B1	VVT actuator	-128 to 127% OCV control duty ratio can be set to any value within this range 100%: Maximum advance -100%: Maximum retard	Engine stalls or idles roughly when VVT actuator is operated at 100 % or more. This test is possible while idling.
VENT VALVE (ALONE)	Activate vent valve (built into canister pump module)	ON/OFF	-
VCUUM PUMP	Activate leak detection pump (built into canister pump module)	ON/OFF	-

ES

3. SYSTEM CHECK

HINT:

Performing a SYSTEM CHECK enables the system, which consists of multiple actuators, to be operated without removing any parts. In addition, it can show whether or not any DTCs (PENDING CODES) are set, and can detect potential malfunctions in the system. SYSTEM CHECK can be performed with a intelligent tester.

(a) Connect a intelligent tester to the DLC3.
(b) Turn the ignition switch to ON and turn the tester ON.
(c) Select the following menu items: DIAGNOSIS / ENHANCED OBD II / SYSTEM CHECK.
(d) Perform the SYSTEM CHECK by referring to the table below.
(e) Turn the ignition switch to OFF.

Intelligent Tester Displays	Test Details	Recommended Vehicle Conditions	Diagnostic Notes
EVAP SYS CHECK (AUTOMATIC OPERATION)	Perform 5 steps in order to operate EVAP key-off monitor automatically	Fuel temperature 35°C (95°F) or less	• If no DTCs in PENDING CODE after performing this test, system functioning normally • Refer to EVAP Inspection Procedure (See page ES-390)
EVAP SYS CHECK (MANUAL OPERATION)	Perform 5 steps in order to operate EVAP key-off monitor manually	Fuel temperature 35°C(95°F) or less	• Used to detect malfunctioning parts • Refer to EVAP Inspection Procedure (See page ES-390)

Intelligent Tester Displays	Test Details	Recommended Vehicle Conditions	Diagnostic Notes
AIR INJ CHECK (AUTOMATIC OPERATION)	Perform secondary air injection system operation automatically	With warm engine, ignition switch turned OFF once	• If no DTCs in PENDING CODE after performing this test, system functioning normally • Refer to inspection procedure for secondary air injection system DTCs • When performing AIR INJ CHECK operation after battery cable has been reconnected, wait for 7 minutes with ignition switch turned to ON or engine running • Turn ignition switch to OFF when SYSTEM CHECK finished
AIR INJ CHECK (MANUAL OPERATION)	Perform secondary air injection system operation manually Select monitor item 1, 2 or 3 1. Air pump: ON Air switching valve: OPEN 2. Air pump: OFF Air switching valve: CLOSE 3. Air pump: ON Air switching valve: CLOSE	With warm engine, ignition switch turned OFF once	• Used to detect malfunctioning parts • Refer to inspection procedure for secondary air injection system DTCs • When performing AIR INJ CHECK operation after battery cable has been reconnected, wait for 7 minutes with ignition switch turned to ON or engine running • Turn ignition switch to OFF when SYSTEM CHECK finishes

DTC	P0010	Camshaft Position "A" Actuator Circuit (Bank 1)

HINT:
This DTC relates to the Oil Control Valve (OCV).

DESCRIPTION

The Variable Valve Timing (VVT) system includes the ECM, OCV and VVT controller. The ECM sends a target duty-cycle control signal to the OCV. This control signal regulates the oil pressure supplied to the VVT controller. Camshaft timing control is performed according to engine operating conditions such as the intake air volume, throttle valve position and engine coolant temperature.
The ECM controls the OCV, based on the signals transmitted by several sensors. The VVT controller regulates the intake camshaft angle using oil pressure through the OCV. As a result, the relative positions of the camshaft and crankshaft are optimized, the engine torque and fuel economy improve, and the exhaust emissions decrease under overall driving conditions. The ECM detects the actual intake valve timing using signals from the camshaft and crankshaft position sensors, and performs feedback control. This is how the target intake valve timing is verified by the ECM.

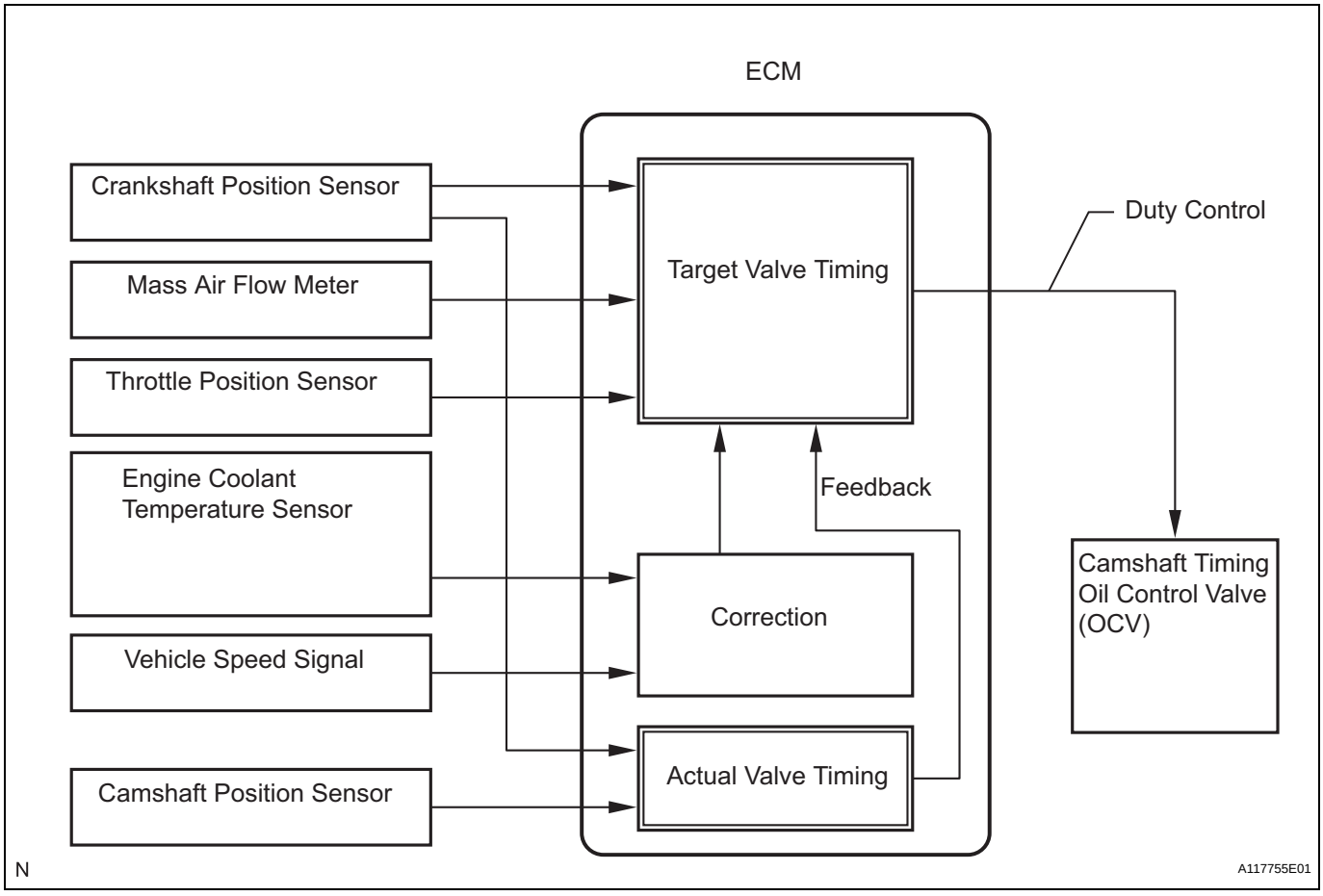

DTC No.	DTC Detection Conditions	Trouble Areas
P0010	Open or short in OCV circuit(1 trip detection logic)	• Open or short in OCV circuit • OCV • ECM

MONITOR DESCRIPTION

The ECM optimizes the valve timing using the VVT system to control the intake camshaft. The VVT system includes the ECM, the OCV and the VVT controller. The ECM sends a target duty-cycle control signal to the OCV. This control signal regulates the oil pressure supplied to the VVT controller. The VVT controller can advance or retard the intake camshaft.
After the ECM sends the target duty-cycle signal to the OCV, the ECM monitors the OCV current to establish an actual duty-cycle. The ECM determines the existence of a malfunction and sets the DTC when the actual duty-cycle ratio varies from the target duty-cycle ratio.

MONITOR STRATEGY

Related DTCs	P0010: VVT OCV range check
Required Sensors/Components (Main)	VVT OCV
Required Sensors/Components (Related)	-
Frequency of Operation	Continuous
Duration	1 second
MIL Operation	Immediate
Sequence of Operation	None

TYPICAL ENABLING CONDITIONS

Monitor runs whenever following DTCs not present	None
All of following conditions met	-
Starter	OFF
Ignition switch	ON
Time after ignition switch off to on	0.5 seconds or more

TYPICAL MALFUNCTION THRESHOLDS

One of following conditions met	-
A. All of following conditions met	-
Battery voltage	11 to 13 V
Target duty ratio	Less than 70 %
Output signal duty ratio	100 %
B. All of following conditions met	-
Battery voltage	13 V or more
Target duty ratio	Less than 80 %
Output signal duty ratio	100 %
C. All of following conditions met	-
Current cut status	Not cut
Output signal duty ratio	3 % or less

COMPONENT OPERATING RANGE

VVT OCV duty ratio	3 to 100%

WIRING DIAGRAM

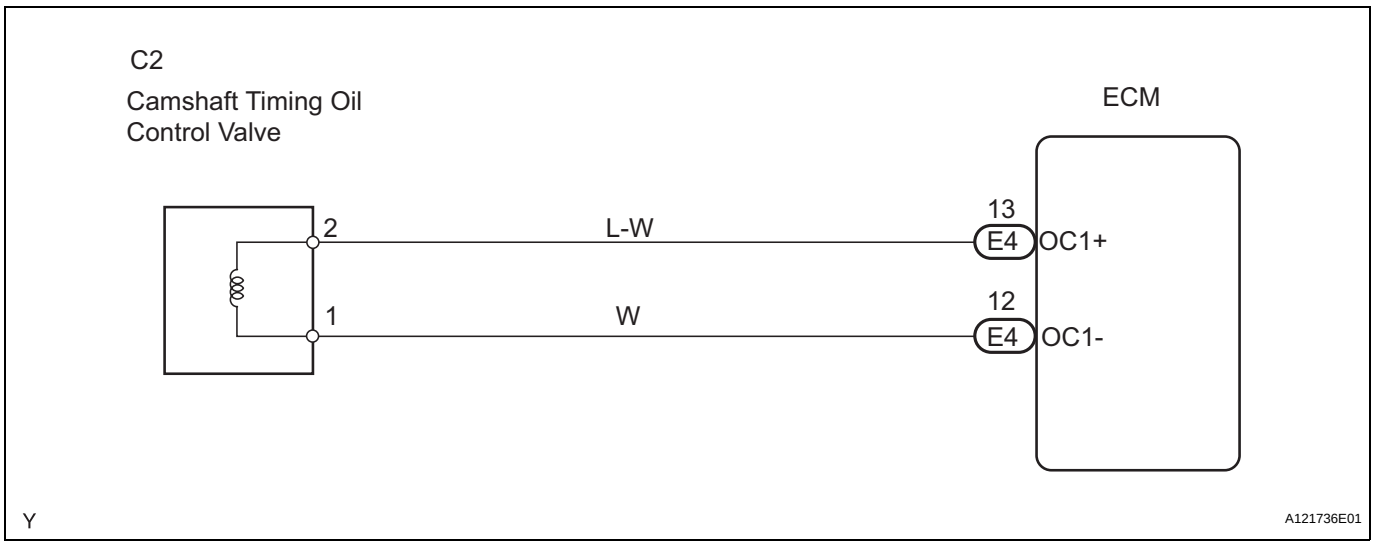

ES

HINT:
Read freeze frame data using the intelligent tester. Freeze frame data records the engine conditions when a malfunction is detected. When troubleshooting, freeze frame data can help determine if the vehicle was running or stopped, if the engine was warmed up or not, if the air-fuel ratio was lean or rich, and other data from the time the malfunction occurred.

1	PERFORM ACTIVE TEST USING INTELLIGENT TESTER (OPERATE OCV)

(a) Connect an intelligent tester to the DLC3.
(b) Start the engine and turn the tester ON.
(c) Warm up the engine.
(d) On the tester, select the following menu items: DIAGNOSIS / ENHANCED OBD II / ACTIVE TEST / VVT CTRL B1.
(e) Check the engine speed while operating the Oil Control Valve (OCV) using the tester.

Result

Tester Operations	Specified Conditions
OCV OFF	Normal engine speed
OCV ON	Engine idles roughly or stalls (soon after OCV switched from OFF to ON)

OK → CHECK FOR INTERMITTENT PROBLEMS

NG

2 INSPECT CAMSHAFT TIMING OIL CONTROL VALVE ASSEMBLY (OCV SIGNAL)

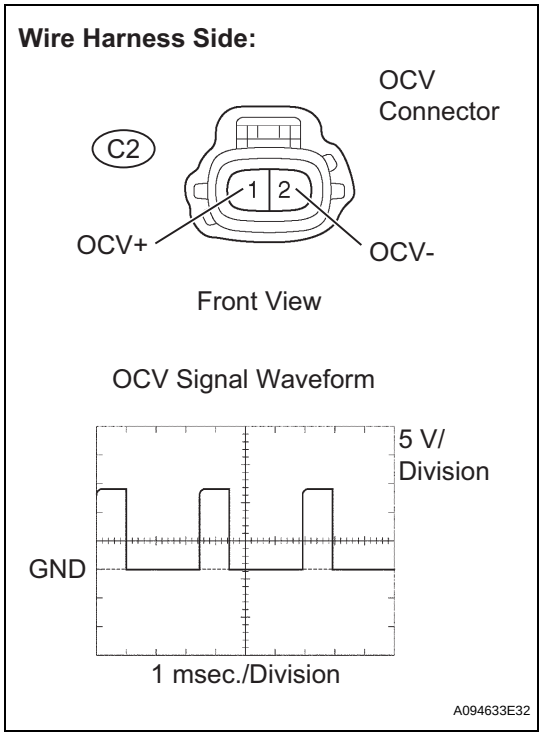

(a) Disconnect the C2 OCV connector.
(b) While idling, check the waveform between the terminals of the OCV connector using an oscilloscope.
Standard

Tester Connections	Specified Conditions
OCV+ (C2-1) - OCV- (C2-2)	Correct waveform shown

(c) Reconnect the OCV connector.

OK → **REPLACE CAMSHAFT TIMING OIL CONTROL VALVE ASSEMBLY**

NG

3 INSPECT ECM (OCV SIGNAL)

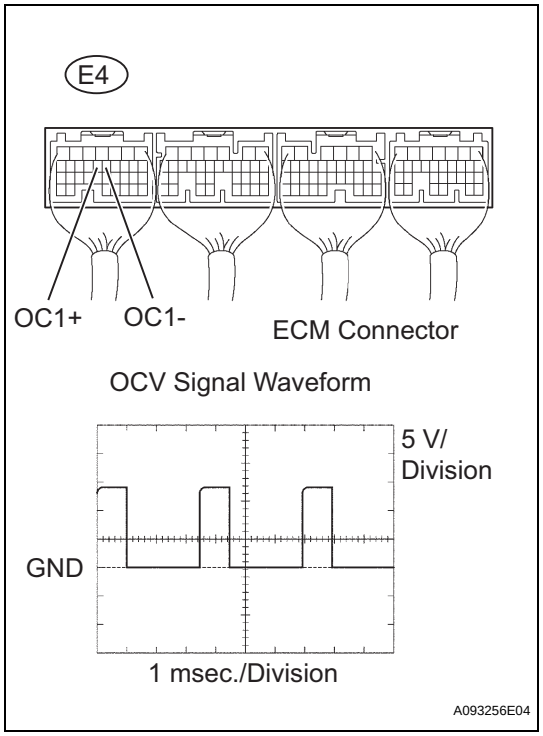

(a) Inspect the ECM using an oscilloscope.
(b) While idling, check the waveform between the terminals of the ECM connector.
Standard

Tester Connections	Specified Conditions
OC1+ (E4-13) - OC1- (E4-12)	Correct waveform shown

NG → **REPLACE ECM**

ES

OK

REPAIR OR REPLACE HARNESS OR CONNECTOR

DTC	P0011	Camshaft Position "A" - Timing Over-Advanced or System Performance (Bank 1)

DTC	P0012	Camshaft Position "A" - Timing Over-Retarded (Bank 1)

HINT:
If DTC P0011 or P0012 is present, check the VVT (Variable Valve Timing) system.

DESCRIPTION

Refer to DTC P0010 (See page ES-66).

DTC No.	DTC Detection Conditions	Trouble Areas
P0011	Advanced cam timing: With warm engine and engine speed of between 550 rpm and 4,000 rpm, all conditions (a), (b) and (c) met (1 trip detection logic): (a) Difference between target and actual intake valve timings more than 5°CA (Crankshaft Angle) (b) Current intake valve timing fixed (timing changes less than 1°CA in 1 second) (c) Variations in VVT controller timing more than 19°CA of maximum delayed timing (advanced)	• Valve timing • Oil control valve (OCV) • OCV filter • Camshaft timing gear assembly • ECM
P0012	Retarded cam timing: With warm engine and engine speed of between 550 rpm and 4,000 rpm, all conditions (a), (b) and (c) met (2 trip detection logic): (a) Difference between target and actual intake valve timings more than 5°CA (Crankshaft Angle) (b) Current intake valve timing fixed (timing changes less than 1°CA in 1 second) (c) Variations in VVT controller timing 19°CA or less of maximum delayed timing (retarded)	• Valve timing • Oil control valve (OCV) • OCV filter • Camshaft timing gear assembly • ECM

MONITOR DESCRIPTION

The ECM optimizes the intake valve timing using the VVT (Variable Valve Timing) system to control the intake camshaft. The VVT system includes the ECM, the Oil Control Valve (OCV) and the VVT controller. The ECM sends a target duty-cycle control signal to the OCV. This control signal regulates the oil pressure supplied to the VVT controller. The VVT controller can advance or retard the intake camshaft. If the difference between the target and actual intake valve timings is large, and changes in actual intake valve timing are small, the ECM interprets this as the VVT controller stuck malfunction and sets a DTC.
Example:
A DTC is set when the following conditions 1), 2) and 3) are met:
1) The difference between the target and actual intake valve timings is more than 5°CA (Crankshaft Angle).
2) It takes 1 second or more to change the valve timing by 1°CA.
3) After above conditions 1) and 2) are met, the OCV is forcibly activated certain times (63 times for P0011, 12 times for P0012) or more.
DTC P0011 (Advanced Cam Timing) is subject to 1 trip detection logic.
DTC P0012 (Retarded Cam Timing) is subject to 2 trip detection logic.
These DTCs indicate that the VVT controller cannot operate properly due to OCV malfunctions or the presence of foreign objects in the OCV.
The monitor will not run unless the following conditions are met:
- The engine is warm (the engine coolant temperature is 70°C [158°F] or more).
- The vehicle has been driven at more than 40 mph (64 km/h) for 3 minutes.
- The engine has idled for 3 minutes.

MONITOR STRATEGY

Related DTCs	P0011: Advance camshaft timing P0012: Retard camshaft timing
Required Sensors/Components (Main)	VVT OCV and VVT actuator
Required Sensors/Components (Related)	Crankshaft position sensor, Camshaft position sensor and Engine coolant temperature sensor
Frequency of Operation	Once per driving cycle
Duration	Within 10 seconds
MIL Operation	P0011: Immediate P0012: 2 driving cycles
Sequence of Operation	None

ES

TYPICAL ENABLING CONDITIONS

Monitor runs whenever following DTCs not present	P0100 - P0103 (MAF meter) P0115 - P0118 (ECT sensor) P0125 (Insufficient ECT for closed loop) P0335 (CKP sensor) P0340 (CMP sensor) P0351 - P0354 (Igniter)
Battery voltage	11 V or more
Throttle position learning	Completed
Engine RPM	550 to 4,000 rpm
Engine coolant temperature	70 to 100°C (167 to 212°F)

TYPICAL MALFUNCTION THRESHOLDS

Advance:

Both of the following conditions are met	-
(a) Deviation of valve timing	More than 5° CA (crankshaft angle)
(b) Valve timing	No change at advanced valve timing

Retarded:

Both of the following conditions are met	-
(a) Deviation of valve timing	More than 5° CA (crankshaft angle)
(b) Valve timing	No change at retarded valve timing

If the difference between the target and actual camshaft timings is greater than the specified value, the ECM operates the VVT (Variable Valve Timing) actuator.
Then, the ECM monitors the camshaft timing change for 5 seconds.

WIRING DIAGRAM

Refer to DTC P0010 (See page ES-68).

NOTICE:
DTC P0011 or P0012 may be set when foreign objects in the engine oil are caught in some parts of the system. The DTC will remain set even if the system returns to normal after a short time. Foreign objects are filtered out by the oil filter.
HINT:
Read freeze frame data using an intelligent tester. Freeze frame data record the engine condition when malfunctions are detected. When troubleshooting, freeze frame data can help determine if the vehicle was moving or stationary, if the engine was warmed up or not, if the air-fuel ratio was lean or rich, and other data, from the time the malfunction occurred.

1	CHECK ANY OTHER DTCS OUTPUT (IN ADDITION TO DTC P0011 OR P0012)

(a) Connect an intelligent tester to the DLC3.
(b) Turn the ignition switch to ON and turn the tester ON.
(c) Select the following menu items: DIAGNOSIS / ENHANCED OBD II / DTC INFO / CURRENT CODES.
(d) Read DTCs.

Result

Display (DTC output)	Proceed To
P0011 or P0012	A
P0011 or P0012 and other DTCs	B

HINT:
If any DTCs other than P0011 or P0012 are output, troubleshoot those DTCs first.

ES

B → GO TO DTC CHART

A

2	PERFORM ACTIVE TEST USING INTELLIGENT TESTER (OPERATE OCV)

(a) Connect the intelligent tester to the DLC3.
(b) Start the engine and turn the tester ON.
(c) Warm up the engine.
(d) On the tester, select the following menu items: DIAGNOSIS / ENHANCED OBD II / ACTIVE TEST / VVT CTRL B1.
(e) Check the engine speed while operating the Oil Control Valve (OCV) using the tester.

Result

Tester Operations	Specified Conditions
OCV OFF	Normal engine speed
OCV ON	Engine idles roughly or stalls (soon after OCV switched from OFF to ON)

NG → Go to step 4

OK

3	CHECK WHETHER DTC OUTPUT RECURS (DTC P0011 OR P0012)

(a) Connect the intelligent tester to the DLC3.
(b) Turn the ignition switch to ON and turn the tester ON.
(c) Clear DTCs (see page ES-40).
(d) Start the engine and warm it up.
(e) Switch the ECM from normal mode to check mode using the tester (see page ES-43).
(f) Drive the vehicle for more than 10 minutes.
(g) Read DTCs using the tester.

OK:
No DTC output.

OK → **END**

NG

4 CHECK VALVE TIMING (CHECK FOR LOOSE AND JUMPED TEETH ON TIMING CHAIN)

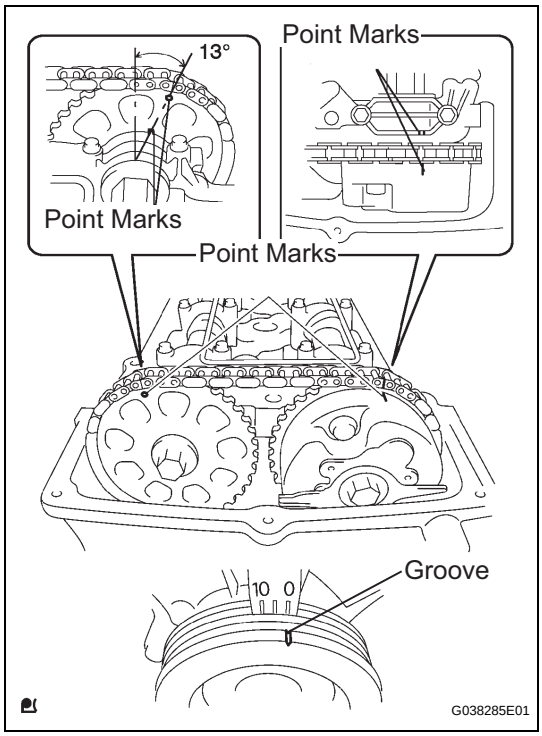

(a) Remove the cylinder head cover (see page EM-23).
(b) Turn the crankshaft pulley, and align its groove with the timing mark "0" on the timing chain cover.
(c) Check that the point marks on the camshaft timing gears are as shown in the illustration.
If not, turn the crankshaft 1 revolution (360°) and align the marks as above.
OK:
Point marks on the camshaft timing gears are aligned as shown in illustration.
(d) Reinstall the cylinder head cover (see page EM-32).

NG → **ADJUST VALVE TIMING**

OK

5 INSPECT CAMSHAFT TIMING OIL CONTROL VALVE ASSEMBLY (OCV)

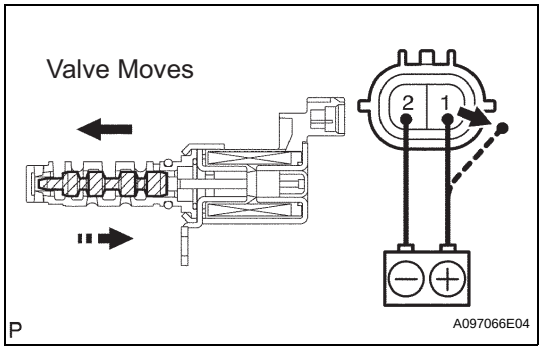

(a) Remove the OCV.
(b) Measure the resistance between the terminals of the OCV.
Standard Resistance:
6.9 to 7.9 Ωat 20°C (68°F)
(c) Apply the positive battery voltage to terminal 1 and negative battery voltage to terminal 2. Check the valve operation.
OK:
Valve moves quickly.
(d) Reinstall the OCV.

NG → **REPLACE CAMSHAFT TIMING OIL CONTROL VALVE ASSEMBLY**

OK

6	INSPECT OIL CONTROL VALVE FILTER

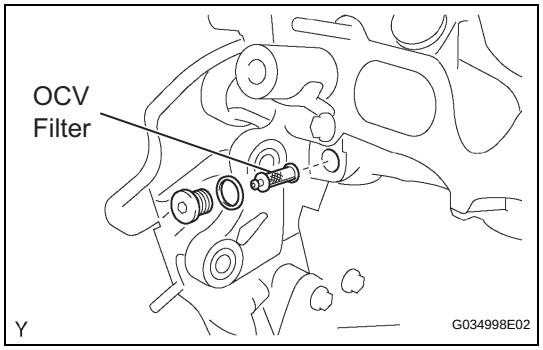

(a) Remove the OCV filter.
(b) Check that the filter is not clogged.
OK:
Filter is not clogged.
(c) Reinstall the OCV filter.

NG → **CLEAN OIL CONTROL VALVE FILTER**

OK

REPLACE CAMSHAFT TIMING GEAR ASSEMBLY

DTC	P0016	Crankshaft Position - Camshaft Position Correlation (Bank 1 Sensor A)

DESCRIPTION

Refer to DTC P0335 (See page ES-171).

DTC No.	DTC Detection Condition	Trouble Area
P0016	Deviations in crankshaft and camshaft position sensor signals (2 trip detection logic)	• Mechanical system (Timing chain has jumped tooth or chain stretched) • ECM

MONITOR DESCRIPTION

The ECM optimizes the valve timing by using the VVT (Variable Valve Timing) system to control the intake camshaft. The VVT system includes the ECM, the Oil Control Valve (OCV) and the VVT controller. The ECM sends a target duty-cycle control signal to the OCV. This control signal regulates the oil pressure supplied to the VVT controller. The VVT controller can advance or retard the intake camshaft. The ECM calibrates the intake valve timing by setting the intake camshaft to the most retarded angle while the engine is idling. The ECM closes the OCV to retard the cam. The ECM stores this value as the VVT learning value. When the difference between the target and actual intake valve timings is 5°CA (Crankshaft Angle) or less, the ECM stores it.

If the VVT learning value matches the following conditions, the ECM determines the existence of a malfunction in the VVT system, and sets the DTC.

- VVT learning value: Less than 33°CA, or more than 51°CA.
- Above condition continues for 18 seconds or more.

This DTC indicates that the intake camshaft has been installed toward the crankshaft at an incorrect angle, caused by factors such as the timing chain having jumped a tooth.

This monitor begins to run after the engine has idled for 5 minutes.

MONITOR STRATEGY

Related DTCs	P0016: Camshaft timing (bank 1) misalignment
Required Sensors/Components (Main)	VVT actuator
Required Sensors/Components (Related)	Camshaft position sensor, Crankshaft position sensor
Frequency of Operation	Once per driving cycle
Duration	Within 60 seconds
MIL Operation	2 driving cycles
Sequence of Operation	None

TYPICAL ENABLING CONDITIONS

Monitor runs whenever following DTCs not present	P0011 (VVT system 1 - advance) P0012 (VVT system 1 - retard) P0115 - P0118 (ECT sensor)
Engine RPM	550 to 1,000 rpm

TYPICAL MALFUNCTION THRESHOLDS

Valve timing when camshaft retarded maximum	Less than 33°, or more than 51°

WIRING DIAGRAM

Refer to DTC P0335 (See page ES-173).

HINT:

- Read freeze frame data using an intelligent tester. Freeze frame data record the engine condition when malfunctions are detected. When troubleshooting, freeze frame data can help determine if the vehicle was moving or stationary, if the engine was warmed up or not, if the air-fuel ratio was lean or rich, and other data, from the time the malfunction occurred.
- After replacing the ECM or adjusting intake valve timing, confirm that the DTC output does not recur.
  (a) Connect an intelligent tester to the DLC3.
  (b) Turn the ignition switch to ON.
  (c) Turn the tester ON.
  (d) Clear DTCs (see page ES-40).
  (e) Switch the ECM from normal mode to check mode using the tester (see page ES-43).
  (f) Start the engine and warm it up.
  (g) Allow the engine to idle for 1 minute or more, and then drive the vehicle for 1 minute or more.
  (h) Confirm that no DTC is set, using the tester.

ES

1	CHECK VALVE TIMING (CHECK FOR LOOSE AND JUMPED TEETH ON TIMING CHAIN)

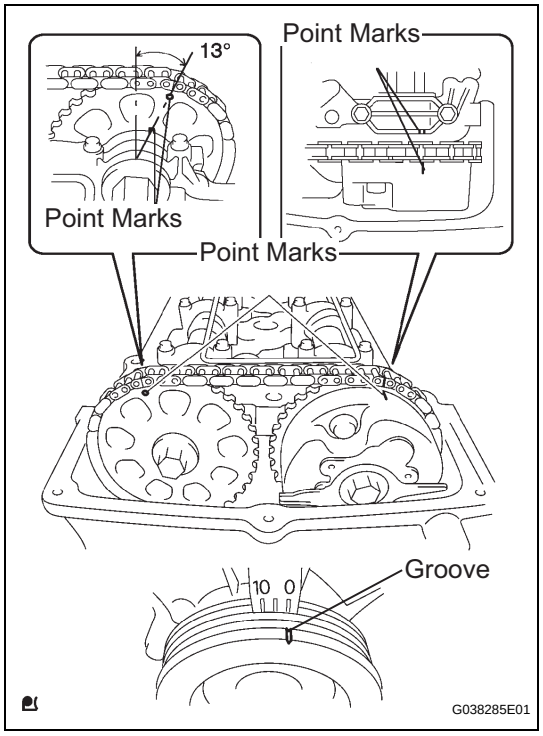

(a) Remove the cylinder head cover.
(b) Turn the crankshaft pulley, and align its groove with the timing mark "0" on the timing chain cover.
(c) Check that the point marks on the camshaft timing gears are as shown in the illustration.

If not, turn the crankshaft 1 revolution (360°) and align the marks as above.

OK:

Point marks on camshaft timing gears are aligned as shown in illustration.

(d) Reinstall the cylinder head cover.

NG → **ADJUST VALVE TIMING**

OK ↓

REPLACE ECM

DTC	P0031	Oxygen (A/F) Sensor Heater Control Circuit Low (Bank 1 Sensor 1)

DTC	P0032	Oxygen (A/F) Sensor Heater Control Circuit High (Bank 1 Sensor 1)

HINT:
- Although the DTC titles say the oxygen sensor, these DTCs relate to the Air-Fuel Ratio (A/F) sensor.
- Sensor 1 refers to the sensor mounted in front of the Three-Way Catalytic Converter (TWC) and located near the engine assembly.

DESCRIPTION

ES

Refer to DTC P2195 (See page ES-312).
HINT:
- When either of these DTCs are set, the ECM enters fail-safe mode. The ECM turns off the A/F sensor heater in fail-safe mode. Fail-safe mode continues until the ignition switch is turned to OFF.
- The ECM provides a pulse width modulated control circuit to adjust the current through the heater. The A/F sensor heater circuit uses a relay on the +B side of the circuit.

Reference (Bank 1 Sensor 1 System Diagram)

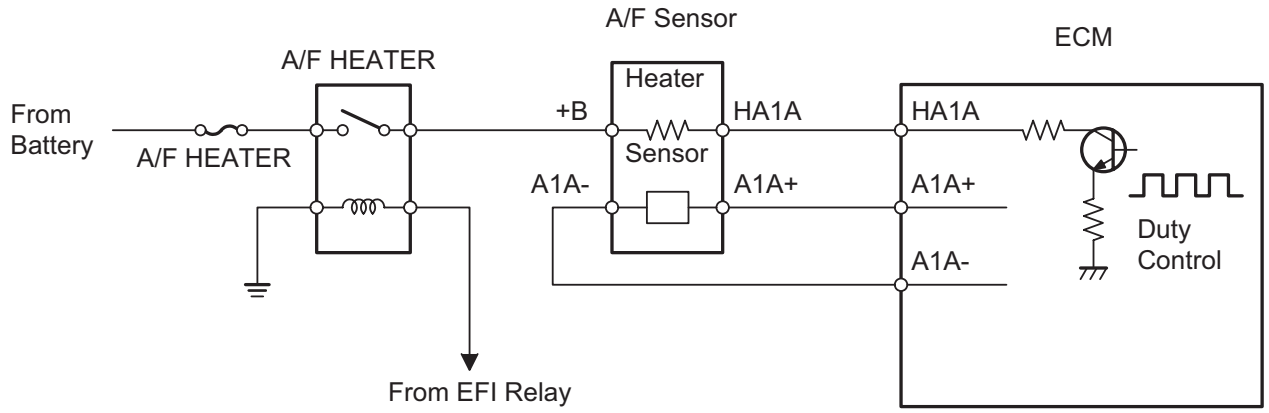

P

A118002E04

DTC No.	DTC Detection Conditions	Trouble Areas
P0031	Air-Fuel Ratio (A/F) sensor heater current less than 0.8 A (1 trip detection logic)	• Open in A/F sensor heater circuit • A/F sensor heater • A/F HEATER relay • ECM
P0032	Air-Fuel Ratio (A/F) sensor heater current more than 10 A (1 trip detection logic)	• Short in A/F sensor heater circuit • A/F sensor heater • A/F HEATER relay • ECM

MONITOR DESCRIPTION

The ECM uses information from the Air-Fuel Ratio (A/F) sensor to regulate the air-fuel ratio and keep it close to the stoichiometric level. This maximizes the ability of the Three-Way Catalytic Converter (TWC) to purify the exhaust gases.

The A/F sensor detects oxygen levels in the exhaust gas and transmits the information to the ECM. The inner surface of the sensor element is exposed to the outside air. The outer surface of the sensor element is exposed to the exhaust gas. The sensor element is made of platinum coated zirconia and includes an integrated heating element.

The zirconia element generates a small voltage when there is a large difference in the oxygen concentrations between the exhaust gas and outside air. The platinum coating amplifies this voltage generation.

The A/F sensor is more efficient when heated. When the exhaust gas temperature is low, the sensor cannot generate useful voltage signals without supplementary heating. The ECM regulates the supplementary heating using a duty-cycle approach to adjust the average current in the sensor heater element. If the heater current is outside the normal range, the signal transmitted by the A/F sensor will be inaccurate, as a result, the ECM will be unable to regulate air-fuel ratio properly.

When the current in the A/F sensor heater is outside the normal operating range, the ECM interprets this as a malfunction in the sensor heater and sets a DTC.

Example:

The ECM sets DTC P0032 when the current in the A/F sensor heater is more than 10 A. Conversely, when the heater current is less than 0.8 A, DTC P0031 is set.

MONITOR STRATEGY

Related DTCs	P0031: A/F sensor heater range check (Low current) P0032: A/F sensor heater range check (High current)
Required Sensors/Components (Main)	A/F sensor heater
Required Sensors/Components (Related)	-
Frequency of Operation	Continuous
Duration	10 seconds
MIL Operation	Immediate
Sequence of Operation	None

TYPICAL ENABLING CONDITIONS

P0031:

Monitor runs whenever following DTCs not present	None
Battery voltage	10.5 V or more
A/F sensor heater duty-cycle ratio	50 % or more
Time after engine start	10 seconds or more

P0032:

Monitor runs whenever following DTCs not present	None
Time after engine start	10 seconds or more

TYPICAL MALFUNCTION THRESHOLDS

P0031:

A/F sensor heater current	Less than 0.8 A

P0032:

A/F sensor heater current	More than 10 A

COMPONENT OPERATING RANGE

A/F sensor heater current	1.8 to 3.4 A at 20°C (68°F)

WIRING DIAGRAM

Refer to DTC P2195 (See page ES-316).

HINT:
Read freeze frame data using a intelligent tester. Freeze frame data record the engine condition when malfunctions are detected. When troubleshooting, freeze frame data can help determine if the vehicle was moving or stationary, if the engine was warmed up or not, if the air-fuel ratio was lean or rich, and other data, from the time the malfunction occurred.

ES

1 INSPECT AIR FUEL RATIO SENSOR (HEATER RESISTANCE)

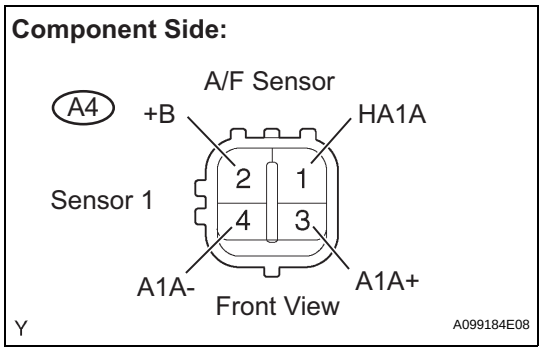

(a) Disconnect the A4 Air-Fuel Ratio (A/F) sensor connector.
(b) Measure the resistance between the terminals of the A/F sensor connector.
Standard Resistance

Tester Connections	Specified Conditions
HA1A (1) - +B (2)	1.8 Ωto 3.4 Ω at 20°C (68°F)
HA1A (1) - A1A- (4)	10 kΩ or higher

(c) Reconnect the A/F sensor connector.

NG → REPLACE AIR FUEL RATIO SENSOR

OK

2 INSPECT AIR FUEL RATIO SENSOR HEATER RELAY (A/F HEATER RELAY)

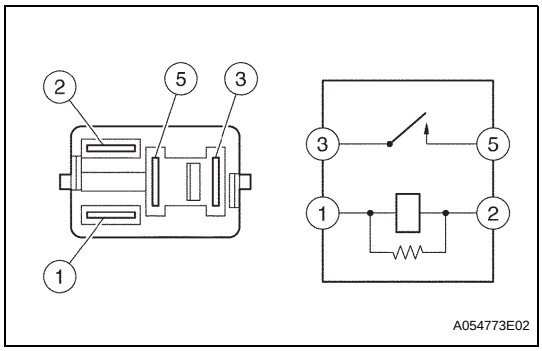

(a) Remove the A/F HEATER relay from the engine room R/B.
(b) Check the A/F HEATER relay resistance.
Standard Resistance

Tester Connections	Specified Conditions
3 - 5	10 kΩ or higher
3 - 5	Below 1 Ω (when battery voltage applied to terminals 1 and 2)

(c) Reinstall the A/F HEATER relay.

NG → REPLACE AIR FUEL RATIO SENSOR HEATER RELAY

OK

3 INSPECT ECM (HA1A VOLTAGE)

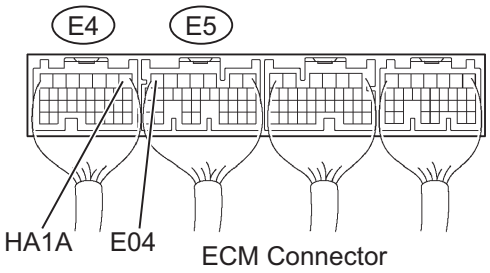

(a) Turn the ignition switch to ON.
(b) Measure the voltage between the terminals of the E4 and E5 ECM connectors.
Standard Voltage

Tester Connections	Specified Conditions
HA1A (E4-1) - E04 (E5-7)	9 to 14 V

OK → **REPLACE ECM**

NG

4 CHECK HARNESS AND CONNECTOR (A/F SENSOR - ECM, A/F SENSOR - A/F HEATER RELAY)

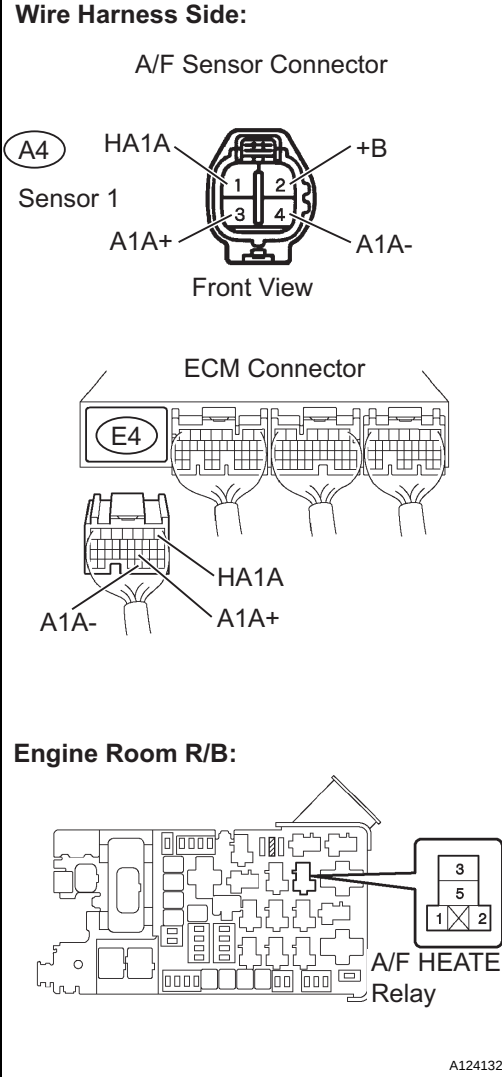

(a) Check the harness and connectors between the ECM and A/F sensor.
(1) Disconnect the A4 A/F sensor connector.
(2) Disconnect the E4 ECM connector.
(3) Check the resistance.
Standard Resistance (Check for open)

Tester Connections	Specified Conditions
HA1A (A4-1) - HA1A (E4-1)	Below 1 Ω

Standard Resistance (Check for short)

Tester Connections	Specified Conditions
HA1A (A4-1) or HA1A (E4-1) - Body ground	10 kΩor higher

(4) Reconnect the A/F sensor connector.
(5) Reconnect the ECM connector.
(b) Check the harness and connector between the A/F sensor and A/F HEATER relay.
(1) Disconnect the A4 A/F sensor connector.
(2) Remove the A/F HEATER relay from the engine room R/B.
(3) Check the resistance.
Standard Resistance (Check for open)

Tester Connections	Specified Conditions
+B (A4-2) - A/F HEATER relay (3)	Below 1 Ω

Standard Resistance (Check for short)

Tester Connections	Specified Conditions
+B (A4-2) or A/F HEATER relay (3) - Body ground	10 kΩor higher

(4) Reconnect the A/F sensor connector.
(5) Reinstall the A/F HEATER relay.

OK → **REPLACE ECM**

ES

NG

REPAIR OR REPLACE HARNESS OR CONNECTOR

DTC	P0037	Oxygen Sensor Heater Control Circuit Low (Bank 1 Sensor 2)

DTC	P0038	Oxygen Sensor Heater Control Circuit High (Bank 1 Sensor 2)

HINT:
Sensor 2 refers to the sensor mounted behind the Three-Way Catalytic Converter (TWC) and located far from the engine assembly.

DESCRIPTION

Refer to DTC P0136 (See page ES-126).
HINT:

- When either of these DTCs are set, the ECM enters fail-safe mode. The ECM turns off the Heated Oxygen (HO2) sensor heater in fail-safe mode. Fail-safe mode continues until the ignition switch is turned to OFF.
- The ECM provides a pulse width modulated control circuit to adjust the current through the heater. The HO2 sensor heater circuit uses a relay on the B+ side of the circuit.

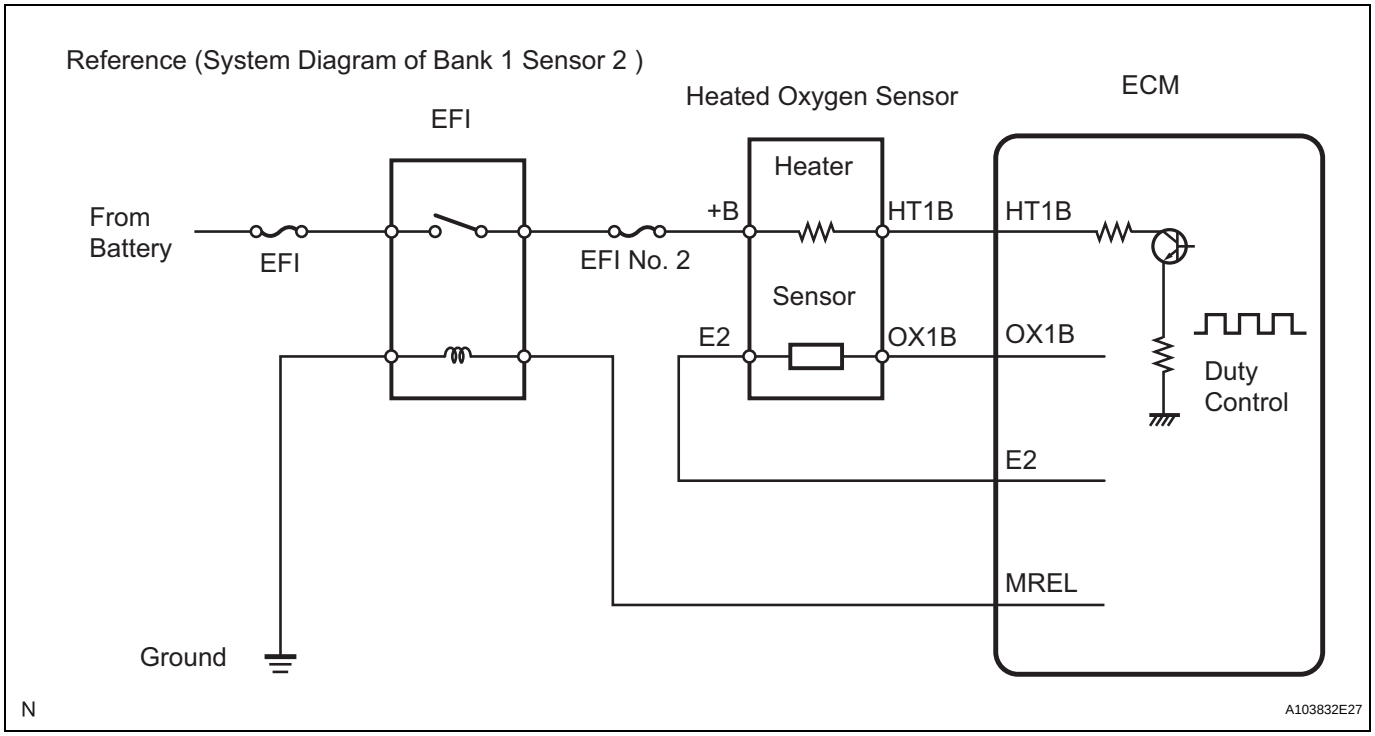

DTC No.	DTC Detection Conditions	Trouble Areas
P0037	Heated Oxygen (HO2) sensor heater current less than 0.3 A (1 trip detection logic)	• Open or short in HO2 sensor heater circuit • HO2 sensor heater • EFI relay • ECM
P0038	Heated Oxygen (HO2) sensor heater current more than 2 A (1 trip detection logic)	• Open or short in HO2 sensor heater circuit • HO2 sensor heater • EFI relay • ECM

MONITOR DESCRIPTION

The sensing portion of the Heated Oxygen (HO2) sensor has a zirconia element which is used to detect the oxygen concentration in the exhaust gas. If the zirconia element is at the appropriate temperature, and the difference between the oxygen concentrations surrounding the inside and outside surfaces of the sensor is large, the zirconia element generates voltage signals. In order to increase the oxygen concentration detecting capacity of the zirconia element, the ECM supplements the heat from the exhaust with heat from a heating element inside the sensor. When the current in the sensor heater is outside the standard operating range, the ECM interprets this as a malfunction in the sensor heater and sets a DTC.
Example:
The ECM sets DTC P0038 when the current in the HO2 sensor heater is more than 2 A. Conversely, when the heater current is less than 0.3 A, DTC P0037 is set.

MONITOR STRATEGY

Related DTCs	P0037: Heated oxygen sensor heater range check (Low current) P0038: Heated oxygen sensor heater range check (High current)
Required Sensors/Components (Main)	Heated oxygen sensor heater
Required Sensors/Components (Related)	Vehicle speed sensor
Frequency of Operation	Continuous
Duration	P0037: 0.5 seconds P0038: 0.3 seconds
MIL Operation	Immediate
Sequence of Operation	None

TYPICAL ENABLING CONDITIONS

P0037:

Monitor runs whenever following DTCs not present	None
Battery voltage	10.5 V or more
All heaters turned OFF and intrusive heating operated when following conditions met:	(a) and (b)
(a) Heater	ON
(b) Heater current	Less than 0.3 A

P0038 Case 1:

Monitor runs whenever following DTCs not present	None
Battery voltage	10.5 V or more
Engine	Running
Starter	OFF
Intrusive operating	Not operating

P0038 Case 2:

Monitor runs whenever following DTCs not present	None
Battery voltage	10.5 V or more
All heaters turned OFF and intrusive heating operated when following conditions met:	(a) and (b)
(a) Heater	ON
(b) Heater current	More than 2 A

TYPICAL MALFUNCTION THRESHOLDS

P0037:

Heated oxygen sensor heater current during intrusive heating	Less than 0.3 A

P0038 Case 1:

Heated oxygen sensor heater current	More than 2 A

P0038 Case 2:

Heated oxygen sensor heater current during intrusive heating	2 A or more

COMPONENT OPERATING RANGE

Heated Oxygen (HO2) sensor heater current	0.4 to 1 A (when engine idles, HO2 sensor warmed up and battery voltage 11 to 14 V)

WIRING DIAGRAM

Refer to DTC P0136 (See page ES-133).

HINT:

- If other DTCs relating to different systems that have terminal E2 as the ground terminal are output simultaneously, terminal E2 may have an open circuit.
- Read freeze frame data using a intelligent tester. Freeze frame data record the engine condition when malfunctions are detected. When troubleshooting, freeze frame data can help determine if the vehicle was moving or stationary, if the engine was warmed up or not, if the air-fuel ratio was lean or rich, and other data, from the time the malfunction occurred.

ES

1 INSPECT HEATED OXYGEN SENSOR (HEATER RESISTANCE)

Component Side:

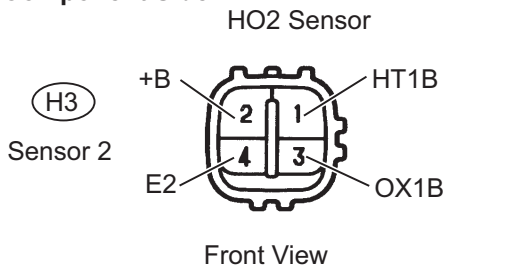

(a) Disconnect the H3 Heated Oxygen (HO2) sensor connector.

(b) Measure the resistance between the terminals of the HO2 sensor connector.

Standard Resistance

Tester Connections	Specified Conditions
HT1B (1) - +B (2)	11 to 16 Ωat 20°C (68°F)
HT1B (1) - E2 (4)	10 kΩ or higher

(c) Reconnect the HO2 sensor connector.

NG → **REPLACE HEATED OXYGEN SENSOR**

OK

2 INSPECT EFI RELAY

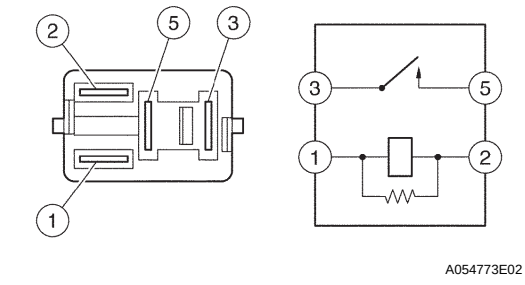

(a) Remove the EFI relay from the engine room R/B.

(b) Check the EFI relay resistance.

Standard Resistance

Tester Connections	Specified Conditions
3 - 5	10 kΩ or higher
3 - 5	Below 1 Ω (when battery voltage applied to terminals 1 and 2)

(c) Reinstall the EFI relay.

NG → **REPLACE EFI RELAY**

OK

3	INSPECT ECM (HT1B VOLTAGE)

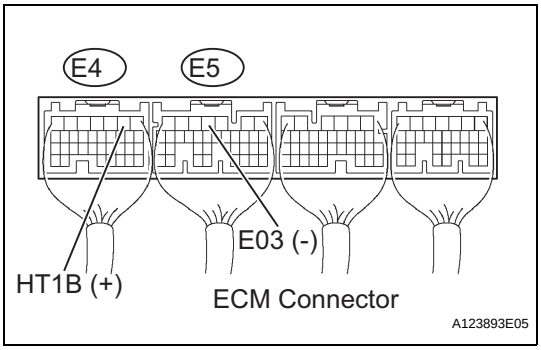

(a) Turn the ignition switch to ON.
(b) Measure the voltage between the terminals of the ECM connectors.

Standard Voltage

Tester Connections	Specified Conditions
HT1B (E4-2) - E03 (E5-4)	9 to 14 V

OK → REPLACE ECM

NG

4	CHECK HARNESS AND CONNECTOR (HEATED OXYGEN SENSOR - ECM, HEATED OXYGEN SENSOR - EFI RELAY)

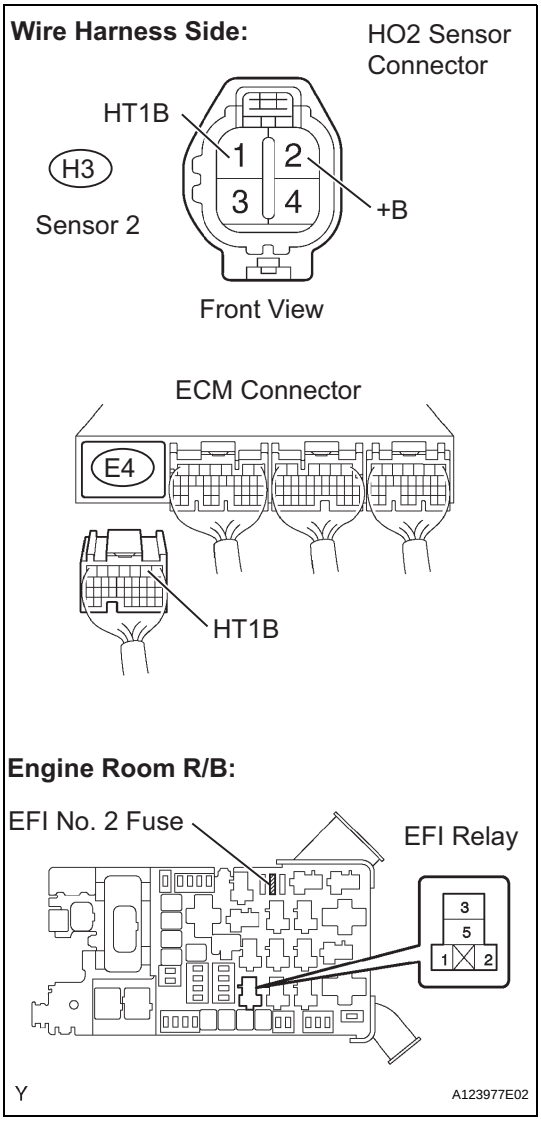

(a) Check the harness and connectors between the ECM and HO2 sensor.
  (1) Disconnect the H3 HO2 sensor connector.
  (2) Disconnect the E4 ECM connector.
  (3) Check the resistance.

Standard Resistance (Check for open):

Tester Connections	Specified Conditions
HT1B (H3-1) - HT1B (E4-2)	Below 1 Ω

Standard Resistance (Check for short)

Tester Connections	Specified Conditions
HT1B (H3-1) or HT1B (E4-2) - Body ground	10 kΩ or higher

  (4) Reconnect the HO2 sensor connector.
  (5) Reconnect the ECM connector.

(b) Check the harness and connector between the HO2 sensor and EFI relay.
  (1) Inspect the EFI No. 2 fuse.
    • Remove the EFI No. 2 fuse from the engine room R/B.
    • Check the EFI No. 2 fuse resistance.
      Standard Resistance:
      Below 1 Ω
    • Reinstall the EFI No. 2 fuse.
  (2) Disconnect the H3 HO2 sensor connector.
  (3) Remove the EFI relay from the engine room R/B.
  (4) Check the resistance.

Standard Resistance (Check for open)

Tester Connections	Specified Conditions
+B (H3-2) - EFI relay (3)	Below 1 Ω

Standard Resistance (Check for short)

Tester Connections	Specified Conditions
+B (H3 - 2) or EFI relay (3) - Body ground	10 kΩ or higher

(5) Reconnect the HO2 sensor connector.
(6) Reinstall the EFI relay.

NG → **REPAIR OR REPLACE HARNESS OR CONNECTOR**

OK

REPLACE ECM

DTC	P0100	Mass or Volume Air Flow Circuit

DTC	P0102	Mass or Volume Air Flow Circuit Low Input

DTC	P0103	Mass or Volume Air Flow Circuit High Input

DESCRIPTION

The Mass Air Flow (MAF) meter is a sensor that measures the amount of air flowing through the throttle valve.

The ECM uses this information to determine the fuel injection time and to provide appropriate air-fuel ratio. Inside the MAF meter, there is a heated platinum wire which is exposed to the flow of intake air. By applying a specific electrical current to the wire, the ECM heats it to a given temperature. The flow of incoming air cools both the wire and an internal thermistor, affecting their resistance. To maintain a constant current value, the ECM varies the voltage applied to these components in the MAF meter. The voltage level is proportional to the airflow through the sensor, and the ECM uses it to calculate the intake air volume.

The circuit is constructed so that the platinum hot wire and the temperature sensor provide a bridge circuit, and the power transistor is controlled so that the potentials of A and B remain equal to maintain the predetermined temperature.

HINT:

When any of these DTCs are set, the ECM enters fail-safe mode. During fail-safe mode, the ignition timing is calculated by the ECM, according to the engine RPM and throttle valve position. Fail-safe mode continues until a pass condition is detected.

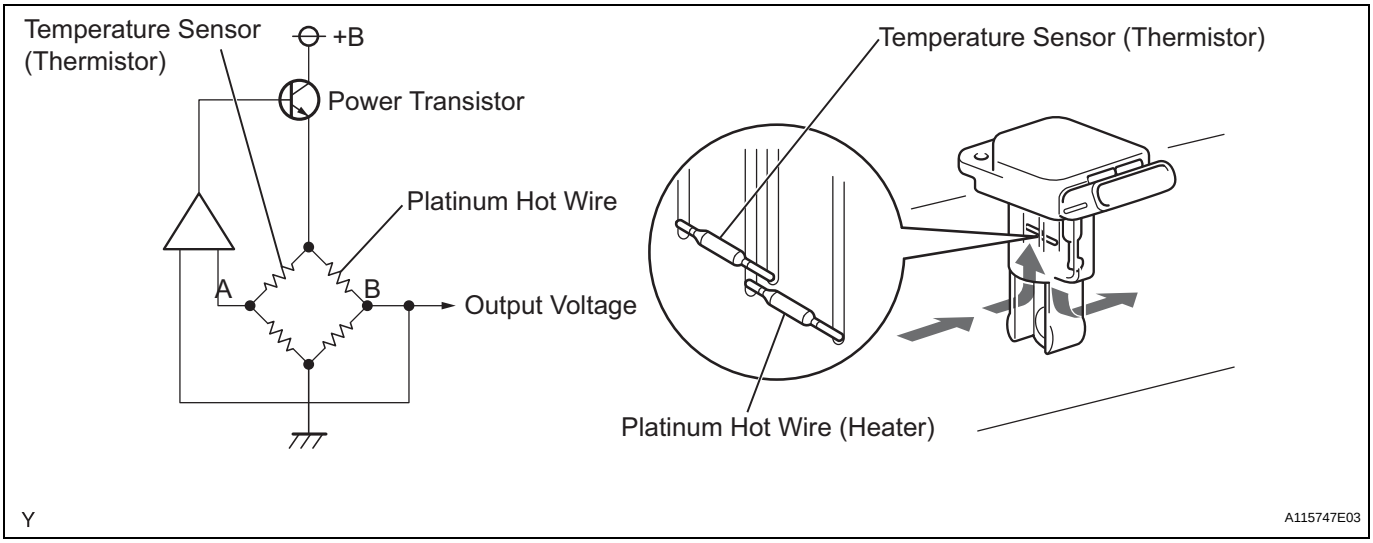

DTC No.	DTC Detection Conditions	Trouble Areas
P0100	Mass Air Flow (MAF) meter voltage less than 0.2 V, or more than 4.9 V for 3 seconds	• Open or short in MAF meter circuit • MAF meter • ECM
P0102	Mass Air Flow (MAF) meter voltage less than 0.2 V for 3 seconds	• Open or short in MAF meter circuit • MAF meter • ECM
P0103	Mass Air Flow (MAF) meter more than 4.9 V for 3 seconds	• Open or short in MAF meter circuit • MAF meter • ECM

HINT:

When any of these DTCs are set, check the air-flow rate by selecting the following menu items on an intelligent tester: DIAGNOSIS / ENHANCED OBD II / DATA LIST / PRIMARY / MAF.

Mass Air Flow Rate (g/sec)	Malfunctions
Approximately 0.0	• Open in Mass Air Flow (MAF) meter power source circuit • Open or short in VG circuit
271.0 or more	• Open in EVG circuit

MONITOR DESCRIPTION

If there is a defect in the MAF meter or an open or short circuit, the voltage level deviates from the normal operating range. The ECM interprets this deviation as a malfunction in the MAF meter and sets a DTC.
Example:
When the sensor voltage output remains less than 0.2 V, or more than 4.9 V, for more than 3 seconds, the ECM sets a DTC.
If the malfunction is not repaired successfully, a DTC is set 3 seconds after the engine is next started.

MONITOR STRATEGY

Related DTCs	P0100: Mass air flow meter range check (Fluctuating) P0102: Mass air flow meter range check (Low voltage) P0103: Mass air flow meter range check (High voltage)
Required Sensors/Components (Main)	MAF meter
Required Sensors/Components (Related)	Crankshaft position sensor
Frequency of Operation	Continuous
Duration	3 seconds
MIL Operation	Immediate: Engine RPM less than 4,000 rpm 2 driving cycles: Engine RPM 4,000 rpm or more
Sequence of Operation	None

TYPICAL ENABLING CONDITIONS

Monitor runs whenever following DTCs not present	None

TYPICAL MALFUNCTION THRESHOLDS

P0100:

MAF meter voltage	Less than 0.2 V, or more than 4.9 V

P0102:

MAF meter voltage	Less than 0.2 V

P0103:

MAF meter voltage	More than 4.9 V

COMPONENT OPERATING RANGE

MAF meter voltage	Between 0.4 V and 2.2 V

WIRING DIAGRAM

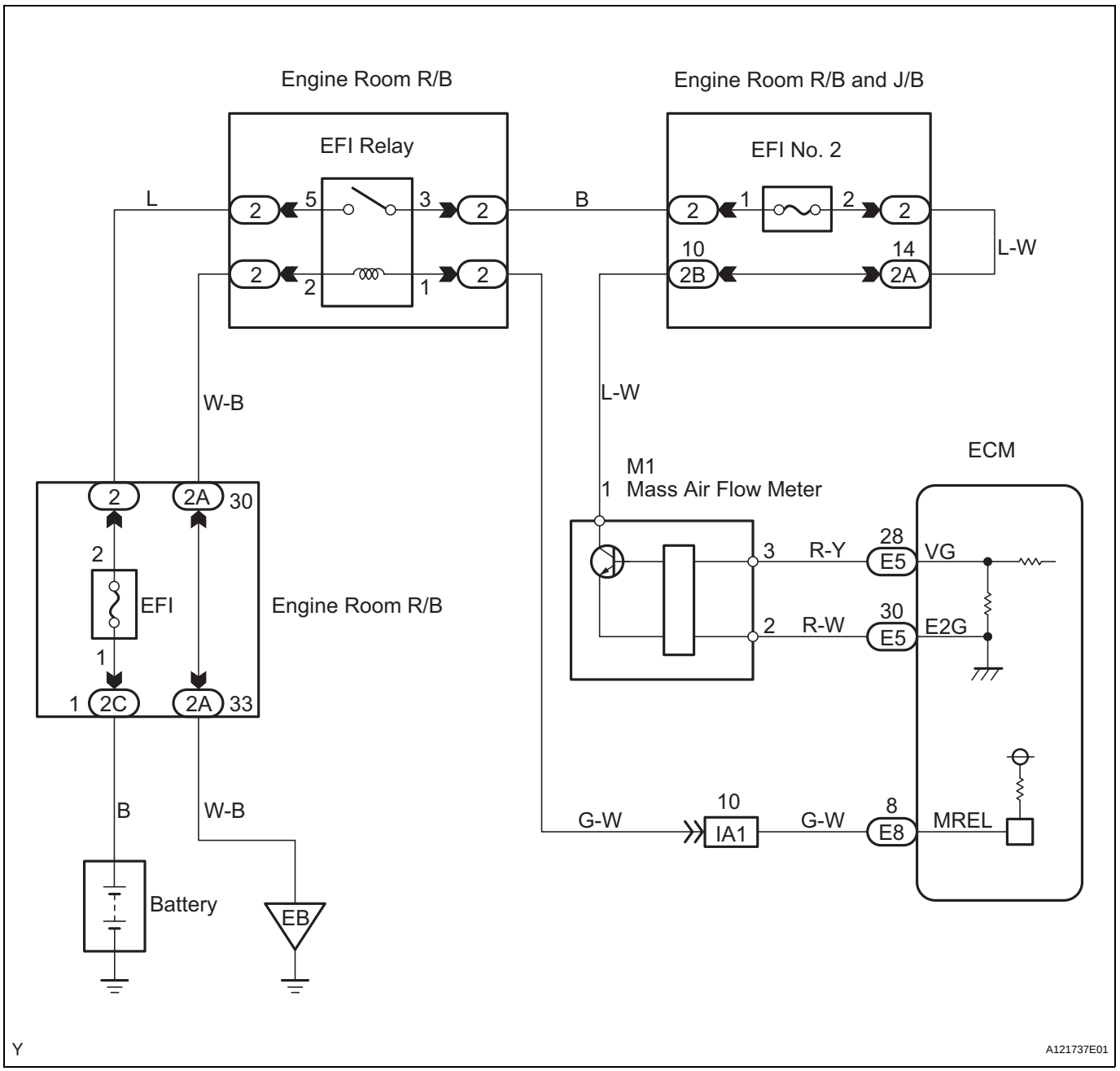

HINT:
Read freeze frame data using an intelligent tester. Freeze frame data record the engine condition when malfunctions are detected. When troubleshooting, freeze frame data can help determine if the vehicle was moving or stationary, if the engine was warmed up or not, if the air-fuel ratio was lean or rich, and other data, from the time the malfunction occurred.

1	READ DATA LIST (MASS AIR FLOW RATE)

(a) Connect an intelligent tester to the DLC3.
(b) Start the engine.
(c) Turn the tester ON.
(d) Select the following menu items: DIAGNOSIS / ENHANCED OBD II / DATA LIST / PRIMARY / MAF.

(e) Read the values displayed on the tester.
Result

Mass Air Flow Rate (g/sec)	Proceed To
0.0	A
271.0 or more	B
Between 1.0 and 270.0 (*1)	C

*1: The value must be changed when the throttle valve is open or closed.

B → **Go to step 6**

C → **CHECK FOR INTERMITTENT PROBLEMS**

A

ES

2 INSPECT MASS AIR FLOW METER (POWER SOURCE VOLTAGE)

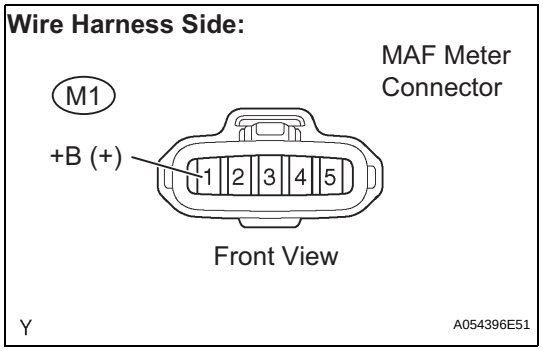

(a) Disconnect the M1 Mass Air Flow (MAF) meter connector.
(b) Turn the ignition switch to ON.
(c) Measure the voltage between the terminal of the wire harness side connector and body ground.
Standard Voltage

Tester Connections	Specified Conditions
+B (M1-1) - Body ground	9 to 14 V

(d) Reconnect the MAF meter connector.

NG → **Go to step 5**

OK

3 INSPECT ECM (VG VOLTAGE)

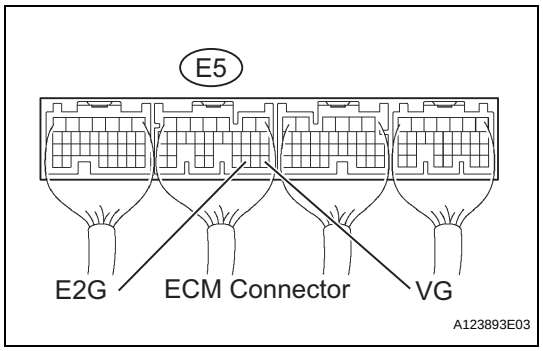

(a) Start the engine.
(b) Measure the voltage between the terminals of the ECM connector.
HINT:
The transmission gear selector lever should be in the P or N position and the A/C switch should be turned OFF.
Standard Voltage

Tester Connections	Engine Conditions	Specified Conditions
VG (E5-28) - E2G (E5-30)	Engine idling	0.5 to 3.0 V

OK → **REPLACE ECM**

NG

4	CHECK HARNESS AND CONNECTOR (MASS AIR FLOW METER - ECM)

Wire Harness Side:

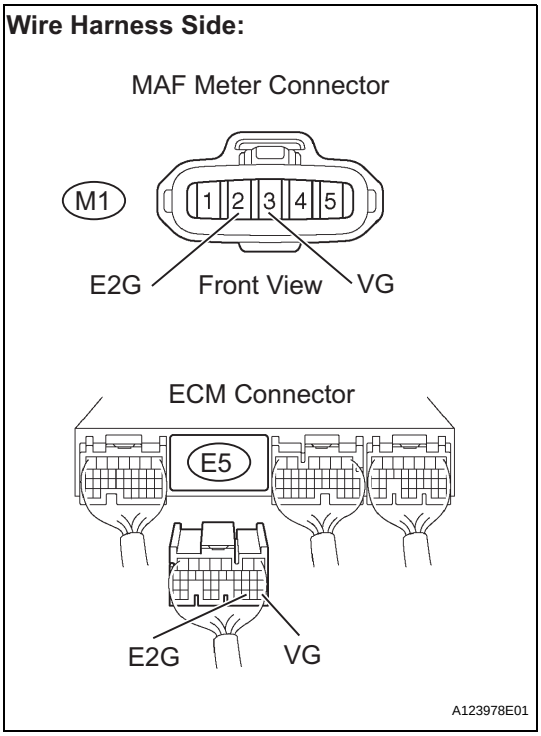

(a) Disconnect the M1 MAF meter connector.
(b) Disconnect the E5 ECM connector.
(c) Check the resistance.

Standard Resistance (Check for open)

Tester Connections	Specified Conditions
VG (M1-3) - VG (E5-28)	Below 1 Ω
E2G (M1-2) - E2G (E5-30)	Below 1 Ω

Standard Resistance (Check for short)

Tester Connections	Specified Conditions
VG (M1-3) or VG (E5-28) - Body ground	10 kΩ or higher

(d) Reconnect the MAF meter connector.
(e) Reconnect the ECM connector.

NG → **REPAIR OR REPLACE HARNESS OR CONNECTOR**

OK

REPLACE MASS AIR FLOW METER

ES

5 CHECK HARNESS AND CONNECTOR (MASS AIR FLOW METER - EFI RELAY)

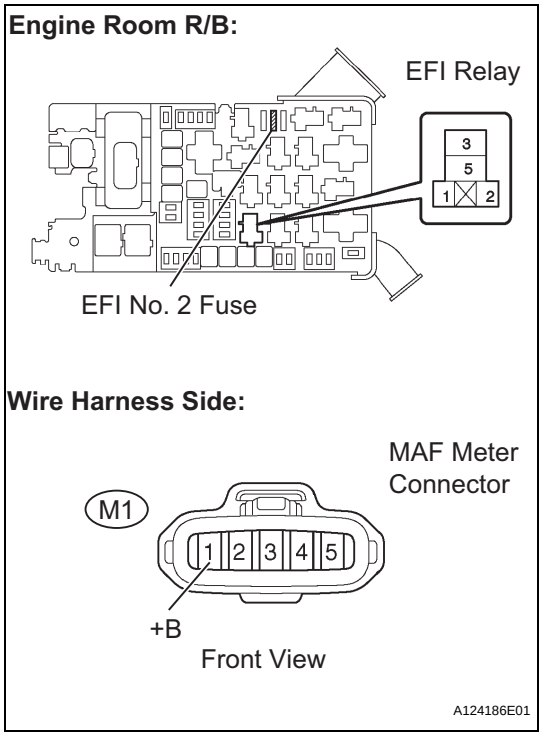

(a) Inspect the EFI No. 2 fuse.
  (1) Remove the EFI No. 2 fuse from the engine room R/B.
  (2) Check the EFI No. 2 fuse resistance.
    Standard Resistance:
    Below 1Ω
  (3) Reinstall the EFI No. 2 fuse.
(b) Remove the EFI relay from the engine room R/B.
(c) Disconnect the M1 MAF meter connector.
(d) Check the resistance.

Standard Resistance (Check for open)

Tester Connections	Specified Conditions
+B (M1-1) - EFI relay (3)	Below 1 Ω

Standard Resistance (Check for short)

Tester Connections	Specified Conditions
+B (M1-1) or EFI relay (3) - Body ground	10 kΩ or higher

(e) Reconnect the MAF meter connector.
(f) Reinstall the EFI relay.

NG → **REPAIR OR REPLACE HARNESS OR CONNECTOR**

OK

INSPECT ECM POWER SOURCE CIRCUIT

6 INSPECT ECM (SENSOR GROUND)

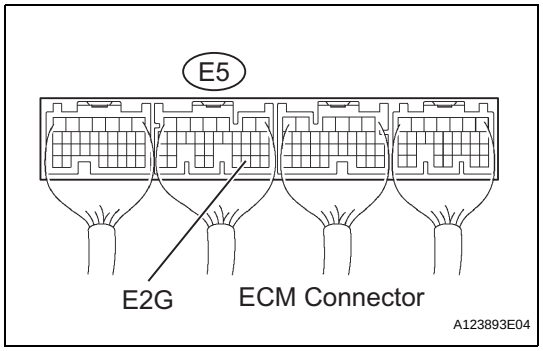

(a) Check the resistance.

Standard Resistance

Tester Connections	Specified Conditions
E2G (E5-30) - Body ground	Below 1 Ω

NG → **REPLACE ECM**

OK

7	CHECK HARNESS AND CONNECTOR (MASS AIR FLOW METER - ECM)

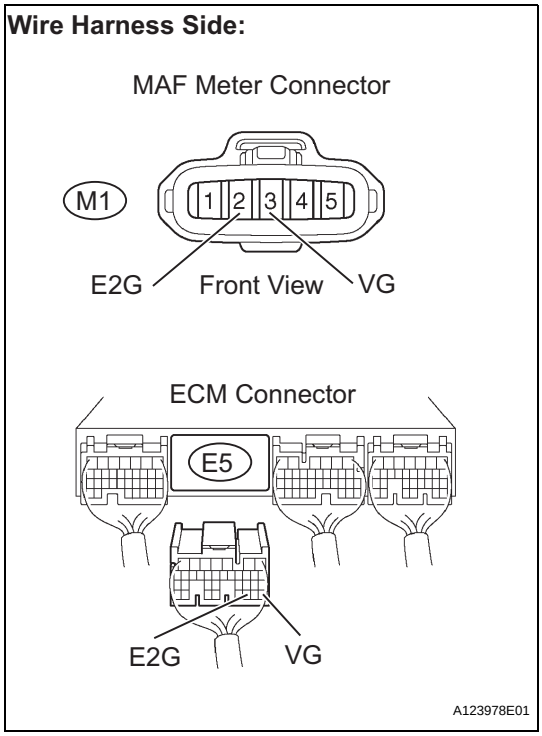

(a) Disconnect the M1 MAF meter connector.
(b) Disconnect the E5 ECM connector.
(c) Check the resistance.

Standard Resistance (Check for open)

Tester Connections	Specified Conditions
VG (M1-3) - VG (E5-28)	Below 1 Ω
E2G (M1-2) - E2G (E5-30)	Below 1 Ω

Standard Resistance (Check for short)

Tester Connections	Specified Conditions
VG (M1-3) or VG (E5-28) - Body ground	10 kΩ or higher

(d) Reconnect the MAF meter connector.
(e) Reconnect the ECM connector.

NG → **REPAIR OR REPLACE HARNESS OR CONNECTOR**

OK

REPLACE MASS AIR FLOW METER

ES

DTC	P0101	Mass Air Flow Circuit Range / Performance Problem

DESCRIPTION

Refer to DTC P0100 (See page ES-88).

DTC No.	DTC Detection Conditions	Trouble Area
P0101	High voltage: Conditions (a), (b) and (c) continue for more than 10 seconds (2 trip detection logic): (a) Engine speed less than 2,000 rpm (b) Engine coolant temperature 70°C (158°F) or higher (c) Voltage output of Mass Air Flow (MAF) meter more than 2.2 V (varies with Throttle Position [TP] sensor voltage) Low voltage: Conditions (a) and (b) continue for more than 10 seconds (2 trip detection logic): (a) Engine speed more than 300 rpm (b) Voltage output of MAF meter less than 0.93 V (varies with TP sensor voltage)	MAF meter

ES

MONITOR DESCRIPTION

The MAF meter is a sensor that measures the amount of air flowing through the throttle valve. The ECM uses this information to determine the fuel injection time and to provide an appropriate air-fuel ratio. Inside the MAF meter, there is a heated platinum wire which is exposed to the flow of intake air. By applying a specific electrical current to the wire, the ECM heats it to a specific temperature. The flow of incoming air cools both the wire and an internal thermistor, affecting their resistance. To maintain a constant current value, the ECM varies the voltage applied to these components of the MAF meter. The voltage level is proportional to the airflow through the sensor, and the ECM uses it to calculate the intake air volume. If there is a defect in the sensor, or an open or short in the circuit, the voltage level deviates from the normal operating range. The ECM interprets this deviation as a malfunction in the MAF meter and sets the DTC.
Example:
If the voltage is more than 2.2 V, or less than 0.93 V while idling, the ECM determines that there is a malfunction in the MAF meter and sets the DTC.

MONITOR STRATEGY

Related DTCs	P0101: Mass air flow Meter rationality
Required Sensors/Components (Main)	Mass air flow meter
Required Sensors/Components (Related)	Crankshaft position sensor, engine coolant temperature sensor, throttle position sensor
Frequency of Operation	Continuous
Duration	10 seconds
MIL Operation	2 driving cycles
Sequence of Operation	None

TYPICAL ENABLING CONDITIONS

Monitor runs whenever following DTCs not present	P0115 - P0118 (ECT sensor) P0120 - P0223, P2135 (TP sensor) P0125 (insufficient ECT for closed loop) P0335 (CKP sensor) P0340, P0341 (CMP sensor)

Mass air flow meter rationality (High voltage)

Engine speed	Less than 2,000 rpm

Engine coolant temperature	70°C (158°F) or more

Mass air flow meter rationality (Low voltage)

Engine speed	More than 300 rpm
Mass air flow meter voltage	0.2 V or more
Fuel cut	OFF

TYPICAL MALFUNCTION THRESHOLDS

Mass air flow meter rationality (High voltage)

Mass air flow meter voltage	More than 2.2 V (varies with throttle position sensor voltage)

Mass air flow meter rationality (Low voltage)

Mass air flow meter voltage	Less than 0.93 V (varies with throttle position sensor voltage)

ES

WIRING DIAGRAM

Refer to DTC P0100 (See page ES-90).

HINT:
Read freeze frame data using the intelligent tester. Freeze frame data records the engine conditions when a malfunction is detected. When troubleshooting, freeze frame data can help determine if the vehicle was running or stopped, if the engine was warmed up or not, if the air-fuel ratio was lean or rich, and other data from the time the malfunction occurred.

1	CHECK ANY OTHER DTCS OUTPUT (IN ADDITION TO DTC P0101)

(a) Connect a intelligent tester to the DLC3.
(b) Turn the ignition switch to ON.
(c) Turn the tester ON.
(d) Select the following menu items: DIAGNOSIS / ENHANCED OBD II / DTC INFO / CURRENT CODES.
(e) Read DTCs.

Result

Display (DTC output)	Proceed to
P0101 and other DTCs	A
P0101	B

HINT:
If any DTCs other than P0101 are output, troubleshoot those DTCs first.

B → **REPLACE MASS AIR FLOW METER**

A

GO TO DTC CHART

DTC	P0110	Intake Air Temperature Circuit

DTC	P0112	Intake Air Temperature Circuit Low Input

DTC	P0113	Intake Air Temperature Circuit High Input

DESCRIPTION

The Intake Air Temperature (IAT) sensor, built into the Mass Air Flow (MAF) meter, monitors the intake air temperature. The IAT sensor has a thermistor that varies its resistance depending on the intake air temperature. When the intake air temperature is low, the resistance in the thermistor increases. When the temperature is high, the resistance drops. The variations in resistance are reflected as voltage changes to the ECM terminal (see Fig. 1).

The IAT sensor is connected to the ECM. The 5 V power source voltage in the ECM is applied to the IAT sensor from terminal THA via resistor R.

Resistor R and the IAT sensor are connected in series. When the resistance value of the IAT sensor changes, according to changes in the IAT, the voltage at terminal THA also varies. Based on this signal, the ECM increases the fuel injection volume when the engine is cold to improve drivability.

Fig. 1

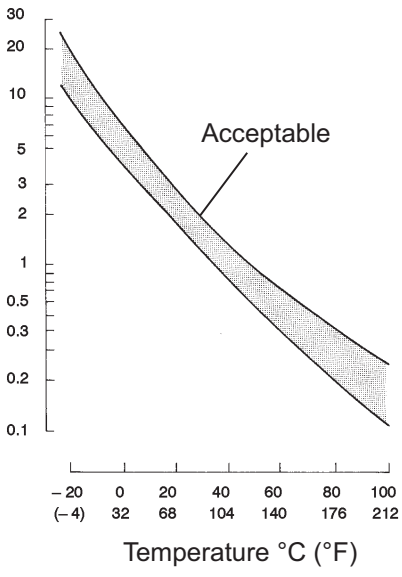

HINT:

When any of DTCs P0110,P0112 and P0113 are set, the ECM enters fail-safe mode. During fail-safe mode, the IAT is estimated to be 20°C (68°F) by the ECM. Fail-safe mode continues until a pass condition is detected.

DTC No.	Proceed To	DTC Detection Conditions	Trouble Areas
P0110	Step 1	Open or short in IAT sensor circuit for 0.5 seconds (1 trip detection logic)	• Open or short in IAT sensor circuit • IAT sensor (built into MAF meter) • ECM
P0112	Step 4	Short in IAT sensor circuit for 0.5 seconds (1 trip detection logic)	• Short in IAT sensor circuit • IAT sensor (built into MAF meter) • ECM
P0113	Step 2	Open in IAT sensor circuit for 0.5 seconds (1 trip detection logic)	• Open in IAT sensor circuit • IAT sensor (built into MAF meter) • ECM

HINT:
When any of these DTCs are set, check the Intake Air Temperature (IAT) by selecting the following menu items on an intelligent tester: DIAGNOSIS / ENHANCED OBD II / DATA LIST / PRIMARY / INTAKE AIR.

Temperature Displayed	Malfunctions
-40°C (-40°F)	Open circuit
140°C (284°F)	Short circuit

MONITOR DESCRIPTION

The ECM monitors the sensor voltage and uses this value to calculate the intake air temperature. When the sensor output voltage deviates from the normal operating range, the ECM interprets this as a fault in the IAT sensor and sets a DTC.
Example:
If the sensor voltage output is more than 4.91 V for 0.5 seconds or more, the ECM determines that there is an open in the IAT sensor circuit, and sets DTC P0113. Conversely, if the voltage output is less than 0.18 V for 0.5 seconds or more, the ECM determines that there is a short in the sensor circuit, and sets DTC P0112.
If the malfunction is not repaired successfully, a DTC is set 0.5 seconds after the engine is next started.

ES

MONITOR STRATEGY

Related DTCs	P0110: IAT sensor range check (Fluctuating) P0112: IAT sensor range check (Low voltage) P0113: IAT sensor range check (High voltage)
Required Sensors/Components (Main)	IAT sensor
Required Sensors/Components (Related)	-
Frequency of Operation	Continuous
Duration	0.5 seconds
MIL Operation	Immediate
Sequence of Operation	None

TYPICAL ENABLING CONDITIONS

Monitor will run whenever these DTCs are not present	None

TYPICAL MALFUNCTION THRESHOLDS

P0110:

IAT sensor voltage	Less than 0.18 V, or more than 4.91 V

P0112:

IAT sensor voltage [intake air temperature]	Less than 0.18 V [more than 140°C (284°F)]

P0113:

IAT sensor voltage [intake air temperature]	More than 4.91 V [less than -40°C (-40°F)]

COMPONENT OPERATING RANGE

IAT sensor voltage [intake air temperature]	0.18 V to 4.91 V [-40 to 140°C (-40 to 284°F)]

WIRING DIAGRAM

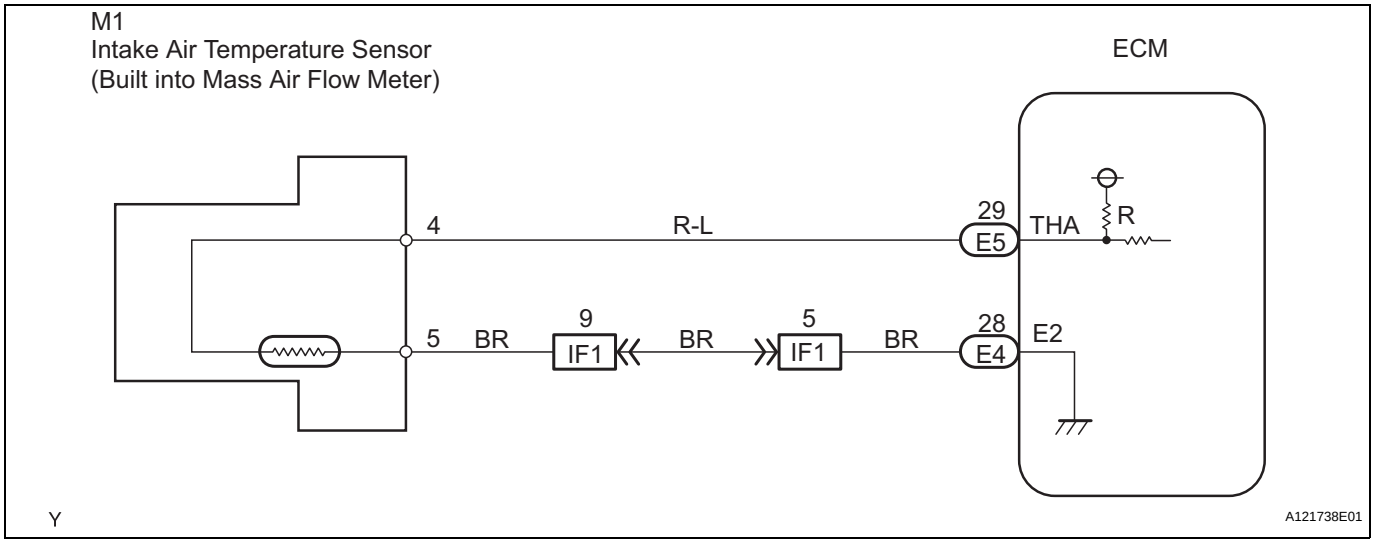

ES

HINT:

- If other DTCs relating to different systems that have terminal E2 as the ground terminal are output simultaneously, terminal E2 may have an open circuit.
- Read freeze frame data using the intelligent tester. Freeze frame data records the engine conditions when a malfunction is detected. When troubleshooting, freeze frame data can help determine if the vehicle was running or stopped, if the engine was warmed up or not, if the air-fuel ratio was lean or rich, and other data from the time the malfunction occurred.

1	READ DATA LIST (INTAKE AIR TEMPERATURE)

(a) Connect the intelligent tester to the DLC3.
(b) Turn the ignition switch to ON and turn the intelligent tester ON.
(c) Select the following menu items: DIAGNOSIS / ENHANCED OBD II / DATA LIST / PRIMARY / INTAKE AIR.
(d) Read the values displayed on the tester.

Standard:

Same value as actual IAT.

Result

Temperature Displayed	Proceed to
-40°C (-40°F)	A
140°C (284°F)	B
Same as actual IAT	C

HINT:

- If there is an open circuit, the intelligent tester indicates -40°C (-40°F).
- If there is a short circuit, the intelligent tester indicates 140°C (284°F).

B	Go to step 4
C	CHECK FOR INTERMITTENT PROBLEMS

A

2	READ DATA LIST (CHECK FOR OPEN IN WIRE HARNESS)

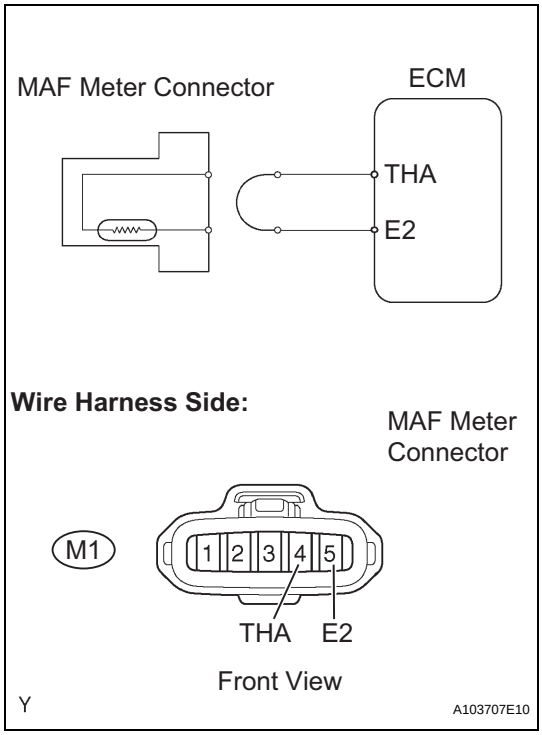

(a) Disconnect the M1 MAF meter connector.
(b) Connect terminals THA and E2 of the MAF meter wire harness side connector.
(c) Connect the intelligent tester to the DLC3.
(d) Turn the ignition switch to ON and turn the intelligent tester ON.
(e) Select the following menu items: DIAGNOSIS / ENHANCED OBD II / DATA LIST / PRIMARY / INTAKE AIR.
(f) Read the value displayed on the tester.
Standard:
140°C (284°F)
(g) Reconnect the MAF meter connector.

OK	CONFIRM GOOD CONNECTION TO SENSOR. IF OK, REPLACE MASS AIR FLOW METER

NG

3	READ DATA LIST (CHECK FOR OPEN IN ECM)

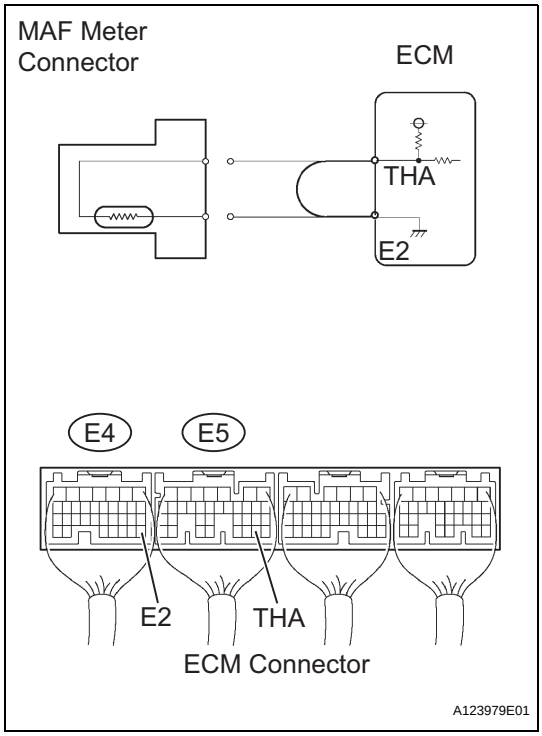

(a) Disconnect the M1 MAF meter connector.
(b) Connect terminals THA and E2 of the ECM connector.
HINT:
Before checking, do a visual and contact pressure check for the ECM connector.
(c) Connect the intelligent tester to the DLC3.
(d) Turn the ignition switch to ON and turn the intelligent tester ON.
(e) Select the following menu items: DIAGNOSIS / ENHANCED OBD II / DATA LIST / PRIMARY / INTAKE AIR.
(f) Read the value displayed on the tester.
Standard:
140°C (284°F)
(g) Reconnect the MAF meter connector.

NG	CONFIRM GOOD CONNECTION TO ECM. IF OK, REPLACE ECM

OK

REPAIR OR REPLACE HARNESS OR CONNECTOR

4	READ DATA LIST (CHECK FOR SHORT IN WIRE HARNESS)

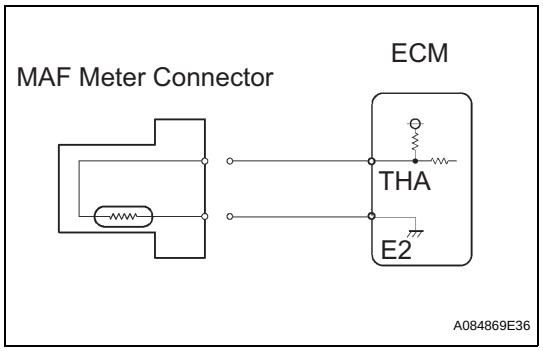

(a) Disconnect the M1 MAF meter connector.
(b) Connect the intelligent tester to the DLC3.
(c) Turn the ignition switch to ON and turn the intelligent tester ON.
(d) Select the following menu items: DIAGNOSIS / ENHANCED OBD II / DATA LIST / PRIMARY / INTAKE AIR.
(e) Read the value displayed on the tester.
Standard:
-40°C (-40°F)
(f) Reconnect the MAF meter connector.

OK → **REPLACE MASS AIR FLOW METER**

NG

5	READ DATA LIST (CHECK FOR SHORT IN ECM)

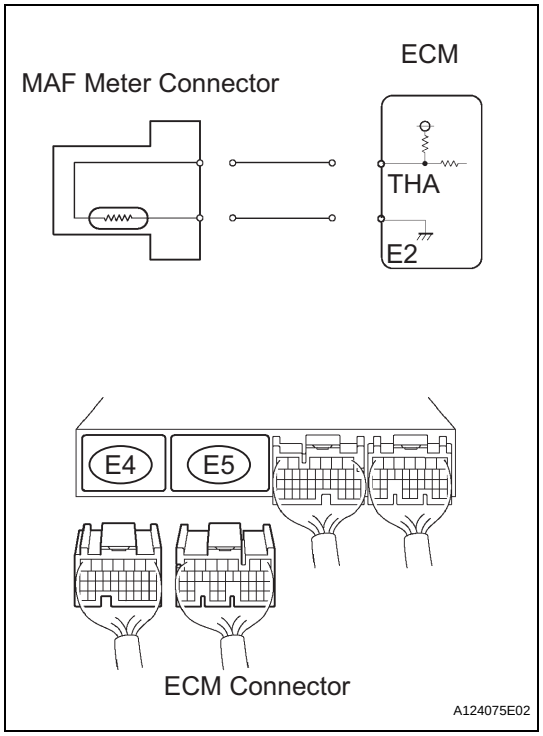

(a) Disconnect the E4 and E5 ECM connector.
(b) Connect the intelligent tester to the DLC3.
(c) Turn the ignition switch to ON and turn the intelligent tester ON.
(d) Select the following menu items: DIAGNOSIS / ENHANCED OBD II / DATA LIST / PRIMARY / INTAKE AIR.
(e) Read the value displayed on the tester.
Standard:
-40°C (-40°F)
(f) Reconnect the ECM connectors.

NG → **REPLACE ECM**

OK

REPAIR OR REPLACE HARNESS OR CONNECTOR

ES

DTC	P0115	Engine Coolant Temperature Circuit

DTC	P0117	Engine Coolant Temperature Circuit Low Input

DTC	P0118	Engine Coolant Temperature Circuit High Input

DESCRIPTION

A thermistor is built into the Engine Coolant Temperature (ECT) sensor, of which the resistance value varies according to the ECT.
The structure of the sensor and connection to the ECM is the same as the Intake Air Temperature (IAT) sensor.
HINT:
When any of DTCs P0115, P0117 and P0118 are set, the ECM enters fail-safe mode. During fail-safe mode, the ECT is estimated to be 80°C (176°F) by the ECM. Fail-safe mode continues until a pass condition is detected.

ES

DTC No.	Proceed To	DTC Detection Condition	Trouble Area
P0115	Step 1	Open or short in ECT sensor circuit for 0.5 seconds (1 trip detection logic)	• Open or short in ECT sensor circuit • ECT sensor • ECM
P0117	Step 4	Short in ECT sensor circuit for 0.5 seconds (1 trip detection logic)	• Short in ECT sensor circuit • ECT sensor • ECM
P0118	Step 2	Open in ECT sensor circuit for 0.5 seconds (1 trip detection logic)	• Open in ECT sensor circuit • ECT sensor • ECM

HINT:
When any of these DTCs are set, check the ECT by selecting the following menu items on an intelligent tester: DIAGNOSIS / ENHANCED OBD II / DATA LIST / PRIMARY / COOLANT TEMP.

Temperature Displayed	Malfunctions
-40°C (-40°F)	Open circuit
140°C (284°F)	Short circuit

MONITOR DESCRIPTION

The ECT sensor is used to monitor the engine coolant temperature. The ECT sensor has a thermistor that varies its resistance depending on the temperature of the engine coolant. When the coolant temperature is low, the resistance in the thermistor increases. When the temperature is high, the resistance drops. The variations in resistance are reflected in the voltage output from the sensor. The ECM monitors the sensor voltage and uses this value to calculate the ECT. When the sensor output voltage deviates from the normal operating range, the ECM interprets this as a fault in the ECT sensor and sets a DTC.
Example:
If the sensor voltage output is more than 4.91 V for 0.5 seconds or more, the ECM determines that there is an open in the ECT sensor circuit, and sets DTC P0118. Conversely, if the voltage output is less than 0.14 V for 0.5 seconds or more, the ECM determines that there is a short in the sensor circuit, and sets DTC P0117.
If the malfunction is not repaired successfully, a DTC is set 0.5 seconds after the engine is next started.

MONITOR STRATEGY

Related DTCs	P0115: ECT sensor range check (Fluctuating) P0117: ECT sensor range check (Low voltage) P0118: ECT sensor range check (High voltage)
Required Sensors/Components (Main)	ECT sensor

Required Sensors/Components (Related)	-
Frequency of Operation	Continuous
Duration	0.5 seconds
MIL Operation	Immediate
Sequence of Operation	None

TYPICAL ENABLING CONDITIONS

Monitor runs whenever following DTCs not present	None

TYPICAL MALFUNCTION THRESHOLDS

P0115:

ECT sensor voltage [Engine coolant temperature]	Less than 0.14 V or more than 4.91 V

P0117:

ECT sensor voltage [Engine coolant temperature]	Less than 0.14 V [more than 140°C (284°F)]

P0118:

ECT sensor voltage [Engine coolant temperature]	More than 4.91 V [less than -40°C (-40°F)]

COMPONENT OPERATING RANGE

ECT sensor voltage [ECT]	0.14 V to 4.91 V [-40 to 140°C (-40 to 284°F)]

WIRING DIAGRAM

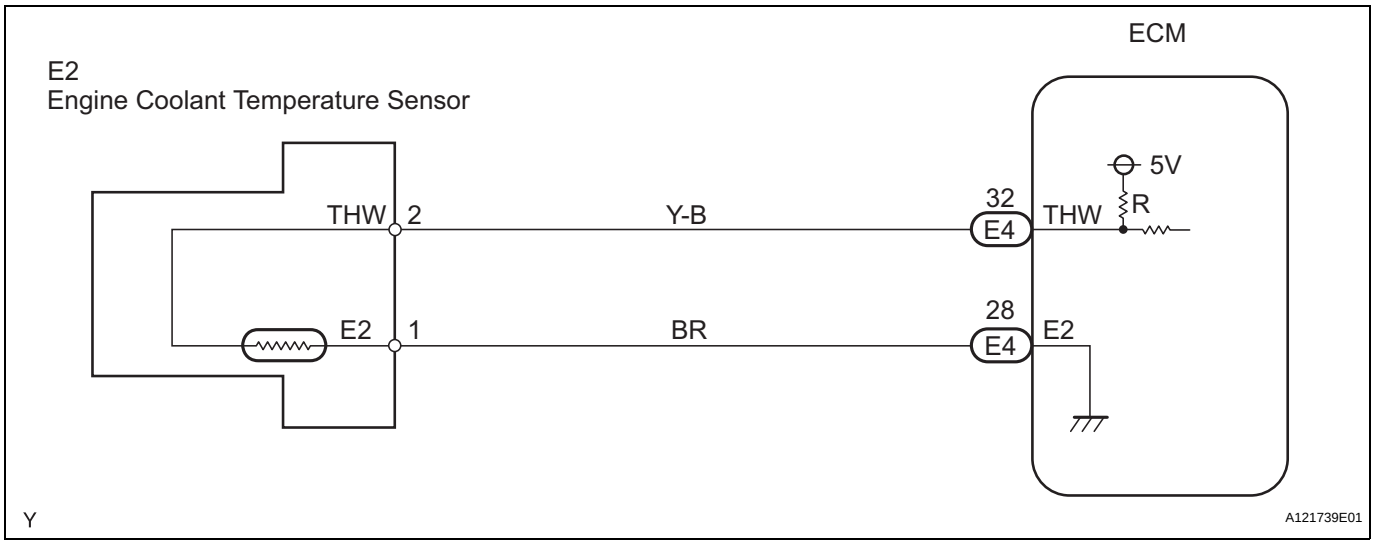

HINT:

- If other DTCs relating to different systems that have terminal E2 as the ground terminal are output simultaneously, terminal E2 may have an open circuit.
- Read freeze frame data using an intelligent tester. Freeze frame data record the engine condition when malfunctions are detected. When troubleshooting, freeze frame data can help determine if the vehicle was moving or stationary, if the engine was warmed up or not, if the air-fuel ratio was lean or rich, and other data, from the time the malfunction occurred.

1	READ DATA LIST (ENGINE COOLANT TEMPERATURE)

(a) Connect the intelligent tester to the DLC3.
(b) Turn the ignition switch to ON and turn the intelligent tester ON.
(c) Select the following menus items: DIAGNOSIS / ENHANCED OBD II / DATA LIST / PRIMARY / COOLANT TEMP.
(d) Read the value displayed on the tester.

Standard:

Between 80°C and 97°C (176°F and 207°F) with warm engine.

Result

Temperature Displayed	Proceed to
-40°C (-40°F)	A
140°C (284°F)	B
Between 80°C and 97°C (176°F and 207°F)	C

HINT:
If there is an open circuit, the intelligent tester indicates -40°C (-40°F).
If there is a short circuit, the intelligent tester indicates 140°C (284°F).

B	Go to step 4
C	CHECK FOR INTERMITTENT PROBLEMS

A

2 READ DATA LIST (CHECK FOR OPEN IN WIRE HARNESS)

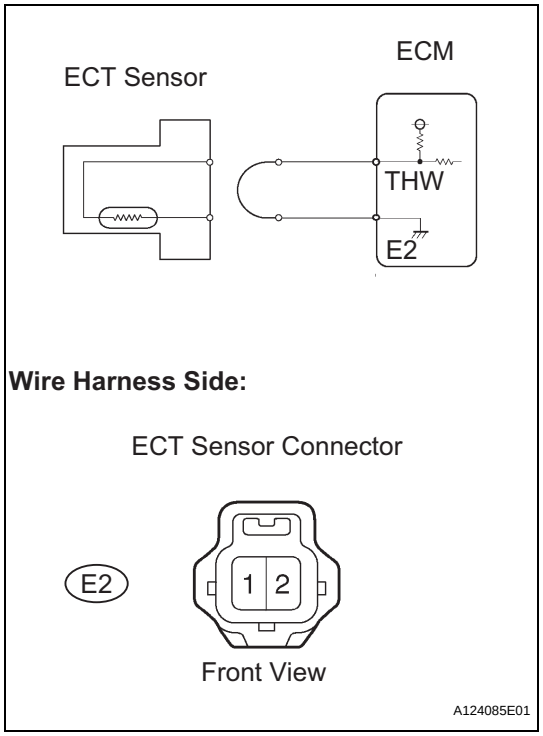

(a) Disconnect the E2 Engine Coolant Temperature (ECT) sensor connector.
(b) Connect terminals 1 and 2 of the ECT sensor connector on the wire harness side.
(c) Connect the intelligent tester to the DLC3.
(d) Turn the ignition switch to ON and turn the intelligent tester ON.
(e) Select the following menus items: DIAGNOSIS / ENHANCED OBD II / DATA LIST / PRIMARY / COOLANT TEMP.
(f) Read the value displayed on the tester.
Standard:
140°C (284°F)
(g) Reconnect the ECT sensor connector.

OK → **CONFIRM GOOD CONNECTION TO SENSOR. IF OK, REPLACE ENGINE COOLANT TEMPERATURE SENSOR**

NG

3 READ DATA LIST (CHECK FOR OPEN IN ECM)

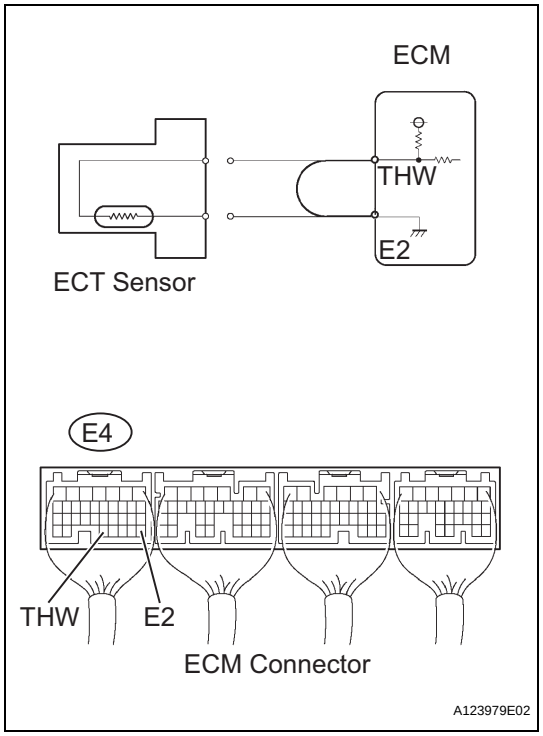

(a) Disconnect the E2 ECT sensor connector.
(b) Connect terminals THW of the E2 of the ECM connector.
HINT:
Before checking, do a visual and contact pressure check for the ECM connector.
(c) Connect the intelligent tester to the DLC3.
(d) Turn the ignition switch to ON and turn the intelligent tester ON.
(e) Enter the following menus: DIAGNOSIS / ENHANCED OBD II / DATA LIST / PRIMARY / COOLANT TEMP.
(f) Read the value displayed on the tester.
Standard:
140°C (284°F)
(g) Reconnect the ECT sensor connector.

NG → **CONFIRM GOOD CONNECTION TO ECM. IF OK, REPLACE ECM**

ES

OK

REPAIR OR REPLACE HARNESS OR CONNECTOR

4	READ DATA LIST (CHECK FOR SHORT IN WIRE HARNESS)

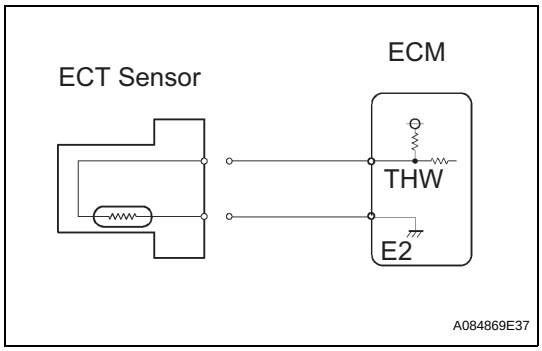

(a) Disconnect the E2 ECT sensor connector.
(b) Connect the intelligent tester to the DLC3.
(c) Turn the ignition switch to ON and turn the intelligent tester ON.
(d) Select the following menu items: DIAGNOSIS / ENHANCED OBD II / DATA LIST / PRIMARY / COOLANT TEMP.
(e) Read the value displayed on the tester.
Standard:
-40°C (-40°F)
(f) Reconnect the ECT sensor connector.

OK → **REPLACE ENGINE COOLANT TEMPERATURE SENSOR**

NG

5	READ DATA LIST (CHECK FOR SHORT IN ECM)

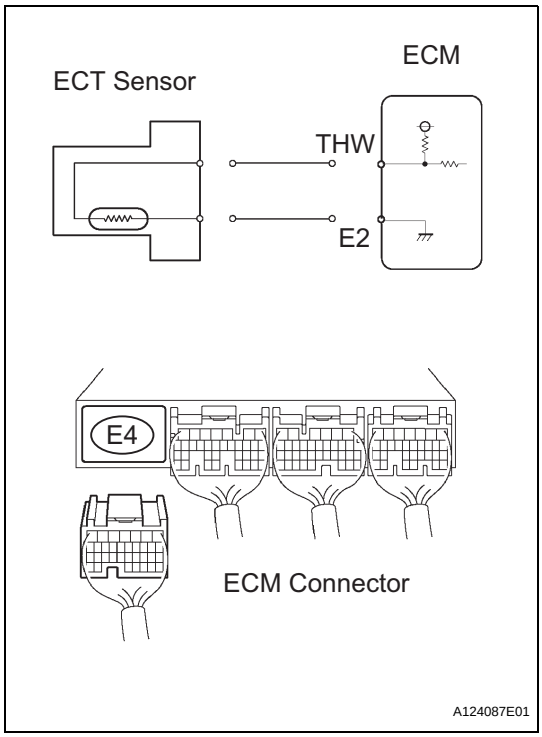

(a) Disconnect the E4 ECM sensor connector.
(b) Connect the intelligent tester to the DLC3.
(c) Turn the ignition switch to ON and turn the intelligent tester ON.
(d) Select the following menu items: DIAGNOSIS / ENHANCED OBD II / DATA LIST / PRIMARY / COOLANT TEMP.
(e) Read the value displayed on the tester.
Standard:
-40°C (-40°F)
(f) Reconnect the ECM sensor connector.

NG → **REPLACE ECM**

OK

REPAIR OR REPLACE HARNESS OR CONNECTOR

DTC	P0116	Engine Coolant Temperature Circuit Range / Performance Problem

DESCRIPTION

Refer to DTC P0115 (See page ES-102).

DTC No.	DTC Detection Condition	Trouble Area
P0116	Case 1: Engine Coolant Temperature (ECT) between 35°C and 60°C (95°F and 140°F) when engine started, and conditions (a) and (b) met (2 trip detection logic): (a) Vehicle driven at varying speeds (accelerated and decelerated) (b) ECT remains within 3°C (5.4°F) of initial ECT Case 2: ECT more than 60°C (140°F) when engine started, and conditions (a) and (b) met (6 trip detection logic): (a) Vehicle driven at varying speeds (accelerated and decelerated) (b) ECT measurements remain within 1°C (1.8°F) of initial ECT on 6 successive occasions	• ECT sensor

MONITOR DESCRIPTION

The ECT sensor is used to monitor the ECT. The ECT sensor has a built-in thermistor with a resistance that varies according to the temperature of the engine coolant. When the ECT is low, the resistance of the thermistor increases. When the temperature is high, the resistance drops. These variations in the resistance are reflected in the voltage output from the ECT sensor. The ECM monitors the sensor voltage and uses this value to calculate the ECT. If the sensor voltage output deviates from the normal operating range, the ECM interprets this deviation as a malfunction in the ECT sensor and sets the DTC.
Examples:

- Upon starting the engine, the ECT is between 35°C (95°F) and 60°C (140°F). If after driving for 250 seconds, the ECT still remains within 3°C (5.4°F) of the starting temperature, the DTC is set (2 trip detection logic).
- Upon starting the engine, the ECT is over 60°C (140°F). If, after driving for 250 seconds, the ECT remains within 1°C (1.8°F) of the starting temperature, the DTC is set (6 trip detection logic).

MONITOR STRATEGY

Related DTCs	P0116: Engine coolant temperature sensor output stuck at low engine coolant temperature P0116: Engine coolant temperature sensor output stuck at high engine coolant temperature
Required Sensors/Components (Main)	ECT sensor
Required Sensors/Components (Related)	Crankshaft position sensor, IAT sensor, MAF meter
Frequency of Operation	Continuous
Duration	1 second
MIL Operation	2 driving cycles: ECT sensor stuck (low ECT) 6 driving cycles: ECT sensor stuck (high ECT)
Sequence of Operation	None

TYPICAL ENABLING CONDITIONS

Monitor runs whenever following DTCs not present	P0100 - P0103 (MAF meter)

ECT sensor stuck (low ECT):

Cumulative idle off period	250 seconds or more
Speed increase of 30 km/h (19 mph) or more	10 times or more

ECT	35 to 60°C (95 to 140°F)
IAT	-6.7°C (20°F) or more

ECT sensor stuck (high ECT):

ECT	60°C (140°F) or more
IAT	-6.7°C (20°F) or more
Stop and go*1	Once or more
Steady driving and stop*2	Once or more
Engine running time after engine start	0.3 seconds or more

HINT:

*1: Vehicle is stopped for 20 seconds or more and accelerated to more than 70 km/h (44 mph) within 40 seconds.

*2: Follow these steps: 1) vehicle is driven at 65 km/h (40 mph) or more for 30 seconds or more and the vehicle speed reaches 70 km/h (44 mph); 2) vehicle is decelerated from 65 km/h (40 mph) to 3 km/h (2 mph) or less within 35 seconds; and 3) vehicle is stopped for 10 seconds.

ES

TYPICAL MALFUNCTION THRESHOLDS

ECT sensor stuck (low ECT):

ECT change	Less than 3°C (5.4°F)

ECT sensor stuck (high ECT):

ECT change	1°C (1.8°F) or less

COMPONENT OPERATING RANGE

ECT	Varies with actual ECT

WIRING DIAGRAM

Refer to DTC P0115 (See page ES-103).

HINT:

- If any of DTCs P0115, P0117, P0118 or P0125 are set simultaneously with DTC P0116, the ECT sensor may have an open or a short circuit. Troubleshoot those DTCs first.
- Read freeze frame data using the intelligent tester. Freeze frame data records the engine conditions when a malfunction is detected. When troubleshooting, freeze frame data can help determine if the vehicle was running or stopped, if the engine was warmed up or not, if the air-fuel ratio was LEAN or RICH, and other data from the time the malfunction occurred.

1	**CHECK ANY OTHER DTC OUTPUT (IN ADDITION TO DTC P0116)**

(a) Connect a intelligent tester to the DLC3.
(b) Turn the ignition switch to ON.
(c) Turn the tester ON.
(d) Select the following menu items: DIAGNOSIS / ENHANCED OBD II / DTC INFO / CURRENT CODES.
(e) Read DTCs.

Result

Display (DTC output)	Proceed to
P0116 and other DTCs	B
P0116	A

HINT:
If any DTCs other than P0116 are output, troubleshoot those DTCs first.

B → GO TO DTC CHART

A

REPLACE ENGINE COOLANT TEMPERATURE SENSOR

DTC	P0120	Throttle / Pedal Position Sensor / Switch "A" Circuit
DTC	P0122	Throttle / Pedal Position Sensor / Switch "A" Circuit Low Input
DTC	P0123	Throttle / Pedal Position Sensor / Switch "A" Circuit High Input
DTC	P0220	Throttle / Pedal Position Sensor / Switch "B" Circuit
DTC	P0222	Throttle / Pedal Position Sensor / Switch "B" Circuit Low Input
DTC	P0223	Throttle / Pedal Position Sensor / Switch "B" Circuit High Input
DTC	P2135	Throttle / Pedal Position Sensor / Switch "A" / "B" Voltage Correlation

ES

HINT:
These DTCs relate to the Throttle Position (TP) sensor.

DESCRIPTION

HINT:
The Throttle Position (TP) sensor is mounted on the throttle body, and detects the opening angle of the throttle valve. This sensor is a non-contact type, and uses Hall-effect elements, in order to yield accurate signals, even in extreme driving conditions, such as at high speeds as well as very low speeds. The TP sensor has two sensor circuits which each transmits a signal, VTA1 and VTA2. VTA1 is used to detect the throttle valve angle and VTA2 is used to detect malfunctions in VTA1. The sensor signal voltages vary between 0 V and 5 V in proportion to the throttle valve opening angle, and are transmitted to the VTA terminals of the ECM.
As the valve closes, the sensor output voltage decreases and as the valve opens, the sensor output voltage increases. The ECM calculates the throttle valve opening angle according to these signals and controls the throttle actuator in response to driver inputs. These signals are also used in calculations such as air-fuel ratio correction, power increase correction and fuel-cut control.

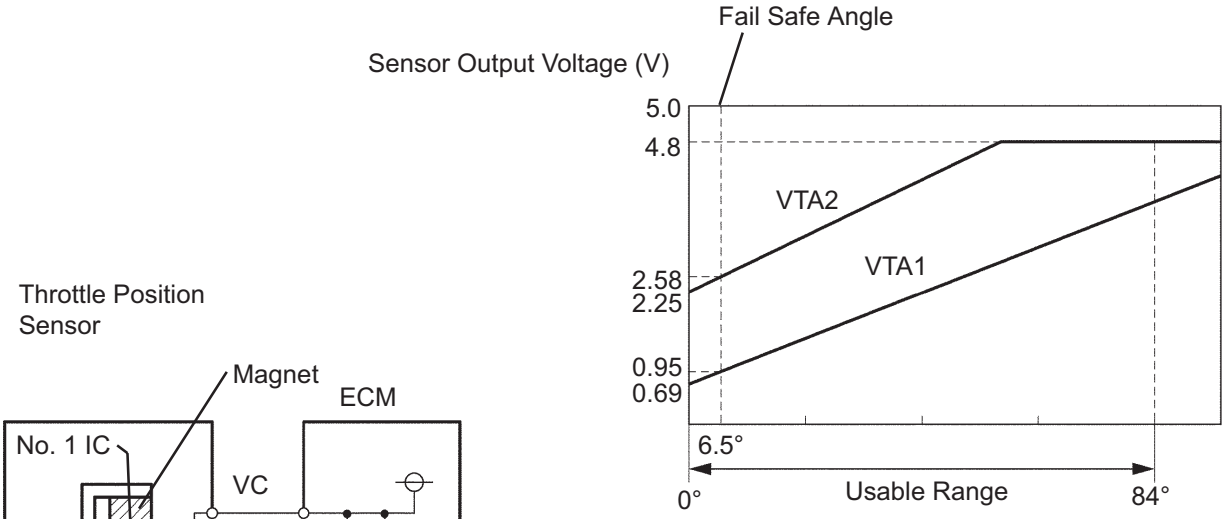

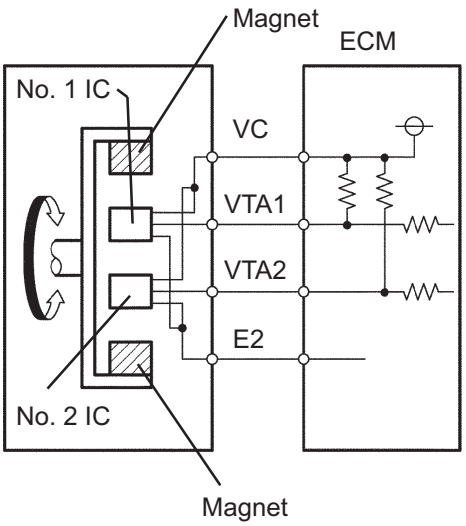

Note:

The throttle valve opening angle detected by the sensor terminal VTA1 is expressed as percentages.

Between 10 % and 22 %: Throttle valve fully closed

Between 66 % and 98 %: Throttle valve fully open

Approximately 19 %: Fail-safe angle (6.5°)

A019802E38

DTC No.	DTC Detection Condition	Trouble Area
P0120	Output voltage of VTA1 quickly fluctuates beyond lower and upper malfunction thresholds for 2 seconds (1 trip detection logic)	• Throttle position (TP) sensor (built into throttle body) • ECM
P0122	Output voltage of VTA1 0.2 V or less for 2 seconds (1 trip detection logic)	• Throttle position (TP) sensor (built into throttle body) • Short in VTA1 circuit • Open in VC circuit • ECM
P0123	Output voltage of VTA1 4.535 V or more for 2 seconds (1 trip detection logic)	• Throttle position (TP) sensor (built into throttle body) • Open in VTA1 circuit • Open in E2 circuit • Short between VC and VTA1 circuit • ECM
P0220	Output voltage of VTA2 quickly fluctuates beyond lower and upper malfunction thresholds for 2 seconds (1 trip detection logic)	• Throttle position (TP) sensor (built into throttle body) • ECM

DTC No.	DTC Detection Condition	Trouble Area
P0222	Output voltage of VTA2 1.75 V or less for 2 seconds (1 trip detection logic)	• Throttle position (TP) sensor (built into throttle body) • Short in VTA2 circuit • Open in VC circuit • ECM
P0223	Output voltage of VTA2 4.8 V or more when VTA1 between 0.2 V and 2.02 V (1 trip detection logic)	• Throttle position sensor (built into throttle body) • Open in VTA2 circuit • Open in E2 circuit Short between VC and VTA2 circuit • ECM
P2135	Either condition (a) or (b) met (1 trip detection logic): (a) Difference between output voltages of VTA1 and VTA2 0.02 V or less for 0.5 seconds or more (b) Output voltage of VTA1 0.2 V or less, and VTA2 1.75 V or less, for 0.4 seconds or more	• Short between VTA1 and VTA2 circuit • Throttle position sensor (built into throttle body) • ECM

HINT:

- When any of these DTCs are set, check the throttle valve opening angle by selecting the following menu items on an intelligent tester: DIAGNOSIS / ENHANCED OBD II / DATA LIST / ETCS / THROTTLE POS AND THROTTLE POS #2.
- THROTTLE POS denotes the VTA1 signal (expressed in percentages), and THROTTLE POS #2 denotes the VTA2 signal (expressed in voltages).

Reference (Normal condition):

Tester Display	Accelerator Pedal Fully Released	Accelerator Pedal Fully Depressed
THROTTLE POS	10 to 22%	66 to 99%
THROTTLE POS #2	2.1 to 3.1 V	4.5 to 5.0 V

MONITOR DESCRIPTION

The ECM uses the Throttle Position (TP) sensor to monitor the throttle valve opening angle. There are several checks that the ECM performs to confirm the proper operation of the TP sensor.

- A specific voltage difference is expected between the sensor terminals, VTA1 and VTA2, for each throttle valve opening angle. If the difference between VTA1 and VTA2 is incorrect, the ECM interprets this as a malfunction in the sensor, and sets a DTC.
- VTA1 and VTA2 each have a specific voltage range. If VTA1 or VTA2 is outside the normal operating range, the ECM interprets this as a malfunction in the sensor, and sets a DTC.
- VTA1 and VTA2 should never be close to the same voltage level. If VTA1 is within 0.02 V of VTA2, the ECM determines that there is a short circuit in the sensor, and sets a DTC.

If the malfunction is not repaired successfully, a DTC is set 10 seconds after the engine is next started.

MONITOR STRATEGY

Related DTCs	P0120: Throttle position sensor 1 range check (fluctuating) P0122: Throttle position sensor 1 range check (low voltage) P0123: Throttle position sensor 1 range check (high voltage) P0220: Throttle position sensor 2 range check (fluctuating) P0222: Throttle position sensor 2 range check (low voltage) P0223: Throttle position sensor 2 range check (high voltage) P2135: Throttle position sensor range check (correlation)
Required sensors/components (Main)	Throttle position sensor
Required sensors/components (Related)	-
Frequency of operation	Continuous
Duration	2 seconds: P0120, P0122, P0123, P0220, P0222 and P0223 (Accelerator pedal ON) 10 seconds: P0120, P0122, P0123, P0220, P0222 and P0223 (Accelerator pedal OFF) Within 0.5 seconds: P2135
MIL operation	Immediate
Sequence of operation	None

TYPICAL ENABLING CONDITIONS

Monitor runs whenever following DTCs not present	None

TYPICAL MALFUNCTION THRESHOLDS

P0120:

VTA1 voltage	0.2 V or less or 4.535 V or more

P0122:

VTA1 voltage	0.2 V or less

P0123:

VTA1 voltage	4.535 V or more

P0220:

VTA2 voltage	1.75 V or less or 4.8 V or more

P0222:

VTA2 voltage	1.75 V or less

P0223:

VTA2 voltage when the VTA1 is 0.2 to 2.02 V	4.8 V or more

P2135:

Either of the following condition A or B is met	-
Condition A	-
Difference between VTA1 and VTA2 voltage	0.02 V or less
Condition B	-
VTA1 voltage	0.2 V or less
VTA2 voltage	1.75 V or less

COMPONENT OPERATING RANGE

VTA1 voltage	0.69 to 4.05 V
VTA2 voltage	2.25 to 4.8 V

FAIL-SAFE

When any of these DTCs, as well as other DTCs relating to ETCS (Electronic Throttle Control System) malfunctions, are set, the ECM enters fail-safe mode. During fail-safe mode, the ECM cuts the current to the throttle actuator off, and the throttle valve is returned to a 6.5° throttle angle by the return spring. The ECM then adjusts the engine output by controlling the fuel injection (intermittent fuel-cut) and ignition timing, in accordance with the accelerator pedal opening angle, to allow the vehicle to continue at a minimal speed. If the accelerator pedal is depressed firmly and gently, the vehicle can be driven slowly. Fail-safe mode continues until a pass condition is detected, and the ignition switch is then turned to OFF.

WIRING DIAGRAM

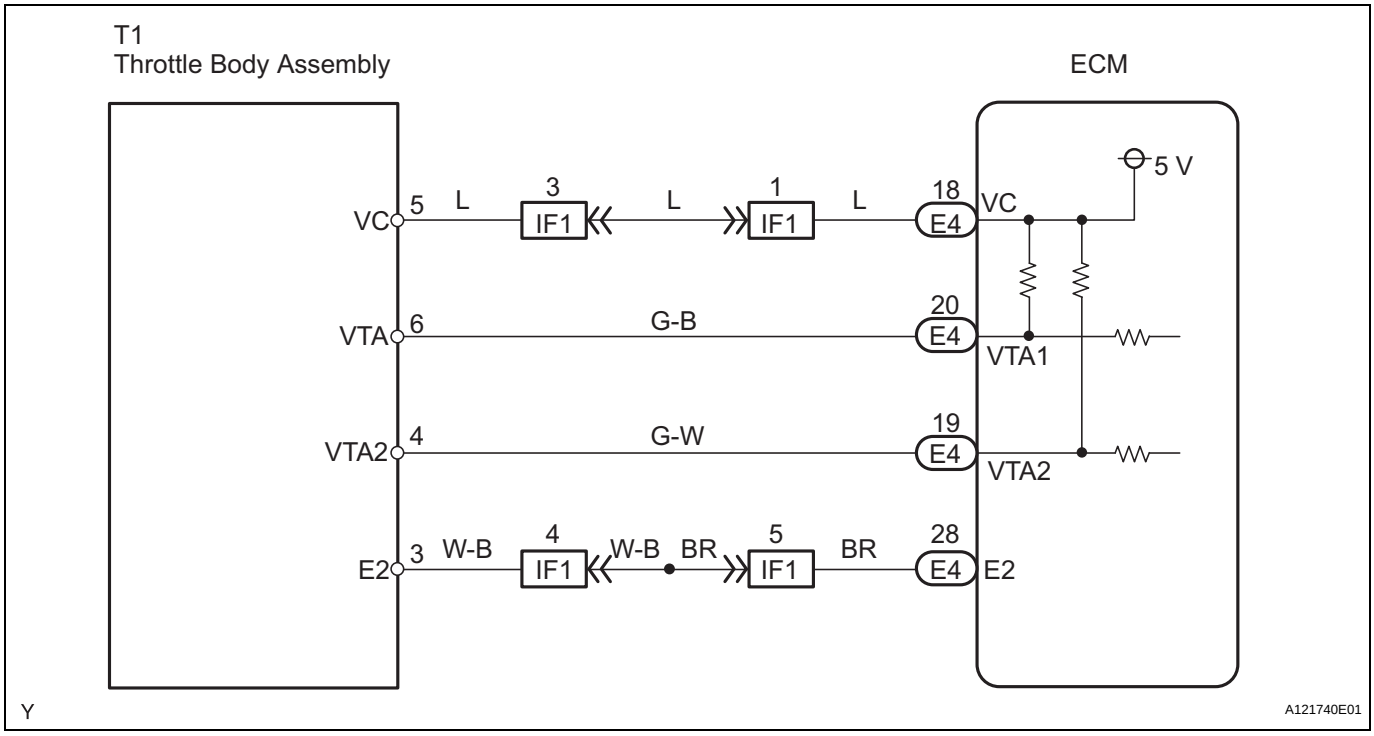

HINT:

- If other DTCs relating to different systems that have terminal E2 as the ground terminal are output simultaneously, terminal E2 may have an open circuit.
- Read freeze frame data using an intelligent tester. Freeze frame data record the engine condition when malfunctions are detected. When troubleshooting, freeze frame data can help determine if the vehicle was moving or stationary, if the engine was warmed up or not, if the air-fuel ratio was lean or rich, and other data, from the time the malfunction occurred.

1	READ DATA LIST (THROTTLE POS #1, THROTTLE POS #2)

(a) Connect the intelligent tester to the DLC3.
(b) Turn the ignition switch to ON and turn the intelligent tester ON.
(c) Select the following menu items: DIAGNOSIS / ENHANCED OBD II / DATA LIST / ETCS / THROTTLE POS #1 and THROTTLE POS #2.
(d) Check the values displayed on the tester.

Result

Throttle position expressed as percentage and voltage				Trouble Area	Proceed to
Accelerator pedal released		Accelerator pedal depressed			
THROTTLE POS #1 (VTA1)	THROTTLE POS #2 (VTA2)	THROTTLE POS #1 (VTA1)	THROTTLE POS #2 (VTA2)		
0%	0 to 0.2 V	0%	0 to 0.2 V	VC circuit open	A
100%	4.5 to 5.0 V	100%	4.5 to 5.0 V	E2 circuit open	A
0% or 100%	2.1 to 3.1 V (fail-safe)	0% or 100%	2.1 to 3.1 V (fail-safe)	VTA1 circuit open or ground short	A
about 19% (fail-safe)	0 to 0.2 or 4.5 to 5.0 V	about 19% (fail-safe)	0 to 0.2 or 4.5 to 5.0 V	VTA2 circuit open or ground short	A
10 to 22%	2.1 to 3.1 V	66 to 98% (does not fail-safe)	4.5 to 5.0 V (does not fail-safe)	TP sensor circuit is normal	B

HINT:
- TP#1 denotes THROTTLE POS, and TP#2 denotes THROTTLE POS#2.
- AP denotes Accelerator Pedal.
- VTA1 is expressed as percentages, and VTA2 is expressed as voltages.

B → Go to step 5

A

2 CHECK HARNESS AND CONNECTOR (THROTTLE POSITION SENSOR - ECM)

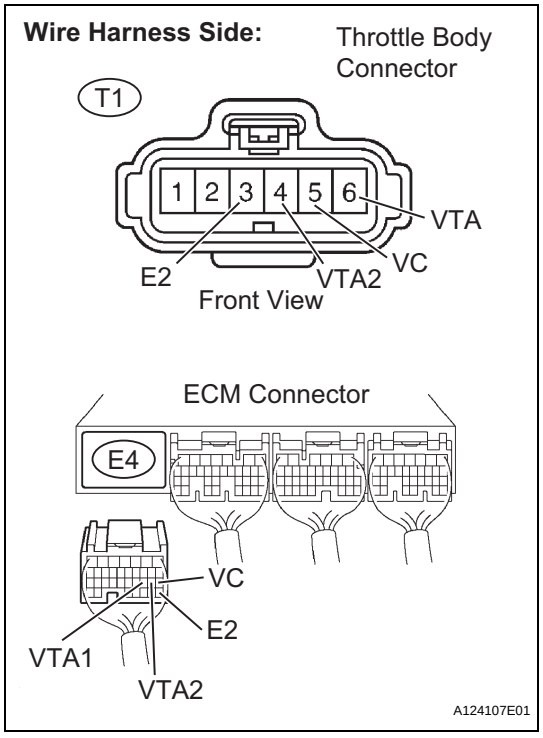

(a) Disconnect the T1 throttle body connector.
(b) Disconnect the E4 ECM connector.
(c) Check the resistance.

Standard Resistance (Check for open)

Tester Connection	Specified Condition
T1-5 (VC) - E4-18 (VC)	Below 1 Ω
T1-6 (VTA) - E4-20 (VTA1)	Below 1 Ω
T1-4 (VTA2) - E4-19 (VTA2)	Below 1 Ω
T1-3 (E2) - E4-28 (VTA2)	Below 1 Ω

Standard Resistance (Check for short)

Tester Connection	Specified Condition
T1-5 (VC) or E4-18 (VC) - Body ground	10 kΩ or higher
T1-6 (VTA1) or E4-20 (VTA1) - Body ground	10 kΩ or higher
T1-4 (VTA2) or E4-19 (VTA2) - Body ground	10 kΩ or higher

(d) Reconnect the throttle body connector.
(e) Reconnect the ECM connector.

NG → REPAIR OR REPLACE HARNESS OR CONNECTOR

OK

ES

3	INSPECT ECM (VC VOLTAGE)

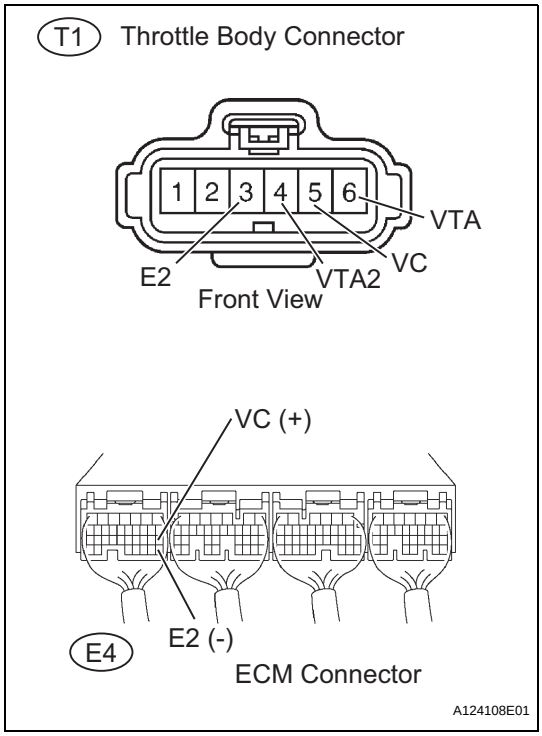

(a) Disconnect the T1 throttle body connector.
(b) Turn the ignition switch to ON.
(c) Measure the voltage between the terminals of the ECM connector.

Standard Voltage

Tester Connections	Specified Conditions
E4-18 (VC) - E4-28 (E2)	4.5 to 5.5 V

(d) Reconnect the throttle body connector.

NG → **REPLACE ECM**

OK

4	REPLACE THROTTLE BODY ASSEMBLY

NEXT

5	CHECK WHETHER DTC OUTPUT RECURS (THROTTLE POSITION SENSOR DTCS)

(a) Connect the intelligent tester to the DLC3.
(b) Turn the ignition switch to ON and turn the intelligent tester ON.
(c) Clear the DTC.
(d) Start the engine.
(e) Allow the engine to idle for 15 seconds or more.
(f) Select the following menu items: DIAGNOSIS / ENHANCED OBD II / DTC INFO / CURRENT CODES.
(g) Read DTCs.

Result

Display (DTC output)	Proceed to
P0120, P0122, P0123, P0220, P0222, P0223 and/or P2135	A
No output	B

B → **SYSTEM OK**

A

REPLACE ECM

DTC	P0121	Throttle / Pedal Position Sensor / Switch "A" Circuit Range / Performance Problem

HINT:
This DTC relates to the Throttle Position (TP) sensor.

DESCRIPTION

Refer to DTC P0120 (See page ES-110).

DTC No.	DTC Detection Conditions	Trouble Areas
P0121	Difference between VTA1 and VTA2 voltages less than 0.8 V, or more than 1.6 V for 2 seconds (1 trip detection logic)	• Throttle position (TP) sensor (built into throttle body)

ES

MONITOR DESCRIPTION

The ECM uses the TP sensor to monitor the throttle valve opening angle.
This sensor transmits two signals: VTA1 and VTA2. VTA1 is used to detect the throttle opening angle and VTA2 is used to detect malfunctions in VTA1. The ECM performs several checks to confirm the proper operation of the TP sensor and VTA1.
For each throttle opening angle, a specific voltage difference is expected between the outputs of VTA1 and VTA2. If the voltage output difference between the two signals deviates from the normal operating range, the ECM interprets this as a malfunction of the TP sensor. The ECM illuminates the MIL and sets the DTC. If the malfunction is not repaired successfully, the DTC is set 2 seconds after the engine is next started.

MONITOR STRATEGY

Related DTCs	P0121: TP sensor rationality
Required Sensors/Components (Main)	TP sensor
Required Sensors/Components (Related)	-
Frequency of Operation	Continuous
Duration	Within 2 seconds
MIL Operation	Immediate
Sequence of Operation	None

TYPICAL ENABLING CONDITIONS

Monitor runs whenever following DTCs not present	None
Either of following conditions A or B set	-
A. Ignition switch	ON
B. ETCS power	ON
TP sensor open/short malfunction (P0120, P0122, P0123, P0220, P0222, P0223 and P2135)	Not detected

TYPICAL MALFUNCTION THRESHOLDS

TP sensor 1 - [TP sensor 2 x 0.8 (corrected by learning value)]	Less than 0.8 V, or more than 1.6 V

FAIL-SAFE

When this DTC, as well as other DTCs relating to ETCS (Electronic Throttle Control System) malfunctions, is set, the ECM enters fail-safe mode. During fail-safe mode, the ECM cuts the current to the throttle actuator off, and the throttle valve is returned to a 6.5° throttle angle by the return spring. The ECM then adjusts the engine output by controlling the fuel injection (intermittent fuel-cut) and ignition timing, in accordance with the accelerator pedal opening angle, to allow the vehicle to continue at a minimal speed. If the accelerator pedal is depressed firmly and gently, the vehicle can be driven slowly. Fail-safe mode continues until a pass condition is detected, and the ignition switch is then turned to OFF.

WIRING DIAGRAM

Refer to DTC P0120 (See page ES-114).

HINT:
Read freeze frame data using the intelligent tester. Freeze frame data records the engine conditions when a malfunction is detected. When troubleshooting, freeze frame data can help determine if the vehicle was running or stopped, if the engine was warmed up or not, if the air-fuel ratio was lean or rich, and other data from the time the malfunction occurred.

ES

1	CHECK ANY OTHER DTC OUTPUT (IN ADDITION TO DTC P0121)

(a) Connect a intelligent tester to the DLC3.
(b) Turn the ignition switch to ON.
(c) Turn the tester ON.
(d) Select the following menu items: DIAGNOSIS / ENHANCED OBD II / DTC INFO / CURRENT CODES.
(e) Read DTCs.

Result

Display (DTC output)	Proceed to
P0121 and other DTCs	B
P0121	A

HINT:
If any DTCs other than P0121 are output, troubleshoot those DTCs first.

B → GO TO DTC CHART

A

REPLACE THROTTLE BODY

DTC	P0125	Insufficient Coolant Temperature for Closed Loop Fuel Control

DESCRIPTION

Refer to DTC P0115 (See page ES-102).

DTC No.	DTC Detection Condition	Trouble Area
P0125	Engine coolant temperature hardly changes for 70 seconds after engine start (2 trip detection logic)	• Engine Coolant Temperature (ECT) sensor • Cooling system • Thermostat
P0125	Engine coolant temperature hardly changes for 114 seconds after engine start (2 trip detection logic)	
P0125	Engine coolant temperature hardly changes for 1,200 seconds after engine start (2 trip detection logic)	

ES

MONITOR DESCRIPTION

The resistance of the ECT sensor varies in proportion to the actual ECT. The ECM supplies a constant voltage to the sensor and monitors the signal output voltage of the sensor. The signal voltage output varies according to the changing resistance of the sensor. After the engine is started, the ECT is monitored through this signal. If the ECT sensor indicates that the engine is not yet warm enough for closed-loop fuel control, despite a specified period of time having elapsed since the engine was started, the ECM interprets this as a malfunction in the sensor or cooling system and sets the DTC.
Example:
The ECT is 0°C(32°F) at engine start. After 70 seconds running time, the ECT sensor still indicates that the engine is not warm enough to begin closed-loop fuel (air-fuel ratio feedback) control. The ECM interprets this as a malfunction in the sensor or cooling system and sets the DTC.

MONITOR STRATEGY

Related DTCs	P0125: Insufficient engine coolant temperature for closed-loop fuel control
Required Sensors/Components (Main)	Thermostat, cooling system
Required Sensors/Components (Related)	Engine coolant temperature sensor and mass air flow meter
Frequency of Operation	Continuous
Duration	70 seconds: -0.34°C (31.38°F) or more 114 seconds: -11.45 to -0.34°C (11.39 to 31.38°F) 1200 seconds: Less than -11.45°C (11.39°F)
MIL Operation	2 driving cycles
Sequence of Operation	None

TYPICAL ENABLING CONDITIONS

All

Monitor will run whenever these DTCs are not present	P0100 - P0103 (MAF meter) P0110 - P0113 (IAT sensor) P0115 - P0118 (ECT sensor)

Case 1

Engine coolant or intake air temperature at engine start	-0.34°C (31.38°F) or more
Engine	Running
Fuel cut	OFF

Case 2

Engine coolant or intake air temperature at engine start	Between -11.45°C (11.39°F) and -0.34°C (31.38°F)

Engine	Running
Fuel cut	OFF

Case 3

Engine coolant or intake air temperature at engine start	Lower than -11.45°C (11.39°F)
Engine	Running
Fuel cut	OFF
Idle	OFF

TYPICAL MALFUNCTION THRESHOLDS

Engine coolant temperature sensor output	Less than 8°C (46°F)

WIRING DIAGRAM

Refer to DTC P0115 (See page ES-103).

HINT:

- If any of DTCs P0115, P0116, P0117 or P0118 are set simultaneously with DTC P0125, the Engine Coolant Temperature (ECT) sensor may have an open or a short circuit. Troubleshoot those DTCs first.
- Read freeze frame data using the intelligent tester. Freeze frame data records the engine conditions when a malfunction is detected. When troubleshooting, freeze frame data can help determine if the vehicle was running or stopped, if the engine was warmed up or not, if the air-fuel ratio was LEAN or RICH, and other data from the time the malfunction occurred.

1 CHECK ANY OTHER DTCS OUTPUT (IN ADDITION TO DTC P0125)

(a) Connect the intelligent tester to the DLC3.
(b) Turn the ignition switch to ON and turn the intelligent tester ON.
(c) Select the following menu items: DIAGNOSIS / ENHANCED OBD II / DTC INFO / CURRENT CODES.
(d) Read DTCs.

Result

Display (DTC output)	Proceed to
P0125	A
P0125 and other DTCs	B

HINT:
If any DTCs other than P0125 are output, troubleshoot those DTCs first.

B → **GO TO DTC CHART**

A

2 INSPECT THERMOSTAT

(a) Remove the thermostat (See page CO-7).
(b) Check the valve opening temperature of the thermostat.

Standard:
80 to 84°C (176 to 183°F)

HINT:
In addition to the above check, confirm that the valve is completely closed when the temperature is below the standard.

(c) Reinstall the thermostat (See page CO-8).

NG → **REPLACE THERMOSTAT**

OK

3	CHECK COOLING SYSTEM

(a) Check for defects in the cooling system that might cause the system to be too cold, such as abnormal radiator fan operation or any modifications.

NG → **REPAIR OR REPLACE COOLING SYSTEM**

OK

REPLACE ENGINE COOLANT TEMPERATURE SENSOR

DTC	P0128	Coolant Thermostat (Coolant Temperature Below Thermostat Regulating Temperature)

HINT:
This DTC relates to the thermostat.

DESCRIPTION

This DTC is set when the Engine Coolant Temperature (ECT) does not reach 70°C (158°F) despite sufficient engine warm-up time.

DTC No.	DTC Detection Conditions	Trouble Areas
P0128	Conditions (a), (b) and (c) met for 5 seconds (2 trip detection logic): (a) Cold start (b) Engine warmed up (c) Engine Coolant Temperature (ECT) less than 70°C (158°F)	• Thermostat • Cooling system • ECT sensor • ECM

ES

MONITOR DESCRIPTION

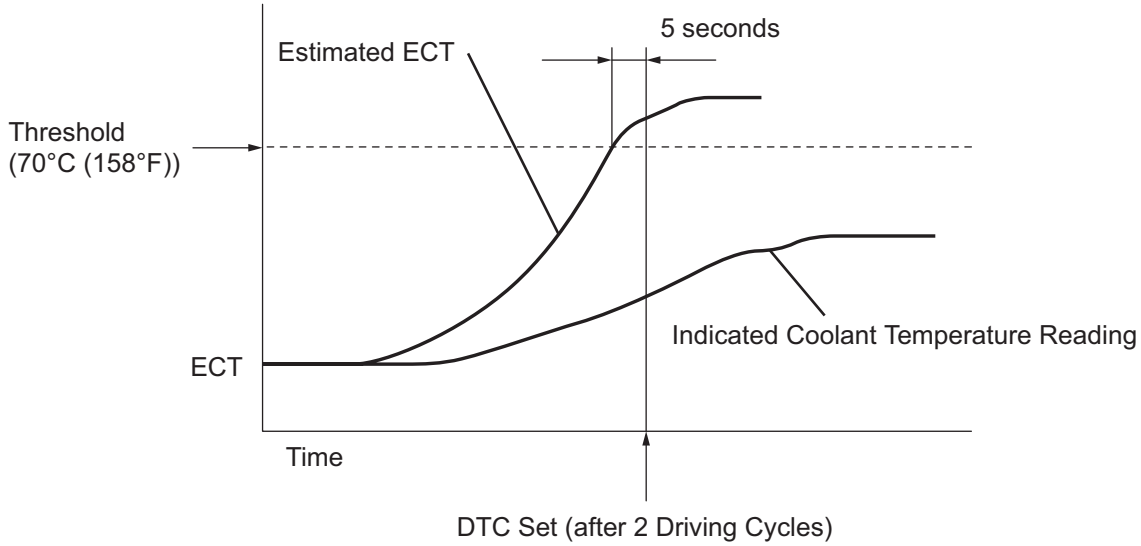

The ECM estimates the ECT based on the starting temperature, engine loads, and engine speeds. The ECM then compares the estimated temperature with the actual ECT. When the estimated ECT reaches 70°C (158°F), the ECM checks the actual ECT. If the actual ECT is less than 70°C (158°F), the ECM interprets this as a malfunction in the thermostat or the engine cooling system and sets the DTC.

MONITOR STRATEGY

Related DTCs	P0128: Coolant Thermostat

Required Sensors / Components (Main)	Thermostat
Required Sensor / Components (Related)	Engine Coolant Temperature (ECT) sensor, Intake Air Temperature (IAT) sensor, Vehicle speed sensor
Frequency of Operation	Once per driving cycle
Duration	900 seconds
MIL Operation	2 driving cycles
Sequence of Operation	None

TYPICAL ENABLING CONDITIONS

Monitor runs whenever following DTCs not present	P0010, (OCV Bank 1) P0011 (VVT System 1 - Advance) P0012 (VVT System 1 - Retard) P0031, P0032 (A/F sensor heater - Sensor 1) P0100 - P0103 (MAF meter) P0110 - P0113 (IAT sensor) P0115 - P0118 (ECT sensor) P0125 (Insufficient ECT for closed loop) P0171, P0172 (Fuel system) P0300 - P0304 (Misfire) P0335 (CKP sensor) P0340, P0341 (CMP sensor) P0351 - P0358 (igniter) P0500 (VSS) P2196 (A/F sensor - rationality) P2A00 (A/F sensor - slow response)
Battery voltage	11 V or more
Throttle valve position learning	Completed
Either of following conditions 1 or 2 met:	-
1. All of following conditions (a), (b) and (c) met:	-
(a) ECT at engine start - IAT at engine start	-15°to 7°C (-27°to 12.6°F)
(b) ECT at engine start	-10°to 51°C (14°to 133°F)
(c) IAT at engine start	-10°to 51°C (14°to 133°F)
2. All of following conditions (d), (e) and (f) met:	-
(d) ECT at engine start - IAT at engine start	More than 7°C (12.6°F)
(e) ECT at engine start	51°C (133°F) or less
(f) IAT at engine start	-10°C (14°F) or more
Accumulated time at 80 mph (128 km/h) or more of vehicle speed	Less than 20 seconds

TYPICAL MALFUNCTION THRESHOLDS

Duration that following conditions A and B met	5 seconds or more
A. Simulated ECT	70°C (158°F) or more
B. Actual ECT	Below 70°C (158°F)

HINT:
Read freeze frame data using a intelligent tester. Freeze frame data record the engine condition when malfunctions are detected. When troubleshooting, freeze frame data can help determine if the vehicle was moving or stationary, if the engine was warmed up or not, if the air-fuel ratio was lean or rich, and other data, from the time the malfunction occurred.

1	**CHECK ANY OTHER DTCS OUTPUT (IN ADDITION TO DTC P0128)**

(a) Connect a intelligent tester to the DLC3.
(b) Turn the ignition switch to ON.

(c) Turn the tester ON.
(d) Select the following menu items: DIAGNOSIS / ENHANCED OBD II / DTC INFO / CURRENT CODES.
(e) Read DTCs.

Result:

Display (DTC Output)	Proceed To
P0128	A
P0128 and other DTCs	B

HINT:
If any DTCs other than P0128 are output, troubleshoot those DTCs first.

B → **GO TO DTC CHART**

A

ES

2 CHECK COOLING SYSTEM

(a) Check for defects in the cooling system that might cause the system to be too cold, such as abnormal radiator fan operation or any modifications.

NG → **REPAIR OR REPLACE COOLING SYSTEM**

OK

3 INSPECT THERMOSTAT

(a) Remove the thermostat (see page CO-7).
(b) Check the valve opening temperature of the thermostat.
Standard:
80° to 84°C (176° to 183°F)
HINT:
In addition to the above check, confirm that the valve is completely closed when the temperature is below the standard.
(c) Reinstall the thermostat (see page CO-8).

NG → **REPLACE THERMOSTAT**

OK

REPLACE ECM

DTC	P0136	Oxygen Sensor Circuit Malfunction (Bank 1 Sensor 2)

DTC	P0137	Heated Oxygen Sensor Circuit Low Voltage (Bank 1 Sensor 2)

DTC	P0138	Oxygen Sensor Circuit High Voltage (Bank 1 Sensor 2)

HINT:
Sensor 2 refers to the sensor mounted behind the Three-Way Catalytic Converter (TWC) and located far from the engine assembly.

ES

DESCRIPTION

In order to obtain a high purification rate of the carbon monoxide (CO), hydrocarbon (HC) and nitrogen oxide (NOx) components in the exhaust gas, a TWC is used. For the most efficient use of the TWC, the air-fuel ratio must be precisely controlled so that it is always close to the stoichiometric air-fuel level. For the purpose of helping the ECM to deliver accurate air-fuel ratio control, a Heated Oxygen (HO2) sensor is used.
The HO2 sensor is located behind the TWC, and detects the oxygen concentration in the exhaust gas. Since the sensor is integrated with the heater that heats the sensing portion, it is possible to detect the oxygen concentration even when the intake air volume is low (the exhaust gas temperature is low).
When the air-fuel ratio becomes lean, the oxygen concentration in the exhaust gas is rich. The HO2 sensor informs the ECM that the post-TWC air-fuel ratio is lean (low voltage, i.e. less than 0.45 V). Conversely, when the air-fuel ratio is richer than the stoichiometric air-fuel level, the oxygen concentration in the exhaust gas becomes lean. The HO2 sensor informs the ECM that the post-TWC air-fuel ratio is rich (high voltage, i.e. more than 0.45 V). The HO2 sensor has the property of changing its output voltage drastically when the air-fuel ratio is close to the stoichiometric level.
The ECM uses the supplementary information from the HO2 sensor to determine whether the air-fuel ratio after the TWC is rich or lean, and adjusts the fuel injection time accordingly. Thus, if the HO2 sensor is working improperly due to internal malfunctions, the ECM is unable to compensate for deviations in the primary air-fuel ratio control.

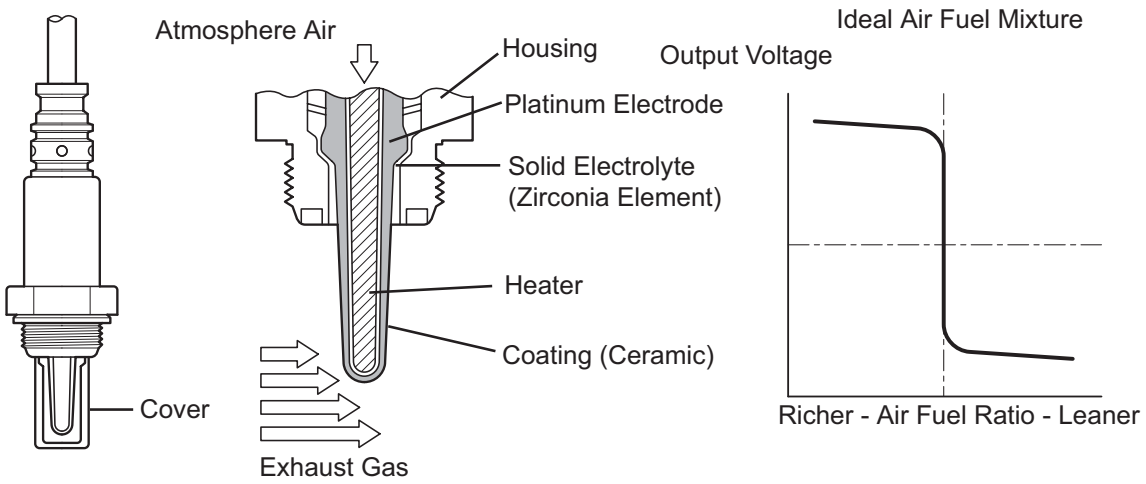

DTC No.	DTC Detection Conditions	Trouble Areas
P0136	• Abnormal voltage output (active air-fuel ratio control): During active air-fuel ratio control, following conditions (a) and (b) met for certain period of time (1 trip detection logic): (a) Heated Oxygen (HO2) sensor voltage does not decrease to less than 0.21 V (b) HO2 sensor voltage does not increase to more than 0.59 V • Low impedance: Sensor impedance less than 5 Ωfor more than 30 seconds when ECM presumes sensor to being warmed up and operating normally (1 trip detection logic)	• Open or short in HO2 sensor (sensor 2) circuit • HO2 sensor (sensor 2) • HO2 sensor heater (sensor 2) • Air-fuel Ratio (A/F) sensor (sensor 1) • EFI relay • Gas leakage from exhaust system
P0137	• Low voltage (open): During active air-fuel ratio control, following conditions (a) and (b) met for certain period of time (1 trip detection logic): (a) HO2 sensor voltage output less than 0.21 V (b) Target air-fuel ratio rich • High impedance: Sensor impedance 15 kΩ or more for more than 90 seconds when ECM presumes sensor to being warmed up and operating normally (1 trip detection logic)	• Open in HO2 sensor (sensor 2) circuit • HO2 sensor (sensor 2) • HO2 sensor (sensor 2) heater • EFI relay • Gas leakage from exhaust system
P0138	• High voltage (short): During active air-fuel ratio control, following conditions (a) and (b) met for certain period of time (1 trip detection logic): (a) HO2 sensor voltage output less than 0.59 V or more (b) Target air-fuel ratio lean • Extremely high voltage (short) : HO2 sensor voltage output exceeds 1.2 V for more than 10 seconds (1 trip detection logic)	• Short in HO2 sensor (sensor 2) circuit • HO2 sensor (sensor 2) • ECM internal circuit malfunction

MONITOR DESCRIPTION

Active Air-Fuel Ratio Control

- The ECM usually performs air-fuel ratio feedback control so that the Air-Fuel Ratio (A/F) sensor output indicates a near stoichiometric air-fuel level. This vehicle includes active air-fuel ratio control in addition to regular air-fuel ratio control. The ECM performs active air-fuel ratio control to detect any deterioration in the Three-Way Catalytic Converter (TWC) and Heated Oxygen (HO2) sensor malfunctions (refer to the diagram below).
- Active air-fuel ratio control is performed for approximately 15 to 20 seconds while driving with a warm engine. During active air-fuel ratio control, the air-fuel ratio is forcibly regulated to become lean or rich by the ECM. If the ECM detects a malfunction, one of the following DTCs is set: DTC P0136 (abnormal voltage output), P0137 (open circuit) and P0138 (short circuit).

Abnormal Voltage Output of HO2 Sensor (DTC P0136)

- While the ECM is performing active air-fuel ratio control, the air-fuel ratio is forcibly regulated to become rich or lean. If the sensor is not functioning properly, the voltage output variation is small. For example, when the HO2 sensor voltage does not decrease to less than 0.21 V and does not increase to more than 0.59 V during active air-fuel ratio control, the ECM determines that the sensor voltage output is abnormal and sets DTC P0136.

ES

HO2 SENSOR CIRCUIT MALFUNCTION (P0136: ABNORMAL VOLTAGE)

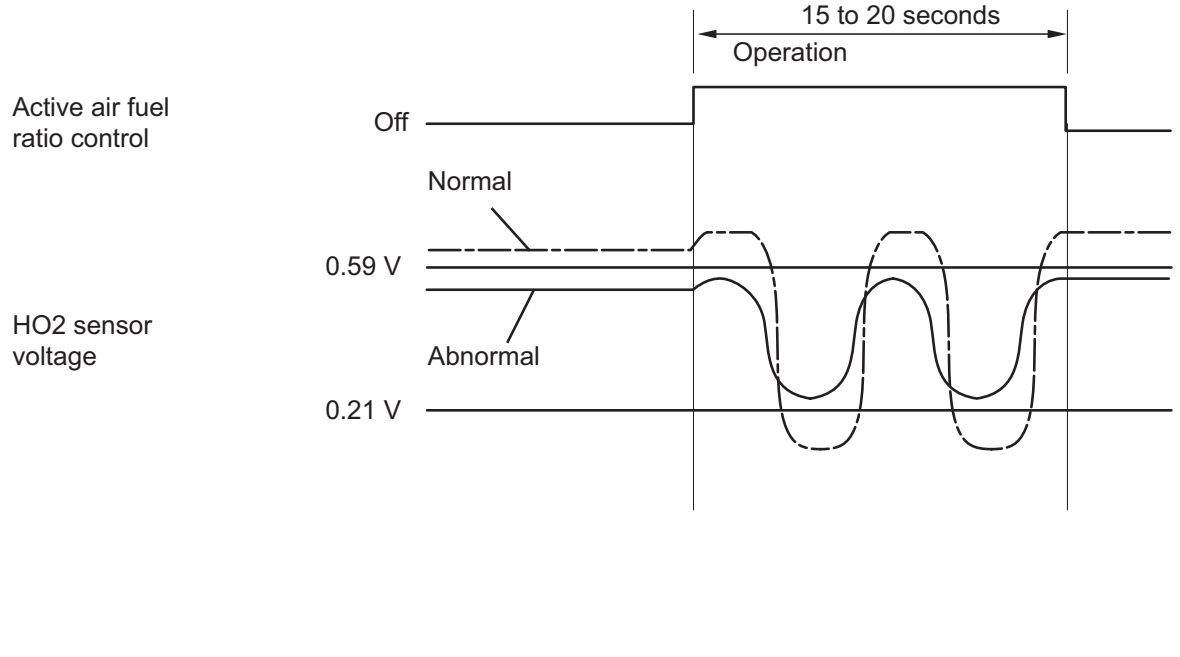

Open or Short in Heated Oxygen (HO2) Sensor Circuit (DTC P0137 or P0138)

- During active air-fuel ratio control, the ECM calculates the Oxygen Storage Capacity (OSC)* of the Three- Way Catalytic Converter (TWC) by forcibly regulating the air-fuel ratio to become rich or lean. If the HO2 sensor has an open or short, or the voltage output of the sensor noticeably decreases, the OSC indicates an extraordinarily high value. Even if the ECM attempts to continue regulating the air-fuel ratio to become rich or lean, the HO2 sensor output does not change.
- While performing active air-fuel ratio control, when the target air-fuel ratio is rich and the HO2 sensor voltage output is 0.21 V or less (lean), the ECM interprets this as an abnormally low sensor output voltage and sets DTC P0137. When the target air-fuel ratio is lean and the voltage output is 0.59 V or more (rich) during active air-fuel ratio control, the ECM determines that the sensor voltage output is abnormally high, and sets DTC P0138.
  HINT:
  DTC P0138 is also set if the HO2 sensor voltage output is more than 1.2 V for 10 seconds or more.

*: The TWC has the capability to store oxygen. The OSC and the emission purification capacity of the TWC are mutually related. The ECM determines whether the catalyst has deteriorated, based on the calculated OSC value (see page ES-206).

HO2 SENSOR CIRCUIT LOW VOLTAGE (P0137: OPEN)

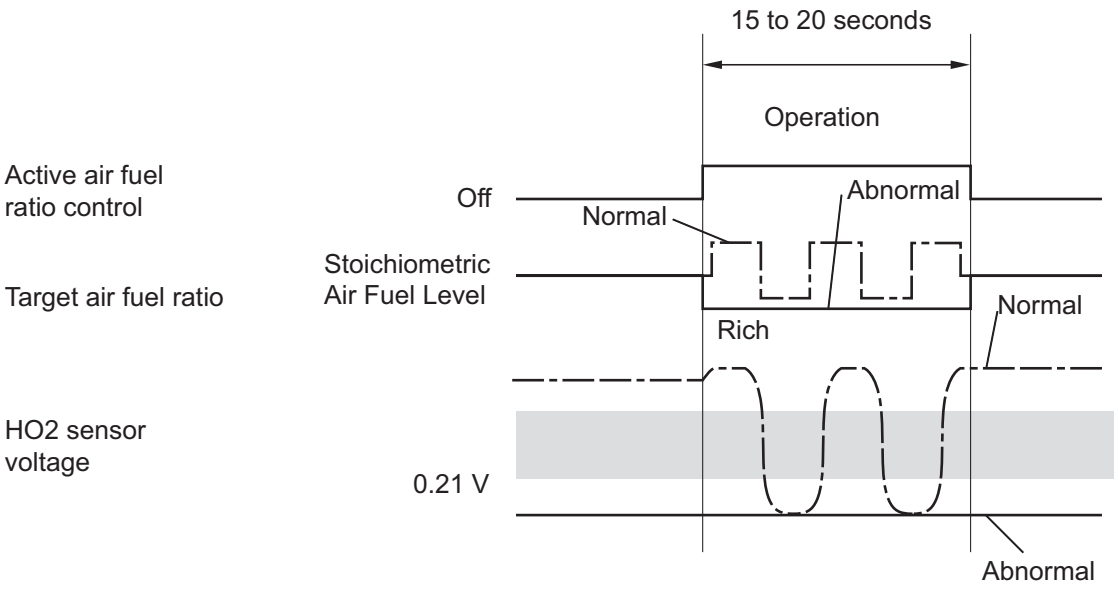

HO2 SENSOR CIRCUIT HIGH VOLTAGE (P0138: SHORT)

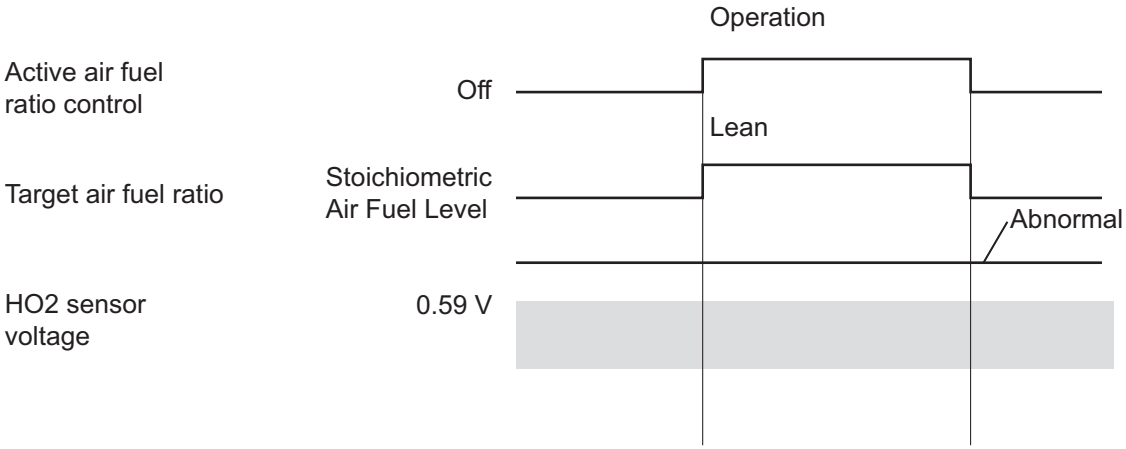

Y

A115541E03

High or Low Impedance of Heated Oxygen (HO2) Sensor (DTC P0136 or P0137)

Relationship between element temperature and impedance:

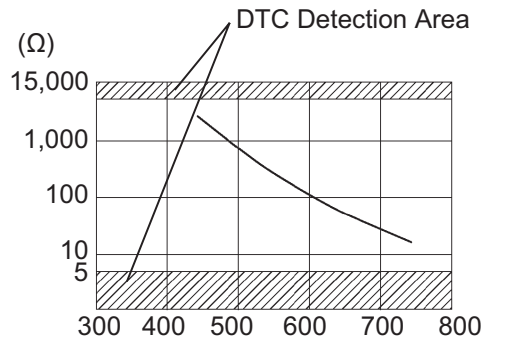

ES

- During normal air-fuel ratio feedback control, there are small variations in the exhaust gas oxygen concentration. In order to continuously monitor the slight variation of the HO2 sensor signal while the engine is running, the impedance* of the sensor is measured by the ECM. The ECM determines that there is a malfunction in the sensor when the measured impedance deviates from the standard range.
- *: The effective resistance in an alternating current electrical circuit.
  HINT:
  - The impedance cannot be measured using an ohmmeter.
  - DTC P0136 indicates the deterioration of the HO2 sensor. The ECM sets the DTC by calculating the impedance of the sensor when the typical enabling conditions are satisfied (1 driving cycle).
  - DTC P0137 indicates an open or short circuit in the HO2 sensor (1 driving cycle). The ECM sets the DTC when the impedance of the sensor exceeds the threshold 15 kΩ.

MONITOR STRATEGY

Related DTCs	P0136: Heated oxygen sensor output voltage (Output voltage) P0136: Heated oxygen sensor impedance (Low) P0137: Heated oxygen sensor output voltage (Low voltage) P0137: Heated oxygen sensor impedance (High) P0138: Heated oxygen sensor output voltage (High voltage) P0138: Heated oxygen sensor output voltage (Extremely high)
Required Sensors/Components (Main)	Heated oxygen sensor
Required Sensors/Components (Related)	Crankshaft position sensor, engine coolant temperature sensor, mass air flow meter and throttle position sensor
Frequency of Operation	Once per driving cycle: Active air-fuel ratio control detection Continuous: Others
Duration	90 seconds: Heated oxygen sensor impedance (High) Within 20 seconds: Active air-fuel ratio control detection 30 seconds: Heated oxygen sensor impedance (Low) 10 seconds: Output voltage (High stuck)
MIL Operation	Immediate
Sequence of Operation	None

TYPICAL ENABLING CONDITIONS

All:

Monitor runs whenever following DTCs not present	P0031, P0032, P0051, P0052 (A/F sensor heater - Sensor 1) P0037, P0038, P0057, P0058 (O2 sensor heater - Sensor 2) P0100 - P0103 (MAF meter) P0110 - P0113 (IAT sensor) P0115 - P0118 (ECT sensor) P0120 - P0223, P2135 (TP sensor) P0125 (Insufficient ECT for closed loop) P0171, P0172 (Fuel system) P0300 - P0308 (Misfire) P0335 (CKP sensor) P0340, P0341 (CMP sensor) P0442 - P0456 (EVAP system) P0500 (VSS) P2196, P2198 (A/F sensor - rationality) P2440 (A/R control valve stuck open) P2441 (A/R control valve stuck close) P2444 (AIP stuck ON) P2445 (AIP stuck OFF) P2A00, P2A03 (A/F sensor - slow response)

ES

Heated Oxygen Sensor Output Voltage (Output Voltage, High Voltage and Low Voltage):

Active air-fuel ratio control	Executing
Active air-fuel ratio control begins when all of following conditions met:	-
Battery voltage	11 V or more
Engine coolant temperature	70°C (158°F) or more
Idling	OFF
Engine RPM	Less than 4,000 rpm
A/F sensor status	Activated
Fuel cut	OFF (for 5 seconds or more)
Engine load	10 to 80 %
Shift position	4th or 5th (for M/T) 3rd, 4th or 5th (for A/T)

Heated Oxygen Sensor Impedance (Low):

Battery voltage	11 V or more
Estimated sensor temperature	Less than 700°C(1,292°F)
DTC P0606	Not set

Heated Oxygen Sensor Impedance (High):

Battery voltage	11 V or more
Estimated sensor temperature	More than 450°C(842°F)
DTC P0606	Not set

Heated Oxygen Sensor Output Voltage (Extremely High):

Battery voltage	11 V or more
Time after engine start	2 seconds or more

TYPICAL MALFUNCTION THRESHOLDS

Heated Oxygen Sensor Output Voltage (Output voltage):

Either of following conditions met:	1 or 2
1. All of the following conditions (a), (b) and (c) met	-
(a) Commanded air-fuel ratio	14.3 or less
(b) Rear HO2 sensor voltage	0.21 to 0.59 V
(c) OSC (Oxygen Storage Capacity of Catalyst)	2.5 g or more
2. All of the following conditions (d), (e) and (f) met	-

(d) Commanded air-fuel ratio	14.9 or more
(e) Rear HO2 sensor voltage	0.21 to 0.59 V
(f) OSC (Oxygen Storage Capacity of Catalyst)	2.5 g or more

Heated Oxygen Sensor Output Voltage (Low output voltage):

All of the following conditions (a), (b) and (c) met	-
(a) Commanded air-fuel ratio	14.3 or less
(b) Rear HO2 sensor voltage	Less than 0.21 V
(c) OSC (Oxygen Storage Capacity of Catalyst)	2.5 g or more

Heated Oxygen Sensor Output Voltage (High output voltage):

All of the following conditions (a), (b) and (c) met	-
(a) Commanded air-fuel ratio	14.9 or more
(b) Rear HO2 sensor voltage	More than 0.59 V
(c) OSC (Oxygen Storage Capacity of Catalyst)	2.5 g or more

ES

Heated Oxygen Sensor Impedance (Low):

Duration of following condition met	30 seconds or more
Heated oxygen sensor impedance	Less than 5 Ω

Heated Oxygen Sensor Impedance (High):

Duration of following condition met	90 seconds or more
Heated oxygen sensor impedance	15 kΩ or more

Heated Oxygen Sensor Impedance (Extremely High):

Duration of following condition met	10 seconds or more
Heated oxygen sensor impedance	1.2 V or more

COMPONENT OPERATING RANGE

Duration of following condition met	30 seconds or more
Heated oxygen sensor voltage	Varies between 0.1 and 0.9 V

MONITOR RESULT

Refer to Checking Monitor Status (See page ES-21).

WIRING DIAGRAM

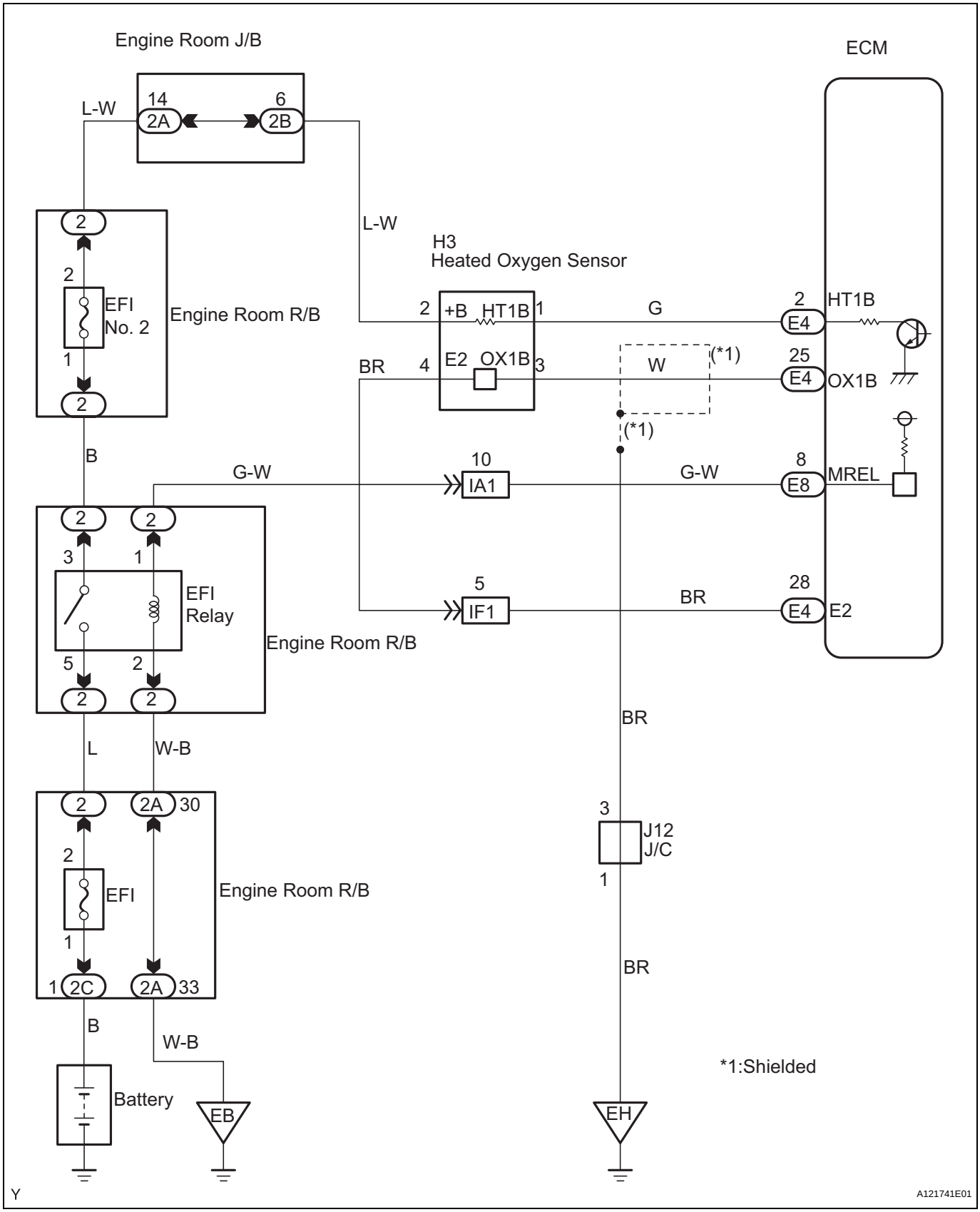

CONFIRMATION DRIVING PATTERN

HINT:

- This confirmation driving pattern is used in the "PERFORM CONFIRMATION DRIVING PATTERN" procedure of the following diagnostic troubleshooting procedure.
- Performing this confirmation pattern will activate the Heated Oxygen (HO2) sensor monitor. (The catalyst monitor is performed simultaneously.) This is very useful for verifying the completion of a repair.

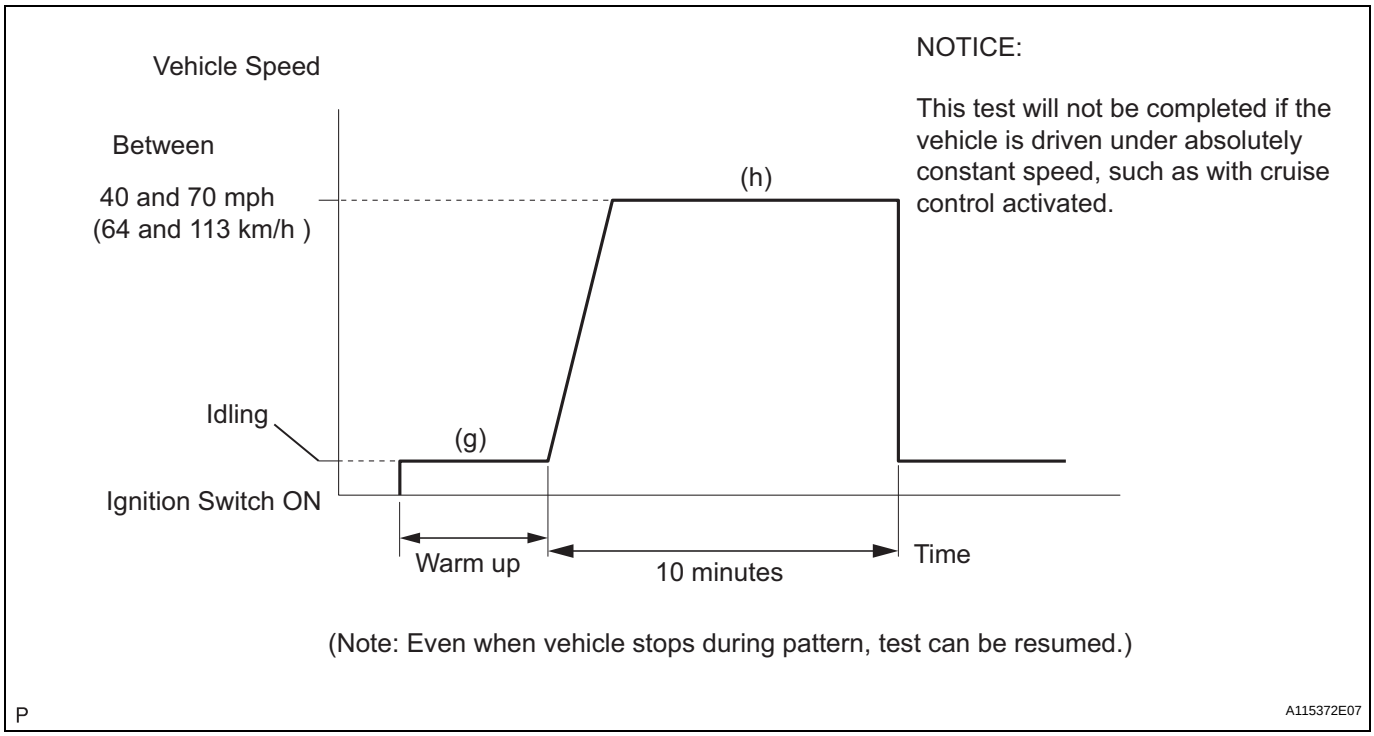

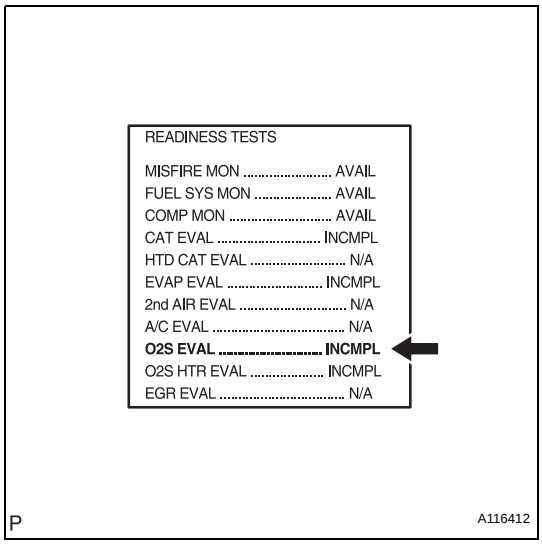

(a) Connect an intelligent tester to the DLC3.
(b) Turn the ignition switch to ON.
(c) Turn the tester or scan tool ON.
(d) Clear DTCs (where set) (See page ES-40).
(e) If using an intelligent tester, select the following menu items: DIAGNOSIS / CARB OBD II / READINESS TESTS.
(f) Check that O2S EVAL is INCMPL (incomplete).
(g) Start the engine and warm it up.
(h) Drive the vehicle at between 40 mph and 70 mph (64 km/h and 113 km/h) for at least 10 minutes.

(i) Note the state of the Readiness Tests items. Those items will change to COMPL (complete) as O2S EVAL monitor operates.
(j) On the tester, select the following menu items: DIAGNOSIS / ENHANCED OBD II / DTC INFO / PENDING CODES and check if any DTCs (any pending DTCs) are set.
HINT:
If O2S EVAL does not change to COMPL, and any pending DTCs fail to set, extend the driving time.

HINT:
Intelligent tester only :
Malfunctioning areas can be identified by performing the A/F CONTROL function provided in the ACTIVE TEST. The A/F CONTROL function can help to determine whether the Air-Fuel Ratio (A/F) sensor, Heated Oxygen (HO2) sensor and other potential trouble areas are malfunctioning.
The following instructions describe how to conduct the A/F CONTROL operation using an intelligent tester.
(a) Connect an intelligent tester to the DLC3.
(b) Start the engine and turn the tester ON.
(c) Warm up the engine at an engine speed of 2,500 rpm for approximately 90 seconds.
(d) On the tester, select the following menu items: DIAGNOSIS / ENHANCED OBD II / ACTIVE TEST / A/F CONTROL.
(e) Perform the A/F CONTROL operation with the engine in an idling condition (press the RIGHT or LEFT button to change the fuel injection volume).
(f) Monitor the voltage outputs of the A/F and HO2 sensors (AFS B1S1 and OS2 B1S2) displayed on the tester.

HINT:
- The A/F CONTROL operation lowers the fuel injection volume by 12.5 % or increases the injection volume by 25 %.
- Each sensor reacts in accordance with increases and decreases in the fuel injection volume.

Standard Voltage

Tester Display (Sensor)	Injection Volumes	Status	Voltages
AFS B1S1 (A/F)	+25%	Rich	Less than 3.0
AFS B1S1 (A/F)	-12.5%	Lean	More than 3.35
O2S B1S2	+25%	Rich	More than 0.5
O2S B1S2	-12.5%	Lean	Less than 0.4

NOTICE:
The Air-Fuel Ratio (A/F) sensor has an output delay of a few seconds and the Heated Oxygen (HO2) sensor has a maximum output delay of approximately 20 seconds.

Case	A/F Sensor (Sensor 1) Output Voltage		HO2 Sensor (Sensor 2) Output Voltage		Main Suspected Trouble Area
1	Injection Volume +25 % -12.5 %		Injection Volume +25 % -12.5 %		-
	Output Voltage More than 3.35 V Less than 3.0 V		Output Voltage More than 0.55 V Less than 0.4 V		
2	Injection Volume +25 % -12.5 %		Injection Volume +25 % -12.5 %		• A/F sensor • A/F sensor heater • A/F sensor circuit
	Output Voltage Almost no reaction		Output Voltage More than 0.55 V Less than 0.4 V		

Case	A/F Sensor (Sensor 1) Output Voltage		HO2 Sensor (Sensor 2) Output Voltage		Main Suspected Trouble Area
3	Injection Volume +25 % -12.5 %		Injection Volume +25 % -12.5 %		• HO2 sensor • HO2 sensor heater • HO2 sensor circuit
	Output Voltage More than 3.35 V Less than 3.0 V		Output Voltage Almost no reaction		
4	Injection volume +25 % -12.5 %		Injection Volume +25 % -12.5 %		• Fuel injector • Fuel pressure • Gas leakage from exhaust system (Air fuel ratio extremely lean or rich)
	Output Voltage Almost no reaction		Output Voltage Almost no reaction		

ES

- Following the A/F CONTROL procedure enables technicians to check and graph the voltage outputs of both the A/F and HO2 sensors.
- To display the graph, select the following menu items on the tester: DIAGNOSIS / ENHANCED OBD II / ACTIVE TEST / A/F CONTROL / USER DATA / AFS B1S1 and O2S B1S2, and press the YES button and then the ENTER button followed by the F4 button.

HINT:

- If other DTCs relating to different systems that have terminal E2 as the ground terminal are output simultaneously, terminal E2 may have an open circuit.
- Read freeze frame data using an intelligent tester. Freeze frame data record the engine condition when malfunctions are detected. When troubleshooting, freeze frame data can help determine if the vehicle was moving or stationary, if the engine was warmed up or not, if the air-fuel ratio was lean or rich, and other data, from the time the malfunction occurred.
- If the OX1B wire from the ECM connector is short-circuited to the +B wire, DTC P0136 will be set.

1	READ OUTPUT DTC

(a) Connect an intelligent tester to the DLC3.
(b) Turn the ignition switch to ON and turn the tester ON.
(c) Select the following menu items: DIAGNOSIS / ENHANCED OBD II / DTC INFO / CURRENT CODES.
(d) Read DTCs.

Result

Display (DTC output)	Proceed to
P0138	A
P0137	B
P0136	C

B → Go to step 14

C → Go to step 7

A

2	READ DATA LIST (OUTPUT VOLTAGE OF HEATED OXYGEN SENSOR)

(a) Connect the intelligent tester to the DLC3.
(b) Turn the ignition switch to ON and turn the tester ON.

(c) Select the following menu items: DIAGNOSIS / ENHANCED OBD II / DATA LIST / PRIMARY / O2S B1S2.
(d) Allow the engine to idle.
(e) Read the Heated Oxygen (HO2) sensor output voltage while idling.
Result

HO2 Sensor Output Voltages	Proceed to
More than 1.2 V	A
Less than 1.0 V	B

B → **Go to step 5**

A

ES

3 CHECK HARNESS AND CONNECTOR (CHECK FOR SHORT)

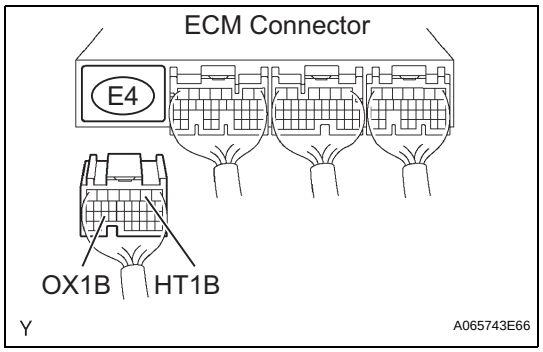

(a) Turn the ignition switch to OFF and wait for 5 minutes.
(b) Disconnect the E4 ECM connector.
(c) Check the resistance.
Standard Resistance

Tester Connection	Specified Condition
HT1B (E4-2) - OX1B (E4-25)	10 kΩ or higher

(d) Reconnect the ECM connector.

OK → **REPLACE ECM**

NG

4 INSPECT HEATED OXYGEN SENSOR (CHECK FOR SHORT)

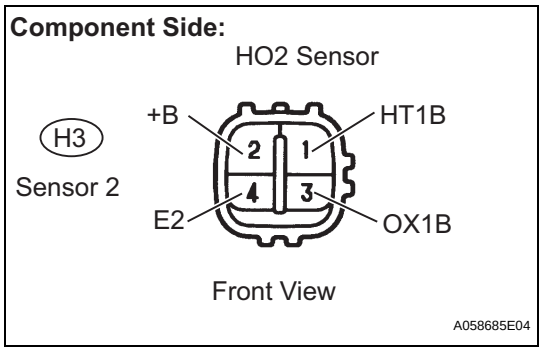

(a) Disconnect the H3 HO2 sensor connector.
(b) Check the resistance.
Standard Resistance

Tester Connections	Specified Conditions
+B (H3-2) - E2 (H3-4)	10 kΩ or higher
+B (H3-2) - OX1B (H3-3)	10 kΩ or higher

(c) Reconnect the HO2 sensor connector.

NG → **REPLACE HEATED OXYGEN SENSOR**

OK

REPAIR OR REPLACE HARNESS OR CONNECTOR

5	PERFORM CONFIRMATION DRIVING PATTERN

NEXT

6	CHECK WHETHER DTC OUTPUT RECURS (DTC P0138)

(a) On the intelligent tester, select the following menu items: DIAGNOSIS / ENHANCED OBD II / DTC INFO / CURRENT CODES.
(b) Read DTCs.
Result

Display (DTC Output)	Proceed To
P0138	A
No output	B

B → CHECK FOR INTERMITTENT PROBLEMS

A

REPLACE HEATED OXYGEN SENSOR

7	READ DATA LIST (OUTPUT VOLTAGE OF HEATED OXYGEN SENSOR)

(a) Connect the intelligent tester to the DLC3.
(b) Turn the ignition switch to ON and turn the tester ON.
(c) Start the engine.
(d) Select the following menu items: DIAGNOSIS / ENHANCED OBD II / DATA LIST / ALL / O2S B1S2
(e) After warming up the engine, run the engine at an engine speed of 2,500 rpm for 3 minutes.
(f) Read the output voltage of the HO2 sensor when the engine rpm is suddenly increased.
HINT:
Quickly accelerate the engine to 4,000 rpm 3 times using the accelerator pedal.
Standard Voltage:
Fluctuates between 0.4 V or less and 0.5 V or more.

NG → Go to step 14

OK

8	PERFORM CONFIRMATION DRIVING PATTERN

NEXT

9	CHECK WHETHER DTC OUTPUT RECURS (DTC P0136)

(a) On the intelligent tester, select the following menu items: DIAGNOSIS / ENHANCED OBD II / DTC INFO / CURRENT CODES.
(b) Read DTCs.

Result

Display (DTC Output)	Proceed To
P0136	A
No output	B

B → CHECK FOR INTERMITTENT PROBLEMS

A

10	REPLACE HEATED OXYGEN SENSOR

NEXT

11	PERFORM CONFIRMATION DRIVING PATTERN

NEXT

12	CHECK WHETHER DTC OUTPUT RECURS (DTC P0136)

(a) On the intelligent tester, select the following menu items: DIAGNOSIS / ENHANCED OBD II / DTC INFO / CURRENT CODES.
(b) Read DTCs.

Result

Display (DTC Output)	Proceed To
P0136	A
No output	B

B → REPAIR COMPLETED

A

13	PERFORM ACTIVE TEST USING INTELLIGENT TESTER (INJECTION VOLUME)

(a) Connect the intelligent tester to the DLC3.
(b) Start the engine and turn the tester ON.
(c) Warm up the engine.
(d) Select the following menu items: DIAGNOSIS / ENHANCED OBD II / ACTIVE TEST / INJ VOL.
(e) Change the fuel injection volume using the tester, monitoring the voltage output of Air-Fuel Ratio (A/F) and HO2 sensors displayed on the tester.

HINT:

- Change the fuel injection volume within the range of -12 % and +12 %. The injection volume can be changed in 1 % graduations within the range.
- The A/F sensor is displayed as AFS B1S1, and the HO2 sensor is displayed as O2S B1S2, on intelligent testers.

Result

Display (DTC Output)	Voltage Variations	Proceed To
AFS B1S1 (A/F)	Alternates between more and less than 3.3 V	OK
AFS B1S1 (A/F)	Remains at more than 3.3 V	NG
AFS B1S1 (A/F)	Remains at less than 3.3 V	NG

ES

HINT:

A normal HO2 sensor voltage (O2S B1S2) reacts in accordance with increases and decreases in fuel injection volumes. When the A/F sensor voltage remains at either less or more than 3.3 V despite the HO2 sensor indicating a normal reaction, the A/F sensor is malfunctioning.

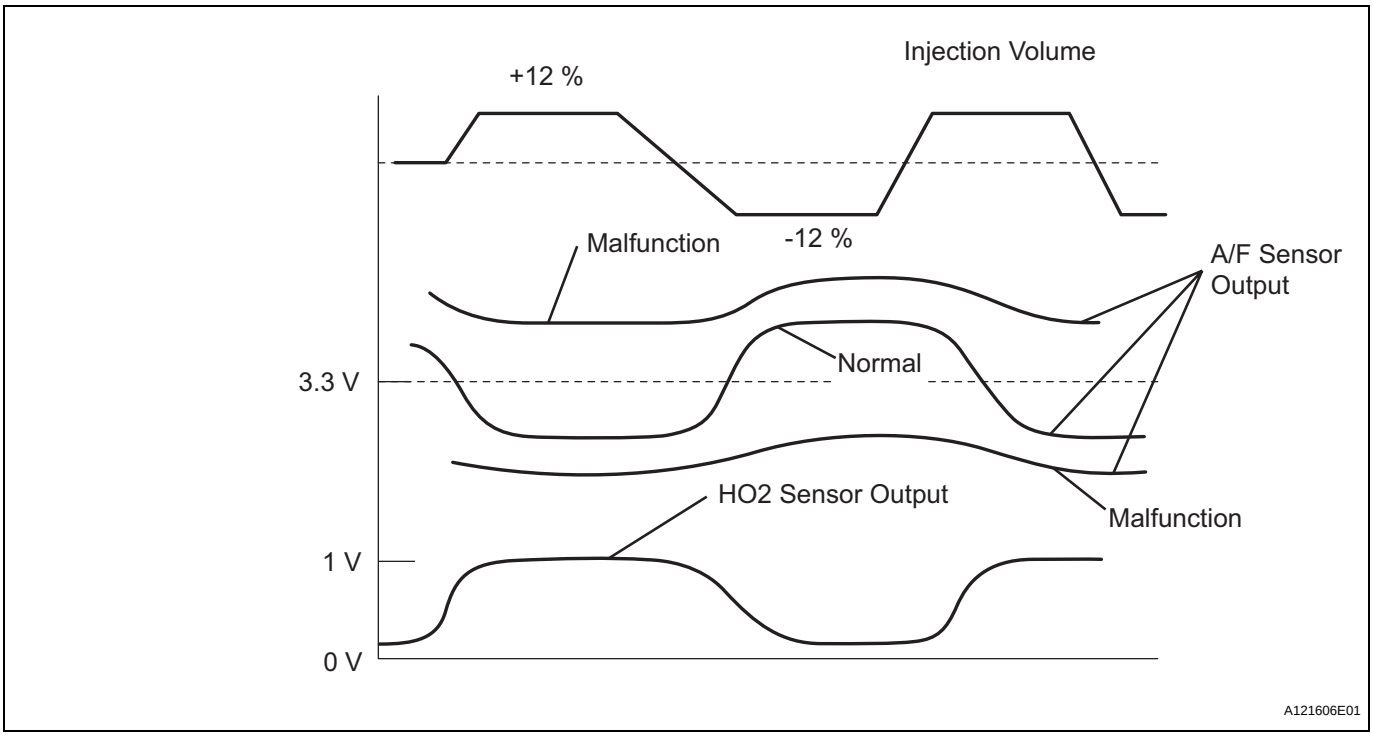

NG → **REPLACE AIR FUEL RATIO SENSOR**

OK

CHECK AND REPAIR EXTREMELY RICH OR LEAN ACTUAL AIR FUEL RATIO (INJECTOR, FUEL PRESSURE, EXHAUST GAS LEAKAGE, ETC.)

14	CHECK FOR EXHAUST GAS LEAKAGE

OK:
No gas leakage.

NG → **REPAIR OR REPLACE EXHAUST GAS LEAKAGE POINT**

OK

15	INSPECT HEATED OXYGEN SENSOR (HEATER RESISTANCE)

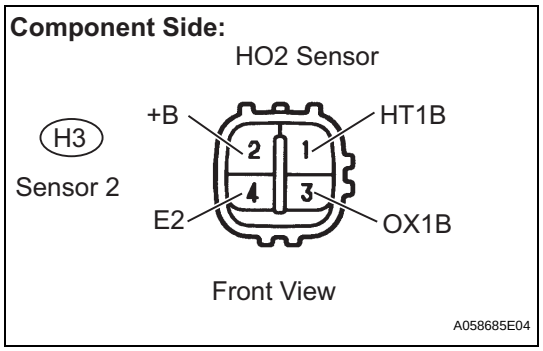

(a) Disconnect the H3 HO2 sensor connector.
(b) Measure the resistance between the terminals of the HO2 sensor connector.
Standard Resistance

Tester Connections	Specified Conditions
HT1B (H3-1) - +B (H3-2)	11 to 16 Ω at 20°C (68°F)
HT1B (H3-1) - E2 (H3-4)	10 kΩ or higher

(c) Reconnect the HO2 sensor connector.

NG → **REPLACE HEATED OXYGEN SENSOR**

OK

16	INSPECT EFI RELAY

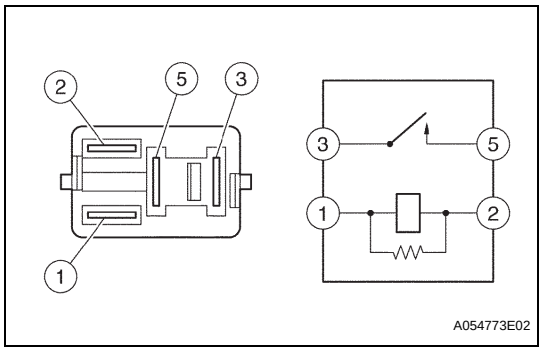

(a) Remove the EFI relay from the engine room R/B.
(b) Check the EFI relay resistance.
Standard Resistance

Tester Connections	Specified Conditions
3 - 5	10 kΩ or higher
3 - 5	Below 1 Ω (when battery voltage applied to terminals 1 and 2)

(c) Reinstall the EFI relay.

NG → **REPLACE EFI RELAY**

OK

17 CHECK HARNESS OR CONNECTOR (HEATED OXYGEN SENSOR - ECM)

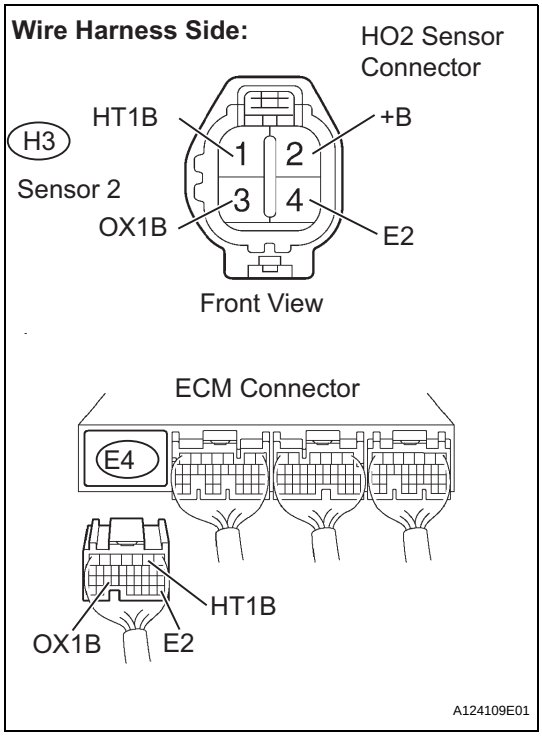

(a) Disconnect the H3 HO2 sensor connector.
(b) Turn the ignition switch to ON.
(c) Measure the voltage between the +B terminal of the HO2 sensor connector and body ground.

Standard Voltage

Tester Connections	Specified Conditions
+B (H3-1) - Body ground	9 to 14 V

(d) Turn the ignition switch to OFF.
(e) Disconnect the E4 ECM connector.
(f) Check the resistance.

Standard Resistance (Check for open)

Tester Connections	Specified Conditions
HT1B (H3-1) - HT1B (E4-2)	Below 1 Ω
OX1B (H3-3) - OX1B (E4-25)	Below 1 Ω
E2 (H3-4) - E2 (E4-28)	Below 1 Ω

Standard Resistance (Check for short)

Tester Connections	Specified Conditions
HT1B (H3-1) or HT1B (E4-2) - Body ground	10 kΩ or higher
OX1B (H3-3) or OX1B (E4-25) - Body ground	10 kΩ or higher
E2 (H3-4) or E2 (E4-28) - Body ground	10 kΩ or higher

(g) Reconnect the HO2 sensor connector.
(h) Reconnect the ECM connectors.

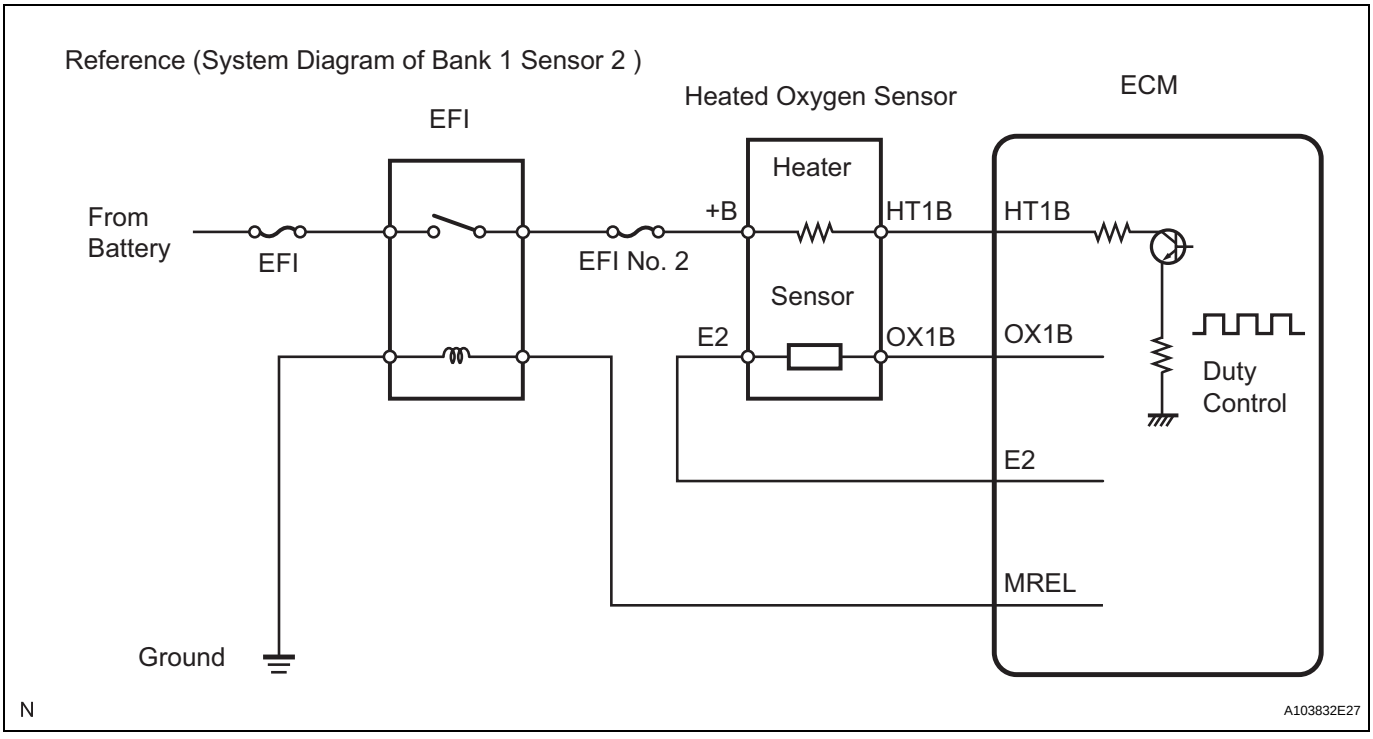

NG → REPAIR OR REPLACE HARNESS OR CONNECTOR

OK

REPLACE HEATED OXYGEN SENSOR

DTC	P0171	System Too Lean (Bank 1)

DTC	P0172	System Too Rich (Bank 1)

DESCRIPTION

The fuel trim is related to the feedback compensation value, not to the basic injection time. The fuel trim consists of both the short-term and long-term fuel trims.

The short-term fuel trim is fuel compensation that is used to constantly maintain the air-fuel ratio at stoichiometric levels. The signal from the Air-Fuel Ratio (A/F) sensor indicates whether the air-fuel ratio is rich or lean compared to the stoichiometric ratio. This triggers a reduction in the fuel injection volume if the air-fuel ratio is rich and an increase in the fuel injection volume if it is lean.

Factors such as individual engine differences, wear over time and changes in operating environment cause short-term fuel trim to vary from the central value. The long-term fuel trim, which controls overall fuel compensation, compensates for long-term deviations in the fuel trim from the central value caused by the short- term fuel trim compensation.

ES

If both the short-term and long-term fuel trims are lean or rich beyond predetermined values, it is interpreted as a malfunction, and the ECM illuminates the MIL and sets a DTC.

DTC No.	DTC Detection Conditions	Trouble Areas
P0171	With warm engine and stable air-fuel ratio feedback, fuel trim considerably in error to lean side (2 trip detection logic)	• Air induction system • Injector blockage • Mass Air Flow (MAF) meter • Engine Coolant Temperature (ECT) sensor • Fuel pressure • Gas leakage from exhaust system • Open or short in Air-Fuel Ratio (A/F) sensor (sensor 1) circuit • A/F sensor (sensor 1) • A/F sensor heater (sensor 1) • A/F HEATER relay • A/F sensor heater and A/F HEATER relay circuits • PCV valve and hose • PCV hose connections • ECM
P0172	With warm engine and stable air-fuel ratio feedback, fuel trim considerably in error to rich side (2 trip detection logic)	• Injector leakage or blockage • Mass Air Flow (MAF) meter • Engine Coolant Temperature (ECT) sensor • Ignition system • Fuel pressure • Gas leakage from exhaust system • Open or short in Air-Fuel Ratio (A/F) sensor (sensor 1) circuit • A/F sensor (sensor1) • A/F sensor heater (sensor1) • A/F HEATER relay • A/F sensor heater and A/F HEATER relay circuits • ECM

HINT:

- When DTC P0171 is set, the actual air-fuel ratio is on the lean side. When DTC P0172 is set, the actual air-fuel ratio is on the rich side.
- If the vehicle runs out of fuel, the air-fuel ratio is lean and DTC P0171 may be set. The MIL is then illuminated.
- When the total of the short-term and long-term fuel trim values is within the malfunction threshold (and the engine coolant temperature is more than 75°C [167°F]), the system is functioning normally.

MONITOR DESCRIPTION

Under closed-loop fuel control, fuel injection volumes that deviate from those estimated by the ECM cause changes in the long-term fuel trim compensation value. The long-term fuel trim is adjusted when there are persistent deviations in the short-term fuel trim values. Deviations from the ECM's estimated fuel injection volumes also affect the average fuel trim learning value, which is a combination of the average short-term fuel trim (fuel feedback compensation value) and the average long-term fuel trim (learning value of the air-fuel ratio). If the average fuel trim learning value exceeds the malfunction thresholds, the ECM interprets this as a fault in the fuel system and sets a DTC.
Example:
The average fuel trim learning value is more than +35 % or less than -35 %, the ECM interprets this as a fuel system malfunction.

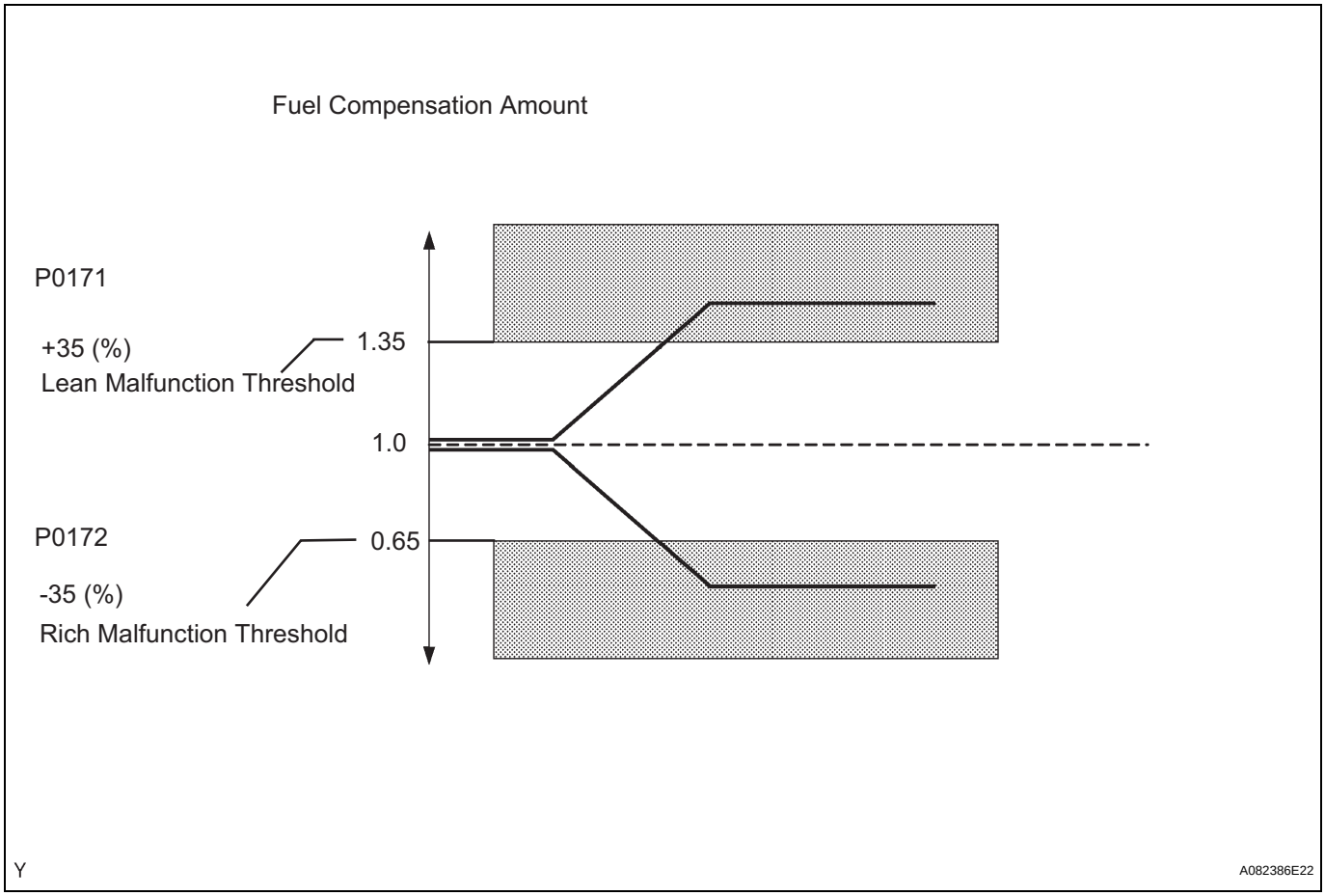

MONITOR STRATEGY

Related DTCs	P0171: Fuel trim lean P0172: Fuel trim rich
Required Sensors/Components (Main)	Fuel system
Required Sensors/Components (Related)	Air-fuel ratio sensor, Mass air flow meter, Crankshaft position sensor
Frequency of Operation	Continuous
Duration	Within 10 seconds
MIL Operation	2 driving cycles
Sequence of Operation	None

TYPICAL ENABLING CONDITIONS

Fuel-trim:

Monitor runs whenever following DTCs not present	P0010, P0020 (OCV Bank 1, 2) P0011 (VVT System 1 - Advance) P0012 (VVT System 1 - Retard) P0021 (VVT System 2 - Advance) P0022 (VVT System 2 - Retard) P0031, P0032, P0051, P0052 (A/F sensor heater - Sensor 1) P0100 - P0103 (MAF meter) P0115 - P0118 (ECT sensor) P0120 - P0223, P2135 (TP sensor) P0125 (Insufficient ECT for closed loop) P0335 (CKP sensor) P0340, P0341 (CMP sensor) P0500 (VSS) P2440 (A/R control valve stuck open) P2441 (A/R control valve stuck close) P2444 (AIP stuck ON) P2445 (AIP stuck OFF)
Fuel system status	Closed-loop
Battery voltage	11 V or more
Throttle position leaning	Completed
Either of following conditions A or B set	-
A. Engine RPM	Below 1,100 rpm
B. Intake air amount per revolution	0.22 g/rev. or more

ES

TYPICAL MALFUNCTION THRESHOLDS

Fuel-trim :

Purge-cut	Executing
Either of following conditions met	-
Average between short-term fuel trim and long-term fuel trim	35 % or more (varies with ECT)
Average between short-term fuel trim and long-term fuel trim	-35 % or less (varies with ECT)

WIRING DIAGRAM

Refer to DTC P2195 (See page ES-316).

HINT:
Intelligent tester only:
Malfunctioning areas can be identified by performing the A/F CONTROL function provided in the ACTIVE TEST. The A/F CONTROL function can help to determine whether the Air-Fuel Ratio (A/F) sensor, Heated Oxygen (HO2) sensor and other potential trouble areas are malfunctioning.
The following instructions describe how to conduct the A/F CONTROL operation using an intelligent tester.

1. Connect an intelligent tester to the DLC3.
2. Start the engine and turn the tester ON.
3. Warm up the engine at an engine speed of 2,500 rpm for approximately 90 seconds.
4. On the tester, select the following menu items: DIAGNOSIS / ENHANCED OBD II / ACTIVE TEST / A/F CONTROL.
5. Perform the A/F CONTROL operation with the engine in an idling condition (press the RIGHT or LEFT button to change the fuel injection volume).
6. Monitor the voltage outputs of the A/F and HO2 sensors (AFS B1S1 and OS2 B1S2) displayed on the tester.

HINT:

- The A/F CONTROL operation lowers the fuel injection volume by 12.5 % or increases the injection volume by 25 %.

- Each sensor reacts in accordance with increases and decreases in the fuel injection volume.

Standard

Tester Display (Sensor)	Injection Volumes	Status	Voltages
AFS B1S1 (A/F)	+25 %	Rich	Less than 3.0
AFS B1S1 (A/F)	-12.5 %	Lean	More than 3.35
O2S B1S2 (HO2)	+25 %	Rich	More than 0.5
O2S B1S2 (HO2)	-12.5 %	Lean	Less than 0.4

NOTICE:
The Air-Fuel Ratio (A/F) sensor has an output delay of a few seconds and the Heated Oxygen (HO2) sensor has a maximum output delay of approximately 20 seconds.

ES

Case	A/F Sensor (Sensor 1) Output Voltage		HO2 Sensor (Sensor 2) Output Voltage		Main Suspected Trouble Areas
1	Injection Volume +25 % -12.5 %		Injection Volume +25 % -12.5 %		-
	Output Voltage More than 3.35 V Less than 3.0 V		Output Voltage More than 0.5 V Less than 0.4 V		
2	Injection Volume +25 % -12.5 %		Injection Volume +25 % -12.5 %		• A/F sensor • A/F sensor heater • A/F sensor circuit
	Output Voltage Almost no reaction		Output Voltage More than 0.5 V Less than 0.4 V		
3	Injection Volume +25 % -12.5 %		Injection Volume +25 % -12.5 %		• HO2 sensor • HO2 sensor heater • HO2 sensor circuit
	Output Voltage More than 3.35 V Less than 3.0 V		Output Voltage Almost no reaction	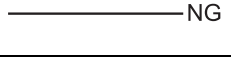	
4	Injection volume +25 % -12.5 %		Injection Volume +25 % -12.5 %		• Injector • Fuel pressure • Gas leakage from exhaust system (Air-fuel ratio extremely lean or rich
	Output Voltage Almost no reaction	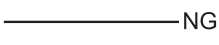	Output voltage Almost no reaction	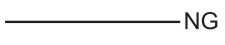	

- Following the A/F CONTROL procedure enables technicians to check and graph the voltage outputs of both the A/F and HO2 sensors.
- To display the graph, select the following menu items on the tester: DIAGNOSIS / ENHANCED OBD II / ACTIVE TEST / A/F CONTROL / USER DATA / AFS B1S1 and O2S B1S2, and press the YES button and then the ENTER button followed by the F4 button.

HINT:

- Read freeze frame data using an intelligent tester. Freeze frame data record the engine condition when malfunctions are detected. When troubleshooting, freeze frame data can help determine if the vehicle was moving or stationary, if the engine was warmed up or not, if the air-fuel ratio was lean or rich, and other data, from the time the malfunction occurred.
- A low A/F sensor voltage could be caused by a rich air-fuel mixture. Check for conditions that would cause the engine to run rich.
- A high A/F sensor voltage could be caused by a lean air-fuel mixture. Check for conditions that would cause the engine to run lean.

1 CHECK ANY OTHER DTCS OUTPUT (IN ADDITION TO DTC P0171 OR P0172)

(a) Connect an intelligent tester to the DLC3.
(b) Turn the ignition switch to ON and turn the tester ON.
(c) Select the following menu items: DIAGNOSIS / ENHANCED OBD II / DTC INFO / CURRENT CODES.
(d) Read DTCs.

Result

Display (DTC Output)	Proceed To
P0171 or P0172	A
P0171 or P0172, and other DTCs	B

HINT:
If any DTCs other than P0171 or P0172 are output, troubleshoot those DTCs first.

B → **GO TO DTC CHART**

A

2 CHECK PCV HOSE CONNECTIONS

OK:
PCV hose is connected correctly and is not damaged.

NG → **REPAIR OR REPLACE PCV HOSE**

OK

3 CHECK AIR INDUCTION SYSTEM

(a) Check the air induction system for vacuum leakage.
OK:
No leakage from air induction system.

NG → **REPAIR OR REPLACE AIR INDUCTION SYSTEM**

OK

4 PERFORM ACTIVE TEST USING INTELLIGENT TESTER (A/F CONTROL)

(a) Connect the intelligent tester to the DLC3.

(b) Start the engine and turn the tester ON.
(c) Warm up the engine at an engine speed of 2,500 rpm for approximately 90 seconds.
(d) On the tester, select the following menu items: DIAGNOSIS / ENHANCED OBD II / ACTIVE TEST / A/F CONTROL.
(e) Perform the A/F CONTROL operation with the engine in an idling condition (press the RIGHT or LEFT button to change the fuel injection volume).
(f) Monitor the voltage outputs of A/F and HO2 sensors (AFS B1S1 and O2S B1S2) displayed on the tester.

HINT:

- The A/F CONTROL operation lowers the fuel injection volume by 12.5 % or increases the injection volume by 25 %.
- Each sensor reacts in accordance with increases and decreases in the fuel injection volume.

ES

Standard Voltage

Tester Display (Sensor)	Injection Volumes	Status	Voltages
AFS B1S1 (A/F)	+25 %	Rich	Less than 3.0
AFS B1S1 (A/F)	-12.5 %	Lean	More than 3.35
O2S B1S2 (HO2)	+25 %	Rich	More than 0.5
OS2 B1S2 (HO2)	-12.5 %	Lean	Less than 0.4

Result

Status AFS B1S1	Status O2S B1S2	A/F Condition and A/F Sensor Condition	Misfires	Suspected Trouble Areas	Proceed To
Lean/Rich	Lean/Rich	Normal	-	-	C
Lean	Lean	Actual air-fuel ratio lean	May occur	• PCV valve and hose • PCV hose connections • Injector blockage • Gas leakage from exhaust system • Air induction system • Fuel pressure • Mass Air Flow (MAF) meter • Engine Coolant Temperature(ECT) sensor	A
Rich	Rich	Actual air-fuel ratio rich	-	• Injector leakage or blockage • Gas leakage from exhaust system • Ignition system • Fuel pressure • MAF meter • ECT sensor	A
Lean	Lean/Rich	A/F sensor malfunction	-	• A/F sensor	B
Rich	Lean/Rich	A/F sensor malfunction	-	• A/F sensor	B

Lean: During A/F CONTROL, the A/F sensor output voltage (AFS) is consistently more than 3.35 V, and the HO2 sensor output voltage (O2S) is consistently less than 0.4 V.
Rich: During A/F CONTROL, the AFS is consistently less than 3.0 V, and the O2S is consistently more than 0.5 V.
Lean/Rich: During A/F CONTROL of the ACTIVE TEST, the output voltage of the heated oxygen sensor alternates correctly.

B	**Go to step 11**
C	**Go to step 15**

A

ES

5 READ DATA LIST (COOLANT TEMP)

(a) Connect the intelligent tester to the DLC3.
(b) Turn the ignition switch to ON and turn the tester ON.
(c) Select the following menu items: DIAGNOSIS / ENHANCED OBD II / DATA LIST / PRIMARY / COOLANT TEMP.
(d) Read the COOLANT TEMP twice, when the engine is both cold and warmed up.
Standard:
With cold engine: Same as ambient air temperature.
With warm engine: Between 75°C and 95°C (167°F and 203°F)

NG	**REPLACE ENGINE COOLANT TEMPERATURE SENSOR**

OK

6 READ DATA LIST (MAF)

(a) Connect the intelligent tester to the DLC3.
(b) Turn the ignition switch to ON and turn the tester ON.
(c) Select the following menu items: DIAGNOSIS / ENHANCED OBD II / DATA LIST / PRIMARY / MAF and COOLANT TEMP.
(d) Allow the engine to idle until the COOLANT TEMP reaches 75°C (167°F) or more.
(e) Read the MAF with the engine in an idling condition and at an engine speed of 2,500 rpm.
Standard:
MAF while engine idling: Between 2.0 g/sec and 4.5 g/sec (shift position: N, A/C: OFF).
MAF at engine speed of 2,500 rpm: Between 8.0 g/sec and 14.7 g/sec (shift position: N, A/C: OFF).

NG	**REPLACE MASS AIR FLOW METER**

OK

7	CHECK FUEL PRESSURE

(a) Check the fuel pressure.

NG → REPAIR OR REPLACE FUEL SYSTEM

OK

8	CHECK FOR EXHAUST GAS LEAKAGE

OK:
No gas leakage.

NG → REPAIR OR REPLACE EXHAUST SYSTEM

OK

9	CHECK FOR SPARK AND IGNITION

HINT:
If the spark plugs or ignition system malfunctions, engine misfire may occur. The misfire count can be read using an intelligent tester. Select the following menu items: DIAGNOSIS / ENHANCED OBD II / DATA LIST / MISFIRE / CYL #1 (to CYL #4).

NG → REPAIR OR REPLACE IGNITION SYSTEM

OK

10	INSPECT FUEL INJECTOR ASSEMBLY (INJECTION AND VOLUME)

HINT:
If the injectors malfunction, engine misfire may occur. The misfire count can be read using an intelligent tester. Select the following menu items: DIAGNOSIS / ENHANCED OBD II / DATA LIST / MISFIRE / CYL #1 (to CYL #4).

NG → REPLACE FUEL INJECTOR ASSEMBLY

OK

ES

11 INSPECT AIR FUEL RATIO SENSOR (HEATER RESISTANCE)

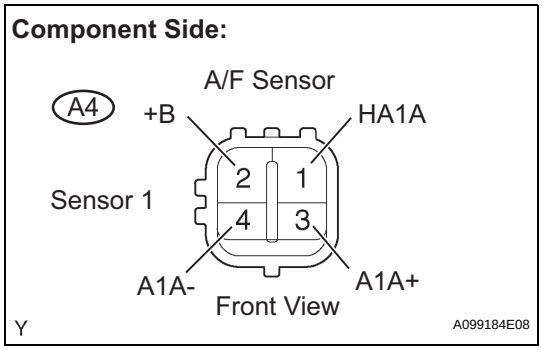

(a) Disconnect the A4 A/F sensor connector.
(b) Measure the resistance between the terminals of the A/F sensor connector.
Standard Resistance

Tester Connections	Specified Conditions
HA1A (1) - +B (2)	1.8 to 3.4 Ωat 20°C (68°F)
HA1A (1) - A1A- (4)	10 kΩ or higher

(c) Reconnect the A/F sensor connector.

NG → REPLACE AIR FUEL RATIO SENSOR

ES

OK

12 INSPECT AIR FUEL RATIO SENSOR HEATER RELAY

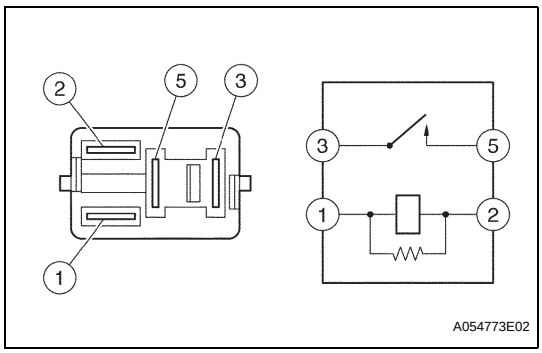

(a) Remove the A/F HEATER relay from the engine room R/B.
(b) Check the A/F HEATER relay resistance.
Standard Resistance

Tester Connections	Specified Condition
3 - 5	10 kΩ or higher
3 - 5	Below 1 Ω (when battery voltage is applied to terminals 1 and 2)

(c) Reinstall the A/F HEATER relay.

NG → REPLACE AIR FUEL RATIO SENSOR HEATER RELAY

OK

13 CHECK HARNESS AND CONNECTOR (A/F SENSOR - ECM)

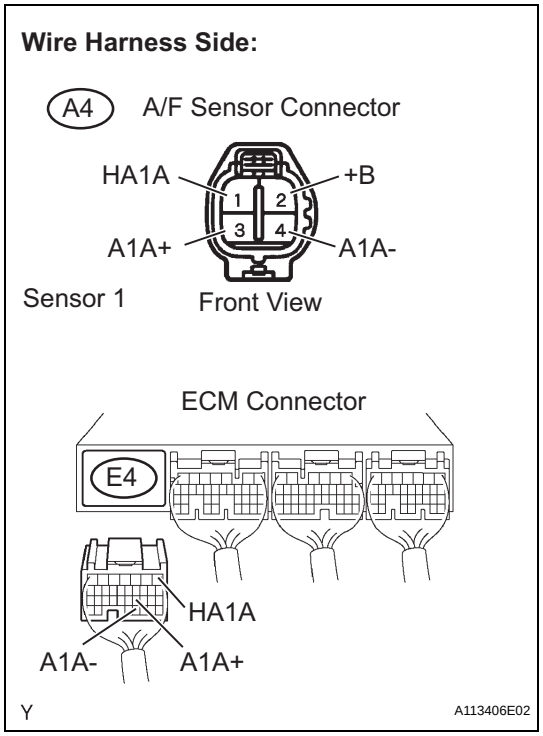

(a) Disconnect the A4 A/F sensor connector.
(b) Turn the ignition switch to ON.
(c) Measure the voltage between the +B terminal of the A/F sensor connector and body ground.

Standard Voltage

Tester Connection	Specified Condition
+B (A4-2) - Body ground	9 to 14 V

(d) Turn the ignition switch to OFF.
(e) Disconnect the E4 ECM connector.
(f) Check the resistance.

Standard Resistance (Check for open)

Tester Connections	Specified Conditions
HA1A (A4-1) - HA1A (E4-1)	Below 1 Ω
A1A+ (A4-3) - A1A+ (E4-21)	Below 1 Ω
A1A- (A4-4) - A1A- (E4-31)	Below 1 Ω

Standard Resistance (Check for short)

Tester Connections	Specified Conditions
HA1A (A4-1) or HA1A (E4-1) - Body ground	10 kΩ or higher
A1A+ (A4-3) or A1A+ (E4-21) - Body ground	10 kΩ or higher
A1A- (A4-4) or A1A- (E4-31) - Body ground	10 kΩ or higher

(g) Reconnect the ECM connector.
(h) Reconnect the A/F sensor connector.

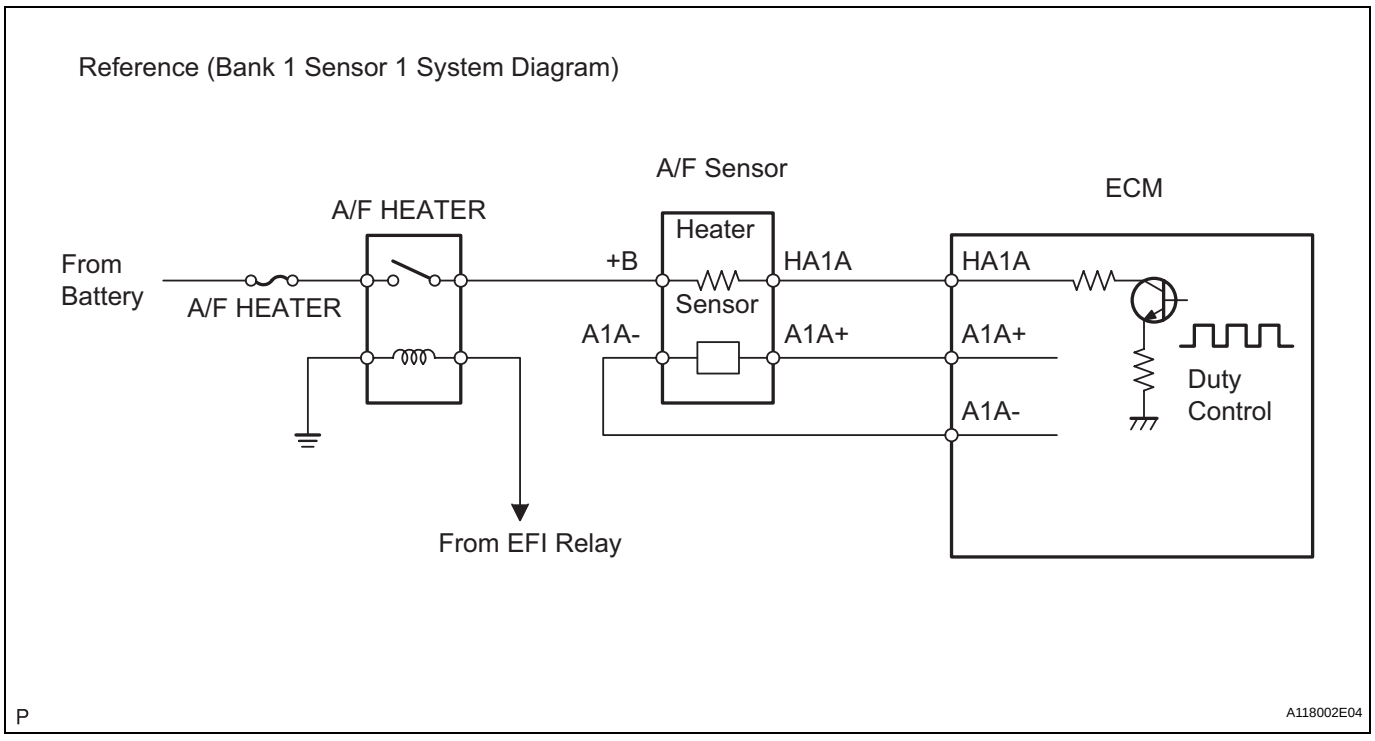

NG → REPAIR OR REPLACE HARNESS OR CONNECTOR

OK

14	REPLACE AIR FUEL RATIO SENSOR

NEXT

15	PERFORM CONFIRMATION DRIVING PATTERN

ES

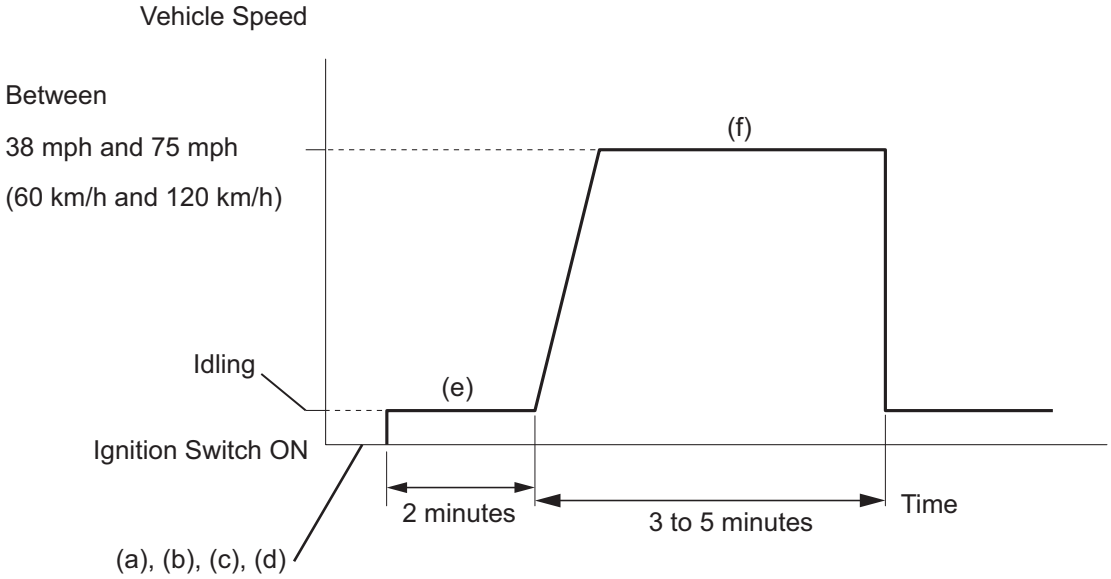

(a) Connect the intelligent tester to the DLC3.
(b) Turn the ignition switch to ON and turn the tester ON.
(c) Clear DTCs (see page ES-40).
(d) Switch the ECM from normal mode to check mode using the tester (see page ES-43).
(e) Start the engine and warm it up with all the accessories switched OFF.
(f) Drive the vehicle at between 38 mph and 75 mph (60 km/h and 120 km/h) and at an engine speed of between 1,400 rpm and 3,200 rpm for 3 to 5 minutes.
HINT:
If the system is still malfunctioning, the MIL will be illuminated during step (f).
NOTICE:
If the conditions in this test are not strictly followed, no malfunction will be detected.

NEXT

16	CHECK WHETHER DTC OUTPUT RECURS (DTC P0171 OR P0172)

(a) On the intelligent tester, select the following menu items: DIAGNOSIS / ENHANCED OBD II / DTC INFO / CURRENT CODES.
(b) Read DTCs.

Result

Display (DTC Output)	Proceed To
No output	A
P0171 or P0172	B

B → Go to step 5

A

END

DTC	P0300	Random / Multiple Cylinder Misfire Detected

DTC	P0301	Cylinder 1 Misfire Detected

DTC	P0302	Cylinder 2 Misfire Detected

DTC	P0303	Cylinder 3 Misfire Detected

DTC	P0304	Cylinder 4 Misfire Detected

DESCRIPTION

ES

When the engine misfires, high concentrations of hydrocarbons (HC) enter the exhaust gas. Extremely high HC concentration levels can cause increase in exhaust emission levels. High concentrations of HC can also cause increases in the Three-Way Catalytic Converter (TWC) temperature, which may cause damage to the TWC. To prevent this increase in emissions and to limit the possibility of thermal damage, the ECM monitors the misfire rate. When the temperature of the TWC reaches the point of thermal degradation, the ECM blinks the MIL. To monitor misfires, the ECM uses both the Camshaft Position (CMP) sensor and the Crankshaft Position (CKP) sensor. The CMP sensor is used to identify any misfiring cylinders and the CKP sensor is used to measure variations in the crankshaft rotation speed. Misfires are counted when the crankshaft rotation speed variations exceed predetermined thresholds.

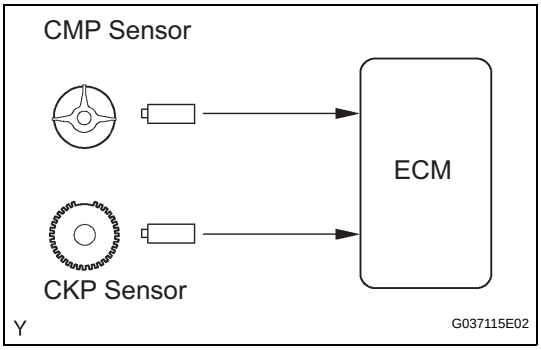

If the misfire exceeds the threshold levels, and could cause emission deterioration, the ECM illuminates the MIL and sets a DTC.

DTC No.	DTC Detection Conditions	Trouble Areas
P0300	Simultaneous misfiring of several cylinders detected (2 trip detection logic)	• Open or short in engine wire harness • Connector connection • Vacuum hose connections • Ignition system • Injector • Fuel pressure • Mass Air Flow (MAF) meter • Air induction system • Engine Coolant Temperature (ECT) sensor • Compression pressure • Valve clearance • Valve timing • PCV valve and hose • PCV hose connections • ECM

DTC No.	DTC Detection Conditions	Trouble Areas
P0301 P0302 P0303 P0304	Misfiring of specific cylinder detected (2 trip detection logic)	• Open or short in engine wire harness • Connector connection • Vacuum hose connections • Ignition system • Injector • Fuel pressure • Air induction system • Mass Air Flow (MAF) meter • Engine Coolant Temperature (ECT) sensor • Compression pressure • Valve clearance • Valve timing • PCV valve and hose • PCV hose connections • ECM

HINT:
When DTCs for misfiring cylinders are randomly set, but DTC P0300 is not set, it indicates that misfires have been detected in different cylinders at different times. DTC P0300 is only set when several misfiring cylinders are detected at the same time.
Reference: Inspection using an oscilloscope
With the engine idling, check the waveform between terminals #10 to #40 and E01 of the ECM connectors.

Items	Contents
Terminals	# 10 to # 40 - E01
Equipment Settings	20 V/Division, 100 or 1 ms/Division
Conditions	Idling

HINT:
The correct waveform is as shown.

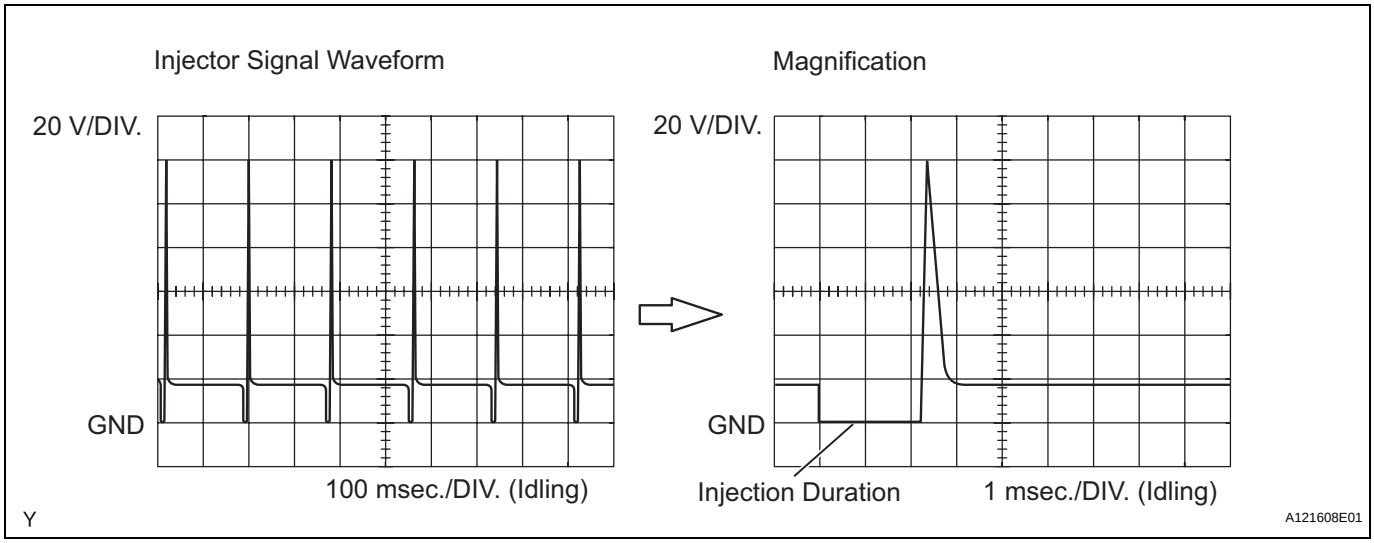

MONITOR DESCRIPTION

The ECM illuminates the MIL and sets a DTC when either one of the following conditions, which could cause emission deterioration, is detected (2 trip detection logic).

- Within the first 1,000 crankshaft revolutions of the engine starting, an excessive misfiring rate (approximately 20 to 50 misfires per 1,000 crankshaft revolutions) occurs once.
- After the first 1,000 crankshaft revolutions, an excessive misfiring rate (approximately 20 to 50 misfires per 1,000 crankshaft revolutions) occurs 4 times in sequential crankshaft revolutions.

The ECM flashes the MIL and sets a DTC when either one of the following conditions, which could cause the Three-Way Catalytic Converter (TWC) damage, is detected (2 trip detection logic).

- In every 200 crankshaft revolutions at a high engine rpm, the threshold misfiring percentage is recorded once.
- In every 200 crankshaft revolutions at a normal engine rpm, the threshold misfiring percentage is recorded 3 times.

MONITOR STRATEGY

Related DTCs	P0300: Multiple cylinder misfire P0301: Cylinder 1 misfire P0302: Cylinder 2 misfire P0303: Cylinder 3 misfire P0304: Cylinder 4 misfire
Required Sensors/Components (Main)	Injector, Ignition coil, Spark plug
Required Sensors/Components (Related)	Crankshaft, Camshaft, Engine coolant temperature and intake air temperature sensors and Mass air flow meter
Frequency of Operation	Continuous
Duration	1,000 to 4,000 crankshaft revolutions: Emission related misfire 200 to 600 crankshaft revolutions: Catalyst damaged misfire
MIL Operation	2 driving cycles: Emission related misfire MIL flashes immediately: Catalyst damaged misfire
Sequence of Operation	None

TYPICAL ENABLING CONDITIONS

Misfire:

Monitor runs whenever following DTCs not present	
Battery voltage	8 V or more
Throttle position learning	Completed
VVT system	Not operated by scan tool
Engine RPM	400 to 5,800 rpm
Both of following conditions A and B met	-
A. Engine coolant Temperature (ECT)	-10°C (14°F) or more
B. Either of following conditions 1 or 2 met	-
1. ECT at engine start	More than -7°C (19°F)
2. ECT	More than 20°C (68°F)

TYPICAL MALFUNCTION THRESHOLDS

Monitor Period of Emission-related-misfire:

Misfire rate	1.538 % or more
Either of following conditions (a) or (b) met	-
(a) First 1,000 revolutions after engine start or check mode	Crankshaft 1,000 revolutions
(b) Except above	Crankshaft 1,000 revolutions x 4

Monitor Period of Catalyst-damaged-misfire (MIL blinks):

Number of misfire per 200 revolutions	97.14 or more (varies with intake air amount and engine RPM)
Either of following conditions (a) or (b) met	-
(a) All of following conditions A, B and C met	Crankshaft 200 revolutions x 3
A. Driving cycles	1st
B. Check mode	OFF
C. Engine RPM	Below 2,200 rpm
(b) Except above	Crankshaft 200 revolutions

MONITOR RESULT

Refer to Checking Monitor Status (See page ES-21).

WIRING DIAGRAM

Refer to DTC P0351 for the wiring diagram of the ignition system (See page ES-184).

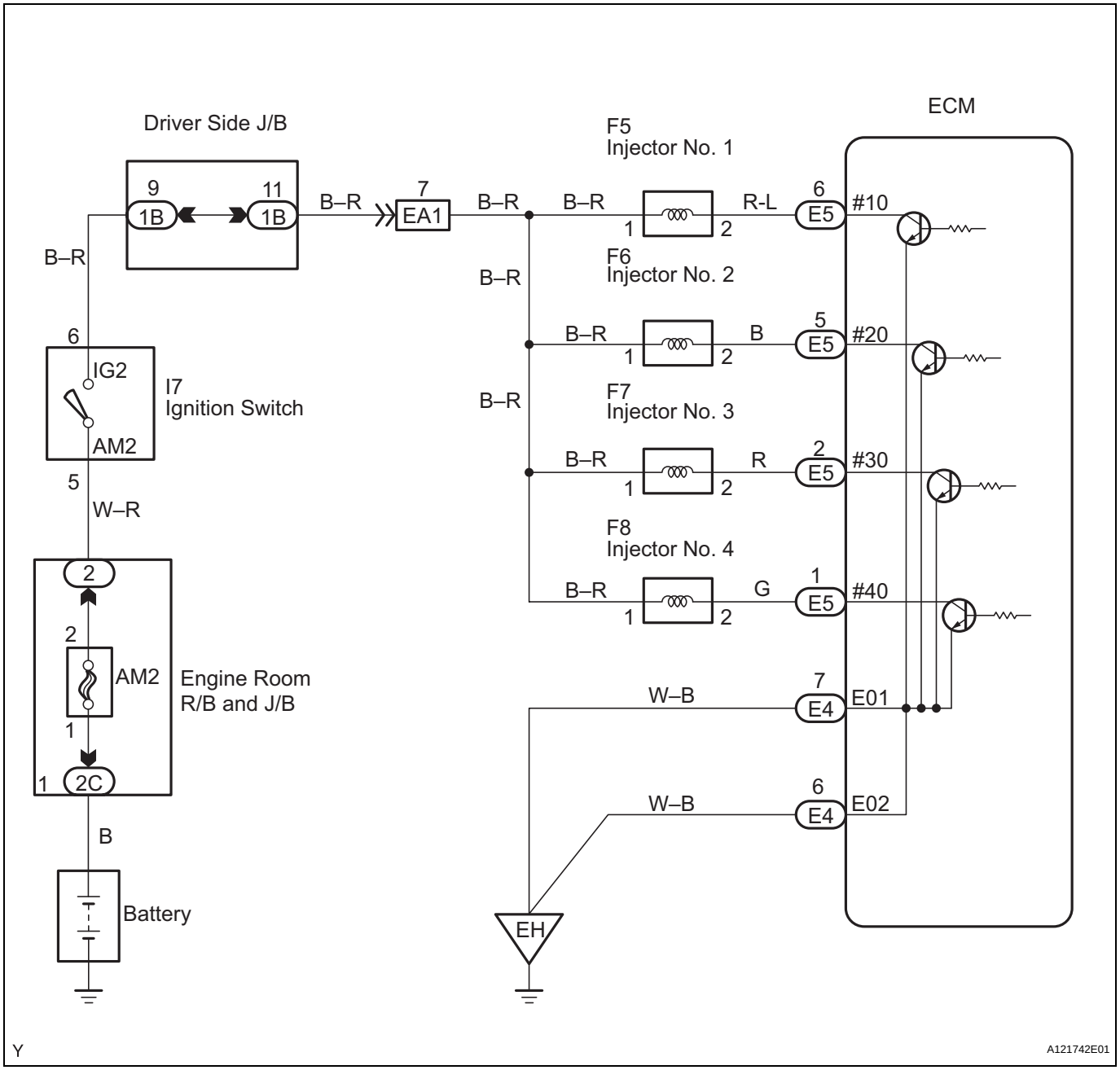

CONFIRMATION DRIVING PATTERN

1. Connect an intelligent tester to the DLC3.
2. Turn the ignition switch to ON.
3. Turn the tester ON.
4. Record the DTC(s) and freeze frame data.
5. Using the tester, switch the ECM from normal mode to check mode.
6. Read the misfire counts of each cylinder (CYL #1 to #4) with the engine in an idling condition. If any misfire count is displayed, skip the following confirmation driving pattern.

7. Drive the vehicle several times with the conditions, such as engine rpm and engine load, shown in MISFIRE RPM and MISFIRE LOAD in the DATA LIST.
   HINT:
   In order to store misfire DTCs, it is necessary to drive the vehicle for the period of time shown in the table below, with the MISFIRE RPM and MISFIRE LOAD in the DATA LIST.

Engine RPM	Duration
Idling	3.5 minutes or more
1,000	3 minutes or more
2,000	1.5 minutes or more
3,000	1 minute or more

8. Check whether misfires have occurred by checking DTCs and freeze frame data.
   HINT:
   Do not turn the ignition switch to OFF until the stored DTC(s) and freeze frame data have been recorded. When the ECM returns to normal mode (default), the stored DTC(s), freeze frame data and other data will be erased.
9. Record the DTC(s), freeze frame data and misfire counts.
10. Turn the ignition switch to OFF and wait for at least 5 seconds.

ES

HINT:
- If any DTCs other than the misfire DTCs are output, troubleshoot those DTCs first.
- Read freeze frame data using the intelligent tester. Freeze frame data record the engine conditions when malfunctions are detected. When troubleshooting, freeze frame data can help determine if the vehicle was moving or stationary, if the engine was warmed up or not, if the air-fuel ratio was lean or rich, and other data, from the time the malfunction occurred.
- If the misfire does not recur when the vehicle is brought to the workshop, reproduce the conditions stored in the freeze frame data.
- If the misfire still cannot be reproduced even though the conditions stored in the freeze frame data have been duplicated, one of the following factors is considered to be a possible cause of the problem:
  (a) The fuel tank is low full.
  (b) Improper fuel is used.
  (c) The spark plugs have been contaminated.
  (d) The problem is complex.
- After finishing repairs, check the misfire counts of the cylinders (CYL #1, #2, #3 and #4).
- Be sure to confirm that no misfiring cylinder DTCs are set again by conducting the confirmation driving pattern, after repairs.
- For 6 and 8 cylinder engines, the ECM intentionally does not set the specific misfiring cylinder DTCs at high engine RPM. If misfires occur only in high engine RPM areas, only DTC P0300 is set.
  In the event of DTC P0300 being present, perform the following operations:
  (a) Clear the DTC (see page ES-40).
  (b) Start the engine and conduct the confirmation driving pattern.
  (c) Read the misfiring rates of each cylinder or DTC(s) using the tester or scan tool.
  (d) Repair the cylinder(s) that has a high misfiring rate or is indicated by the DTC.
  (e) After finishing repairs, conduct the confirmation driving pattern again, in order to verify that DTC P0300 is not set.
- When one of SHORT FT #1, LONG FT #1, SHORT FT #2 or LONG FT #2 in the freeze frame data is outside the range of +- 20 %, the air-fuel ratio may be rich (-20 % or less) or lean (+20 % or more).
- When the COOLANT TEMP in the freeze frame data is less than 75°C (167°F), the misfires have occurred only while warming up the engine.

1	CHECK ANY OTHER DTCS OUTPUT (IN ADDITION TO MISFIRE DTCS)

(a) Connect an intelligent tester to the DLC3.
(b) Turn the ignition switch to ON.

(c) Turn the tester ON.
(d) Select the following menu items: DIAGNOSIS / ENHANCED OBD II / DTC INFO / CURRENT CODES.
(e) Read DTCs.

Result

Display (DTC output)	Proceed To
P0300, P0301, P0302, P0303 and/or P0304	A
P0300, P0301, P0302, P0303 and/or P0304 and other DTCs	B

HINT:
If any DTCs other than P0300, P0301, P0302, P0303 and P0304 are output, troubleshoot those DTCs first.

B → **GO TO DTC CHART**

A

2 READ DATA LIST (MISFIRE RPM AND MISFIRE LOAD)

(a) Connect an intelligent tester to the DLC3.
(b) Turn the ignition switch to ON and turn the tester ON.
(c) Select the following menu items: DIAGNOSIS / ENHANCED OBD II / DATA LIST / MISFIRE / MISFIRE RPM and MISFIRE LOAD.
(d) Read and note the MISFIRE RPM and MISFIRE LOAD (engine load) values.
HINT:
The MISFIRE RPM and MISFIRE LOAD indicate the vehicle conditions under which the misfire occurred.

NEXT

3 CHECK CONNECTION OF PCV HOSE

OK:
PCV hose is connected correctly and is not damaged.

NG → **REPAIR OR REPLACE PCV HOSE**

OK

4 CHECK MISFIRE COUNT (CYL #1, #2, #3 AND #4)

(a) Connect the intelligent tester to the DLC3.
(b) Turn the ignition switch to ON.
(c) Turn the tester ON.
(d) Clear DTCs (see page ES-40).
(e) Select the following menu items: DIAGNOSIS / ENHANCED OBD II / DATA LIST / MISFIRE / CYL #1, #2, #3 and #4.
(f) Allow the engine to idle.
(g) Read each value of CYL #1 to #4 displayed on the tester.
If no misfire counts occur in any cylinders, perform the following operations:

(1) Shift the gear selector lever to the D position.
(2) Repeat steps (e) to (g).
(3) Check the CYL #1 to #4.
(4) If misfire counts are still not displayed, perform steps (h) and (i) and then check the misfire counts again.

(h) Drive the vehicle with the MISFIRE RPM and MISFIRE LOAD noted in step 2.
(i) Read the CYL #1 to #4 or DTCs displayed on the tester.

Result

Misfire Count	Proceed To
One or two cylinders have misfire counts	A
Three cylinders or more have misfire counts	B

B → **Go to step 13**

ES

A

5 CHECK SPARK PLUG

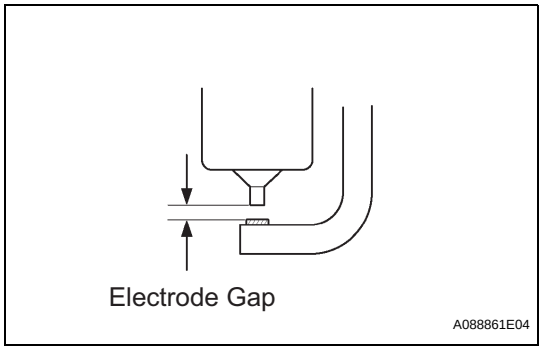

(a) Remove the ignition coil and the spark plug of the misfiring cylinder.
(b) Measure the spark plug electrode gap.
Standard:
Between 1.0 mm and 1.3 mm (0.039 in. and 0.051 in.)
(c) Check the electrode for carbon deposits.
Recommended spark plug

Manufacturers	Products
DENSO	SK20HR11
NGK	ILFR6C11

NOTICE:
If the electrode gap is larger than standard, replace the spark plug. Do not adjust the electrode gap.

NG → **REPLACE SPARK PLUG**

OK

6 CHECK SPARK AND IGNITION

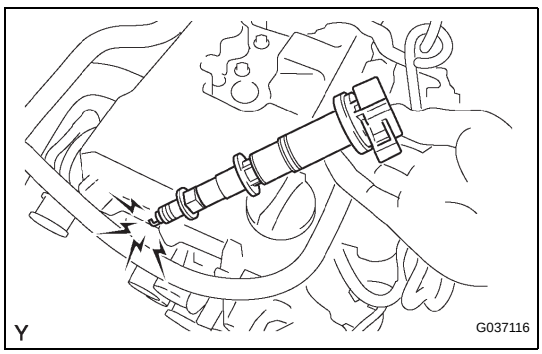

(a) Disconnect the injector connectors, in order to prevent the engine from starting.
(b) Install the spark plug to the ignition coil.
(c) Attach the spark plug assembly to the cylinder head cover set bolt.
(d) Crank the engine for less than 2 seconds and check the spark.
OK:
Sparks jump across electrode gap
(e) Reconnect the injector connectors.

NG → **Go to step 8**

OK

7	CHECK CYLINDER COMPRESSION PRESSURE ON MISFIRING CYLINDER

(a) Measure the cylinder compression pressure of the misfiring cylinder.

OK → Go to step 9

NG

REPAIR OR REPLACE ENGINE TO DETERMINE CAUSE OF LOW COMPRESSION

ES

8	CHANGE NORMAL SPARK PLUG AND CHECK SPARK OF MISFIRING CYLINDER

(a) Change the installed spark plug to a spark plug that functions normally.
(b) Perform a spark test.
CAUTION:
Always disconnect each injector connector.
NOTICE:
Do not crank the engine for more than 2 seconds.
(1) Install the spark plug to the ignition coil and connect the ignition coil connector.
(2) Disconnect the injector connector.
(3) Ground the spark plug.
(4) Check if sparks occur while the engine is being cranked.
OK:
Sparks jump across electrode gap.

OK → REPLACE SPARK PLUG

NG

REPLACE IGNITION COIL (THEN CONFIRM THAT THERE IS NO MISFIRE)

9	INSPECT ECM TERMINAL OF MISFIRING CYLINDER (#10, #20, #30,AND/OR #40 VOLTAGE)

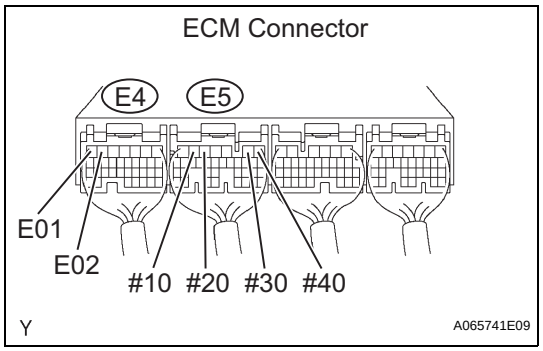

(a) Turn the ignition switch to ON.
(b) Measure the voltage between the terminals of the ECM connector.
Standard Voltage

Tester Connections	Specified Conditions
#10 (E5-6) - E01 (E4-7)	9 to 14 V
#20 (E5-5) - E01 (E4-7)	9 to 14 V
#30 (E5-2) - E01 (E4-7)	9 to 14 V
#40 (E5-1) - E01 (E4-7)	9 to 14 V

OK → Go to step 11

NG

10 CHECK HARNESS AND CONNECTOR (INJECTOR - ECM)

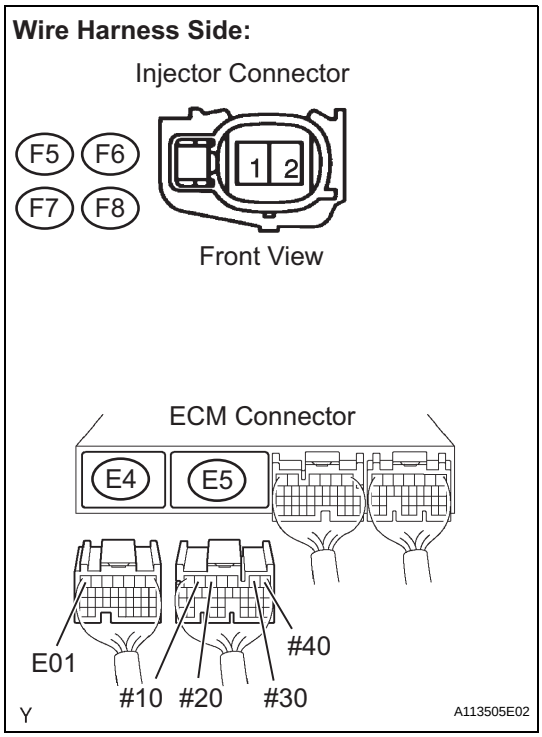

(a) Disconnect the injector connector (of the misfiring cylinder).
(b) Disconnect the E4 and E5 ECM connectors.
(c) Turn the ignition switch to ON.
(d) Measure the resistance and voltage between the injector and the ECM connector terminals.

Standard Resistance and Standard Voltage (No.1 Cylinder)

Tester Connections	Specified Conditions
F5-1 - Ground	11 to 14 V
F5-2 - Ground	10 kΩ or higher
F5-2 - #10 (E5-6)	Below 1 Ω

Standard Resistance and Standard Voltage (No.2 Cylinder)

Tester Connections	Specified Conditions
F6-1 - Ground	11 to 14 V
F6-2 - Ground	10 kΩ or higher
F6-2 - #20 (E5-5)	Below 1 Ω

Standard Resistance and Standard Voltage (No.3 Cylinder)

Tester Connections	Specified Conditions
F7-1 - Ground	11 to 14 V
F7-2 - Ground	10 kΩ or higher
F7-2 - #30 (E5-2)	Below 1 Ω

Standard Resistance and Standard Voltage (No.4 Cylinder)

Tester Connections	Specified Conditions
F8-1 - Ground	11 to 14 V
F8-2 - Ground	10 kΩ or higher
F8-2 - #40 (E5-1)	Below 1 Ω

(e) Reconnect the injector connector.
(f) Reconnect the ECM connector.

NG → REPAIR OR REPLACE HARNESS OR CONNECTOR

OK

11 CHECK FUEL INJECTOR (FUEL INJECTOR OF MISFIRING CYLINDER)

(a) Check the injector injection (whether fuel volume is high or low, and whether injection pattern is poor).

NG → REPLACE FUEL INJECTOR ASSEMBLY

OK

12 CHECK VALVE CLEARANCE (VALVE CLEARANCE OF MISFIRING CYLINDER)

NG → ADJUST VALVE CLEARANCE

OK

13 CHECK AIR INDUCTION SYSTEM

(a) Check the air induction system for vacuum leakage.

OK:

No leakage from air induction system.

NG → REPAIR OR REPLACE AIR INDUCTION SYSTEM

OK

14 CHECK VALVE TIMING

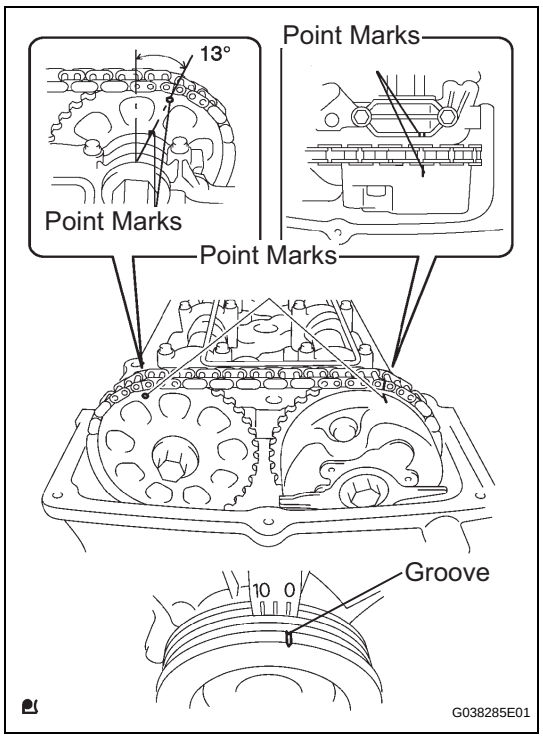

(a) Remove the cylinder head cover (see page EM-23).

(b) Turn the crankshaft pulley, and align its groove with the timing mark "0" on the timing chain cover.

(c) Check that the point marks on the camshaft timing gears are as shown in the illustration.
If not, turn the crankshaft 1 revolution (360°) and align the marks as above.

OK:

Point marks on camshaft timing gears are aligned as shown in illustration.

(d) Reinstall the cylinder head cover (see page EM-32).

NG → ADJUST VALVE TIMING

OK

15 CHECK FUEL PRESSURE

(a) Check the fuel pressure.

NG → CHECK AND REPLACE FUEL PUMP, PRESSURE REGULATOR, FUEL PIPE LINE AND FILTER

OK

16	READ DATA LIST (COOLANT TEMP)

(a) Connect the intelligent tester to the DLC3.
(b) Turn the ignition switch to ON.
(c) Turn the tester ON.
(d) Select the following menu items: DIAGNOSIS / ENHANCED OBD II / DATA LIST / PRIMARY / COOLANT TEMP.
(e) Read the COOLANT TEMP twice, when the engine is both cold and warmed up.

Standard:

With cold engine: Same as ambient air temperature.
With warm engine: Between 75°C and 95°C (167°F and 203°F).

NG → REPLACE ENGINE COOLANT TEMPERATURE SENSOR

OK

17	READ DATA LIST (MAF)

(a) Connect the intelligent tester to the DLC3.
(b) Turn the ignition switch to ON.
(c) Turn the tester ON.
(d) Select the following menu items: DIAGNOSIS / ENHANCED OBD II / DATA LIST / PRIMARY / MAF and COOLANT TEMP.
(e) Allow the engine to idle until the COOLANT TEMP reaches 75°C (167°F) or more.
(f) Read the MAF with the engine in an idling condition and at an engine speed of 2,500 rpm.

Standard:

MAF while engine idling: Between 2.0 g/sec and 4.5 g/sec (shift position: N, A/C: OFF).
MAF at engine speed of 2,500 rpm: Between 8.0 g/sec and 14.7 g/sec (shift position: N, A/C: OFF).

NG → REPLACE MASS AIR FLOW METER

OK

CHECK FOR INTERMITTENT PROBLEMS

DTC	P0327	Knock Sensor 1 Circuit Low Input (Bank 1 or Single Sensor)

DTC	P0328	Knock Sensor 1 Circuit High Input (Bank 1 or Single Sensor)

DESCRIPTION

A flat type knock sensor (non-resonant type) has a structure that can detect vibrations over a wide band of frequencies: between approximately 6 kHz and 15 kHz.
Knock sensors are fitted onto the engine block to detect engine knocking.
The knock sensor contains a piezoelectric element which generates a voltage when it becomes deformed. The voltage is generated when the engine block vibrates due to knocking. Any occurrence of engine knocking can be suppressed by delaying the ignition timing.

ES

DTC No.	DTC Detection Condition	Trouble Area
P0327	Output voltage of knock sensor less than 0.5 V (1 trip detection logic)	• Short in knock sensor circuit • Knock sensor • ECM
P0328	Output voltage of knock sensor more than 4.5 V (1 trip detection logic)	• Open in knock sensor circuit • Knock sensor • ECM

HINT:
When any of DTCs P0327 and P0328 are set, the ECM enters fail-safe mode. During fail-safe mode, the ignition timing is delayed to its maximum retardation. Fail-safe mode continues until the ignition switch is turned to OFF.

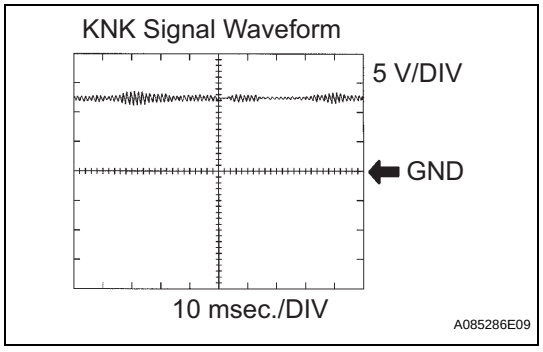

Reference: Inspection using an oscilloscope
The correct waveform is shown.

Items	Contents
Terminals	KNK1 - EKNK
Equipment Settings	0.01 to 10 V/Division, 0.01 to 10 msec./Division
Conditions	Keep engine speed at 4,000 rpm with warm engine

MONITOR DESCRIPTION

If the output voltage transmitted by the knock sensor remains low or high for more than 1 second, the ECM interprets this as a malfunction in the sensor circuit, and sets a DTC.
The monitor for DTCs P0327 and P0328 begins to run when 5 seconds have elapsed since the engine was started.
If the malfunction is not repaired successfully, any of DTC P0327 or P0328 is set 5 seconds after the engine is next started.

MONITOR STRATEGY

Related DTCs	P0327: Knock sensor range check (Low voltage) P0328: Knock sensor range check (High voltage)
Required Sensors/Components (Main)	Knock sensor
Required Sensors/Components (Related)	-
Frequency of Operation	Continuous
Duration	1 second
MIL Operation	Immediate
Sequence of Operation	None

TYPICAL ENABLING CONDITIONS

ES

Monitor runs whenever following DTCs not present	None
Battery voltage	10.5 V or more
Time after engine start	5 seconds or more

TYPICAL MALFUNCTION THRESHOLDS

Knock Sensor Range Check (Low voltage) P0327:

Knock sensor voltage	Less than 0.5 V

Knock Sensor Range Check (High voltage) P0328:

Knock sensor voltage	More than 4.5 V

WIRING DIAGRAM

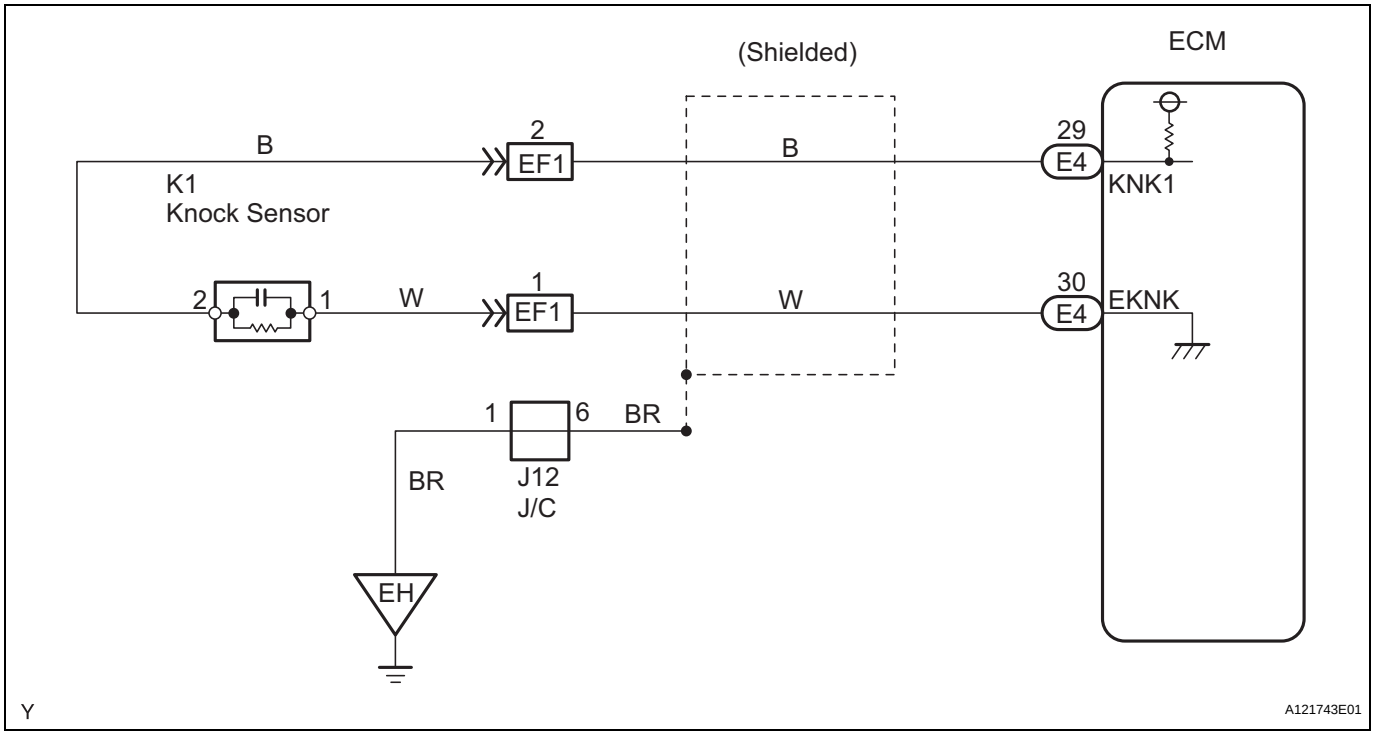

HINT:
Read freeze frame data using an intelligent tester. Freeze frame data record the engine condition when malfunctions are detected. When troubleshooting, freeze frame data can help determine if the vehicle was moving or stationary, if the engine was warmed up or not, if the air-fuel ratio was lean or rich, and other data, from the time the malfunction occurred.

1 CHECK HARNESS AND CONNECTOR (ECM - KNOCK SENSOR)

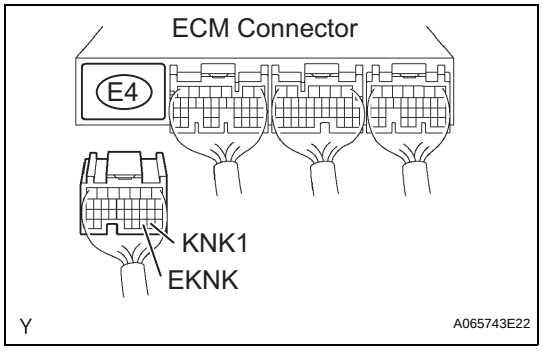

(a) Disconnect the E4 ECM connector.
(b) Measure the resistance between the terminals of the ECM connector.
Standard Resistance

Tester Connections	Specified Conditions
KNK1 (E4-29) - EKNK (E4-30)	120 to 280 kΩ at 20 °C (68°F)

(c) Reconnect the ECM connector.

NG → **Go to step 3**

OK

2 INSPECT ECM (KNK1 VOLTAGE)

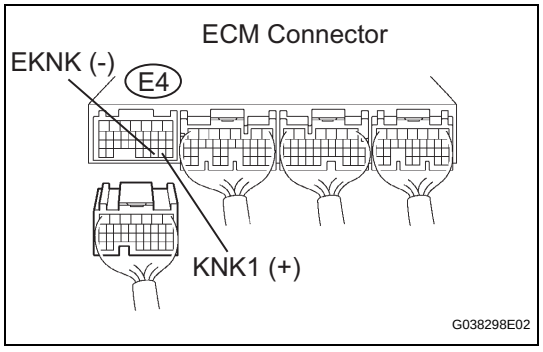

(a) Disconnect the ECM connector.
(b) Turn the ignition switch to ON.
(c) Measure the voltage between the ECM terminals.
Standard Voltage

Tester Connections	Specified Conditions
KNK1 (E4-29) - EKNK (E4-30)	4.5 to 5.5 V

(d) Reconnect the ECM connector.

NG → **REPLACE ECM**

OK

CHECK FOR INTERMITTENT PROBLEMS

3 INSPECT KNOCK SENSOR

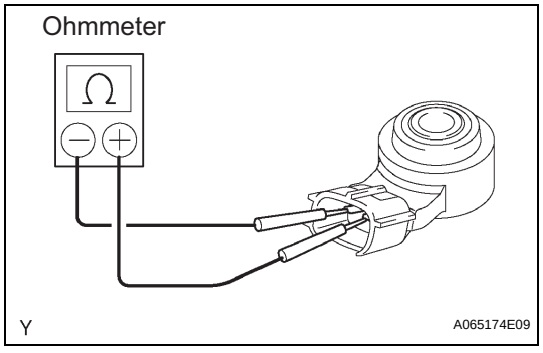

(a) Remove the knock sensor.
(b) Measure the resistance between the terminals.
Standard Resistance

Tester Connections	Specified Conditions
KNK1 (K1-2) - EKNK (K1-1)	120 to 280 kΩ at 20°C (68°F)

(c) Reinstall the knock sensor.

NG → **REPLACE KNOCK SENSOR**

ES

OK

REPAIR OR REPLACE HARNESS OR CONNECTOR

DTC	P0335	Crankshaft Position Sensor "A" Circuit

DTC	P0339	Crankshaft Position Sensor "A" Circuit Intermittent

DESCRIPTION

The Crankshaft Position (CKP) sensor system consists of a CKP sensor plate and a pickup coil. The sensor plate has 34 teeth and is installed on the crankshaft. The pickup coil is made of an iron core and a magnet.

The sensor plate rotates and, as each tooth passes through the pickup coil, a pulse signal is created. The pickup coil generates 34 signals per engine revolution. Based on these signals, the ECM calculates the crankshaft position and engine RPM. Using these calculations, the fuel injection time and ignition timing are controlled.

ES

DTC No.	DTC Detection Conditions	Trouble Areas
P0335	• No Crankshaft Position (CKP) sensor signal to ECM while cranking (1 trip detection logic) • No CKP sensor signal to ECM at engine speed of 600 rpm or more (1 trip detection logic)	• Open or short in CKP sensor circuit • CKP sensor • Sensor plate (CKP sensor plate) • ECM
P0339	Under conditions (a), (b) and (c), no Crankshaft Position (CKP) sensor signal to ECM for 0.05 seconds or more (1 trip detection logic): (a) Engine speed 1,000 rpm or more (b) Starter signal OFF (c) 3 seconds or more have elapsed since starter signal switched from ON to OFF	• Open or short in CKP sensor circuit • CKP sensor • Sensor plate (CKP sensor plate) • ECM

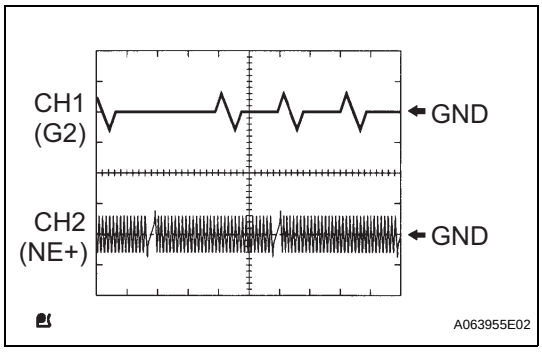

Reference: Inspection using an oscilloscope

HINT:

- The correct waveform is shown on the left.
- G2 stands for the Camshaft Position (CMP) sensor signal, and NE+ stands for the CKP sensor signal.

Items	Contents
Terminals	CH1: G2 - NE- CH2: NE+ - NE-
Equipment Settings	5 V/Division, 20 ms/Division
Conditions	Cranking or idling

MONITOR DESCRIPTION

If there is no signal from the CKP sensor despite the engine revolving, the ECM interprets this as a malfunction of the sensor.

If the malfunction is not repaired successfully, a DTC is set 10 seconds after the engine is next started.

MONITOR STRATEGY

Related DTCs	P0335: Crankshaft position sensor range check during cranking P0335: Crankshaft position sensor range check during engine running
Required Sensors/Components (Main)	Crankshaft Position (CKP) sensor
Required Sensors/Components (Related)	-
Frequency of Operation	Continuous
Duration	Conditions met for 3 times
MIL Operation	Immediate
Sequence of Operation	None

TYPICAL ENABLING CONDITIONS

Monitor runs whenever following DTCs not present	None

ES

Crankshaft Position Sensor Range Check during Cranking P0335:

Starter	ON
Minimum battery voltage while starter ON	Less than 11 V
Number of camshaft position sensor signal pulse	6 or more

Crankshaft Position Sensor Range Check during Engine Running P0335:

Engine speed	600 rpm or more
Starter	OFF
Time after starter from ON to OFF	3 seconds or more

TYPICAL MALFUNCTION THRESHOLDS

Crankshaft Position Sensor Range Check during Cranking P0335:

Number of crankshaft position sensor signal pulse	132 or less, or 174 or more

Crankshaft Position Sensor Range Check during Engine Running P0335:

CKP sensor signal	No signal

COMPONENT OPERATING RANGE

CKP sensor	• CKP sensor output voltage fluctuates while crankshaft revolving • 34 CKP sensor signals per crankshaft revolution

WIRING DIAGRAM

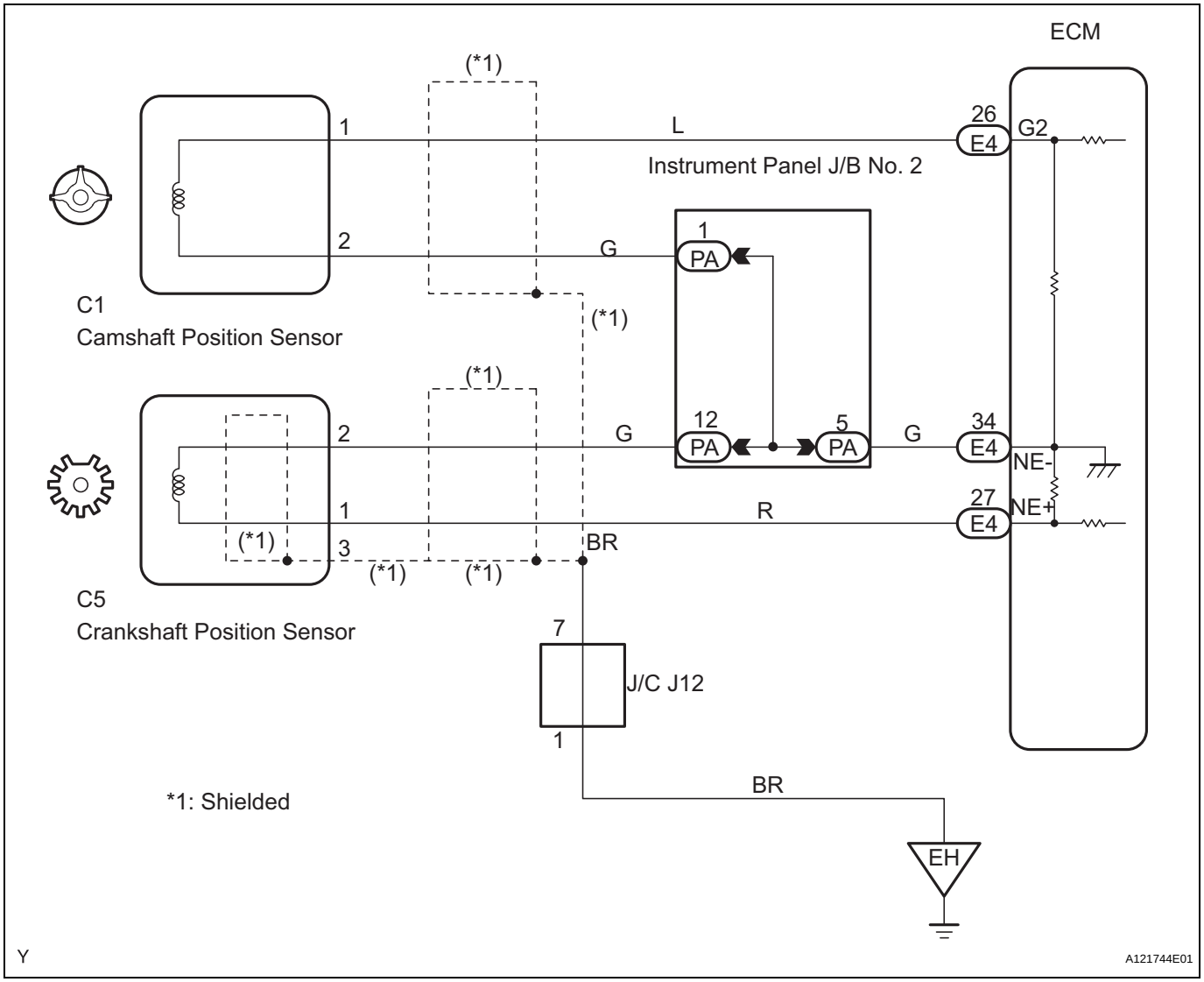

HINT:

- If no problem is found by this diagnostic troubleshooting procedure, troubleshoot the engine mechanical systems.
- Check the engine speed. The engine speed can be checked by using an intelligent tester. To check, follow the operation below:
  (a) Connect an intelligent tester to the DLC3.
  (b) Start the engine.
  (c) Turn the tester ON.
  (d) Select the following menu items: DIAGNOSIS / ENHANCED OBD II / DATA LIST / PRIMARY / ENGINE SPD.
  The engine speed may be indicated as zero despite the engine revolving normally. This is caused by a lack of NE signals from the Crankshaft Position (CKP) sensor. Alternatively, the engine speed may be indicated as lower than the actual engine speed, if the CKP sensor voltage output is insufficient.
- Read freeze frame data using an intelligent tester. Freeze frame data record the engine condition when malfunctions are detected. When troubleshooting, freeze frame data can help determine if the vehicle was moving or stationary, if the engine was warmed up or not, if the air-fuel ratio was lean or rich, and other data, from the time the malfunction occurred.

1 INSPECT CRANKSHAFT POSITION SENSOR (RESISTANCE)

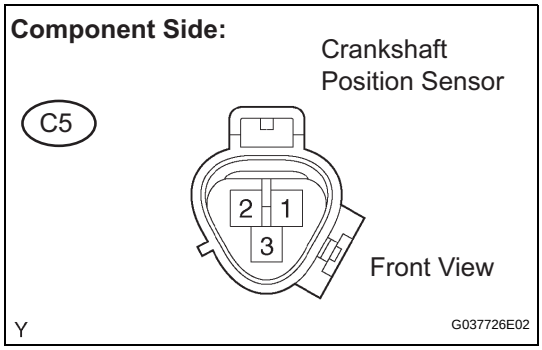

(a) Disconnect the C5 Crankshaft Position (CKP) sensor connector.
(b) Measure the resistance between terminals 1 and 2.

Standard Resistance

Tester Connections	Specified Conditions
1 - 2	1,630 to 2,740 Ω at cold
1 - 2	2,065 to 3,225 Ω at hot

HINT:
Terms cold and hot refer to the temperature of the coils.
Cold means approximately -10° to 50°C (14°to 122°F).
Hot means approximately 50° to 100°C (122° to 212°F).

(c) Reconnect the CKP sensor connector.

NG → **REPLACE CRANKSHAFT POSITION SENSOR**

OK

2 CHECK HARNESS AND CONNECTOR (CRANKSHAFT POSITION SENSOR - ECM)

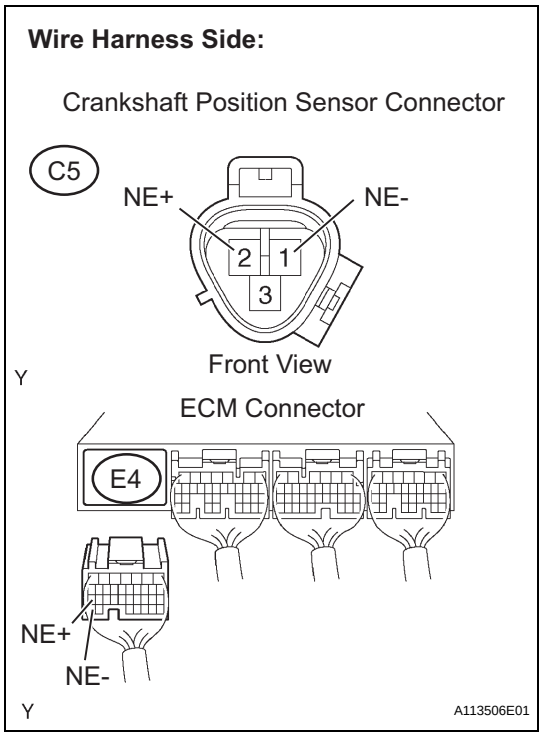

(a) Disconnect the C5 CKP sensor connector.
(b) Disconnect the E4 ECM connector.
(c) Check the resistance.

Standard Resistance (Check for open)

Tester Connections	Specified Conditions
NE+ (C5-1) - NE+ (E4-27)	Below 1 Ω
NE- (C5-2) - NE- (E4-34)	Below 1 Ω

Standard Resistance (Check for short)

Tester Connections	Specified Conditions
NE+ (C5-1) or NE+ (E4-27) - Body ground	10 kΩ or higher
NE- (C5-2) or NE- (E4-34) - Body ground	10 kΩ or higher

(d) Reconnect the ECM connector.
(e) Reconnect the CKP sensor connector.

NG → **REPAIR OR REPLACE HARNESS OR CONNECTOR**

OK

ES

3	CHECK CRANKSHAFT POSITION SENSOR (SENSOR INSTALLATION)

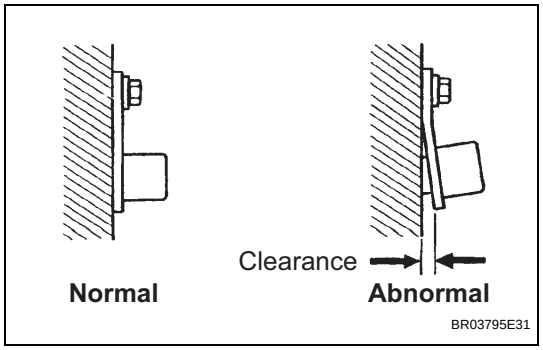

(a) Check the CKP sensor installation.
OK:
Sensor is installed correctly.

NG → **SECURELY REINSTALL SENSOR**

OK

4	CHECK CRANKSHAFT TIMING PULLEY (TEETH OF PLATE)

(a) Check the teeth of the sensor plate.
OK:
Sensor plate does not have any cracks or deformation.

NG → **REPLACE CRANKSHAFT POSITION SENSOR PLATE**

OK

REPLACE ECM

ES

DTC	P0340	Camshaft Position Sensor "A" Circuit (Bank 1 or Single Sensor)

DTC	P0341	Camshaft Position Sensor "A" Circuit Range / Performance (Bank 1 or Single Sensor)

DESCRIPTION

The Camshaft Position (CMP) sensor consists of a magnet and an iron core which is wrapped with copper wire, and is installed onto the cylinder head. When the camshaft rotates, each of 3 teeth on the camshaft passes through the CMP sensor. This activates the internal magnet in the sensor, generating a voltage in the copper wire. The camshaft rotation is synchronized with the crankshaft rotation. When the crankshaft turns twice the voltage is generated 3 times in the CMP sensor. The generated voltage in the sensor acts as a signal, allowing the ECM to locate the camshaft position. This signal is then used to control ignition timing, fuel injection timing, and the VVT system.

ES

DTC No.	DTC Detection Conditions	Trouble Areas
P0340	Case 1 • No Camshaft Position (CMP) sensor signal to ECM while cranking (2 trip detection logic) Case 2 • No CMP sensor signal to ECM at engine speed of 600 rpm or more (1 trip detection logic)	• Open or short in CMP sensor circuit • CMP sensor • Camshaft • Jumped tooth of timing chain • ECM
P0341	When crankshaft rotates twice, Camshaft Position (CMP) sensor signal input to ECM 12 times or more (1 trip detection logic)	• Open or short in CMP sensor circuit • CMP sensor • Camshaft • Jumped tooth of timing chain • ECM

HINT:

- DTC P0340 indicates a malfunction relating to the CMP sensor (+) circuit (the wire harness between the ECM and CMP sensor, and the CMP sensor itself).
- DTC P0341 indicates a malfunction relating to the CMP sensor (-) circuit (the wire harness between the ECM and CMP sensor, and the CMP sensor itself).

Reference: Inspection using an oscilloscope

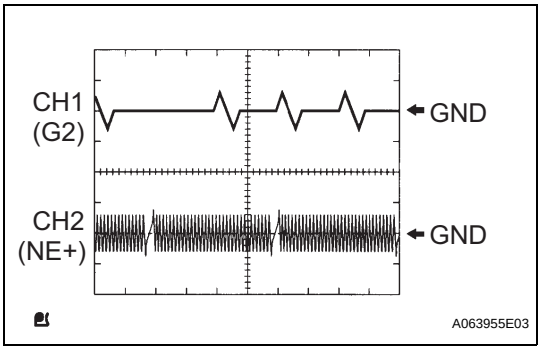

HINT:

- The correct waveform is as shown above.
- G2 stands for the CMP sensor signal, and NE+ stands for the Crankshaft Position (CKP) sensor signal.

Items	Contents
Terminals	CH1: G2 - NE- CH2: NE+ - NE-
Equipment Settings	5 V/Division, 20 ms/Division
Conditions	Cranking or idling

MONITOR DESCRIPTION

If no signal is transmitted by the CMP sensor despite the engine revolving, or the rotation of the camshaft and the crankshaft is not synchronized, the ECM interprets this as a malfunction of the sensor.
If the malfunction is not repaired successfully, a DTC is set 10 seconds after the engine is next started.

MONITOR STRATEGY

Related DTCs	P0340: Camshaft position sensor range check P0340: Camshaft position/crankshaft position misalignment P0341: Camshaft position sensor malfunction
Required Sensors/Components (Main)	Camshaft Position (CMP) sensor
Required Sensors/Components (Related)	Crankshaft Position (CKP) sensor
Frequency of Operation	Continuous
Duration	5 seconds
MIL Operation	2 driving cycles: CMP sensor range check Immediate: Camshaft position/crankshaft position misalignment and CMP sensor malfunction
Sequence of Operation	None

TYPICAL ENABLING CONDITIONS

Monitor runs whenever following DTCs not present	None

Camshaft Position Sensor Range Check P0340:

Starter	ON
Minimal battery voltage while starter ON	Less than 11 V

Camshaft Position/Crankshaft Position Misalignment P0340:

Engine speed	600 rpm or more
Starter	OFF

Camshaft Position Sensor Malfunction P0341:

Starter	After OFF to ON timing

TYPICAL MALFUNCTION THRESHOLDS

Camshaft Position Sensor Range Check P0340:

CMP sensor signal	No signal

Camshaft Position/Crankshaft Position Misalignment P0340:

Camshaft position and crankshaft position phase	Misaligned

Camshaft Position Sensor Malfunction P0341:

Camshaft position and crankshaft position phase	Misaligned
CMP sensor signal per 2 crankshaft revolutions	12 signals or more

COMPONENT OPERATING RANGE

CMP sensor	• CMP sensor output voltage fluctuates while camshaft revolving • 3 CMP sensor signals per 2 crankshaft revolutions

WIRING DIAGRAM

Refer to DTC P0335 (See page ES-173).

HINT:
Read freeze frame data using an intelligent tester. Freeze frame data record the engine condition when malfunctions are detected. When troubleshooting, freeze frame data can help determine if the vehicle was moving or stationary, if the engine was warmed up or not, if the air-fuel ratio was lean or rich, and other data, from the time the malfunction occurred.

1 INSPECT CAMSHAFT POSITION SENSOR (RESISTANCE)

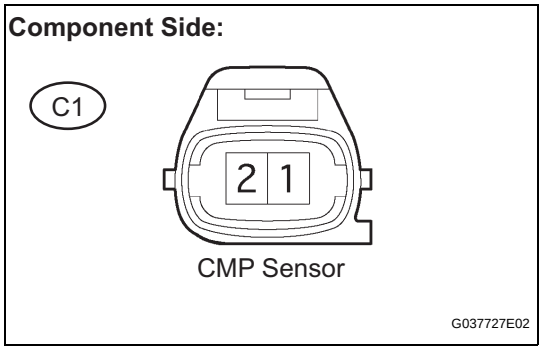

(a) Disconnect the C1 Camshaft Position (CMP) sensor connector.
(b) Measure the resistance between terminals 1 and 2.

Standard Resistance

Tester Connections	Specified Conditions
1 - 2	835 to 1,400 Ω at cold
1 - 2	1,060 to 1,645 Ω at hot

HINT:
Terms cold and hot refer to the temperature of the coils. Cold means approximately -10° to 50°C (14° to 122°F). Hot means approximately 50° to 100°C (122° to 212°F).

(c) Reconnect the CMP sensor connector.

NG → REPLACE CAMSHAFT POSITION SENSOR

OK

2 CHECK HARNESS AND CONNECTOR (CAMSHAFT POSITION SENSOR - ECM)

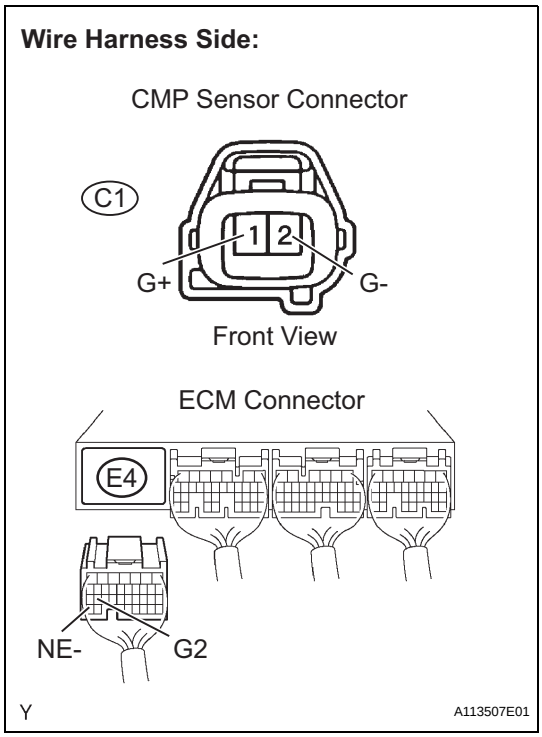

(a) Disconnect the C1 CMP sensor connector.
(b) Disconnect the E4 ECM connector.
(c) Check the resistance.

Standard Resistance (Check for open)

Tester Connections	Specified Conditions
G+ (C1-1) - G2 (E4-26)	Below 1 Ω
G- (C1-2) - NE- (E4-34)	Below 1 Ω

Standard Resistance (Check for short)

Tester Connections	Specified Conditions
G+ (C1-1) or G2 (E4-26) - Body ground	10 kΩ or higher
G- (C1-2) or NE- (E4-34) - Body ground	10 kΩ or higher

(d) Reconnect the ECM connector.
(e) Reconnect the CMP sensor connector.

NG → REPAIR OR REPLACE HARNESS OR CONNECTOR

OK

3	CHECK SENSOR INSTALLATION (CAMSHAFT POSITION SENSOR)

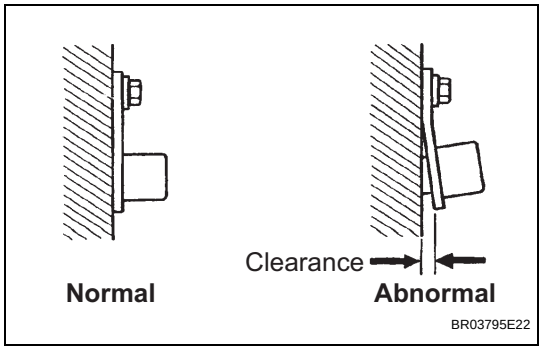

(a) Check the CMP sensor installation.
OK:
Sensor is installed correctly.

NG → **SECURELY REINSTALL SENSOR**

OK

4	CHECK CAMSHAFT TIMING GEAR ASSEMBLY (TEETH OF SENSOR PLATE)

(a) Check the teeth of the sensor plate.
OK:
Sensor plate teeth do not have any cracks or deformation.

NG → **REPLACE CAMSHAFT TIMING GEAR ASSEMBLY**

OK

REPLACE ECM

ES

DTC	P0351	Ignition Coil "A" Primary / Secondary Circuit

DTC	P0352	Ignition Coil "B" Primary / Secondary Circuit

DTC	P0353	Ignition Coil "C" Primary / Secondary Circuit

DTC	P0354	Ignition Coil "D" Primary / Secondary Circuit

HINT:
- These DTCs indicate malfunctions relating to the primary circuit.
- If DTC P0351 is set, check No.1 ignition coil with igniter circuit.
- If DTC P0352 is set, check No.2 ignition coil with igniter circuit.
- If DTC P0353 is set, check No.3 ignition coil with igniter circuit.
- If DTC P0354 is set, check No.4 ignition coil with igniter circuit.

DESCRIPTION

A Direct Ignition System (DIS) is used on this vehicle.
The DIS is a 1-cylinder ignition system in which each cylinder is ignited by one ignition coil and one spark plug is connected to the end of each secondary wiring. A powerful voltage, generated in the secondary wiring, is applied directly to each spark plug. The sparks of the spark plugs pass from the center electrodes to the ground electrodes.
The ECM determines the ignition timing and transmits the ignition (IGT) signals to each cylinder. Using the IGT signal, the ECM turns the power transistor inside the igniter on and off. The power transistor, in turn, switches on and off the current to the primary coil. When the current to the primary coil is cut off, a powerful voltage is generated in the secondary coil. This voltage is applied to the spark plugs, causing them to spark inside the cylinders. As the ECM cuts the current to the primary coil, the igniter sends back an ignition confirmation (IGF) signal to the ECM, for each cylinder ignition.

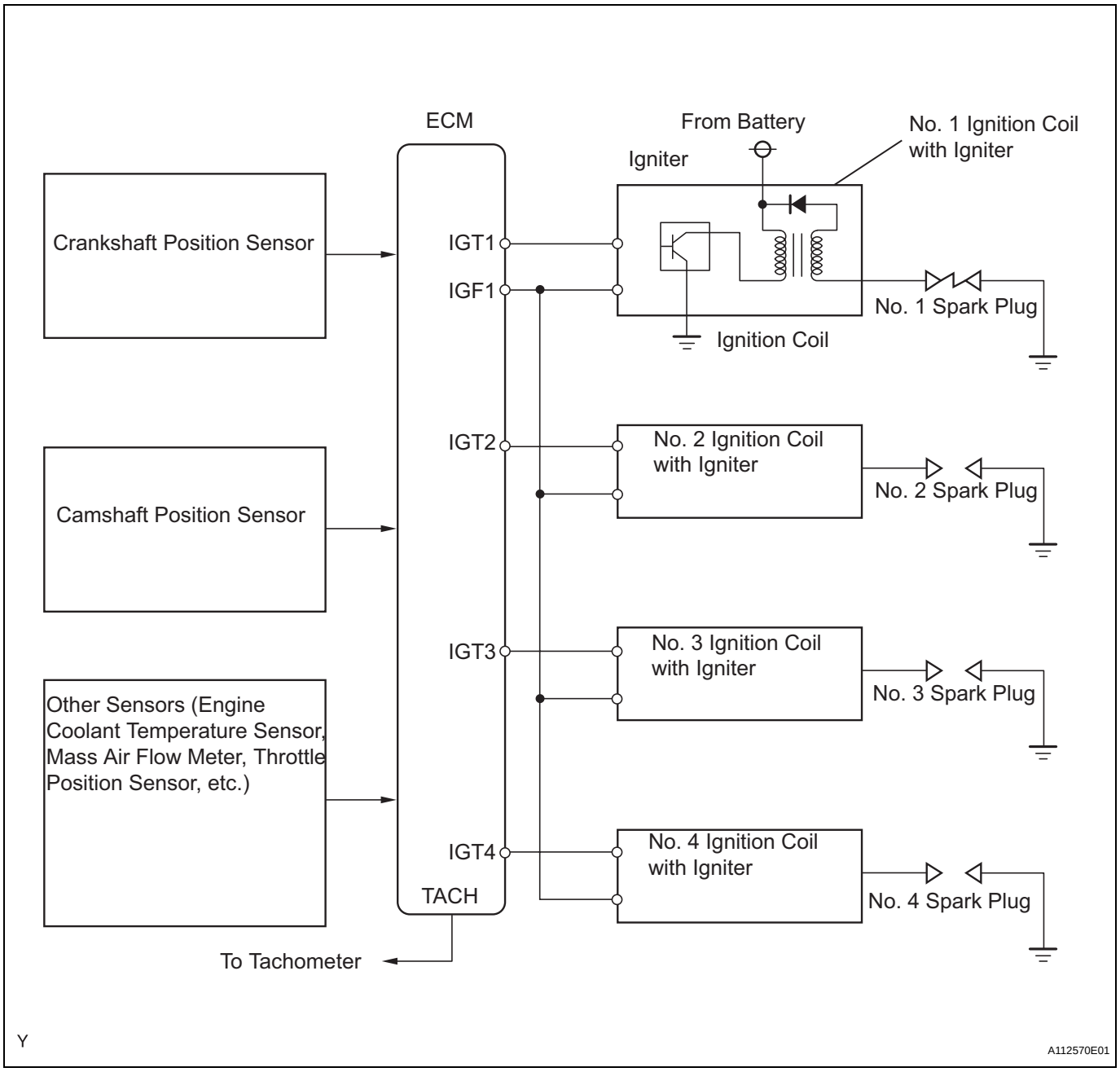

DTC No.	DTC Detection Conditions	Trouble Areas
P0351 P0352 P0353 P0354	No IGF signal to ECM while engine running (1 trip detection logic)	• Ignition system • Open or short in IGF1 or IGT circuit (1 to 4) between ignition coil with igniter and ECM • No. 1 to No. 4 ignition coils with igniters • ECM

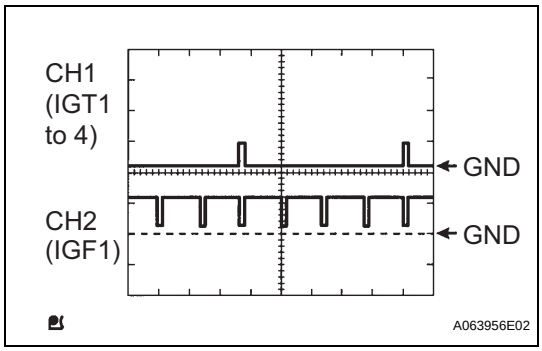

Reference: Inspection using an oscilloscope.
While cranking or idling, check the waveform between terminals IGT(1 to 4) and E1, and IGF1 and E1 of the ECM connector.

ES

Items	Contents
Terminals	CH1: IGT1, IGT2, IGT3, IGT4 - E1 CH2: IGF1 - E1
Equipment Settings	2 V/Division, 20 ms/Division
Conditions	Cranking or idling

MONITOR DESCRIPTION

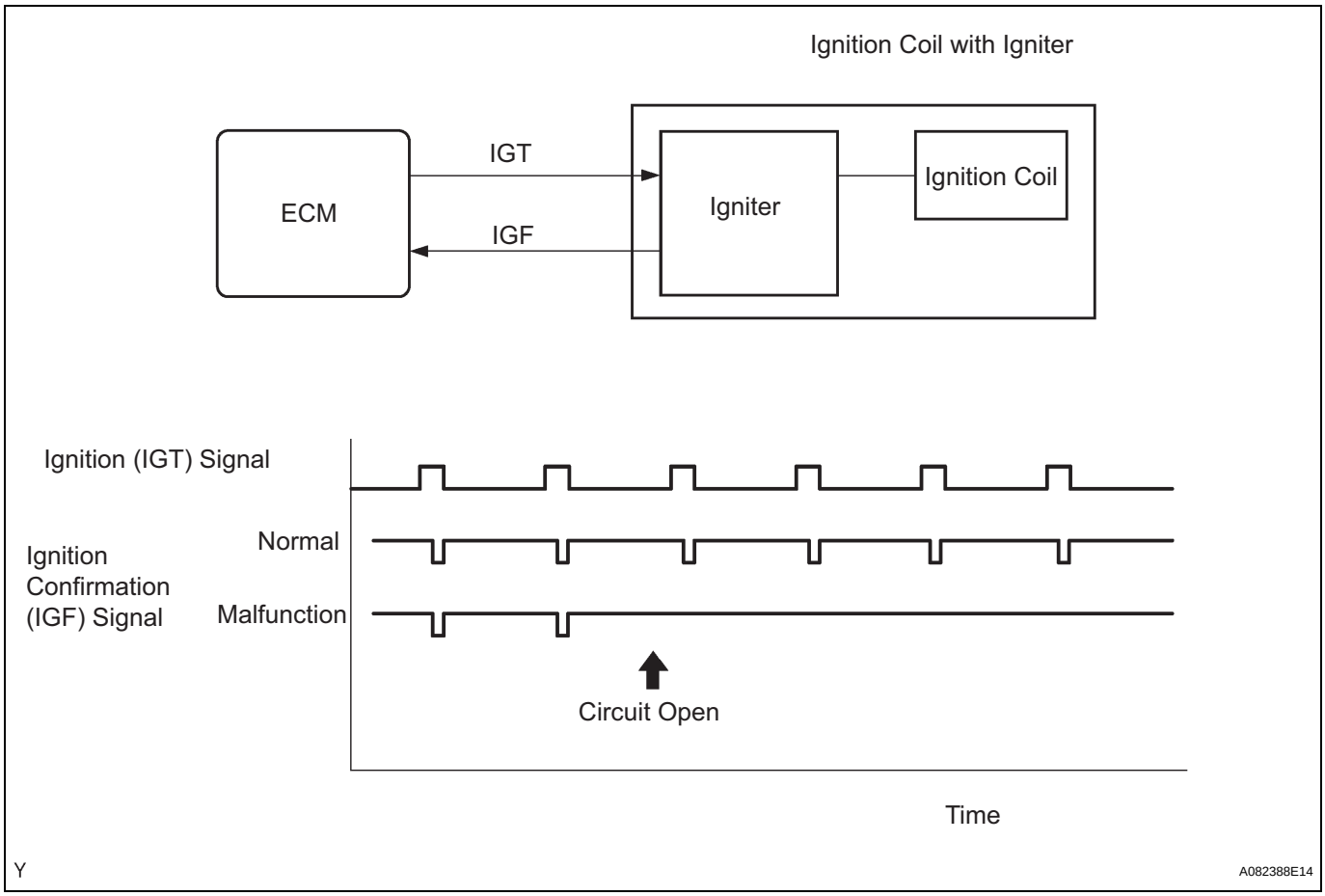

If the ECM does not receive any IGF signals despite transmitting the IGT signal, it interprets this as a fault in the igniter and sets a DTC.
If the malfunction is not repaired successfully, a DTC is set 1second after the engine is next started.

MONITOR STRATEGY

Related DTCs	P0351: Igniter (cylinder 1) malfunction P0352: Igniter (cylinder 2) malfunction P0353: Igniter (cylinder 3) malfunction P0354: Igniter (cylinder 4) malfunction
Required Sensors/Components (Main)	Igniter
Required Sensors/Components (Related)	Crankshaft position sensor
Frequency of Operation	Continuous
Duration	0.256 seconds and 4 sparks
MIL Operation	Immediate
Sequence of Operation	None

TYPICAL ENABLING CONDITIONS

Monitor runs whenever following DTCs not present	None
Either of following conditions met	-
Engine RPM	1,500 rpm or less
Starter	OFF

TYPICAL MALFUNCTION THRESHOLDS

IGF signal	ECM does not receive any IGF signal despite ECM sending IGT signal to igniter

COMPONENT OPERATING RANGE

IGF signal	Igniter transmits IGF signal when it receives IGT signal from ECM

WIRING DIAGRAM

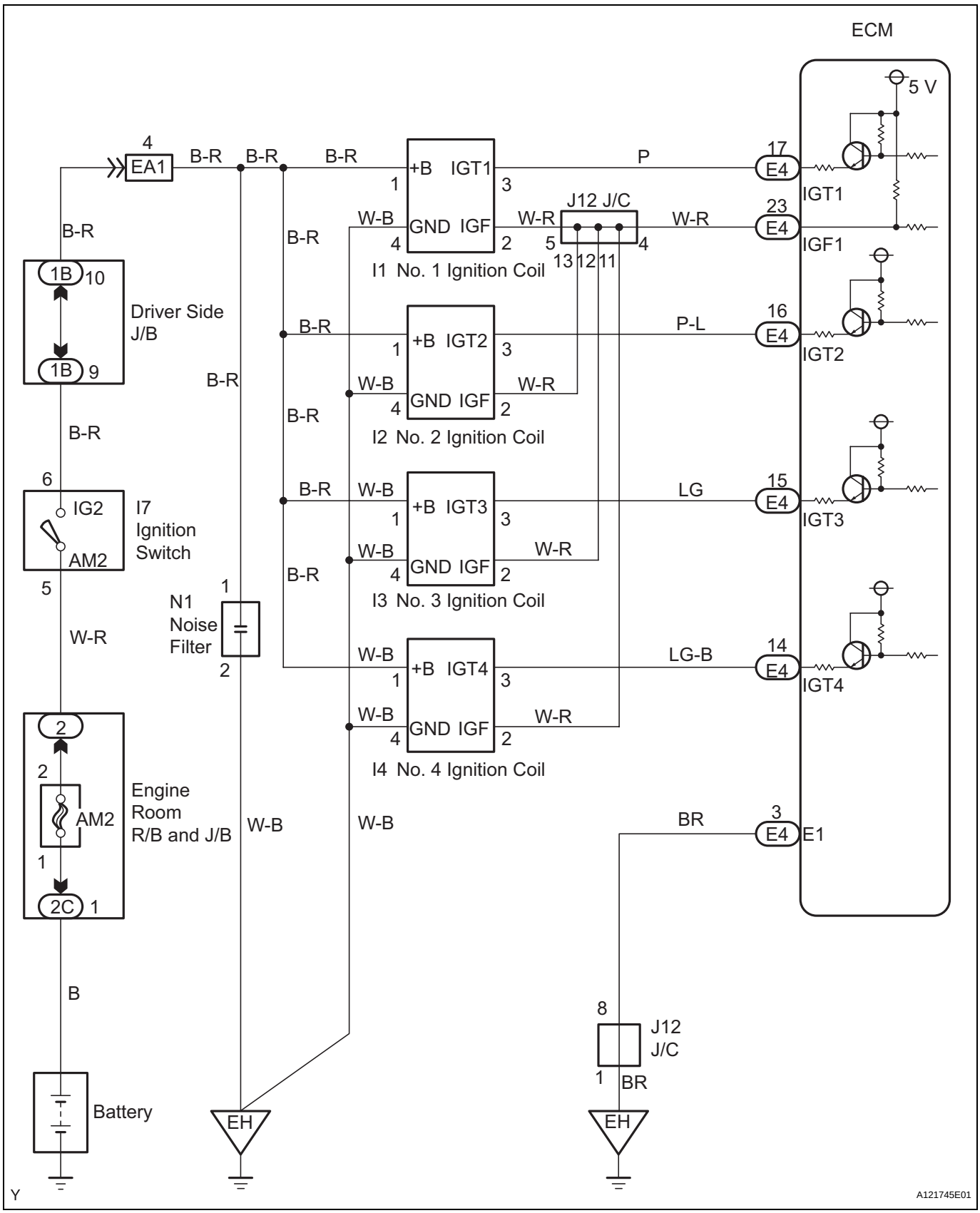

HINT:
Read freeze frame data using an intelligent tester. Freeze frame data record the engine condition when malfunctions are detected. When troubleshooting, freeze frame data can help determine if the vehicle was moving or stationary, if the engine was warmed up or not, if the air-fuel ratio was lean or rich, and other data, from the time the malfunction occurred.

1 CHECK WHETHER DTC OUTPUT RECURS (DTC P0351, P0352, P0353 OR P0354)

(a) Connect an intelligent tester to the DLC3.
(b) Turn the ignition switch to ON.
(c) Turn the tester ON.
(d) Clear DTCs (see page ES-40).
(e) Shuffle arrangement of the ignition coils with igniters (among No. 1 to No. 4 cylinders).
NOTICE:
Do not shuffle the connectors.
(f) Perform a simulation test.
(g) Check DTCs displayed on the tester.

Result

Display (DTC Output)	Proceed To
Same DTC output	A
Other ignition coil DTC output	B

B → **REPLACE IGNITION COIL ASSEMBLY**

A

2 INSPECT ECM (IGT1, IGT2, IGT3, IGT4 AND IGF1 SIGNAL)

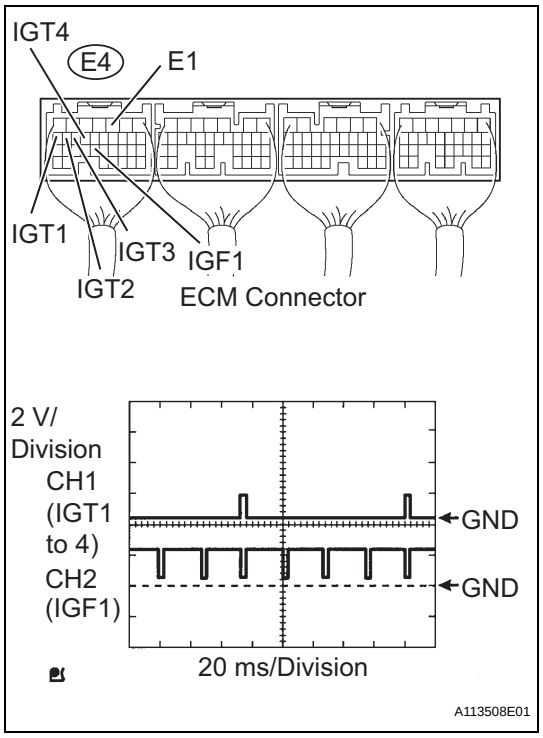

(a) Inspect the ECM using an oscilloscope.
(b) While cranking or idling, check the waveform between the terminals of the E4 ECM connector.
Standard

Tester Connections	Specified Conditions
IGT1 (E4-17) - E1 (E4-3)	Correct waveform shown
IGT2 (E4-16) - E1 (E4-3)	Correct waveform shown
IGT3 (E4-15) - E1 (E4-3)	Correct waveform shown
IGT4 (E4-14) - E1 (E4-3)	Correct waveform shown
IGF1 (E4-23) - E1 (E4-3)	Correct waveform shown

NG → **REPLACE ECM**

OK

3	CHECK HARNESS AND CONNECTOR (IGNITION COIL ASSEMBLY - ECM)

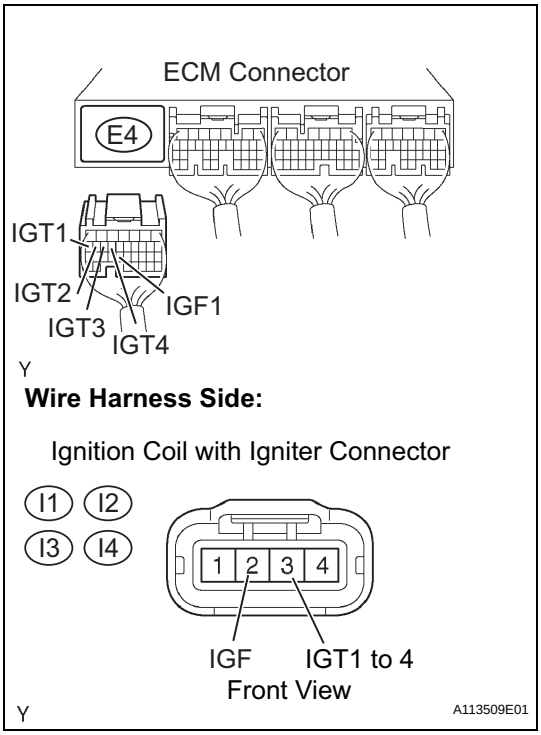

(a) Disconnect the ignition coil with igniter connector.
(b) Disconnect the E4 ECM connector.
(c) Check the resistance.

Standard Resistance (Check for open)

Tester Connections	Specified Conditions
IGF (I1-2) - IGF1 (E4-23)	Below 1 Ω
IGF (I2-2) - IGF1 (E4-23)	Below 1 Ω
IGF (I3-2) -IGF1 (E4-23)	Below 1 Ω
IGF (I4-2) - IGF1 (E4-23)	Below 1 Ω

Standard Resistance (Check for open)

Tester Connections	Specified Conditions
IGT1 (I1-3) - IGT1 (E4-17)	Below 1 Ω
IGT2 (I2-3) - IGT2 (E4-16)	Below 1 Ω
IGT3 (I3-3) - IGT3 (E4-15)	Below 1 Ω
IGT4 (I4-3) - IGT4 (E4-14)	Below 1 Ω

Standard Resistance (Check for short)

Tester Connections	Specified Conditions
IGF (I1-2) or IGF1 (E4-23) - Body ground	10 kΩ or higher
IGF (I2-2) or IGF1 (E4-23) - Body ground	10 kΩ or higher
IGF (I3-2) or IGF1 (E4-23) - Body ground	10 kΩ or higher
IGF (I4-2) or IGF1 (E4-23) - Body ground	10 kΩ or higher

Standard Resistance (Check for short)

Tester Connections	Specified Conditions
IGT1 (I1-3) or IGT1 (E4-17) - Body ground	10 kΩ or higher
IGT2 (I2-3) or IGT2 (E4-16) - Body ground	10 kΩ or higher
IGT3 (I3-3) or IGT3 (E4-15) - Body ground	10 kΩ or higher
IGT4 (I4-3) or IGT4 (E4-14) - Body ground	10 kΩ or higher

(d) Reconnect the ECM connector.
(e) Reconnect the ignition coil with igniter connector.

NG → **REPAIR OR REPLACE HARNESS OR CONNECTOR**

OK

ES

4 INSPECT IGNITION COIL ASSEMBLY (POWER SOURCE)

Wire Harness Side:
Ignition Coil with Igniter Connector

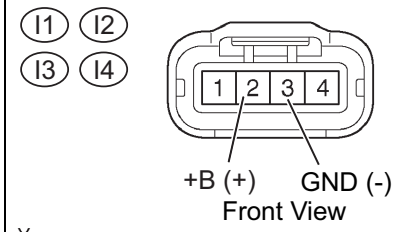

(a) Disconnect the ignition coil with igniter connector.
(b) Check the resistance.

Standard Resistance (Check for open)

Tester Connections	Specified Conditions
GND (I1-4) - Body ground	Below 1 Ω
GND (I2-4) - Body ground	Below 1 Ω
GND (I3-4) - Body ground	Below 1 Ω
GND (I4-4) - Body ground	Below 1 Ω

(c) Turn the ignition switch to ON.
(d) Measure the voltage between the terminals of the wire harness side connector.

Standard Voltage

Tester Connections	Specified Conditions
+B (I1-1) - GND (I1-4)	9 to 14 V
+B (I2-1) - GND (I2-4)	9 to 14 V
+B (I3-1) - GND (I3-4)	9 to 14 V
+B (I4-1) - GND (I4-4)	9 to 14 V

(e) Reconnect the ignition coil with igniter connector.

OK → **REPLACE IGNITION COIL ASSEMBLY**

NG

5 CHECK HARNESS AND CONNECTOR (IGNITION COIL ASSEMBLY - IGNITION SWITCH)

Wire Harness Side:

Ignition Coil with Igniter Connector

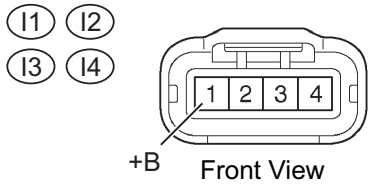

Wire Harness Side:

Ignision Switch Connector

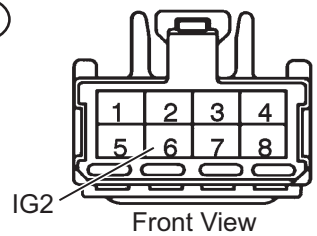

(a) Disconnect the ignition coil with igniter connector.
(b) Disconnect the I7 ignition switch connector.
(c) Check the resistance.

Standard Resistance (Check for open)

Tester Connections	Specified Conditions
+B (I1-1) -IG2 (I7-6)	Below 1 Ω
+B (I2-1) - IG2 (I7-6)	Below 1 Ω
+B (I3-1) - IG2 (I7-6)	Below 1 Ω
+B (I4-1) - IG2 (I7-6)	Below 1 Ω

Standard Resistance (Check for short)

Tester Connections	Specified Conditions
+B (I1-1) or IG2 (I7-6) - Body ground	10 kΩ or higher
+B (I2-1) or IG2 (I7-6) - Body ground	10 kΩ or higher
+B (I3-1) or IG2 (I7-6) - Body ground	10 kΩ or higher
+B (I4-1) or IG2 (I7-6) - Body ground	10 kΩ or higher

(d) Reconnect the ignition coil with igniter connector.
(e) Reconnect the ignition switch connector.

NG → **REPAIR OR REPLACE HARNESS OR CONNECTOR**

ES

OK

REPLACE IGNITION COIL ASSEMBLY

DTC	P0412	Secondary Air Injection System Switching Valve "A" Circuit

DESCRIPTION

The Secondary Air Injection (AIR) system consists of an air pump, the Air Switching Valve (ASV), a pressure sensor, the Air Injection Control Driver (AID) and the ECM. For a short time after cold engine starts, the AIR system pumps secondary air to the exhaust port of the cylinder head to purify the exhaust emissions. The secondary air is supplied by the air pump and is pumped to the exhaust port through the ASV.

The AID drives the ASV and the air pump according to command signals transmitted by the ECM. The pressure sensor detects the pressure in the secondary air passage when the AIR system is ON and OFF, and transmits pressure signal to the ECM.

The AID is not only equipped to drive the pump and valve, but also with a diagnosis function to detect malfunctions in the AIR system circuit.

HINT:

As a large current is required to drive the air pump and ASV, an AID has been added to the previous system.

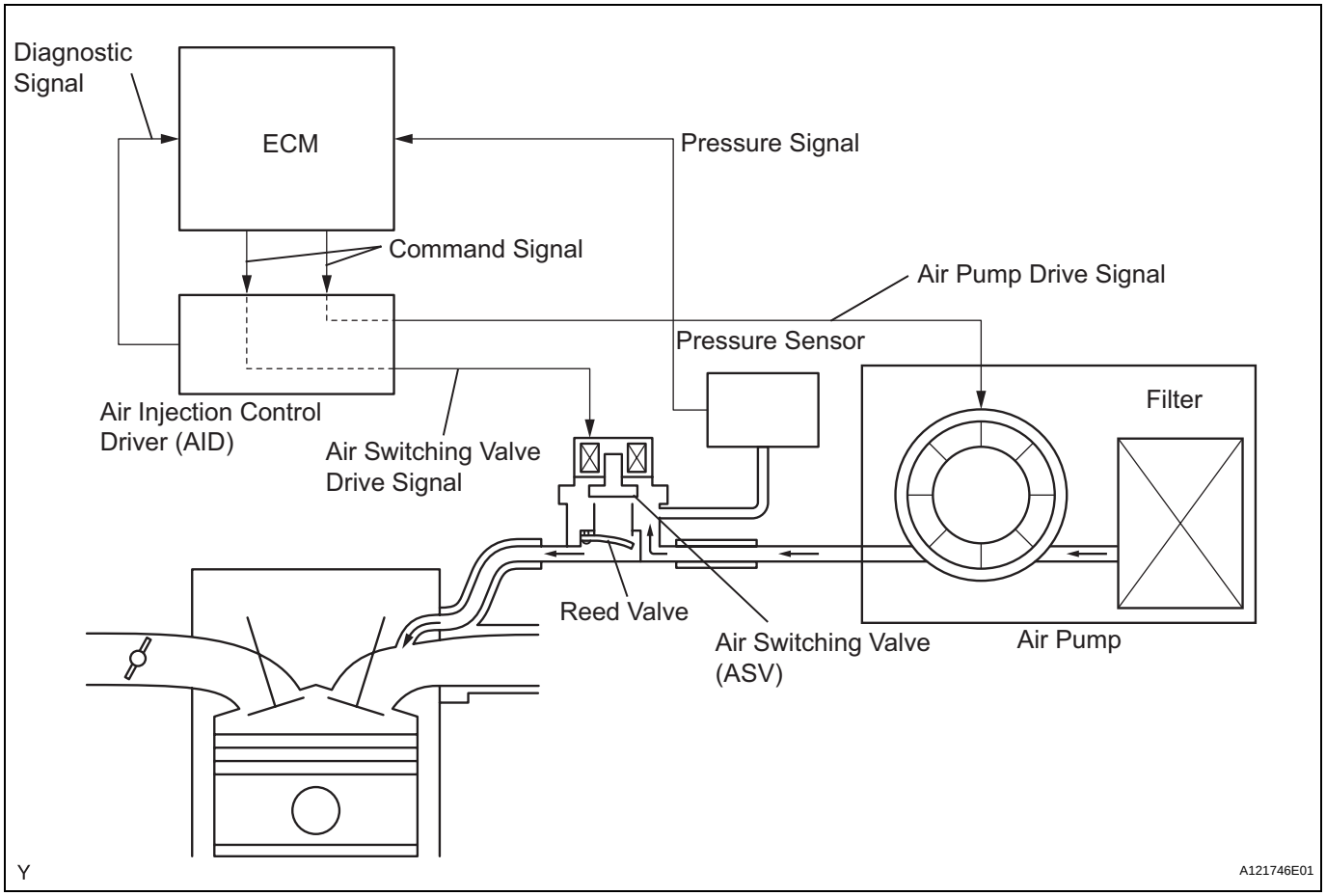

DTC No.	DTC Detection Conditions	Trouble Areas
P0412	After cold engine starts, all of following conditions met (1 trip detection logic): (a) Air Injection (AIR) system not operating (air pump OFF, Air Switching Valve [ASV] OFF) (b) Diagnostic signal from Air Injection Control Driver (AID) 40 % (c) Battery voltage 8 V or more	• Open in ASV drive circuit • Short between ASV drive and +B circuits • AID • ASV • ECM

DTC No.	DTC Detection Conditions	Trouble Areas
P0412	After cold engine starts, all of following conditions met (1 trip detection logic): (a) Air Injection (AIR) system operating (air pump ON, Air Switching Valve [ASV] ON) (b) Diagnostic signal from Air Injection Control Driver (AID) 40 % (c) Battery voltage 8 V or more	• Short between ASV drive circuit and body ground • AID • ASV • ECM

MONITOR DESCRIPTION

The Air Injection Control Driver (AID) detects open and short circuits according to the voltages of the air pump terminal (VB) and the Air Switching Valve (ASV) terminal (VV), and transmits diagnostic information as a signal to the ECM.

For a short time after cold engine starts, the ECM transmits command signals to the AID to drive the air pump and ASV.

ES

The AID transmits an ASV malfunction signal to the ECM if either of the following conditions is met:

- The voltage at the AID terminal relating to the ASV is low despite the AID receiving command signals from the ECM to drive the ASV.
- The voltage at the AID terminal relating to the ASV is high despite the AID receiving no command signals from the ECM to drive the ASV.

The ECM sets the DTC based on diagnostic signals from the AID.

MONITOR STRATEGY

Related DTCs	P0412: Secondary air injection system air switching valve circuit range check
Required Sensors/Components (Main)	Air injection control driver
Required Sensors/Components (Related)	Air switching valve
Frequency of Operation	Once per drive cycle
Duration	3 seconds
MIL Operation	Immediate
Sequence of Operation	None

TYPICAL ENABLING CONDITIONS

Case 1:

Monitor runs whenever following DTCs not present	-
Secondary air injection system	Operating
Battery voltage	8 V or more
Ignition switch	ON
Time after ignition switch OFF to ON	0.5 seconds or more
Starter	OFF
Time after starter turned from ON to OFF	0.5 seconds or more

Case 2:

Monitor runs whenever following DTCs not present	-
Secondary air injection system	Not operating
Battery voltage	8 V or more
Ignition switch	ON
Time after ignition switch OFF to ON	0.5 seconds or more
Starter	OFF
Time after starter turned from ON to OFF	0.5 seconds or more

TYPICAL MALFUNCTION THRESHOLDS

Diagnostic signal duty ratio from air injection control driver	31 % or more, and 48 % or less

COMPONENT OPERATING RANGE

Diagnostic signal duty ratio from air injection control driver	70 % or more, and 90 % or less when secondary air injection system operating. 0 % when secondary air injection system not operating.

WIRING DIAGRAM

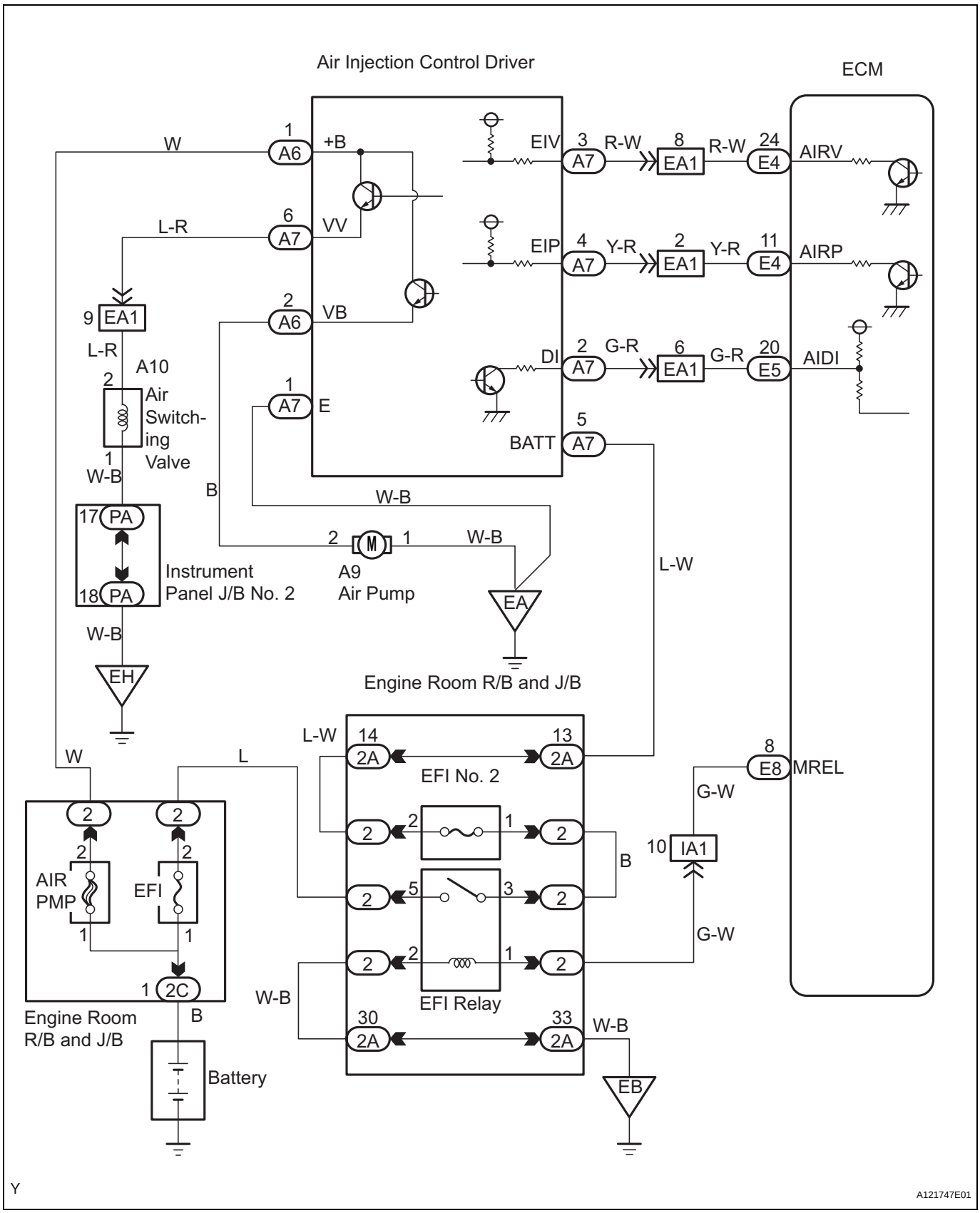

HINT:
Diagnostic information output by the AID can be confirmed by connecting an oscilloscope to the diagnostic information terminal of the AID. Reading the waveform while performing the AIR system intrusive operation provided in the SYSTEM CHECK function, allows the possible trouble areas to be narrowed down.
(a) Start the engine and warm it up.
(b) Turn the ignition switch to OFF.
(c) Connect an intelligent tester to the DLC3.
(d) Connect oscilloscope probes to the AIDI and E1 terminals of the ECM.

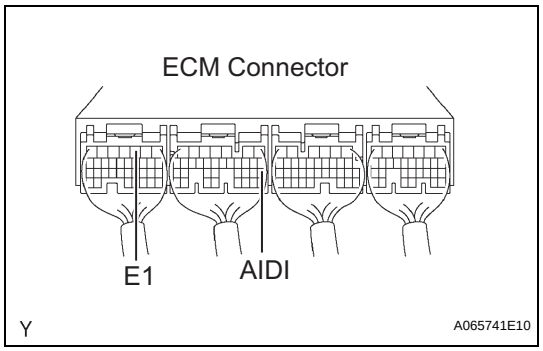

(e) Turn the ignition switch to ON and turn the tester ON.
(f) Select the following menu items: DIAGNOSIS / ENHANCED OBD II / SYSTEM CHECK / AIR INJ CHECK / MANUAL OPERATION / AP: ON, ASV: OPEN and AP: OFF, ASV CLOSE.
HINT:
When MANUAL OPERATION is selected, the tester initialization (atmospheric pressure measurement) is performed automatically. The initialization takes 10 seconds. After the initialization, AP and ASV operation can be selected.
(g) Start the engine.
(h) Perform the AIR system intrusive operation while the engine is idling.

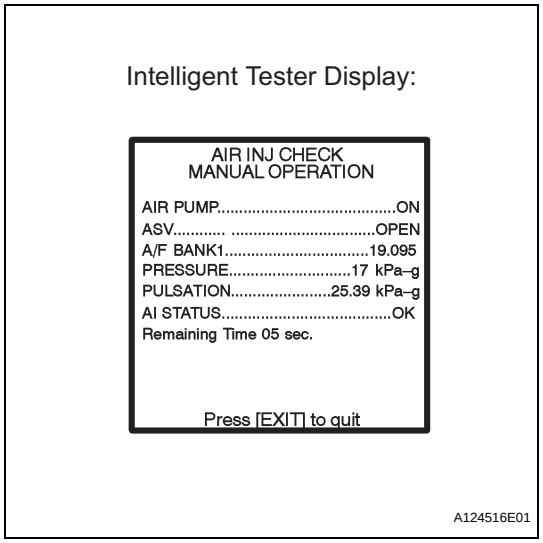

(i) Monitor the AID voltage output (duty ratio signal).

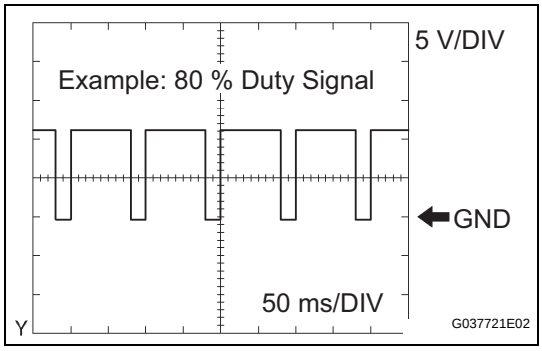

Oscilloscope range

Items	Contents
Terminals	CH1: AIDI - E1
Equipment Settings	5 V/Division, 20 to 50 ms/Division
Conditions	Idling

(j) Turn the ignition switch to OFF.

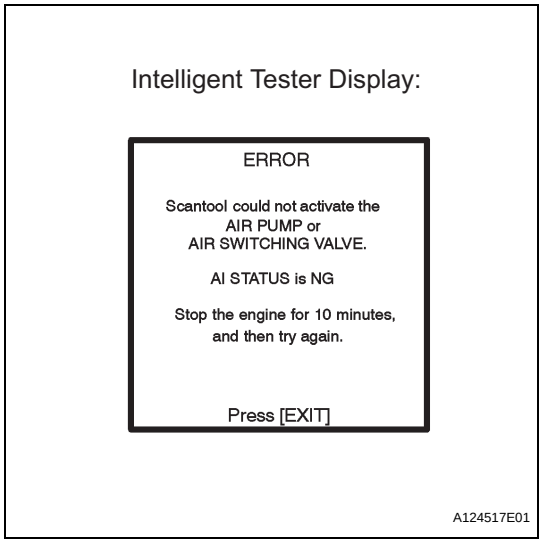

NOTICE:

- **This AIR INJECTION CHECK only allows technicians to operate the AIR system for a maximum of 5 seconds. Furthermore, the check can only be performed up to 4 times per trip. If the test is repeated, intervals of at least 30 seconds are required between checks. While AIR system operation using the intelligent tester is prohibited, the tester display indicates the prohibition (WAIT or ERROR).**
  If an ERROR as shown in the illustration is displayed on the tester during the test, stop the engine for 10 minutes, and then try again.
- **Performing the AIR INJ CHECK repetitively may cause damage to the AIR system. If necessary, leave an interval of several minutes between SYSTEM CHECK operations to prevent the system from overheating.**
- **When performing the AIR INJ CHECK operation after the battery cable has been reconnected, wait for 7 minutes with the ignition switch turned to ON or the engine running.**
- **Turn the ignition switch to OFF when the AIR INJ CHECK operation finishes.**

AID Diagnostic Signal Waveforms	ECM Commands	DTCs (ECM Output)	Suspected Trouble Areas
100 % Duty Ratio See waveform 1	Any Air Injection (AIR) System operation	P1613	• Open in diagnostic signal circuit • Air Injection Control Driver (AID) • Open in AID+B circuit (AID power source) • Short between +B and diagnostic signal circuits
0 % Duty Ratio See waveform 2	AIR System: ON (Air pump ON, ASV ON)	P1613	• Open or short in air pump or Air Switching Valve (ASV) command signal circuit (ECM-AID) • Open in AID ground circuit • Short between diagnostic signal circuit and body ground • AID • ECM
	AIR System: OFF (Air pump OFF, ASV OFF)	-	Normal
20 % Duty Ratio See waveform 3	Air Pump: ON	P0418	Short between air pump drive circuit and body ground • Harness and connector (AID-Pump) • Air pump • AID • ECM
	Air Pump: OFF	P0418	Open in air pump drive circuit (AID-Pump), or short between air pump drive circuit and +B • Harness and connector (AID-Pump) • Air pump • AID • ECM
40 % Duty Ratio See waveform 4	ASV: ON	P0412	Short between ASV drive circuit and body ground • Harness and connector (AID-ASV) • ASV • AID • ECM
	ASV: OFF	P0412	Open in ASV drive circuit (AID-ASV), or short between ASV drive circuit and +B • Harness and connector (AID-ASV) • AID • ASV • ECM
80 % Duty Ratio See waveform 5	AIR System: OFF (Air pump OFF, ASV OFF)	P1613	• AID • ECM
	AIR System: ON (Air pump ON, ASV ON)	-	Normal
Other than above (other than 0, 20, 40, 80 and 100 % duty)	-	P1613	• AID • Open in AID ground circuit

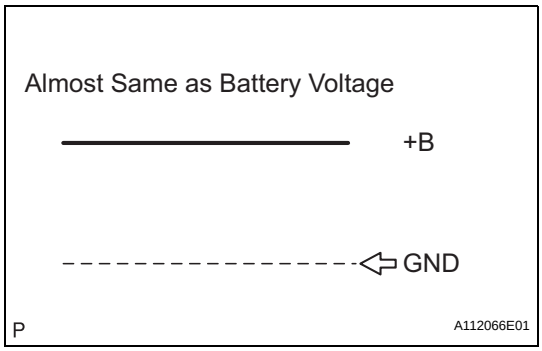

1. Waveform 1
100 % Duty Ratio

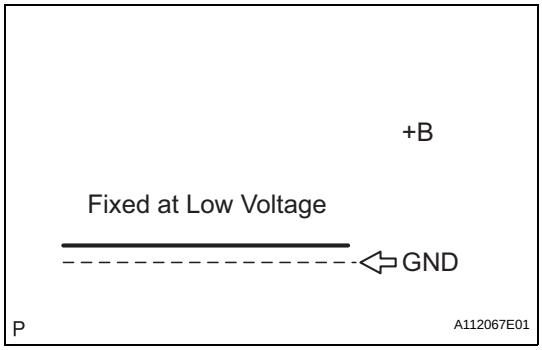

2. Waveform 2
0 % Duty Ratio

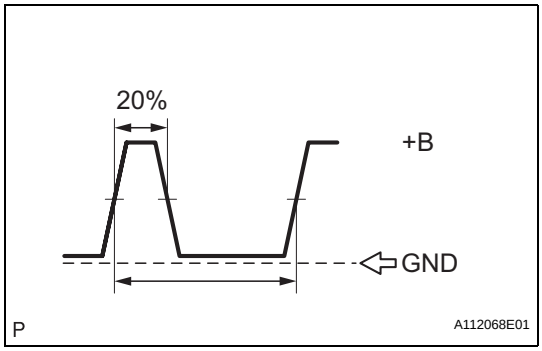

3. Waveform 3
20 % Duty Ratio

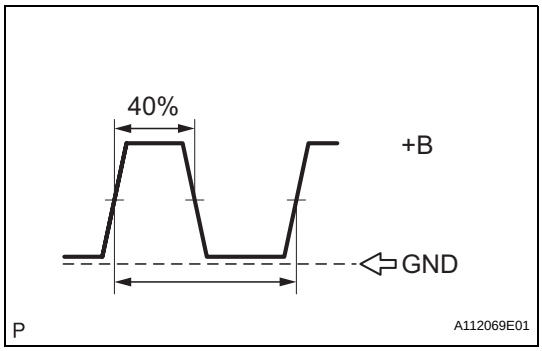

4. Waveform 4
40 % Duty Ratio

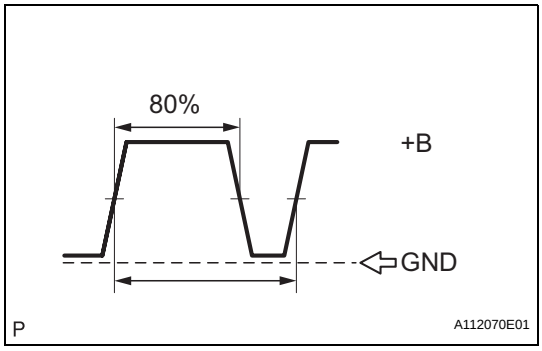

5. Waveform 5
80 % Duty Ratio

HINT:

- By using an intelligent tester to perform the AIR INJ CHECK operation in the SYSTEM CHECK, the air-fuel ratio and the pressure in the secondary air injection system passage can be checked while the secondary air injection system is operating. This helps technicians to troubleshoot the system when it malfunctions.
- Read freeze frame data using an intelligent tester. Freeze frame data record the engine condition when malfunctions are detected. When troubleshooting, freeze frame data can help determine if the vehicle was moving or stationary, if the engine was warmed up or not, if the air-fuel ratio was lean or rich, and other data, from the time the malfunction occurred.

1 INSPECT AIR SWITCHING VALVE ASSEMBLY

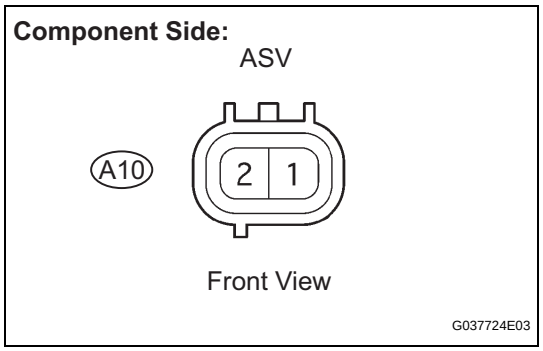

(a) Disconnect the A10 ASV connector.
(b) Measure the ASV resistance.
Standard Resistance

Tester Connections	Specified Conditions
ASV (A10-1) - ASV (A10-2)	3 to 10 Ω at 20°C (68°F)

(c) Reconnect the ASV connector.

NG → **REPLACE AIR SWITCHING VALVE ASSEMBLY**

OK

2 CHECK HARNESS AND CONNECTOR (AIR SWITCHING VALVE - BODY GROUND)

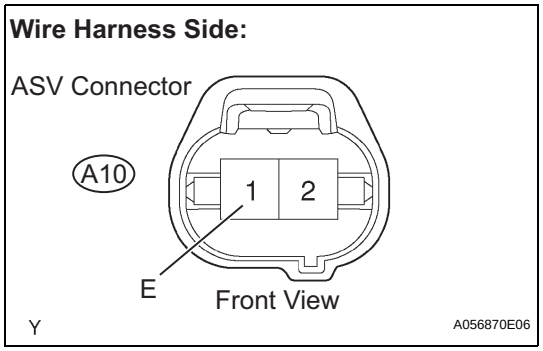

(a) Disconnect the A10 ASV connector.
(b) Check the resistance.
Standard Resistance

Tester Connections	Specified Conditions
ASV (A10-1) - Body ground	Below 1 Ω

(c) Reconnect the ASV connector.

NG → **REPAIR OR REPLACE HARNESS OR CONNECTOR**

OK

ES

3	CHECK HARNESS AND CONNECTOR (AIR SWITCHING VALVE - AIR INJECTION CONTROL DRIVER)

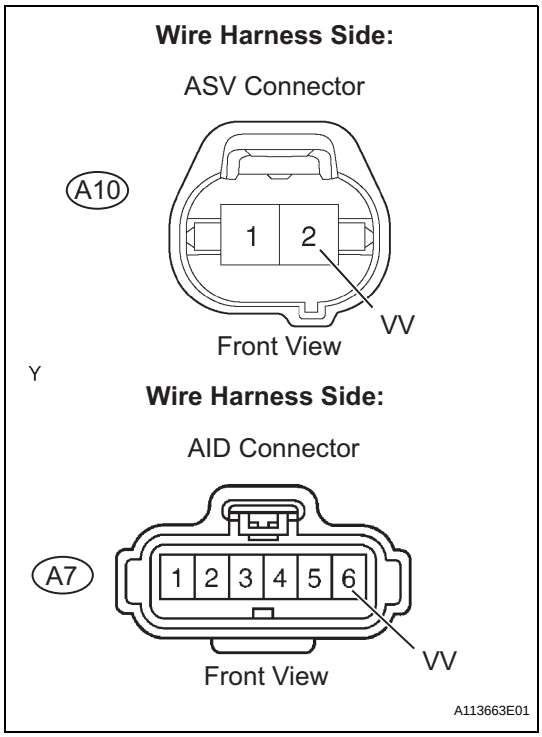

(a) Disconnect the A10 ASV connector.
(b) Disconnect the A7 AID connector.
(c) Check the resistance.

Standard Resistance

Tester Connections	Specified Conditions
ASV (A10-2) - AID (A7-6)	Below 1 Ω

(d) Reconnect the ASV connector.
(e) Reconnect the AID connector.

NG → **REPAIR OR REPLACE HARNESS OR CONNECTOR**

OK

REPLACE AIR INJECTION CONTROL DRIVER

DTC	P0418	Secondary Air Injection System Control "A" Circuit

DESCRIPTION

Refer to DTC P0412 (See page ES-189).

DTC No.	DTC Detection Conditions	Trouble Areas
P0418	After cold engine starts, all of following conditions met (1 trip detection logic): (a)Air Injection (AIR) system not operating (air pump OFF, Air Switching Valve [ASV] OFF) (b)Diagnostic signal from Air Injection Control Driver (AID) 20 % (c)Battery voltage 8 V or more	• Open in air pump drive circuit • Short between air pump drive and +B circuits • Air pump • AID • ECM
P0418	After cold engine starts, all of following conditions met (1 trip detection logic): (a)Air Injection (AIR) system operating (air pump ON, Air Switching Valve [ASV] ON) (b)Diagnostic signal from Air Injection Control Driver (AID) 20 % (c)Battery voltage 8 V or more	• Short between air pump drive circuit and body ground • Air pump • AID • ECM

ES

MONITOR DESCRIPTION

The Air Injection Control Driver (AID) detects open and short circuits according to the voltages of the air pump terminal (VB) and the Air Switching Valve (ASV) terminal (VV), and transmits diagnostic information as a signal to the ECM.

For a short time after cold engine starts, the ECM transmits command signals to the AID to drive the air pump and ASV.

The AID transmits an air pump malfunction signal to the ECM if either of the following conditions is met:

- The voltage at the AID terminal relating to the air pump is low despite the AID receiving command signals from the ECM to drive the air pump.
- The voltage at the AID terminal relating to the air pump is high despite the AID receiving no command signals from the ECM to drive the air pump.

The ECM sets the DTC based on diagnostic signals from the AID.

MONITOR STRATEGY

Related DTCs	P0418: Secondary air injection system air pump circuit range check
Required Sensors/Components (Main)	Air injection control driver
Required Sensors/Components (Related)	Air pump
Frequency of Operation	Once per drive cycle
Duration	3 seconds
MIL Operation	Immediate
Sequence of Operation	None

TYPICAL ENABLING CONDITIONS

Case 1:

Monitor runs whenever following DTCs not present	-
Secondary air injection system	Operating
Battery voltage	8 V or more
Ignition switch	ON
Time after ignition switch OFF to ON	0.5 seconds or more
Starter	OFF
Time after starter turned from ON to OFF	0.5 seconds or more

Case 2:

Monitor runs whenever following DTCs not present	-
Secondary air injection system	Not operating
Battery voltage	8 V or more
Ignition switch	ON
Time after ignition switch OFF to ON	0.5 seconds or more
Starter	OFF
Time after starter turned from ON to OFF	0.5 seconds or more

TYPICAL MALFUNCTION THRESHOLDS

Diagnostic signal duty ratio from air injection control driver	11 % or more, and 29 % or less

ES

COMPONENT OPERATING RANGE

Diagnostic signal duty ratio from air injection control driver	70 % or more, and 90 % or less when secondary air injection system operating. 0 % when secondary air injection system not operating.

WIRING DIAGRAM

Refer to DTC P0412 (See page ES-192).

HINT:
Diagnostic information output by the AID can be confirmed by connecting an oscilloscope to the diagnostic information terminal of the AID. Reading the waveform while performing the AIR system intrusive operation provided in the SYSTEM CHECK function, allows the possible trouble areas to be narrowed down.
(a) Start the engine and warm it up.
(b) Turn the ignition switch to OFF.
(c) Connect an intelligent tester to the DLC3.
(d) Connect oscilloscope probes to the AIDI and E1 terminals of the ECM.

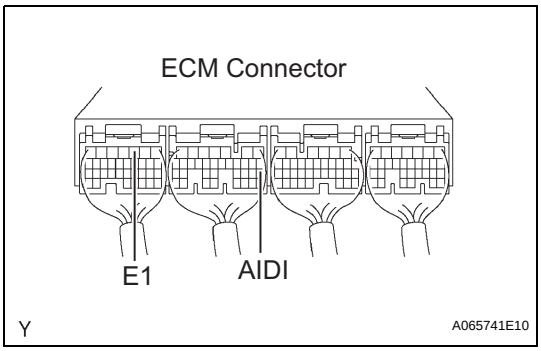

(e) Turn the ignition switch to ON and turn the tester ON.
(f) Select the following menu items: DIAGNOSIS / ENHANCED OBD II / SYSTEM CHECK / AIR INJ CHECK / MANUAL OPERATION / AP: ON, ASV: OPEN and AP: OFF, ASV CLOSE.
HINT:
When MANUAL OPERATION is selected, the tester initialization (atmospheric pressure measurement) is performed automatically. The initialization takes 10 seconds. After the initialization, AP and ASV operation can be selected.
(g) Start the engine.

(h) Perform the AIR system intrusive operation while the engine is idling.

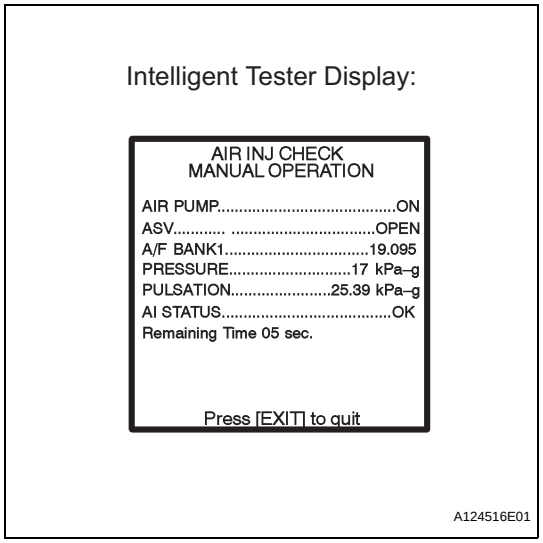

(i) Monitor the AID voltage output (duty ratio signal).

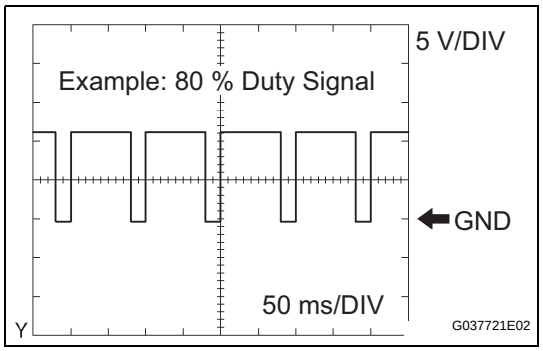

Oscilloscope range

Items	Contents
Terminals	CH1: AIDI - E1
Equipment Settings	5 V/Division, 20 to 50 ms/Division
Conditions	Idling

(j) Turn the ignition switch to OFF.

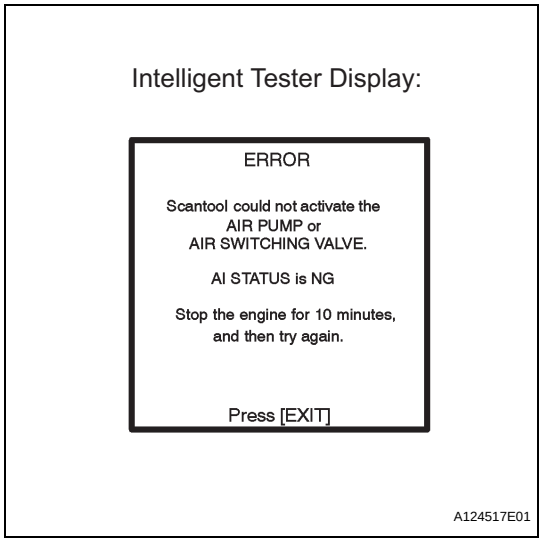

ES

NOTICE:

- **This AIR INJECTION CHECK only allows technicians to operate the AIR system for a maximum of 5 seconds. Furthermore, the check can only be performed up to 4 times per trip. If the test is repeated, intervals of at least 30 seconds are required between checks. While AIR system operation using the intelligent tester is prohibited, the tester display indicates the prohibition (WAIT or ERROR).**
  If an ERROR as shown in the illustration is displayed on the tester during the test, stop the engine for 10 minutes, and then try again.
- **Performing the AIR INJ CHECK repetitively may cause damage to the AIR system. If necessary, leave an interval of several minutes between SYSTEM CHECK operations to prevent the system from overheating.**
- **When performing the AIR INJ CHECK operation after the battery cable has been reconnected, wait for 7 minutes with the ignition switch turned to ON or the engine running.**
- **Turn the ignition switch to OFF when the AIR INJ CHECK operation finishes.**

AID Diagnostic Signal Waveforms	ECM Commands	DTCs (ECM Output)	Suspected Trouble Areas
100 % Duty Ratio See waveform 1	Any Air Injection (AIR) System operation	P1613	• Open in diagnostic signal circuit • Air Injection Control Driver (AID) • Open in AID+B circuit (AID power source) • Short between +B and diagnostic signal circuits
0 % Duty Ratio See waveform 2	AIR System: ON (Air pump ON, ASV ON)	P1613	• Open or short in air pump or Air Switching Valve (ASV) command signal circuit (ECM-AID) • Open in AID ground circuit • Short between diagnostic signal circuit and body ground • AID • ECM
	AIR System: OFF (Air pump OFF, ASV OFF)	-	Normal
20 % Duty Ratio See waveform 3	Air Pump: ON	P0418	Short between air pump drive circuit and body ground • Harness and connector (AID-Pump) • Air pump • AID • ECM
	Air Pump: OFF	P0418	Open in air pump drive circuit (AID-Pump), or short between air pump drive circuit and +B • Harness and connector (AID-Pump) • Air pump • AID • ECM

AID Diagnostic Signal Waveforms	ECM Commands	DTCs (ECM Output)	Suspected Trouble Areas
40 % Duty Ratio See waveform 4	ASV: ON	P0412	Short between ASV drive circuit and body ground • Harness and connector (AID-ASV) • ASV • AID • ECM
	ASV: OFF	P0412	Open in ASV drive circuit (AID-ASV), or short between ASV drive circuit and +B • Harness and connector (AID-ASV) • AID • ASV • ECM
80 % Duty Ratio See waveform 5	AIR System: OFF (Air pump OFF, ASV OFF)	P1613	• AID • ECM
	AIR System: ON (Air pump ON, ASV ON)	-	Normal
Other than above (other than 0, 20, 40, 80 and 100 % duty)	-	P1613	• AID • Open in AID ground circuit

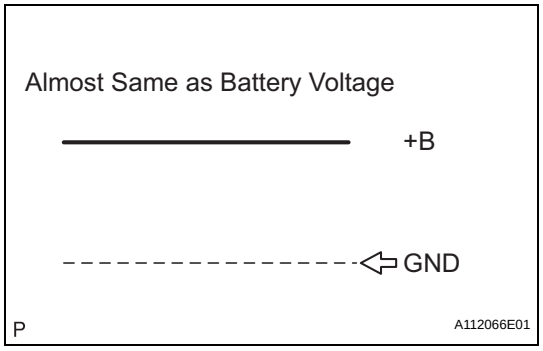

1. Waveform 1
100 % Duty Ratio

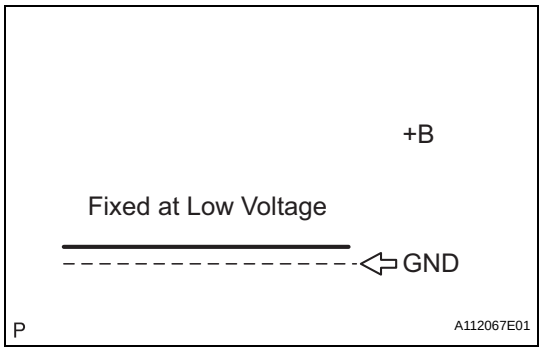

2. Waveform 2
0 % Duty Ratio

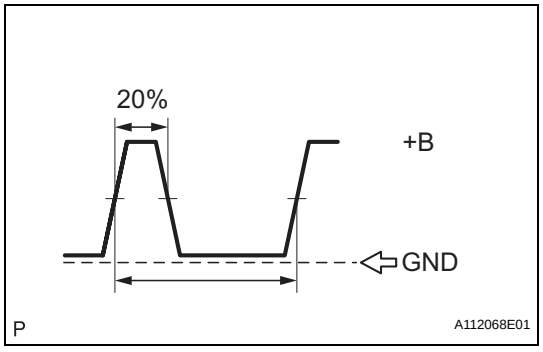

3. Waveform 3
20 % Duty Ratio

ES

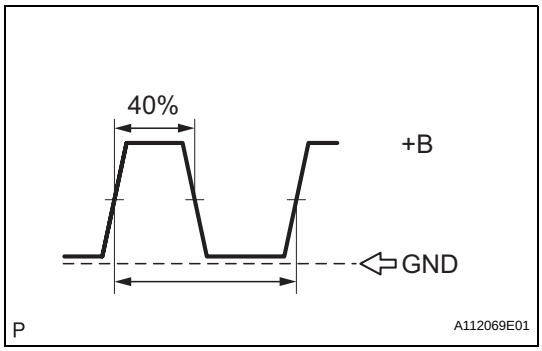

4. Waveform 4
40 % Duty Ratio

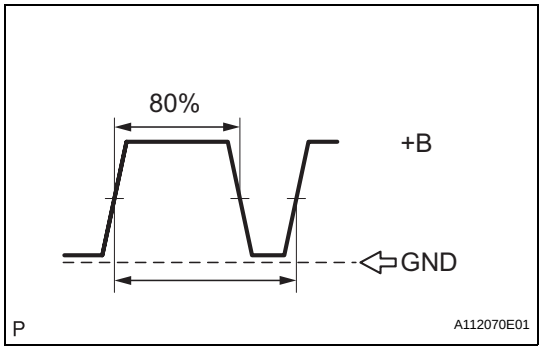

5. Waveform 5
80 % Duty Ratio

ES

HINT:

- By using an intelligent tester to perform the AIR INJ CHECK operation in the SYSTEM CHECK, the air-fuel ratio and the pressure in the secondary air injection system passage can be checked while the secondary air injection system is operating. This helps technicians to troubleshoot the system when it malfunctions.
- Read freeze frame data using an intelligent tester. Freeze frame data record the engine condition when malfunctions are detected. When troubleshooting, freeze frame data can help determine if the vehicle was moving or stationary, if the engine was warmed up or not, if the air-fuel ratio was lean or rich, and other data, from the time the malfunction occurred.

1	INSPECT AIR PUMP ASSEMBLY

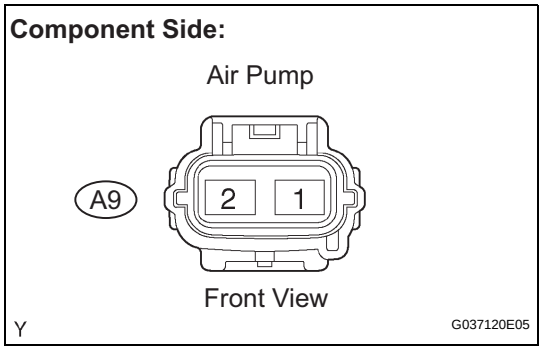

(a) Disconnect the A9 air pump connector.
(b) Measure the air pump resistance.
Standard Resistance

Tester Connections	Specified Conditions
Air pump (A9-1) - Air pump (A9-2)	0.4 to 10 Ω at 20°C (68°F)

(c) Reconnect the air pump connector.

NG → **REPLACE AIR PUMP ASSEMBLY**

OK

2 CHECK HARNESS AND CONNECTOR (AIR PUMP - BODY GROUND)

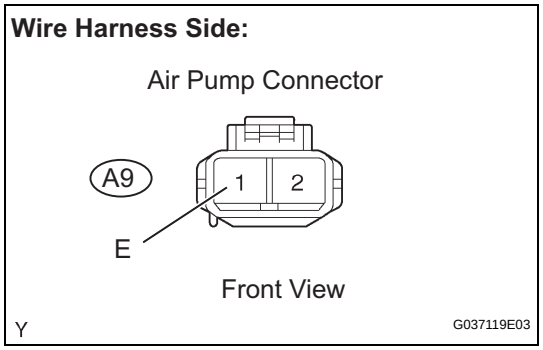

(a) Disconnect the A9 air pump connector.
(b) Check the resistance.
Standard Resistance

Tester Connections	Specified Conditions
Air Pump (A9-1) - Body ground	Below 1 Ω

(c) Reconnect the air pump connector.

NG → **REPAIR OR REPLACE HARNESS OR CONNECTOR**

OK

3 CHECK HARNESS AND CONNECTOR (AIR PUMP - AIR INJECTION CONTROL DRIVER)

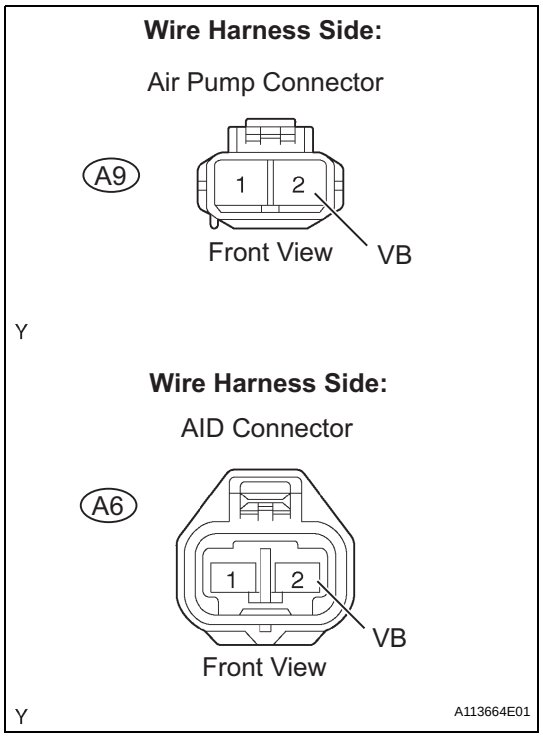

(a) Disconnect the A9 air pump connector.
(b) Disconnect the A6 AID connector.
(c) Check the resistance.
Standard Resistance

Tester Connections	Specified Conditions
Air Pump (A9-2) - AID (A6-2)	Below 1 Ω

(d) Reconnect the air pump connector.
(e) Reconnect the AID connector.

NG → **REPAIR OR REPLACE HARNESS OR CONNECTOR**

OK

REPLACE AIR INJECTION CONTROL DRIVER

ES

DTC	P0420	Catalyst System Efficiency Below Threshold (Bank 1)

MONITOR DESCRIPTION

The ECM uses sensors mounted in front of and behind the Three-Way Catalytic Converter (TWC) to monitor its efficiency.
The first sensor, the Air-Fuel Ratio (A/F) sensor, sends pre-catalyst information to the ECM. The second sensor, the Heated Oxygen (HO2) sensor, sends post-catalyst information to the ECM.
In order to detect any deterioration in the TWC, the ECM calculates the Oxygen Storage Capacity (OSC) of the TWC. This calculation is based on the voltage output of the HO2 sensor while performing active air-fuel ratio control, rather than the conventional detecting method, which uses the locus ratio.
The OSC value is an indication of the oxygen storage capacity of the TWC. When the vehicle is being driven with a warm engine, active air-fuel ratio control is performed for approximately 15 to 20 seconds. When it is performed, the ECM deliberately sets the air-fuel ratio to lean or rich levels. If a rich-lean cycle of the HO2 sensor is long, the OSC becomes greater. There is a direct correlation between the OSCs of the HO2 sensor and the TWC.
The ECM uses the OSC value to determine the state of the TWC. If any deterioration has occurred, it illuminates the MIL and sets the DTC.

DTC No.	DTC Detection Conditions	Trouble Areas
P0420	OSC value smaller than standard value under active air-fuel ratio control (2 trip detection logic)	• Front exhaust pipe • Gas leakage from exhaust system • Air-Fuel Ratio (A/F) sensor (sensor 1) • Heated Oxygen (HO2) sensor (sensor 2)

MONITOR STRATEGY

Related DTCs	P0420: Catalyst Deterioration
Required Sensors/Components (Main)	TWC
Required Sensors/Components (Related)	A/F sensor, HO2 sensor, intake air temperature sensor, mass air flow meter, crankshaft position sensor and engine coolant temperature sensor
Frequency of Operation	Once per driving cycle
Duration	20 seconds
MIL Operation	2 driving cycles
Sequence of Operation	None

TYPICAL ENABLING CONDITIONS

Monitor runs whenever following DTCs not present	P0011 (VVT System 1 - Advance) P0012 (VVT System 1 - Retard) P0021 (VVT System 2 - Advance) P0022 (VVT System 2 - Retard) P0031, P0032, P0051, P0052 (A/F sensor heater - Sensor 1) P0037, P0038, P0057, P0058 (HO2 sensor heater - Sensor 2) P0100 - P0103 (MAF meter) P0115 - P0118 (ECT sensor) P0120 - P0223, P2135 (TP sensor) P0125 (Insufficient ECT for closed loop) P0136, P0156 (HO2 Sensor - Sensor 2) P0171, P0172 (Fuel system) P0300 - P0308 (Misfire) P0335 (CKP sensor) P0340, P0341 (CMP sensor) P0351 - P0356 (Ignitor) P0500 (VSS) P2196, P2198 (A/F sensor - rationality) P2440 (A/R control valve stuck open) P2441 (A/R control valve stuck close) P2444 (AIP stuck ON) P2445 (AIP stuck OFF) P2A00, P2A03 (A/F sensor - slow response)
Battery voltage	11 V or more
Engine coolant temperature sensor	70°C (158°F) or more
Idling	OFF
Engine RPM	Less than 4,000 rpm
A/F sensor status	Activated
Fuel system status	Closed loop
A/F sensor monitor	Completed
Heated oxygen sensor monitor	Completed
Engine load	10 to 80 %
Mass air flow rate	6.0 to 35 g/sec
Estimated catalyst temperature	Front catalyst: 650° to 840°C (1,202° to 1,544°F) Rear catalyst: 400° to 760°C (752° to 1,400°F)
Shift position	4th or 5th (for M/T) 3rd, 4th or 5th (for A/T)

TYPICAL MALFUNCTION THRESHOLDS

Oxygen Storage Capacity (OSC) of Three-Way Catalytic Converter (TWC)	Less than 0.08 g

MONITOR RESULT

Refer to Checking Monitor Status (See page ES-21).

CONDITIONING FOR SENSOR TESTING

HINT:

Perform the operation with the engine speeds and time durations described below prior to checking the waveforms of the A/F and HO2 sensors. This is in order to activate the sensors sufficiently to obtain the appropriate inspection results.

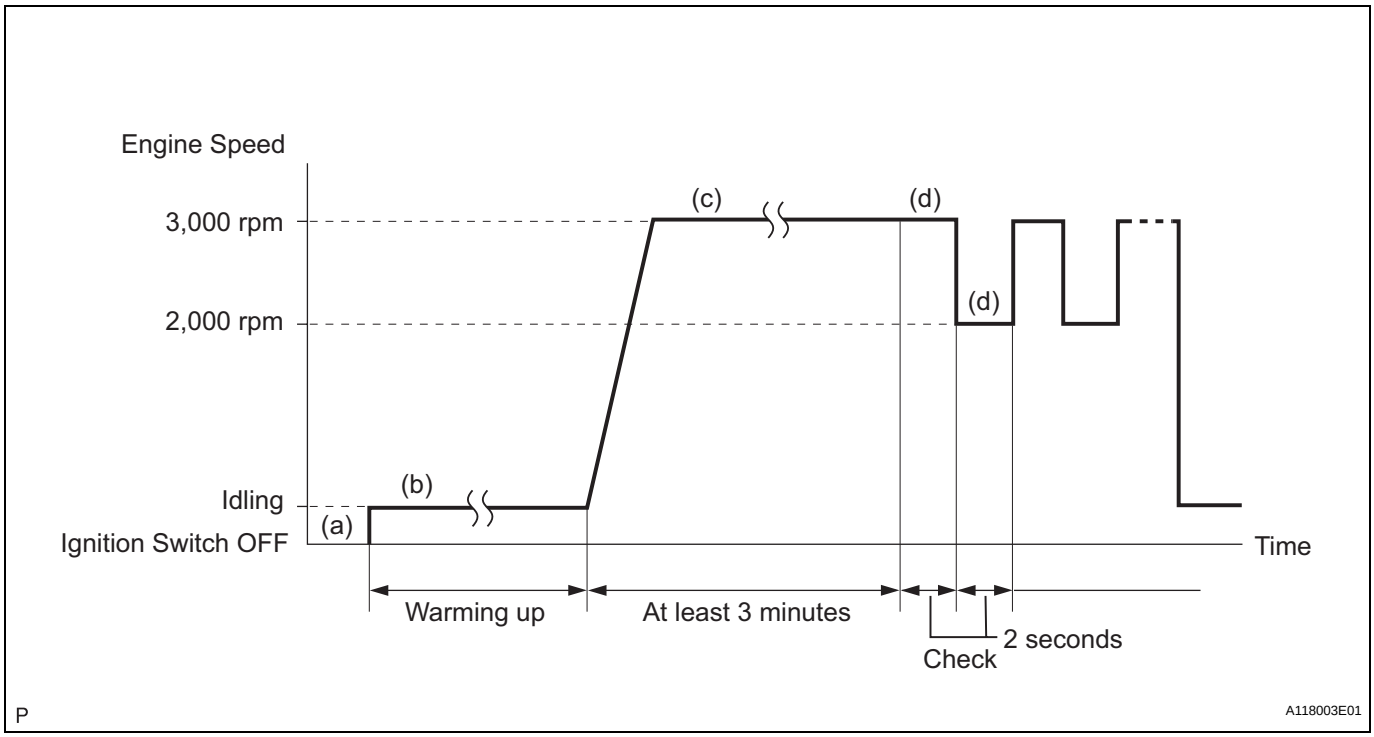

(a) Connect an intelligent tester to the DLC3.
(b) Start the engine and warm it up with all the accessories switched OFF, until the engine coolant temperature stabilizes.
(c) Run the engine at an engine speed of between 2,500 rpm and 3,000 rpm for at least 3 minutes.
(d) While running the engine at 3,000 rpm for 2 seconds and 2,000 rpm for 2 seconds, check the waveforms of the A/F and HO2 sensors using the tester (refer to Conditioning for Sensor Testing).
HINT:

- If either of the voltage outputs of the Air-Fuel Ratio (A/F) or Heated Oxygen (HO2) sensor does not fluctuate, or either of the sensors makes a noise, the sensor may be malfunctioning.
- If the voltage outputs of both the sensors remain lean or rich, the air-fuel ratio may be extremely lean or rich. In such cases, perform the following A/F CONTROL using an intelligent tester.
- If the Three-Way Catalytic Converter (TWC) has deteriorated, the HO2 sensor (located behind the TWC) voltage output fluctuates up and down frequently, even under normal driving conditions (active air-fuel ratio control is not performed).

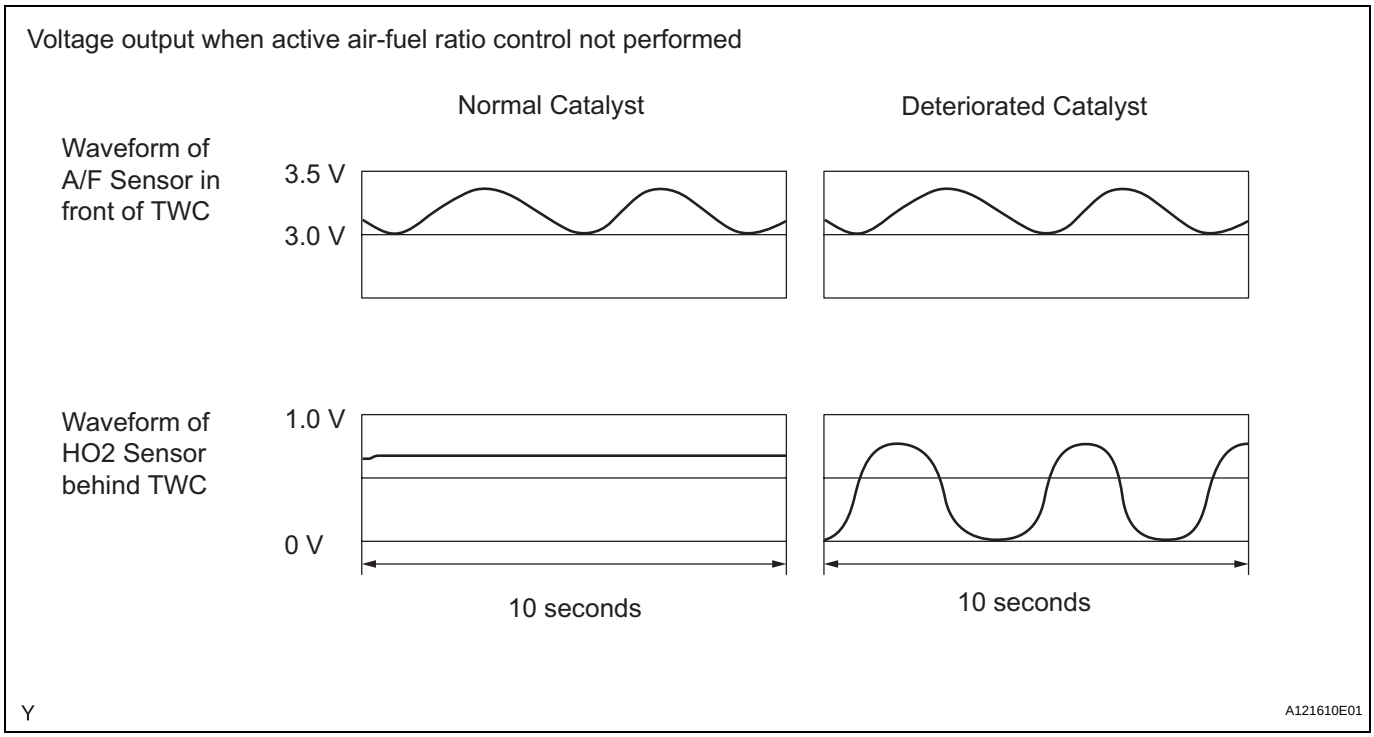

CONDITIONING FOR SENSOR TESTING

HINT:

- Intelligent tester only:
- Malfunctioning areas can be identified by performing the A/F CONTROL function provided in the ACTIVE TEST. The A/F CONTROL function can help to determine whether the Air-Fuel Ratio (A/F) sensor, Heated Oxygen (HO2) sensor and other potential trouble areas are malfunctioning.
- The following instructions describe how to conduct the A/F CONTROL operation using an intelligent tester.

(a) Connect an intelligent tester to the DLC3.
(b) Start the engine and turn the tester ON.
(c) Warm up the engine at an engine speed of 2,500 rpm for approximately 90 seconds.
(d) On the tester, select the following menu items: DIAGNOSIS / ENHANCED OBD II / ACTIVE TEST / A/F CONTROL.
(e) Perform the A/F CONTROL operation with the engine in an idling condition (press the RIGHT or LEFT button to change the fuel injection volume).
(f) Monitor the voltage outputs of the A/F and HO2 sensors (AFS B1S1 and OS2 B1S2) displayed on the tester.

HINT:

- The A/F CONTROL operation lowers the fuel injection volume by 12.5 % or increases the injection volume by 25 %.
- Each sensor reacts in accordance with increases and decreases in the fuel injection volume.

Standard Voltage

Tester Display (Sensor)	Injection Volumes	Status	Voltages
AFS B1S1 (A/F)	+25 %	Rich	Less than 3.0
AFS B1S1 (A/F)	-12.5 %	Lean	More than 3.35
O2S B1S2 (HO2)	+25 %	Rich	More than 0.5
O2S B1S2 (HO2)	-12.5 %	Lean	Less than 0.4

NOTICE:
The Air-Fuel Ratio (A/F) sensor has an output delay of a few seconds and the Heated Oxygen (HO2) sensor has a maximum output delay of approximately 20 seconds.

Case	A/F Sensor (Sensor 1) Output Voltage		HO2 Sensor (Sensor 2) Output Voltage		Main Suspected Trouble Areas
1	Injection Volume +25 % -12.5 %		Injection Volume +25 % -12.5 %		-
	Output Voltage More than 3.35 V Less than 3.0 V		Output Voltage More than 0.5 V Less than 0.4 V		
2	Injection Volume +25 % -12.5 %		Injection Volume +25 % -12.5 %		• A/F sensor • A/F sensor heater • A/F sensor circuit
	Output Voltage Almost no reaction		Output Voltage More than 0.5 V Less than 0.4 V		
3	Injection Volume +25 % -12.5 %		Injection Volume +25 % -12.5 %		• HO2 sensor • HO2 sensor heater • HO2 sensor circuit
	Output Voltage More than 3.35 V Less than 3.0 V		Output Voltage Almost no reaction		
4	Injection volume +25 % -12.5 %		Injection Volume +25 % -12.5 %		• Injector • Fuel pressure • Gas leakage from exhaust system (Air-fuel ratio extremely lean or rich)
	Output Voltage Almost no reaction		Output Voltage Almost no reaction		

- Following the A/F CONTROL procedure enables technicians to check and graph the voltage outputs of both the A/F and HO2 sensors.
- To display the graph, select the following menu items on the tester: DIAGNOSIS / ENHANCED OBD II / ACTIVE TEST / A/F CONTROL / USER DATA / AFS B1S1 and O2S B1S2, and press the YES button and then the ENTER button followed by the F4 button.

HINT:
Read freeze frame data using an intelligent tester. Freeze frame data record the engine condition when malfunctions are detected. When troubleshooting, freeze frame data can help determine if the vehicle was moving or stationary, if the engine was warmed up or not, if the air-fuel ratio was lean or rich, and other data, from the time the malfunction occurred.

1	CHECK ANY OTHER DTCS OUTPUT (IN ADDITION TO DTC P0420)

(a) Connect an intelligent tester to the DLC3.
(b) Turn the ignition switch to ON and turn the tester ON.
(c) Select the following menu items: DIAGNOSIS / ENHANCED OBD II / DTC INFO / CURRENT CODES.
(d) Read DTCs.

Result

Display (DTC Output)	Proceed To
P0420	A

Display (DTC Output)	Proceed To
P0420 and other DTCs	B

HINT:
If any DTCs other than P0420 are output, troubleshoot those DTCs first.

B → GO TO DTC CHART

A

2 PERFORM ACTIVE TEST USING INTELLIGENT TESTER (A/F CONTROL)

(a) Connect the intelligent tester to the DLC3.
(b) Start the engine and turn the tester ON.
(c) Warm up the engine at an engine speed of 2,500 rpm for approximately 90 seconds.
(d) On the tester, select the following menu items: DIAGNOSIS / ENHANCED OBD II / ACTIVE TEST / A/F CONTROL.
(e) Perform the A/F CONTROL operation with the engine in an idling condition (press the RIGHT or LEFT button to change the fuel injection volume).
(f) Monitor the voltage outputs of the A/F and HO2 sensors (AFS B1S1 and O2S B1S2) displayed on the tester.

HINT:
- The A/F CONTROL operation lowers the fuel injection volume by 12.5 % or increases the injection volume by 25 %.
- Each sensor reacts in accordance with increases and decreases in the fuel injection volume.

ES

Standard Voltage

Tester Display (Sensor)	Injection Volumes	Status	Voltages
AFS B1S1 (A/F)	+25 %	Rich	Less than 3.0
AFS B1S1 (A/F)	-12.5 %	Lean	More than 3.35
O2S B1S2 (HO2)	+25 %	Rich	More than 0.5
O2S B1S2 (HO2)	-12.5 %	Lean	Less than 0.4

Result

Status AFS B1S1	Status O2S B1S2	A/F Condition and A/F and HO2 Sensors Condition	Misfires	Main Suspected Trouble Areas	Proceed To
Lean/Rich	Lean/Rich	Normal	-	• Three-Way Catalytic Converter (TWC) • Gas leakage from exhaust system	A
Lean	Lean/Rich	A/F sensor malfunction	-	• A/F sensor	B

Status AFS B1S1	Status O2S B1S2	A/F Condition and A/F and HO2 Sensors Condition	Misfires	Main Suspected Trouble Areas	Proceed To
Rich	Lean/Rich	A/F sensor malfunction	-	• A/F sensor	B
Lean/Rich	Lean	HO2 sensor malfunction	-	• HO2 sensor • Gas leakage from exhaust system	C
Lean/Rich	Rich	HO2 sensor malfunction	-	• HO2 sensor • Gas leakage from exhaust system	C
Lean	Lean	Actual air-fuel ratio lean	May occur	• Extremely rich or lean actual air-fuel ratio • Gas leakage from exhaust system	A
Rich	Rich	Actual air-fuel ratio rich	-	• Extremely rich or lean actual air-fuel ratio • Gas leakage from exhaust system	A

ES

Lean: During A/F CONTROL, the A/F sensor output voltage (AFS) is consistently more than 3.35 V, and the HO2 sensor output voltage (O2S) is consistently less than 0.4 V.
Rich: During A/F CONTROL, the AFS is consistently less than 3.0 V, and the O2S is consistently more than 0.5 V.
Lean/Rich: During A/F CONTROL of the ACTIVE TEST, the output voltage of the HO2 sensor alternates correctly.

B → **CHECK AND REPLACE AIR FUEL RATIO SENSOR**

C → **CHECK AND REPLACE HEATED OXYGEN SENSOR, AND CHECK AND REPAIR EXHAUST GAS LEAKAGE**

A

3 CHECK FOR EXHAUST GAS LEAKAGE

OK:
No gas leakage.

NG → **REPAIR OR REPLACE EXHAUST GAS LEAKAGE POINT**

OK

REPLACE THREE-WAY CATALYTIC CONVERTER

DTC	P043E	Evaporative Emission System Reference Orifice Clog Up

DTC	P043F	Evaporative Emission System Reference Orifice High Flow

DTC SUMMARY

DTCs	Monitoring Items	Malfunction Detection Conditions	Trouble Areas	Detection Timings	Detection Logic
P043E	Reference orifice clogged	Leak detection pump creates negative pressure through reference orifice, and EVAP system pressure measured to determine leak pressure standard. 0.02 inch leak criterion measured at start and at end of leak check. If system pressure lower than -4.85 kPa (-36.38 mmHg)*, ECM determines that reference orifice has clogging malfunction.	• Canister pump module • Connector/wire harness (Canister pump module - ECM) • ECM • Leakage from EVAP system	While ignition switch OFF	2 trip
P043F	Reference orifice high-flow	Leak detection pump creates negative pressure through reference orifice, and EVAP system pressure measured to determine leak pressure standard. 0.02 inch leak criterion measured at start and at end of leak check. If system pressure higher than -1.06 kPa (-7.95 mmHg)*, ECM determines that reference orifice has high-flow malfunction.	• Canister pump module • Connector/wire harness (Canister pump module - ECM) • ECM • Leakage from EVAP system	While ignition switch OFF	2 trip

*: The threshold values vary according to the atmospheric pressure measured at the beginning of the EVAP system monitor. The values described in the table above are based on an atmospheric pressure of 100 kPa (750.1 mmHg) (absolute pressure).
HINT:
The reference orifice is located inside the canister pump module.

DESCRIPTION

The circuit description can be found in the EVAP (Evaporative Emission) System (see page ES-392).

Refer to the EVAP System (see page ES-397).

MONITOR DESCRIPTION

5 hours* after the ignition switch is turned to OFF, the electric leak detection pump creates negative pressure (vacuum) in the EVAP (Evaporative Emission) system. The ECM monitors for leaks and actuator malfunctions based on the EVAP pressure.

HINT:

*: If the engine coolant temperature is not below 35°C (95°F) 5 hours after the ignition switch is turned off, the monitor check starts 2 hours later. If it is still not below 35°C (95°F) 7 hours after the ignition switch is turned off, the monitor check starts 2.5 hours later.

Sequence	Operations	Descriptions	Duration
-	ECM activation	Activated by soak timer, 5 hours (7 or 9.5 hours) after ignition switch turned to OFF.	-
A	Atmospheric pressure measurement	Vent valve turned OFF (vent) and EVAP system pressure measured by ECM in order to register atmospheric pressure. If pressure in EVAP system not between 70 kPa and 110 kPa (525 mmHg and 825 mmHg), ECM cancels EVAP system monitor.	10 seconds
B	First 0.02 inch leak criterion (reference pressure) measurement	In order to determine 0.02 inch leak criterion, leak detection pump creates negative pressure (vacuum) through reference orifice and then ECM checks if leak detection pump and vent valve operate normally.	60 seconds
C	EVAP system pressure measurement	Vent valve turned ON (closed) to shut EVAP system. Negative pressure (vacuum) created in EVAP system, and EVAP system pressure then measured. Write down measured value as they will be used in leak check. If EVAP pressure does not stabilize within 15 minutes, ECM cancels EVAP system monitor.	15 minutes*
D	Purge VSV monitor	Purge VSV opened and then EVAP system pressure measured by ECM. Large increase indicates normal.	10 seconds
E	Second 0.02 inch leak criterion (reference pressure) measurement	After second 0.02 inch leak pressure measurement, leak check performed by comparing first and second 0.02 inch leak criterion. If stabilized system pressure higher than second 0.02 inch leak criterion, ECM determines that EVAP system leaking.	60 seconds
F	Final check	Atmospheric pressure measured and then monitoring result recorded by ECM.	-

* If only a small amount of fuel is in the fuel tank, it takes longer for the EVAP pressure to stabilize.

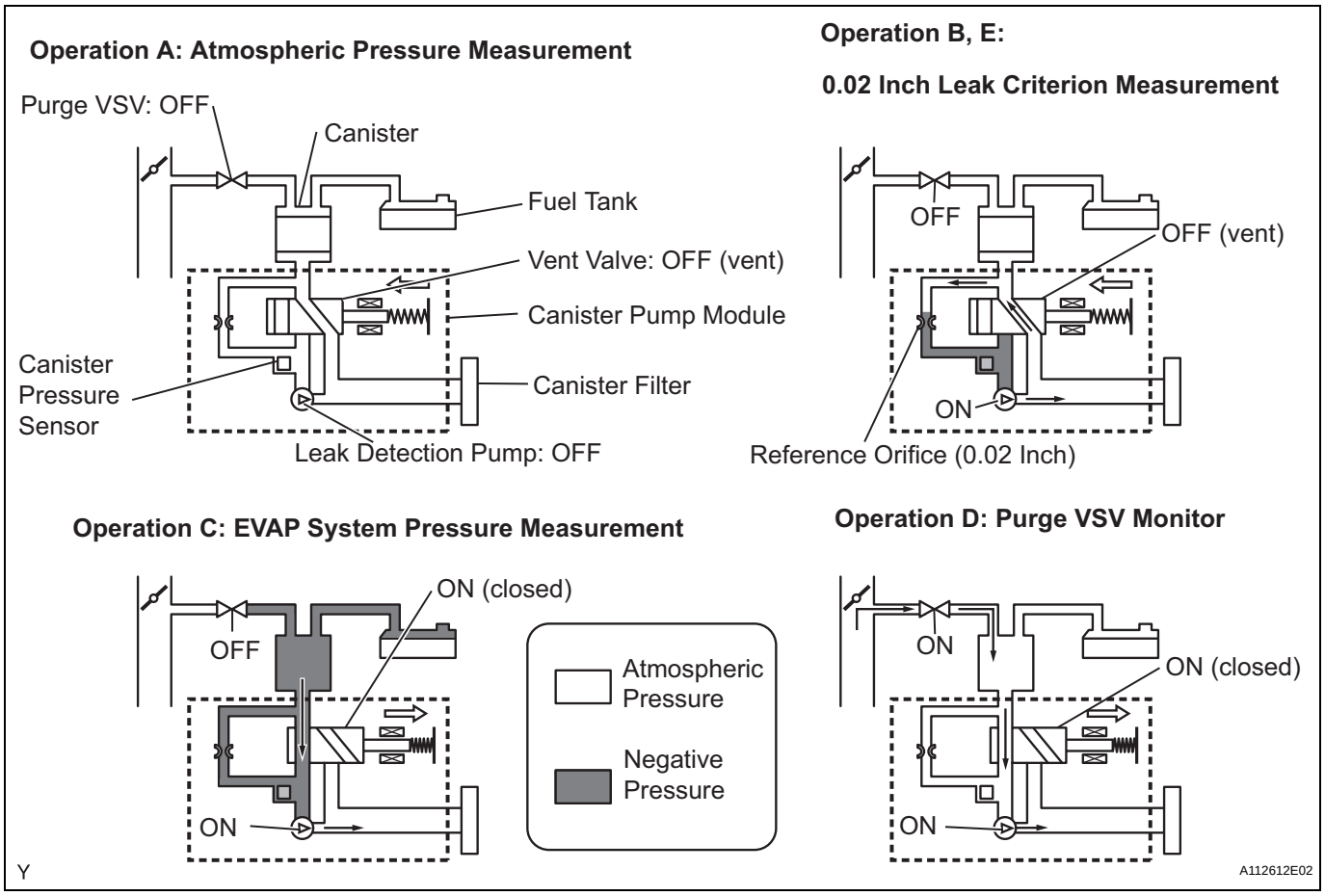

(a) P043E: Reference orifice clogged

In operation B, the leak detection pump creates negative pressure (vacuum) through the reference orifice. The EVAP system pressure is then measured by the ECM, using the pressure sensor, to determine the 0.02 inch leak criterion. If the pressure is lower than -4.85 kPa (-36.38 mmHg)*, the ECM interprets this as a clog malfunction in the reference orifice, and stops the EVAP (Evaporative Emission) system monitor. The ECM then illuminates the MIL and sets the DTC (2 trip detection logic).

*: The threshold varies according to the atmospheric pressure measured in operation A. The value described above is based on an atmospheric pressure of 100 kPa (750.1 mmHg): absolute pressure.

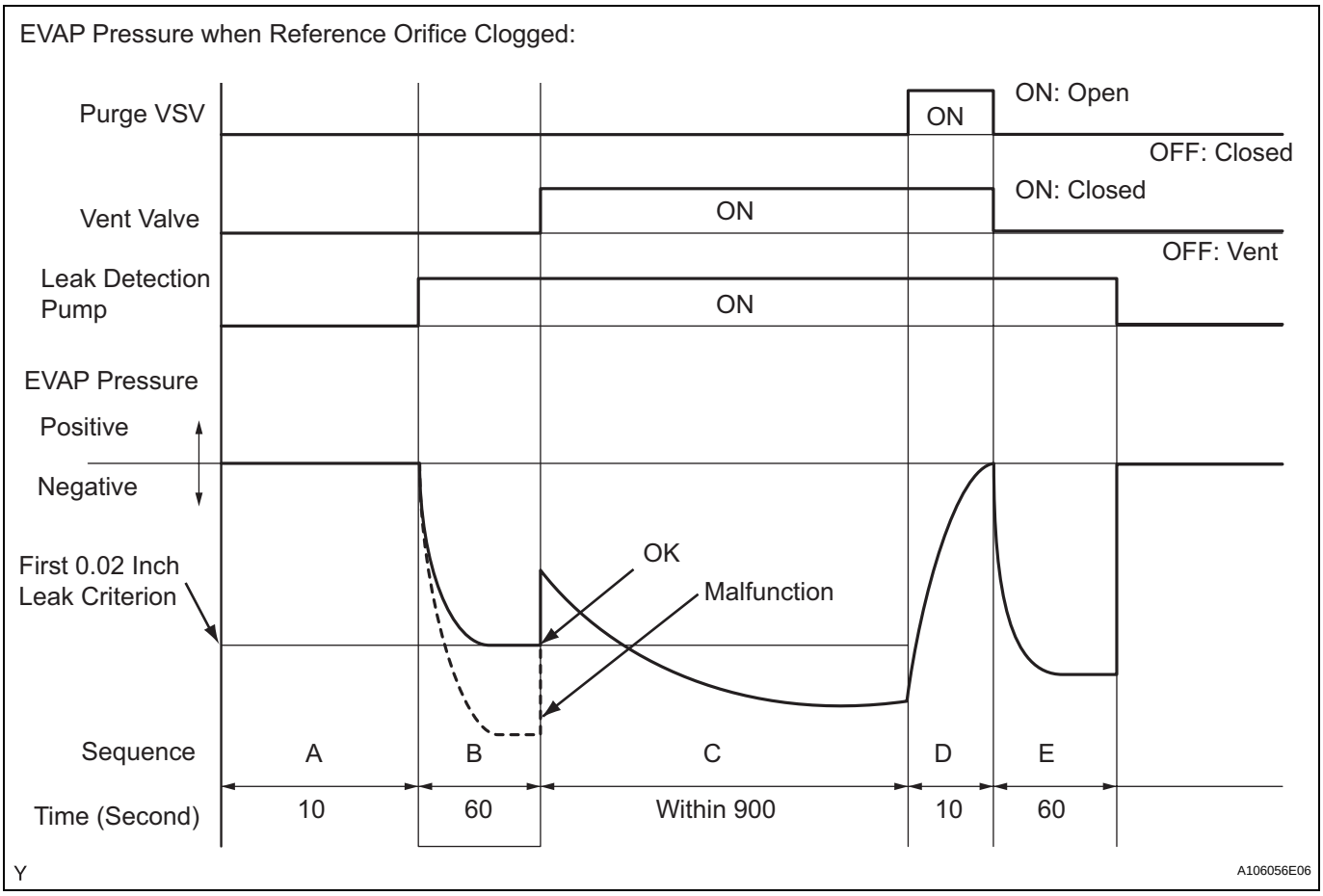

(b) P043F: Reference orifice high-flow

In operation B, the leak detection pump creates negative pressure (vacuum) through the reference orifice. The EVAP system pressure is then measured by the ECM using the canister pressure sensor to determine the 0.02 inch leak criterion. If the pressure is higher than -1.06 kPa (-7.95 mmHg)*, the ECM interprets this as a high-flow malfunction in the reference orifice, and stops the EVAP system monitor. The ECM then illuminates the MIL and sets the DTC (2 trip detection logic).

*: The threshold varies according to the atmospheric pressure measured in operation A. The value described above is based on a atmospheric pressure of 100 kPa (750.1 mmHg): absolute pressure.

EVAP Pressure when Reference Orifice High-flow Malfunction:

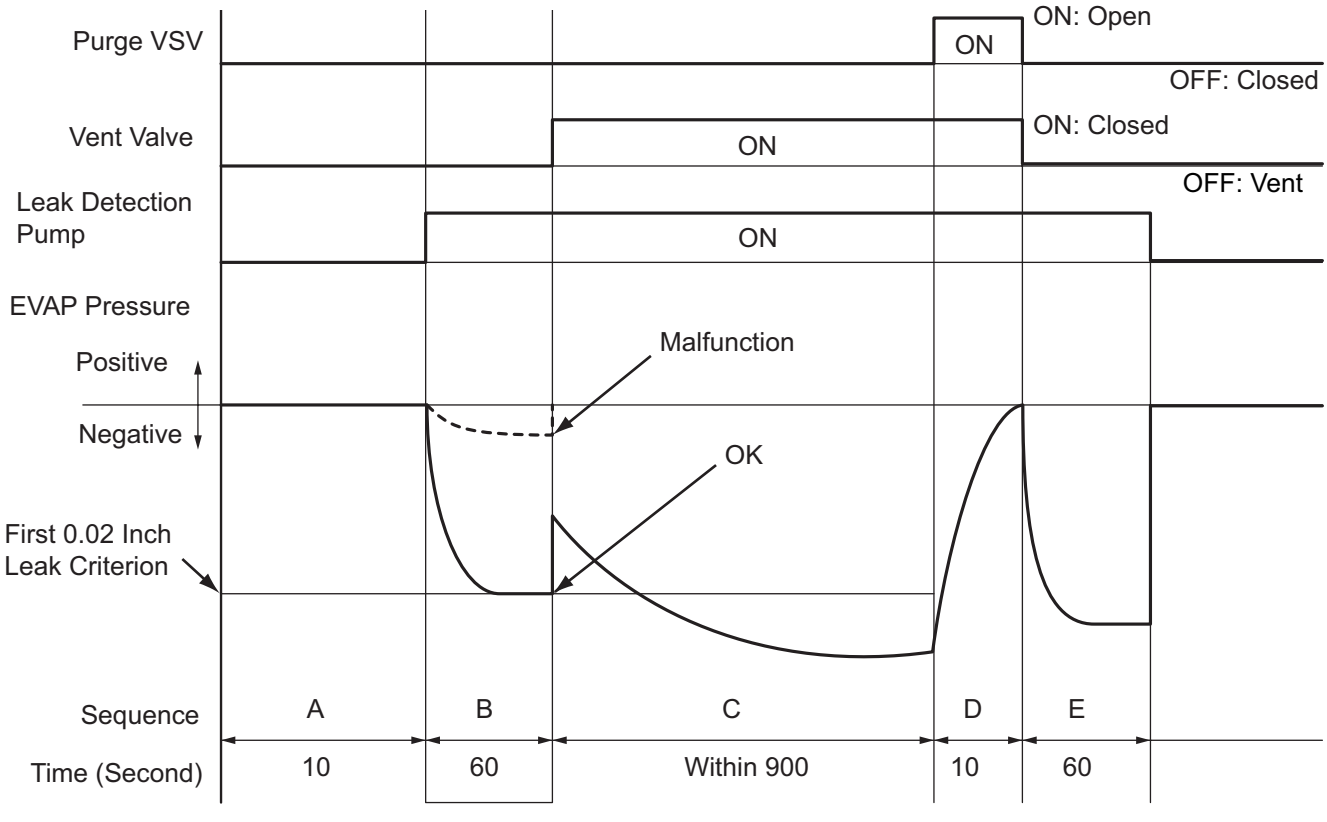

OBD II MONITOR SPECIFICATIONS

MONITOR STRATEGY

Required Sensors/Components	Canister pump module
Frequency of Operation	Once per driving cycle
Duration	Within 15 minutes (varies with amount of fuel in tank)
MIL Operation	2 driving cycles
Sequence of Operation	None

TYPICAL ENABLING CONDITIONS

Monitor runs whenever following DTCs not present	None
EVAP key-off monitor runs when all of following conditions met	-
Atmospheric pressure	70 to 110 kPa (525 to 825 mmHg)
Battery voltage	10.5 V or more
Vehicle speed	Below 2.5 mph (4 km/h)
Ignition switch	OFF
FTP sensor malfunction (P0450, P0451, P0452 and P0453)	Not detected
Purge VSV	Not operated by scan tool
Vent valve	Not operated by scan tool
Leak detection pump	Not operated by scan tool
Both of following conditions met before IG switch OFF	Conditions 1 and 2
1. Duration that vehicle driven	5 minutes or more
2. Purge flow	Executed

ECT	4.4° to 35°C (40° to 95°F)
IAT	4.4° to 35°C (40° to 95°F)
Time after engine stopped	5 hours

Example of restart time

First time	7 hours
Second time	9 hours and 30 minutes

1. Key-off monitor sequence 1 to 8

1. Atmospheric pressure

Next sequence is run if following condition set	-
Atmospheric pressure change for 10 second	Less than 0.3 kPa (2.25 mmHg) for 1 second

2. First reference pressure

Next sequence is run if all of following conditions set	Condition 1, 2 and 3
1. FTP when 4 seconds after reference pressure measurement	-1 kPa (-7.5 mmHg) or less
2. Reference pressure	-4.85 to -1.057 kPa (-33.38 to -7.93 mmHg)
3. Reference pressure	Saturated within 60 seconds

3. Vent valve stuck closed check

Next sequence is run if following condition set	-
FTP change for 10 seconds after vent valve ON (closed)	0.3 kPa (2.25 mmHg) or more

4. Vacuum introduction and leak

Next sequence is run if both of following conditions set	Condition 1 and 2
1. Vacuum introduction time	12 minutes or less
2. FTP	Saturated within 12 minutes

5. Purge VSV stuck closed check

Next sequence is run if following condition set	-
FTP change for 10 seconds after purge VSV ON (open)	0.3 kPa (2.25 mmHg) or more

6. Second reference pressure measurement

Next sequence is run if all of following conditions set	Condition 1, 2, 3 and 4
1. FTP when 4 seconds after reference pressure measurement	-1 kPa (-7.5 mmHg) or less
2. Reference pressure	-4.85 to -1.057 kPa (-36.4 to -7.92 mmHg)
3. Reference pressure	Saturated within 60 seconds
4. Reference pressure difference between first and second	0.7 kPa (5.25 mmHg) or less

7. Leak check

Next sequence is run if following condition set	-
FTP when vacuum introduction was complete	Second reference pressure or less

8. Atmospheric pressure

Monitor is complete if following condition set	-
Atmospheric pressure difference between sequence 1 and 8	0.3 kPa (2.25 mmHg) or less

TYPICAL MALFUNCTION THRESHOLDS

"Saturated" indicates that the EVAP pressure change is less than 0.1 kPa (0.75 mmHg) in 30 seconds.

One of following conditions met	-
EVAP pressure just after reference pressure measurement start	More than -1 kPa (-7.5 mmHg)
Reference pressure	Less than -4.85 kPa (-36.4 mmHg)
Reference pressure	-1.057 kPa (-7.9 mmHg) or more
Reference pressure	Not saturated within 60 seconds

Difference between first and second reference pressure	0.7 kPa (5.3 mmHg) or more

MONITOR RESULT

Refer to Checking Monitor Status (See page ES-21) or (See page ES-422).

DTC	P0441	Evaporative Emission Control System Incorrect Purge Flow

DTC SUMMARY

DTCs.	Monitoring Items	Malfunction Detection Conditions	Trouble Areas	Detection Timings	Detection Logic
P0441	Purge VSV (Vacuum Switching Valve) stuck open	Leak detection pump creates negative pressure (vacuum) in EVAP system and EVAP system pressure measured. 0.02 inch leak criterion measured at start and at end of leak check. If stabilized pressure higher than [second 0.02 inch leak criterion x 0.2], ECM determines that purge VSV stuck open	• Purge VSV • Connector/wire harness (Purge VSV - ECM) • ECM • Canister pump module • Leakage from EVAP system	While ignition switch OFF	2 trip
P0441	Purge VSV stuck closed	After EVAP leak check performed, purge VSV turned ON (open), and atmospheric air introduced into EVAP system. 0.02 inch leak criterion measured at start and at end of the check. If pressure does not return to near atmospheric pressure, ECM determines that purge VSV stuck closed	• Purge VSV • Connector/wire harness (Purge VSV - ECM) • ECM • Canister pump module • Leakage from EVAP system	While ignition switch OFF	2 trip
P0441	Purge flow	While engine running, following conditions successively met: • Negative pressure not created in EVAP system when purge VSV turned ON (open) • EVAP system pressure change less than 0.5 kPa (3.75 mmHg) when vent valve turned ON (closed) • Atmospheric pressure change before and after purge flow monitor less than 0.1 kPa (0.75 mmHg)	• Purge VSV • Connector/wire harness (Purge VSV - ECM) • Leakage from EVAP line (Purge VSV - Intake manifold) • ECM	While engine running	2 trip

DESCRIPTION

The circuit description can be found in the EVAP (Evaporative Emission) System (see page ES-392).

Refer to the EVAP System (see page ES-397).

MONITOR DESCRIPTION

The two monitors, Key-Off and Purge Flow, are used to detect malfunctions relating to DTC P0441. The Key-Off monitor is initiated by the ECM internal timer, known as the soak timer, 5 hours* after the ignition switch is turned to OFF. The purge flow monitor runs while the engine is running.

1. KEY-OFF MONITOR

   5 hours* after the ignition switch is turned to OFF, the electric leak detection pump creates negative pressure (vacuum) in the EVAP (Evaporative Emission) system. The ECM monitors for leaks and actuator malfunctions based on the EVAP pressure.

   HINT:

   *: If the engine coolant temperature is not below 35°C (95°F) 5 hours after the ignition switch is turned off, the monitor check starts 2 hours later. If it is still not below 35°C (95°F) 7 hours after the ignition switch is turned off, the monitor check starts 2.5 hours later.

Sequence	Operations	Descriptions	Duration
-	ECM activation	Activated by soak timer, 5 hours (7 or 9.5 hours) after ignition switch turned to OFF.	-
A	Atmospheric pressure measurement	Vent valve turned OFF (vent) and EVAP system pressure measured by ECM in order to register atmospheric pressure. If pressure in EVAP system not between 70 kPa and 110 kPa (525 mmHg and 825 mmHg), ECM cancels EVAP system monitor.	10 seconds
B	First 0.02 inch leak criterion (reference pressure) measurement	In order to determine 0.02 inch leak criterion, leak detection pump creates negative pressure (vacuum) through reference orifice and then ECM checks if leak detection pump and vent valve operate normally.	60 seconds
C	EVAP system pressure measurement	Vent valve turned ON (closed) to shut EVAP system. Negative pressure (vacuum) created in EVAP system, and EVAP system pressure then measured. Write down measured value as they will be used in leak check. If EVAP pressure does not stabilize within 15 minutes, ECM cancels EVAP system monitor.	15 minutes*
D	Purge VSV monitor	Purge VSV opened and then EVAP system pressure measured by ECM. Large increase indicates normal.	10 seconds

Sequence	Operations	Descriptions	Duration
E	Second 0.02 inch leak criterion (reference pressure) measurement	After second 0.02 inch leak criterion measurement, leak check performed by comparing first and second 0.02 inch leak criterion. If stabilized system pressure higher than second 0.02 inch leak criterion, ECM determines that EVAP system leaking.	60 seconds
F	Final check	Atmospheric pressure measured and then monitoring result recorded by ECM.	-

HINT:

* If only a small amount of fuel is in the fuel tank, it takes longer for the EVAP pressure to stabilize.

ES

Operation A: Atmospheric Pressure Measurement

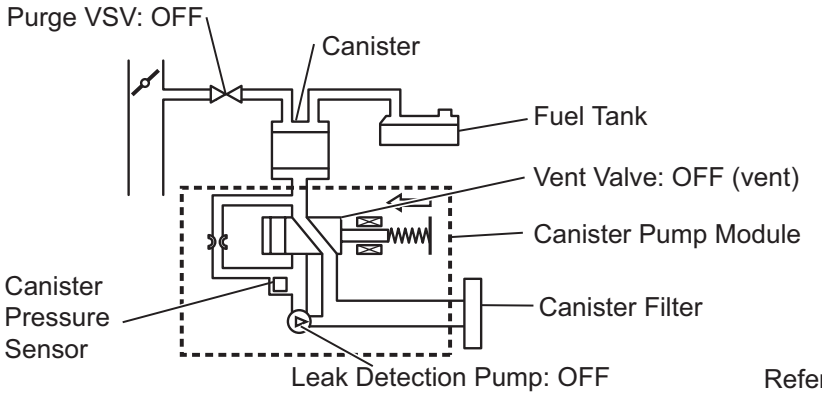

Operation B, E:

0.02 Inch Leak Criterion Measurement

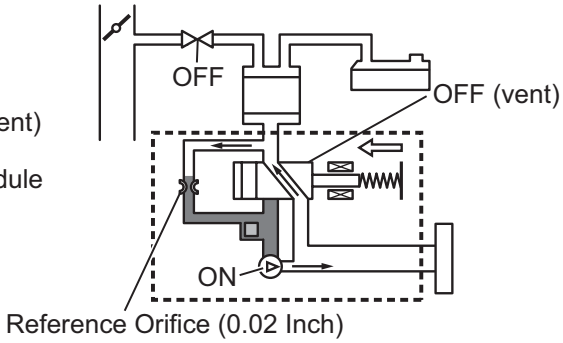

Operation C: EVAP System Pressure Measurement

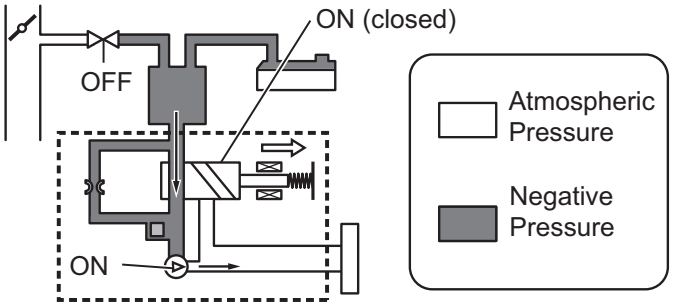

Operation D: Purge VSV Monitor

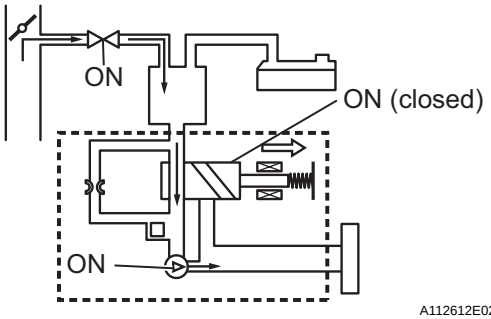

Y

A112612E02

(a) Purge VSV stuck open

In operation C, the leak detection pump creates negative pressure (vacuum) in the EVAP (Evaporative Emission) system. The EVAP system pressure is then measured by the ECM using the canister pressure sensor. If the stabilized system pressure is higher than [second 0.02 inch leak criterion x 0.2], the ECM interprets this as the purge VSV (Vacuum Switching Valve) being stuck open. The ECM illuminates the MIL and sets the DTC (2 trip detection logic).

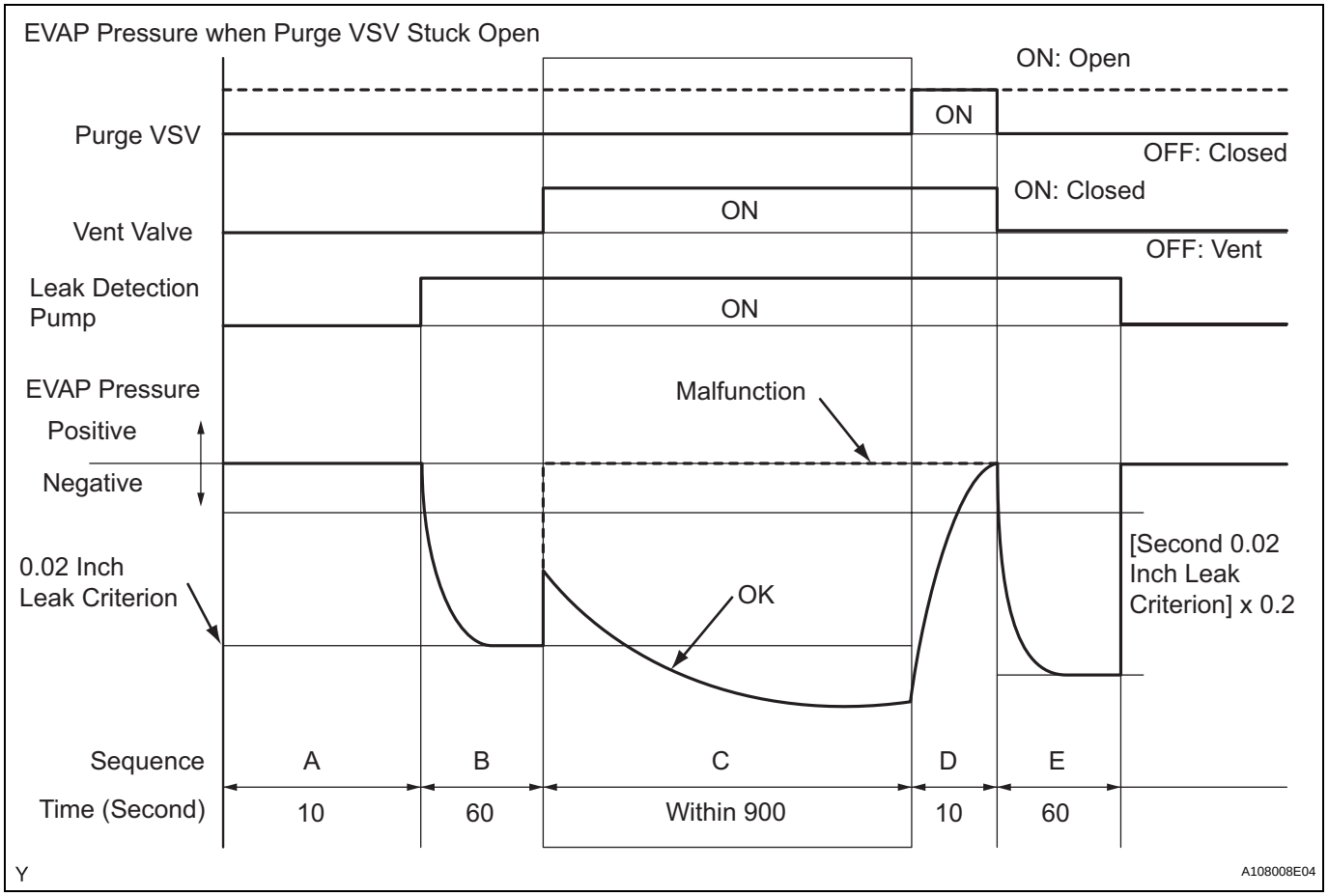

ES

(b) Purge VSV stuck closed

In operation D, the canister pressure sensor measures the EVAP (Evaporative Emission) system pressure. The pressure measurement for purge VSV monitor is begun when the purge VSV is turned ON (open) after the EVAP leak check. When the measured pressure indicates an increase of 0.3 kPa (2.25 mmHg) or more, the purge VSV is functioning normally. If the pressure does not increase, the ECM interprets this as the purge VSV being stuck closed. The ECM illuminates the MIL and sets the DTC (2 trip detection logic).

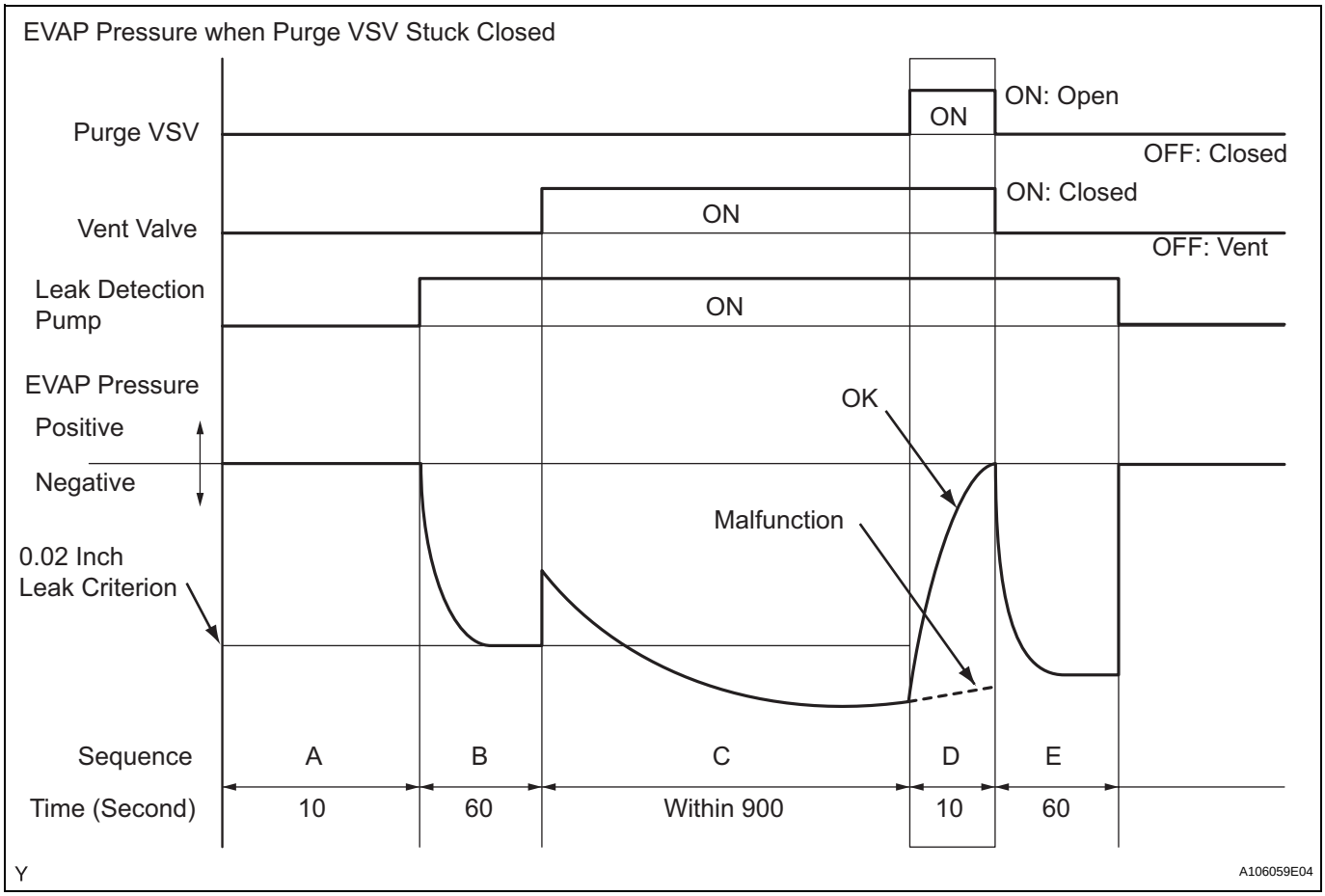

2. PURGE FLOW MONITOR

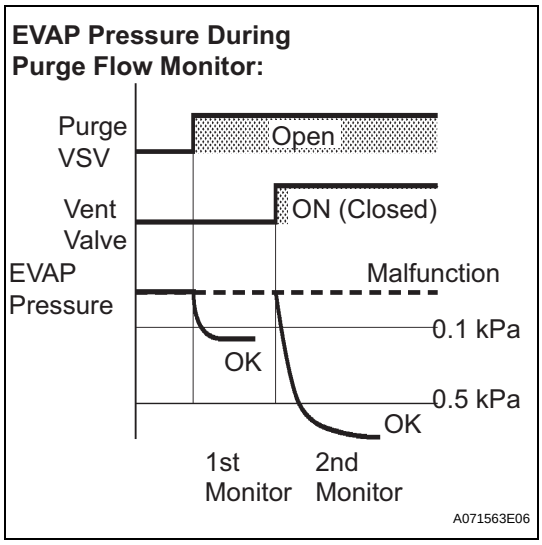

The purge flow monitor consists of the two step monitors. The 1st monitor is conducted every time and the 2nd monitor is activated if necessary.

- The 1st monitor
  While the engine is running and the purge VSV (Vacuum Switching Valve) is ON (open), the ECM monitors the purge flow by measuring the EVAP pressure change. If negative pressure is not created, the ECM begins the 2nd monitor.
- The 2nd monitor
  The vent valve is turned ON (closed) and the EVAP pressure is then measured. If the variation in the pressure is less than 0.5 kPa (3.75 mmHg), the ECM interprets this as the purge VSV being stuck closed, and illuminates the MIL and sets DTC P0441 (2 trip detection logic).

Atmospheric pressure check:
In order to ensure reliable malfunction detection, the variation between the atmospheric pressures, before and after conduction of the purge flow monitor, is measured by the ECM.

OBD II MONITOR SPECIFICATIONS

1. Key-off Monitor

Monitor Strategy

Required Sensors/Components	Purge VSV and Canister pump module
Frequency of Operation	Once per driving cycle
Duration	Within 15 minutes (varies with fuel in tank)
MIL Operation	2 driving cycles
Sequence of Operation	None

Typical Enabling Conditions

Monitor runs whenever following DTCs not present	None
EVAP key-off monitor runs when all of following conditions met	-
Atmospheric pressure	70 to 110 kPa (525 to 825 mmHg)
Battery voltage	10.5 V or more
Vehicle speed	Below 2.5 mph (4 km/h)
Ignition switch	OFF
FTP sensor malfunction (P0450, P0451, P0452 and P0453)	Not detected
Purge VSV	Not operated by scan tool
Vent valve	Not operated by scan tool
Leak detection pump	Not operated by scan tool
Both of following conditions met before IG switch OFF	Conditions 1 and 2
1. Duration that vehicle driven	5 minutes or more
2. Purge flow	Executed
ECT	4.4° to 35°C (40° to 95°F)
IAT	4.4° to 35°C (40° to 95°F)
Time after engine stopped	5 hours

Example of restart time

First time	7 hours
Second time	9 hours and 30 minutes

2. Key-off monitor sequence 1 to 8

1. Atmospheric pressure

Next sequence is run if following condition set	-
Atmospheric pressure change for 10 second	Less than 0.3 kPa (2.25 mmHg) for 1 second

2. First reference pressure

Next sequence is run if all of following conditions set	Condition 1, 2 and 3
1. FTP when 4 seconds after reference pressure measurement	-1 kPa (-7.5 mmHg) or less
2. Reference pressure	-4.85 to -1.057 kPa (-33.38 to -7.93 mmHg)
3. Reference pressure	Saturated within 60 seconds

3. Vent valve stuck closed check

Next sequence is run if following condition set	-
FTP change for 10 seconds after vent valve ON (closed)	0.3 kPa (2.25 mmHg) or more

4. Vacuum introduction and leak

Next sequence is run if both of following conditions set	Condition 1 and 2
1. Vacuum introduction time	12 minutes or less
2. FTP	Saturated within 12 minutes

5. Purge VSV stuck closed check

Next sequence is run if following condition set	-
FTP change for 10 seconds after purge VSV ON (open)	0.3 kPa (2.25 mmHg) or more

6. Second reference pressure measurement

Next sequence is run if all of following conditions set	Condition 1, 2, 3 and 4
1. FTP when 4 seconds after reference pressure measurement	-1 kPa (-7.5 mmHg) or less
2. Reference pressure	-4.85 to -1.057 kPa (-36.4 to -7.92 mmHg)
3. Reference pressure	Saturated within 60 seconds
4. Reference pressure difference between first and second	0.7 kPa (5.25 mmHg) or less

7. Leak check

Next sequence is run if following condition set	-
FTP when vacuum introduction was complete	Second reference pressure or less

8. Atmospheric pressure

Monitor is complete if following condition set	-
Atmospheric pressure difference between sequence 1 and 8	0.3 kPa (2.25 mmHg) or less

Typical Malfunction Thresholds

Purge VSV stuck open	-
FTP when vacuum introduction complete	Higher than reference pressure x 0.2
Purge VSV stuck closed	-
FTP change for 10 seconds after purge VSV ON (open)	Less than 0.3 kPa (2.25 mmHg)

"Saturated" indicates that the EVAP pressure change is less than 0.1 kPa (0.75 mmHg) in 30 seconds.

OBD II MONITOR SPECIFICATIONS

1. Purge Flow Monitor

Monitor Strategy

Required Sensors/Components	Purge VSV and canister pump module
Frequency of Operation	Once per driving cycle
Duration	Within 30 seconds
MIL Operation	2 driving cycles
Sequence of Operation	None

Typical Enabling Conditions

Monitor runs whenever following DTCs not present	None
Engine	Running
ECT	4.4°C (40°F) or more
IAT	4.4°C (40°F) or more
FTP sensor malfunction	Not detected
Purge VSV	Not operated by scan tool
EVAP system check	Not operated by scan tool
Battery voltage	10 V or more

Purge duty cycle	8 % or more

Typical Malfunction Thresholds

Both of following conditions are met	Conditions 1 or 2
1. FTP change when purge operation started	Less than 0.1 kPa (0.75 mmHg)
2. FTP change during purge operation when vent valve closed	Less than 0.5 kPa (3.75 mmHg)

MONITOR RESULT

Refer to Checking Monitor Status (See page ES-422) or (See page ES-21).

DTC	P0450	Evaporative Emission Control System Pressure Sensor / Switch

DTC	P0451	Evaporative Emission Control System Pressure Sensor Range / Performance

DTC	P0452	Evaporative Emission Control System Pressure Sensor / Switch Low Input

DTC	P0453	Evaporative Emission Control System Pressure Sensor / Switch High Input

ES

DTC SUMMARY

DTC	Monitoring Items	Malfunction Detection Conditions	Trouble Areas	Detection Timings	Detection Logic
P0450	Canister pressure sensor voltage abnormal fluctuation	Sensor output rapidly fluctuates beyond upper and lower malfunction thresholds for 0.5 seconds.	• Canister pump module • ECM	• EVAP monitoring (ignition OFF) • Ignition ON	1 trip
P0451	Canister pressure sensor noise	Sensor output voltage fluctuates frequently in certain time period.	• Canister pump module • Connector/wire harness (Canister pump module - ECM) • ECM	• EVAP monitoring (ignition OFF) • Engine running	2 trip
P0451	Canister pressure sensor voltage fixed	Sensor output voltage does not vary in certain time period.	• Canister pump module • Connector/wire harness (Canister pump module - ECM) • ECM	• EVAP monitoring (ignition OFF)	2 trip
P0452	Canister pressure sensor voltage low	Sensor output less than 42.1 kPa for 0.5 seconds.	• Canister pump module • Connector/wire harness (Canister pump module - ECM) • ECM	• Ignition ON • EVAP monitoring (ignition OFF)	1 trip
P0453	Canister pressure sensor voltage high	Sensor output more than 123.8 kPa for 0.5 seconds.	• Canister pump module • Connector/wire harness (Canister pump module - ECM) • ECM	• Ignition ON • EVAP monitoring (ignition OFF)	1 trip

HINT:
The canister pressure sensor is built into the canister pump module.

DESCRIPTION

The circuit description can be found in the EVAP (Evaporative Emission) System (see page ES-392).

MONITOR DESCRIPTION

1. DTC P0450: Canister pressure sensor output abnormal fluctuation
   If the canister pressure sensor output rapidly fluctuates between less than 42.1 kPa and more than 123.8 kPa, the ECM interprets this as an open or short circuit malfunction in the canister pressure sensor or its circuit, and stops the EVAP (Evaporative Emission) system monitor. The ECM then illuminates the MIL and sets the DTC (1 trip detection logic).
2. DTC P0451: Canister pressure sensor noise or stuck
   If the canister pressure sensor voltage output fluctuates rapidly for 10 seconds, the ECM stops the EVAP system monitor. The ECM interprets this as noise from the canister pressure sensor, and stops the EVAP system monitor. The ECM then illuminates the MIL and sets the DTC.
   Alternatively, if the sensor voltage output does not change for 10 seconds, the ECM interprets this as the sensor being stuck, and stops the monitor. The ECM then illuminates the MIL and sets the DTC. (Both the malfunctions are detected by 2 trip detection logic).
3. DTC P0452: Canister pressure sensor output low
   If the canister pressure sensor output is below 42.1 kPa, the ECM interprets this as an open or short circuit malfunction in the canister pressure sensor or its circuit, and stops the EVAP system monitor. The ECM then illuminates the MIL and sets the DTC (1 trip detection logic).
4. DTC P0453: Canister pressure sensor output high
   If the canister pressure sensor output is 123.8 kPa or more, the ECM interprets this as an open or short circuit malfunction in the canister pressure sensor or its circuit, and stops the EVAP system monitor. The ECM then illuminates the MIL and sets the DTC (1 trip detection logic).

MONITOR STRATEGY

Required Sensors/Components	Canister pump module
Frequency of Operation	Once per driving cycle: P0451 sensor fixed Continuous: P0451 sensor noise, P0450, P0452 and P0453
Duration	-
MIL Operation	Immediate: P0450, P0452 and P0453 2 driving cycles: P0451
Sequence of Operation	None

TYPICAL ENABLING CONDITIONS

P0451 (Noise monitor):

Monitor runs whenever these DTCs not present	None
Atmospheric pressure (absolute pressure)	70 kPa (525 mmHg) or more, less than 110 kPa (825 mmHg)
Battery voltage	10.5 V or more
Intake air temperature	4.4°to 35°C (40° to 95°F)
Either of following conditions met	A or B
A. Engine	Running
B. Soak time (ignition switch OFF time)	5 hours

Example of restart time

First time	7 hours
Second time	9 hours and 30 minutes

P0451 (Stuck monitor):

Monitor runs whenever these DTCs not present	None
Atmospheric pressure (absolute pressure)	Less than 70 kPa (525 mmHg), or 110 kPa (825 mmHg) or more
Battery voltage	10.5 V or more
Intake air temperature	4.4°to 35°C (40° to 95°F)
Soak time (ignition switch OFF time)	5 hours

Example of restart time

First time	7 hours
Second time	9 hours and 30 minutes

P0450, P0452 and P0453:

Monitor runs whenever these DTCs not present	None
Either of following conditions met	(a) or (b)
(a) Ignition switch	ON
(b) Soak timer	ON

TYPICAL MALFUNCTION THRESHOLDS

P0450: Canister pressure sensor chattering	-
Canister pressure sensor output	Less than 42.1 kPa, or more than 123.8 kPa

ES

P0451: Canister pressure sensor noise	-
Pressure variation indicated by Canister pressure sensor in 10 seconds	More than +- 0.3 kPa (+- 2.25 mmHg) 10 times

P0451: Canister pressure sensor fixed	-
0.02 inch leak criterion variation indicated by canister pressure sensor in 10 seconds	Less than 0.65 kPa (4.87 mmHg)

P0452: Canister pressure sensor low	-
Canister pressure sensor output	Less than 42.1 kPa

P0453: Canister pressure sensor high	-
Canister pressure sensor output	More than 123.8 kPa

WIRING DIAGRAM

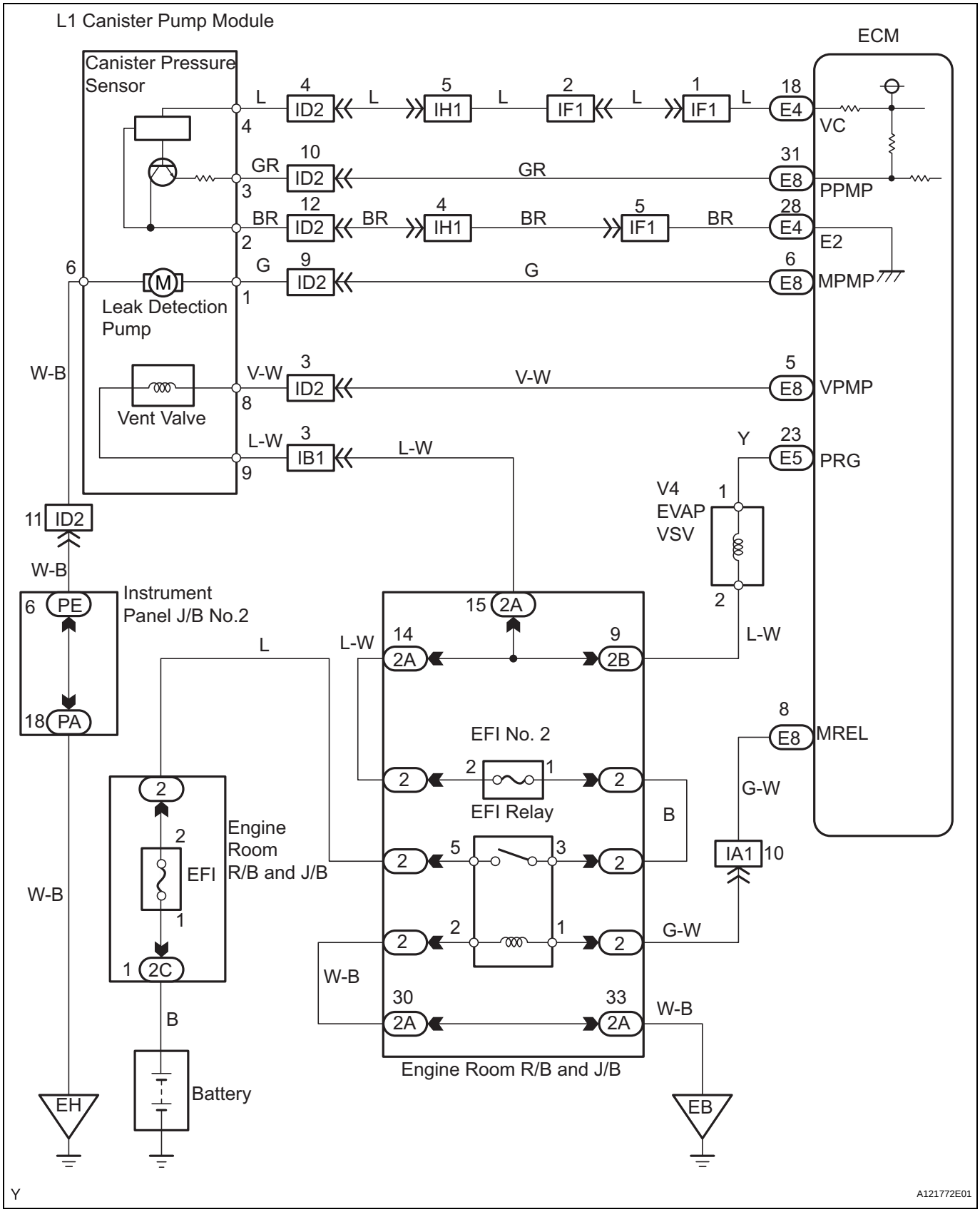

NOTICE:

- **When a vehicle is brought into the workshop, leave it as it is. Do not change the vehicle condition. For example, do not tighten the fuel tank cap.**

- **Do not disassemble the canister pump module.**
- **An intelligent tester is required to conduct the following diagnostic troubleshooting procedure.**

1	CONFIRM DTC AND EVAP PRESSURE

(a) Connect an intelligent tester to the DLC3.
(b) Turn the ignition switch to ON (do not start the engine).
(c) Turn the tester ON.
(d) Select the following menu items: DIAGNOSIS / ENHANCED OBD II / DTC INFO / CURRENT CODES.
(e) Read DTCs.
(f) Select the following menu items: DIAGNOSIS / ENHANCED OBD II / DATA LIST / EVAP / VAPOR PRESS.
(g) Read the EVAP (Evaporative Emission) pressure displayed on the tester.

ES

Result

Display (DTC Output)	Test Results	Suspected Trouble Areas	Proceed To
P0451	-	Canister pressure sensor	C
P0452	Less than 45 kpa (430 mmHg)	• Wire harness/connector (ECM - Canister pressure sensor) • Canister pressure sensor • Short in ECM circuit	A
P0453	More than 120 kPa (900 mmHg)	• Wire harness/connector (ECM - Canister pressure sensor) • Canister pressure sensor • Open in ECM circuit	B

B → **Go to step 4**

C → **GO TO EVAP SYSTEM (EVAP SYSTEM INSPECTION PROCEDURE)**

A

2	CHECK HARNESS AND CONNECTOR (CANISTER PUMP MODULE - ECM)

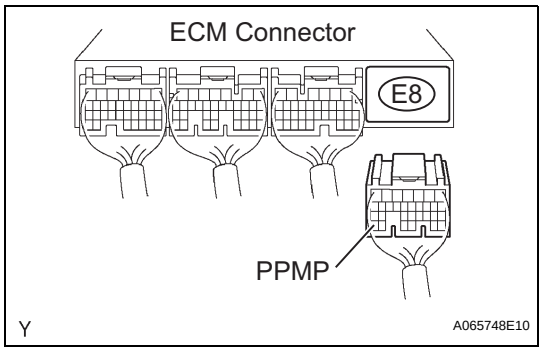

(a) Turn the ignition switch to OFF.
(b) Disconnect the E8 ECM connector.
(c) Measure the resistance between PPMP terminal of the ECM connector and the body ground.

Result

Test Results	Suspected Trouble Areas	Proceed To
10 Ω or less	• Wire harness/connector (ECM - Canister pressure sensor) • Short in canister pressure sensor circuit	A
10 kΩ or more	• Wire harness/connector (ECM - Canister pressure sensor) • Short in ECM circuit	B

(d) Reconnect the ECM connector.

B → **Go to step 7**

A

ES

3 CHECK HARNESS AND CONNECTOR (CANISTER PUMP MODULE - ECM)

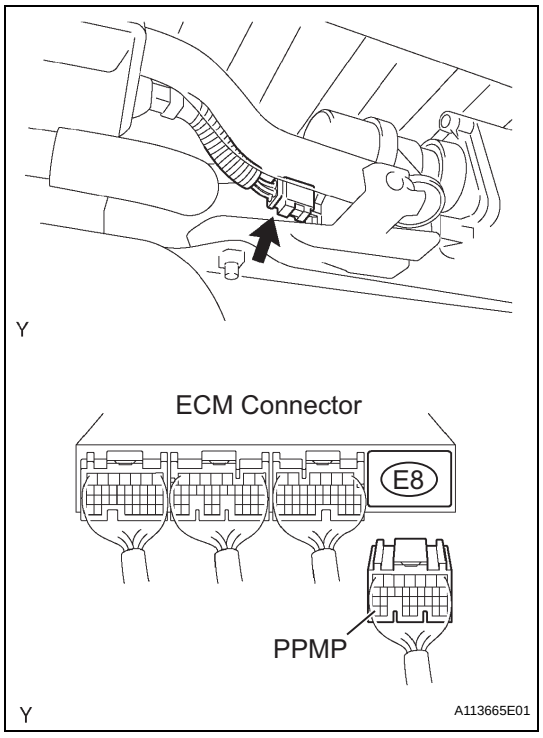

(a) Disconnect the L1 canister connector.
(b) Disconnect the E8 ECM connector.
(c) Check the resistance between PPMP terminal of the ECM connector and the body ground.

Result

Test Results	Suspected Trouble Areas	Proceed To
10 kΩ or more	Short in canister pressure sensor circuit	A
10 Ω or less	Short in wire harness/connector (ECM - Canister pressure sensor)	B

A → **Go to step 5**

B → **Go to step 6**

4	CHECK HARNESS AND CONNECTOR (CANISTER PUMP MODULE - ECM)

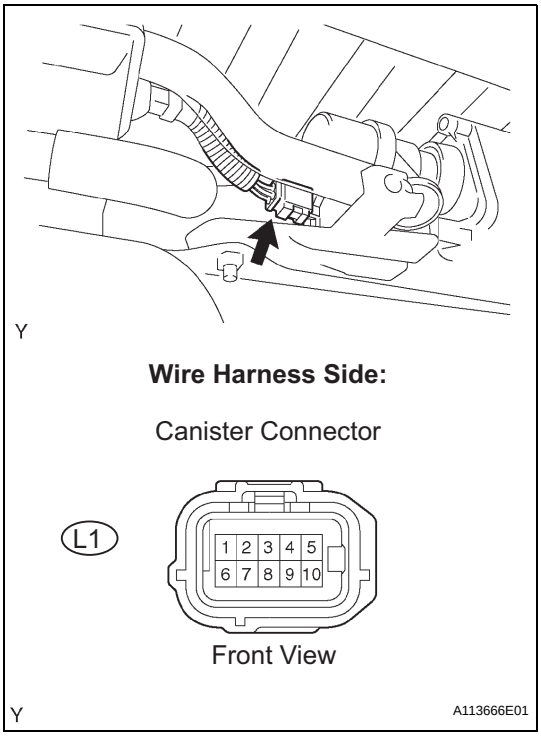

(a) Disconnect the L1 canister connector.
(b) Turn the ignition switch to ON.
(c) Measure the voltage and resistance of the canister connector.

Standard Voltage and Standard Resistance

Tester Connections	Specified Conditions
L1-4 - Body ground	4.5 to 5.0 V
L1-3 - Body ground	4.5 to 5.0 V
L1-2 - Body ground	100 Ω or less

Result

Test Results	Suspected Trouble Areas	Proceed To
Voltage and resistance within standard ranges	Open in canister pressure sensor circuit	A
Voltage and resistance outside standard ranges	Open in wire harness/connector (ECM - Canister pressure sensor)	B

(d) Reconnect the canister connector.

A	Go to step 5
B	Go to step 6

5	REPLACE CHARCOAL CANISTER ASSEMBLY

(a) Replace the canister assembly.

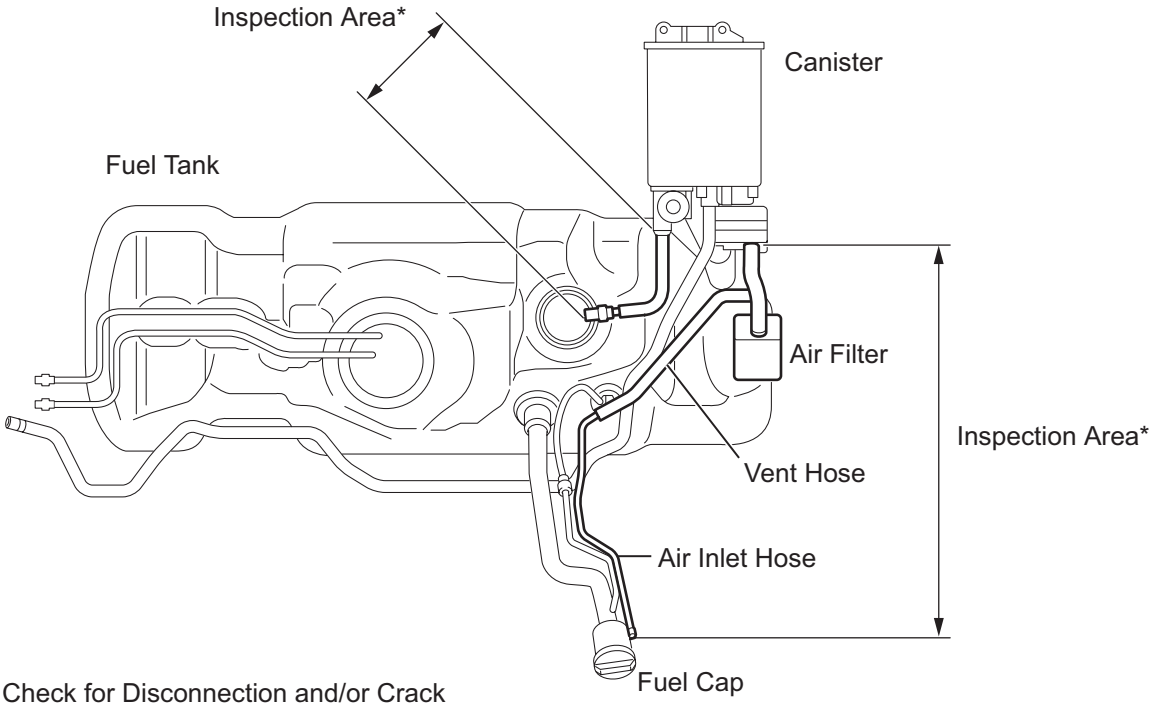

NOTICE:
When replacing the canister, check the canister pump module interior and related pipes for water, fuel or other liquids. If liquids are present, check for disconnections and/or cracks in the following: 1) the pipe from the air inlet port to the canister pump module; 2) the canister filter; and 3) the fuel tank vent hose.

NEXT	Go to step 8

6	REPAIR OR REPLACE WIRE HARNESS AND CONNECTOR

HINT:
If the exhaust tail pipe has been removed, go to the next step before reinstalling it.

NEXT	Go to step 8

7	REPLACE ECM

(a) Replace the ECM (See page ES-467).

NEXT	Go to step 8

8	CHECK WHETHER DTC OUTPUT RECURS (AFTER REPAIR)

(a) Connect the intelligent tester to the DLC3.
(b) Turn the ignition switch to ON and turn the tester ON.
(c) Wait for at least 60 seconds.
(d) On the tester, select the following menu items: DIAGNOSIS / ENHANCED OBD II / DTC INFO/ PENDING CODES.
HINT:
If no pending DTC is displayed on the tester, the repair has been successfully completed.

NEXT

ES

COMPLETED

DTC	P0455	Evaporative Emission Control System Leak Detected (Gross Leak)

DTC	P0456	Evaporative Emission Control System Leak Detected (Very Small Leak)

DTC SUMMARY

DTC	Monitoring Items	Malfunction Detection Conditions	Trouble Areas	Detection Timings	Detection Logic
P0455	EVAP gross leak	Leak detection pump creates negative pressure (vacuum) in EVAP system and EVAP system pressure measured. 0.02 inch leak criterion measured at start and at end of leak check. If stabilized pressure higher than [second 0.02 inch leak criterion x 0.2], ECM determines that EVAP system has large leakage.	• Fuel cap (loose) • Leakage from EVAP line (Canister - Fuel tank) • Leakage from EVAP line (Purge VSV - Canister) • Canister pump module • Leakage from fuel tank • Leakage from canister	While ignition switch OFF	2 trip
P0456	EVAP small leak	Leak detection pump creates negative pressure (vacuum) in EVAP system and EVAP system pressure measured. 0.02 inch leak criterion measured at start and at end of leak check. If stabilized pressure higher than second 0.02 inch leak criterion, ECM determines that EVAP system has small leakage.	Same above	While ignition switch OFF	2 trip

DESCRIPTION

The circuit description can be found in the EVAP (Evaporative Emission) System (see page ES-392).

Refer to the EVAP System (see page ES-397).

MONITOR DESCRIPTION

5 hours* after the ignition switch is turned to OFF, the electric leak detection pump creates negative pressure (vacuum) in the EVAP (Evaporative Emission) system. The ECM monitors for leaks and actuator malfunctions based on the EVAP pressure.
HINT:
*: If the engine coolant temperature is not below 35°C (95°F) 5 hours after the ignition switch is turned off, the monitor check starts 2 hours later. If it is still not below 35°C (95°F) 7 hours after the ignition switch is turned off, the monitor check starts 2.5 hours later.

Sequence	Operations	Descriptions	Duration
-	ECM activation	Activated by soak timer, 5 hours (7 or 9.5 hours) after ignition switch turned to OFF.	-
A	Atmospheric pressure measurement	Vent valve turned OFF (vent) and EVAP system pressure measured by ECM in order to register atmospheric pressure. If pressure in EVAP system not between 70 kPa and 110 kPa (525 mmHg and 825 mmHg), ECM cancels EVAP system monitor.	10 seconds
B	First 0.02 inch leak criterion (reference pressure) measurement	In order to determine 0.02 inch leak criterion, leak detection pump creates negative pressure (vacuum) through reference orifice and then ECM checks if leak detection pump and vent valve operate normally.	60 seconds
C	EVAP system pressure measurement	Vent valve turned ON (closed) to shut EVAP system. Negative pressure (vacuum) created in EVAP system, and EVAP system pressure then measured. Write down measured value as they will be used in leak check. If EVAP pressure does not stabilize within 15 minutes, ECM cancels EVAP system monitor.	15 minutes*
D	Purge VSV monitor	Purge VSV opened and then EVAP system pressure measured by ECM. Large increase indicates normal.	10 seconds
E	Second 0.02 inch leak criterion (reference pressure) measurement	After second 0.02 inch leak criterion measurement, leak check performed by comparing first and second 0.02 inch leak criterion. If stabilized system pressure higher than second 0.02 inch leak criterion, ECM determines that EVAP system leaking.	60 seconds
F	Final check	Atmospheric pressure measured and then monitoring result recorded by ECM.	-

* If only a small amount of fuel is in the fuel tank, it takes longer for the EVAP pressure to stabilize.

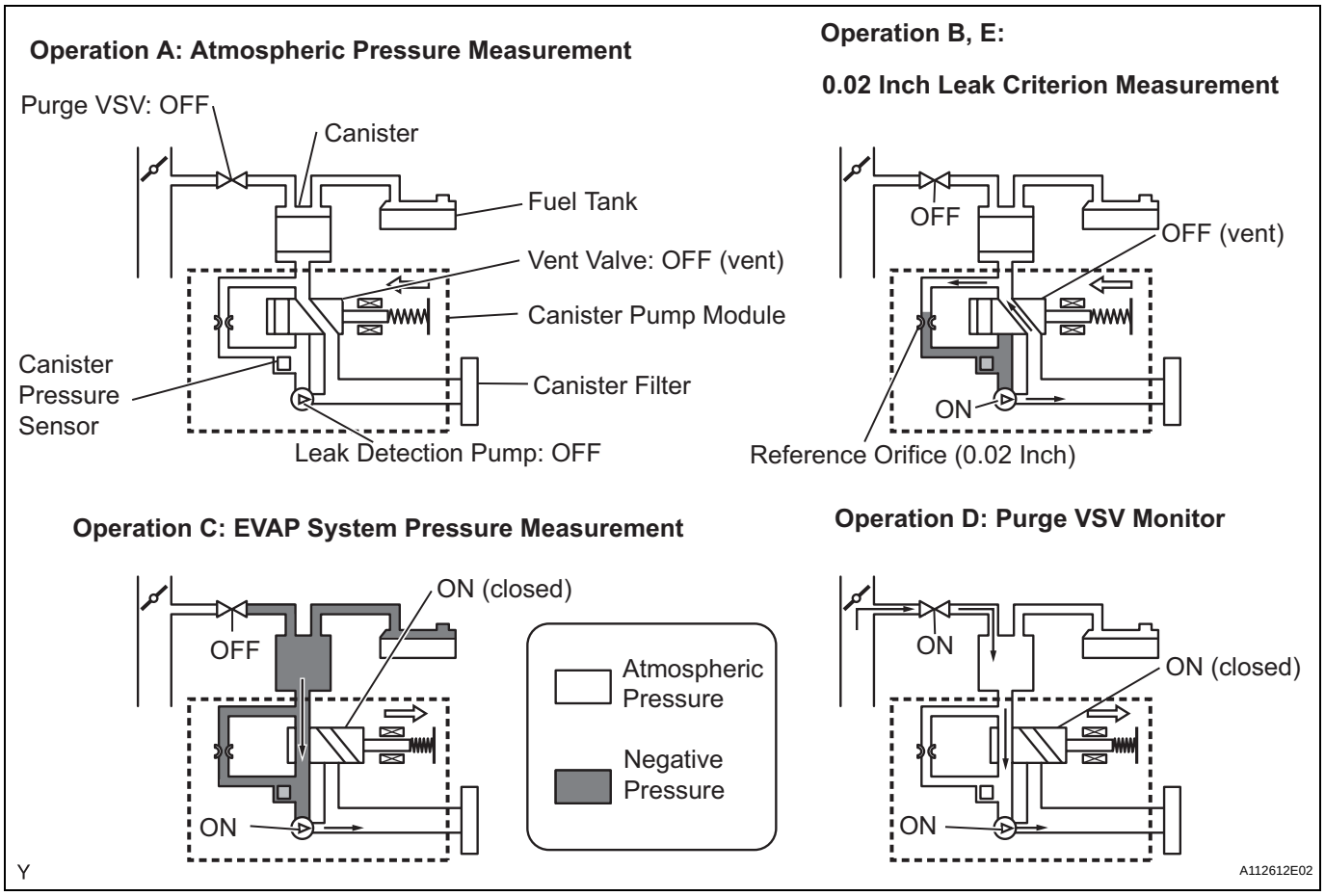

ES

1. P0455: EVAP (Evaporative Emission) gross leak
   In operation C, the leak detection pump creates negative pressure (vacuum) in the EVAP system and the EVAP system pressure is measured. If the stabilized system pressure is higher than [second 0.02 inch leak criterion x 0.2] (near atmospheric pressure), the ECM determines that the EVAP system has a large leakage, illuminates the MIL and sets the DTC (2 trip detection logic).

2. P0456: EVAP very small leak
In operation C, the leak detection pump creates negative pressure (vacuum) in the EVAP system and the EVAP system pressure is measured. If the stabilized system pressure is higher than second 0.02 inch leak criterion, the ECM determines that the EVAP system has a small leakage, illuminates the MIL and sets the DTC (2 trip detection logic).

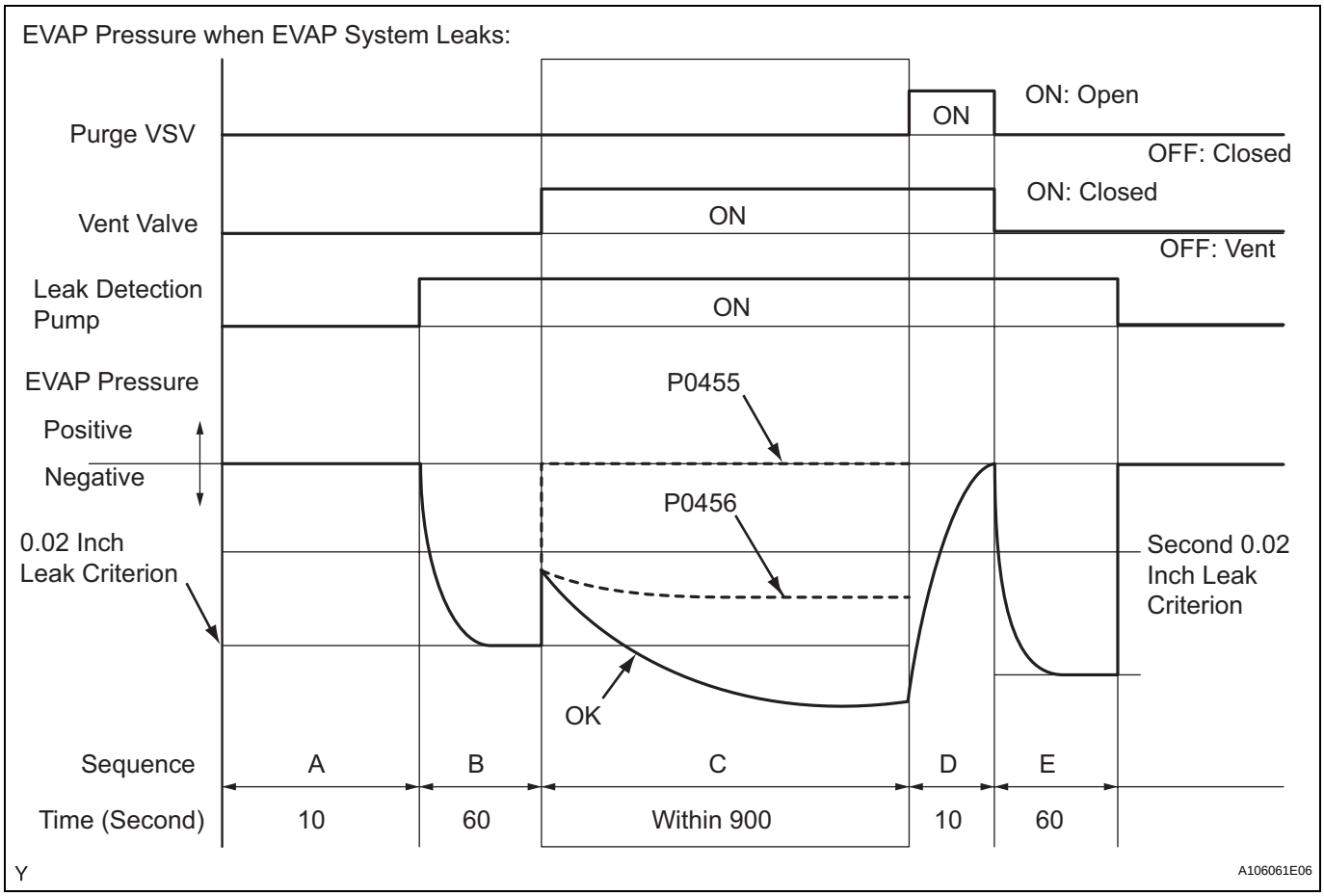

MONITOR STRATEGY

Required Sensors/Components	Purge VSV and Canister pump module
Frequency of Operation	Once per driving cycle
Duration	Within 15 minutes (varies with amount of fuel in tank)
MIL Operation	2 driving cycles
Sequence of Operation	None

TYPICAL ENABLING CONDITIONS

Monitor runs whenever following DTCs not present	None
EVAP key-off monitor runs when all of following conditions met	-
Atmospheric pressure	70 to 110 kPa (525 to 825 mmHg)
Battery voltage	10.5 V or more
Vehicle speed	Below 2.5 mph (4 km/h)
Ignition switch	OFF
FTP sensor malfunction (P0450, P0451, P0452 and P0453)	Not detected
Purge VSV	Not operated by scan tool
Vent valve	Not operated by scan tool
Leak detection pump	Not operated by scan tool

Both of following conditions met before IG switch OFF	Conditions 1 and 2
1. Duration that vehicle driven	5 minutes or more
2. Purge flow	Executed
ECT	4.4° to 35°C (40° to 95°F)
IAT	4.4° to 35°C (40° to 95°F)
Time after engine stopped	5 hours

Example of restart time

First time	7 hours
Second time	9 hours and 30 minutes

1. Key-off monitor sequence 1 to 8

1. Atmospheric pressure

Next sequence is run if following condition set	-
Atmospheric pressure change for 10 second	Less than 0.3 kPa (2.25 mmHg) for 1 second

ES

2. First reference pressure

Next sequence is run if all of following conditions set	Condition 1, 2 and 3
1. FTP when 4 seconds after reference pressure measurement	-1 kPa (-7.5 mmHg) or less
2. Reference pressure	-4.85 to -1.057 kPa (-33.38 to -7.93 mmHg)
3. Reference pressure	Saturated within 60 seconds

3. Vent valve stuck closed check

Next sequence is run if following condition set	-
FTP change for 10 seconds after vent valve ON (closed)	0.3 kPa (2.25 mmHg) or more

4. Vacuum introduction and leak

Next sequence is run if both of following conditions set	Condition 1 and 2
1. Vacuum introduction time	12 minutes or less
2. FTP	Saturated within 12 minutes

5. Purge VSV stuck closed check

Next sequence is run if following condition set	-
FTP change for 10 seconds after purge VSV ON (open)	0.3 kPa (2.25 mmHg) or more

6. Second reference pressure measurement

Next sequence is run if all of following conditions set	Condition 1, 2, 3 and 4
1. FTP when 4 seconds after reference pressure measurement	-1 kPa (-7.5 mmHg) or less
2. Reference pressure	-4.85 to -1.057 kPa (-36.4 to -7.92 mmHg)
3. Reference pressure	Saturated within 60 seconds
4. Reference pressure difference between first and second	0.7 kPa (5.25 mmHg) or less

7. Leak check

Next sequence is run if following condition set	-
FTP when vacuum introduction was complete	Second reference pressure or less

8. Atmospheric pressure

Monitor is complete if following condition set	-
Atmospheric pressure difference between sequence 1 and 8	0.3 kPa (2.25 mmHg) or less

2. Typical Malfunction Thresholds

"Saturated" indicates that the EVAP pressure change is less than 0.1 kPa (0.75 mmHg) in 30 seconds.

P0455: EVAP gross leak	-
FTP when vacuum introduction complete	Higher than reference pressure x 0.2

P0456: EVAP small leak	-
FTP when vacuum introduction complete	Between 1 and 2
Condition 1.	Higher than second reference pressure
Condition 2.	Lower than reference pressure x 0.2
Atmospheric pressure (absolute pressure)	70 kPa (525 mmHg) or more, and less than 110 kPa (825 mmHg)

MONITOR RESULT

Refer to Checking Monitor Status (See page ES-21) or (See page ES-422).

DTC	P0500	Vehicle Speed Sensor "A"

DTC	P0503	Vehicle Speed Sensor "A" Intermittent / Erratic / High

DESCRIPTION

Automatic Transaxle Models:

Vehicles, which are equipped with ABS (Anti-lock Brake System), detect the vehicle speed using the skid control ECU and wheel speed sensor. The wheel speed sensor monitors the wheel rotation speed and sends a signal to the skid control ECU. The skid control ECU converts the wheel speed signal into a 4-pulse signal and transmits it to the ECM via the combination meter. The ECM determines the vehicle speed based on the frequency of the pulse signal.

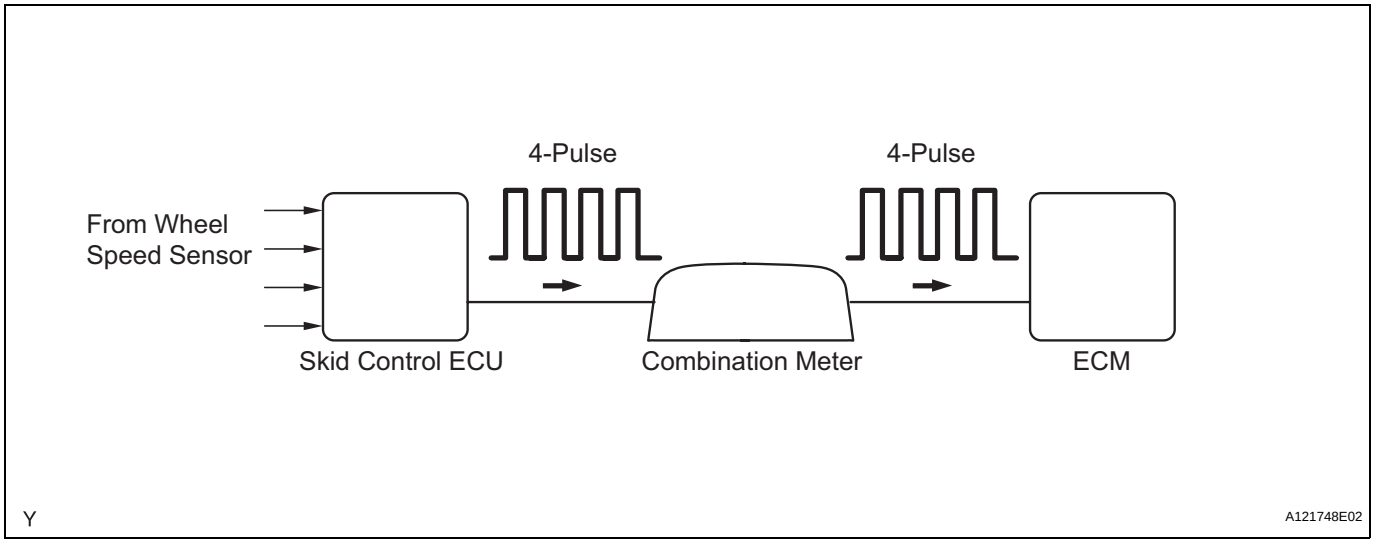

Manual Transaxle Models:

Vehicles, which are equipped with manual transaxle, detect the vehicle speed using the No. 1 vehicle speed sensor. The No. 1 vehicle speed sensor transmits a 4-pulse signal for every revolution of the rotor shaft, which is rotated by the transaxle or transfer output shaft via the driven gear. The 4-pulse signal is converted into a more precise rectangular waveform by the waveform shaping circuit inside the combination meter. The signal is then transmitted to the ECM. The ECM determines the vehicle speed based on the frequency of the pulse signal.

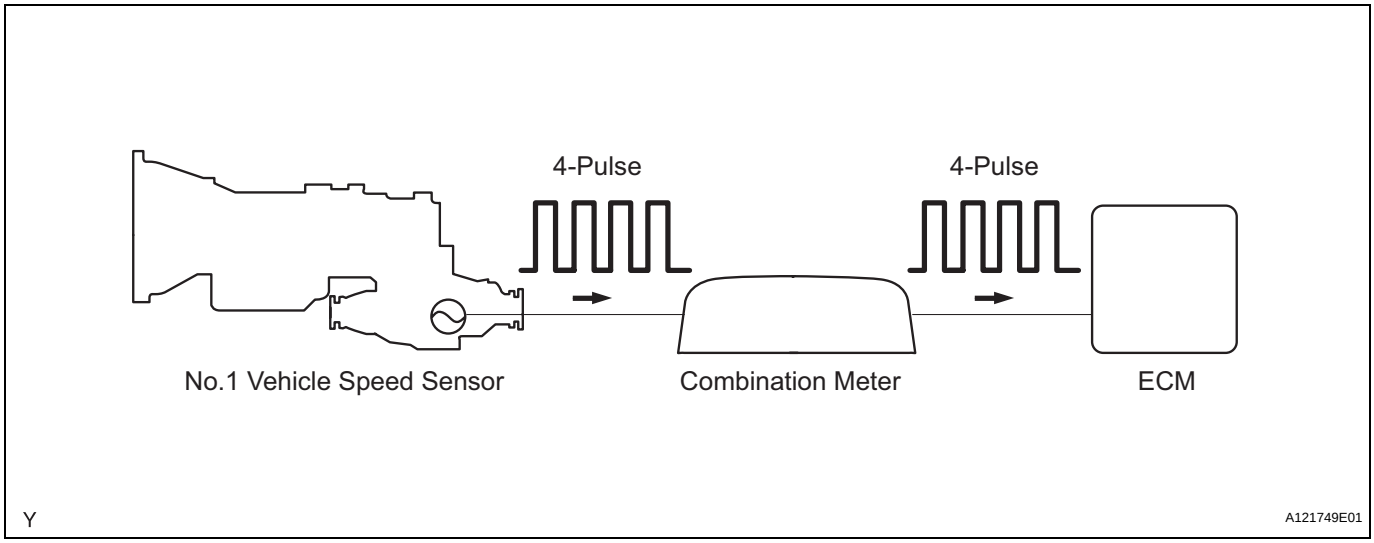

DTC No.	DTC Detection Conditions	Trouble Areas
P0500	Automatic transmission: ECM detects following conditions simultaneously 500 times (1 trip detection logic) • No speed sensor signal while ECM detects No. 2 speed sensor signal • Vehicle speed 6 mph (9 km/h) or more for 4 seconds • Park/Neutral position switch OFF (shift lever other than P and N positions) Manual transmission: ECM detects following conditions simultaneously for 8 seconds or more (2 trip detection logic) • No speed sensor signal input • Engine speed 2,000 rpm or more • ECM detects high engine load • Transfer lever in other than N position (4WD)	• Open or short in speed signal circuit • Combination meter • ECM • Skid control ECU
P0503	Momentary interruption and noise are detected when a rapid change of vehicle speed occurs	• Open or short in speed signal circuit • Combination meter • ECM • Skid control ECU

ES

MONITOR DESCRIPTION

Automatic Transaxle Models:
The ECM assumes that the vehicle is being driven, while the vehicle speed sensor signal is being transmitted by the combination meter. If there is no signal from the combination meter, despite the ECM detecting the speed signal from the No. 2 speed sensor, the ECM interprets this as a malfunction in the speed signal circuit. The ECM then illuminates the MIL and sets the DTC.
Manual Transaxle Models:
The ECM assumes that the vehicle is being driven, when the indicated engine speed is more than 2,000 rpm and the engine load calculated by the ECM is more than certain level. If there is no signal from the vehicle speed sensor, despite these conditions being met, the ECM interprets this as a malfunction in the speed signal circuit. The ECM then illuminates the MIL and sets the DTC.

MONITOR STRATEGY

Related DTCs	P0500: Vehicle speed sensor "A" pulse input error
Required Sensors/Components (Main)	Vehicle Speed Sensor (VSS), Combination meter and Skid control ECU
Required Sensors/Components (Related)	Park/neutral Position (PNP) switch, Engine Coolant Temperature (ECT) sensor, Crankshaft Position (CKP) sensor and Mass Air Flow (MAF) meter
Frequency of Operation	Continuous
Duration	8 seconds: Manual transmission Conditions met 500 times: Automatic transmission
MIL Operation	2 driving cycles: Manual transmission 1 driving cycle: Automatic transmission
Sequence of Operation	None

TYPICAL ENABLING CONDITIONS

Monitor runs whenever following DTCs not present	None

With Manual Transmission:

Engine coolant temperature	70°C (158°F) or more
Engine speed	2,000 rpm or more
Engine load	100 % when engine speed 2,000 rpm (threshold varies with engine speed)
Fuel cut at high engine speed	Not executing

With Automatic Transmission:

Vehicle speed sensor output	48 pulses or more
Time after following conditions met:	4 seconds or more
Ignition switch	ON
Park/neutral position switch	OFF
Vehicle speed	5.59 mph (9 km/h)
Time after ignition switch turned to ON	0.5 seconds or more

TYPICAL MALFUNCTION THRESHOLDS

Vehicle speed sensor signal	No pulse input

WIRING DIAGRAM

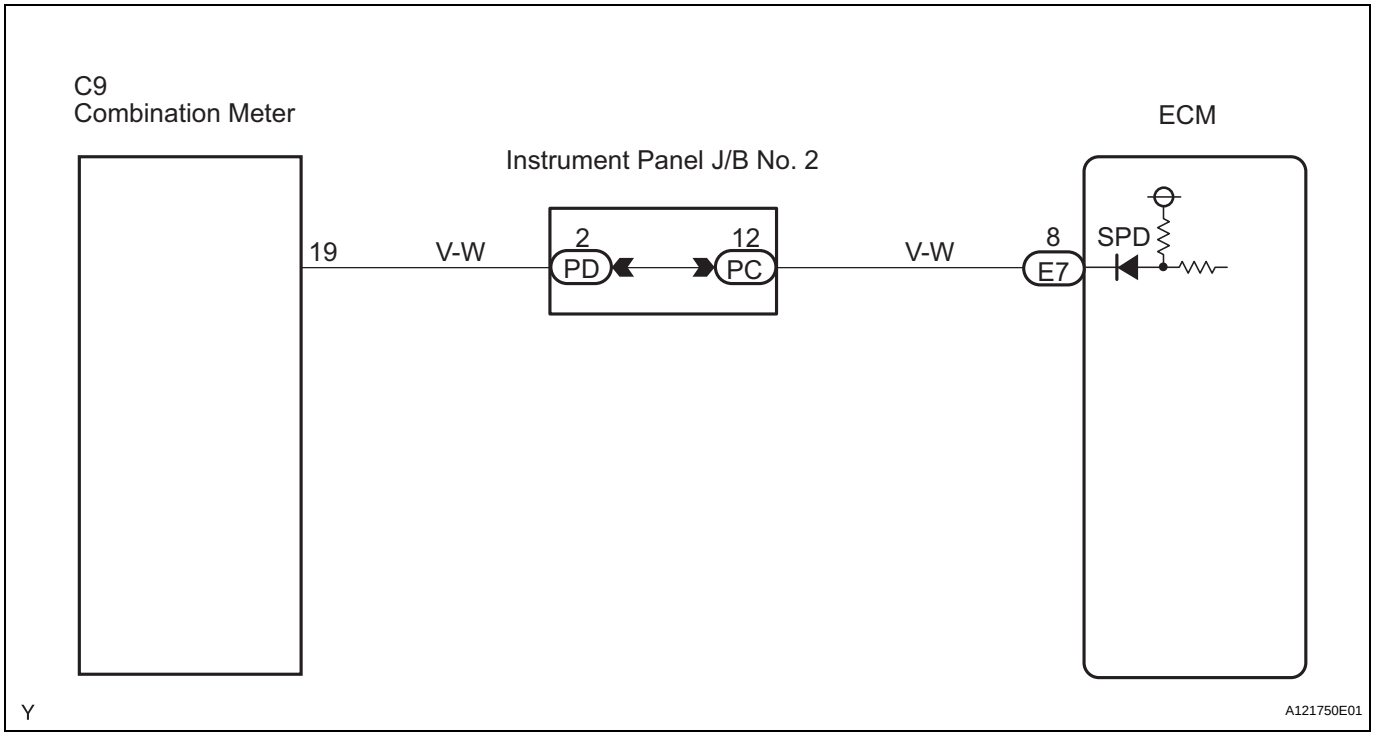

HINT:
Read freeze frame data using an intelligent tester. Freeze frame data record the engine condition when malfunctions are detected. When troubleshooting, freeze frame data can help determine if the vehicle was moving or stationary, if the engine was warmed up or not, if the air-fuel ratio was lean or rich, and other data, from the time the malfunction occurred.

1	**CHECK OPERATION OF SPEEDOMETER**

(a) Drive the vehicle and check if the operation of the speedometer in the combination meter is normal.
HINT:
The vehicle speed sensor is operating normally if the speedometer reading is normal.

NG	**CHECK SPEEDOMETER CIRCUIT**

OK

2	INSPECT ECM (SPD VOLTAGE)

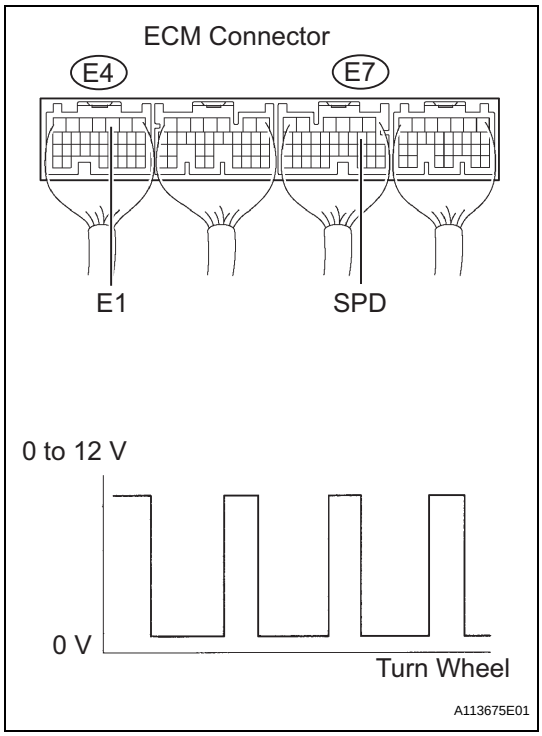

(a) Shift the transmission gear selector lever to the neutral position.
(b) Jack up the vehicle.
(c) Turn the ignition switch to ON.
(d) Check the voltage between the terminals of the ECM connectors as the wheel is turned slowly.

Standard Voltage

Tester Connections	Specified Conditions
SPD (E7-8) - E1 (E4-3)	Voltage generated intermittently

HINT:
The output voltage should fluctuate up and down similarly to the diagram on the left when the wheel is turned slowly.

NG → **REPAIR OR REPLACE HARNESS OR CONNECTOR**

OK

REPLACE ECM

ES

DTC	P0504	Brake Switch "A" / "B" Correlation

DESCRIPTION

The stop light switch is a duplex system that transmits two signals: STP and ST1-. These two signals are used by the ECM to monitor whether or not the brake system is working properly. If the signals, which indicate the brake pedal is being depressed and released, are detected simultaneously, the ECM interprets this as a malfunction in the stop light switch and sets the DTC.

HINT:

The normal conditions are as shown in the table below. The signals can be read using an intelligent tester.

Signals	Brake Pedal Released	In Transition	Brake Pedal Depressed
STP	OFF	ON	ON
ST1-	ON	ON	OFF

DTC No.	DTC Detection Conditions	Trouble Areas
P0504	Conditions (a), (b) and (c) continue for 0.5 seconds or more (1 trip detection logic): (a) Ignition switch ON (b) Brake pedal released (c) STP signal OFF when ST1- signal OFF	• Short in stop light switch signal circuit • STOP fuse • Stop light switch • ECM

WIRING DIAGRAM

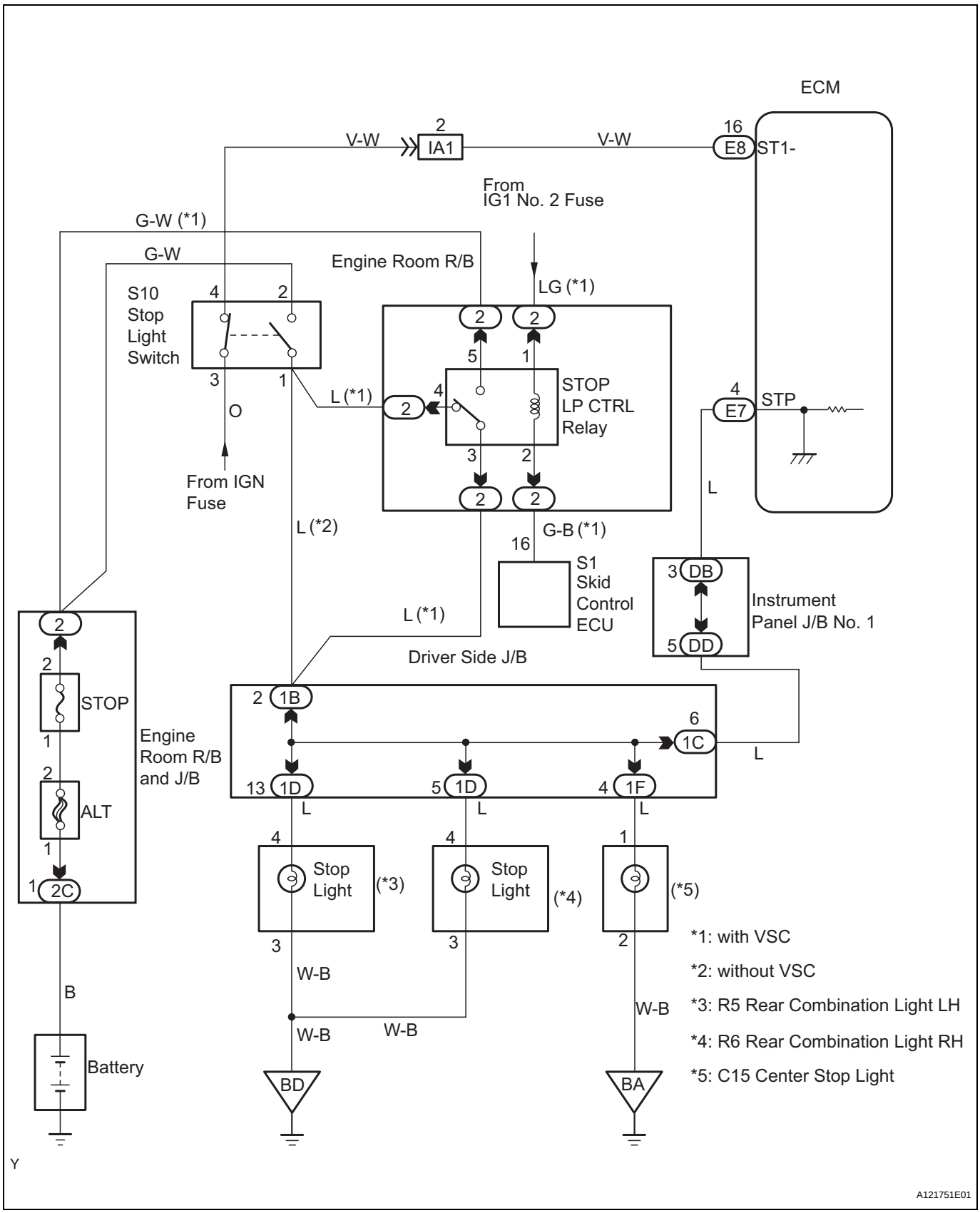

HINT:
Read freeze frame data using an intelligent tester. Freeze frame data record the engine condition when malfunctions are detected. When troubleshooting, freeze frame data can help determine if the vehicle was moving or stationary, if the engine was warmed up or not, if the air-fuel ratio was lean or rich, and other data, from the time the malfunction occurred.

1 CHECK OPERATION OF STOP LIGHT

(a) Check whether the stop lights turn on and off normally when the brake pedal is depressed and released.

OK:

Stop lights turn ON when brake pedal is depressed.

NG → **REPAIR OR REPLACE STOP LIGHT SWITCH CIRCUIT**

OK

2 INSPECT STOP LIGHT SWITCH ASSEMBLY

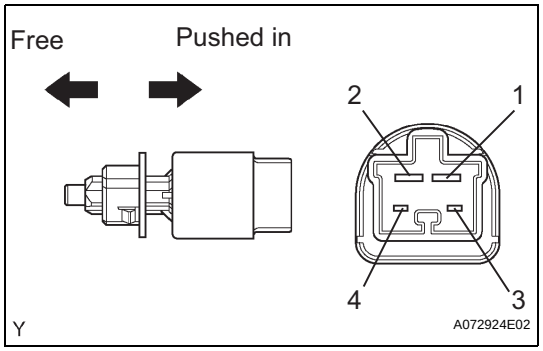

(a) Remove the stop light switch assembly.

(b) Check the resistance.

Standard Resistance

Switch Positions	Tester Connections	Specified Conditions
Switch pin free	1 - 2	Below 1 Ω
Switch pin free	3 - 4	10 kΩ or higher
Switch pin pushed in	1 - 2	10 kΩ or higher
Switch pin pushed in	3 - 4	Below 1 Ω

(c) Reinstall the stop light switch assembly.

NG → **REPLACE STOP LIGHT SWITCH ASSEMBLY**

OK

3 READ DATA LIST (STP SIGNAL AND ST1 - VOLTAGE)

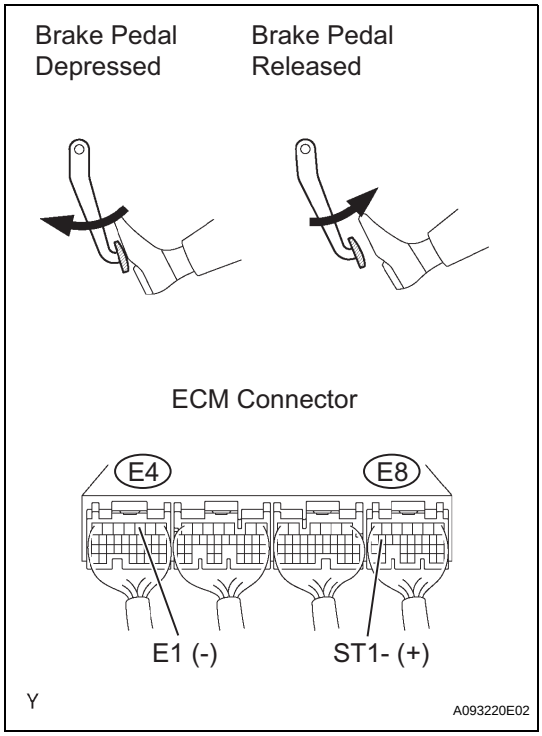

(a) Connect an intelligent tester to the DLC3.
(b) Turn the ignition switch to ON and turn the tester ON.
(c) Select the following menu items: DIAGNOSIS / ENHANCED OBD II / DATA LIST / PRIMARY / STOP LIGHT SW.
(d) Check the STP signal when the brake pedal is depressed and released.

Standard

Brake Pedal Operations	Specified Conditions
Depressed	STP signal ON
Released	STP signal OFF

(e) Measure the voltage between the terminals of the ECM connectors.

Standard Voltage

Tester Connections	Brake Pedal Operations	Specified Conditions
ST1- (E8-16) - E1 (E4-3)	Depressed	Below 1.5 V
ST1- (E8-16) - E1 (E4-3)	Released	7.5 to 14 V

OK → **CHECK FOR INTERMITTENT PROBLEMS**

NG

4 CHECK HARNESS AND CONNECTOR (STOP LIGHT SWITCH - ECM)

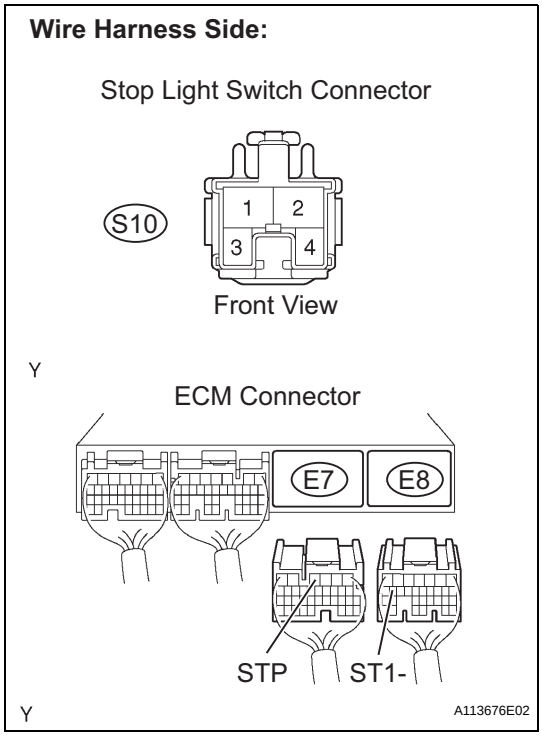

(a) Disconnect the S10 stop light switch connector.
(b) Disconnect the E7 and E8 ECM connectors.
(c) Check the resistance.

Standard Resistance (Check for open)

Tester Connections	Specified Conditions
Stop light switch (S10-1) - STP (E7-4)	Below 1 Ω
Stop light switch (S10-4) - ST1- (E8-16)	Below 1 Ω

(d) Reconnect the stop light switch connector.
(e) Reconnect the ECM connector.

NG → **REPAIR OR REPLACE HARNESS OR CONNECTOR**

OK

REPLACE ECM

DTC	P0505	Idle Control System Malfunction

DESCRIPTION

The idling speed is controlled by the ETCS (Electronic Throttle Control System). The ETCS is comprised of: 1) the one valve type throttle body; 2) the throttle actuator, which operates the throttle valve; 3) the Throttle Position (TP) sensor, which detects the opening angle of the throttle valve; 4) the Accelerator Pedal Position (APP) sensor, which detects the accelerator pedal position; and 5) the ECM, which controls the ETCS. Based on the target idling speed, the ECM controls the throttle actuator to provide the proper throttle valve opening angle.

DTC No.	DTC Detection Conditions	Trouble Areas
P0505	Idling speed continues to vary greatly from target idling speed (2 trip detection logic)	• Electronic Throttle Control System (ETCS) • Air induction system • PCV hose connection • ECM

ES

MONITOR DESCRIPTION

The ECM monitors the idling speed and idling air flow volume to conduct Idle Speed Control (ISC). The ECM determines that the ISC system is malfunctioning if the following conditions apply:
HINT:

- The learned idling air flow volume remains at the maximum or minimum volume 5 times or more during a drive cycle.
- While driving at 6 mph (10 km/h) or more, the actual engine idling speed varies from the target idling speed by between 100 rpm and 150 rpm, 5 times or more during a drive cycle.

Example:

If the actual idling speed varies from the target idling speed by more than 200 rpm* 5 times during a drive cycle, the ECM illuminates the MIL and sets the DTC.
HINT:

*: Threshold idling speed varies with engine load.

Example

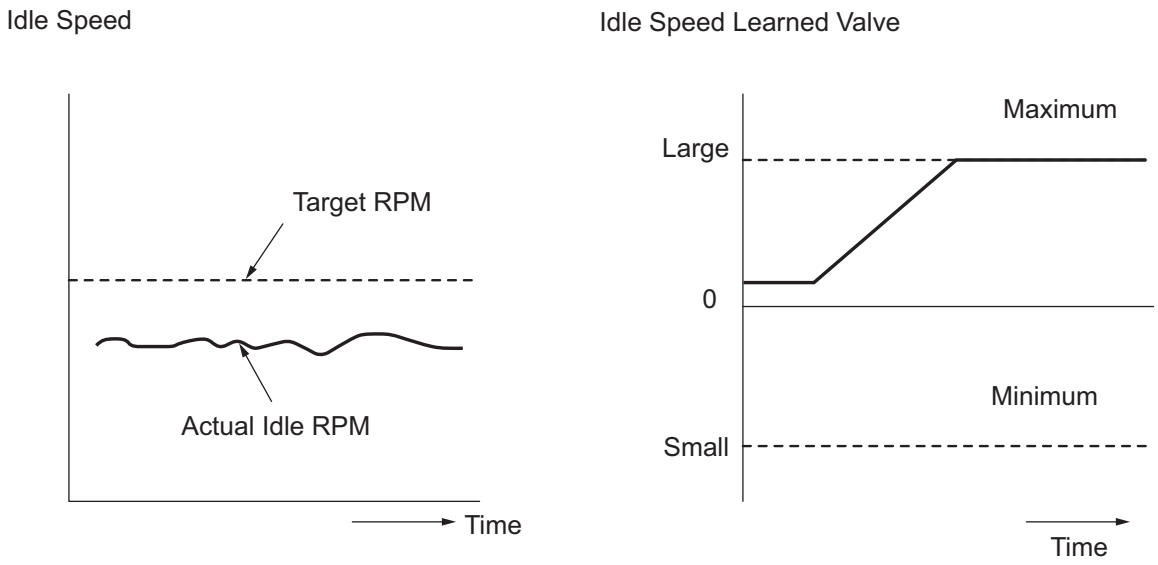

Y A121611E01

ES

MONITOR STRATEGY

Related DTCs	P0505: ISC Function
Required Sensors/Components (Main)	ETCS
Required Sensors/Components (Related)	Crankshaft position sensor, Engine coolant temperature sensor, and Vehicle speed sensor
Frequency of Operation	Continuous
Duration	10 minutes
MIL Operation	2 driving cycles
Sequence of Operation	None

TYPICAL ENABLING CONDITIONS

Monitor runs whenever following DTCs not present	None
Engine	Running

TYPICAL MALFUNCTION THRESHOLDS

Following conditions met:	A and B
A. Frequency that both of following conditions 1 and 2 met:	5 times or more
1. Deviation in engine speed	Less than -100 rpm or more than 150 rpm (when shift position D and A/C OFF)
2. Vehicle condition	Stop after vehicle was driven by 6 mph (10 km/h) or more
B. Frequency that both of following conditions 3 and 4 met:	Once
3. Deviation in engine speed	Less than -100 rpm or more than 150 rpm (when shift position D and A/C OFF)

4. IAC flow rate learning value	0.5 L/sec or less, 6.4 L/sec or more

HINT:
- The following conditions may also cause DTC P0505 to be set: (1) The floor carpet overlapping slightly onto the accelerator pedal, causing the accelerator pedal to be slightly depressed and therefore the throttle valve position to be slightly open. (2) The accelerator pedal being not fully released.
- Read freeze frame data using an intelligent tester. Freeze frame data record the engine condition when malfunctions are detected. When troubleshooting, freeze frame data can help determine if the vehicle was moving or stationary, if the engine was warmed up or not, if the air-fuel ratio was lean or rich, and other data, from the time the malfunction occurred.

1 CHECK ANY OTHER DTCS OUTPUT (IN ADDITION TO DTC P0505)

ES

(a) Connect an intelligent tester to the DLC3.
(b) Turn the ignition switch to ON.
(c) Turn the tester ON.
(d) Select the following menu items: DIAGNOSIS / ENHANCED OBD II / DTC INFO / CURRENT CODES.
(e) Read DTCs.

Result

Display (DTC Output)	Proceed To
P0505	A
P0505 and other DTCs	B

HINT:
If any DTCs other than P0505 are output, troubleshoot those DTCs first.

B → **GO TO DTC CHART**

A

2 CHECK CONNECTION OF PCV HOSE

OK:
PCV hose is connected correctly and is not damaged.

NG → **REPAIR OR REPLACE PCV HOSE**

OK

3 CHECK AIR INDUCTION SYSTEM

(a) Check the air induction system for vacuum leakage.
OK:
No leakage from air induction system.

NG → **REPAIR OR REPLACE AIR INDUCTION SYSTEM**

OK

4	CHECK THROTTLE VALVE

(a) Check the throttle valve condition.

NG → REPLACE THROTTLE BODY ASSEMBLY

OK

REPLACE ECM

DTC	P0560	System Voltage

MONITOR DESCRIPTION

The battery supplies electricity to the ECM even when the ignition switch is in the OFF position. This power allows the ECM to store data such as DTC history, freeze frame data and fuel trim values. If the battery voltage falls below a minimum level, these memories are cleared and the ECM determines that there is a malfunction in the power supply circuit. When the engine is next started, the ECM illuminates the MIL and sets the DTC.

DTC No.	DTC Detection Conditions	Trouble Areas
P0560	Open in ECM back up power source circuit (1 trip detection logic)	• Open in back up power source circuit • EFI fuse • ECM

HINT:

If DTC P0560 is set, the ECM does not store other DTCs.

MONITOR STRATEGY

Related DTCs	P0560: ECM system voltage
Required Sensors/Components (Main)	ECM
Required Sensors/Components (Related)	-
Frequency of Operation	Continuous
Duration	3 seconds
MIL Operation	Immediate (MIL illuminated after next engine start)
Sequence of Operation	None

TYPICAL ENABLING CONDITIONS

Monitor runs whenever following DTCs not present	None

TYPICAL MALFUNCTION THRESHOLDS

ECM power source	Less than 3.5 V

WIRING DIAGRAM

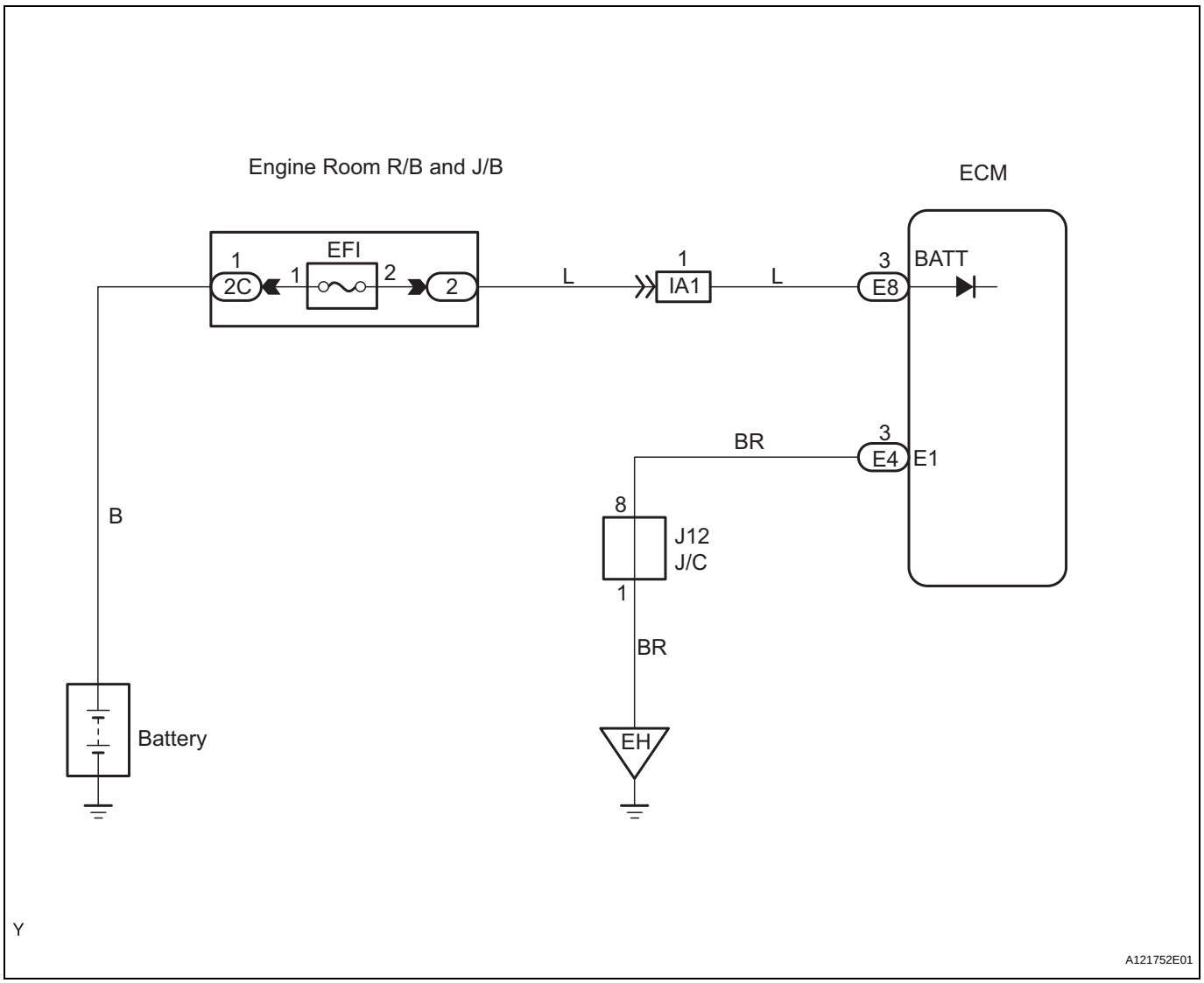

ES

HINT:
Read freeze frame data using an intelligent tester. Freeze frame data record the engine condition when malfunctions are detected. When troubleshooting, freeze frame data can help determine if the vehicle was moving or stationary, if the engine was warmed up or not, if the air-fuel ratio was lean or rich, and other data, from the time the malfunction occurred.

1	CHECK FUSE (EFI FUSE)

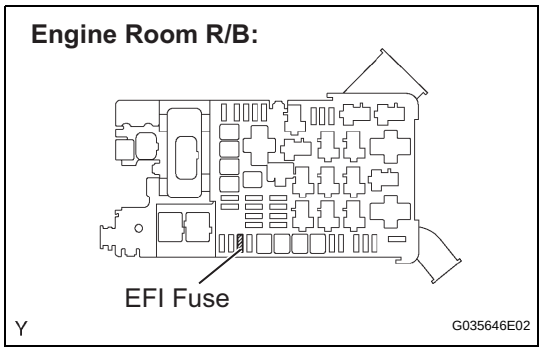

(a) Remove the EFI fuse from the engine room R/B.
(b) Check the resistance.
Standard Resistance:
Below 1 Ω
(c) Reinstall the EFI fuse.

NG	CHECK CHECK FOR SHORTS IN ALL HARNESSES AND CONNECTORS CONNECTED TO FUSE AND REPLACE FUSE

OK

2 INSPECT ECM (BATT VOLTAGE)

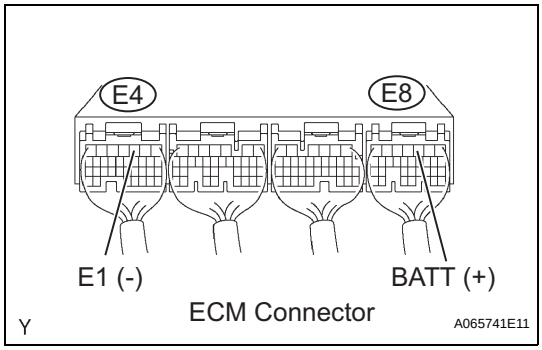

(a) Measure the voltage between the terminals of the ECM connectors.

Standard Voltage

Tester Connections	Specified Conditions
BATT (E8-3) - E1 (E4-3)	9 to 14 V

OK → REPLACE ECM

NG

3 CHECK HARNESS AND CONNECTOR (ECM - EFI FUSE, EFI FUSE - BATTERY)

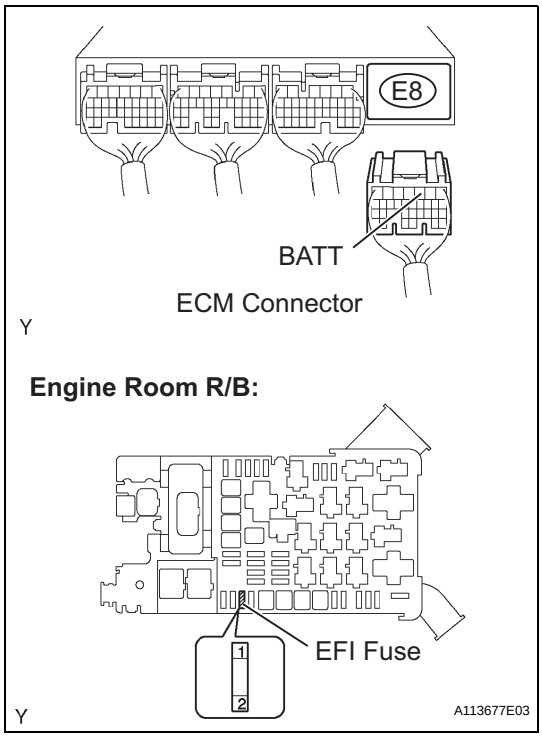

(a) Check the harness and the connector between the EFI fuse and ECM.
   (1) Remove the EFI fuse from the engine room R/B.
   (2) Disconnect the E8 ECM connector.
   (3) Check the resistance.

Standard Resistance (Check for open)

Tester Connections	Specified Conditions
EFI fuse (2) - BATT (E8-3)	Below 1 Ω

Standard Resistance (Check for short)

Tester Connections	Specified Conditions
EFI fuse (2) or BATT (E8-3) - Body ground	10 kΩ or higher

   (4) Reconnect the ECM connector.
   (5) Reinstall the EFI fuse.

(b) Check the harness and the connector between the EFI fuse and battery.
   (1) Remove the EFI fuse from the engine room R/B.
   (2) Disconnect the positive battery terminal.
   (3) Check the resistance.

Standard Resistance (Check for open)

Tester Connections	Specified Conditions
Battery positive terminal - EFI fuse (1)	Below 1 Ω

Standard Resistance (Check for short)

Tester Connections	Specified Conditions
Battery positive terminal or EFI fuse (1) - Body ground	10 kΩ or higher

   (4) Reconnect the positive battery terminal.
   (5) Reinstall the EFI fuse.

NG → REPAIR OR REPLACE HARNESS OR CONNECTOR

OK

4	INSPECT BATTERY

(a) Check that the battery is not depleted.

NG → REPLACE BATTERY

OK

CHECK AND REPLACE ENGINE ROOM RELAY BLOCK ASSEMBLY

DTC	P0604	Internal Control Module Random Access Memory (RAM) Error

DTC	P0606	ECM / PCM Processor

DTC	P0607	Control Module Performance

DTC	P0657	Actuator Supply Voltage Circuit / Open

MONITOR DESCRIPTION

ES

The ECM continuously monitors its own internal memory status, internal circuits, and output signals transmitted to the throttle actuator. This self-check ensures that the ECM is functioning properly. If any malfunction is detected, the ECM sets the appropriate DTC and illuminates the MIL.
The ECM memory status is diagnosed by internal mirroring of the main CPU and the sub CPU to detect Random Access Memory (RAM) errors. The two CPUs also perform continuous mutual monitoring. The ECM illuminates the MIL and sets a DTC if: 1) outputs from the two CPUs are different or deviate from the standards, 2) the signals sent to the throttle actuator deviate from the standards, 3) a malfunction is found in the throttle actuator supply voltage, and 4) any other ECM malfunction is found.

DTC No.	DTC Detection Conditions	Trouble Areas
P0604 P0606 P0607 P0657	ECM internal error (1 trip detection logic)	ECM

MONITOR STRATEGY

Related DTCs	P0604: ECM RAM error P0606: ECM range check P0607: ECM CPU malfunction P0657: ETCS power supply
Required Sensors/Components (Main)	ECM
Required Sensors/Components (Related)	-
Frequency of Operation	Continuous
Duration	P0604: Conditions met for 6 times P0606: 1 second P0607 and P0657: Within 1 second
MIL Operation	Immediate
Sequence of Operation	None

TYPICAL ENABLING CONDITIONS

Monitor runs whenever following DTCs not present	None

TYPICAL MALFUNCTION THRESHOLDS

ECM RAM errors (P0604):

RAM mirror check	Fail

ECM CPU range check (P0606):

Either of following conditions met:	-
Difference between throttle valve position of main CPU and throttle valve position of sub CPU	0.3 V or more

Difference between accelerator pedal position of main CPU and accelerator pedal position of sub CPU	0.3 V or more

ECM CPU malfunction (P0607):

CPU reset	Occurred

Electronic throttle control system power supply function of ECM malfunctions (P0657):

ETCS (Electronic Throttle Control System) power supply when ignition switch turned to ON	7 V or more

HINT:
Read freeze frame data using an intelligent tester. Freeze frame data record the engine condition when malfunctions are detected. When troubleshooting, freeze frame data can help determine if the vehicle was moving or stationary, if the engine was warmed up or not, if the air-fuel ratio was lean or rich, and other data, from the time the malfunction occurred.

ES

1	**CHECK ANY OTHER DTCS OUTPUT (IN ADDITION TO DTC P0604, P0606, P0607 OR P0657)**

Result

Display (DTC output)	Proceed To
P0604 or P0606 or P0607 or P0657	A
P0604 or P0606 or P0607 or P0657 and other DTCs	B

B → **GO TO DTC CHART**

A → **REPLACE ECM**

DTC	P0617	Starter Relay Circuit High

DESCRIPTION

While the engine is being cranked, the positive battery voltage is applied to terminal STA of the ECM. If the ECM detects the Starter Control (STA) signal while the vehicle is being driven, it determines that there is a malfunction in the STA circuit. The ECM then illuminates the MIL and sets the DTC.
This monitor runs when the vehicle is driven at 12.4 mph (20 km/h) for over 20 seconds.

DTC No.	DTC Detection Conditions	Trouble Areas
P0617	When conditions (a), (b) and (c) met, positive (+B) battery voltage 10.5 V or more applied to ECM for 20 seconds (1 trip detection logic): (a) Vehicle speed more than 12.4 mph (20 km/h) (b) Engine speed more than 1,000 rpm (c) STA signal ON	• Park/Neutral Position (PNP) switch (A/T*) • Clutch start switch (M/T*) • Starter relay circuit • Ignition switch • ECM

ES

*: A/T denotes Automatic Transaxle models and M/T denotes Manual Transaxle models.

MONITOR STRATEGY

Related DTCs	P0617: Starter signal
Required Sensors/Components (Main)	STARTER relay, PNP switch, Clutch start switch and Ignition switch
Required Sensors/Components (Related)	Vehicle Speed Sensor (VSS), Crankshaft Position (CKP) sensor
Frequency of Operation	Continuous
Duration	20 seconds
MIL Operation	Immediate
Sequence of Operation	None

TYPICAL ENABLING CONDITIONS

Monitor runs whenever following DTCs not present	None
Battery voltage	10.5 V or more
Vehicle speed	12.4 mph (20 km/h) or more
Engine speed	1,000 rpm or more

TYPICAL MALFUNCTION THRESHOLDS

Starter signal	ON

WIRING DIAGRAM

For Automatic Transaxle Models:

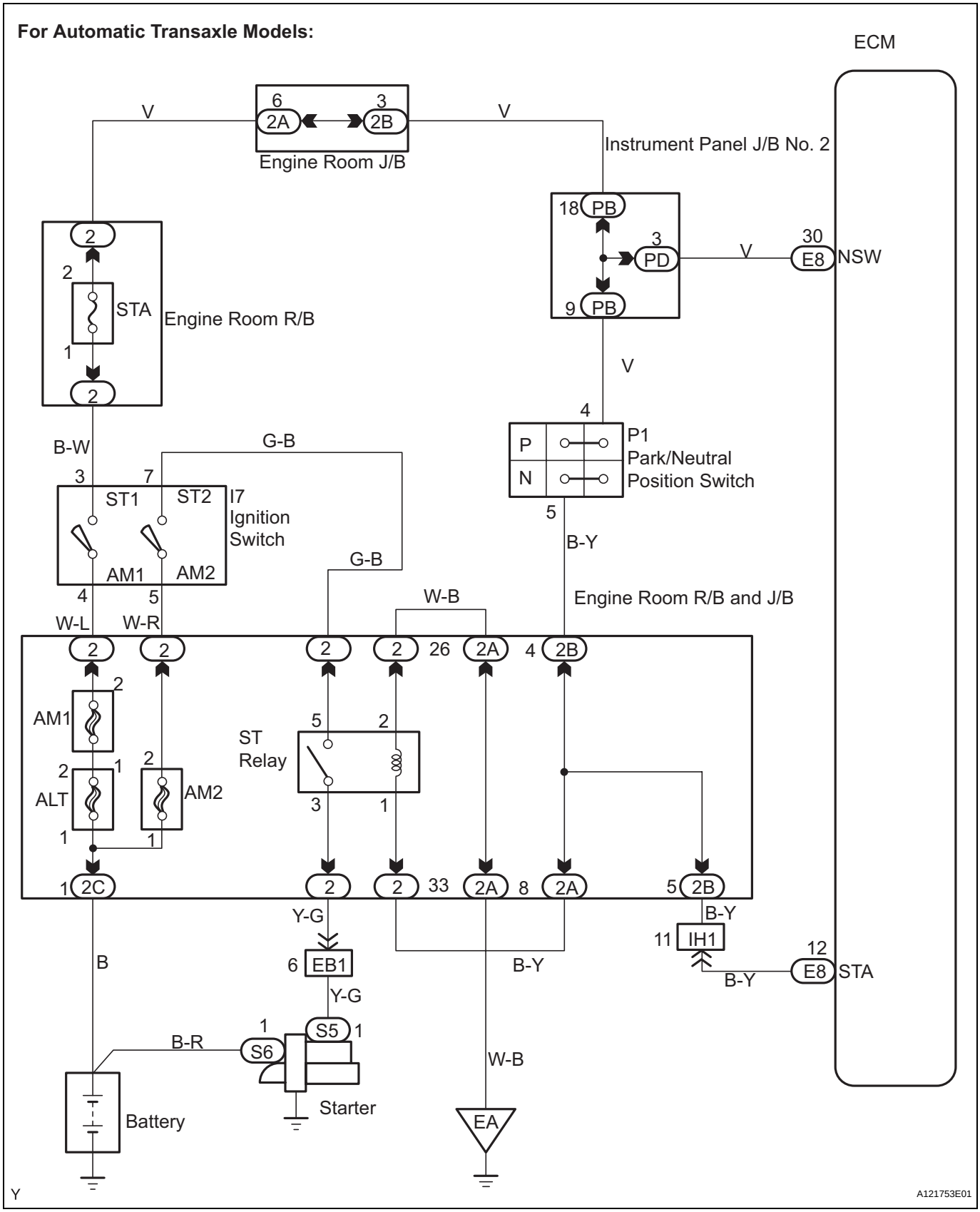

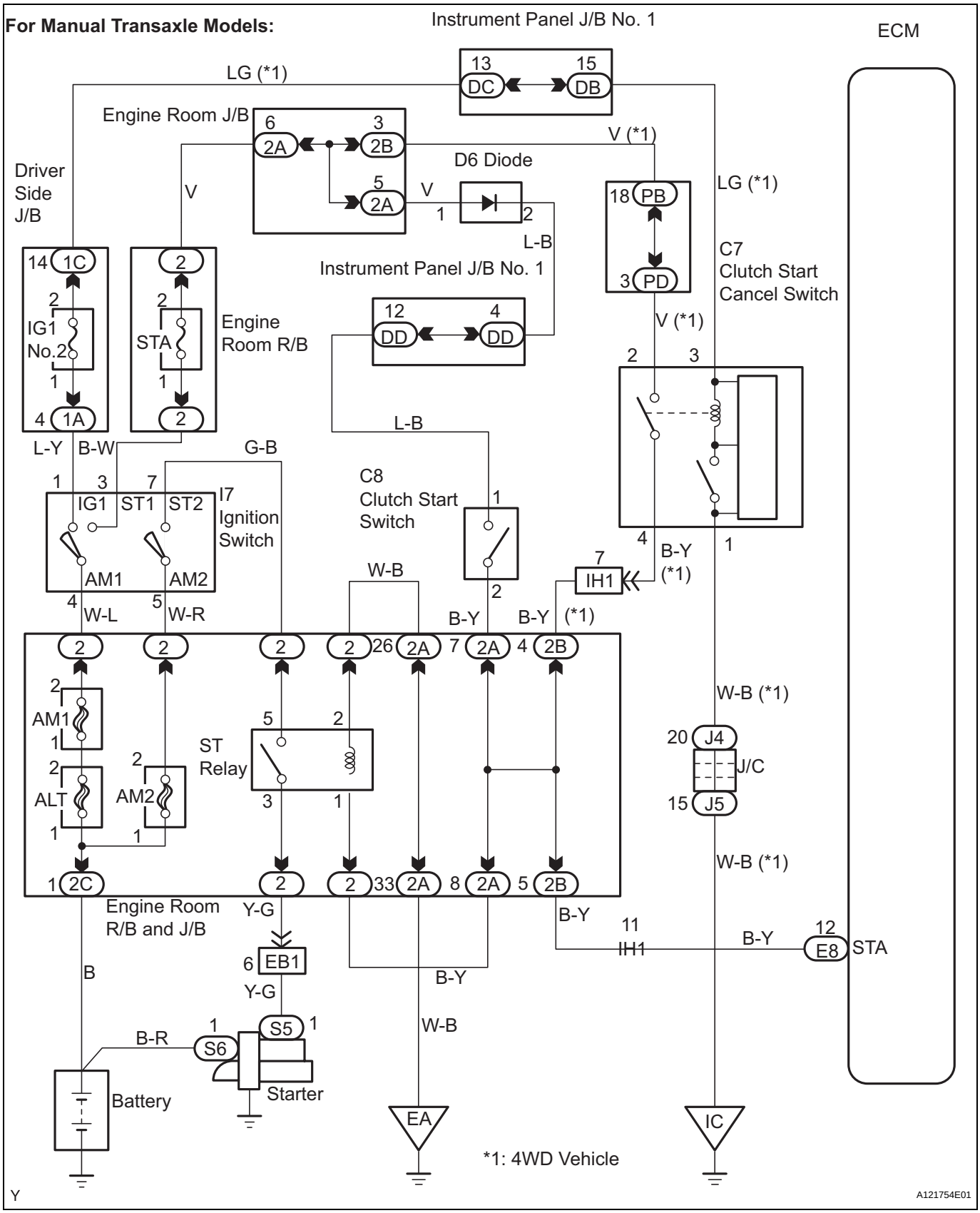

HINT:

- The following troubleshooting flowchart is based on the premise that the engine is cranked normally. If the engine will not crank, proceed to the problem symptoms table (See page ES-29).

- Read freeze frame data using an intelligent tester. Freeze frame data record the engine condition when malfunctions are detected. When troubleshooting, freeze frame data can help determine if the vehicle was moving or stationary, if the engine was warmed up or not, if the air-fuel ratio was lean or rich, and other data, from the time the malfunction occurred.

1 READ DATA LIST (STARTER SIGNAL)

(a) Connect an intelligent tester to the DLC3.
(b) Turn the ignition switch to ON and turn the tester ON.
(c) Select the following menu items: DIAGNOSIS / ENHANCED OBD II / DATA LIST / PRIMARY / STARTER SIG.
(d) Check the value displayed on the tester when the ignition switch is turned to the ON and START positions.

Result

Ignition Switch Positions	STARTER SIG
ON	OFF
START	ON

OK → REPLACE ECM

NG

2 INSPECT PARK / NEUTRAL POSITION SWITCH OR CLUTCH START SWITCH ASSEMBLY

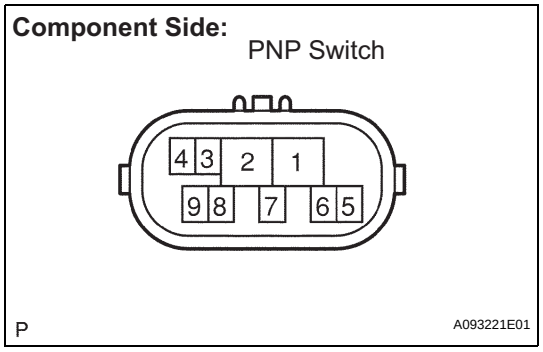

(a) Inspect the Park/Neutral Position (PNP) switch (for A/T models).
(1) Disconnect the P1 PNP switch connector.
(2) Check the resistance when the transmission gear selector lever is moved to each position.

Standard Resistance

Gear Selector Lever Positions	Tester Connections	Specified Conditions
P	2 - 6, 4 - 5	Below 1 Ω
R	1 - 2	Below 1 Ω
N	2 - 9, 4 - 5	Below 1 Ω
D	2 - 7	Below 1 Ω
2	2 - 3	Below 1 Ω
L	2 - 8	Below 1 Ω

(3) Reconnect the PNP switch connector.

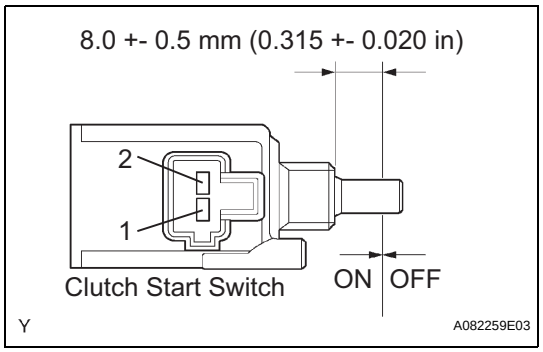

(b) Inspect the clutch start switch (for M/T models).
(1) Disconnect the C8 clutch start switch connector.
(2) Check the resistance when the clutch start switch is ON and OFF.

Standard Resistance

Ignition Switch Positions	Tester Connections	Specified Conditions
ON (pushed)	1 - 2	Below 1 Ω
OFF (free)	1 - 2	10 kΩ or higher

(3) Reconnect the clutch start switch connector.

NG → REPLACE PARK / NEUTRAL POSITION SWITCH OR CLUTCH START SWITCH ASSEMBLY (GO TO STEP 3 AFTER REPLACEMENT)

OK

3 READ DATA LIST (STARTER SIGNAL)

(a) Connect the intelligent tester to the DLC3.
(b) Turn the ignition switch to ON and turn the tester ON.
(c) Select the following menu items: DIAGNOSIS / ENHANCED OBD II / DATA LIST / PRIMARY / STARTER SIG.
(d) Check the value displayed on the tester when the ignition switch is turned to the ON and START positions.

Result

Ignition Switch Positions	STARTER SIG
ON	OFF
START	ON

OK → SYSTEM OK

NG

4 INSPECT IGNITION OR STARTER SWITCH ASSEMBLY

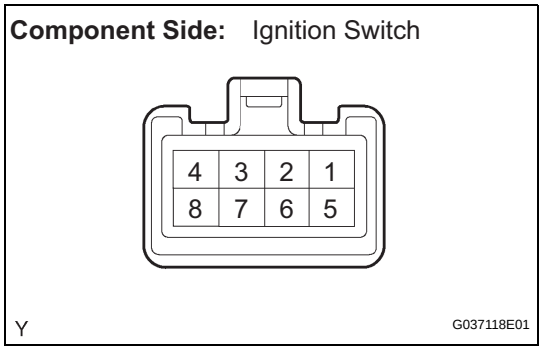

(a) Disconnect the I7 ignition switch connector.
(b) Check the resistance.

Standard Resistance

Ignition Switch Positions	Tester Connections	Specified Conditions
LOCK	All Terminals	10 kΩ or higher
ACC	2-4	Below 1 Ω
ON	1-4, 1-6, 2-4, 3-4, 5-6	Below 1 Ω
START	1-4, 3-4, 5-6, 5-7	Below 1 Ω

(c) Reconnect the ignition switch connector.

NG → REPLACE IGNITION OR STARTER SWITCH ASSEMBLY (GO TO STEP 5 AFTER REPLACEMENT)

OK

5	READ DATA LIST (STARTER SIGNAL)

(a) Connect the intelligent tester to the DLC3.
(b) Turn the ignition switch to ON and turn the tester ON.
(c) Select the following menu items: DIAGNOSIS / ENHANCED OBD II / DATA LIST / PRIMARY / STARTER SIG.
(d) Check the value displayed on the tester when the ignition switch is turned to the ON and START positions.

Result

Ignition Switch Positions	STARTER SIG
ON	OFF
START	ON

OK → **SYSTEM OK**

NG

REPAIR OR REPLACE HARNESS OR CONNECTOR

DTC	P0630	VIN not Programmed or Mismatch - ECM / PCM

DESCRIPTION

DTC P0630 is set when the Vehicle Identification Number (VIN) is not stored in the Engine Control Module (ECM) or the input VIN is not accurate. Input the VIN with the intelligent tester.

DTC No.	DTC Detection Conditions	Trouble Areas
P0630	• VIN not stored in ECM • Input VIN in ECM not accurate	ECM

MONITOR STRATEGY

Related DTCs	P0630: VIN not programmed
Required Sensors/Components (Main)	ECM
Required Sensors/Components (Related)	-
Frequency of Operation	Continuous
Duration	Conditions met 5 times
MIL Operation	Immediate
Sequence of Operation	None

ES

TYPICAL ENABLING CONDITIONS

Battery voltage	8 V or more
Ignition switch	ON
Starter	OFF

TYPICAL MALFUNCTION THRESHOLDS

VIN code	Not programmed

COMPONENT OPERATING RANGE

VIN code	Programmed

1	READ OUTPUT DTC (CURRENT DTC)

(a) Connect an intelligent tester to the DLC3.
(b) Turn the ignition switch to ON and turn the tester ON.
(c) Select the following menu items: DIAGNOSIS / ENHANCED OBD II / DTC INFO / CURRENT CODES.
(d) Read DTCs.

Result

Display (DTC Output)	Proceed To
P0630	**A**
P0630 and other DTCs	**B**

If any DTCs other than P0630 are output, troubleshoot those DTCs first.

NOTICE:
If P0630 is set, the VIN must be input to the ECM using the intelligent tester. However, all DTCs are cleared automatically by the tester when inputting the VIN. If DTCs other than P0630 are set, check them first.

B	GO TO DTC CHART

A

2	INPUT VIN WITH INTELLIGENT TESTER

NEXT

END

DTC	P1500	AC Inverter Malfunction

DESCRIPTION

This vehicle is equipped with a voltage inverter, which supplies power to various electrical appliances. When the main switch of the voltage inverter is turned ON, the inverter relay turns ON, and the inverter then converts the 12 V Direct Current (DC) of the battery into an 115 V Alternating Current (AC). The voltage inverter can output a maximum of 400W from an outlet.
When the AC 115 V is output, a load is applied to the engine. The ECM controls the engine idling speed according to the vehicle speed and engine load. A speed signal is input to the inverter and an idle-up signal is transmitted to the ECM.

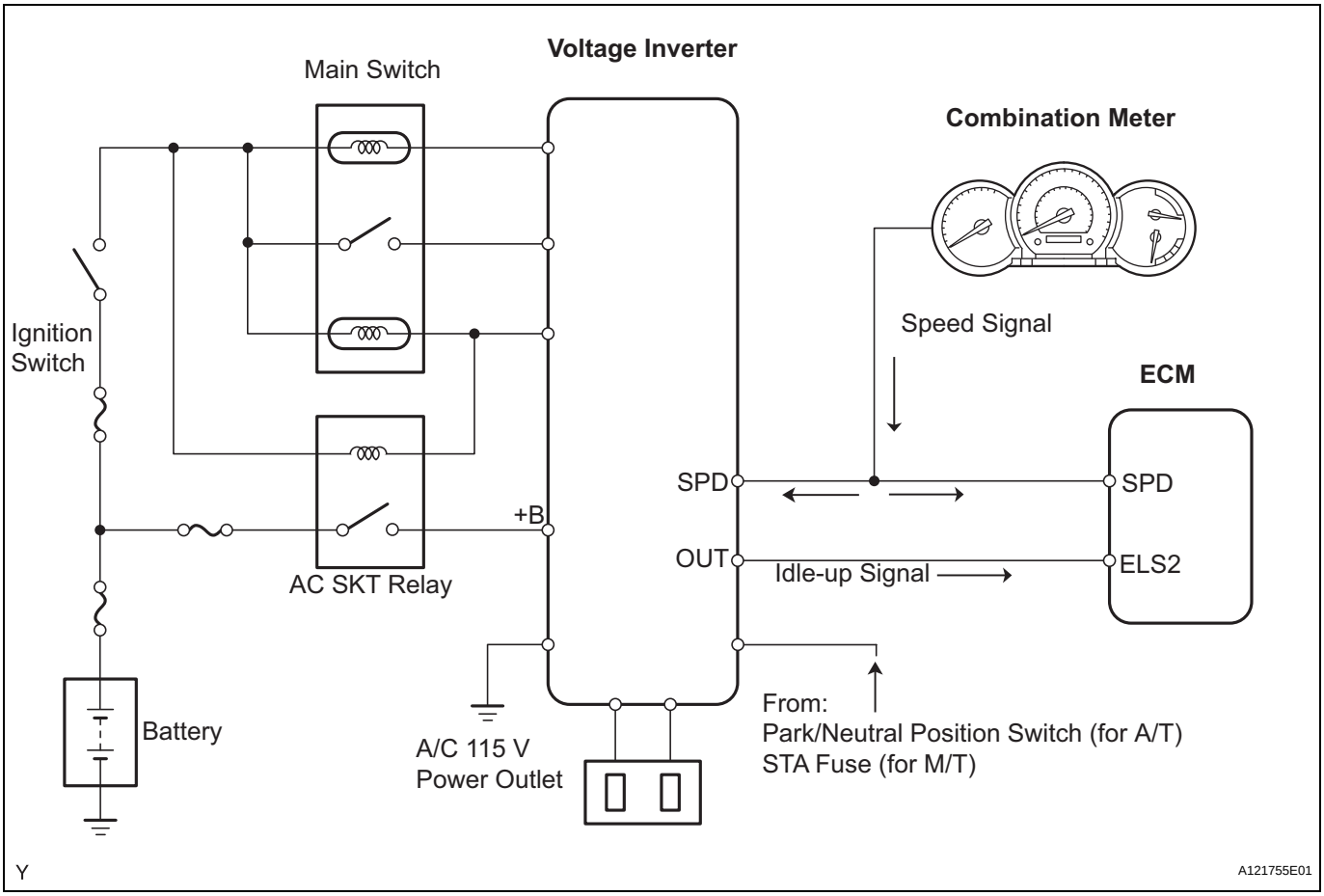

DTC No.	DTC Detection Conditions	Trouble Areas
P1500	While vehicle running, idling-up signal input into ECM for 10 seconds	• Open in speed signal circuit • Short between idle-up signal and +B circuits • Voltage inverter • ECM

MONITOR DESCRIPTION

While the engine is idling, the ECM performs idle up according to the power supply of the inverter to stabilize the engine idling speed.
When the vehicle is stationary and the inverter input exceeds 8.3 A, the inverter sends an idle-up signal from the OUT terminal of the inverter to the ELS2 terminal of the ECM.
If the idle-up signal is input into the ECM for 10 seconds while the vehicle is running, the ECM interprets this as a malfunction in the inverter circuit and sets the DTC.

MONITOR STRATEGY

Related DTCs	P1500: Voltage inverter performance
Required Sensors/Components (Main)	Voltage inverter
Required Sensors/Components (Related)	-
Frequency of Operation	Continuous
Duration	10 seconds
MIL Operation	2 driving cycles
Sequence of Operation	None

TYPICAL ENABLING CONDITIONS

Monitor runs whenever following DTCs not present	None
Vehicle speed	3.11 mph (5 km/h) or more
Battery voltage	8 V or more
Ignition switch	ON
Starter	OFF

TYPICAL MALFUNCTION THRESHOLDS

Electric load signal 2	ON

WIRING DIAGRAM

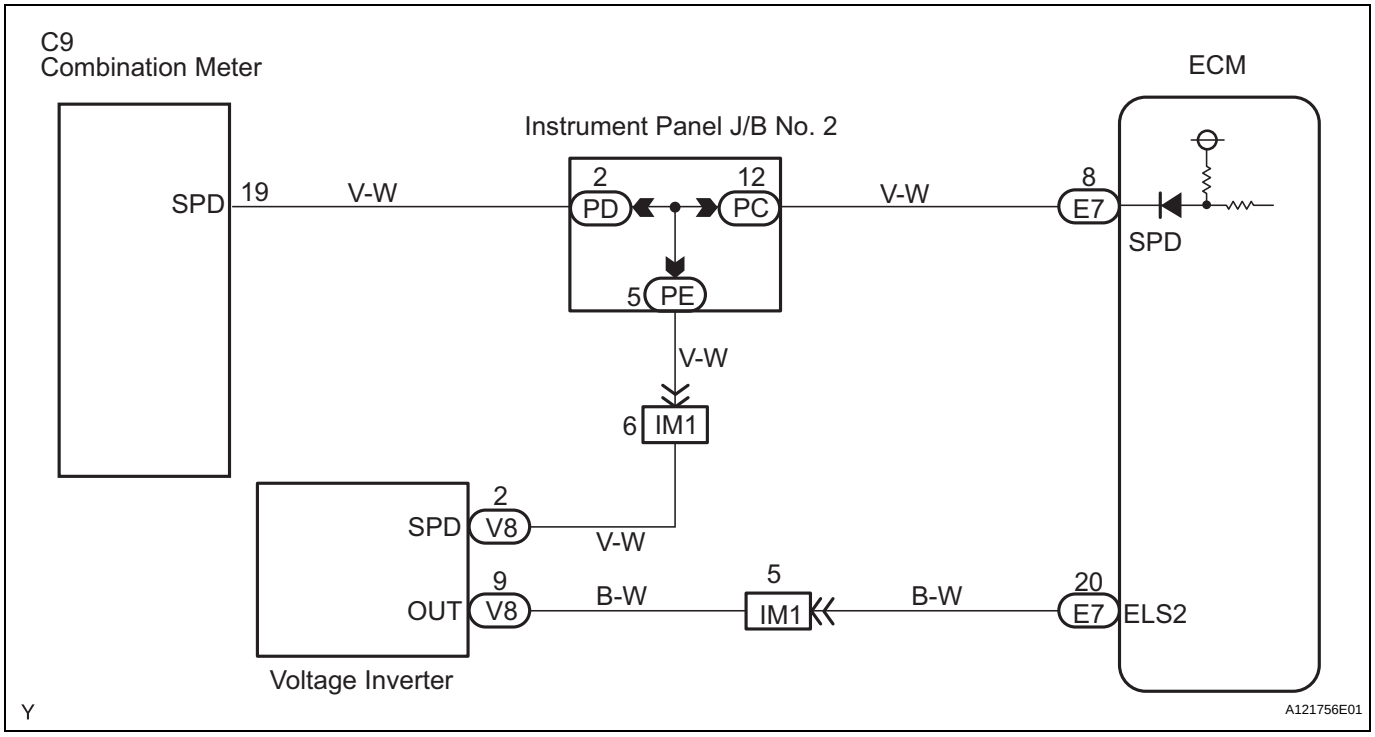

Read freeze frame data using an intelligent tester. Freeze frame data record the engine condition when malfunctions are detected. When troubleshooting, freeze frame data can help determine if the vehicle was moving or stationary, if the engine was warmed up or not, if the air-fuel ratio was lean or rich, and other data, from the time the malfunction occurred.

1	CHECK ANY OTHER DTCS OUTPUT (IN ADDITION TO DTC P1500)

(a) Connect an intelligent tester to the DLC3.
(b) Turn the ignition switch to ON and turn the tester ON.
(c) Select the following menu items: DIAGNOSIS / ENHANCED OBD II / DTC INFO / CURRENT CODES.
(d) Read DTCs.

Result

Display (DTC output)	Proceed To
P1500	A
P1500 and other DTCs.	B

If any DTCs other than P1500 are output, troubleshoot those DTCs first.

B → **GO TO DTC CHART**

A

2	INSPECT VOLTAGE INVERTER ASSEMBLY (SPD SIGNAL)

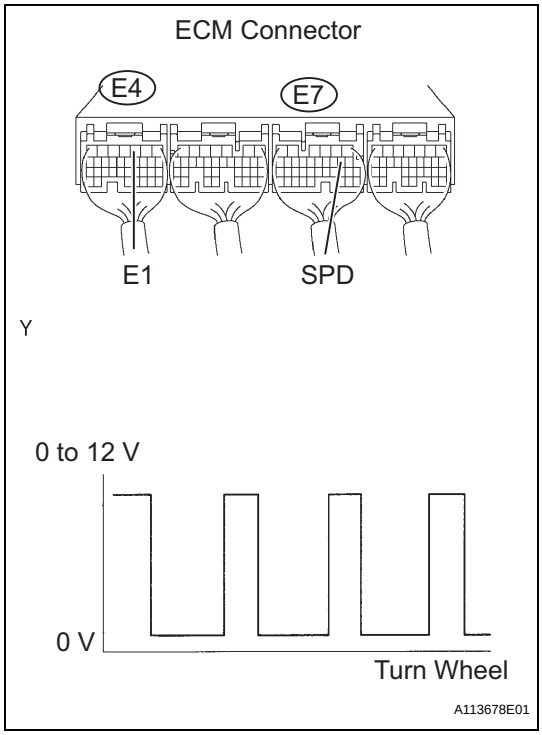

(a) Shift the transmission gear selector lever to the neutral position.
(b) Jack up the vehicle.
(c) Turn the ignition switch to ON.
(d) Check the voltage between the terminals of the ECM connectors as the wheel is turned slowly.

Standard Voltage

Tester Connections	Specified Conditions
SPD (E7--8) - E1 (E4-3)	Voltage generated intermittently

HINT:
The output voltage should fluctuate up and down similarly to the diagram on the left when the wheel is turned slowly.

NG → **REPAIR OR REPLACE HARNESS OR CONNECTOR**

OK

3 INSPECT ECM (ELS VOLTAGE)

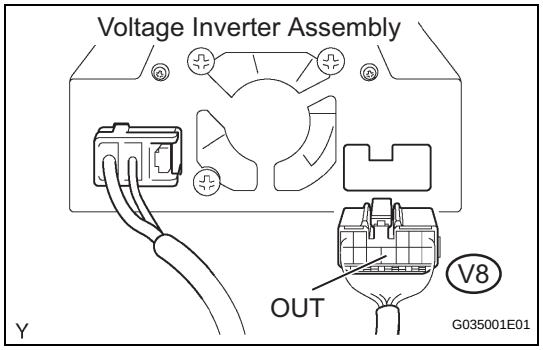

(a) Disconnect the V8 inverter connector.
(b) Start the engine.
(c) Measure the voltage between the OUT terminal of inverter and the body ground.
Standard Voltage

Tester Connections	Specified Conditions
OUT (V8-9) - Body ground	1 V or less

(d) Reconnect the inverter connector.

OK → **REPLACE VOLTAGE INVERTER ASSEMBLY**

NG

4 CHECK HARNESS AND CONNECTOR (ECM - INVERTER, INVERTER - POWER SOURCE)

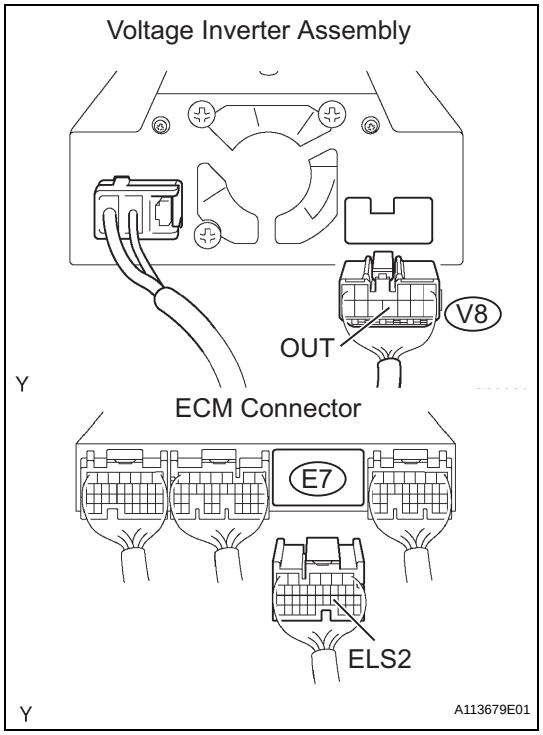

(a) Disconnect the V8 inverter connector.
(b) Disconnect the E7 ECM connector.
(c) Turn the ignition to ON.
(d) Measure the voltage between the terminals of the wire harness and body ground.
Standard Voltage (Check for short in idling up signal circuit)

Tester Connections	Specified Conditions
OUT (V8-9) or ELS2 (E7-20) - Body ground	1 V or less

(e) Reconnect the inverter connector and the ECM connector.

NG → **REPAIR OR REPLACE HARNESS OR CONNECTOR**

OK

REPLACE ECM

ES

DTC	P1613	Secondary Air Injection Driver Malfunction

DESCRIPTION

Refer to DTC P0412 (See page ES-189).

DTC No.	DTC Detection Conditions	Trouble Areas
P1613	Either of following conditions (1) or (2) met (1) All of following conditions met (1 trip detection logic): • Either of air pump or air switching valve not operating • Diagnostic signal from Air Injection Control Driver (AID) 80 % • Battery voltage 8 V or more (2) Both of following conditions met (1 trip detection logic): • Battery voltage 8 V or more • Diagnostic signal from AID abnormal (duty signal other than 0, 20, 40, 80 and 100 %)	• AID • Open in AID ground circuit
P1613	All of following conditions met (1 trip detection logic): (a) Air injection system operating (Air Switching Valve [ASV] ON and air pump ON) (b) Diagnostic signal from Air Injection Control Driver (AID) 0 % (c) Battery voltage 8 V or more	• Short in diagnostic information signal circuit (AID - ECM) • Open or short in air pump and air switching valve command signal circuit (AID - ECM) • Open in AID ground circuit • AID • ECM
P1613	Both of following conditions met (1 trip detection logic): (a) Battery voltage 8 V or more (b) Diagnostic signal from Air Injection Control Driver (AID) 100 %	• Open or short in AID power source circuit • Open in diagnostic information signal circuit (AID - ECM) • AID • ECM

MONITOR DESCRIPTION

For a short time after cold engine starts, the ECM transmits command signals to the Air Injection Control Driver (AID) to drive the air pump and the Air Switching Valve (ASV). The AID detects open and short circuits according to the voltages at the AID terminals to the air pump and ASV, and the circuit voltage of the AID power source, and transmits diagnostic information as a signal to the ECM.
If the Secondary Air Injection (AIR) system circuit or the AID itself malfunctions, the AID sends a malfunction signal (duty signal) as diagnostic information to the ECM (when the system is normal, a system normal signal is sent). The ECM sets the DTC based on the diagnostic information from the AID.
EXAMPLE:

1. The duty ratio of the diagnostic signal from the AID is 0 or 100 % (remains at 0 V or the same as battery voltage).
2. The duty ratio of the diagnostic signal from the AID shows an impossible ratio (other than 0, 20, 40, 80 and 100 %).
3. The AID outputs the normal signal (normal duty signal: 80 %) while the system is not operating.

MONITOR STRATEGY

Related DTCs	P1613: Secondary air injection system air injection control driver circuit range check
Required Sensors/Components (Main)	Air injection control driver
Required Sensors/Components (Related)	Air switching valve
Frequency of Operation	Once per drive cycle
Duration	3 seconds
MIL Operation	Immediate
Sequence of Operation	None

TYPICAL ENABLING CONDITIONS

Case 1 and 4:

Monitor runs whenever following DTCs not present	None
Battery voltage	8 V or more
Ignition switch	ON
Starter	OFF

Case 2:

Monitor runs whenever following DTCs not present	None
Either a or b met:	-
a. Air pump	Not operating
b. Air switching valve	Not operating
Battery voltage	8 V or more
Ignition switch	ON
Starter	OFF

Case 3:

Monitor runs whenever following DTCs not present	None
Following conditions (a) and (b) met	-
a. Air pump	Operating
b. Air switching valve	Operating
Battery voltage	8 V or more
Ignition switch	ON
Starter	OFF

TYPICAL MALFUNCTION THRESHOLDS

Case 1:

One of following conditions met:	A, B, C or D
A. Diagnostic signal duty ratio from air injection control driver	1 % or more, and 10 % or less
B. Diagnostic signal duty ratio from air injection control driver	30 %
C. Diagnostic signal duty ratio from air injection control driver	49 %
D. Diagnostic signal duty ratio from air injection control driver	91 % or more, and 99 % or less

Case 2:

Diagnostic signal duty ratio from air injection control driver	70 % or more, and 90 % or less

Case 3:

Diagnostic signal duty ratio from air injection control driver	0 %

Case 4:

Diagnostic signal duty ratio from air injection control driver	100 %

COMPONENT OPERATING RANGE

Diagnostic signal duty ratio from air injection control driver	70 % or more, and 90 % or less when secondary air injection system operating. 0 % when secondary air injection system not operating.

WIRING DIAGRAM

Refer to DTC P0412 (See page ES-192).

HINT:
Diagnostic information output by the AID can be confirmed by connecting an oscilloscope to the diagnostic information terminal of the AID. Reading the waveform while performing the AIR system intrusive operation provided in the SYSTEM CHECK function, allows the possible trouble areas to be narrowed down.
(a) Start the engine and warm it up.
(b) Turn the ignition switch to OFF.
(c) Connect an intelligent tester to the DLC3.

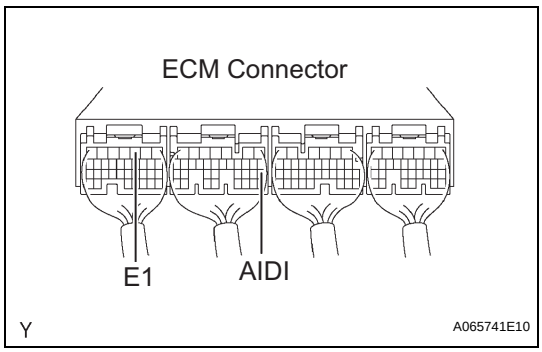

(d) Connect oscilloscope probes to the AIDI and E1 terminals of the ECM.
(e) Turn the ignition switch to ON and turn the tester ON.
(f) Select the following menu items: DIAGNOSIS / ENHANCED OBD II / SYSTEM CHECK / AIR INJ CHECK / MANUAL OPERATION / AP: ON, ASV: OPEN and AP: OFF, ASV CLOSE.
HINT:
When MANUAL OPERATION is selected, the tester initialization (atmospheric pressure measurement) is performed automatically. The initialization takes 10 seconds. After the initialization, AP and ASV operation can be selected.
(g) Start the engine.
(h) Perform the AIR system intrusive operation while the engine is idling.

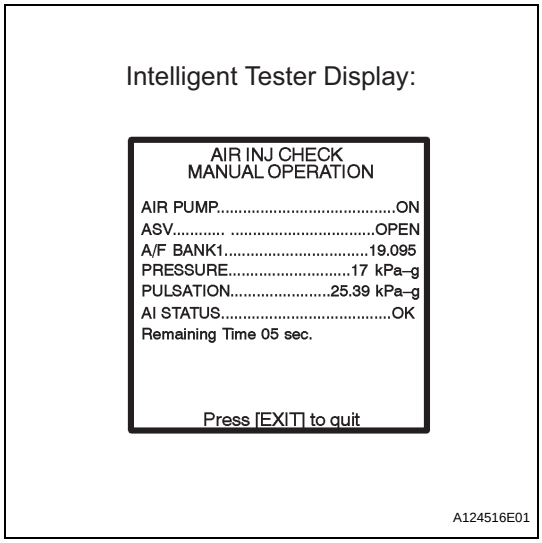

(i) Monitor the AID voltage output (duty ratio signal).

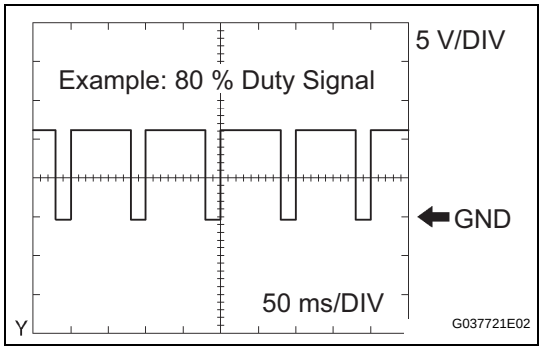

Oscilloscope range

Items	Contents
Terminals	CH1: AIDI - E1
Equipment Settings	5 V/Division, 20 to 50 ms/Division
Conditions	Idling

(j) Turn the ignition switch to OFF.

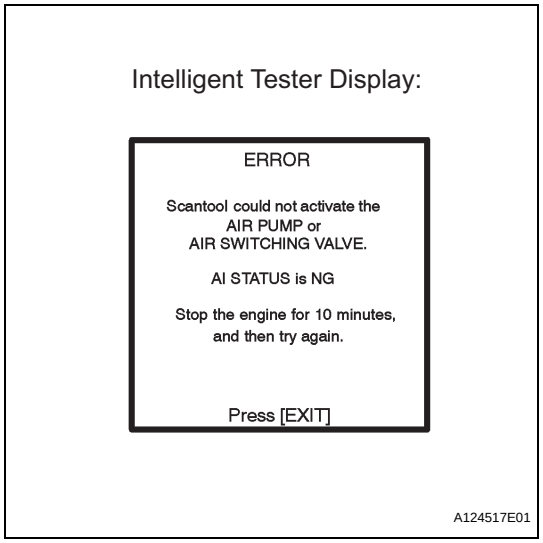

NOTICE:

- **This AIR INJECTION CHECK only allows technicians to operate the AIR system for a maximum of 5 seconds. Furthermore, the check can only be performed up to 4 times per trip. If the test is repeated, intervals of at least 30 seconds are required between checks. While AIR system operation using the intelligent tester is prohibited, the tester display indicates the prohibition (WAIT or ERROR).**
  If an ERROR as shown in the illustration is displayed on the tester during the test, stop the engine for 10 minutes, and then try again.
- **Performing the AIR INJ CHECK repetitively may cause damage to the AIR system. If necessary, leave an interval of several minutes between SYSTEM CHECK operations to prevent the system from overheating.**
- **When performing the AIR INJ CHECK operation after the battery cable has been reconnected, wait for 7 minutes with the ignition switch turned to ON or the engine running.**
- **Turn the ignition switch to OFF when the AIR INJ CHECK operation finishes.**

AID Diagnostic Signal Waveforms	ECM Commands	DTCs (ECM Output)	Suspected Trouble Areas
100 % Duty Ratio See waveform 1	Any Air Injection (AIR) System operation	P1613	• Open in diagnostic signal circuit • Air Injection Control Driver (AID) • Open in AID+B circuit (AID power source) • Short between +B and diagnostic signal circuits
0 % Duty Ratio See waveform 2	AIR System: ON (Air pump ON, ASV ON)	P1613	• Open or short in air pump or Air Switching Valve (ASV) command signal circuit (ECM-AID) • Open in AID ground circuit • Short between diagnostic signal circuit and body ground • AID • ECM
	AIR System: OFF (Air pump OFF, ASV OFF)	-	Normal
20 % Duty Ratio See waveform 3	Air Pump: ON	P0418	Short between air pump drive circuit and body ground • Harness and connector (AID-Pump) • Air pump • AID • ECM
	Air Pump: OFF	P0418	Open in air pump drive circuit (AID-Pump), or short between air pump drive circuit and +B • Harness and connector (AID-Pump) • Air pump • AID • ECM
40 % Duty Ratio See waveform 4	ASV: ON	P0412	Short between ASV drive circuit and body ground • Harness and connector (AID-ASV) • ASV • AID • ECM
	ASV: OFF	P0412	Open in ASV drive circuit (AID-ASV), or short between ASV drive circuit and +B • Harness and connector (AID-ASV) • AID • ASV • ECM
80 % Duty Ratio See waveform 5	AIR System: OFF (Air pump OFF, ASV OFF)	P1613	• AID • ECM
	AIR System: ON (Air pump ON, ASV ON)	-	Normal
Other than above (other than 0, 20, 40, 80 and 100 % duty)	-	P1613	• AID • Open in AID ground circuit

ES

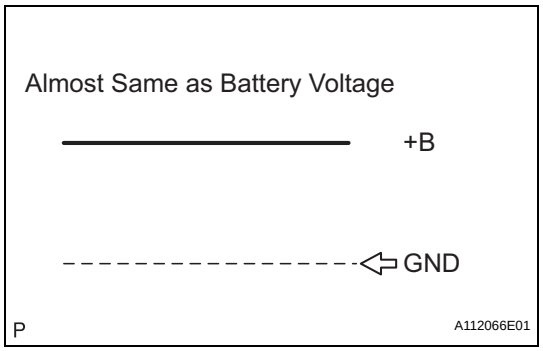

1. Waveform 1
100 % Duty Ratio

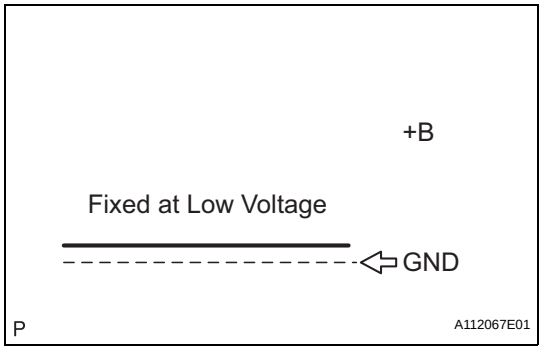

2. Waveform 2
0 % Duty Ratio

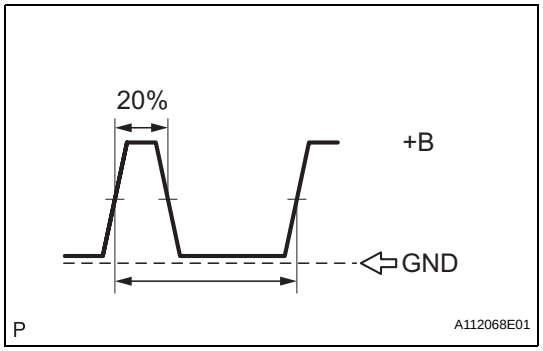

3. Waveform 3
20 % Duty Ratio

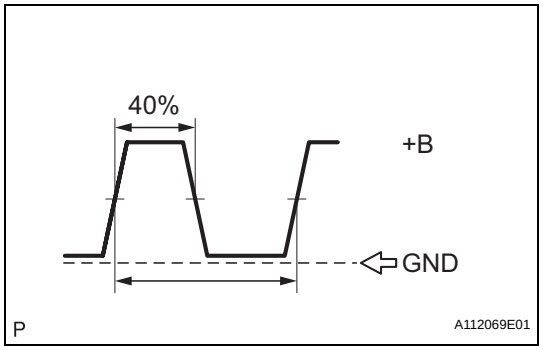

4. Waveform 4
40 % Duty Ratio

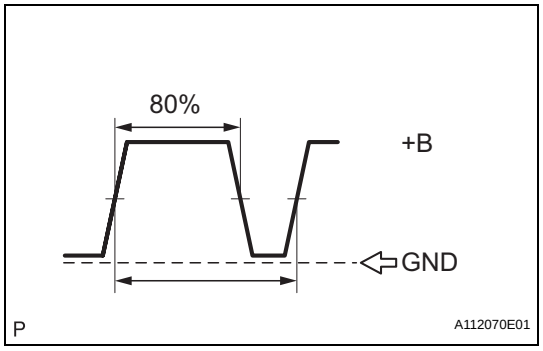

5. Waveform 5
80 % Duty Ratio

ES

HINT:

- By using an intelligent tester to perform the AIR INJ CHECK operation in the SYSTEM CHECK, the air-fuel ratio and the pressure in the secondary air injection system passage can be checked while the secondary air injection system is operating. This helps technicians to troubleshoot the system when it malfunctions.
- Read freeze frame data using an intelligent tester. Freeze frame data record the engine condition when malfunctions are detected. When troubleshooting, freeze frame data can help determine if the vehicle was moving or stationary, if the engine was warmed up or not, if the air-fuel ratio was lean or rich, and other data, from the time the malfunction occurred.

1	CHECK ANY OTHER DTCS OUTPUT (IN ADDITION TO DTC P1613)

ES

(a) Connect an intelligent tester to the DLC3.
(b) Turn the ignition switch to ON and turn the tester ON.
(c) Select the following menu items: DIAGNOSIS / ENHANCED OBD II / DTC INFO / CURRENT CODES.
(d) Read DTCs.

Result

Display (DTC Output)	Proceed To
P1613	A
P1613 and other DTCs	B

If any DTCs other than P1613 are output, troubleshoot those DTCs first.

NG → GO TO DTC CHART

OK

2	PERFORM ACTIVE TEST USING INTELLIGENT TESTER (AIDI VOLTAGE)

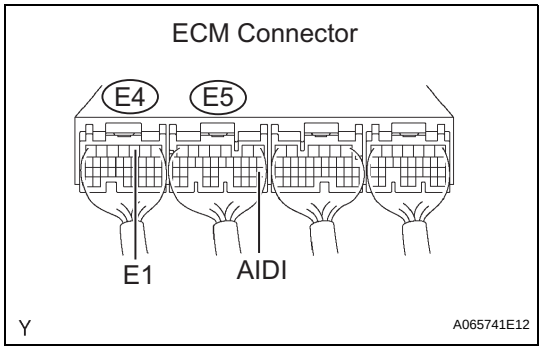

(a) Start the engine and warm it up.
(b) Turn the ignition switch to OFF.
(c) Connect the intelligent tester to the DLC3.
(d) Turn the ignition switch to ON and turn the tester ON.
(e) Select the following menu items:
DIAGNOSIS / ENHANCED OBD II / SYSTEM CHECK / AIR INJ CHECK / MANUAL OPERATION / AP: ON, ASV: OPEN and AP: OFF, ASV CLOSE.
HINT:
When MANUAL OPERATION is selected, the tester initialization (atmospheric pressure measurement) is performed automatically. The initialization takes 10 seconds. After the initialization, AP and ASV operation can be selected.
(f) Start the engine.
(g) Perform the AIR system intrusive operation while the engine is idling.
(h) Measure the voltage between the AIDI and E1 terminals of the ECM connector when the AIR system is ON and OFF.
(i) Turn the ignition switch to OFF.

NOTICE:

- **Do not perform the SYSTEM CHECK operation repetitively. It may cause the damage in the system. If necessary, leave an interval of several minutes between SYSTEM CHECK operations.**
- **When performing the AIR INJ CHECK operation after the battery cable has been reconnected, wait for 7 minutes with the ignition switch turned to ON or the engine running.**
- **Turn the ignition switch to OFF when the AIR INJ CHECK operation finishes.**

Result

Results	Suspected Trouble Areas	Proceed To
Fixed at low (1.6 V or less) even when AIR system ON (Air pump ON, ASV OPEN)	• Short between air pump or air switching valve command signal circuit and body ground • Open in air pump command signal circuit (between ECM and AID) • Open in ASV command signal circuit (between ECM and AID) • Open in AID ground circuit (between AID and body ground) • Diagnostic signal circuit ground short • AID • ECM	A
Fixed at high (12 V or more) even when AIR system OFF (Air pump OFF, ASV CLOSE)	• Open in diagnostic signal circuit (ECM - AID) • Short between +B and diagnostic signal circuits (ECM - AID) • Open in AID power source circuit • AID • ECM	B
Other than above: Fluctuating (duty signal other than 20, 40 and 80 %)	• AID • Open in AID ground circuit (between AID and body ground)	C

ES

B → Go to step 5

C → Go to step 8

A

3 INSPECT ECM (AIRP AND AIRV VOLTAGE)

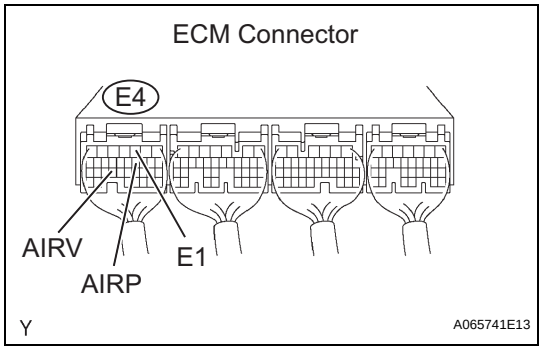

(a) Turn the ignition switch to ON.

(b) Measure the voltage between the terminals of the ECM connector.

Standard Voltage

Tester Connections	Specified Conditions
AIRP (E4-11) - E1 (E4-3)	9 to 14 V (near battery voltage)
AIRV (E4-24) - E1 (E4-3)	9 to 14 V (near battery voltage)

OK → REPLACE ECM

NG

4	CHECK HARNESS AND CONNECTOR (ECM - AID, AID - BODY GROUND)

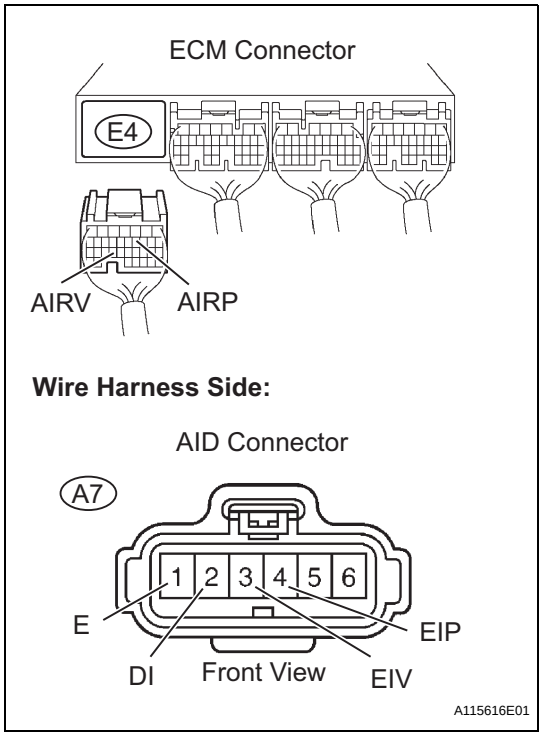

(a) Check for short in harness and connectors between the ECM and AID.
  (1) Disconnect the E4 ECM connector.
  (2) Disconnect the A7 AID connector.
  (3) Check the resistance.
  Standard Resistance (check for short)

Tester Connections	Specified Conditions
AIRP (E4-11) or EIP (A7-4) - Body ground	10 kΩ or higher
AIRV (E4-24) or EIV (A7-3) - Body ground	10 kΩ or higher

  (4) Reconnect the ECM connector and the AID connector.

(b) Check for open in harness and connector between the AID and body ground.
  (1) Disconnect the A7 AID connector.
  (2) Check the resistance.
  Standard Resistance (check for open)

Tester Connections	Specified Conditions
E (A7-1) - Body ground	Below 1 Ω

  (3) Reconnect the AID connector.

(c) Check for short in harness and connector between the diagnostic signal circuit and body ground.
  (1) Disconnect the A7 AID connector.
  (2) Turn the ignition switch to ON.
  (3) Measure the voltage between the terminals of the AID connector.
  Standard Voltage (check for short)

Tester Connections	Specified Conditions
DI (A7-2) - E (A7-1)	9 to 14 V (near battery voltage)

  (4) Reconnect the AID connector.

NG → **REPAIR OR REPLACE HARNESS OR CONNECTOR**

OK

REPLACE AIR INJECTION CONTROL DRIVER

5 CHECK AIR INJECTION CONTROL DRIVER POWER SOURCE CIRCUIT

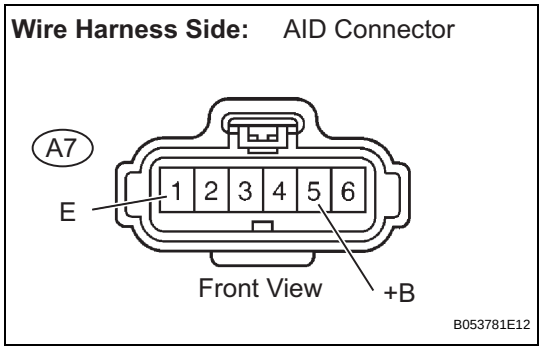

(a) Disconnect the A7 AID connector.
(b) Turn the ignition switch to ON.
(c) Measure the voltage between the terminal of the AID and the body ground.
Standard Voltage

Tester Connections	Specified Conditions
+B (A7-5) - Body ground	9 to 14 V (near battery voltage)

(d) Reconnect the AID connector.

NG → **REPAIR OR REPLACE HARNESS OR CONNECTOR**

OK

6 INSPECT AIR INJECTION CONTROL DRIVER (DI TERMINAL VOLTAGE)

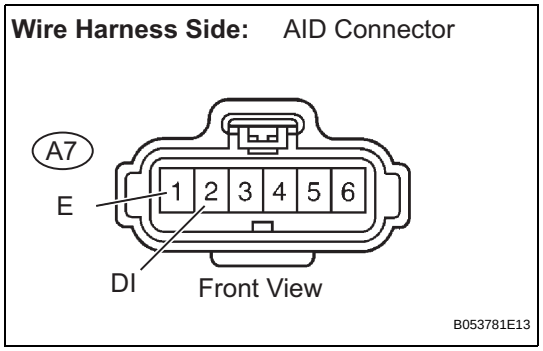

(a) Disconnect the A7 AID connector.
(b) Turn the ignition switch to ON.
(c) Measure the voltage between the terminals of the AID connector.
Standard Voltage

Tester Connections	Specified Conditions
DI (A7-2) - E (A7-1)	9 to 14 V (near battery voltage)

(d) Reconnect the AID connector.

OK → **REPLACE AIR INJECTION CONTROL DRIVER**

NG

ES

7	CHECK HARNESS AND CONNECTOR (ECM - AID)

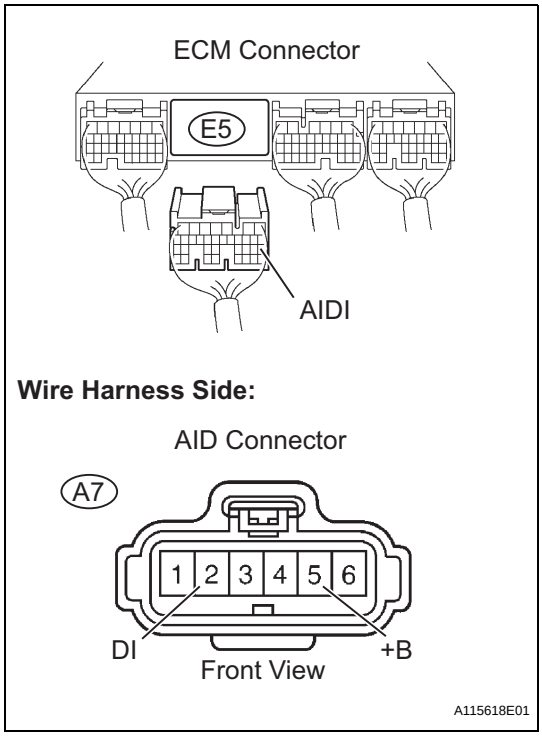

(a) Disconnect the E5 ECM connector.
(b) Disconnect the A7 AID connector.
(c) Check the resistance.

Standard Resistance (check for open)

Tester Connections	Specified Conditions
DI (A7-2) - AIDI (E5-20)	Below 1 Ω

Standard Resistance (check for short)

Tester Connections	Specified Conditions
DI (A7-2) or AIDI (E5-20) - +B (A7-5)	10 kΩ or higher

(d) Reconnect the ECM and AID connector.

NG → **REPAIR OR REPLACE HARNESS OR CONNECTOR**

OK

REPLACE ECM

8	CHECK HARNESS OR CONNECTOR (AID - BODY GROUND)

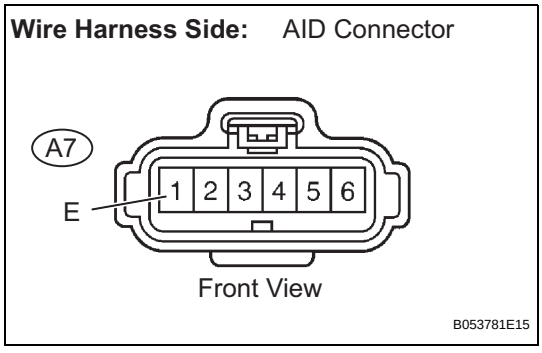

(a) Disconnect the A7 AID connector.
(b) Check the resistance.

Standard Resistance (check for open)

Tester Connections	Specified Conditions
E (A7-1) - Body ground	Below 1 Ω

(c) Reconnect the AID connector.

NG → **REPAIR OR REPLACE HARNESS OR CONNECTOR**

OK

9	REPLACE AIR INJECTION CONTROL DRIVER

NEXT

10	CHECK WHETHER DTC OUTPUT RECURS (SYSTEM CHECK AUTOMATIC OPERATION)

(a) Start the engine and warm it up.
(b) Turn the ignition switch to OFF.
(c) Connect the intelligent tester to the DLC3.
(d) Turn the ignition switch to ON and turn the tester ON.
(e) Clear DTCs (where set) (see page ES-40).
(f) Select the following menu items:
DIAGNOSIS / ENHANCED OBD II / SYSTEM CHECK / AIR INJ CHECK / AUTOMATIC OPERATION.
(g) Start the engine after the tester initialization is finished.
(h) Perform the SYSTEM CHECK operation by pressing ENTER.
(i) After operating the AIR system, press the ENTER button to confirm the AIR system pending codes.
(j) Check PENDING DTCs.
(k) Turn the ignition switch to OFF.

OK:

No pending DTC output.

NOTICE:

- **When performing the AIR INJ CHECK operation after the battery cable has been reconnected, wait for 7 minutes with the ignition switch turned to ON or the engine running.**
- **Turn the ignition switch to OFF when the AIR INJ CHECK operation finishes.**

ES

NEXT

END

DTC	P2102	Throttle Actuator Control Motor Circuit Low

DTC	P2103	Throttle Actuator Control Motor Circuit High

DESCRIPTION

The throttle actuator is operated by the ECM and opens and closes the throttle valve using gears. The opening angle of the throttle valve is detected by the Throttle Position (TP) sensor, which is mounted on the throttle body. The TP sensor provides feedback to the ECM. This feedback allows the ECM to appropriately control the throttle actuator and monitor the throttle opening angle as the ECM responds to driver inputs.

HINT:

This ETCS (Electronic Throttle Control System) does not use a throttle cable.

DTC No.	DTC Detection Conditions	Trouble Areas
P2102	Conditions (a) and (b) continue for 2.0 seconds (1 trip detection logic): (a) Throttle actuator duty ratio 80 % or more (b) Throttle actuator current 0.5 A or less	• Open in throttle actuator circuit • Throttle actuator • ECM
P2103	Either of following conditions met: • Hybrid IC diagnosis signal fail • Hybrid IC current limiter port fail	• Short in throttle actuator circuit • Throttle actuator • Throttle valve • Throttle body assembly • ECM

MONITOR DESCRIPTION

The ECM monitors the electrical current through the electronic actuator, and detects malfunctions and open circuits in the throttle actuator based on this value. If the current is outside the standard range, the ECM determines that there is a malfunction in the throttle actuator. In addition, if the throttle valve does not function properly (for example, stuck on), the ECM determines that there is a malfunction. The ECM then illuminates the MIL and sets a DTC.

Example:

When the electrical current is more than 10 A, or less than 0.5 A and the throttle actuator duty ratio exceeds 80 %, the ECM interprets this as the current being outside the standard range, and illuminates the MIL and sets a DTC.

If the malfunction is not repaired successfully, a DTC is set when the engine is quickly revved to a high rpm several times after the engine has idled for 5 seconds after engine start.

FAIL-SAFE

When either of these DTCs, as well as other DTCs relating to ETCS (Electronic Throttle Control System) malfunctions, is set, the ECM enters fail-safe mode. During fail-safe mode, the ECM cuts the current to the throttle actuator off, and the throttle valve is returned to a 6.5° throttle angle by the return spring. The ECM then adjusts the engine output by controlling the fuel injection (intermittent fuel-cut) and ignition timing, in accordance with the accelerator pedal opening angle, to allow the vehicle to continue at a minimal speed. If the accelerator pedal is depressed firmly and gently, the vehicle can be driven slowly. Fail-safe mode continues until a pass condition is detected, and the ignition switch is then turned to OFF.

MONITOR STRATEGY

Related DTCs	P2102: Throttle actuator current (low current) P2103: Throttle actuator current (high current)
Required Sensors/Components (Main)	Throttle actuator (throttle body)
Required Sensors/Components (Related)	None
Frequency of Operation	Continuous
Duration	P2102: 2 seconds P2103: 0.6 seconds or conditions met 25 times

MIL Operation	Immediate
Sequence of Operation	None

TYPICAL ENABLING CONDITIONS

Monitor runs whenever following DTCs not present	None

P2102:

Duty ratio to open throttle actuator	80 % or more
Throttle actuator power supply	8 V or more

P2103:

Throttle actuator power supply	8 V or more

TYPICAL MALFUNCTION THRESHOLDS

ES

P2102:

Throttle actuator current	Less than 0.5 A

P2103:

Either of following conditions met:	A or B
A. Hybrid IC diagnosis signal	Fail
B. Hybrid IC current limiter port	Fail

WIRING DIAGRAM

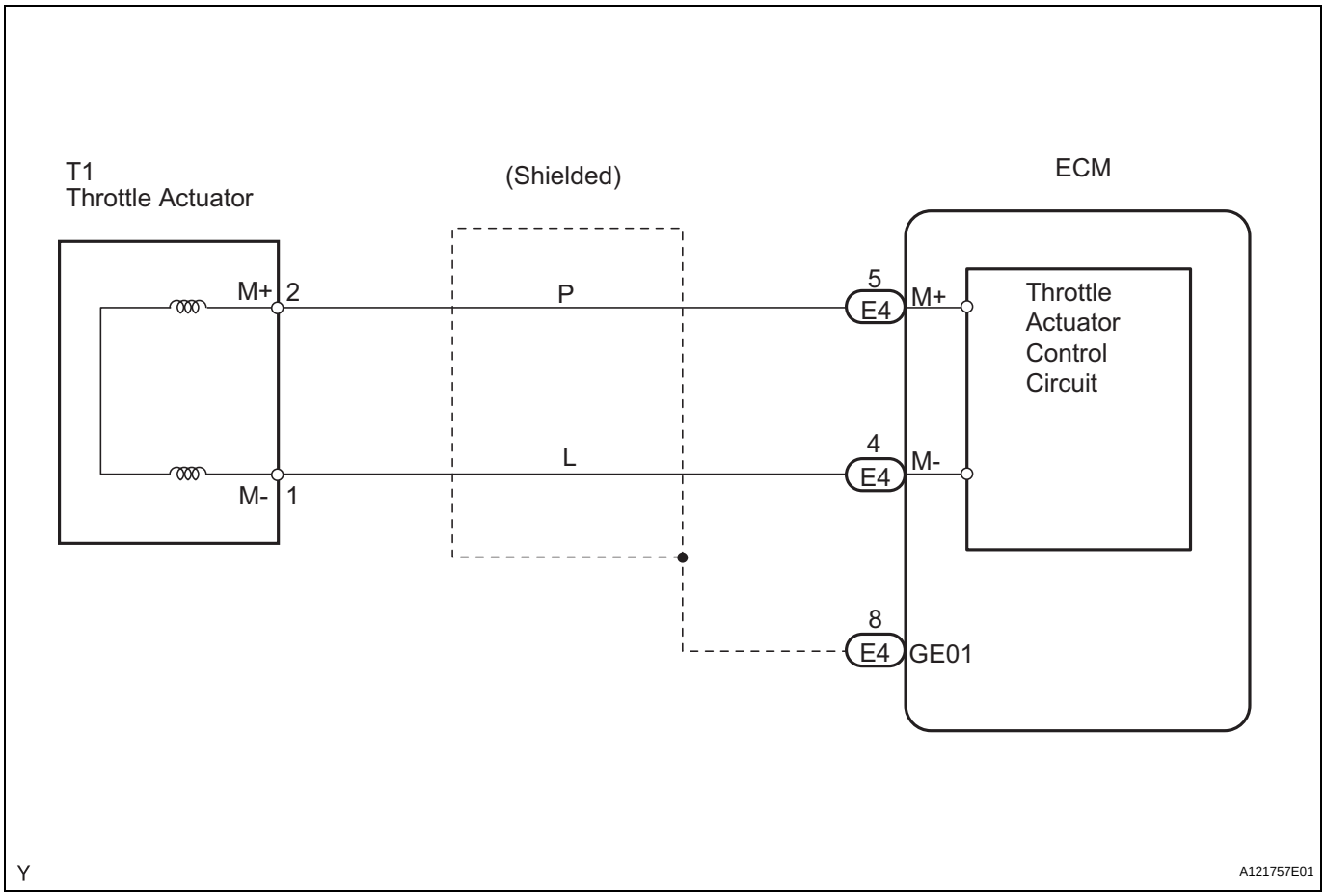

HINT:

- Read freeze frame data using an intelligent tester. Freeze frame data record the engine condition when malfunctions are detected. When troubleshooting, freeze frame data can help determine if the vehicle was moving or stationary, if the engine was warmed up or not, if the air-fuel ratio was lean or rich, and other data, from the time the malfunction occurred.
- The throttle actuator current (THROTTLE MOT) and the throttle actuator duty ratio (THROTTLE OPN / THROTTLE CLS) can be read using an intelligent tester. However the ECM shuts off the throttle actuator current when the ETCS malfunctions.

1 INSPECT THROTTLE BODY ASSEMBLY (THROTTLE ACTUATOR RESISTANCE)

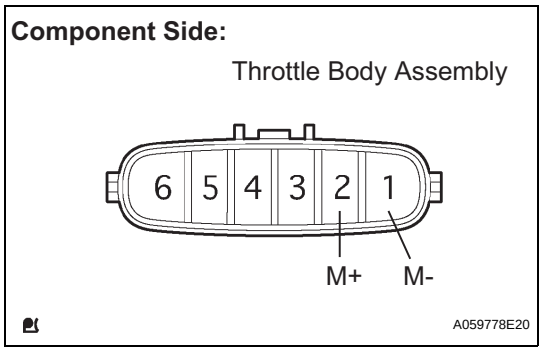

(a) Disconnect the T1 throttle body connector.
(b) Measure the resistance between the terminals of the throttle body.

Standard Resistance

Tester Connections	Specified Conditions
M+ (2) - M- (1)	0.3 to 100 Ω at 20°C (68°F)

(c) Reconnect the throttle body connector.

NG → **REPLACE THROTTLE BODY**

OK

2 CHECK HARNESS AND CONNECTOR (THROTTLE ACTUATOR - ECM)

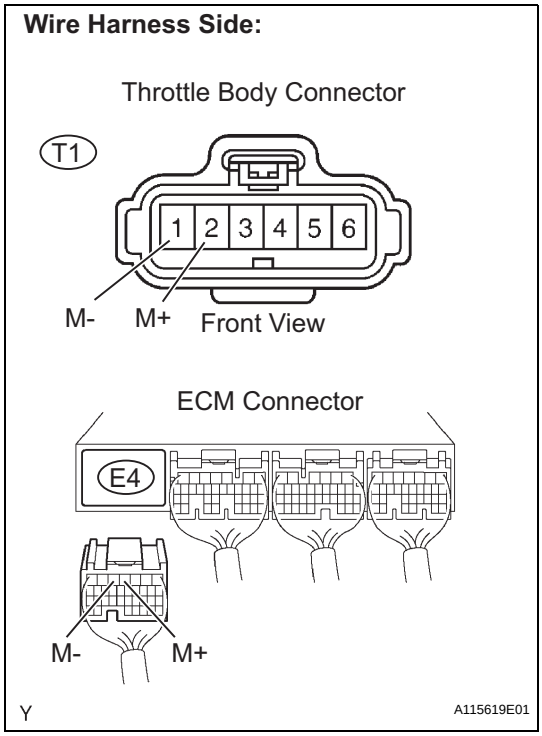

(a) Disconnect the T1 throttle body connector.
(b) Disconnect the E4 ECM connector.
(c) Check the resistance.

Standard Resistance (Check for open)

Tester Connections	Specified Conditions
M+ (T1-2) - M+ (E4-5)	Below 1 Ω
M- (T1-1) - M- (E4-4)	Below 1 Ω

Standard Resistance (Check for short)

Tester Connections	Specified Conditions
M+ (T1-2) or M+ (E4-5) - Body ground	10 kΩ or higher
M- (T1-1) or M- (E4-4) - Body ground	10 kΩ or higher

(d) Reconnect the throttle body connector.
(e) Reconnect the ECM connector.

NG → **REPAIR OR REPLACE HARNESS OR CONNECTOR**

OK

3	INSPECT THROTTLE BODY

(a) Check for foreign objects between the throttle valve and the housing.

NG → **REMOVE FOREIGN OBJECT AND CLEAN THROTTLE BODY**

OK

4	INSPECT THROTTLE VALVE

(a) Check if the throttle valve opens and closes smoothly.

NG → **REPLACE THROTTLE BODY**

OK

REPLACE ECM

DTC	P2111	Throttle Actuator Control System - Stuck Open

DTC	P2112	Throttle Actuator Control System - Stuck Closed

DESCRIPTION

The throttle actuator is operated by the ECM, and opens and closes the throttle valve using gears. The opening angle of the throttle valve is detected by the Throttle Position (TP) sensor, which is mounted on the throttle body. The TP sensor provides feedback to the ECM in order that it can control the throttle actuator, and therefore the throttle valve, appropriately in response to driver inputs.
HINT:
This ETCS (Electronic Throttle Control System) does not use a throttle cable.

DTC No.	DTC Detection Conditions	Trouble Areas
P2111	ECM signals throttle actuator to close, but stuck (1 trip detection logic)	• Throttle actuator circuit • Throttle body assembly • Throttle valve
P2112	ECM signals throttle actuator to open, but stuck (1 trip detection logic)	• Throttle actuator • Throttle body assembly • Throttle valve

MONITOR DESCRIPTION

The ECM determines that there is a malfunction in the ETCS when the throttle valve remains at a fixed angle despite a high drive current from the ECM. The ECM illuminates the MIL and sets a DTC.
If the malfunction is not repaired successfully, a DTC is set when the accelerator pedal is fully depressed and released quickly (to fully open and close the throttle valve) after the engine is next started.

MONITOR STRATEGY

Related DTCs	P2111: Throttle actuator stuck open P2112: Throttle actuator stuck closed
Required Sensors/Components (Main)	Throttle actuator
Required Sensors/Components (Related)	-
Frequency of Operation	Continuous
Duration	0.5 seconds
MIL Operation	Immediate
Sequence of Operation	None

TYPICAL ENABLING CONDITIONS

All:

Monitor runs whenever following DTCs not present	None

P2111 (Throttle actuator stuck open):

All of following conditions met	-
System guard*	ON
Throttle actuator current	2 A or more
Throttle actuator close duty ratio	80 % or more

P2112 (Throttle actuator stuck closed):

All of following conditions met	-
System guard*	ON
Throttle actuator current	2 A or more

Throttle actuator open duty-cycle	80 % or more
* System guard set when following conditions met	-
Throttle actuator	ON
Throttle actuator duty calculation	Executing
Throttle position sensor	Fail determined
Throttle actuator current-cut operation	Not executing
Throttle actuator power supply	4 V or more
Throttle actuator	Fail determined

TYPICAL MALFUNCTION THRESHOLDS

P2111 (Throttle actuator stuck open):

TP sensor voltage change	No change

P2112 (Throttle actuator stuck closed):

TP sensor voltage change	No change

FAIL-SAFE

When either of these DTCs, as well as other DTCs relating to ETCS (Electronic Throttle Control System) malfunctions, is set, the ECM enters fail-safe mode. During fail-safe mode, the ECM cuts the current to the throttle actuator off, and the throttle valve is returned to a 6.5° throttle angle by the return spring. The ECM then adjusts the engine output by controlling the fuel injection (intermittent fuel-cut) and ignition timing, in accordance with the accelerator pedal opening angle, to allow the vehicle to continue at a minimal speed.
If the accelerator pedal is depressed firmly and gently, the vehicle can be driven slowly.
Fail-safe mode continues until a pass condition is detected, and the ignition switch is then turned to OFF.

WIRING DIAGRAM

Refer to DTC P2102 (See page ES-287).

HINT:
Read freeze frame data using an intelligent tester. Freeze frame data record the engine condition when malfunctions are detected. When troubleshooting, freeze frame data can help determine if the vehicle was moving or stationary, if the engine was warmed up or not, if the air-fuel ratio was lean or rich, and other data, from the time the malfunction occurred.

1	CHECK ANY OTHER DTCS OUTPUT (IN ADDITION TO DTC P2111 OR P2112)

(a) Connect an intelligent tester to the DLC3.
(b) Turn the ignition switch to ON.
(c) Turn the tester ON.
(d) Select the following menu items: DIAGNOSIS / ENHANCED OBD II / DTC INFO / CURRENT CODES.
(e) Read DTCs.

Result

Display (DTC Output)	Proceed To
P2111 or P2112	A
P2111 or P2112 and other DTCs	B

HINT:
If any DTCs other than P2111 or P2112 are output, troubleshoot those DTCs first.

B → GO TO DTC CHART

A

2 CHECK THROTTLE BODY (VISUALLY CHECK THROTTLE VALVE)

(a) Check for contamination between the throttle valve and the housing. If necessary, clean the throttle body. And check that the throttle valve moves smoothly.
OK:
Throttle valve is not contaminated with foreign objects and moves smoothly.

NG → REPLACE THROTTLE BODY ASSEMBLY

ES

OK

3 CHECK WHETHER DTC OUTPUT RECURS (DTC P2111 OR P2112)

(a) Connect the intelligent tester to the DLC3.
(b) Turn the ignition switch to ON.
(c) Turn the tester ON.
(d) Clear DTCs (see page ES-40).
(e) Start the engine, and fully depress and release the accelerator pedal quickly (to fully open and close the throttle valve).
(f) Select the following menu items: DIAGNOSIS / ENHANCED OBD II / DTC INFO / CURRENT CODES.
(g) Read DTCs.

Result

Display (DTC Output)	Proceed To
No DTC	A
P2111 or P2112	B

B → REPLACE ECM

A

CHECK FOR INTERMITTENT PROBLEMS

DTC	P2118	Throttle Actuator Control Motor Current Range / Performance

DESCRIPTION

The ETCS (Electronic Throttle Control System) has a dedicated power supply circuit. The voltage (+BM) is monitored and when it is low (less than 4 V), the ECM determines that there is a malfunction in the ETCS and cuts off the current to the throttle actuator.
When the voltage becomes unstable, the ETCS itself becomes unstable. For this reason, when the voltage is low, the current to the throttle actuator is cut. If repairs are made and the system returns to normal, turn the ignition switch to OFF. The ECM then allows the current to flow to the throttle actuator so that it can be restarted.
HINT:
The ETCS does not use a throttle cable.

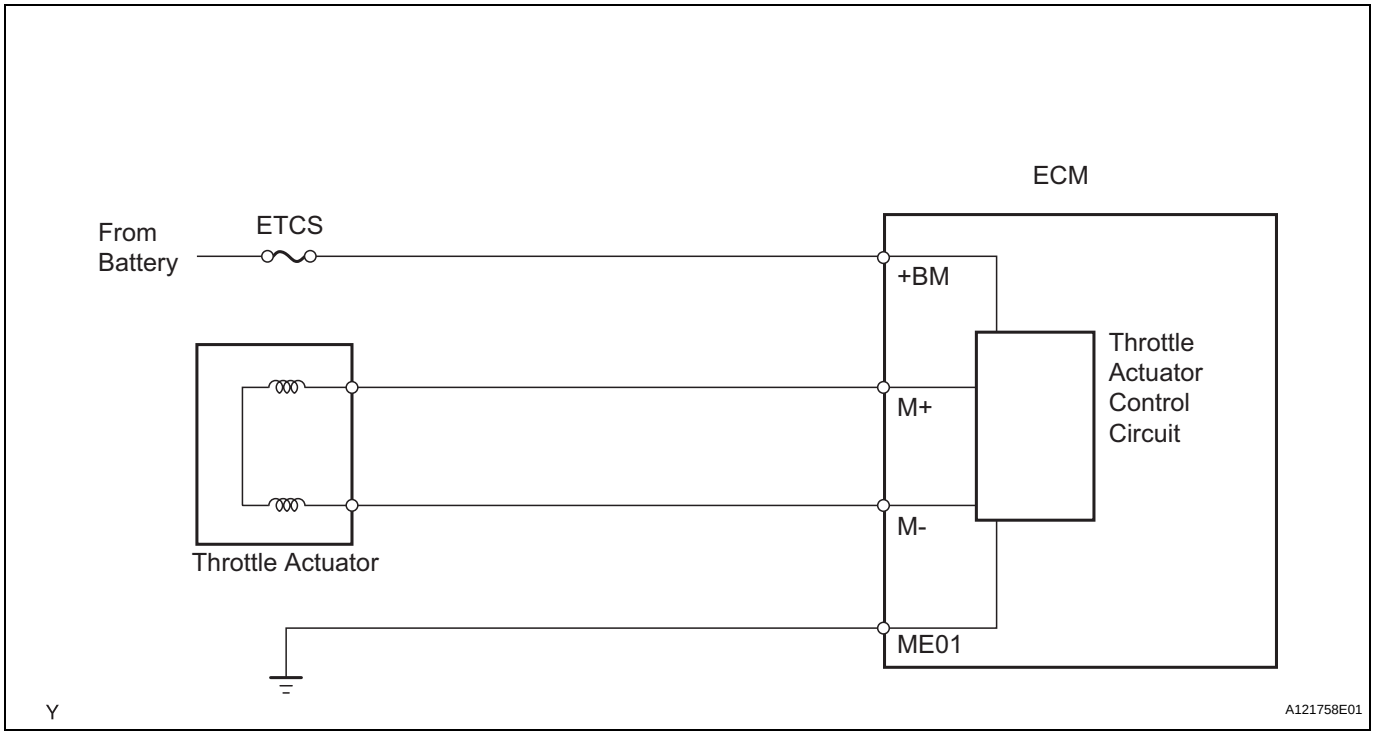

DTC No.	DTC Detection Conditions	Trouble Areas
P2118	Open in Electronic Throttle Control System (ETCS) power source (+BM) circuit (1 trip detection logic)	• Open in ETCS power source circuit • ETCS fuse • ECM

MONITOR DESCRIPTION

The ECM monitors the battery supply voltage applied to the throttle actuator.
When the power supply voltage (+BM) drops below 4 V for 0.8 seconds or more, the ECM interprets this as an open in the power supply circuit (+BM). The ECM illuminates the MIL and sets the DTC.
If the malfunction is not repaired successfully, the DTC is set 5 seconds after the engine is next started.

MONITOR STRATEGY

Related DTCs	P2118: Throttle actuator power supply
Required Sensors/Components (Main)	Throttle actuator, throttle valve, ETCS fuse
Required Sensors/Components (Related)	None
Frequency of Operation	Continuous
Duration	0.8 seconds

MIL Operation	Immediate
Sequence of Operation	None

TYPICAL ENABLING CONDITIONS

Monitor runs whenever following DTCs not present	None
Battery voltage	More than 8 V

TYPICAL MALFUNCTION THRESHOLDS

Throttle actuator power supply voltage (+BM)	Less than 4 V

COMPONENT OPERATING RANGE

Throttle actuator power supply voltage	9 to 14 V

FAIL-SAFE

When this DTC, as well as other DTCs relating to ETCS (Electronic Throttle Control System) malfunctions, is set, the ECM enters fail-safe mode. During fail-safe mode, the ECM cuts the current to the throttle actuator off, and the throttle valve is returned to a 6.5° throttle angle by the return spring. The ECM then adjusts the engine output by controlling the fuel injection (intermittent fuel-cut) and ignition timing, in accordance with the accelerator pedal opening angle, to allow the vehicle to continue at a minimal speed. If the accelerator pedal is depressed firmly and gently, the vehicle can be driven slowly. Fail-safe mode continues until a pass condition is detected, and the ignition switch is then turned to OFF.

WIRING DIAGRAM

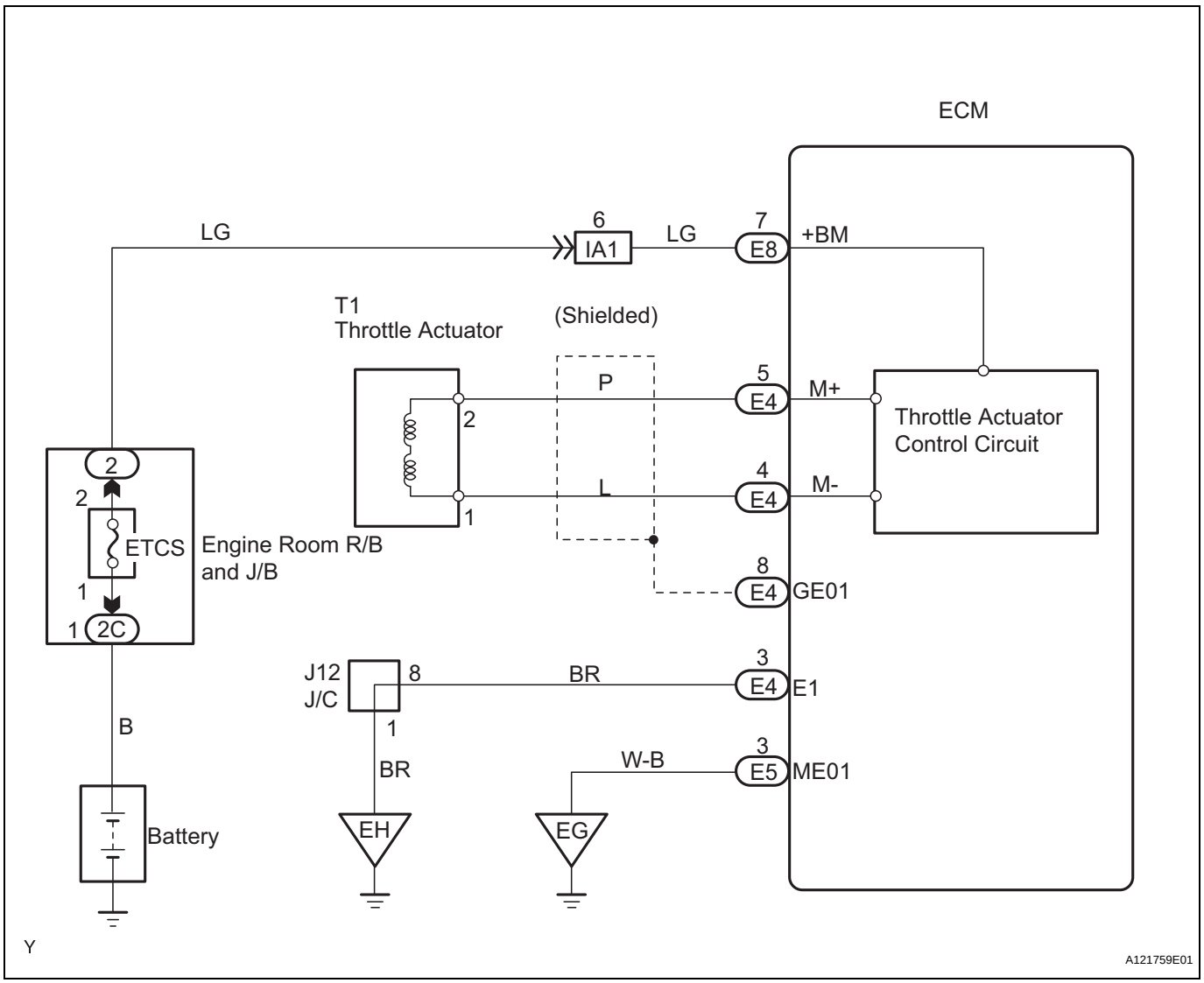

HINT:
Read freeze frame data using an intelligent tester. Freeze frame data record the engine condition when malfunctions are detected. When troubleshooting, freeze frame data can help determine if the vehicle was moving or stationary, if the engine was warmed up or not, if the air-fuel ratio was lean or rich, and other data, from the time the malfunction occurred.

1	CHECK FUSE (ETCS)

Engine Room R/B:

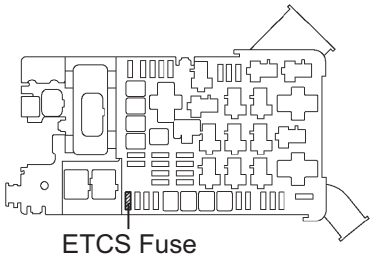

(a) Remove the ETCS fuse from the engine room R/B.
(b) Check the ETCS fuse resistance.
Standard Resistance:
Below 1 Ω
(c) Reinstall the ETCS fuse.

NG → **CHECK FOR SHORT IN ALL HARNESS AND COMPONENTS CONNECTED TO FUSE**

OK

2 INSPECT ECM (+BM VOLTAGE)

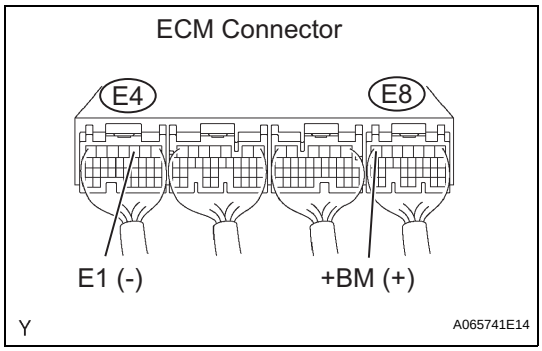

(a) Measure the voltage between the terminals of the ECM connectors.

Standard Voltage

Tester Connections	Specified Conditions
+BM (E8-7) - E1 (E4-3)	9 to 14 V

OK → CHECK FOR INTERMITTENT PROBLEMS

ES

NG

3 CHECK HARNESS AND CONNECTOR (ECM - ETCS FUSE, FUSE - BATTERY)

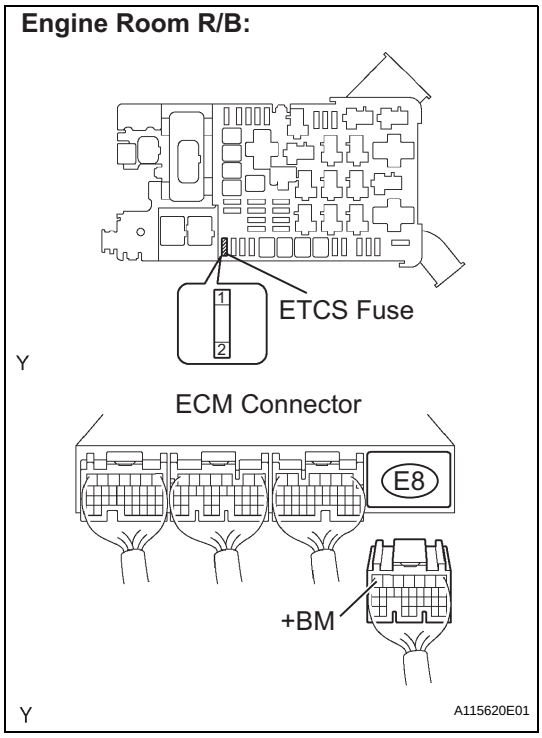

(a) Check the harness and connector between the ETCS fuse and ECM.
   (1) Remove the ETCS fuse from the engine room R/B.
   (2) Disconnect the E8 ECM connector.
   (3) Check the resistance.

Standard Resistance (Check for open)

Tester Connections	Specified Conditions
ETCS fuse (2) - +BM (E8-7)	Below 1 Ω

Standard Resistance (Check for short):

Tester Connections	Specified Conditions
ETCS fuse (2) or +BM (E8-7) - Body ground	10 kΩ or higher

   (4) Reinstall the ETCS fuse.
   (5) Reconnect the ECM connector.

(b) Check the harness and connector between the ETCS fuse and positive battery cable.
   (1) Remove the ETCS fuse from the engine room R/B.
   (2) Disconnect the positive battery cable.
   (3) Check the resistance.

Standard Resistance (Check for open)

Tester Connections	Specified Conditions
Positive battery cable - ETCS fuse (1)	Below 1 Ω

Standard Resistance (Check for short)

Tester Connections	Specified Conditions
Positive battery cable or ETCS fuse (1) - Body ground	10 kΩ or higher

   (4) Reinstall the ETCS fuse.
   (5) Reconnect the positive battery cable.

NG → REPAIR OR REPLACE HARNESS OR CONNECTOR

OK

REPLACE ECM

DTC	P2119	Throttle Actuator Control Throttle Body Range / Performance

DESCRIPTION

The Electronic Throttle Control System (ETCS) is composed of the throttle actuator, Throttle Position (TP) sensor, Accelerator Pedal Position (APP) sensor, and ECM. The ECM operates the throttle actuator to regulate the throttle valve in response to driver inputs. The TP sensor detects the opening angle of the throttle valve, and provides the ECM with feedback so that the throttle valve can be appropriately controlled by the ECM.

DTC No.	DTC Detection Conditions	Trouble Areas
P2119	Throttle valve opening angle continues to vary greatly from target opening angle (1 trip detection logic)	• Electronic Throttle Control System (ETCS) • ECM

ES

MONITOR DESCRIPTION

The ECM determines the actual opening angle of the throttle valve from the TP sensor signal. The actual opening angle is compared to the target opening angle commanded by the ECM. If the difference between these two values is outside the standard range, the ECM interprets this as a malfunction in the ETCS. The ECM then illuminates the MIL and sets the DTC.
If the malfunction is not repaired successfully, the DTC is set when the accelerator pedal is quickly released (to close the throttle valve) after the engine speed reaches 5,000 rpm by the accelerator pedal being fully depressed (fully open the throttle valve).

MONITOR STRATEGY

Related DTCs	P2119: ETCS malfunction
Required Sensors/Components (Main)	Throttle actuator
Required Sensors/Components (Related)	-
Frequency of Operation	Continuous
Duration	Within 1 second
MIL Operation	Immediate
Sequence of Operation	None

TYPICAL ENABLING CONDITIONS

Monitor runs whenever following DTCs not present	None
System guard*	ON
*System guard set when following conditions met	-
Throttle actuator	ON
Throttle actuator duty calculation	Executing
TP sensor	Fail determined
Throttle actuator current-cut operation	Not executing
Throttle actuator power supply	4 V or more
Throttle actuator	Fail determined

TYPICAL MALFUNCTION THRESHOLDS

Either of following conditions A or B met	-
A. Commanded closed TP - current closed TP	0.3 V or more for 1 second
B. Commanded open TP - current open TP	0.3 V or more for 0.6 seconds

FAIL-SAFE

When this DTC, as well as other DTCs relating to ETCS (Electronic Throttle Control System) malfunctions, is set, the ECM enters fail-safe mode. During fail-safe mode, the ECM cuts the current to the throttle actuator off, and the throttle valve is returned to a 6.5° throttle angle by the return spring. The ECM then adjusts the engine output by controlling the fuel injection (intermittent fuel-cut) and ignition timing, in accordance with the accelerator pedal opening angle, to allow the vehicle to continue at a minimal speed. If the accelerator pedal is depressed firmly and gently, the vehicle can be driven slowly. Fail-safe mode continues until a pass condition is detected, and the ignition switch is then turned to OFF.

WIRING DIAGRAM

Refer to DTC P2102 (See page ES-287).

HINT:
Read freeze frame data using an intelligent tester. Freeze frame data record the engine condition when malfunctions are detected. When troubleshooting, freeze frame data can help determine if the vehicle was moving or stationary, if the engine was warmed up or not, if the air-fuel ratio was lean or rich, and other data, from the time the malfunction occurred.

ES

1	CHECK ANY OTHER DTCS OUTPUT (IN ADDITION TO DTC P2119)

(a) Connect an intelligent tester to the DLC3.
(b) Turn the ignition switch to ON.
(c) Turn the tester ON.
(d) Select the following menu items: DIAGNOSIS / ENHANCED OBD II / DTC INFO / CURRENT CODES.
(e) Read DTCs.

Result

Display (DTC Output)	Proceed To
P2119	A
P2119 and other DTCs	B

HINT:
If any DTCs other than P2119 are output, troubleshoot those DTCs first.

B → GO TO DTC CHART

A

2	CHECK WHETHER DTC OUTPUT RECURS (DTC P2119)

(a) Connect the intelligent tester to the DLC3.
(b) Turn the ignition switch to ON.
(c) Turn the tester ON.
(d) Clear DTCs (see page ES-40).
(e) Allow the engine to idle for 15 seconds.
CAUTION:
Exercise extreme care and take precautions at steps (f) and (g) below. Failure to do so may result in the vehicle unexpectedly rolling away.
(f) Securely apply the parking brake and move the gear selector lever to the D position.

(g) While depressing the brake pedal securely, fully depress the accelerator pedal for 5 seconds.
(h) On the tester, select the following menu items: DIAGNOSIS / ENHANCED OBD II / DTC INFO / CURRENT CODES.
(i) Read DTCs.
HINT:
The voltage output of the throttle position sensor can be checked during step (g) using an intelligent tester. Variations in the voltage output indicate that the throttle actuator is in operation. To check the voltage output using the intelligent tester, select the following menu items: DIAGNOSIS / ENHANCED OBD II / DATA LIST / ETCS / THROTTLE POS #1.

OK:

No DTC output.

NG → **REPLACE THROTTLE BODY**

OK

SYSTEM OK

DTC	P2120	Throttle / Pedal Position Sensor / Switch "D" Circuit
DTC	P2122	Throttle / Pedal Position Sensor / Switch "D" Circuit Low Input
DTC	P2123	Throttle / Pedal Position Sensor / Switch "D" Circuit High Input
DTC	P2125	Throttle / Pedal Position Sensor / Switch "E" Circuit
DTC	P2127	Throttle / Pedal Position Sensor / Switch "E" Circuit Low Input
DTC	P2128	Throttle / Pedal Position Sensor / Switch "E" Circuit High Input
DTC	P2138	Throttle / Pedal Position Sensor / Switch "D" / "E" Voltage Correlation

HINT:
These DTCs relate to the Accelerator Pedal Position (APP) sensor.

DESCRIPTION

HINT:

- This ETCS (Electronic Throttle Control System) does not use a throttle cable.
- The Accelerator Pedal Position (APP) sensor is mounted on the accelerator pedal bracket and has 2 sensor circuits: VPA (main) and VPA2 (sub). This sensor is a non-contact type, and uses Hall-effect elements, in order to yield accurate signals, even in extreme driving conditions, such as at high speeds as well as very low speeds. The voltage, which is applied to terminals VPA and VPA2 of the ECM, varies between 0 V and 5 V in proportion to the operating angle of the accelerator pedal (throttle valve). A signal from VPA indicates the actual accelerator pedal opening angle (throttle valve opening angle) and is used for engine control. A signal from VPA2 conveys the status of the VPA circuit and is used to check the APP sensor itself.
- The ECM monitors the actual accelerator pedal opening angle (throttle valve opening angle) through the signals from VPA and VPA2, and controls the throttle actuator according to these signals.

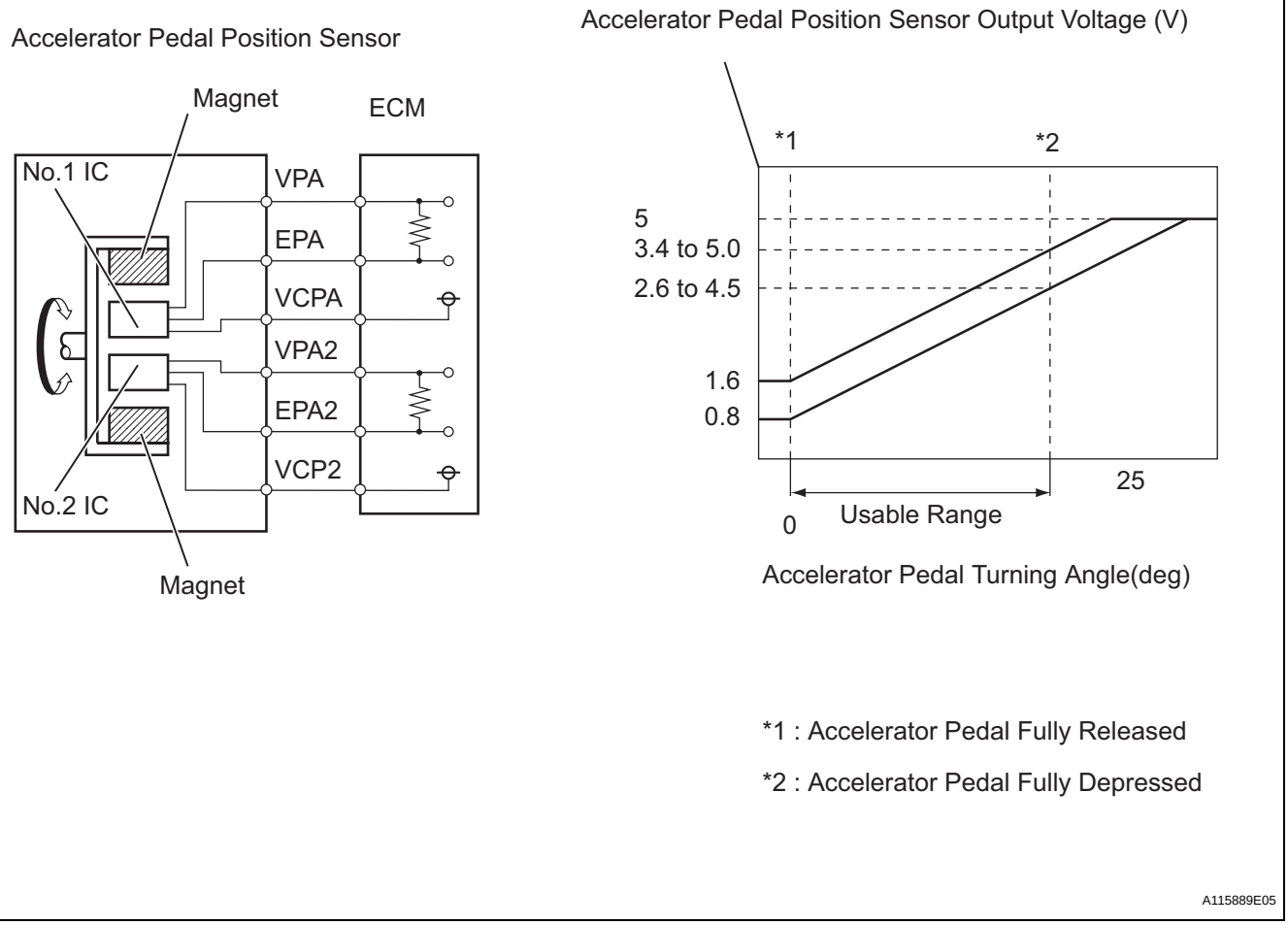

DTC No.	DTC Detection Conditions	Trouble Areas
P2120	VPA fluctuates rapidly beyond upper and lower malfunction thresholds for 0.5 seconds or more (1 trip detection logic)	• Accelerator Pedal Position (APP) sensor • ECM
P2122	VPA 0.4 V or less for 0.5 seconds or more when accelerator pedal fully released (1 trip detection logic)	• APP sensor • Open in VCP1 circuit • Open or ground short in VPA circuit • ECM
P2123	VPA 4.8 V or more for 2.0 seconds or more (1 trip detection logic)	• APP sensor • Open in EPA circuit • ECM
P2125	VPA2 fluctuates rapidly beyond upper and lower malfunction thresholds for 0.5 seconds or more (1 trip detection logic)	• APP sensor • ECM
P2127	VPA2 1.2 V or less for 0.5 seconds or more when accelerator pedal fully released (1 trip detection logic)	• APP sensor • Open in VCP2 circuit • Open or ground short in VPA2 circuit • ECM
P2128	Conditions (a) and (b) continue for 2.0 seconds or more (1 trip detection logic): (a) VPA2 4.8 V or more (b) VPA between 0.4 V and 3.45 V	• APP sensor • Open in EPA2 circuit • ECM

DTC No.	DTC Detection Conditions	Trouble Areas
P2138	Conditions (a) and (b) continue for 2.0 seconds or more (1 trip detection logic): (a) Difference between VPA and VPA2 0.02 V or less (b) VPA 0.4 V or less and VPA2 1.2 V or less	• Short in between VPA and VPA2 circuits • APP sensor • ECM

HINT:
When any of these DTCs are set, check the APP sensor voltage by selecting the following menu items on an intelligent tester: DIAGNOSIS / ENHANCED OBD II / DATA LIST / ETCS / ACCEL POS #1 and ACCEL POS #2.

Trouble Areas	ACCEL POS #1 When AP Released	ACCEL POS #2 When AP Released	ACCEL POS #1 When AP Depressed	ACCEL POS #2 When AP Depressed
VCP circuit open	0 to 0.2 V	0 to 0.2 V	0 to 0.2 V	0 to 0.2 V
Open or ground short in VPA circuit	0 to 0.2 V	1.2 to 2.0 V	0 to 0.2 V	3.4 to 5.0 V
Open or ground short in VPA2 circuit	0.5 to 1.1 V	0 to 0.2 V	2.6 to 4.5 V	0 to 0.2 V
EPA circuit open	4.5 to 5.0 V	4.5 to 5.0 V	4.5 to 5.0 V	4.5 to 5.0 V
Normal condition	0.5 to 1.1 V	1.2 to 2.0 V	2.6 to 4.5 V	3.4 to 5.0 V

HINT:
- Accelerator pedal positions are expressed as voltages.
- AP denotes for Accelerator Pedal.

MONITOR DESCRIPTION

When either of the voltage outputs of VPA or VPA2 deviates from the standard range, or the difference between the voltage outputs of the 2 sensor circuits is less than the threshold, the ECM determines that there is a malfunction in the APP sensor. The ECM then illuminates the MIL and sets a DTC.
Example:
When the voltage output of VPA drops below 0.4 V for more than 0.5 seconds when the accelerator pedal is fully depressed, DTC P2122 is set.
If the malfunction is not repaired successfully, a DTC is set 2 seconds after the engine is next started.

MONITOR STRATEGY

Related DTCs	P2120: Accelerator pedal position sensor 1 (VPA) range check (fluctuating) P2122: Accelerator pedal position sensor 1 (VPA) range check (low voltage) P2123: Accelerator pedal position sensor 1 (VPA) range check (high voltage) P2125: Accelerator pedal position sensor 2 (VPA2) range check (fluctuating) P2127: Accelerator pedal position sensor 2 (VPA2) range check (low voltage) P2128: Accelerator pedal position sensor 2 (VPA2) range check (high voltage) P2138: Accelerator pedal position sensor correlation range check
Required Sensors/Components (Main)	Accelerator pedal position sensor
Required Sensors/Components (Related)	-
Frequency of Operation	Continuous
Duration	0.5 seconds: P2120, P2122, P2125 and P2127 2 seconds: P2123, P2128 and P2138
MIL Operation	Immediate
Sequence of Operation	None

TYPICAL ENABLING CONDITIONS

Monitor runs whenever following DTCs not present	None
Ignition switch	ON

TYPICAL MALFUNCTION THRESHOLDS

P2120:

VPA voltage	0.4 V or less or 4.8 V or more

P2122:

VPA voltage	0.4 V or less (when accelerator pedal fully released)

P2123:

VPA voltage	4.8 V or more

P2125:

VPA2 voltage	1.2 V or less or 4.8 V or more

P2127:

VPA2 voltage	1.2 V or less (when accelerator pedal fully released)

P2128:

Both of following conditions met:	A & B
A. VPA voltage	0.4 V or more and 3.45 V or less
B. VPA2 voltage	4.8 V or more

P2138:

Either of following condition met	A or B
A. Difference between VPA and VPA2 voltages	0.02 V or less
B. Both following conditions are met:	(1) & (2)
(1) VPA voltage	0.4 V or less
(2) VPA2 voltage	1.2 V or less

COMPONENT OPERATING RANGE

Parameter	Standard Value
VPA voltage	More than 0.4 V and less than 4.8 V
VPA2 voltage	More than 1.2 V and less than 4.8 V
Difference between VPA and VPA2 voltages	More than 0.02 V

FAIL-SAFE

When any of DTCs P2120, P2121, P2122, P2123, P2125, P2127, P2128 and P2138 are set, the ECM enters fail-safe mode. If either of the 2 sensor circuit malfunctions, the ECM uses the remaining circuit to calculate the accelerator pedal position to allow the vehicle to continue driving. If both of the circuits malfunction, the ECM regards the accelerator pedal as being released. As a result, the throttle valve is closed and the engine idles.

Fail-safe mode continues until a pass condition is detected, and the ignition switch is turned to OFF.

WIRING DIAGRAM

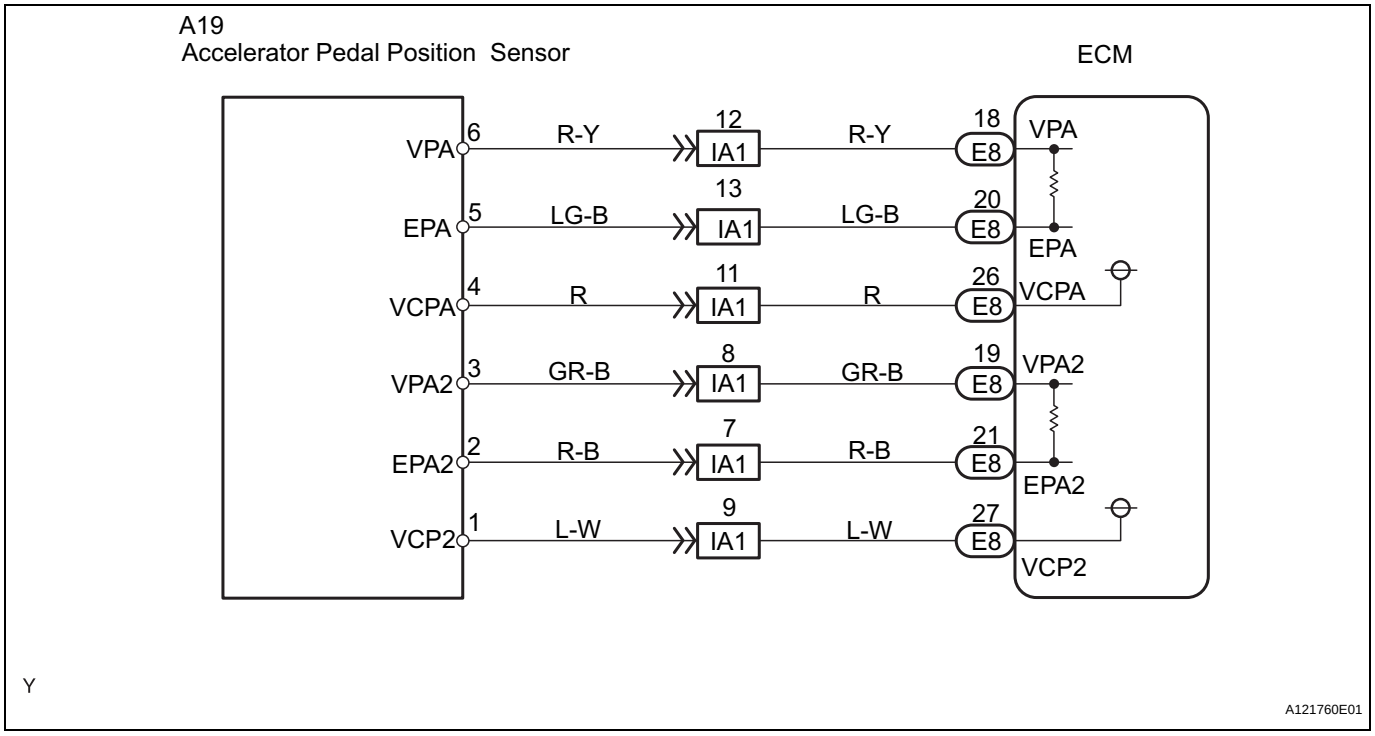

HINT:
Read freeze frame data using an intelligent tester. Freeze frame data record the engine condition when malfunctions are detected. When troubleshooting, freeze frame data can help determine if the vehicle was moving or stationary, if the engine was warmed up or not, if the air-fuel ratio was lean or rich, and other data, from the time the malfunction occurred.

1	READ DATA LIST (ACCEL POS #1 AND ACCEL POS #2)

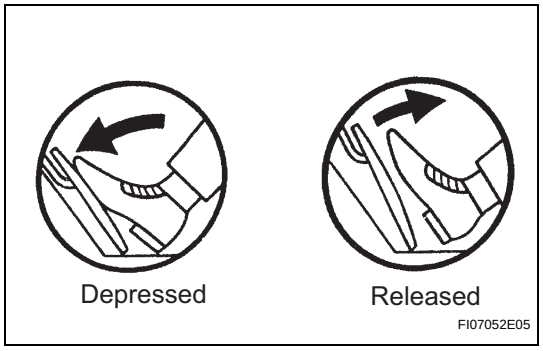

(a) Connect an intelligent tester to the DLC3.
(b) Turn the ignition switch to ON and turn the tester ON.
(c) Select the following menu items: DIAGNOSIS / ENHANCED OBD II / DATA LIST / ETCS /ACCEL POS #1 and ACCEL POS #2.
(d) Read the values displayed on the tester.

Standard Voltage

Accelerator Pedal Operations	ACCEL POS #1 (AP #1)	ACCEL POS #2 (AP #2)
Released	0.5 to 1.1 V	1.2 to 2.0 V
Depressed	2.6 to 4.5 V	3.4 to 5.0 V

OK → **Go to step 5**

NG

2	CHECK HARNESS AND CONNECTOR (ACCELERATOR PEDAL POSITION SENSOR - ECM)

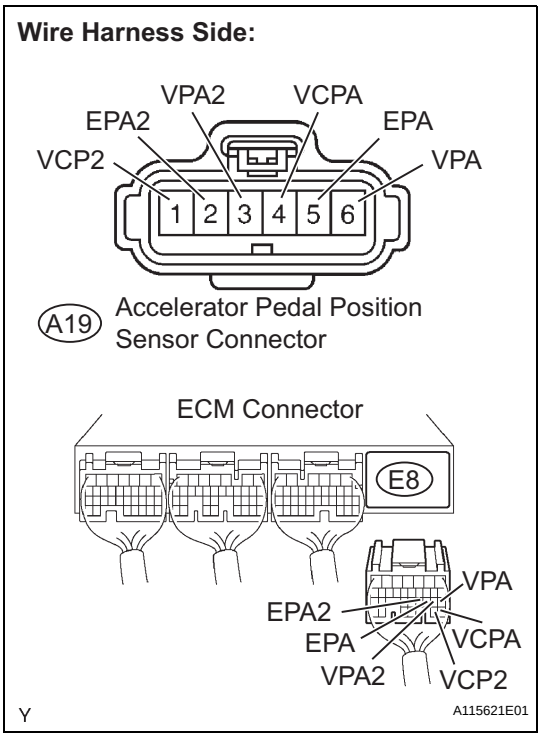

(a) Disconnect the A19 Accelerator Pedal Position (APP) sensor connector.
(b) Disconnect the E8 ECM connector.
(c) Check the resistance.

Standard Resistance (Check for open)

Tester Connections	Specified Conditions
VPA (A19-6) - VPA (E8-18)	Below 1 Ω
EPA (A19-5) - EPA (E8-20)	Below 1 Ω
VCPA (A19-4) - VCPA (E8-26)	Below 1 Ω
VPA2 (A19-3) - VPA2 (E8-19)	Below 1 Ω
EPA2 (A19-2) - EPA2 (E8-21)	Below 1 Ω
VCP2 (A19-1) - VCP2 (E8-27)	Below 1 Ω

Standard Resistance (Check for short)

Tester Connections	Specified Conditions
VPA (A19-6) or VPA (E8-18) - Body ground	10 kΩ or higher
EPA (A19-5) or EPA (E8-20) - Body ground	10 kΩ or higher
VCPA (A19-4) or VCPA (E8-26) - Body ground	10 kΩ or higher
VPA2 (A19-3) or VPA2 (E8-19) - Body ground	10 kΩ or higher
EPA2 (A19-2) or EPA2 (E8-21) -Body ground	10 kΩ or higher
VCP2 (A19-1) or VCP2 (E8-27) - Body ground	10 kΩ or higher

(d) Reconnect the APP sensor connector.
(e) Reconnect the ECM connector.

NG → **REPAIR OR REPLACE HARNESS OR CONNECTOR**

OK

3 INSPECT ECM (VCPA AND VCP2 VOLTAGE)

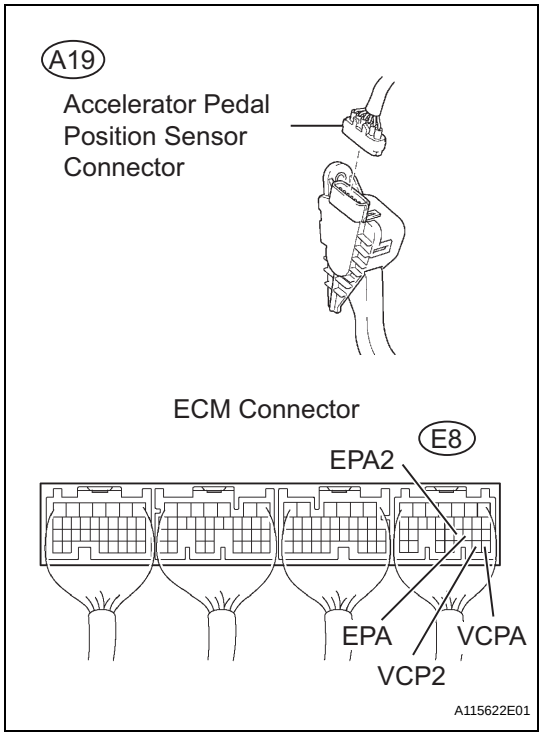

(a) Disconnect the APP sensor connector.
(b) Turn the ignition switch to ON.
(c) Measure the voltage between the terminals of the ECM connector.

Standard Voltage

Tester Connections	Specified Conditions
VCPA (E8-26) - EPA (E8-20)	4.5 to 5.0 V
VCP2 (E8-27) - EPA2 (E8-21)	4.5 to 5.0 V

(d) Reconnect the APP sensor connector.

NG → **REPLACE ECM**

OK

4 REPLACE ACCELERATOR PEDAL ROD ASSEMBLY

NEXT

5 CHECK WHETHER DTC OUTPUT RECURS (ACCELERATOR PEDAL POSITION SENSOR DTCS)

(a) Connect the intelligent tester to the DLC3.
(b) Turn the ignition switch to ON and turn the tester ON.
(c) Clear DTCs (see page ES-40).
(d) Allow the engine to idle for 15 seconds.
(e) Select the following menu items: DIAGNOSIS / ENHANCED OBD II / DTC INFO / CURRENT CODES.
(f) Read DTCs.

Result

Display (DTC Output)	Proceed To
P2120, P2122, P2123, P2125, P2127, P2128 and P2138	A
No output	B

B → **SYSTEM OK**

ES

A

REPLACE ECM

DTC	P2121	Throttle / Pedal Position Sensor / Switch "D" Circuit Range / Performance

HINT:
This DTC relates to the Accelerator Pedal Position (APP) sensor.

DESCRIPTION

Refer to DTC P2120 (See page ES-301).

DTC No.	DTC Detection Condition	Trouble Area
P2121	Difference between VPA and VPA2 exceeds threshold for 0.5 seconds	• Accelerator pedal position sensor circuit • Accelerator pedal position sensor • ECM

MONITOR DESCRIPTION

The accelerator pedal position sensor is mounted on the accelerator pedal bracket. The accelerator pedal position sensor has 2 sensor elements and 2 signal outputs: VPA and VPA2. VPA is used to detect the actual accelerator pedal angle (used for engine control) and VPA2 is used to detect malfunctions in VPA. When the difference between the voltage outputs of VPA and VPA2 deviates from the standard, the ECM determines that the accelerator pedal position sensor is malfunctioning. The ECM turns on the MIL and the DTC is set.

MONITOR STRATEGY

Related DTCs	P2121: Accelerator pedal position sensor malfunction
Required Sensors/Components (Main)	Accelerator pedal position sensor
Required Sensors/Components (Related)	-
Frequency of Operation	Continuous
Duration	0.5 seconds
MIL Operation	Immediate
Sequence of Operation	None

TYPICAL ENABLING CONDITIONS

Monitor runs whenever following DTCs not present	None

TYPICAL MALFUNCTION THRESHOLDS

Either of following conditions met:	
Difference between VTA sensor 1 voltage (learned value) and VTA2 sensor 2 voltage (learned value)	Less than 0.4 V, or more than 1.2 V

FAIL-SAFE

The accelerator pedal position sensor has two (main and sub) sensor circuits. If a malfunction occurs in either of the sensor circuits, the ECM detects the abnormal signal voltage difference between the two sensor circuits and switches to limp mode. In limp mode, the functioning circuit is used to calculate the accelerator pedal opening angle to allow the vehicle to continue driving. If both circuits malfunction, the ECM regards the opening angle of the accelerator pedal as being fully closed. In this case, the throttle valve remains closed as if the engine is idling.
If a pass condition is detected and then the ignition switch is turned to OFF, the fail-safe operation stops and the system returns to a normal condition.

WIRING DIAGRAM

Refer to DTC P2120 (See page ES-305).

HINT:
Read freeze frame data using an intelligent tester. Freeze frame data record the engine condition when malfunctions are detected. When troubleshooting, freeze frame data can help determine if the vehicle was moving or stationary, if the engine was warmed up or not, if the air-fuel ratio was lean or rich, and other data, from the time the malfunction occurred.

1	READ VALUE USING INTELLIGENT TESTER (ACCEL POS #1 AND ACCEL POS #2)

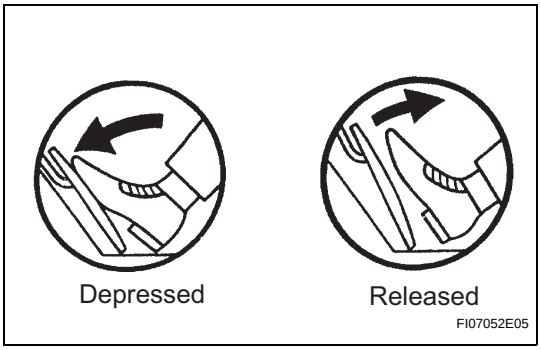

(a) Connect an intelligent tester to the DLC3.
(b) Turn the ignition switch to ON and turn the tester ON.
(c) Select the following menu items: DIAGNOSIS / ENHANCED OBD II / DATA LIST / ETCS / ACCEL POS #1 and ACCEL POS #2.
(d) Read the values displayed on the tester.

Standard Voltage

Accelerator Pedal Operations	ACCEL POS #1 (AP #1)	ACCEL POS #2 (AP #2)
Released	0.5 to 1.1 V	1.2 to 2.0 V
Depressed	2.6 to 4.5 V	3.4 to 5.0 V

OK → **Go to step 3**

NG

2	CHECK HARNESS AND CONNECTOR (ACCELERATOR PEDAL POSITION SENSOR - ECM)

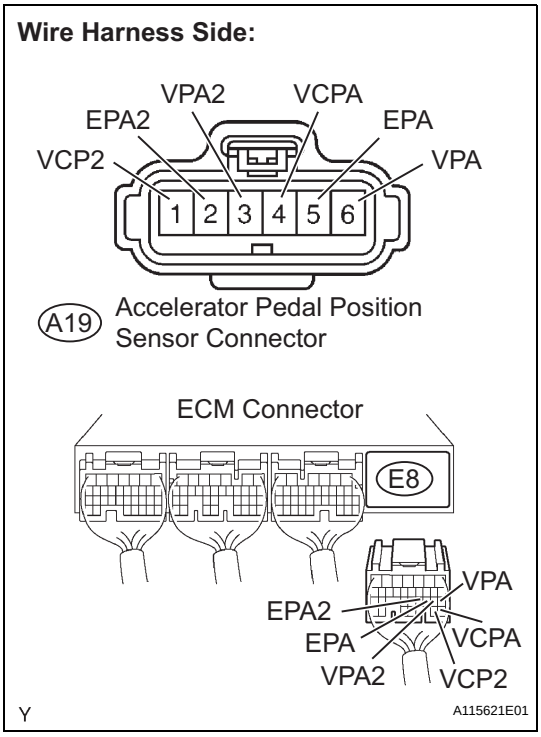

(a) Disconnect the A19 Accelerator Pedal Position (APP) sensor connector.
(b) Disconnect the E8 ECM connector.
(c) Check the resistance.

Standard Resistance (Check for open)

Tester Connections	Specified Conditions
VPA (A19-6) - VPA (E8-18)	Below 1 Ω
EPA (A19-5) - EPA (E8-20)	Below 1 Ω
VCPA (A19-4) - VCPA (E8-26)	Below 1 Ω
VPA2 (A19-3) - VPA2 (E8-19)	Below 1 Ω
EPA2 (A19-2) - EPA2 (E8-21)	Below 1 Ω
VCP2 (A19-1) - VCP2 (E8-27)	Below 1 Ω

Standard Resistance (Check for short)

Tester Connections	Specified Conditions
VPA (A19-6) or VPA (E8-18) - Body ground	10 kΩ or higher
EPA (A19-5) or EPA (E8-20) - Body ground	10 kΩ or higher
VCPA (A19-4) or VCPA (E8-26) - Body ground	10 kΩ or higher
VPA2 (A19-3) or VPA2 (E8-19) - Body ground	10 kΩ or higher

Tester Connections	Specified Conditions
EPA2 (A19-2) or EPA2 (E8-21) - Body ground	10 kΩ or higher
VCP2 (A19-1) or VCP2 (E8-27) - Body ground	10 kΩ or higher

(d) Reconnect the APP sensor connector.
(e) Reconnect the ECM connector.

NG → **REPAIR OR REPLACE HARNESS OR CONNECTOR**

OK

3	REPLACE ACCELERATOR PEDAL ROD ASSEMBLY

NEXT

4	CHECK WHETHER DTC OUTPUT RECURS (ACCELERATOR PEDAL POSITION SENSOR DTCS)

(a) Connect the intelligent tester to the DLC3.
(b) Turn the ignition switch to ON and turn the tester ON.
(c) Clear the DTC (see page ES-40).
(d) Start the engine.
(e) Allow the engine to idle for 15 seconds.
(f) Select the following menu items: DIAGNOSIS / ENHANCED OBD II / DTC INFO / CURRENT CODES.
(g) Read DTCs.

Result

Display (DTC output)	Proceed to
P2121	A
No output	B

B → **SYSTEM OK**

A

REPLACE ECM

DTC	P2195	Oxygen (A/F) Sensor Signal Stuck Lean (Bank 1 Sensor 1)

DTC	P2196	Oxygen (A/F) Sensor Signal Stuck Rich (Bank 1 Sensor 1)

HINT:
- Although the DTC titles say oxygen sensor, these DTCs relate to the Air-Fuel Ratio (A/F) sensor.
- Sensor 1 refers to the sensor mounted in front of the Three-Way Catalytic Converter (TWC) and located near the engine assembly.

DESCRIPTION

ES

The A/F sensor generates a voltage* that corresponds to the actual air-fuel ratio. This sensor voltage is used to provide the ECM with feedback so that it can control the air-fuel ratio. The ECM determines the deviation from the stoichiometric air-fuel ratio level, and regulates the fuel injection time. If the A/F sensor malfunctions, the ECM is unable to control the air-fuel ratio accurately.
The A/F sensor is the planar type and is integrated with the heater, which heats the solid electrolyte (zirconia element). This heater is controlled by the ECM. When the intake air volume is low (the exhaust gas temperature is low), a current flows into the heater to heat the sensor, in order to facilitate accurate air-fuel ratio detection. In addition, the sensor and heater portions are narrower than the conventional type. The heat generated by the heater is conducted to the solid electrolyte through the alumina, therefore the sensor activation is accelerated.
In order to obtain a high purification rate of the carbon monoxide (CO), hydrocarbon (HC) and nitrogen oxide (NOx) components in the exhaust gas, a TWC is used. For the most efficient use of the TWC, the air-fuel ratio must be precisely controlled so that it is always close to the stoichiometric level.
*: Value changes inside the ECM. Since the A/F sensor is the current output element, a current is converted to a voltage inside the ECM. Any measurements taken at the A/F sensor or ECM connectors will show a constant voltage.

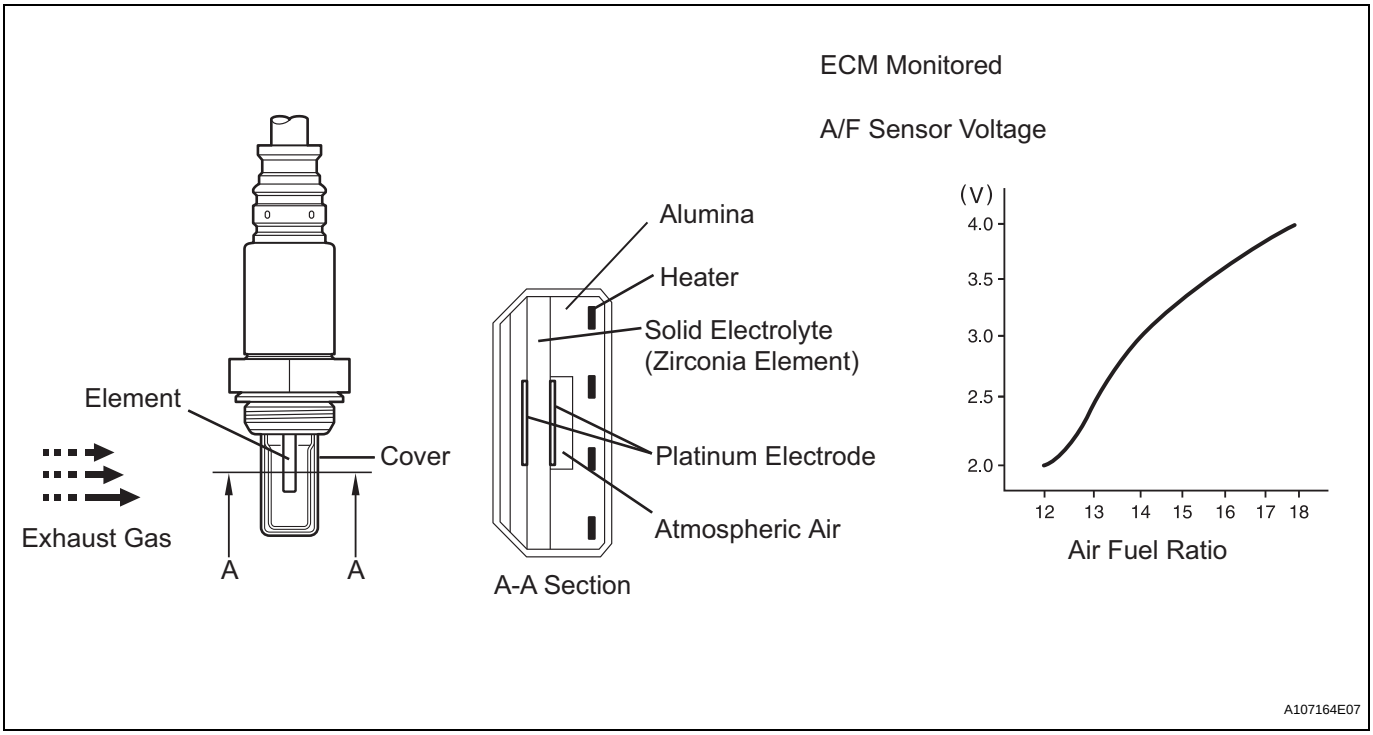

DTC No.	DTC Detection Conditions	Trouble Areas
P2195	Conditions (a) and (b) continue for 10 seconds or more (2 trip detection logic): (a) Air-Fuel Ratio (A/F) sensor voltage more than 3.8 V (b) Heated Oxygen (HO2) sensor voltage 0.15 V or more	• Open or short in A/F sensor (sensor 1) circuit • A/F sensor (sensor 1) • A/F sensor (sensor 1) heater • A/F HEATER relay • A/F sensor heater and relay circuits • Air induction system • Fuel pressure • Injector • ECM
P2195	While fuel-cut operation performed (during vehicle deceleration), Air-Furl Ratio (A/F) sensor current 3.6 mA or more for 3 seconds. (2 trip detection logic)	• A/F sensor • ECM
P2196	Conditions (a) and (b) continue for 10 seconds or more (2 trip detection logic): (a) Air-Furl Ratio (A/F) sensor voltage less than 2.8 V (b) Heated Oxygen (HO2) sensor voltage less than 0.60 V	• Open or short in A/F sensor (sensor 1) circuit • A/F sensor (sensor 1) • A/F sensor (sensor 1) heater • A/F HEATER relay • A/F sensor heater and relay circuits • Air induction system • Fuel pressure • Injector • ECM
P2196	While fuel-cut operation performed (during vehicle deceleration), Air-Furl Ratio (A/F) sensor current less than 1.0 mA for 3 seconds. (2 trip detection logic)	• A/F sensor • ECM

HINT:

- When either of theses DTCs is set, check the A/F sensor voltage output by selecting the following menu items on an intelligent tester: DIAGNOSIS / ENHANCED OBD II / DATA LIST / PRIMARY / AFS B1S1.
- Short-term fuel trim values can also be read using an intelligent tester.
- The ECM regulates the voltages at the A1A+ and A1A- terminals of the ECM to a constant level. Therefore, the A/F sensor voltage output cannot be confirmed without using an intelligent tester.
- If the A/F sensor is malfunctioning, the ECM sets the DTC P2195 or P2196.

MONITOR DESCRIPTION

1. Sensor voltage detection monitor

Under the air-fuel ratio feedback control, if the A/F sensor voltage output indicates rich or lean for a certain period of time, the ECM determines that there is a malfunction in the A/F sensor. The ECM illuminates the MIL and sets a DTC.

Example:

If the A/F sensor voltage output is less than 2.8 V (very rich condition) for 10 seconds, despite the rear HO2 sensor voltage output being less than 0.60 V, the ECM sets DTC P2196. Alternatively, if the A/F sensor voltage output is more than 3.8 V (very lean condition) for 10 seconds, despite the rear HO2 sensor voltage output being 0.15 V or more, DTC P2195 is set.

2. Sensor current detection monitor

A rich air-fuel mixture causes a low A/F sensor current, and a lean air-fuel mixture causes a high A/F sensor current. Therefore, the sensor output becomes low during acceleration, and it becomes high during deceleration with the throttle valve fully closed. The ECM monitors the A/F sensor current during fuel-cut and detects any abnormal current values.

If the A/F sensor output is 3.6 mA or more for more than 3 seconds of cumulative time, the ECM interprets this as a malfunction in the A/F sensor and sets DTC P2195 (high-side stuck). If the A/F sensor output is 1.0 mA or less for more than 3 seconds of cumulative time, the ECM sets DTC P2196 (low-side stuck).

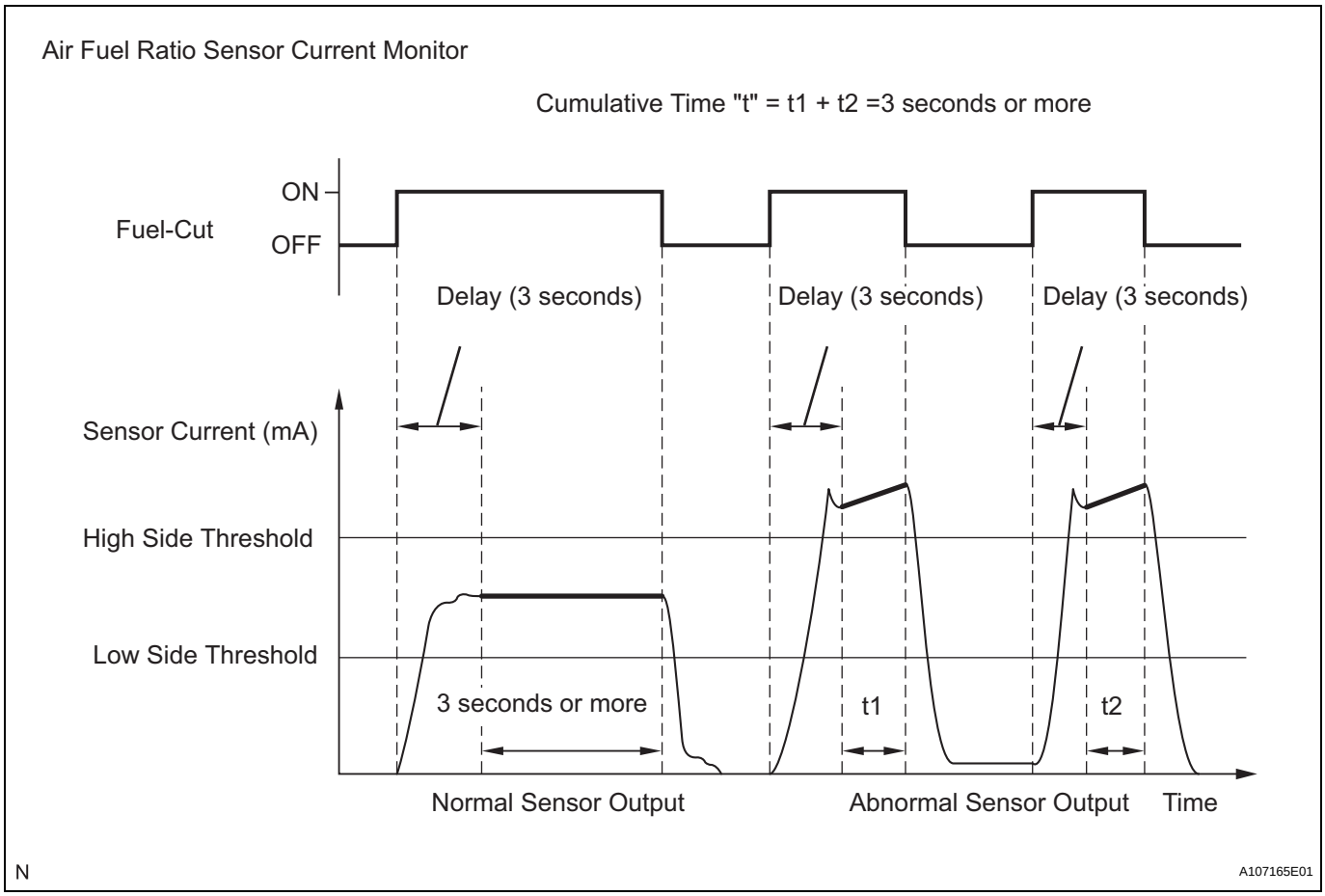

MONITOR STRATEGY

Related DTCs	P2195: A/F sensor signal stuck lean P2196: A/F sensor signal stuck rich
Required Sensors/Components (Main)	A/F sensor
Required Sensors/Components (Related)	HO2 sensor
Frequency of Operation	Continuous
Duration	Within 10 seconds
MIL Operation	2 driving cycles
Sequence of Operation	None

TYPICAL ENABLING CONDITIONS

All:

The monitor will run whenever these DTCs are not present	P0031, P0032, P0051, P0052 (A/F sensor heater - Sensor 1) P0037, P0038, P0057, P0058 (O2 sensor heater - Sensor 2) P0100 - P0103 (MAF meter) P0110 - P0113 (IAT sensor) P0115 - P0118 (ECT sensor) P0120 - P0223, P2135 (TP sensor) P0125 (Insufficient ECT for closed loop) P0136, P0156 (O2 Sensor - Sensor 2) P0171, P0172 (Fuel system) P0300 - P0308 (Misfire) P0335 (CKP sensor) P0340, P0341 (CMP sensor) P0500 (VSS) P2440 (A/R control valve stuck open) P2441 (A/R control valve stuck close) P2444 (AIP stuck ON) P2445 (AIP stuck OFF)

ES

Sensor voltage detection monitor (Lean side malfunction P2195):

Time while all of following conditions met	2 seconds or more
Rear HO2 sensor voltage	0.15 V or more
Time after engine start	30 seconds or more
A/F sensor status	Activated
Fuel system status	Closed-loop
Engine	Running

Sensor voltage detection monitor (Rich side malfunction P2196):

Time while all of following conditions met	2 seconds or more
Rear HO2 sensor voltage	Below 0.6 V
Time after engine start	30 seconds or more
A/F sensor status	Activated
Fuel system status	Closed-loop
Engine	Running

Sensor current detection monitor (P2195, P2196)

Battery voltage	11 V or more
Atmospheric pressure	75 kPa (570 mmHg) or higher
Air-fuel ratio sensor status	Activated
Engine coolant temperature	70°C (158°F) or more
Continuous time of fuel cut	3 seconds or more, and less than 10 seconds

TYPICAL MALFUNCTION THRESHOLDS

Sensor voltage detection monitor (Lean side malfunction P2195):

A/F sensor voltage	More than 3.8 V

Sensor voltage detection monitor (Rich side malfunction P2196):

A/F sensor voltage	Less than 2.8 V

Sensor current detection monitor (High side malfunction P2195):

Following condition met for:	3 seconds or more
Air-fuel ratio sensor current during fuel cut	3.6 mA or more

Sensor current detection monitor (Rich side malfunction P2196):

Following condition met for:	3 seconds or more
Air-fuel ratio sensor current during fuel cut	Less than 1 mA

MONITOR RESULT

Refer to Checking Monitor Status (See page ES-21).

WIRING DIAGRAM

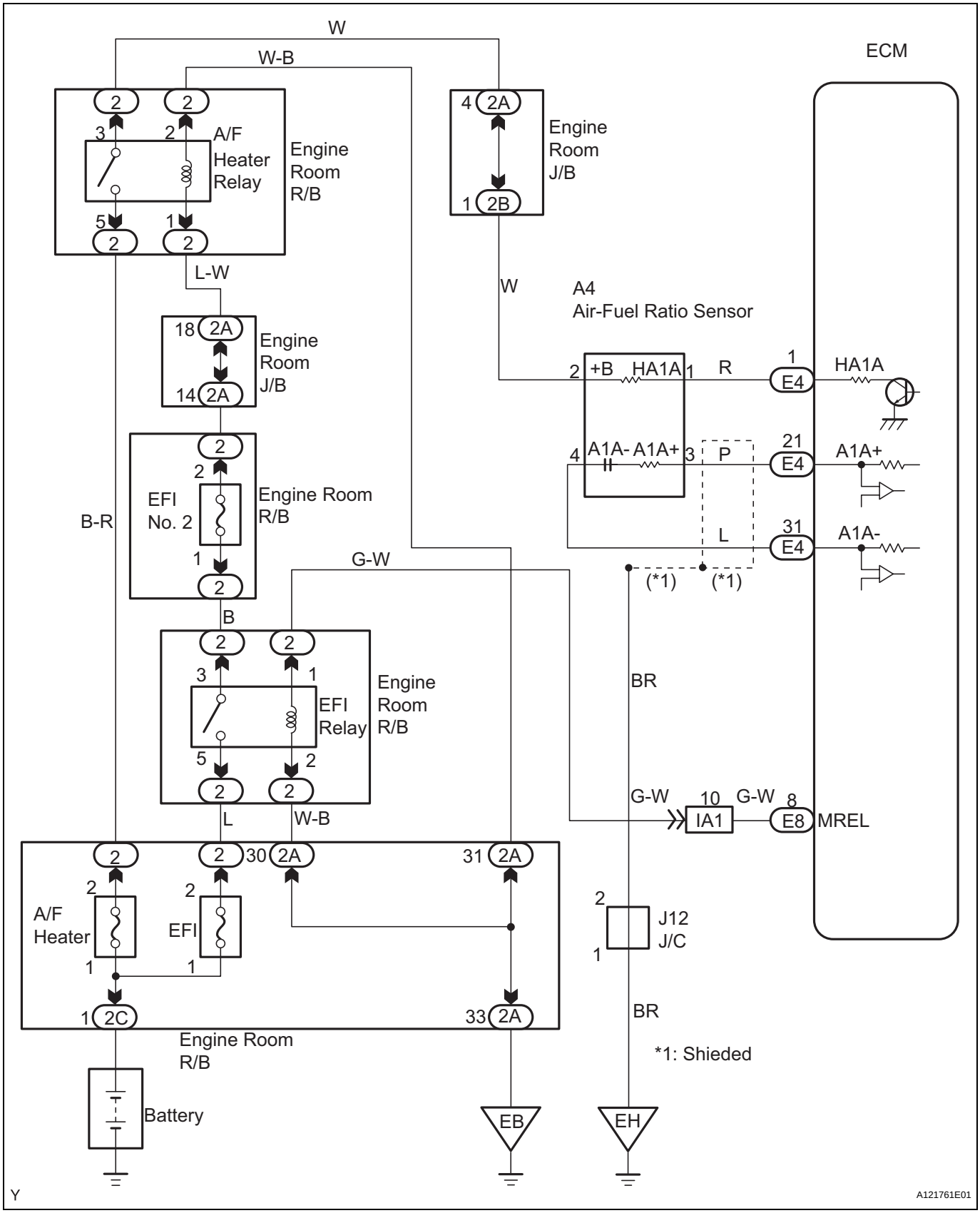

CONFIRMATION DRIVING PATTERN

This confirmation driving pattern is used in the "PERFORM CONFIRMATION DRIVING PATTERN" procedure of the following diagnostic troubleshooting procedure.

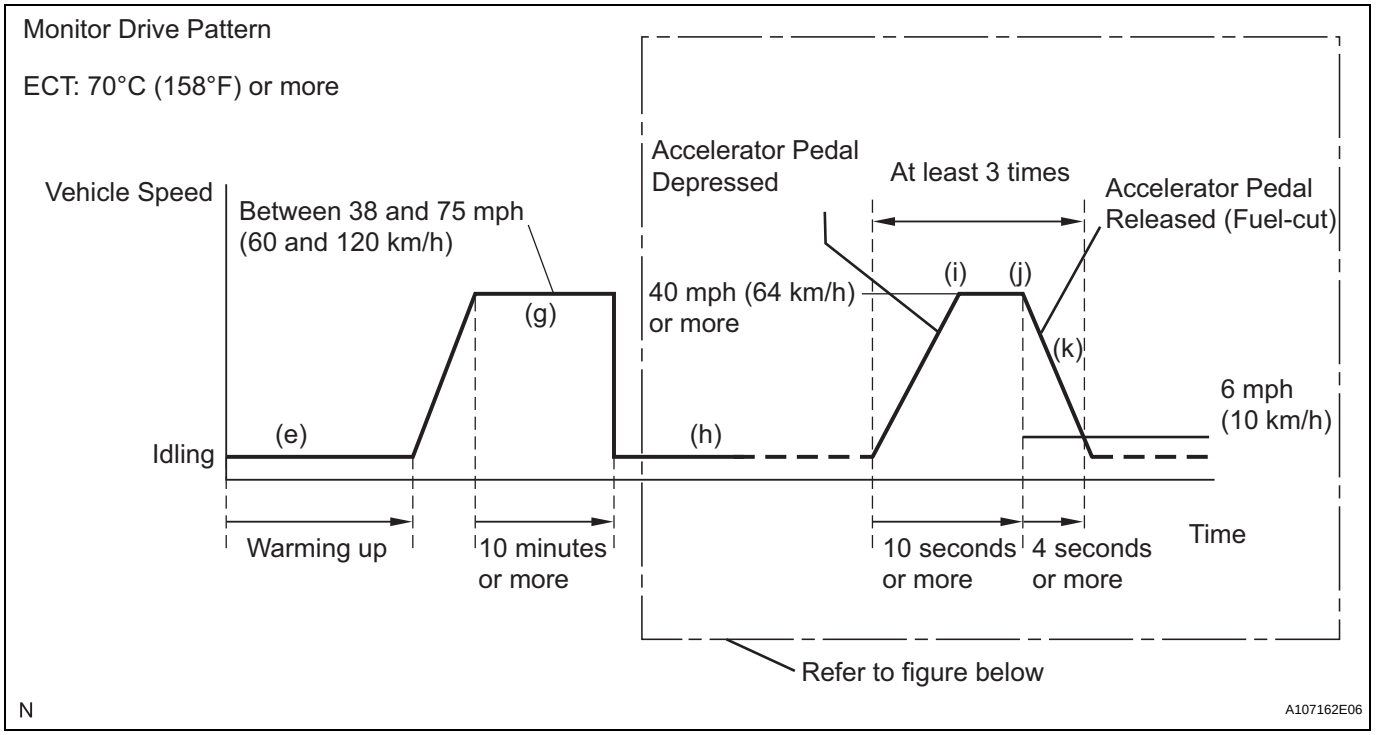

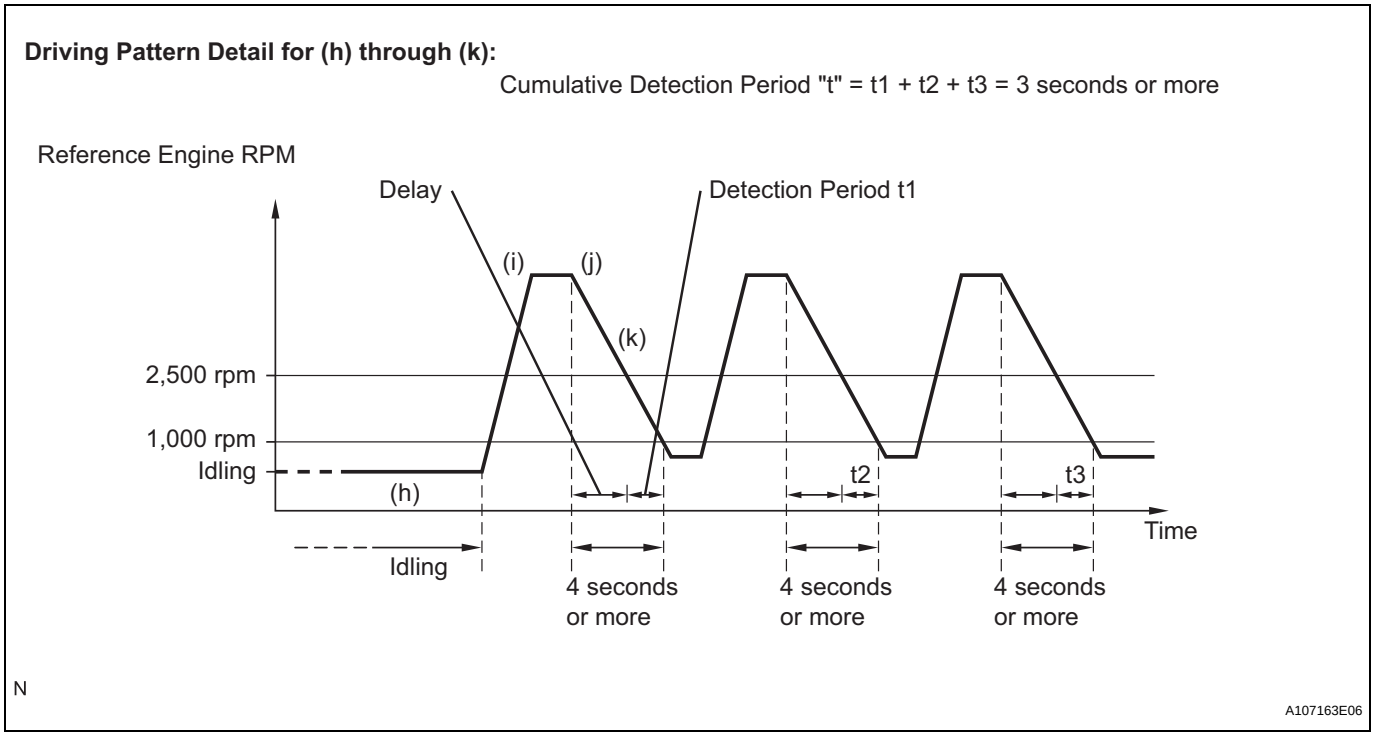

(a) Connect an intelligent tester to the DLC3.
(b) Turn the ignition switch to ON.
(c) Turn the tester ON.
(d) Clear DTCs (See page ES-40).
(e) Start the engine, and warm it up until the ECT reaches 70°C (158°F) or higher.
(f) On the intelligent tester, select the following menu items to check the fuel-cut status: DIAGNOSIS / ENHANCED OBD II / DATA LIST / USER DATA / FC IDLE.

(g) Drive the vehicle at between 38 mph (60 km/h) and 75 mph (120 km/h) for at least 10 minutes.
(h) Change the transmission to 2nd gear.
(i) Drive the vehicle at proper vehicle speed to perform fuel-cut operation (refer to the following HINT).
HINT:
Fuel-cut is performed when the following conditions are met:
- Accelerator pedal fully released.
- Engine speed is 2,500 rpm or more (fuel injection returns at 1,000 rpm).

(j) Accelerate the vehicle to 40 mph (64 km/h) or more by depressing the accelerator pedal for at least 10 seconds.
(k) Soon after performing step (j) above, release the accelerator pedal for at least 4 seconds without depressing the brake pedal, in order to execute fuel-cut control.
(l) Allow the vehicle to decelerate until the vehicle speed declines to less than 6 mph (10 km/h).
(m) Repeat steps from (h) through (k) above at least 3 times in one driving cycle.
HINT:
Completion of all A/F sensor monitors is required to change the value in TEST RESULT.

ES

CAUTION:
Strictly observe posted speed limits, traffic laws, and road conditions when performing these drive patterns.

HINT:
Malfunctioning areas can be identified by performing the A/F CONTROL function provided in the ACTIVE TEST. The A/F CONTROL function can help to determine whether the Air-Fuel Ratio (A/F) sensor, Heated Oxygen (HO2) sensor and other potential trouble areas are malfunctioning.
The following instructions describe how to conduct the A/F CONTROL operation using an intelligent tester.
1. Connect an intelligent tester to the DLC3.
2. Start the engine and turn the tester ON.
3. Warm up the engine at an engine speed of 2,500 rpm for approximately 90 seconds.
4. On the tester, select the following menu items: DIAGNOSIS / ENHANCED OBD II / ACTIVE TEST / A/F CONTROL.
5. Perform the A/F CONTROL operation with the engine in an idling condition (press the RIGHT or LEFT button to change the fuel injection volume).
6. Monitor the voltage outputs of the A/F and HO2 sensors (AFS B1S1 and OS2 B1S2) displayed on the tester.

   NOTICE:
   - **The A/F CONTROL operation lowers the fuel injection volume by 12.5 % or increases the injection volume by 25 %.**
   - **Each sensor reacts in accordance with increases and decreases in the fuel injection volume.**

Standard Voltage

Tester Display (Sensor)	Injection Volumes	Status	Voltages
AFS B1S1 (A/F)	+25 %	Rich	Less than 3.0
AFS B1S1 (A/F)	-12.5 %	Lean	More than 3.35
O2S B1S2 (HO2)	+25 %	Rich	More than 0.5
O2S B1S2 (HO2)	-12.5 %	Lean	Less than 0.4

NOTICE:
The Air-Fuel Ratio (A/F) sensor has an output delay of a few seconds and the Heated Oxygen (HO2) sensor has a maximum output delay of approximately 20 seconds.

Case	A/F Sensor (Sensor 1) Output Voltage		HO2 Sensor (Sensor 2) Output Voltage		Main Suspected Trouble Areas
1	Injection Volume +25 % -12.5 %		Injection Volume +25 % -12.5 %		-
	Output Voltage More than 3.35 V Less than 3.0 V		Output Voltage More than 0.5 V Less than 0.4 V		
2	Injection Volume +25 % -12.5 %		Injection Volume +25 % -12.5 %		• A/F sensor • A/F sensor heater • A/F sensor circuit
	Output Voltage Almost no reaction		Output Voltage More than 0.5 V Less than 0.4 V		
3	Injection Volume +25 % -12.5 %		Injection Volume +25 % -12.5 %		• HO2 sensor • HO2 sensor heater • HO2 sensor circuit
	Output Voltage More than 3.35 V Less than 3.0 V		Output Voltage Almost no reaction		
4	Injection volume +25 % -12.5 %		Injection Volume +25 % -12.5 %		• Injector • Fuel pressure • Gas leakage from exhaust system (Air-fuel ratio extremely lean or rich
	Output Voltage Almost no reaction	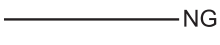	Output voltage Almost no reaction		

- Following the A/F CONTROL procedure enables technicians to check and graph the voltage outputs of both the A/F and HO2 sensors.
- To display the graph, select the following menu items on the tester: DIAGNOSIS / ENHANCED OBD II / ACTIVE TEST / A/F CONTROL / USER DATA / AFS B1S1 and O2S B1S2, and press the YES button and then the ENTER button followed by the F4 button.

HINT:

- DTC P2A00 may be set, when the air-fuel ratio is stuck rich or lean.
- A low A/F sensor voltage could be caused by a rich air-fuel mixture. Check for conditions that would cause the engine to run rich.
- A high A/F sensor voltage could be caused by a lean air-fuel mixture. Check for conditions that would cause the engine to run lean.
- Read freeze frame data using an intelligent tester. Freeze frame data record the engine condition when malfunctions are detected. When troubleshooting, freeze frame data can help determine if the vehicle was moving or stationary, if the engine was warmed up or not, if the air-fuel ratio was lean or rich, and other data, from the time the malfunction occurred.

1	CHECK ANY OTHER DTCS OUTPUT (IN ADDITION TO P2195 OR P2196)

(a) Connect an intelligent tester to the DLC3.
(b) Turn the ignition switch to ON.
(c) Turn the tester ON.
(d) Select the following menu items: DIAGNOSIS / ENHANCED OBD II / DTC INFO / CURRENT CODES.
(e) Read DTCs.

ES

Result

Display (DTC Output)	Proceed To
P2195 or P2196	A
P2195 or P2196 and other DTCs	B

If any DTCs relating to the A/F sensor (DTCs for the A/F sensor heater or A/F sensor admittance) are output, troubleshoot those DTCs first.

B → GO TO DTC CHART

A

2 READ DATA LIST (TEST VALUE OF A/F SENSOR)

ES

(a) Connect the intelligent tester to the DLC3.
(b) Turn the ignition switch to ON and turn the tester ON.
(c) Clear DTCs (see page ES-40).
(d) Allow the vehicle to drive in accordance with the drive pattern described in the CONFIRMATION DRIVING PATTERN.
(e) Select the following menu items on the tester: DIAGNOSIS / ENHANCED OBD II / MONITOR INFO / MONITOR STATUS.
(f) Check that the status of O2S MON is COMPL.
If the status is still INCMPL, drive the vehicle according to the driving pattern again.
HINT:
- AVAIL indicates that the component has not been monitored yet.
- COMPL indicates that the component is functioning normally.
- INCMPL indicates that the component is malfunctioning.

(g) Select the following menu items: DIAGNOSIS / ENHANCED OBD II / MONITOR INFO / TEST RESULT / RANGE B1S1, then press the ENTER button.
(h) Check the test value of the A/F sensor output current during fuel-cut.

Result

Test Value	Proceed To
Within normal range (1.0 mA or more, and less than 3.6 mA)	A
Outside normal range (Less than 1.0 mA, or 3.6 mA or more)	B

B → Go to step 20

A

3 READ DATA LIST (OUTPUT VOLTAGE OF A/F SENSOR)

(a) Connect an intelligent tester to the DLC3.
(b) Start the engine.
(c) Turn the tester ON.

(d) Warm up the A/F sensor at an engine speed of 2,500 rpm for 90 seconds.
(e) On the tester, select the following menu items: DIAGNOSIS / ENHANCED OBD II / DATA LIST / USER DATA / AFS B1S1 and ENGINE SPD.
(f) Check the A/F sensor voltage three times, when the engine is in each of the following conditions:
  (1) While idling (check for at least 30 seconds)
  (2) At an engine speed of approximately 2,500 rpm (without any sudden changes in engine speed)
  (3) Raise the engine speed to 4,000 rpm and then quickly release the accelerator pedal so that the throttle valve is fully closed.

Standard Voltage

Conditions	A/F Sensor Voltage Variations	Reference
(1) and (2)	Changes at approximately 3.3 V	3.1 V and 3.5 V
(3)	Increases to 3.8 V or more	This occurs during engine deceleration (when fuel-cut performed)

ES

For more information, see the diagrams below.

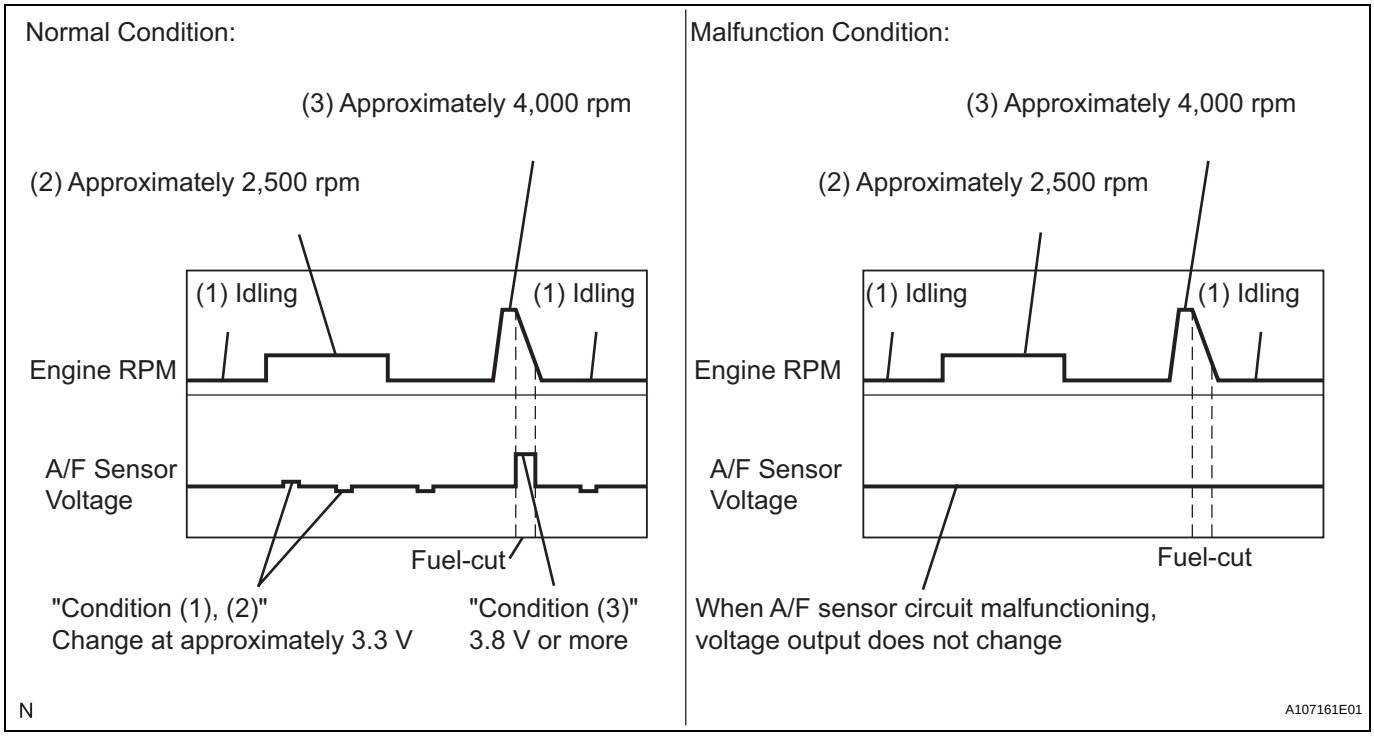

HINT:

- If the output voltage of the A/F sensor remains at approximately 3.3 V (see Malfunction Condition diagram) under any conditions, including those above, the A/F sensor may have an open circuit. (This will also happen if the A/F sensor heater has an open circuit.)
- If the output voltage of the A/F sensor remains at either approximately 3.8 V or more, or 2.8 V or less (see Malfunction Condition diagram) under any conditions, including those above, the A/F sensor may have a short circuit.

- The ECM stops fuel injection (fuel cut) during engine deceleration. This causes a lean condition and results in a momentary increase in the A/F sensor output voltage.
- The ECM must establish a closed throttle valve position learning value to perform fuel cut. If the battery terminal has been reconnected, the vehicle must be driven over 10 mph (16 km/h) to allow the ECM to learn the closed throttle valve position.
- When the vehicle is driven:
  The output voltage of the A/F sensor may be below 2.8 V during fuel enrichment. For the vehicle, this translates to a sudden increase in speed with the accelerator pedal fully depressed when trying to overtake another vehicle. The A/F sensor is functioning normally.
- The A/F sensor is a current output element; therefore, the current is converted into a voltage inside the ECM. Measuring the voltage at the connectors of the A/F sensor or ECM will show a constant voltage result.

ES

NG → **Go to step 10**

OK

4	PERFORM CONFIRMATION DRIVING PATTERN

NEXT

5	CHECK WHETHER DTC OUTPUT RECURS (DTC P2195 OR P2196)

(a) Read DTCs using the intelligent tester.
(b) Select the following menu items: DIAGNOSIS / ENHANCED OBD II / DTC INFO / PENDING CODES.

Result

Display (DTC Output)	Proceed To
P2195 or P2196	A
No output	B

B → **Go to step 9**

A

6	REPLACE AIR-FUEL RATIO SENSOR

NEXT

7	PERFORM CONFIRMATION DRIVING PATTERN

NEXT

8	CHECK WHETHER DTC OUTPUT RECURS (DTC P2195 OR P2196)

(a) Read DTCs using the intelligent tester.
(b) Select the following menu items: DIAGNOSIS / ENHANCED OBD II / DTC INFO / PENDING CODES.

Result

Display (DTC Output)	Proceed To
No output	A
P2195 or P2196	B

B → **REPLACE ECM AND PERFORM CONFIRMATION DRIVING PATTERN**

A

9	CONFIRM WHETHER VEHICLE HAS RUN OUT OF FUEL IN PAST

NO → **CHECK FOR INTERMITTENT PROBLEMS**

YES

DTC CAUSED BY RUNNING OUT OF FUEL

10	INSPECT AIR-FUEL RATIO SENSOR (HEATER RESISTANCE)

Component Side:

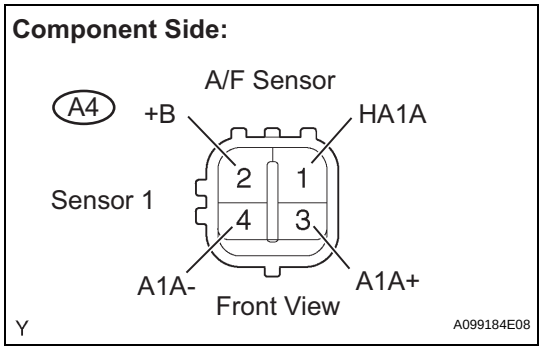

(a) Disconnect the A4 Air-Fuel Ratio (A/F) sensor connector.
(b) Measure the resistance between the terminals of the A/F sensor connector.

Standard Resistance

Tester Connections	Specified Conditions
HA1A (1) - +B (2)	1.8 Ω to 3.4 Ω at 20°C (68°F)
HA1A (1) - A1A- (4)	10 kΩ or higher

(c) Reconnect the A/F sensor connector.

NG → **REPLACE AIR-FUEL RATIO SENSOR**

OK

11 INSPECT AIR FUEL RATIO SENSOR (A/F HEATER RELAY)

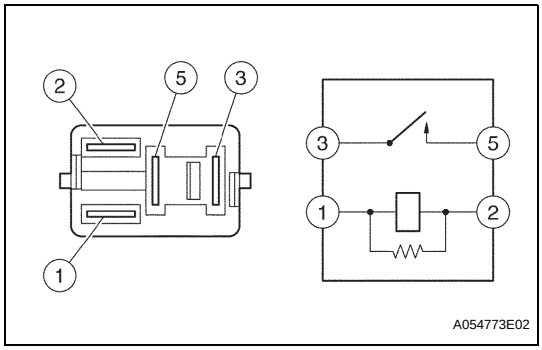

(a) Remove the A/F HEATER relay from the engine room R/B.
(b) Check the A/F HEATER relay resistance.
Standard Resistance

Tester Connections	Specified Conditions
3 - 5	10 kΩ or higher
3 - 5	Below 1 Ω (when battery voltage applied to terminals 1 and 2)

(c) Reinstall the A/F HEATER relay.

ES

NG → **REPLACE AIR FUEL RATIO SENSOR HEATER RELAY**

OK

12 CHECK HARNESS AND CONNECTOR (A/F SENSOR - ECM)

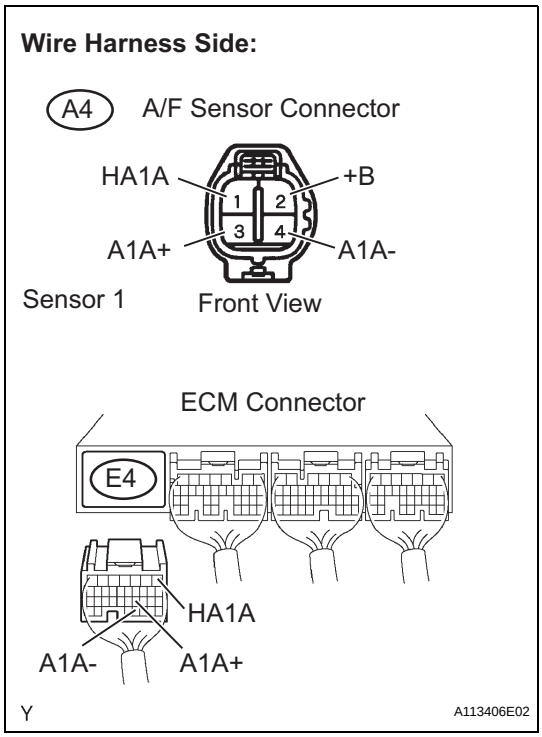

(a) Disconnect the A4 air-fuel ratio sensor connector.
(b) Turn the ignition switch to ON.
(c) Measure the voltage between the +B terminal of the air-fuel ratio sensor connector and body ground.
Standard Voltage

Tester Connections	Specified Conditions
+B (A4-2) - Body ground	9 to 14 V

(d) Turn the ignition switch to OFF.
(e) Disconnect the E4 ECM connector.
(f) Check the resistance.
Standard Resistance (Check for open)

Tester Connections	Specified Conditions
HA1A (A4-1) - HA1A (E4-1)	Below 1 Ω
A1A+ (A4-3) - A1A+ (E4-21)	Below 1 Ω
A1A- (A4-4) - A1A- (E4-31)	Below 1 Ω

Standard Resistance (Check for short)

Tester Connections	Specified Conditions
HA1A (A4-1) or HA1A (E4-1) - Body ground	10 kΩ or higher
A1A+ (A4-3) or A1A+ (E4-21) - Body ground	10 kΩ or higher
A1A- (A4-4) or A1A- (E4-31) - Body ground	10 kΩ or higher

(g) Reconnect the ECM connector.
(h) Reconnect the air-fuel ratio sensor connector.

Reference (Bank 1 Sensor 1 System Diagram)

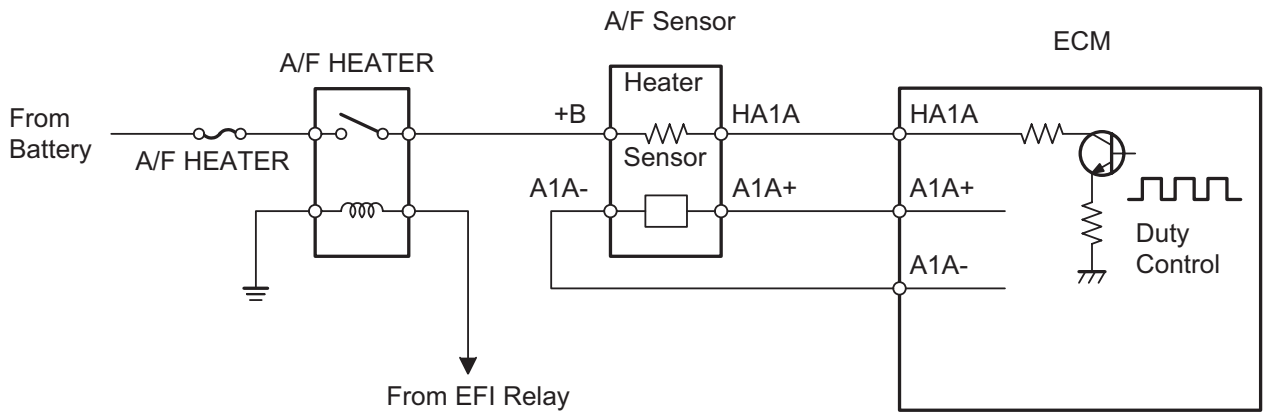

P A118002E04

NG → **REPAIR OR REPLACE HARNESS OR CONNECTOR**

OK

13	CHECK AIR INDUCTION SYSTEM

(a) Check the air induction system for vacuum leakage.
OK:
No leakage from air induction system.

NG → **REPAIR OR REPLACE AIR INDUCTION SYSTEM**

OK

14	CHECK FUEL PRESSURE

(a) Check the fuel pressure.

NG → **REPAIR OR REPLACE FUEL SYSTEM**

OK

15	INSPECT FUEL INJECTOR ASSEMBLY

(a) Check the injector injection (whether fuel volume is high or low, and whether injection pattern is poor).

NG → **REPLACE FUEL INJECTOR ASSEMBLY**

ES

OK

16	REPLACE AIR-FUEL RATIO SENSOR

NEXT

17	PERFORM CONFIRMATION DRIVING PATTERN

NEXT

ES

18	CHECK WHETHER DTC OUTPUT RECURS (DTC P2195 OR P2196)

(a) Read DTCs using the intelligent tester.
(b) Select the following menu items: DIAGNOSIS / ENHANCED OBD II / DTC INFO / PENDING CODES.

Result

Display (DTC Output)	Proceed To
No output	A
P2195 or P2196	B

B → REPLACE ECM AND PERFORM CONFIRMATION DRIVING PATTERN

A

19	CONFIRM WHETHER VEHICLE HAS RUN OUT OF FUEL IN PAST

NO → CHECK FOR INTERMITTENT PROBLEMS

YES

DTC CAUSED BY RUNNING OUT OF FUEL

20	REPLACE AIR FUEL RATIO SENSOR

NEXT

21	PERFORM CONFIRMATION DRIVING PATTERN

NEXT

22	CHECK WHETHER DTC OUTPUT RECURS (DTC P2195 OR P2196)

(a) Connect the intelligent tester to the DLC3.

(b) Turn the ignition switch to ON and turn the tester ON.
(c) Select the following menu items: DIAGNOSIS / ENHANCED OBD II / DTC INFO / PENDING CODES.
(d) Read pending DTCs.

Result

Display (DTC Output)	Proceed To
No output	A
P2195 or P2196 (A/F sensor pending DTCs)	B

B → **REPLACE ECM**

A

END

DTC	P2238	Oxygen (A/F) Sensor Pumping Current Circuit Low (Bank 1 Sensor 1)

DTC	P2239	Oxygen (A/F) Sensor Pumping Current Circuit High (Bank 1 Sensor 1)

DTC	P2252	Oxygen (A/F) Sensor Reference Ground Circuit Low (Bank 1 Sensor 1)

DTC	P2253	Oxygen (A/F) Sensor Reference Ground Circuit High (Bank 1 Sensor 1)

ES

HINT:
- Although the DTC titles say oxygen sensor, these DTCs relate to the Air-Fuel Ratio (A/F) sensor.
- Sensor 1 refers to the sensor mounted in front of the Three-Way Catalytic Converter (TWC) and located near the engine assembly.

DESCRIPTION

Refer to DTC P2195 (See page ES-312).

DTC No.	DTC Detection Conditions	Trouble Areas
P2238	• Case 1: Condition (a) or (b) continues for 5.0 seconds or more (2 trip detection logic) (a) A1A+ voltage 0.5 V or less (b) (A1A+) - (A1A-) = 0.1 V or less • Case 2: A/F sensor admittance: Less than 0.022 1/Ω (2 trip detection logic)	• Open or short in Air-Fuel Ratio (A/F) sensor (sensor 1) circuit • A/F sensor (sensor 1) • A/F sensor heater • A/F HEATER relay • A/F sensor heater and relay circuits • ECM
P2239	A1A+ voltage more than 4.5 V for 5.0 seconds or more (2 trip detection logic)	• Open or short in Air-Fuel Ratio (A/F) sensor (sensor 1) circuit • A/F sensor (sensor 1) • A/F sensor heater • A/F HEATER relay • A/F sensor heater and relay circuits • ECM
P2252	A1A- voltage 0.5 V or less for 5.0 seconds or more (2 trip detection logic)	• Open or short in Air-Fuel Ratio (A/F) sensor (sensor 1) circuit • A/F sensor (sensor 1) • A/F sensor heater • A/F HEATER relay • A/F sensor heater and relay circuits • ECM
P2253	A1A- voltage more than 4.5 V for 5.0 seconds or more (2 trip detection logic)	• Open or short in Air-Fuel Ratio (A/F) sensor (sensor 1) circuit • A/F sensor (sensor 1) • A/F sensor heater • A/F HEATER relay • A/F sensor heater and relay circuits • ECM

MONITOR DESCRIPTION

The Air-Fuel Ratio (A/F) sensor varies its output voltage in proportion to the air-fuel ratio. If the A/F sensor impedance (alternating current resistance) or voltage output deviates greatly from the standard range, the ECM determines that there is an open or short malfunction in the A/F sensor circuit.

MONITOR STRATEGY

Related DTCs	P2238: A/F sensor open circuit between A1A+ and A1A- P2238: A/F sensor short circuit between A1A+ and A1A- P2238: A/F sensor short circuit between A1A+ and GND P2239: A/F sensor short circuit between A1A+ and +B P2252: A/F sensor short circuit between A1A- and GND P2253: A/F sensor short circuit between A1A- and +B
Required Sensors/Components (Main)	A/F sensor
Required Sensors/Components (Related)	Engine Coolant Temperature (ECT) sensor, Crankshaft position sensor
Frequency of Operation	Once per driving cycle
Duration	10 seconds
MIL Operation	2 driving cycles
Sequence of Operation	None

TYPICAL ENABLING CONDITIONS

Monitor runs whenever following DTCs not present	None

P2238 (open circuit between A1A+ and A1A-):

Duration while all following conditions met	20 seconds or more
A1A+ terminal voltage	0.5 to 4.5 V
A1A- terminal voltage	0.5 to 4.5 V
Difference between A1A+ and A1A- terminal voltages	0.1 to 0.8 V
ECT	8°C (46°F) or more: closed loop fuel control enable temperature
Engine condition	Running
Time after engine start	20 seconds or more
Fuel-cut	OFF (for 25 seconds or more)
A/F sensor heater duty ratio	0 % or more
Time after A/F sensor heating	20 seconds or more
Battery voltage	10.5 V or more
Ignition switch	ON (for 5 seconds or more)

Others:

Battery voltage	10.5 V or more
Ignition switch	ON (for 5 seconds or more)

TYPICAL MALFUNCTION THRESHOLDS

P2238 (Open circuit between A1A+ and A1A-):

A/F sensor admittance	Below 0.022 1/Ω

P2238 (Short circuit between A1A+ and GND):

A1A+ terminal voltage	0.5 V or less

P2238 (Short circuit between A1A+ and A1A-):

Difference between A1A+ and A1A- terminal voltages	0.1 V or less

P2239 (Short circuit between A1A+ and +B):

A1A+ terminal voltage	More than 4.5 V

P2252 (Short circuit between A1A- and GND):

A1A- terminal voltage	0.5 V or less

P2253 (Short circuit between A1A- and +B):

A1A- terminal voltage	More than 4.5 V

WIRING DIAGRAM

Refer to DTC P2195 (See page ES-316).

HINT:
Intelligent tester only:
Malfunctioning areas can be identified by performing the A/F CONTROL function provided in the ACTIVE TEST. The A/F CONTROL function can help to determine whether the Air-Fuel Ratio (A/F) sensor, Heated Oxygen (HO2) sensor and other potential trouble areas are malfunctioning.
The following instructions describe how to conduct the A/F CONTROL operation using an intelligent tester.

1. Connect an intelligent tester to the DLC3.
2. Start the engine and turn the tester ON.
3. Warm up the engine at an engine speed of 2,500 rpm for approximately 90 seconds.
4. On the tester, select the following menu items: DIAGNOSIS / ENHANCED OBD II / ACTIVE TEST / A/F CONTROL.
5. Perform the A/F CONTROL operation with the engine in an idling condition (press the RIGHT or LEFT button to change the fuel injection volume).
6. Monitor the voltage outputs of the A/F and HO2 sensors (AFS B1S1 and OS2 B1S2) displayed on the tester.
   HINT:
   - The A/F CONTROL operation lowers the fuel injection volume by 12.5 % or increases the injection volume by 25 %.
   - Each sensor reacts in accordance with increases and decreases in the fuel injection volume.

Standard Voltage

Tester Display (Sensor)	Injection Volumes	Status	Voltages
AFS B1S1 (A/F)	+25 %	Rich	Less than 3.0
AFS B1S1 (A/F)	-12.5 %	Lean	More than 3.35
O2S B1S2 (HO2)	+25 %	Rich	More than 0.5
O2S B1S2 (HO2)	-12.5 %	Lean	Less than 0.4

NOTICE:
The Air-Fuel Ratio (A/F) sensor has an output delay of a few seconds and the Heated Oxygen (HO2) sensor has a maximum output delay of approximately 20 seconds.

Case	A/F Sensor (Sensor 1) Output Voltage		HO2 Sensor (Sensor 2) Output Voltage		Main Suspected Trouble Areas
1	Injection Volume +25 % -12.5 %		Injection Volume +25 % -12.5 %		-
	Output Voltage More than 3.35 V Less than 3.0 V		Output Voltage More than 0.5 V Less than 0.4 V		
2	Injection Volume +25 % -12.5 %		Injection Volume +25 % -12.5 %		• A/F sensor • A/F sensor heater • A/F sensor circuit
	Output Voltage Almost no reaction		Output Voltage More than 0.5 V Less than 0.4 V		

Case	A/F Sensor (Sensor 1) Output Voltage		HO2 Sensor (Sensor 2) Output Voltage		Main Suspected Trouble Areas
3	Injection Volume +25 % -12.5 %		Injection Volume +25 % -12.5 %		• HO2 sensor • HO2 sensor heater • HO2 sensor circuit
	Output Voltage More than 3.35 V Less than 3.0 V		Output Voltage Almost no reaction		
4	Injection volume +25 % -12.5 %		Injection Volume +25 % -12.5 %		• Injector • Fuel pressure • Gas leakage from exhaust system (Air-fuel ratio extremely lean or rich
	Output Voltage Almost no reaction		Output voltage Almost no reaction		

ES

- Following the A/F CONTROL procedure enables technicians to check and graph the voltage outputs of both the A/F and HO2 sensors.
- To display the graph, select the following menu items on the tester: DIAGNOSIS / ENHANCED OBD II / ACTIVE TEST / A/F CONTROL / USER DATA / AFS B1S1 and O2S B1S2, and press the YES button and then the ENTER button followed by the F4 button.

HINT:

- Read freeze frame data using an intelligent tester. Freeze frame data record the engine condition when malfunctions are detected. When troubleshooting, freeze frame data can help determine if the vehicle was moving or stationary, if the engine was warmed up or not, if the air-fuel ratio was lean or rich, and other data, from the time the malfunction occurred.

1 INSPECT AIR FUEL RATIO SENSOR (HEATER RESISTANCE)

Component Side:

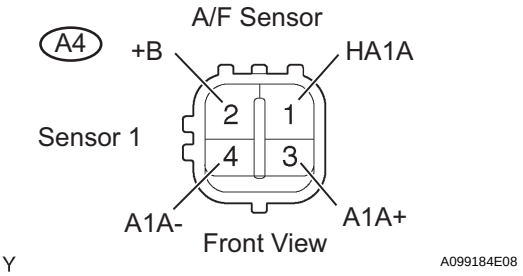

(a) Disconnect the A4 Air-Fuel Ratio (A/F) sensor connector.
(b) Measure the resistance between the terminals of the A/F sensor connector.

Standard Resistance

Tester Connections	Specified Conditions
HA1A (1) - +B (2)	1.8 to 3.4 Ω at 20°C (68°F)
HA1A (1) - A1A- (4)	10 kΩ or higher

(c) Reconnect the A/F sensor connector.

NG → **REPLACE AIR FUEL RATIO SENSOR**

OK

2 INSPECT AIR FUEL RATIO SENSOR HEATER RELAY (A/F HEATER RELAY)

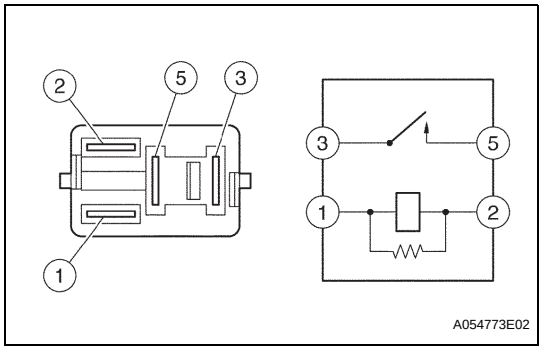

(a) Remove the A/F HEATER relay from the engine room R/B.
(b) Check the A/F HEATER relay resistance.

Standard Resistance

Tester Connections	Specified Conditions
3 - 5	10 kΩ or higher
3 - 5	Below 1 Ω (when battery voltage applied to terminals 1 and 2)

(c) Reinstall the A/F HEATER relay.

ES

NG → **REPLACE AIR FUEL RATIO SENSOR HEATER RELAY**

OK

3 CHECK HARNESS AND CONNECTOR (A/F SENSOR - ECM)

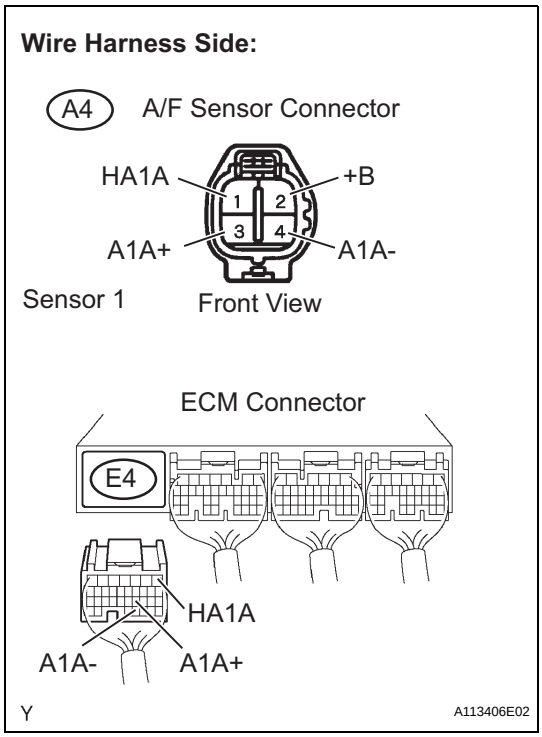

(a) Disconnect the A4 A/F sensor connector.
(b) Turn the ignition switch to ON.
(c) Measure the voltage between the +B terminal of the A/F sensor connector and body ground.

Standard Voltage

Tester Connections	Specified Conditions
+B (A4-2) - Body ground	9 to 14 V

(d) Turn the ignition switch to OFF.
(e) Disconnect the E4 ECM connector.
(f) Check the resistance.

Standard Resistance (Check for open)

Tester Connections	Specified Conditions
HA1A (A4-1) - HA1A (E4-1)	Below 1 Ω
A1A+ (A4-3) - A1A+ (E4-21)	Below 1 Ω
A1A- (A4-4) - A1A- (E4-31)	Below 1 Ω

Standard Resistance (Check for open)

Tester Connections	Specified Conditions
HA1A (A4-1) or HA1A (E4-1) - Body ground	10 kΩ or higher
A1A+ (A4-3) or A1A+ (E4-21) - Body ground	10 kΩ or higher
A1A- (A4-4) or A1A- (E4-31) - Body ground	10 kΩ or higher

(g) Reconnect the ECM connector.
(h) Reconnect the A/F sensor connector.

Reference (Bank 1 Sensor 1 System Diagram)

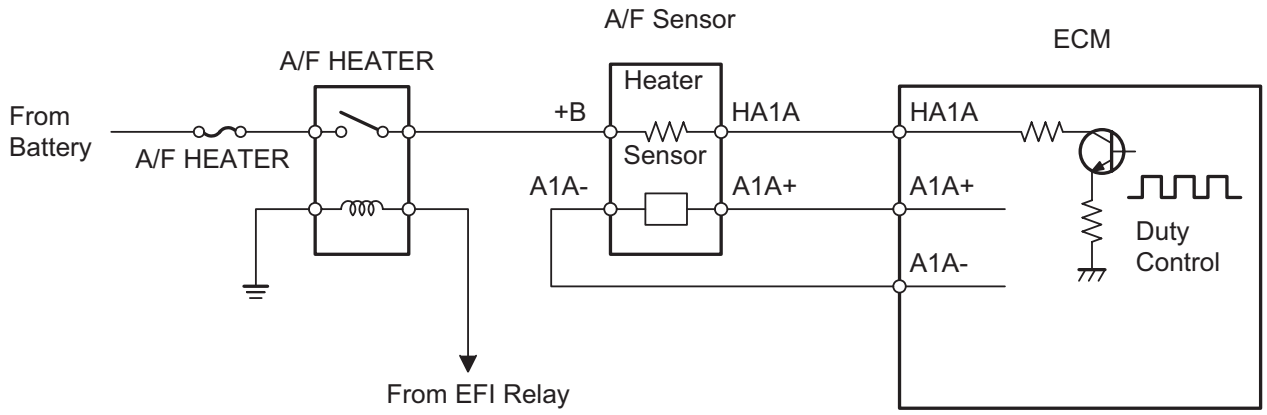

P A118002E04

NG → **REPAIR OR REPLACE HARNESS OR CONNECTOR**

OK

REPLACE ECM

ES

DTC	P2401	Evaporative Emission Leak Detection Pump Stuck OFF

DTC	P2402	Evaporative Emission Leak Detection Pump Stuck ON

DTC SUMMARY

DTC No.	Monitoring Items	Malfunction Detection Conditions	Trouble Areas	Detection Timings	Detection Logic
P2401	Leak detection pump stuck OFF	Leak detection pump creates negative pressure through reference orifice, and EVAP system pressure measured to determine 0.02 inch leak criterion. 0.02 inch leak criterion measured at start and at end of leak check. If system pressure higher than -1.06 kPa (-7.95 mmHg)*, or lower than -4.85 kPa (-36.38 mmHg)*, ECM determines that leak detection pump stuck OFF.	• Canister pump module • Connector/wire harness (Canister pump module - ECM) • ECM • Leakage from EVAP system	While ignition switch OFF	2 trip
P2402	Leak detection pump stuck ON	Leak detection pump creates negative pressure through reference orifice, and EVAP system pressure measured to determine 0.02 inch leak criterion. If system pressure higher than -1.06 kPa (-7.95 mmHg)*, or lower than -4.85 kPa (-36.38 mmHg)*, ECM determines that leak detection pump stuck ON.	• Canister pump module • Connector/wire harness (Canister pump module - ECM) • ECM	While ignition switch OFF	2 trip

*: The threshold values vary according to the atmospheric pressure measured in operation A. The values described in the table above are based on an atmospheric pressure of 100 kPa (750.1 mmHg).

HINT:

The leak detection pump is built into the canister pump module.

DESCRIPTION

The circuit description can be found in the EVAP (Evaporative Emission) System (see page ES-392).

Refer to the EVAP System (see page ES-397).

MONITOR DESCRIPTION

5 hours* after the ignition switch is turned to OFF, the electric leak detection pump creates negative pressure (vacuum) in the EVAP (Evaporative Emission) system. The ECM monitors for leaks and actuator malfunctions based on the EVAP pressure.
HINT:
*: If the engine coolant temperature is not below 35°C (95°F) 5 hours after the ignition switch is turned off, the monitor check starts 2 hours later. If it is still not below 35°C (95°F) 7 hours after the ignition switch is turned off, the monitor check starts 2.5 hours later.

Sequence	Operations	Descriptions	Duration
-	ECM activation	Activated by soak timer, 5 hours (7 or 9.5 hours) after ignition switch turned to OFF.	-
A	Atmospheric pressure measurement	Vent valve turned OFF (vent) and EVAP system pressure measured by ECM in order to register atmospheric pressure. If pressure in EVAP system not between 70 kPa and 110 kPa (525 mmHg and 825 mmHg), ECM cancels EVAP system monitor.	10 seconds
B	First 0.02 inch leak criterion (reference pressure) measurement	In order to determine 0.02 inch leak criterion, leak detection pump creates negative pressure (vacuum) through reference orifice and then ECM checks if leak detection pump and vent valve operate normally.	60 seconds
C	EVAP system pressure measurement	Vent valve turned ON (closed) to shut EVAP system. Negative pressure (vacuum) created in EVAP system, and EVAP system pressure then measured. Write down measured value as they will be used in leak check. If EVAP pressure does not stabilize within 15 minutes, ECM cancels EVAP system monitor.	15 minutes*
D	Purge VSV monitor	Purge VSV opened and then EVAP system pressure measured by ECM. Large increase indicates normal.	10 seconds
E	Second 0.02 inch leak criterion (reference pressure) measurement	After second 0.02 inch leak criterion measurement, leak check performed by comparing first and second 0.02 inch leak criterion. If stabilized system pressure higher than second 0.02 inch leak criterion, ECM determines that EVAP system leaking.	60 seconds
F	Final check	Atmospheric pressure measured and then monitoring result recorded by ECM.	-

* If only a small amount of fuel is in the fuel tank, it takes longer for the EVAP pressure to stabilize.

Operation A: Atmospheric Pressure Measurement

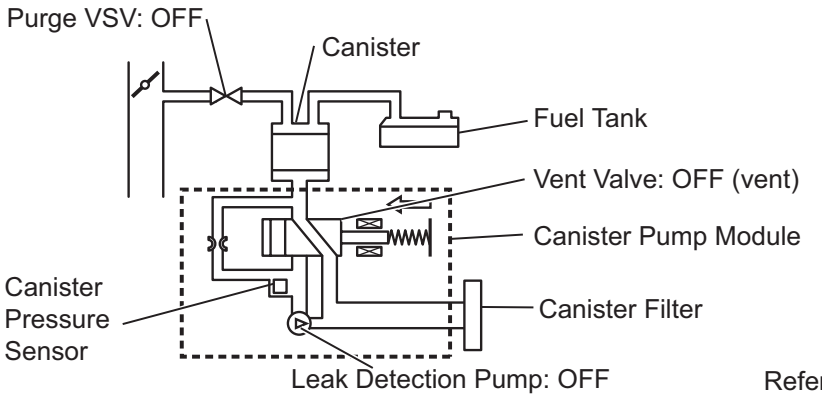

Operation B, E:

0.02 Inch Leak Criterion Measurement

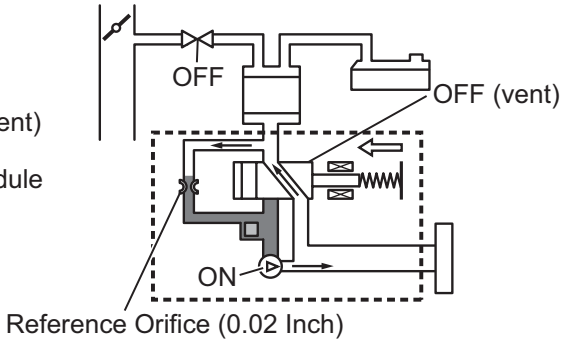

Operation C: EVAP System Pressure Measurement

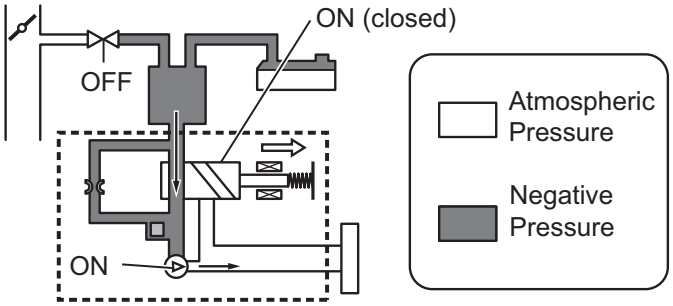

Operation D: Purge VSV Monitor

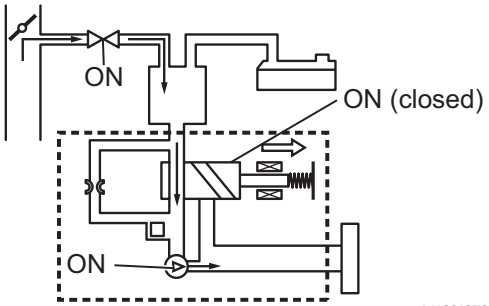

Y

A112612E02

1. P2401: Leak detection pump stuck OFF
   In operation B, the leak detection pump creates negative pressure (a vacuum) through the reference orifice. The EVAP (Evaporative Emission) system pressure is then measured by the ECM, using the canister pressure sensor, to determine the 0.02 inch leak criterion. If the pressure is higher than -1.06 kPa (-7.95 mmHg)*, or lower than -4.85 kPa (-36.38 mmHg)*, the ECM interprets this as the leak detection pump being stuck OFF (not operating). The ECM illuminates the MIL and sets the DTC (2 trip detection logic).
   *: The thresholds vary according to the atmospheric pressure measured in operation A. The values described above are based on an atmospheric pressure of 100 kPa (750.1 mmHg): absolute pressure.

EVAP Pressure when Leak Detection Pump Stuck OFF

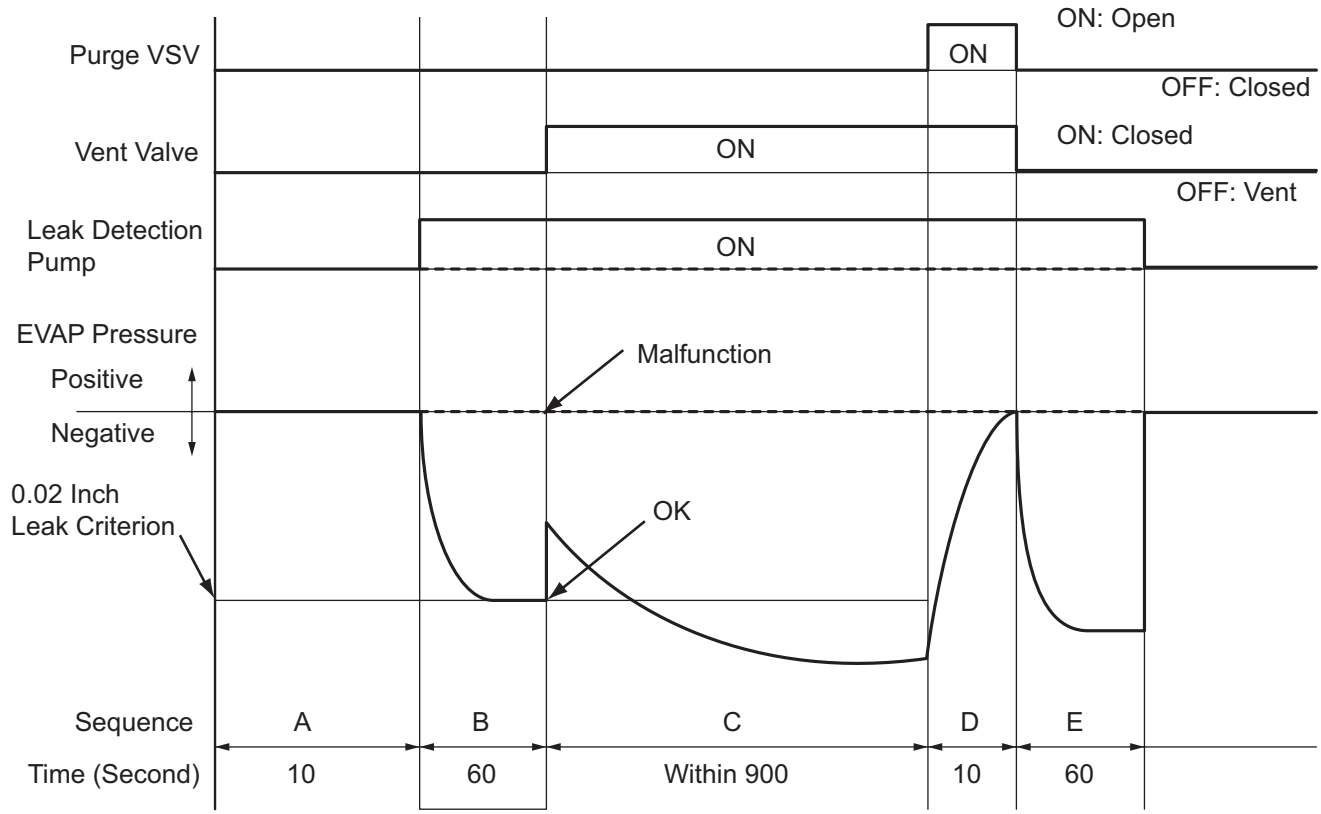

ES

2. P2402: Leak detection pump stuck ON
In operation B, the leak detection pump creates negative pressure (a vacuum) through the reference orifice. The EVAP (Evaporative Emission) system pressure is then measured by the ECM, using the canister pressure sensor, to determine the 0.02 inch leak criterion. If the pressure is higher than -1.06 kPa (-7.95 mmHg)*, or lower than -4.85 kPa (-36.38 mmHg)*, the ECM interprets this as the leak detection pump being stuck ON (remaining ON all the time). The ECM illuminates the MIL and sets the DTC (2 trip detection logic).
*: The thresholds vary according to the atmospheric pressure measured in operation A. The values described above are based on an atmospheric pressure of 100 kPa (750.1 mmHg): absolute pressure.

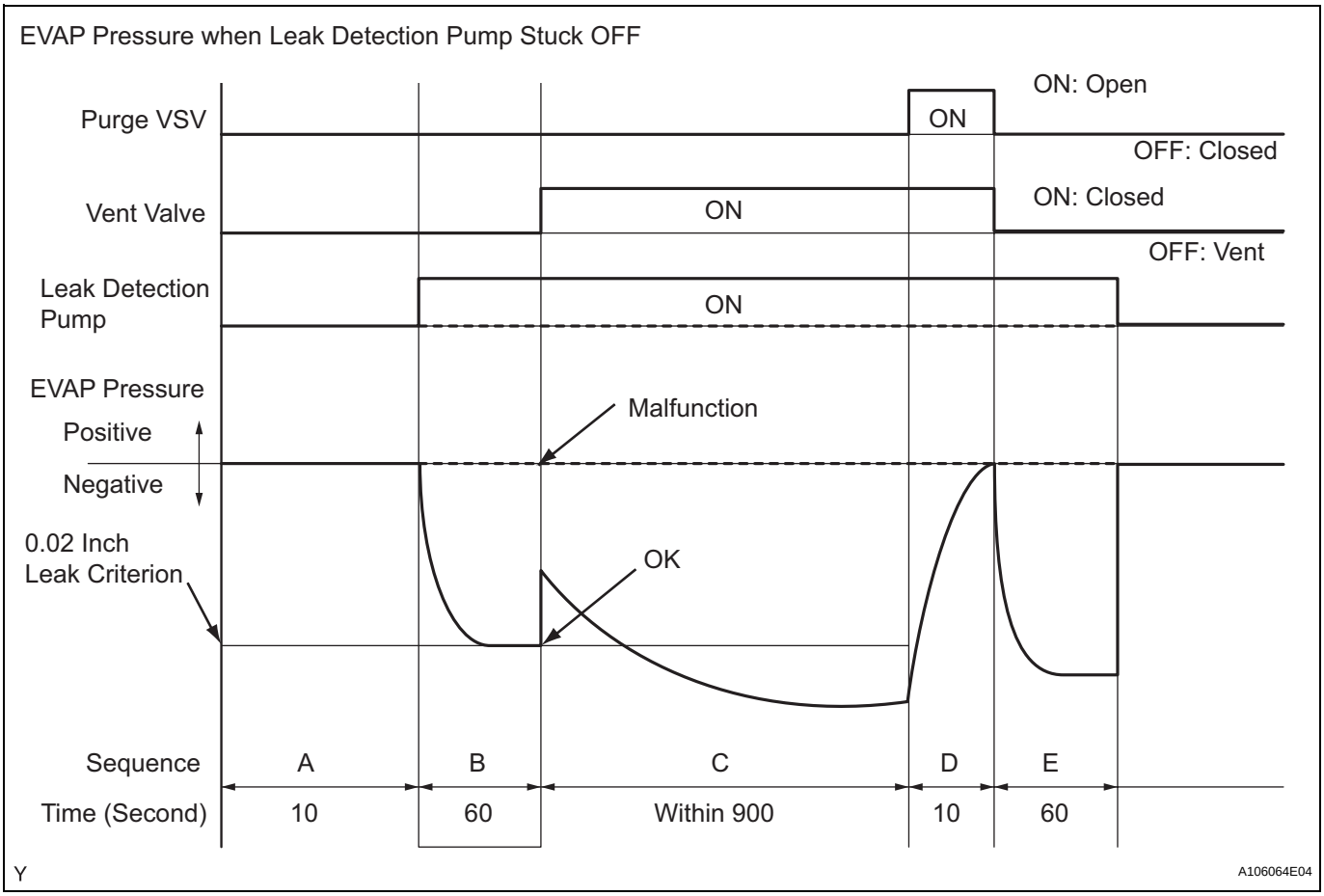

HINT:
The detection logic of DTCs P2401 and P2402 is the same because in both cases the 0.02 inch leak criterion measured in operation B is compared to the atmospheric pressure registered in operation A. The ECM calculates the difference between these pressures by deducting [the 0.02 inch leak criterion] from [the stored atmospheric pressure], and uses this to monitor the EVAP system pressure change.

MONITOR STRATEGY

Required Sensors/Components	Purge VSV and canister pump module
Frequency of Operation	Once per driving cycle
Duration	Within 15 minutes (varies with amount of fuel in tank)
MIL Operation	2 driving cycles
Sequence of Operation	None

TYPICAL ENABLING CONDITIONS

Typical Enabling Conditions

Monitor runs whenever following DTCs not present	None

EVAP key-off monitor runs when all of following conditions met	-
Atmospheric pressure	70 to 110 kPa (525 to 825 mmHg)
Battery voltage	10.5 V or more
Vehicle speed	Below 2.5 mph (4 km/h)
Ignition switch	OFF
FTP sensor malfunction (P0450, P0451, P0452 and P0453)	Not detected
Purge VSV	Not operated by scan tool
Vent valve	Not operated by scan tool
Leak detection pump	Not operated by scan tool
Both of following conditions met before IG switch OFF	Conditions 1 and 2
1. Duration that vehicle driven	5 minutes or more
2. Purge flow	Executed
ECT	4.4° to 35°C (40° to 95°F)
IAT	4.4° to 35°C (40° to 95°F)
Time after engine stopped	5 hours

Example of restart time

First time	7 hours
Second time	9 hours and 30 minutes

1. Key-off monitor sequence 1 to 8

1. Atmospheric pressure

Next sequence is run if following condition set	-
Atmospheric pressure change for 10 second	Less than 0.3 kPa (2.25 mmHg) for 1 second

2. First reference pressure

Next sequence is run if all of following conditions set	Condition 1, 2 and 3
1. FTP when 4 seconds after reference pressure measurement	-1 kPa (-7.5 mmHg) or less
2. Reference pressure	-4.85 to -1.057 kPa (-33.38 to -7.93 mmHg)
3. Reference pressure	Saturated within 60 seconds

3. Vent valve stuck closed check

Next sequence is run if following condition set	-
FTP change for 10 seconds after vent valve ON (closed)	0.3 kPa (2.25 mmHg) or more

4. Vacuum introduction and leak

Next sequence is run if both of following conditions set	Condition 1 and 2
1. Vacuum introduction time	12 minutes or less
2. FTP	Saturated within 12 minutes

5. Purge VSV stuck closed check

Next sequence is run if following condition set	-
FTP change for 10 seconds after purge VSV ON (open)	0.3 kPa (2.25 mmHg) or more

6. Second reference pressure measurement

Next sequence is run if all of following conditions set	Condition 1, 2, 3 and 4
1. FTP when 4 seconds after reference pressure measurement	-1 kPa (-7.5 mmHg) or less
2. Reference pressure	-4.85 to -1.057 kPa (-36.4 to -7.92 mmHg)
3. Reference pressure	Saturated within 60 seconds
4. Reference pressure difference between first and second	0.7 kPa (5.25 mmHg) or less

7. Leak check

Next sequence is run if following condition set	-
FTP when vacuum introduction was complete	Second reference pressure or less

8. Atmospheric pressure

Monitor is complete if following condition set	-
Atmospheric pressure difference between sequence 1 and 8	0.3 kPa (2.25 mmHg) or less

TYPICAL MALFUNCTION THRESHOLDS

One of following conditions met	-
FTP when 4 seconds after reference pressure measurement began	More than -1 kPa (-7.5 mmHg)
Reference pressure	Less than -4.85 kPa (-36.4 mmHg)
Reference pressure	-1.057 kPa (-7.9 mmHg) or more
Reference pressure	Not saturated within 60 seconds
Reference pressure difference between first and second	0.7 kPa (5.2 mmHg) or more

"Saturated" indicates that the EVAP pressure change is less than 0.1 kPa (0.75 mmHg) in 30 seconds.

ES

MONITOR RESULT

Refer to Checking Monitor Status (See page ES-21) or (See page ES-422).

DTC	P2419	Evaporative Emission System Switching Valve Control Circuit Low

DTC	P2420	Evaporative Emission System Switching Valve Control Circuit High

DTC SUMMARY

DTCs	Monitoring Items	Malfunction Detection Conditions	Trouble Areas	Detection Timings	Detection Logic
P2419	Vent valve stuck closed	Leak detection pump creates negative pressure through reference orifice and EVAP system pressure measured to determine leak criterion. If system pressure higher than -1.06 kPa (-7.95 mmHg)* 4 seconds after leak detection pump turned ON, ECM determines that vent valve stuck closed.	• Canister pump module • Connector/wire harness (Canister pump module - ECM) • ECM	While ignition switch OFF	2 trip
P2420	Vent valve stuck open (vent)	leak detection pump creates negative pressure through reference orifice and EVAP system pressure measured to determine leak criterion. 0.02 inch leak criterion measured at start and at end of leak check. If system pressure does not increase by more than 0.3 kPa (2.25 mmHg) within 10 seconds when vent valve turned ON, ECM determines that vent valve stuck close.	• Canister pump module • Connector/wire harness (Canister pump module - ECM) • ECM • Leakage from EVAP system	While ignition switch OFF	2 trip

*: The threshold value varies according to the atmospheric pressure measured in operation A. The value described above is based on an atmospheric pressure of 100 kPa (750.1 mmHg): absolute pressure.
HINT:
The vent valve is built into the canister pump module.

DESCRIPTION

The circuit description can be found in the EVAP (Evaporative Emission) System (see page ES-392).

Refer to the EVAP System (see page ES-397).

MONITOR DESCRIPTION

5 hours* after the ignition switch is turned to OFF, the electric leak detection pump creates negative pressure (vacuum) in the EVAP (Evaporative Emission) system. The ECM monitors for leaks and actuator malfunctions based on the EVAP pressure.
HINT:
*: If the engine coolant temperature is not below 35°C (95°F) 5 hours after the ignition switch is turned off, the monitor check starts 2 hours later. If it is still not below 35°C (95°F) 7 hours after the ignition switch is turned off, the monitor check starts 2.5 hours later.

Sequence	Operations	Descriptions	Duration
-	ECM activation	Activated by soak timer, 5 hours (7 or 9.5 hours) after ignition switch turned to OFF.	-
A	Atmospheric pressure measurement	Vent valve turned OFF (vent) and EVAP system pressure measured by ECM in order to register atmospheric pressure. If pressure in EVAP system not between 70 kPa and 110 kPa (525 mmHg and 825 mmHg), ECM cancels EVAP system monitor.	10 seconds
B	First 0.02 inch leak criterion (reference pressure) measurement	In order to determine 0.02 inch leak criterion, leak detection pump creates negative pressure (vacuum) through reference orifice and then ECM checks if leak detection pump and vent valve operate normally.	60 seconds
C	EVAP system pressure measurement	Vent valve turned ON (closed) to shut EVAP system. Negative pressure (vacuum) created in EVAP system, and EVAP system pressure then measured. Write down measured value as they will be used in leak check. If EVAP pressure does not stabilize within 15 minutes, ECM cancels EVAP system monitor.	15 minutes*
D	Purge VSV monitor	Purge VSV opened and then EVAP system pressure measured by ECM. Large increase indicates normal.	10 seconds
E	Second 0.02 inch leak criterion (reference pressure) measurement	After second 0.02 inch leak criterion measurement, leak check performed by comparing first and second 0.02 inch leak criterion. If stabilized system pressure higher than second 0.02 inch leak criterion, ECM determines that EVAP system leaking.	60 seconds
F	Final check	Atmospheric pressure measured and then monitoring result recorded by ECM.	-

* If only a small amount of fuel is in the fuel tank, it takes longer for the EVAP pressure to stabilize.

Operation A: Atmospheric Pressure Measurement

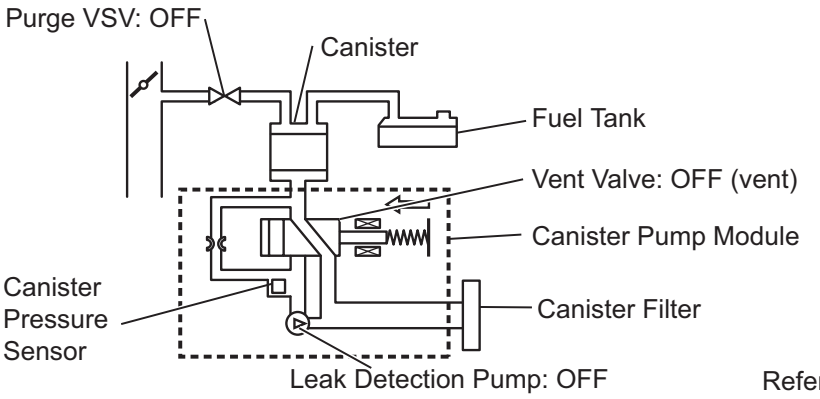

Operation B, E:

0.02 Inch Leak Criterion Measurement

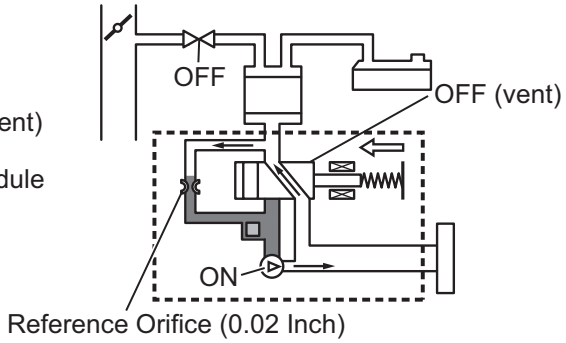

Operation C: EVAP System Pressure Measurement

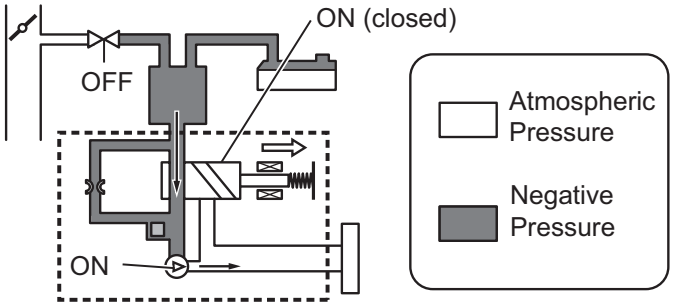

Operation D: Purge VSV Monitor

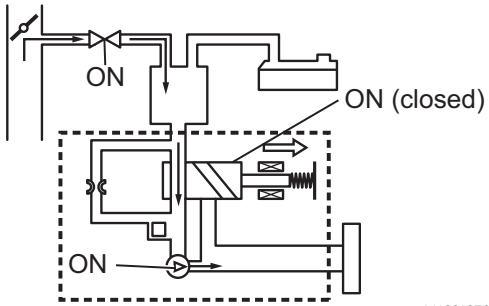

Y

A112612E02

ES

1. P2419: Vent valve stuck closed
   In operation B, the leak detection pump creates negative pressure (a vacuum) through the reference orifice. The EVAP (Evaporative Emission) system pressure is then measured by the ECM, using the canister pressure sensor, to determine the 0.02 inch leak criterion. If the pressure exceeds -1.06 kPa (-7.95 mmHg)* 4 seconds after the leak detection pump is turned ON, the ECM interprets this as the vent valve being stuck closed.
   The ECM illuminates the MIL and sets the DTC (2 trip detection logic).
   *: The threshold varies according to the atmospheric pressure measured in operation A. The value described above is based on an atmospheric pressure of 100 kPa (750.1 mmHg): absolute pressure.

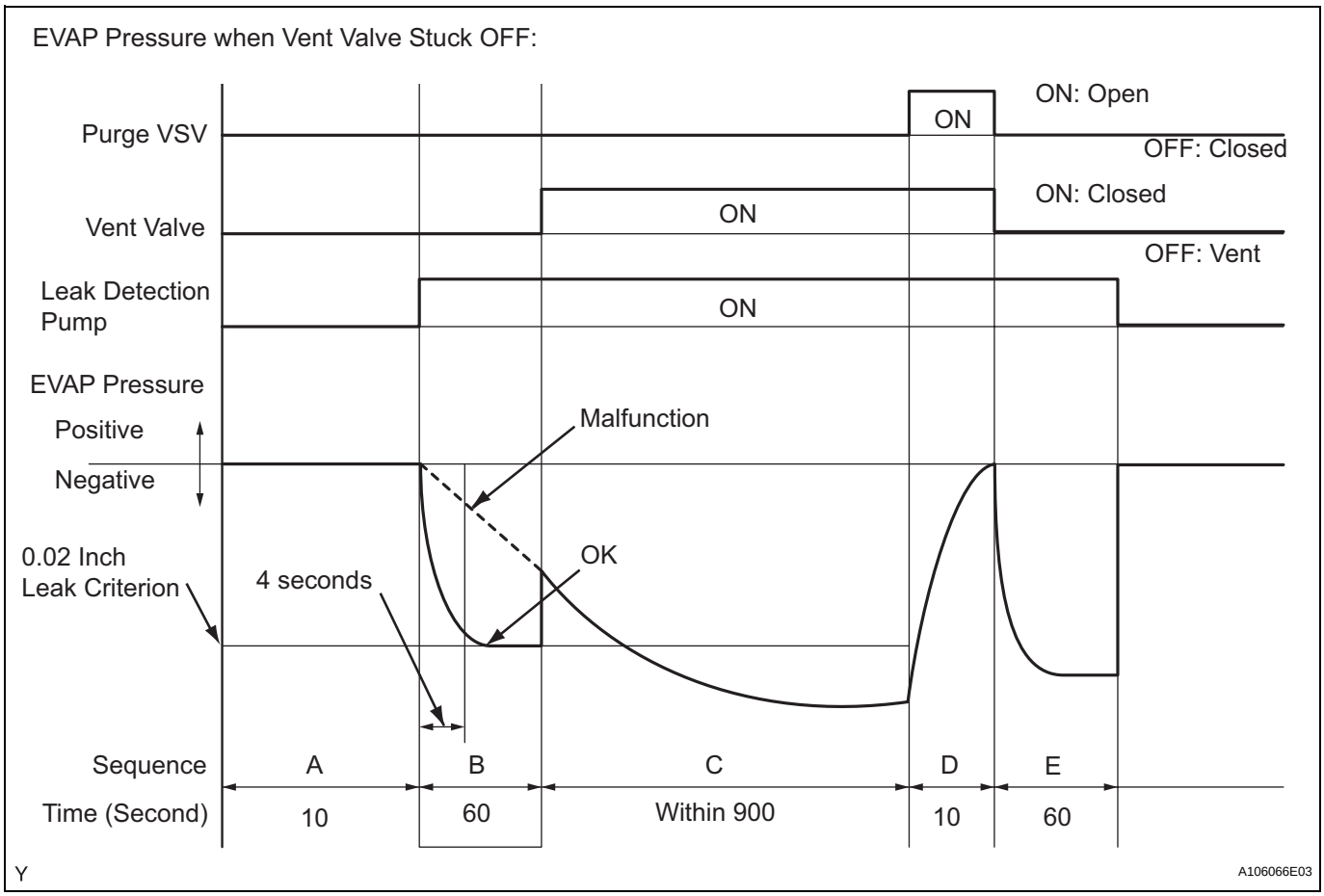

2. P2420: Vent valve stuck open (vent)
In operation C, the vent valve turns ON (closes) and the EVAP (Evaporative Emission) system pressure is then measured by the ECM, using the canister pressure sensor, to conduct an EVAP leak check. If the pressure does not increase when the vent valve is open, the ECM interprets this as the vent valve being stuck open. The ECM illuminates the MIL and sets the DTC.

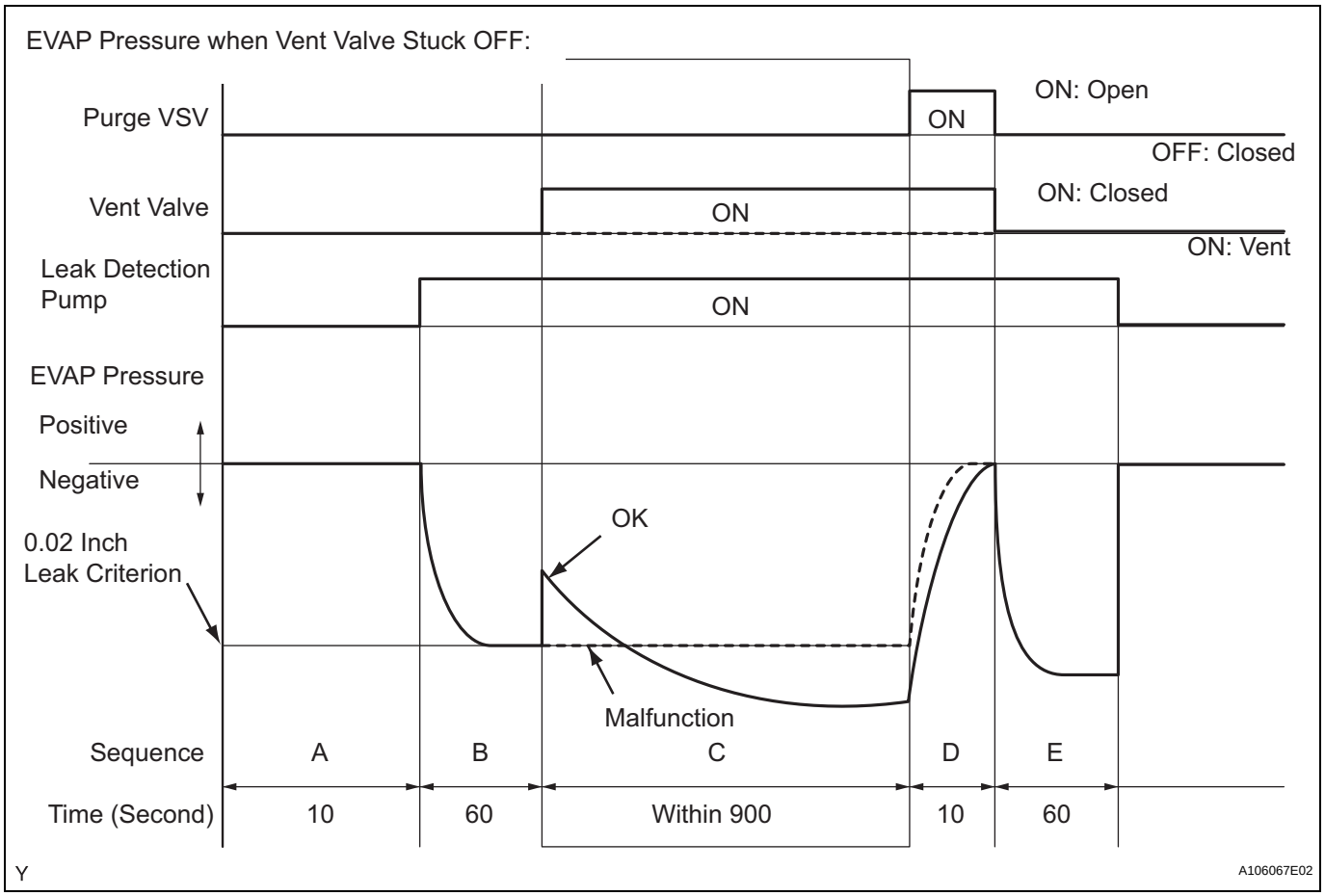

ES

OBD II MONITOR SPECIFICATIONS

MONITOR STRATEGY

Required Sensors/Components	Purge VSV and Canister pump module
Frequency of Operation	Once per driving cycle
Duration	Within 15 minutes (varies with amount of fuel in tank)
MIL Operation	2 driving cycles
Sequence of Operation	None

TYPICAL ENABLING CONDITIONS

Monitor runs whenever following DTCs not present	None
EVAP key-off monitor runs when all of following conditions met	-
Atmospheric pressure	70 to 110 kPa (525 to 825 mmHg)
Battery voltage	10.5 V or more
Vehicle speed	Below 2.5 mph (4 km/h)
Ignition switch	OFF
FTP sensor malfunction (P0450, P0451, P0452 and P0453)	Not detected
Purge VSV	Not operated by scan tool

Vent valve	Not operated by scan tool
Leak detection pump	Not operated by scan tool
Both of following conditions met before IG switch OFF	Conditions 1 and 2
1. Duration that vehicle driven	5 minutes or more
2. Purge flow	Executed
ECT	4.4° to 35°C (40° to 95°F)
IAT	4.4° to 35°C (40° to 95°F)
Time after engine stopped	5 hours

Example of restart time

First time	7 hours
Second time	9 hours and 30 minutes

1. Key-off monitor sequence 1 to 8

1. Atmospheric pressure

Next sequence is run if following condition set	-
Atmospheric pressure change for 10 second	Less than 0.3 kPa (2.25 mmHg) for 1 second

2. First reference pressure

Next sequence is run if all of following conditions set	Condition 1, 2 and 3
1. FTP when 4 seconds after reference pressure measurement	-1 kPa (-7.5 mmHg) or less
2. Reference pressure	-4.85 to -1.057 kPa (-33.38 to -7.93 mmHg)
3. Reference pressure	Saturated within 60 seconds

3. Vent valve stuck closed check

Next sequence is run if following condition set	-
FTP change for 10 seconds after vent valve ON (closed)	0.3 kPa (2.25 mmHg) or more

4. Vacuum introduction and leak

Next sequence is run if both of following conditions set	Condition 1 and 2
1. Vacuum introduction time	12 minutes or less
2. FTP	Saturated within 12 minutes

5. Purge VSV stuck closed check

Next sequence is run if following condition set	-
FTP change for 10 seconds after purge VSV ON (open)	0.3 kPa (2.25 mmHg) or more

6. Second reference pressure measurement

Next sequence is run if all of following conditions set	Condition 1, 2, 3 and 4
1. FTP when 4 seconds after reference pressure measurement	-1 kPa (-7.5 mmHg) or less
2. Reference pressure	-4.85 to -1.057 kPa (-36.4 to -7.92 mmHg)
3. Reference pressure	Saturated within 60 seconds
4. Reference pressure difference between first and second	0.7 kPa (5.25 mmHg) or less

7. Leak check

Next sequence is run if following condition set	-
FTP when vacuum introduction was complete	Second reference pressure or less

8. Atmospheric pressure

Monitor is complete if following	-
Atmospheric pressure difference between sequence 1 and 8	0.3 kPa (2.25 mmHg) or less

TYPICAL MALFUNCTION THRESHOLDS

P2419: Vent valve stuck closed

One of the following conditions set	-

EVAP pressure just after reference pressure measurement start	-1 kPa (-7.5 mmHg) or more
Reference pressure	Less than -4.85 kPa (-36.4 mmHg)
Reference pressure	-1.057 kPa (-7.9 mmHg) or more
0.02 inch leak criterion	Not saturated within 60 seconds
Difference between first reference pressure and second reference pressure	More than 0.7 kPa (5.25 mmHg)

P2420: Vent valve stuck open (vent)

EVAP pressure change in 10 seconds when vent valve turned ON after measurement of 0.02 inch leak criterion	Less than 0.3 kPa (2.25 mmHg)

"Saturated" indicates that the EVAP pressure change is less than 0.286 kPa (2.14 mmHg) in 60 seconds.

MONITOR RESULT

Refer to Checking Monitor Status (See page ES-21) or (See page ES-422).

DTC	P2430	Secondary Air Injection System Air Flow / Pressure Sensor Circuit Bank1
DTC	P2431	Secondary Air Injection System Air Flow / Pressure Sensor Circuit Range / Performance Bank1
DTC	P2432	Secondary Air Injection System Air Flow / Pressure Sensor Circuit Low Bank1
DTC	P2433	Secondary Air Injection System Air Flow / Pressure Sensor Circuit High Bank1

ES

DESCRIPTION

The Secondary Air injection (AIR) system consists of an air pump, the Air Switching Valve (ASV), a pressure sensor, the Air Injection Control Driver (AID) and the ECM. For a short time after cold engine starts, the AIR system pumps secondary air to the exhaust port of the cylinder head to purify the exhaust emissions. The secondary air is supplied by the air pump and is pumped to the exhaust port through the ASV.

The AID drives the ASV and the air pump according to command signals transmitted by the ECM. The pressure sensor detects the pressure in the secondary air passage when the AIR system is ON and OFF, and transmits pressure signal to the ECM.

The AID is not only equipped to drive the pump and valve, but also with a diagnosis function to detect malfunctions in the AIR system circuit.

HINT:

As a large current is required to drive the air pump and ASV, an AID has been added to the previous system.

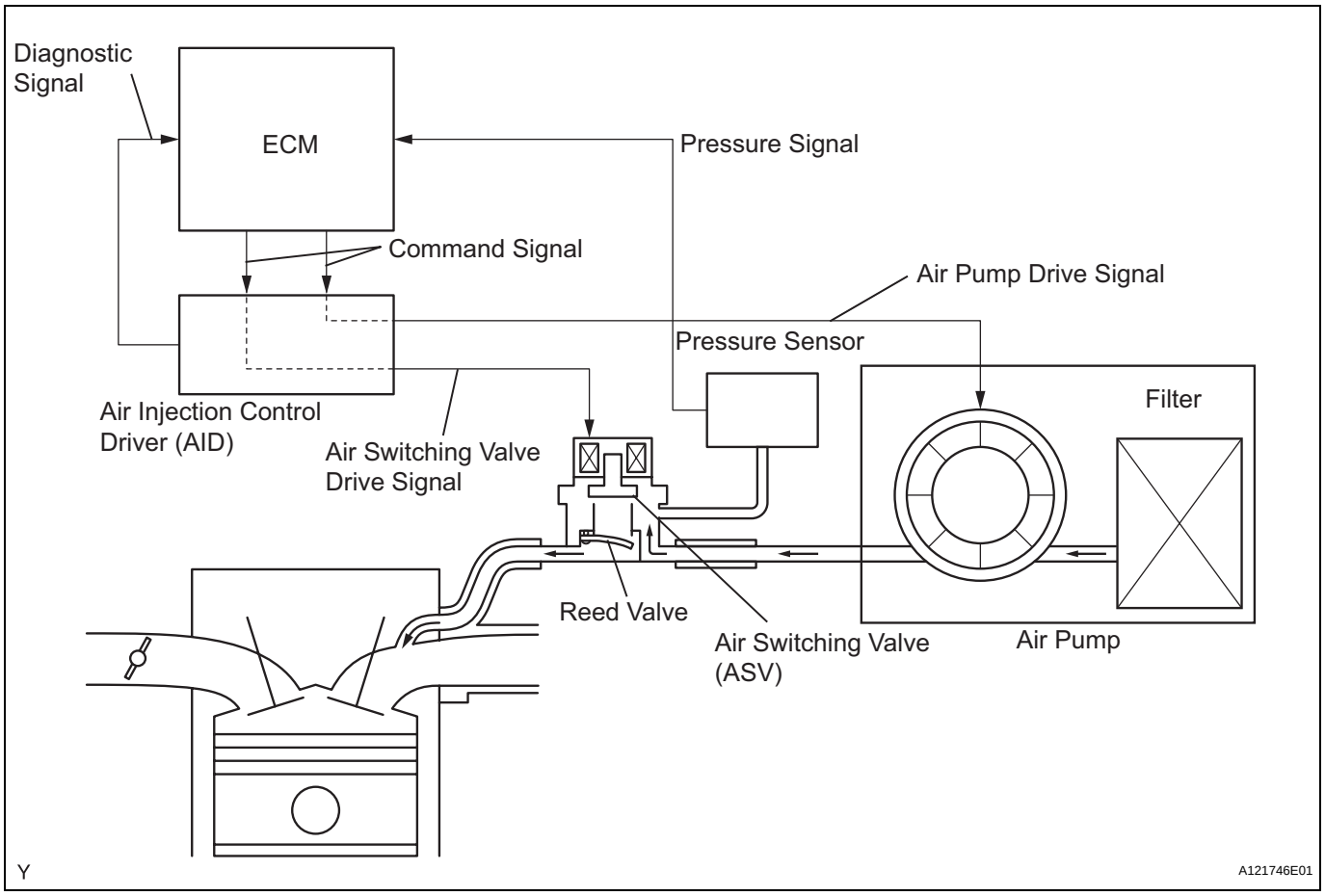

DTC No.	DTC Detection Conditions	Trouble Areas
P2430	While engine running, voltage output of pressure sensor indicates 0.1 V or less, or indicates 4.8V or more (1 trip detection logic	• Pressure sensor • Open or short in pressure sensor circuit • ECM
P2431	Pressure sensor indicates less than 45 kPa (338 mmHg), or more than 135 kPa (1,013 mmHg) (2 trip detection logic)	• Pressure sensor • Open or short in pressure sensor circuit • ECM
P2432	While engine running, voltage output of pressure sensor remains below 0.1 V (1 trip detection logic)	• Pressure sensor • Open or short in pressure sensor circuit • ECM
P2433	While engine running, voltage output of pressure sensor remains above 4.8 V (1 trip detection logic)	• Pressure sensor • Open or short in pressure sensor circuit • ECM

MONITOR DESCRIPTION

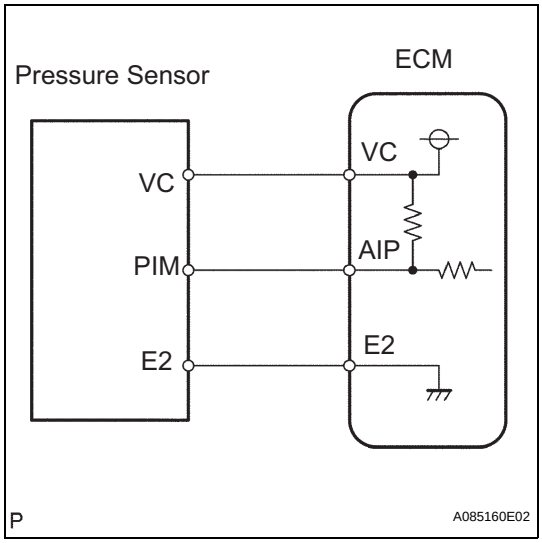

The ECM monitors the pressure in the secondary air passage using the pressure sensor located on the air switching valve in the secondary air injection system.
If there is a defect in the sensor or the sensor circuit, the voltage level deviates from the normal operating range, the ECM interprets this deviation as a malfunction in the pressure sensor or circuit and sets a DTC.

MONITOR STRATEGY

Related DTCs	P2430: Air flow/Pressure sensor circuit range check (Fluctuating) P2431: Air flow/Pressure sensor circuit rationality P2432: Air flow/Pressure sensor circuit range check (Low voltage) P2433: Air flow/Pressure sensor circuit range check (High voltage)
Required Sensors/Components (Main)	Pressure sensor
Required Sensors/Components (Related)	-
Frequency of Operation	Continuous
Duration	P2430, P2432, P2433: 0.5 seconds P2431: 5 seconds
MIL Operation	P2430, P2432 and P2433: Immediate P2431: 2 driving cycles
Sequence of Operation	None

TYPICAL ENABLING CONDITIONS

P2430, P2432 and P2433

Monitor runs whenever following DTCs not present	None
All of following conditions met:	-
Starter	OFF
Battery voltage	8 V or more
Ignition switch	ON

P2431 Case 1:

Monitor runs whenever following DTCs not present	None
All following conditions met for:	3 seconds or more
Secondary air injection system	Operating
Starter	OFF
Battery voltage	8 V or more
Ignition switch	ON

P2431 Case 2:

Monitor runs whenever following DTCs not present	None
All following conditions met for:	3 seconds or more
Secondary air injection system	Not operating
Starter	OFF
Battery voltage	8 V or more
Ignition switch	ON

TYPICAL MALFUNCTION THRESHOLDS

P2430:

Air pressure sensor voltage	Less than 0.1 V, or more than 4.8 V

P2432:

Air pressure sensor voltage	Less than 0.1 V

P2433:

Air pressure sensor voltage	More than 4.8 V

P2431:

Air Pressure	Less than 45 kPa (338 mmHg), or more than 135 kPa (1,013 mmHg)

COMPONENT OPERATING RANGE

Air pressure sensor voltage	Between 0.1 V and 4.8 V

WIRING DIAGRAM

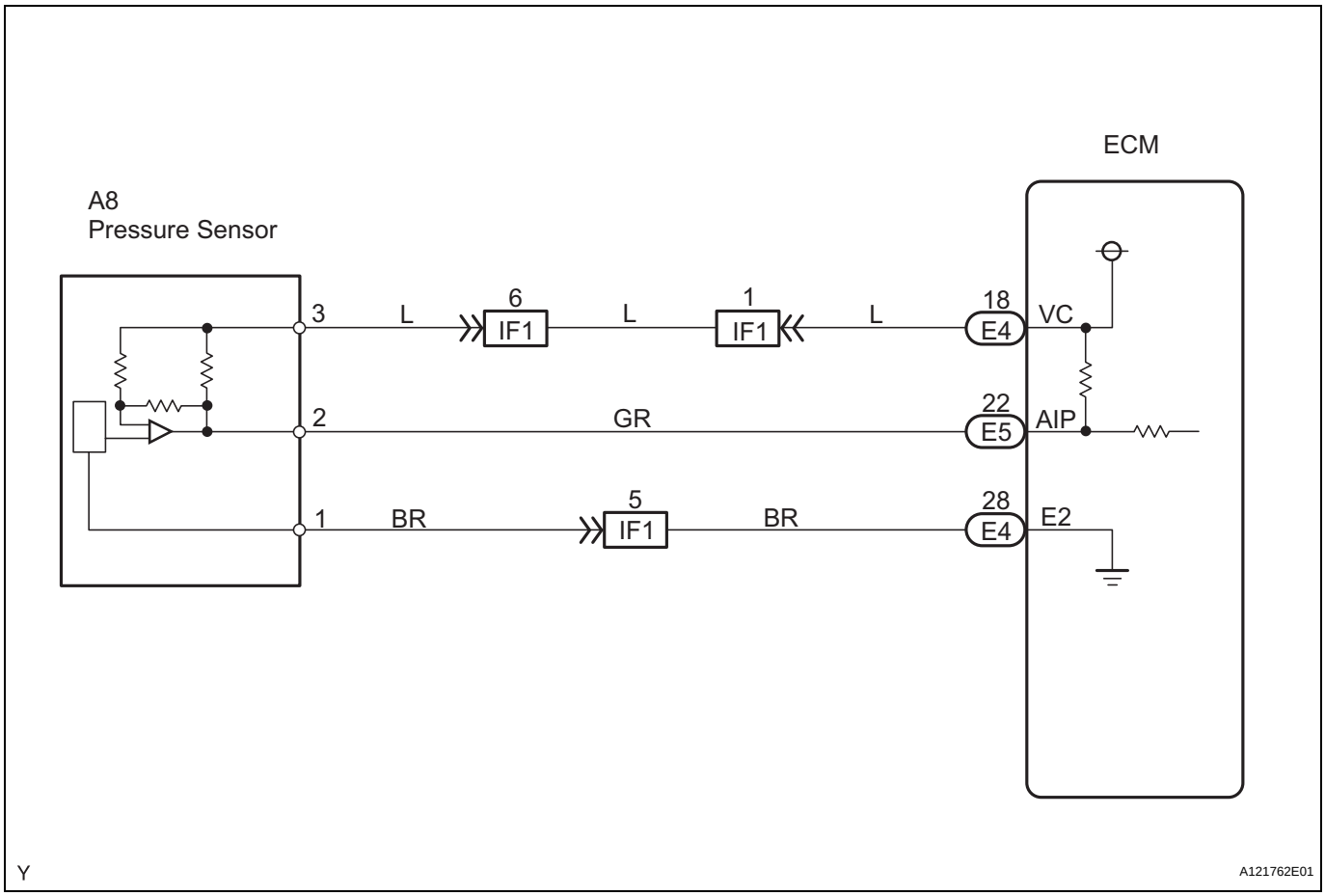

HINT:
Read freeze frame data using an intelligent tester. Freeze frame data record the engine condition when malfunctions are detected. When troubleshooting, freeze frame data can help determine if the vehicle was moving or stationary, if the engine was warmed up or not, if the air-fuel ratio was lean or rich, and other data, from the time the malfunction occurred.

1 CHECK HARNESS AND CONNECTOR (PRESSURE SENSOR - ECM)

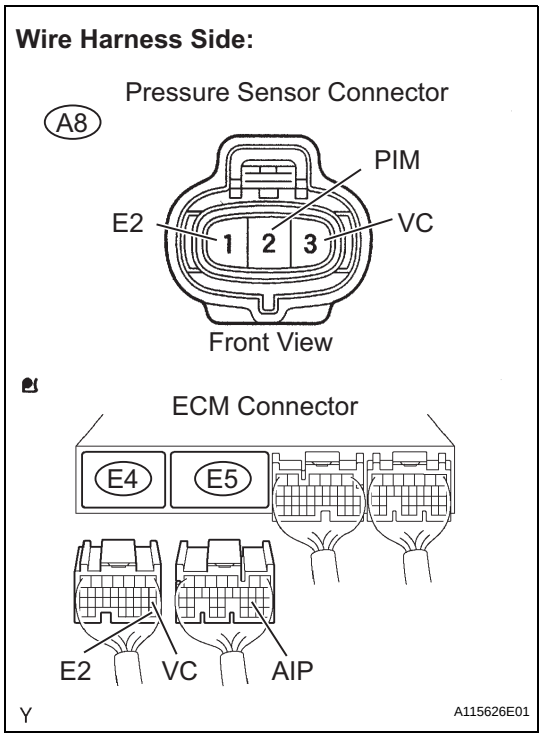

(a) Disconnect the A8 pressure sensor connector.
(b) Disconnect the E4 and E5 ECM connectors.
(c) Check the resistance.

Standard Resistance (Check for open)

Tester Connections	Specified Conditions
Pressure sensor (A8-1) - E2 (E4-28)	Below 1 Ω
Pressure sensor (A8-2) - AIP (E5-22)	Below 1 Ω
Pressure sensor (A8-3) - VC (E4-18)	Below 1 Ω

Standard Resistance (Check for short)

Tester Connections	Specified Conditions
Pressure sensor (A8-2) or AIP (E5-22) - Body ground	10 kΩ or higher
Pressure sensor (A8-3) or VC (E4-18) - Body ground	10 kΩ or higher

(d) Reconnect the pressure sensor connector.
(e) Reconnect the ECM connectors.

NG → **REPAIR OR REPLACE HARNESS OR CONNECTOR**

OK

2 INSPECT ECM (AIP VOLTAGE)

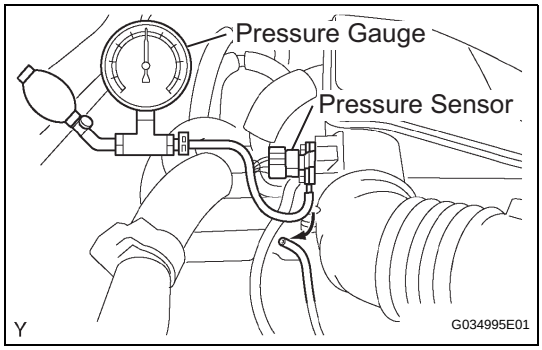

(a) Connect a pressure gauge to the air pressure sensor as shown in the illustration.
(b) Connect an intelligent tester to the DLC3.
(c) Turn the ignition switch to ON and turn the tester ON.
(d) Select the following menu items: DIAGNOSIS / ENHANCED OBD II / DATA LIST / AIR PMP PRS(A).
(e) Check that the pressure displayed on the tester fluctuates when applying the pressure to the pressure sensor with the pressure gauge.
HINT:
The tester displays the air pump pressure (AIR PMP PRS(A)) as absolute pressure.

NG → **REPLACE PRESSURE SENSOR (TURBO PRESSURE SENSOR)**

OK

REPLACE ECM

DTC	P2440	Secondary Air Injection System Switching Valve Stuck Open Bank1

DTC	P2441	Secondary Air Injection System Switching Valve Stuck Close Bank1

DESCRIPTION

Refer to DTC P0412 (See page ES-189).

DTC No.	DTC Detection Conditions	Trouble Areas
P2440	Pressure sensor detects pulsation of exhaust gas despite ECM commanding Air Switching Valve (ASV) to close, while engine running (2 trip detection logic)	• ASV • Open or short in ASV circuit • Pressure sensor • Pressure sensor circuit • Air Injection Control Driver (AID) • ECM
P2441	Pressure sensor detects no pulsation of exhaust gas despite ECM commanding Air Switching Valve (ASV) to open, while engine running (2 trip detection logic)	• ASV • Open or short in ASV circuit • Vacuum hose (ASV - pressure sensor) • Air injection hose • Pressure sensor • Pressure sensor circuit • Air Injection Control Driver (AID) • ECM

HINT:
Air switching valve normal operation:
When the Air Switching Valve (ASV) is open, exhaust gas pulsation occurs in the secondary air passage.
When the ASV is closed, exhaust gas pulsation does not occur in the secondary air passage.

MONITOR DESCRIPTION

The ECM monitors the pressure in the secondary air passage using the pressure sensor connected to the ASV of the Secondary Air Injection (AIR) system.
If either of the following conditions occurs, the ECM interprets it as a malfunction of the secondary AIR system, and illuminates the MIL and sets a DTC:

- Exhaust gas pulsation is detected by the pressure sensor despite the ECM commanding the ASV to close.
- Exhaust gas pulsation is not detected by the pressure sensor despite the ECM commanding the ASV to open.

MONITOR STRATEGY

Related DTCs	P2440: Air control valve stuck open P2441: Air control valve stuck closed
Required Sensors/Components (Main)	Pressure sensor
Required Sensors/Components (Related)	-
Frequency of Operation	Once per drive cycle
Duration	7 seconds
MIL Operation	2 driving cycles
Sequence of Operation	None

TYPICAL ENABLING CONDITIONS

All:

Monitor runs whenever following DTCs not present	• P0010 - P0022: VVT system • P0031 - P0052: Front A/F sensor heater • P0100 - P0103: MAF sensor • P0110 - P0113: IAT sensor • P0115 - P0118: ECT sensor • P0120 - P2125: TP sensor • P0125: Closed loop • P0171 - P0175: Fuel trim • P0300 - P0308: Misfire • P0325 - P0333: Knock sensor • P0335: CKP sensor • P0340 - P0346: VVT sensor • P0351 - P0358: Igniter • P0441 - P2420: EVAP system • P0500: VSS • P1340: CMP sensor • P2195 - P2A03: A/F sensor • P2430 - P2433: AIR pressure sensor
Battery voltage	11 V or more
Atmospheric pressure	45 kPa (337.5 mmHg) or more

While secondary air injection ON:

Time after secondary injection operation begins	6 seconds or more
Secondary air injection pump	ON
Secondary air injection switching valve	ON
Engine speed	Less than 3,750 rpm
Delay time after engine started	6 seconds or more
Pressure sensor malfunction	Not detected

While secondary air injection OFF:

Secondary air injection pump	OFF
Engine speed	Less than 3,750 rpm
Secondary air injection system monitor during secondary air injection ON	Completed
Pressure sensor malfunction	Not detected

TYPICAL MALFUNCTION THRESHOLDS

Condition 1:

AIR pressure during AIR ON	2.5 kPa or more and pulse is generated

Condition 2:

AIR pressure during AIR ON	Less than 2.5 kPa and pulse is generated

Condition 3:

AIR pressure during AIR ON	2.5 kPa or more and pulse is not generated

Condition 4:

AIR pressure during AIR ON	Less than 2.5 kPa and pulse is not generated

Condition 5:

AIR pressure during AIR OFF	2.5 kPa or more and pulse is generated

Condition 6:

AIR pressure during AIR OFF	Less than 2.5 kPa and pulse is generated

Condition 7:

AIR pressure during AIR OFF	2.5 kPa or more and pulse is not generated

Condition 8:

AIR pressure during AIR OFF	Less than 2.5 kPa and pulse is not generated

P2440: ASV stuck open

Any of following conditions met:	(a), (b) or (c)
(a) Conditions 1 and 6	Met
(b) Conditions 1 and 5	Met
(c) Conditions 2 and 6	Met

P2441: ASV stuck closed

Any of following conditions met:	(a), (b) or (c)
(a) Conditions 3 and 7	Met
(b) Conditions 3 and 8	Met
(c) Conditions 4 and 8	Met

ES

MONITOR RESULT

Refer to Checking Monitor Status (See page ES-21).

WIRING DIAGRAM

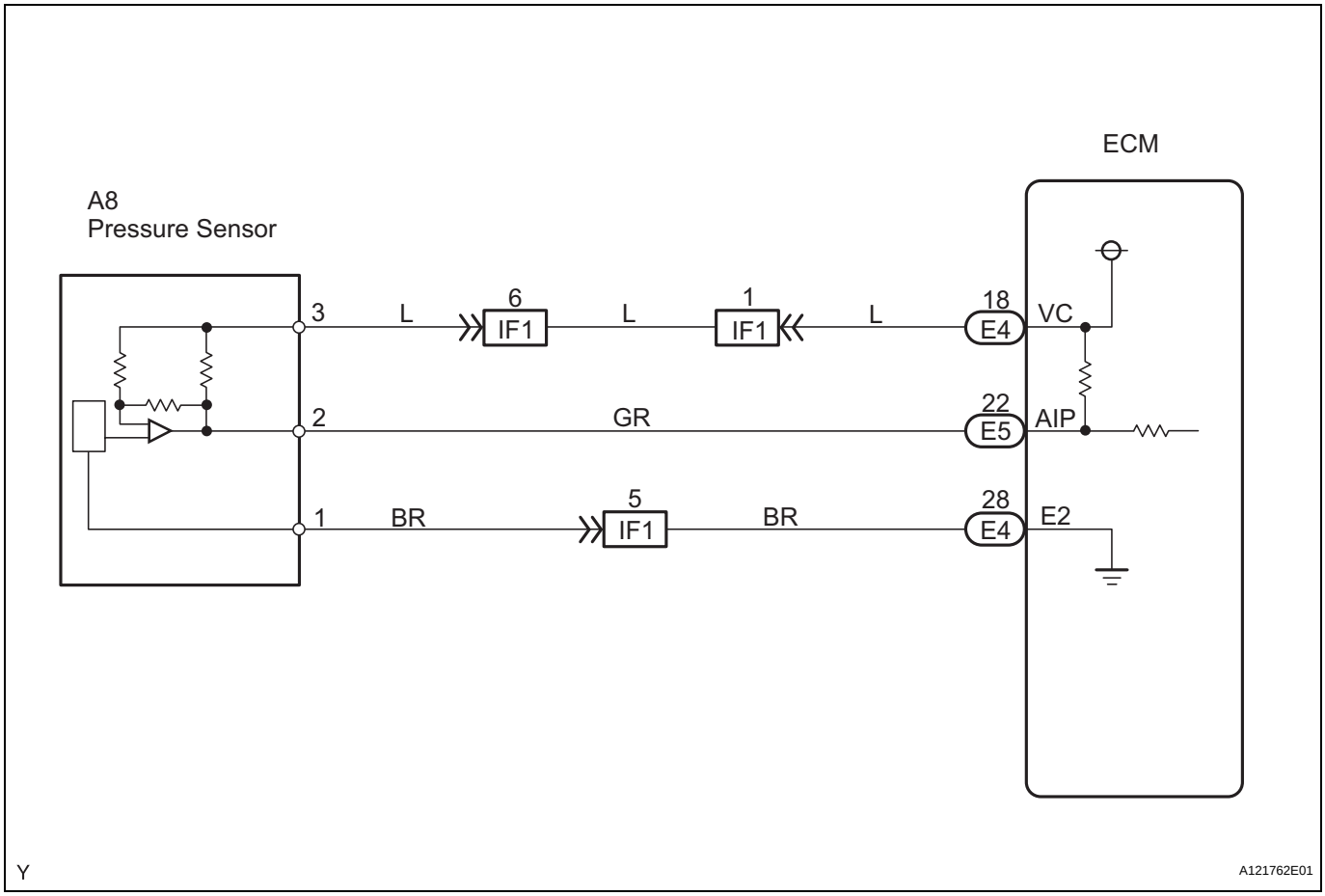

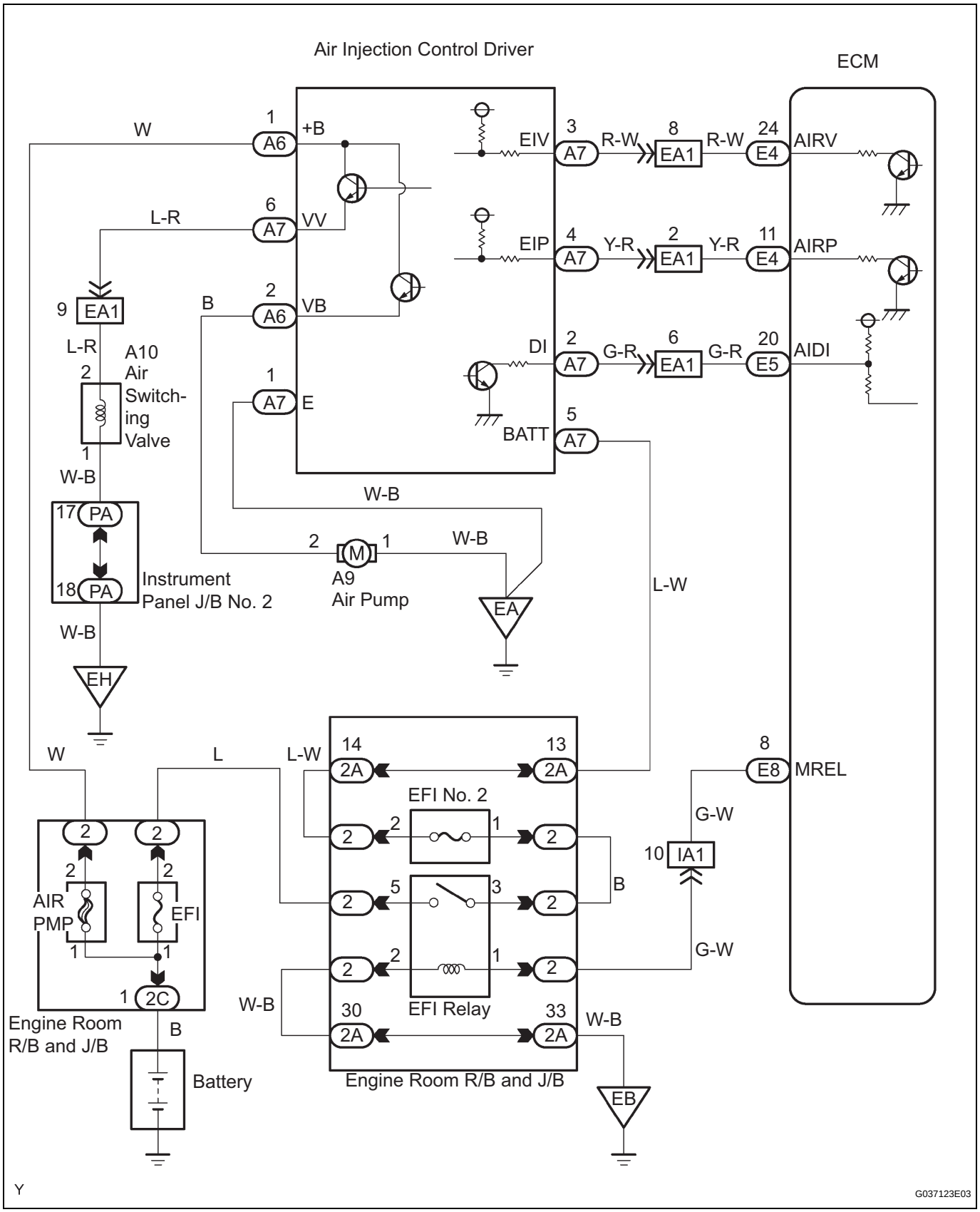

HINT:
Determination by ECM monitoring:

The ECM locates malfunctions in the Secondary Air Injection (AIR) system by detecting the pressure in the AIR passage between the air pump and Air Switching Valve (ASV) and sets a DTC. Soon after cold engine starts, the monitor runs for a short time while the AIR system is both ON and OFF. The ECM detects both the pressure and the exhaust pulsation and compares them.
The following 4 patterns are AIR system pressure conditions in the AIR system passage.

Pressure condition in Secondary Air Injection System Case 1:

Air Pump	ON
Air Switching Valve	Open
Pressure	2.5 kPa or more
Pulsation Detection	Exhaust gas pulsation detected

Pressure condition in Secondary Air Injection System Case 2:

Air Pump	OFF
Air Switching Valve	Open
Pressure	Less than 2.5 kPa
Pulsation Detection	Exhaust gas pulsation detected

ES

Pressure condition in Secondary Air Injection System Case 3:

Air Pump	ON
Air Switching Valve	Closed
Pressure	2.5 kPa or more
Pulsation Detection	Slight pulsation detected

Pressure condition in Secondary Air Injection System Case 4:

Air Pump	OFF
Air Switching Valve	Open
Pressure	Less than 2.5 kPa
Pulsation Detection	Exhaust gas pulsation detected

If the detected pressure is high, the air pump is assumed to be ON and if it alternates sharply*, the ASV is assumed to be open. The ECM locates malfunctions from the combination of pressures detected when the AIR system is ON and OFF.
*: The exhaust pulsation value is calculated in the ECM. If the calculated value exceeds a certain level, the ECM determines that the exhaust pulsation is in the AIR system.
HINT:

- In case 3, as the pressure sensor detects a slight pump operation pulsation, the detected value is not constant. Since the pump outlet is blocked by closing the ASV, the average pressure is higher than in case 1 (approximately 20 to 30 kPa).
- In case 1, the average pressure is approximately 9 to 11 kPa. The value of 2.5 kPa indicated in the table above is a threshold for detecting pump malfunctions.

Detected Conditions while AIR operating: Air pump ON, ASV Open	Detected Conditions while AIR not operating: Air pump OFF, ASV Closed	ECM Determination	DTCs Output
Case 1	Case 4	Normal	-
Case 1	Case 2	ASV stuck open	P2440
Case 1	Case 3	Air pump stuck ON	P2444
Case 2	Case 4	Air pump stuck OFF	P2445
Case 3	Case 4	ASV stuck closed	P2441
Case 1	Case 1	ASV stuck open and Air pump stuck ON	P2440 and P2444
Case 2	Case 2	ASV stuck open and Air pump stuck OFF	P2440 and P2445
Case 3	Case 3	ASV stuck closed and Air pump stuck ON	P2441 and P2444

Detected Conditions while AIR operating: Air pump ON, ASV Open	Detected Conditions while AIR not operating: Air pump OFF, ASV Closed	ECM Determination	DTCs Output
Case 4	Case 4	ASV stuck closed and Air pump stuck OFF	P2441 and P2445

HINT:
- If the vacuum hose between the ASV and the pressure sensor is not connected correctly, case 4 may occur.
- By using an intelligent tester to perform the AIR INJ CHECK operation in the SYSTEM CHECK, the air-fuel ratio and the pressure in the secondary air injection system passage can be checked while the secondary air injection system is operating. This helps technicians to troubleshoot the system when it malfunctions. Furthermore, PENDING CODES also can be checked by performing SYSTEM CHECK / AUTOMATIC OPERATION after the repair.
- Read freeze frame data using an intelligent tester. Freeze frame data record the engine condition when malfunctions are detected. When troubleshooting, freeze frame data can help determine if the vehicle was moving or stationary, if the engine was warmed up or not, if the air-fuel ratio was lean or rich, and other data, from the time the malfunction occurred.

ES

SYSTEM CHECK:
The pressure in the secondary air passage can be checked using an intelligent tester.
(a) Start the engine and warm it up.

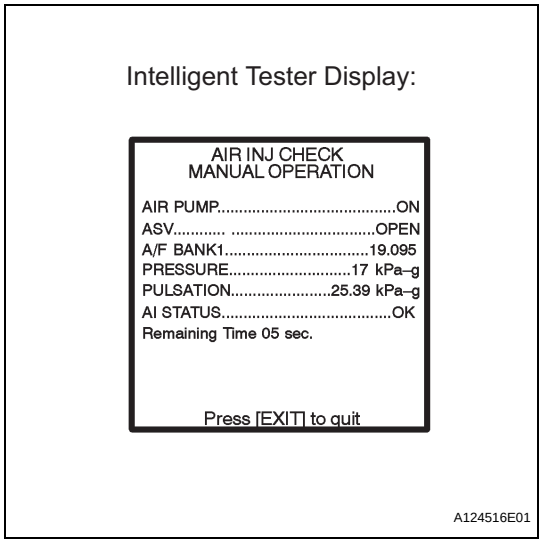

(b) Turn the ignition switch to OFF.
(c) Connect an intelligent tester to the DLC3.
(d) Turn the ignition switch to ON and turn the tester ON.
(e) Select the following menu items:
DIAGNOSIS / ENHANCED OBD II / SYSTEM CHECK / AIR INJ CHECK / MANUAL OPERATION / AP: ON, ASV: OPEN and AP: OFF, ASV CLOSE.
HINT:
When MANUAL OPERATION is selected, the tester initialization (atmospheric pressure measurement) is performed automatically. The initialization takes 10 seconds. After the initialization, AP and ASV operation can be selected.
(f) Start the engine.
(g) Perform the AIR system intrusive operation while the engine is idling.
(h) Check that the air pump (AIR PUMP), ASV and pressure in the AIR system passage (PRESSURE) displayed on the tester, indicate the conditions shown in the table below.

Standard

Intelligent Tester Operations	AIR PUMP	ASV	PRESSURE *1	PULSATION *2
AP: ON, ASV: OPEN	ON	OPEN	2.5 kPa or more	11.25 kPa or more

Intelligent Tester Operations	AIR PUMP	ASV	PRESSURE *1	PULSATION *2
AP: OFF, ASV: CLOSE	OFF	CLOSE	Less than 2.5 kPa	Less than 11.25 kPa

*1:
Average pumping pressure (gauge pressure). The pressure should be 2.5 kPa or more when the AIR system operates.

*2:
The cumulative exhaust pulsation calculated by the ECM. If the calculated value exceeds a certain level, the ECM determines that the exhaust pulsation is in the AIR system.

(i) Turn the ignition switch to OFF.

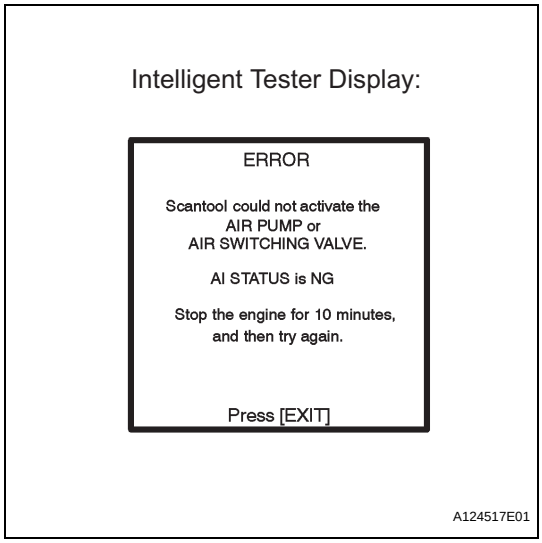

NOTICE:

- **This AIR INJECTION CHECK only allows technicians to operate the AIR system for a maximum of 5 seconds.**
  Furthermore, the check can only be performed up to 4 times per trip. If the test is repeated, intervals of at least 30 seconds are required between checks.
  While AIR system operation using the intelligent tester is prohibited, the tester display indicates the prohibition (WAIT or ERROR).
  If an ERROR as shown in the illustration is displayed on the tester during the test, stop the engine for 10 minutes, and then try again.
- **Performing the AIR INJ CHECK repetitively may cause damage to the AIR system. If necessary, leave an interval of several minutes between SYSTEM CHECK operations to prevent the system from overheating.**
- **When performing the AIR INJ CHECK operation after the battery cable has been reconnected, wait for 7 minutes with the ignition switch turned to ON or the engine running.**
- **Turn the ignition switch to OFF when the AIR INJ CHECK operation finishes.**

1	**CHECK ANY OTHER DTCS OUTPUT (IN ADDITION TO SECONDARY AIR INJECTION SYSTEM DTCS)**

(a) Connect an intelligent tester to the DLC3.
(b) Turn the ignition switch to ON and turn the tester ON.
(c) Select the following menu items: DIAGNOSIS / ENHANCED OBD II / DTC INFO / CURRENT CODES.
(d) Read DTCs.

Result

Display (DTC Output)	Proceed To
P2440 and/or P2441	A
P2440 and/or P2441, and P0412	B
P2440 and/or P2441, and other DTCs (except P0412)	C

If any DTCs other than P2440 and/or P2441 are output, troubleshoot those DTCs first.

B → **GO TO AIR SWITCHING VALVE INSPECTION PROCEDURE**

C → **GO TO DTC CHART**

A

ES

2 PERFORM ACTIVE TEST USING INTELLIGENT TESTER

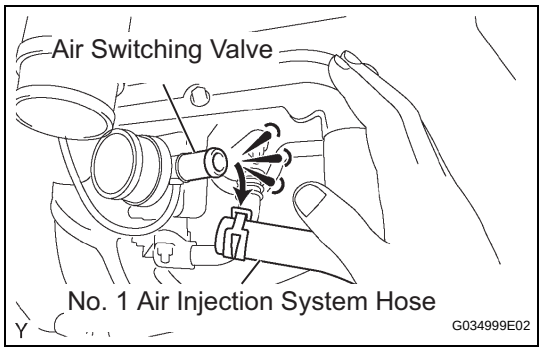

(a) Visual check
  (1) Start the engine and warm it up.
  (2) Turn the ignition switch to OFF.
  (3) Disconnect the No. 1 air injection system hose.
  (4) Connect the intelligent tester to the DLC3.
  (5) Turn the ignition switch to ON and turn the tester ON.
  (6) Select the following menu items:
  DIAGNOSIS / ENHANCED OBD II / SYSTEM CHECK / AIR INJ CHECK / MANUAL OPERATION / AP: ON, ASV: OPEN.
  HINT:
  When MANUAL OPERATION is selected, the tester initialization (atmospheric pressure measurement) is performed automatically. The initialization takes 10 seconds. After the initialization, AP and ASV operation can be selected.
  (7) Start the engine.
  (8) Perform the AIR system intrusive operation while the engine is idling.
  (9) Place your hand near the air switching valve port and check that the exhaust gas pressure pulsates when the ASV is turned ON.
  CAUTION:
  To avoid the danger of being burned by the exhaust gas, bring your hand close to the valve port slowly.
  (10) Select the following menu items: DIAGNOSIS / ENHANCED OBD II / SYSTEM CHECK / AIR INJ CHECK / MANUAL OPERATION / AP: ON, ASV: CLOSE.
  (11) Check that the exhaust gas does not pulsate when the ASV is turned OFF.

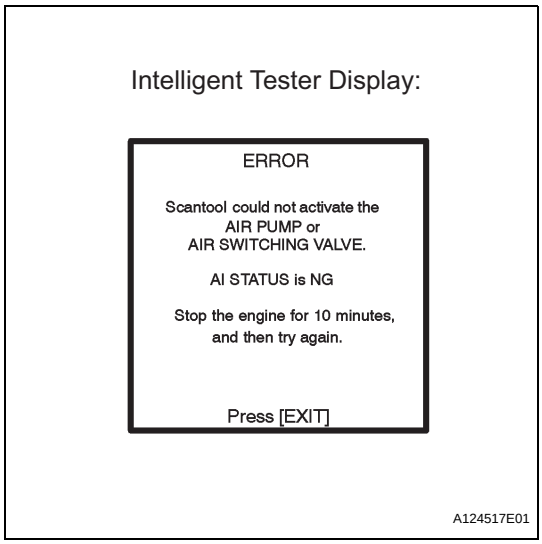

(12) Turn the ignition switch to OFF.

NOTICE:

- **This AIR INJECTION CHECK only allows technicians to operate the AIR system for a maximum of 5 seconds. Furthermore, the check can only be performed up to 4 times per trip. If the test is repeated, intervals of at least 30 seconds are required between checks.**
  While AIR system operation using the intelligent tester is prohibited, the tester display indicates the prohibition (WAIT or ERROR).
  If an ERROR as shown in the illustration is displayed on the tester during the test, stop the engine for 10 minutes, and then try again.
- **Performing the AIR INJ CHECK repetitively may cause damage to the AIR system. If necessary, leave an interval of several minutes between SYSTEM CHECK operations to prevent the system from overheating.**
- **When performing the AIR INJ CHECK operation after the battery cable has been reconnected, wait for 7 minutes with the ignition switch turned to ON or the engine running.**
- **Turn the ignition switch to OFF when the AIR INJ CHECK operation finishes.**

Standard

Air Pump Operations	ASV Operations	Exhaust Gas Pulsation
ON	OFF	Not detected
ON	ON	Detected

(13) Reconnect the No. 1 air injection system hose.
(14) Reconnect the air cleaner hose.

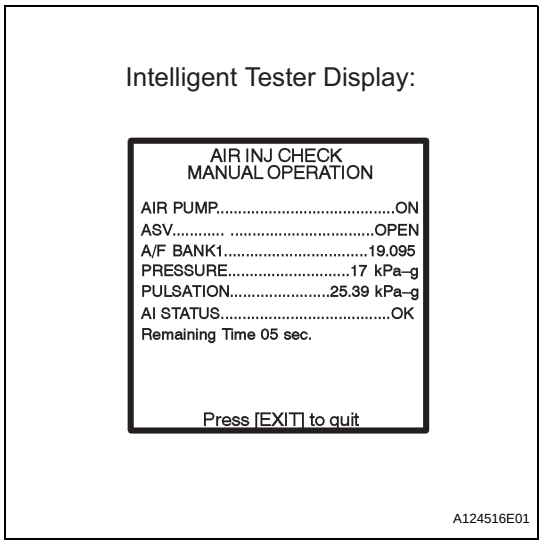

(b) Other inspection method:
The ASV operation can be confirmed by checking the cumulative pressure pulsation* provided in the SYSTEM CHECK.
Perform SYSTEM CHECK operation under MANUAL OPERATION.

*: The exhaust pulsation value is calculated in the ECM. If the calculated value exceeds a certain level, the ECM determines that the exhaust pulsation is in the AIR system.

(1) Start the engine and warm it up.
(2) Turn the ignition switch to OFF.
(3) Connect the intelligent tester to the DLC3.
(4) Turn the ignition switch to ON and turn the tester ON.
(5) Select the following menu items: DIAGNOSIS / ENHANCED OBD II / SYSTEM CHECK / AIR INJ CHECK / MANUAL OPERATION / AP: ON, ASV OPEN and AP: OFF, ASV: CLOSE.

(6) Start the engine after the tester initialization is finished.
(7) Perform the AIR system intrusive operation while the engine is idling.
(8) Check that the air-fuel ratio and pressure in the secondary air injection system passage (PULSATION) displayed on the tester, indicate the conditions shown in the table below.
(9) Turn the ignition switch to OFF.

Result

AIR System Operations	Pulsation Conditions (ECM Calculation)	Air-Fuel Ratio (Reference)
AP: ON, ASV: OPEN	11.25 kPa or more	18 or more
AP: OFF, ASV: CLOSE	Less than 11.25 kPa	Approximately 14.5 (around stoichiometric air-fuel ratio)

ES

REFERENCE:
If the air pump operation is confirmed as normal (See page ES-368), the air-fuel ratio detected in front of three-way catalytic converter changes in response to the secondary air pumped into the exhaust port when the air pump operates.

OK → **Go to step 9**

NG

3 INSPECT NO.4 INTAKE PIPE (BLOCKAGES AND LEAKAGES)

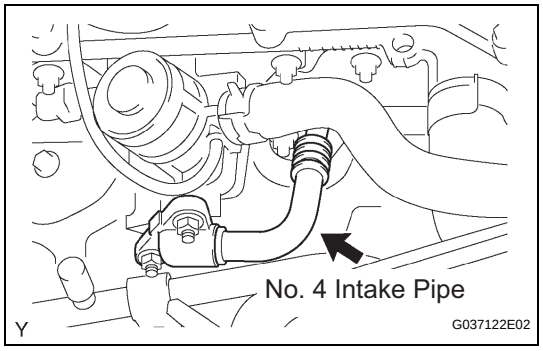

(a) Check that the No. 4 intake pipe is securely connected to both the exhaust manifold and the ASV.
(b) Inspect the No. 4 intake pipe for blockages and damage.
OK:
No blockages and damage on No. 4 intake pipe.

NG → **REPLACE NO.4 INTAKE PIPE**

OK

4 INSPECT AIR SWITCHING VALVE ASSEMBLY (AIR SWITCHING VALVE OPERATION)

Component Side:

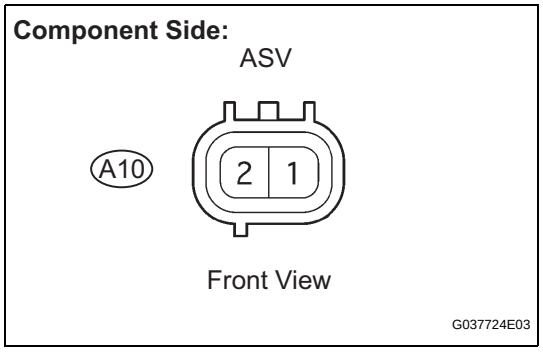

(a) Check the resistance.
(1) Using an ohmmeter, measure the resistance between the terminals.
Standard Resistance

Tester Connections	Specified Conditions
A10-1 - A10-2	3 to 10 Ω at 20°C (68°F)

If the result is not as specified, replace the ASV.

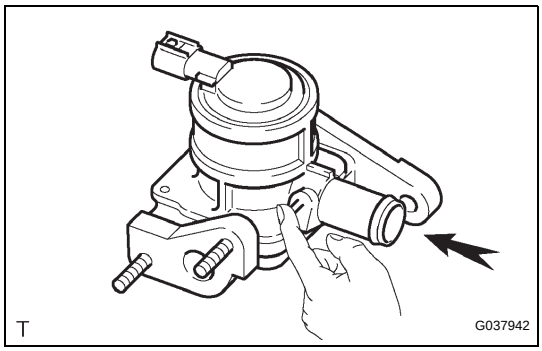

(b) Check the operation.
(1) Check that air does not flow from the ports.

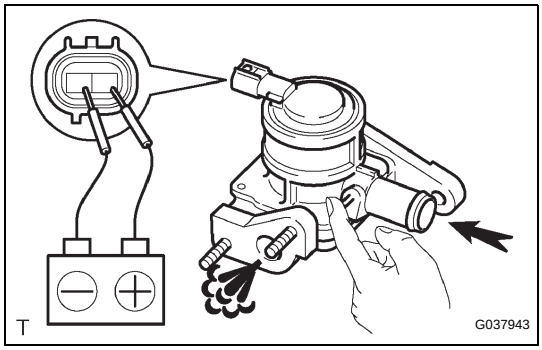

(2) Apply the battery positive voltage across the terminals.
(3) Check that air flows from the ports.
If the operation is not as specified, replace the ASV.
OK:
ASV operates correctly

NG → **REPLACE AIR SWITCHING VALVE ASSEMBLY**

OK

5	INSPECT AIR INJECTION CONTROL DRIVER (POWER SOURCE OF AIR INJECTION CONTROL DRIVER)

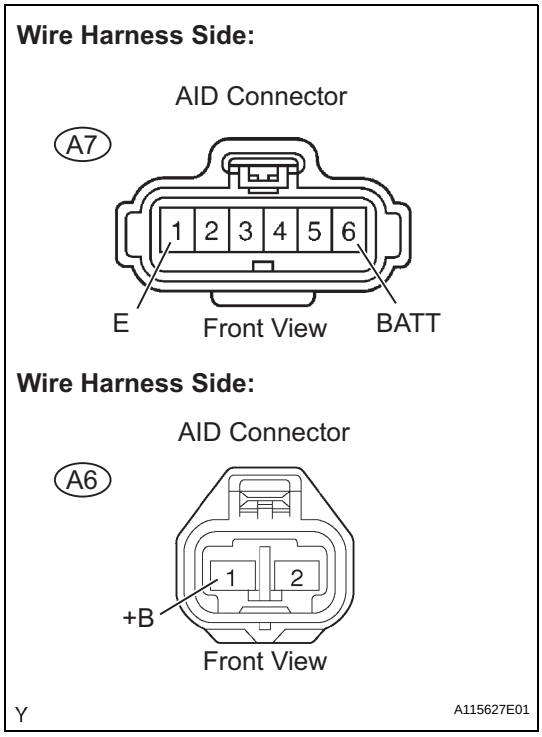

(a) Disconnect the A6 and A7 AID connectors.
(b) Turn the ignition switch to ON.
(c) Measure the voltage between the terminals of the AID connector.
Standard Voltage

Tester Connections	Specified Conditions
BATT (A7-5) - Body ground	9 to 14 V (near battery voltage)
+B (A6-1) - Body ground	9 to 14 V (near battery voltage)

(d) Check the resistance.
Standard Resistance (Check for open)

Tester Connections	Specified Conditions
E (A7-1) - Body ground	Below 1 Ω

(e) Reconnect the AID connectors.

NG → **REPAIR OR REPLACE AIR INJECTION CONTROL DRIVER POWER SOURCE CIRCUIT**

OK

6	PERFORM ACTIVE TEST USING INTELLIGENT TESTER

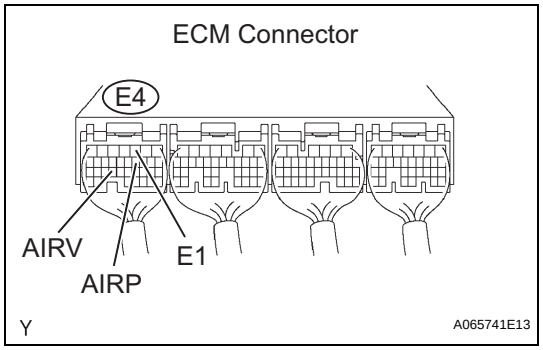

(a) Start the engine and warm it up.
(b) Turn the ignition switch to OFF.
(c) Connect the intelligent tester to the DLC3.
(d) Turn the ignition switch to ON and turn the tester ON.
(e) Select the following menu items: DIAGNOSIS / ENHANCED OBD II / SYSTEM CHECK / AIR INJ CHECK / MANUAL OPERATION / AP: ON, ASV: OPEN and AP: OFF, ASV: CLOSE.
(f) Start the engine after the tester initialization is finished.
(g) Operate the AIR system using the SYSTEM CHECK function and measure the voltage between the terminals of the ECM connector.
(h) Turn the ignition switch to OFF.

NOTICE:

- **Do not perform the SYSTEM CHECK operation repetitively. It may cause damage to the system. If necessary, leave an interval of several minutes between SYSTEM CHECK operations.**
- **When performing the AIR INJ CHECK operation after the battery cable has been reconnected, wait for 7 minutes with the ignition switch turned to ON or the engine running.**
- **Turn the ignition switch to OFF when the AIR INJ CHECK operation finishes.**

Standard Voltage

Intelligent Tester Operations	Voltmeter Connections	Specified Conditions
AP: ON, ASV: OPEN	AIRP (E4-11) - E1 (E4-3)	3.5 to 7.5 V
AP: OFF, ASV: CLOSE	AIRP (E4-11) - E1 (E4-3)	10 V or more
AP: ON, ASV: OPEN	AIRV (E4-24) - E1 (E4-3)	3.5 to 7.5 V
AP: OFF, ASV: CLOSE	AIRV (E4-24) - E1 (E4-3)	10 V or more

NG → Go to step 11

OK

7	REPLACE AIR INJECTION CONTROL DRIVER

NEXT

8	CHECK WHETHER DTC OUTPUT RECURS (DTC P2440 AND/OR P2441)

(a) Start the engine and warm it up.
(b) Turn the ignition switch to OFF.
(c) Connect the intelligent tester to the DLC3.
(d) Turn the ignition switch to ON and turn the tester ON.
(e) Clear DTCs (where set) (see page ES-40).
(f) Select the following menu items:

DIAGNOSIS / ENHANCED OBD II / SYSTEM CHECK / AIR INJ CHECK / AUTOMATIC OPERATION.

(g) Start the engine after the tester initialization is finished.
(h) Perform the SYSTEM CHECK operation by pressing ENTER.
(i) After operating the AIR system, press the ENTER button to confirm the AIR system pending codes.
(j) Check PENDING DTCs.
(k) Turn the ignition switch to OFF.

OK:

No pending DTC output.

NOTICE:

- **When performing the AIR INJ CHECK operation after the battery cable has been reconnected, wait for 7 minutes with the ignition switch turned to ON or the engine running.**
- **Turn the ignition switch to OFF when the AIR INJ CHECK operation finishes.**

ES

NEXT

END

9	INSPECT VACUUM HOSES (AIR SWITCHING VALVE - PRESSURE SENSOR)

OK:

No blockage and no deformation in vacuum hose.

NG → **REPAIR OR REPLACE VACUUM HOSE**

OK

10	INSPECT ECM (AIP VOLTAGE)

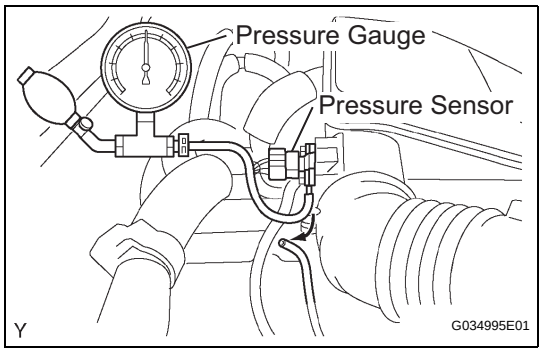

(a) Connect a pressure gauge to the air pressure sensor as shown in the illustration.
(b) Connect the intelligent tester to the DLC3.
(c) Turn the ignition switch to ON and turn the tester ON.
(d) Select the following menu items: DIAGNOSIS / ENHANCED OBD ll / DATA LIST / AIR PMP PRS(A).
(e) Check that the pressure displayed on the tester fluctuates when applying pressure to the pressure sensor with the pressure gauge.

OK:

Pressure fluctuates in response to pressure applied with pressure gauge.

HINT:

The tester displays the air pump pressure (AIR PMP PRS(A)) as absolute pressure.

NG → **REPLACE PRESSURE SENSOR (TURBO PRESSURE SENSOR)**

OK

CHECK FOR INTERMITTENT PROBLEMS

11 **CHECK HARNESS AND CONNECTOR (ECM - AIR INJECTION CONTROL DRIVER)**

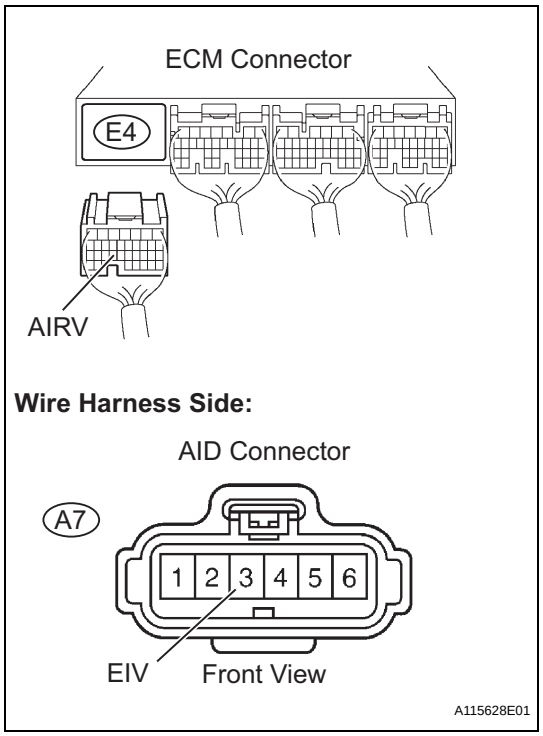

(a) Disconnect the E4 ECM connector.
(b) Disconnect the A7 AID connector.
(c) Check the resistance.
Standard Resistance (Check for open)

Tester Connections	Specified Conditions
AIRV (E4-24) - EIV (A7-3)	Below 1 Ω

(d) Reconnect the ECM and AID connectors.

NG → **REPAIR OR REPLACE HARNESS AND CONNECTOR**

OK

REPLACE ECM

ES

DTC	P2444	Secondary Air Injection System Pump Stuck On Bank1

DTC	P2445	Secondary Air Injection System Pump Stuck Off Bank1

DESCRIPTION

Refer to P2440 (See page ES-354).

DTC No.	DTC Detection Conditions	Trouble Areas
P2444	Secondary air pressure more than 2.5 kPa (19 mmHg) despite ECM commanding air pump to turn off (2 trip detection logic)	• Short in air pump circuit • Open or short in pressure sensor circuit • Pressure sensor • Air Injection Control Driver (AID) • ECM
P2445	Secondary air pressure less than 2.5 kPa (19 mmHg) despite ECM commanding air pump to turn on (2 trip detection logic)	• Air pump • Open in air pump circuit • Air injection system piping • Vacuum hose (pressure sensor - air switching valve) • Pressure sensor • Open or short in pressure sensor circuit • Air Injection Control Driver (AID) • ECM

ES

MONITOR DESCRIPTION

The ECM monitors the pressure in the secondary air passage using the pressure sensor located on the Air Switching Valve (ASV) of the Secondary Air Injection (AIR) system. The sensor measures the pressure in the secondary air passage and transmits a signal to the ECM.
If either of the following conditions occurs, the ECM interprets it as a malfunction of the AIR system, and illuminates the MIL and sets a DTC:

- The pressure indicated by the pressure sensor does not reach threshold levels despite the ECM turning on the air pump.
- The pressure indicated by the pressure sensor exceeds threshold levels despite the ECM turning off the air pump.

MONITOR STRATEGY

Related DTCs	P2444: Air pump stuck ON P2445: Air pump stuck OFF
Required Sensors/Components (Main)	Pressure sensor
Required Sensors/Components (Related)	-
Frequency of Operation	Once per drive cycle
Duration	7 seconds
MIL Operation	2 driving cycles
Sequence of Operation	None

TYPICAL ENABLING CONDITIONS

All:

Monitor runs whenever following DTCs not present	• P0010 - P0022: VVT system • P0031 - P0052: Front A/F sensor heater • P0100 - P0103: MAF sensor • P0110 - P0113: IAT sensor • P0115 - P0118: ECT sensor • P0120 - P2125: TP sensor • P0125: Closed loop • P0171 - P0175: Fuel trim • P0300 - P0308: Misfire • P0325 - P0333: Knock sensor • P0335: CKP sensor • P0340 - P0346: VVT sensor • P0351 - P0358: Igniter • P0441 - P2420: EVAP system • P0500: VSS • P1340: CMP sensor • P2195 - P2A03: A/F sensor • P2430 - P2433: AIR pressure sensor
Battery voltage	11 V or more
Atmospheric pressure	45 kPa (337.5 mmHg) or more

While secondary air injection ON:

Secondary air injection pump	ON
Secondary air injection switching valve	ON
Engine speed	Less than 3,750 rpm
Delay time after engine started	6 seconds or more
Pressure sensor malfunction	Not detected

While secondary air injection OFF:

Secondary air injection pump	OFF
Engine speed	Less than 3,750 rpm
Secondary air injection system monitor during secondary air injection ON	Completed
Pressure sensor malfunction	Not detected

TYPICAL MALFUNCTION THRESHOLDS

Condition 1:

AIR pressure during AIR ON	2.5 kPa or more and pulse is generated

Condition 2:

AIR pressure during AIR ON	Less than 2.5 kPa and pulse is generated

Condition 3:

AIR pressure during AIR ON	2.5 kPa or more and pulse is not generated

Condition 4:

AIR pressure during AIR ON	Less than 2.5 kPa and pulse is not generated

Condition 5:

AIR pressure during AIR OFF	2.5 kPa or more and pulse is generated

Condition 6:

AIR pressure during AIR OFF	Less than 2.5 kPa and pulse is generated

Condition 7:

AIR pressure during AIR OFF	2.5 kPa or more and pulse is not generated

Condition 8:

AIR pressure during AIR OFF	Less than 2.5 kPa and pulse is not generated

P2444: AIR pump stuck ON

Both of following conditions met:	(a) and (b)
(a) Not condition 6	Met
(b) Not condition 8	Met

P2445: AIR pump stuck OFF

Both of following conditions met:	(a) and (b)
(a) Not condition 1	Met
(b) Not condition 3	Met

P2445: AIR insufficient

AIR amount	0 L/min or less

ES

MONITOR RESULT

Refer to Checking Monitor Status (See page ES-21).

WIRING DIAGRAM

Refer to DTC P2440 (See page ES-356).

HINT:
Determination by ECM monitoring:
The ECM locates malfunctions in the secondary Air Injection (AIR) system by detecting the pressure in the AIR passage between the air pump and Air Switching Valve (ASV) and sets a DTC. Soon after cold engine starts, the monitor runs for a short time while the AIR system is both ON and OFF. The ECM detects both the pressure and the exhaust pulsation and compares them.
The following 4 patterns are AIR system pressure conditions in the AIR system passage.

Pressure condition in Secondary Air Injection System Case 1:

Air Pump	ON
Air Switching Valve	Open
Pressure	2.5 kPa or more
Pulsation Detection	Exhaust gas pulsation detected

Pressure condition in Secondary Air Injection System Case 2:

Air Pump	OFF
Air Switching Valve	Open
Pressure	Less than 2.5 kPa
Pulsation Detection	Exhaust gas pulsation detected

Pressure condition in Secondary Air Injection System Case 3:

Air Pump	ON
Air Switching Valve	Closed
Pressure	2.5 kPa or more
Pulsation Detection	Slight pulsation detected

Pressure condition in Secondary Air Injection System Case 4:

Air Pump	OFF
Air Switching Valve	Closed
Pressure	Less than 2.5 kPa
Pulsation Detection	Exhaust pulsation not detected

If the detected pressure is high, the air pump is assumed to be ON and if it alternates sharply*, the ASV is assumed to be open. The ECM locates malfunctions from the combination of pressures detected when the AIR system is ON and OFF.

*: The exhaust pulsation value is calculated in the ECM. If the calculated value exceeds a certain level, the ECM determines that the exhaust pulsation is in the AIR system.

HINT:

- In case 3, as the pressure sensor detects a slight pump operation pulsation, the detected value is not constant. Since the pump outlet is blocked by closing the ASV, the average pressure is higher than in case 1 (approximately 20 to 30 kPa).
- In case 1, the average pressure is approximately 9 to 11 kPa. The value of 2.5 kPa indicated in the table above is a threshold for detecting pump malfunctions.

Detected Conditions while AIR operating: Air pump ON, ASV Open	Detected Conditions while AIR not operating: Air pump OFF, ASV Closed	ECM Determination	DTCs Output
Case 1	Case 4	Normal	-
Case 1	Case 2	ASV stuck open	P2440
Case 1	Case 3	Air pump stuck ON	P2444
Case 2	Case 4	Air pump stuck OFF	P2445
Case 3	Case 4	ASV stuck closed	P2441
Case 1	Case 1	ASV stuck open and Air pump stuck ON	P2440 and P2444
Case 2	Case 2	ASV stuck open and Air pump stuck OFF	P2440 and P2445
Case 3	Case 3	ASV stuck closed and Air pump stuck ON	P2441 and P2444
Case 4	Case 4	ASV stuck closed and Air pump stuck OFF	P2441 and P2445

HINT:

- If the vacuum hose between the ASV and the pressure sensor is not connected correctly, case 4 may occur.
- By using an intelligent tester to perform the AIR INJ CHECK operation in the SYSTEM CHECK, the air-fuel ratio and the pressure in the secondary air injection system passage can be checked while the secondary air injection system is operating. This helps technicians to troubleshoot the system when it malfunctions. Furthermore, PENDING CODES also can be checked by performing SYSTEM CHECK / AUTOMATIC OPERATION after the repair.
- Read freeze frame data using an intelligent tester. Freeze frame data record the engine condition when malfunctions are detected. When troubleshooting, freeze frame data can help determine if the vehicle was moving or stationary, if the engine was warmed up or not, if the air-fuel ratio was lean or rich, and other data, from the time the malfunction occurred.

SYSTEM CHECK:

The pressure in the secondary air passage can be checked using an intelligent tester.

(a) Start the engine and warm it up.

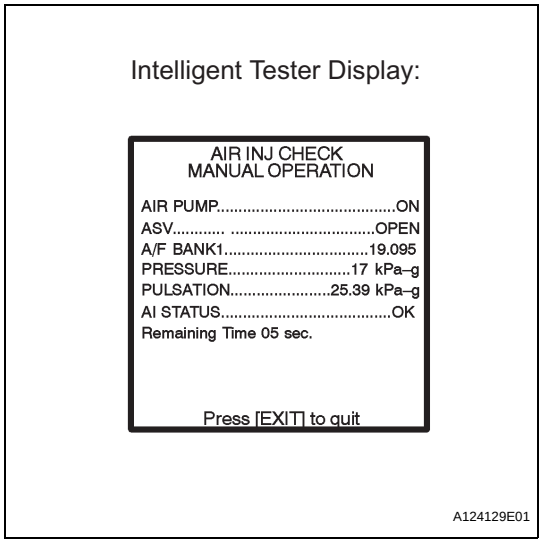

(b) Turn the ignition switch to OFF.
(c) Connect an intelligent tester to the DLC3.
(d) Turn the ignition switch to ON and turn the tester ON.
(e) Select the following menu items:
DIAGNOSIS / ENHANCED OBD II / SYSTEM CHECK / AIR INJ CHECK / MANUAL OPERATION / AP: ON, ASV: OPEN and AP: OFF, ASV CLOSE.
HINT:
When MANUAL OPERATION is selected, the tester initialization (atmospheric pressure measurement) is performed automatically. The initialization takes 10 seconds. After the initialization, AP and ASV operation canbe selected.
(f) Start the engine.
(g) Perform the AIR system intrusive operation while the engine is idling.
(h) Check that the air pump (AIR PUMP), ASV and pressure in the AIR system passage (PRESSURE) displayed on the tester, indicate the conditions shown in the table below.

Standard

Intelligent Tester Operations	AIR PUMP	ASV	PRESSURE *1	PULSATION *2
AP: ON, ASV: OPEN	ON	OPEN	2.5 kPa or more	11.25 kPa or more
AP: OFF, ASV: CLOSE	OFF	CLOSE	Less than 2.5 kPa	Less than 11.25 kPa

*1:
Average pumping pressure (gauge pressure). The pressure should be 2.5 kPa or more when the AIR system operates.
*2:
The cumulative exhaust pulsation calculated by the ECM. If the calculated value exceeds a certain level, the ECM determines that the exhaust pulsation is in the AIR system.

(i) Turn the ignition switch to OFF.

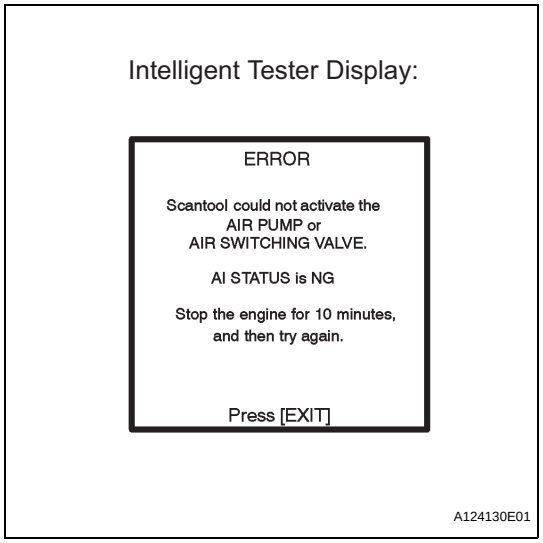

NOTICE:

- **This AIR INJECTION CHECK only allows technicians to operate the AIR system for a maximum of 5 seconds.**
  Furthermore, the check can only be performed up to 4 times per trip. If the test is repeated, intervals of at least 30 seconds are required between checks.
  While AIR system operation using the intelligent tester is prohibited, the tester display indicates the prohibition (WAIT or ERROR).
  If an ERROR as shown in the illustration is displayed on the tester during the test, stop the engine for 10 minutes, and then try again.
- **Performing the AIR INJ CHECK repetitively may cause damage to the AIR system. If necessary, leave an interval of several minutes between SYSTEM CHECK operations to prevent the system from overheating.**
- **When performing the AIR INJ CHECK operation after the battery cable has been reconnected, wait for 7 minutes with the ignition switch turned to ON or the engine running.**
- **Turn the ignition switch to OFF when the AIR INJ CHECK operation finishes.**

1	CHECK ANY OTHER DTCS OUTPUT (IN ADDITION TO DTC P2444 AND/OR P2445)

(a) Connect an intelligent tester to the DLC3.
(b) Turn the ignition switch to ON and turn the tester ON.
(c) Select the following menu items: DIAGNOSIS / ENHANCED OBD II / DTC INFO / CURRENT CODES.
(d) Read DTCs.

Result

Display (DTC Output)	Proceed To
P2444 and/or P2445	A
P2444 and/or P2445, and P0418	B
P2444 and/or P2445, and other DTCs (except P0418)	C

If any DTCs other than P2444, P2445 and/or P0418 are output, troubleshoot those DTCs first.

B	GO TO AIR PUMP INSPECTION PROCEDURE
C	GO TO DTC CHART

A

2	PERFORM ACTIVE TEST USING INTELLIGENT TESTER (SECONDARY AIR INJECTION SYSTEM OPERATION)

Intelligent Tester Display:

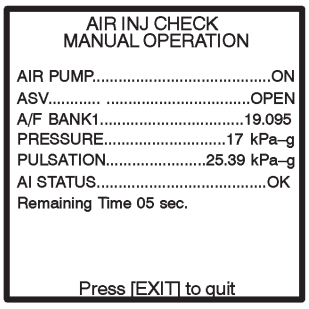

A124129E01

(a) Start the engine and warm it up.
(b) Turn the ignition switch to OFF.
(c) Connect the intelligent tester to the DLC3.
(d) Turn the ignition switch to ON and turn the tester ON.
(e) Select the following menu items:
DIAGNOSIS / ENHANCED OBD II / SYSTEM CHECK / AIR INJ CHECK / MANUAL OPERATION / AP: ON, ASV: OPEN and AP: OFF, ASV CLOSE.
HINT:
When MANUAL OPERATION is selected, the tester initialization (atmospheric pressure measurement) is performed automatically. The initialization takes 10 seconds. After the initialization, AP and ASV operation can be selected.
(f) Start the engine.
(g) Perform the AIR system intrusive operation while the engine is idling.
(h) Check that the air pump (AIR PUMP), ASV and pressure in the AIR system passage (PRESSURE) status displayed on the tester, indicate the conditions shown in the table below.

Standard

Intelligent Tester Operations	AIR PUMP	ASV	PRESSURE*
AP: ON, ASV: OPEN	ON	ON	2.5 kPa or more
AP: OFF, ASV: CLOSE	OFF	OFF	Less than 2.5 kPa

*: Average pumping pressure. The pressure should be 2.5 kPa or more when the AIR system operates.

Intelligent Tester Display:



A124130E01

(i) Turn the ignition switch to OFF.

NOTICE:

- **This AIR INJECTION CHECK only allows technicians to operate the AIR system for a maximum of 5 seconds.**
  Furthermore, the check can only be performed up to 4 times per trip. If the test is repeated, intervals of at least 30 seconds are required between checks.
  While AIR system operation using the intelligent tester is prohibited, the tester display indicates the prohibition (WAIT or ERROR).
  If an ERROR as shown in the illustration is displayed on the tester during the test, stop the engine for 10 minutes, and then try again.
- **Performing the AIR INJ CHECK repetitively may cause damage to the AIR system. If necessary, leave an interval of several minutes between SYSTEM CHECK operations to prevent the system from overheating.**

- **When performing the AIR INJ CHECK operation after the battery cable has been reconnected, wait for 7 minutes with the ignition switch turned to ON or the engine running.**
- **Turn the ignition switch to OFF when the AIR INJ CHECK operation finishes.**

NG → **Go to step 4**

OK

3 CHECK WHETHER DTC OUTPUT RECURS (DTC P2444 AND/OR P2445)

(a) Start the engine and warm it up.
(b) Turn the ignition switch to OFF.
(c) Connect the intelligent tester to the DLC3.
(d) Turn the ignition switch to ON and turn the tester ON.
(e) Clear DTCs (where set) (see page ES-40).
(f) Select the following menu items:
DIAGNOSIS / ENHANCED OBD II / SYSTEM CHECK / AIR INJ CHECK / AUTOMATIC OPERATION.
(g) Start the engine after the tester initialization is finished.
(h) Perform the SYSTEM CHECK operation by pressing ENTER.
(i) After operating the AIR system, press the ENTER button to confirm the AIR system pending codes.
(j) Check PENDING DTCs.
(k) Turn the ignition switch to OFF.

NOTICE:

- **When performing the AIR INJ CHECK operation after the battery cable has been reconnected, wait for 7 minutes with the ignition switch turned to ON or the engine running.**
- **Turn the ignition switch to OFF when the AIR INJ CHECK operation finishes.**

Result

Display (DTC output)	Proceed To
P2444 and/or P2445	A
No pending DTC	B

B → **CHECK FOR INTERMITTENT PROBLEMS**

A

4 CHECK VACUUM HOSES (PRESSURE SENSOR - AIR SWITCHING VALVE)

(a) Check the vacuum hose connections with the pressure sensor and ASV.
(b) Inspect the vacuum hose for blockages and damage.

OK:

Vacuum hose has no blockages or damage.

NG → **REPAIR OR REPLACE VACUUM HOSE**

OK

5	INSPECT ECM (AIP VOLTAGE)

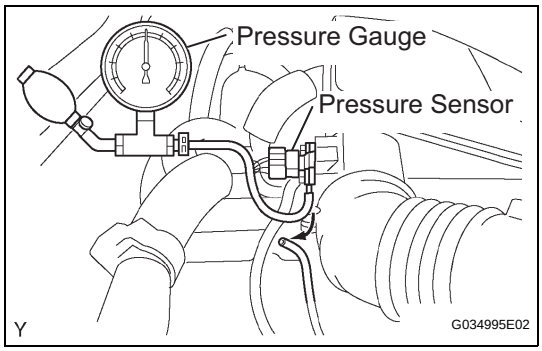

(a) Connect a pressure gauge to the air pressure sensor as shown in the illustration.
(b) Connect the intelligent tester to the DLC3.
(c) Turn the ignition switch to ON and the tester ON.
(d) Select the following menu items: DIAGNOSIS / ENHANCED OBD ll / DATA LIST / AIR PMP PRS(A).
(e) Check that the pressure displayed on the tester fluctuates when applying the pressure to the pressure sensor with the pressure gauge.
OK:
Pressure fluctuates in response to pressure applied with pressure gauge.
HINT:
The tester displays the air pump pressure (AIR PMP PRS(A)) as absolute pressure.

NG → **REPLACE PRESSURE SENSOR (TURBO PRESSURE SENSOR)**

OK

6	CHECK AIR INJECTION SYSTEM PIPE CONNECTIONS

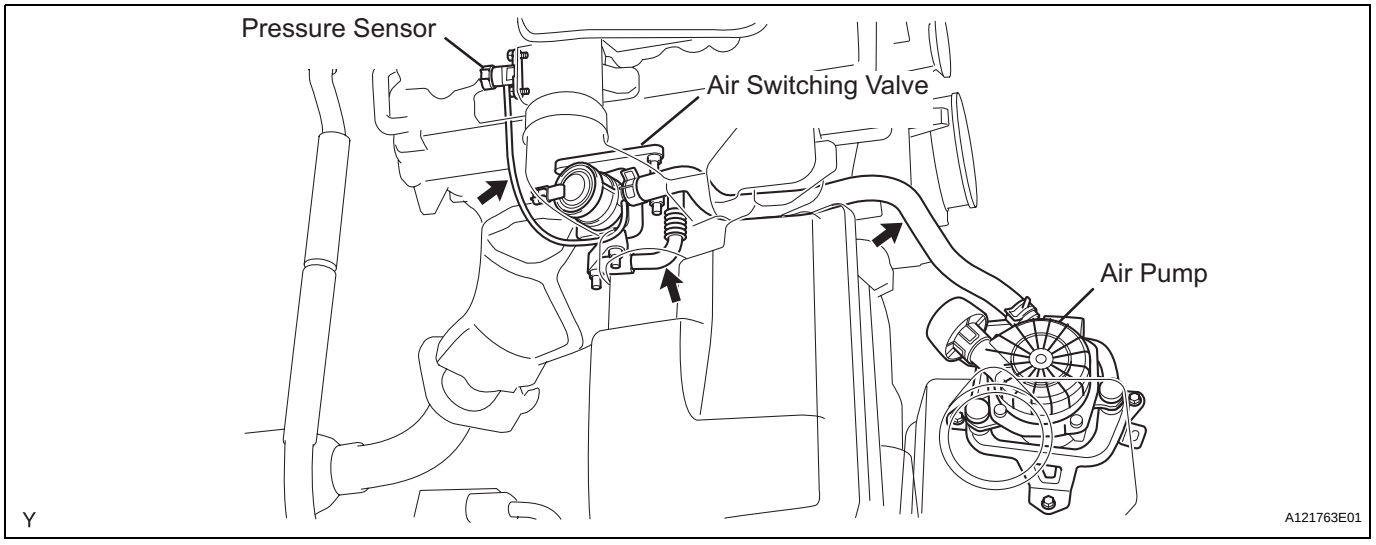

(a) Check that all the pipes and hoses between the air pump and ASV are securely connected.
(b) Inspect the pipes and hoses for blockages and damage.
OK:
AIR system piping has no blockages or damage.

NG → **REPAIR OR REPLACE AIR INJECTION SYSTEM PIPING**

OK

7 INSPECT AIR PUMP ASSEMBLY

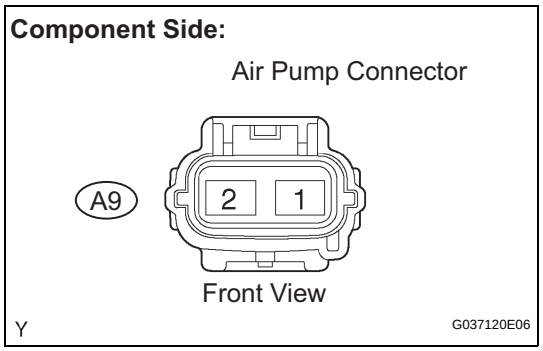

(a) Check the resistance.
(1) Using an ohmmeter, measure the resistance between the terminals.
Standard Resistance

Tester Connections	Specified Conditions
Air pump (A9-1) - Air pump (A9-2)	0.4 to 10 Ω at 20°C (68°F)

If the result is not as specified, replace the air pump.
HINT:
To check the air pump operation, use the AIR INJ CHECK function described in the SYSTEM CHECK.

ES

NG → **REPLACE AIR PUMP ASSEMBLY**

OK

8 INSPECT AIR INJECTION CONTROL DRIVER (AIR INJECTION CONTROL DRIVER POWER SOURCE CIRCUIT)

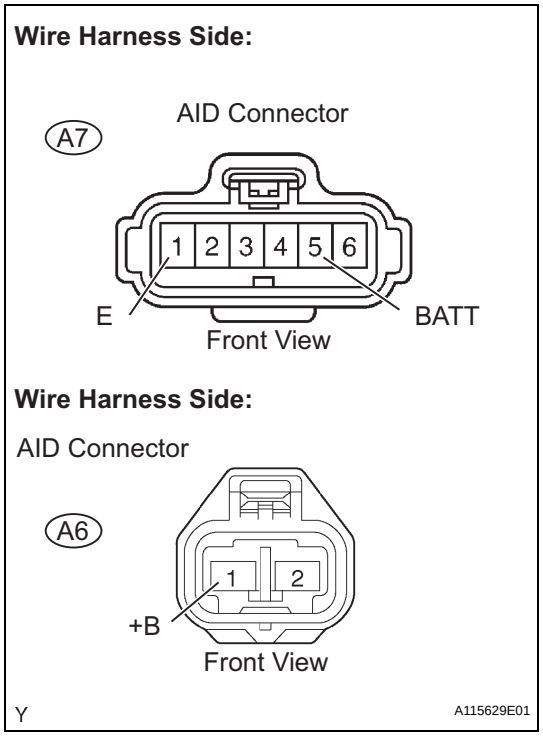

(a) Disconnect the A6 and A7 AID connectors.
(b) Turn the ignition switch to ON.
(c) Measure the voltage between the terminals of the AID connector.
Standard Voltage

Tester Connections	Specified Conditions
BATT (A7-5) - Body ground	9 to 14 V (near battery voltage)
+B (A6-1) - Body ground	9 to 14 V (near battery voltage)

(d) Check the resistance.
Standard Resistance (Check for open)

Tester Connections	Specified Conditions
E (A7-1) - Body ground	Below 1 Ω

(e) Reconnect the AID connector.

NG → **REPAIR OR REPLACE AIR INJECTION CONTROL DRIVER POWER SOURCE CIRCUIT**

OK

9	PERFORM ACTIVE TEST USING INTELLIGENT TESTER

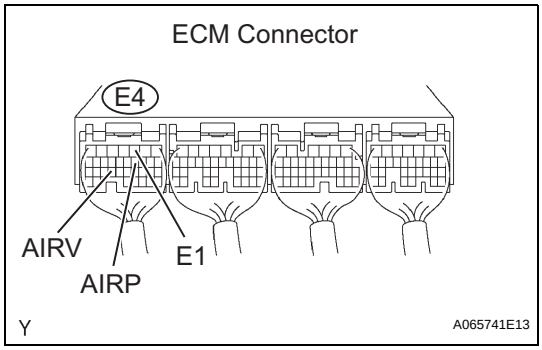

(a) Start the engine and warm it up.
(b) Turn the ignition switch to OFF.
(c) Connect the intelligent tester to the DLC3.
(d) Turn the ignition switch to ON and turn the tester ON.
(e) Select the following menu items: DIAGNOSIS / ENHANCED OBD II / SYSTEM CHECK / AIR INJ CHECK / MANUAL OPERATION / AP: ON, ASV: OPEN and AP: OFF, ASV: CLOSE.
(f) Start the engine after the tester initialization is finished.
(g) Operate the AIR system using SYSTEM CHECK function and measure the voltage between the terminals of the ECM connector.
(h) Turn the ignition switch to OFF.

NOTICE:

- **Do not perform the SYSTEM CHECK operation repetitively. It may cause damage to the system. If necessary, leave an interval of several minutes between SYSTEM CHECK operations.**
- **When performing the AIR INJ CHECK operation after the battery cable has been reconnected, wait for 7 minutes with the ignition switch turned to ON or the engine running.**
- **Turn the ignition switch to OFF when the AIR INJ CHECK operation finishes.**

Standard Voltage

Intelligent Tester Operations	Voltmeter Connections	Specified Conditions
AP: ON, ASV: OPEN	AIRP (E4-11) - E1 (E4-3)	3.5 to 7.5 V
AP: OFF, ASV: CLOSE	AIRP (E4-11) - E1 (E4-3)	10 V or more
AP: ON, ASV: OPEN	AIRV (E4-24) - E1 (E4-3)	3.5 to 7.5 V
AP: OFF, ASV: CLOSE	AIRV (E4-24) - E1 (E4-3)	10 V or more

NG → Go to step 12

OK

10	REPLACE AIR INJECTION CONTROL DRIVER

NEXT

11	CHECK WHETHER DTC OUTPUT RECURS (DTC P2444 AND/OR P2445)

(a) Start the engine and warm it up.
(b) Turn the ignition switch to OFF.
(c) Connect the intelligent tester to the DLC3.
(d) Turn the ignition switch to ON and turn the tester ON.
(e) Clear DTCs (where set) (see page ES-40).
(f) Select the following menu items:

DIAGNOSIS / ENHANCED OBD II / SYSTEM CHECK / AIR INJ CHECK / AUTOMATIC OPERATION.

(g) Start the engine after the tester initialization is finished.
(h) Perform the SYSTEM CHECK operation by pressing ENTER.
(i) After operating the AIR system, press the ENTER button to confirm the AIR system pending codes.
(j) Check PENDING DTCs.
(k) Turn the ignition switch to OFF.

OK:

No pending DTC output.

NOTICE:

- **When performing the AIR INJ CHECK operation after the battery cable has been reconnected, wait for 7 minutes with the ignition switch turned to ON or the engine running.**
- **Turn the ignition switch to OFF when the AIR INJ CHECK operation finishes.**

ES

NEXT

END

12 CHECK HARNESS AND CONNECTOR (ECM - AIR INJECTION CONTROL DRIVER)

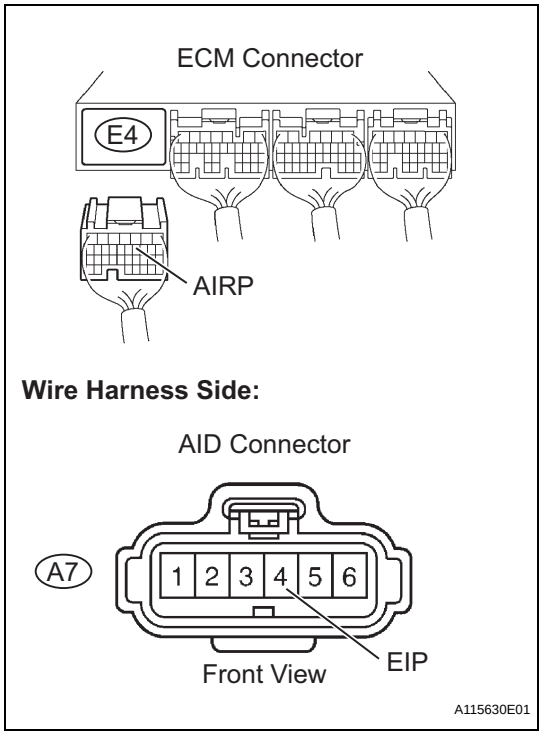

(a) Disconnect the E4 ECM connector.
(b) Disconnect the A7 AID connector.
(c) Check the resistance.

Standard Resistance (Check for open)

Tester Connections	Specified Conditions
AIRP (E4-11) - EIP (A7-4)	Below 1 Ω

(d) Reconnect the ECM and AID connectors.

NG → **REPAIR OR REPLACE HARNESS AND CONNECTOR**

OK

REPLACE ECM

DTC	P2610	ECM / PCM Internal Engine Off Timer Performance

DTC SUMMARY

DTC	Monitoring Items	Malfunction Detection Conditions	Trouble Areas	Detection Timings	Detection Logic
P2610	Soak timer (built into ECM)	ECM internal malfunction	ECM	Engine running	2 trip

DESCRIPTION

ES

To ensure the accuracy of the EVAP (Evaporative Emission) monitor values, the soak timer, which is built into the ECM, measures 5 hours (+- 15 minutes) from when the ignition switch is turned to OFF, before the monitor is run. This allows the fuel to cool down, which stabilizes the Fuel Tank Pressure (FTP). When 5 hours have elapsed, the ECM turns on.

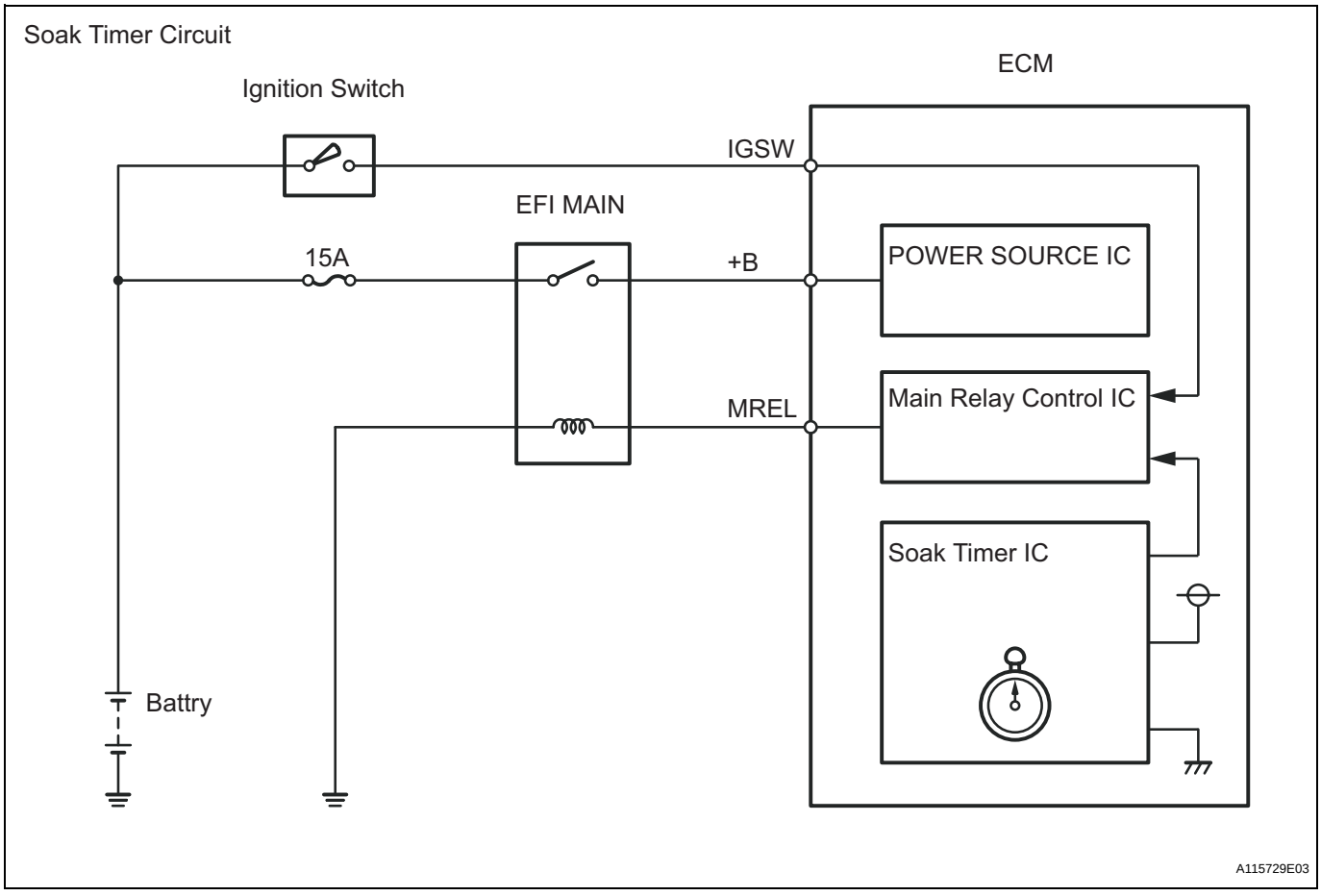

MONITOR DESCRIPTION

5 hours after the ignition switch is turned to OFF, the soak timer activates the ECM to begin the EVAP system monitor. While the engine is running, the ECM monitors the synchronization of the soak timer and the CPU clock. If these two are not synchronized, the ECM interprets this as a malfunction, illuminates the MIL and sets the DTC (2 trip detection logic).

MONITOR STRATEGY

Required Sensors/Components	ECM

Frequency of Operation	Once per driving cycle
Duration	10 minutes
MIL Operation	2 driving cycles
Sequence of Operation	None

TYPICAL ENABLING CONDITIONS

Monitor runs whenever following DTC not present	None
Ignition switch	ON
Engine	Running
Battery voltage	8 V or more
Starter	OFF

TYPICAL MALFUNCTION THRESHOLDS

Soak timer measurement when ECM CPU clock counts 10 minutes	Less than 7 minutes or more than 13 minutes

HINT:

- DTC P2610 is set if an internal ECM problem is detected. Diagnostic procedures are not required. ECM replacement is required.
- Read freeze frame data using an intelligent tester. Freeze frame data record the engine condition when malfunctions are detected. When troubleshooting, freeze frame data can help determine if the vehicle was moving or stationary, if the engine was warmed up or not, if the air-fuel ratio was lean or rich, and other data, from the time the malfunction occurred.

1	**REPLACE ECM**

NEXT

2	**CHECK WHETHER DTC OUTPUT RECURS**

(a) Connect an intelligent tester to the DLC3.
(b) Turn the ignition switch to ON.
(c) Clear DTCs (See page ES-40).
(d) Start the engine and wait for 10 minutes or more.
(e) On the tester, select the following menu items: DIAGNOSIS / ENHANCED OBD II / DTC INFO / PENDING CODES.
(f) If no pending DTC is displayed, the repair has been successfully completed.

NEXT

END

DTC	P2A00	A/F Sensor Circuit Slow Response (Bank 1 Sensor 1)

HINT:
Sensor 1 refers to the sensor mounted in front of the Three-Way Catalytic Converter (TWC) and located near the engine assembly.

DESCRIPTION

Refer to DTC P2195 (See page ES-312).

DTC No.	DTC Detection Conditions	Trouble Areas
P2A00	Calculated value for air-fuel ratio (A/F) sensor response rate deterioration level is less than threshold	• Open or short in A/F sensor circuit • A/F sensor • ECM

ES

MONITOR DESCRIPTION

After engine is warmed up, the ECM performs air-fuel ratio feedback control to maintain the air-fuel ratio at the stoichiometric level. In addition, active A/F ratio control is performed for approximately 10 seconds after preconditions are met in order to measure the A/F sensor response rate. During active A/F ratio control, the ECM forcibly increases and decreases the injection volume a certain amount, based on the stoichiometric air-fuel ratio learned during normal air-fuel ratio control, and measures the A/F sensor response rate. The ECM receives a signal from the A/F sensor while performing active A/F ratio control and uses it to calculate the A/F sensor response rate deterioration level.
If the value for A/F sensor response rate deterioration level is less than threshold, the ECM interprets this as a malfunction and sets the DTC.

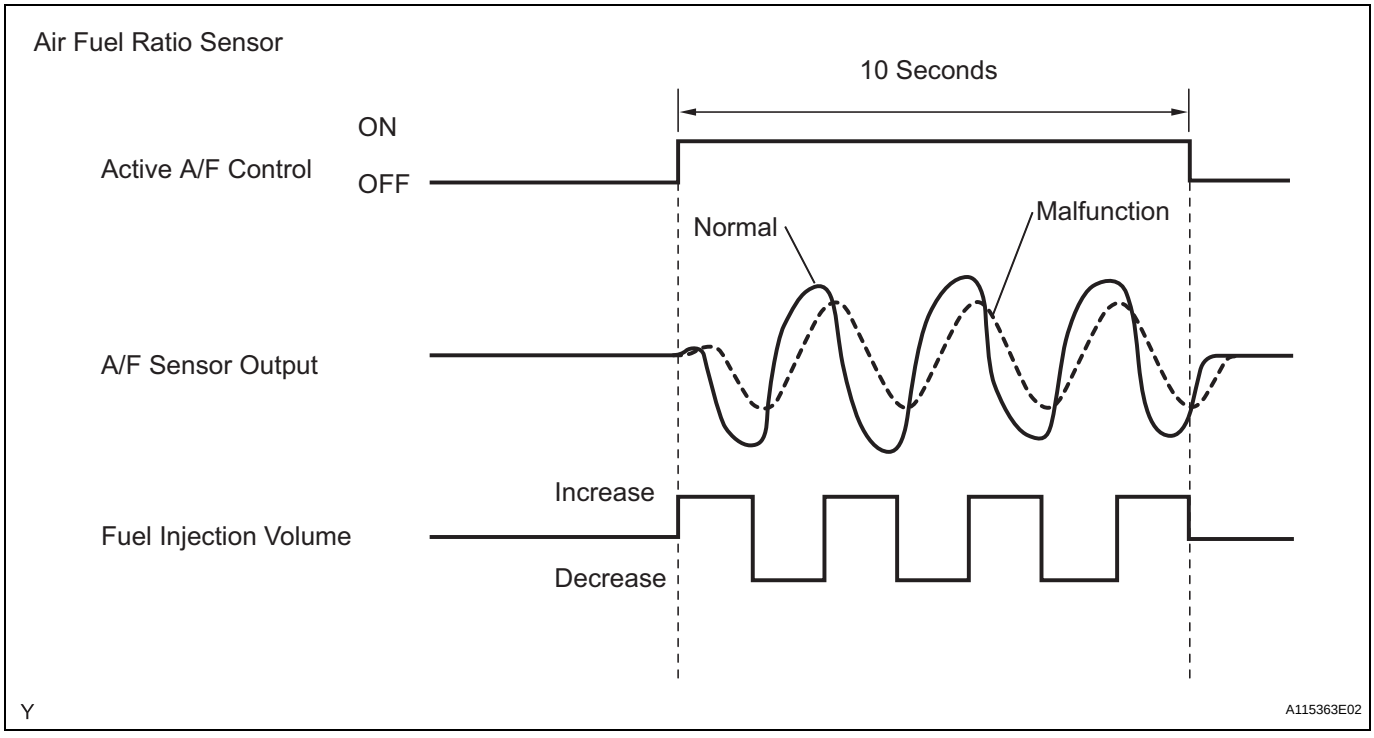

CONFIRMATION DRIVING PATTERN

HINT:
Performing this confirmation pattern will activate the A/F sensor response monitor.

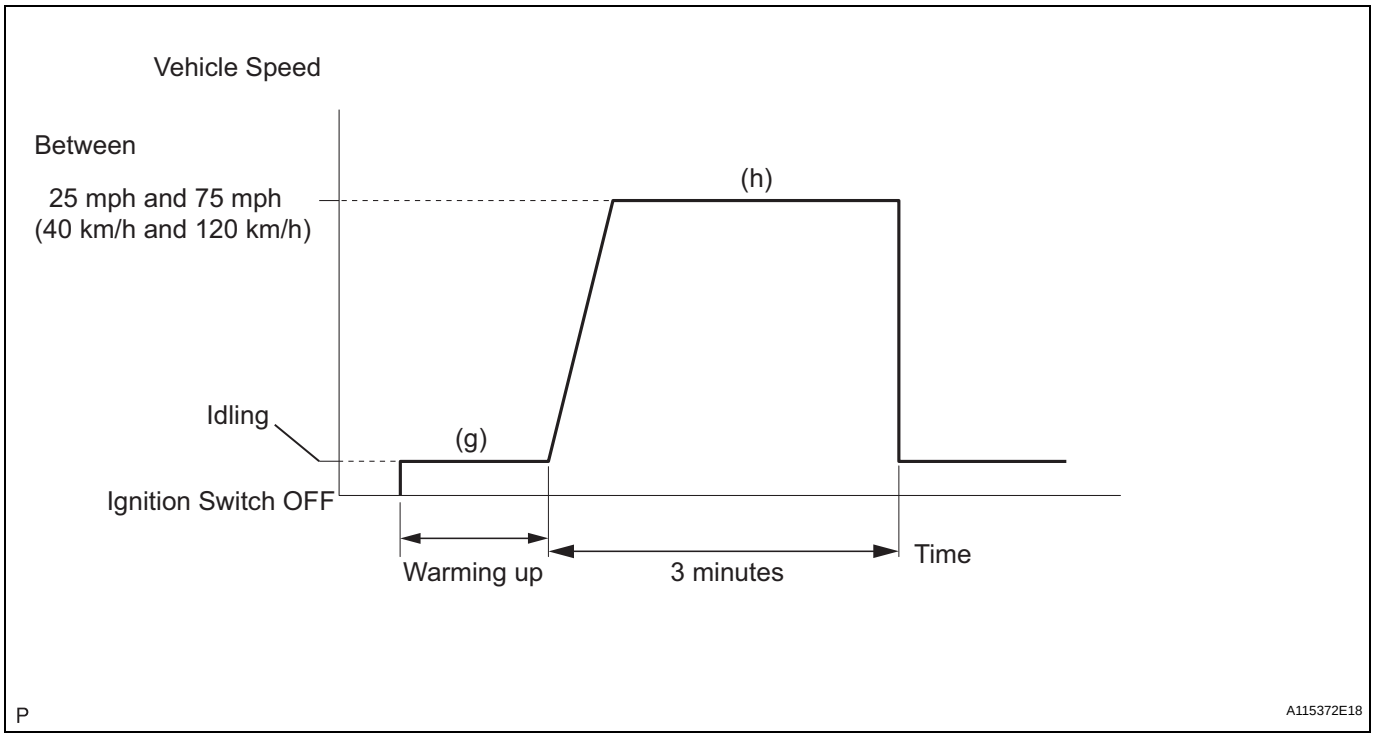

(a) Connect an intelligent tester to the DLC3.

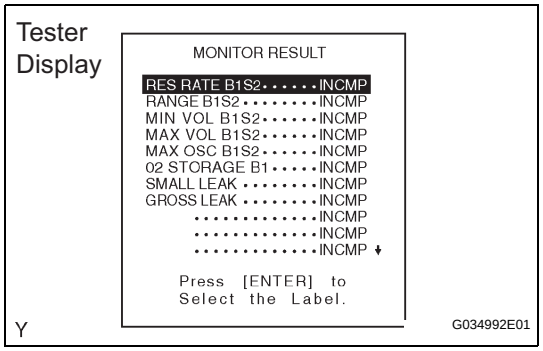

(b) Turn the ignition switch to ON.
(c) Turn the tester ON.
(d) Clear DTCs (where set).
(e) Select the following menu items: DIAGNOSIS /ENHANCED OBD II / MONITOR INFO / MONITOR RESULT.
(f) Check that RES RATE B1S1 is INCOMP.
(g) Start the engine and warm it up.
(h) Drive the vehicle at between 25 mph and 75 mph (40 km/h and 120 km/h) for 3 minutes. However, the vehicle should be driven at a constant speed.
(i) Check the monitor result values on the intelligent tester by selecting the following menu items: DIAGNOSIS / ENHANCED OBD II / MONITOR INFO / TEST RESULT.
(j) If the values indicated on the tester do not change, perform READINESS MONITOR DRIVE PATTERN for the A/F sensor and the heated oxygen sensor (see page ES-25).
HINT:
Completion of all A/F sensor monitors is required to change the value in TEST RESULT.
(k) Note the value of the Monitor Result.
(l) Select the following menu items: DIAGNOSIS / ENHANCED OBD II / DTC INFO / PENDING CODES.
(m) Check if any DTCs (any pending DTCs) are set.

MONITOR STRATEGY

Related DTCs	P2A00: Air-Fuel Ratio (A/F) sensor slow response
Required Sensors/Components (Main)	A/F sensor
Required Sensors/Components (Related)	Vehicle speed sensor, Crankshaft position sensor
Frequency of Operation	Once per driving cycle
Duration	10 to 15 seconds
MIL Operation	2 driving cycles
Sequence of Operation	None

TYPICAL ENABLING CONDITIONS

Monitor runs whenever following DTCs not present	P0031, P0032, P0051, P0052 (A/F sensor heater - Sensor 1) P0100 - P0103 (MAF meter) P0110 - P0113 (IAT sensor) P0115 - P0118 (ECT sensor) P0120 - P0223, P2135 (TP sensor) P0125 (Insufficient ECT for Closed Loop) P0171, P0172 (Fuel system) P0300 - P0308 (Misfire) P0335 (CKP sensor) P0340, P0341 (CMP sensor) P0442 - P0456 (EVAP system) P0500 (VSS) P2196, P2198 (A/F sensor - rationality) P2440 (A/R control valve stuck open) P2441 (A/R control valve stuck close) P2444 (AIP stuck ON) P2445 (AIP stuck OFF)
A/F sensor active control	Executing
Engine coolant temperature	70°C (158°F) or more
Battery voltage	11 V or more
Malfunction determination in this driving cycle	Not yet
Engine RPM	Less than 4,000 rpm
Fuel system status	Closed-loop
A/F sensor status	Activated
Fuel-cut	OFF (for 5 seconds or more)
Engine load	10 to 70 %
Shift position	2nd or more
Intake air amount	3 to 14 g/sec

TYPICAL MALFUNCTION THRESHOLDS

Response rate deterioration level	Less than 0.2 V

MONITOR RESULT

Refer to Checking Monitor Status (See page ES-21).

WIRING DIAGRAM

Refer to DTC P2195 (See page ES-316).

HINT:
Malfunctioning areas can be identified by performing the A/F CONTROL function provided in the ACTIVE TEST. The A/F CONTROL function can help to determine whether the Air-Fuel Ratio (A/F) sensor, Heated Oxygen (HO2) sensor and other potential trouble areas are malfunctioning.

The following instructions describe how to conduct the A/F CONTROL operation using an intelligent tester.

1. Connect an intelligent tester to the DLC3.
2. Start the engine and turn the tester ON.
3. Warm up the engine at an engine speed of 2,500 rpm for approximately 90 seconds.
4. On the tester, select the following menu items: DIAGNOSIS / ENHANCED OBD II / ACTIVE TEST / A/F CONTROL.
5. Perform the A/F CONTROL operation with the engine in an idling condition (press the RIGHT or LEFT button to change the fuel injection volume).
6. Monitor the voltage outputs of the A/F and HO2 sensors (AFS B1S1 and OS2 B1S2) displayed on the tester.
   HINT:
   - The A/F CONTROL operation lowers the fuel injection volume by 12.5 % or increases the injection volume by 25 %.
   - Each sensor reacts in accordance with increases and decreases in the fuel injection volume.

Standard Voltage

Tester Display (Sensor)	Injection Volumes	Status	Voltages
AFS B1S1 (A/F)	+25 %	Rich	Less than 3.0
AFS B1S1 (A/F)	-12.5 %	Lean	More than 3.35
O2S B1S2 (HO2)	+25 %	Rich	More than 0.5
O2S B1S2 (HO2)	-12.5 %	Lean	Less than 0.4

NOTICE:
The Air-Fuel Ratio (A/F) sensor has an output delay of a few seconds and the Heated Oxygen (HO2) sensor has a maximum output delay of approximately 20 seconds.

Case	A/F Sensor (Sensor 1) Output Voltage		HO2 Sensor (Sensor 2) Output Voltage		Main Suspected Trouble Areas
1	Injection Volume +25 % -12.5 %		Injection Volume +25 % -12.5 %		-
	Output Voltage More than 3.35 V Less than 3.0 V		Output Voltage More than 0.5 V Less than 0.4 V		
2	Injection Volume +25 % -12.5 %		Injection Volume +25 % -12.5 %		• A/F sensor • A/F sensor heater • A/F sensor circuit
	Output Voltage Almost no reaction	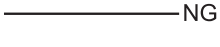	Output Voltage More than 0.5 V Less than 0.4 V		
3	Injection Volume +25 % -12.5 %		Injection Volume +25 % -12.5 %		• HO2 sensor • HO2 sensor heater • HO2 sensor circuit
	Output Voltage More than 3.35 V Less than 3.0 V		Output Voltage Almost no reaction		

Case	A/F Sensor (Sensor 1) Output Voltage		HO2 Sensor (Sensor 2) Output Voltage		Main Suspected Trouble Areas
4	Injection volume +25 % -12.5 %		Injection Volume +25 % -12.5 %		• Injector • Fuel pressure • Gas leakage from exhaust system (Air-fuel ratio extremely lean or rich)
	Output Voltage Almost no reaction		Output voltage Almost no reaction		

- Following the A/F CONTROL procedure enables technicians to check and graph the voltage outputs of both the A/F and HO2 sensors.
- To display the graph, select the following menu items on the tester: DIAGNOSIS / ENHANCED OBD II / ACTIVE TEST / A/F CONTROL / USER DATA / AFS B1S1 and O2S B1S2, and press the YES button and then the ENTER button followed by the F4 button.

HINT:

- DTC P2A00 may be set, when the air-fuel ratio is stuck rich or lean.
- A low A/F sensor voltage could be caused by a rich air-fuel mixture. Check for conditions that would cause the engine to run rich.
- A high A/F sensor voltage could be caused by a lean air-fuel mixture. Check for conditions that would cause the engine to run lean.
- Read freeze frame data using an intelligent tester. Freeze frame data record the engine condition when malfunctions are detected. When troubleshooting, freeze frame data can help determine if the vehicle was moving or stationary, if the engine was warmed up or not, if the air-fuel ratio was lean or rich, and other data, from the time the malfunction occurred.
- DTC P2A00 may also be set, when the sensor element is electrically clogged or contaminated.

1	CHECK ANY OTHER DTCS OUTPUT (IN ADDITION TO DTC P2A00)

(a) Connect an intelligent tester to the DLC3.
(b) Turn the ignition switch to ON.
(c) Turn the tester ON.
(d) Select the following menu items: DIAGNOSIS / ENHANCED OBD II / DTC INFO / CURRENT CODES.
(e) Read DTCs.

Result

Display (DTC Output)	Proceed To
P2A00	A
P2A00 and other DTCs	B

If any DTCs relating to the A/F sensor (DTCs for the A/F sensor heater or A/F sensor admittance) are output, troubleshoot those DTCs first.

B → GO TO DTC CHART

A

2 INSPECT AIR FUEL RATIO SENSOR (HEATER RESISTANCE)

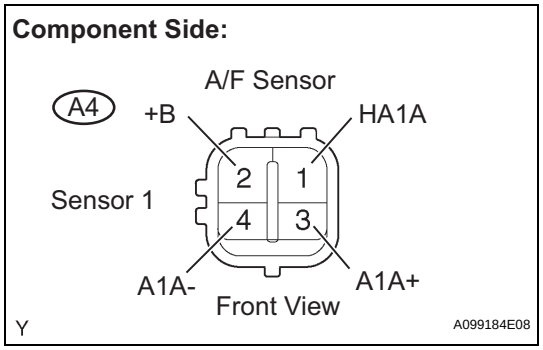

(a) Disconnect the A4 Air-Fuel Ratio (A/F) sensor connector.
(b) Measure the resistance between the terminals of the A/F sensor connector.

Standard Resistance

Tester Connections	Specified Conditions
HA1A (1) - +B (2)	1.8 to 3.4 Ω at 20°C (68°F)
HA1A (1) - A1A- (4)	10 kΩ or higher

(c) Reconnect the air-fuel ratio sensor connector.

NG → REPLACE AIR FUEL RATIO SENSOR

OK

3 CHECK HARNESS AND CONNECTOR (ECM - AIR FUEL RATIO SENSOR)

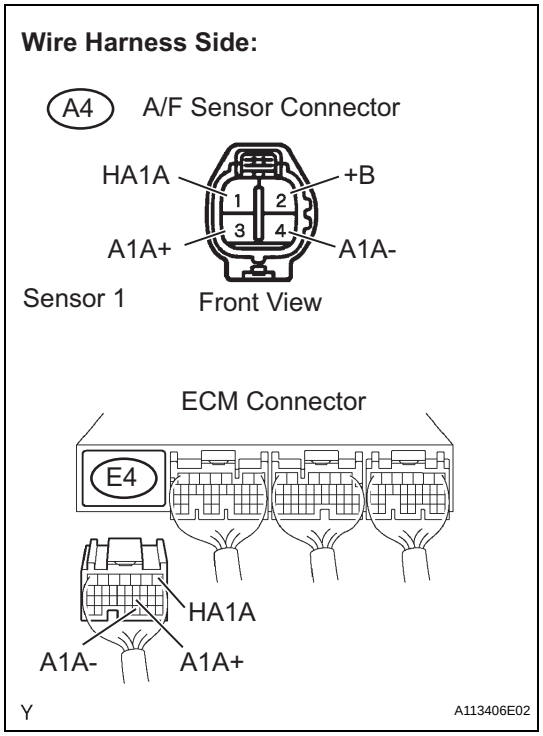

(a) Disconnect the A4 A/F sensor connector.
(b) Turn the ignition switch to ON.
(c) Measure the voltage between the +B terminal of the A/F sensor connector and body ground.

Standard Voltage

Tester Connections	Specified Conditions
+B (A4-2) - Body ground	9 to 14 V

(d) Turn the ignition switch to OFF.
(e) Disconnect the E4 ECM connector.
(f) Check the resistance.

Standard Resistance (Check for open)

Tester Connections	Specified Conditions
HA1A (A4-1) - HA1A (E4-1)	Below 1 Ω
A1A+ (A4-3) - A1A+ (E4-21)	Below 1 Ω
A1A- (A4-4) - A1A- (E4-31)	Below 1 Ω

Standard Resistance (Check for short)

Tester Connections	Specified Conditions
HA1A (A4-1) or HA1A (E4-1) - Body ground	10 kΩ or higher
A1A+ (A4-3) or A1A+ (E4-21) - Body ground	10 kΩ or higher
A1A- (A4-4) or A1A- (E4-31) - Body ground	10 kΩ or higher

(g) Reconnect the ECM connector.
(h) Reconnect the A/F sensor connector.

ES

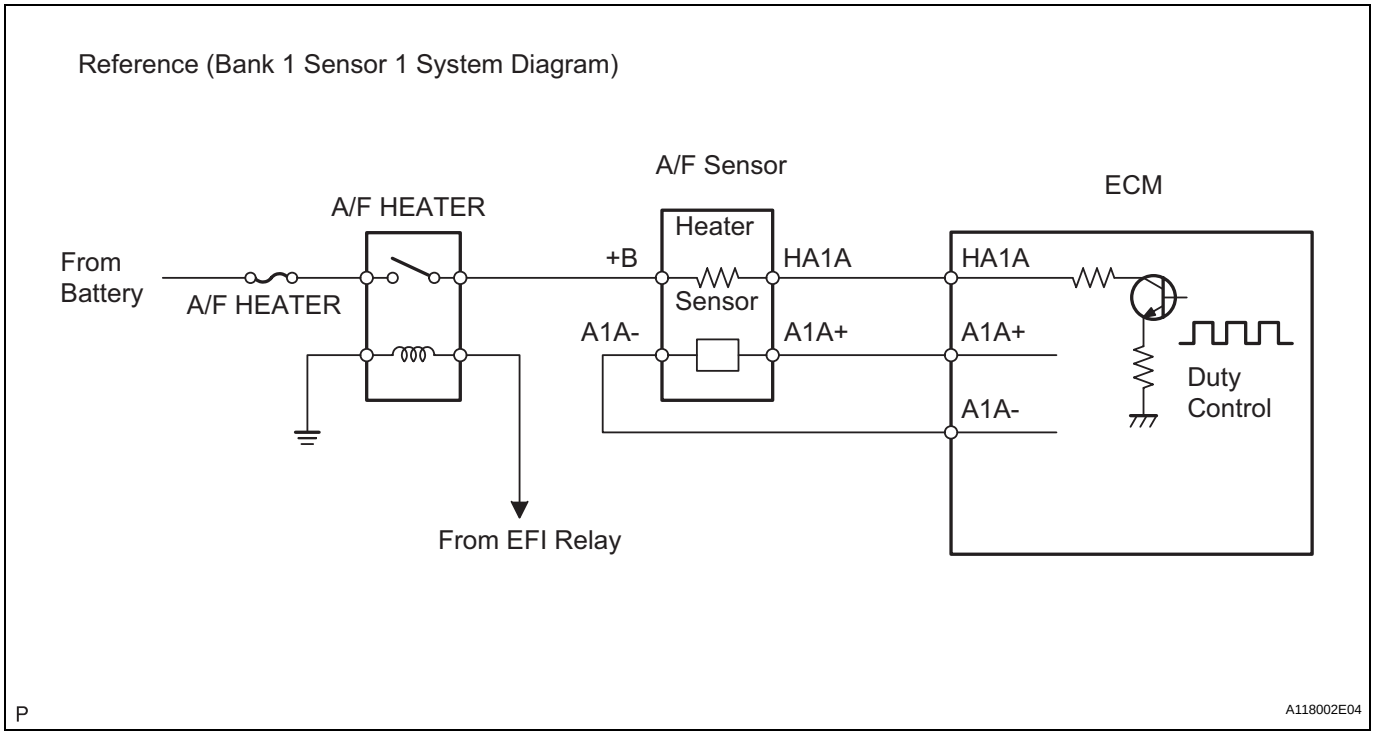

ES

NG → **REPAIR OR REPLACE HARNESS OR CONNECTOR**

OK

4	PERFORM CONFIRMATION DRIVING PATTERN

NEXT

5	CHECK WHETHER DTC OUTPUT RECURS (DTC P2A00)

(a) Connect the intelligent tester to the DLC3.
(b) Turn the ignition switch to ON and turn the tester ON.
(c) Select the following menu items: DIAGNOSIS / ENHANCED OBD II / DTC INFO / PENDING CODES.
(d) Read pending DTCs.

Result

Display (DTC Output)	Proceed To
P2A00	A
No output	B

B → **CHECK FOR INTERMITTENT PROBLEMS**

A

6	REPLACE AIR FUEL RATIO SENSOR

NEXT

7	PERFORM CONFIRMATION DRIVING PATTERN

NEXT

8	CHECK WHETHER DTC OUTPUT RECURS (DTC P2A00)

(a) Connect the intelligent tester to the DLC3.
(b) Turn the ignition switch to ON and turn the tester ON.
(c) Select the following menu items: DIAGNOSIS / ENHANCED OBD II / DTC INFO / PENDING CODES.
(d) Read pending DTCs.

ES

Result

Display (DTC Output)	Proceed To
No output	A
P2A00	B

B → CHECK EXTREMELY RICH OR LEAN ACTUAL AIR FUEL RATIO (REFER TO DTC P0171 PROCEDURE)

A

END

EVAP System

RELATED DTCS

DTC No.	Monitoring Items	See procedure
P043E	Reference orifice clogged (built into canister pump module)	ES-213
P043F	Reference orifice high-flow (built into canister pump module)	
P0441	• Purge VSV (Vacuum Switching Valve) stuck closed • Purge VSV stuck open • Purge flow	ES-220
P0450	Canister pressure sensor (built into canister pump module) voltage abnormal fluctuation	ES-228
P0451	• Canister pressure sensor (built into canister pump module) noise • Canister pressure sensor stuck (built into canister pump module)	
P0452	Canister pressure sensor (built into canister pump module) voltage low	
P0453	Canister pressure sensor (built into canister pump module) voltage high	
P0455	EVAP gross leak	ES-237
P0456	EVAP small leak	
P2401	Leak detection pump stuck OFF (built into canister pump module)	ES-334
P2402	Leak detection pump stuck ON (built into canister pump module)	
P2419	Vent valve stuck closed (built into canister pump module)	ES-341
P2420	Vent valve stuck open (vent) (built into canister pump module)	
P2610	Soak timer (built into ECM)	ES-380

If any EVAP system DTCs are set, the malfunctioning area can be determined using the table below.

DTCs / Malfunctioning Areas	P043E P043F	P0441	P0450	P0451	P0452	P0453	P0455	P0456	P2401 P2402	P2419	P2420
Reference orifice clogged	●								●	●	
Reference orifice high-flow	●								●	●	
Purge VSV stuck open		●					●				
Purge VSV stuck closed		●									
Canister pressure sensor stuck				●							
Canister pressure sensor noise				●							
Canister pressure sensor low output			●		●						
Canister pressure sensor high output			●			●					
Gross leak		●					●				
Small leak								●			
Leak detection pump stuck OFF	●								●	●	
Leak detection pump stuck ON	●								●	●	
Vent valve stuck closed	●								●	●	
Vent valve stuck open (vent)											●

Y

A106731E06

NOTICE:
If the 0.02 inch leak criterion difference between the first and second checks is greater than the specification, the DTCs corresponding to the leak criterion (P043E, P043F, P2401, P2402 and P2419) will be all stored.

ES

DESCRIPTION

Location of EVAP (Evaporative Emission) System:

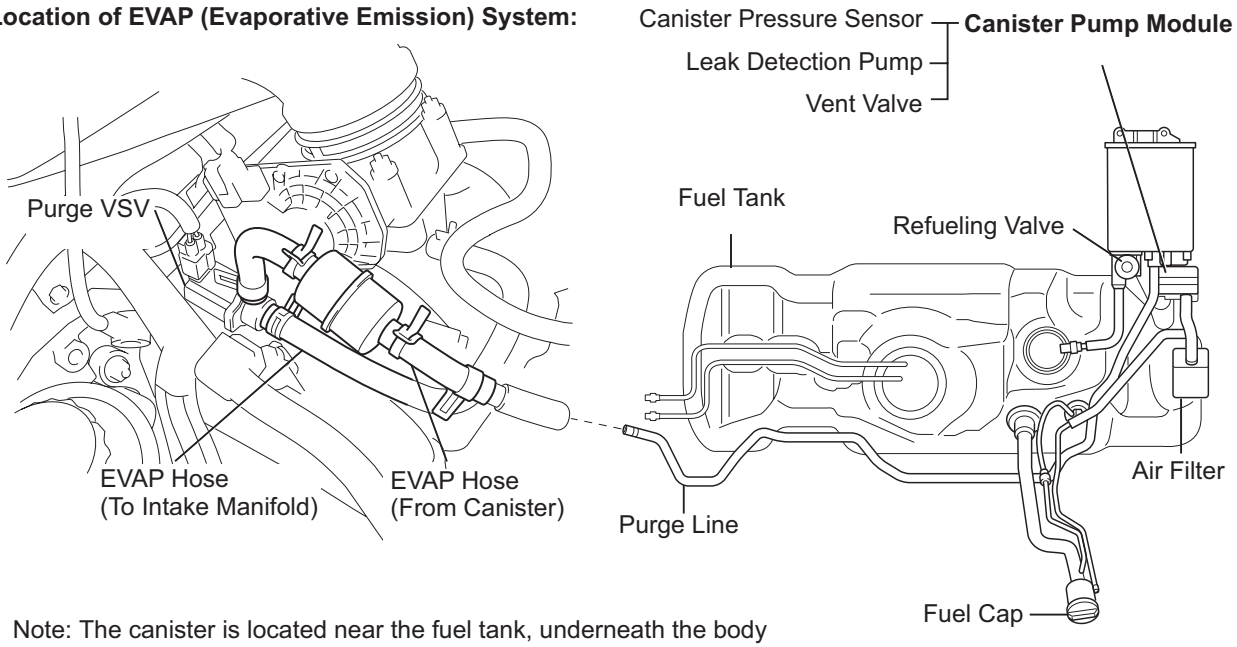

Note: The canister is located near the fuel tank, underneath the body

Y

A121764E01

EVAP System Circuit:

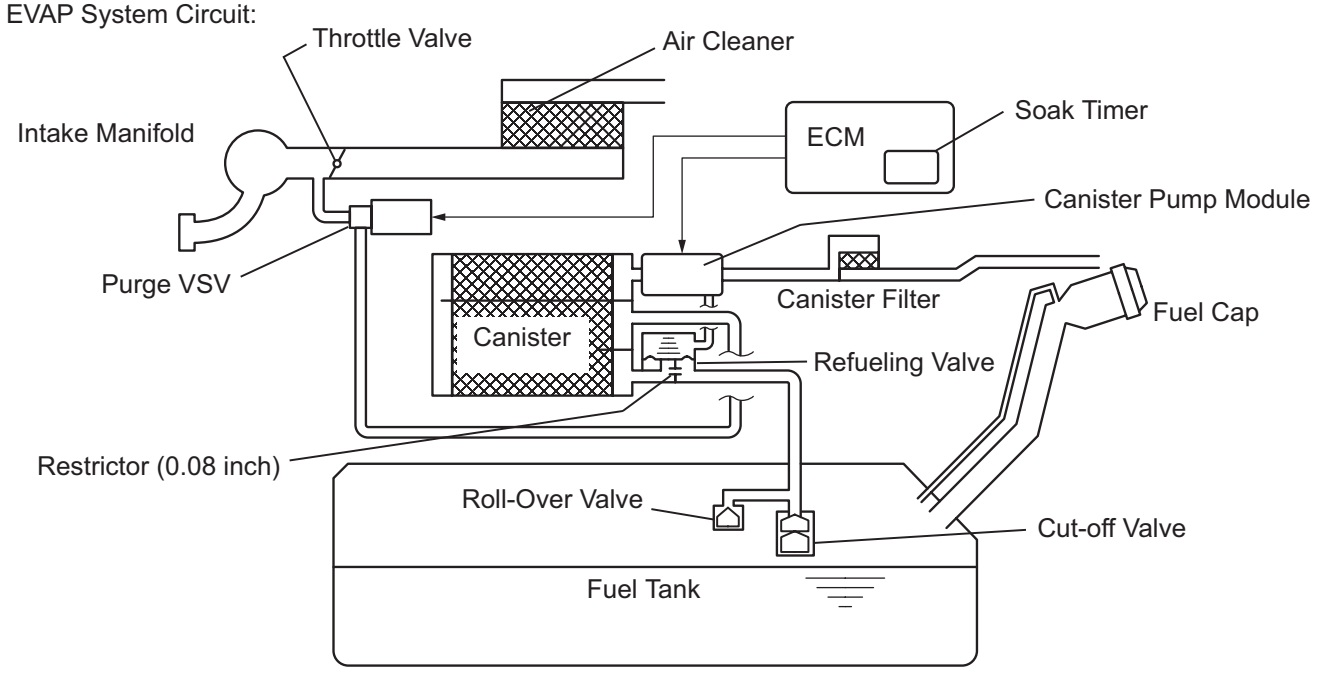

Y

A122570E01

NOTICE:
In this vehicle's EVAP system, turning ON the vent valve does not seal off the EVAP system. To check for leaks in the EVAP system, disconnect the air inlet vent hose and apply pressure from the atmosphere side of the canister.

While the engine is running, if a predetermined condition (closed-loop etc.) is met, the purge VSV is opened by the ECM and stored fuel vapors in the canister are purged to the intake manifold. The ECM changes the duty cycle ratio of the purge VSV to control purge flow volume.
The purge flow volume is also determined by the intake manifold pressure. Atmospheric pressure is allowed into the canister through the vent valve to ensure that the purge flow is maintained when the negative pressure (vacuum) is applied to the canister.
The following two monitors run to confirm appropriate EVAP system operation.

1. Key-off monitor

This monitor checks for EVAP (Evaporative Emission) system leaks and canister pump module malfunctions. The monitor starts 5 hours* after the ignition switch is turned to OFF. More than 5 hours are required to allow enough time for the fuel to cool down to stabilize the Fuel Tank Pressure (FTP), thus making the EVAP system monitor more accurate.
The leak detection pump creates negative pressure (vacuum) in the EVAP system and the pressure is measured. Finally, the ECM monitors for leaks from the EVAP system, and malfunctions in both the canister pump module and purge VSV, based on the EVAP pressure.
HINT:
*: If the engine coolant temperature is not below 35°C 5 hours after the ignition switch is turned off, the monitor check starts 2 hours later. If it is still not below 35°C 7 hours after the ignition switch is turned off, the monitor check starts 2.5 hours later.

2. Purge flow monitor

The purge flow monitor consists of the two monitors. The 1st monitor is always conducted every time and the 2nd monitor is activated if necessary.

- The 1st monitor
  While the engine is running and the purge VSV (Vacuum Switching Valve) is ON (open), the ECM monitors the purge flow by measuring the EVAP pressure change. If negative pressure is not created, the ECM begins the 2nd monitor.
- The 2nd monitor
  The vent valve is turned OFF (open) and the EVAP pressure is then measured. If the variation in the pressure is less than 0.5 kPa (3.75 mmHg), the ECM interprets this as the purge VSV being stuck closed, and illuminates the MIL and sets DTC P0441 (2 trip detection logic).

Atmospheric pressure check:
In order to ensure reliable malfunction detection, the variation between the atmospheric pressures, before and after conduction of the purge flow monitor, is measured by the ECM.

ES

EVAP Purge Flow:

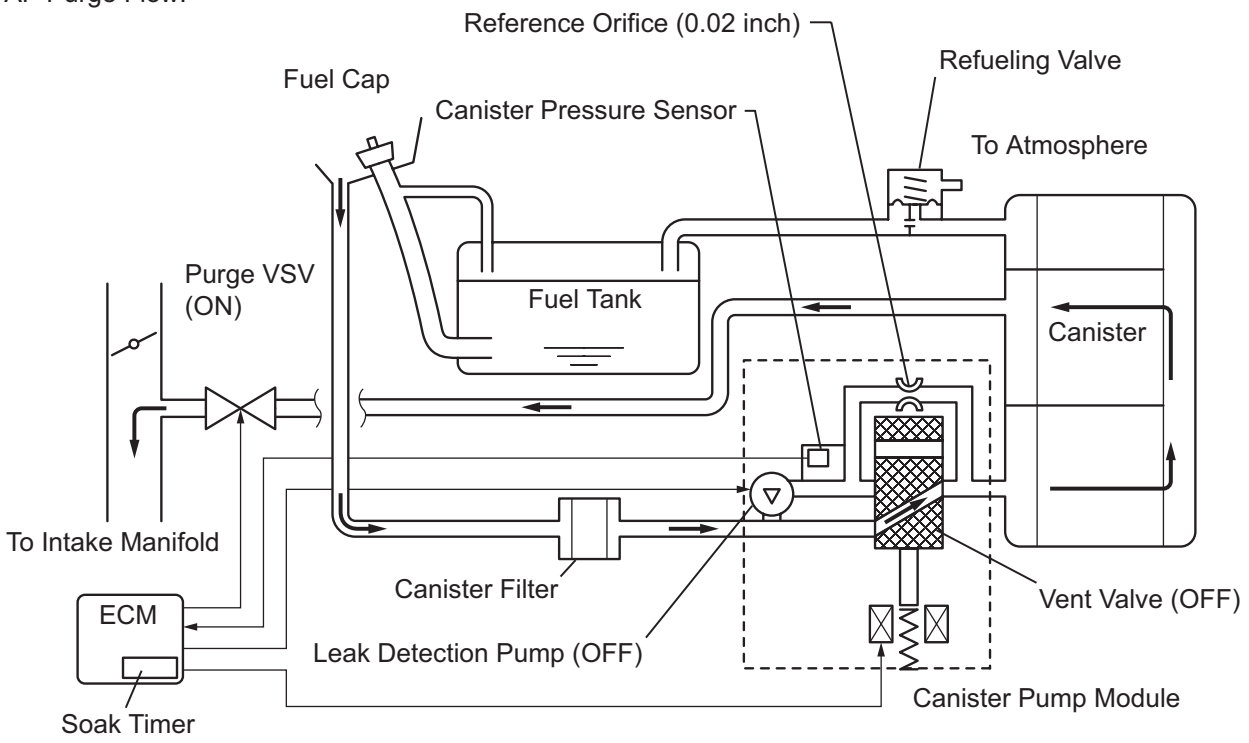

Y

A122571E01

Components	Operations
Canister	Contains activated charcoal to absorb EVAP (Evaporative Emissions) generated in fuel tank.
Cut-off valve	Located in fuel tank. Valve floats and closes when fuel tank 100 % full.
Purge VSV (Vacuum Switching Valve)	Opens or closes line between canister and intake manifold. ECM uses purge VSV to control EVAP purge flow. In order to discharge EVAP absorbed by canister to intake manifold, ECM opens purge VSV. EVAP discharge volume to intake manifold controlled by purge VSV duty cycle ratio (current-carrying time). (Open: ON, Close: OFF)
Refueling valve	Controls EVAP pressure from fuel tank to canister. Valve consists of diaphragm, spring and restrictor (diameter: 0.08 inch). When fuel vapor and pressure inside fuel tank increase, valve opens. While EVAP purged, valve closes and restrictor prevents large amount of vacuum from affecting pressure in fuel tank. Valve opened while refueling. When valve open, adding fuel into fuel tank possible.
Roll-over valve	Located in fuel tank. Valve closes by its own weight when vehicle overturns to prevent fuel from spilling out.
Soak timer	Built into ECM. To ensure accurate EVAP monitor, measures 5 hours (+- 15 min) after ignition switch turned to OFF. This allows fuel to cool down, stabilizing Fuel Tank Pressure (FTP). When approximately 5 hours elapsed, ECM activates.
Canister pump module	Consists of (a) to (d) below. Canister pump module cannot be disassembled.
(a) Vent valve	Vents and closes EVAP system. When ECM turns valve ON, EVAP system closed. When, ECM turns valve OFF, EVAP system vented. Negative pressure (vacuum) created in EVAP system to check for EVAP leaks by closing purge VSV, turning on vent valve (closed) and operating leak detection pump (refer to fig. 1).
(b) Canister pressure sensor	Indicates pressure as voltages. ECM supplies regulated 5 V to canister pressure sensor, and uses feedback from sensor to monitor EVAP system pressure (refer to fig 2).

Components	Operations
(c) Leak detection pump	Creates negative pressure (vacuum) in EVAP system for leak check.
(d) Reference orifice	Has opening with 0.02 inch diameter. Vacuum produced through orifice by closing purge VSV, turning off vent valve and operating leak detection pump, to monitor 0.02 inch leak criterion. 0.02 inch leak criterion indicates small leak of EVAP.

Canister Pump Module (fig. 1):

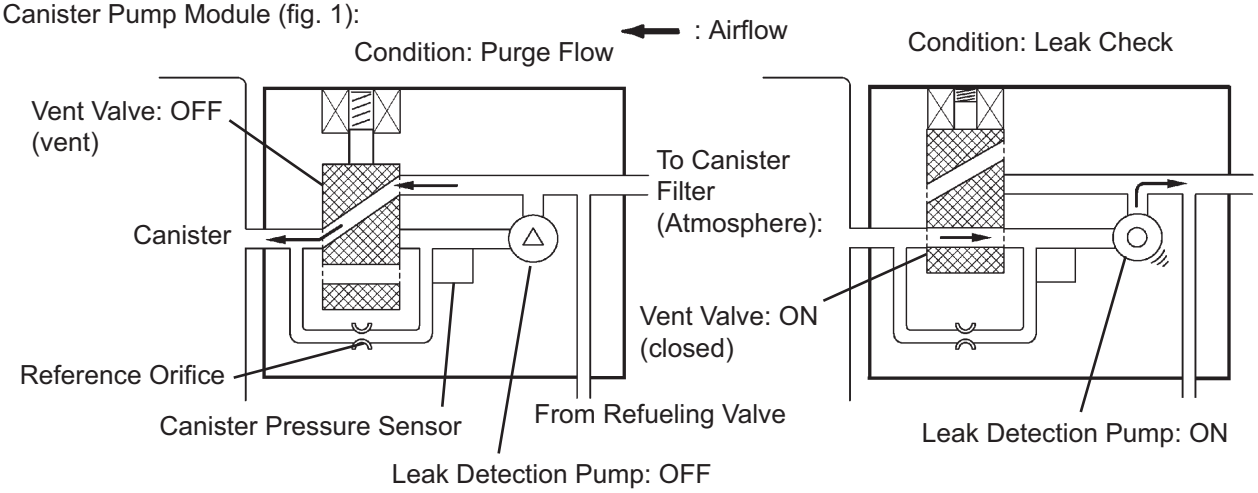

A097611E07

Canister Pressure Sensor Specification (fig. 2):

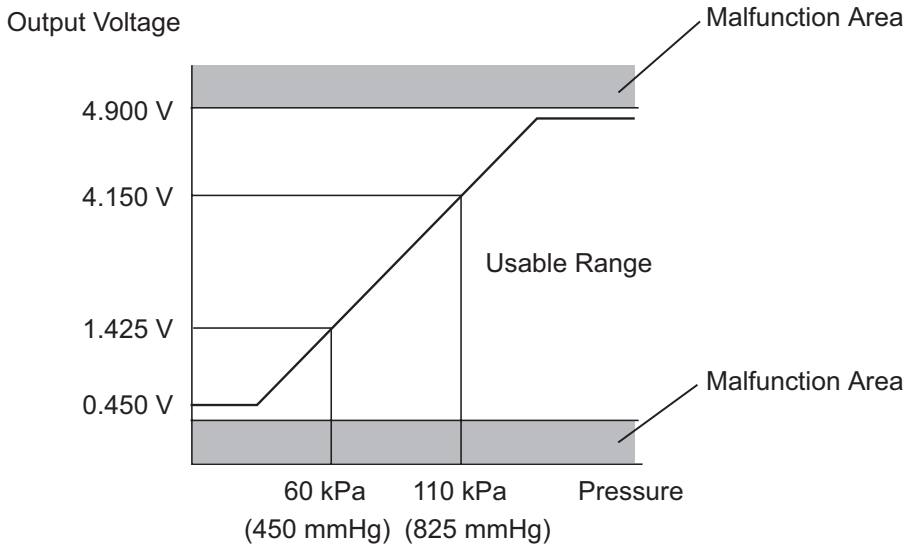

HINT:

Standard atmospheric pressure is 101.3 kPa (759.8mmHg)

A115543E02

ES

Soak Timer Circuit (fig. 3):

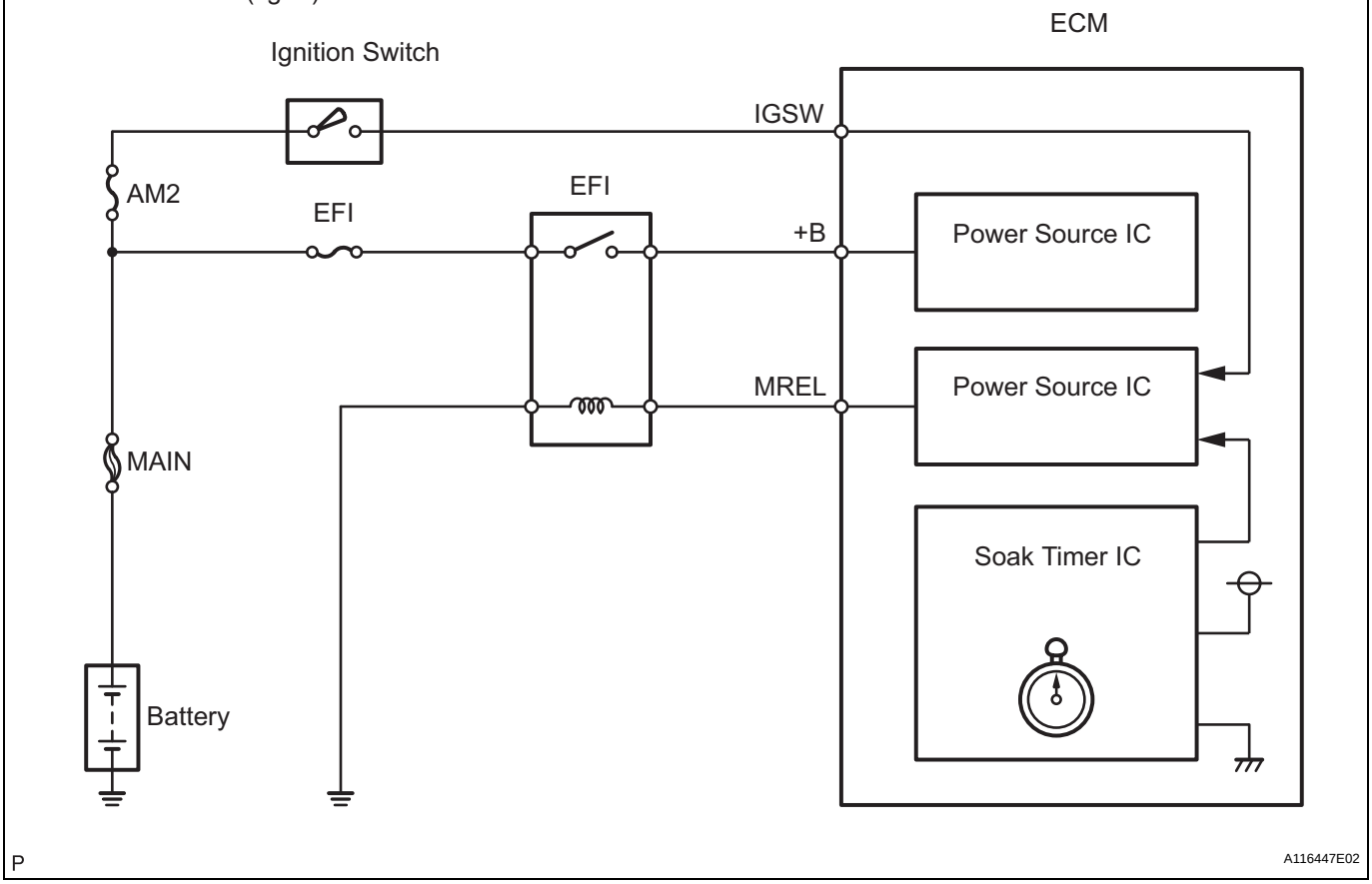

WIRING DIAGRAM

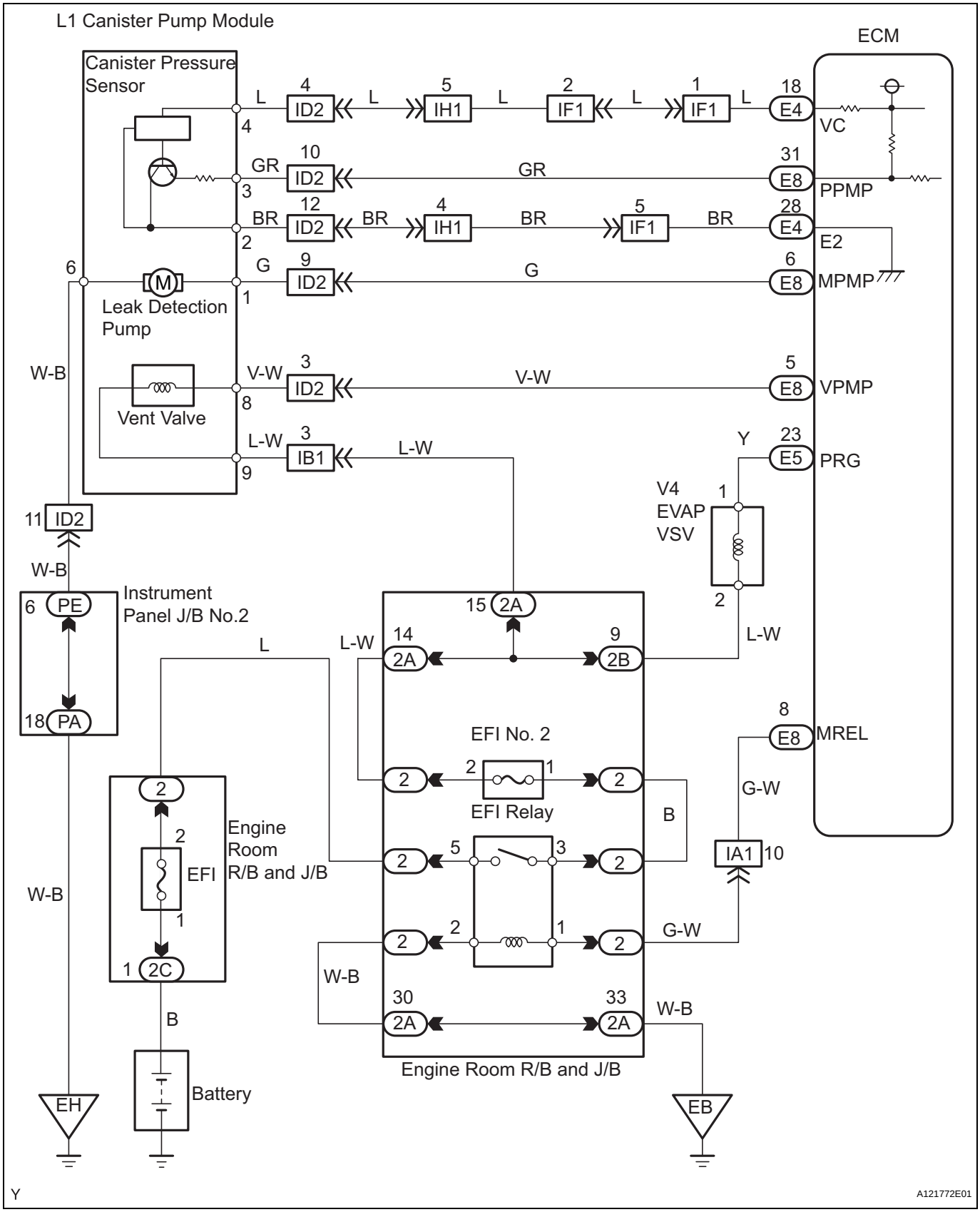

NOTICE:
The intelligent tester is required to conduct the following diagnostic troubleshooting procedure.

HINT:

- Using intelligent tester monitor results enables the EVAP (Evaporative Emission) system to be confirmed.
- Read freeze frame data using an intelligent tester. Freeze frame data record the engine condition when malfunctions are detected. When troubleshooting, freeze frame data can help determine if the vehicle was moving or stationary, if the engine was warmed up or not, if the air-fuel ratio was lean or rich, and other data, from the time the malfunction occurred.

1	**CONFIRM DTC**

(a) Turn the ignition switch to OFF and wait for 10 seconds.
(b) Turn the ignition switch to ON.
(c) Turn the ignition switch to OFF and wait for 10 seconds.
(d) Connect an intelligent tester to the DLC3.
(e) Turn the ignition switch to ON and turn the tester ON.
(f) Select the following menu items: DIAGNOSIS / ENHANCED OBD II / DTC INFO / CURRENT CODES.
(g) Confirm DTCs and freeze frame data.
If any EVAP system DTCs are set, the malfunctioning area can be determined using the table below.
NOTICE:
If the 0.02 inch leak criterion difference between the first and second checks is greater than the specification, the DTCs corresponding to the leak criterion (P043E, P043F, P2401, P2402 and P2419) will all be stored.

ES

DTCs / Malfunctioning Areas	P043E P043F	P0441	P0450	P0451	P0452	P0453	P0455	P0456	P2401 P2402	P2419	P2420
Reference orifice clogged	●								●	●	
Reference orifice high-flow	●								●	●	
Purge VSV stuck open		●					●				
Purge VSV stuck closed		●									
Canister pressure sensor stuck				●							
Canister pressure sensor noise				●							
Canister pressure sensor low output			●		●						
Canister pressure sensor high output			●			●					
Gross leak		●					●				
Small leak								●			
Leak detection pump stuck OFF	●								●	●	
Leak detection pump stuck ON	●								●	●	
Vent valve stuck closed	●								●	●	
Vent valve stuck open (vent)											●

Y

A106731E06

ES

NEXT

2	PERFORM EVAP SYSTEM CHECK (AUTO OPERATION)

NOTICE:

- **The EVAP SYSTEM CHECK (AUTO OPERATION) consists of five steps performed automatically by the intelligent tester. It takes a maximum of approximately 18 minutes.**
- **Do not perform the EVAP SYSTEM CHECK when the fuel tank is more than 90 % full because the cut-off valve may be closed and making the leak check of the fuel tank unavailable.**
- **Do not run the engine in this step.**
- **When the temperature of the fuel is 35°°C (95°F) or more, a large amount of vapor forms and any check results become inaccurate. When performing the EVAP SYSTEM CHECK, keep the temperature below 35°C (95°F).**

(a) Clear DTCs (see page ES-40).

(b) On the tester, select the following menu items: DIAGNOSIS / ENHANCED OBD II / SYSTEM CHECK / EVAP SYS CHECK / AUTO OPERATION.
(c) After the EVAP SYSTEM CHECK is completed, check for pending DTCs by selecting the following menu items: DIAGNOSIS / ENHANCED OBD II / DTC INFO / PENDING CODES.
HINT:
If no pending DTC is displayed, perform the Monitor Confirmation (see "Diagnostic Help" menu). After this confirmation, check for pending DTCs. If no DTC is displayed, the EVAP system is normal.

NEXT

ES

3	PERFORM EVAP SYSTEM CHECK (MANUAL OPERATION)

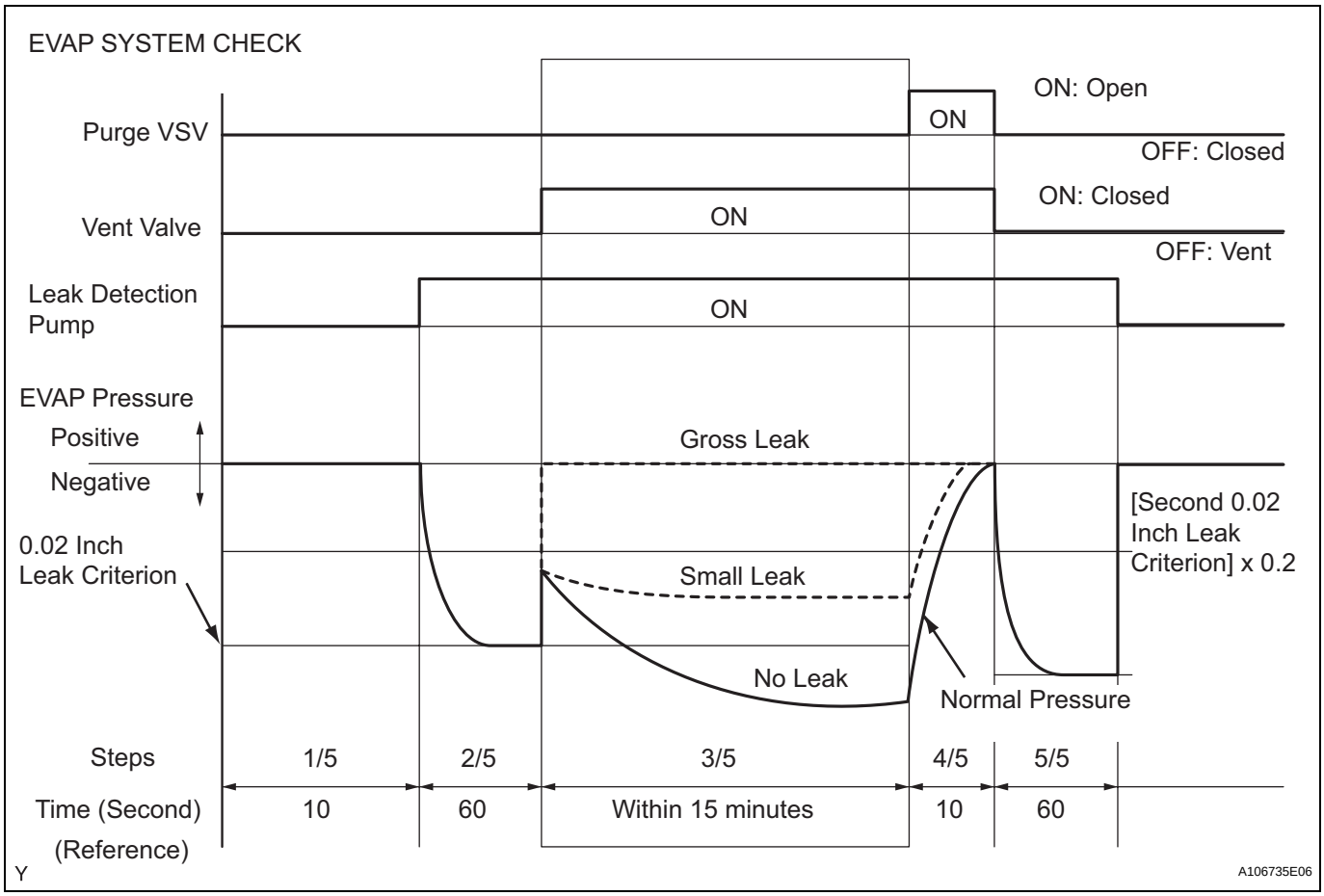

NOTICE:

- **In the EVAP SYSTEM CHECK (MANUAL OPERATION), the series of 5 EVAP SYSTEM CHECK steps is performed manually by the intelligent tester.**
- **Do not perform the EVAP SYSTEM CHECK when the fuel tank is more than 90 % full because the cut-off valve may be closed and making the leak check of the fuel tank unavailable.**
- **Do not run the engine in this step.**

- **When the temperature of the fuel is 35°C (95°F) or more, a large amount of vapor forms and any check results become inaccurate. When performing the EVAP SYSTEM CHECK, keep the temperature below 35°C (95°F).**

(a) Clear DTCs (see page ES-40).
(b) Select the following menu items: DIAGNOSIS / ENHANCED OBD II / SYSTEM CHECK / EVAP SYS CHECK / MANUAL OPERATION.

NEXT

4	PERFORM EVAP SYSTEM CHECK (STEP 1/5)

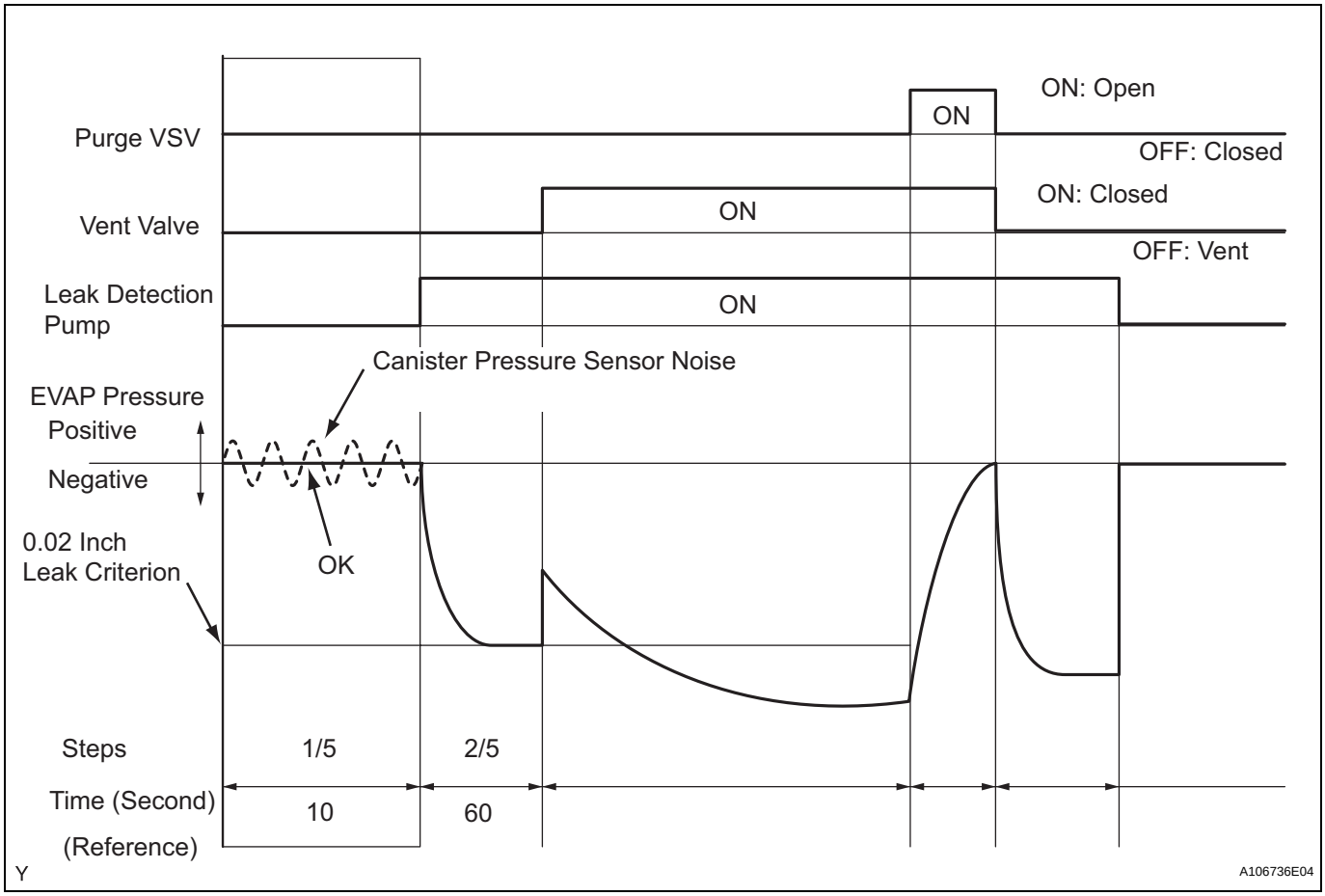

(a) Check the EVAP pressure in step 1/5.

Result

DTCs*	Test Results	Suspected Trouble Areas	Proceed To
-	Virtually no variation in EVAP pressure	Not yet determined	A
P0451	EVAP pressure fluctuates by +-0.3 kPa (2.25 mmHg) or more	Canister pressure sensor noise	B

*: These DTCs are already present in the ECM when the vehicle arrives and are confirmed in step 1.

B	Go to step 30

A

5	PERFORM EVAP SYSTEM CHECK (STEP 1/5 TO 2/5)

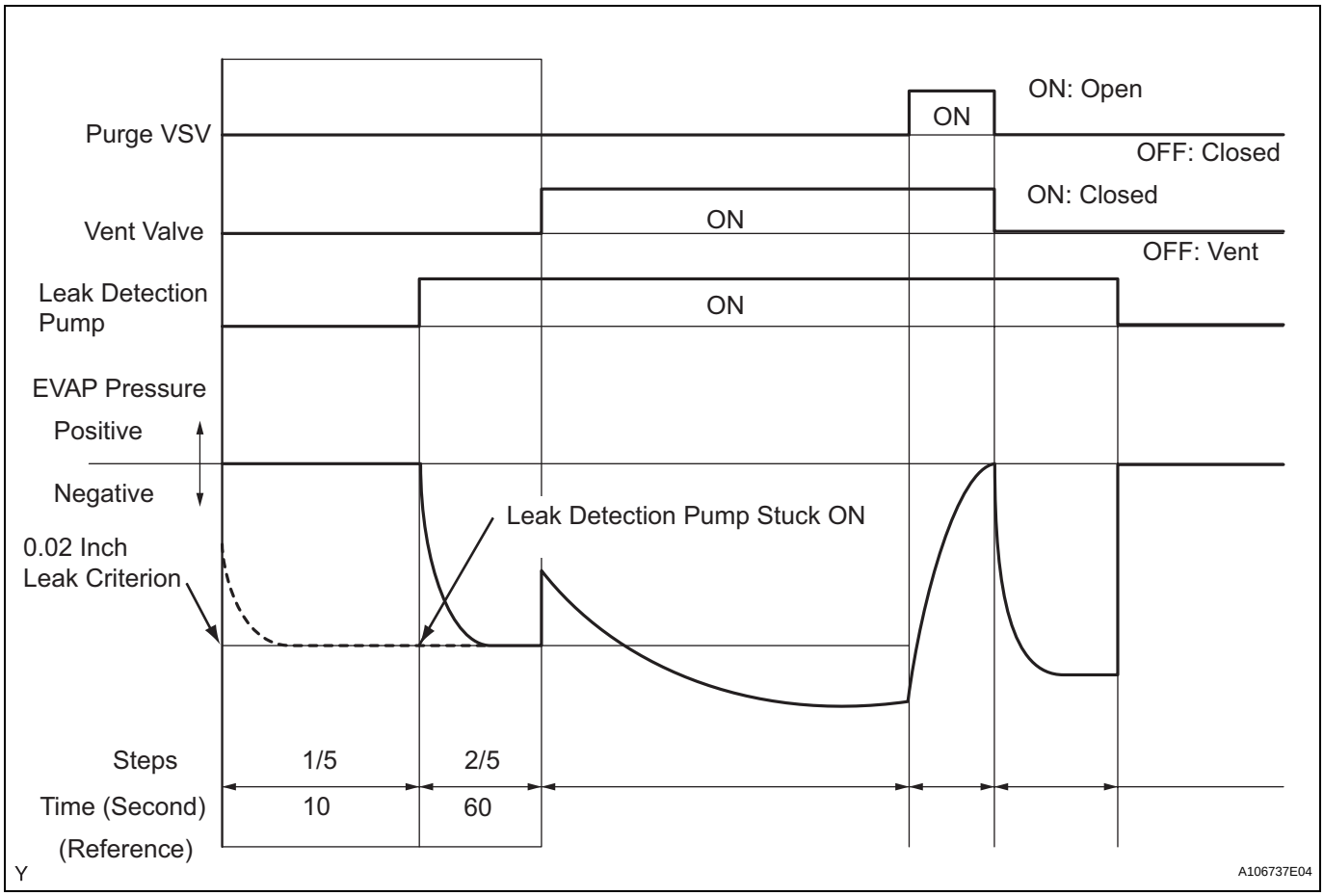

(a) Check the EVAP pressure in step 1/5 and 2/5.

Result

DTCs*	Test Results	Suspected Trouble Areas	Proceed To
-	Virtually no variation in EVAP pressure during step 1/5. Then decreases to 0.02 inch leak criterion	Not yet determined	A
P2402	Small difference between EVAP pressures during steps 1/5 and 2/5	Leak detection pump stuck ON	B

*: These DTCs are already present in the ECM when the vehicle arrives and are confirmed in step 1.
HINT:
The first 0.02 inch leak criterion is the value determined in step 2/5.

B → Go to step 23

A

6	PERFORM EVAP SYSTEM CHECK (STEP 2/5)

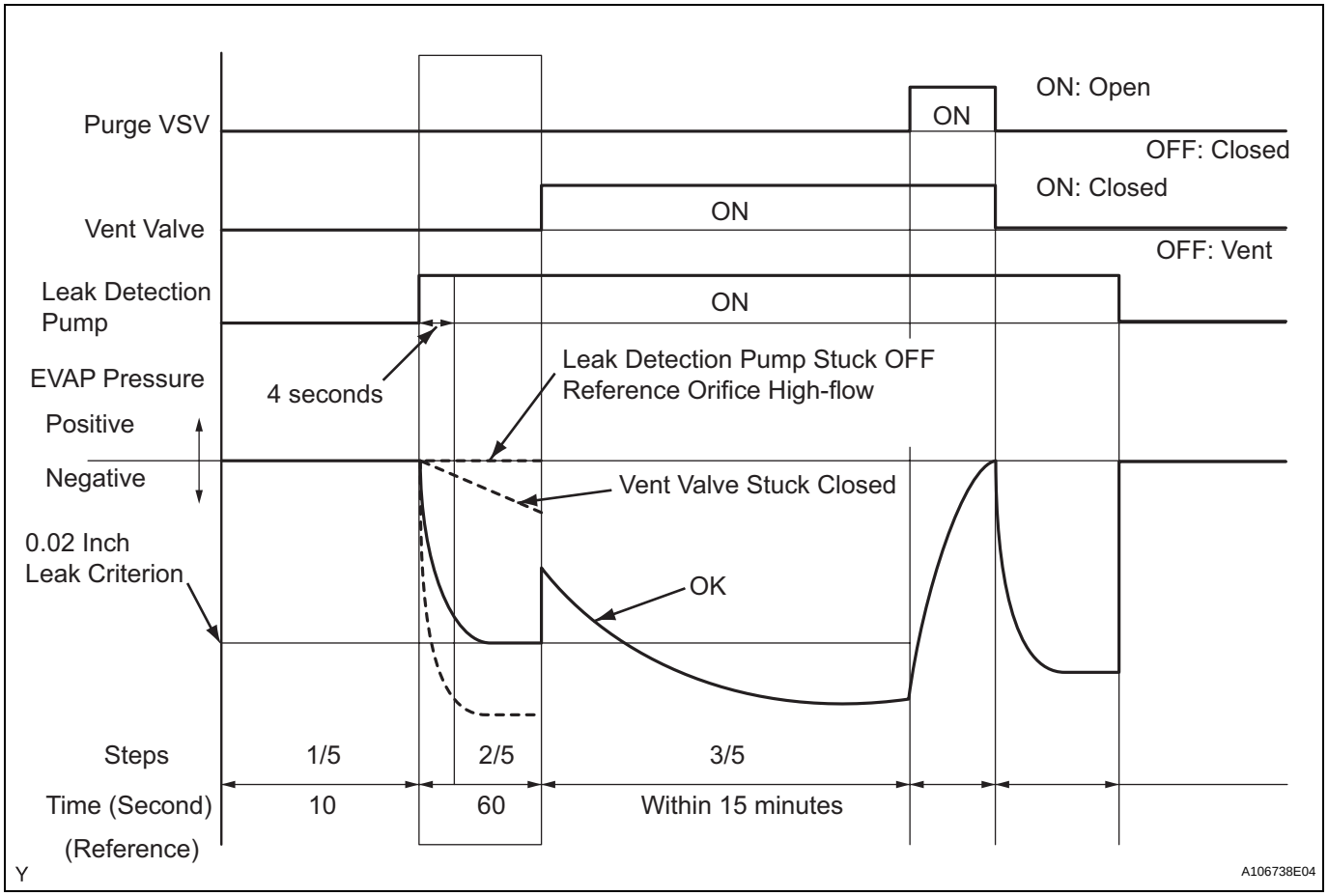

HINT:
Make a note of the pressures checked in steps (a) and (b) below.

(a) Check the EVAP pressure 4 seconds after the leak detection pump is activated*.

(b) Check the EVAP pressure again when it has stabilized. This pressure is the 0.02 inch leak criterion.

*: The leak detection pump begins to operate as step 1/5 is proceeded to step 2/5.

Result

DTCs*	Test Results	Suspected Trouble Areas	Proceed To
-	EVAP pressure in step (b) between -4.85 kPa and -1.06 kPa (-36.38 mmHg and -7.95 mmHg)	Not yet determined	A
P043F and P2401	EVAP pressure in step (b) -1.06 kPa (-7.95 mmHg) or more	• Reference orifice high-flow • Leak detection pump stuck OFF	B
P043E	EVAP pressure in step (b) below -4.85 kPa (-36.38 mmHg)	Reference orifice clogged	C
P2419	EVAP pressure in step (a) more than -1.06 kPa (-7.95 mmHg)	Vent valve stuck closed	D

*: These DTCs are already present in the ECM when the vehicle arrives and are confirmed in step 1.

B	Go to step 11
C	Go to step 30
D	Go to step 19

A

7	PERFORM EVAP SYSTEM CHECK (STEP 2/5 TO 3/5)

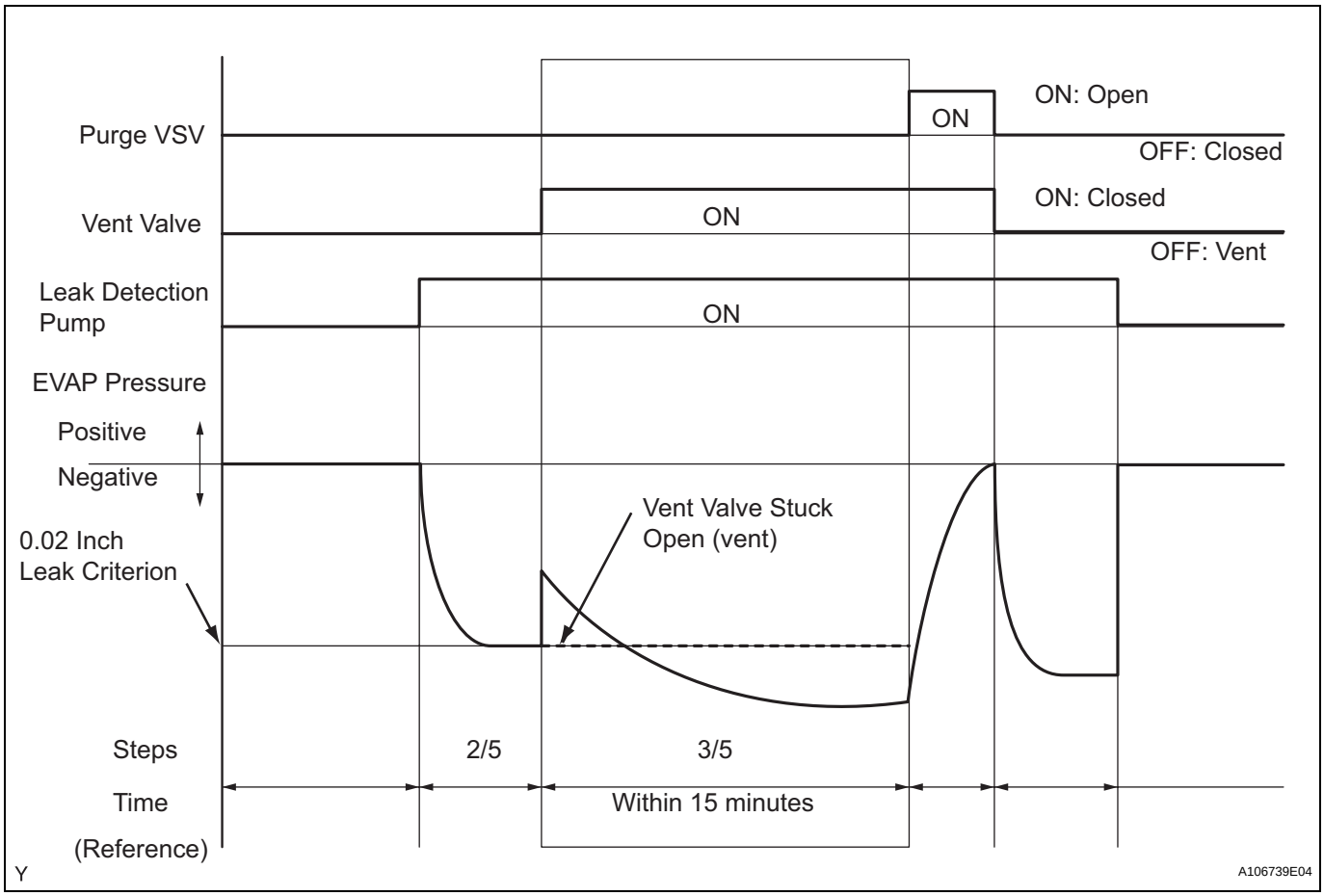

(a) Check the EVAP pressure increase in step 3/5.

Result

DTCs*	Test Results	Suspected Trouble Areas	Proceed To
-	EVAP pressure increases by 0.3 kPa (2.25 mmHg) or more within 10 seconds of proceeding from step 2/5 to step 3/5	Not yet determined	A
P2420	No variation in EVAP pressure despite proceeding from step 2/5 to step 3/5	Vent valve stuck open (vent)	B
P0451	No variation in EVAP pressure during steps 1/5 through 3/5	Canister pressure sensor malfunction stuck	C

*: These DTCs are already present in the ECM when the vehicle arrives and are confirmed in step 1.

B	Go to step 20
C	Go to step 30

A

8	PERFORM EVAP SYSTEM CHECK (STEP 3/5)

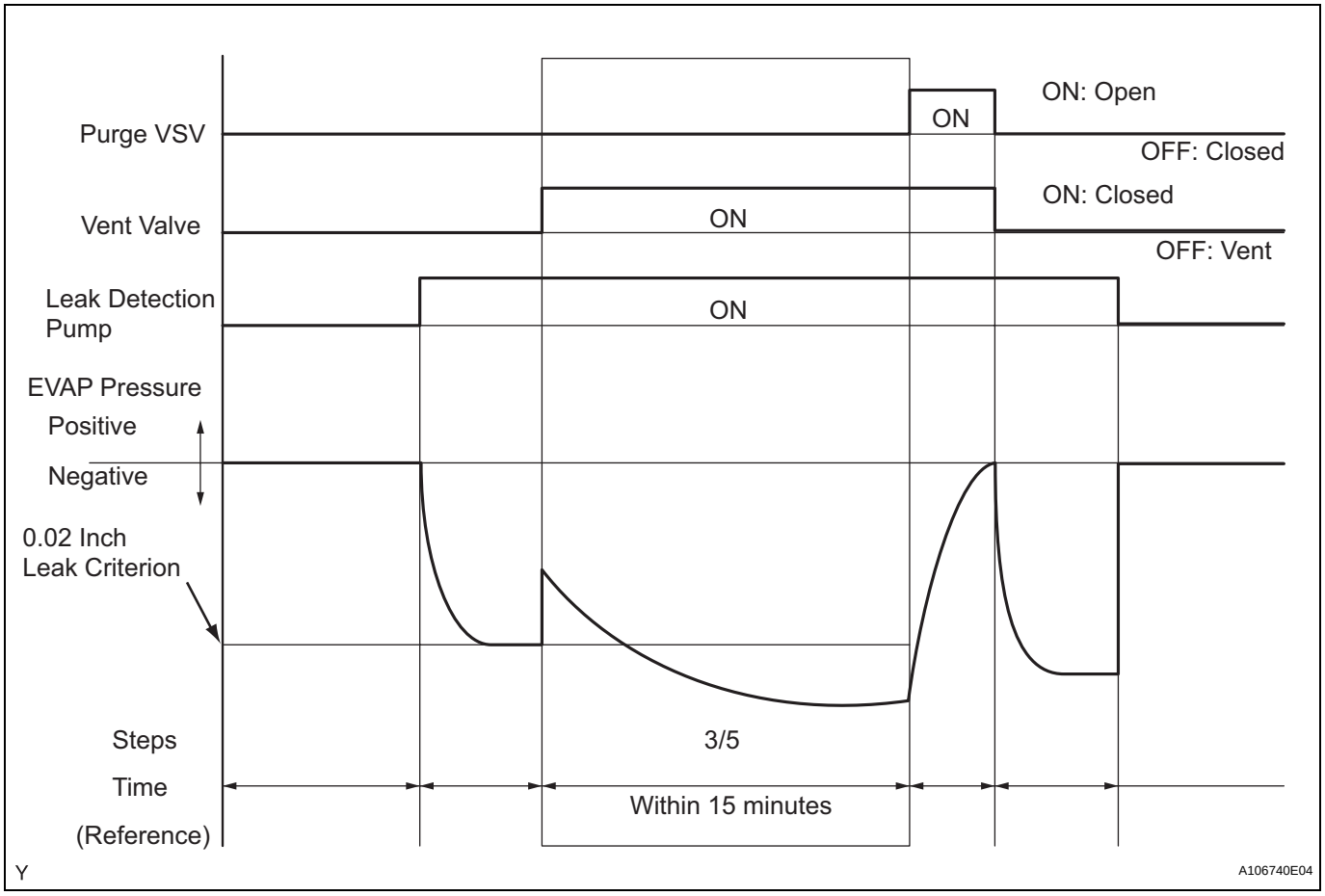

(a) Wait until the EVAP pressure change is less than 0.1 kPa (0.75 mmHg) for 30 seconds.

(b) Measure the EVAP pressure and record it.
HINT:
A few minutes are required for the EVAP pressure to become saturated. When there is little fuel in the fuel tank, it takes up to 15 minutes (900 seconds).

NEXT

9	PERFORM EVAP SYSTEM CHECK (STEP 4/5)

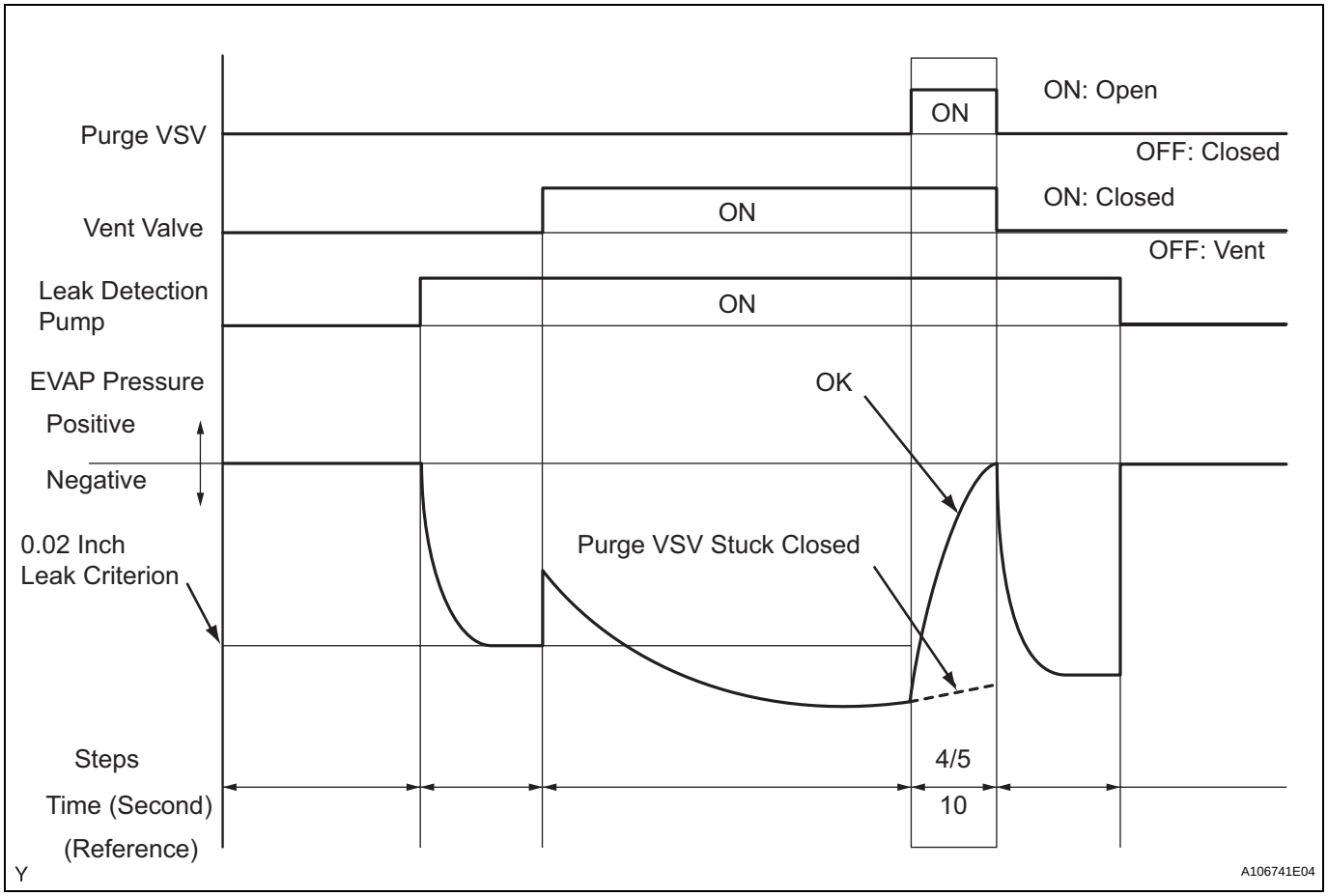

(a) Check the EVAP pressure in step 4/5.

Result

DTCs*	Test Results	Suspected Trouble Areas	Proceed To
-	EVAP pressure increases by 0.3 kPa (2.25 mmHg) or more within 10 seconds of proceeding from step 3/5 to step 4/5	Not yet determined	A
P0441	EVAP pressure increases by 0.3 kPa (2.25 mmHg) or more within 10 seconds of proceeding from step 3/5 to step 4/5	Problems in EVAP hose between pure VSV and intake manifold	B
P0441	Variation in EVAP pressure less than 0.3 kPa (2.25 mmHg) for 10 seconds, after proceeding from step 3/5 to step 4/5	Purge VSV stuck closed	C

*: These DTCs are already present in the ECM when the vehicle arrives and are confirmed in step 1.

B	Go to step 15
C	Go to step 12

A

10	PERFORM EVAP SYSTEM CHECK (STEP 5/5)

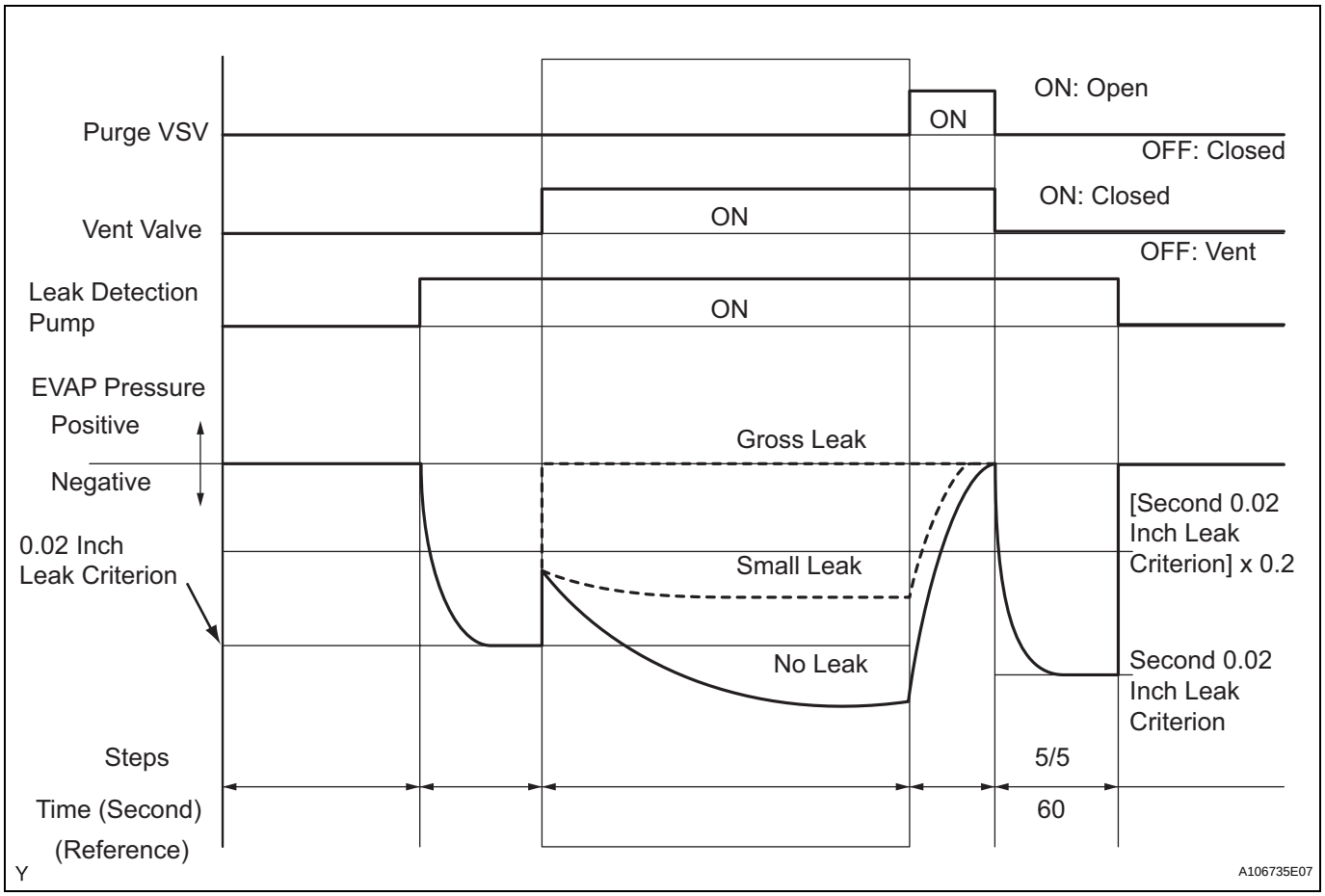

(a) Check the EVAP pressure in step 5/5.
(b) Compare the EVAP pressure in step 3/5 and the second 0.02 inch leak criterion (step 5/5).

Result

DTCs*	Test Results	Suspected Trouble Areas	Proceed To
-	EVAP pressure (step 3/5) lower than second 0.02 inch leak criterion (step 5/5)	Not yet determined (no leakage from EVAP system)	A
P0441 and P0455	EVAP pressure (step 3/5) higher than [second 0.02 inch leak criterion (step 5/5) x 0.2]	• Purge VSV stuck open • EVAP gross leak	B
P0456	EVAP pressure (step 3/5) higher than second 0.02 inch leak criterion (step 5/5)	EVAP small leak	B

*: These DTCs are already present in the ECM when the vehicle arrives and are confirmed in step 1.

A	Go to step 36
B	Go to step 12

11	PERFORM EVAP SYSTEM CHECK (STEP 3/5)

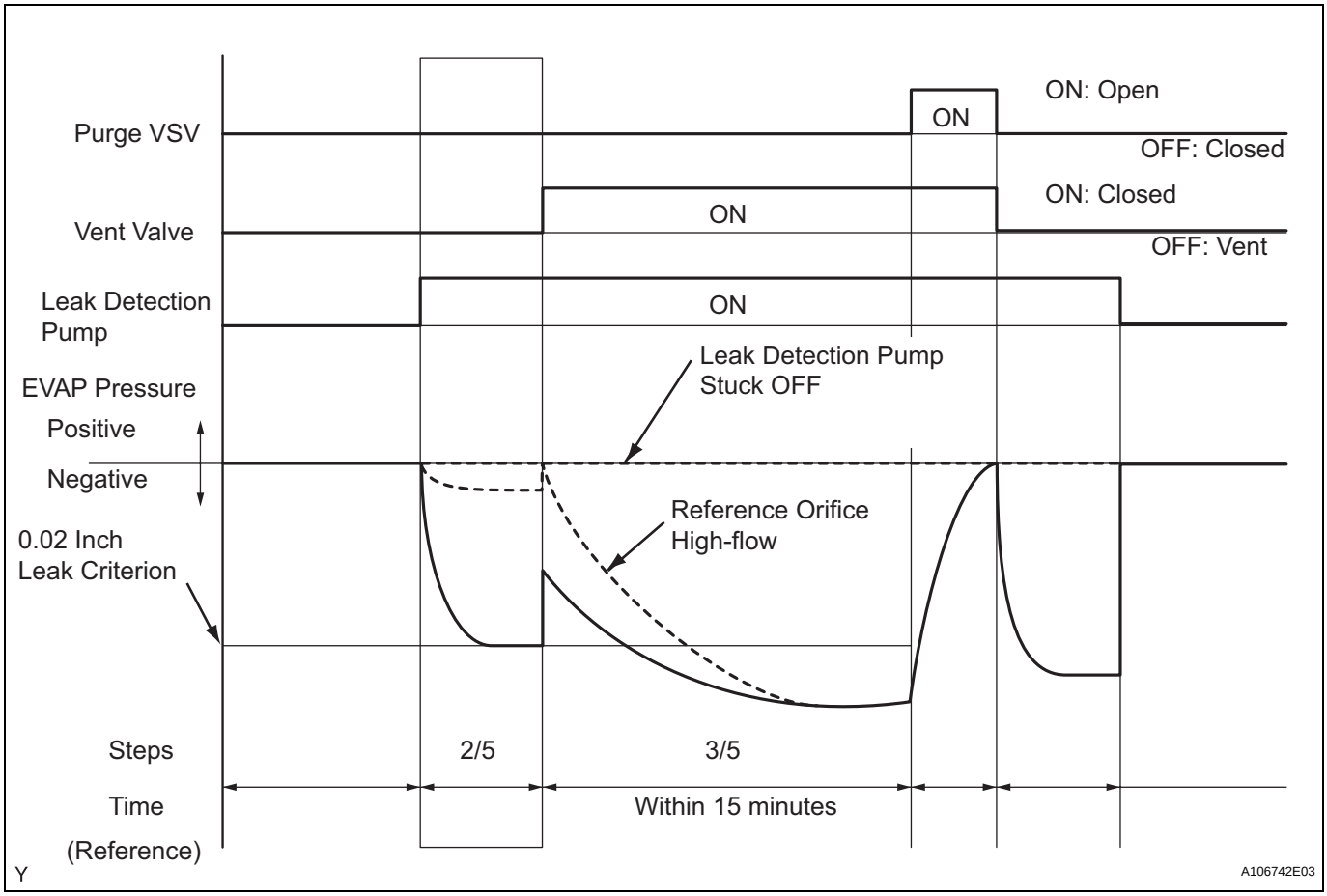

(a) Check the EVAP pressure in step 3/5.

Result

DTCs*	Test Results	Suspected Trouble Areas	Proceed To
P043F	EVAP pressure less than [0.02 inch leak criterion] measured at 2/5	Reference orifice high-flow	A
P2401	EVAP pressure almost same as [0.02 inch leak criterion] measured at 2/5	Leak detection pump stuck OFF	B

*: These DTCs are already present in the ECM when the vehicle arrives and are confirmed in step 1.
HINT:
The first 0.02 inch leak criterion is the value determined in step 2/5.

A	Go to step 30
B	Go to step 23

12 PERFORM ACTIVE TEST USING INTELLIGENT TESTER (PURGE VSV)

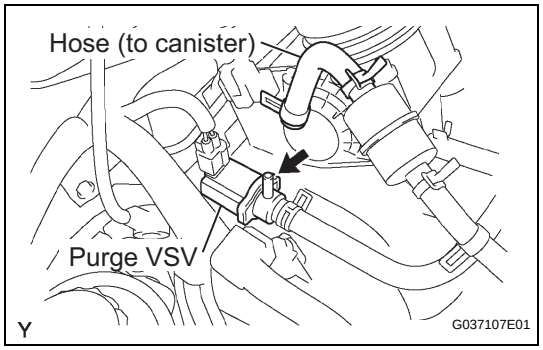

(a) On the intelligent tester, select the following menu items: DIAGNOSIS / ENHANCED OBD II/ ACTIVE TEST / EVAP VSV.
(b) Disconnect the hose (connected to the canister) from the purge VSV.
(c) Start the engine.
(d) Using the tester, turn off the purge VSV (EVAP VSV: OFF).
(e) Use your finger to confirm that the purge VSV has no suction.
(f) Using the tester, turn on the purge VSV (EVAP VSV: ON).
(g) Use your finger to confirm that the purge VSV has suction.

ES

Result

Test Results	Suspected Trouble Areas	Proceed To
No suction when Purge VSV turned OFF, and suction applied when turned ON	Purge VSV normal	A
Suction applied when purge VSV turned OFF	Purge VSV stuck open	B
No suction when purge VSV turned ON	• Purge VSV stuck closed • Problems with EVAP hose between purge VSV and intake manifold	C

(h) Reconnect the hose.

B → **Go to step 14**

C → **Go to step 15**

A

13 CHECK FUEL CAP ASSEMBLY

(a) Check that the fuel cap is correctly installed.
(b) Confirm that the fuel cap is tightened until a few click sounds are heard.
HINT:
If an EVAP tester is available, check the fuel cap using the tester.
(1) Remove the fuel cap and install it onto a fuel cap adaptor.
(2) Connect an EVAP tester pump hose to the adaptor, and pressurize the cap to 3.2 to 3.7 kPa (24 to 28 mmHg) using an EVAP tester pump.
(3) Seal the adaptor and wait for 2 minutes.
(4) Check the pressure. If the pressure is 2 kPa (15 mmHg) or more, the fuel cap is normal.
(c) Reinstall the fuel cap.

Result

Test Results	Suspected Trouble Areas	Proceed To
Fuel cap correctly installed	-	A
Fuel cap loose	• Fuel cap improperly installed • Defective fuel cap • Fuel cap does not meet OEM specifications	B
No fuel cap	-	C

A	Go to step 29
B	Go to step 27
C	Go to step 28

ES

14 INSPECT DUTY VACUUM SWITCHING VALVE (PURGE VSV)

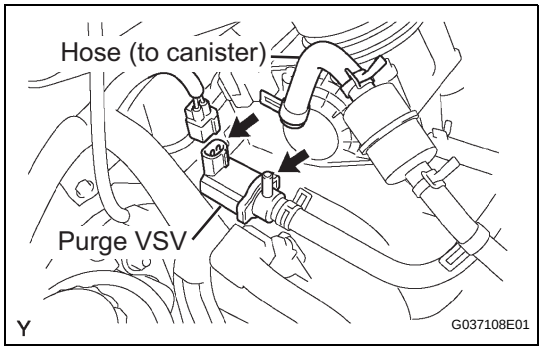

(a) Turn the ignition switch to OFF.
(b) Disconnect the V4 purge VSV connector.
(c) Disconnect the hose (connected to the canister) from the purge VSV.
(d) Start the engine.
(e) Use your finger to confirm that the purge VSV has no suction.

Result

Test Results	Suspected Trouble Areas	Proceed To
No suction	ECM	A
Suction applied	Purge VSV	B

(f) Reconnect the purge VSV connector.
(g) Reconnect the hose.

A	Go to step 35
B	Go to step 31

15 CHECK EVAP HOSE (PURGE VSV - INTAKE MANIFOLD)

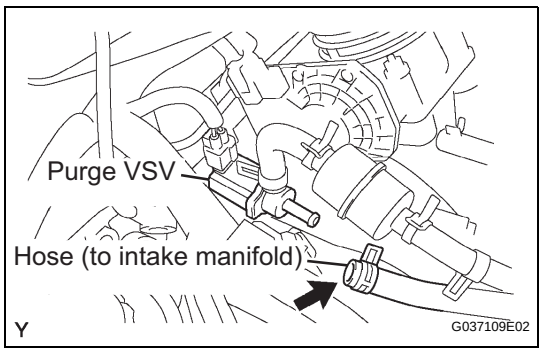

(a) Disconnect the hose (connected to the intake manifold) from the purge VSV.
(b) Start the engine.
(c) Use your finger to confirm that the hose has suction.

Result

Test Results	Suspected Trouble Areas	Proceed To
Suction applied	EVAP hose between purge VSV and intake manifold normal	A
No suction	• Intake manifold port • EVAP hose between purge VSV and intake manifold	B

(d) Reconnect the hose.

B → Go to step 26

A

16 INSPECT DUTY VACUUM SWITCHING VALVE (PURGE VSV)

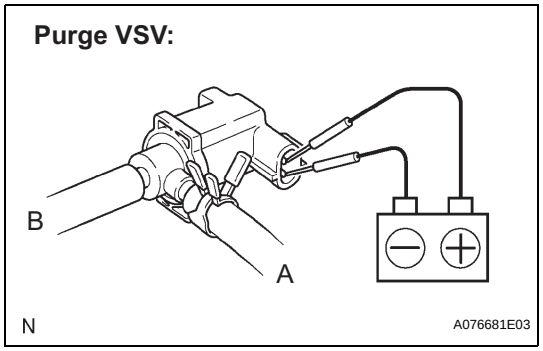

(a) Remove the purge VSV.
(b) Apply the battery voltage to the terminals of the purge VSV.
(c) Using an air gun, confirm that air flows from port A to port B.

Result

Test Results	Suspected Trouble Areas	Proceed To
Air flows	Purge VSV normal	A
No air flow	Purge VSV	B

(d) Install the purge VSV.

B → Go to step 31

A

17 CHECK HARNESS AND CONNECTOR (POWER SOURCE OF PURGE VSV)

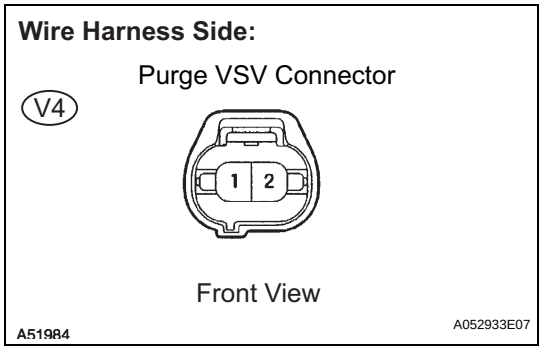

(a) Disconnect the V4 purge VSV connector.
(b) Turn the ignition switch to ON.
(c) Measure the voltage between terminal 1 of the purge VSV connector and the body ground.

Result

Test Results	Suspected Trouble Areas	Proceed To
Between 11 V and 14 V	Normal	A

Test Results	Suspected Trouble Areas	Proceed To
Other than result above	Wire harness or connectors between purge VSV and ECM	B

(d) Reconnect the purge VSV connector.

B → **Go to step 32**

A

18 CHECK HARNESS AND CONNECTOR (PURGE VSV - ECM)

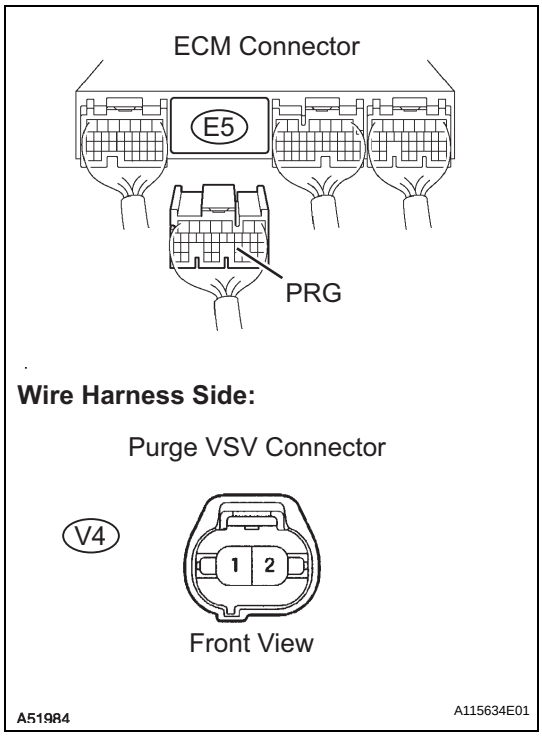

(a) Disconnect the E5 ECM connector and the V4 purge VSV connector.
(b) Check the resistance.

Standard Resistance

Tester Connections	Specified Conditions
PRG (E5-23) - Purge VSV (V4-1)	Below 1 Ω
PRG (E5-23) - Body ground	10 kΩ or higher
Purge VSV (V4-2) - Body ground	10 kΩ or higher

(c) Reconnect the purge VSV connector.
(d) Reconnect the ECM connector.

OK → **Go to step 35**

NG → **Go to step 32**

19 PERFORM ACTIVE TEST USING INTELLIGENT TESTER (FOR VENT VALVE)

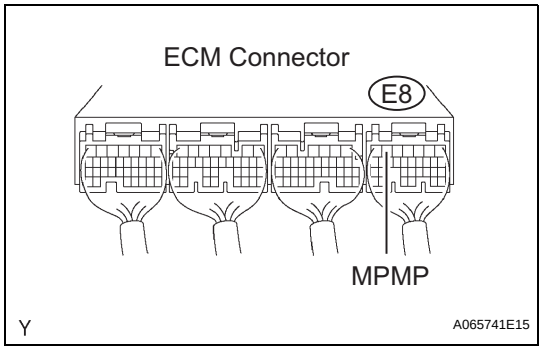

(a) Turn the ignition switch to ON.
(b) On the intelligent tester, select the following menu items: DIAGNOSIS / ENHANCED OBD II / ACTIVE TEST / VENT VALVE (ALONE).
(c) Measure the voltage between terminal VPMP of the ECM connector and the body ground when the vent valve is turned ON (close) and OFF (vent) using the tester.

Result

Test Results	Suspected Trouble Areas	Proceed To
Between 9 V and 14 V when OFF Below 3 V when ON	Vent valve	A
Below 3 V when OFF and ON	ECM	B

A	Go to step 22
B	Go to step 35

20 PERFORM ACTIVE TEST USING INTELLIGENT TESTER (FOR VENT VALVE)

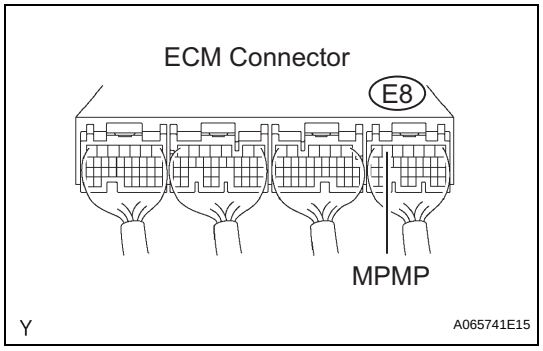

(a) Turn the ignition switch to ON.
(b) On the intelligent tester, select the following menu items: DIAGNOSIS / ENHANCED OBD II / ACTIVE TEST / VENT VALVE (ALONE).
(c) Measure the voltage between terminal VPMP of the ECM connector and the body ground when the vent valve is turned ON (close) and OFF (vent) using the tester.

ES

Result

Test Results	Suspected Trouble Areas	Proceed To
Below 3 V when OFF and ON	Power source of vent valve	A
Between 9 V and 14 V when OFF Below 3 V when ON	Vent valve	B
Between 9 V and 14 V when OFF and ON	ECM	C

B	Go to step 22
C	Go to step 35

A

21 INSPECT CANISTER PUMP MODULE (POWER SOURCE FOR VENT VALVE)

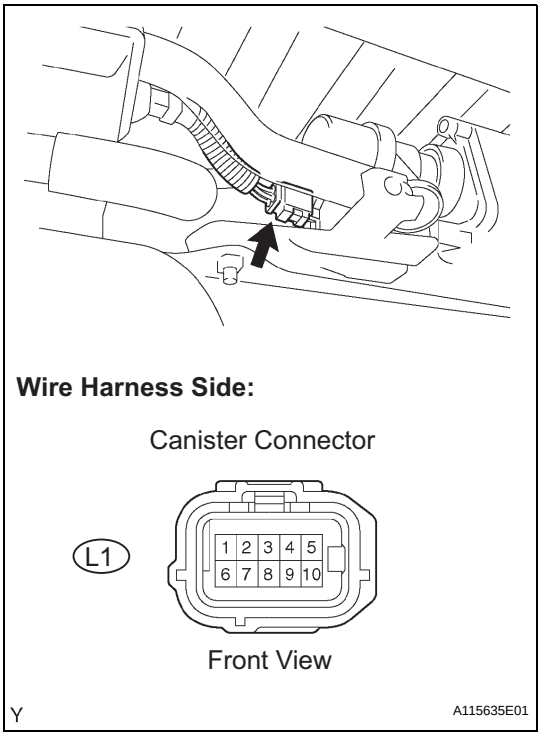

(a) Turn the ignition switch OFF.
(b) Disconnect the L1 canister connector.
(c) Turn the ignition switch to ON.
(d) Measure the voltage between terminal 9 of the canister connector and the body ground.

Result

Test Results	Suspected Trouble Areas	Proceed To
Between 9 V and 14 V	Normal	A
Between 0 V and 3 V	Power source wire harness of vent valve	B

(e) Reconnect the canister connector.

B → **Go to step 32**

A

22 INSPECT CANISTER PUMP MODULE (VENT VALVE OPERATION)

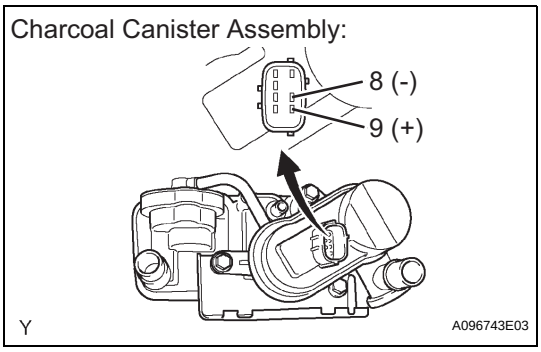

(a) Turn the ignition switch to OFF.
(b) Disconnect the L1 canister connector.
(c) Apply the battery voltage to terminals 9 and 8 of the canister pump module.
(d) Touch the canister pump module to confirm the vent valve operation.

Result

Test Results	Suspected Trouble Areas	Proceed To
Operating	Wire harness between vent valve and ECM	A
Not operating	Vent valve	B

(e) Reconnect the canister connector.

A	Go to step 32
B	Go to step 30

23	PERFORM ACTIVE TEST USING INTELLIGENT TESTER (FOR CANISTER PUMP MODULE (LEAK DETECTION PUMP))

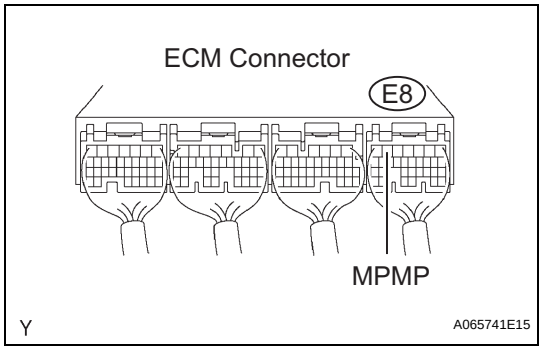

(a) On the intelligent tester, select the following menu items: DIAGNOSIS / ENHANCED OBD II / ACTIVE TEST / VACUUM PUMP (ALONE).

(b) Measure the voltage between MPMP terminal of the ECM connector and the body ground when the leak detection pump is turned ON and OFF using the tester.

ES

Result

Test Results	Suspected Trouble Areas	Proceed To
Between 0 V and 3 V when OFF Between 9 V and 14 V when ON	ECM normal	A
Between 9 V and 14 V when OFF Between 0 V and 3 V when ON	ECM	B

B	Go to step 35

A

24	CHECK HARNESS AND CONNECTOR (CANISTER PUMP MODULE - ECM)

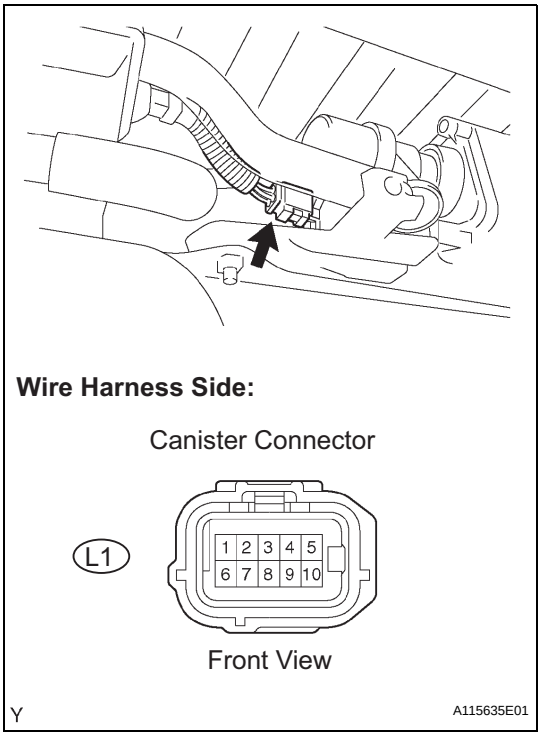

(a) Turn the ignition switch to OFF.
(b) Disconnect the L1 canister connector.
(c) Turn the ignition switch to ON.
(d) On the intelligent tester, select the following menu items: DIAGNOSIS / ENHANCED OBD II / ACTIVE TEST / VACUUM PUMP (ALONE).
(e) Turn the leak detection pump ON.
(f) Measure the voltage between terminal 1 of the canister connector and the body ground.

ES

Result

Test Results	Suspected Trouble Areas	Proceed To
Between 9 V and 14 V	Normal	A
Between 0 V and 3 V	Wire harness between ECM and leak detection pump	B

(g) Reconnect the canister connector.

B → Go to step 32

A

25	CHECK HARNESS AND CONNECTOR (CANISTER PUMP MODULE - GROUND)

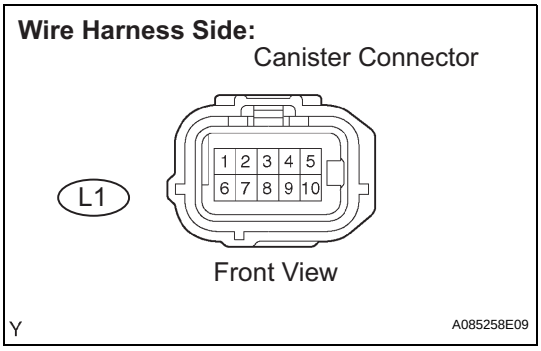

(a) Disconnect the L1 canister connector.
(b) Turn the ignition switch to OFF.
(c) Check the resistance between terminal 6 of the canister connector and the body ground.

Result

Test Results	Suspected Trouble Areas	Proceed To
Below 1 Ω	Leak detection pump	A

Test Results	Suspected Trouble Areas	Proceed To
10 kΩ or higher	Wire harness between leak detection pump and body ground	B

(d) Reconnect the canister connector.

A	Go to step 30
B	Go to step 32

26 INSPECT INTAKE MANIFOLD (EVAP PURGE PORT)

(a) Stop the engine.
(b) Disconnect the EVAP hose from the intake manifold.
(c) Start the engine.
(d) Use your finger to confirm that the port of the intake manifold has suction.

ES

Result

Test Results	Suspected Trouble Areas	Proceed To
Suction applied	EVAP hose between intake manifold and purge VSV	A
No suction	Intake manifold	B

(e) Reconnect the EVAP hose.

A	Go to step 33
B	Go to step 34

27 CORRECTLY REINSTALL OR REPLACE FUEL CAP

HINT:
- When reinstalling the fuel cap, tighten it until a few click sounds are heard.
- When replacing the fuel cap, use a fuel cap that meets OEM specifications, and install it until a few click sounds are heard.

NEXT	Go to step 37

28 REPLACE FUEL CAP ASSEMBLY

HINT:
When installing the fuel cap, tighten it until a few click sounds are heard.

NEXT	Go to step 37

29 REPAIR EVAP LEAKING PART

(a) Reinstall the fuel cap.
(b) Disconnect the vent hose.

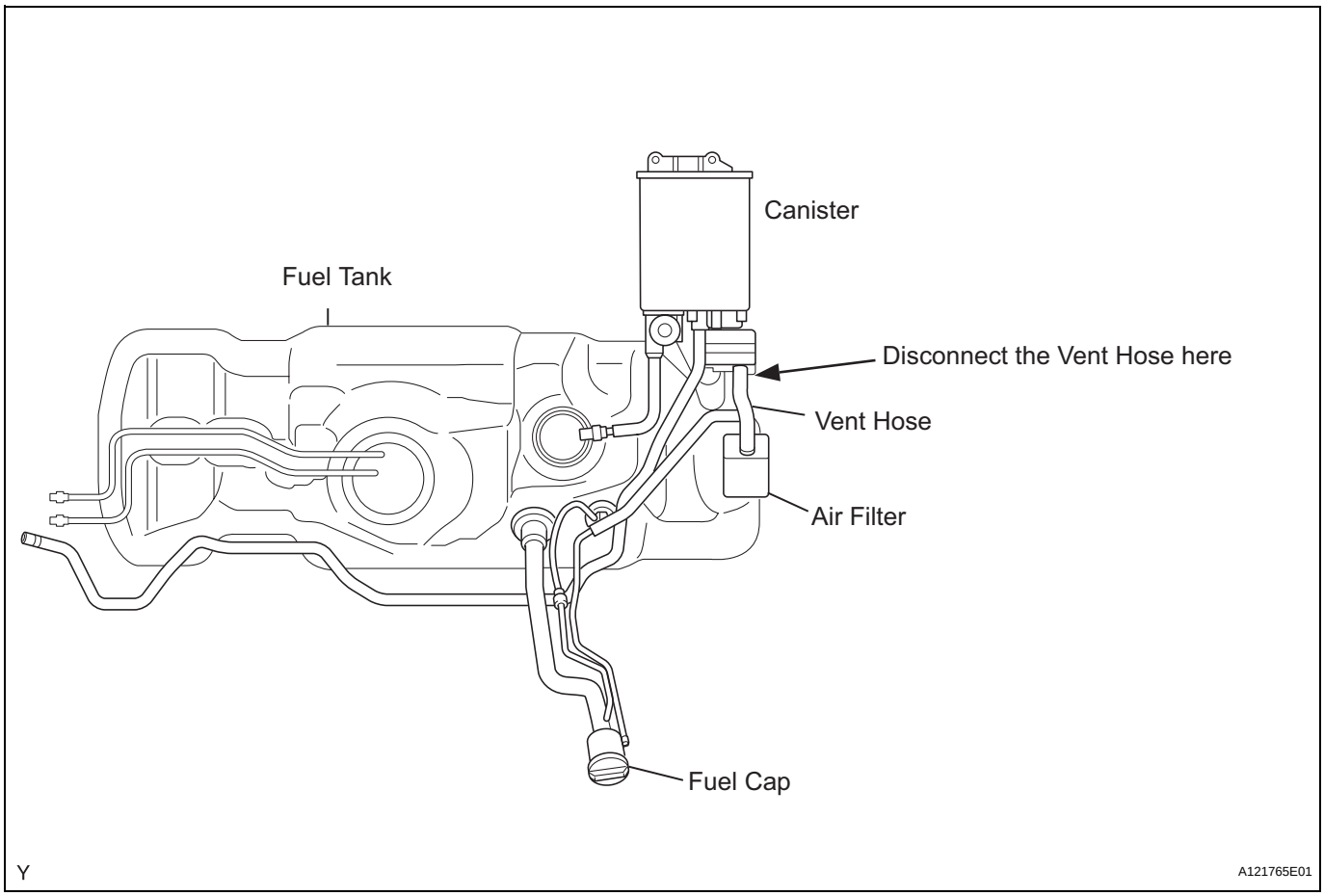

(c) Connect the EVAP pressure tester tool to the canister with the adapter.

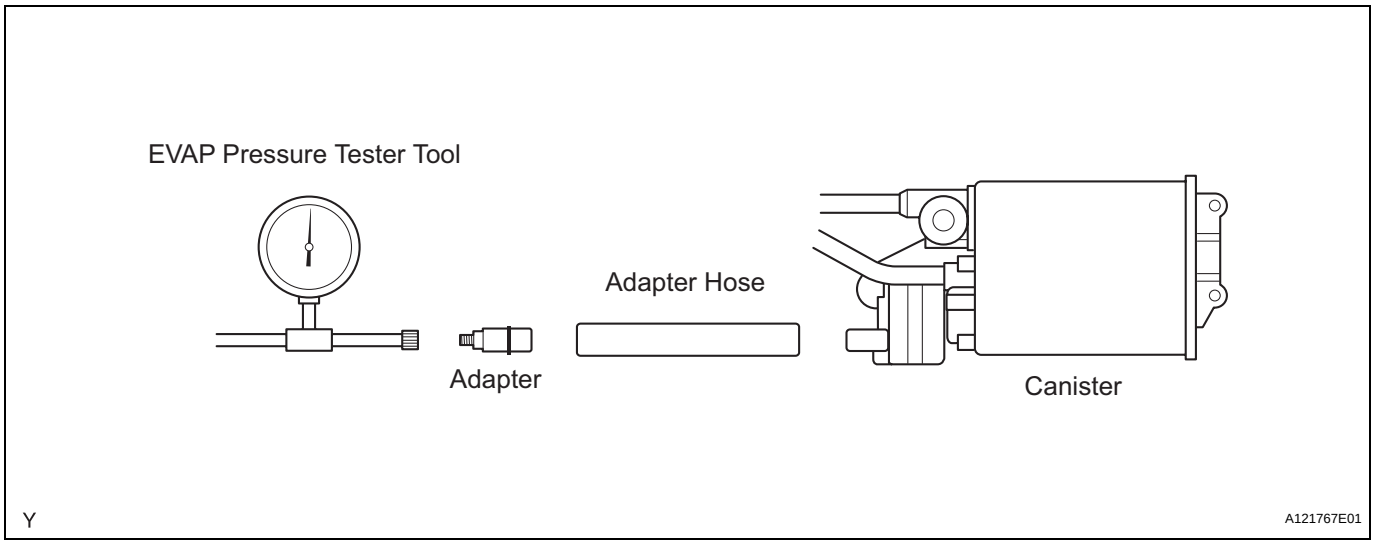

(d) Pressurize the EVAP system to 3.2 to 3.7 kPa (24 to 28 mmHg).
(e) Apply soapy water to the piping and connecting parts of the EVAP system.
(f) Look for areas where bubbles appear. This indicates leak point.
(g) Repair or replace the leak point.

HINT:
Disconnect the hose between the canister and the fuel tank from the canister. Block the canister side and conduct an inspection. In this way, the fuel tank can be excluded as an area suspected of causing fuel leaks.

NEXT	Go to step 37

30	REPLACE CHARCOAL CANISTER ASSEMBLY

(a) Replace the canister assembly.

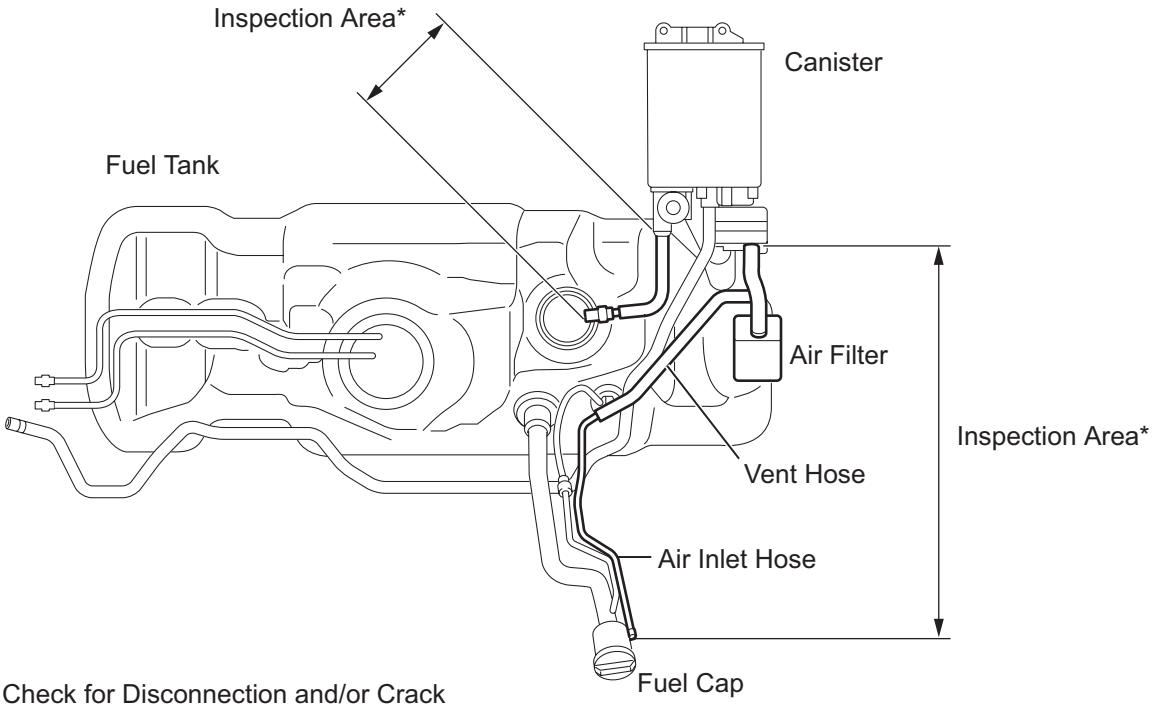

NOTICE:
When replacing the canister, check the canister pump module interior and related pipes for water, fuel or other liquids. If liquids are present, check for disconnections and/or cracks in the following: 1) the pipe from the air inlet port to the canister pump module; 2) the canister filter; and 3) the fuel tank vent hose.

NEXT	Go to step 37

31	REPLACE DUTY VACUUM SWITCHING VALVE (PURGE VSV)

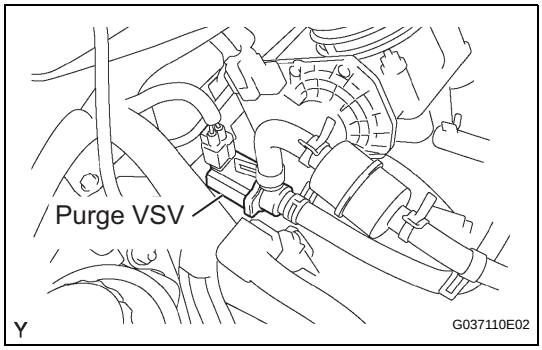

(a) Disconnect the connector and the hoses from the purge VSV.
(b) Remove the purge VSV.
(c) Install a new purge VSV.
(d) Reconnect the connector and hoses.

NEXT → Go to step 37

ES

32	REPAIR OR REPLACE HARNESS AND CONNECTOR

NEXT → Go to step 37

33	REPLACE EVAP HOSE (INTAKE MANIFOLD - PURGE VSV)

NEXT → Go to step 37

34	INSPECT INTAKE MANIFOLD (EVAP PURGE PORT)

(a) Check that the EVAP purge port of the intake manifold is not clogged. If necessary, replace the intake manifold.

NEXT → Go to step 37

35	REPLACE ECM

(a) replace the ECM (See page ES-467).

NEXT → Go to step 37

36	REPAIR OR REPLACE PARTS AND COMPONENTS INDICATED BY OUTPUT DTCS

(a) Repair the malfunctioning areas indicated by the DTCs that had been confirmed when the vehicle was brought in.

NEXT → Go to step 37

37	PERFORM EVAP SYSTEM CHECK (AUTO OPERATION)

NOTICE:

- **The EVAP SYSTEM CHECK (AUTO OPERATION) consists of five steps performed automatically by the intelligent tester. It takes a maximum of approximately 18 minutes.**
- **Do not perform the EVAP SYSTEM CHECK when the fuel tank is more than 90 % full because the cut-off valve may be closed and making the leak check of the fuel tank unavailable.**
- **Do not run the engine in this step.**
- **When the temperature of the fuel is 35°C (95°F) or more, a large amount of vapor forms and any check results become inaccurate. When performing an EVAP SYSTEM CHECK, keep the temperature below 35°C (95°F).**

(a) Clear DTCs (see page ES-40).

(b) On the intelligent tester, select the following menu items: DIAGNOSIS / ENHANCED OBD II / SYSTEM CHECK / EVAP SYS CHECK / AUTO OPERATION.

(c) After the SYSTEM CHECK is completed, check for pending DTCs by selecting the following menu items: DIAGNOSIS / ENHANCED OBD II / DTC INFO / PENDING CODES.
HINT:
If no pending DTC is found, the repair has been successfully completed.

NEXT

COMPLETED

CONFIRMATION DRIVING PATTERN

HINT:
After a repair, check Monitor Status by performing the Key-Off Monitor Confirmation and Purge Flow Monitor Confirmation described below.

1. KEY-OFF MONITOR CONFIRMATION

(a) Preconditions
The monitor will not run unless:
- The vehicle has been driven for 10 minutes or more (in a city area or on a free way)
- The fuel tank is less than 90 % full
- The altitude is less than 8,000 ft (2,400 m)
- The Engine Coolant Temperature (ECT) is between 4.4°C and 35°C (40°F and 95°F)
- The Intake Air Temperature (IAT) is between 4.4°C and 35°C (40°F and 95°F)
- The vehicle remains stationary (the vehicle speed is 0 mph [0 km/h])

(b) Monitor Conditions
1. Allow the engine to idle for at least 5 minutes.
2. Turn the ignition switch to OFF and wait for 6 hours (8 or 10.5 hours).
HINT:
Do not start the engine until checking MONITOR STATUS. If the engine is started, the steps described above must be repeated.

(c) Monitor Status
1. Connect an intelligent tester to the DLC3.
2. Turn the ignition switch to ON and turn the tester ON.
3. Select the following menu items: DIAGNOSIS / ENHANCED OBD II / MONITOR STATUS.
4. Check the Monitor Status displayed on the tester.
HINT:
If INCMP is displayed, the monitor is not completed. Make sure that the preconditions have been met, and perform the Monitor Conditions again.

2. PURGE FLOW MONITOR CONFIRMATION (P0441)

HINT:
Perform this monitor confirmation after the Key-Off Monitor Confirmation shows COMPL (complete).

(a) Preconditions
The monitor will not run unless:
- The vehicle has been driven for 10 minutes or more (in a city area or on a free way)
- The ECT is between 4.4°C and 35°C (40°F and 95°F)
- The IAT is between 4.4°C and 35°C (40°F and 95°F)

(b) Monitor Conditions
1. Release the pressure from the fuel tank by removing and reinstalling the fuel cap.
2. Warm the engine up until the ECT reaches more than 75°C (167°F).
3. Increase the engine speed to 3,000 rpm once.
4. Allow the engine to idle and turn A/C ON for 1 minute.

(c) Monitor Status
1. Turn the ignition switch to OFF (where ON or the engine is running).
2. Connect an intelligent tester to the DLC3.
3. Turn the ignition switch to ON and turn the tester ON.
4. Select the following menu items: DIAGNOSIS / ENHANCED OBD II / MONITOR STATUS.
5. Check the Monitor Status displayed on the tester.
HINT:
If INCMP is displayed, the monitor is not completed. Make sure that the preconditions have been met, and perform the Monitor Conditions again.

MONITOR RESULT

Refer to Checking Monitor Status (See page ES-21).

The test value and test limit information are described as shown in the following table. This information is included under MONITOR RESULT in the emissions-related DTC sections:
- MID (Monitor Identification Data) is assigned to each emissions-related component.
- TID (Test Identification Data) is assigned to each test value.
- Scaling is used to calculate the test value indicated on generic OBD II scan tools.

Thermostat

MID	TID	Scaling	Description of Test Value	Minimum Test Limit	Maximum Test Limit
$3D	$C9	Multiply by 0.001 [kPa]	Test value for small leak (P0456) Refer to pressure D*	Minimum test limit for small leak	Maximum test limit for small leak
$3D	$CA	Multiply by 0.001 [kPa]	Test value for gross leak (P0455) Refer to pressure E*	Minimum test limit for gross leak	Maximum test limit for gross leak
$3D	$CB	Multiply by 0.001 [kPa]	Test value for leak detection pump stuck OFF (P2401) Refer to pressure A*	Minimum test limit for leak detection pump stuck OFF	Maximum test limit for leak detection pump stuck OFF
$3D	$CD	Multiply by 0.001 [kPa]	Test value for leak detection pump stuck ON (P2402) Refer to pressure A*	Minimum test limit for leak detection pump stuck ON	Maximum test limit for leak detection pump stuck ON

MID	TID	Scaling	Description of Test Value	Minimum Test Limit	Maximum Test Limit
$3D	$CE	Multiply by 0.001 [kPa]	Test value for vent valve stuck OFF (vent) (P2420) Refer to pressure C*	Minimum test limit for vent valve stuck ON	Maximum test limit for vent valve stuck ON
$3D	$CF	Multiply by 0.001 [kPa]	Test value for vent valve stuck ON (P2419) Refer to pressure A*	Minimum test limit for vent valve stuck OFF	Maximum test limit for vent valve stuck OFF
$3D	$D0	Multiply by 0.001 [kPa]	Test value for reference orifice low flow (P043E) Refer to pressure B*	Minimum test limit for reference orifice low flow	Maximum test limit for reference orifice low flow
$3D	$D1	Multiply by 0.001 [kPa]	Test value for reference orifice high flow (P043F) Refer to pressure A*	Minimum test limit for reference orifice high flow	Maximum test limit for reference orifice high flow
$3D	$D4	Multiply by 0.001 [kPa]	Test value for Purge VSV stuck closed (P0441) Refer to pressure F*	Minimum test limit for Purge VSV stuck closed	Maximum test limit for Purge VSV stuck closed
$3D	$D5	Multiply by 0.001 [kPa]	Test value for Purge VSV stuck open (P0441) Refer to pressure E*	Minimum test limit for Purge VSV stuck open	Maximum test limit for Purge VSV stuck open
$3D	$D7	Multiply by 0.001 [kPa]	Test value for purge flow (P0441) Refer to pressure G*	Minimum test limit for purge flow	Maximum test limit for purge flow

* Pressures A to G are indicated as shown in the diagram below.

ES

Key-off Monitor:

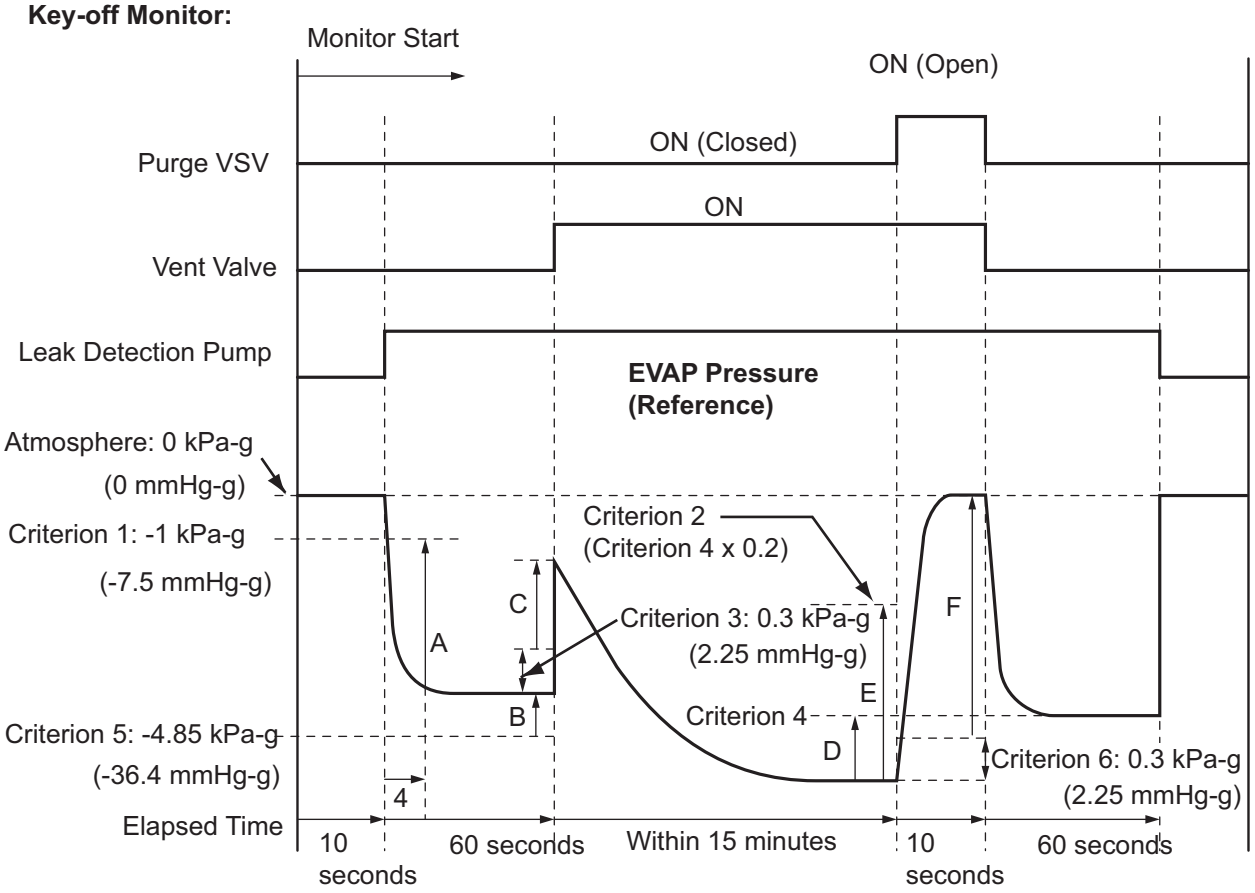

Purge Flow Monitor:

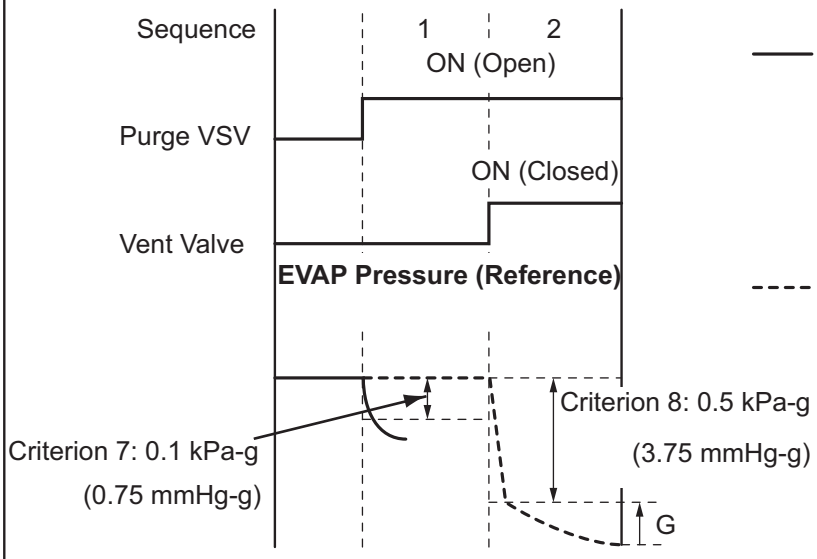

——— If pressure change in sequence 1 is greater than criterion 7, purge flow monitor is completed (functioning normally).

- - - - If pressure change in sequence 1 is smaller than criterion 7 and pressure change in sequence 2 is smaller than criterion 8, purge flow is insufficient.

Y

A106747E07

ECM Power Source Circuit

DESCRIPTION

When the ignition switch is turned to ON, the battery voltage is applied to terminal IGSW of the ECM. The ECM MREL output signal causes a current to flow to the coil, closing the contacts of the EFI relay and supplying power to terminal +B of the ECM.

WIRING DIAGRAM

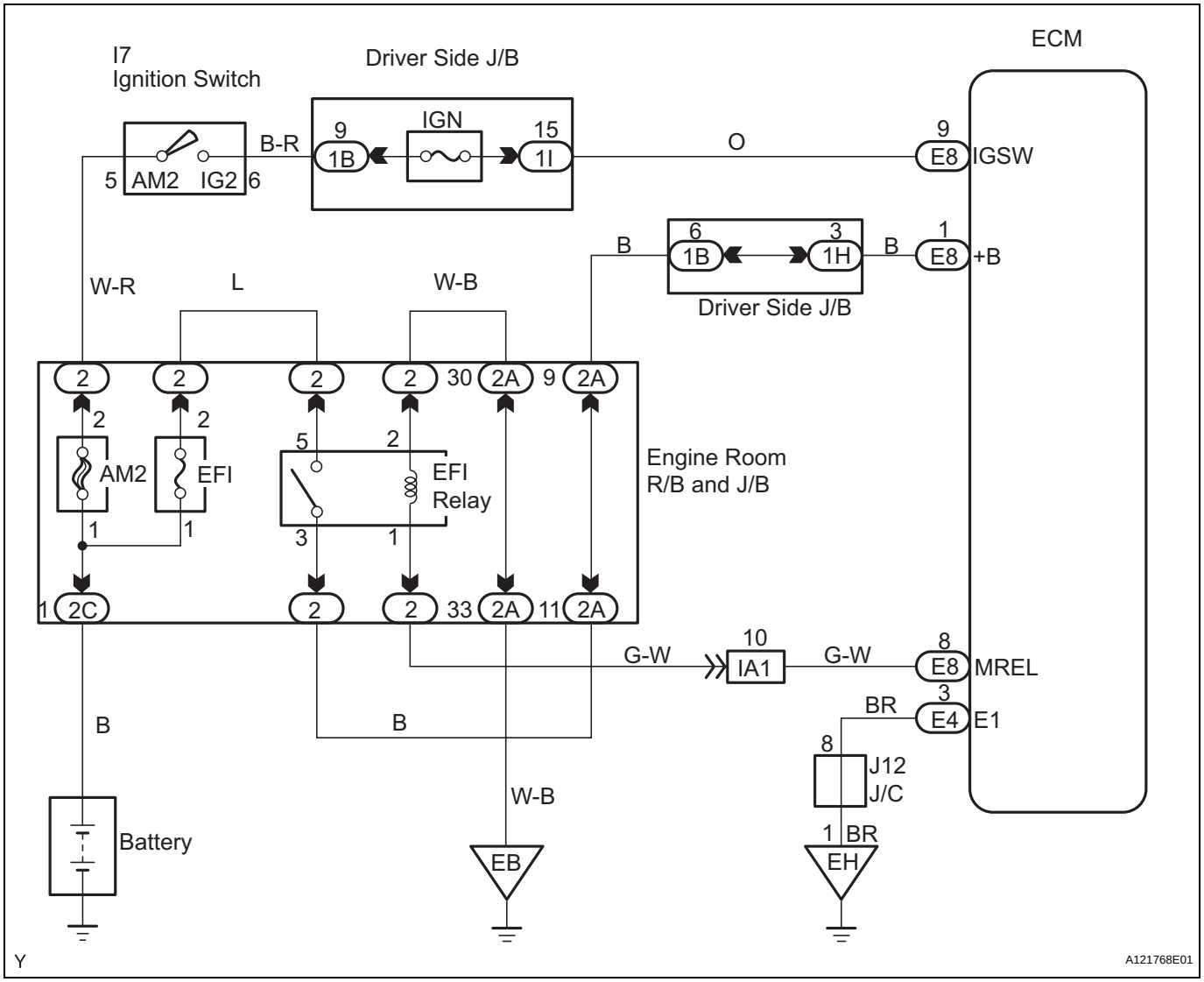

1 **INSPECT ECM (+B VOLTAGE)**

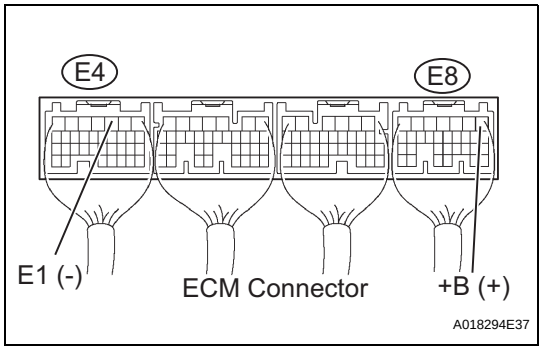

(a) Turn the ignition switch to ON.
(b) Measure the voltage between the terminals of the ECM connectors.
Standard Voltage

Tester Connections	Specified Conditions
+B (E8-1) - E1 (E4-3)	9 to 14 V

OK → **PROCEED TO NEXT CIRCUIT INSPECTION SHOWN IN PROBLEM SYMPTOMS TABLE**

ES **NG**

2 **CHECK HARNESS AND CONNECTOR (ECM - BODY GROUND)**

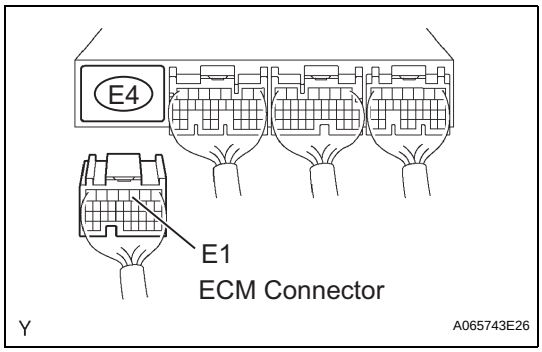

(a) Disconnect the negative battery cable.
(b) Disconnect the E4 ECM connector.
(c) Check the resistance.
Standard Resistance

Tester Connections	Specified Conditions
E1 (E4-3) - Body ground	Below 1 Ω

(d) Reconnect the ECM connector.
(e) Reconnect the negative battery cable.

NG → **REPAIR OR REPLACE HARNESS OR CONNECTOR**

OK

3 **INSPECT ECM (IGSW VOLTAGE)**

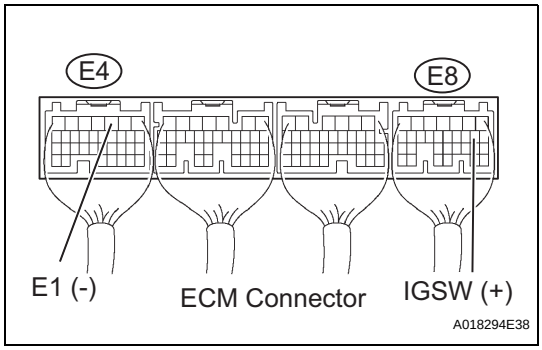

(a) Turn the ignition switch to ON.
(b) Measure the voltage between the terminals of the ECM connectors.
Standard Voltage

Tester Connections	Specified Conditions
IGSW (E8-9) - E1 (E4-3)	9 to 14 V

OK → **Go to step 6**

NG

4 CHECK FUSE (AM2 AND IGN)

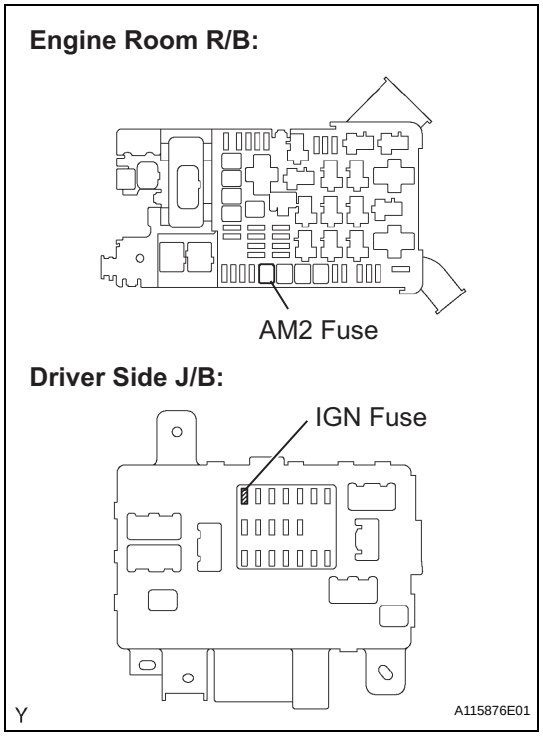

(a) Check the AM2 fuse.
  (1) Remove the AM2 fuse from the engine room R/B.
  (2) Check the AM2 fuse resistance.
    Standard Resistance:
    Below 1 Ω
  (3) Reinstall the AM2 fuse.

(b) Check the IGN fuse.
  (1) Remove the IGN fuse from the driver side J/B.
  (2) Check the IGN fuse resistance.
    Standard Resistance:
    Below 1 Ω
  (3) Reinstall the IGN fuse.

NG → **CHECK FOR SHORT IN ALL HARNESS AND COMPONENTS CONNECTED TO FUSE**

OK

5 INSPECT IGNITION OR STARTER SWITCH ASSEMBLY

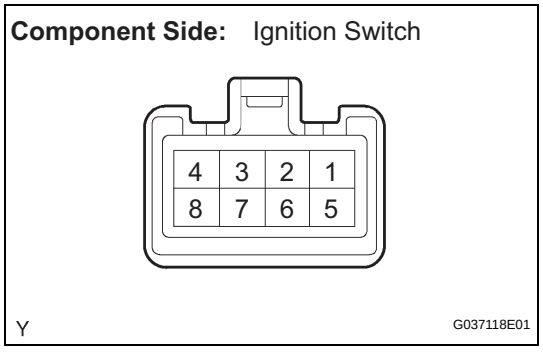

(a) Disconnect the I7 ignition switch connector.

(b) Check the resistance.

Standard Resistance

Ignition Switch Positions	Tester Connections	Specified Conditions
LOCK	All Terminals	10 kΩ or higher
ACC	2-4	Below 1 Ω
ON	1-4, 1-6, 2-4, 3-4, 5-6	Below 1 Ω
START	1-4, 3-4, 5-6, 5-7	Below 1 Ω

(c) Reconnect the ignition switch connector.

NG → **REPLACE IGNITION OR STARTER SWITCH ASSEMBLY**

OK

CHECK AND REPAIR HARNESS AND CONNECTOR (BATTERY - IGNITION SWITCH, IGNITION SWITCH - ECM)

6 INSPECT ECM (MREL VOLTAGE)

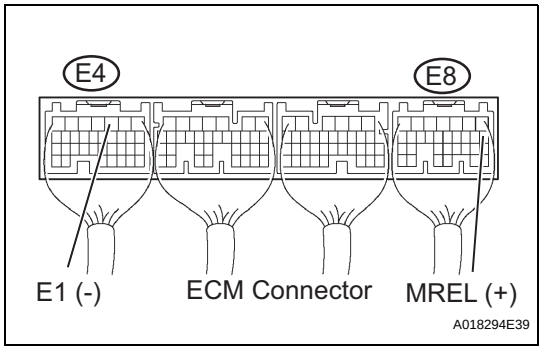

(a) Turn the ignition switch to ON.
(b) Measure the voltage between the terminals of the ECM connectors.
Standard Voltage

Tester Connections	Specified Conditions
MREL (E8-8) - E1 (E4-3)	9 to 14 V

NG → **REPLACE ECM**

OK

7 CHECK FUSE (EFI)

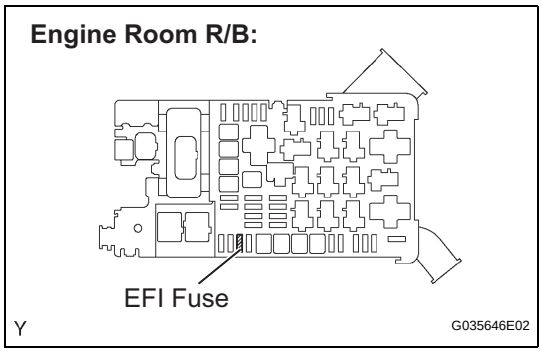

(a) Remove the EFI fuse from the engine room R/B.
(b) Check the EFI fuse resistance.
Standard Resistance:
Below 1 Ω
(c) Reinstall the EFI fuse.

NG → **CHECK FOR SHORT IN ALL HARNESS AND COMPONENTS CONNECTED TO FUSE**

OK

8 INSPECT EFI RELAY

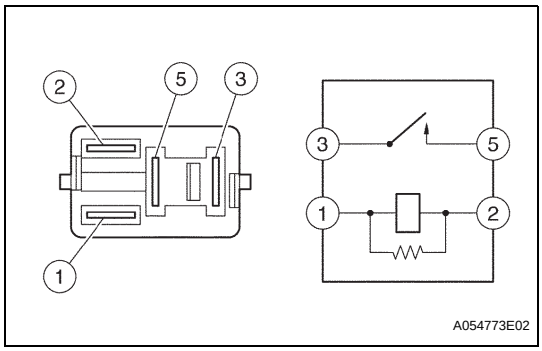

(a) Remove the EFI relay from the engine room R/B.
(b) Check the EFI relay resistance.
Standard Resistance

Tester Connections	Specified Conditions
3 - 5	10 kΩ or higher
3 - 5	Below 1 Ω (when battery voltage applied to terminals 1 and 2)

(c) Reinstall the EFI relay.

NG → **REPLACE EFI RELAY**

OK

9	CHECK HARNESS AND CONNECTOR (EFI RELAY - ECM, EFI RELAY - BODY GROUND)

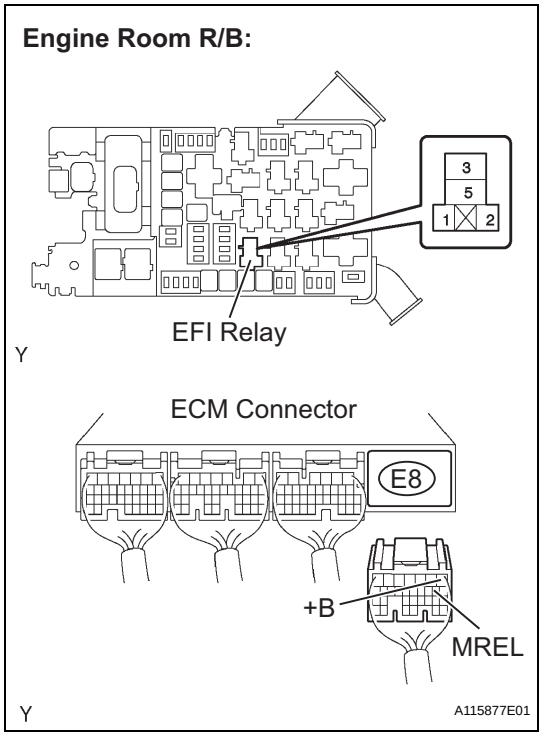

(a) Check the harness and connector between the EFI relay and ECM.
  (1) Remove the EFI relay from the engine room R/B.
  (2) Disconnect the E8 ECM connector.
  (3) Check the resistance.

Standard Resistance (Check for open)

Tester Connections	Specified Conditions
Engine room R/B (EFI relay terminal 1) - MREL (E8-8)	Below 1 Ω
Engine room R/B (EFI relay terminal 3) - +B (E8-1)	Below 1 Ω

Standard Resistance (Check for short)

Tester Connections	Specified Conditions
Engine room R/B (EFI relay terminal 1) or MREL (E8-8) - Body ground	10 kΩ or higher
Engine room R/B (EFI relay terminal 3) or +B (E8-1) - Body ground	10 kΩ or higher

  (4) Reconnect the ECM connector.
  (5) Reinstall the EFI relay.

(b) Check the harness and connector between the EFI relay and body ground.
  (1) Remove the EFI relay from the engine room R/B.
  (2) Check the resistance.

Standard Resistance (Check for open):

Tester Connections	Specified Conditions
Engine room R/B (EFI relay terminal 2) - Body ground	Below 1 Ω

  (3) Reinstall the EFI relay.

NG → **REPAIR OR REPLACE HARNESS OR CONNECTOR**

OK

CHECK AND REPLACE HARNESS AND CONNECTOR (TERMINAL 5 OF EFI RELAY - BATTERY POSITIVE TERMINAL)

VC Output Circuit

DESCRIPTION

The ECM constantly generates 5 V power from the battery voltage supplied to the +B (BATT) terminal to operate the microprocessor. The ECM also provides this power to the sensors through the VC output circuit.

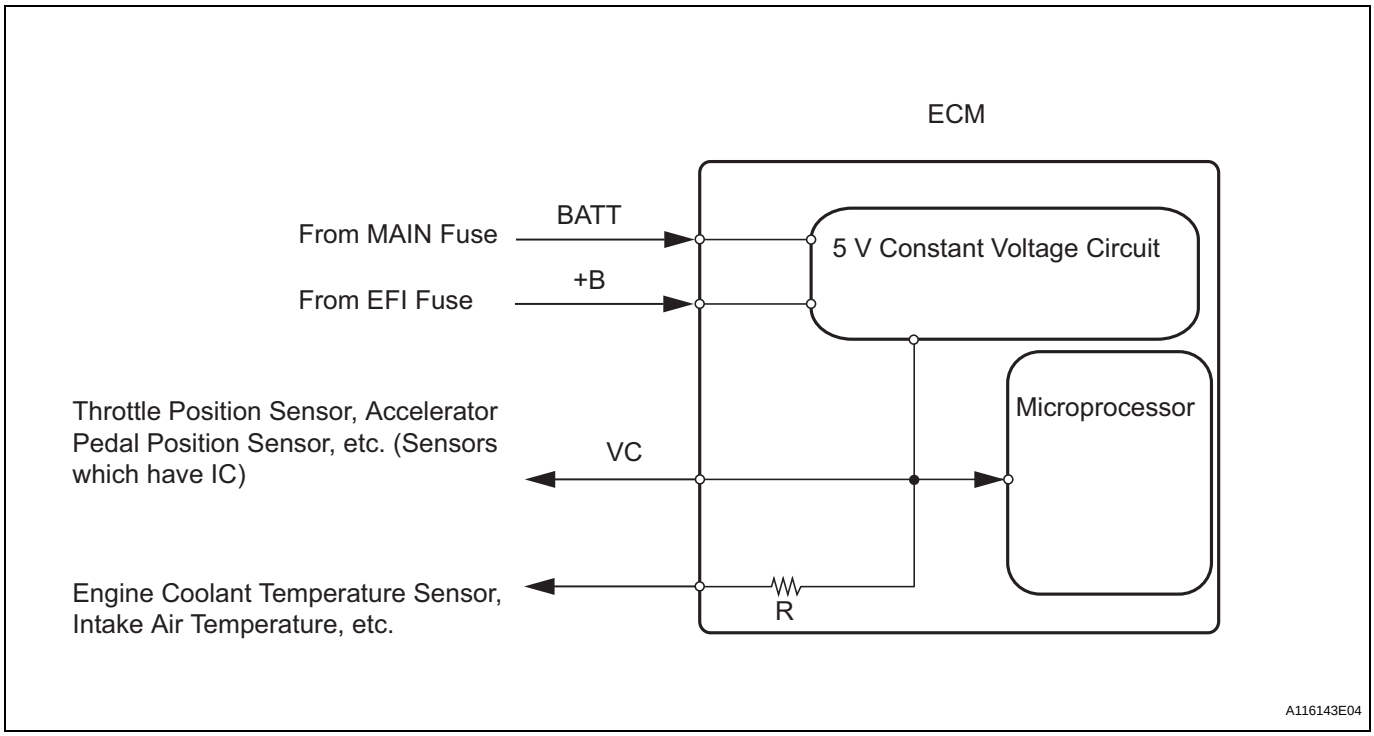

When the VC circuit is short-circuited, the microprocessor in the ECM and sensors that are supplied power through the VC circuit are inactivated because the power is not supplied from the VC circuit. Under this condition, the system does not start up and the MIL does not illuminate even if the system malfunctions.

HINT:

Under normal conditions, the MIL is illuminated for several seconds when the ignition switch is first turned to ON. The MIL goes off when the engine is started.

WIRING DIAGRAM

Refer to the following pages.

- Throttle position sensor circuit (See page ES-114).
- Canister pump module circuit (See page ES-397).
- Secondary air injection pressure sensor circuit (See page ES-192).
- Accelerator pedal circuit (See page ES-305).

1	**CHECK MIL**

(a) Check that the Malfunction Indicator Lamp (MIL) lights up when turning the ignition switch ON.

OK:

MIL lights up

OK	**SYSTEM OK**

NG

2 CHECK CONNECTION BETWEEN INTELLIGENT TESTER AND ECM

(a) Connect the intelligent tester to the DLC3.
(b) Turn the ignition switch ON and intelligent tester ON.
(c) Check the communication between the intelligent tester and ECM.

Result	Proceed to
Communication is possible	A
Communication is not possible	B

A → **GO TO MIL CIRCUIT**

B

3 CHECK MIL (THROTTLE BODY)

(a) Disconnect the throttle body connector.
(b) Turn the ignition switch ON.
(c) Check the MIL.

Result

Result	Proceed to
MIL illuminates	**A**
MIL does not illuminate	**B**

A → **REPLACE THROTTLE BODY**

B

4 CHECK MIL (ACCELERATOR PEDAL)

(a) Disconnect the accelerator pedal connector.
(b) Turn the ignition switch ON.
(c) Check the MIL.

Result

Result	Proceed to
MIL illuminates	**A**
MIL does not illuminate	**B**

A → **REPLACE ACCELERATOR PEDAL ASSEMBLY**

B

5 CHECK MIL (PRESSURE SENSOR FOR SECONDARY AIR INJECTION)

(a) Disconnect the pressure sensor connector.
(b) Turn the ignition switch ON.
(c) Check the MIL.

Result

Result	Proceed to
MIL illuminates	A
MIL does not illuminate	B

A → **REPLACE PRESSURE SENSOR**

B

6 CHECK MIL (CANISTER PUMP MODULE)

(a) Disconnect the canister pump module connector.
(b) Turn the ignition switch ON.
(c) Check the MIL.

Result

Result	Proceed to
MIL illuminates	A
MIL does not illuminate	B

A → **REPLACE CHARCOAL CANISTER ASSEMBLY**

B

7 CHECK HARNESS AND CONNECTOR

(a) Disconnect the throttle body connector.
(b) Disconnect the accelerator pedal connector.
(c) Disconnect the pressure sensor connector.
(d) Disconnect the canister pump module connector.
(e) Disconnect the ECM connector.
(f) Measure the resistance of the wire harness side connector.

Standard Resistance (check for short)

Tester Connection	Specified Condition
VC (E4-18) - Body ground	10 kΩ or higher

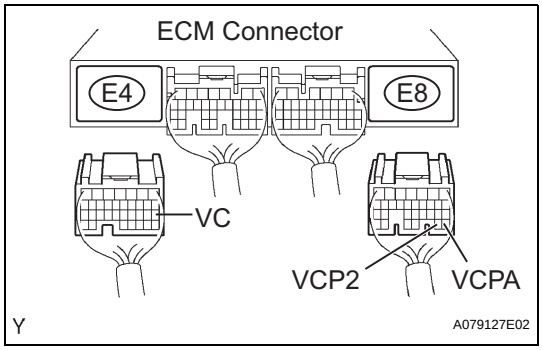

NG → **REPAIR OR REPLACE HARNESS OR CONNECTOR**

OK

REPLACE ECM

Fuel Pump Control Circuit

DESCRIPTION

When the engine is cranked, a current flows from terminal ST2 of the ignition switch into the STA (starter) relay coil and a current also flows into terminal STA of the ECM (STA signal).
When the STA and NE signals are received by the ECM, Tr (power transistor) is switched on, allowing a current to flow into the circuit opening relay coil. The circuit opening relay switches on, power is supplied to the fuel pump and the fuel pump operates.
While the NE signal is being generated (engine running), the ECM keeps Tr ON, therefore keeping the circuit opening relay ON, so that the fuel pump continues to operate.

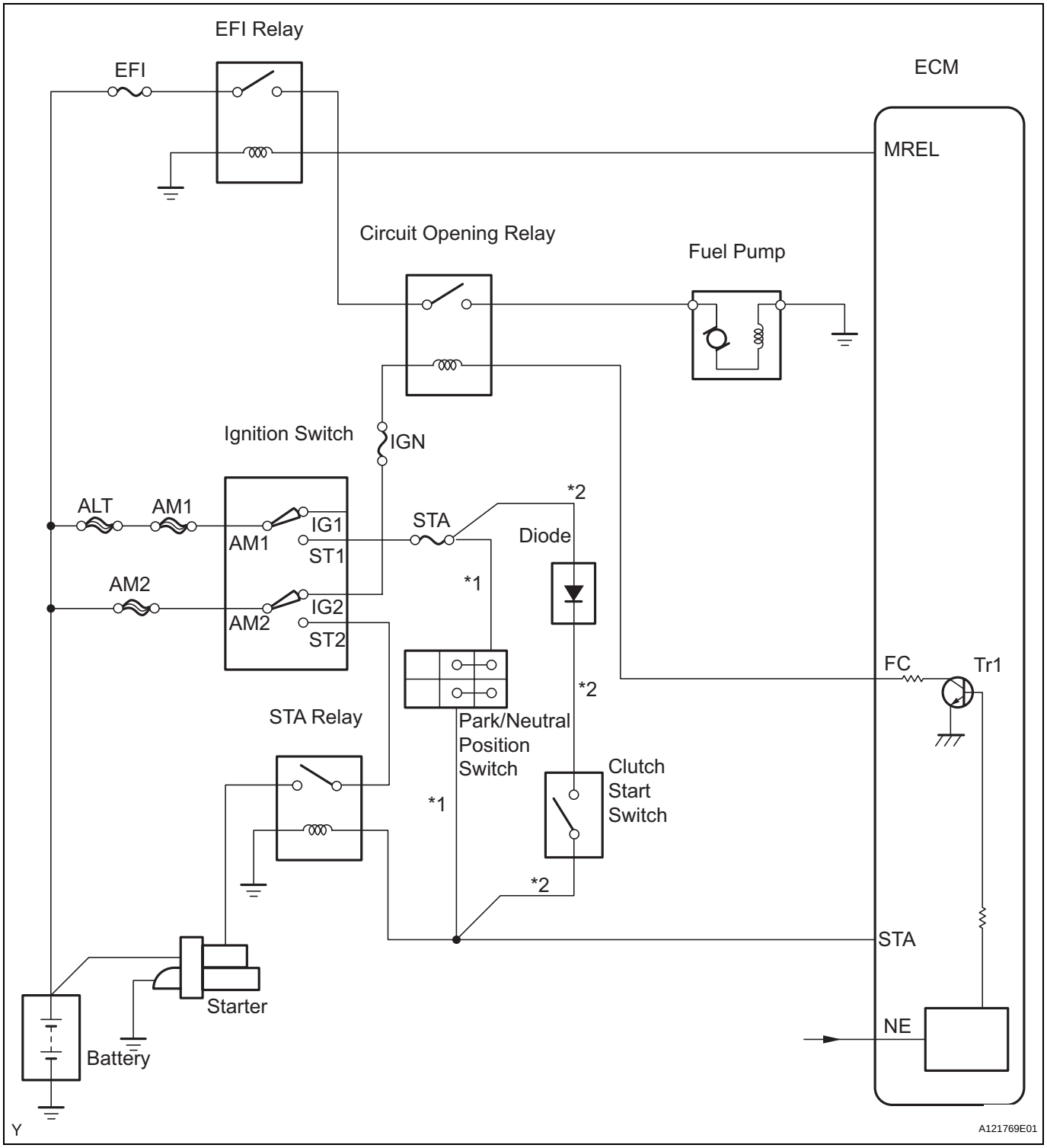

WIRING DIAGRAM

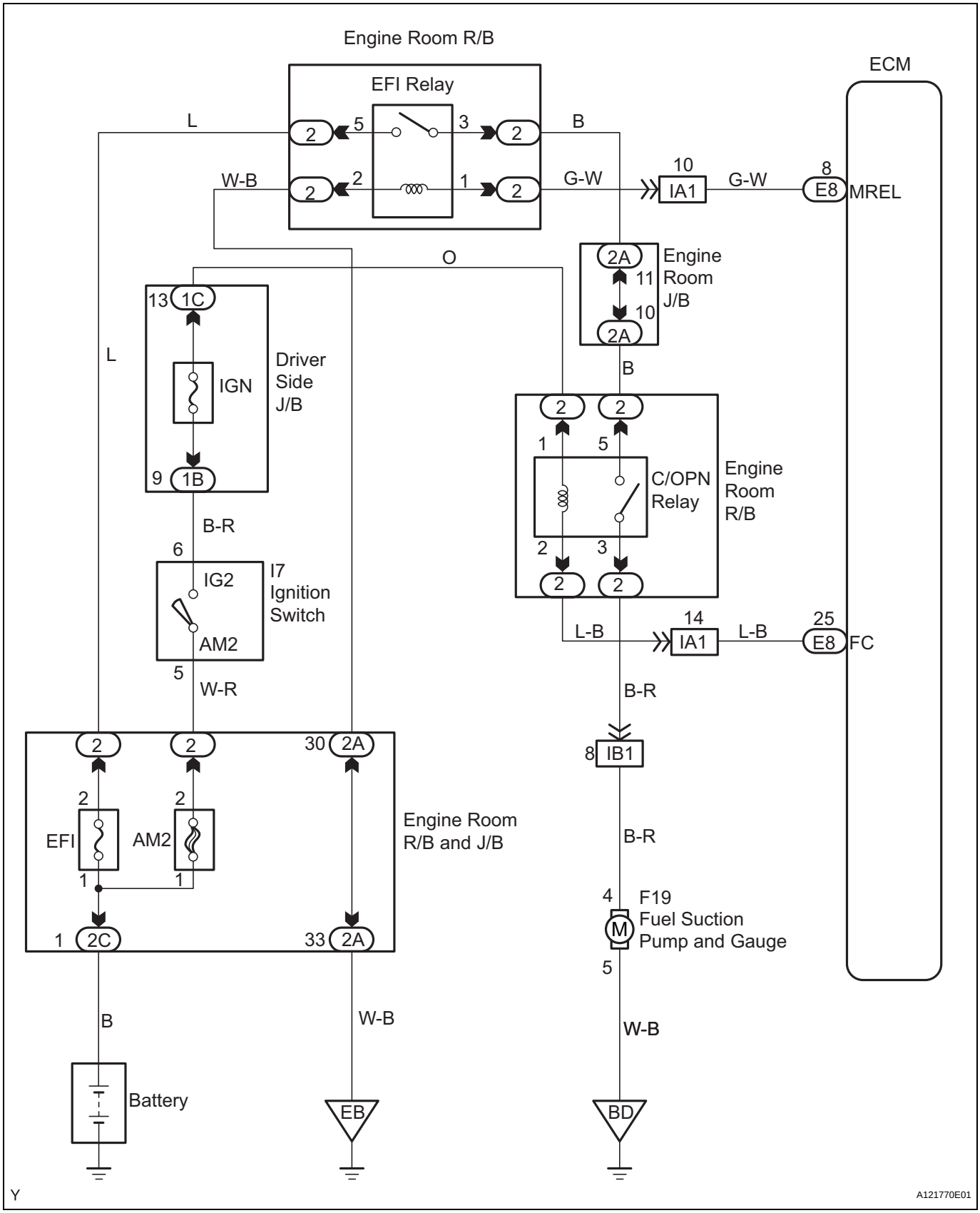

1	PERFORM ACTIVE TEST USING INTELLIGENT TESTER (OPERATION OF CIRCUIT OPENING RELAY)

(a) Connect an intelligent tester to the DLC3.
(b) Turn the ignition switch to ON and turn the tester ON.
(c) Select the following menu items: DIAGNOSIS / ENHANCED OBD II / ACTIVE TEST / FUEL PUMP/ SPD.
(d) Check whether relay operating sounds can be heard while operating the relay using the tester.
OK:
Relay operating sounds can be heard from relay.

OK → **Go to step 7**

NG

2	INSPECT ECM POWER SOURCE CIRCUIT

NG → **REPAIR OR REPLACE POWER SOURCE CIRCUIT**

OK

3	INSPECT CIRCUIT OPENING RELAY (C/OPN RELAY)

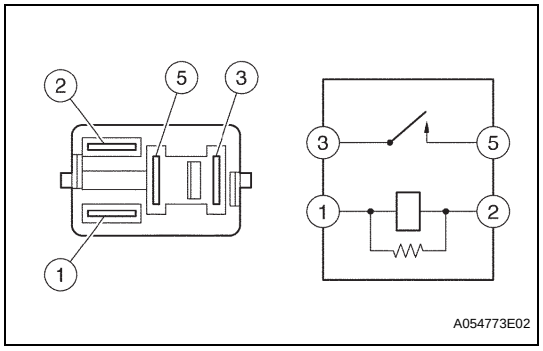

(a) Remove the circuit opening (C/OPN) relay from the engine room R/B.
(b) Check the circuit opening relay resistance.
Standard Resistance

Tester Connections	Specified Conditions
3 - 5	10 kΩ or higher
3 - 5	Below 1 Ω (when battery voltage applied to terminals 1 and 2)

(c) Reinstall the circuit opening relay.

NG → **REPLACE CIRCUIT OPENING RELAY**

OK

4	INSPECT ECM (FC VOLTAGE)

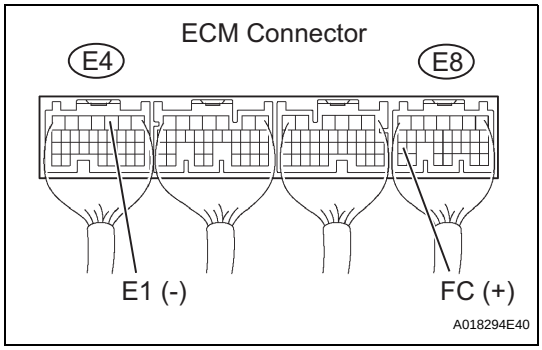

(a) Turn the ignition switch to ON.
(b) Measure the voltage between the terminals of the ECM connectors.

Standard Voltage

Tester Connections	Specified Conditions
FC (E8-25) - E1 (E4-3)	9 to 14 V

OK → **REPLACE ECM**

NG

5	CHECK HARNESS AND CONNECTOR (IGNITION SWITCH - CIRCUIT OPENING RELAY)

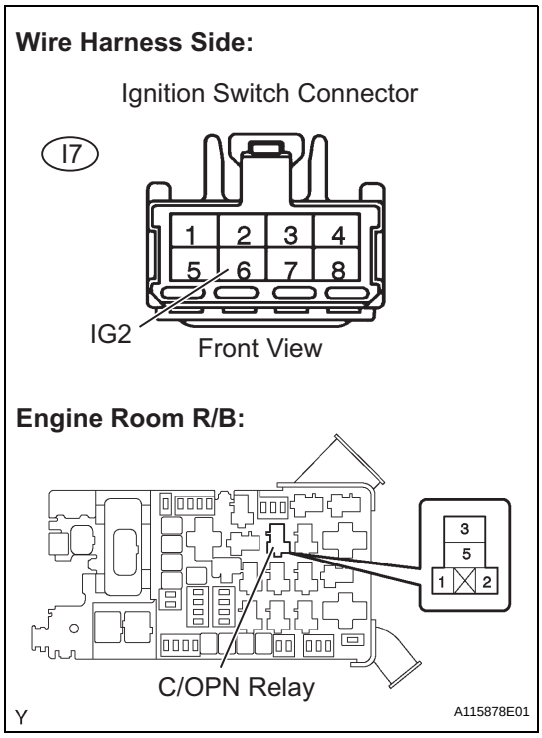

(a) Disconnect the I7 ignition switch connector.
(b) Remove the circuit opening (C/OPN) relay from the engine room R/B.
(c) Check the resistance.

Standard Resistance (Check for open)

Terminal Connections	Specified Conditions
IG2 (I7-6) - Engine room R/B (Circuit opening relay terminal 1)	Below 1 Ω

Standard Resistance (Check for short)

Terminal Connections	Specified Conditions
IG2 (I7-6) or Engine room R/B (Circuit opening relay terminal 1) - Body ground	10 kΩ or higher

(d) Reinstall the circuit opening relay.
(e) Reconnect the ignition switch connector.

NG → **REPAIR OR REPLACE HARNESS OR CONNECTOR**

OK

6	CHECK HARNESS AND CONNECTOR (ECM - CIRCUIT OPENING RELAY)

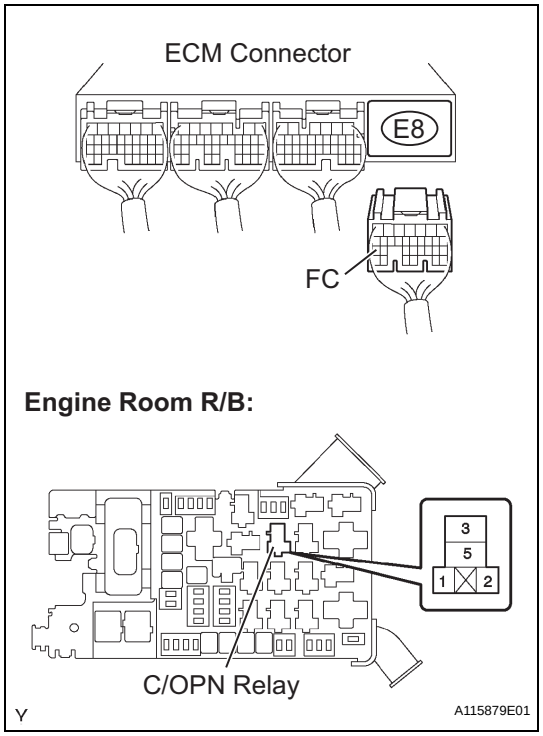

(a) Disconnect the E8 ECM connector.
(b) Remove the circuit opening (C/OPN) relay from the engine room R/B.
(c) Check the resistance.

Standard Resistance (Check for open)

Tester Connections	Specified Conditions
FC (E8-25) - Engine room R/B (Circuit opening relay terminal 2)	Below 1 Ω

Standard Resistance (Check for short)

Tester Connections	Specified Conditions
FC (E8-25) or Engine room R/B (Circuit opening relay terminal 2) - Body ground	10 kΩ or higher

(d) Reinstall the circuit opening relay.
(e) Reconnect the ECM connector.

NG → **REPAIR OR REPLACE HARNESS OR CONNECTOR**

OK

REPLACE ECM

7	INSPECT FUEL PUMP ASSEMBLY

HINT:
Refer to Fuel Pump Inspection (See page FU-26).

NG → **REPLACE FUEL PUMP ASSEMBLY**

OK

8	CHECK HARNESS AND CONNECTOR (CIRCUIT OPENING RELAY - FUEL PUMP, FUEL PUMP - BODY GROUND)

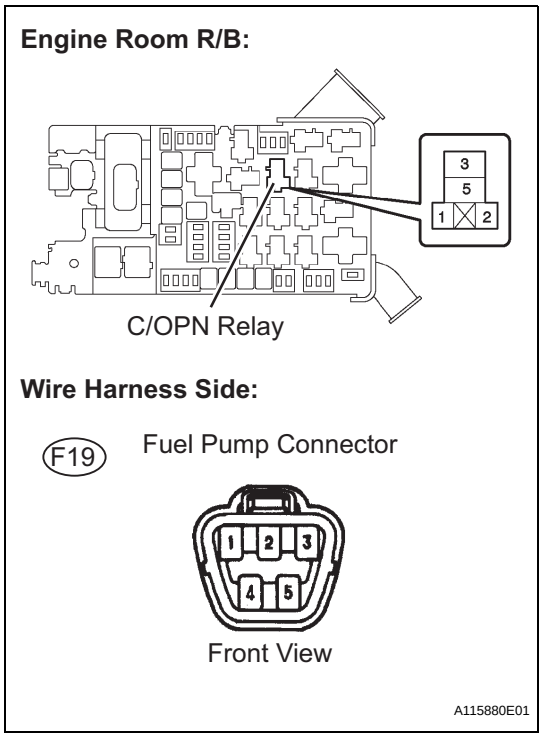

(a) Remove the circuit opening (C/OPN) relay from the engine room R/B.
(b) Disconnect the F19 fuel pump connector.
(c) Check the resistance.

Standard Resistance (Check for open)

Tester Connections	Specified Conditions
Engine room R/B (Circuit opening relay terminal 3) - Fuel pump (F19-4)	Below 1 Ω
Fuel pump (F19-5) - Body ground	Below 1 Ω

Standard Resistance (Check for short)

Tester Connections	Specified Conditions
Engine room R/B (Circuit opening relay terminal 3) or Fuel pump (F19-4) - Body ground	10 kΩ or higher

(d) Reconnect the fuel pump connector.
(e) Reinstall the circuit opening relay.

NG → **REPAIR OR REPLACE HARNESS OR CONNECTOR**

OK

CHECK AND REPLACE HARNESS AND CONNECTOR (EFI RELAY - C/OPN RELAY)

MIL Circuit

DESCRIPTION

The MIL (Malfunction Indicator Lamp) is used to indicate vehicle malfunction detections by the ECM.
By turning the ignition switch to ON, power is supplied to the MIL circuit, and the ECM provides the circuit ground which illuminates the MIL.
The MIL operation can be checked visually: When the ignition switch is first turned to ON, the MIL should be illuminated and should then turn OFF. If the MIL remains illuminated or is not illuminated, conduct the following troubleshooting procedure using an intelligent tester.

WIRING DIAGRAM

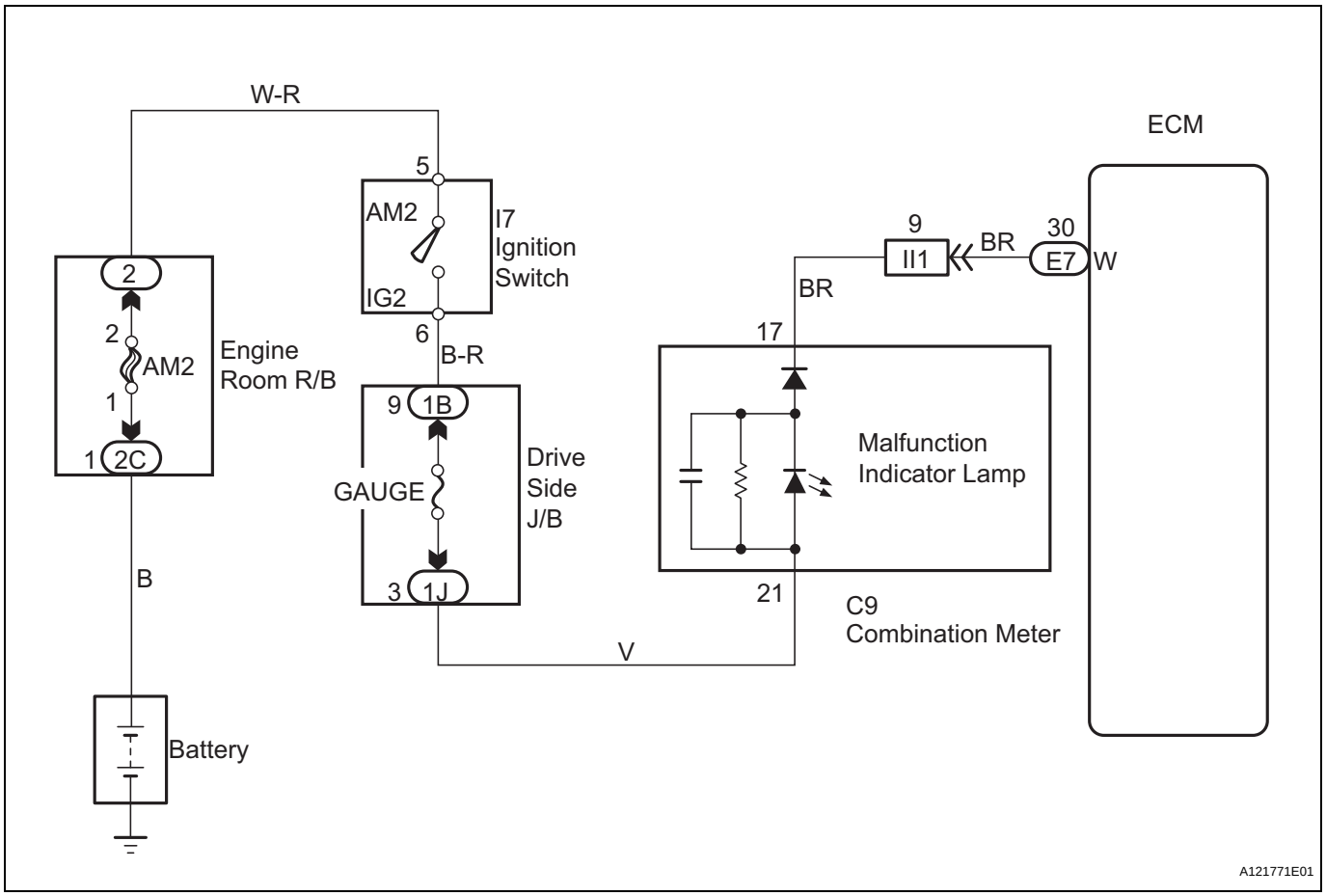

ES

1	CHECK THAT MIL IS ILLUMINATED

(a) Perform troubleshooting in accordance with the chart below.

Result

MIL Condition	Proceed To
MIL remains ON	A
MIL does not illuminate	B

B	Go to step 4

A

2	CHECK WHETHER MIL TURNS OFF

(a) Connect an intelligent tester to the DLC3.
(b) Turn the ignition switch to ON.
(c) Turn the tester ON.
(d) Check whether any DTCs have been stored (see page ES-40). Note them down if necessary.
(e) Clear DTCs (see page ES-40).
(f) Check if the MIL turns off.
OK:
MIL should turn off.

ES

OK → **REPAIR CIRCUITS INDICATED BY OUTPUT DTCS**

NG

3	CHECK HARNESS AND CONNECTOR (CHECK FOR SHORT IN WIRE HARNESS)

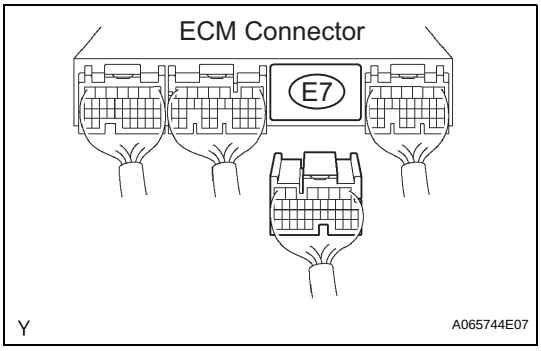

(a) Disconnect the ECM connector.
(b) Turn the ignition switch to ON.
(c) Check that the MIL is not illuminated.
OK:
MIL is not illuminated.
(d) Reconnect the ECM connector.

OK → **REPLACE ECM**

NG

CHECK AND REPLACE HARNESS AND CONNECTOR

4	CHECK THAT MIL IS ILLUMINATED

(a) Check if the MIL is illuminated when the ignition switch is turned to ON.
OK:
MIL should be illuminated.

OK → **SYSTEM OK**

NG

5	CHECK THAT ENGINE STARTS

(a) Turn the ignition switch to ON
(b) Start the engine.

Result

Result	Proceed To
Engine starts	A
Engine does not start*	B

HINT:
*: The intelligent tester cannot communicate with the ECM.

B → **GO TO VC OUTPUT CIRCUIT**

A

6	INSPECT COMBINATION METER ASSEMBLY (MIL CIRCUIT)

(a) See the combination meter troubleshooting procedure (See page ME-7).

NG → **REPAIR OR REPLACE BULB OR COMBINATION METER ASSEMBLY**

OK

CHECK AND REPLACE HARNESS AND CONNECTOR (COMBINATION METER - ECM)

ON-VEHICLE INSPECTION

1. INSPECT THROTTLE BODY ASSEMBLY

(a) Listen to the throttle control motor operating sounds.
  (1) Turn the ignition switch to ON.
  (2) When pressing the accelerator pedal, listen to the running sounds of the motor. Make sure no friction noises come from the motor.
  If friction noises exist, check the throttle body, wire harness and ECM.

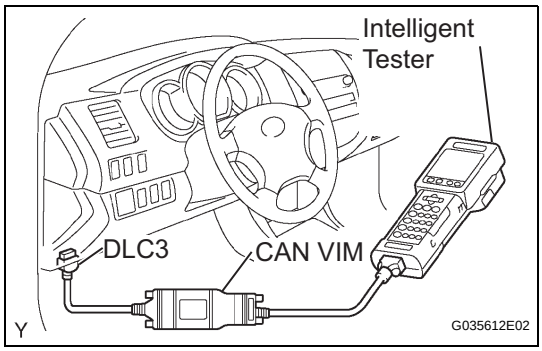

(b) Inspect the throttle position sensor.
  (1) Connect the intelligent tester to the DLC3.
  (2) Turn the ignition switch to ON.
  (3) Turn the intelligent tester ON.
  (4) Select the following menu items: DIAGNOSIS / ENHANCED OBD II / DATA LIST / ALL / THROTTLE POS.
  (5) Depress the accelerator pedal. When the throttle valve is fully opened, check that the THROTTLE POS value is within the specified range.
  Standard:
  60 % or more
  NOTICE:
  When checking the standard throttle valve opening percentage, the transmission should be in the neutral position.
  If the result is not as specified, check the throttle body, wire harness and ECM.

ES

REMOVAL

1. **DISCONNECT CABLE FROM NEGATIVE BATTERY TERMINAL**
2. **REMOVE NO. 1 ENGINE UNDER COVER SUB-ASSEMBLY (for 4WD and Pre-Runner)**
3. **DRAIN ENGINE COOLANT (See page CO-3)**
4. **REMOVE INTAKE AIR CONNECTOR**
   (a) Disconnect the pressure sensor connector.
   (b) Disengage the wire harness clamp.
   (c) Disconnect the vacuum hose.

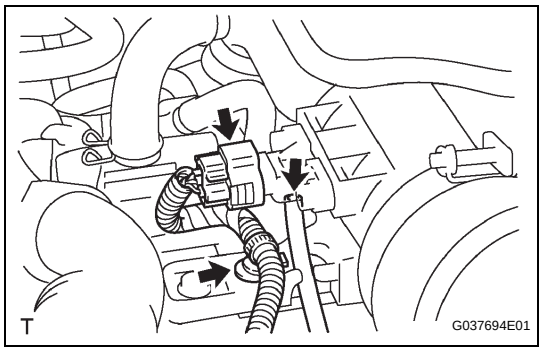

(d) Disconnect the No. 2 ventilation hose.

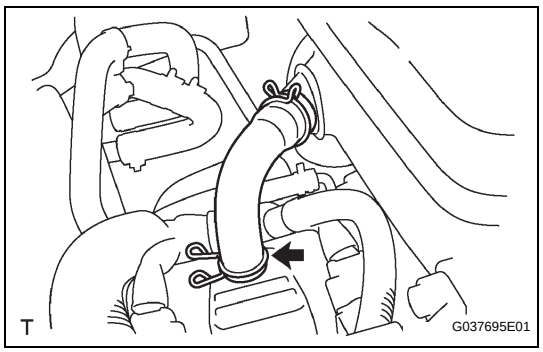

(e) Disconnect the vacuum hose.

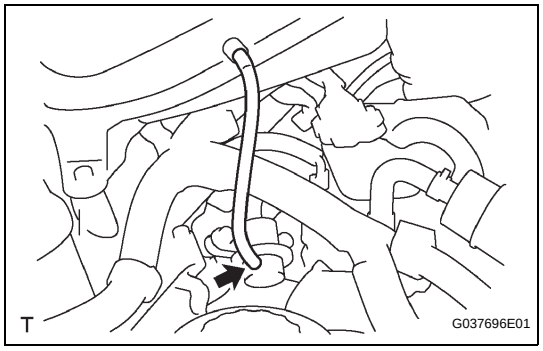

(f) Loosen the 2 hose clamp bolts.
(g) Remove the 3 bolts, then remove the intake air connector.

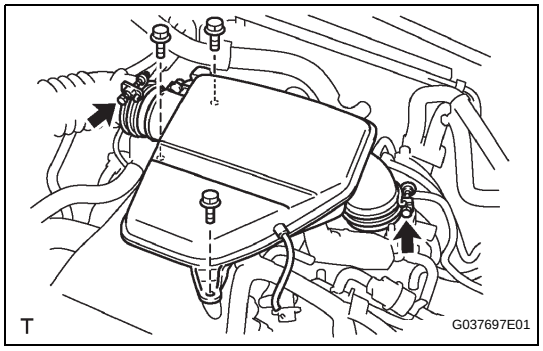

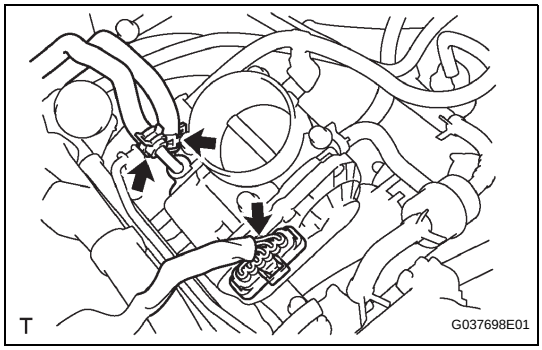

5. REMOVE THROTTLE WITH MOTOR BODY ASSEMBLY

(a) Disconnect the water by-pass hose.
(b) Disconnect the No. 2 water by-pass hose.
(c) Disconnect the throttle motor connector.

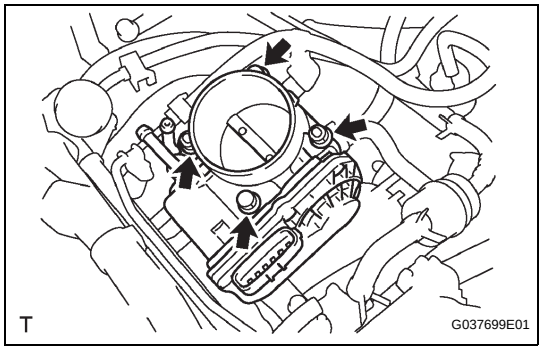

(d) Remove the 2 bolts and 2 nuts, then remove the throttle with motor body.

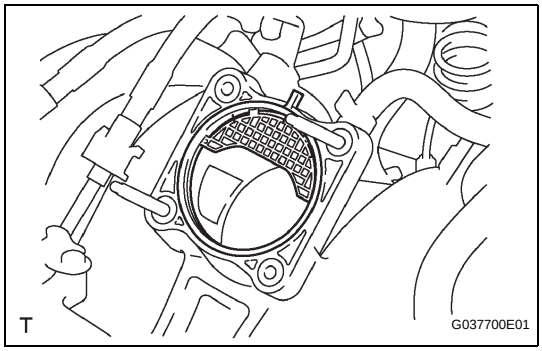

(e) Remove the gasket from the intake manifold.

INSPECTION

1. INSPECT THROTTLE WITH MOTOR BODY ASSEMBLY

(a) Check the resistance.
(1) Using an ohmmeter, measure the resistance between the terminals.
Standard

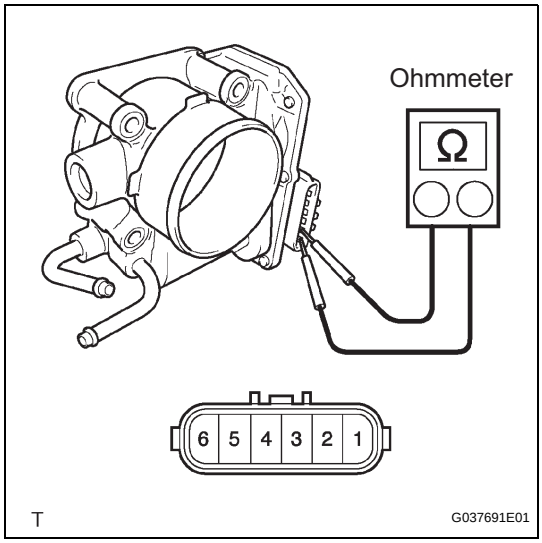

Tester Connection	Specified Condition
1(M-) - 2 (M+)	0.3 to 100 Ω at 20°C (68°F)
3 (E2) - 5 (VC)	2.0 to 4.0 kΩ at 20°C (68°F)

If the result is not as specified, replace the throttle body.

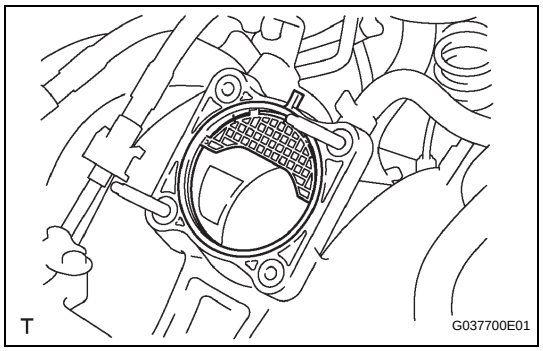

INSTALLATION

1. INSTALL THROTTLE WITH MOTOR BODY ASSEMBLY

(a) Install a new gasket onto the intake manifold.

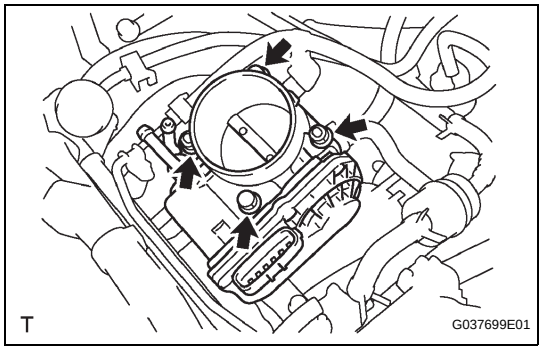

(b) Install the throttle with motor body with the 2 bolts and 2 nuts.
Torque: 9 N*m (92 kgf*cm, 80 in.*lbf)

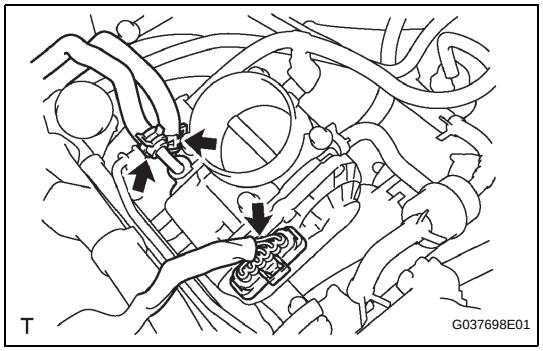

(c) Connect the water by-pass hose.
(d) Connect the water by-pass hose No. 2.
(e) Connect the throttle motor connector.

2. INSTALL INTAKE AIR CONNECTOR

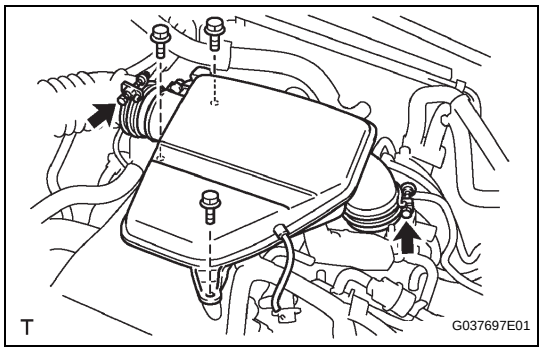

(a) Install the intake air connector with the 3 bolts.
Torque: 8 N*m (82 kgf*cm, 71 in.*lbf)
(b) Tighten the 2 hose clamp bolts.
Torque: 5 N*m (51 kgf*cm, 44 in.*lbf)

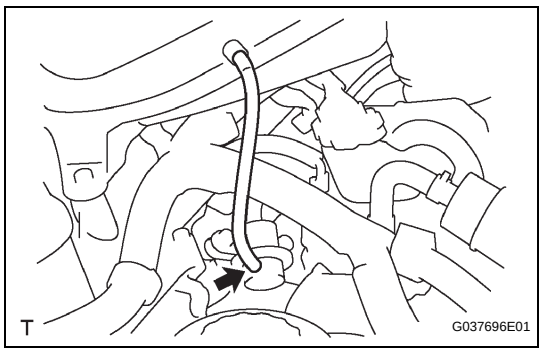

(c) Connect the vacuum hose.

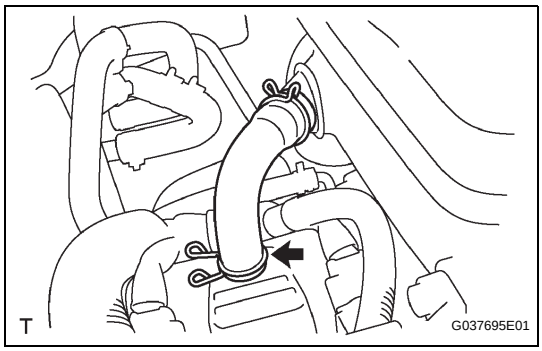

(d) Connect the ventilation hose No. 2.

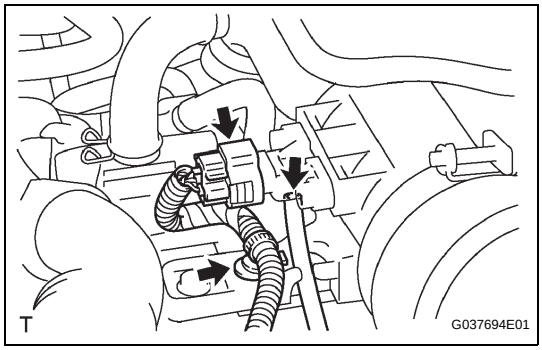

(e) Connect the vacuum hose.
(f) Engage the wire harness clamp.
(g) Connect the pressure sensor connector.

3. CONNECT CABLE TO NEGATIVE BATTERY TERMINAL
Torque: 3.9 N*m (40 kgf*cm, 35 in.*lbf)

4. ADD ENGINE COOLANT (See page CO-3)

5. CHECK FOR ENGINE COOLANT LEAKAGE (See page CO-2)

6. INSTALL ENGINE UNDER COVER SUB-ASSEMBLY NO.1 (for 4WD and Pre-Runner)

ES

ES

REMOVAL

1. **DISCONNECT CABLE FROM NEGATIVE BATTERY TERMINAL**
2. **REMOVE ENGINE UNDER COVER SUB-ASSEMBLY (for 4WD and Pre-Runner)**
3. **DRAIN ENGINE COOLANT (See page CO-3)**
4. **REMOVE INTAKE AIR CONNECTOR (See page ES-452)**
5. **REMOVE THROTTLE WITH MOTOR BODY ASSEMBLY (See page ES-453)**
6. **DISCONNECT FUEL HOSE (See page FU-11)**
7. **DISCONNECT FUEL HOSE NO.2 (See page FU-11)**
8. **REMOVE INTAKE MANIFOLD**

(a) Disconnect the fuel vapor feed hose from the VSV.

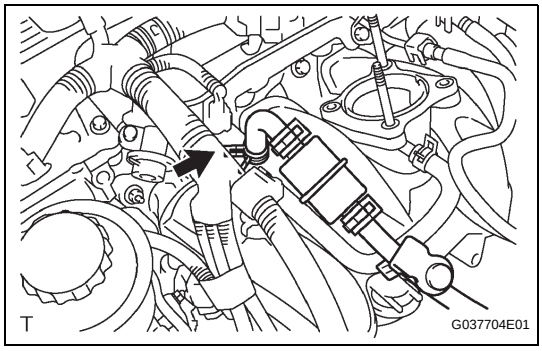

(b) Disconnect the vacuum hose.

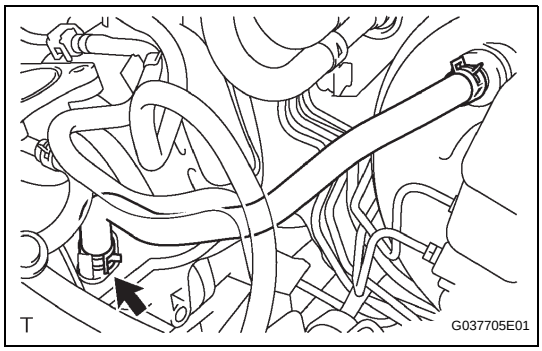

(c) Remove the bolt, then remove the clamp bracket.

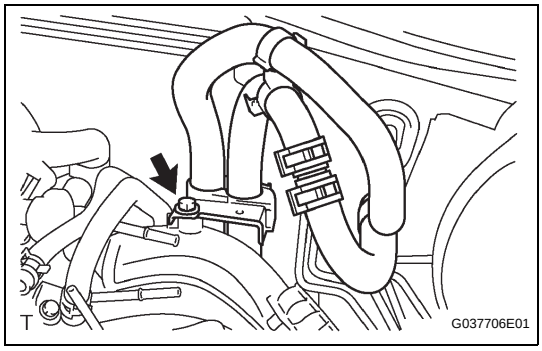

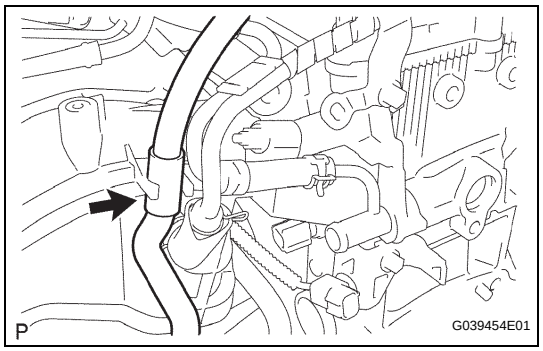

(d) Disconnect the water by-pass hose No. 2.

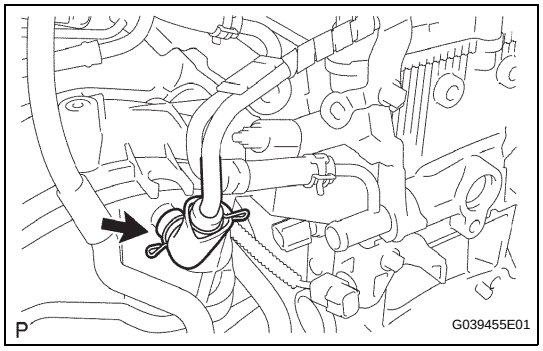

(e) Disconnect the ventilation hose No. 3.

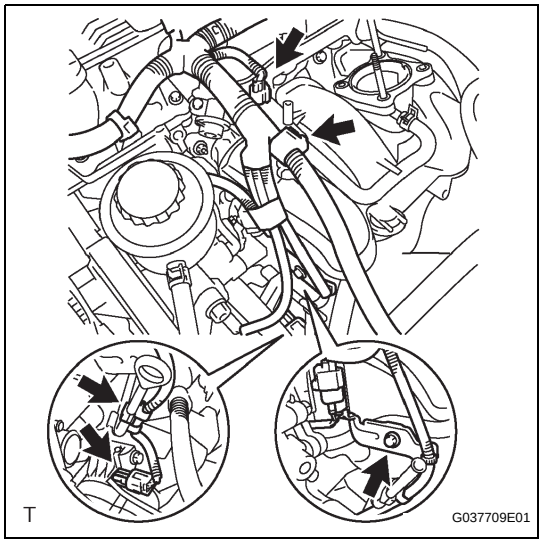

(f) Disconnect the VSV connector.
(g) Disengage the engine wire harness clamp.
(h) Disconnect the compressor magnetic clutch connector. (w/ AIR CONDITIONING)
(i) Disengage the wire harness clamp.
(j) Remove the bolt and harness clamp bracket.

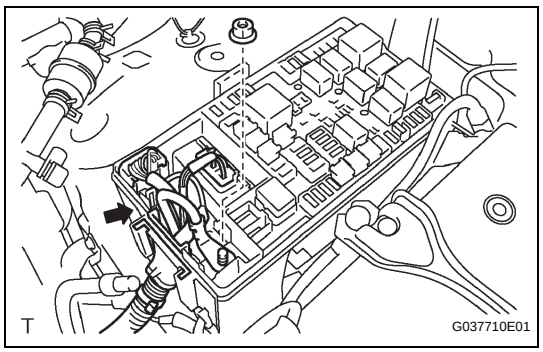

(k) Disconnect the 3 connectors.
(l) Remove the nut shown in the illustration.
(m) Disconnect the engine wire harness from the relay block.

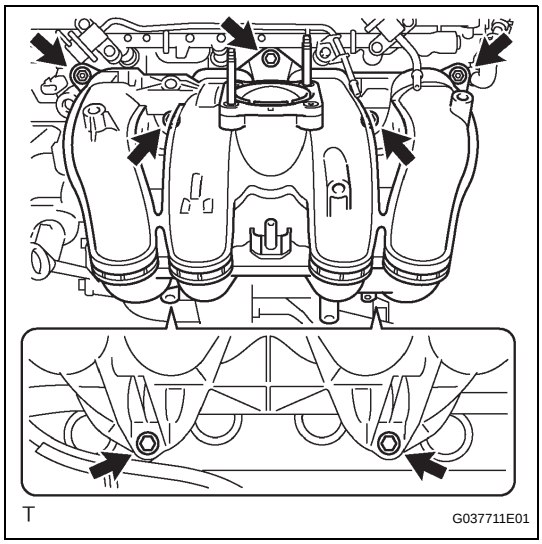

(n) Remove the 5 bolts and 2 nuts, then remove the intake manifold.

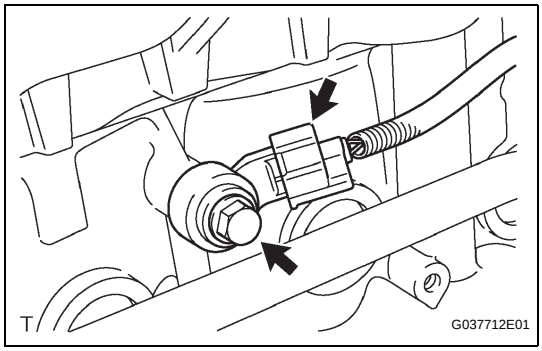

9. REMOVE KNOCK CONTROL SENSOR

(a) Disconnect the knock control sensor connector.
(b) Remove the bolt, then remove the knock control sensor.

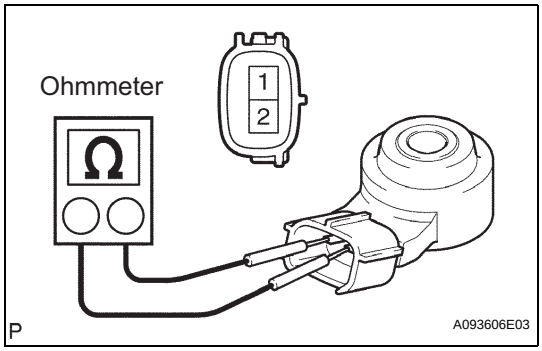

INSPECTION

1. INSPECT KNOCK SENSOR

(a) Check the resistance.
(1) Using an ohmmeter, measure the resistance between the terminals.
Standard

Tester Connection	Specified Condition
1 (Ground) - 2 (Output)	120 to 280 kΩ at 20°C (68°F)

If the result is not as specified, replace the knock sensor.

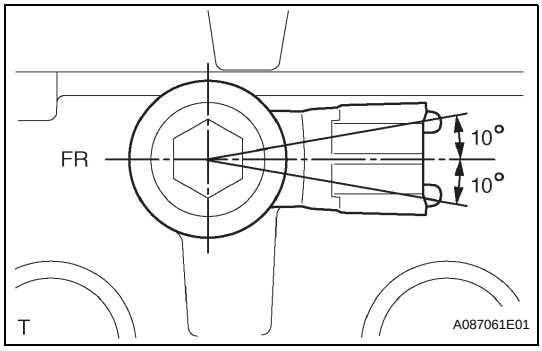

INSTALLATION

1. INSTALL KNOCK CONTROL SENSOR

(a) Install the knock control sensor with the bolt.
Torque: 20 N*m (204 kgf*cm, 15 ft.*lbf)
NOTICE:
Make sure that the knock sensor is at the correct angle when installing.
(b) Connect the knock control sensor connector.

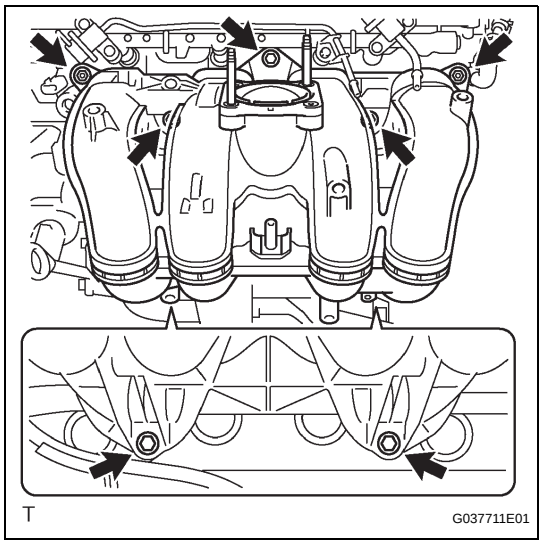

(n) Remove the 5 bolts and 2 nuts, then remove the intake manifold.

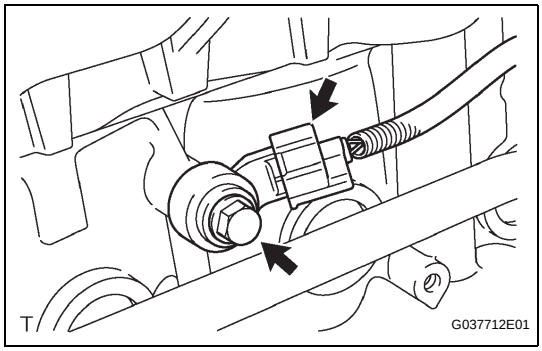

9. REMOVE KNOCK CONTROL SENSOR

(a) Disconnect the knock control sensor connector.
(b) Remove the bolt, then remove the knock control sensor.

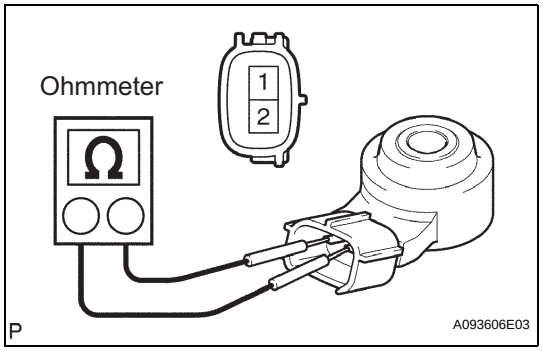

INSPECTION

1. INSPECT KNOCK SENSOR

(a) Check the resistance.
(1) Using an ohmmeter, measure the resistance between the terminals.
Standard

Tester Connection	Specified Condition
1 (Ground) - 2 (Output)	120 to 280 kΩ at 20°C (68°F)

If the result is not as specified, replace the knock sensor.

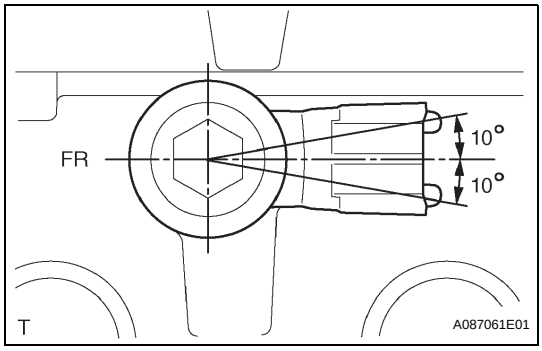

INSTALLATION

1. INSTALL KNOCK CONTROL SENSOR

(a) Install the knock control sensor with the bolt.
Torque: 20 N*m (204 kgf*cm, 15 ft.*lbf)
NOTICE:
Make sure that the knock sensor is at the correct angle when installing.
(b) Connect the knock control sensor connector.

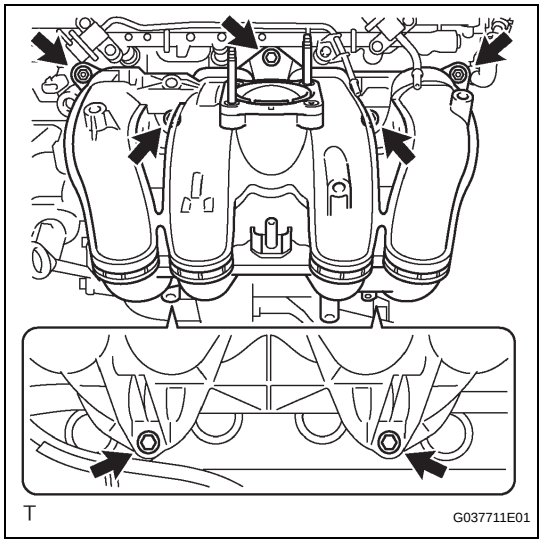

2. INSTALL INTAKE MANIFOLD

(a) Install a new gasket onto the intake manifold.
(b) Install the intake manifold with the 5 bolts and 2 nuts.
Torque: 25 N*m (255 kgf*cm, 18 ft.*lbf)

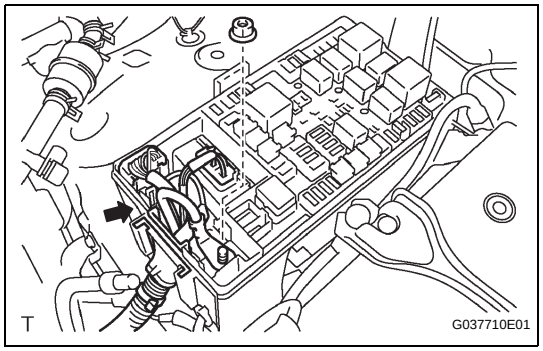

(c) Connect the engine wire harness to the relay block.
(d) Install the nut shown in the illustration.
Torque: 10 N*m (102 kgf*cm, 7 ft.*lbf)
(e) Connect the 3 connectors.

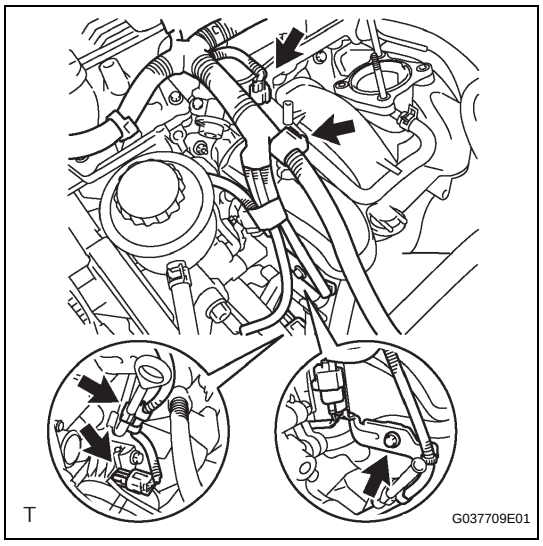

(f) Install the harness clamp bracket with the bolt.
Torque: 8.2 N*m (84 kgf*cm, 73 in.*lbf)
(g) Engage the wire harness clamp.
(h) Connect the compressor magnetic clutch connector. (w/ AIR CONDITIONING)
(i) Engage the engine wire harness clamp.
(j) Connect the VSV connector.

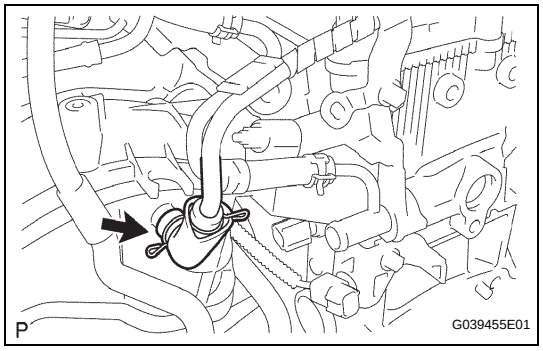

(k) Connect the ventilation hose No. 3.

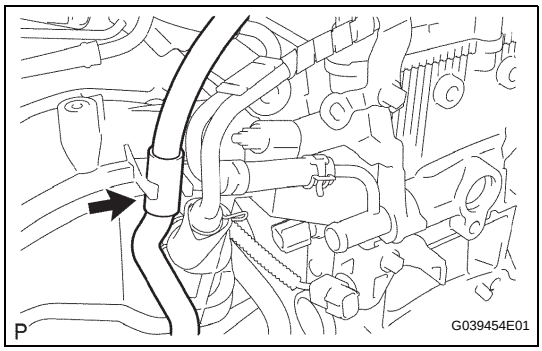

(l) Connect the water by-pass hose No. 2.

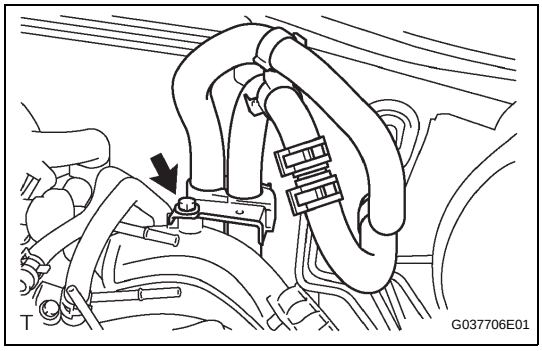

(m) Install the clamp bracket with the bolt.
Torque: 19 N*m (194 kgf*cm, 14 in.*lbf)

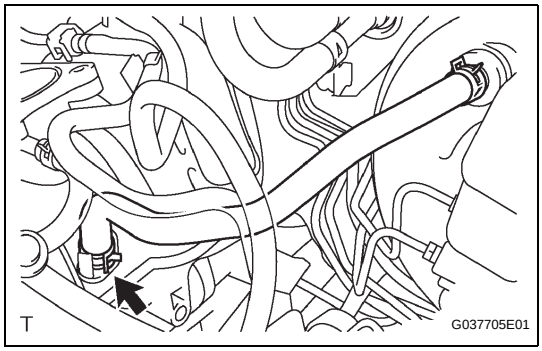

(n) Connect the vacuum hose.

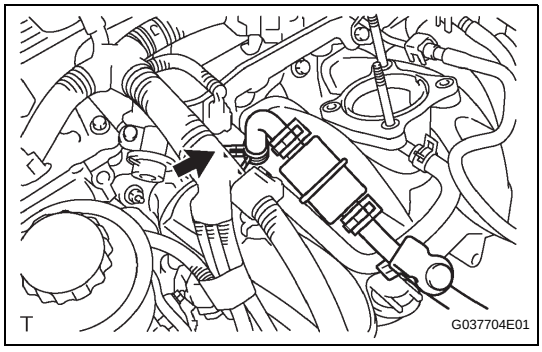

(o) Connect the fuel vapor feed hose to the VSV.

3. **CONNECT FUEL HOSE (See page FU-17)**
4. **CONNECT FUEL HOSE NO.2 (See page FU-17)**
5. **INSTALL THROTTLE WITH MOTOR BODY ASSEMBLY (See page ES-454)**
6. **INSTALL INTAKE AIR CONNECTOR (See page ES-455)**
7. **CONNECT CABLE TO NEGATIVE BATTERY TERMINAL**
   Torque: 3.9 N*m (40 kgf*cm, 35 in.*lbf)
8. **ADD ENGINE COOLANT (See page CO-3)**
9. **CHECK FOR ENGINE COOLANT LEAKAGE (See page CO-2)**
10. **CHECK FOR FUEL LEAKAGE**
11. **INSTALL ENGINE UNDER COVER SUB-ASSEMBLY NO.1 (for 4WD and Pre-Runner)**

REASSEMBLY

CAUTION:
Wear protective gloves. Sharp surfaces on the front seat back spring and front seat with adjuster frame could cause injuries to your hands.

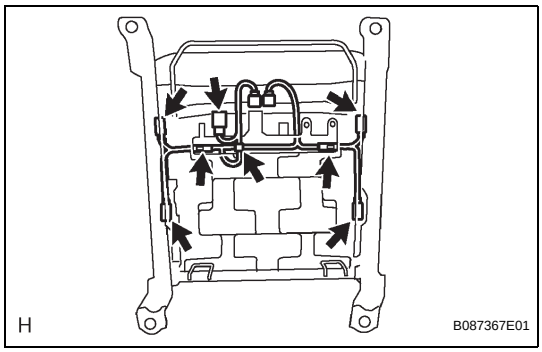

1. INSTALL SEAT WIRE
(a) Install the 3 wire harness clamps and connector clamp.
(b) Connect the 4 connectors.

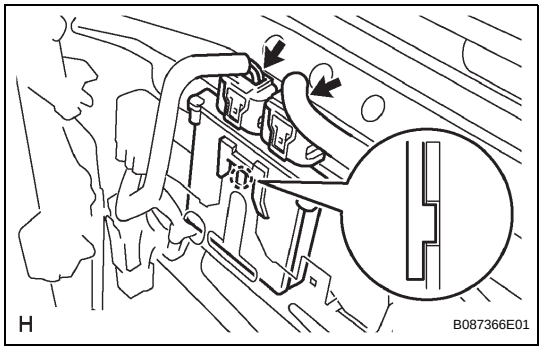

2. INSTALL OCCUPANT CLASSIFICATION ECU
(a) Engage the claw and install the occupant classification ECU.
(b) Connect the 2 connectors.

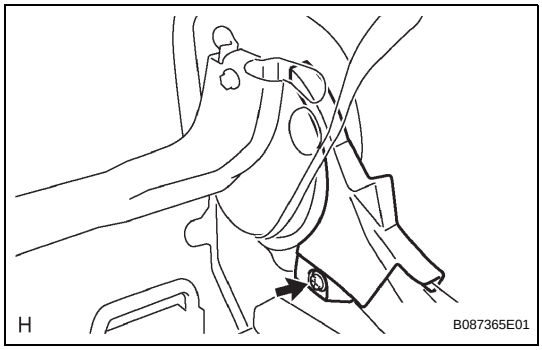

3. INSTALL RECLINING ADJUSTER OUTSIDE COVER LH
(a) Install the reclining adjuster outside cover with the screw.

4. INSTALL RECLINING ADJUSTER OUTSIDE COVER RH
HINT:
Follow the same procedures as for the reclining adjuster outside cover LH.

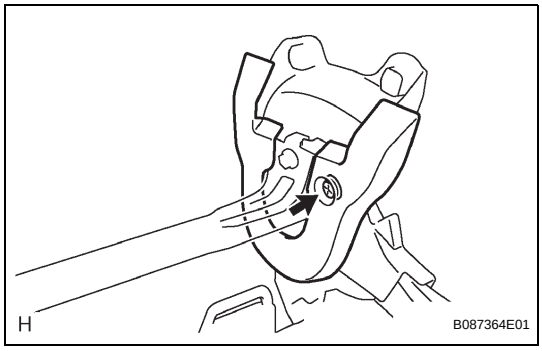

5. INSTALL RECLINING ADJUSTER INSIDE COVER LH
(a) Install the reclining adjuster inside cover with the screw.

6. INSTALL RECLINING ADJUSTER INSIDE COVER RH
HINT:
Follow the same procedures as for the reclining adjuster inside cover LH.

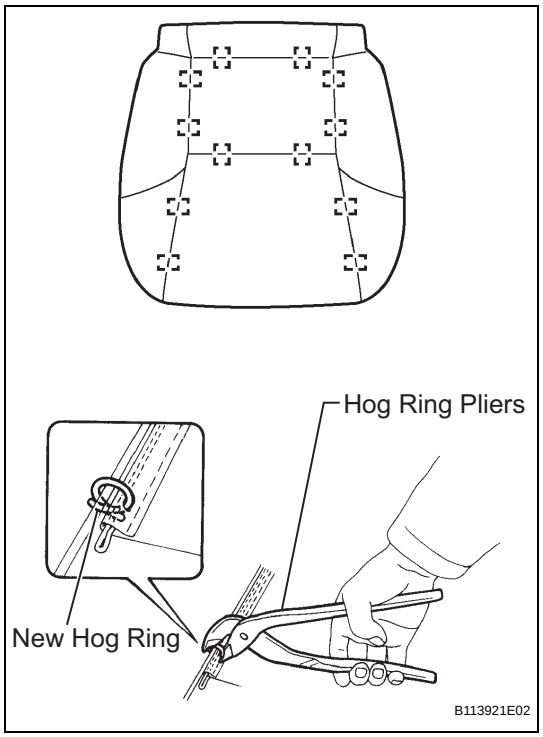

7. INSTALL FRONT SEAT CUSHION COVER

(a) Using hog ring pliers, install the front seat cushion cover with new hog rings.

NOTICE:

- **Do not contaminate or scratch the front seat cushion cover.**
- **When installing the hog rings, minimize wrinkles as far as possible.**

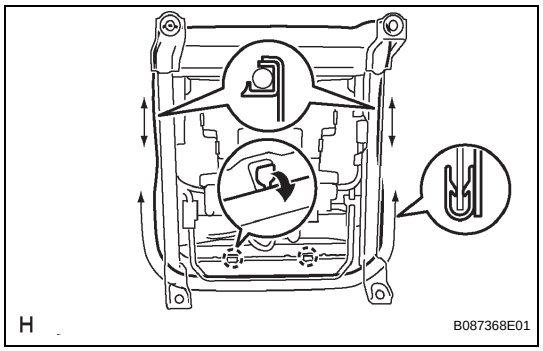

8. INSTALL FRONT SEAT CUSHION ASSEMBLY

(a) Engage the 2 claws and 3 hooks, and install the front seat cushion.

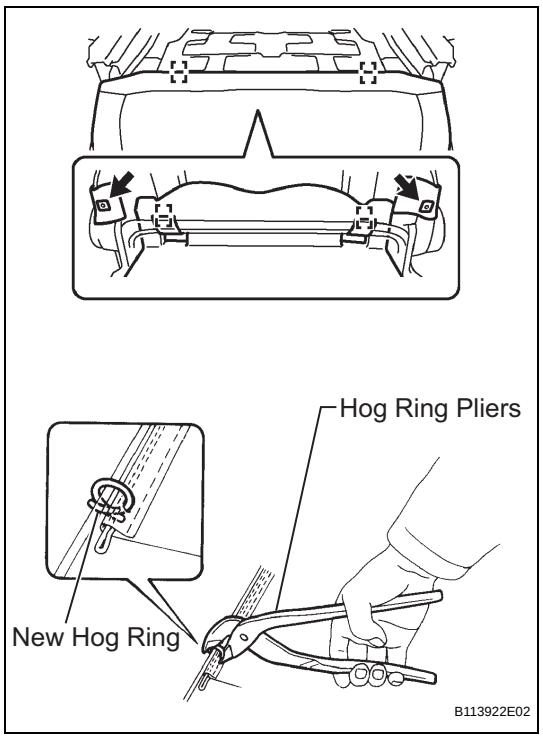

(b) Hook the front seat cushion cover to the front seat with adjuster frame.

(c) Using hog ring pliers, install new hog rings.

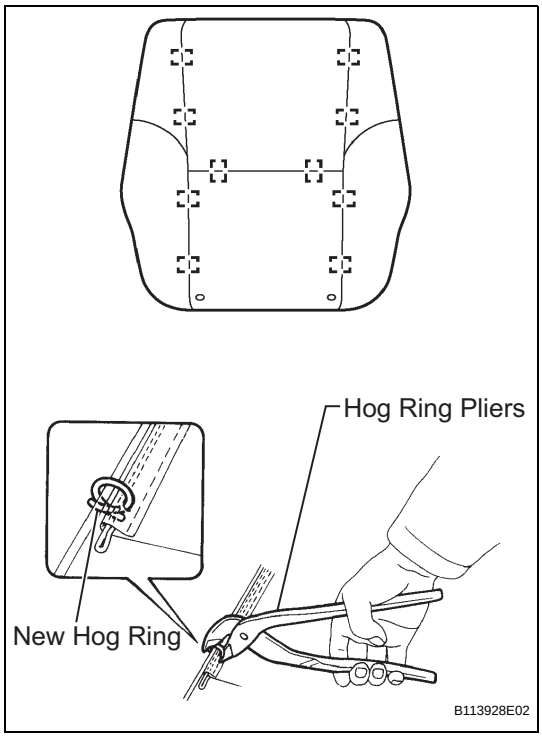

9. INSTALL FRONT SEAT BACK COVER

(a) Using hog ring pliers, install the front seat back cover with new hog rings.

NOTICE:

- **Do not contaminate or scratch the front seat back cover.**
- **When installing hog rings, minimize wrinkles as far as possible.**

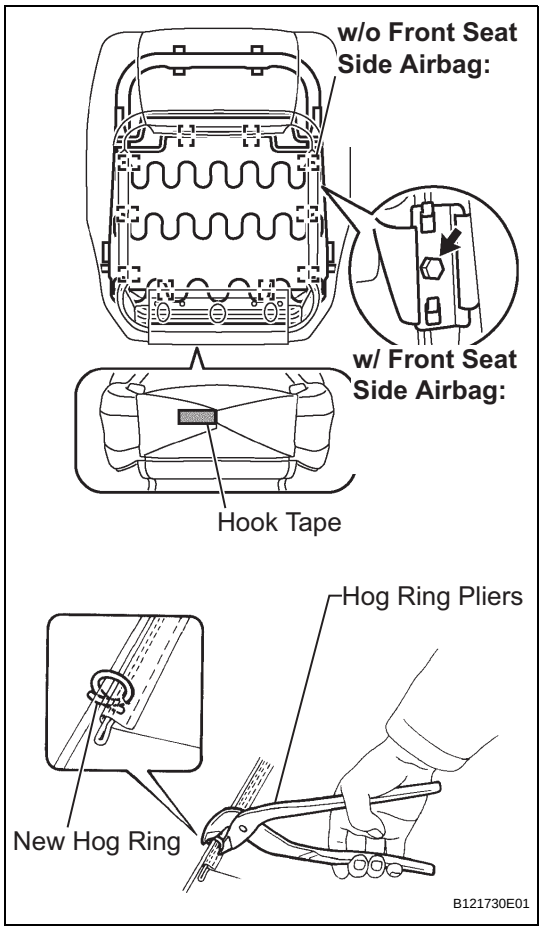

10. INSTALL FRONT SEAT BACK SPRING ASSEMBLY

(a) w/ Front Seat Side Airbag:

(1) Install the front seat back spring into the front seat back pad.

(2) Install the hook tape.

(3) Using hog ring pliers, install new hog rings.

(4) Fully cover the air bag with the inner hook and tighten the bolt.

Torque: 5.5 N*m (55 kgf*cm, 49 in.*lbf)

NOTICE:

- **For vehicles with side air bag, the front seat back cover must be securely installed. Otherwise, the side air bag may not deploy properly.**
- **Make sure that the strap is not twisted after installing the inner hook.**
- **Install the inner hook securely.**

(b) w/o Front Seat Side Airbag:

(1) Install the front seat back spring into the front seat back pad.

(2) Install the hook tape.

(3) Using hog ring pliers, install new hog rings.

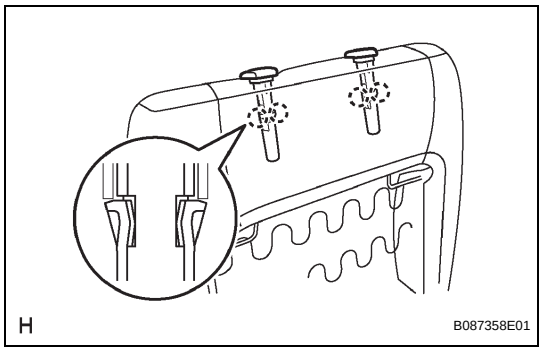

11. INSTALL FRONT SEAT HEADREST SUPPORT

HINT:

Follow the same procedures as for the opposite side.

(a) Engage the 2 claws and install the front seat headrest support.

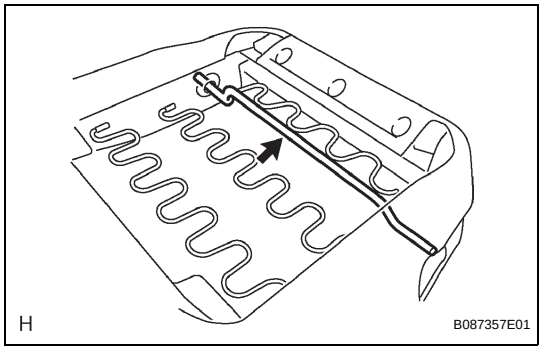

12. INSTALL FRONT SEAT BACK LOCK HANDLE ROD

(a) Install the front seat back lock handle rod.

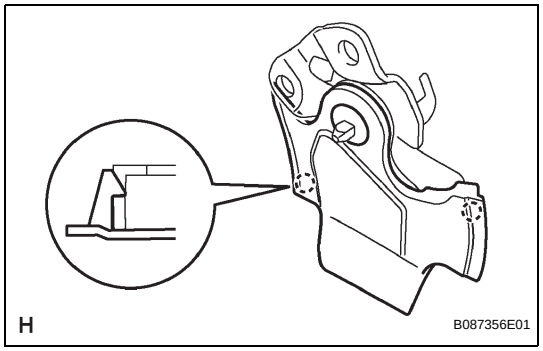

13. INSTALL FRONT SEAT HINGE COVER LH

(a) Engage the 2 claws and install the front seat hinge cover.

14. INSTALL FRONT SEAT HINGE COVER RH

HINT:

Follow the same procedures as for the seat hinge cover LH.

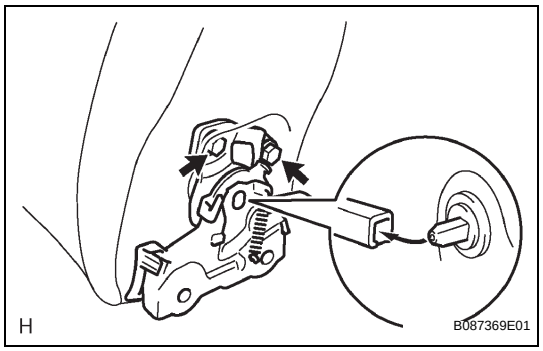

15. INSTALL FRONT SEAT BACK LOCK SUB-ASSEMBLY LH

(a) Install the front seat back lock with the 2 bolts.
Torque: 43 N*m (440 kgf*cm, 32 ft.*lbf)

16. INSTALL FRONT SEAT BACK LOCK SUB-ASSEMBLY RH

HINT:

Follow the same procedures as for the front seat back lock LH.

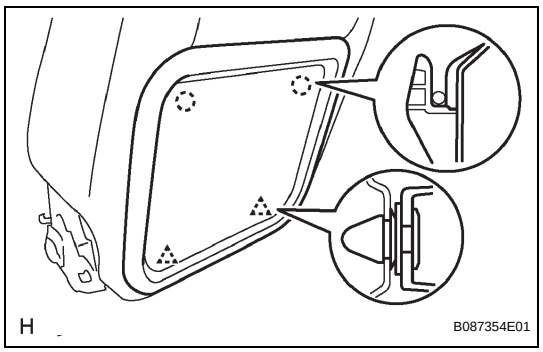

17. INSTALL FRONT SEAT BACK BOARD

(a) Engage the 2 claws and 2 clips, and install the front seat back board.

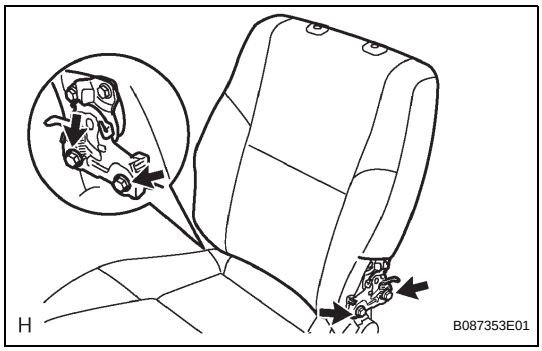

18. INSTALL FRONT SEAT BACK ASSEMBLY

(a) Install the front seat back with the 4 bolts.
Torque: 43 N*m (440 kgf*cm, 32 ft.*lbf)

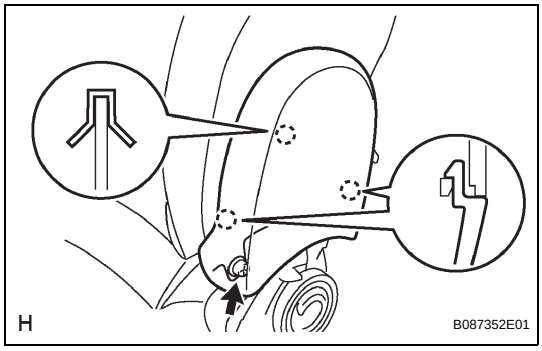

19. INSTALL FRONT SEAT BACK SHIELD LH

(a) Engage the 3 claws and install the front seat back shield.
(b) Tighten the screw.

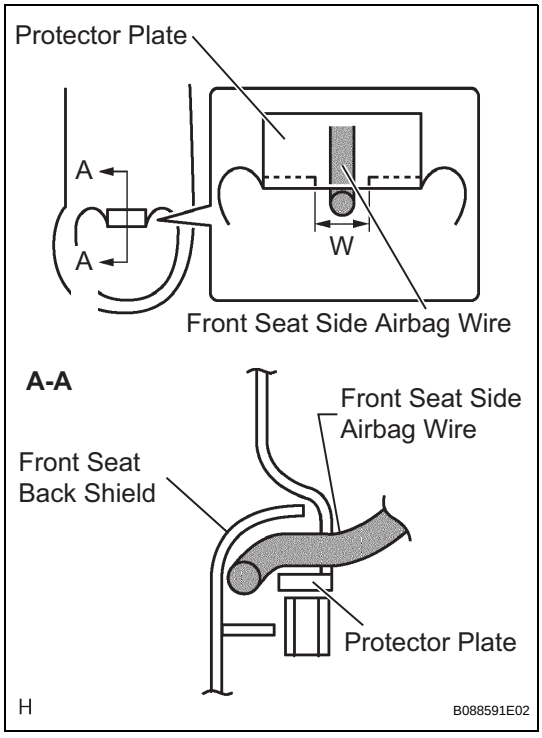

20. INSTALL FRONT SEAT BACK SHIELD RH

(a) w/ Front Seat Side Airbag:
(1) The front seat side air bag wire must pass between protector plate and the front seat back shield.
HINT:
Tune "W" to be able to thread the front seat side airbag wire and clips through.

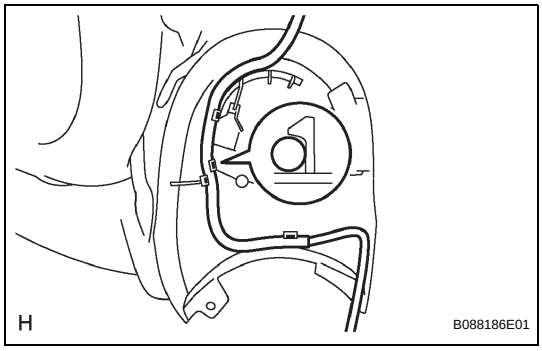

(2) Engage the 4 claws and install the front seat side air bag wire.

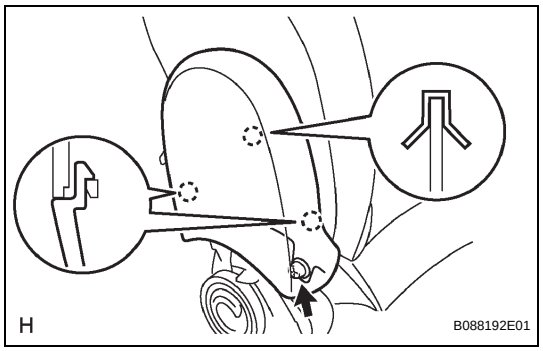

(3) Engage the 3 claws and install the front seat back shield.
(4) Tighten the screw.

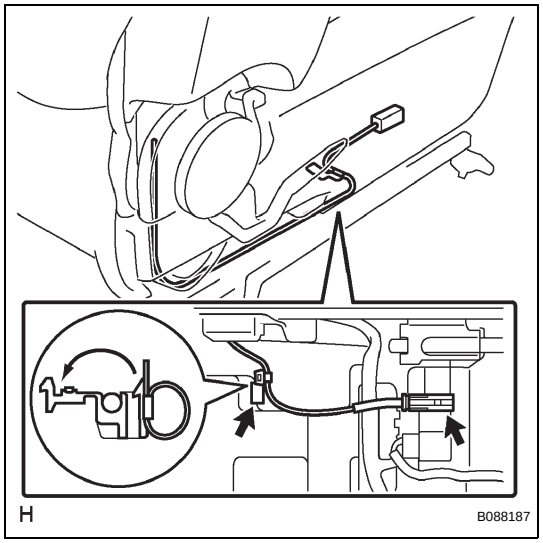

(5) Install the wire harness clamp and connector clamp.

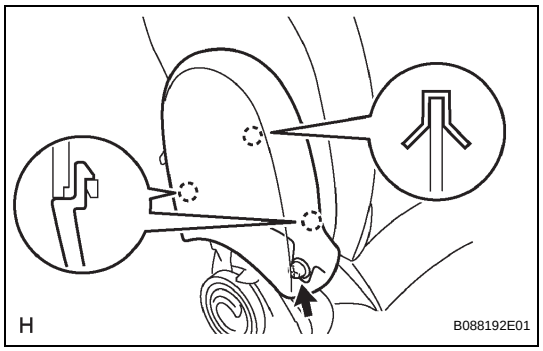

(b) w/o Front Seat Side Airbag:
(1) Engage the 3 claws and install the front seat back shield.
(2) Tighten the screw.

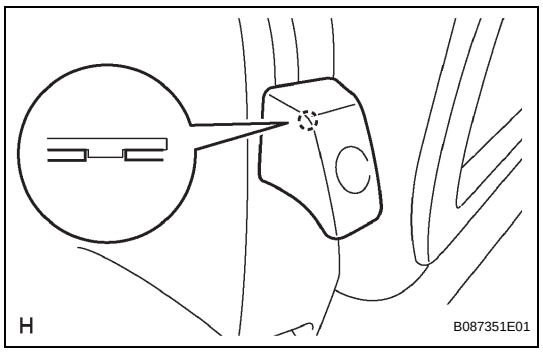

21. INSTALL RECLINING ADJUSTER RELEASE KNOB LH

(a) Engage the claw and install the reclining adjuster release handle.

22. INSTALL RECLINING ADJUSTER RELEASE KNOB RH

HINT:
Follow the same procedures as for the reclining adjuster release handle LH.

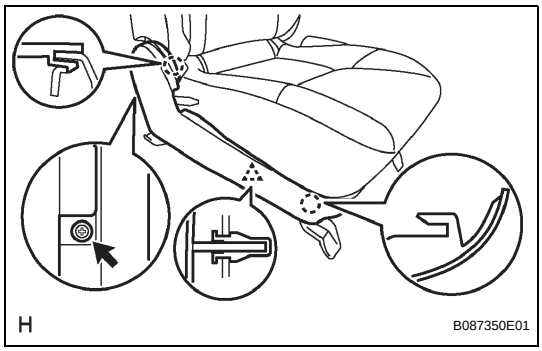

23. INSTALL FRONT SEAT CUSHION SHIELD

(a) Engage the 2 claws and clip, and install the front seat cushion shield.

(b) Tighten the screw.

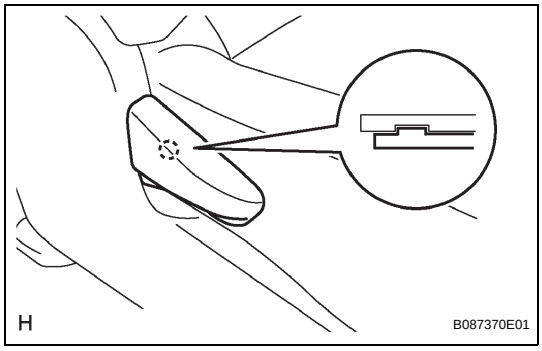

24. INSTALL RECLINING ADJUSTER RELEASE HANDLE

(a) Engage the claw and install the reclining adjuster release handle.

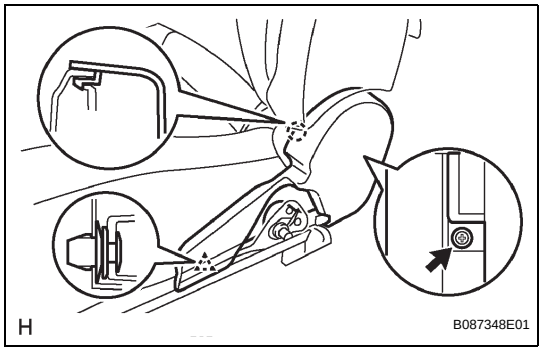

25. INSTALL FRONT SEAT CUSHION INNER SHIELD

(a) Engage the claw and clip, and install the front seat cushion inner shield.

(b) Tighten the screw.

26. INSTALL FRONT SEAT INNER BELT ASSEMBLY (See page SE-47)

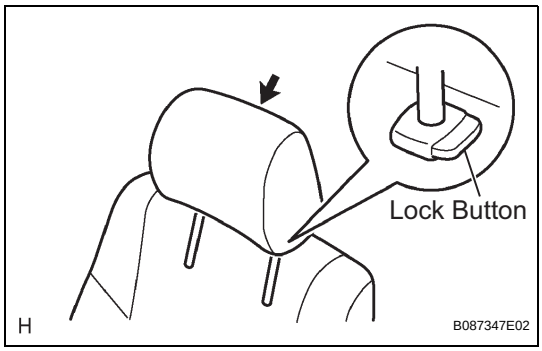

27. INSTALL FRONT SEAT HEADREST ASSEMBLY

(a) Disengage the lock button of the front seat headrest support and install the front seat headrest.

INSTALLATION

CAUTION:
Some of these service operations affect the SRS airbag system. Read the precautionary notices concerning the SRS airbag system before servicing (w/ Front Seat Side Airbag) (See page RS-1).

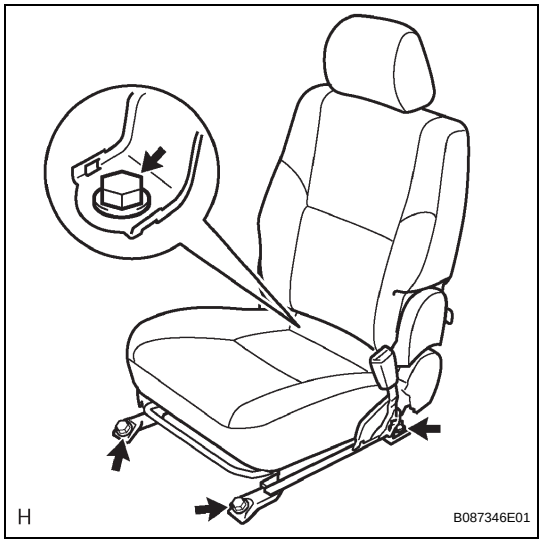

1. INSTALL FRONT SEAT ASSEMBLY
(a) Place the front seat in the cabin.
(b) Tighten the 2 bolts on the front side of the front seat.
Torque: 37 N*m (375 kgf*cm, 27 ft.*lbf)
(c) Tighten the 2 bolts on the rear side of the front seat.
Torque: 37 N*m (375 kgf*cm, 27 ft.*lbf)

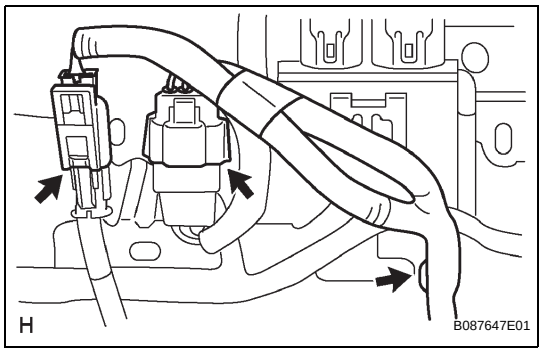

(d) Install the wire harness clamp.
(e) Connect the connector.
(f) w/ Front Seat Side Airbag:
(1) Connect the connector.

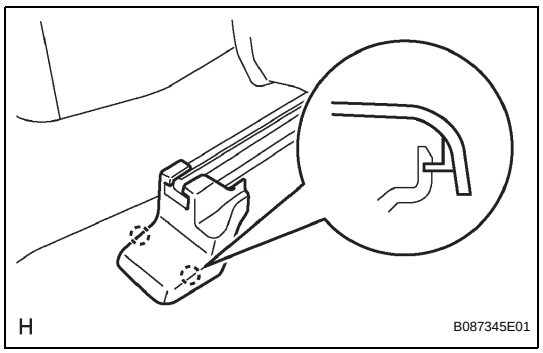

2. INSTALL SEAT TRACK COVER
HINT:
Follow the same procedures as for the opposite side.
(a) Engage the 2 claws and install the seat track cover.

3. CONNECT CABLE TO NEGATIVE BATTERY TERMINAL
Torque: 3.9 N*m (40 kgf*cm, 35 in.*lbf)

4. INSPECT SRS WARNING LIGHT (w/ Front Seat Side Airbag)
(See page RS-28)

SE

REMOVAL

CAUTION:
Some of these service operations affect the SRS airbag system. Read the precautionary notices concerning the SRS airbag system before servicing (w/ Front Seat Side Airbag) (See page RS-1).

1. DISCONNECT CABLE FROM NEGATIVE BATTERY TERMINAL

Wait for at least 90 seconds after disconnecting the cable to prevent the airbag from working (w/ Front Seat Side Airbag).

2. REMOVE SEAT TRACK COVER

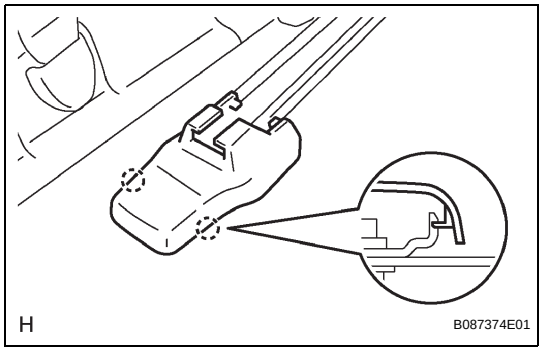

HINT:
Follow the same procedures as for the opposite side.

(a) Disengage the 2 claws and remove the seat track cover.

3. REMOVE FRONT SEAT ASSEMBLY

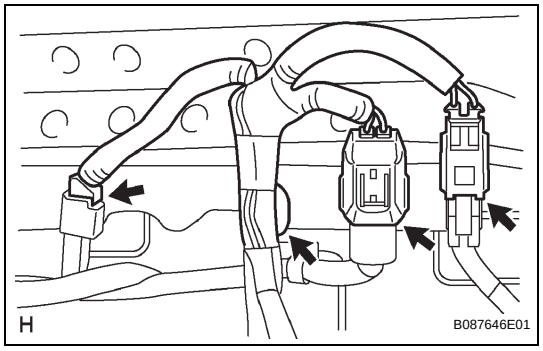

(a) Disconnect the 2 connectors.
(b) w/ Front Seat Side Airbag:
  (1) Disconnect the connector.
(c) Using a clip remover, remove the wire harness clamp.



(d) Remove the 4 bolts and front seat.

SE

DISASSEMBLY

CAUTION:
Wear protective gloves. Sharp surface on the front seat with adjuster frame could cause injuries to your hands.

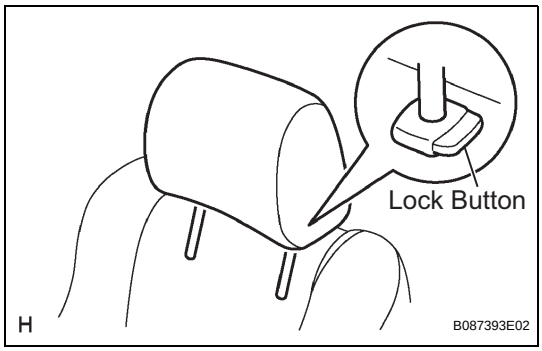

1. REMOVE FRONT SEAT HEADREST ASSEMBLY

(a) Disengage the lock button of the front seat headrest support and remove the front seat headrest.

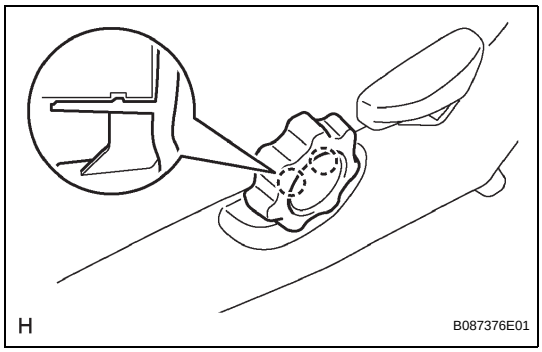

2. REMOVE LUMBAR ADJUSTER DIAL

(a) Pull the lumbar adjuster dial outward.

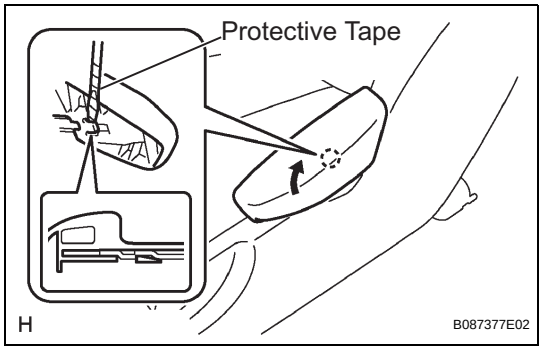

3. REMOVE RECLINING ADJUSTER RELEASE HANDLE

(a) Using a screwdriver with its tip taped in protective tape, disengage the claw and remove the reclining adjuster release handle.

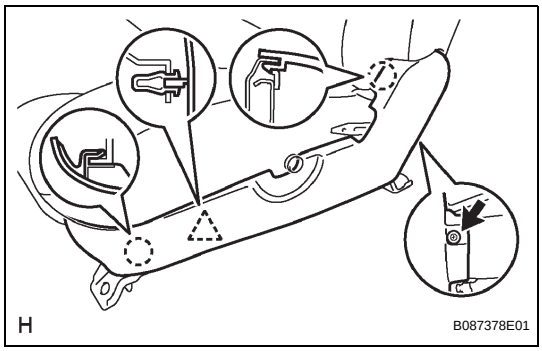

4. REMOVE FRONT SEAT CUSHION SHIELD LH

(a) Remove the screw.
(b) Disengage the 2 claws and clip, and remove the front seat cushion shield.

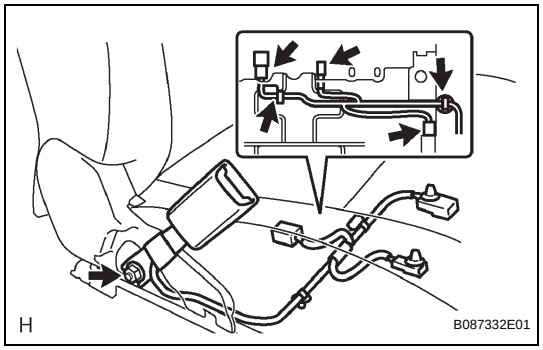

5. REMOVE FRONT SEAT INNER BELT ASSEMBLY

(a) Using a clip remover, remove the wire harness clamp and 2 connector clamps.
(b) Remove the wire harness clamp.
(c) Disconnect the seat position airbag sensor connector.
(d) Remove the nut and front seat inner belt.

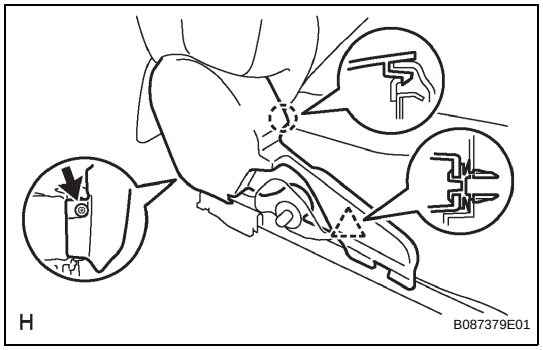

6. REMOVE FRONT SEAT CUSHION INNER SHIELD

(a) Remove the screw.
(b) Disengage the claw and clip, and remove the front seat cushion inner shield.

SE

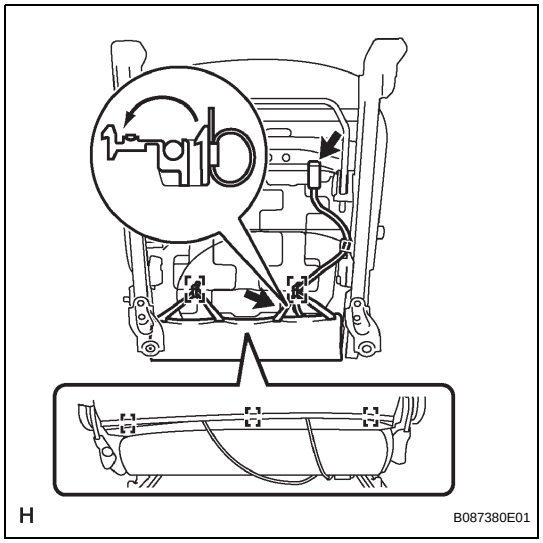

7. REMOVE FRONT SEAT HEADREST SUPPORT

(a) w/ Front Seat Side Airbag:
  (1) Using a clip remover, remove the connector clamp.
  (2) Remove the wire harness clamp.
(b) Remove the 5 hog rings.

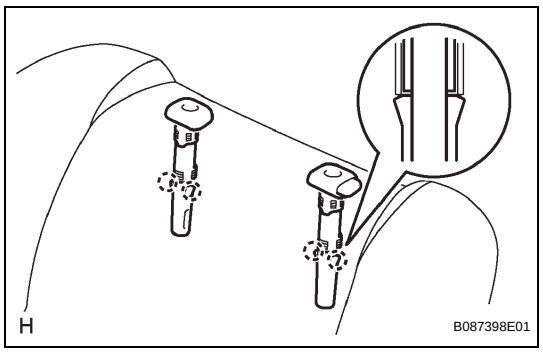

(c) Disengage the 2 claws and remove the front seat headrest support.
HINT:
Follow the same procedures as for the opposite side.

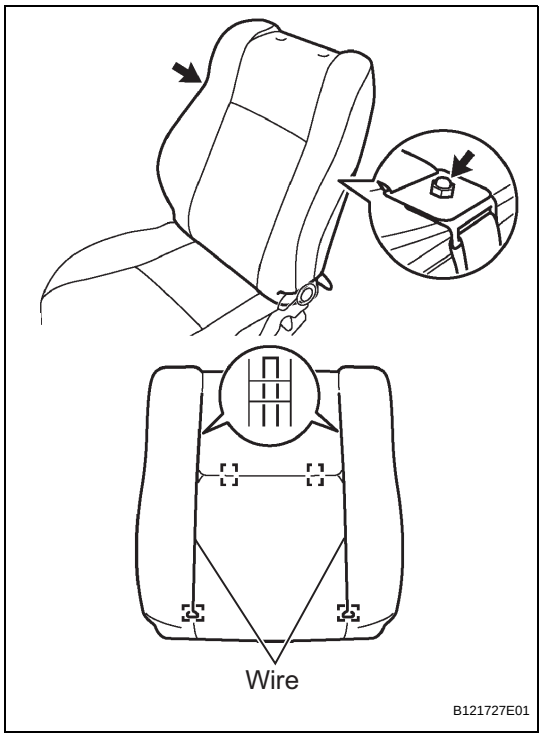

8. REMOVE FRONT SEAT BACK COVER

(a) Remove the 2 hog rings.
(b) Remove the 2 wires.

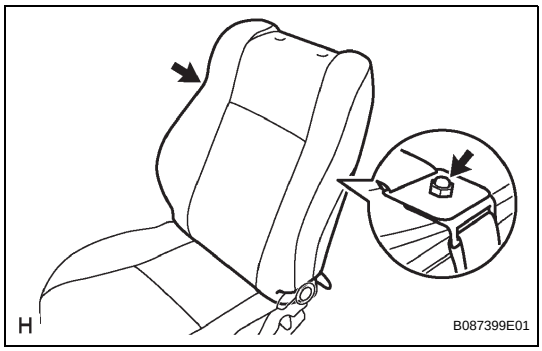

(c) w/ Front Seat Side Airbag:
  (1) Remove the nut and strap.
(d) Remove the 2 hog rings and front seat back cover.
(e) Remove the front seat back pad from the front seat frame adjuster.

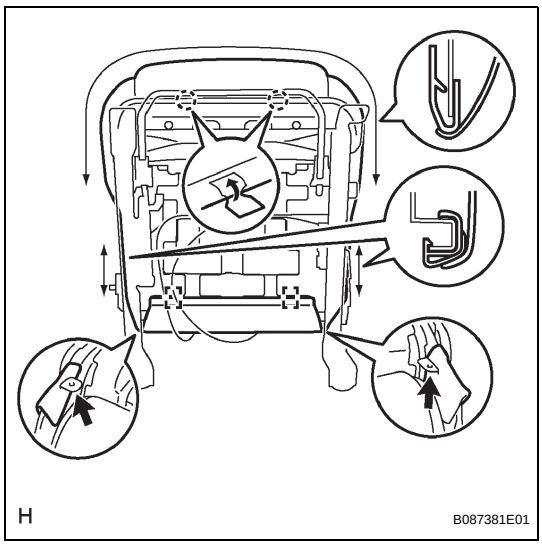

9. REMOVE FRONT SEAT CUSHION COVER

(a) Remove the front seat cushion cover from the front seat frame adjuster.
(b) Remove the 2 hog rings.
(c) Disengage the 2 claws and 3 hooks, and remove the front seat cushion pad together with the front seat cushion cover.

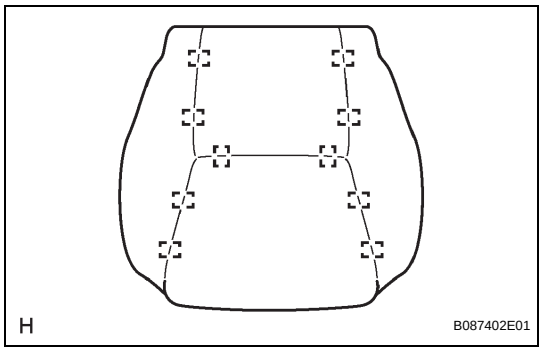

(d) Remove the 10 hog rings and front seat cushion cover.

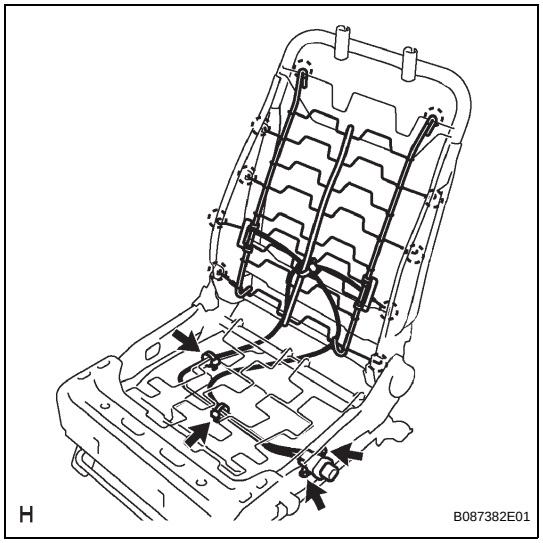

10. REMOVE LUMBAR SUPPORT ADJUSTER ASSEMBLY

(a) Remove the 2 wiring harness clamps.
(b) Remove the 2 screws.
(c) Disengage the 10 hooks and lumbar support adjuster.

SE

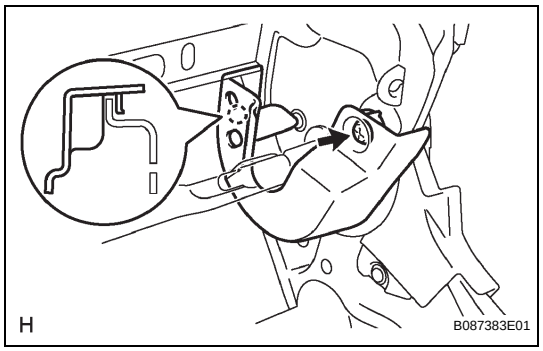

11. REMOVE RECLINING ADJUSTER INSIDE COVER LH

(a) Remove the screw.
(b) Disengage the claw and remove the reclining adjuster inside cover.

12. REMOVE RECLINING ADJUSTER INSIDE COVER RH

HINT:
Follow the same procedures as for the reclining adjuster inside cover LH.

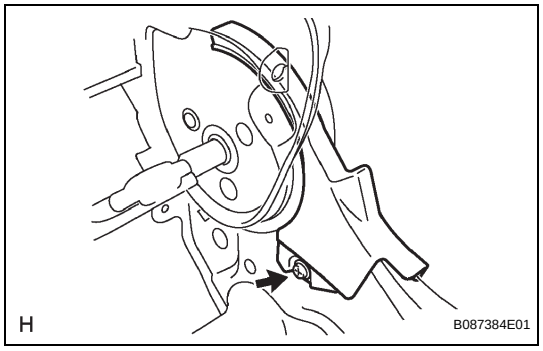

13. REMOVE RECLINING ADJUSTER OUTSIDE COVER LH

(a) Remove the screw and reclining adjuster outside cover.

14. REMOVE RECLINING ADJUSTER OUTSIDE COVER RH

HINT:
Follow the same procedures as for the reclining adjuster outside cover LH.

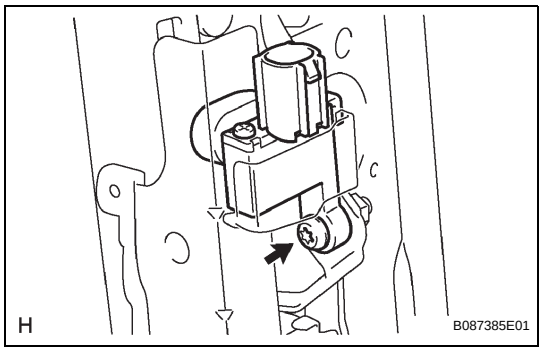

15. REMOVE SEAT POSITION SENSOR

(a) Using a "Torx" socket wrench T30, remove the screw and seat position sensor.

REASSEMBLY

CAUTION:
Wear protective gloves. Sharp surface on the front seat with adjuster frame could cause injuries to your hands.

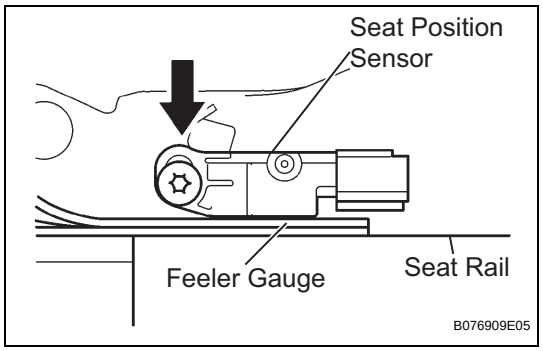

1. INSTALL SEAT POSITION SENSOR

(a) Temporarily install the seat position sensor.

(b) Install a 1 mm (0.04 in.) feeler gauge between the slide rail and seat position sensor as shown in the illustration.

NOTICE:

- **If the seat position sensor has been dropped, or there are any cracks, dents or other defects in the case, bracket or connector, replace the seat position sensor with a new one.**
- **When installing the seat position sensor, make sure that the SRS wiring does not interfere with other parts and is not pinched between other parts.**

HINT:

Make sure that the clearance between the seat position sensor and seat rail is within 0.6 to 2 mm (0.023 to 0.079 in.).

(c) Push the top of the seat position sensor. While holding the seat position sensor, tighten the seat position sensor using a "Torx" socket wrench T30.

Torque: 8.0 N*m (80 kgf*cm, 71 in.*lbf)

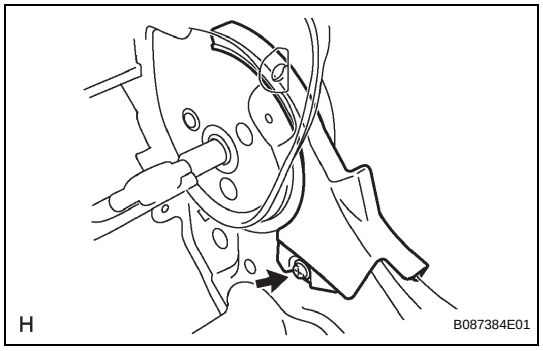

2. INSTALL RECLINING ADJUSTER OUTSIDE COVER LH

(a) Install the reclining adjuster outside cover with the screw.

3. INSTALL RECLINING ADJUSTER OUTSIDE COVER RH

HINT:

Follow the same procedures as for the reclining adjuster outside cover LH.

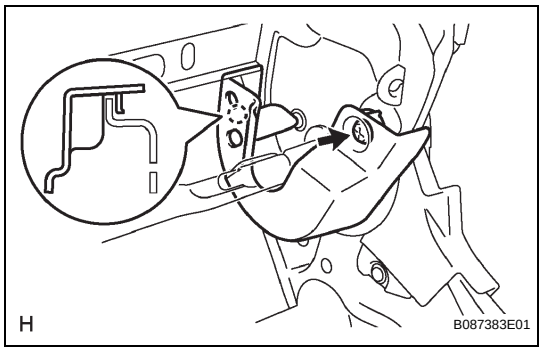

4. INSTALL RECLINING ADJUSTER INSIDE COVER LH

(a) Engage the claw and install the reclining adjuster inside cover.

(b) Tighten the screw.

5. INSTALL RECLINING ADJUSTER INSIDE COVER RH

HINT:

Follow the same procedures as for the reclining adjuster inside cover LH.

SE

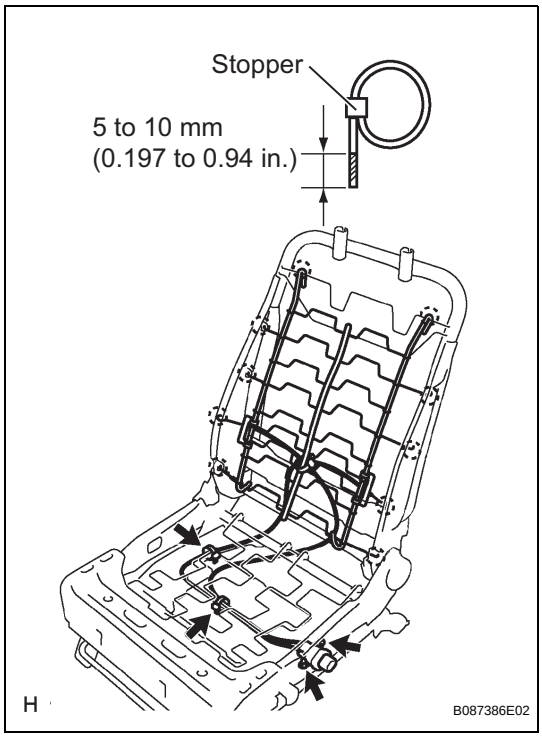

6. INSTALL LUMBAR SUPPORT ADJUSTER ASSEMBLY

(a) Hook the 10 hooks.
(b) Install the lumbar support adjuster with the 2 screws.
(c) Install 2 new wiring harness clamps.
(d) Cut each wiring harness clamp 5 to10 mm (0.197 to 0.394 in.) from the stopper, as shown in the illustration.

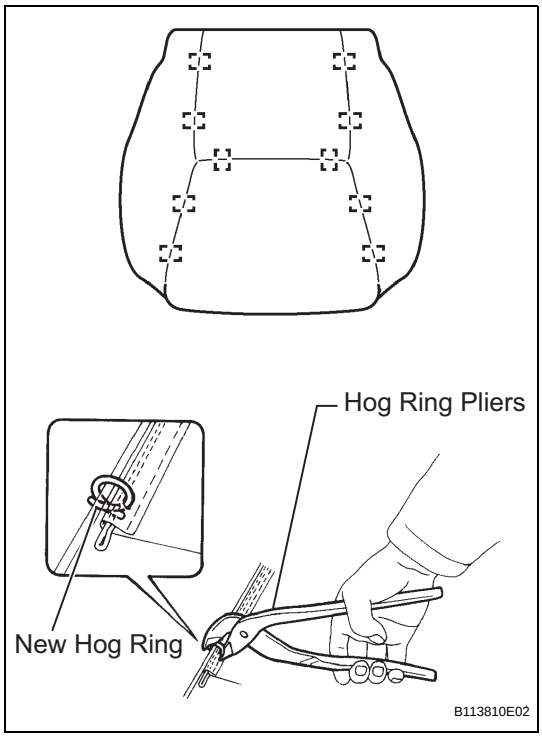

7. INSTALL FRONT SEAT CUSHION COVER

(a) Using hog ring pliers, install the front seat cushion cover with new hog rings.

NOTICE:

- **Do not contaminate or scratch the front seat cushion cover.**
- **When installing the hog rings, minimize wrinkles as far as possible.**

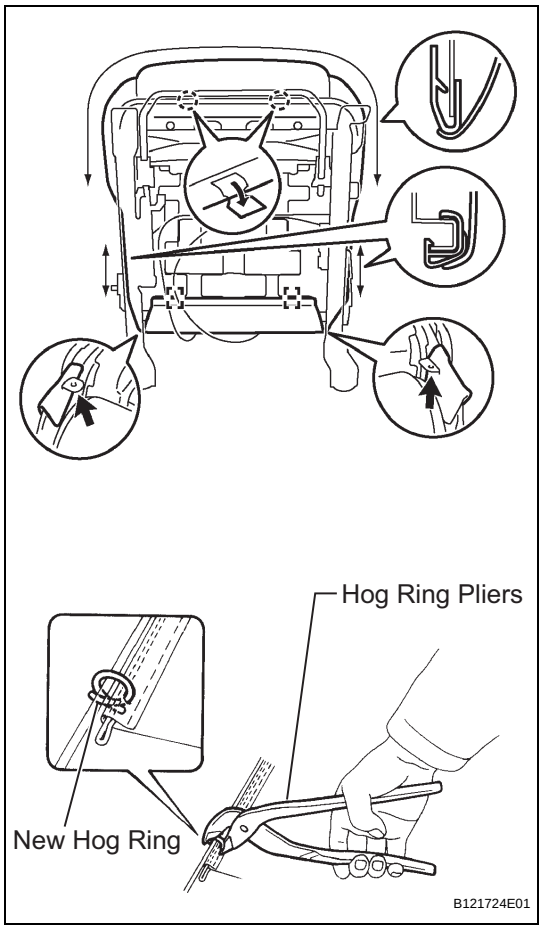

(b) Engage the 3 hooks and 2 claws, and install the front seat cushion pad together with the front seat cushion cover.
(c) Using hog ring pliers, install new hog rings.
(d) Hook the front seat cushion cover to the front seat frame adjuster.

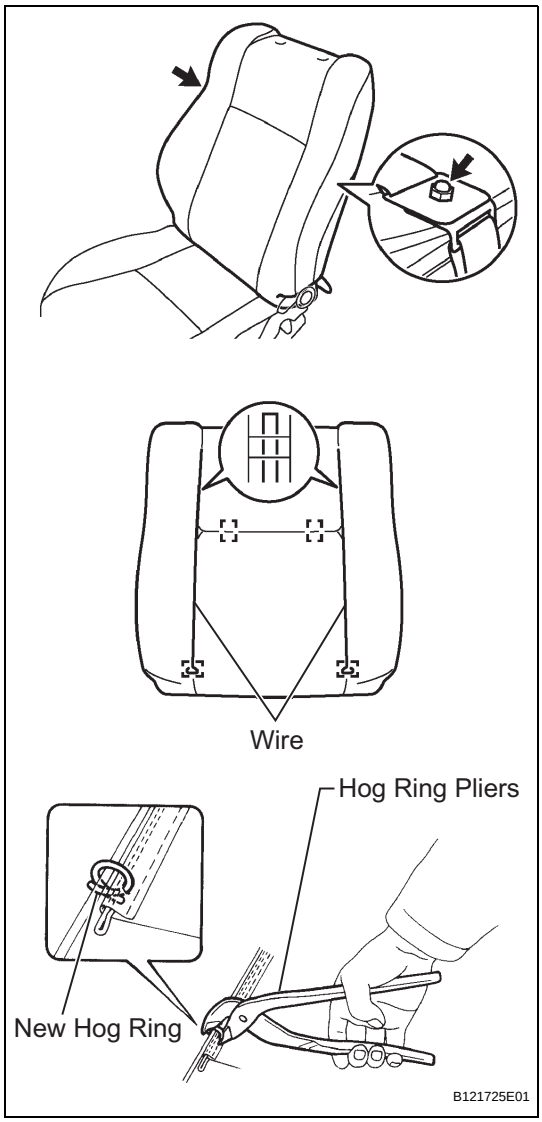

8. INSTALL FRONT SEAT BACK COVER

(a) Install the front seat back pad onto the front seat frame adjuster.

(b) Using hog ring pliers, install the front seat back cover with new hog rings.

NOTICE:

- **Do not contaminate or scratch the front seat back cover.**
- **When installing the hog rings, minimize wrinkles as far as possible.**

(c) w/ Front Seat Side Airbag:

(1) Attach straps and tighten the nut.

Torque: 5.5 N*m (55 kgf*cm, 49 in.*lbf)

NOTICE:

- **For vehicles with side air bag, the front seat back cover must be securely installed. Otherwise, the side air bag may not deploy properly.**
- **Make sure that the strap is not twisted after installing the inner hook.**
- **Install the inner hook securely.**

(d) Roll the front seat back cover down and install the 2 wires.

(e) Using hog ring pliers, install new hog rings.

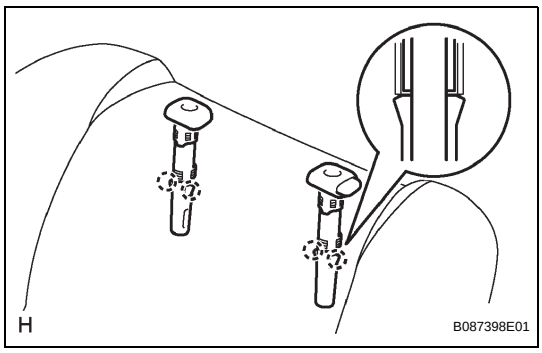

9. INSTALL FRONT SEAT HEADREST SUPPORT

(a) Engage the 2 claws and install the front seat headrest support.

HINT:

Follow the same procedures as for the opposite side.

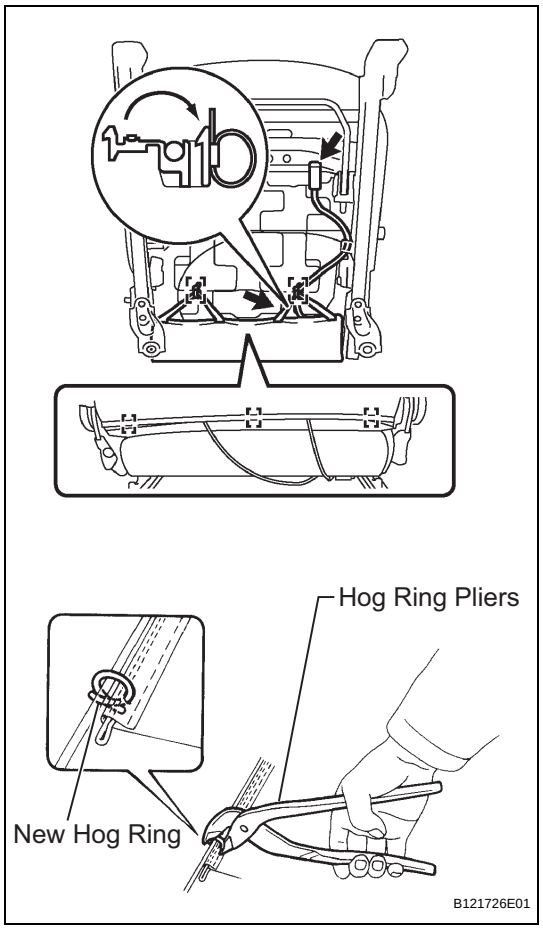

(b) Using hog ring pliers, install the new hog rings.
(c) w/ Front Seat Side Airbag:
  (1) Install the wire harness clamp and connector clamp.

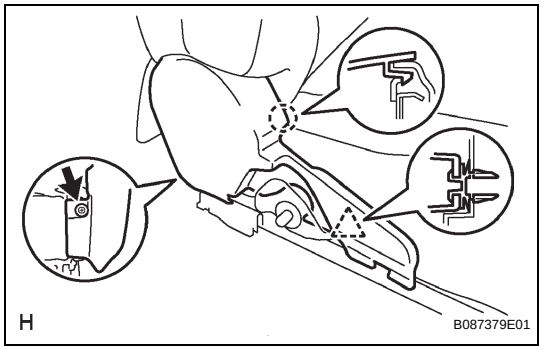

10. INSTALL FRONT SEAT CUSHION INNER SHIELD
(a) Engage the claw and clip, and install the front seat cushion inner shield.
(b) Tighten the screw.

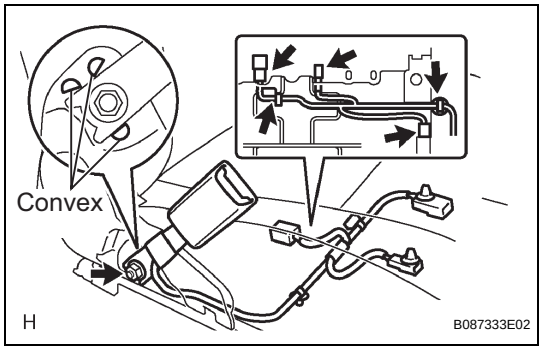

11. INSTALL FRONT SEAT INNER BELT ASSEMBLY
(a) Install the front seat inner belt with the nut.
Torque: 42 N*m (430 kgf*cm, 31 ft.*lbf)
NOTICE:
Be careful not to place the front seat inner belt over the convex areas of the front seat with adjuster frame.
(b) Check that the front seat inner belt rotates smoothly.
(c) Connect the seat position airbag sensor connector.
(d) Install the 2 wire harness clamps and 2 connector clamps.

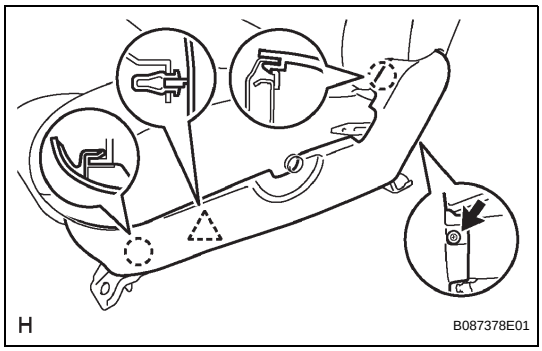

12. INSTALL FRONT SEAT CUSHION SHIELD

(a) Engage the 2 claws and clip, and install the front seat cushion shield.

(b) Tighten the screw.

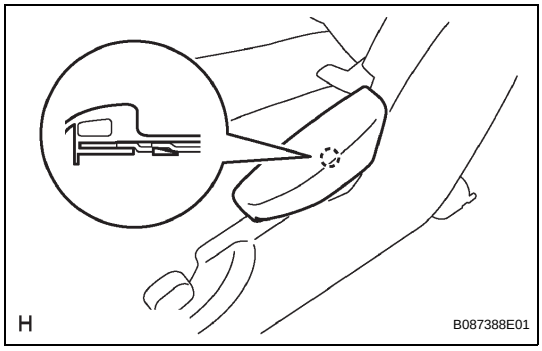

13. INSTALL RECLINING ADJUSTER RELEASE HANDLE

(a) Engage the claw and install the reclining adjuster release handle.

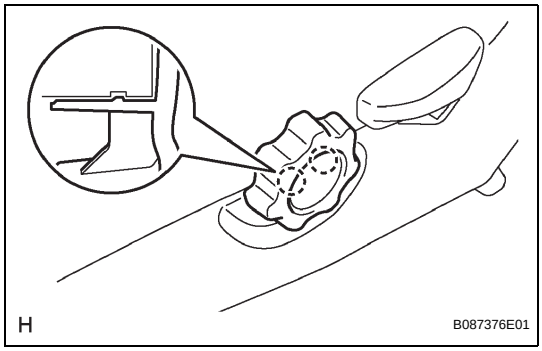

14. INSTALL LUMBAR ADJUSTER DIAL

(a) Line up the lumbar adjuster dial and push in it to engage.

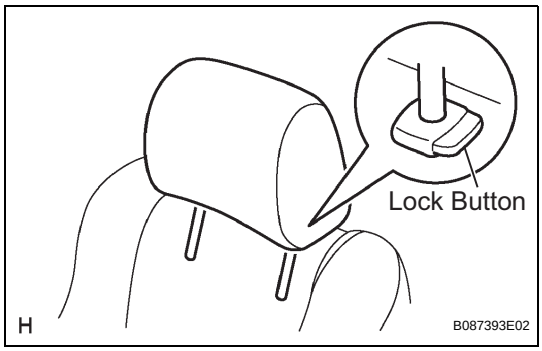

15. INSTALL FRONT SEAT HEADREST ASSEMBLY

(a) Disengage the lock button of the front seat headrest support and install the front seat headrest.

INSTALLATION

CAUTION:
Some of these service operations affect the SRS airbag system. Read the precautionary notices concerning the SRS airbag system before servicing (w/ Front Seat Side Airbag) (See page RS-1).



1. INSTALL FRONT SEAT ASSEMBLY
(a) Place the front seat in the cabin.
(b) Tighten the 2 bolts on the front side of the front seat.
Torque: 37 N*m (375 kgf*cm, 27 ft.*lbf)
(c) Tighten the 2 bolts on the rear side of the front seat.
Torque: 37 N*m (375 kgf*cm, 27 ft.*lbf)

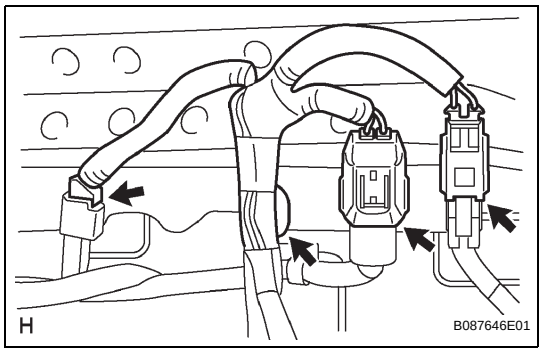

(d) Install the wire harness clamp.
(e) Connect the 2 connectors.
(f) w/ Front Seat Side Airbag:
(1) Connect the connector.

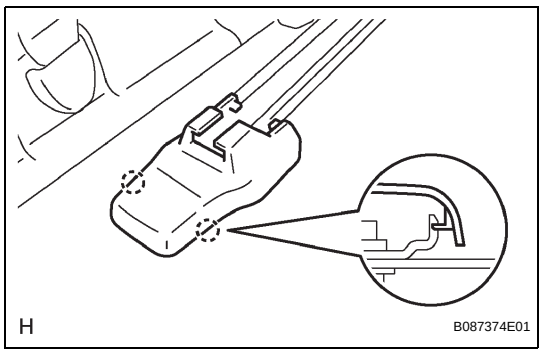

2. INSTALL SEAT TRACK COVER
HINT:
Follow the same procedures as for the opposite side.
(a) Engage the 2 claws and install the seat track cover.

3. CONNECT CABLE TO NEGATIVE BATTERY TERMINAL
Torque: 3.9 N*m (40 kgf*cm, 35 in.*lbf)

4. INSPECT SRS WARNING LIGHT
(See page RS-28)

SE

REMOVAL

CAUTION:
Some of these service operations affect the SRS airbag system. Read the precautionary notices concerning the SRS airbag system before servicing (w/ Front Seat Side Airbag) (See page RS-1).

1. REMOVE CABLE FROM NEGATIVE BATTERY TERMINAL

Wait for at least 90 seconds after disconnecting the cable to prevent the airbag from working (w/ Front Seat Side Airbag).

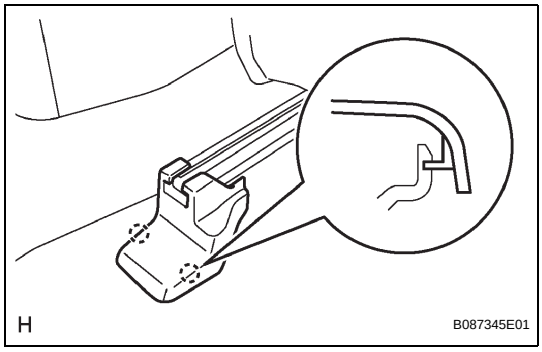

2. REMOVE SEAT TRACK COVER

HINT:
Follow the same procedures as for the opposite side.

(a) Disengage the 2 claws and remove the seat track cover.

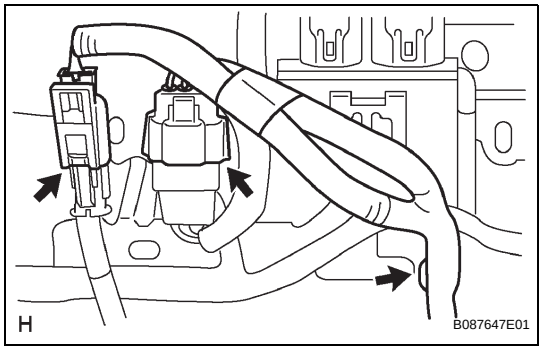

3. REMOVE FRONT SEAT ASSEMBLY

(a) Disconnect the connector.
(b) w/ Front Seat Side Airbag:
  (1) Disconnect the connector.
(c) Using a clip remover, remove the wire harness clamp.

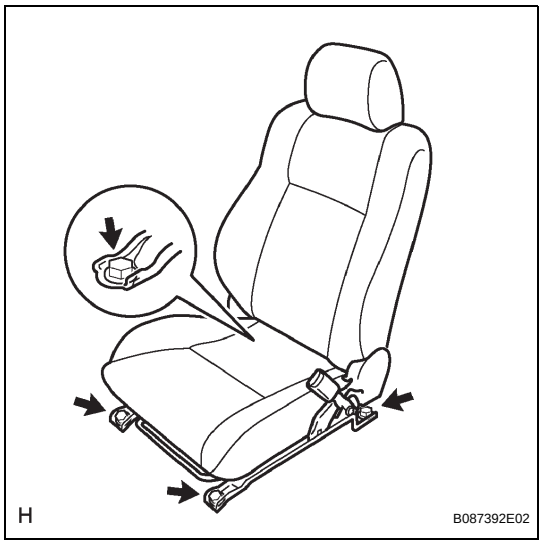

(d) Remove the 4 bolts and front seat.

DISASSEMBLY

CAUTION:
Wear protective gloves. Sharp surface on the front seat with adjuster frame could cause injuries to your hands.

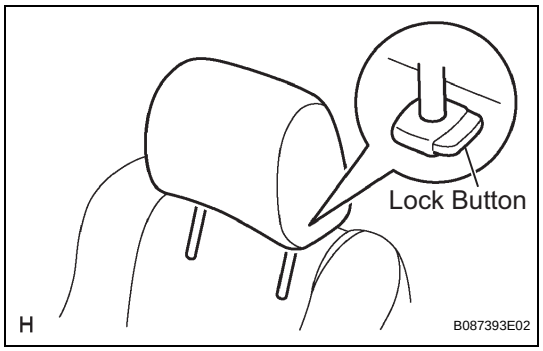

1. REMOVE FRONT SEAT HEADREST ASSEMBLY
(a) Disengage the lock button of the front seat headrest support and remove the front seat headrest.

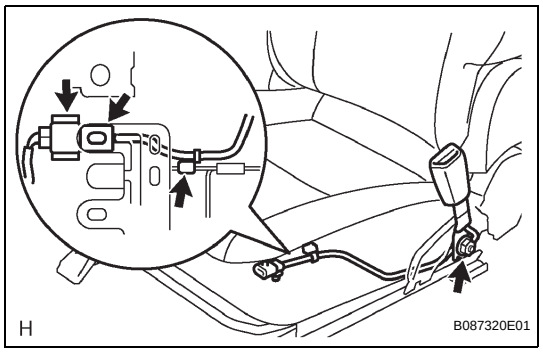

2. REMOVE FRONT SEAT INNER BELT ASSEMBLY
(a) Disconnect the seat wire connector.
(b) Using a clip remover, remove the connector clamp.
(c) Remove the wire harness clamp.
(d) Remove the nut and front seat inner belt.

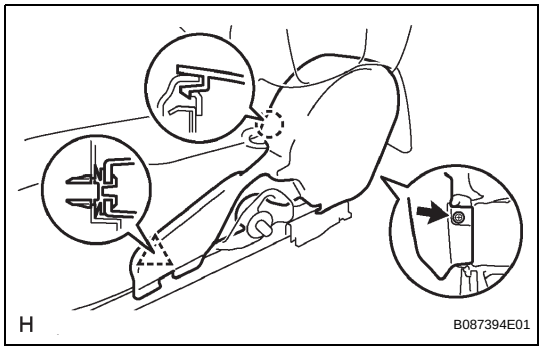

3. REMOVE FRONT SEAT CUSHION INNER SHIELD
(a) Remove the screw.
(b) Disengage the claw and clip, and remove the front seat cushion shield inner.

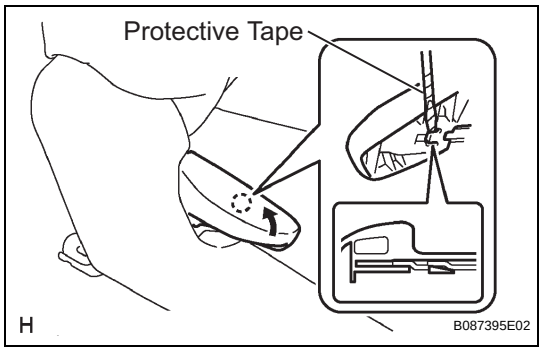

4. REMOVE RECLINING ADJUSTER RELEASE HANDLE
(a) Using a screwdriver with its tip taped in protective tape, disengage the claw and remove the reclining adjuster release handle.

SE

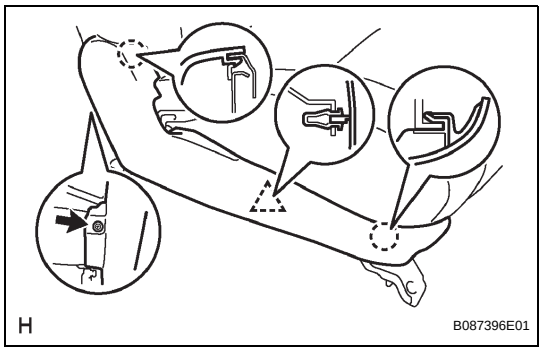

5. REMOVE FRONT SEAT CUSHION SHIELD

(a) Remove the screw.

(b) Disengage the 2 claws and clip, and remove the front seat cushion shield.

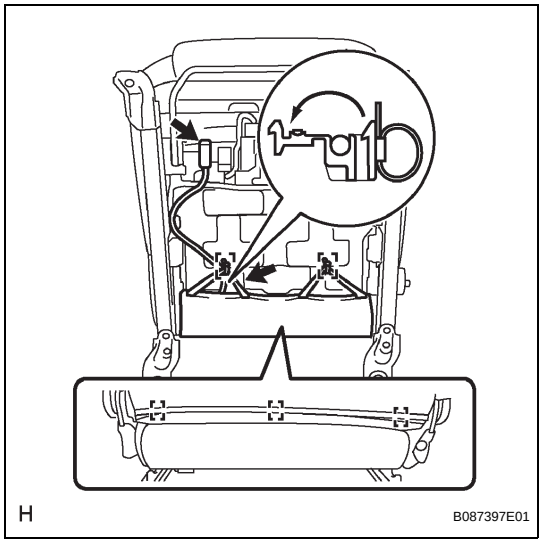

6. REMOVE FRONT SEAT HEADREST SUPPORT

(a) w/ Front Seat Side Airbag:

(1) Using a clip remover, remove the connector clamp.

(2) Remove the wire harness clamp.

(b) Remove the 5 hog rings.

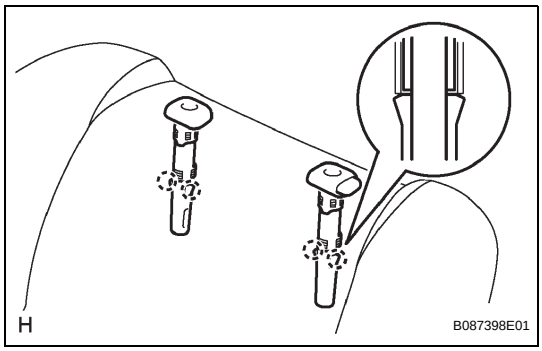

(c) Disengage the 2 claws and remove the front seat headrest support.

HINT:

Follow the same procedures as for the opposite side.

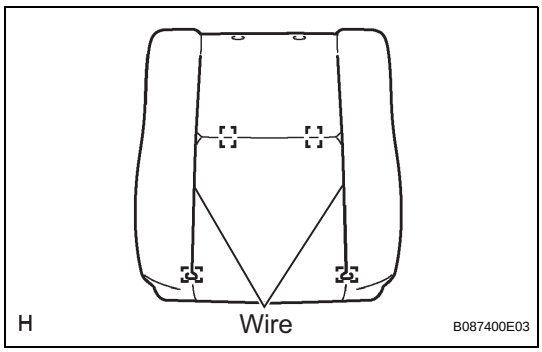

7. REMOVE FRONT SEAT BACK COVER

(a) Remove the 2 hog rings.

(b) Remove the 2 wires.

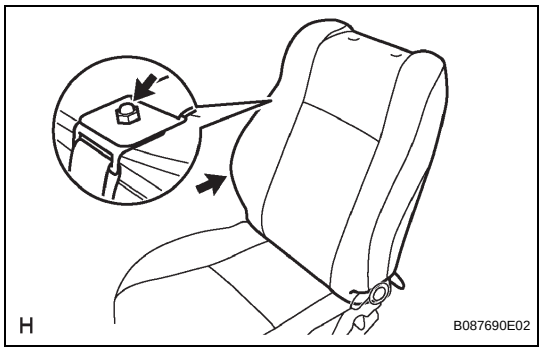

(c) w/ Front Seat Side Airbag:
  (1) Remove the nut and strap.
(d) Remove the 2 hog rings and front seat back cover.
(e) Remove the front seat back pad from the front seat frame adjuster.

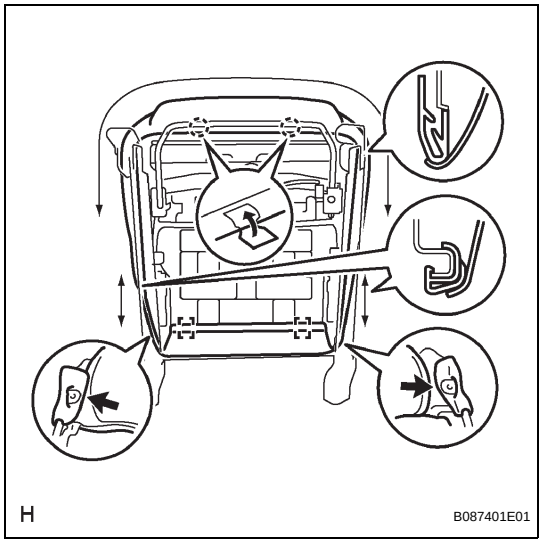

8. REMOVE FRONT SEAT CUSHION COVER

(a) Remove the front seat cushion cover from the front seat frame adjuster.
(b) Remove the 2 hog rings.
(c) Disengage the 2 claws and 3 hooks, and remove the front seat cushion pad together with the front seat cushion cover.

SE

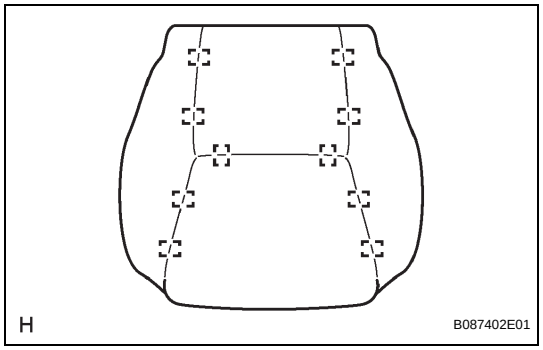

(d) Remove the 10 hog rings and front seat cushion cover.

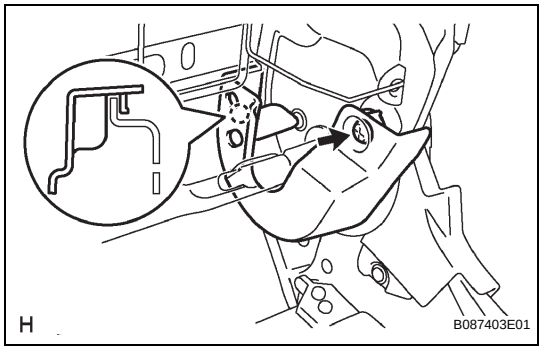

9. REMOVE RECLINING ADJUSTER INSIDE COVER LH

(a) Remove the screw.
(b) Disengage the claw and remove the reclining adjuster inside cover.

10. REMOVE RECLINING ADJUSTER INSIDE COVER RH

HINT:
Follow the same procedures as for the reclining adjuster inside cover LH.

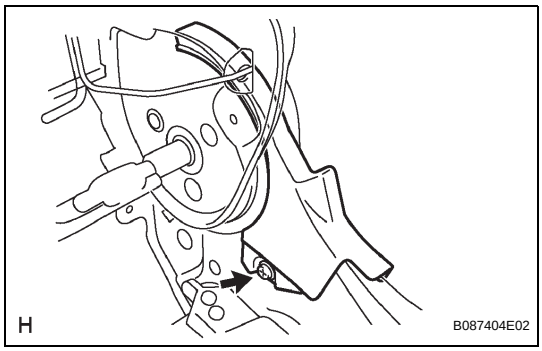

11. REMOVE RECLINING ADJUSTER OUTSIDE COVER LH

(a) Remove the screw and reclining adjuster outside cover.

12. REMOVE RECLINING ADJUSTER OUTSIDE COVER RH

HINT:
Follow the same procedures as for the reclining adjuster outside cover LH.

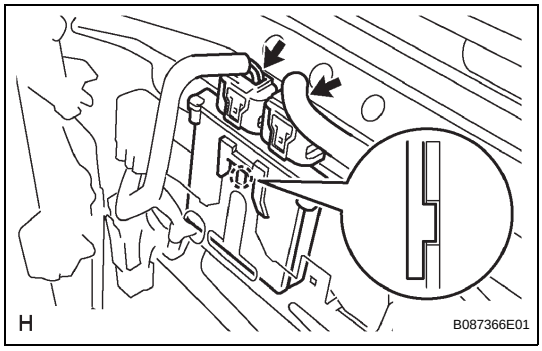

13. REMOVE OCCUPANT CLASSIFICATION ECU

(a) Disconnect the 2 connectors.
(b) Disengage the claw and remove the occupant classification ECU.

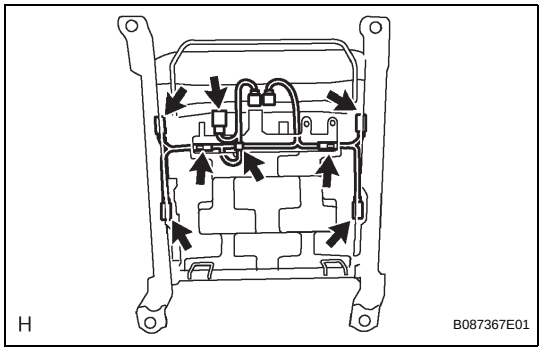

14. REMOVE SEAT WIRE

(a) Disconnect the 4 connectors.
(b) Using a clip remover, remove the 3 wire harness clamps.

REASSEMBLY

CAUTION:
Wear protective gloves. Sharp surface on the front seat with adjuster frame could cause injuries to your hands.

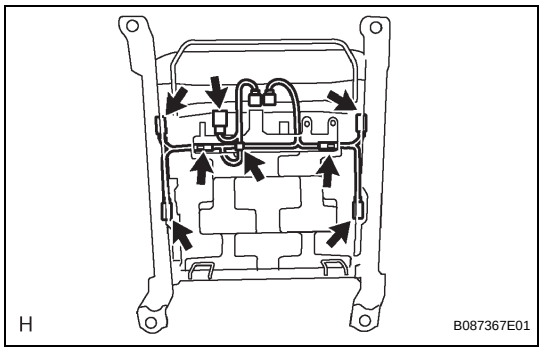

1. INSTALL SEAT WIRE
(a) Install the 3 wire harness clamps and connector clamp.
(b) Connect the 4 connectors.

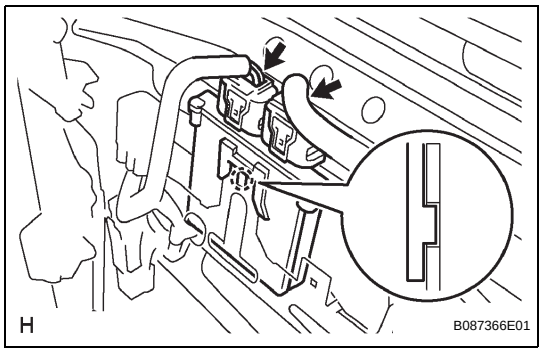

2. INSTALL OCCUPANT CLASSIFICATION ECU
(a) Engage the claw and install the occupant classification ECU.
(b) Connect the 2 connectors.

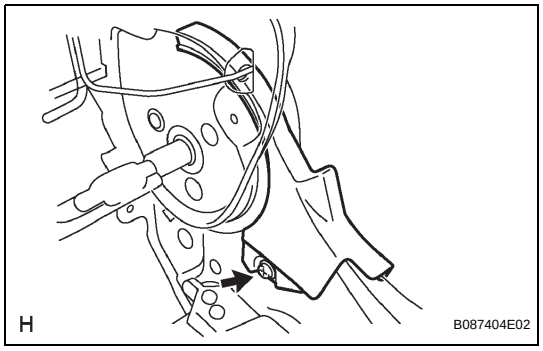

3. INSTALL RECLINING ADJUSTER OUTSIDE COVER LH
(a) Install the reclining adjuster outside cover with the screw.

4. INSTALL RECLINING ADJUSTER OUTSIDE COVER RH
HINT:
Follow the same procedures as for the reclining adjuster outside cover LH.

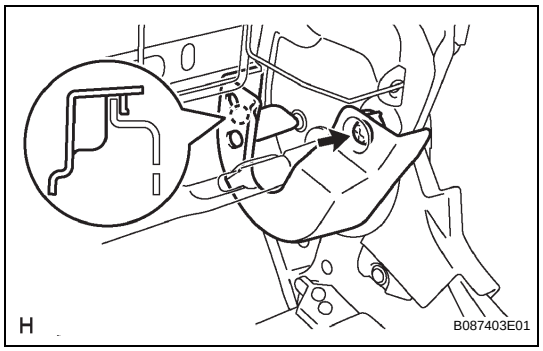

5. INSTALL RECLINING ADJUSTER INSIDE COVER LH
(a) Engage the claw and install the reclining adjuster inside cover.
(b) Tighten the screw.

6. INSTALL RECLINING ADJUSTER INSIDE COVER RH
HINT:
Follow the same procedures as for the reclining adjuster inside cover LH.

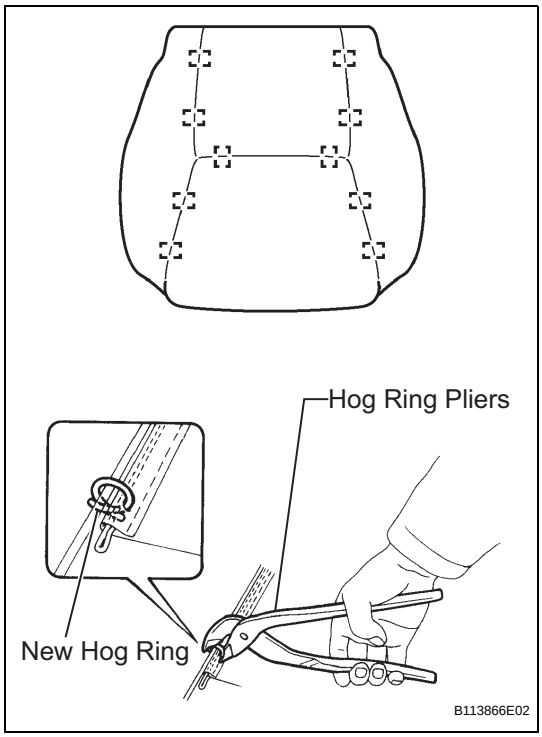

7. INSTALL FRONT SEAT CUSHION COVER

(a) Using hog ring pliers, install the front seat cushion cover with new hog rings.

NOTICE:

- **Do not contaminate or scratch the front seat cushion cover.**
- **When installing the hog rings, minimize wrinkles as far as possible.**

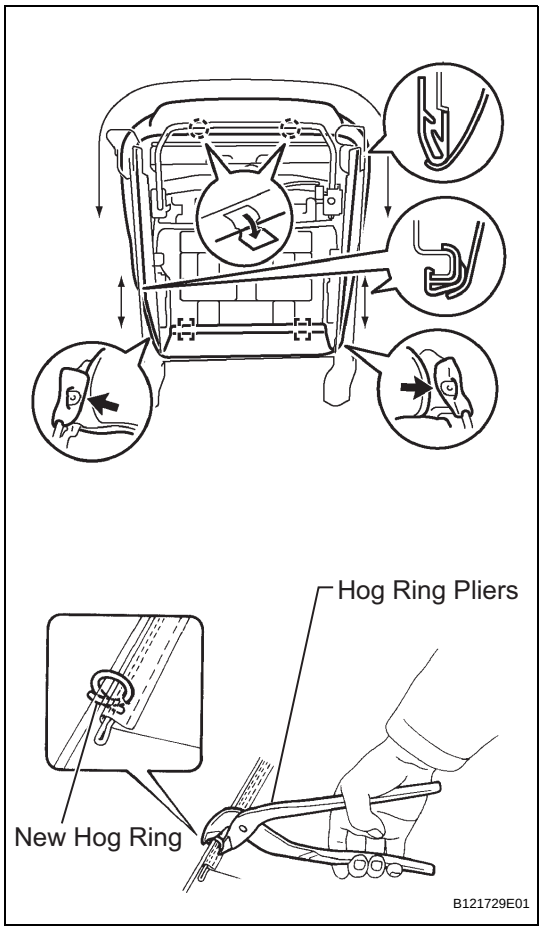

(b) Engage the 3 hooks and 2 claws, and install the front seat cushion pad together with the front seat cushion cover.

(c) Using hog ring pliers, install new hog rings.

(d) Hook the front seat cushion cover to the front seat frame adjuster.

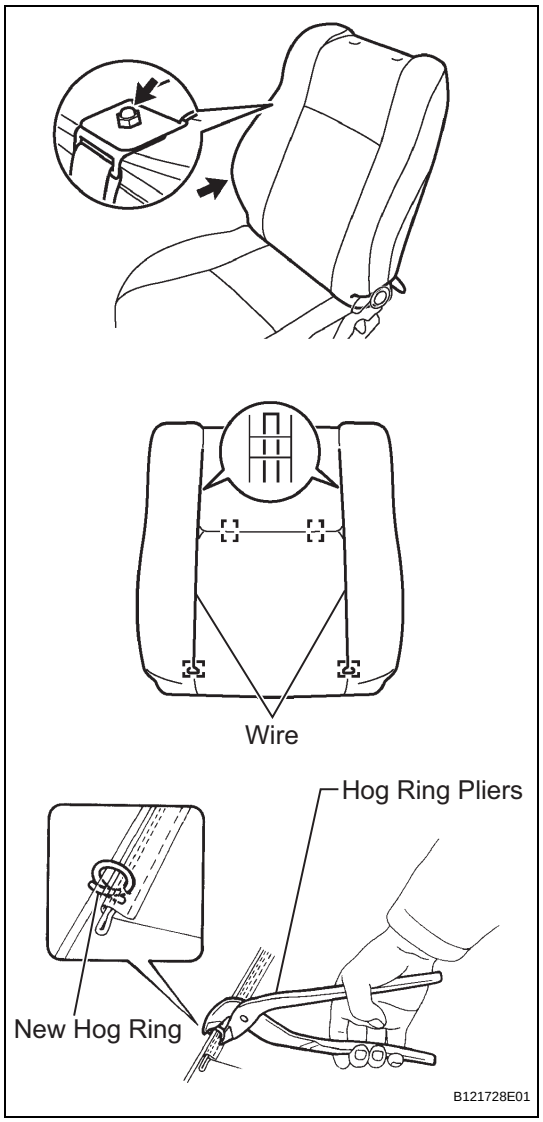

8. INSTALL FRONT SEAT BACK COVER

(a) Install the front seat back pad onto the front seat frame adjuster.

(b) Using hog ring pliers, install the front seat back cover with new hog rings.

NOTICE:

- **Do not contaminate or scratch the front seat back cover.**
- **When installing the hog rings, minimize wrinkles as far as possible.**

(c) w/ Front Seat Side Airbag:

(1) Attach straps and tighten the nut.

Torque: 5.5 N*m (55 kgf*cm, 49 in.*lbf)

NOTICE:

- **For vehicles with side air bag, the front seat back cover must be securely installed. Otherwise, the side air bag may not deploy properly.**
- **Make sure that the strap is not twisted after installing the inner hook.**
- **Install the inner hook securely.**

(d) Roll the front seat back cover down and install the 2 wires.

(e) Using hog ring pliers, install new hog rings.

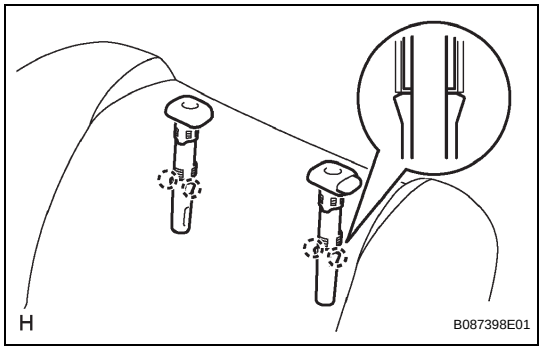

9. INSTALL FRONT SEAT HEADREST SUPPORT

(a) Engage the 2 claws and install the front seat headrest support.

HINT:

Follow the same procedures as for the opposite side.

SE

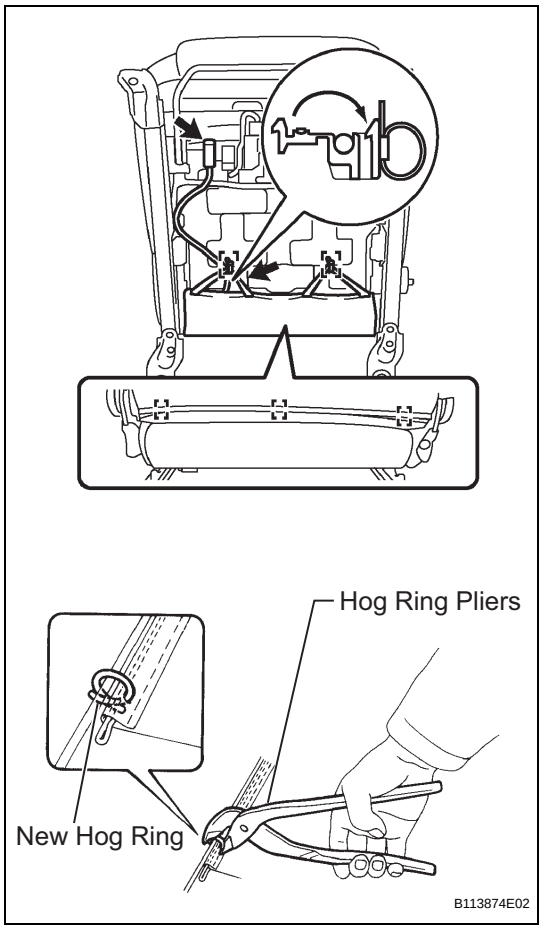

(b) Using hog ring pliers, install the new hog rings.
(c) Install the wire harness clamp and connector clamp.

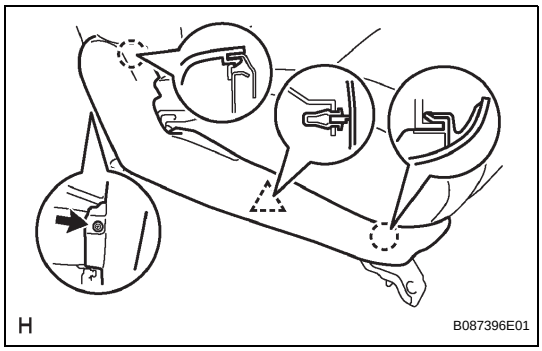

10. INSTALL FRONT SEAT CUSHION SHIELD
(a) Engage the 2 claws and clip, and install the front seat cushion shield.
(b) Tighten the screw.

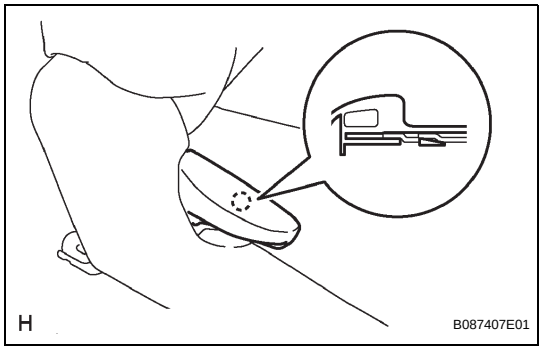

11. INSTALL RECLINING ADJUSTER RELEASE HANDLE
(a) Engage the claw and install the reclining adjuster release handle.

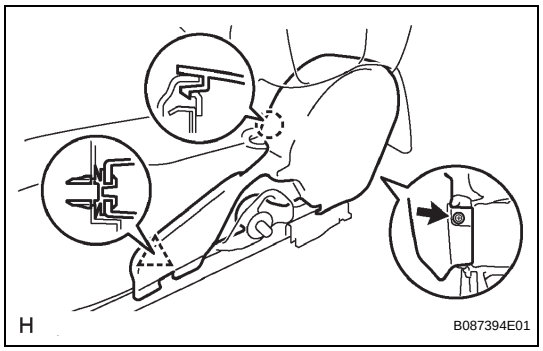

12. INSTALL FRONT SEAT CUSHION INNER SHIELD

(a) Engage the claw and clip, and install the front seat cushion inner shield.

(b) Tighten the screw.

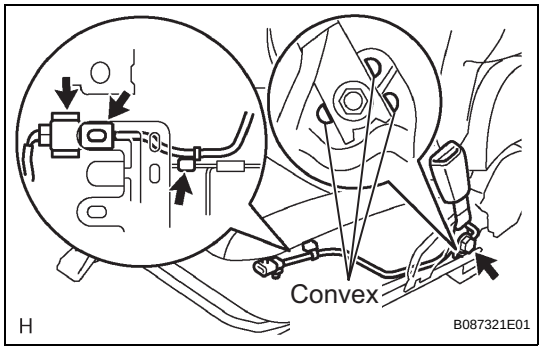

13. INSTALL FRONT SEAT INNER BELT ASSEMBLY

(a) Install the front seat inner belt with the nut.
Torque: 42 N*m (430 kgf*cm, 31 ft.*lbf)
NOTICE:
Be careful not to place the front seat inner belt over the convex areas of the front seat with adjuster frame.

(b) Check that the front seat inner belt rotates smoothly.

(c) Install the wire harness clamp and connector clamp.

(d) Connect the seat wire No. 1 connector.

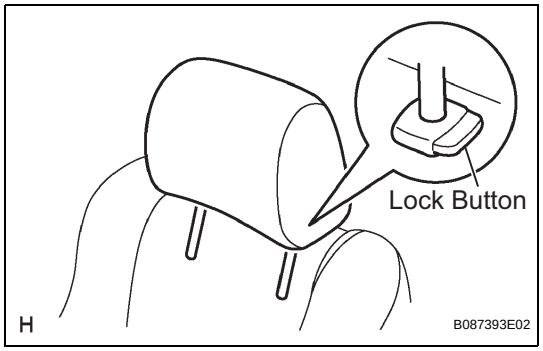

14. INSTALL FRONT SEAT HEADREST ASSEMBLY

(a) Disengage the lock button of the front seat headrest support and install the front seat headrest.

SE

INSTALLATION

CAUTION:
Some of these service operations affect the SRS airbag system. Read the precautionary notices concerning the SRS airbag system before servicing (w/ Front Seat Side Airbag) (See page RS-1).

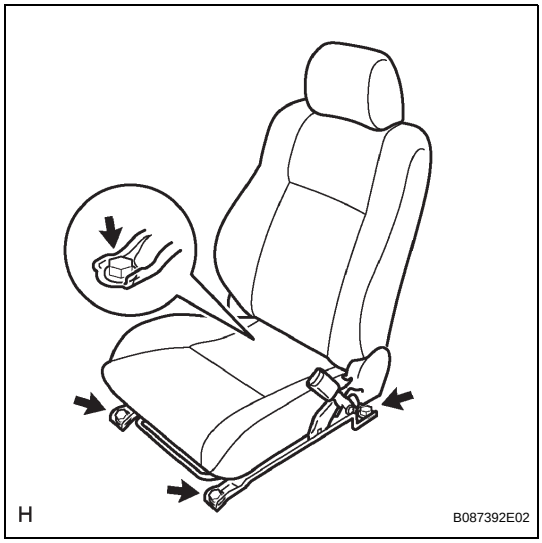

1. INSTALL FRONT SEAT ASSEMBLY
(a) Place the front seat in the cabin.
(b) Tighten the 2 bolts on the front side of the front seat.
Torque: 37 N*m (375 kgf*cm, 27 ft.*lbf)
(c) Tighten the 2 bolts on the rear side of the front seat.
Torque: 37 N*m (375 kgf*cm, 27 ft.*lbf)

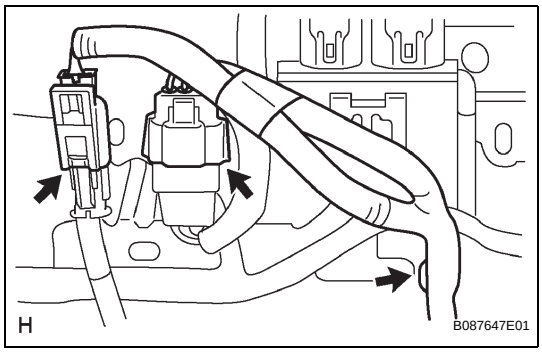

(d) Install the wire harness clamp.
(e) Connect the connector.
(f) w/ Front Seat Side Airbag:
(1) Connect the connector.

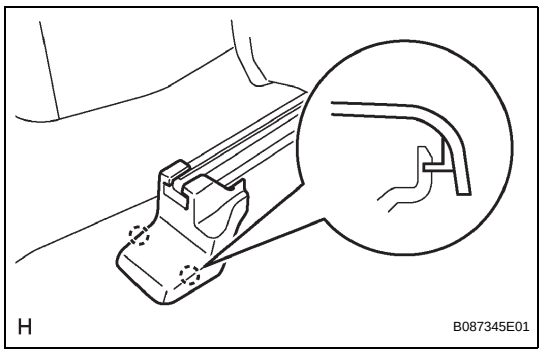

2. INSTALL SEAT TRACK COVER
HINT:
Follow the same procedures as for the opposite side.
(a) Engage the 2 claws and install the seat track cover.

3. CONNECT CABLE TO NEGATIVE BATTERY TERMINAL
Torque: 3.9 N*m (40 kgf*cm, 35 in.*lbf)

4. INSPECT SRS WARNING LIGHT (w/ Front Seat Side Airbag)
(See page RS-28)

REMOVAL

1. **DISCONNECT CABLE FROM NEGATIVE BATTERY TERMINAL**
2. **REMOVE FRONT SEAT INNER BELT ASSEMBLY LH (See page SB-12)**
3. **REMOVE FRONT SEAT INNER BELT ASSEMBLY RH (See page SB-12)**
4. **REMOVE FRONT SEAT HEADREST ASSEMBLY**
   (a) Push in the 2 lock buttons of the 2 front seat headrest supports and remove the 2 front seat headrests.

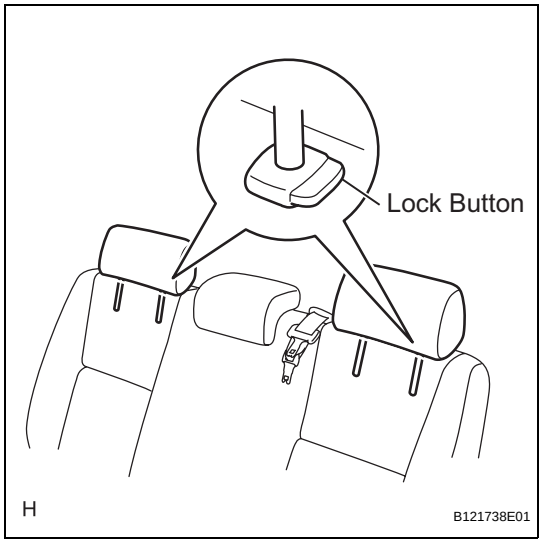

5. **REMOVE FRONT SEAT ASSEMBLY**
   (a) Remove the belt of the front center seat outer belt from the front center seat outer belt guide.

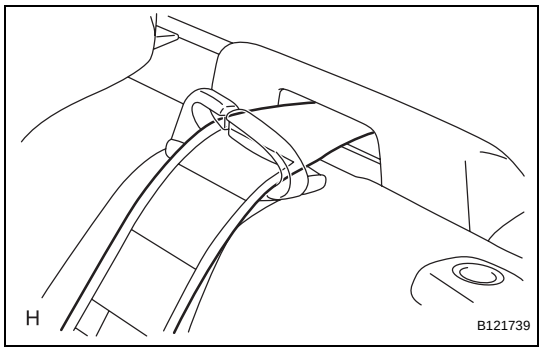

SE

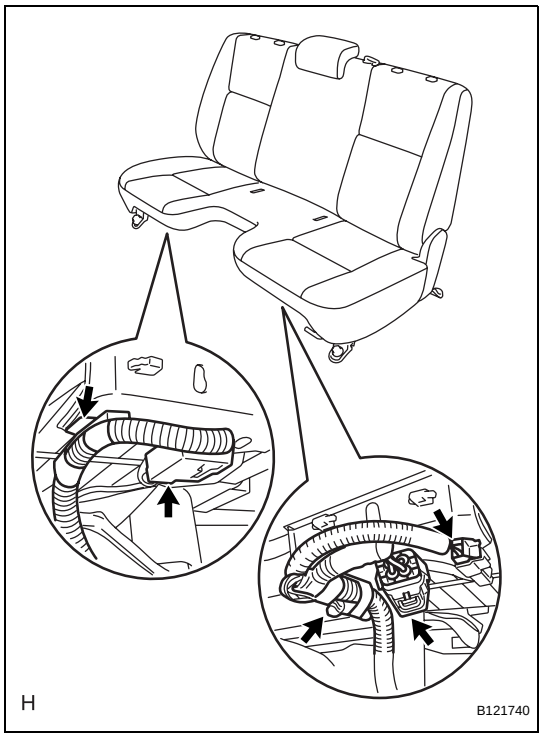

(b) Disconnect the 3 connectors.
(c) Using a clip remover, remove the 2 wiring harness clamps.

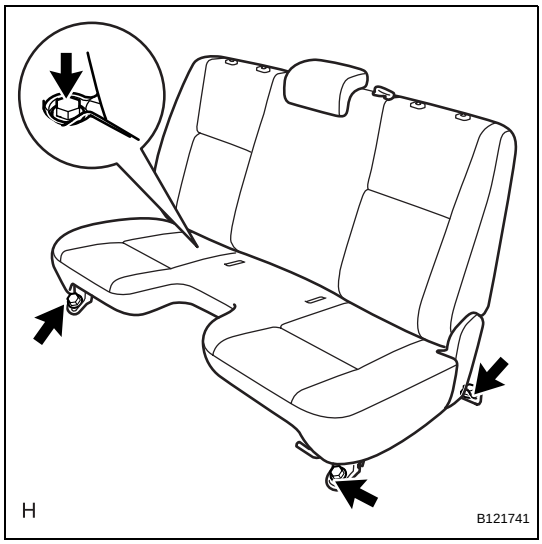

(d) Remove the 4 bolts and the front seat.

DISASSEMBLY

CAUTION:
Wear protective gloves. Sharp surfaces on the front seat back spring and the front seat cushion spring could cause injuries to your hands.
NOTICE:
Remove the front seat cushion pad and the front seat cushion cover together, in order to avoid occupant classification sensor malfunctions.

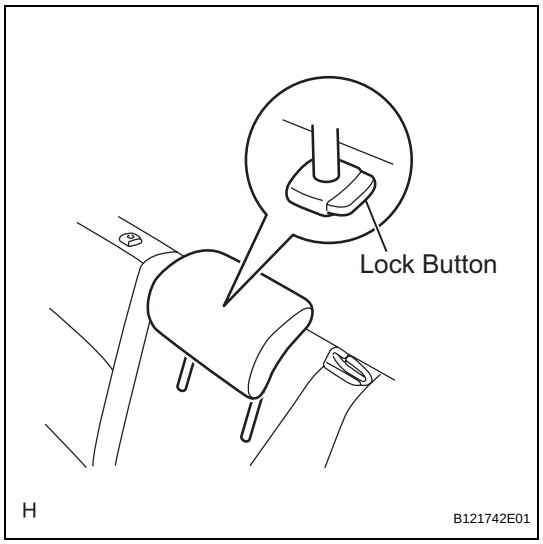

1. REMOVE FRONT CENTER SEAT HEADREST ASSEMBLY

(a) Push in the lock button of the front seat headrest support and remove the front center seat headrest.

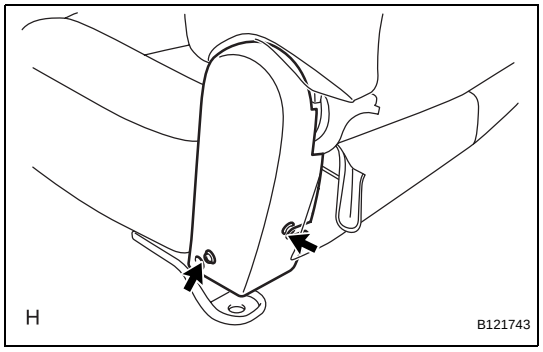

2. REMOVE FRONT SEAT HINGE COVER LH

(a) Remove the 2 screws and the front seat hinge cover.

3. REMOVE FRONT SEAT HINGE COVER RH

HINT:
Use the same procedure as for the LH side.

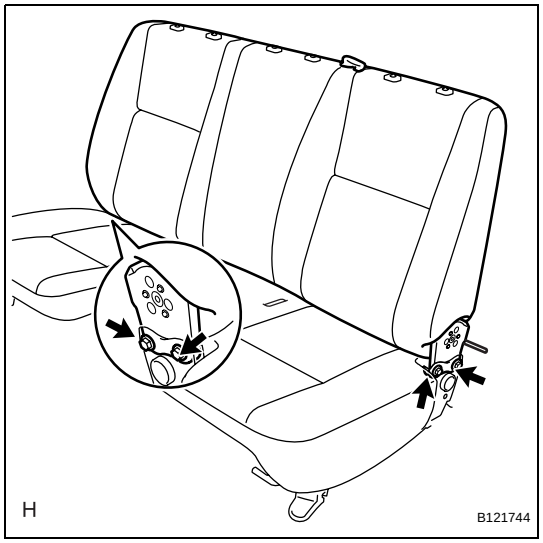

4. REMOVE FRONT SEAT BACK ASSEMBLY

(a) Remove the 4 bolts and the front seat back.

SE

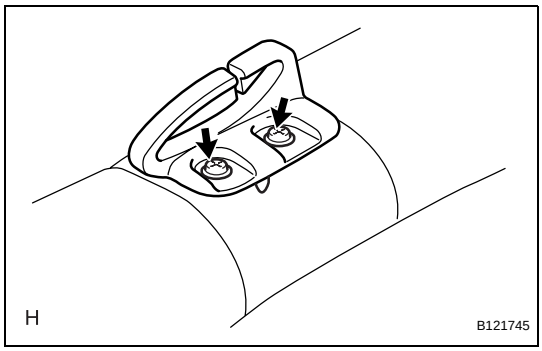

5. REMOVE FRONT CENTER SEAT OUTER BELT GUIDE

(a) Remove the 2 screws, the pin and the front center seat outer belt guide.

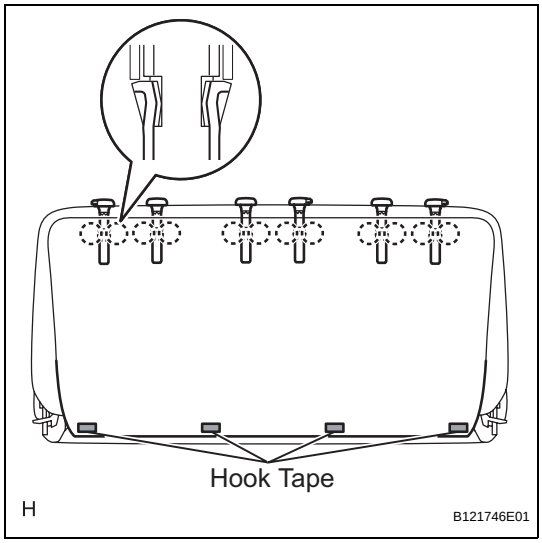

6. REMOVE FRONT SEAT HEADREST SUPPORT

(a) Remove the 4 pieces of hook tape and open the front seat back cover.

(b) Disengage the 12 claws and remove the 6 front seat headrest supports.

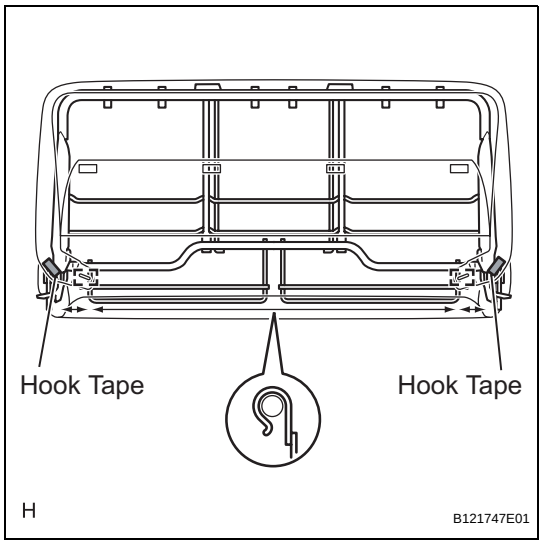

7. REMOVE FRONT SEAT BACK SPRING ASSEMBLY

(a) Remove the 2 hog rings.

(b) Remove the 2 pieces of hook tape.

(c) Disengage the 4 hooks and remove the front seat back spring.

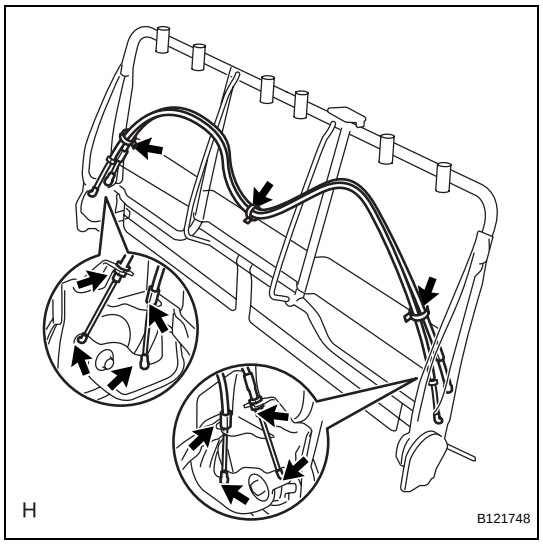

8. REMOVE FRONT SEAT RECLINING CONTROL CABLE ASSEMBLY

(a) Remove the 3 wiring harness clamps.
(b) Loosen the 2 nuts and remove the 2 screw caps.
(c) Remove the 2 casing caps.
(d) Remove the 4 cable ends and the 2 front seat reclining control cables.

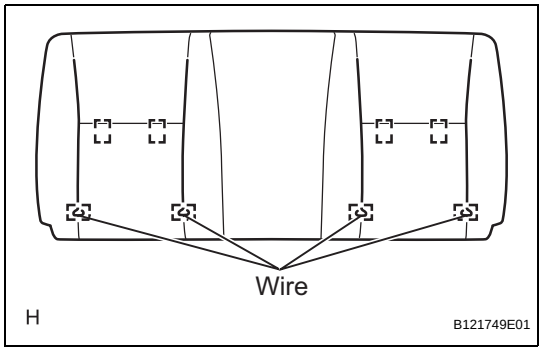

9. REMOVE FRONT SEAT BACK COVER

(a) Remove the 4 hog rings and the 4 wires.
(b) Remove the 4 hog rings and the front seat back cover.

10. REMOVE OCCUPANT CLASSIFICATION ECU (See page RS-635)

11. REMOVE SEAT POSITION SENSOR PROTECTOR (See page RS-620)

12. REMOVE SEAT POSITION SENSOR

(a) for Driver Side:
  (1) Remove the seat position sensor (See page RS-621).
(b) for Front Passenger Side:
  (1) Remove the seat position sensor (See page RS-621).

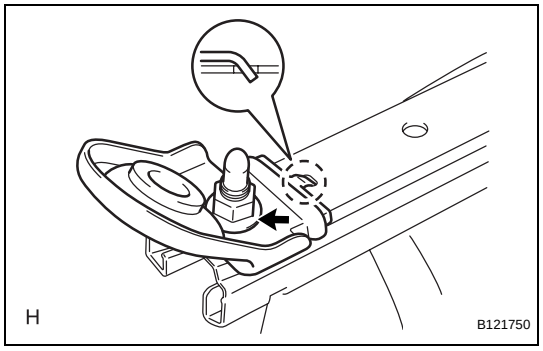

13. REMOVE FRONT SEAT TRACK FRONT BRACKET LH

(a) Remove the nut, the hook and the front seat track front bracket.

14. REMOVE FRONT SEAT TRACK FRONT BRACKET RH

HINT:
Use the same procedure as for the LH side.

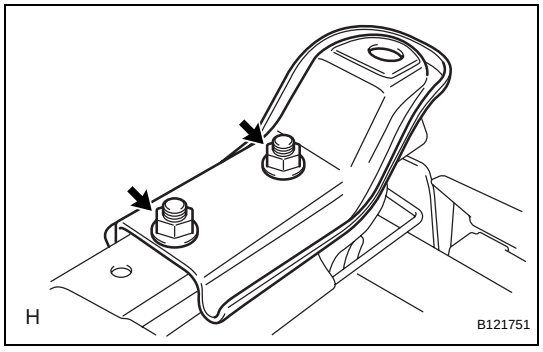

15. REMOVE FRONT SEAT TRACK REAR BRACKET LH

(a) Remove the 2 nuts and the front seat track rear bracket.

16. REMOVE FRONT SEAT TRACK REAR BRACKET RH

HINT:
Use the same procedure as for the LH side.

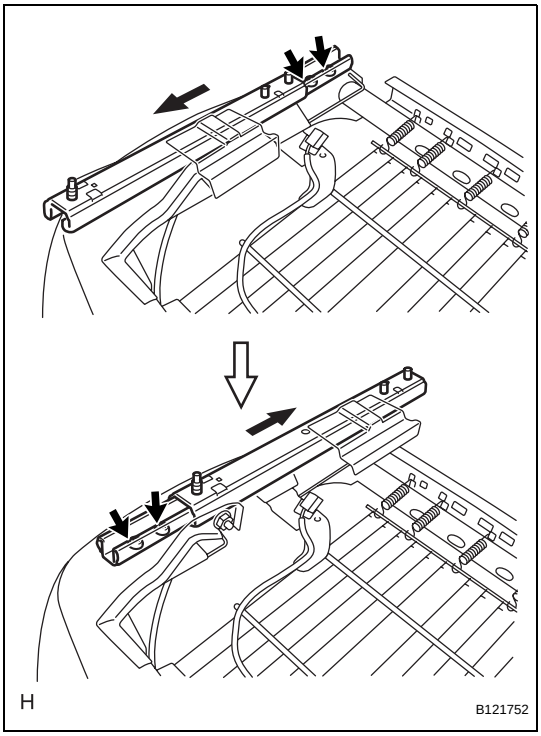

17. REMOVE FRONT SEAT TRACK OUTER ASSEMBLY LH

(a) Slide the front seat track outer to the most rearward position.
(b) Using "Torx" socket wrench T40, remove the 2 bolts.
(c) Slide the front seat track outer to the most forward position.
(d) Using "Torx" socket wrench T40, remove the 2 bolts and the front seat track outer.

18. REMOVE FRONT SEAT TRACK OUTER ASSEMBLY RH

HINT:
Use the same procedure as for the LH side.

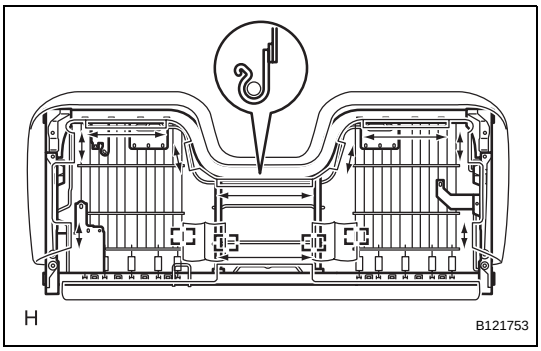

19. REMOVE FRONT SEAT CUSHION SPRING ASSEMBLY

(a) Remove the 4 hog rings.
(b) Disengage the 10 hooks and remove the front seat cushion spring.

20. REMOVE OCCUPANT CLASSIFICATION SENSOR (See page RS-627)

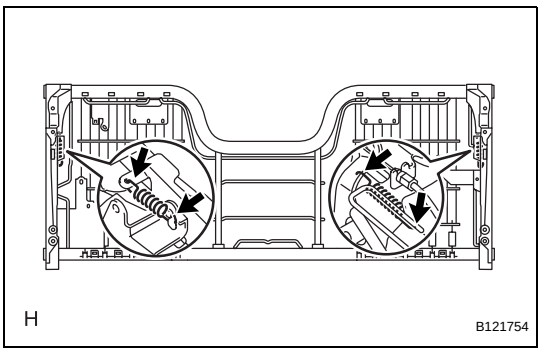

21. REMOVE SEAT TRACK SPRING

(a) Remove the 2 seat track springs.

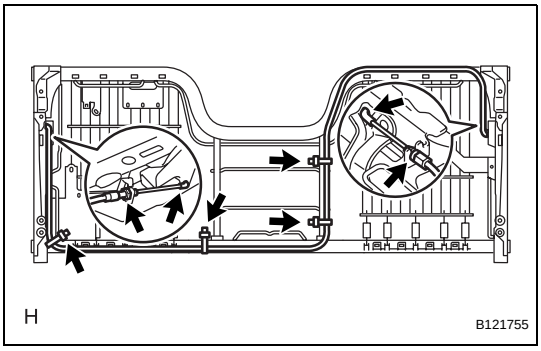

22. REMOVE FRONT SEAT SLIDE CONTROL CABLE ASSEMBLY

(a) Remove the 4 wiring harness clamps.
(b) Loosen the nut and remove the screw cap.
(c) Remove the casing cap.
(d) Remove the 2 cable ends and the front seat slide control cable.

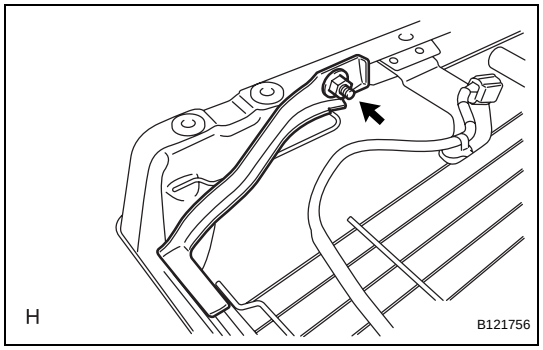

23. REMOVE SEAT TRACK HANDLE SUB-ASSEMBLY LH

(a) Remove the nut and the seat track handle.

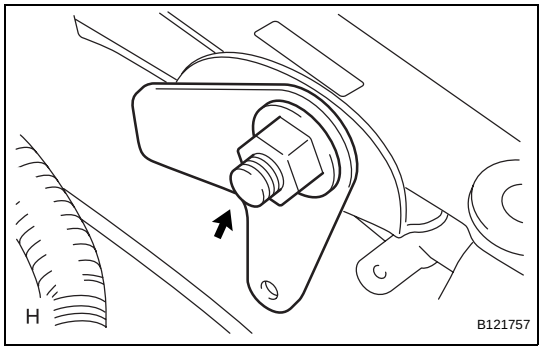

24. REMOVE SEAT TRACK HANDLE SUB-ASSEMBLY RH

(a) Remove the nut and the seat track handle.

SE

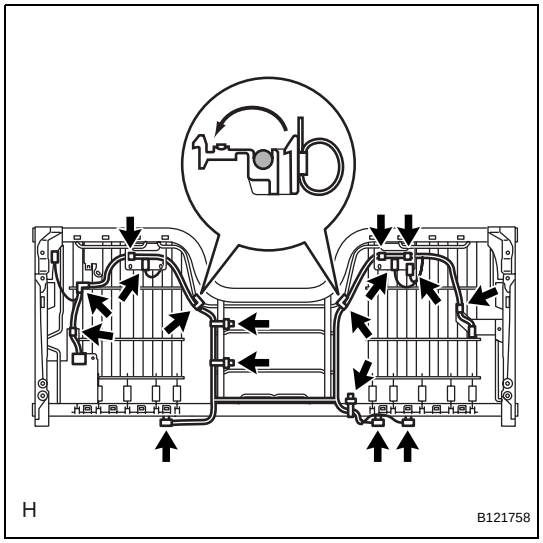

25. REMOVE SEAT WIRE

(a) Remove the 5 wiring harness clamps.

(b) Using a clip remover, remove the 12 wiring harness clamps and the seat wire.

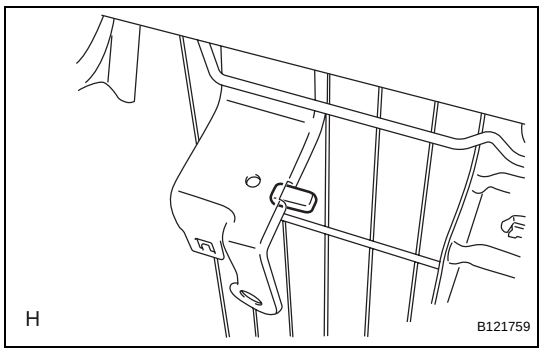

26. REMOVE FRONT SEAT CUSHION SPRING PROTECTOR

(a) Remove the front seat cushion spring protector.

REASSEMBLY

1. INSTALL HOOD LOCK CONTROL CABLE ASSEMBLY

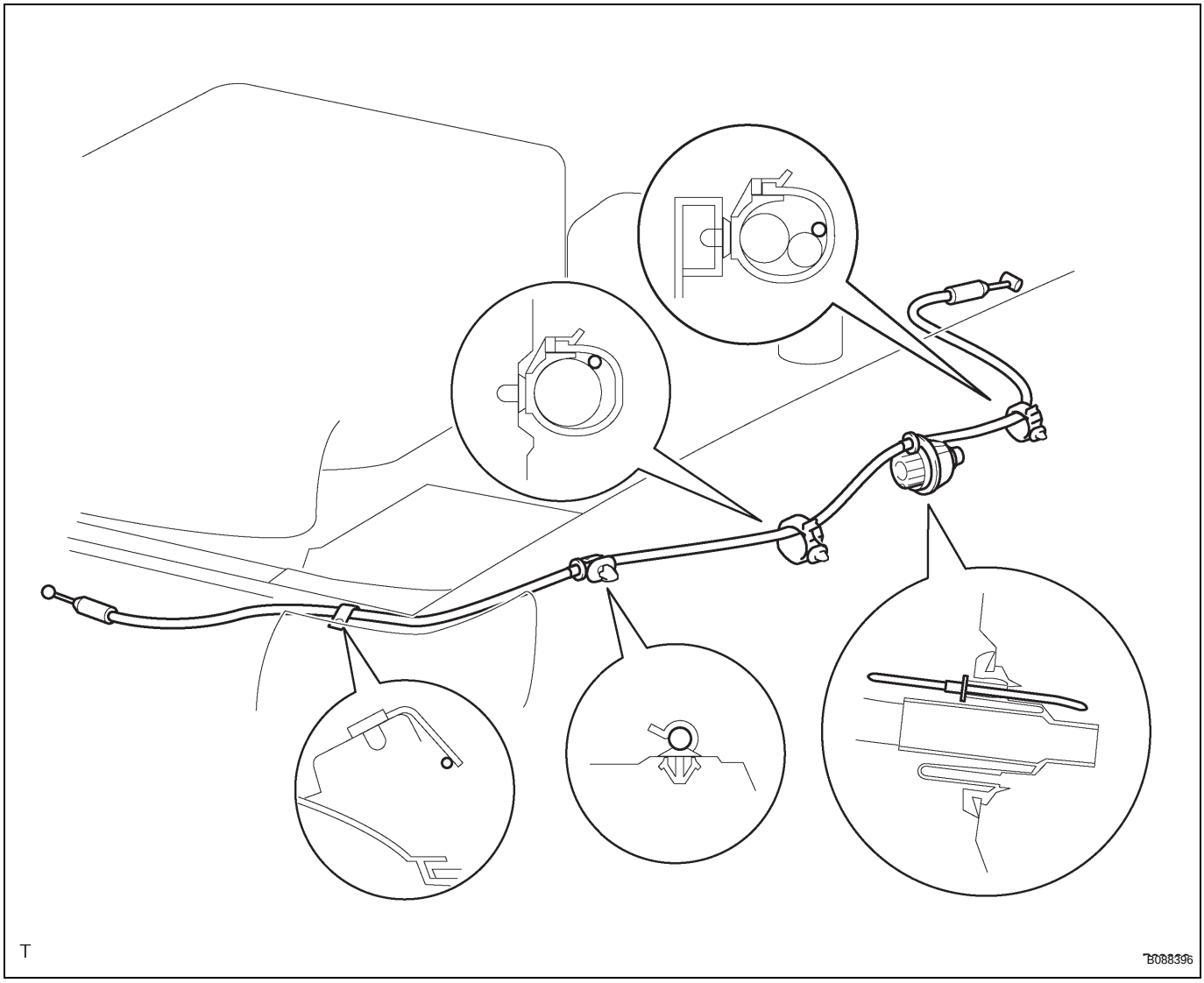

(a) Tie the string inside the wire harness grommet to the hood lock control cable assembly.
(b) Using the string, fit the hood lock control cable assembly into the wire harness grommet.

2. INSTALL HOOD LOCK CONTROL LEVER SUB-ASSEMBLY

(a) Connect the hood lock control cable assembly.

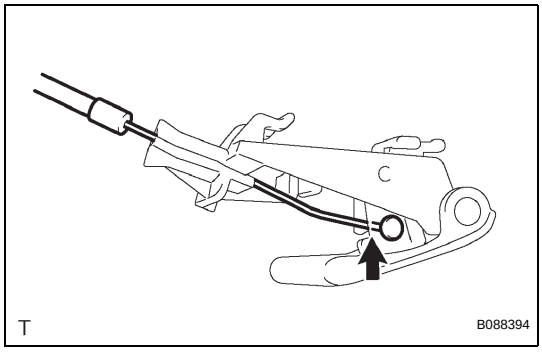

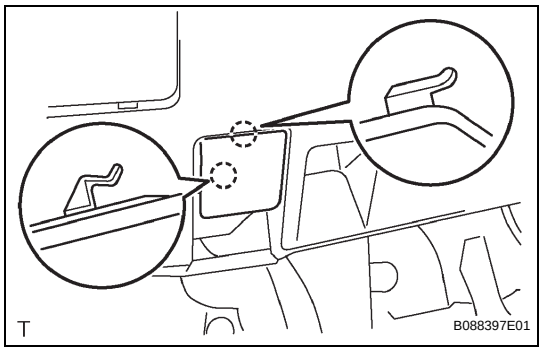

(b) Engage the 2 claws and install the hood lock control lever sub-assembly.

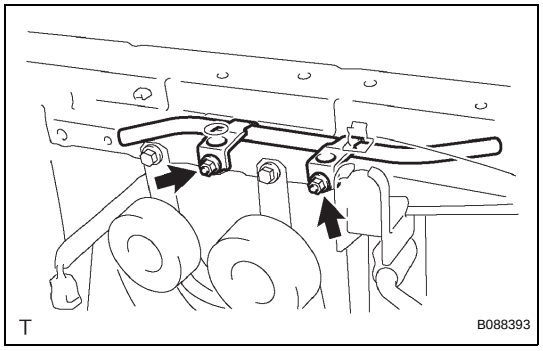

3. INSTALL HOOD LOCK CONTROL CABLE PROTECTOR SUB-ASSEMBLY

(a) Install the hood lock control cable protector sub-assembly with the 2 nuts.
Torque: 5.5 N*m (56 kgf*cm, 49 in.*lbf)

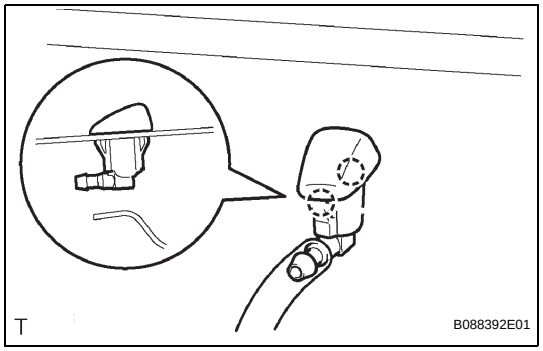

4. INSTALL WASHER NOZZLE SUB-ASSEMBLY

(a) Connect the washer hose.
(b) Engage the 2 claws and install the washer nozzle sub-assembly.

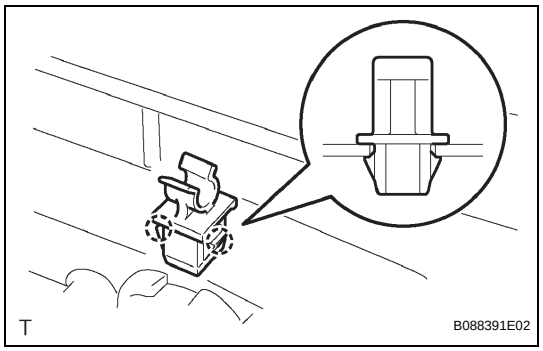

5. INSTALL HOOD SUPPORT

(a) Engage the 2 claws and install the hood stay holder.

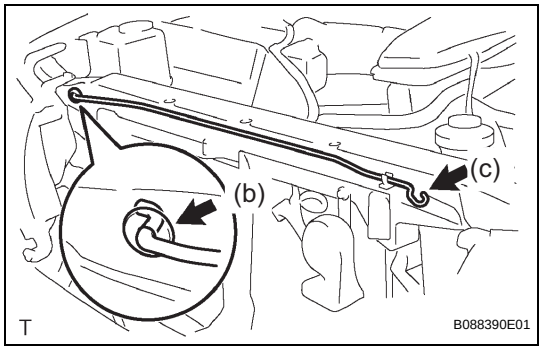

(b) Install the grommet.
(c) Install the hood support.

ED

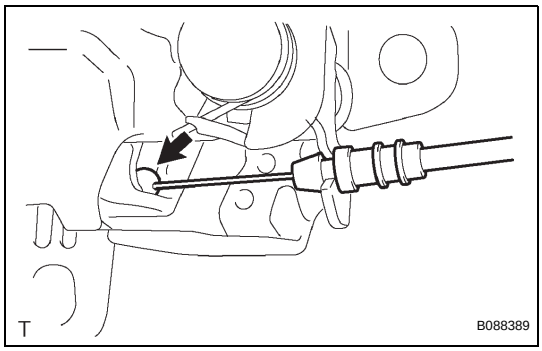

6. **INSTALL HOOD LOCK ASSEMBLY**
   (a) Connect the hood lock control cable assembly.

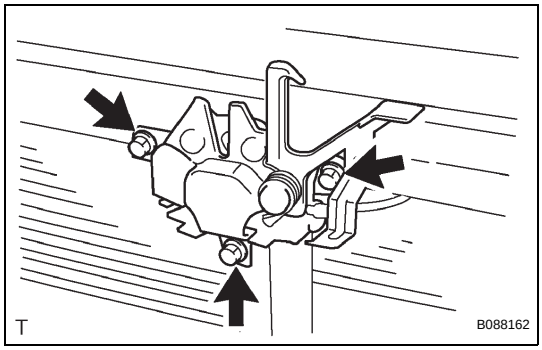

   (b) Install the hood lock assembly with the 3 bolts.
   Torque: 12 N*m (122 kgf*cm, 9 ft.*lbf)

7. **INSTALL NO. 2 HOOD LOCK RELEASE LEVER PROTECTOR (See page ED-5)**

8. **INSTALL RADIATOR GRILLE (See page ET-11)**

DISASSEMBLY

HINT:
Use the same procedures for both the LH and RH sides.

1. DISCONNECT CABLE FROM NEGATIVE BATTERY TERMINAL

2. REMOVE FRONT DOOR LOWER FRAME BRACKET GARNISH LH

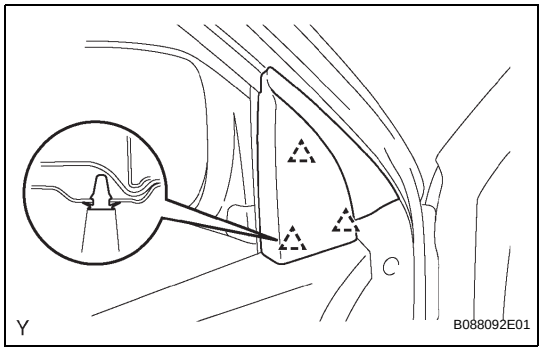

(a) Disengage the 3 clips and remove the front door lower frame bracket garnish LH.

NOTICE:
Confirm that no clips remain on the door panel when the garnish is removed. Transfer any remaining clips to the garnish side before installing.

3. REMOVE POWER WINDOW REGULATOR MASTER SWITCH ASSEMBLY (for Double Cab)

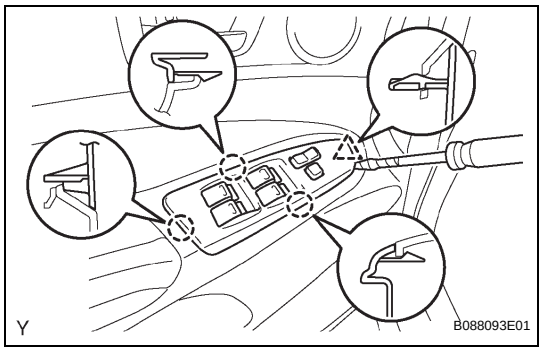

(a) Using a screwdriver with its tip wrapped in protective tape, disengage the 3 claws and clip, then remove the power window regulator master switch assembly.
(b) Disconnect the connector.

4. REMOVE POWER WINDOW REGULATOR MASTER SWITCH ASSEMBLY (for Access Cab)

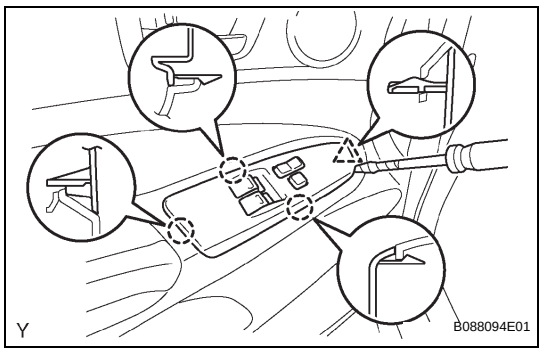

(a) Using a screwdriver with its tip wrapped in protective tape, disengage the 3 claws and clip, then remove the power window regulator master switch assembly.
(b) Disconnect the connector.

5. REMOVE POWER WINDOW REGULATOR SWITCH ASSEMBLY

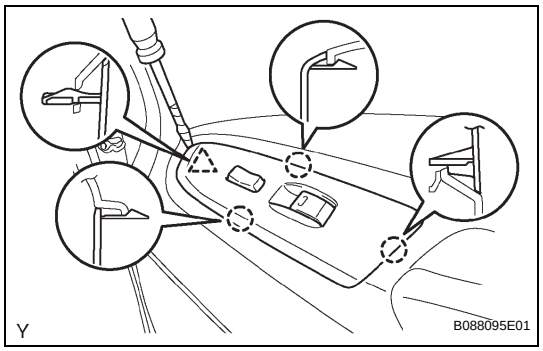

(a) Using a screwdriver with its tip wrapped in protective tape, disengage the 3 claws and clip, then remove the power window regulator switch assembly.
(b) Disconnect the connector.

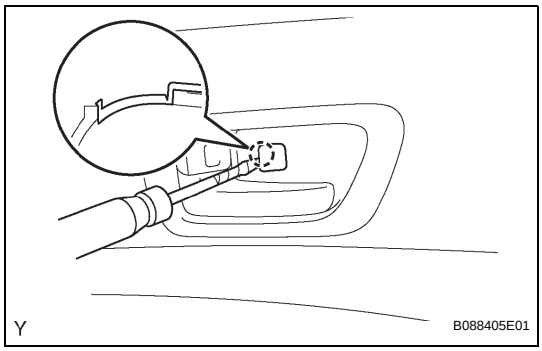

6. REMOVE FRONT DOOR TRIM PANEL ASSEMBLY LH

(a) Using a screwdriver with its tip wrapped in protective tape, open the cover.

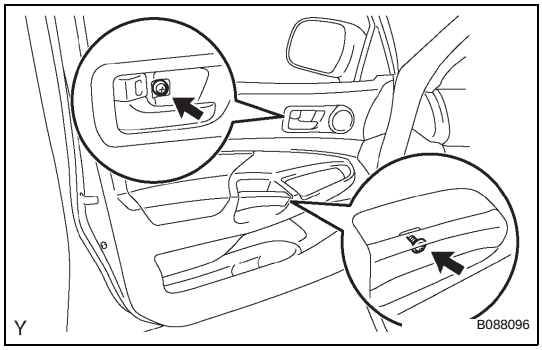

(b) Remove the 2 screws.

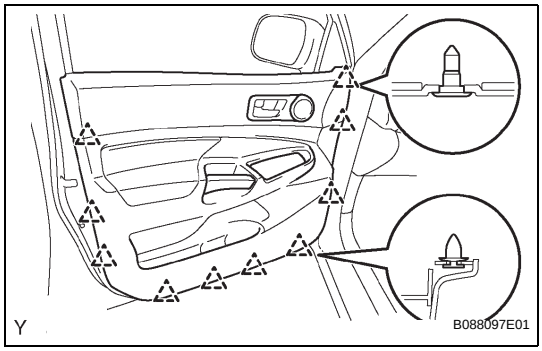

(c) Disengage the 10 clips and remove the front door trim panel assembly LH.

7. REMOVE FRONT NO. 1 SPEAKER ASSEMBLY

HINT:

- Regular cab (See page AV-76)
- Except regular cab (See page AV-78)

8. REMOVE FRONT NO. 2 SPEAKER ASSEMBLY (See page AV-83)

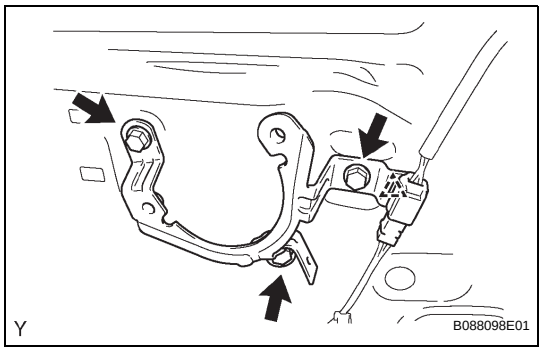

9. REMOVE FRONT NO. 1 SPEAKER BRACKET

(a) Disconnect the wire harness clamp and connector.

(b) Remove the 3 screws and front No. 1 speaker bracket.

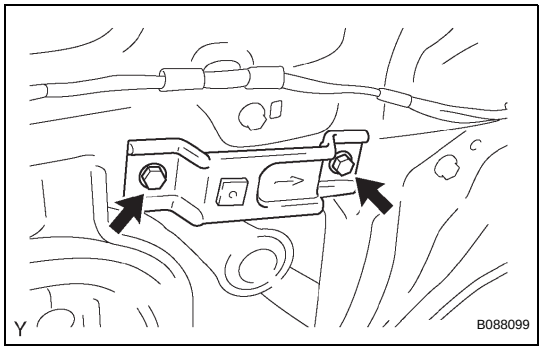

10. REMOVE NO. 1 DOOR TRIM BRACKET RH

(a) Remove the 2 screws and No. 1 door trim bracket.

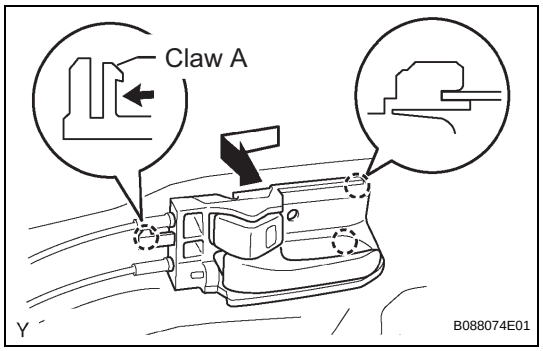

11. REMOVE FRONT DOOR INSIDE HANDLE SUB-ASSEMBLY LH

(a) Using a screwdriver with its tip wrapped in protective tape, disengage claw A as shown in the illustration.

(b) Move the front door inside handle sub-assembly LH in the direction indicated by the arrow mark in the illustration. This will release the claw and allow the removal of the front door inside handle sub-assembly LH.

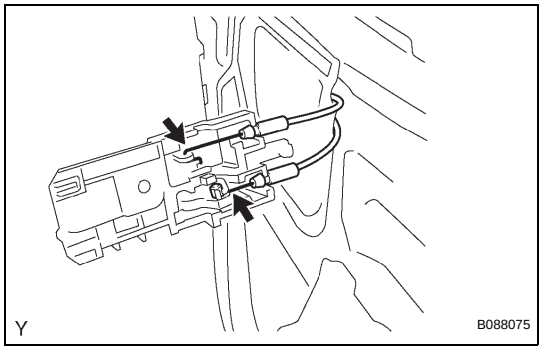

(c) Disconnect the 2 cables from the front door inside handle sub-assembly LH.

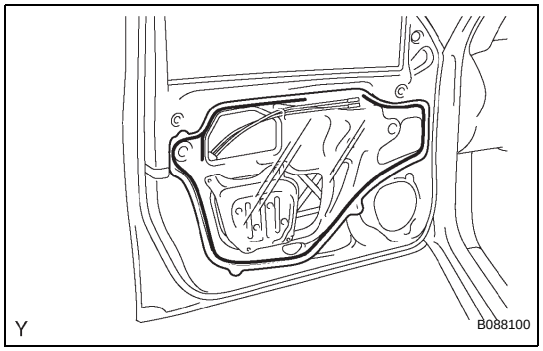

12. REMOVE FRONT DOOR SERVICE HOLE COVER LH

(a) Remove the front door service hole cover LH.
NOTICE:
Remove the remaining tape on the door side.

13. REMOVE OUTER REAR VIEW MIRROR ASSEMBLY LH (See page MI-8)

14. REMOVE FRONT DOOR BELT MOULDING LH (See page ET-32)

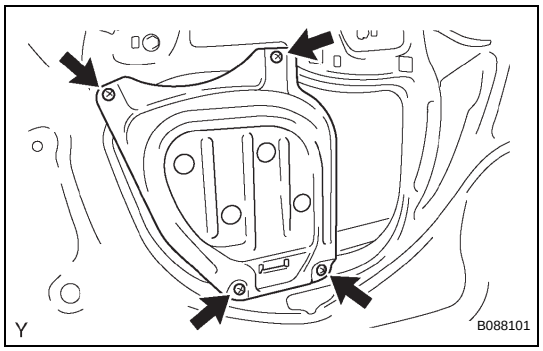

15. REMOVE FRONT DOOR INSIDE PANEL PLATE LH

(a) Remove the 4 screws and front door inside panel plate LH.

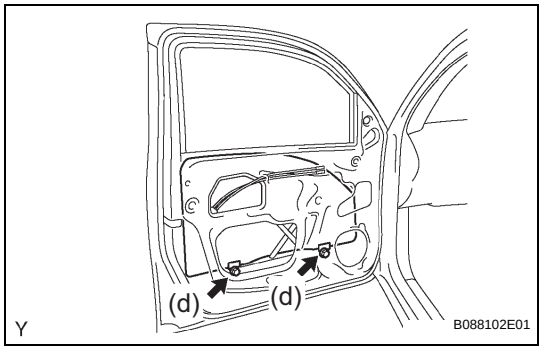

16. REMOVE FRONT DOOR GLASS SUB-ASSEMBLY LH

HINT:
Insert a shop rag inside the door panel to prevent the glass from being scratched.

(a) Driver side: Connect the power window regulator master switch.

(b) Passenger side: Connect the power window regulator switch.

(c) Move the front door glass sub-assembly LH until the 2 bolts appear in the service holes.

(d) Remove the 2 bolts.
NOTICE:
Be careful when removing the 2 bolts as the glass may fall and be damaged.

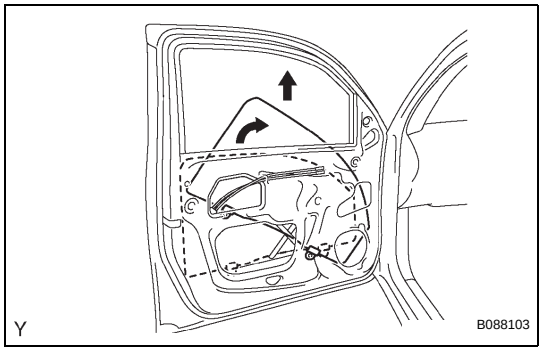

(e) Remove the front door glass sub-assembly LH in the direction indicated by the arrow marks in the illustration.
NOTICE:
Be careful not to damage the glass.

(f) Driver side: Disconnect the power window regulator master switch.

(g) Passenger side: Disconnect the power window regulator switch.

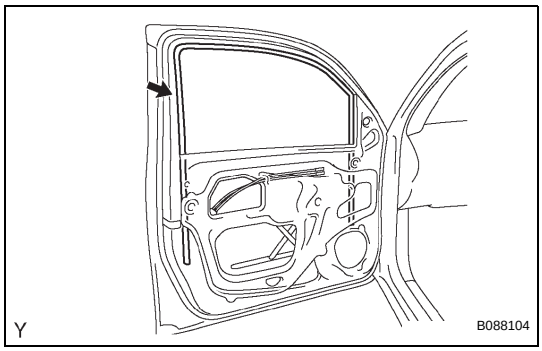

17. REMOVE FRONT DOOR GLASS RUN LH

(a) Remove the front door glass run LH.

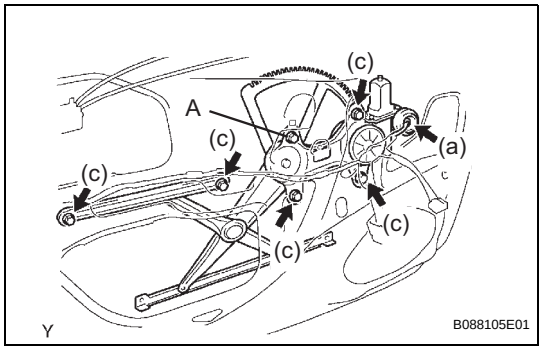

18. REMOVE FRONT DOOR WINDOW REGULATOR SUB-ASSEMBLY LH

(a) Disconnect the front door power window regulator connector.

(b) Loosen bolt A.

(c) Remove the 5 bolts, then remove the front door window regulator sub-assembly LH.
NOTICE:
Be careful when removing the bolts as the window regulator may fall and be damaged.
HINT:
Remove the window regulator through the service hole.

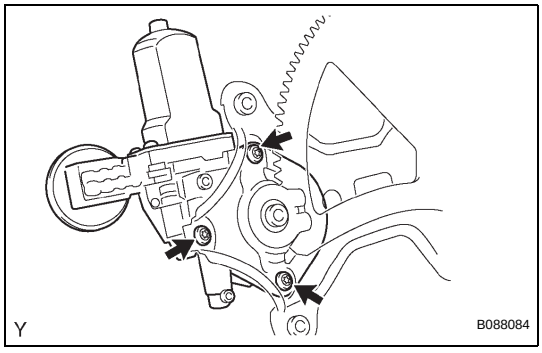

19. REMOVE POWER WINDOW REGULATOR MOTOR ASSEMBLY LH

(a) Place matchmarks on the power window regulator motor gear and regulator gear.

(b) Using a torx driver T25, remove the 3 screws and power window regulator motor assembly LH.

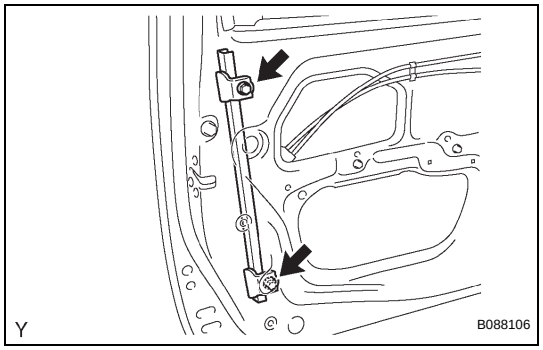

20. REMOVE FRONT DOOR REAR LOWER FRAME SUB-ASSEMBLY LH

(a) Remove the 2 bolts, then remove the front door rear lower frame sub-assembly LH.

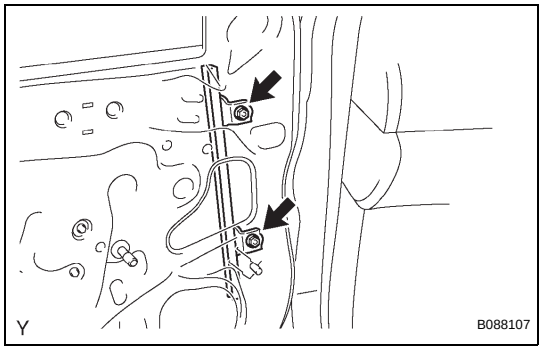

21. REMOVE FRONT DOOR FRONT LOWER FRAME SUB-ASSEMBLY LH

(a) Remove the 2 nuts, then remove the front door front lower frame sub-assembly LH.

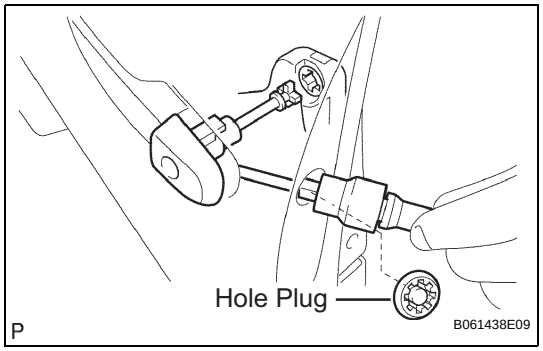

22. REMOVE FRONT DOOR OUTSIDE HANDLE COVER LH

(a) Remove the hole plug.

(b) Using a torx socket wrench T30, loosen the screw and remove the front door outside handle cover LH.

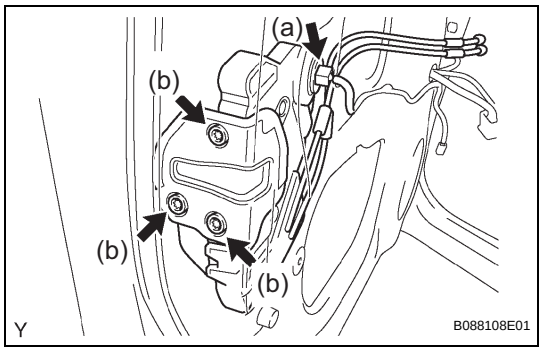

23. REMOVE FRONT DOOR LOCK ASSEMBLY LH

(a) Disconnect the front door lock connector.

(b) Using a torx socket wrench T30, remove the 3 screws, then remove the front door lock assembly LH.

NOTICE:

Be careful when removing the 3 screws as the door lock may fall and be damaged.

HINT:

Remove the door lock through the service hole.

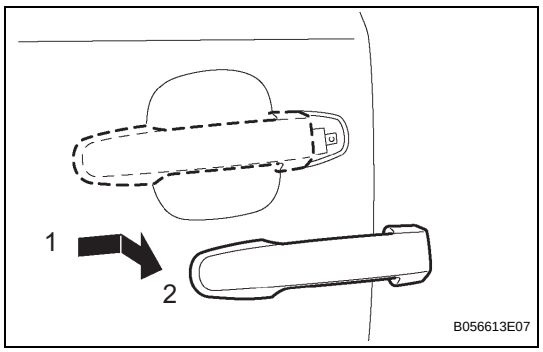

24. REMOVE FRONT DOOR OUTSIDE HANDLE ASSEMBLY LH

(a) Remove the front door outside handle assembly LH by sliding and pulling it in the direction indicated by the arrow mark in the illustration.

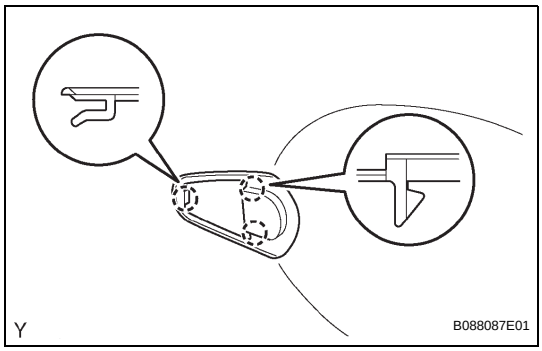

(b) Disengage the 3 claws and remove the front door outside handle front pad.

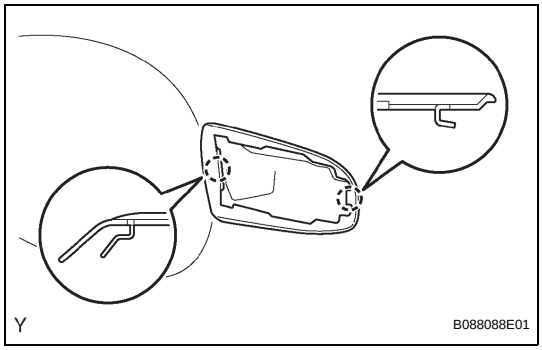

(c) Disengage the 2 claws and remove the front door outside handle rear pad.

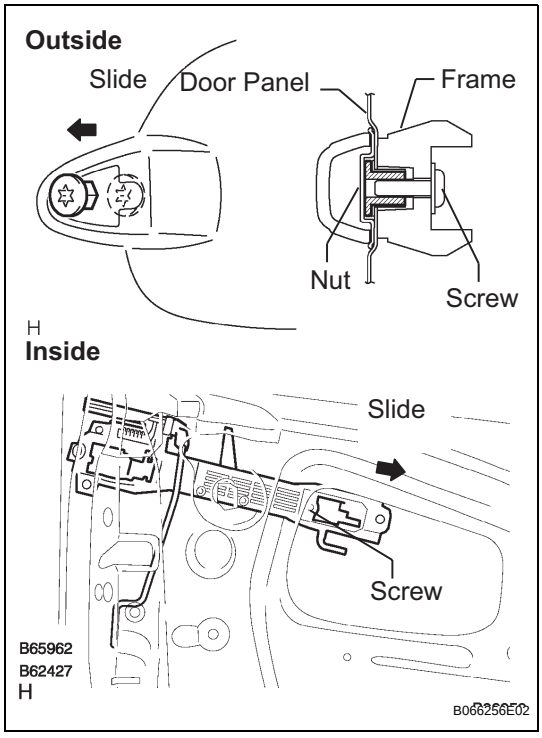

25. REMOVE FRONT DOOR OUTSIDE HANDLE FRAME SUB-ASSEMBLY LH

(a) Using a torx socket wrench T30, loosen the screw.

(b) Slide the outside handle frame sub-assembly to remove it.

HINT:

Remove the outside handle frame sub-assembly through the service hole.

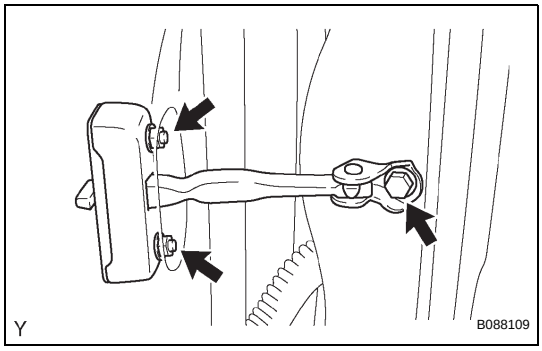

26. REMOVE FRONT DOOR CHECK ASSEMBLY LH

(a) Remove the 2 nuts and bolt, then remove the front door check assembly LH.

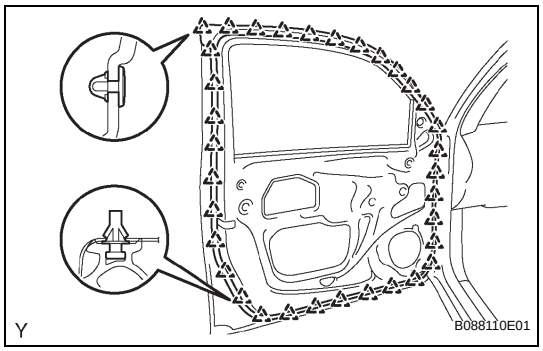

27. REMOVE FRONT DOOR WEATHERSTRIP LH (for Double Cab)

(a) Disengage the 34 clips and remove the front door weatherstrip LH.

NOTICE:

Remove the remaining tape on the door side.

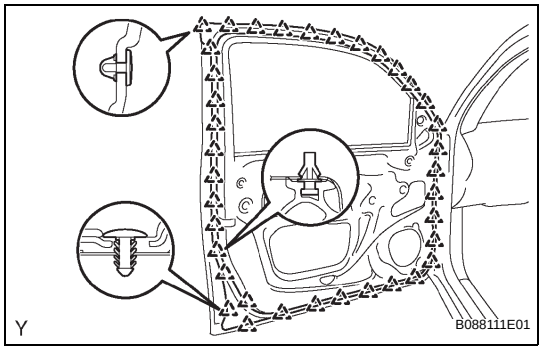

28. REMOVE FRONT DOOR WEATHERSTRIP LH (for Access Cab)

(a) Disengage the 36 clips and remove the front door weatherstrip LH.

NOTICE:

Remove the remaining tape on the door side.

ED

ADJUSTMENT

HINT:

- Before adjusting the positions of doors on vehicles equipped with side airbags and curtain shield airbags, be sure to disconnect the cable from the negative battery terminal. After making adjustments, inspect the SRS warning lamp, the side airbag system and the curtain shield airbag system for normal operation (See page RS-28).
- Use the same procedure for both the RH and LH sides.
- The procedures listed below are for the LH side.
- Centering bolts are used to mount the door hinge onto the vehicle body and door. The doors cannot be adjusted with the centering bolts on. Substitute the standard bolts (with washers) for the centering bolts when making adjustments.
- For bolts without torque specifications, check the standard bolt chart (See page SS-2).

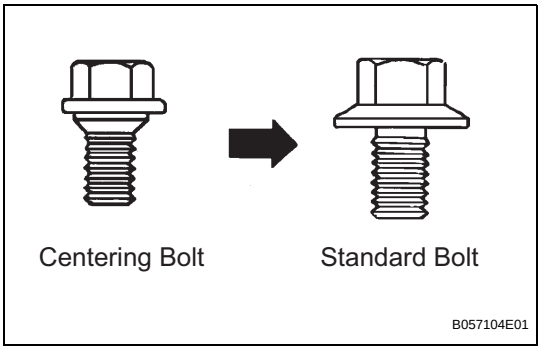

ED

1. INSPECT FRONT DOOR PANEL SUB-ASSEMBLY LH (for Double Cab)

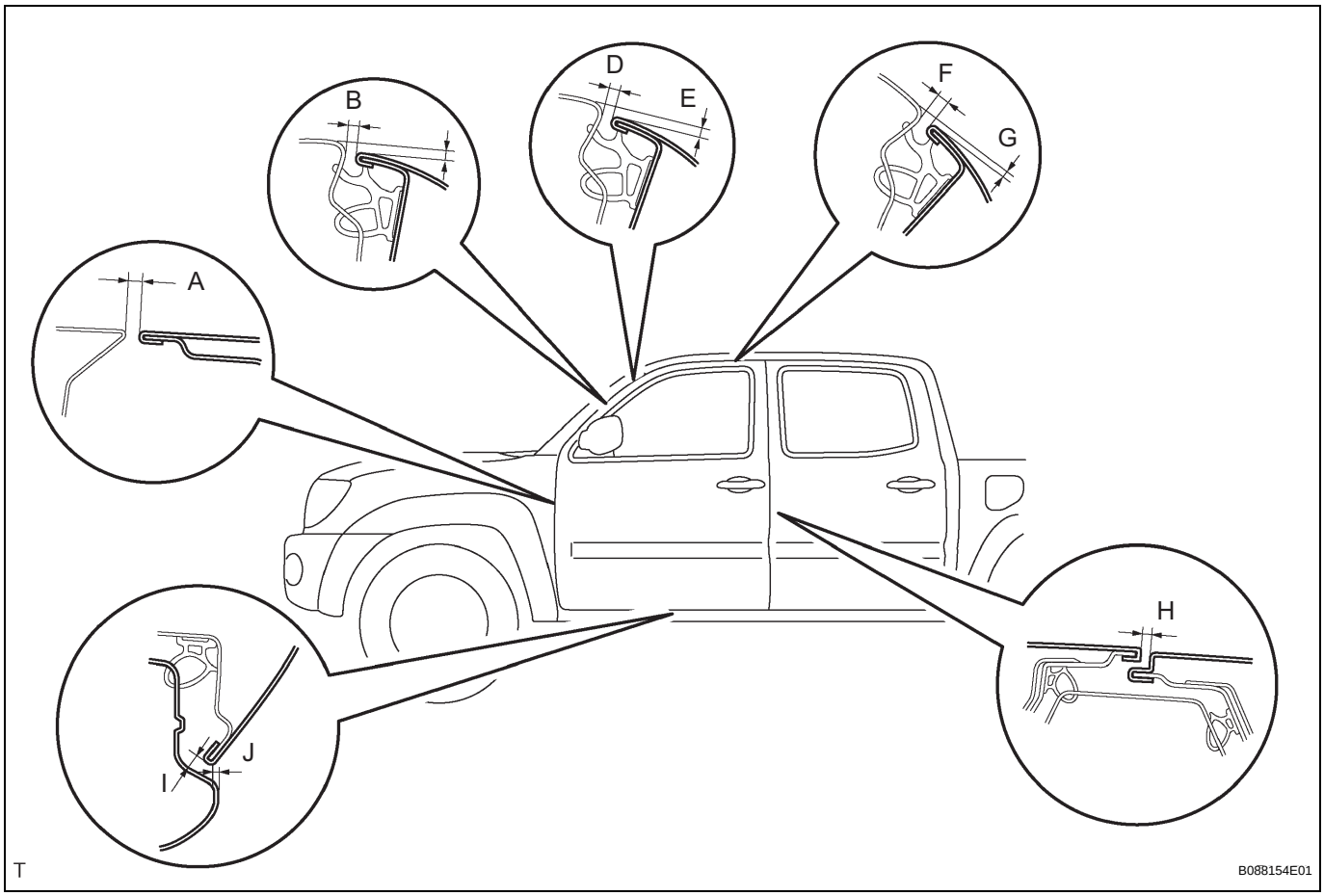

Check that the clearance measurements of areas A to J are within the standard ranges.

Standard:

Area	Measurement	Area	Measurement
A	4.6 +- 1.5 mm (0.181 +- 0.059 in.)	F	5.0 +- 1.5 mm (0.197 +- 0.059 in.)
B	5.0 +- 1.5 mm (0.197 +- 0.059 in.)	G	1.9 +- 1.5 mm (0.075 +- 0.059 in.)

C	3.0 +- 1.5 mm (0.118 +- 0.059 in.)	H	5.0 +- 1.5 mm (0.197 +- 0.059 in.)
D	5.0 +- 1.5 mm (0.197 +- 0.059 in.)	I	5.0 +- 1.5 mm (0.197 +- 0.059 in.)
E	2.7 +- 1.5 mm (0.106 +- 0.059 in.)	J	2.0 +- 1.5 mm (0.079 +- 0.059 in.)

2. INSPECT FRONT DOOR PANEL SUB-ASSEMBLY LH (for Access Cab)

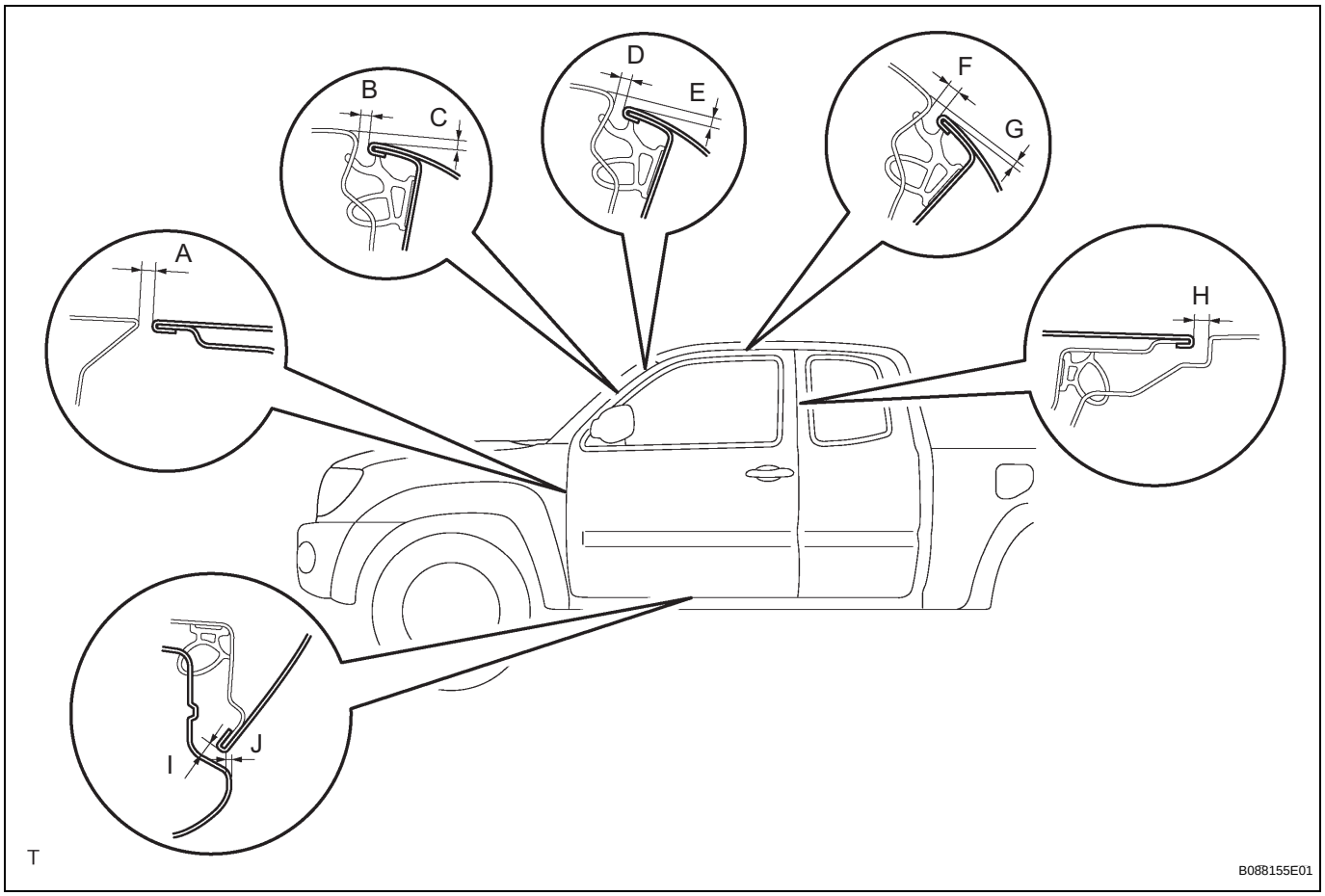

(a) Check that the clearance measurements of areas A to J are within the standard ranges.

Standard:

Area	Measurement	Area	Measurement
A	4.6 +- 1.5 mm (0.181 +- 0.059 in.)	F	5.0 +- 1.5 mm (0.197 +- 0.059 in.)
B	5.0 +- 1.5 mm (0.197 +- 0.059 in.)	G	1.9 +- 1.5 mm (0.075 +- 0.059 in.)
C	3.0 +- 1.5mm (0.118 +- 0.059 in.)	H	6.0 +- 1.5mm (0.236 +- 0.059 in.)
D	5.0 +- 1.5 mm (0.197 +- 0.059 in.)	I	5.0 +- 1.5mm (0.197 +- 0.059 in.)
E	2.7 +- 1.5mm (0.106 +- 0.059 in.)	J	2.0 +- 1.5mm (0.079 +- 0.059 in.)

3. ADJUST FRONT DOOR PANEL SUB-ASSEMBLY LH

(a) Disconnect the cable from the negative battery terminal.
CAUTION:
Work must be started at least 90 seconds after the ignition switch is turned to OFF and and the cable is disconnected from the negative battery terminal. (The SRS is equipped with a back-up power source. If work is started within 90 seconds of disconnecting the cable from the negative battery terminal and the ignition switch being turned to OFF, the SRS may deploy.)

(b) Apply strips of protective tape to the door panel and fender panel, as shown in the illustration.

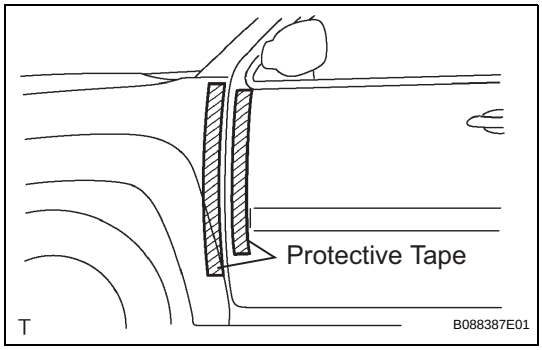

(c) Open the door, and then disengage the 3 clips.
HINT:
If any clips are damaged, replace them with new ones.

(d) Remove the front fender side panel protector LH from the gap between the fender and door.

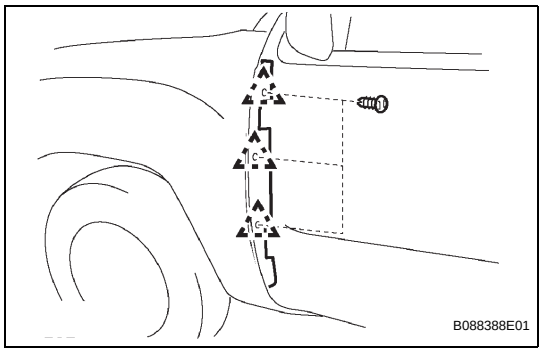

(e) Using SST, adjust the door horizontally and vertically by loosening the body side hinge bolts.
SST 09812-00010

(f) Tighten the body side hinge bolts after the adjustment.
Torque: 26 N*m (265 kgf*cm, 19 ft.*lbf)

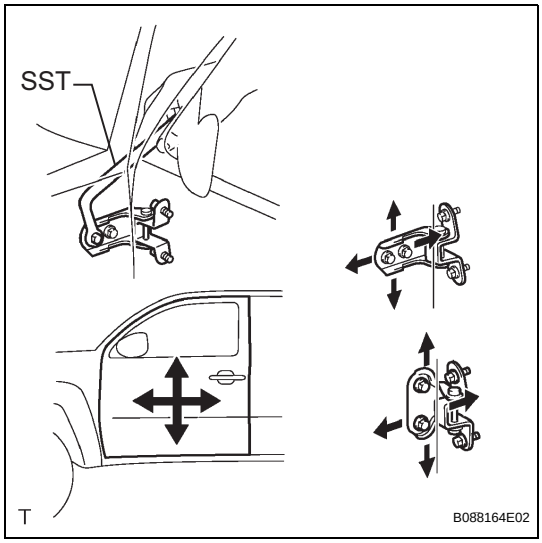

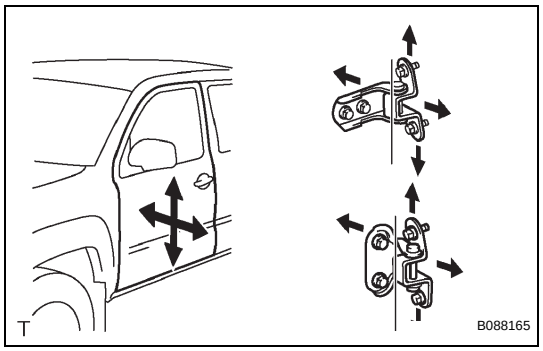

(g) Horizontally and vertically adjust the door by loosening the door side hinge bolts.
(h) Tighten the door side hinge bolts after the adjustment.
Torque: 26 N*m (265 kgf*cm, 19 ft.*lbf)

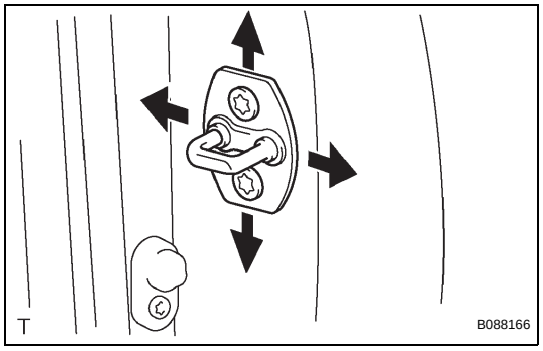

(i) Adjust the striker position by slightly loosening the striker mounting screws with a torx socket wrench T40 and hitting the striker with a plastic hammer.
(j) Using a torx socket wrench T40, tighten the striker mounting screws after the adjustment.
Torque: 23 N*m (235 kgf*cm, 17 ft.*lbf)

ED

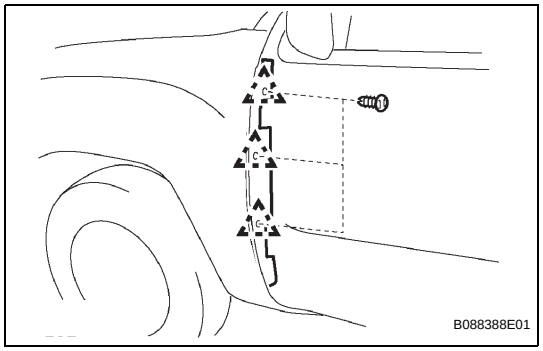

(k) Install the front fender side panel protector LH with the 3 clips.
(l) Connect the cable to the negative battery terminal.
Torque: 3.9 N*m (40 kgf*cm, 35 in.*lbf)
(m) Inspect the SRS warning lamp (See page RS-28)

REASSEMBLY

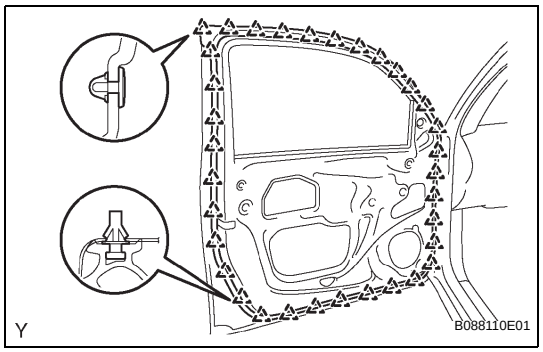

1. INSTALL FRONT DOOR WEATHERSTRIP LH (for Double Cab)
(a) Engage the 34 clips and install a new front door weatherstrip LH.
(b) Remove the tab tape at both ends of 2-sided tape attached to the weather strip, and attach the weather strip to the door panel with the 2-sided tape.

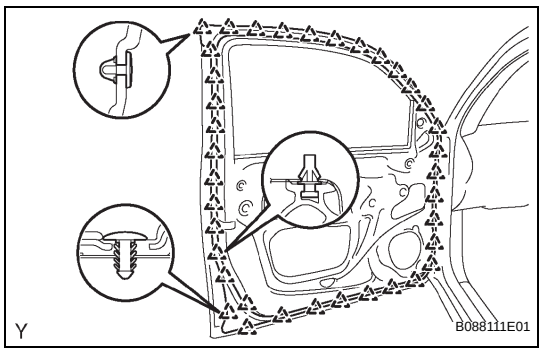

2. INSTALL FRONT DOOR WEATHERSTRIP LH (for Access Cab)
(a) Engage the 36 clips and install a new front door weatherstrip LH.
(b) Remove the tab tape at both ends of 2-sided tape attached to the weather strip, and attach the weather strip to the door panel with the 2-sided tape.

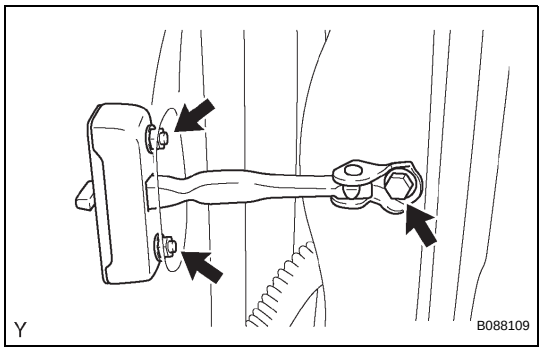

3. INSTALL FRONT DOOR CHECK ASSEMBLY LH

(a) Apply MP grease to the sliding areas of the check.

(b) Install the front door check assembly LH onto the door panel with the 2 nuts.
Torque: 5.5 N*m (56 kgf*cm, 49 in.*lbf)

(c) Apply adhesive to the threads of the bolt.
Adhesive:
Part No. 08833-00070, THREE BOND 1324 or equivalent

(d) Install the front door check assembly LH onto the body panel with the bolt.
Torque: 30 N*m (306 kgf*cm, 22 ft.*lbf)

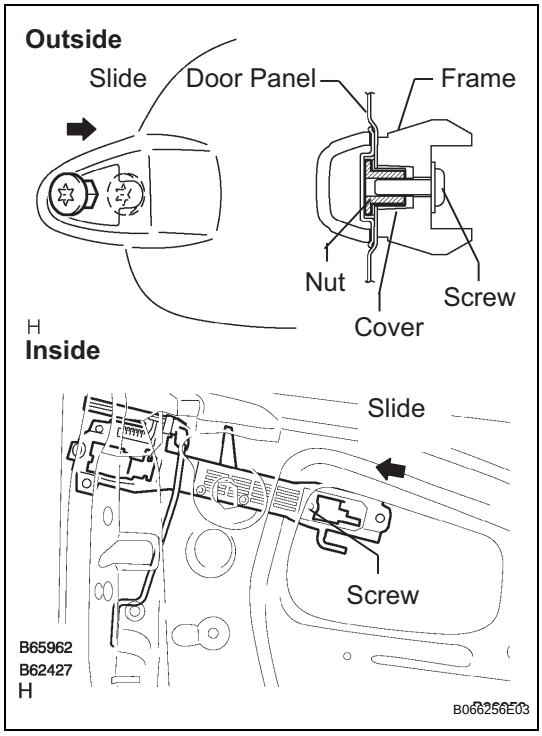

4. INSTALL FRONT DOOR OUTSIDE HANDLE FRAME SUB-ASSEMBLY LH

(a) Using a torx socket wrench T30 , install the outside handle frame sub-assembly with the screw.
Torque: 7.0 N*m (71 kgf*cm, 62 in.*lbf)
NOTICE:
A cover should be inserted between the nut and the door panel.

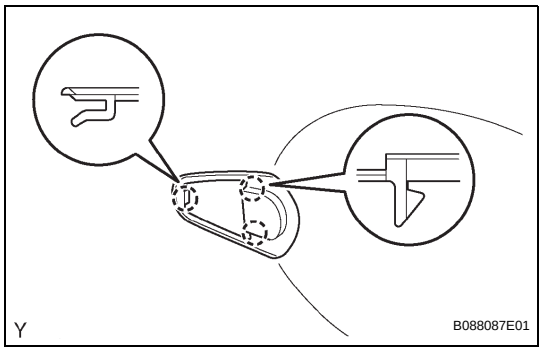

5. INSTALL FRONT DOOR OUTSIDE HANDLE ASSEMBLY LH

(a) Engage the 3 claws and install the front door outside handle front pad.

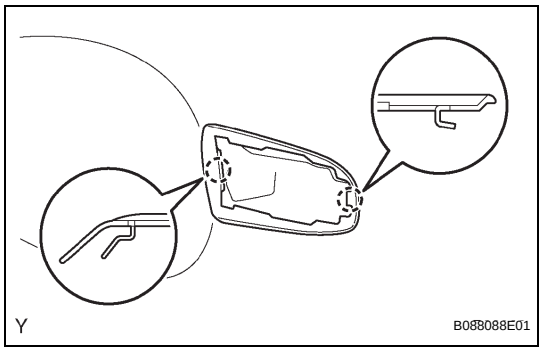

(b) Engage the 2 claws and install the front door outside handle rear pad.

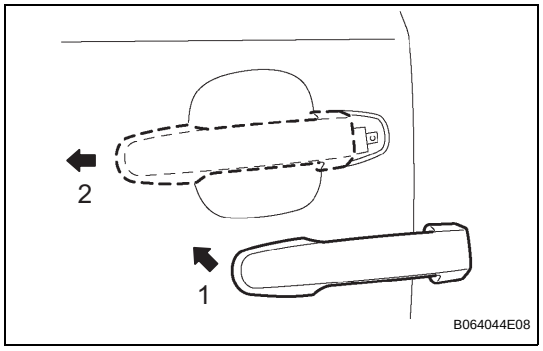

(c) Pushing the front door handle assembly outside LH in the direction of the arrow marks shown in the illustration, install the front door outside handle assembly LH.

6. INSTALL FRONT DOOR LOCK ASSEMBLY LH

(a) Apply MP grease to the sliding and rotating areas of the front door lock assembly LH.
NOTICE:
- **If reusing a door lock assembly that has been removed, replace the packing in the connecting part with new.**
- **Make sure that no grease or dirt adheres to the packing surface in the connecting part.**
- **Reusing removed packing or using damaged packing will allow water to penetrate through the connecting part, and will result in a malfunction of the door lock assembly.**

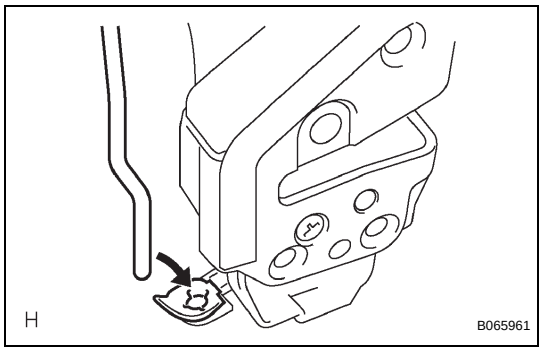

(b) Insert the door lock open rod into the front door lock assembly, then set it to the door panel.
NOTICE:
Make sure that the outside handle link is securely engaged with the door lock assembly.

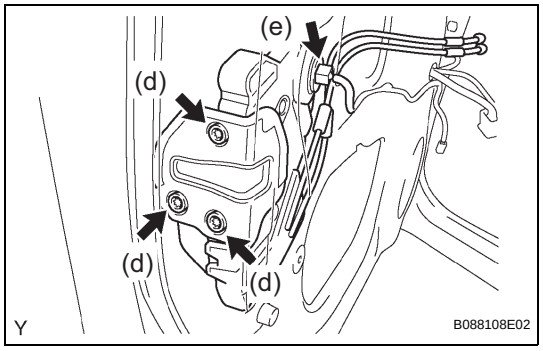

(c) Apply adhesive to the threads of the 3 screws.
Adhesive:
Part No. 08833-00070, THREE BOND 1324 or equivalent

(d) Using a torx socket wrench T30 , install the door lock assembly with the 3 screws.
Torque: 12 N*m (122 kgf*cm, 9 ft.*lbf)

(e) Connect the front door lock connector.

ED

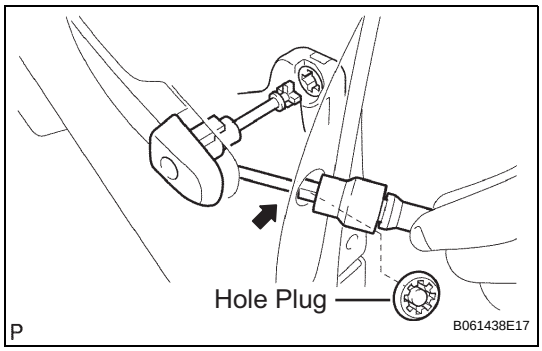

7. INSTALL FRONT DOOR OUTSIDE HANDLE COVER LH

(a) Using a torx socket wrench T30 , install the front door outside handle cover LH with the screw.
Torque: 7.0 N*m (71 kgf*cm, 62 in.*lbf)

(b) Install the hole plug.

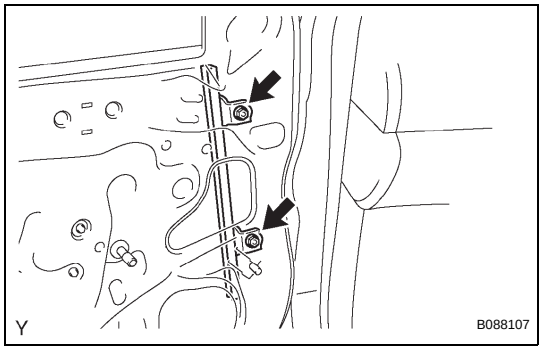

8. INSTALL FRONT DOOR FRONT LOWER FRAME SUB-ASSEMBLY LH

(a) Install the front door front lower frame sub-assembly LH with the 2 nuts.
Torque: 5.5 N*m (56 kgf*cm, 49 in.*lbf)

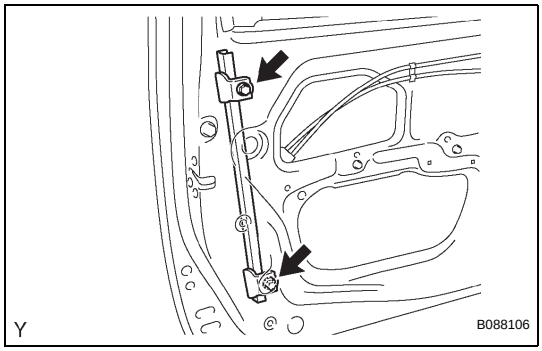

9. INSTALL FRONT DOOR REAR LOWER FRAME SUB-ASSEMBLY LH

(a) Install the front door rear lower frame sub-assembly LH with the 2 bolts.
Torque: 8.0 N*m (82 kgf*cm, 70 in.*lbf)

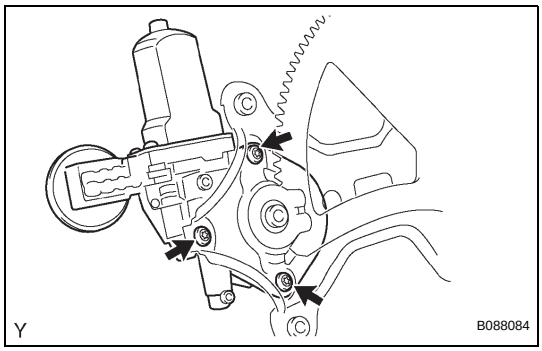

10. INSTALL POWER WINDOW REGULATOR MOTOR ASSEMBLY LH

(a) Align the matchmarks on the power window regulator motor gear and regulator gear.

(b) Using a torx driver T25 , install the power window regulator motor assembly LH with the 3 screws.
Torque: 5.4 N*m (55 kgf*cm, 48 in.*lbf)
HINT:
Never rotate the motor assembly downward until the window glass installation is complete.

11. INSTALL FRONT DOOR WINDOW REGULATOR SUB-ASSEMBLY LH

(a) Apply MP grease to the sliding and rotating parts of the front door window regulator assembly LH.
NOTICE:
Do not apply grease to the window regulator spring.

(b) Loosely screw bolt A onto the front door window regulator sub-assembly LH.

ED

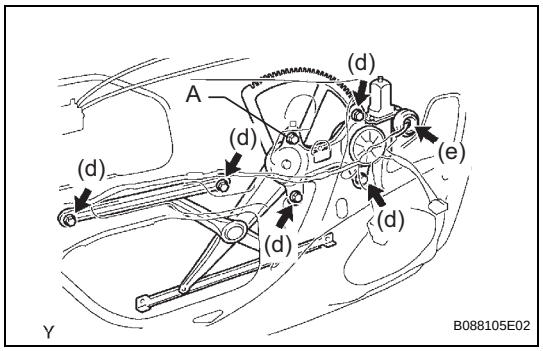

(c) Insert the front door window regulator into the door panel. Use bolt A to hang the front door window regulator on the door panel.
NOTICE:
Be careful not to drop the window regulator as it may be damaged.

(d) Install the front door window regulator with the 5 bolts, and then tighten bolt A.
Torque: 11 N*m (112 kgf*cm, 8 ft.*lbf)

(e) Connect the front door power window regulator connector.

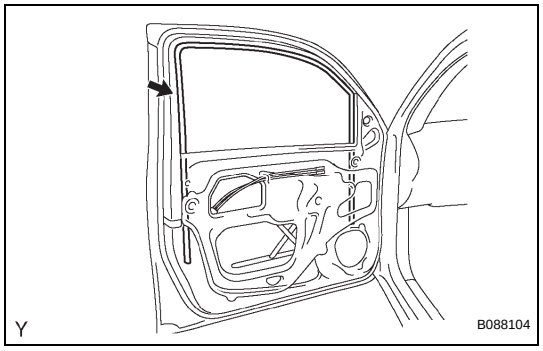

12. INSTALL FRONT DOOR GLASS RUN LH

(a) Install the front door glass run LH.

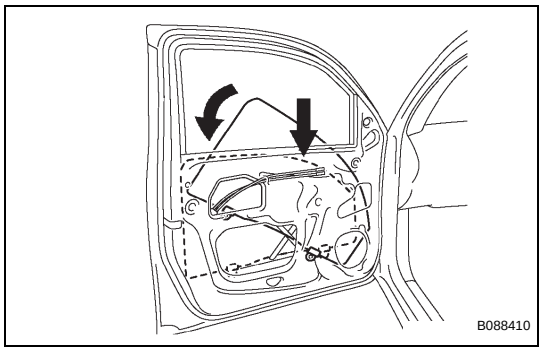

13. INSTALL FRONT DOOR GLASS SUB-ASSEMBLY LH

(a) Insert the front door glass sub-assembly LH into the door panel along the glass run as indicated by the arrow marks in the illustration.

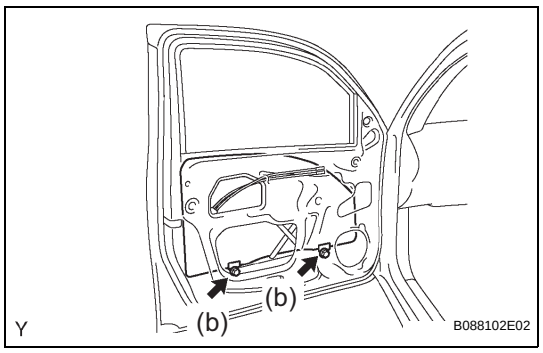

(b) Install the front door glass sub-assembly LH into the front door window regulator sub-assembly LH with the 2 bolts.
Torque: 8.0 N*m (82 kgf*cm, 71 in.*lbf)

(c) Check the operation of the power window.
HINT:
When the door glass sub-assembly is not installed at the proper installation position, adjust the regulator position manually.
(1) Connect the power window switch to the wire harness and turn the ignition switch to ON.
(2) Repeat UP and DOWN operations several times manually.

ED

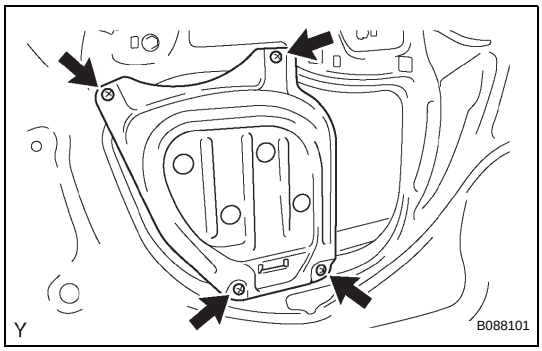

14. INSTALL FRONT DOOR INSIDE PANEL PLATE LH

(a) Install the front door inside panel plate LH with the 4 screws.

15. INSTALL FRONT DOOR BELT MOULDING LH (See page ET-33)

16. INSTALL OUTER REAR VIEW MIRROR ASSEMBLY LH (See page MI-10)

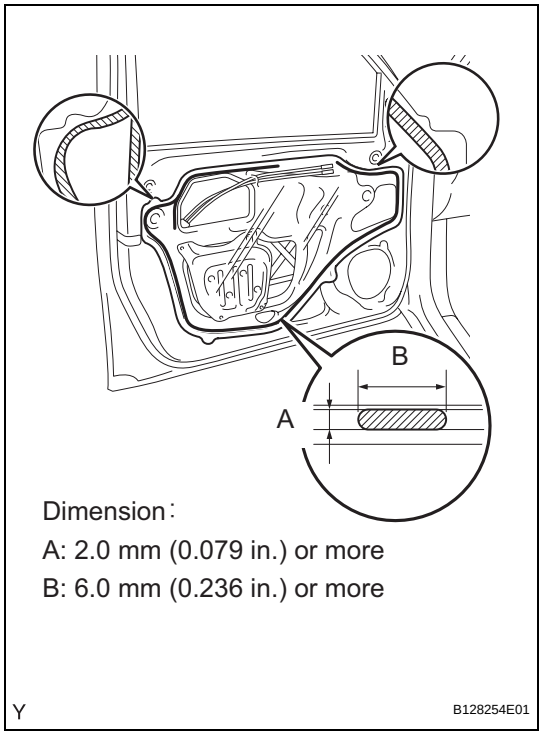

17. INSTALL FRONT DOOR SERVICE HOLE COVER LH

(a) Apply butyl tape to the door panel, then install the front door service hole cover LH as shown in the illustration.

Adhesive:

Part No. 08850-00065, Butyl Tape Set or equivalent

HINT:

- When installing the service hole cover, pull the links and connectors out through the service hole cover.
- There should be no wrinkles or folds after attaching the service hole cover.
- After attaching the service hole cover, check the quality of the seal.

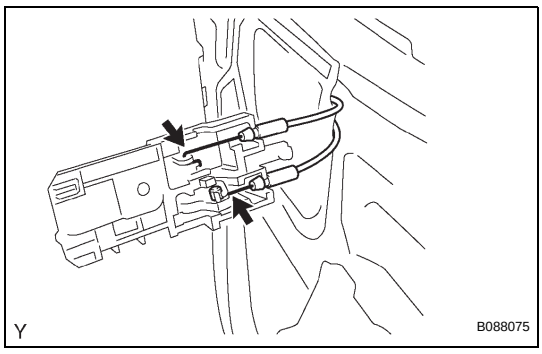

18. INSTALL FRONT DOOR INSIDE HANDLE SUB-ASSEMBLY LH

(a) Connect the 2 cables to the front door inside handle sub-assembly LH.

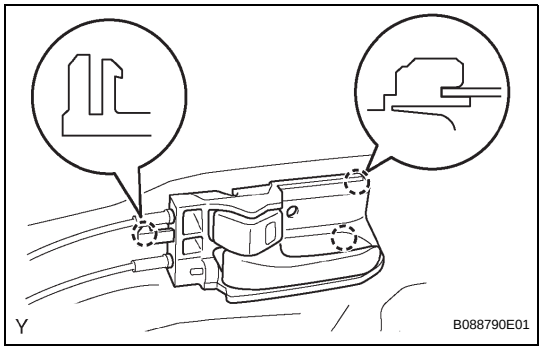

(b) Engage the 3 claws and install the front door inside handle sub-assembly LH onto the door panel.

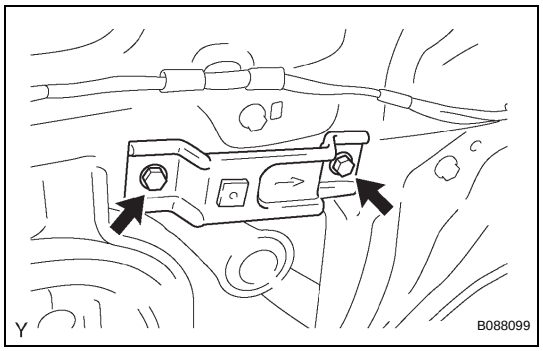

19. INSTALL NO. 1 DOOR TRIM BRACKET RH

(a) Install the No. 1 door trim bracket with the 2 screws.

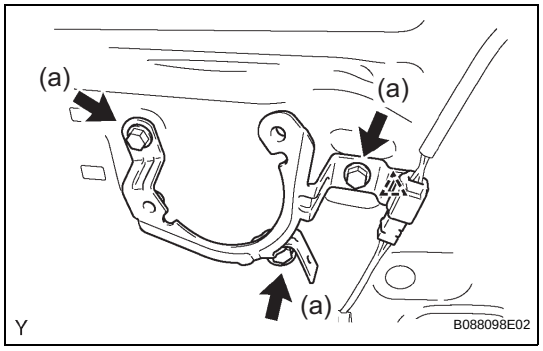

20. INSTALL FRONT NO. 1 SPEAKER BRACKET

(a) Install the front No. 1 speaker bracket with the 3 screws.

(b) Connect the wire harness clamp and connector.

21. INSTALL FRONT NO. 2 SPEAKER ASSEMBLY (See page AV-83)

22. INSTALL FRONT NO. 1 SPEAKER ASSEMBLY

HINT:

- Regular cab (See page AV-76)
- Except regular cab (See page AV-79)

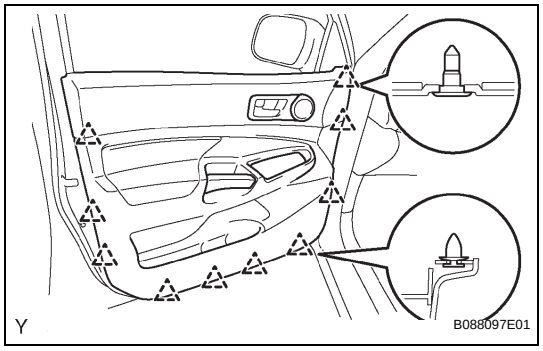

23. INSTALL FRONT DOOR TRIM PANEL ASSEMBLY LH

(a) Engage the 10 clips and install the front door trim panel assembly LH.

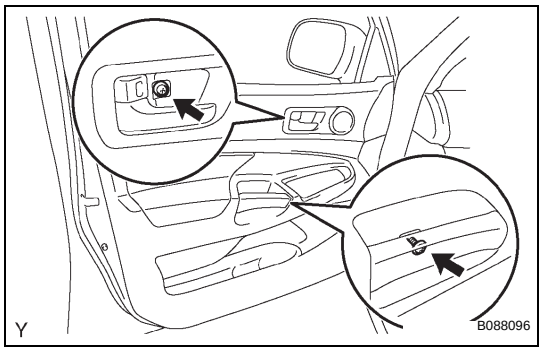

(b) Install the 2 screws.

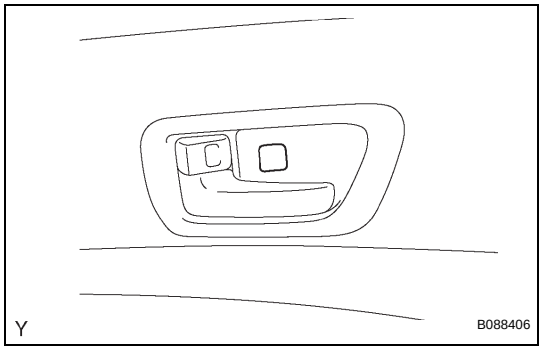

(c) Close the cover.

ED

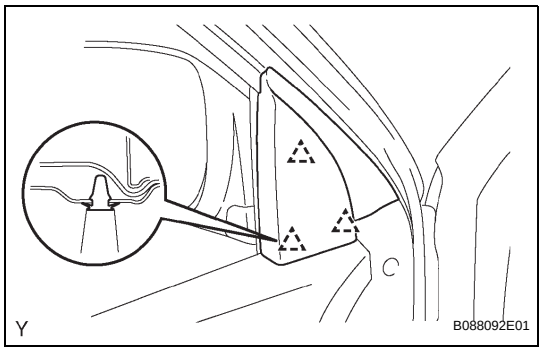

24. INSTALL FRONT DOOR LOWER FRAME BRACKET GARNISH LH

(a) Engage the 3 clips and install the front lower frame bracket garnish LH.

NOTICE:

Confirm that no clips remain on the door panel before the garnish is installed. Transfer any remaining clips to the garnish side before installing it. Installing the garnish with any clips remaining on the door panel side could cause the clips to drop inside the door panel.

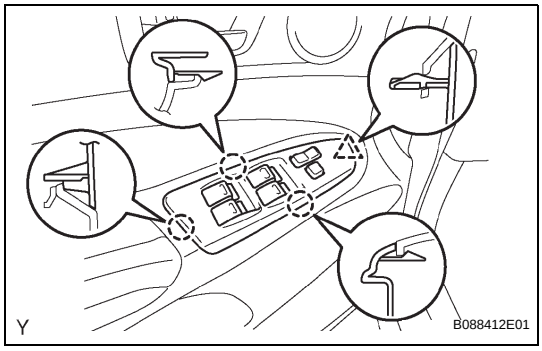

25. INSTALL POWER WINDOW REGULATOR MASTER SWITCH ASSEMBLY (for Double Cab)

(a) Connect the connector.

(b) Engage the 3 claws and clip, and install the power window regulator master switch assembly.

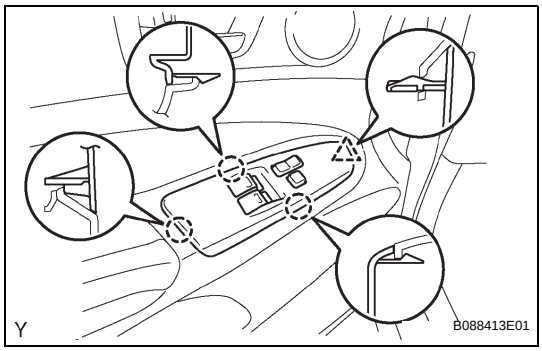

26. INSTALL POWER WINDOW REGULATOR MASTER SWITCH ASSEMBLY (for Access Cab)

(a) Connect the connector.

(b) Engage the 3 claws and clip, and install the power window regulator master switch assembly.

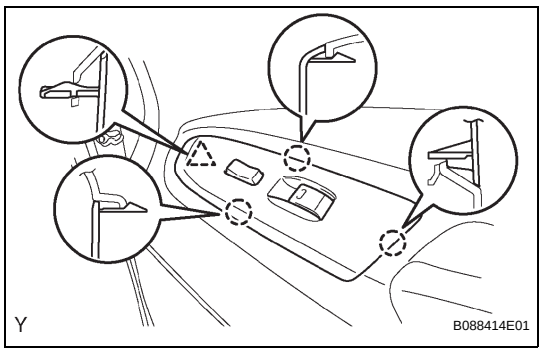

27. INSTALL POWER WINDOW REGULATOR SWITCH ASSEMBLY

(a) Connect the connector.

(b) Engage the 3 claws and clip, and install the power window regulator switch assembly.

28. CONNECT CABLE TO NEGATIVE BATTERY TERMINAL

Torque: 3.9 N*m (40 kgf*cm, 35 in.*lbf)

ED

DISASSEMBLY

HINT:
Use the same procedures for the RH and LH sides.

1. DISCONNECT CABLE FROM NEGATIVE BATTERY TERMINAL

2. REMOVE FRONT DOOR WINDOW REGULATOR HANDLE ASSEMBLY

(a) Pull out the snap ring with a cloth as shown in the illustration, then remove the door window regulator handle assembly.

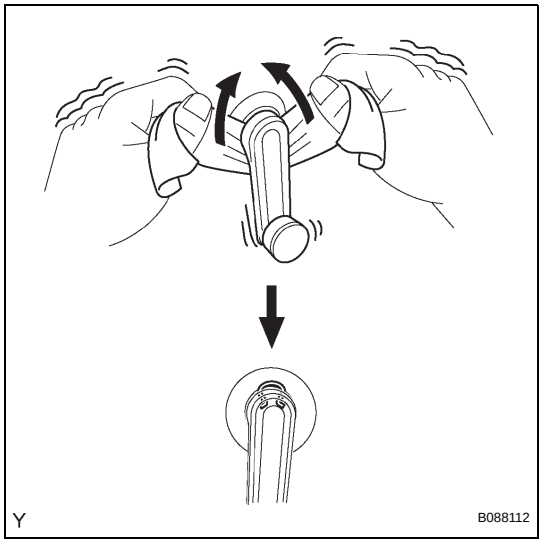

(b) Remove the window regulator handle plate.

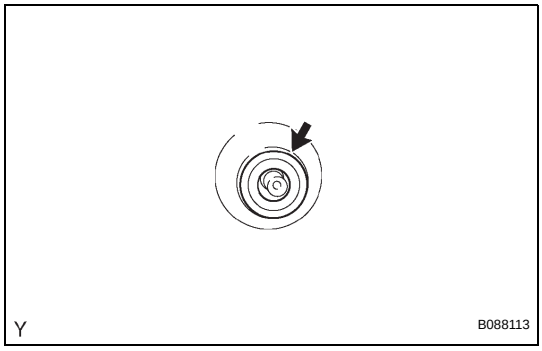

3. REMOVE FRONT DOOR LOWER FRAME BRACKET GARNISH LH

(a) Disengage the 3 clips and remove the front door lower frame bracket garnish LH.

NOTICE:
Confirm that no clips remain on the door panel when the garnish is removed. Transfer any remaining clips to the garnish side before installing.

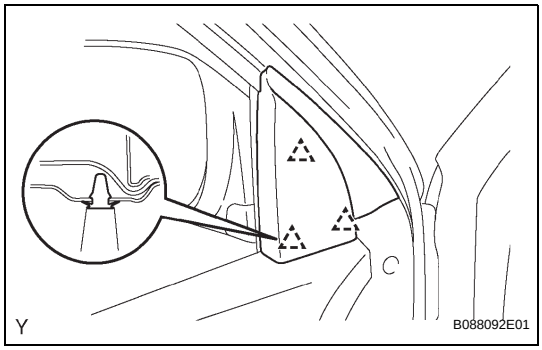

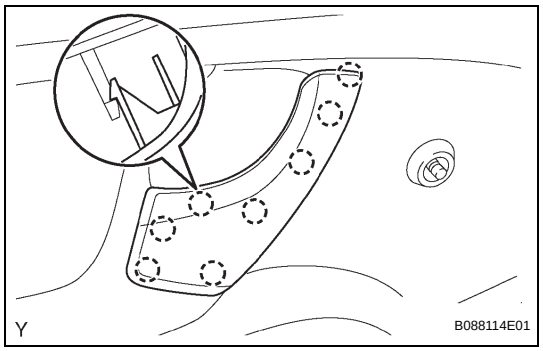

4. REMOVE FRONT DOOR TRIM PANEL ASSEMBLY LH

(a) Using a screwdriver with its tip wrapped in protective tape, disengage the 8 claws and remove the door assist grip cover LH.

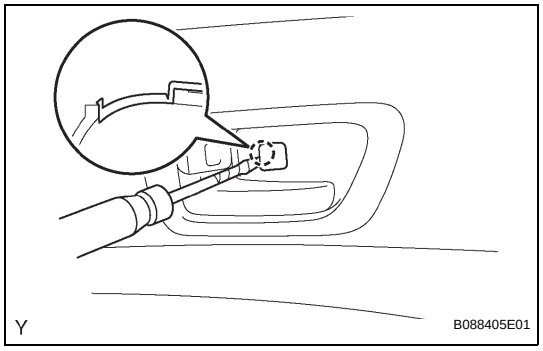

(b) Using a screwdriver with its tip wrapped in protective tape, open the cover.

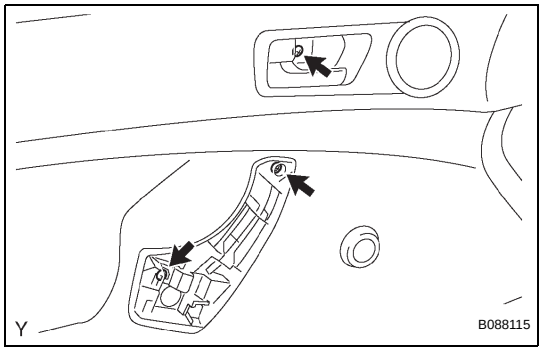

(c) Remove the 3 screws.

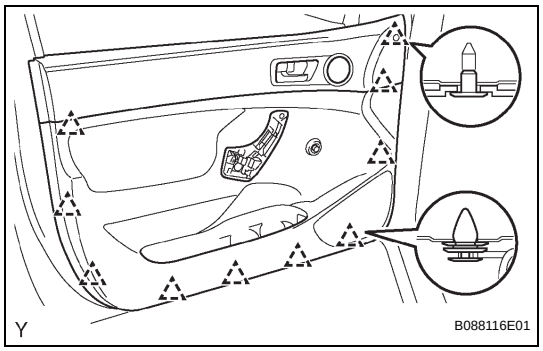

(d) Disengage the 10 clips and remove the front door trim panel assembly LH.

5. REMOVE FRONT NO. 1 SPEAKER ASSEMBLY

HINT:

- Regular cab (See page AV-76)
- Except regular cab (See page AV-78)

6. REMOVE FRONT NO. 2 SPEAKER ASSEMBLY (See page AV-83)

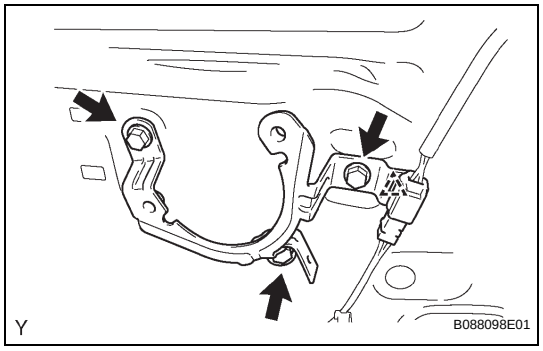

7. REMOVE FRONT NO. 1 SPEAKER BRACKET

(a) Remove the 3 screws and remove the front No. 1 speaker bracket.

ED

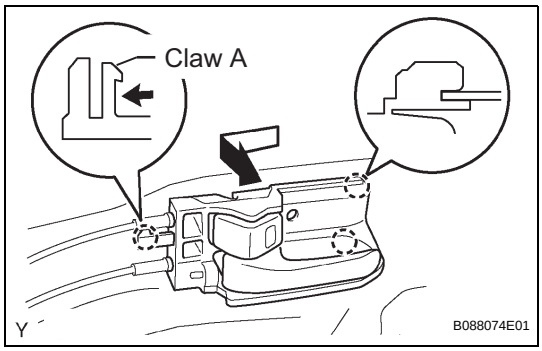

8. REMOVE FRONT DOOR INSIDE HANDLE SUB-ASSEMBLY LH

(a) Using a screwdriver with its tip wrapped in protective tape, disengage claw A as shown in the illustration.

(b) Move the front door inside handle sub-assembly LH in the direction indicated by the arrow mark in the illustration. This will release the claw and allow the removal of the front door inside handle sub-assembly LH.

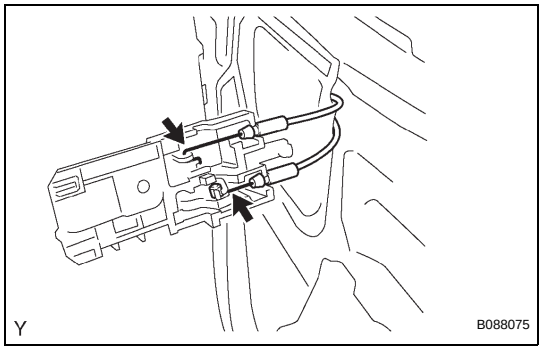

(c) Disconnect the 2 cables from the front door inside handle sub-assembly LH.

ED

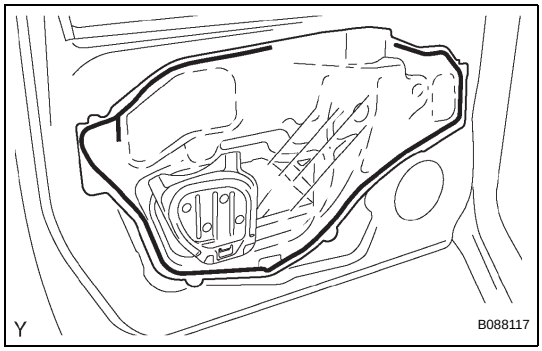

9. REMOVE FRONT DOOR SERVICE HOLE COVER LH

(a) Remove the front door service hole cover LH.

NOTICE:
Remove the remaining tape on the door side.

10. REMOVE OUTER REAR VIEW MIRROR ASSEMBLY LH (See page MI-8)

11. REMOVE FRONT DOOR BELT MOULDING LH (See page ET-32)

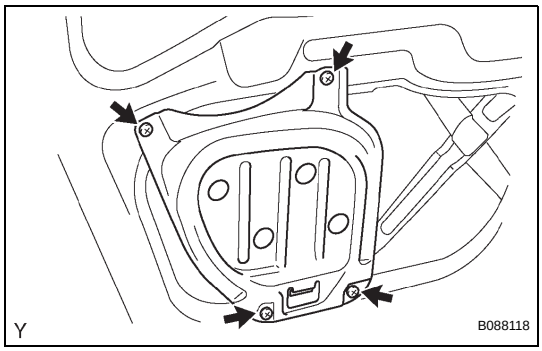

12. REMOVE FRONT DOOR INSIDE PANEL PLATE LH

(a) Remove the 4 screws and front door inside panel plate LH.

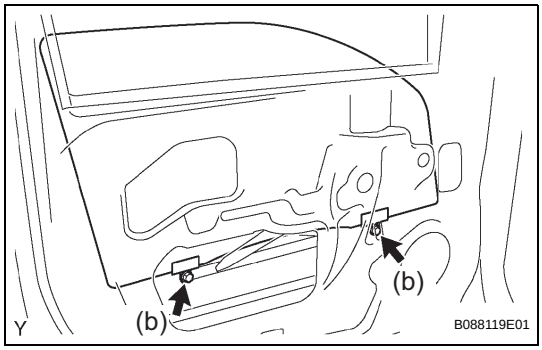

13. REMOVE FRONT DOOR GLASS SUB-ASSEMBLY LH

HINT:
Insert a shop rag inside the door panel to prevent the glass from being scratched.

(a) Move the front door glass sub-assembly LH until the 2 bolts appear in the service holes.

(b) Remove the 2 bolts.

NOTICE:
Be careful when removing the 2 bolts as the glass may fall and be damaged.

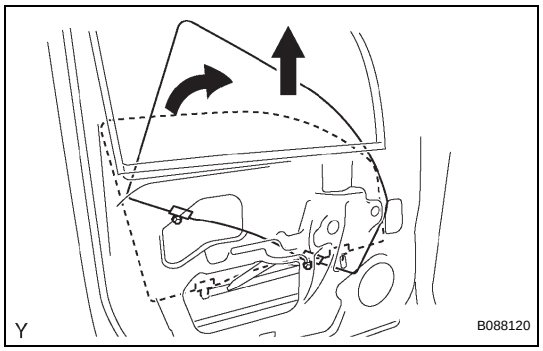

(c) Remove the front door glass sub-assembly LH by moving it in the direction indicated by the arrow marks in the illustration.
NOTICE:
Be careful not to damage the glass.

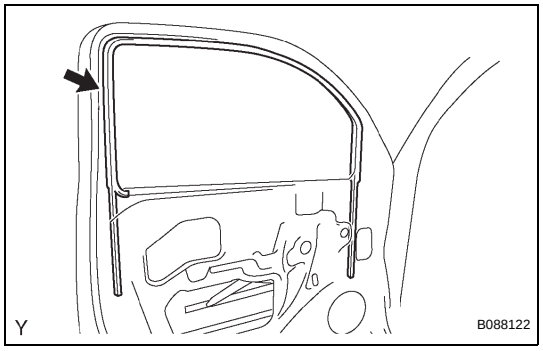

14. REMOVE FRONT DOOR GLASS RUN LH
(a) Remove the front door glass run LH.

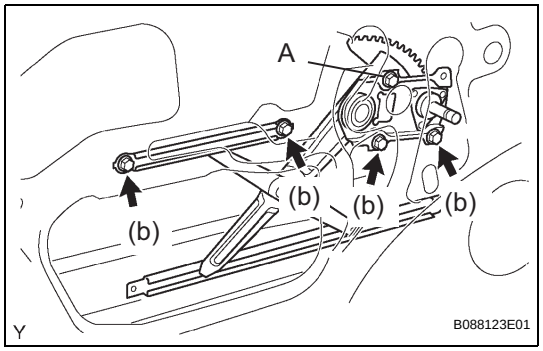

15. REMOVE FRONT DOOR WINDOW REGULATOR SUB-ASSEMBLY LH
(a) Loosen bolt A.
(b) Remove the 4 bolts, then remove the front door window regulator sub-assembly LH.
NOTICE:
Be careful when removing the bolts as the window regulator may fall and be damaged.
HINT:
Remove the window regulator through the service hole.

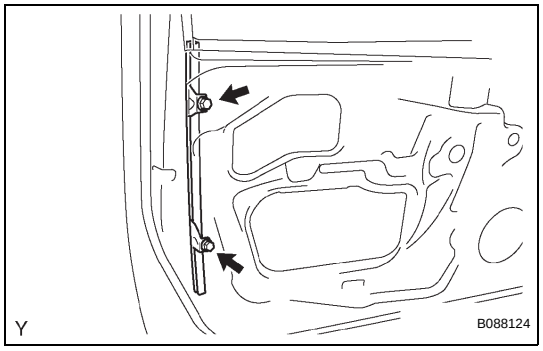

16. REMOVE FRONT DOOR REAR LOWER FRAME SUB-ASSEMBLY LH
(a) Remove the 2 bolts, then remove the front door rear lower frame sub-assembly LH.

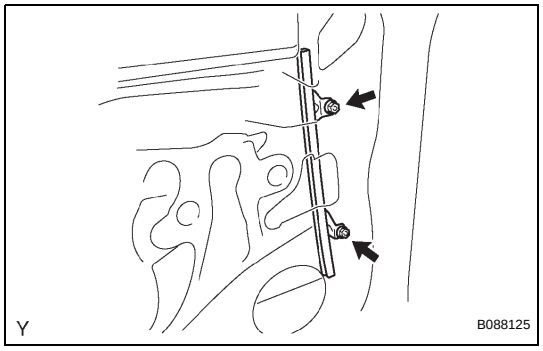

17. REMOVE FRONT DOOR FRONT LOWER FRAME SUB-ASSEMBLY LH
(a) Remove the 2 nuts, then remove the front door front lower frame sub-assembly LH.

ED

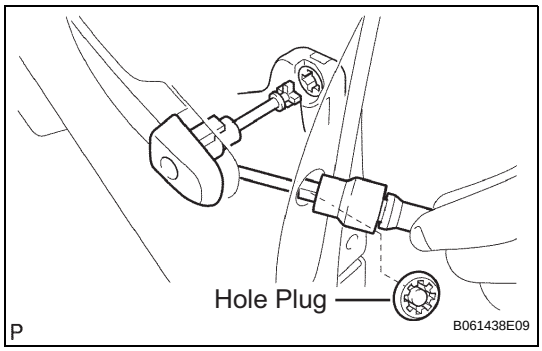

18. REMOVE FRONT DOOR OUTSIDE HANDLE COVER LH

(a) Remove the hole plug.

(b) Using a torx socket wrench T30 , loosen the screw and remove the front door outside handle cover LH.

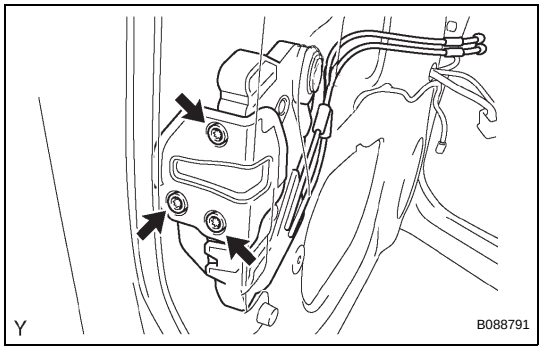

19. REMOVE FRONT DOOR LOCK ASSEMBLY LH

(a) Using a torx socket wrench T30 , remove the 3 screws and remove the front door lock assembly LH.

NOTICE:

Be careful when removing the 3 screws as the door lock may fall and be damaged.

HINT:

Remove the door lock through the service hole.

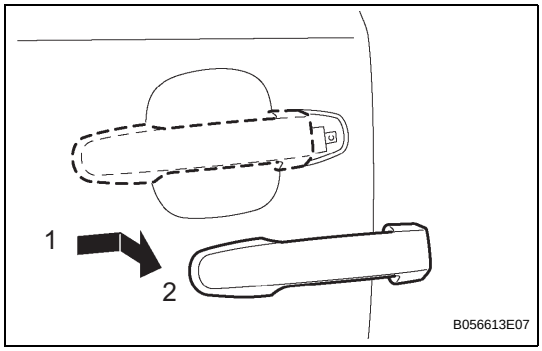

20. REMOVE FRONT DOOR OUTSIDE HANDLE ASSEMBLY LH

(a) Remove the front door outside handle assembly LH by sliding and pulling it in the direction indicated by the arrow mark in the illustration.

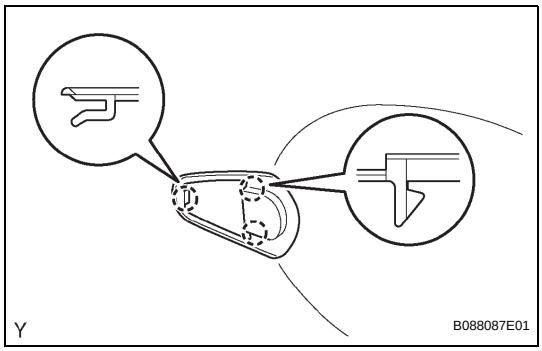

(b) Disengage the 3 claws and remove the front door outside handle front pad.

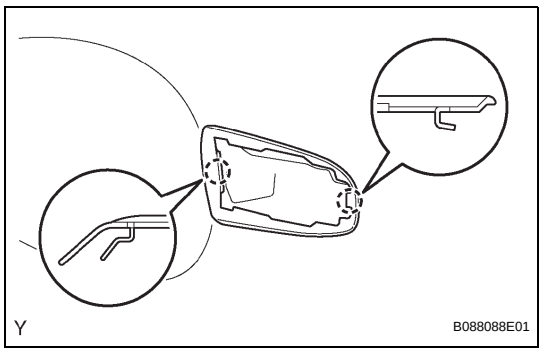

(c) Disengage the 2 claws and remove the front door outside handle rear pad.

ED

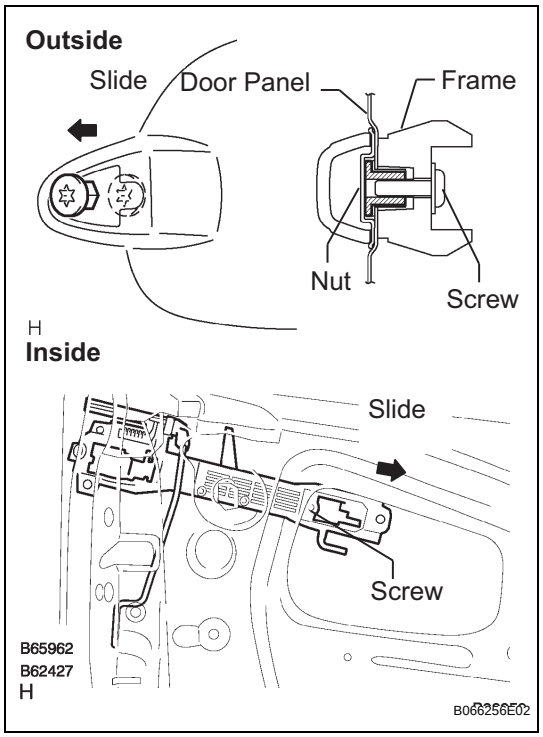

21. REMOVE FRONT DOOR OUTSIDE HANDLE FRAME SUB-ASSEMBLY LH

(a) Using a torx socket wrench T30 , loosen the screw.

(b) Slide the outside handle frame sub-assembly to remove it.

HINT:

Remove the outside handle frame sub-assembly through the service hole.

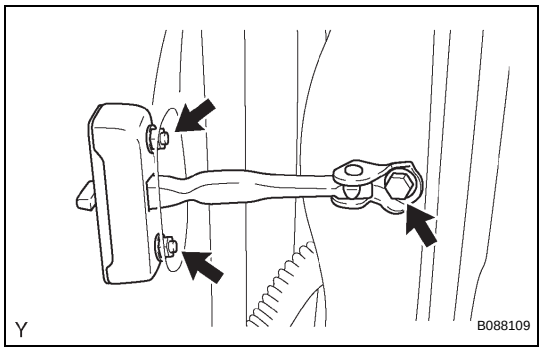

22. REMOVE FRONT DOOR CHECK ASSEMBLY LH

(a) Remove the 2 nuts and bolt, then remove the front door check assembly LH.

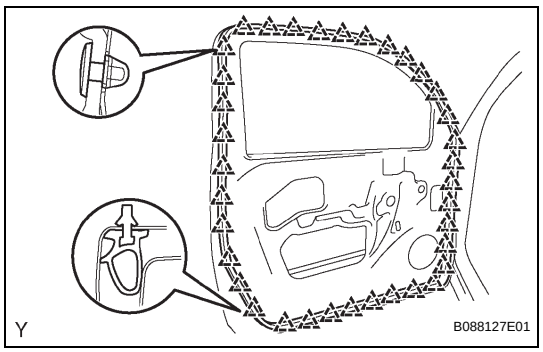

23. REMOVE FRONT DOOR WEATHERSTRIP LH (for Regular Cab)

(a) Disengage the 36 clips and remove the front door weatherstrip LH.

NOTICE:

Remove the remaining tape on the door side.

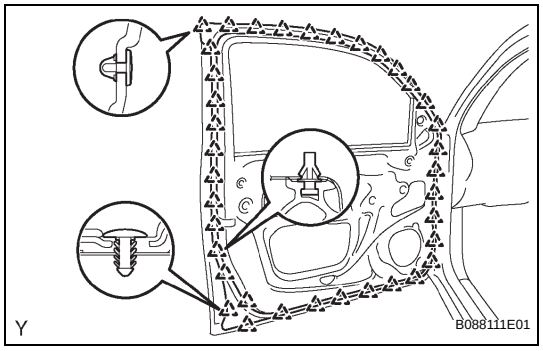

24. REMOVE FRONT DOOR WEATHERSTRIP LH (for Access Cab)

(a) Disengage the 36 clips and remove the front door weatherstrip LH.

NOTICE:

Remove the remaining tape on the door side.

ADJUSTMENT

HINT:

- Before adjusting the positions of doors on vehicles equipped with side airbags and curtain shield airbags, be sure to disconnect the cable from the negative battery terminal. After making adjustments, inspect the SRS warning lamp, the side airbag system and the curtain shield airbag system for normal operation (See page RS-28).
- Use the same procedure for both the RH and LH sides.
- The procedures listed below are for the LH side.
- Centering bolts are used to mount the door hinge onto the vehicle body and door. The doors cannot be adjusted with the centering bolts on. Substitute the standard bolts (with washers) for the centering bolts when making adjustments.
- For bolts without torque specifications, check the standard bolt chart (See page SS-2).

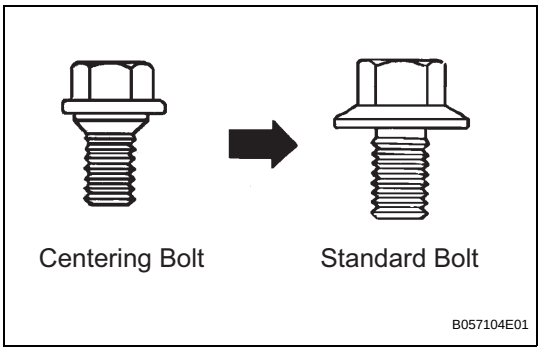

1. INSPECT FRONT DOOR PANEL SUB-ASSEMBLY LH

(a) Check that the clearance measurements of areas A to J are within the standard ranges.

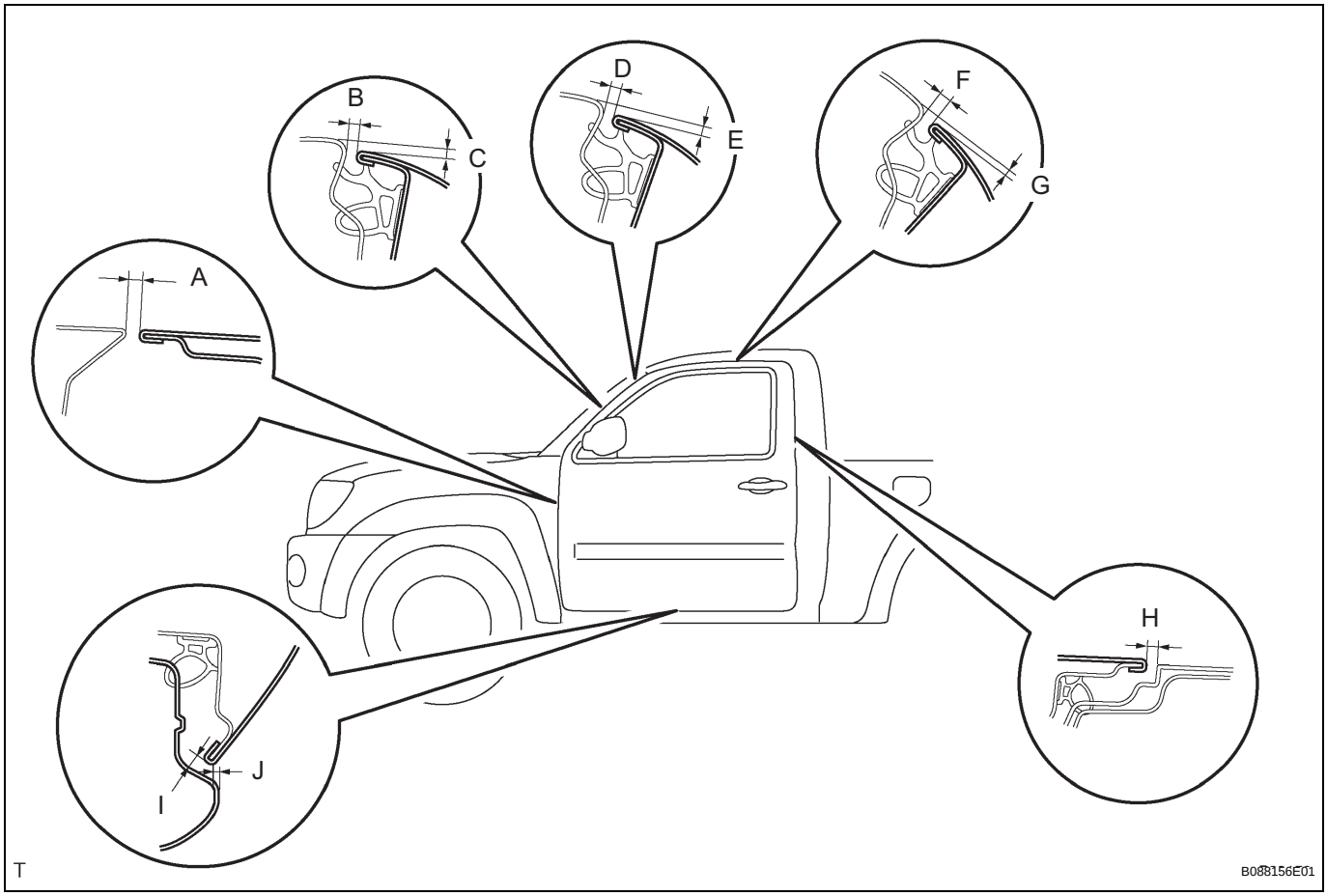

Standard:

Area	Measurement	Area	Measurement
A	4.6 +- 1.5 mm (0.181 +- 0.059 in.)	F	5.0 +- 1.5 mm (0.197 +- 0.059 in.)
B	5.0 +- 1.5 mm (0.197 +- 0.059 in.)	G	1.9 +- 1.5 mm (0.075 +- 0.059 in.)
C	3.0 +- 1.5 mm (0.118 +- 0.059 in.)	H	4.5 +- 1.5 mm (0.177 +- 0.059 in.)

Area	Measurement	Area	Measurement
D	5.0 +- 1.5 mm (0.197 +- 0.059 in.)	I	5.0 +- 1.5 mm (0.197 +- 0.059 in.)
E	2.7 +- 1.5 mm (0.106 +- 0.059 in.)	J	2.0 +- 1.5 mm (0.079 +- 0.059 in.)

2. ADJUST FRONT DOOR PANEL SUB-ASSEMBLY LH

(a) Disconnect the cable from the negative battery terminal.

CAUTION:
Work must be started at least 90 seconds after the ignition switch is turned to OFF and the cable is disconnected from the negative battery terminal. (The SRS is equipped with a back-up power source. If work is started within 90 seconds of disconnecting the cable from the negative battery terminal and the ignition switch being turned to OFF, the SRS may deploy.)

(b) Apply strips of protective tape to the door panel and fender panel, as shown in the illustration.

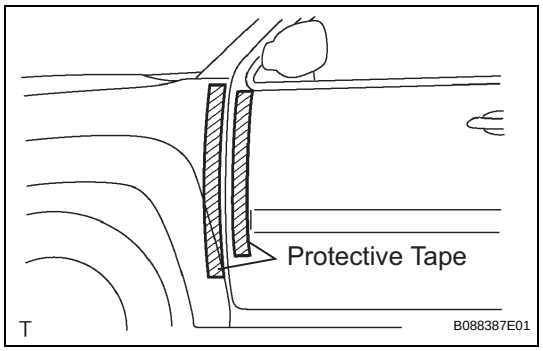

(c) Open the door, and then disengage the 3 clips.
HINT:
If any clips are damaged, replace them with new ones.

(d) Remove the front fender side panel protector LH from the gap between the fender and door.

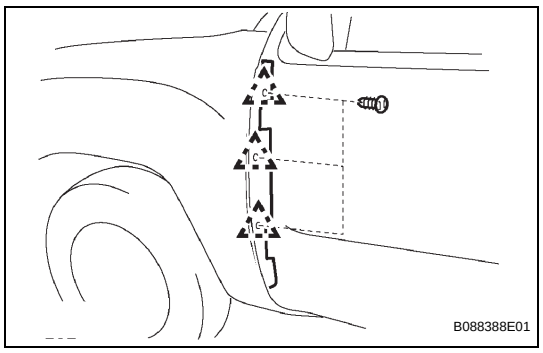

(e) Using SST, adjust the door horizontally and vertically by loosening the body side hinge bolts.
SST 09812-00010

(f) Tighten the body side hinge bolts after the adjustment.
Torque: 26 N*m (265 kgf*cm, 19 ft.*lbf)

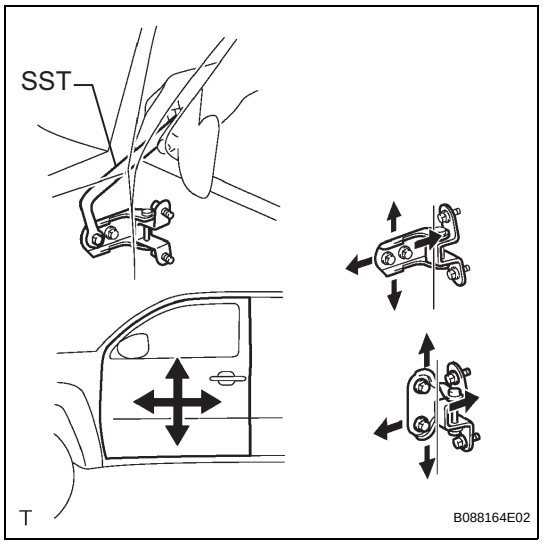

ED

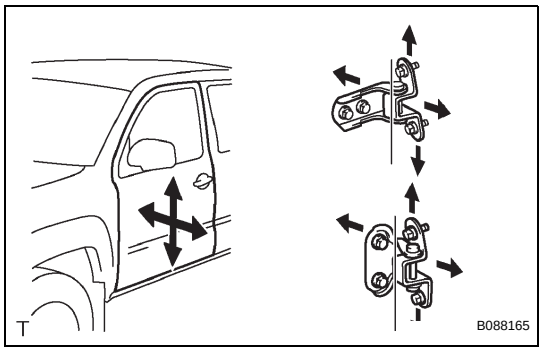

(g) Horizontally and vertically adjust the door by loosening the door side hinge bolts.
(h) Tighten the door side hinge bolts after the adjustment.
Torque: 26 N*m (265 kgf*cm, 19 ft.*lbf)

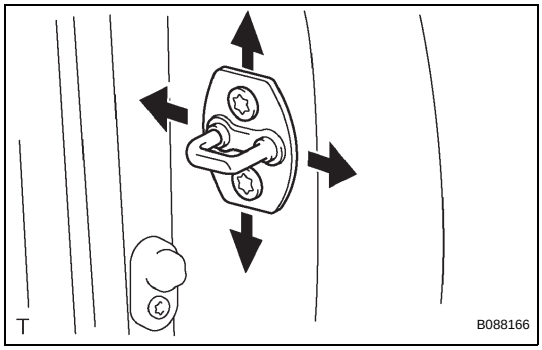

(i) Adjust the striker position by slightly loosening the striker mounting screws with a torx socket wrench T40 and hitting the striker with a plastic hammer.
(j) Using a torx socket wrench T40 , tighten the striker mounting screws after the adjustment.
Torque: 23 N*m (235 kgf*cm, 17 ft.*lbf)

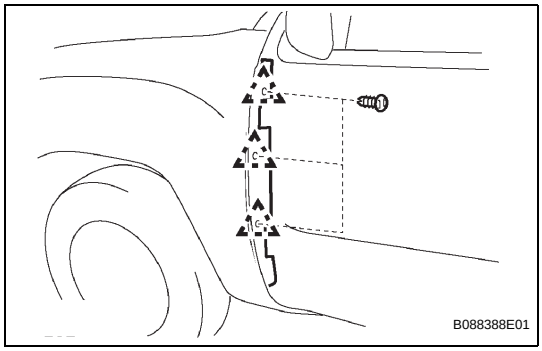

(k) Install the front fender side panel protector LH with the 3 clips.
(l) Connect the cable to the negative battery terminal.
Torque: 3.9 N*m (40 kgf*cm, 35 in.*lbf)
(m) Inspect the SRS warning lamp (See page RS-28).

REASSEMBLY

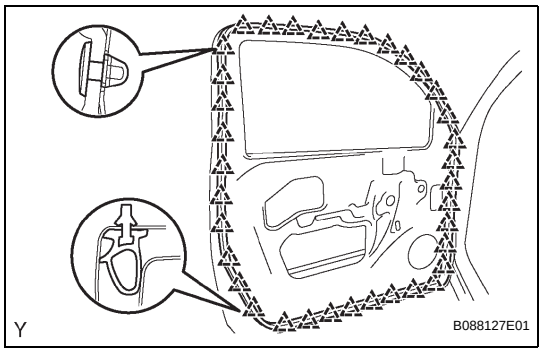

1. INSTALL FRONT DOOR WEATHERSTRIP LH (for Regular Cab)
(a) Engage the 36 clips and install a new front door weatherstrip LH.
(b) Remove the tab tape at both ends of 2-sided tape attached to the weather strip, and attach the weather strip to the door panel with the 2-sided tape.

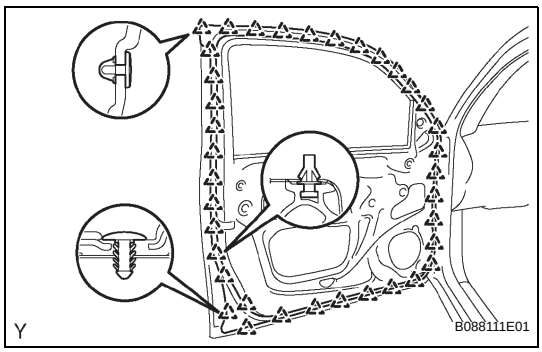

2. INSTALL FRONT DOOR WEATHERSTRIP LH (for Access Cab)
(a) Engage the 36 clips and install a new front door weatherstrip LH.
(b) Remove the tab tape at both ends of 2-sided tape attached to the weather strip, and attach the weather strip to the door panel with the 2-sided tape.

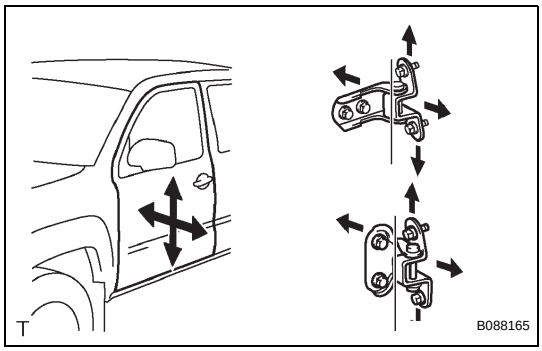

(g) Horizontally and vertically adjust the door by loosening the door side hinge bolts.
(h) Tighten the door side hinge bolts after the adjustment.
Torque: 26 N*m (265 kgf*cm, 19 ft.*lbf)

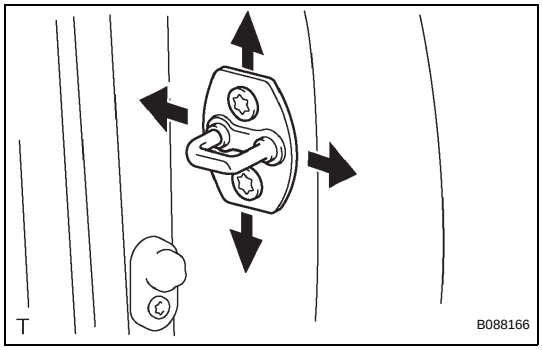

(i) Adjust the striker position by slightly loosening the striker mounting screws with a torx socket wrench T40 and hitting the striker with a plastic hammer.
(j) Using a torx socket wrench T40 , tighten the striker mounting screws after the adjustment.
Torque: 23 N*m (235 kgf*cm, 17 ft.*lbf)

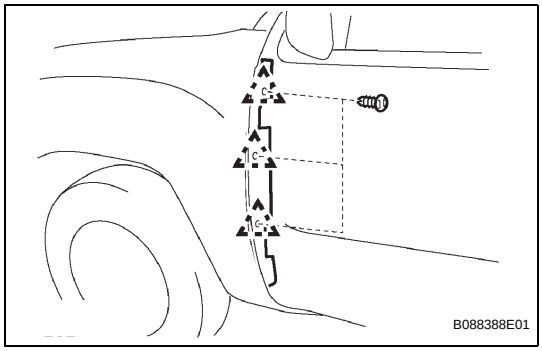

(k) Install the front fender side panel protector LH with the 3 clips.
(l) Connect the cable to the negative battery terminal.
Torque: 3.9 N*m (40 kgf*cm, 35 in.*lbf)
(m) Inspect the SRS warning lamp (See page RS-28).

REASSEMBLY

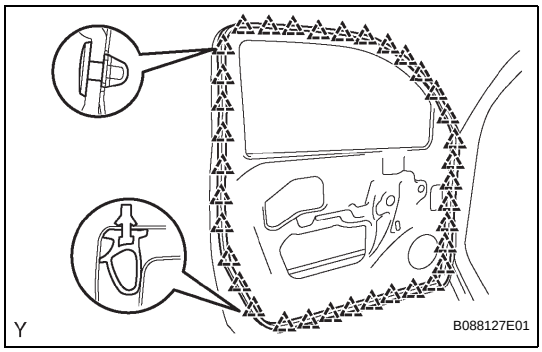

1. INSTALL FRONT DOOR WEATHERSTRIP LH (for Regular Cab)
(a) Engage the 36 clips and install a new front door weatherstrip LH.
(b) Remove the tab tape at both ends of 2-sided tape attached to the weather strip, and attach the weather strip to the door panel with the 2-sided tape.

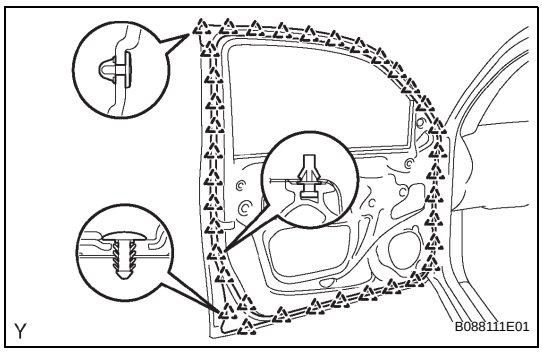

2. INSTALL FRONT DOOR WEATHERSTRIP LH (for Access Cab)
(a) Engage the 36 clips and install a new front door weatherstrip LH.
(b) Remove the tab tape at both ends of 2-sided tape attached to the weather strip, and attach the weather strip to the door panel with the 2-sided tape.

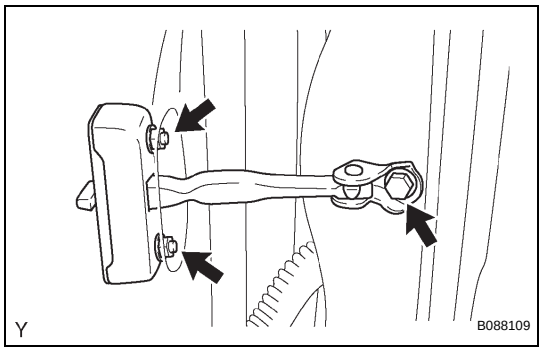

3. INSTALL FRONT DOOR CHECK ASSEMBLY LH

(a) Apply MP grease to the sliding areas of the check.

(b) Install the front door check assembly LH onto the door panel with the 2 nuts.
Torque: 5.5 N*m (56 kgf*cm, 49 in.*lbf)

(c) Apply adhesive to the threads of the bolt.
Adhesive:
Part No. 08833-00070, THREE BOND 1324 or equivalent

(d) Install the front door check assembly LH onto the body panel with the bolt.
Torque: 30 N*m (306 kgf*cm, 22 ft.*lbf)

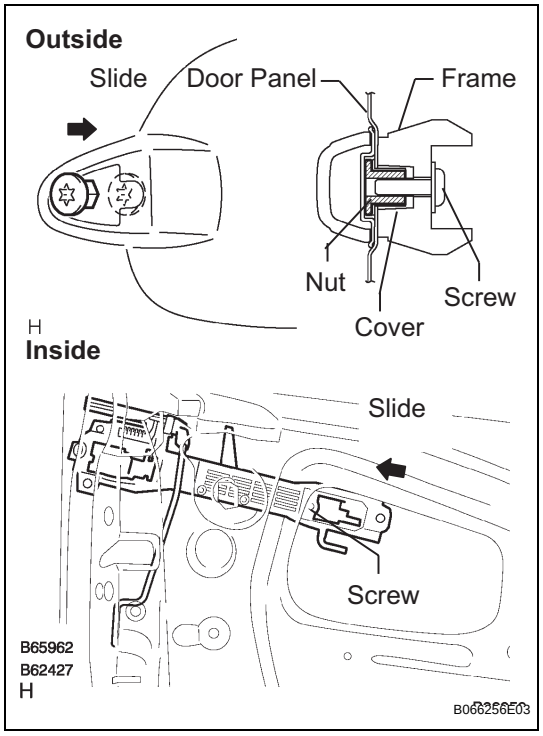

4. INSTALL FRONT DOOR OUTSIDE HANDLE FRAME SUB-ASSEMBLY LH

(a) Using a torx socket wrench T30 , install the outside handle frame sub-assembly with the screw.
Torque: 7.0 N*m (71 kgf*cm, 62 in.*lbf)
NOTICE:
A cover should be inserted between the nut and the door panel.

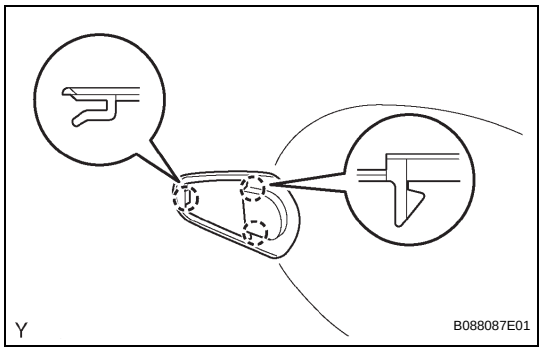

5. INSTALL FRONT DOOR OUTSIDE HANDLE ASSEMBLY LH

(a) Engage the 3 claws and install the front door outside handle front pad.

ED

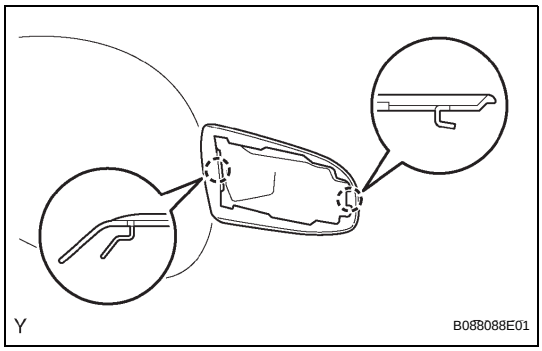

(b) Engage the 2 claws and install the front door outside handle rear pad.

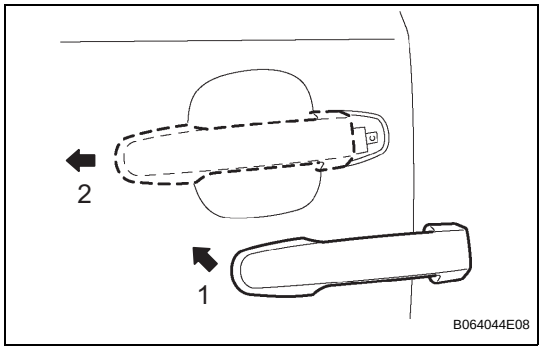

(c) Pushing the front door outside handle assembly LH in the direction of the arrow marks shown in the illustration, install the front door outside handle assembly LH.

6. INSTALL FRONT DOOR LOCK ASSEMBLY LH

(a) Apply MP grease to the sliding and rotating parts of the front door lock assembly LH.
NOTICE:
- **If reusing a door lock assembly that has been removed, replace the packing in the connecting part with new.**
- **Make sure that no grease and dirt adheres to the packing surface in the connecting part.**

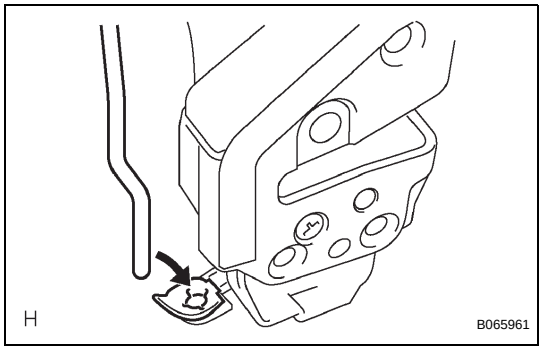

(b) Insert the door lock open rod into the front door lock assembly, then set it to the door panel.
NOTICE:
Make sure that the outside handle link is securely engaged with the door lock assembly.

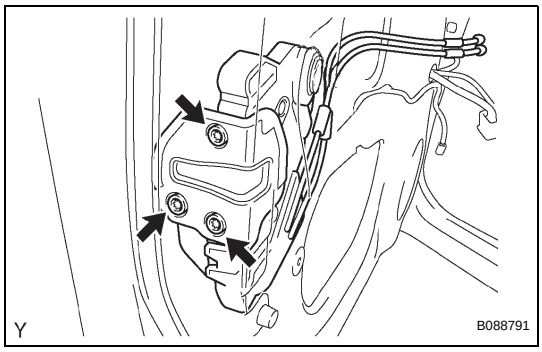

(c) Apply adhesive to the threads of the screws.
Adhesive:
Part No. 08833-00070, THREE BOND 1324 or equivalent

(d) Using a torx socket wrench T30 , install the front door lock assembly LH with the 3 screws.
Torque: 12 N*m (122 kgf*cm, 9 ft.*lbf)

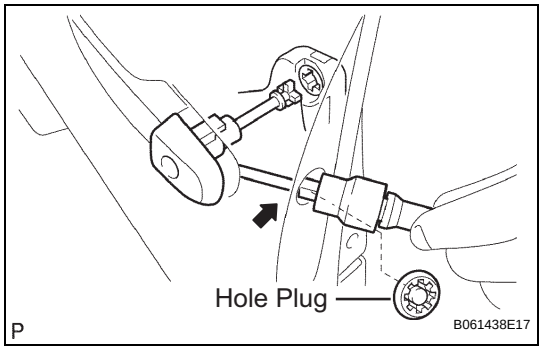

7. INSTALL FRONT DOOR OUTSIDE HANDLE COVER LH

(a) Using a torx socket wrench T30 , install the front door outside handle cover LH with the screw.
Torque: 7.0 N*m (71 kgf*cm, 62 in.*lbf)

(b) Install the hole plug.

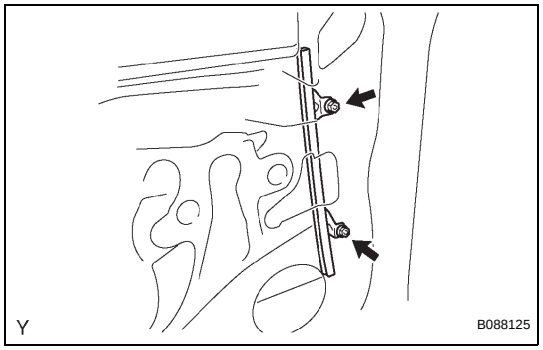

8. INSTALL FRONT DOOR FRONT LOWER FRAME SUB-ASSEMBLY LH

(a) Install the front door front lower frame sub-assembly LH with the 2 nuts.
Torque: 5.5 N*m (56 kgf*cm, 49 in.*lbf)

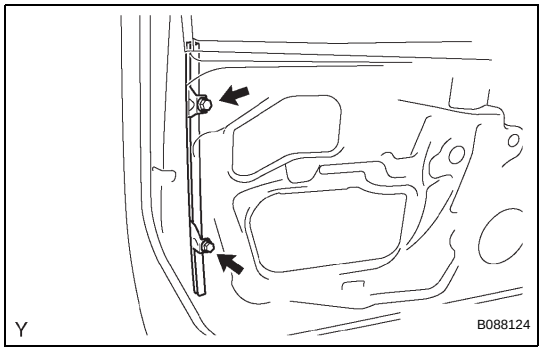

9. INSTALL FRONT DOOR REAR LOWER FRAME SUB-ASSEMBLY LH

(a) Install the front door rear lower frame sub-assembly LH with the 2 bolts.
Torque: 8.0 N*m (82 kgf*cm, 70 in.*lbf)

10. INSTALL FRONT DOOR WINDOW REGULATOR SUB-ASSEMBLY LH

(a) Apply MP grease to the sliding and rotating areas of the front door window regulator sub-assembly LH.
NOTICE:
Do not apply grease to the window regulator spring.

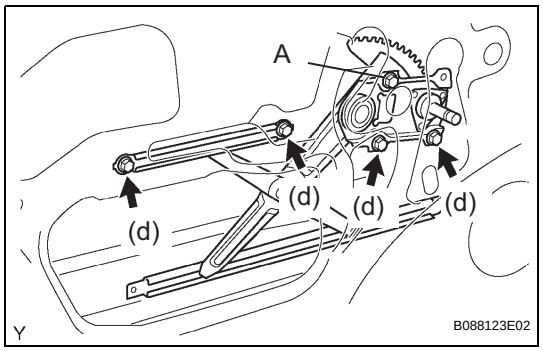

(b) Loosely screw bolt A onto the front door window regulator sub-assembly LH.

(c) Insert the front door window regulator into the door panel. Use bolt A to hang the front door window regulator on the door panel.
NOTICE:
Be careful not to drop the window regulator as it may be damaged.

(d) Install the front door window regulator with the 4 bolts, and tighten bolt A.
Torque: 11 N*m (112 kgf*cm, 8 ft.*lbf)

ED

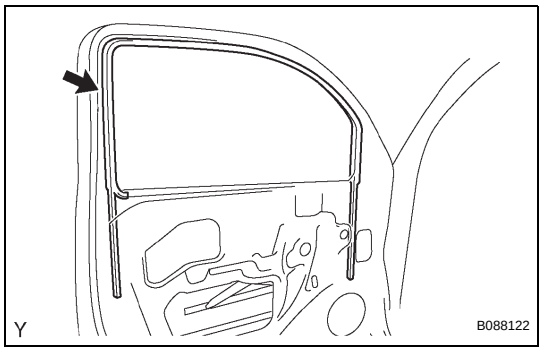

11. INSTALL FRONT DOOR GLASS RUN LH

(a) Install the front door glass run LH.

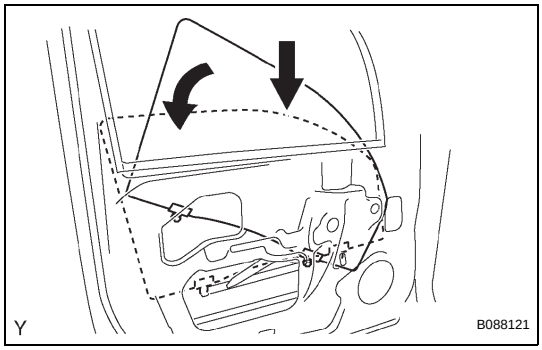

12. INSTALL FRONT DOOR GLASS SUB-ASSEMBLY LH

(a) Insert the front door glass sub-assembly LH into the door panel along the glass run as indicated by the arrow marks in the illustration.

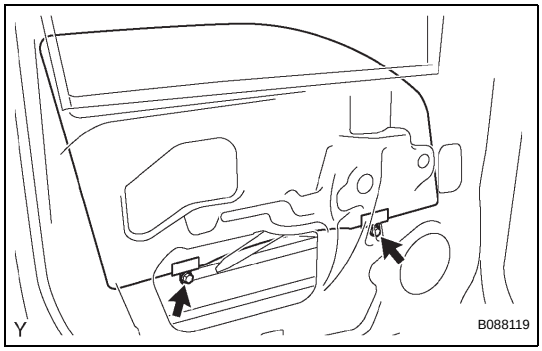

(b) Install the front door glass sub-assembly LH onto the front door window regulator sub-assembly LH with the 2 bolts.
Torque: 8.0 N*m (82 kgf*cm, 71 in.*lbf)

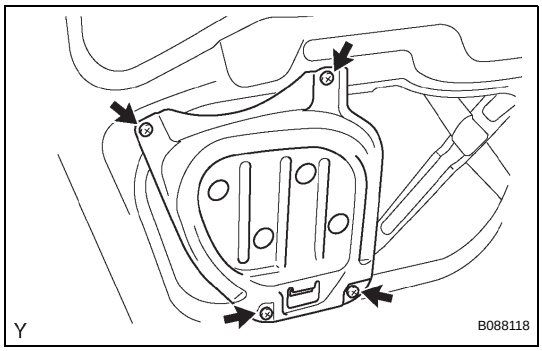

13. INSTALL FRONT DOOR INSIDE PANEL PLATE LH

(a) Install the front door inside panel plate LH.

14. INSTALL FRONT DOOR BELT MOULDING LH (See page ET-33)

15. INSTALL OUTER REAR VIEW MIRROR ASSEMBLY LH (See page MI-10)

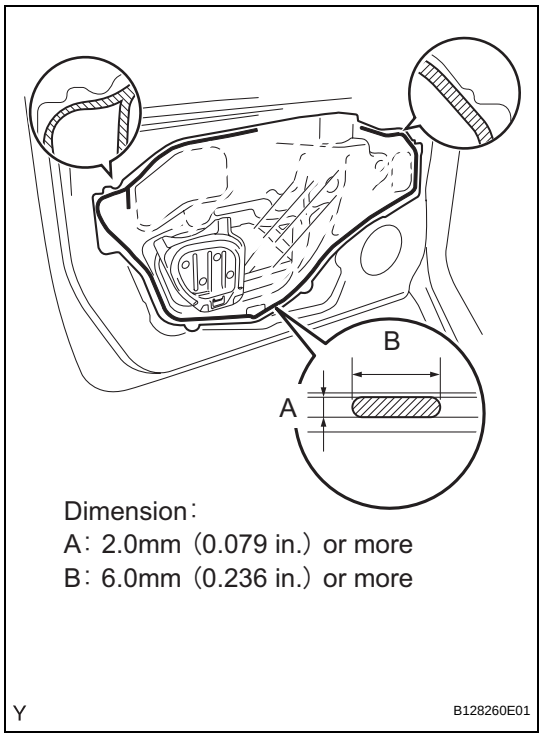

16. INSTALL FRONT DOOR SERVICE HOLE COVER LH

(a) Apply butyl tape to the door panel, and install the front door service hole cover LH as shown in the illustration.

Adhesive:
Part No. 08850-00065, Butyl Tape Set or equivalent

HINT:

- When installing the service hole cover, pull the links and connectors out through the service hole cover.
- There should be no wrinkles or folds after attaching the service hole cover.
- After attaching the service hole cover, check the quality of the seal.

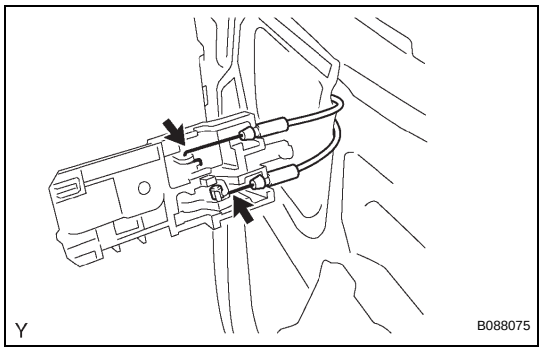

17. INSTALL FRONT DOOR INSIDE HANDLE SUB-ASSEMBLY LH

(a) Connect the 2 cables to the front door inside handle sub-assembly LH.

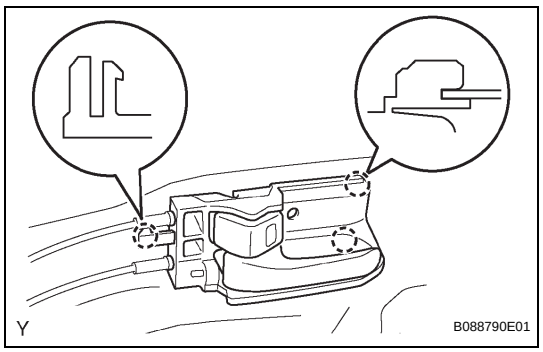

(b) Engage the 3 claws and install the front door inside handle sub-assembly LH onto the door panel.

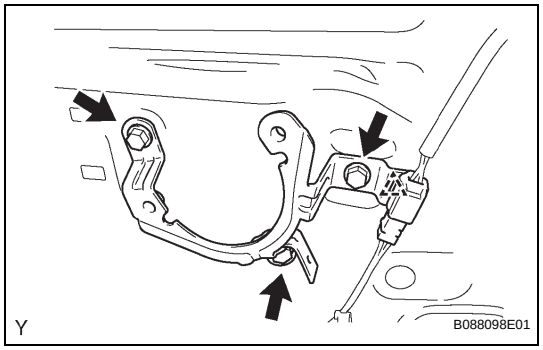

18. INSTALL FRONT NO. 1 SPEAKER BRACKET

(a) Install the front No. 1 speaker bracket with the 3 screws.

(b) Connect the wire harness clamp and connector.

19. INSTALL FRONT NO. 2 SPEAKER ASSEMBLY (See page AV-83)

20. INSTALL FRONT NO. 1 SPEAKER ASSEMBLY

HINT:

- Regular cab (See page AV-76)
- Except regular cab (See page AV-79)

ED

21. CONNECT CABLE TO NEGATIVE BATTERY TERMINAL
Torque: 3.9 N*m (40 kgf*cm, 35 in.*lbf)

22. INSTALL FRONT DOOR TRIM PANEL ASSEMBLY LH

(a) Engage the 10 clips and install the front door trim panel assembly LH.

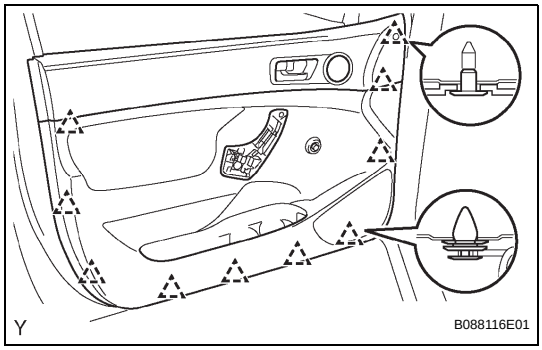

(b) Install the 3 screws.

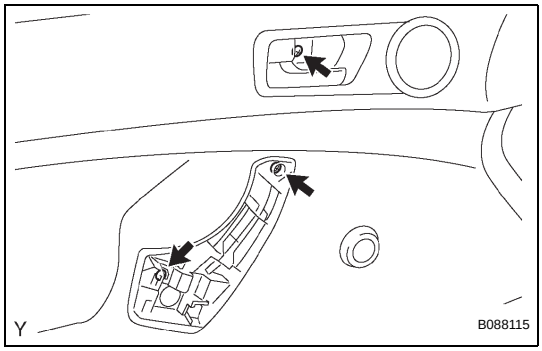

(c) Engage the 8 claws and install the door assist grip cover LH.

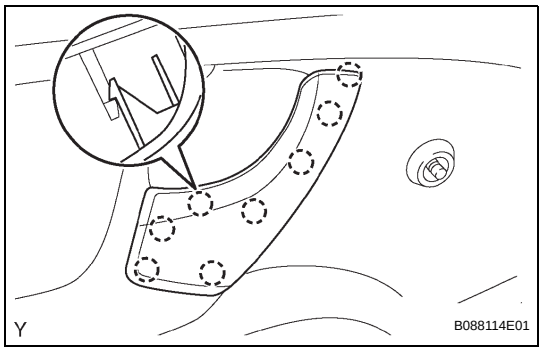

(d) Close the cover.

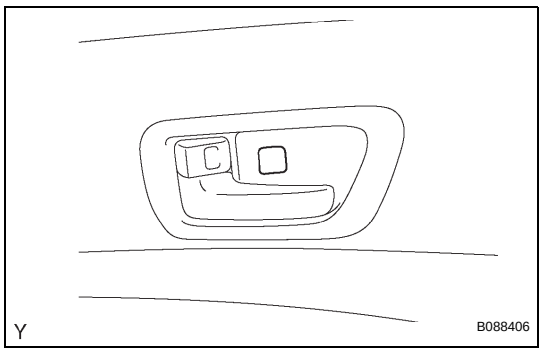

ED

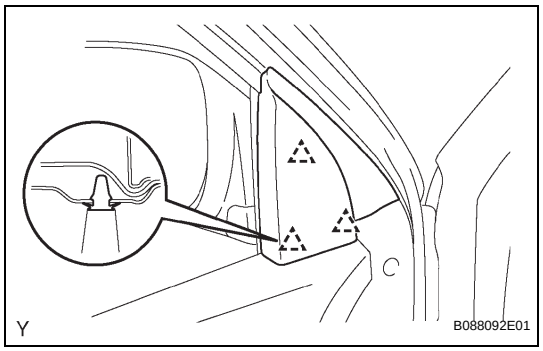

23. INSTALL FRONT DOOR LOWER FRAME BRACKET GARNISH LH

(a) Engage the 3 clips and install the front door lower frame bracket garnish LH.

NOTICE:

Confirm that no clips remain on the door panel before the garnish is installed. Transfer any remaining clips to the garnish side before installing it. Installing the garnish with any clips remaining on the door panel side could cause the clips to drop inside the door panel.

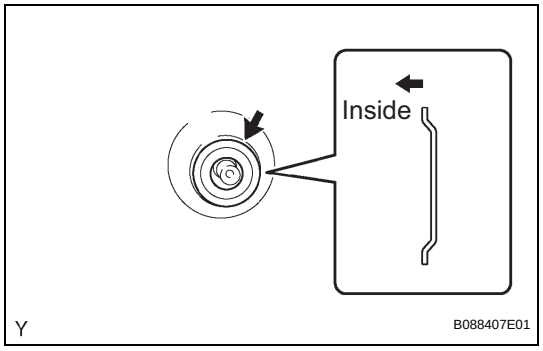

24. INSTALL FRONT DOOR WINDOW REGULATOR HANDLE ASSEMBLY

(a) Install the window regulator handle plate.

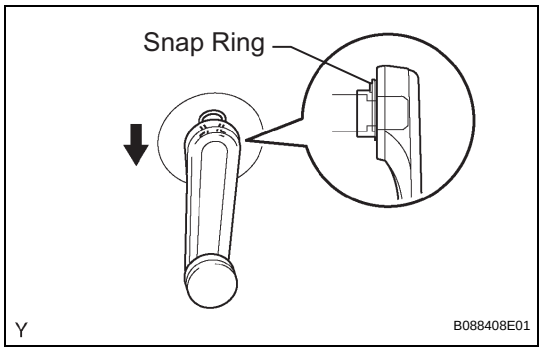

(b) Install the front door window regulator handle assembly with the snap ring.

ED

DISASSEMBLY

1. DISCONNECT CABLE FROM NEGATIVE BATTERY TERMINAL

2. REMOVE ACCESS PANEL REAR WEATHERSTRIP LH

(a) Remove the access panel rear weatherstrip LH.

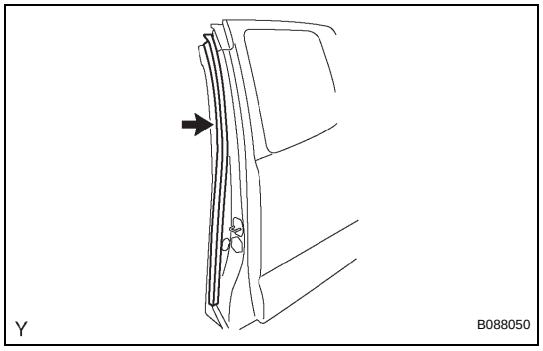

3. REMOVE LAP BELT OUTER ANCHOR COVER

(a) Disengage the 3 claws and remove the lap belt outer anchor cover.

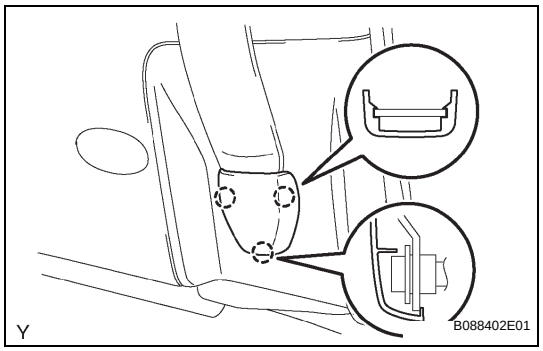

4. REMOVE REAR DOOR TRIM BOARD SUB-ASSEMBLY LH

(a) Remove the bolt and separate the outer front seat belt assembly LH (floor side).

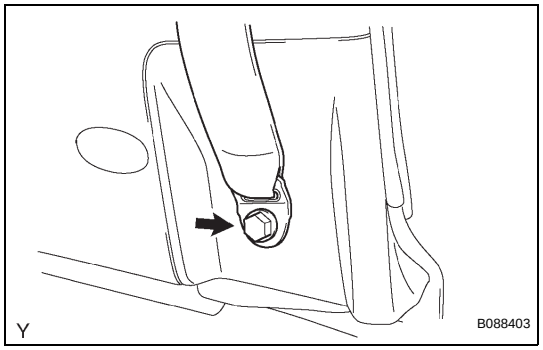

(b) Using a screwdriver with its tip wrapped in protective tape, open the cover.

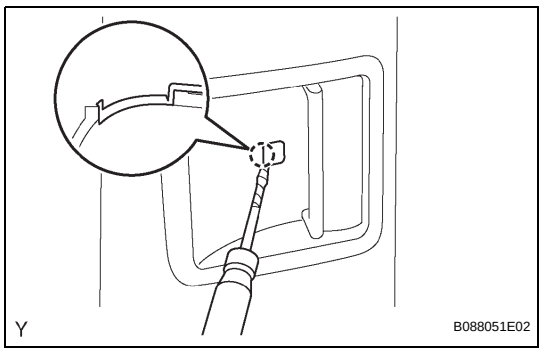

ED

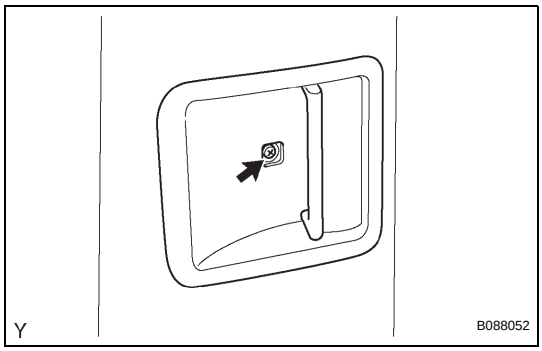

(c) Remove the screw, then remove the access panel inside handle bezel LH.

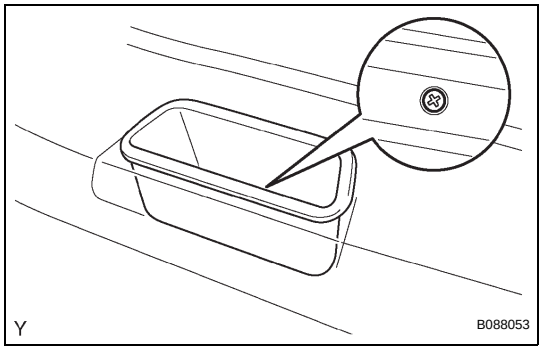

(d) Remove the screw, then remove the door pull handle.

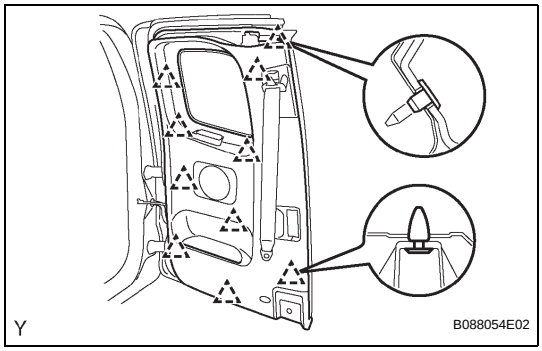

(e) Remove the 10 clips.
(f) Remove the rear door trim board sub-assembly by sliding it upward.

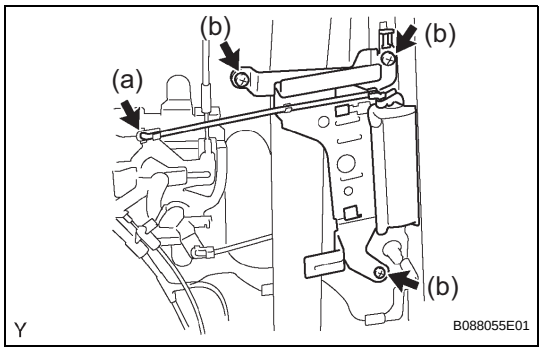

5. REMOVE ACCESS PANEL INSIDE HANDLE SUB-ASSEMBLY LH

(a) Disconnect the rod.
(b) Remove the 3 screws, then remove the access panel handle sub-assembly.

6. REMOVE FRONT SEAT OUTER BELT ASSEMBLY LH (See page SB-37)

7. REMOVE FRONT SHOULDER BELT ANCHOR ADJUSTER ASSEMBLY (See page SB-37)

8. REMOVE REAR SPEAKER ASSEMBLY (See page AV-88)

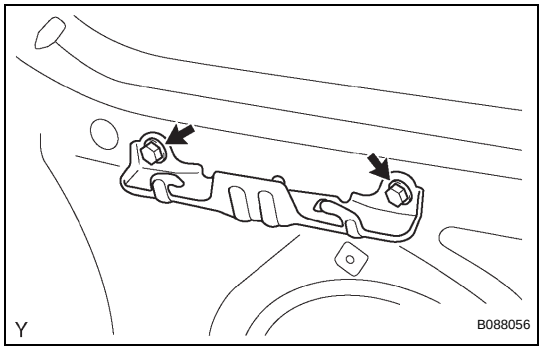

9. REMOVE NO. 1 DOOR TRIM BRACKET RH

(a) Remove the 2 screws and remove the No. 1 door trim bracket.

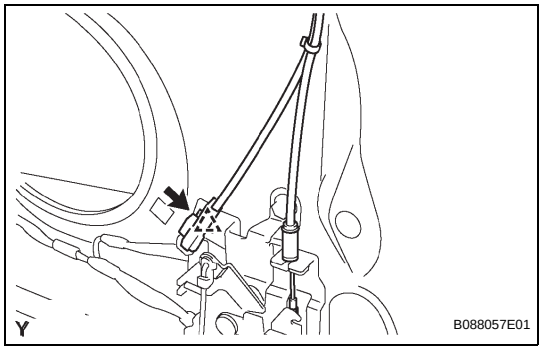

10. REMOVE ACCESS PANEL UPPER LOCK ASSEMBLY LH

(a) Disconnect the connector, connector clamp and the access lock control cable sub-assembly.

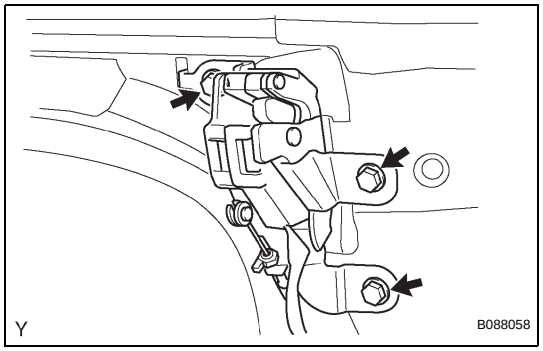

(b) Remove the 3 bolts, then remove the access panel upper lock assembly LH.

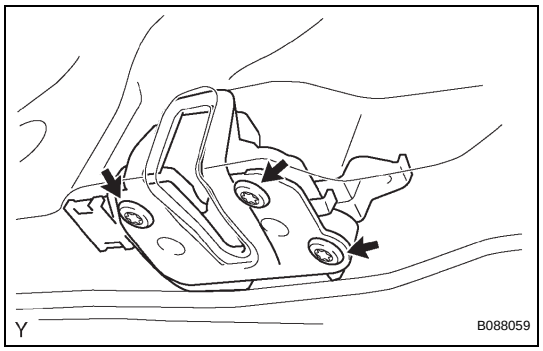

11. REMOVE ACCESS PANEL LOWER LOCK ASSEMBLY LH

(a) Using a torx socket wrench T30 , remove the 3 screws.

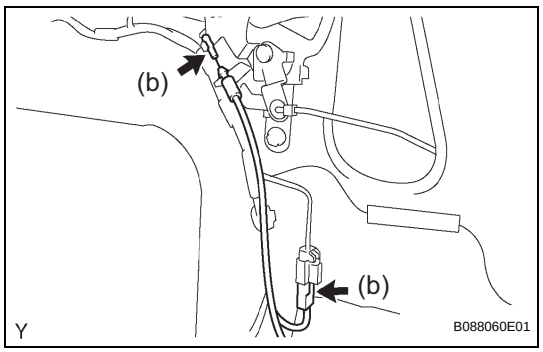

(b) Disconnect the connector and access lock control cable sub-assembly.

(c) Remove the access panel lower lock assembly LH by sliding it upward.

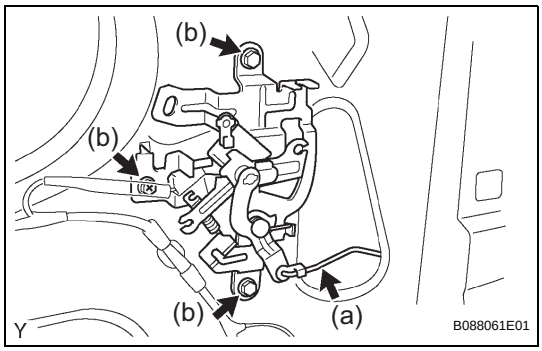

12. REMOVE ACCESS PANEL LOCK REMOTE CONTROL ASSEMBLY LH

(a) Disconnect the rod.
(b) Remove the 2 bolts and the screw, then remove the access panel lock remote control assembly LH.

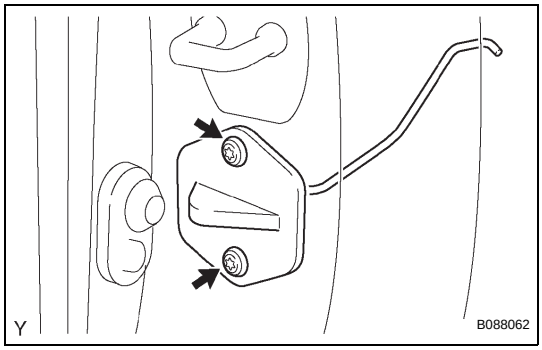

13. REMOVE REAR DOOR INSIDE LOCKING CABLE ASSEMBLY LH

(a) Using a torx socket wrench T25 , remove the 2 screws, then remove the access panel lock cancel lever assembly LH.

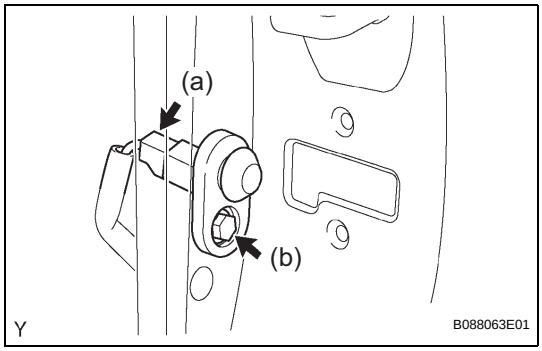

14. REMOVE FRONT DOOR COURTESY LAMP SWITCH ASSEMBLY

(a) Disconnect the connector.
(b) Remove the bolt, then remove the front door courtesy lamp switch.

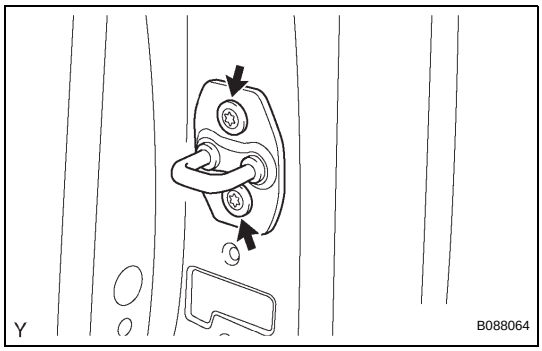

15. REMOVE FRONT DOOR LOCK STRIKER PLATE ASSEMBLY

(a) Using a torx socket wrench T40 , remove the 2 screws and door lock striker plate assembly.

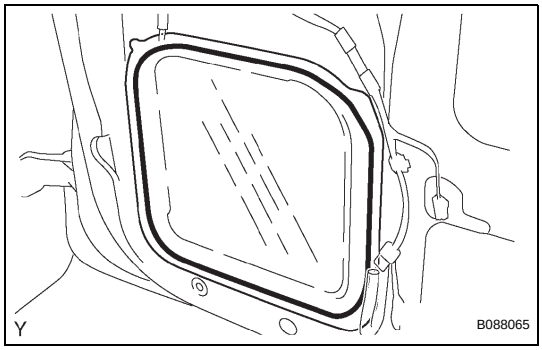

16. REMOVE REAR DOOR SERVICE HOLE COVER LH

(a) Remove the rear door service hole cover LH.

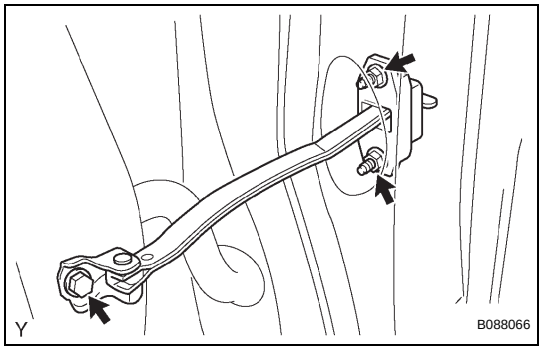

17. REMOVE REAR DOOR CHECK ASSEMBLY LH

(a) Remove the bolt and 2 nuts, then remove the access panel check assembly LH.

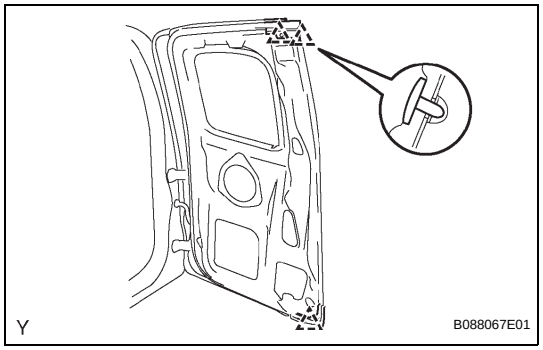

18. REMOVE REAR DOOR WEATHERSTRIP LH

(a) Disengage the 3 clips.

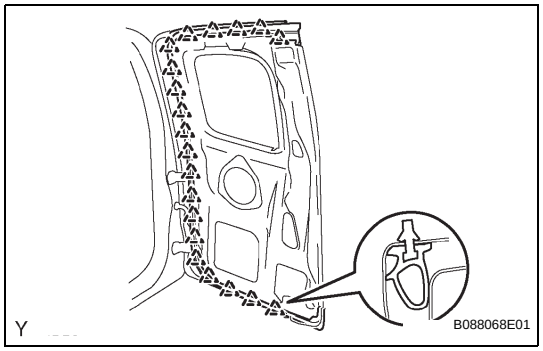

(b) Using a clip remover, disengage the 20 clips, then remove the rear door weatherstrip LH.

NOTICE:

Remove the remaining tape on the door side.

ED

ADJUSTMENT

HINT:

- Before adjusting the positions of doors on vehicles equipped with side airbags and curtain shield airbags, be sure to disconnect the cable from the negative battery terminal. After making adjustments, inspect the SRS warning lamp, the side airbag system and the curtain shield airbag system for normal operation (See page RS-28).
- Use the same procedure for both the RH and LH sides.
- The procedures listed below are for the LH side.
- Centering bolts are used to mount the door hinge onto the vehicle body and door. The doors cannot be adjusted with the centering bolts on. Substitute the standard bolts (with washers) for the centering bolts when making adjustments.
- For bolts without torque specifications, check the standard bolt chart (See page SS-2).

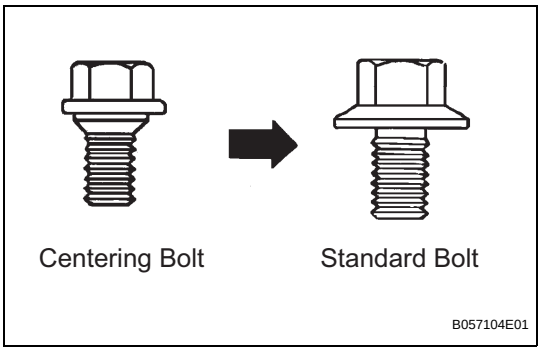

1. INSPECT ACCESS PANEL SUB-ASSEMBLY LH

(a) Check that the clearance measurements of areas A to F are within the standard ranges.

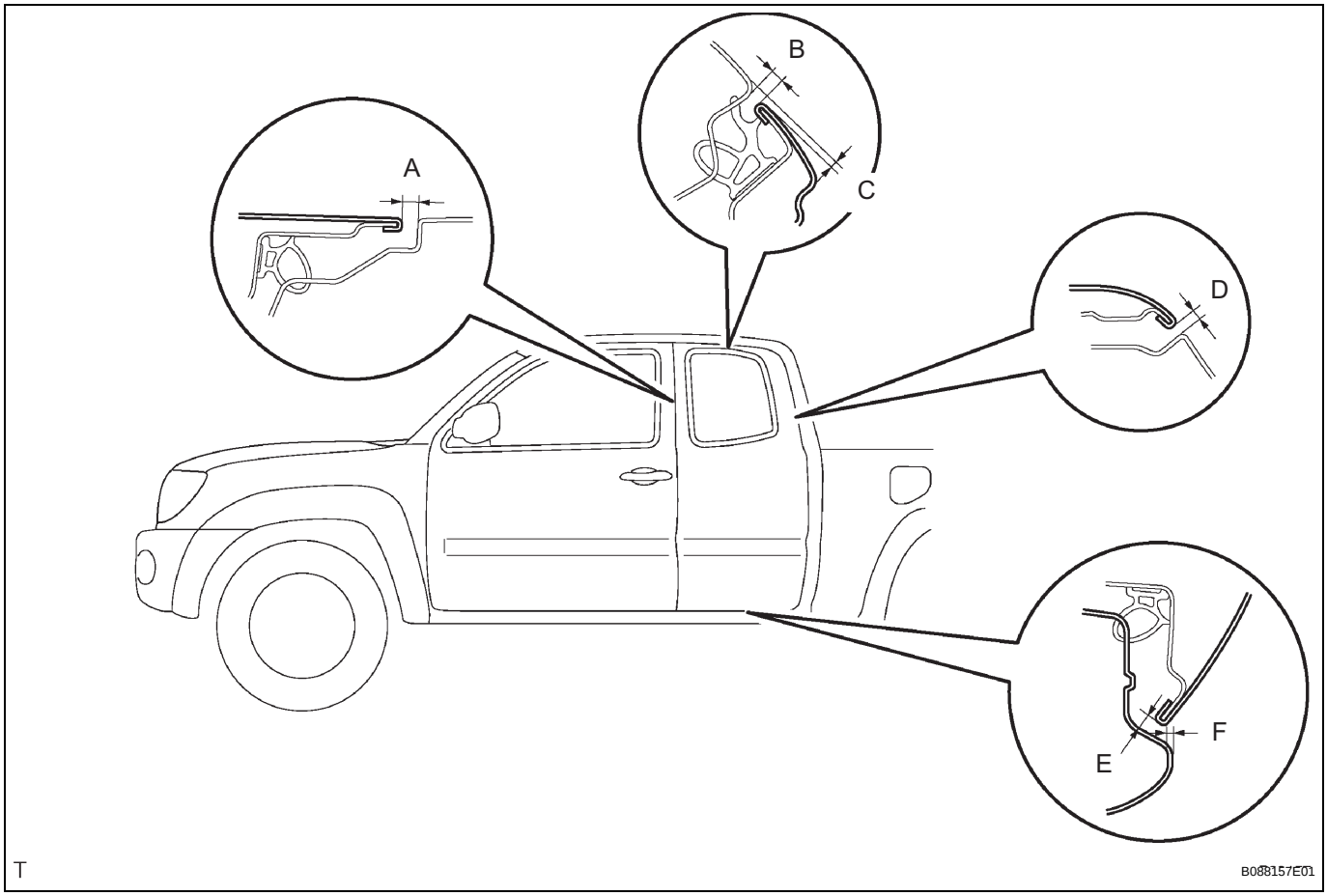

Standard:

Area	Measurement	Area	Measurement
A	6.0 +- 1.5 mm (0.236 +- 0.059 in.)	D	6.1 +- 1.5 mm (0.240 +- 0.059 in.)
B	5.0 +- 1.5 mm (0.197 +- 0.059 in.)	E	5.0 +- 1.5 mm (0.197 +- 0.059 in.)
C	1.8 +- 1.5 mm (0.071 +- 0.059 in.)	F	2.0 +- 1.5 mm (0.079 +- 0.059 in.)

2. ADJUST ACCESS PANEL SUB-ASSEMBLY LH

(a) Disconnect the cable from the negative battery terminal.

CAUTION:
Work must be started at least 90 seconds after the ignition switch is turned to OFF and the cable is disconnected from the negative battery terminal. (The SRS is equipped with a back-up power source. If work is started within 90 seconds of disconnecting the cable from the negative battery terminal and the ignition switch being turned to OFF, the SRS may deploy.)

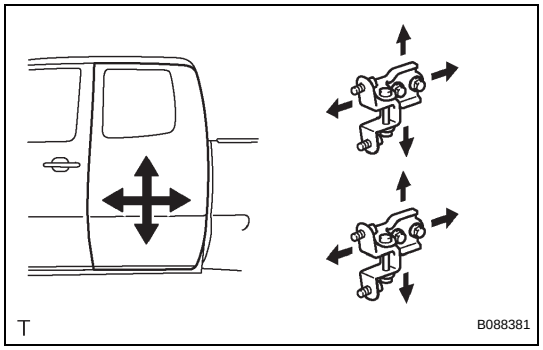

(b) Loosen the body side hinge bolts and adjust the door position.

(c) Tighten the body side hinge bolts after the adjustment.

Torque: 26 N*m (265 kgf*cm, 19 ft.*lbf)

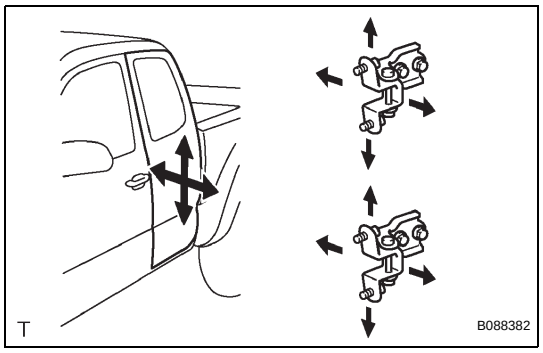

(d) Loosen the door side hinge bolts and adjust the door position.

(e) Tighten the door side hinge bolts after the adjustment.

Torque: 26 N*m (265 kgf*cm, 19 ft.*lbf)

(f) Remove roof side inner garnish cap LH (See page IR-62).

(g) Remove roof side inner garnish LH (See page IR-65).

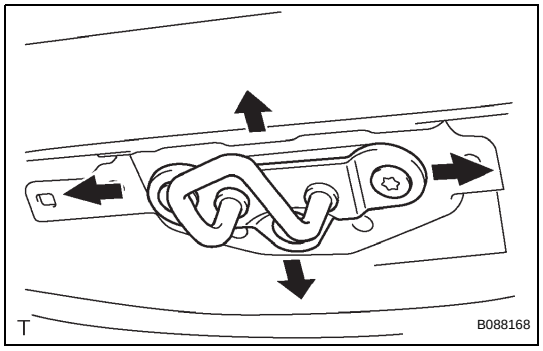

(h) Adjust the striker position by slightly loosening the striker mounting screws with a torx socket wrench T40 and hitting the striker with a plastic hammer (upper side).

(i) Using a torx socket wrench T40 , tighten the striker mounting screws after the adjustment.

Torque: 23 N*m (235 kgf*cm, 17 ft.*lbf)

ED

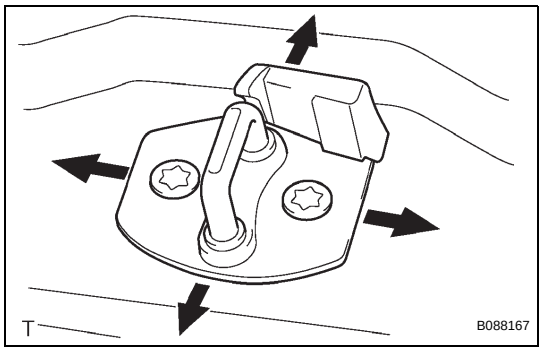

(j) Adjust the striker position by slightly loosening the striker mounting screws with a torx socket wrench T40 and hitting the striker with a plastic hammer (lower side).
(k) Using a torx socket wrench T40, tighten the striker mounting screws after the adjustment.
Torque: 23 N*m (235 kgf*cm, 17 ft.*lbf)
(l) Connect the cable to the negative battery terminal.
Torque: 3.9 N*m (40 kgf*cm, 35 in.*lbf)
(m) Inspect the SRS warning lamp (See page RS-28).
(n) Install the roof side inner garnish LH (See page IR-71).
(o) Install the roof side inner garnish cap LH (See page IR-75).

REASSEMBLY

1. INSTALL REAR DOOR WEATHERSTRIP LH

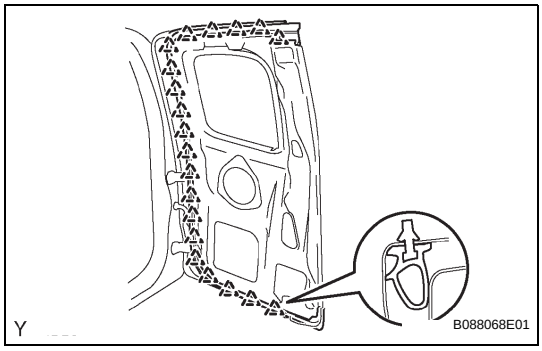

(a) Engage the 20 clips and install a new rear door weatherstrip LH.

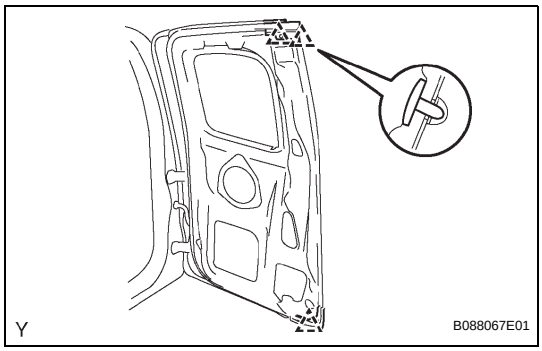

(b) Engage the 3 clips.
(c) Remove the tab tape at both ends of 2-sided tape attached to the weather strip, and attach the weather strip to the door panel with the 2-sided tape.

2. INSTALL REAR DOOR CHECK ASSEMBLY LH

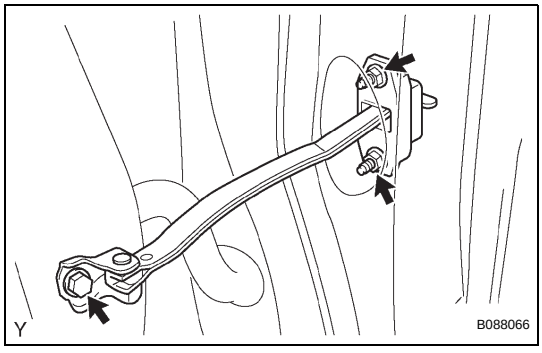

(a) Apply MP grease to the sliding areas of the check.
(b) Install the access panel check assembly LH onto the door panel with the 2 nuts.
Torque: 5.5 N*m (56 kgf*cm, 49 in.*lbf)
(c) Apply adhesive to the threads of the bolt.
Adhesive:
Part No. 08833-00070, THREE BOND 1324 or equivalent
(d) Install the access panel check assembly LH onto the body panel with the bolt.
Torque: 30 N*m (306 kgf*cm, 22 ft.*lbf)

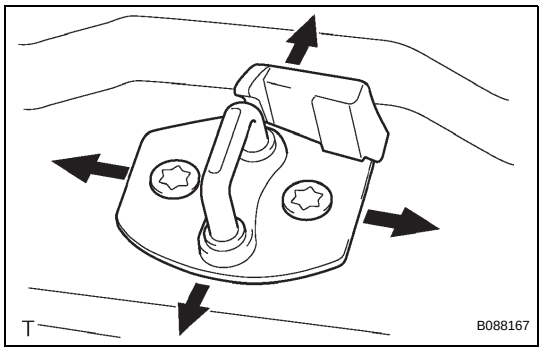

(j) Adjust the striker position by slightly loosening the striker mounting screws with a torx socket wrench T40 and hitting the striker with a plastic hammer (lower side).
(k) Using a torx socket wrench T40, tighten the striker mounting screws after the adjustment.
Torque: 23 N*m (235 kgf*cm, 17 ft.*lbf)
(l) Connect the cable to the negative battery terminal.
Torque: 3.9 N*m (40 kgf*cm, 35 in.*lbf)
(m) Inspect the SRS warning lamp (See page RS-28).
(n) Install the roof side inner garnish LH (See page IR-71).
(o) Install the roof side inner garnish cap LH (See page IR-75).

REASSEMBLY

1. INSTALL REAR DOOR WEATHERSTRIP LH

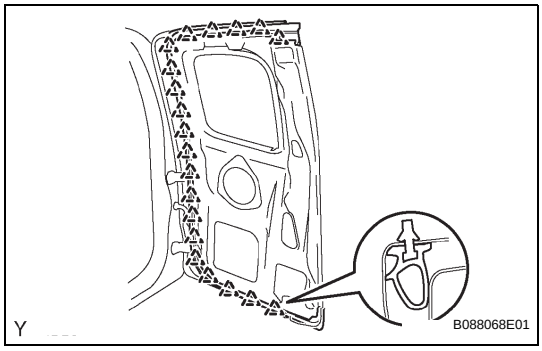

(a) Engage the 20 clips and install a new rear door weatherstrip LH.

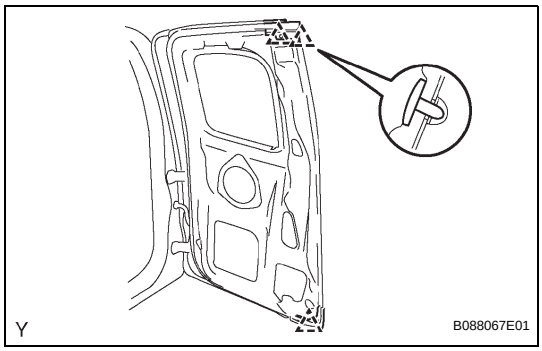

(b) Engage the 3 clips.
(c) Remove the tab tape at both ends of 2-sided tape attached to the weather strip, and attach the weather strip to the door panel with the 2-sided tape.

2. INSTALL REAR DOOR CHECK ASSEMBLY LH

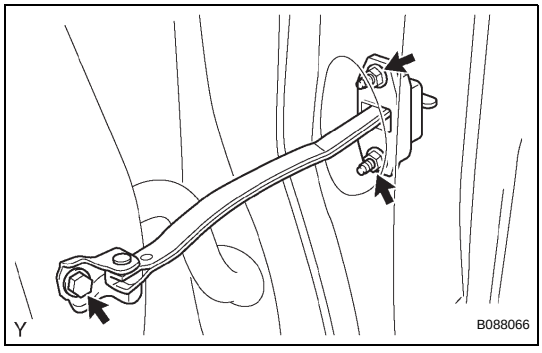

(a) Apply MP grease to the sliding areas of the check.
(b) Install the access panel check assembly LH onto the door panel with the 2 nuts.
Torque: 5.5 N*m (56 kgf*cm, 49 in.*lbf)
(c) Apply adhesive to the threads of the bolt.
Adhesive:
Part No. 08833-00070, THREE BOND 1324 or equivalent
(d) Install the access panel check assembly LH onto the body panel with the bolt.
Torque: 30 N*m (306 kgf*cm, 22 ft.*lbf)

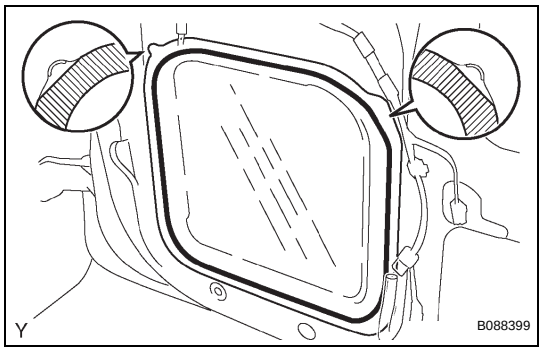

3. INSTALL REAR DOOR SERVICE HOLE COVER LH

(a) Install a new rear door service hole cover LH.
HINT:
After attaching the service hole cover, check the quality of the seal.

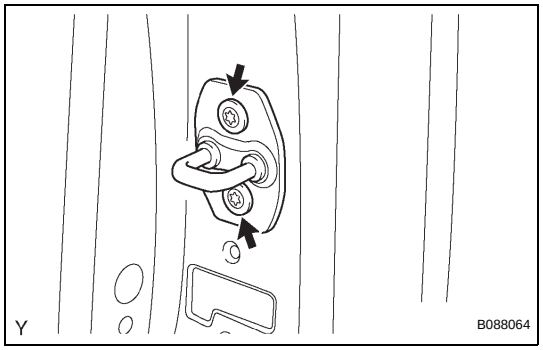

4. INSTALL FRONT DOOR LOCK STRIKER PLATE ASSEMBLY

(a) Using a torx socket wrench T40 , install the door lock striker plate assembly with the 2 screws.
Torque: 23 N*m (235 kgf*cm, 17 ft.*lbf)

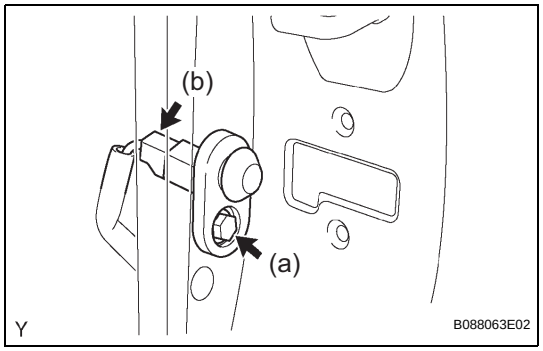

5. INSTALL FRONT DOOR COURTESY LAMP SWITCH ASSEMBLY

(a) Install the front door courtesy lamp switch with the bolt.
Torque: 9.0 N*m (92 kgf*cm, 80 in.*lbf)
(b) Connect the connector.

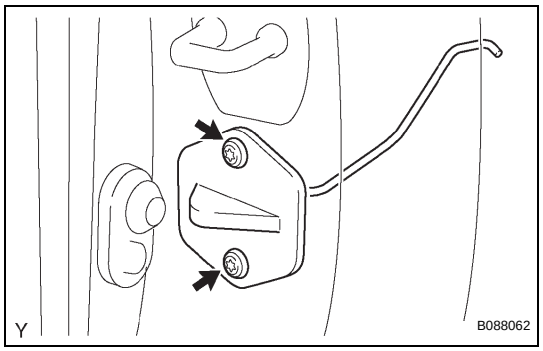

6. INSTALL REAR DOOR INSIDE LOCKING CABLE ASSEMBLY LH

(a) Using a torx socket wrench T25 , install the access panel lock cancel lever assembly LH with the 2 screws.
Torque: 5.0 N*m (51 kgf*cm, 44 in.*lbf)

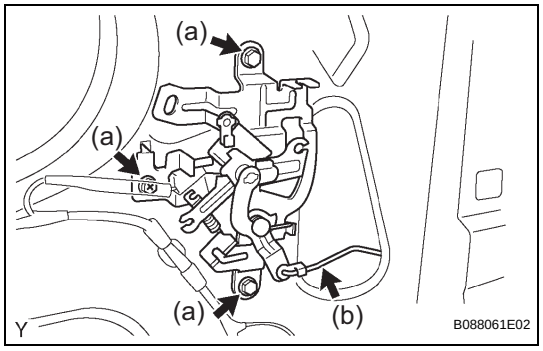

7. INSTALL ACCESS PANEL LOCK REMOTE CONTROL ASSEMBLY LH

(a) Install the access panel lock remote control assembly LH with the 2 bolts and the screw.
Torque: 12 N*m (122 kgf*cm, 9 ft.*lbf)
(b) Connect the rod.

ED

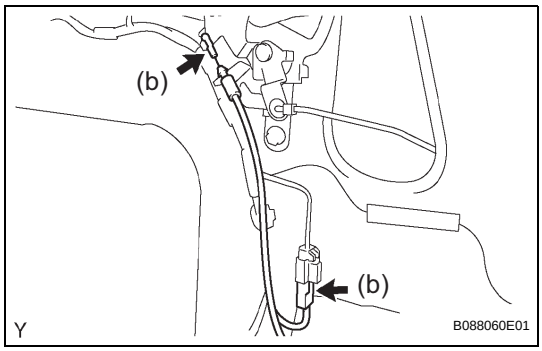

8. INSTALL ACCESS PANEL LOWER LOCK ASSEMBLY LH

(a) Install the access panel lower lock assembly LH onto the access door.

(b) Connect the connector and access lock control cable sub-assembly.

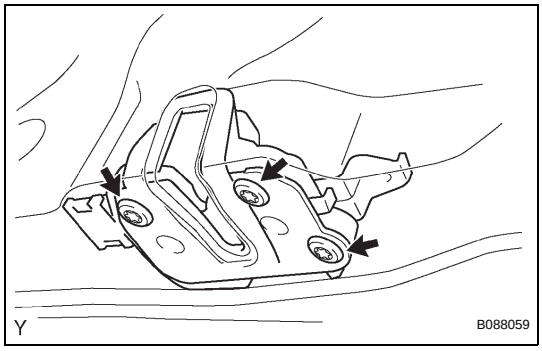

(c) Using a torx socket wrench T30 , install the 3 screws.
Torque: 12 N*m (122 kgf*cm, 9 ft.*lbf)

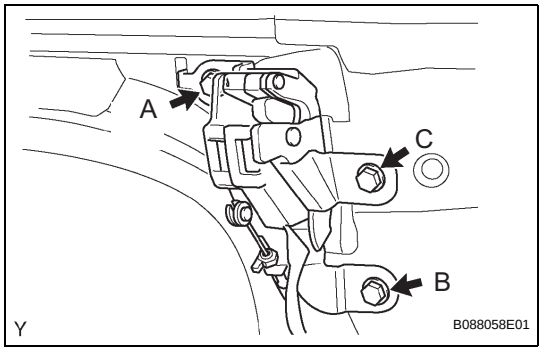

9. INSTALL ACCESS PANEL UPPER LOCK ASSEMBLY LH

(a) Provisionally install the access panel upper lock assembly LH with the 3 bolts.

(b) Tighten the 3 bolts in the order A to C as indicated.
Torque: 12 N*m (122 kgf*cm, 9 ft.*lbf)

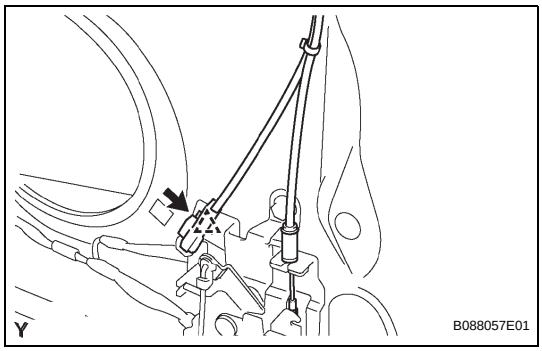

(c) Connect the connector, connector clamp and access lock control cable sub-assembly.

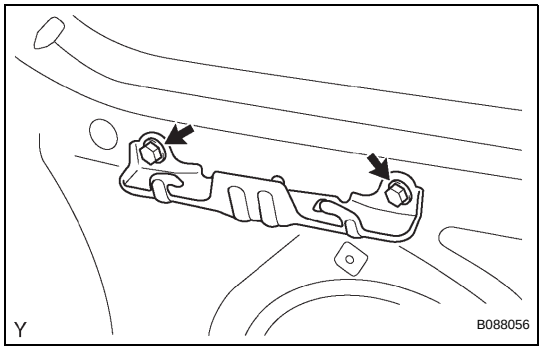

10. INSTALL NO. 1 DOOR TRIM BRACKET RH

(a) Install the No. 1 door trim bracket with the 2 screws.

11. INSTALL REAR SPEAKER ASSEMBLY (See page AV-88)

12. INSTALL FRONT SHOULDER BELT ANCHOR ADJUSTER ASSEMBLY (See page SB-38)

13. INSTALL FRONT SEAT OUTER BELT ASSEMBLY LH (See page SB-38)

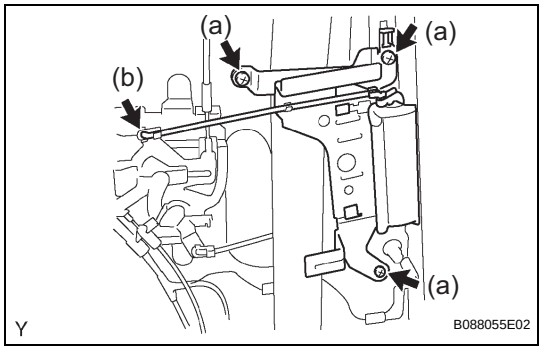

14. INSTALL ACCESS PANEL INSIDE HANDLE SUB-ASSEMBLY LH

(a) Install the access panel inside handle sub-assembly inside LH with the 3 screws.

(b) Connect the rod.

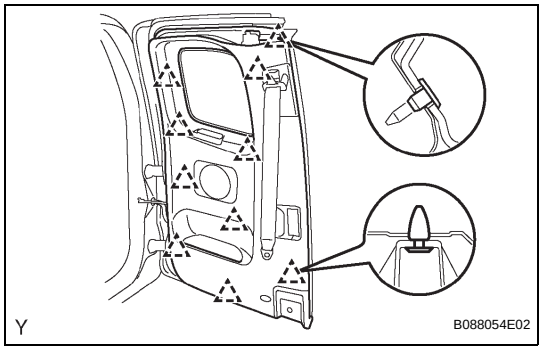

15. INSTALL REAR DOOR TRIM BOARD SUB-ASSEMBLY LH

(a) Install the rear door trim board sub-assembly LH.

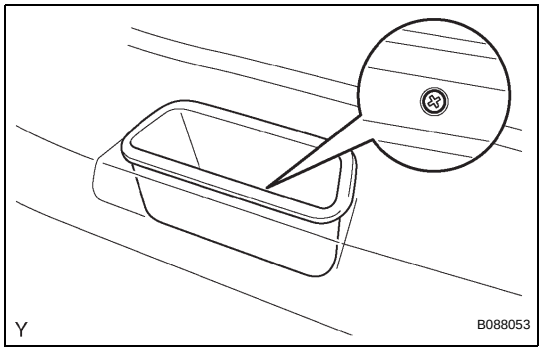

(b) Install the door pull handle with the screw.

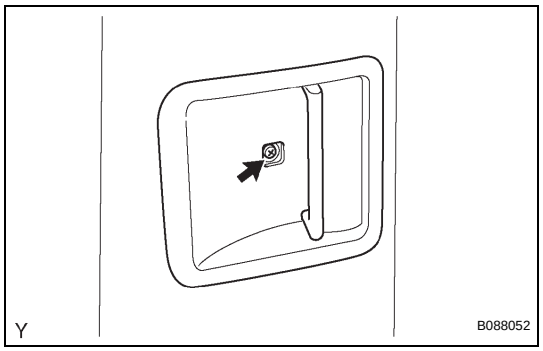

(c) Install the access panel inside handle bezel LH with the screw.

(d) Close the cover.

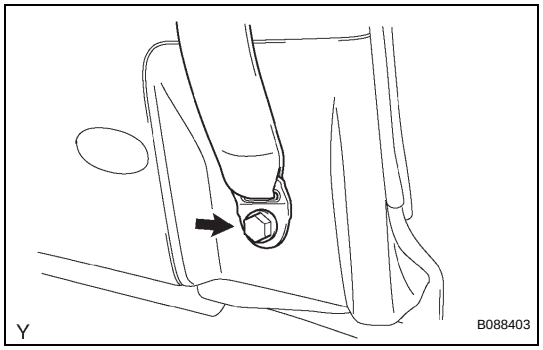

(e) Install the outer front seat belt assembly LH (floor side) with the bolt.
Torque: 42 N*m (428 kgf*cm, 31 ft.*lbf)

ED

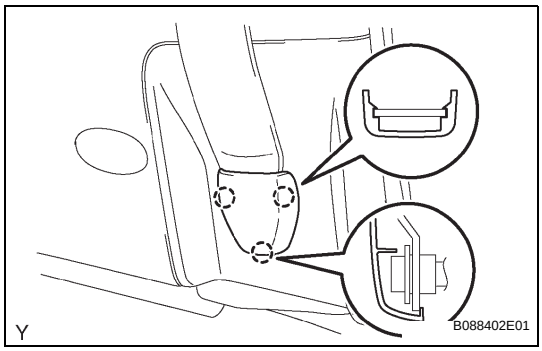

16. INSTALL LAP BELT OUTER ANCHOR COVER

(a) Engage the 3 claws and install the lap belt outer anchor cover.

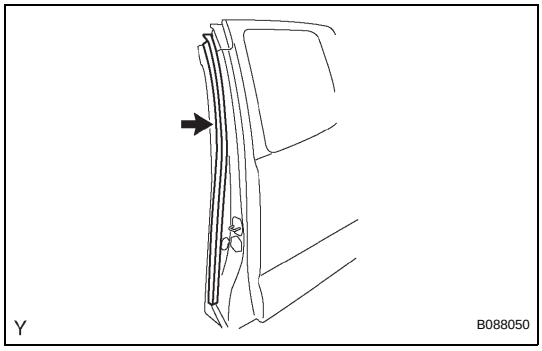

17. INSTALL ACCESS PANEL REAR WEATHERSTRIP LH

(a) Install the rear access panel weatherstrip LH.

18. CONNECT CABLE TO NEGATIVE BATTERY TERMINAL

Torque: 3.9 N*m (40 kgf*cm, 35 in.*lbf)

DISASSEMBLY

1. DISCONNECT CABLE FROM NEGATIVE BATTERY TERMINAL

2. REMOVE REAR DOOR FRAME GARNISH LH

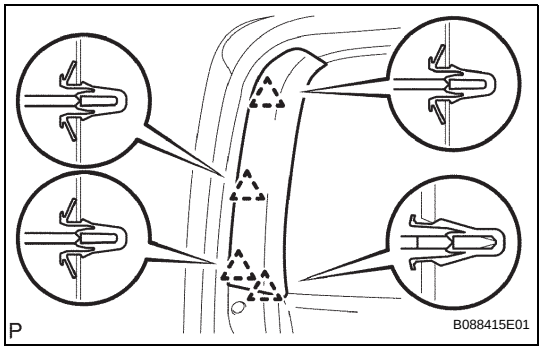

(a) Disengage the 4 clips and remove the rear door frame garnish LH.

NOTICE:
Confirm that no clips remain on the door panel when the garnish is removed. Transfer any remaining clips to the garnish side before installing.

3. REMOVE REAR POWER WINDOW REGULATOR SWITCH ASSEMBLY

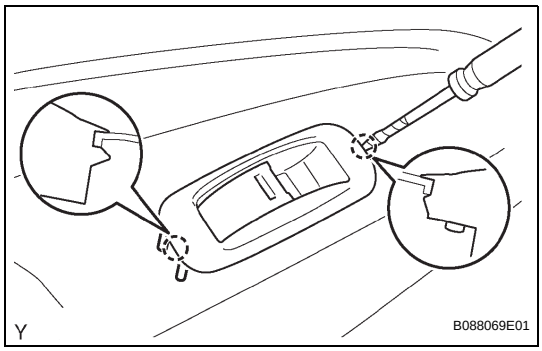

(a) Using a screwdriver with its tip wrapped in protective tape, disengage the 2 claws, then pull out the rear power window regulator switch assembly by pulling it toward the front of the vehicle.

(b) Disconnect the connector, then remove the rear power window regulator switch assembly.

4. REMOVE REAR DOOR TRIM PANEL ASSEMBLY LH

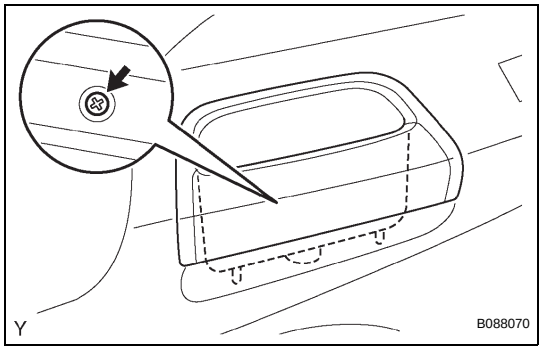

(a) Remove the screw, then remove the door assist grip assembly LH.

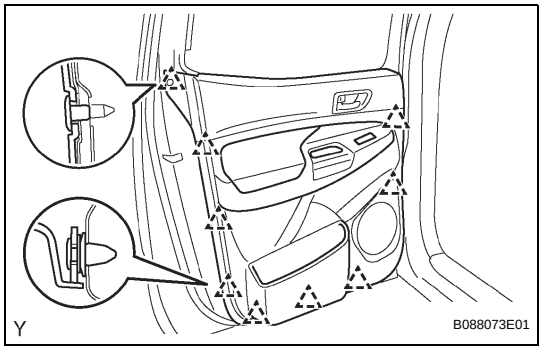

(b) Disengage the 9 clips.

(c) Remove the rear door trim panel assembly by sliding it upward.

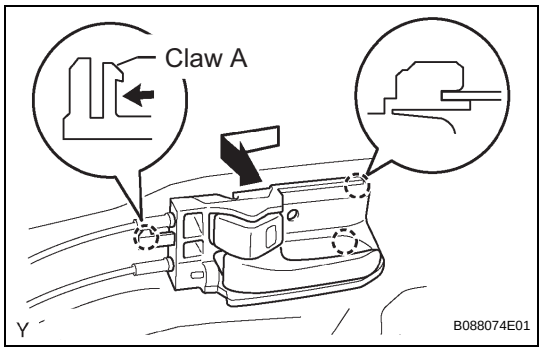

5. REMOVE REAR DOOR INSIDE HANDLE SUB-ASSEMBLY LH

(a) Using a screwdriver with its tip wrapped in protective tape, disengage claw A as shown in the illustration.

(b) Move the rear door inside handle sub-assembly LH in the direction indicated by the arrow mark in the illustration. This will release the claw and allow the removal of the rear door inside handle sub-assembly LH.

(c) Disconnect the 2 cables from the rear door inside handle sub-assembly LH.

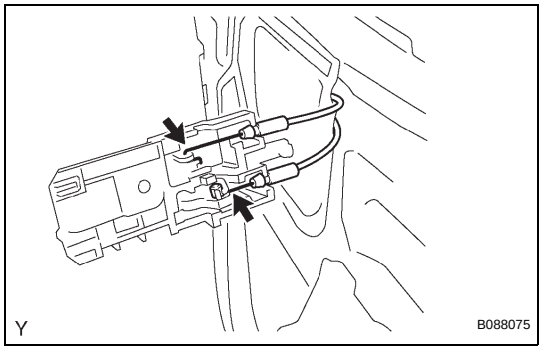

6. REMOVE REAR SPEAKER ASSEMBLY

HINT:

- Access cab (See page AV-88)
- Double cab (See page AV-86)

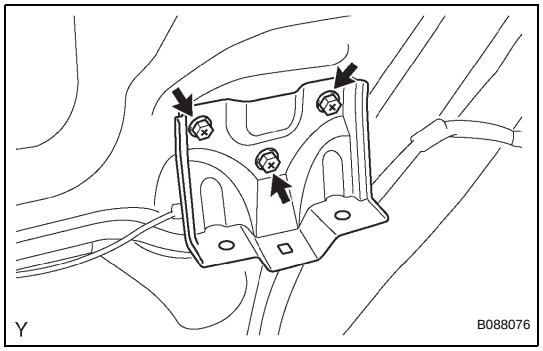

7. REMOVE NO. 2 REAR DOOR TRIM BRACKET

(a) Remove the 3 screws and No. 2 rear door trim bracket.

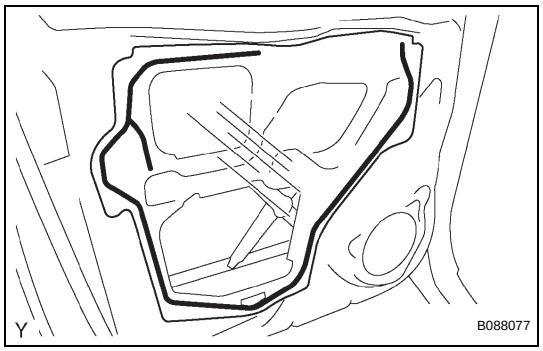

8. REMOVE REAR DOOR SERVICE HOLE COVER LH

(a) Remove the rear door service hole cover LH.

NOTICE:
Remove the remaining tape on the door side.

9. REMOVE REAR DOOR BELT MOULDING LH (See page ET-35)

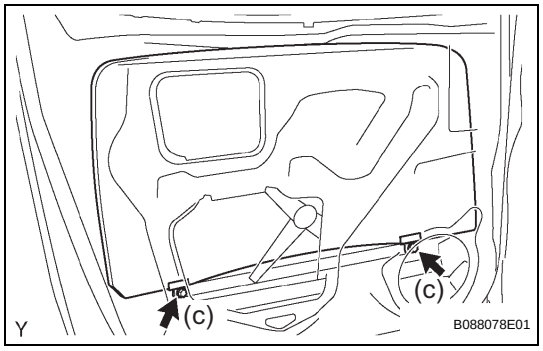

10. REMOVE REAR DOOR GLASS SUB-ASSEMBLY LH

HINT:

Insert a shop rag inside the door panel to prevent the glass from being scratched.

(a) Connect the power window regulator switch.

(b) Move the rear door glass sub-assembly LH until the 2 bolts appear in the service holes.

ED

(c) Remove the 2 bolts and rear door glass sub-assembly LH.
NOTICE:
- **Be careful when removing the 2 bolts as the glass may fall and be damaged.**
- **Be careful not to damage the glass.**

(d) Disconnect the power window regulator switch.

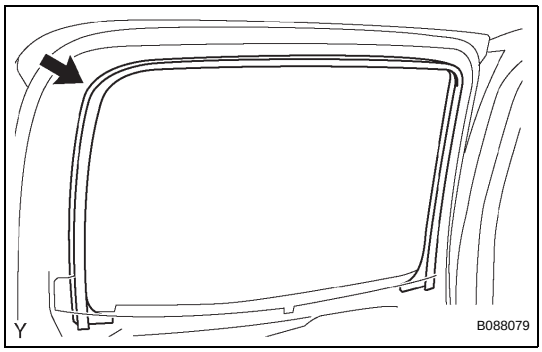

11. REMOVE REAR DOOR GLASS RUN LH

(a) Remove the rear door glass run LH.

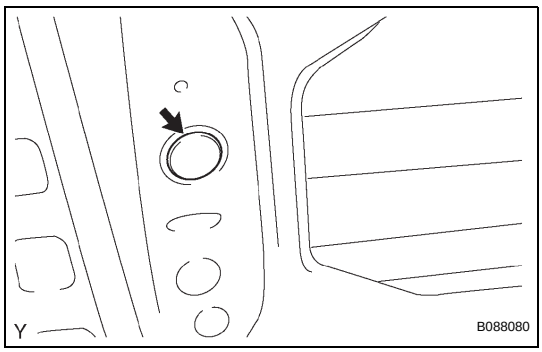

12. REMOVE REAR DOOR REAR LOWER WINDOW FRAME SUB-ASSEMBLY LH

(a) Remove the hole plug.

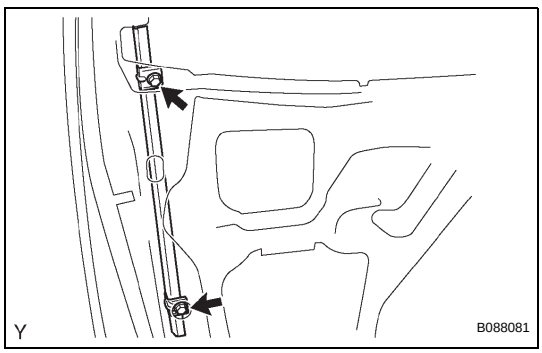

(b) Remove the 2 bolts and rear door rear lower window frame sub-assembly LH.

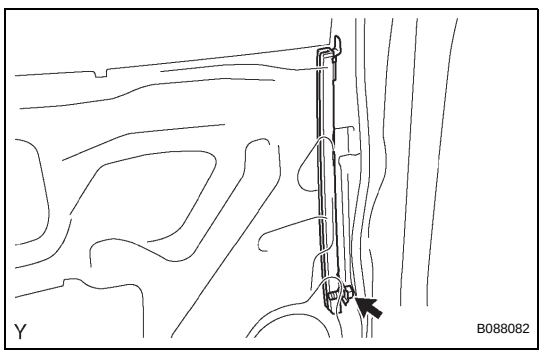

13. REMOVE REAR DOOR FRONT WINDOW GUIDE SUB-ASSEMBLY LH

(a) Remove the bolt and rear door front window guide sub-assembly LH.

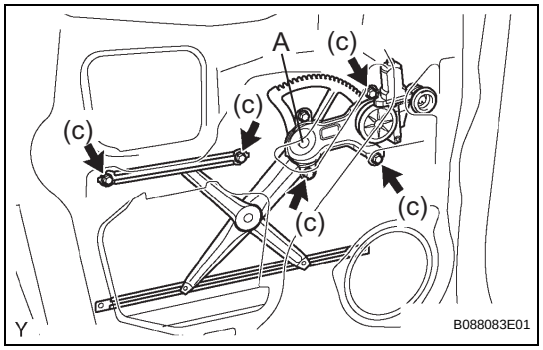

14. REMOVE REAR DOOR WINDOW REGULATOR SUB-ASSEMBLY LH

(a) Disconnect the connector.
(b) Loosen bolt A.
(c) Remove the 5 bolts, then remove the rear door window regulator sub-assembly LH.

NOTICE:
Be careful when removing the bolts as the window regulator may fall and be damaged.
HINT:
Remove the window regulator through the service hole.

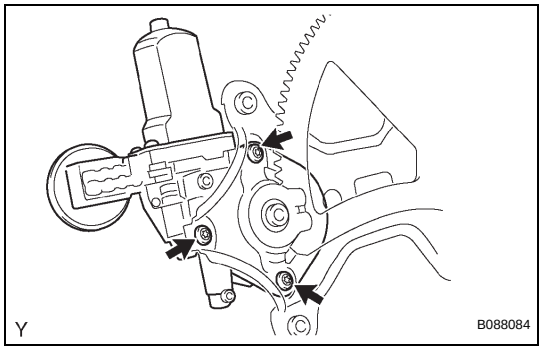

15. REMOVE POWER WINDOW REGULATOR MOTOR ASSEMBLY LH

(a) Using a torx socket wrench T25 , remove the 3 screws and power window regulator motor assembly LH.

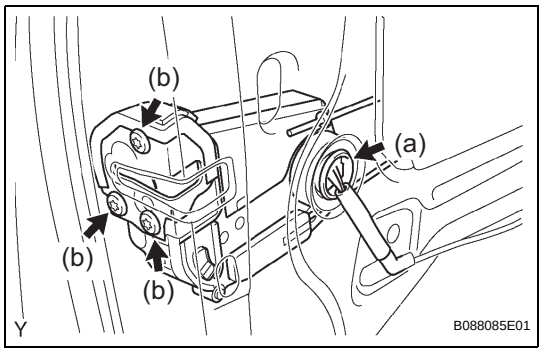

16. REMOVE REAR DOOR LOCK ASSEMBLY LH

(a) Disconnect the connector.
(b) Using a torx socket wrench T30 , remove the 3 screws, then remove the rear door lock assembly LH.

NOTICE:
Be careful when removing the 3 screws as the door lock may fall and be damaged.
HINT:
Remove the door lock through the service hole.

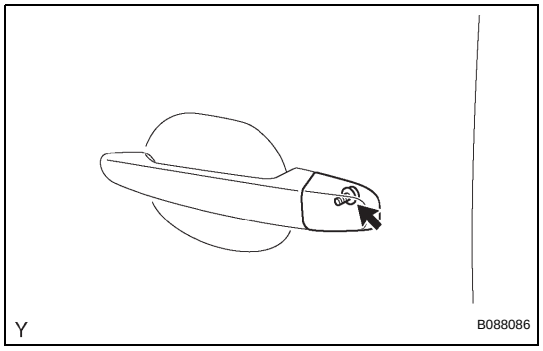

17. REMOVE REAR DOOR OUTSIDE HANDLE COVER LH

(a) Using a torx socket wrench T30 , loosen the screw and remove the rear door outside handle cover.

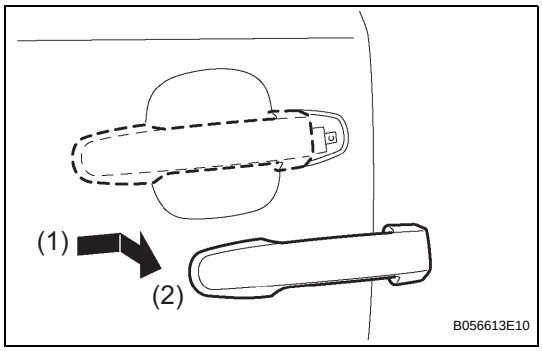

18. REMOVE REAR DOOR OUTSIDE HANDLE ASSEMBLY RH

(a) Remove the outside handle by sliding and pulling it in the direction indicated by the arrow mark in the illustration.

NOTICE:

If the release plate is not pulled and held when removing the outside handle, the release plate will interfere with the outside handle. This will damage the release plate.

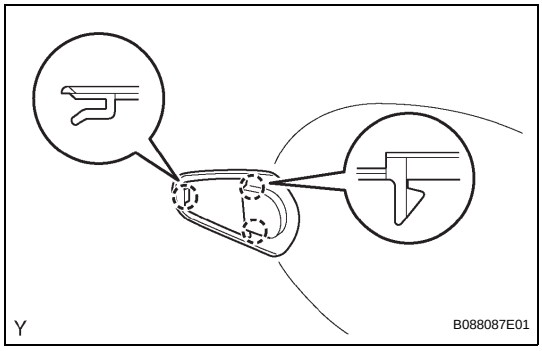

(b) Disengage the 3 claws and remove the outside handle front pad.

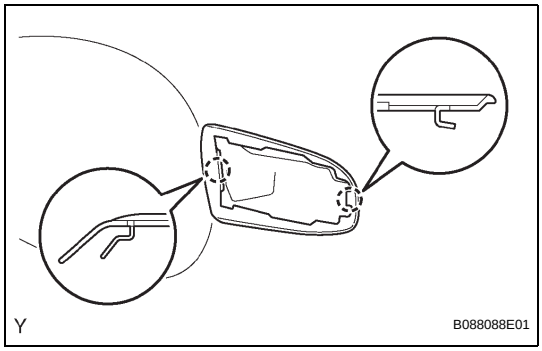

(c) Disengage the 2 claws and remove the outside handle rear pad.

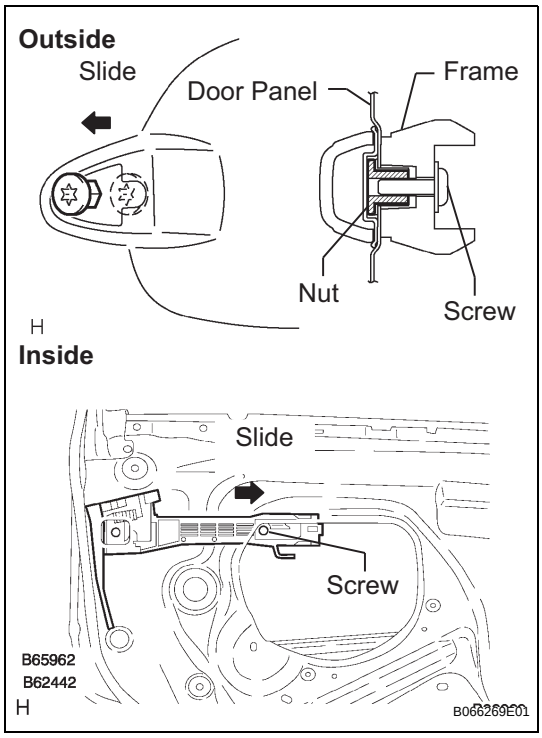

19. REMOVE REAR DOOR OUTSIDE HANDLE FRAME SUB-ASSEMBLY LH

(a) Using a torx socket wrench T30 , loosen the screw.

(b) Slide the rear door outside handle frame sub-assembly LH to remove it.

HINT:

Remove the rear door outside handle frame sub-assembly LH through the service hole.

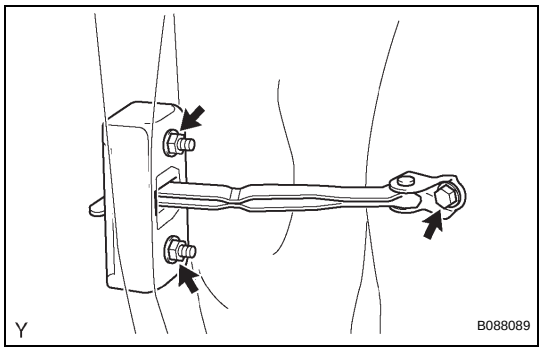

20. REMOVE REAR DOOR CHECK ASSEMBLY LH

(a) Remove the bolt and 2 nuts, then remove the rear door check assembly LH.

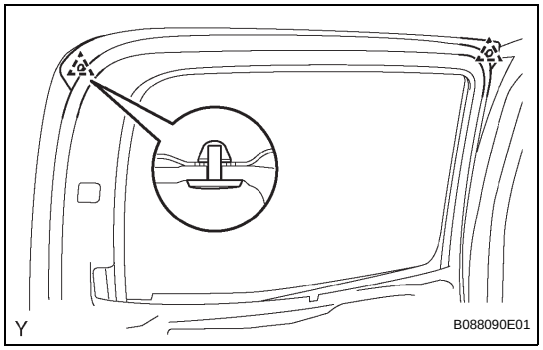

21. REMOVE REAR DOOR WEATHERSTRIP LH

(a) Disengage the 2 clips.

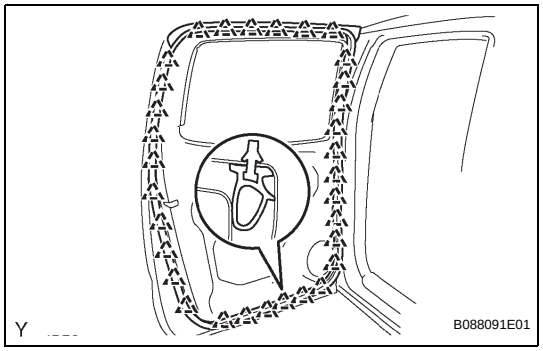

(b) Using a clip remover, disengage the 32 clips, then remove the rear door weatherstrip LH.

NOTICE:

Remove the remaining tape on the door side.

ED

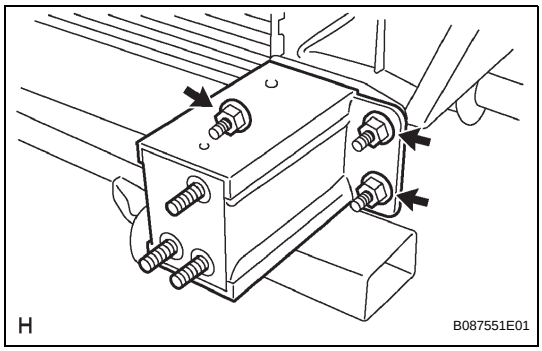

24. REMOVE FRONT BUMPER EXTENSION SUB-ASSEMBLY LH

(a) Remove the 3 nuts and front bumper extension.

25. REMOVE FRONT BUMPER EXTENSION SUB-ASSEMBLY RH

HINT:
Follow the same procedures as for the front bumper extension LH.

INSTALLATION

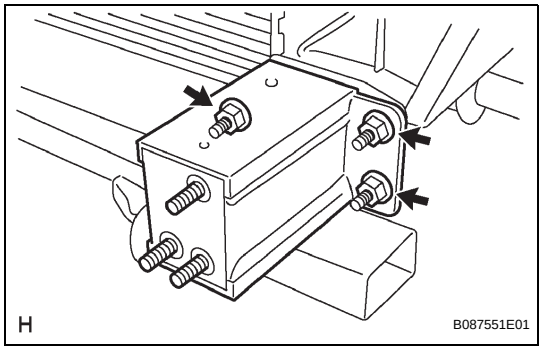

1. INSTALL FRONT BUMPER EXTENSION SUB-ASSEMBLY LH

(a) Install the front bumper extension with the 3 nuts.
Torque: 58 N*m (590 kgf*cm, 43 ft.*lbf)

2. INSTALL FRONT BUMPER EXTENSION SUB-ASSEMBLY RH

HINT:
Follow the same procedures as for the front bumper extension LH.

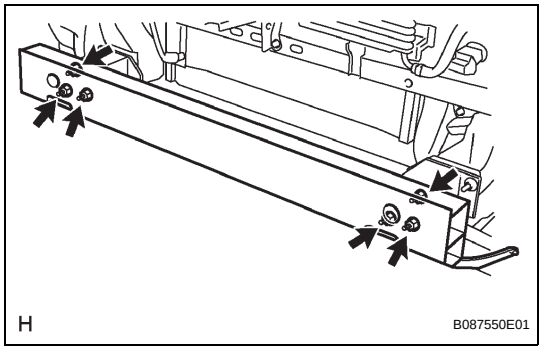

3. INSTALL FRONT BUMPER REINFORCEMENT SUB-ASSEMBLY

(a) Install the front bumper reinforcement with the 6 nuts.
Torque: 58 N*m (590 kgf*cm, 43 ft.*lbf)

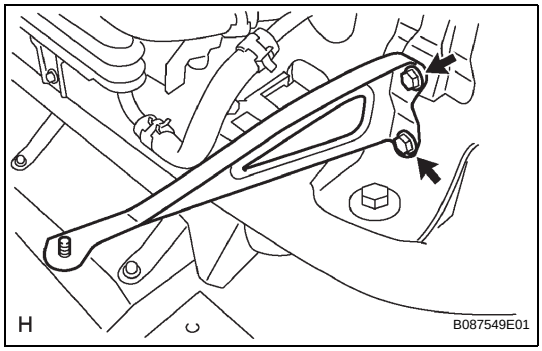

4. INSTALL FRONT BUMPER ARM MOUNTING BRACKET LH

(a) Install the front bumper arm mounting bracket with the 2 bolts.
Torque: 13 N*m (135 kgf*cm, 10 ft.*lbf)

5. INSTALL FRONT BUMPER ARM MOUNTING BRACKET RH

HINT:
Follow the same procedures as for the front bumper arm mounting bracket LH.

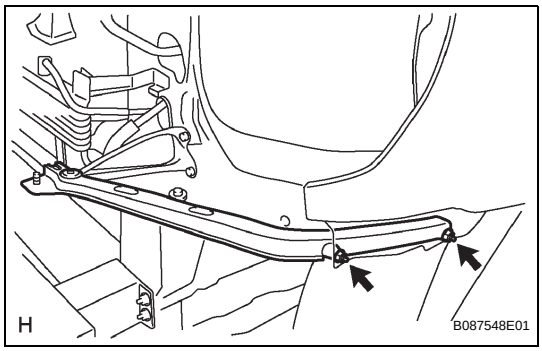

6. INSTALL FRONT BUMPER REINFORCEMENT EXTENSION LH

(a) Install the front bumper reinforcement extension with the 2 nuts.
Torque: 13 N*m (135 kgf*cm, 10 ft.*lbf)

7. INSTALL FRONT BUMPER REINFORCEMENT EXTENSION RH

HINT:
Follow the same procedures as for the front bumper reinforcement extension.

ET

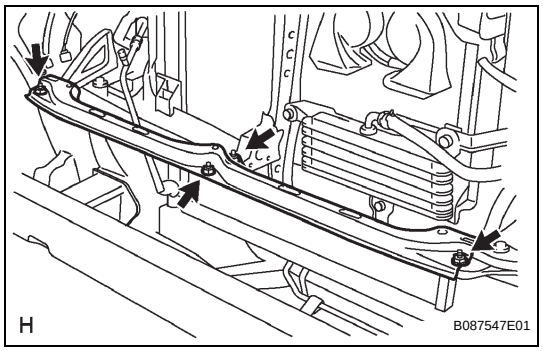

8. INSTALL FRONT BUMPER UPPER CENTER RETAINER

(a) Install the front bumper upper center retainer with the 4 nuts.
Torque: 13 N*m (135 kgf*cm, 10 ft.*lbf)

9. INSTALL HEADLIGHT ASSEMBLY LH (See page LI-10)

10. INSTALL HEADLIGHT ASSEMBLY RH

HINT:
Follow the same procedures as for the headlight LH.

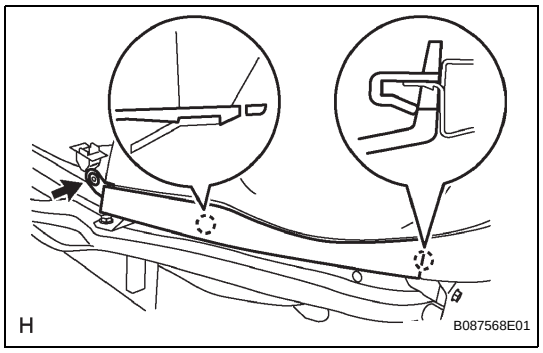

11. INSTALL FRONT BUMPER FILLER LH

(a) Engage the 2 claws and install the front bumper filler.
(b) Install the clip.

12. INSTALL FRONT BUMPER FILLER RH

HINT:
Follow the same procedures as for the front bumper filler LH.

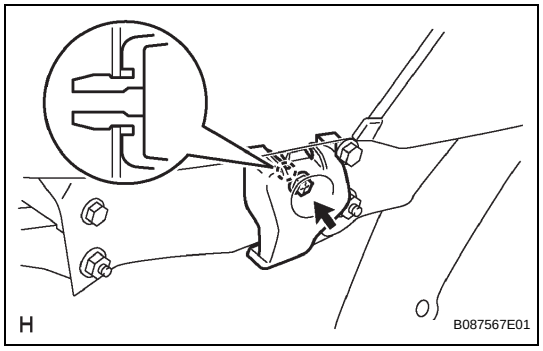

13. INSTALL FRONT BUMPER SIDE SUPPORT

HINT:
Follow the same procedures as for the opposite side.
(a) Engage the claw and install the front bumper side support.
(b) Tighten the screw.

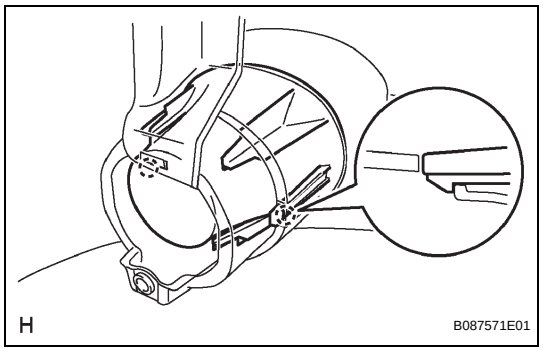

14. INSTALL FRONT BUMPER HOLE COVER LH (w/o Fog Light)

(a) Engage the 2 claws and install the front bumper hole cover.

15. INSTALL FRONT BUMPER HOLE COVER RH (w/o Fog Light)

HINT:
Follow the same procedures as for the front bumper hole cover LH.

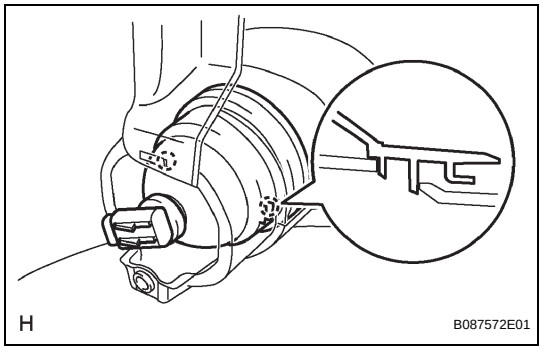

16. INSTALL FOG LIGHT ASSEMBLY LH (w/ Fog Light)

(a) Engage the 2 claws and install the fog light.

17. INSTALL FOG LIGHT ASSEMBLY RH (w/ Fog Light)

HINT:
Follow the same procedures as for the fog light LH.

ET

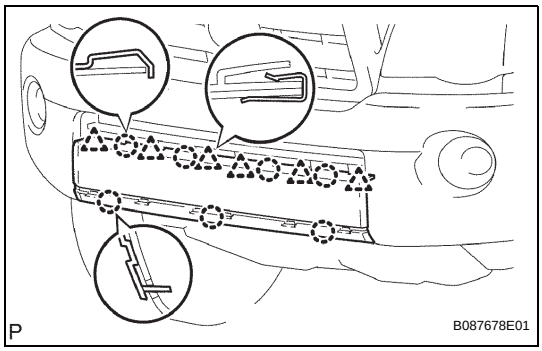

18. INSTALL FRONT SPOILER CENTER COVER (for X-Runner)

(a) Engage the 7 claws and install the front spoiler center cover.

(b) Install the 6 retainers.

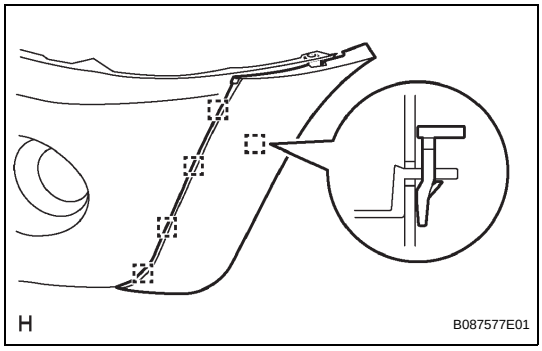

19. INSTALL FRONT BUMPER EXTENSION LH

(a) for 4WD and Pre Runner:

(1) Install the front bumper extension with the 5 retainers.

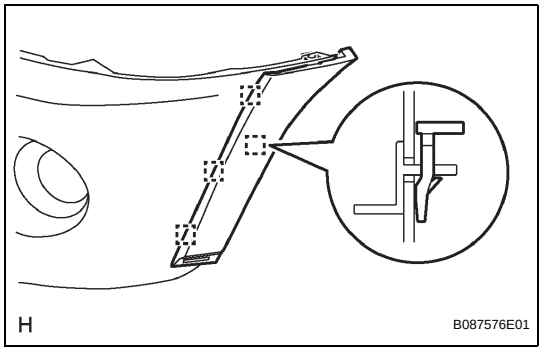

(b) for X-Runner:

(1) Install the front bumper extension with the 4 retainers.

20. INSTALL FRONT BUMPER EXTENSION RH

HINT:

Follow the same procedures as for the front bumper extension LH.

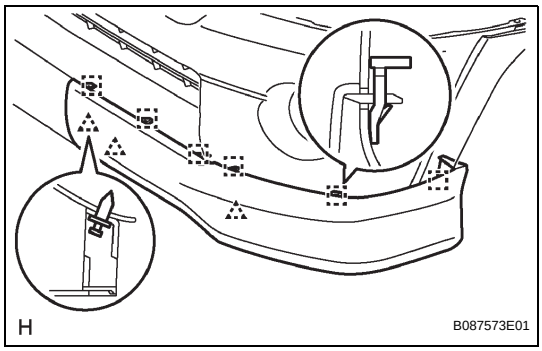

21. INSTALL FRONT SPOILER COVER LH (for X-Runner)

(a) Install the front spoiler cover with the 6 retainers.

(b) Install the 3 clips.

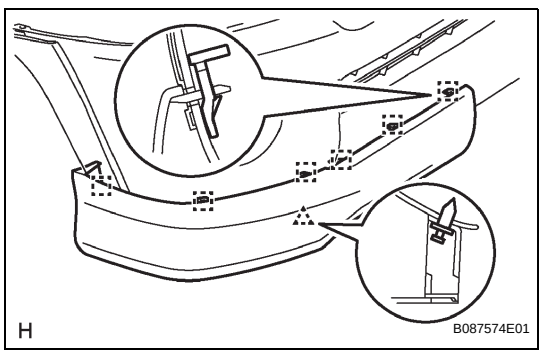

22. INSTALL FRONT SPOILER COVER RH (for X-Runner)

(a) Install the front spoiler cover with the 6 retainers.

(b) Install the clip.

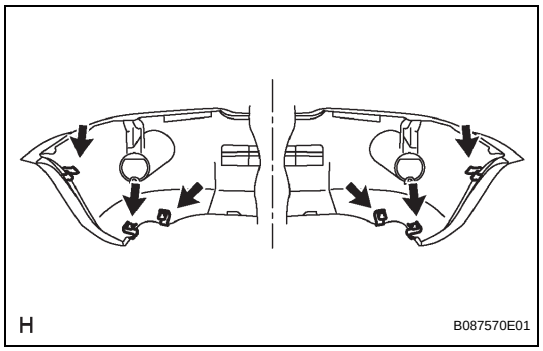

23. INSTALL FRONT BUMPER COVER

(a) Install the 6 clips.

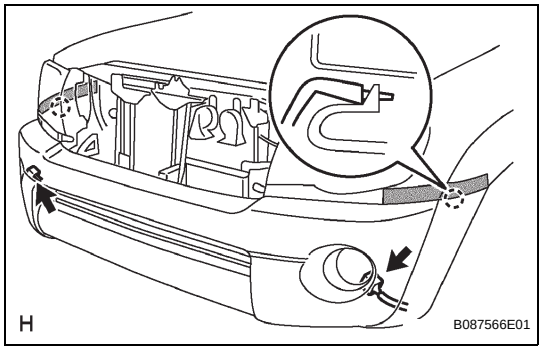

(b) Engage the 2 claws and install the front bumper cover.
(c) Connect the 2 fog lamp connectors (w/ fog lamp).

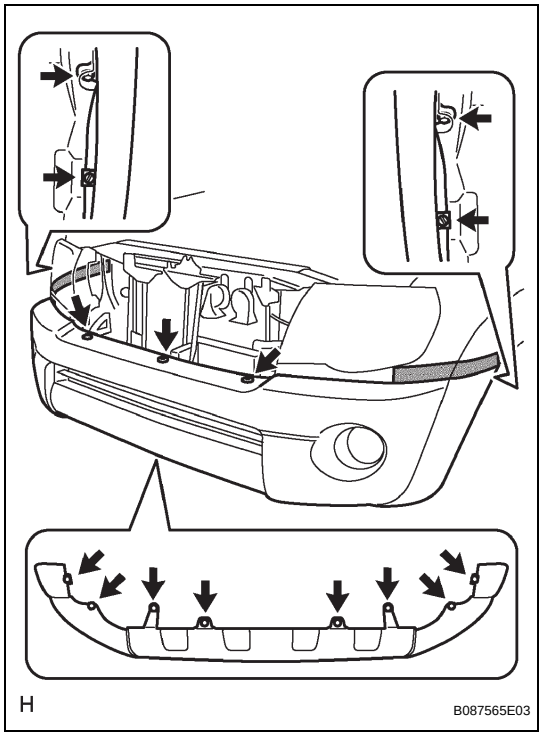

(d) Install the 9 clips.
(e) Tighten the 6 screws.

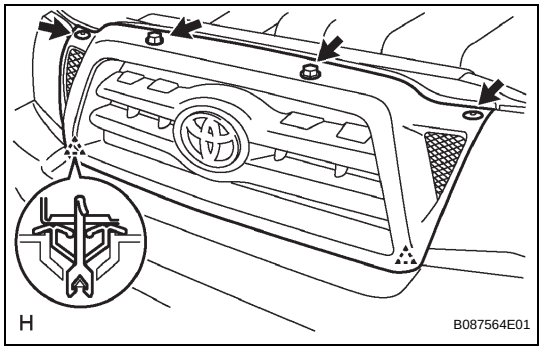

24. INSTALL RADIATOR GRILLE

(a) Engage the 2 clips and install the radiator grille.
(b) Install the 2 clips.
(c) Tighten the 2 screws.

25. CONNECT CABLE TO NEGATIVE BATTERY TERMINAL
Torque: 3.9 N*m (40 kgf*cm, 35 in.*lbf)

26. PREPARE VEHICLE FOR HEADLIGHT AIMING ADJUSTMENT (See page LI-5)

27. **PREPARE FOR HEADLIGHT AIMING (for Using a Tester) (See page LI-5)**
28. **PREPARE FOR HEADLIGHT AIMING (for Using a Screen) (See page LI-5)**
29. **INSPECT HEADLIGHT AIMING (See page LI-7)**
30. **ADJUST HEADLIGHT AIMING (See page LI-9)**
31. **PREPARE VEHICLE FOR FOG LIGHT AIMING ADJUSTMENT (See page LI-14)**
32. **PREPARE FOR FOG LIGHT AIMING (See page LI-14)**
33. **INSPECT FOG LIGHT AIMING (See page LI-16)**
34. **ADJUST FOG LIGHT AIMING (See page LI-17)**

REMOVAL

1. DISCONNECT CABLE FROM NEGATIVE BATTERY TERMINAL

2. REMOVE REAR BUMPER BAR

(a) w/ Towing hitch:

(1) Disconnect the 2 No. 3 wire frame connectors.
(2) Loosen 2 bolts A.
(3) Remove the 8 bolts.
(4) Disengage the 2 pins and remove the rear bumper bar.

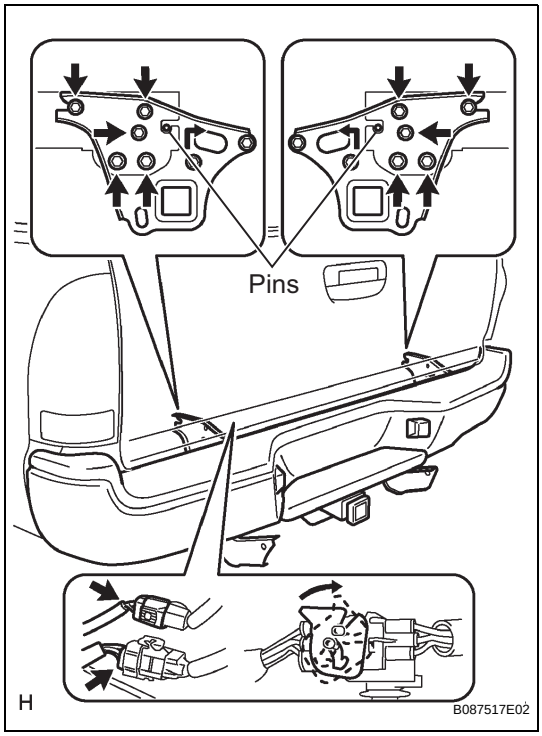

(b) w/o Towing hitch:

(1) Disconnect the 2 license lamp connectors.
(2) Loosen the 2 bolts.
(3) Remove the 4 bolts.
(4) Disengage the 2 pins and remove the rear bumper bar.

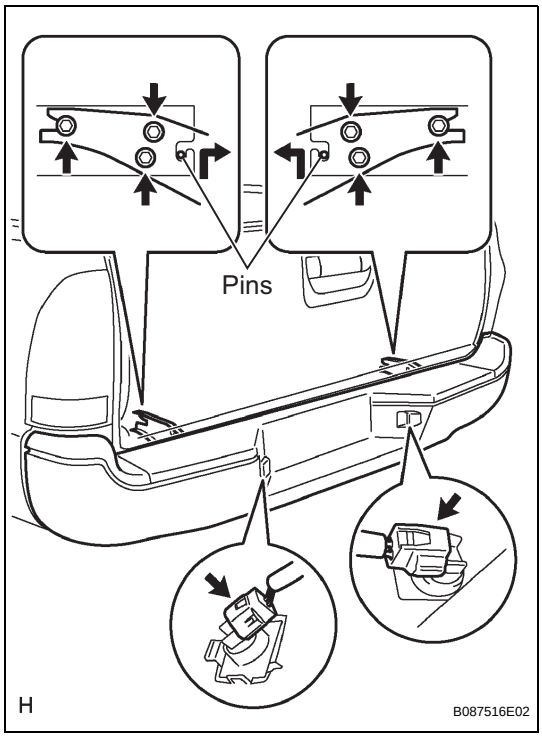

ET

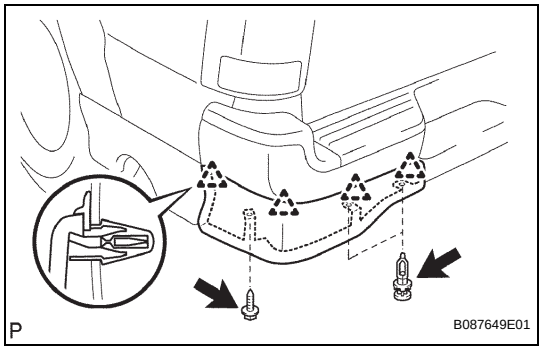

3. REMOVE REAR BUMPER SPOILER LH (for X-Runner)

(a) Using a clip remover, remove the 2 clips.
(b) Remove the screw.
(c) Disengage the 4 clips and remove the rear bumper spoiler.

4. REMOVE REAR BUMPER SPOILER RH (for X-Runner)

HINT:
Follow the same procedures as for the rear bumper spoiler LH.

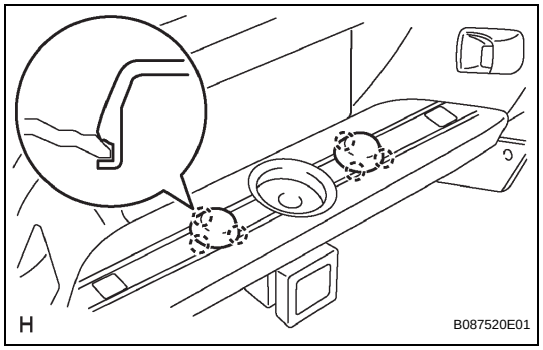

5. REMOVE REAR BUMPER COVER

(a) w/ Towing Hitch:
(1) Disengage the 3 claws and remove the receiver hitch cap.
HINT:
Follow the same procedures as for the opposite side.

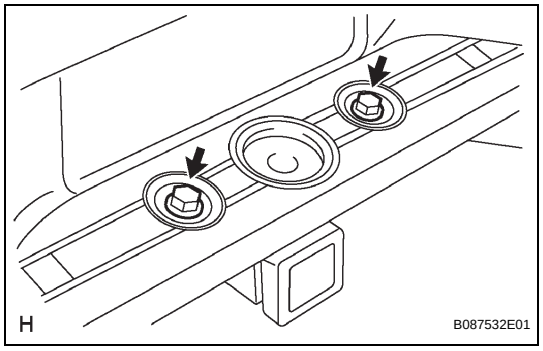

(2) Remove the 2 bolts.
(3) Remove the hitch ball.

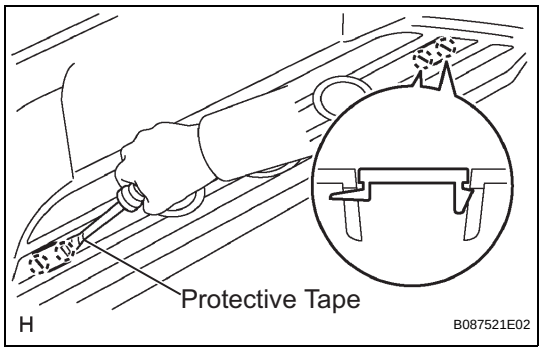

(b) Using a screwdriver with its tip in protective tape, disengage the 2 claws and remove the rear bumper cover lower.
HINT:
Follow the same procedures as for the opposite side.

ET

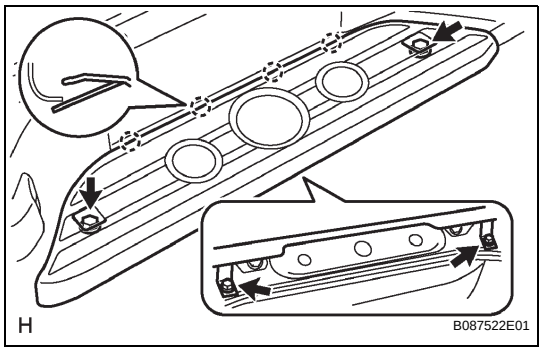

(c) Remove the 4 bolts.
(d) Disengage the 4 claws and remove the rear bumper cover.

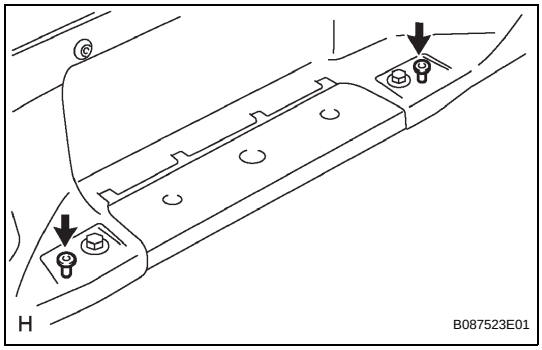

(e) Remove the 2 nuts from the rear bumper bar.

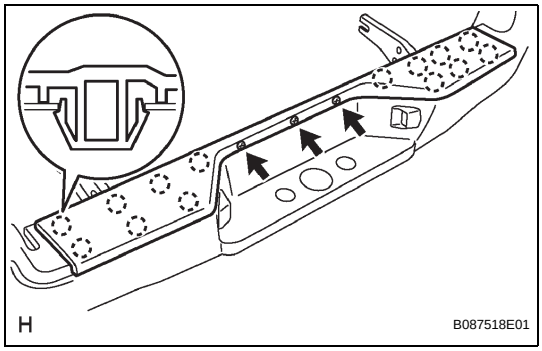

6. REMOVE REAR BUMPER PLATE
(a) Remove the 3 clips.
(b) Disengage the 14 claws and remove the rear bumper plate.

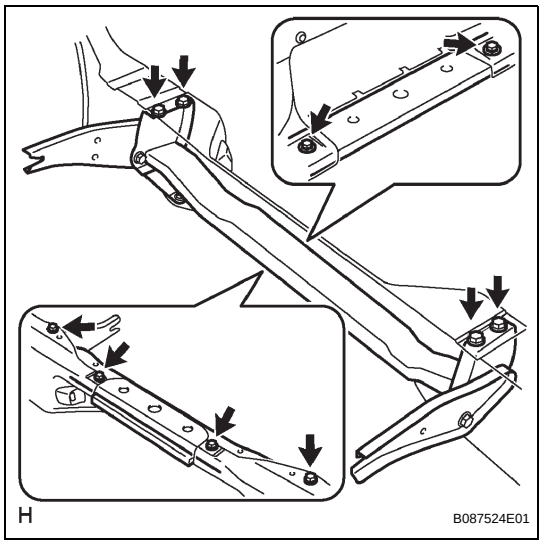

7. REMOVE REAR BUMPER BAR REINFORCEMENT SUB-ASSEMBLY (w/o Towing Hitch)
(a) Remove the 10 bolts and rear bumper bar reinforcement.

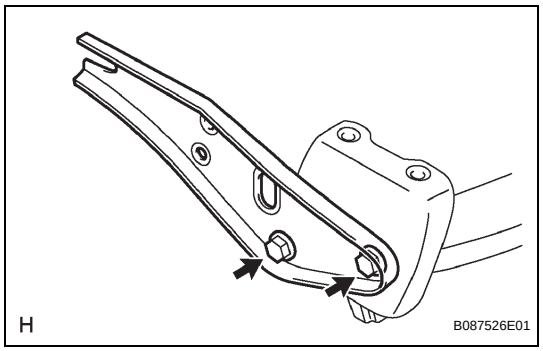

8. REMOVE REAR BUMPER ARM SUB-ASSEMBLY LH (w/o Towing Hitch)

(a) Remove the 2 bolts and rear bumper arm.

9. REMOVE REAR BUMPER ARM SUB-ASSEMBLY RH (w/o Towing Hitch)

HINT:

Follow the same procedures as for the rear bumper arm LH.

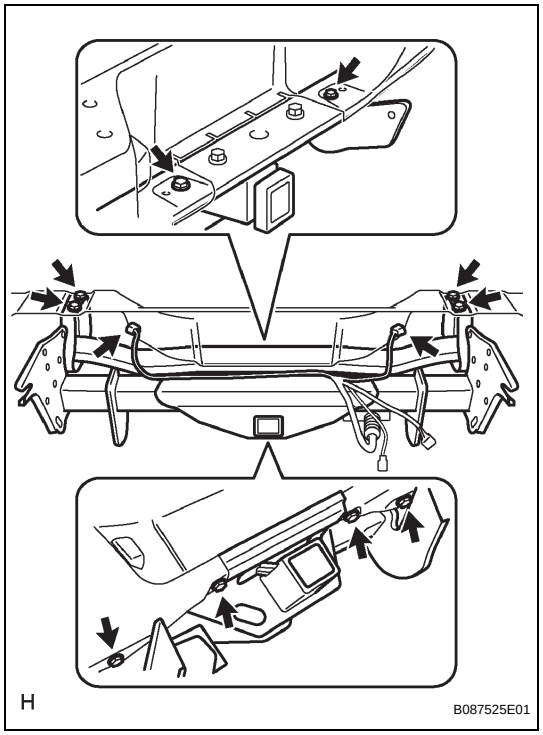

10. REMOVE RECEIVER HITCH BRACKET SUB-ASSEMBLY (w/ Towing Hitch)

(a) Disconnect the 2 license light connectors.

(b) Remove the 10 bolts and receiver hitch bracket.

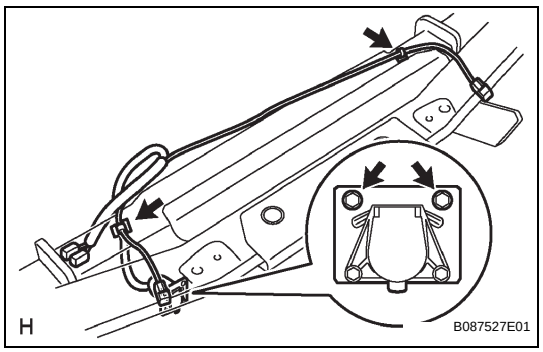

11. REMOVE NO. 3 FRAME WIRE (w/ Towing Hitch)

(a) Using a clip remover, remove the 2 wire harness clamps.

(b) Remove the 2 bolts and No. 3 frame wire.

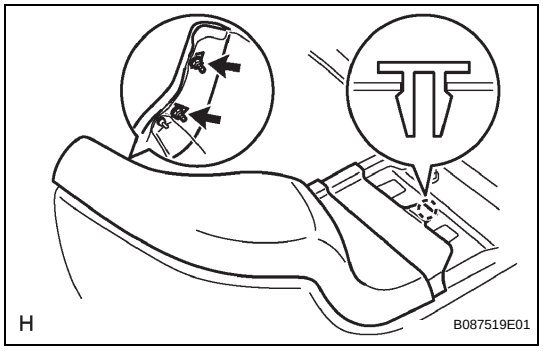

12. REMOVE REAR BUMPER PLATE LH

(a) Remove the 2 nuts.

(b) Disengage the claw and remove the rear bumper plate.

13. REMOVE REAR BUMPER PLATE RH

HINT:

Follow the same procedures as for the rear bumper plate LH.

ET

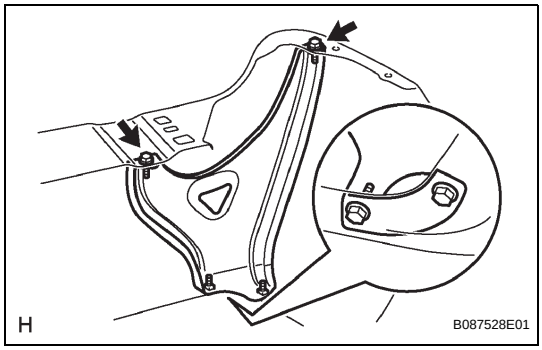

14. REMOVE REAR BUMPER BAR CORNER REINFORCEMENT LH

(a) Remove the 4 bolts and rear bumper bar corner reinforcement.

15. REMOVE REAR BUMPER BAR CORNER REINFORCEMENT RH

HINT:
Follow the same procedures as for the rear bumper bar corner reinforcement LH.

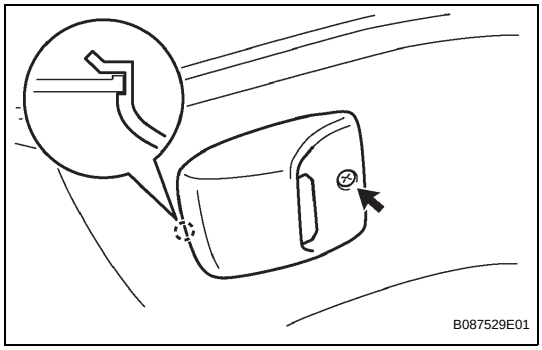

16. REMOVE LICENSE PLATE LIGHT ASSEMBLY

HINT:
Follow the same procedures as for the opposite side.

(a) Remove the screw.

(b) Disengage the claw and remove the license plate light.

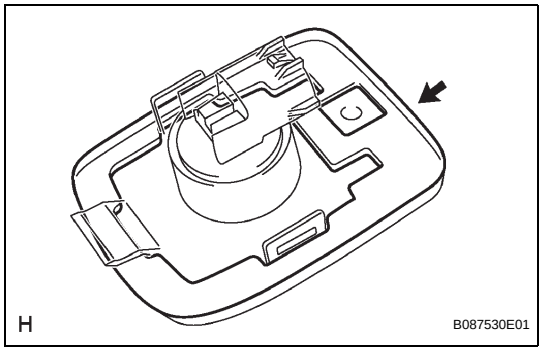

(c) Remove the bumper moulding mounting plate from the license plate light.

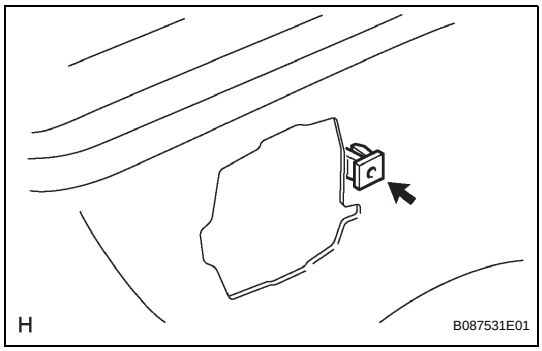

(d) Remove the nut from the rear bumper bar.

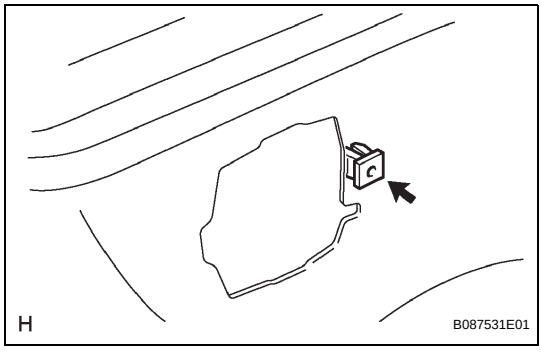

INSTALLATION

1. INSTALL LICENSE PLATE LIGHT ASSEMBLY

HINT:
Follow the same procedures as for the opposite side.

(a) Install the nut into the rear bumper bar.

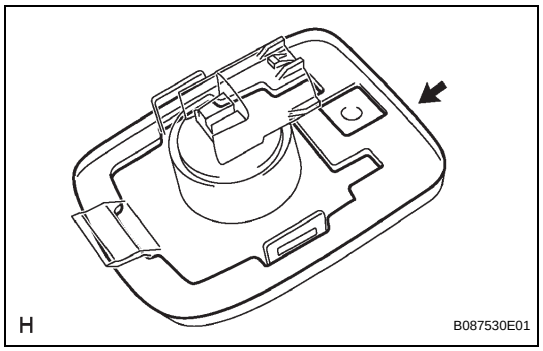

(b) Install the bumper moulding mounting plate onto the license plate light.

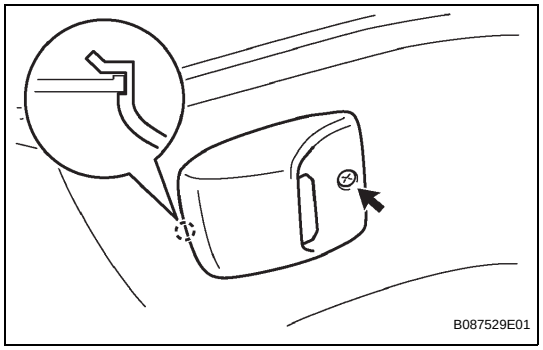

(c) Engage the claw and install the license plate light.
(d) Install the screw.

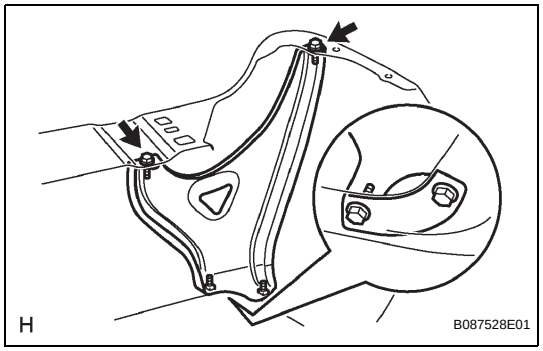

2. INSTALL REAR BUMPER BAR CORNER REINFORCEMENT LH

(a) Install the rear bumper bar corner reinforcement with 4 bolts.
Torque: 19 N*m (195 kgf*cm, 14 ft.*lbf)

3. INSTALL REAR BUMPER BAR CORNER REINFORCEMENT RH

HINT:
Follow the same procedures as for the rear bumper bar corner reinforcement LH.

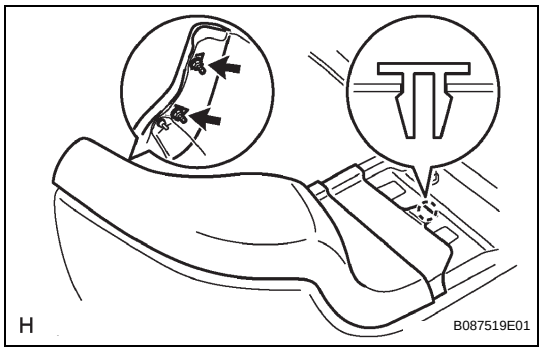

4. INSTALL REAR BUMPER PLATE LH

(a) Engage the claw and install the bumper plate.
(b) Install the 2 nuts.
Torque: 7.0 N*m (70 kgf*cm, 62 in.*lbf)

5. INSTALL REAR BUMPER PLATE RH

HINT:
Follow the same procedures as for the rear bumper plate LH.

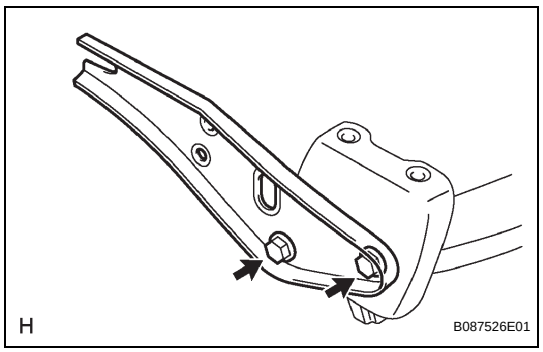

6. INSTALL REAR BUMPER ARM SUB-ASSEMBLY LH (w/o Towing Hitch)

(a) Install the rear bumper arm with the 2 bolts..
Torque: 19 N*m (195 kgf*cm, 14 ft.*lbf)

7. INSTALL REAR BUMPER ARM SUB-ASSEMBLY RH (w/o Towing Hitch)

HINT:
Follow the same procedures as for the rear bumper arm LH.

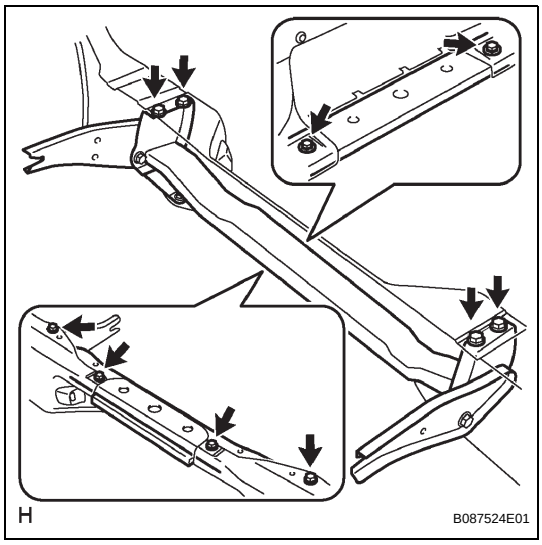

8. INSTALL REAR BUMPER REINFORCEMENT SUB-ASSEMBLY (w/o Towing Hitch)

(a) Install the rear bumper bar reinforcement with the 10 bolts.
Torque: 19 N*m (195 kgf*cm, 14 ft.*lbf)

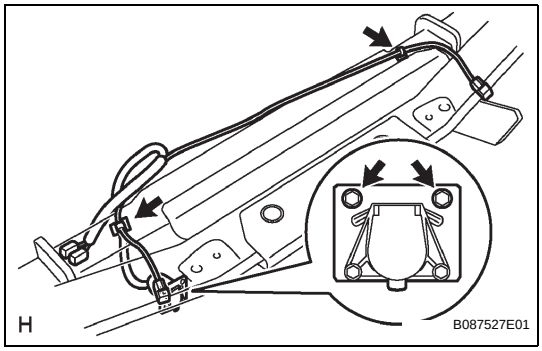

9. INSTALL NO. 3 FRAME WIRE (w/ Towing Hitch)

(a) Install the No. 3 frame wire with the 2 bolts.
Torque: 19 N*m (195 kgf*cm, 14 ft.*lbf)

(b) Install the 2 wire harness clamps.

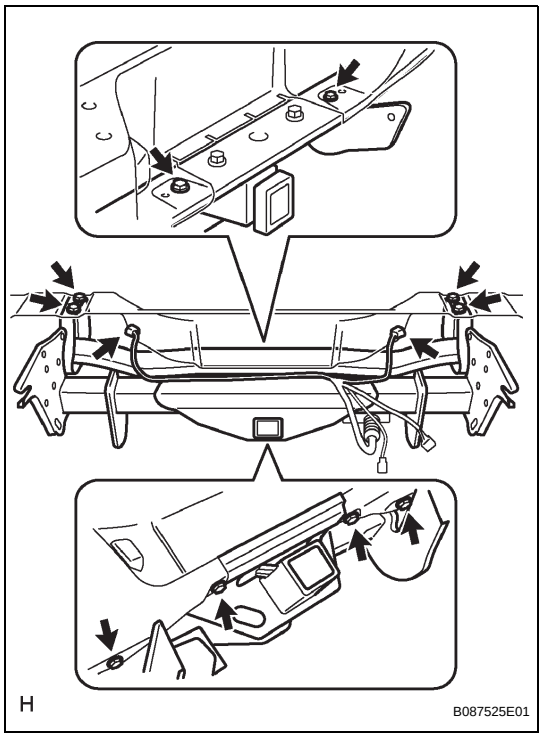

10. INSTALL RECEIVER HITCH BRACKET SUB-ASSEMBLY (w/ Towing Hitch)

(a) Install the receiver hitch bracket with the 10 bolts.
Torque: 19 N*m (195 kgf*cm, 14 ft.*lbf)

(b) Connect the 2 license light connectors.

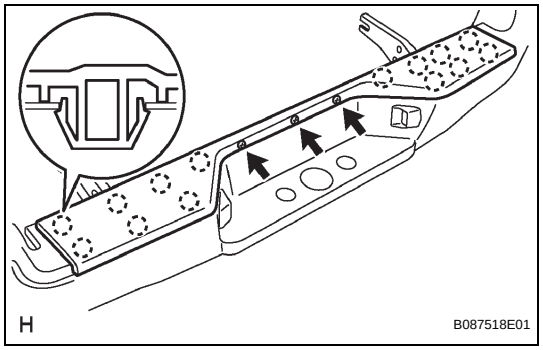

11. INSTALL REAR BUMPER PLATE

(a) Engage the 14 claws and install the rear bumper No. 1 plate.

(b) Install the 3 clips.

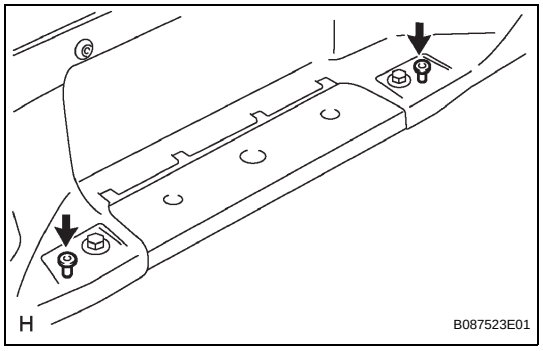

12. INSTALL REAR BUMPER COVER

(a) Install the 2 nuts into the rear bumper bar.

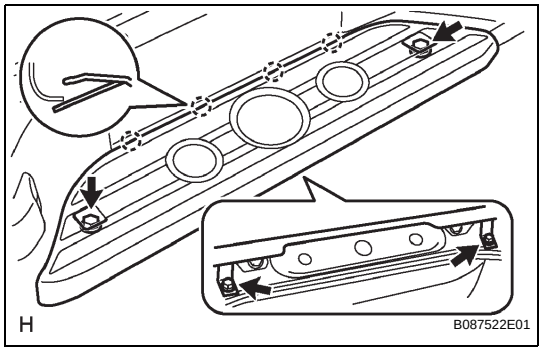

(b) Engage the 4 claws and install the rear bumper pad center.

(c) Tighten the 4 bolts.

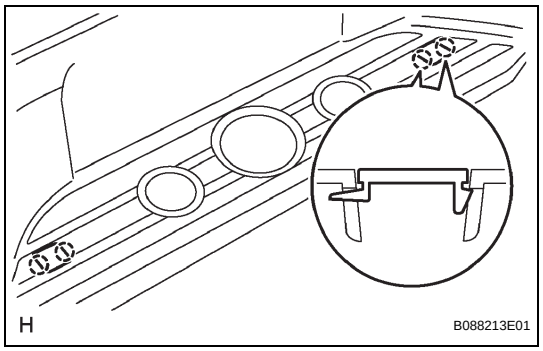

(d) Engage the 2 claws and install the rear bumper cover lower.
HINT:
Follow the same procedures as for the opposite side.

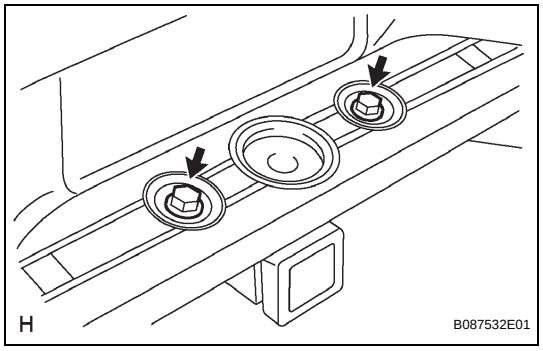

(e) w/ Towing Hitch:
(1) Install the hitch ball.
(2) Tighten the 2 bolts.

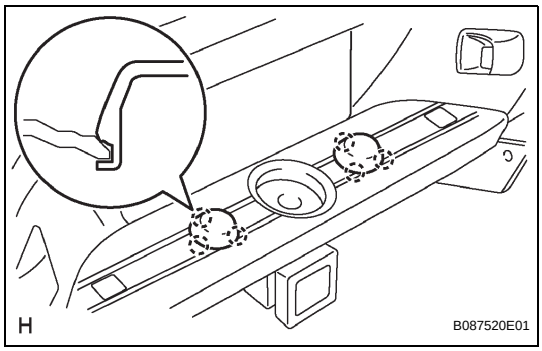

(3) Engage the 3 claws and remove the receiver hitch cap.
HINT:
Follow the same procedures as for the opposite side.

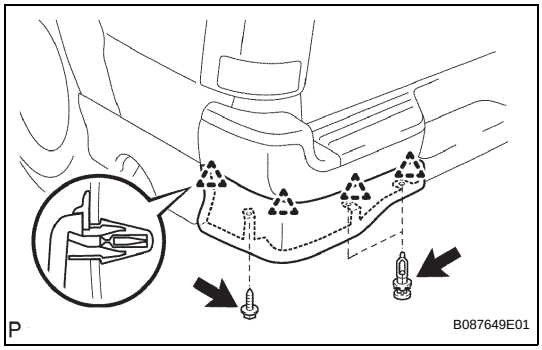

13. INSTALL REAR BUMPER SPOILER LH (for X-Runner)
(a) Engage the 4 clips and install the rear bumper spoiler.
(b) Tighten the screw.
(c) Install the 2 clips.

14. INSTALL REAR BUMPER SPOILER RH (for X-Runner)
HINT:
Follow the same procedures as for the rear bumper spoiler LH.

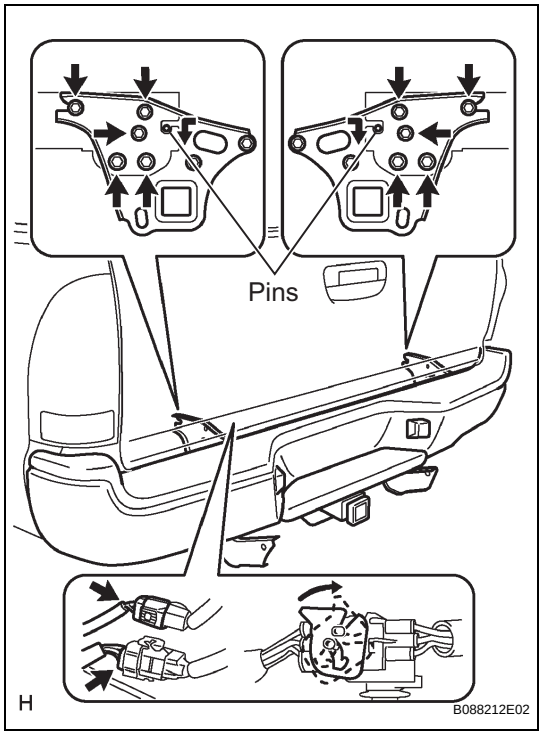

15. INSTALL REAR BUMPER BAR
(a) w/ Towing hitch:
(1) Engage the 2 pins and remove the rear bumper bar.
(2) Tighten the 8 bolts.
Torque: 90 N*m (920 kgf*cm, 67 ft.*lbf)
(3) Connect the 2 No. 3 wire frame connectors.

ET

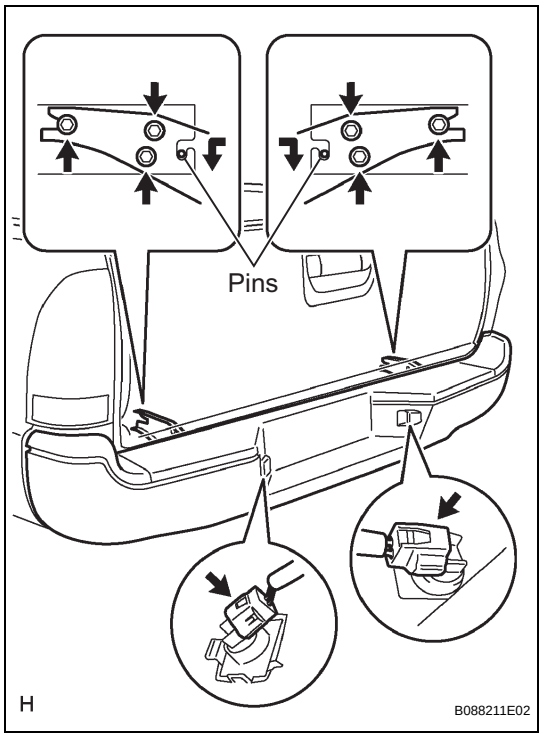

(b) w/o Towing hitch:
(1) Engage the 2 pins and install the rear bumper bar.
(2) Tighten the 6 bolts.
Torque: 90 N*m (920 kgf*cm, 67 ft.*lbf)
(3) Connect the 2 license lamp connectors.

16. CONNECT CABLE TO NEGATIVE BATTERY TERMINAL
Torque: 3.9 N*m (40 kgf*cm, 35 in.*lbf)

INSTALLATION

CAUTION:
Some of these service operations affect the SRS airbag system. Read the precautionary notices concerning the SRS airbag system before servicing (See page RS-1).

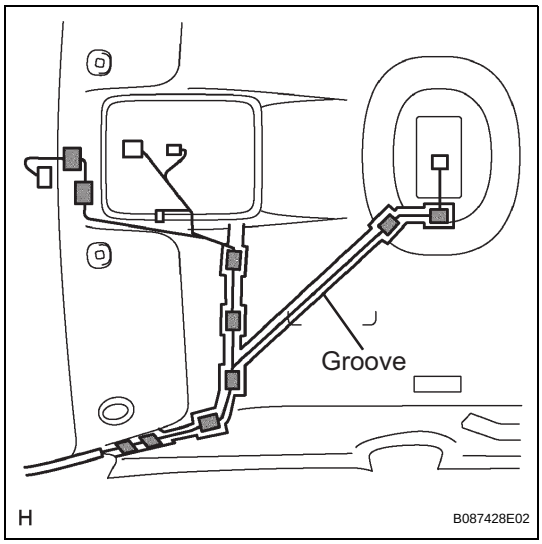

1. INSTALL ROOF WIRE

(a) w/ EC mirror:
  (1) Install the roof wire with 8 new tapes, as shown in the illustration.

(b) w/o EC mirror:
  (1) Install the roof wire with 8 new tapes, as shown in the illustration.

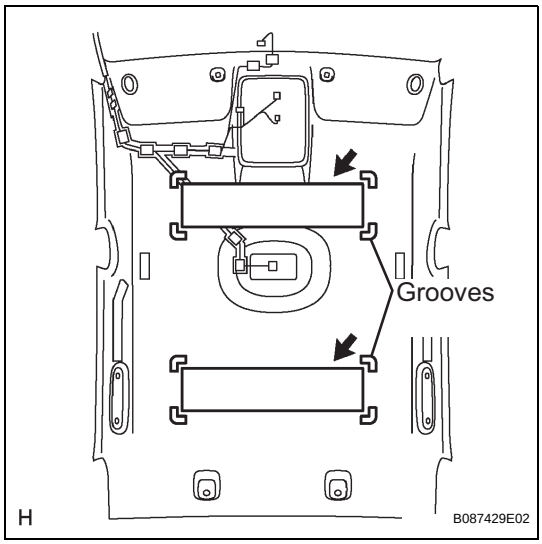

2. INSTALL ROOF HEADLINING PAD

(a) Install 2 new roof headlining pads onto the roof headlining.

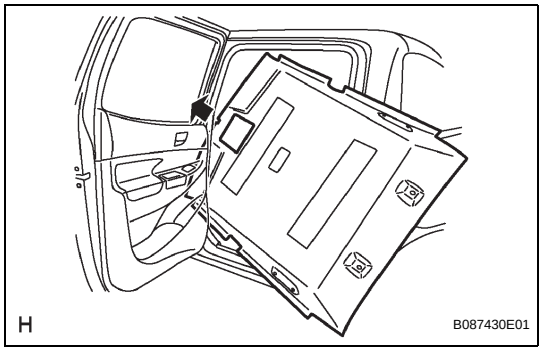

3. INSTALL ROOF HEADLINING ASSEMBLY

(a) Install the roof headlining into the vehicle.

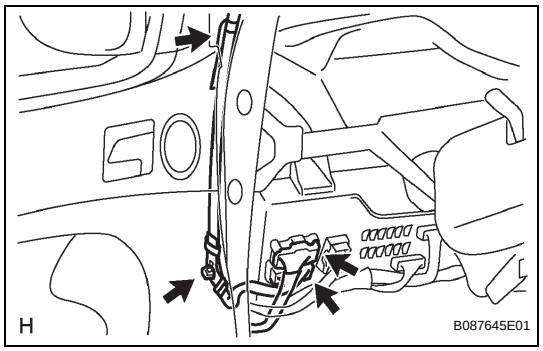

(b) Install the 2 wire harness clamps.
(c) Connect the roof wire connector.
(d) Connect the frame wire connector.

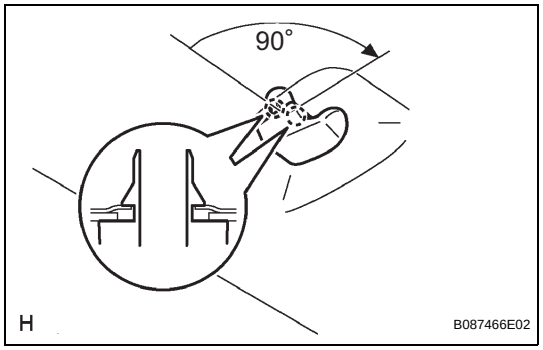

4. INSTALL COAT HOOK

HINT:
Follow the same procedures as for the opposite side.
(a) Turn the coat hook 90° clockwise and install it.

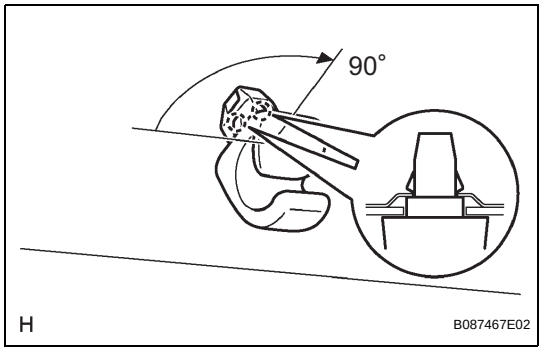

5. INSTALL VISOR HOLDER

HINT:
Follow the same procedures as for the opposite side.
(a) Turn the visor holder 90° clockwise and install it.

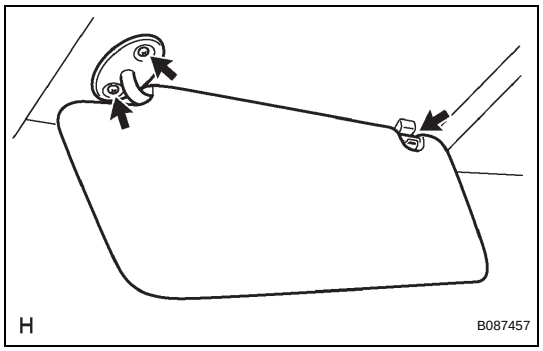

6. INSTALL VISOR ASSEMBLY LH

(a) Install the visor into the visor holder.
(b) Tighten the 2 screws.

7. INSTALL VISOR ASSEMBLY RH

HINT:
Follow the same procedures as for the visor assembly LH.

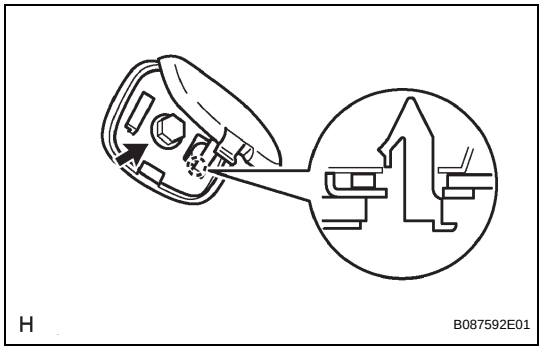

8. INSTALL ASSIST GRIP PLUG (w/ Curtain Shield Airbag)

HINT:
Follow the same procedures as for the opposite side.
(a) Engage the claw and install the assist grip plug.
(b) Tighten the screw.

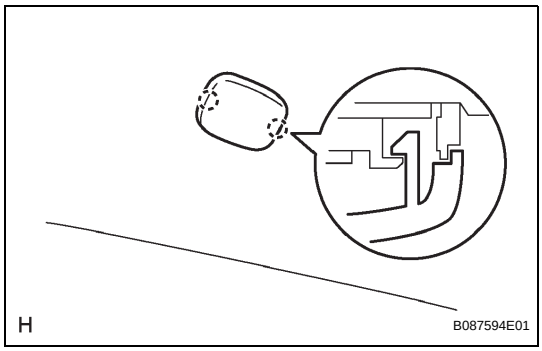

(c) Engage the 2 claws and close the cover.

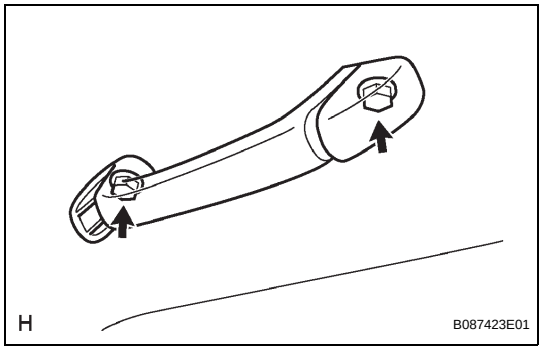

9. INSTALL ASSIST GRIP SUB-ASSEMBLY

HINT:

Follow the same procedures as for the opposite side.

(a) Install the assist grip with the 2 screws.

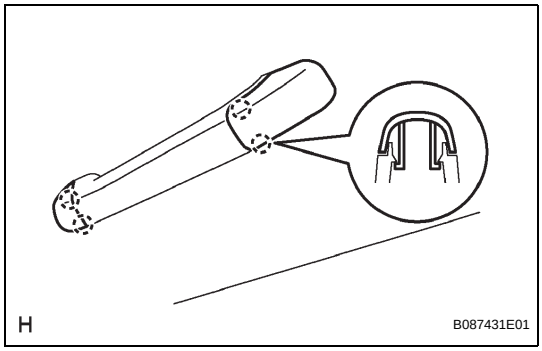

(b) Engage the 2 claws and close the cover.

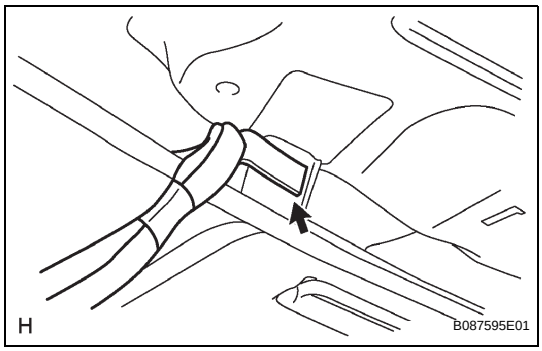

10. INSTALL ROOF CONSOLE BOX ASSEMBLY

(a) Install the wire harness clamp.

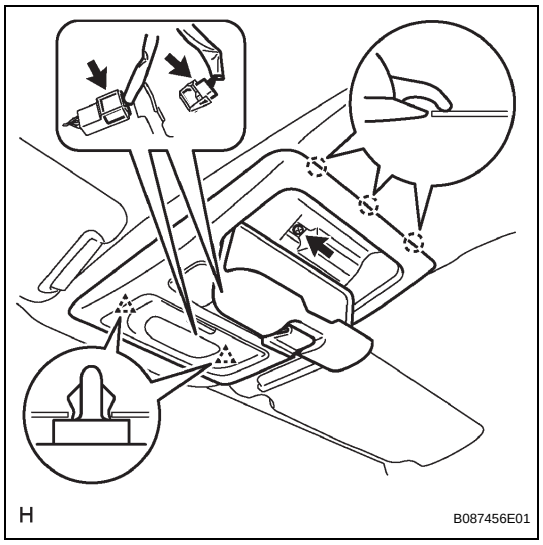

(b) Connect the accessory meter connector and map lamp connector.
(c) Engage the 2 clips and 3 claws and install the map lamp.
(d) Tighten the screw.

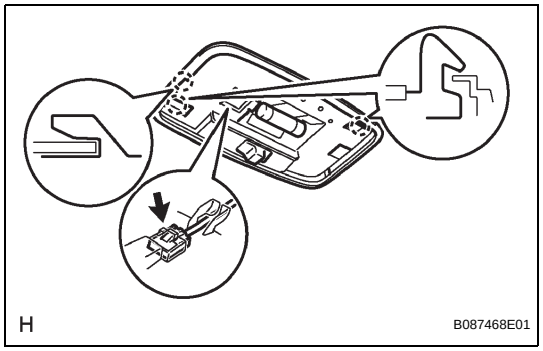

11. INSTALL ROOM LIGHT ASSEMBLY
(a) Connect the room light connector.
(b) Engage the 3 claws and install the room light.

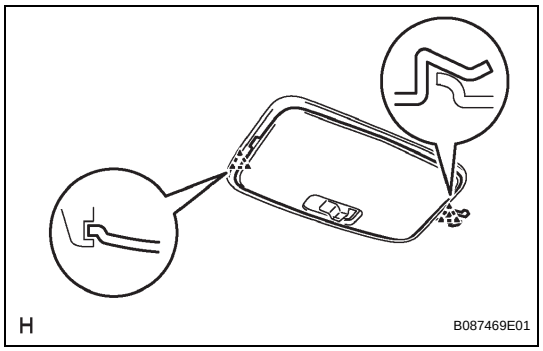

(c) Engage the 2 claws and install the room light lens.

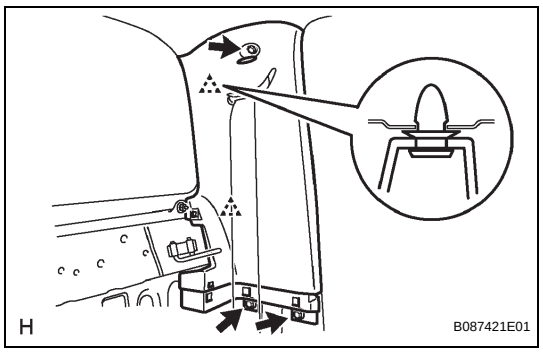

12. INSTALL QUARTER INSIDE TRIM BOARD LH
(a) Engage the 2 clips and install the quarter inside trim board.
(b) Tighten the 3 screws.

IR

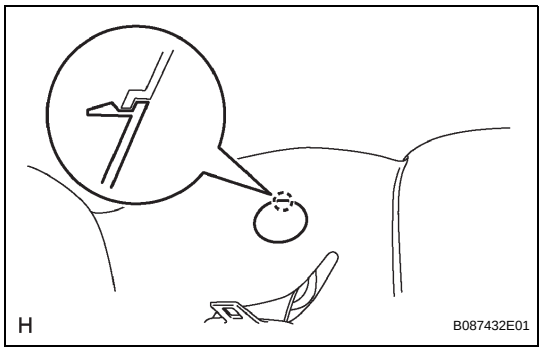

(c) Engage the claw and close the cover.

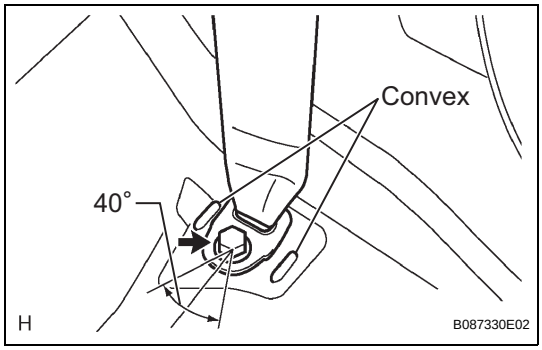

(d) Install the floor anchor of the rear seat belt outer with the bolt.
Torque: 42 N*m (430 kgf*cm, 31 ft.*lbf)
NOTICE:
- **Make sure that the rear seat outer belt is oriented in the correct direction when installing.**
- **Be careful not to place the rear seat outer belt over the convex areas of the floor panel.**

13. INSTALL QUARTER INSIDE TRIM BOARD RH
HINT:
Follow the same procedures as for the quarter inside trim board LH.

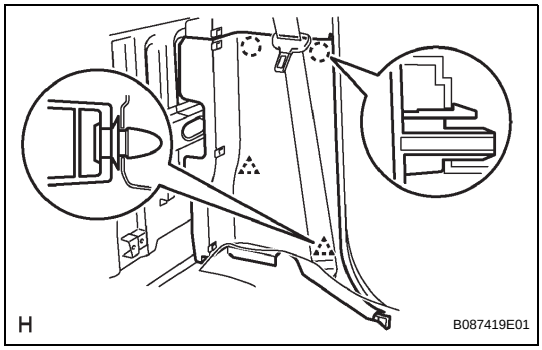

14. INSTALL QUARTER TRIM LOWER PANEL LH
(a) Engage the 2 claws and 2 clips, and install the quarter trim lower panel.

15. INSTALL QUARTER TRIM LOWER PANEL RH
HINT:
Follow the same procedures as for the quarter trim lower panel LH.

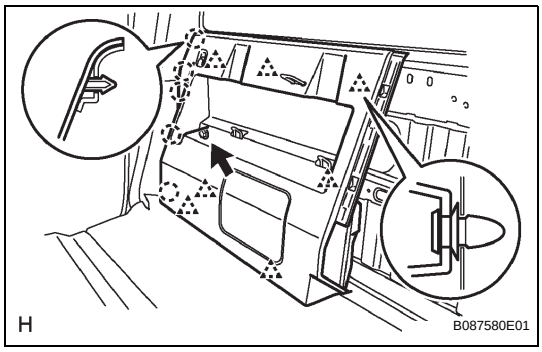

16. INSTALL LUGGAGE COMPARTMENT SIDE TRAY RH
(a) w/ Woofer:
(1) Engage the 5 claws and 7 clips, and install the luggage compartment side tray.
(2) Tighten the bolt.

IR

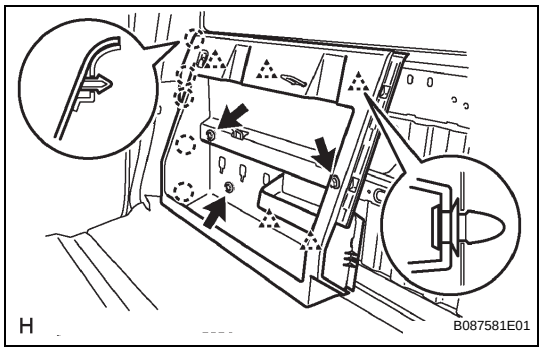

(b) w/o Woofer:
(1) Engage the 5 claws and 5 clips, and install the luggage compartment side tray.
(2) Tighten the 3 bolts.

17. INSTALL REAR SEAT BACK CENTER HINGE SUB-ASSEMBLY (See page SE-77)

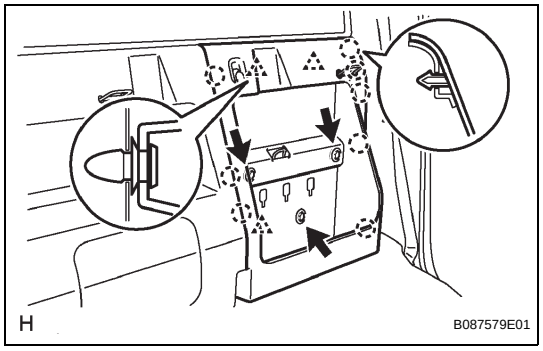

18. INSTALL LUGGAGE COMPARTMENT SIDE TRAY LH
(a) Engage the 8 claws and 3 clips, and install the luggage compartment side tray.
(b) Tighten the 3 bolts.

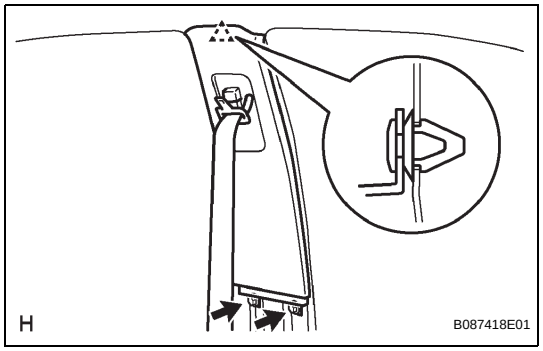

19. INSTALL CENTER PILLAR UPPER GARNISH LH
(a) Engage the clip and install the center pillar upper garnish.
(b) Tighten the 2 screws.

20. INSTALL CENTER PILLAR UPPER GARNISH RH
HINT:
Follow the same procedures as for the center pillar upper garnish LH.

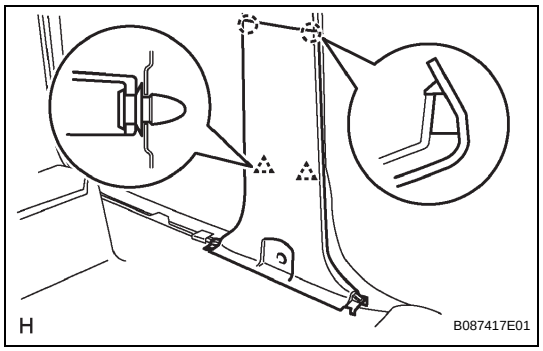

21. INSTALL CENTER PILLAR LOWER GARNISH LH
(a) Engage the 2 claws and 2 clips, and install the center pillar lower garnish.

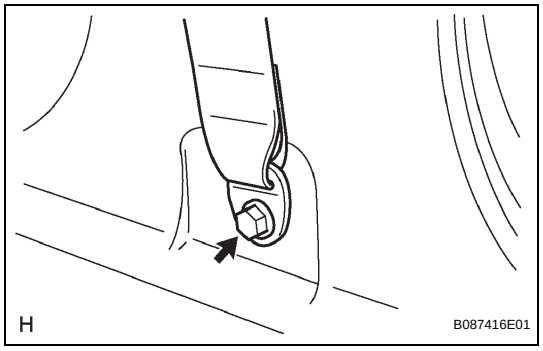

(b) Install the floor anchor of the front seat outer belt with the bolt.
Torque: 42 N*m (430 kgf*cm, 31 ft.*lbf)

22. INSTALL CENTER PILLAR LOWER GARNISH RH
HINT:
Follow the same procedures as for the center pillar lower garnish LH.

IR

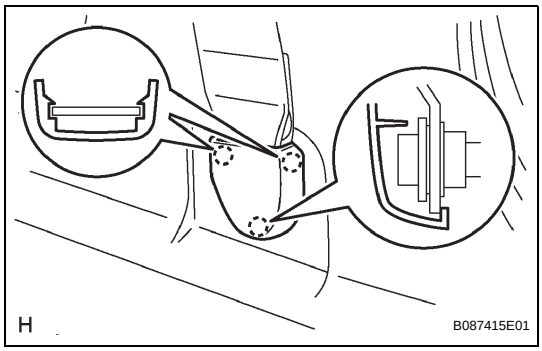

23. **INSTALL LAP BELT OUTER ANCHOR COVER**
HINT:
Follow the same procedures as for the opposite side.
(a) Engage the 3 claws and install the lap belt outer anchor cover.

24. **INSTALL INSTRUMENT PANEL SUB-ASSEMBLY (See page IP-18)**

25. **CONNECT PASSENGER AIRBAG CONNECTOR**

26. **INSTALL INSTRUMENT SIDE PANEL (See page IP-20)**

27. **INSTALL INSTRUMENT LOWER COVER SUB-ASSEMBLY (See page IP-20)**

28. **INSTALL INSTRUMENT LOWER PANEL (See page IP-20)**

29. **INSTALL INSTRUMENT LOWER PANEL FINISH PANEL SUB-ASSEMBLY (See page IP-20)**

30. **INSTALL GLOVE COMPARTMENT DOOR ASSEMBLY (See page IP-20)**

31. **INSTALL INSTRUMENT CENTER CLUSTER FINISH PANEL SUB-ASSEMBLY (See page IP-21)**

32. **INSTALL COMBINATION METER ASSEMBLY (See page IP-21)**

33. **INSTALL INSTRUMENT CLUSTER FINISH PANEL SUB-ASSEMBLY (See page IP-21)**

34. **INSTALL INSTRUMENT LOWER PANEL FINISH PANEL (See page IP-22)**

35. **CONNECT HOOD LOCK CONTROL LEVER SUB-ASSEMBLY (See page ED-8)**

36. **INSTALL RADIO RECEIVER ASSEMBLY (See page AV-70)**

37. **INSTALL AIR CONDITIONING CONTROL ASSEMBLY (See page IP-22)**

38. **INSTALL FRONT CONSOLE BOX**
(a) for Automatic Transmission:
(1) Install the front console box (See page IP-24).
(b) for Manual Transmission:
(1) Install the front console box (See page IP-23).

39. **INSTALL INSTRUMENT PANEL CUP HOLDER TRAY (for Automatic Transmission) (See page IP-24)**

40. **INSTALL REAR CONSOLE BOX ASSEMBLY (See page IP-24)**

41. **INSTALL REAR CONSOLE UPPER PANEL SUB-ASSEMBLY**
(a) for Automatic Transmission:
(1) Install the rear console upper panel sub-assembly (See page IP-25).

(b) for Manual Transmission:
(1) Install the rear console upper panel sub-assembly (See page IP-25).

42. INSTALL INSTRUMENT PANEL UNDER TRAY (for Pedal Type Parking Brake) (See page IP-25)

43. INSTALL INSTRUMENT PANEL HOLE COVER (for Lever Type Parking Brake) (See page IP-25)

44. INSTALL FRONT PILLAR GARNISH LH

(a) Install the 3 wire harness clamps (LH side only).

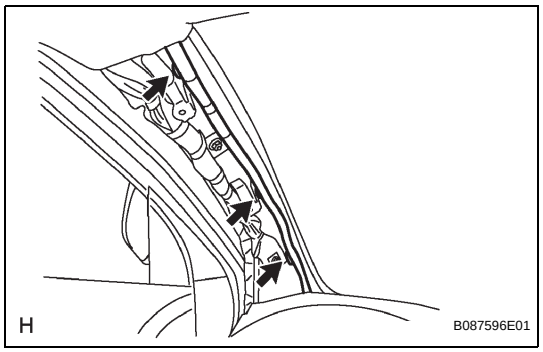

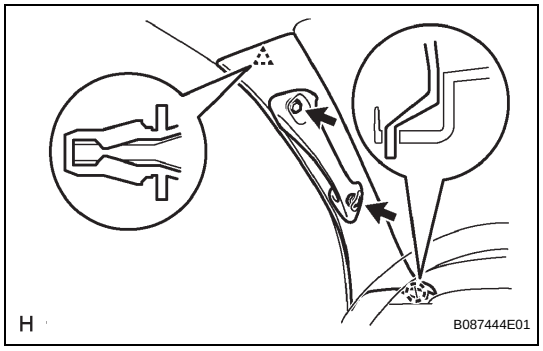

(b) Engage the claw and clip, and install the front pillar garnish.
(c) Tighten the 2 screws.

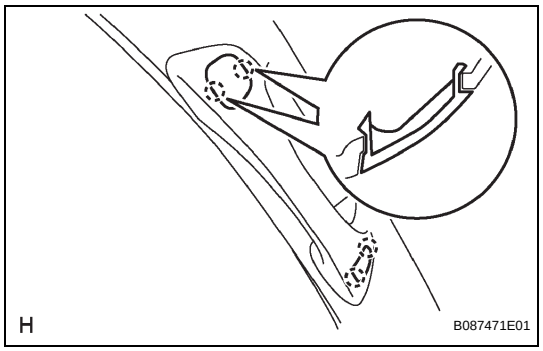

(d) Engage the 2 claws and install the assist grip plug.
HINT:
Follow the same procedures as for the opposite side.

45. INSTALL FRONT PILLAR GARNISH RH

HINT:
Follow the same procedures as for the front pillar garnish LH.

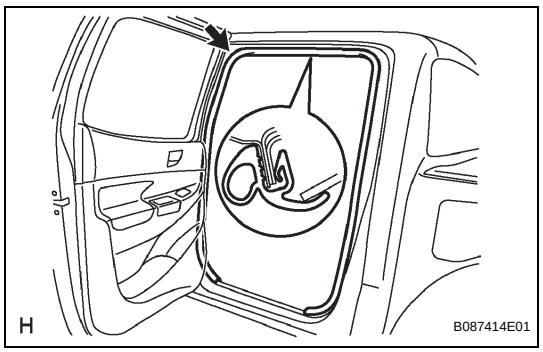

46. INSTALL REAR DOOR OPENING TRIM WEATHERSTRIP LH

(a) Install the rear door opening trim weatherstrip.

47. INSTALL REAR DOOR OPENING TRIM WEATHERSTRIP RH

HINT:
Follow the same procedures as for the rear door opening trim weatherstrip.

IR

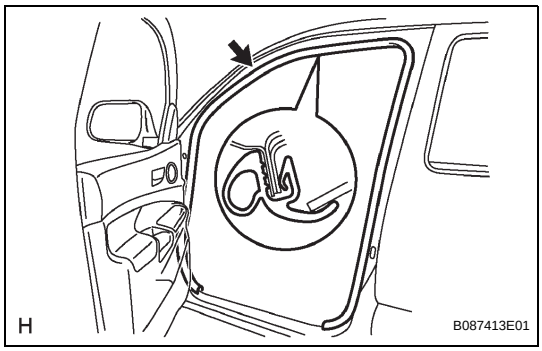

48. INSTALL FRONT DOOR OPENING TRIM WEATHERSTRIP LH

(a) Install the front door opening trim weatherstrip.

49. INSTALL FRONT DOOR OPENING TRIM WEATHERSTRIP RH

HINT:
Follow the same procedures as for the front door opening trim weatherstrip.

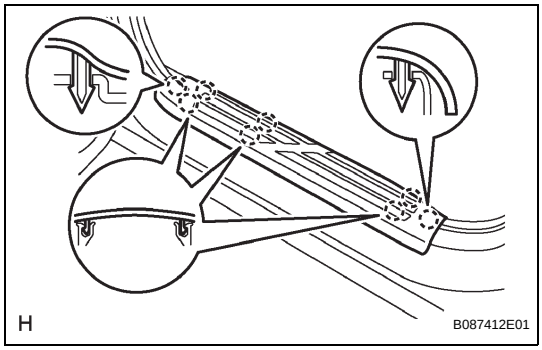

50. INSTALL REAR DOOR SCUFF PLATE LH

(a) Engage the 8 claws and install the rear door scuff plate.

51. INSTALL REAR DOOR SCUFF PLATE RH

HINT:
Follow the same procedures as for the rear door scuff plate LH.

IR

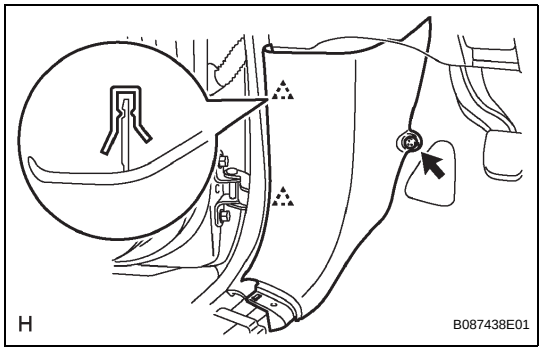

52. INSTALL COWL SIDE TRIM BOARD LH

(a) Engage the 2 clips and install the cowl side trim board.
(b) Install the clip.

53. INSTALL COWL SIDE TRIM BOARD RH

HINT:
Follow the same procedures as for the cowl side trim board LH.

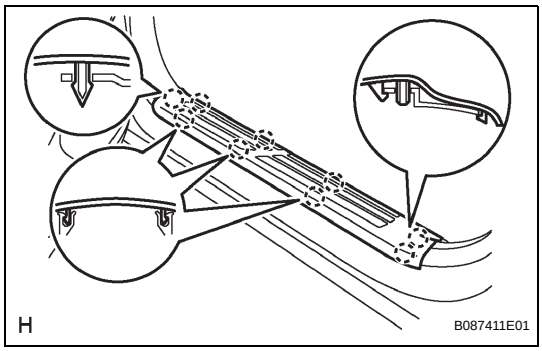

54. INSTALL FRONT DOOR SCUFF PLATE LH

(a) Engage the 9 claws and install the front door scuff plate.

55. INSTALL FRONT DOOR SCUFF PLATE RH

HINT:
Follow the same procedures as for the front door scuff plate LH.

56. INSTALL REAR SEAT BACK HINGE SUB-ASSEMBLY LH (See page SE-77)

57. INSTALL REAR SEAT BACK HINGE SUB-ASSEMBLY RH

HINT:
Follow the same procedures as for the rear seat back hinge sub-assembly LH.

58. INSTALL FRONT FLOOR FOOTREST (See page IR-1)

59. INSTALL REAR SEAT BACK ASSEMBLY LH (See page SE-77)

60. INSTALL REAR SEAT BACK ASSEMBLY RH (See page SE-90)

61. INSTALL REAR SEAT BACK HINGE COVER

(a) for LH Side:

(1) Install the rear seat back hinge cover (See page SE-78).

(b) for RH Side:

(1) Install the rear seat back hinge cover (See page SE-90).

62. INSTALL REAR SEAT CUSHION ASSEMBLY LH (See page SE-78)

63. INSTALL REAR SEAT CUSHION ASSEMBLY RH (See page SE-90)

64. INSTALL FRONT SEAT ASSEMBLY LH (See page SE-34)

65. INSTALL FRONT SEAT ASSEMBLY RH

(a) for Separate Folding Seat Type:

(1) Install the front seat assembly RH (See page SE-19).

(b) for Separate Seat Type Front Passenger Side:

(1) Install the front seat assembly RH (See page SE-48).

66. INSTALL SEAT TRACK COVER LH (See page SE-34)

67. INSTALL SEAT TRACK COVER RH

(a) for Separate Folding Seat Type:

(1) Install the seat track cover RH (See page SE-19).

(b) for Separate Seat Type Front Passenger Side:

(1) Install the seat track cover RH (See page SE-48).

68. INSTALL INNER REAR VIEW MIRROR ASSEMBLY (w/ EC Mirror)

(a) Engage the 2 claws and install the inner rear view mirror cover.

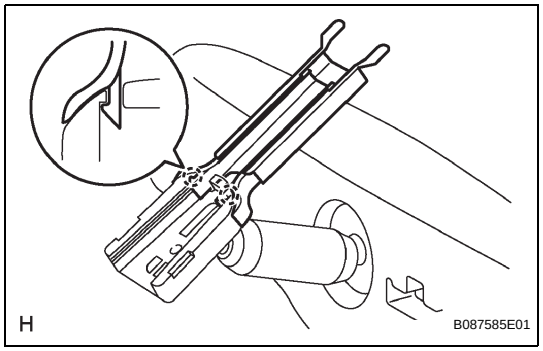

(b) Slide and install the inner rear view mirror.

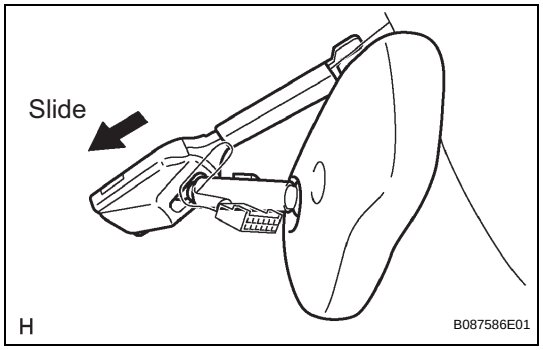

IR

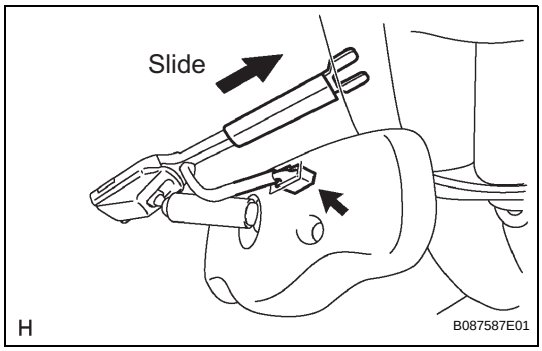

(c) Slide the inner rear view mirror cover.
(d) Connect the EC mirror connector.

69. CONNECT CABLE TO NEGATIVE BATTERY TERMINAL
Torque: 3.9 N*m (40 kgf*cm, 35 in.*lbf)

70. INSPECT SRS WARNING LIGHT
(See page RS-28)

REMOVAL

CAUTION:
Some of these service operations affect the SRS airbag system. Read the precautionary notices concerning the SRS airbag system before servicing (See page RS-1).

1. **DISCONNECT CABLE FROM NEGATIVE BATTERY TERMINAL**
   Wait for at least 90 seconds after disconnecting the cable to prevent the airbag from working.
2. **REMOVE FRONT FLOOR FOOTREST (See page IR-1)**
3. **REMOVE FRONT DOOR SCUFF PLATE LH**
   (a) Disengage the 8 claws and clip, and remove the front door scuff plate.
4. **REMOVE FRONT DOOR SCUFF PLATE RH**
   HINT:
   Follow the same procedures as for the front door scuff plate LH.

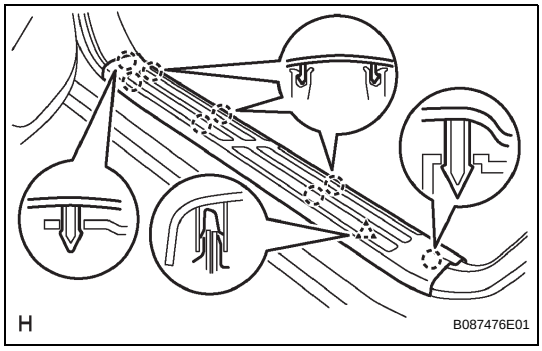

5. **REMOVE COWL SIDE TRIM BOARD LH**
   (a) Remove the clip.
   (b) Disengage the 2 clips and remove the cowl side trim board.
6. **REMOVE COWL SIDE TRIM BOARD RH**
   HINT:
   Follow the same procedures as for the cowl side trim board LH.

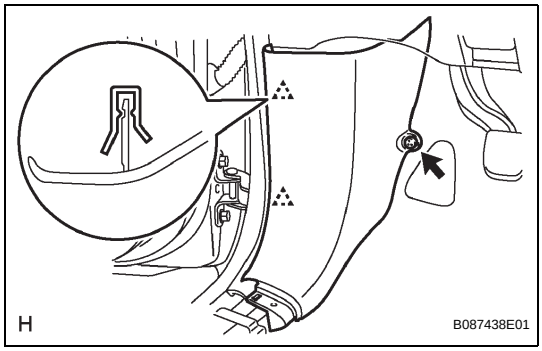

7. **REMOVE FRONT DOOR OPENING TRIM WEATHERSTRIP LH**
   (a) Remove the front door opening trim weatherstrip.
8. **REMOVE FRONT DOOR OPENING TRIM WEATHERSTRIP RH**
   HINT:
   Follow the same procedures as for the front door opening trim weatherstrip LH.

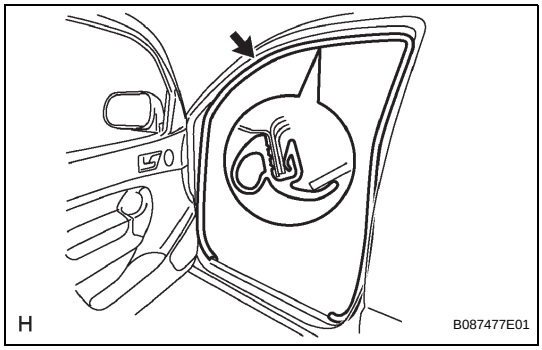

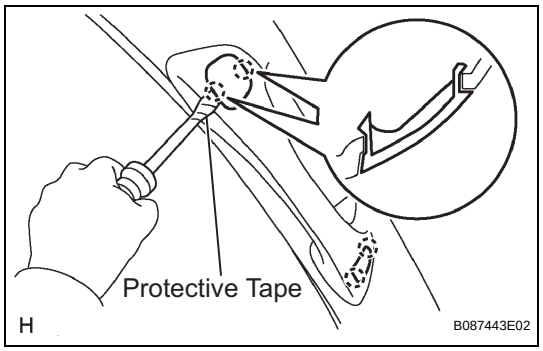

9. REMOVE FRONT PILLAR GARNISH LH

(a) Using a screwdriver with its tip taped in protective tape, disengage the 2 claws and remove the assist grip plug.
HINT:
Follow the same procedures as for the opposite side.

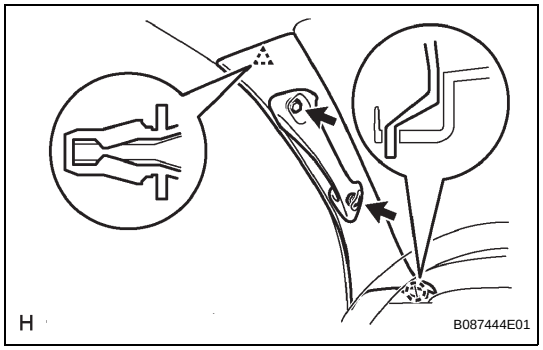

(b) Remove the 2 screws.
(c) Disengage the clip and claw and remove the front pillar garnish.

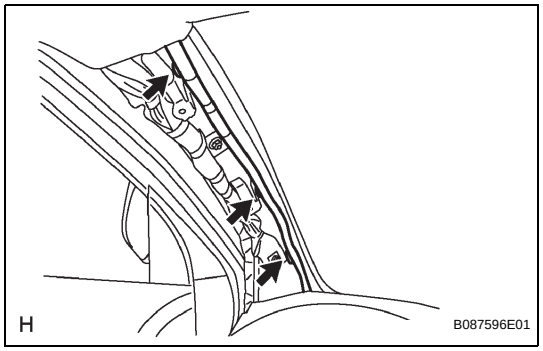

(d) for LH Side:
(1) Using a clip remover, remove the 3 wire harness clamps.

10. REMOVE FRONT PILLAR GARNISH RH

HINT:
Follow the same procedures as for the front pillar garnish LH.

11. REMOVE INSTRUMENT PANEL UNDER TRAY (for Pedal Type Parking Brake) (See page IP-9)

12. REMOVE INSTRUMENT PANEL HOLE COVER (for Lever Type Parking Brake) (See page IP-9)

13. REMOVE REAR CONSOLE UPPER PANEL SUB-ASSEMBLY

(a) for Automatic Transmission on Separate Seat Type:
(1) Remove the rear console upper panel sub-assembly (See page IP-9).
(b) for Manual Transmission on Separate Seat Type:
(1) Remove the rear console upper panel sub-assembly (See page IP-9).

14. REMOVE REAR CONSOLE BOX ASSEMBLY (for Separate Seat Type) (See page IP-10)

15. REMOVE INSTRUMENT PANEL CUP HOLDER TRAY (for Automatic Transmission on Separate Seat Type) (See page IP-10)

16. REMOVE FRONT CONSOLE BOX

(a) for Automatic Transmission on Separate Seat Type:
(1) Remove the front console box (See page IP-10).

(b) for Manual Transmission on Separate Seat Type:
(1) Remove the front console box (See page IP-11).

(c) for Automatic Transmission on Bench Seat Type:
(1) Remove the front console box (See page IP-11).

(d) for Manual Transmission on Bench Seat Type:
(1) Remove the front console box (See page IP-11).

17. **REMOVE AIR CONDITIONING CONTROL ASSEMBLY (See page IP-12)**

18. **REMOVE RADIO RECEIVER ASSEMBLY (See page AV-69)**

19. **SEPARATE HOOD LOCK CONTROL LEVER SUB-ASSEMBLY (See page ED-3)**

20. **REMOVE INSTRUMENT LOWER PANEL FINISH PANEL (See page IP-12)**

21. **REMOVE INSTRUMENT CLUSTER FINISH PANEL SUB-ASSEMBLY (See page IP-12)**

22. **REMOVE COMBINATION METER ASSEMBLY (See page IP-13)**

23. **REMOVE INSTRUMENT CENTER CLUSTER FINISH PANEL SUB-ASSEMBLY (See page IP-13)**

24. **REMOVE GLOVE COMPARTMENT DOOR ASSEMBLY (See page IP-13)**

25. **REMOVE INSTRUMENT LOWER PANEL FINISH PANEL SUB-ASSEMBLY (See page IP-14)**

26. **REMOVE INSTRUMENT LOWER PANEL (See page IP-14)**

27. **REMOVE INSTRUMENT LOWER COVER SUB-ASSEMBLY (See page IP-14)**

28. **REMOVE INSTRUMENT SIDE PANEL (See page IP-14)**

29. **DISCONNECT PASSENGER AIRBAG CONNECTOR (See page RS-576)**

30. **REMOVE INSTRUMENT PANEL SUB-ASSEMBLY (See page IP-14)**

31. **REMOVE BACK PANEL TRIM COVER**

(a) for Separate Seat Type and Bench Seat Type:
HINT:
Follow the same procedures as for the opposite side (for Bench Seat Type).
(1) Disengage the 6 claws and remove the back panel trim cover.

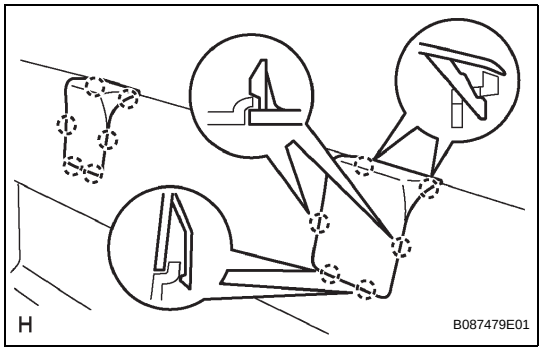

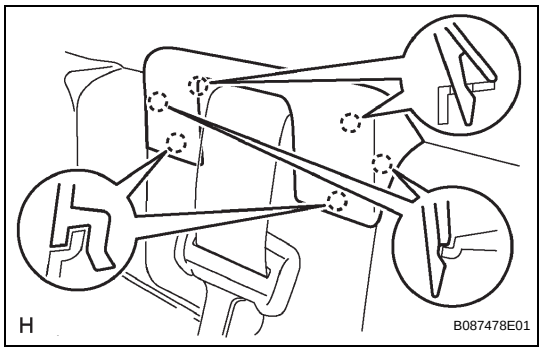

(b) for Bench Seat Type:
(1) Disengage the 6 claws and remove the back panel trim cover.

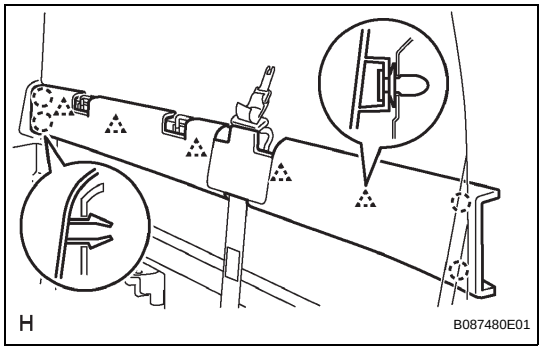

32. REMOVE BACK PANEL UPPER GARNISH
(a) Disengage the 4 claws and 5 clips, and remove the back panel upper garnish.

33. REMOVE JACK ASSEMBLY (for Separate Seat Type)

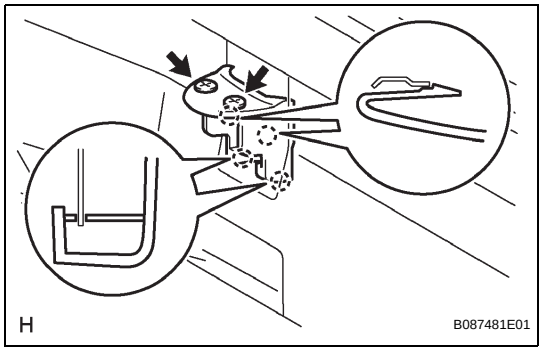

34. REMOVE BACK PANEL TRIM COVER (for Separate Seat Type)
(a) Remove the 2 clips.
(b) Disengage the 4 claws and remove the back panel trim cover.

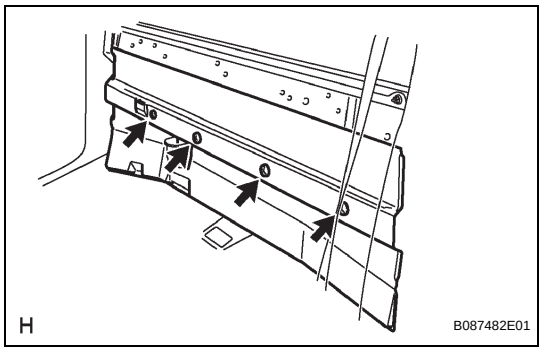

35. REMOVE BACK PANEL TRIM (for Separate Seat Type)
(a) Remove the 4 clips and back panel trim.

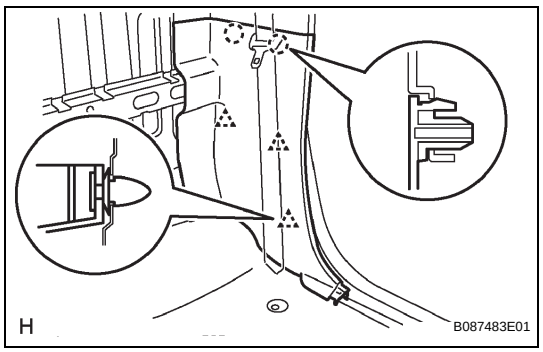

36. REMOVE QUARTER TRIM LOWER PANEL LH
(a) Disengage the 2 claws and 3 clips, and remove the quarter trim lower panel.

37. REMOVE QUARTER TRIM LOWER PANEL RH
HINT:
Follow the same procedures as for the quarter trim lower panel LH.

IR

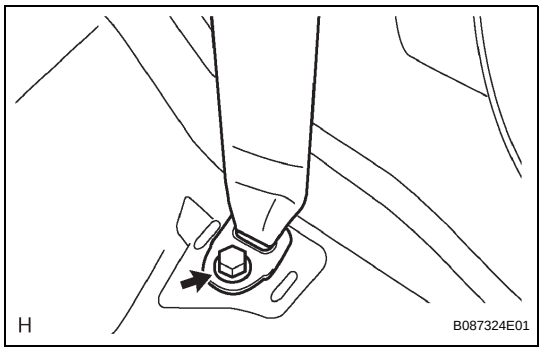

38. REMOVE QUARTER INSIDE TRIM BOARD LH

(a) for LH Side and Separate Seat Type RH side:
  (1) Remove the bolt and the floor anchor of the front seat outer belt.

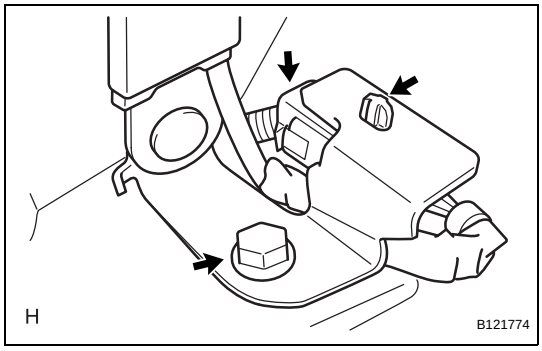

(b) for Bench Seat Type RH Side:
  (1) Remove the bolt and the floor anchor of the front seat outer belt.
  (2) Disconnect the belt tension sensor connector.
  (3) Remove the wiring harness clamp.

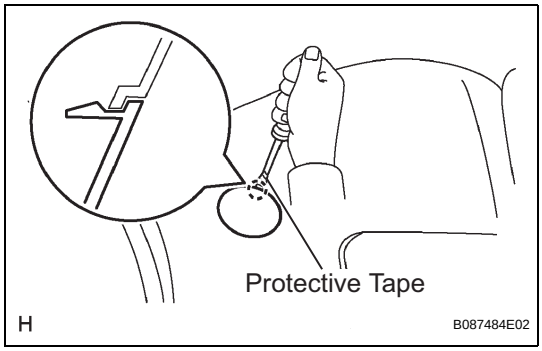

(c) Using a screwdriver with its tip taped in protective tape, disengage the claw and open the cover.

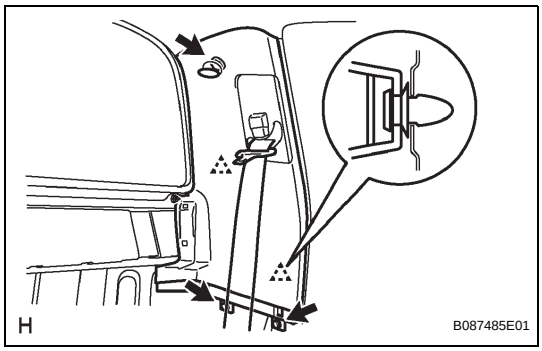

(d) Remove the 3 screws.
(e) Disengage the 2 clips and remove the quarter trim board.

39. REMOVE QUARTER INSIDE TRIM BOARD RH

HINT:
Follow the same procedures as for the quarter trim board LH.

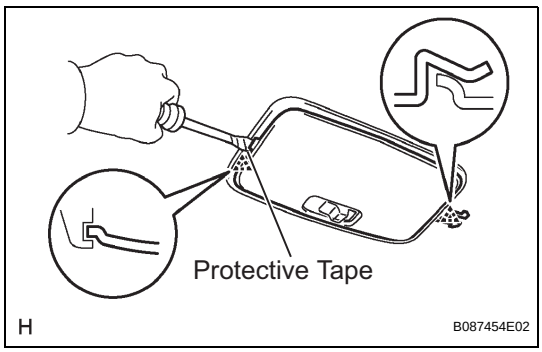

40. REMOVE ROOM LIGHT ASSEMBLY

(a) Using a screwdriver with its tip taped in protective tape, disengage the 2 claws and remove the room light lens.

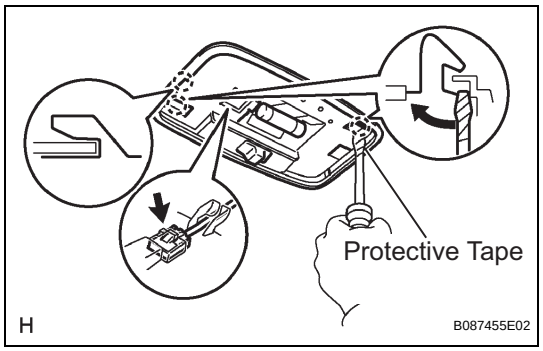

(b) Using a screwdriver with its tip taped in protective tape, disengage the 3 claws.
(c) Disconnect the room light connector and remove the room light.

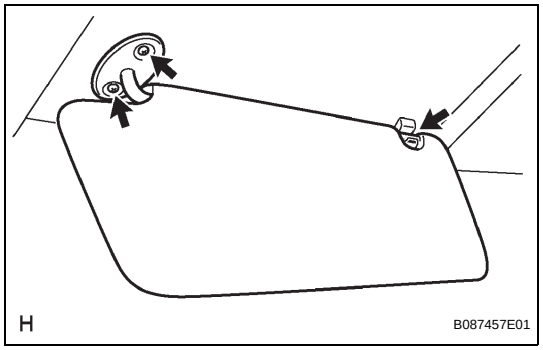

41. REMOVE VISOR ASSEMBLY LH
(a) Remove the 2 screws.
(b) Remove the visor from the visor holder.

42. REMOVE VISOR ASSEMBLY RH
HINT:
Follow the same procedures as for the visor assembly LH.

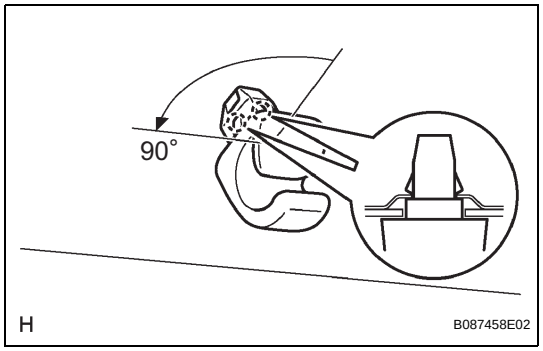

43. REMOVE VISOR HOLDER
HINT:
Follow the same procedures as for the opposite side.
(a) Turn the visor holder 90° counterclockwise and remove it.

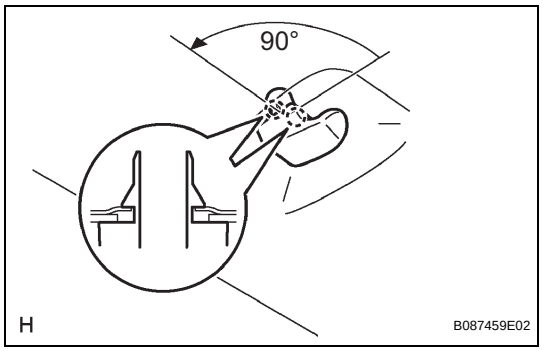

44. REMOVE COAT HOOK
HINT:
Follow the same procedures as for the opposite side.
(a) Turn the coat hook 90° counterclockwise and remove it.

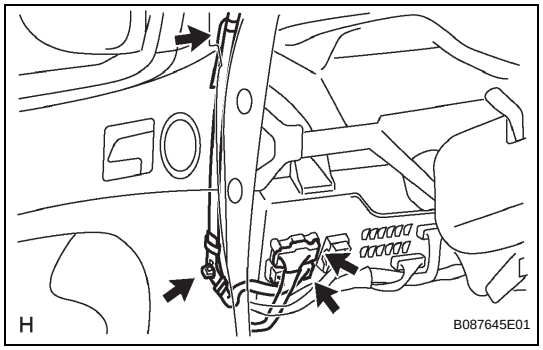

45. REMOVE ROOF HEADLINING ASSEMBLY
(a) Disconnect the frame wire connector.
(b) Disconnect the roof wire connector.
(c) Using a clip remover, remove the 2 wire harness clamps.

IR

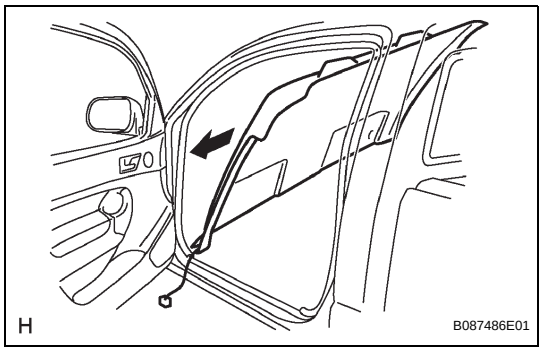

(d) Remove the roof headlining from the vehicle.

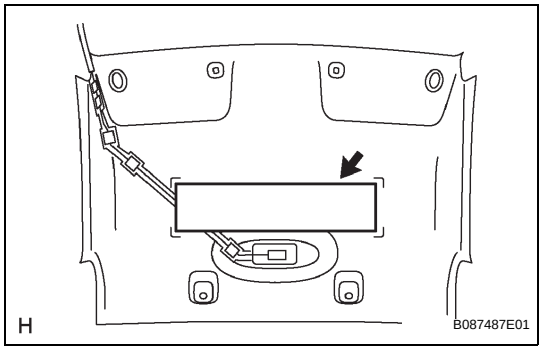

46. REMOVE ROOF HEADLINING PAD

(a) Remove the roof headlining pad from the roof headlining.

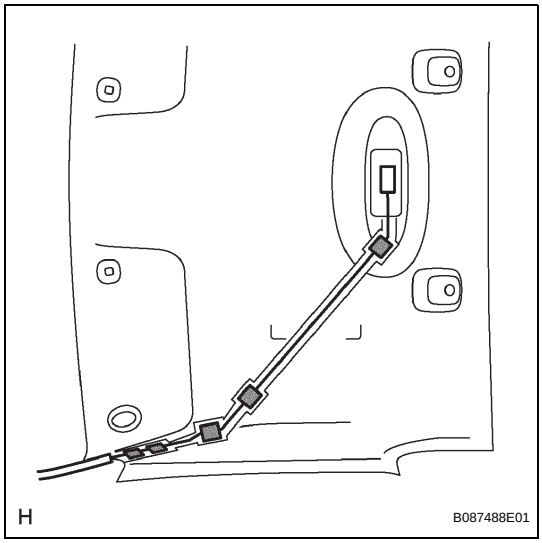

47. REMOVE ROOF WIRE

(a) Remove the 5 adhesive tapes and roof wire.

INSTALLATION

CAUTION:
Some of these service operations affect the SRS airbag system. Read the precautionary notices concerning the SRS airbag system before servicing (See page RS-1).

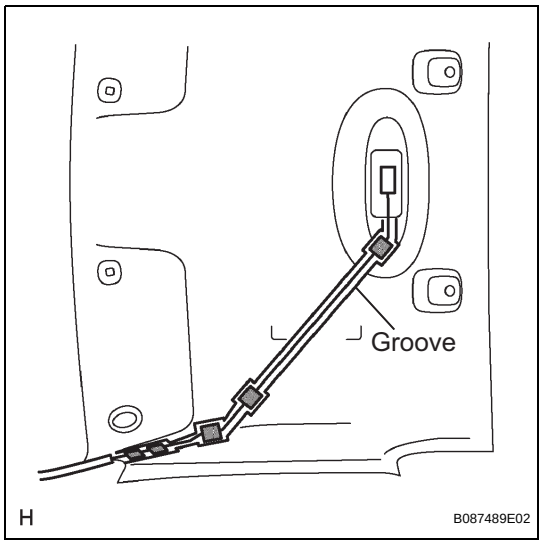

1. INSTALL ROOF WIRE

(a) Install the roof wire with 5 new adhesive tapes, as shown in the illustration.

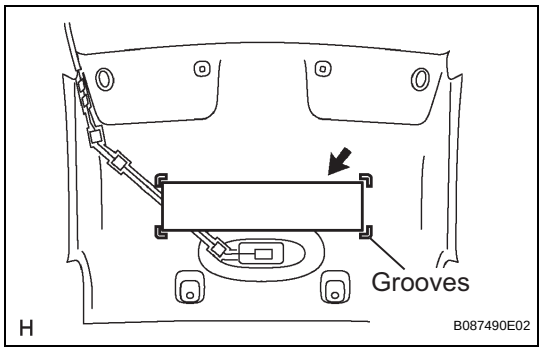

2. INSTALL ROOF HEADLINING PAD

(a) Install a new roof headlining pad onto the roof headlining, as shown in the illustration.

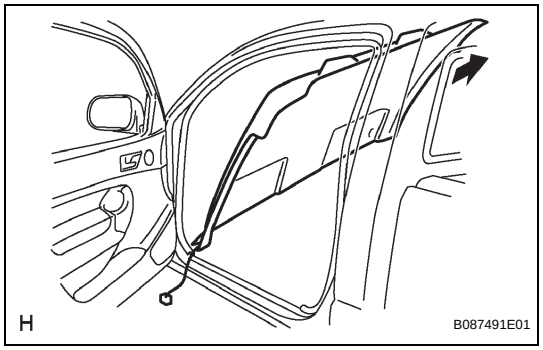

3. INSTALL ROOF HEADLINING ASSEMBLY

(a) Install the roof headlining into the vehicle.

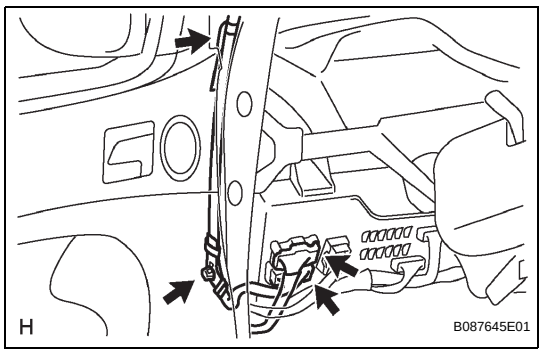

(b) Install the 2 wire harness clamps.
(c) Connect the roof wire connector.
(d) Connect the frame wire connector.

IR

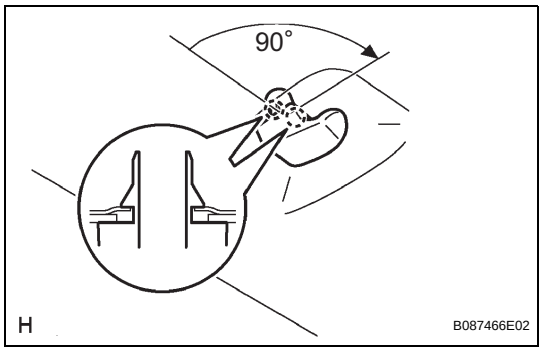

4. INSTALL COAT HOOK

HINT:

Follow the same procedures as for the opposite side.

(a) Turn the coat hook 90° clockwise and install it.

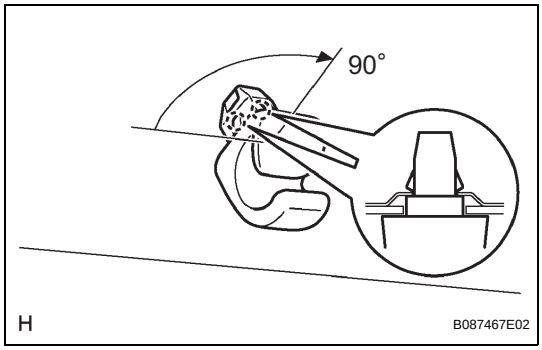

5. INSTALL VISOR HOLDER

HINT:

Follow the same procedures as for the opposite side.

(a) Turn the visor holder 90° clockwise and install it.

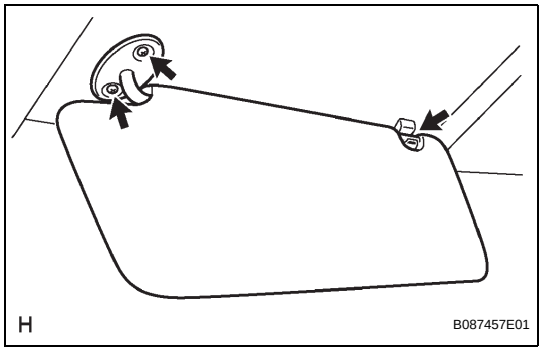

6. INSTALL VISOR ASSEMBLY LH

(a) Install the visor into the visor holder.

(b) Install the 2 screws.

7. INSTALL VISOR ASSEMBLY RH

HINT:

Follow the same procedures as for the visor assembly LH.

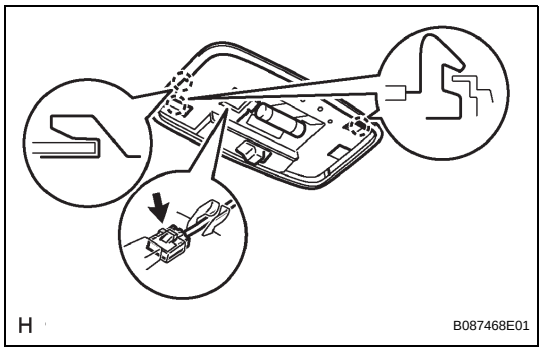

8. INSTALL ROOM LIGHT ASSEMBLY

(a) Connect the room light connector.

(b) Engage the 3 claws and install the room light.

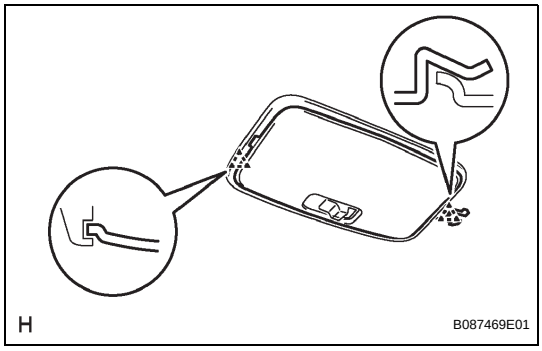

(c) Engage the 2 claws and install the room light lens.

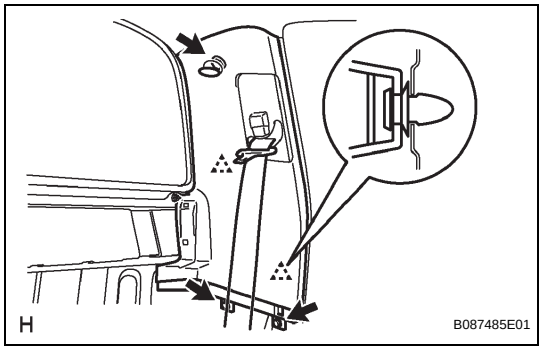

9. INSTALL QUARTER INSIDE TRIM BOARD LH

(a) Engage the 2 clips and install the quarter trim board.

(b) Tighten the 3 screws.

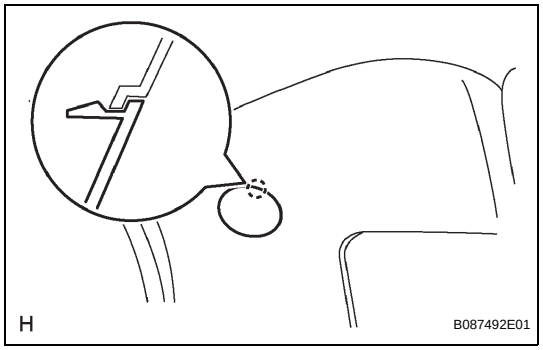

(c) Engage the claw and close the cover.

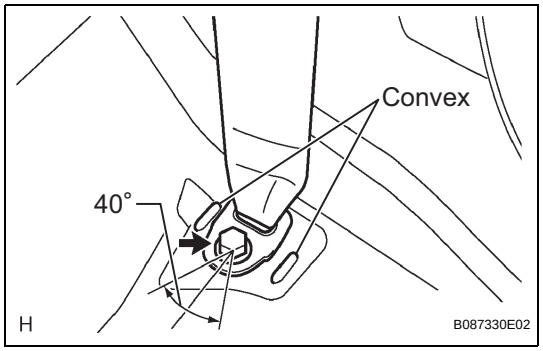

(d) for LH Side and Separate Seat Type RH Side:

(1) Install the floor anchor of the front seat outer belt with the bolt.

Torque: 42 N*m (430 kgf*cm, 31 ft.*lbf)

NOTICE:

- **Make sure that the floor anchor of the front seat outer belt is oriented in the correct direction when installing.**
- **Be careful not to place the floor anchor of the front seat outer belt over the convex areas of the floor panel.**

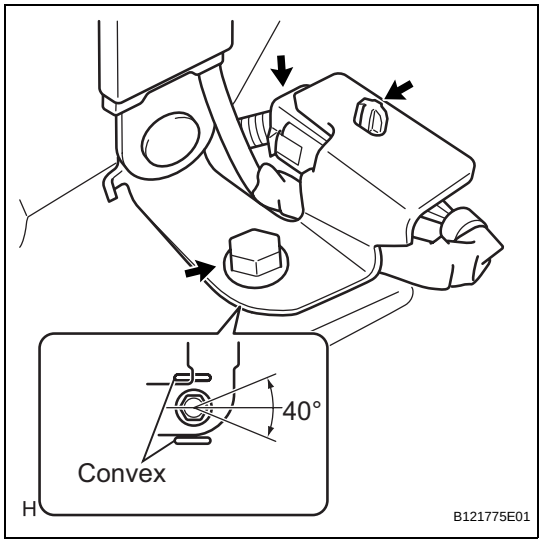

(e) for Bench Seat Type RH Side:

(1) Install the wiring harness clamp.

(2) Connect the belt tension sensor connector.

(3) Install the floor anchor of the front seat outer belt with the bolt.

Torque: 42 N*m (430 kgf*cm, 31 ft.*lbf)

NOTICE:

- **Make sure that the floor anchor of the front seat outer belt is oriented in the correct direction when installing.**
- **Be careful not to place the floor anchor of the front seat outer belt over the convex areas of the floor panel.**

10. INSTALL QUARTER INSIDE TRIM BOARD RH

HINT:

Follow the same procedures as for the quarter inside trim board LH.

IR

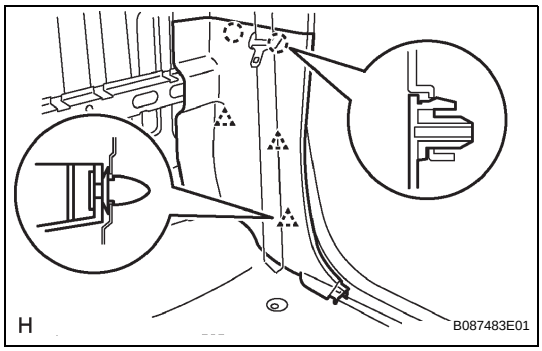

11. INSTALL QUARTER TRIM LOWER PANEL LH

(a) Engage the 2 claws and 3 clips, and install the quarter trim lower panel.

12. INSTALL QUARTER TRIM LOWER PANEL RH

HINT:

Follow the same procedures as for the quarter trim lower panel LH.

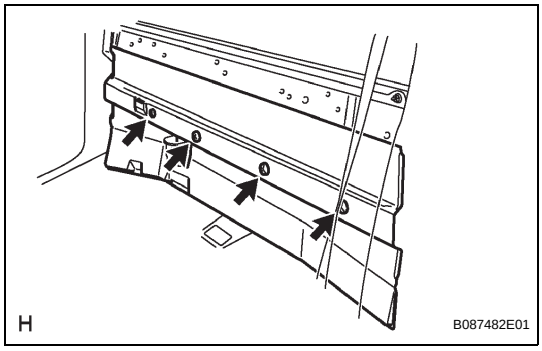

13. INSTALL BACK PANEL TRIM COVER (for Separate Seat Type)

(a) Install the back panel trim with the 4 clips.

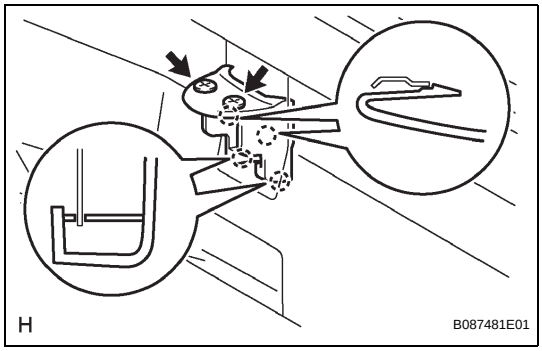

14. INSTALL BACK PANEL TRIM COVER (for Separate Seat Type)

(a) Engage the 4 claws and install the back panel trim cover.

(b) Install the 2 clips.

15. INSTALL JACK ASSEMBLY (for Separate Seat Type)

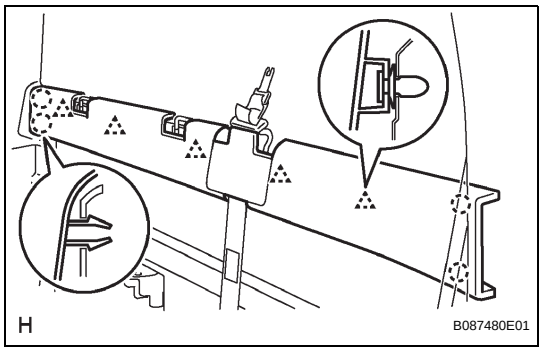

16. INSTALL BACK PANEL UPPER GARNISH

(a) Engage the 4 claws and 5 clips, and install the back panel upper garnish.

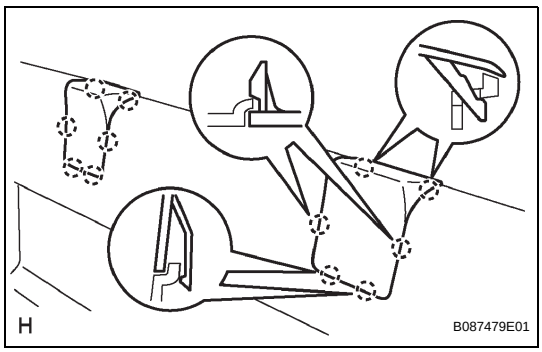

17. INSTALL BACK PANEL TRIM COVER

(a) for Separate Seat Type and Bench Seat Type:

(1) Engage the 6 claws and install the back panel trim cover.

HINT:

Follow the same procedures as for the opposite side (for Bench Seat Type).

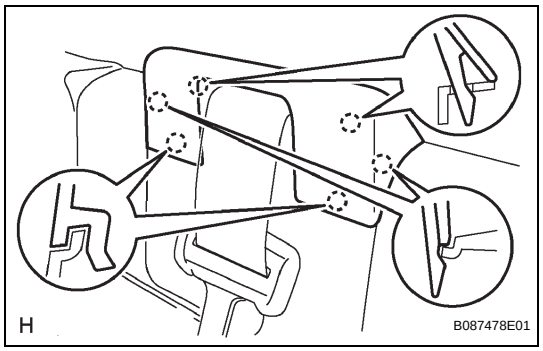

(b) for Bench Seat Type:
(1) Engage the 6 claws and install the back panel trim cover.

18. **INSTALL INSTRUMENT PANEL SUB-ASSEMBLY (See page IP-18)**
19. **CONNECT PASSENGER AIRBAG CONNECTOR**
20. **INSTALL INSTRUMENT SIDE PANEL (See page IP-20)**
21. **INSTALL INSTRUMENT LOWER COVER SUB-ASSEMBLY (See page IP-20)**
22. **INSTALL INSTRUMENT LOWER PANEL (See page IP-20)**
23. **INSTALL INSTRUMENT LOWER PANEL FINISH PANEL SUB-ASSEMBLY (See page IP-20)**
24. **INSTALL GLOVE COMPARTMENT DOOR ASSEMBLY (See page IP-20)**
25. **INSTALL INSTRUMENT CENTER CLUSTER FINISH PANEL SUB-ASSEMBLY (See page IP-21)**
26. **INSTALL COMBINATION METER ASSEMBLY (See page IP-21)**
27. **INSTALL INSTRUMENT CLUSTER FINISH PANEL SUB-ASSEMBLY (See page IP-21)**
28. **INSTALL INSTRUMENT LOWER PANEL FINISH PANEL (See page IP-22)**
29. **CONNECT HOOD LOCK CONTROL LEVER SUB-ASSEMBLY (See page ED-8)**
30. **INSTALL RADIO RECEIVER ASSEMBLY (See page AV-70)**
31. **INSTALL AIR CONDITIONING CONTROL ASSEMBLY (See page IP-22)**
32. **INSTALL FRONT CONSOLE BOX**
(a) for Automatic Transmission on Separate Seat Type:
(1) Install the front console box (See page IP-24).
(b) for Automatic Transmission on Bench Seat Type:
(1) Install the front console box (See page IP-23).
(c) for Manual Transmission on Separate Seat Type:
(1) Install the front console box (See page IP-23).
(d) for Manual Transmission on Bench Seat Type:
(1) Install the front console box (See page IP-22).
33. **INSTALL INSTRUMENT PANEL CUP HOLDER TRAY (for Automatic Transmission on Separate Seat Type) (See page IP-24)**
34. **INSTALL REAR CONSOLE BOX ASSEMBLY (for Separate Seat Type) (See page IP-24)**

35. INSTALL REAR CONSOLE UPPER PANEL SUB-ASSEMBLY

(a) for Automatic Transmission on Separate Seat Type:
  (1) Install the rear console upper panel sub-assembly (See page IP-25).

(b) for Manual Transmission on Separate Seat Type:
  (1) Install the rear console upper panel sub-assembly (See page IP-25).

36. INSTALL INSTRUMENT PANEL UNDER TRAY (for Pedal Type Parking Brake) (See page IP-25)

37. INSTALL INSTRUMENT PANEL HOLE COVER (for Lever Type Parking Brake) (See page IP-25)

38. INSTALL FRONT PILLAR GARNISH LH

(a) for LH Side:
  (1) Install the 3 wire harness clamps.

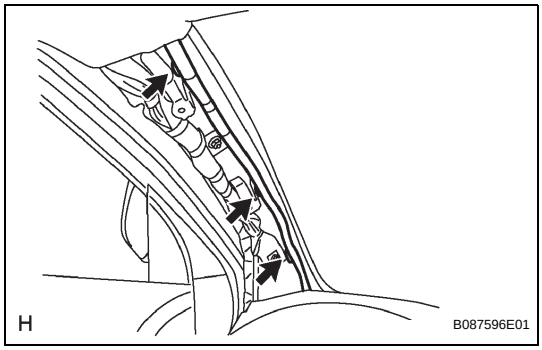

(b) Engage the claw and clip, and install the front pillar garnish.

(c) Tighten the 2 screws.

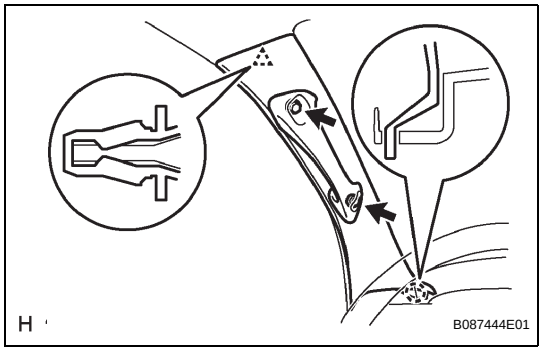

(d) Engage the 2 claws and install the assist grip plug.

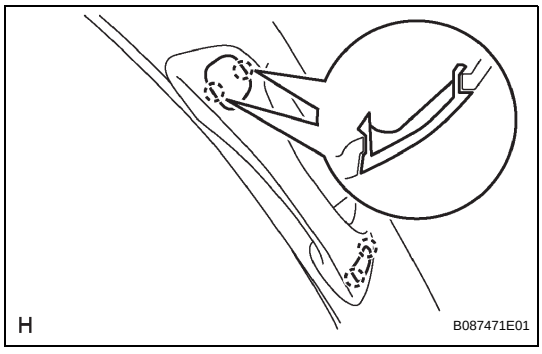

39. INSTALL FRONT PILLAR GARNISH RH

HINT:
Follow the same procedures as for the front pillar garnish LH.

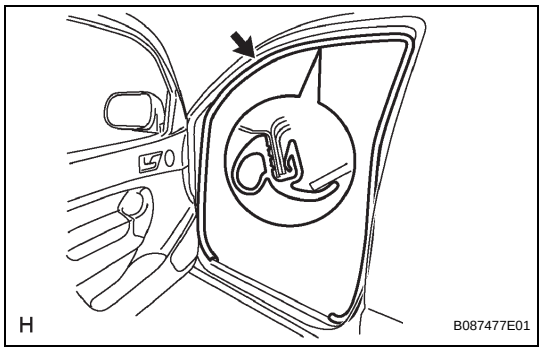

40. INSTALL FRONT DOOR OPENING TRIM WEATHERSTRIP LH

(a) Install the front door opening trim weatherstrip.

41. INSTALL FRONT DOOR OPENING TRIM WEATHERSTRIP RH

HINT:

Follow the same procedures as for the front door opening trim weatherstrip LH.

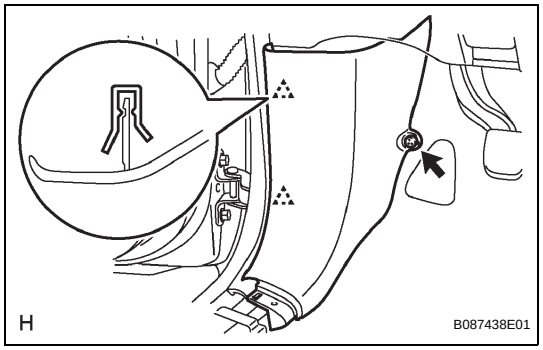

42. INSTALL COWL SIDE TRIM BOARD LH

(a) Engage the 2 clips and install the cowl side trim board.

(b) Install the clip.

43. INSTALL COWL SIDE TRIM BOARD RH

HINT:

Follow the same procedures as for the cowl side trim board LH.

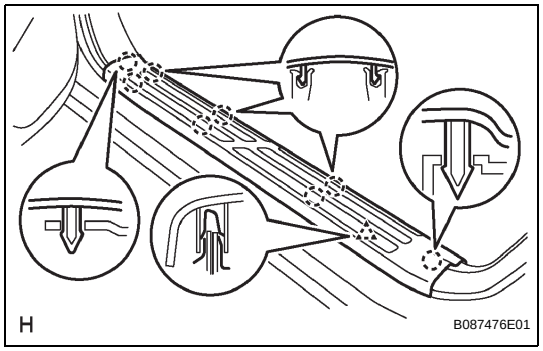

44. INSTALL FRONT DOOR SCUFF PLATE LH

(a) Engage the 8 claws and clip, and install the front door scuff plate.

45. INSTALL FRONT DOOR SCUFF PLATE RH

HINT:

Follow the same procedures as for the front door scuff plate LH.

46. INSTALL FRONT FLOOR FOOTREST (See page IR-1)

47. CONNECT CABLE TO NEGATIVE BATTERY TERMINAL

Torque: 3.9 N*m (40 kgf*cm, 35 in.*lbf)

48. INSPECT SRS WARNING LIGHT

(See page RS-28)

IR

REMOVAL

CAUTION:
Some of these service operations affect the SRS airbag system. Read the precautionary notices concerning the SRS airbag system before servicing (See page RS-1).

1. **DISCONNECT CABLE FROM NEGATIVE BATTERY TERMINAL**
   Wait for at least 90 seconds after disconnecting the cable to prevent the airbag from working.
2. **REMOVE INNER REAR VIEW MIRROR ASSEMBLY (w/ EC Mirror) (See page IR-11)**
3. **REMOVE FRONT FLOOR FOOTREST (See page IR-1)**
4. **REMOVE FRONT DOOR SCUFF PLATE LH**
   (a) Disengage the 9 claws and clip, and remove the front door scuff plate.

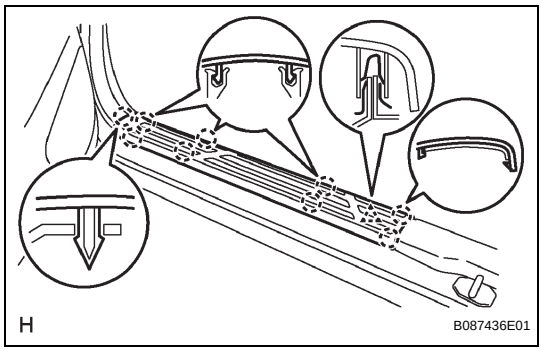

5. **REMOVE FRONT DOOR SCUFF PLATE RH**
   HINT:
   Follow the same procedures as for the front door scuff plate LH.

6. **REMOVE COWL SIDE TRIM BOARD LH**
   (a) Remove the clip.
   (b) Disengage the 2 clips and remove the cowl side trim board.

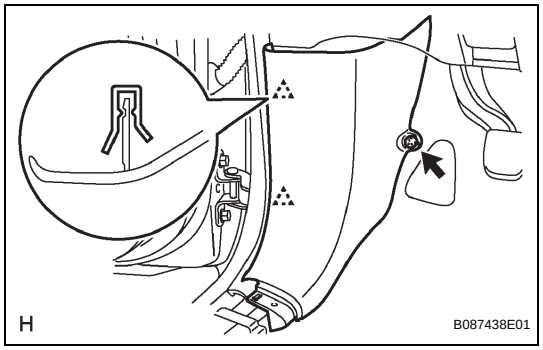

7. **REMOVE COWL SIDE TRIM BOARD RH**
   HINT:
   Follow the same procedures as for the cowl side trim board LH.
8. **REMOVE REAR DOOR SCUFF PLATE LH**
   (a) Disengage the 7 claws and remove the rear door scuff plate.

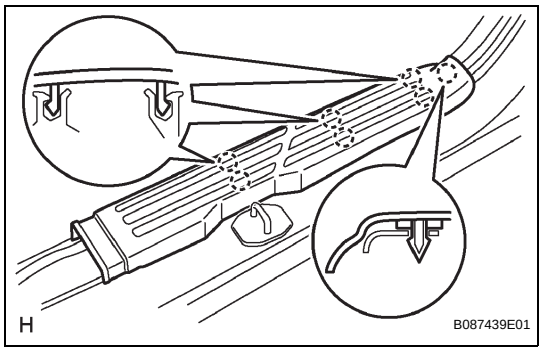

9. **REMOVE REAR DOOR SCUFF PLATE RH**
   HINT:
   Follow the same procedures as for the rear door scuff plate LH.

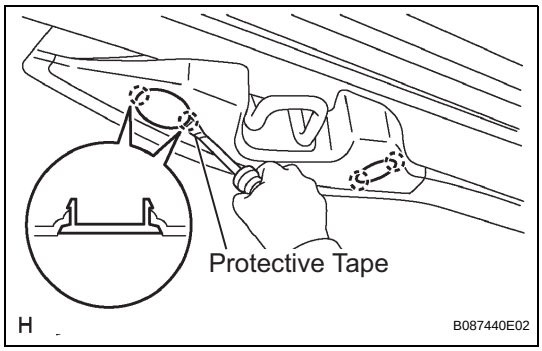

10. REMOVE ROOF SIDE INNER GARNISH COVER LH

HINT:

Follow the same procedures as for the opposite side.

(a) Using a screwdriver with its tip taped in protective tape, disengage the 2 claws and remove the roof side inner garnish cover.

11. REMOVE ROOF SIDE INNER GARNISH COVER RH

HINT:

Follow the same procedures as for the roof side inner garnish cover LH.

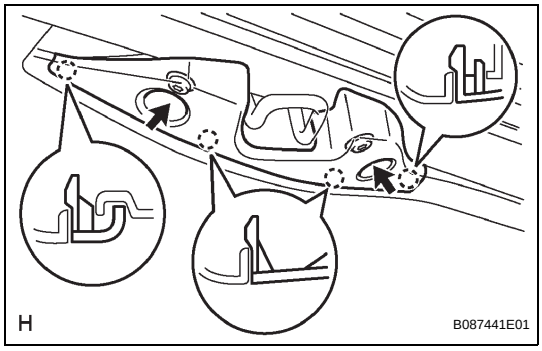

12. REMOVE ROOF SIDE INNER GARNISH CAP LH

(a) Using a "Torx" socket wrench T30, remove the 2 screws.

(b) Disengage the 4 claws and remove the roof side inner garnish cap.

13. REMOVE ROOF SIDE INNER GARNISH CAP RH

HINT:

Follow the same procedures as for the roof side inner garnish cap LH.

IR

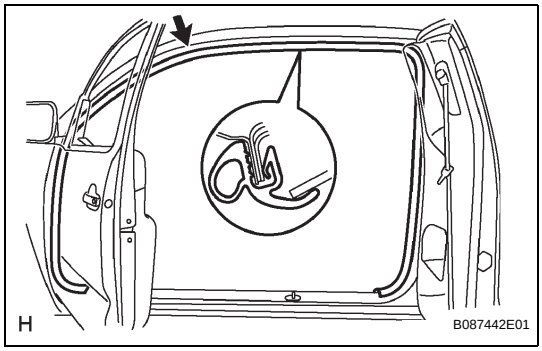

14. REMOVE FRONT DOOR OPENING TRIM WEATHERSTRIP LH

(a) Remove the front door opening trim weatherstrip.

15. REMOVE FRONT DOOR OPENING TRIM WEATHERSTRIP RH

HINT:

Follow the same procedures as for the front door opening trim weatherstrip LH.

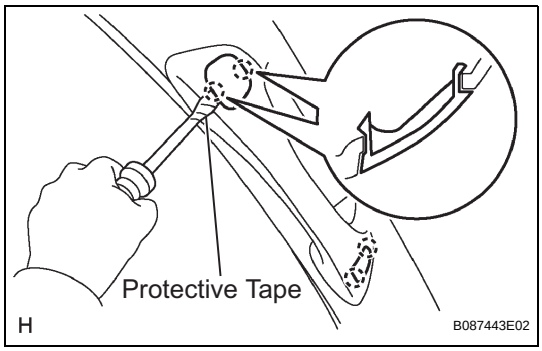

16. REMOVE FRONT PILLAR GARNISH LH

(a) Using a screwdriver with its tip taped in protective tape, disengage the 2 claws and remove the assist grip plug.

HINT:

Follow the same procedures as for the opposite side.

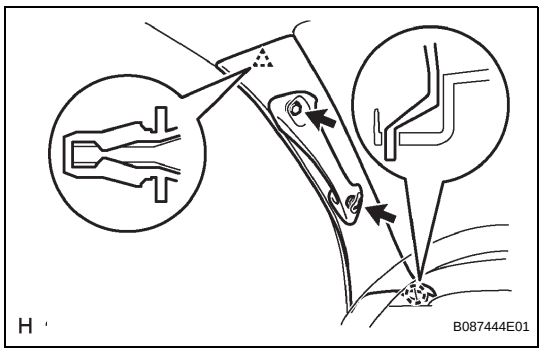

(b) Remove the 2 screws.

(c) Disengage the claw and clip, and remove the front pillar garnish.

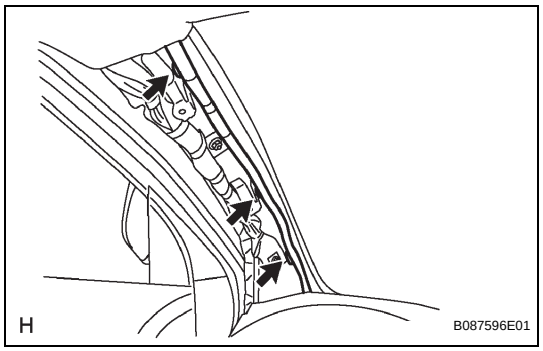

(d) for LH Side:
(1) Using a clip remover, remove the 3 wire harness clamps.

17. REMOVE FRONT PILLAR GARNISH RH
HINT:
Follow the same procedures as for the front pillar garnish LH.

18. REMOVE INSTRUMENT PANEL UNDER TRAY (for Pedal Type Parking Brake) (See page IP-9)

19. REMOVE INSTRUMENT PANEL HOLE COVER (for Lever Type Parking Brake) (See page IP-9)

20. REMOVE REAR CONSOLE UPPER PANEL SUB-ASSEMBLY
(a) for Automatic Transmission:
(1) Remove the rear console upper panel sub-assembly (See page IP-9).
(b) for Manual Transmission:
(1) Remove the rear console upper panel sub-assembly (See page IP-9).

21. REMOVE REAR CONSOLE BOX ASSEMBLY (See page IP-10)

22. REMOVE INSTRUMENT PANEL CUP HOLDER TRAY (for Automatic Transmission) (See page IP-10)

23. REMOVE FRONT CONSOLE BOX
(a) for Automatic Transmission:
(1) Remove the front console box (See page IP-10).
(b) for Manual Transmission:
(1) Remove the front console box (See page IP-11).

24. REMOVE AIR CONDITIONING CONTROL ASSEMBLY (See page IP-12)

25. REMOVE RADIO RECEIVER ASSEMBLY (See page AV-69)

26. SEPARATE HOOD LOCK CONTROL LEVER SUB-ASSEMBLY (See page ED-3)

27. REMOVE INSTRUMENT LOWER PANEL FINISH PANEL (See page IP-12)

28. REMOVE INSTRUMENT CLUSTER FINISH PANEL SUB-ASSEMBLY (See page IP-12)

29. REMOVE COMBINATION METER ASSEMBLY (See page IP-13)

30. REMOVE INSTRUMENT CENTER CLUSTER FINISH PANEL SUB-ASSEMBLY (See page IP-13)

31. REMOVE GLOVE COMPARTMENT DOOR ASSEMBLY (See page IP-13)

32. **REMOVE INSTRUMENT LOWER PANEL FINISH PANEL SUB-ASSEMBLY (See page IP-14)**

33. **REMOVE INSTRUMENT LOWER PANEL (See page IP-14)**

34. **REMOVE INSTRUMENT LOWER COVER SUB-ASSEMBLY (See page IP-14)**

35. **REMOVE INSTRUMENT SIDE PANEL (See page IP-14)**

36. **DISCONNECT PASSENGER AIRBAG CONNECTOR (See page RS-576)**

37. **REMOVE INSTRUMENT PANEL SUB-ASSEMBLY (See page IP-14)**

38. **REMOVE BACK PANEL TRIM COVER**

(a) Disengage the 6 claws and remove the back panel trim cover.

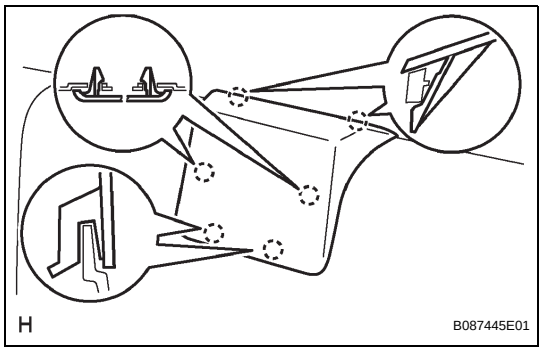

39. **REMOVE REAR SEAT INNER BELT ASSEMBLY**

HINT:

Follow the same procedures as for the opposite side.

(a) Disengage the claw and remove the buckle of the rear seat belt inner.

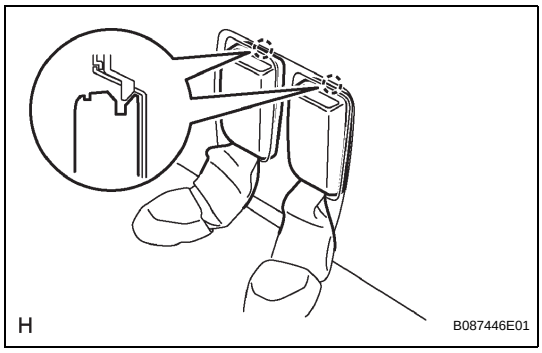

40. **REMOVE BACK PANEL TRIM**

(a) Disengage the 8 claws and 14 clips, and remove the back panel trim.

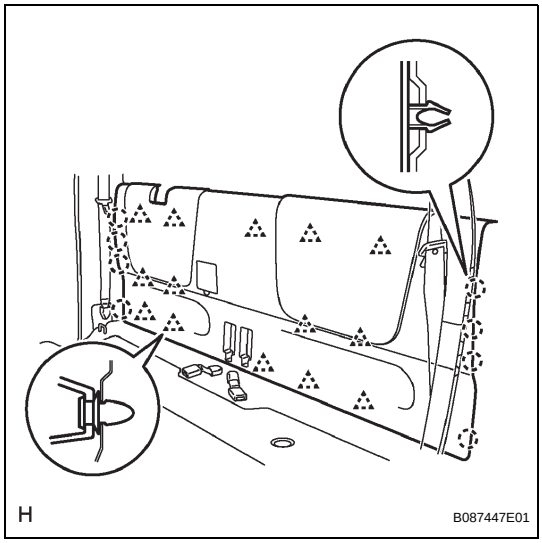

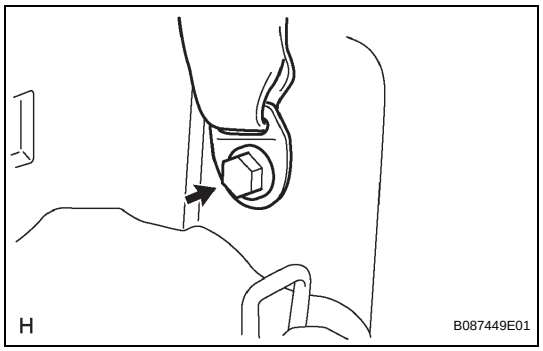

41. REMOVE QUARTER TRIM LOWER PANEL LH

(a) Remove the bolt and floor anchor of the rear seat belt outer.

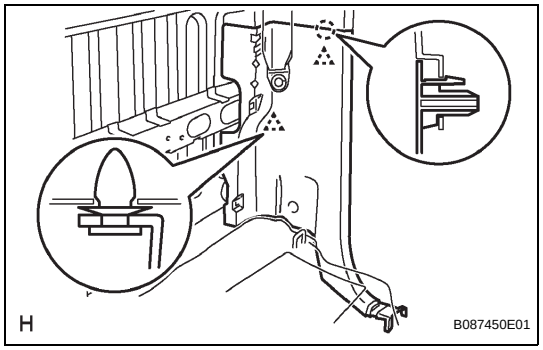

(b) Disengage the claw and 2 clips, and remove the quarter trim lower panel.

42. REMOVE QUARTER TRIM LOWER PANEL RH

HINT:

Follow the same procedures as for the quarter trim lower panel LH.

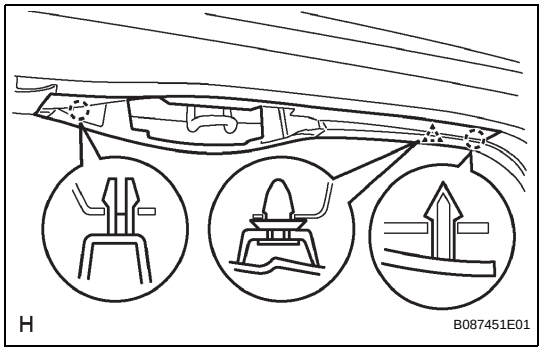

43. REMOVE ROOF SIDE INNER GARNISH LH

(a) Disengage the 2 claws and clip, and remove the roof side inner garnish.

44. REMOVE ROOF SIDE INNER GARNISH RH

HINT:

Follow the same procedures as for the roof side inner garnish LH.

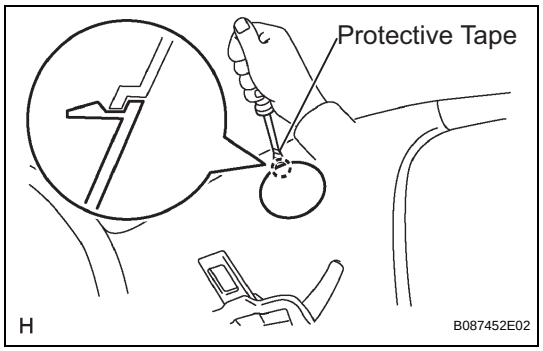

45. REMOVE QUARTER INSIDE TRIM BOARD LH

(a) Using a screwdriver with its tip taped in protective tape, disengage the claw and open the cover.

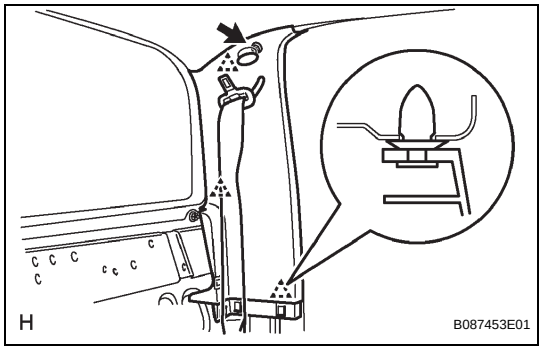

(b) Remove the screw.

(c) Disengage the 3 clips and remove the quarter inside trim board.

46. REMOVE QUARTER INSIDE TRIM BOARD RH

HINT:

Follow the same procedures as for the quarter inside trim board LH.

IR

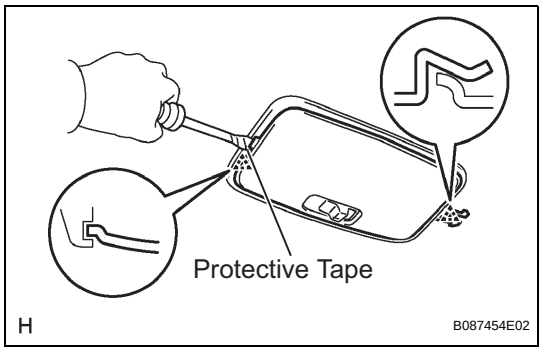

47. REMOVE ROOM LIGHT ASSEMBLY

(a) Using a screwdriver with its tip taped in protective tape, disengage the 2 claws and remove the room light lens.

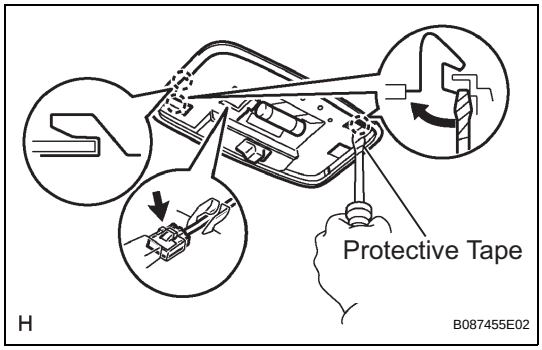

(b) Using a screwdriver with its tip taped in protective tape, disengage the 2 claws.

(c) Disconnect the room light connector and remove the room light.

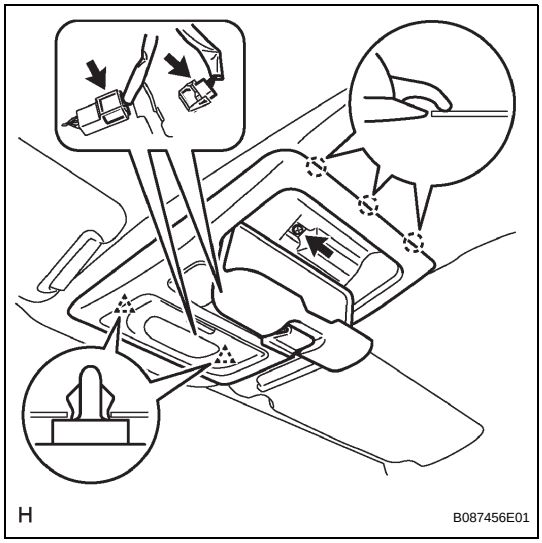

48. REMOVE ROOF CONSOLE BOX ASSEMBLY

(a) Remove the screw.

(b) Disengage the 2 clips and 3 claws.

(c) Disconnect the accessory meter connector and map lamp connector, and remove the roof console box.

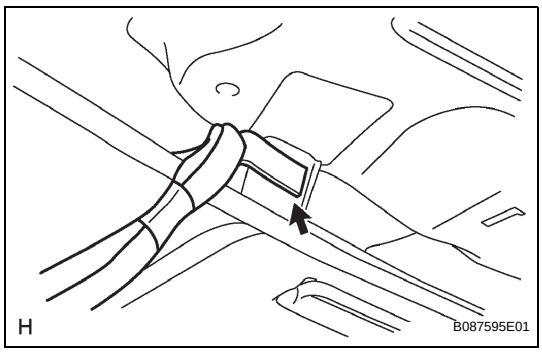

(d) Using a clip remover, remove the wire harness clamp.

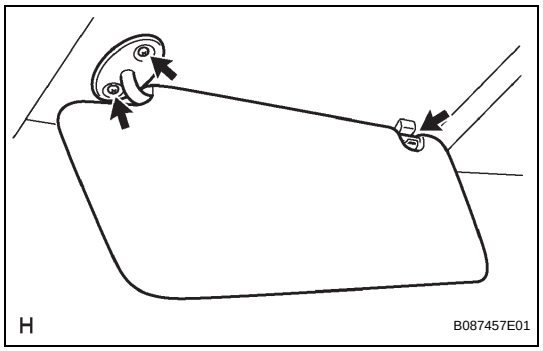

49. REMOVE VISOR ASSEMBLY LH

(a) Remove the 2 screws.

(b) Remove the visor from the visor holder.

50. REMOVE VISOR ASSEMBLY RH

HINT:

Follow the same procedures as for the visor assembly LH.

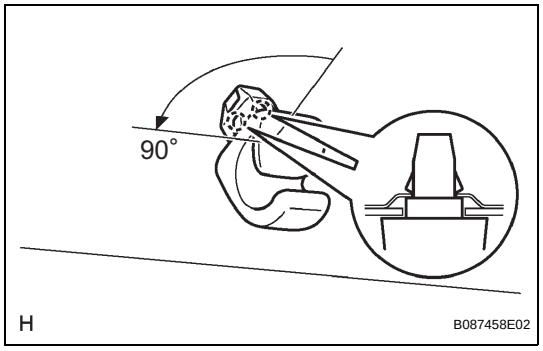

51. REMOVE VISOR HOLDER

HINT:

Follow the same procedures as for the opposite side.

(a) Turn the visor holder 90° counterclockwise and remove it.

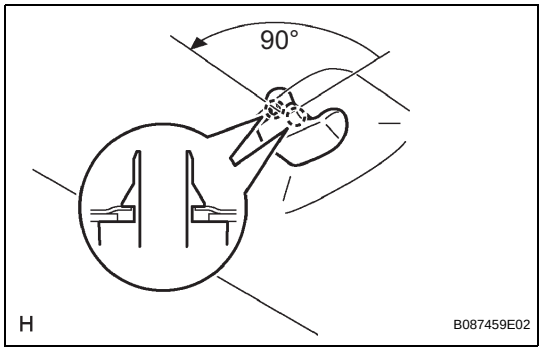

52. REMOVE COAT HOOK

HINT:

Follow the same procedures as for the opposite side.

(a) Turn the coat hook 90° counterclockwise and remove it.

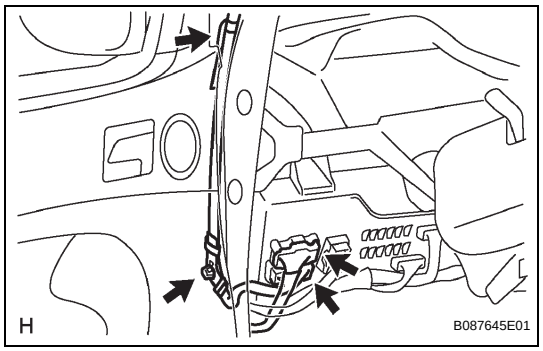

53. REMOVE ROOF HEADLINING ASSEMBLY

(a) Disconnect the frame wire connector.

(b) Disconnect the roof wire connector.

(c) Using a clip remover, remove the 2 wire harness clamps.

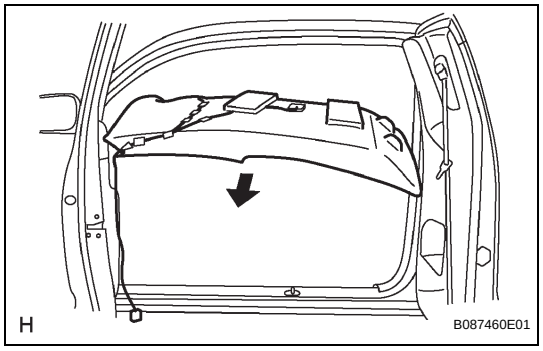

(d) Remove the roof headlining from the vehicle.

IR

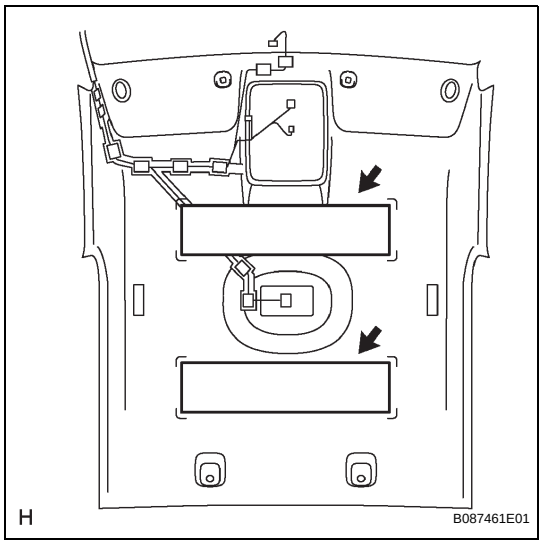

54. REMOVE ROOF HEADLINING PAD

(a) Remove the 2 roof headlining pads from the roof headlining.

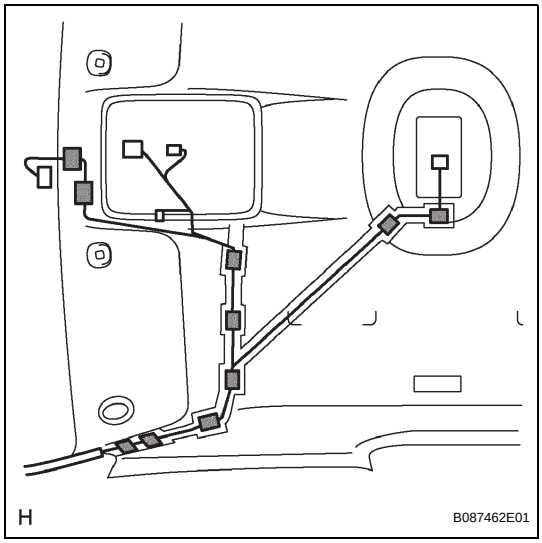

55. REMOVE ROOF WIRE

(a) w/ EC mirror:
  (1) Remove the 10 adhesive tapes and roof wire.

(b) w/o EC mirror:
  (1) Remove the 8 tapes and roof wire.

INSTALLATION

CAUTION:
Some of these service operations affect the SRS airbag system. Read the precautionary notices concerning the SRS airbag system before servicing (See page RS-1).

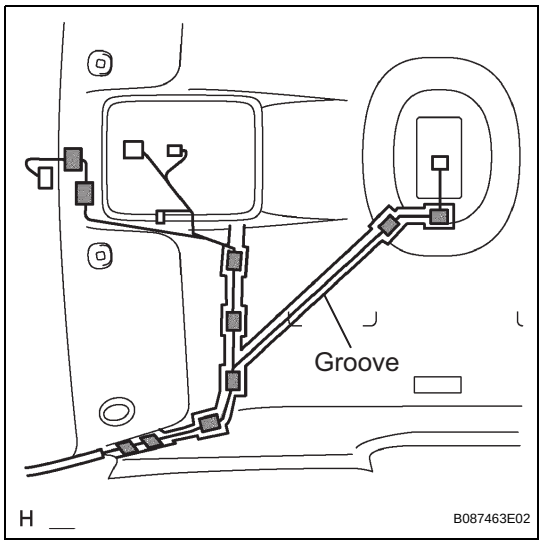

1. INSTALL ROOF WIRE

(a) w/ EC Mirror:
  (1) Install the roof wire with 10 new adhesive tapes, as shown in the illustration.

(b) w/o EC Mirror:
  (1) Install the roof wire with 8 new tapes, as shown in the illustration.

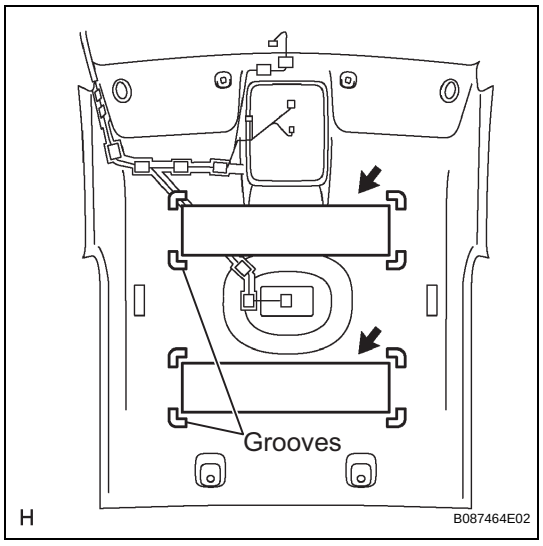

2. INSTALL ROOF HEADLINING PAD

(a) Install the 2 new roof headlining pads onto the roof headlining, as shown in the illustration.

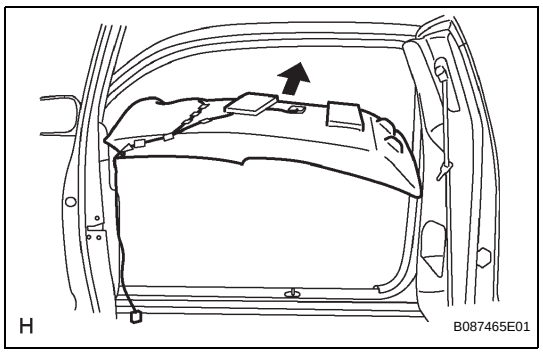

3. INSTALL ROOF HEADLINING ASSEMBLY

(a) Install the roof headlining into the vehicle.

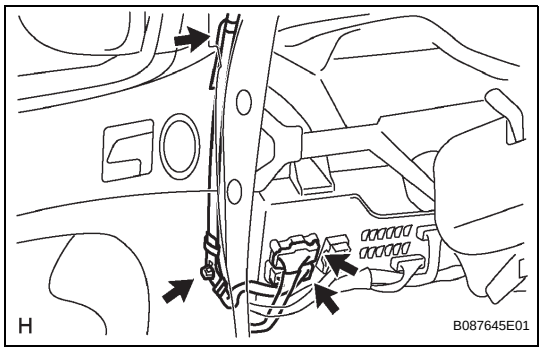

(b) Install the 2 wire harness clamps.
(c) Connect the roof wire connector.
(d) Connect the frame wire connector.

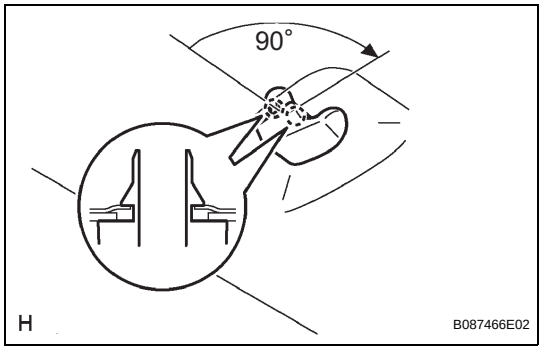

4. INSTALL COAT HOOK

HINT:
Follow the same procedures as for the opposite side.
(a) Turn the coat hook 90° clockwise and install it.

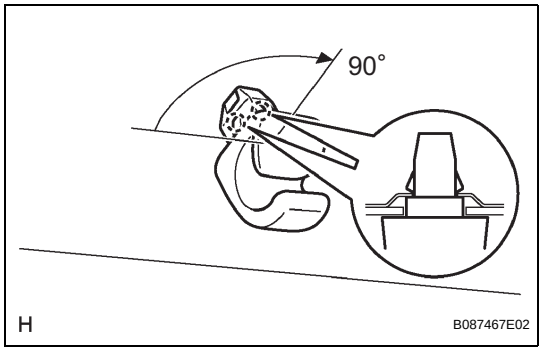

5. INSTALL VISOR HOLDER

HINT:
Follow the same procedures as for the opposite side.
(a) Turn the visor holder 90° clockwise and install it.

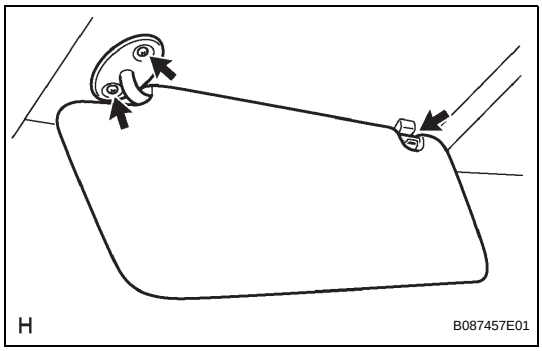

6. INSTALL VISOR ASSEMBLY LH

(a) Install the visor into the visor holder.
(b) Tighten the 2 screws.

7. INSTALL VISOR ASSEMBLY RH

HINT:
Follow the same procedures as for the visor assembly LH.

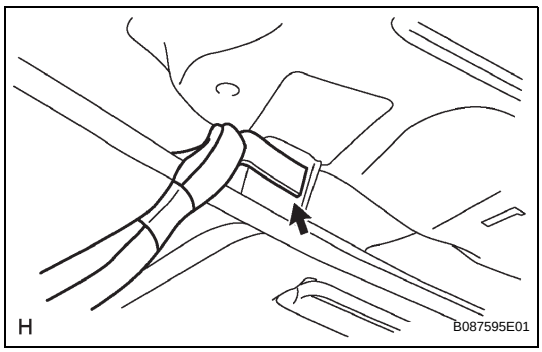

8. INSTALL ROOF CONSOLE BOX ASSEMBLY

(a) Install the wire harness clamp.

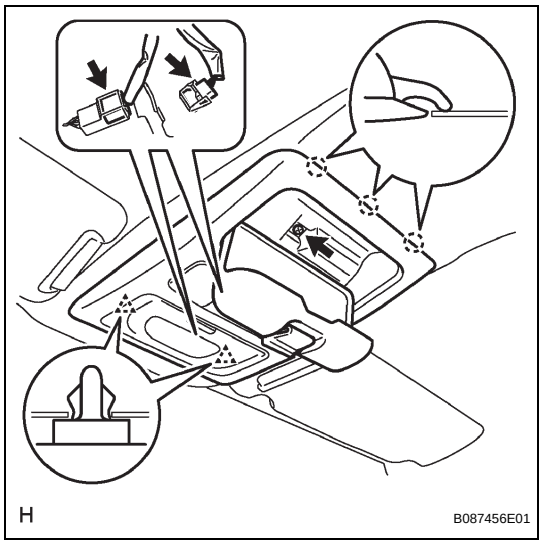

(b) Connect the accessory meter connector and map lamp connector.
(c) Engage the 2 clips and 3 claws and install the map lamp.
(d) Tighten the screw.

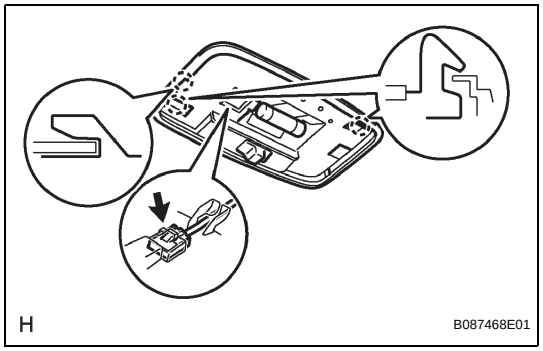

9. INSTALL ROOM LIGHT ASSEMBLY
(a) Connect the room light connector.
(b) Engage the 3 claws and install the room light.

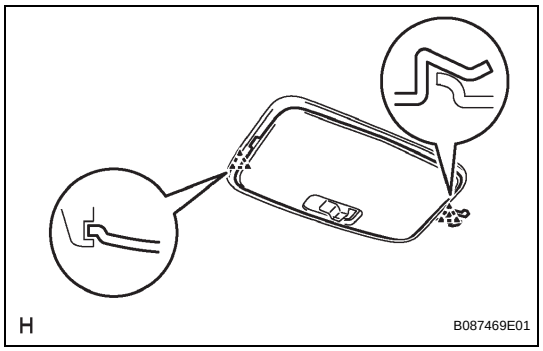

(c) Engage the 2 claws and install the room light lens.

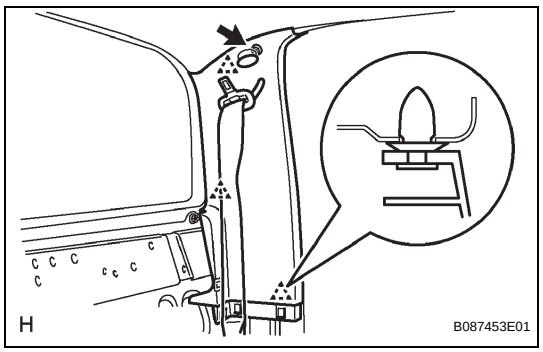

10. INSTALL QUARTER INSIDE TRIM BOARD LH
(a) Engage the 3 clips and install the quarter inside trim board.
(b) Tighten the screw.

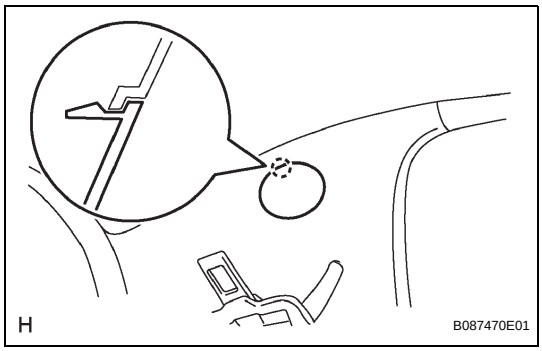

(c) Engage the claw and close the cover.

11. INSTALL QUARTER INSIDE TRIM BOARD RH

HINT:
Follow the same procedures as for the quarter inside trim board LH.

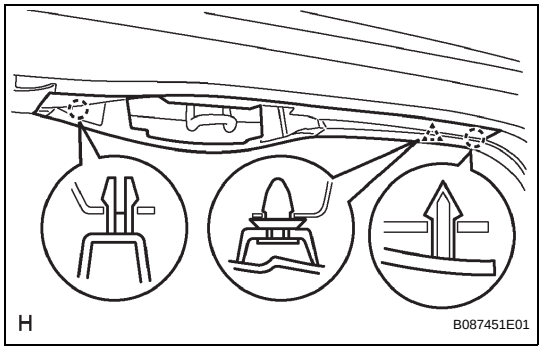

12. INSTALL ROOF SIDE INNER GARNISH LH

(a) Engage the 2 claws and clip, and install the roof side inner garnish.

13. INSTALL ROOF SIDE INNER GARNISH RH

HINT:
Follow the same procedures as for the roof side inner garnish LH.

IR

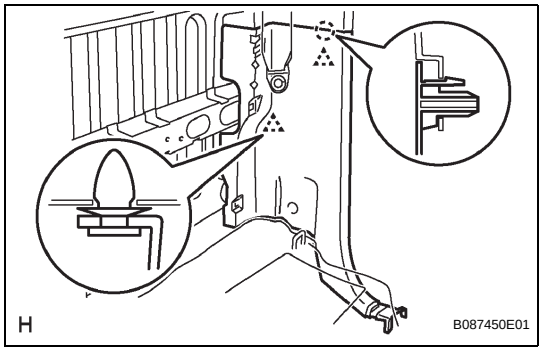

14. INSTALL QUARTER TRIM LOWER PANEL LH

(a) Engage the claw and 2 clips, and install the quarter trim lower panel.

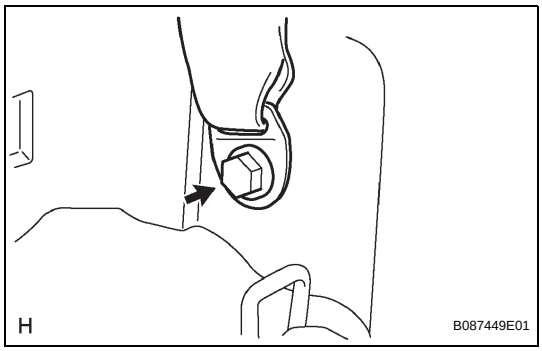

(b) Install the floor anchor of the rear seat belt outer with the bolt.
Torque: 42 N*m (430 kgf*cm, 31 ft.*lbf)

15. INSTALL QUARTER TRIM LOWER PANEL RH

HINT:
Follow the same procedures as for the quarter trim lower panel LH.

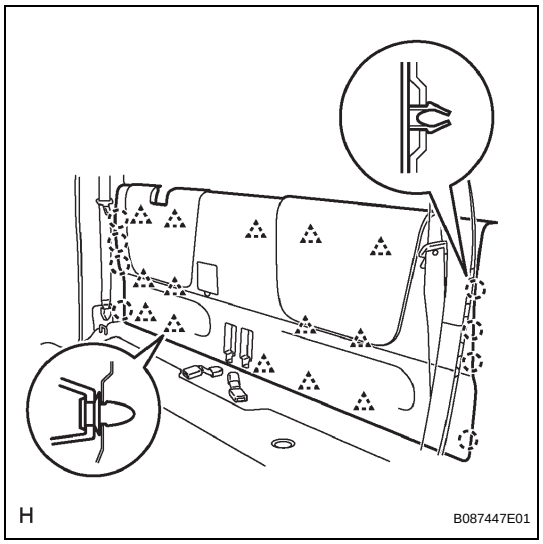

16. INSTALL BACK PANEL TRIM

(a) Engage the 8 claws and 14 clips, and install the back panel trim.

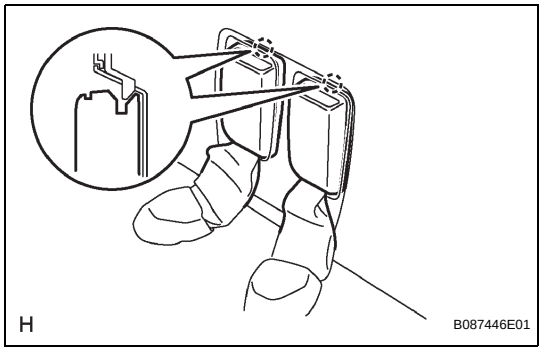

17. INSTALL REAR SEAT INNER BELT ASSEMBLY

HINT:

Follow the same procedures as for the opposite side.

(a) Engage the claw and install the buckle of the rear seat belt inner.

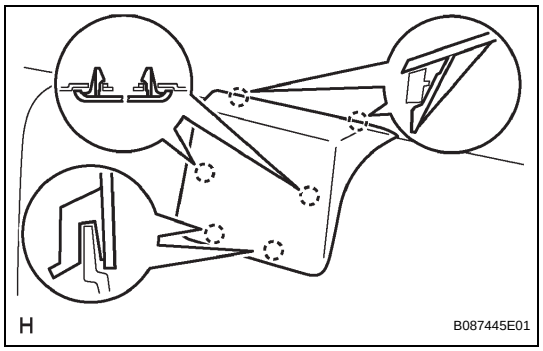

18. INSTALL BACK PANEL TRIM COVER

(a) Engage the 6 claws and install the back panel trim cover.

19. INSTALL INSTRUMENT PANEL SUB-ASSEMBLY (See page IP-18)

20. CONNECT PASSENGER AIRBAG CONNECTOR

21. INSTALL INSTRUMENT SIDE PANEL (See page IP-20)

22. INSTALL INSTRUMENT LOWER COVER SUB-ASSEMBLY (See page IP-20)

23. INSTALL INSTRUMENT LOWER PANEL (See page IP-20)

24. INSTALL INSTRUMENT LOWER PANEL FINISH PANEL SUB-ASSEMBLY (See page IP-20)

25. INSTALL GLOVE COMPARTMENT DOOR ASSEMBLY (See page IP-20)

26. INSTALL INSTRUMENT CENTER CLUSTER FINISH PANEL SUB-ASSEMBLY (See page IP-21)

27. INSTALL COMBINATION METER ASSEMBLY (See page IP-21)

28. INSTALL INSTRUMENT CLUSTER FINISH PANEL SUB-ASSEMBLY (See page IP-21)

29. INSTALL INSTRUMENT LOWER PANEL FINISH PANEL (See page IP-22)

30. CONNECT HOOD LOCK CONTROL LEVER SUB-ASSEMBLY (See page ED-8)

31. INSTALL RADIO RECEIVER ASSEMBLY (See page AV-70)

32. INSTALL AIR CONDITIONING CONTROL ASSEMBLY (See page IP-22)

33. INSTALL FRONT CONSOLE BOX

(a) for Automatic Transmission:

(1) Install the front console box (See page IP-24).

(b) for Manual Transmission:

(1) Install the front console box (See page IP-23).

34. INSTALL INSTRUMENT PANEL CUP HOLDER TRAY (for Automatic Transmission) (See page IP-24)

35. INSTALL REAR CONSOLE BOX ASSEMBLY (See page IP-24)

36. INSTALL REAR CONSOLE UPPER PANEL SUB-ASSEMBLY

(a) for Automatic Transmission:

(1) Install the rear console upper panel sub-assembly (See page IP-25).

(b) for Manual Transmission:

(1) Install the rear console upper panel sub-assembly (See page IP-25).

37. INSTALL INSTRUMENT PANEL UNDER TRAY (for Pedal Type Parking Brake) (See page IP-25)

38. INSTALL INSTRUMENT PANEL HOLE COVER (for Lever Type Parking Brake) (See page IP-25)

39. INSTALL FRONT PILLAR GARNISH LH

(a) for LH Side:

(1) Install the 3 wire harness clamps.

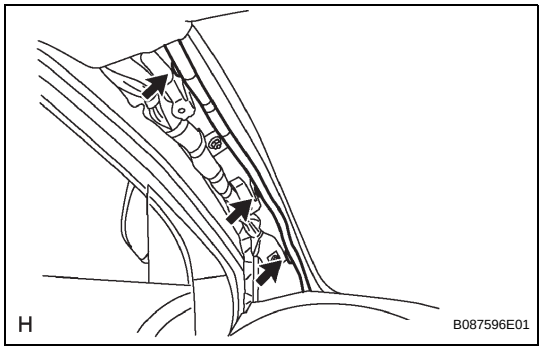

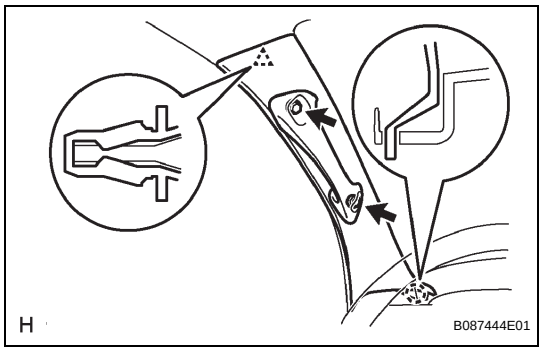

(b) Engage the claw and clip, and install the front pillar garnish.
(c) Tighten the 2 screws.

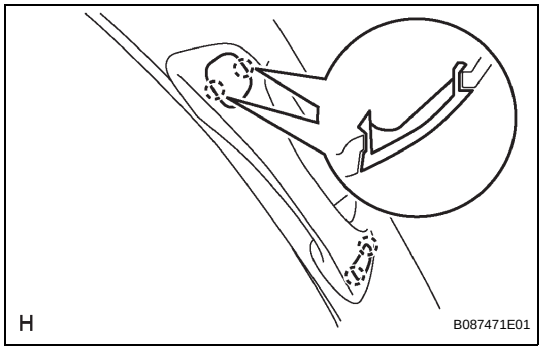

(d) Engage the 2 claws and install the assist grip plug.
HINT:
Follow the same procedures as for the opposite side.

40. INSTALL FRONT PILLAR GARNISH RH
HINT:
Follow the same procedures as for the front pillar garnish LH.

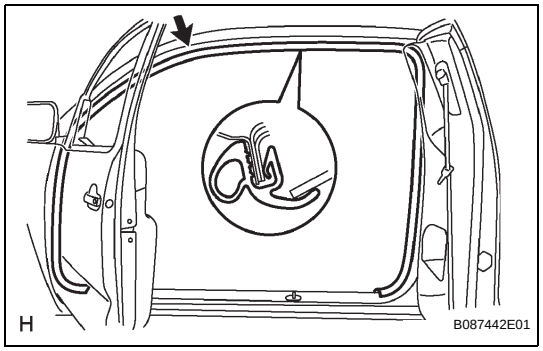

41. INSTALL FRONT DOOR OPENING TRIM WEATHERSTRIP LH
(a) Install the front door opening trim weatherstrip.

42. INSTALL FRONT DOOR OPENING TRIM WEATHERSTRIP RH
HINT:
Follow the same procedures as for the front door opening trim weatherstrip LH.

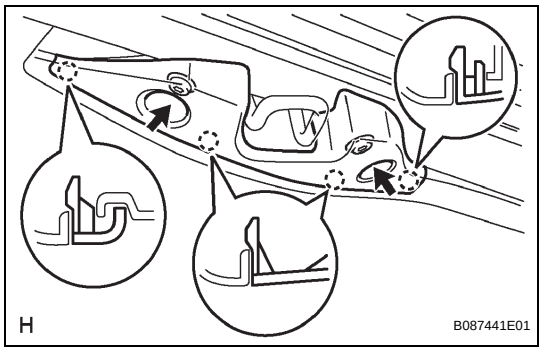

43. INSTALL ROOF SIDE INNER GARNISH CAP LH
(a) Engage the 4 claws and install the roof side inner garnish cap.
(b) Using a "Torx" socket wrench T30, tighten the 2 screws.

44. INSTALL ROOF SIDE INNER GARNISH CAP RH
HINT:
Follow the same procedures as for the roof side inner garnish cap LH.

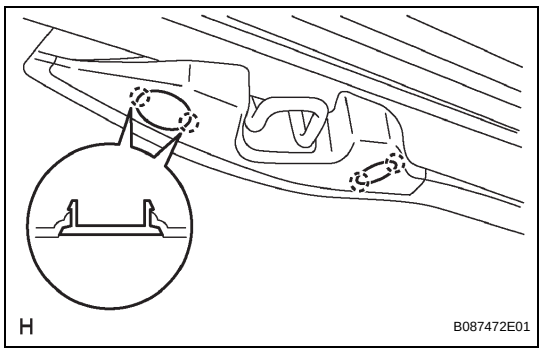

45. INSTALL ROOF SIDE INNER GARNISH COVER LH
HINT:
Follow the same procedures as for the opposite side.
(a) Engage the 2 claws and install the roof side inner garnish cover.

46. INSTALL ROOF SIDE INNER GARNISH COVER RH
HINT:
Follow the same procedures as for the roof side inner garnish cover LH.

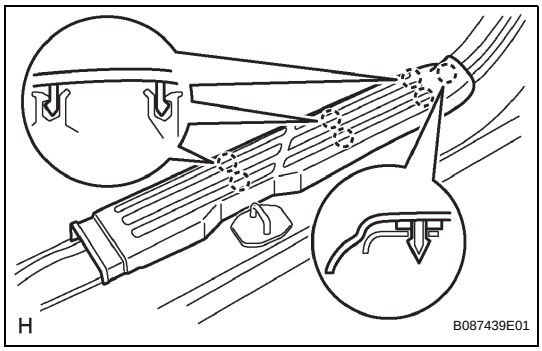

47. INSTALL REAR DOOR SCUFF PLATE LH

(a) Engage the 7 claws and install the rear door scuff plate.

48. INSTALL REAR DOOR SCUFF PLATE RH

HINT:
Follow the same procedures as for the rear door scuff plate LH.

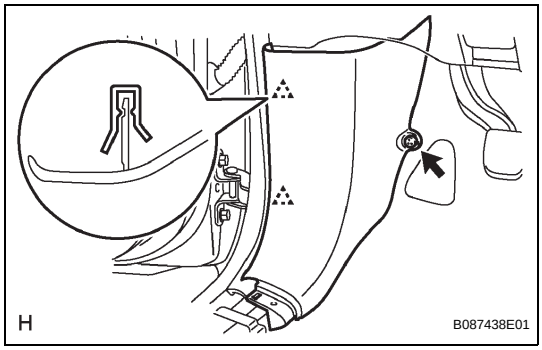

49. INSTALL COWL SIDE TRIM BOARD LH

(a) Engage the 2 clips and install the cowl side trim board.
(b) Install the clip.

50. INSTALL COWL SIDE TRIM BOARD RH

HINT:
Follow the same procedures as for the cowl side trim board LH.

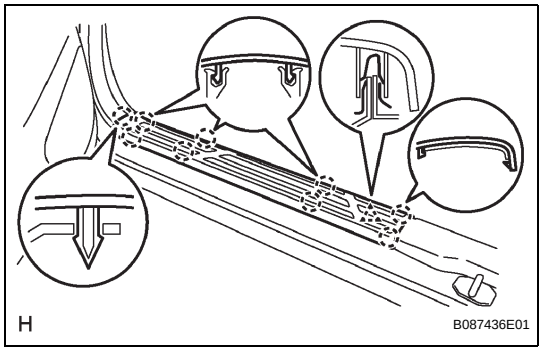

51. INSTALL FRONT DOOR SCUFF PLATE LH

(a) Engage the 9 claws and clip, and install the front door scuff plate.

52. INSTALL FRONT DOOR SCUFF PLATE RH

HINT:
Follow the same procedures as for the front door scuff plate LH.

53. INSTALL FRONT FLOOR FOOTREST (See page IR-1)

54. INSTALL INNER REAR VIEW MIRROR ASSEMBLY (w/ EC Mirror) (See page IR-30)

55. CONNECT CABLE TO NEGATIVE BATTERY TERMINAL
Torque: 3.9 N*m (40 kgf*cm, 35 in.*lbf)

56. INSPECT SRS WARNING LIGHT
(See page RS-28)

SYSTEM DESCRIPTION

1. BRIEF DESCRIPTION

(a) CAN (Controller Area Network) is a serial data communication system for real time application. It is an in-vehicle multiplex communication system which has a high communication speed (500 kbps) and a function to detect malfunctions.

(b) The CAN performs communication based on differential voltage by pairing the CANH bus line and CANL bus line.

(c) This vehicle uses the CAN communication system for communication between the components in the ABS with EBD & BA & TRAC & VSC system.

(d) The CAN has two resistors of 120 Ω that are necessary for communication with the main bus line.

2. DEFINITION OF TERMS

(a) Main bus line

(1) The main bus line is a wire harness between the two terminus circuits on the bus (communication line). This is the main bus in the CAN communication system.

(b) Sub bus line

(1) The sub bus line is a wire harness which diverges from the main bus line to an ECU or sensor.

(c) Terminus circuit

(1) The terminus circuit is a circuit which is placed to convert communication current of the CAN communication into bus voltage. It consists of a resistor and condenser. Two terminus circuits are necessary on a bus.

(d) CAN J/C

(1) The CAN J/C is a junction designed for CAN communication, which stores a terminus circuit.

3. COMPONENTS WHICH COMMUNICATE THROUGH THE CAN COMMUNICATION SYSTEM

(a) Skid control ECU

(b) Steering angle sensor

(c) Yaw rate sensor

(d) ECM

4. DIAGNOSTIC CODES FOR THE CAN COMMUNICATION SYSTEM

(a) DTCs for the CAN communication system are as follows: U0073/94, U0123/62, U0124/95, U0126/63, U0100/65

5. REMARKS FOR TROUBLESHOOTING

(a) Trouble in the CAN bus (communication line) can be checked from the DLC3 (except a wire break in lines other than the DLC3 sub bus line).

(b) The CAN communication system cannot detect trouble in the DLC3 sub bus line even though the DLC3 is also connected to the CAN communication system.

6. HOW TO DISTINGUISH THE CAN J/C CONNECTOR

(a) In the CAN communication system, the shape of all connectors connected to the CAN J/C is the same. The connectors connected to the CAN J/C can be distinguished by the colors of the bus line and the connecting side of the connector.
HINT:
See "TERMINALS OF ECU" (See page CA-8) for bus line color or the type of connecting surface.

HOW TO PROCEED WITH TROUBLESHOOTING

NOTICE:

- **DTCs for the CAN communication system are as follows: U0073/94, U0100/65, U0123/62, U0124/95, U0126/63.**
- **Refer to troubleshooting of each system if DTCs regarding the CAN communication system are not output.**

1	CHECK AND CLEAR DTCs

NEXT

2	CHECK CAN BUS LINE

NEXT

3	CHECK USING INTELLIGENT TESTER VIA CAN VIM

(a) Select "BUS CHECK" (See page CA-14)

Result:

A	All ECUs and sensors connected to the CAN communication system are displayed.
B	All ECU or sensor not connected to the CAN communication system is displayed.
C	A few ECUs or sensors not connected to the CAN communication system are displayed.

B → **COMMUNICATION STOP MODE TABLE**

C → **CHECK FOR AN OPEN IN ONE SIDE OF THE CAN BUS LINE**

A

4	DTC COMBINATION TABLE

(a) Confirm trouble according to the combination of output DTCs regarding the CAN communication system.

HINT:

Previous CAN communication system DTCs may be the cause if CAN communication system DTCs are output and all ECUs and sensors connected to the CAN communication system are displayed on the intelligent tester's "BUS CHECK" screen via the CAN VIM.

NEXT

5	**CIRCUIT INSPECTION**

NEXT

6	**IDENTIFICATION OF PROBLEM**

NEXT

7	**REPAIR OR REPLACE**

NEXT

8	**CONFIRMATION TEST**

NEXT

CA

END

PROBLEM SYMPTOMS TABLE

1. COMMUNICATION STOP MODE TABLE

(a) Complete "CHECK CAN BUS LINE" to confirm that there is no malfunction in the CAN bus line. Select "BUS CHECK" on the hand-held tester via the CAN VIM .

(b) Check the communication stop mode of the ECUs or sensors not displayed among the following: "ENGINE", "ABS/VSC/TRAC", "YAW / DECELERAT" or "STEERING SENSOR".

NOTICE:

If 2 or more ECUs or sensors are not displayed on the hand-held tester via the CAN VIM, perform troubleshooting for the communication stop mode of each undisplayed ECU or sensor. (Either side of the CAN sub bus lines may be open.)

Symptom	Suspected area	See page
"ENGINE" is not displayed on the handheld tester via CAN VIM.	ECM COMMUNICATION STOP MODE	*1
"ABS/VSC/TARC" is not displayed on the hand-held tester via CAN VIM.	SKID CONTROL ECU COMMUNICATION STOP MODE	CA-16
"STEERING SENSOR" is not displayed on the hand-held tester via CAN VIM.	STEERING ANGLE SENSOR COMMUNICATION STOP MODE	CA-18
"YAW /DECELERAT" is not displayed on the hand-held tester via CAN VIM.	YAW RATE SENSOR COMMUNICATION STOP MODE	CA-20

CA

HINT:

*1

"ENGINE" is not displayed on the intelligent tester via the CAN VIM if no power is supplied to the ECM.

2. DTC COMBINATION TABLE

(a) Perform troubleshooting according to the combination of DTCs output.

Trouble Mode	U0100/65	U0073/94	U0123/62	U0124/95	U0126/63
SKID CONTROL COMMUNICATION STOP MODE	○	○	○	○	○
YAW RATE SENSOR COMMUNICATION STOP MODE	-	-	○	○	-
STEERING ANGLE SENSOR COMMUNICATION STOP MODE	-	-	-	-	○
ECM COMMUNICATION STOP MODE *2	○	-	-	-	-

HINT:

- Previous CAN communication system DTCs may be the cause if CAN communication system DTCs are output and all ECUs and sensors connected to the CAN communication system are displayed on the intelligent tester's "BUS CHECK" screen via the CAN VIM.

- U0073/94, U0123/62, U0124/95, U0126/63 and U0100/65 are the DTCs in the CAN communication system.
- *2
- U0100/65 is output if no power is supplied to the ECM.
- The above table shows combination of these DTCs.
- O: DTCs that are being output.
- -: DTCs that are not being output.
- SKID CONTROL ECU COMMUNICATION STOP MODE
- STEERING ANGLE SENSOR COMMUNICATION STOP MODE
- YAW RATE SENSOR COMMUNICATION STOP MODE
- ECM COMMUNICATION STOP MODE

TERMINALS OF ECU

HINT:
This section describes the standard CAN values for all CAN related components.

1. CAN JUNCTION CONNECTOR

(a) CAN J/C connectors.
HINT:
- The connectors connected to the CAN J/C can be distinguished by the colors of the bus lines and the connecting side of the connector.
- J7, J8, J9 and J10 are interchangeable.

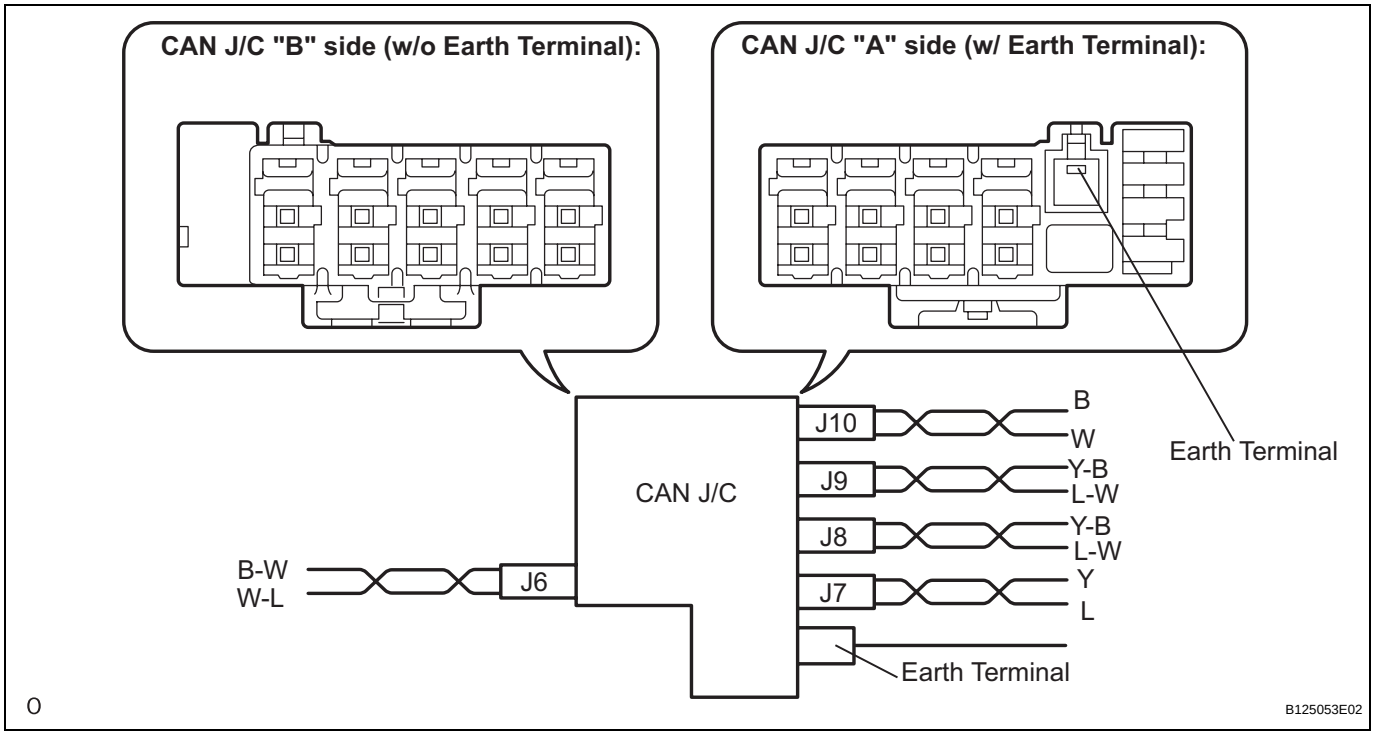

Wiring color

CAN J/C connectors ("A" side, w/ earth terminal)	Color (CAN-H Side)	Color (CAN-L Side)
ECM (J10)	B	W
DLC3 (J9)	Y-B	L-W
Steering angle sensor (J8)	Y-B	L-W
Yaw rate sensor (J7)	W	R

Wiring color

CAN J/C connectors (B side, w/o earth terminal)	Color (CAN-H Side)	Color (CAN-L Side)
Skid control ECU (J6)	B	W

CAN J/C Connector Front View:

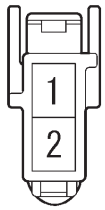

G026205E01

(b) The terminals of the CAN J/C connectors.

Terminal	Terminal symbol
1	CANH
2	CANL

CAN J/C "A" Side (w/ Earth Terminal):

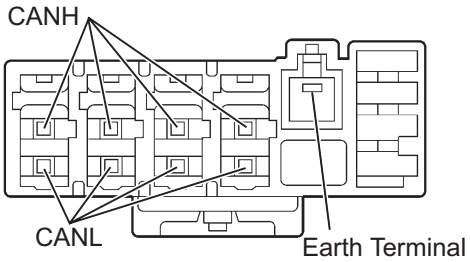

CAN J/C "B" Side (w/o Earth Terminal):

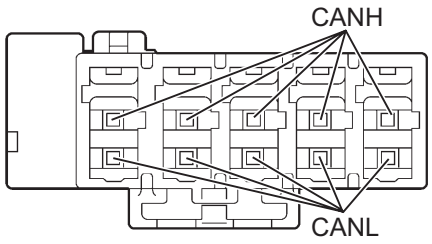

G026214E08

(c) Measure the resistance according to the value(s) in the table below.

Standard Resistance

Terminal	Specified value
CANH - CANL	**108 to 132 Ω**

DLC3:

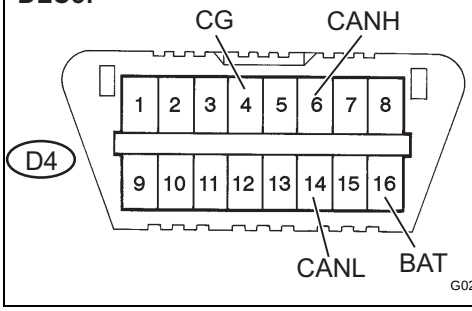

G026206E56

2. DLC3

(a) Measure the resistance according to the value(s) in the table below.

Standard Resistance

Terminals	Terminal Description	Condition	Specified Condition
D4-6 (CANH) - D4-14 (CANL)	**HIGH-level CAN bus line - LOW-level CAN bus line**	**IG switch OFF Stop light switch OFF**	**54 to 69 Ω**
D4-6 (CANH) - D4-16 (BAT)	**HIGH-level CAN bus line - Battery positive**	**IG switch OFF Stop light switch OFF**	**1 MΩ or higher**
D4-14 (CANL) - D4-16 (BAT)	**LOW-level CAN bus line - Battery positive**	**IG switch OFF Stop light switch OFF**	**1 MΩ or higher**
D4-6 (CANH) - D4-4 (CG)	**HIGH-level CAN bus line - Ground**	**IG switch OFF Stop light switch OFF**	**3 kΩ or higher**

Terminals	Terminal Description	Condition	Specified Condition
D4-14 (CANL) - D4-4 (CG)	LOW-level CAN bus line - Ground	IG switch OFF Stop light switch OFF	3 kΩ or higher

3. SKID CONTROL ECU

(a) Check the skid control ECU harness side connector (S1).

(1) Disconnect the connector (S1) from the skid control ECU.

(2) Measure the resistance according to the value(s) in the table below.

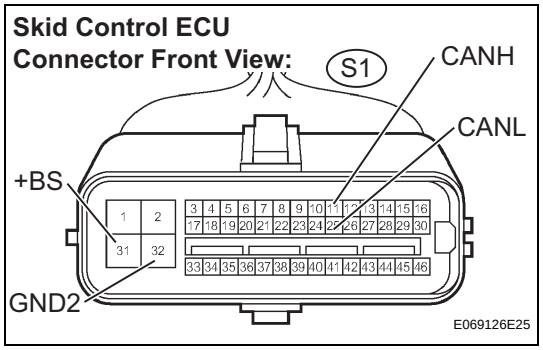

Standard Resistance

Terminals	Wiring Color	Terminal Description	Condition	Specified Condition
S1-11 (CANH) - S1-25 (CANL)	B-W - W-L	HIGH-level CAN bus line - LOW-level CAN bus line	IG switch OFF Stop light switch OFF	54 to 69 Ω
S1-11 (CANH) - S1-32 (GND2)	B-W - W-B	HIGH-level CAN bus line - Ground	IG switch OFF Stop light switch OFF	3 kΩ or higher
S1-25 (CANL) - S1-32 (GND2)	W-B - W-B	LOW-level CAN bus line - Ground	IG switch OFF Stop light switch OFF	3 kΩ or higher
S1-11 (CANH) - S1-31 (+BS)	B-W - R	HIGH-level CAN bus line - Battery positive	IG switch OFF Stop light switch OFF	1 MΩ or higher
S1-25 (CANL) - S1-31 (+BS)	W-L - R	LOW-level CAN bus line - Battery positive	IG switch OFF Stop light switch OFF	1 MΩ or higher

CA

4. STEERING ANGLE SENSOR

(a) Check the harness side connector (S9) of the steering angle sensor.

(1) Disconnect the connector (S9) from the steering angle sensor.

(2) Measure the resistance according to the value(s) in the table below.

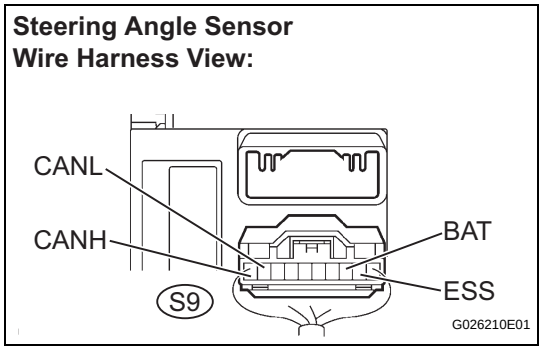

Standard Resistance

Terminals	Wiring Color	Terminal Description	Condition	Specified Condition
S9-3 (CANH) - S9-11 (CANL)	Y-B - L-W	HIGH-level CAN bus line - LOW-level CAN bus line	IG switch OFF Stop light switch OFF	54 to 69 Ω

Terminals	Wiring Color	Terminal Description	Condition	Specified Condition
S9-3 (CANH) - S9-2 (ESS)	Y-B - W-B	HIGH-level CAN bus line - Ground	IG switch OFF Stop light switch OFF	3 kΩ or higher
S9-11 (CANL) - S9-21 (ESS)	L-W - W-B	LOW-level CAN bus line - Ground	IG switch OFF Stop light switch OFF	3 kΩ or higher
S9-3 (CANH) - S9-9 (BAT)	Y-B - R	HIGH-level CAN bus line - Battery positive	IG switch OFF Stop light switch OFF	1 MΩ or higher
S9-11 (CANL) - S9-9 (BAT)	L-W - R	LOW-level CAN bus line - Battery positive	IG switch OFF Stop light switch OFF	1 MΩ or higher

5. YAW RATE SENSOR

(a) Check the yaw rate sensor harness side connector (Y1).

(1) Disconnect the connector (Y1) from the yaw rate sensor.

(2) Measure the resistance according to the value(s) in the table below.

Yaw Rate Sensor Connector Front View:

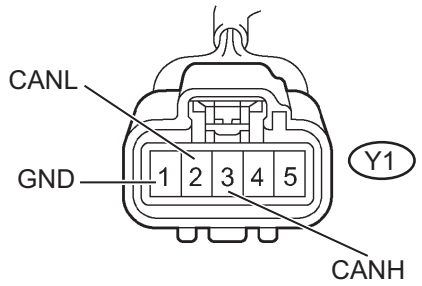

DLC3:

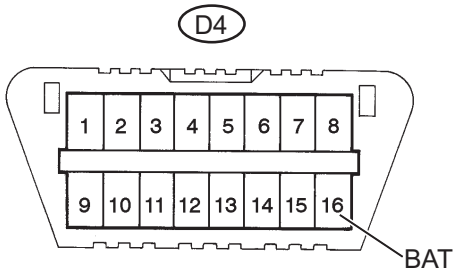

G026641E06

Standard Resistance

Terminals	Wiring Color	Terminal Description	Condition	Specified Condition
Y1-3 (CANH) - Y1-2 (CANL)	Y - L	HIGH-level CAN bus line - LOW-level CAN bus line	IG switch OFF Stop light switch OFF	54 to 69 Ω
Y1-3 (CANH) - Y1-1 (GND)	Y - W-B	HIGH-level CAN bus line - Ground	IG switch OFF Stop light switch OFF	3 kΩ or higher
Y1-2 (CANL) - Y1-1 (GND)	L - W-B	LOW-level CAN bus line - Ground	IG switch OFF Stop light switch OFF	3 kΩ or higher
Y1-3 (CANH) - D4-16 (BAT)	Y - Y	HIGH-level CAN bus line - Battery positive	IG switch OFF Stop light switch OFF	1 MΩ or higher
Y1-2 (CANL) - D4-16 (BAT)	L - Y	LOW-level CAN bus line - Battery positive	IG switch OFF Stop light switch OFF	1 MΩ or higher

CA

6. ECM

(a) Measure the resistance according to the value(s) in the table below.

2TR-FE ECM:

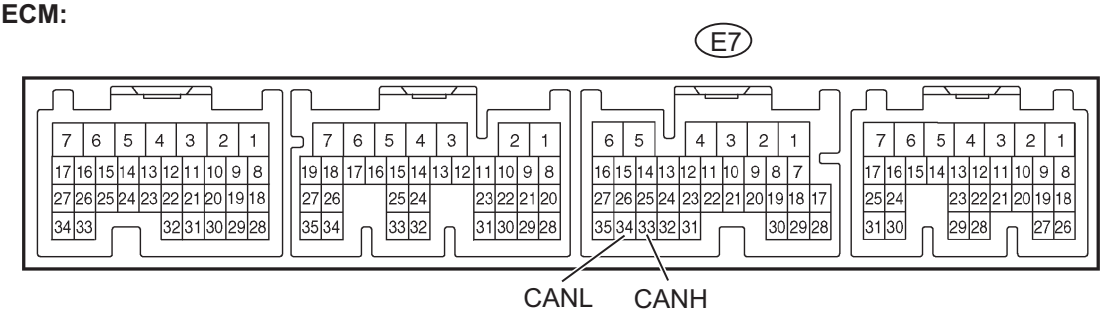

1GR-FE ECM:

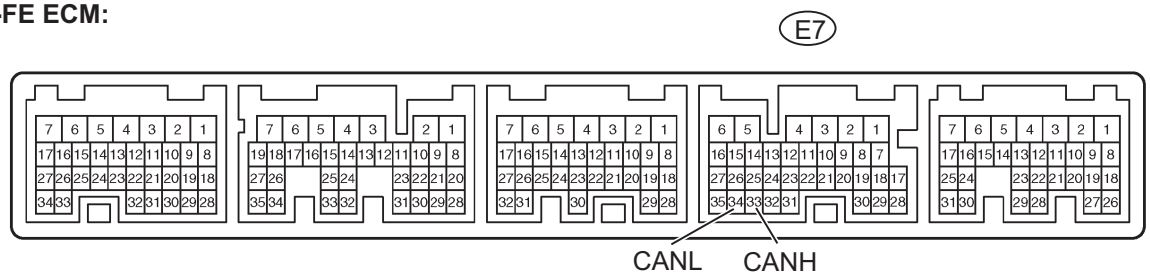

G100738E01

Standard resistance

Terminals	Condition	Specified Condition
E7-33 (CANH) - E7-34 (CANL)	IG switch OFF Stop light switch OFF	108 to 132 Ω

ECM Wire Harness View 1GR-FE:

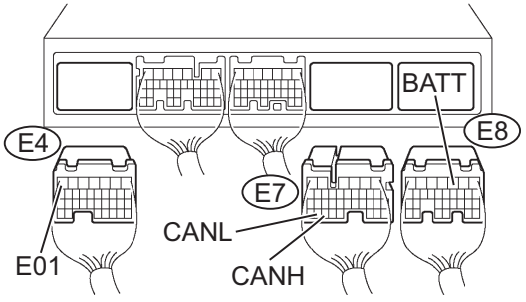

ECM Wire Harness View 2TR-FE:

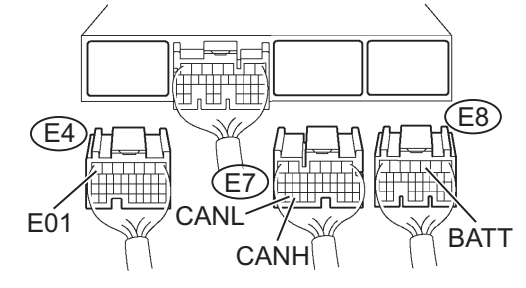

G100737E01

(b) Measure the resistance according to the value(s) in the table below.

Standard resistance

Terminals	Wiring Color	Condition	Specified Condition
E7-33 (CANH) - E7-34 (CANL)	B - W	IG switch OFF Stop light switch OFF	108 to 132 Ω

CA

Terminals	Wiring Color	Condition	Specified Condition
E7-33 (CANH) - E4-7 (E01)	B - W-B	IG switch OFF Stop light switch OFF	3 kΩ or more
E7-34 (CANL) - E4-7 (E01)	W - W-B	IG switch OFF Stop light switch OFF	3 kΩ or more
E7-33 (CANH) - E8-3 (BATT)	B - L	IG switch OFF Stop light switch OFF	1 MΩ or more
E7-34 (CANL) - E8-3 (BATT)	W - L	IG switch OFF Stop light switch OFF	1 MΩ or more

DIAGNOSIS SYSTEM

1. BUS CHECK

HINT:
The ECUs and sensors that are properly connected to the CAN communication system can be displayed using the intelligent tester via CAN VIM.

(a) Select "BUS CHECK" from the "OBD/MOBD MENU" screen.

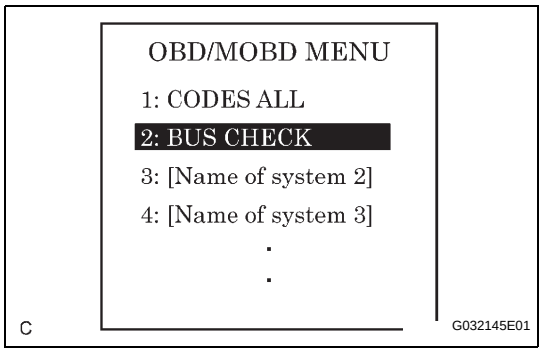

(b) Press "ENTER" on the intelligent tester via CAN VIM.

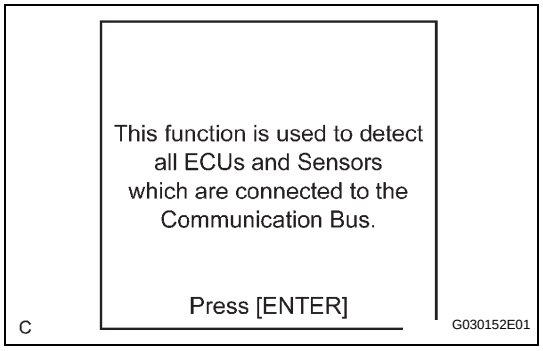

(c) The screen displays the ECUs and sensors that are properly connected to the CAN communication system.
HINT:
There is a communication stop in the system of any properly connected ECUs or sensors that are not displayed (See page CA-7).

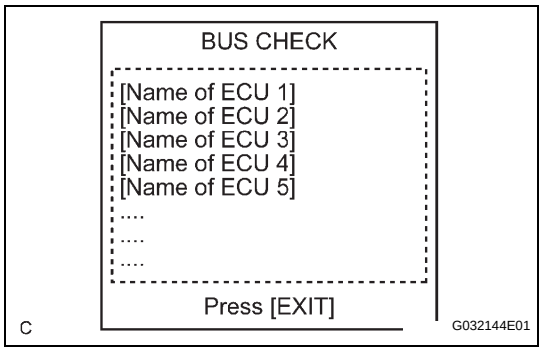

2. DTC TABLE BY ECU

HINT:
If CAN communication system DTCs are output, trouble cannot be determined only by the DTCs. Perform troubleshooting according to "HOW TO PROCEED WITH TROUBLESHOOTING" (See page CA-6).

(a) Skid Control ECU
HINT:
DTC communication uses the SIL line.

DTC No.2	Detection Item
U0073/94	Control Module Communication Bus Off
U0100/65	Lost Communication With ECM/PCM "A"
U0123/62	Lost Communication With Yaw Rate Sensor Module
U0124/95	Lost Communication With Lateral Acceleration Sensor Module
U0126/63	Lost Communication With Steering Angle Sensor Module

(b) ECM
HINT:
The ECM is connected to the CAN communication system but CAN communication system DTCs are not output.

FAIL-SAFE CHART

1. FAIL-SAFE FUNCTION

(a) When communication fails in any of the CAN bus lines (communication lines) due to a short circuit or any other causes, the fail-safe function, which is specified for each system, operates to prevent the system from malfunctioning.

(b) This function operates for each system when communication is impossible. (For further details, see the pages for each system.)

Function	ECM	Skid Control ECU	Steering Angle Sensor	Yaw Rate Sensor	Action when unable to communicate	DTC detection (Driver detectable)
VSC Control (Controls VSC/TRAC engine output)	-	Rx	Tx	Tx	VSC function stops	Detectable (Light comes on)
VSC Control (Controls VSC/TRAC engine output)	Rx	Tx	-	-	VSC function stops	Detectable (Light comes on)

HINT:

- Rx: Reception from each ECU (sensor)
- Tx: Transmission to each ECU (sensor)

Skid Control ECU Communication Stop Mode

DESCRIPTION

Detection Item	Symptom	Trouble Area
SKID CONTROL ECU COMMUNICATION STOP MODE	• ABS/VSC/TARC is not displayed on the "BUS CHECK" screen of the intelligent tester via the CAN VIM. • DTCs are output from each ECU in skid control ECU communication stop mode as shown in the "DTC COMBINATION TABLE" (See page CA-7).	• Power source or inside the skid control ECU • Skid control ECU sub bus line or connector

WIRING DIAGRAM

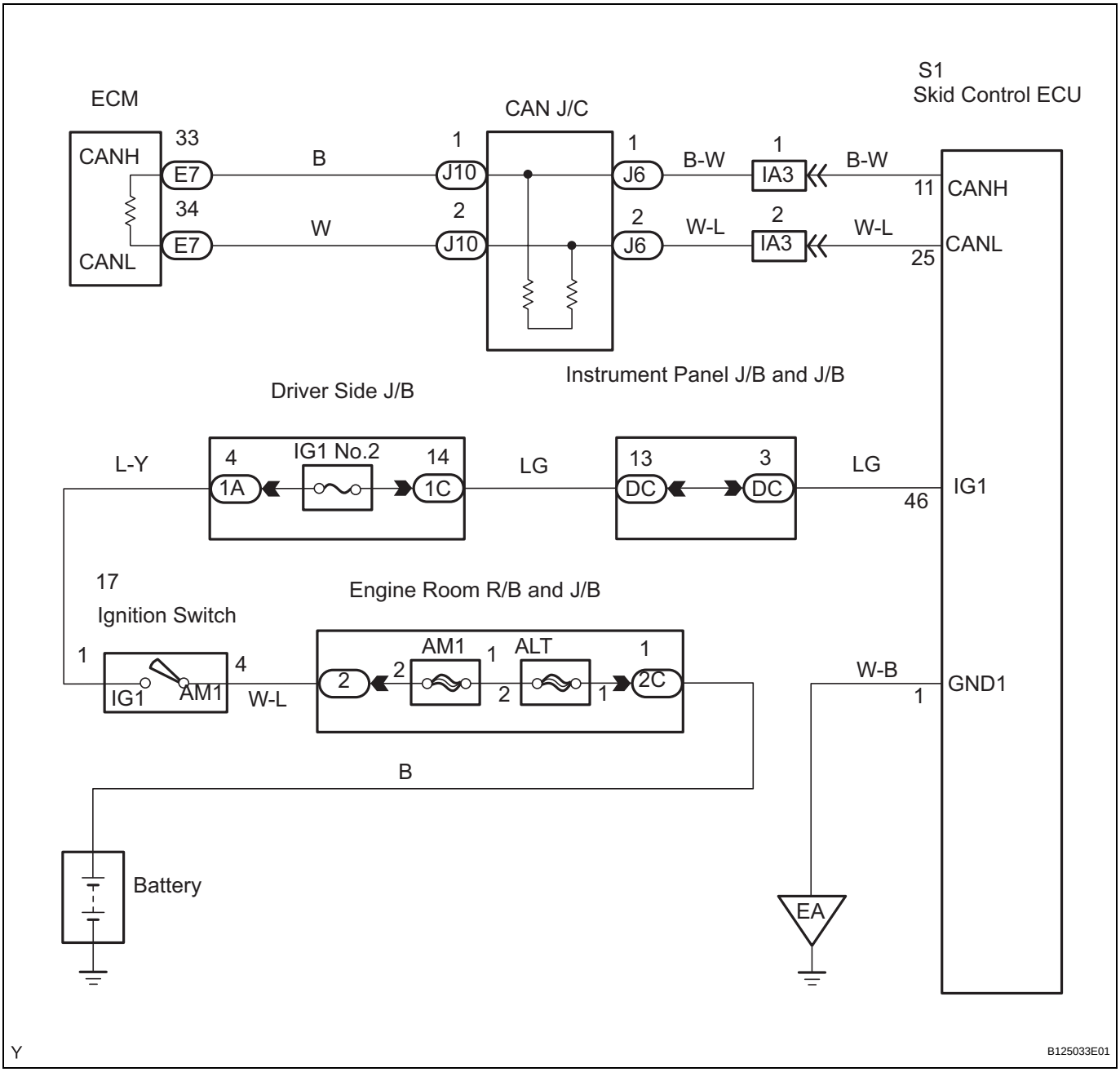

1	CHECK CAN BUS LINE FOR DISCONNECTION (SKID CONTROL ECU SUB BUS LINE)

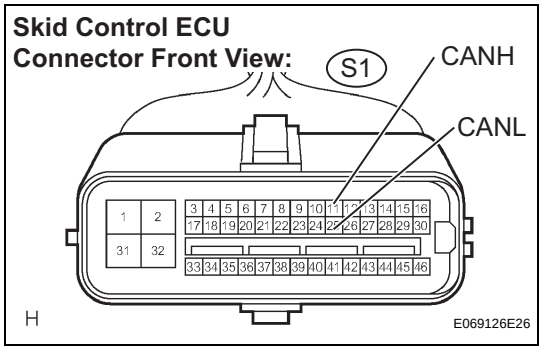

(a) Turn the ignition switch to the LOCK position.
(b) Disconnect the skid control ECU connector (S1).
(c) Measure the resistance according to the value(s) in the table below.

Standard resistance

Tester Connection	Condition	Specified Value
S1-11 (CANH) - S1-25 (CANL)	•Ignition switch OFF •Stop light switch OFF	54 to 69 Ω

NG → **REPAIR OR REPLACE SKID CONTROL ECU BRANCH LINE OR CONNECTOR (CAN-H, CAN-L)**

OK

2	CHECK WIRE HARNESS (IG, GND2)

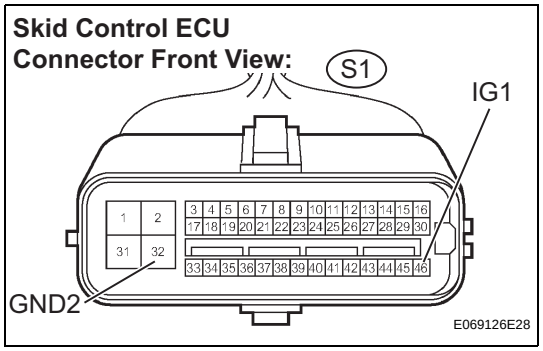

(a) Measure the resistance according to the value(s) in the table below.

Standard resistance

Tester Connection	Condition	Specified Value
S1-32 (GND2) - Body ground	Always	Below 1 Ω

(b) Measure the voltage according to the value(s) in the table below.

Standard voltage

Tester Connection	Condition	Specified Value
S1-46 (IG1) - Body ground	• Ignition switch ON • Stop light switch OFF	10 to 14 V

NG → **REPAIR OR REPLACE WIRE HARNESS OR CONNECTOR**

OK

REPLACE MASTER CYLINDER SOLENOID

CA

Steering Angle Sensor Communication Stop Mode

DESCRIPTION

Detection Item	Symptom	Trouble Area
STEERING ANGLE SENSOR COMMUNICATION STOP MODE	• "STEERING SENSOR" is not displayed on the "Bus Check "screen of the intelligent tester via the CAN VIM. • DTCs are output from each ECU in steering angle sensor communication stop mode as shown in the "DTC COMBINATION TABLE" (See page CA-7).	• Power source or inside the steering angle sensor • Steering angle sensor sub bus line or connector

WIRING DIAGRAM

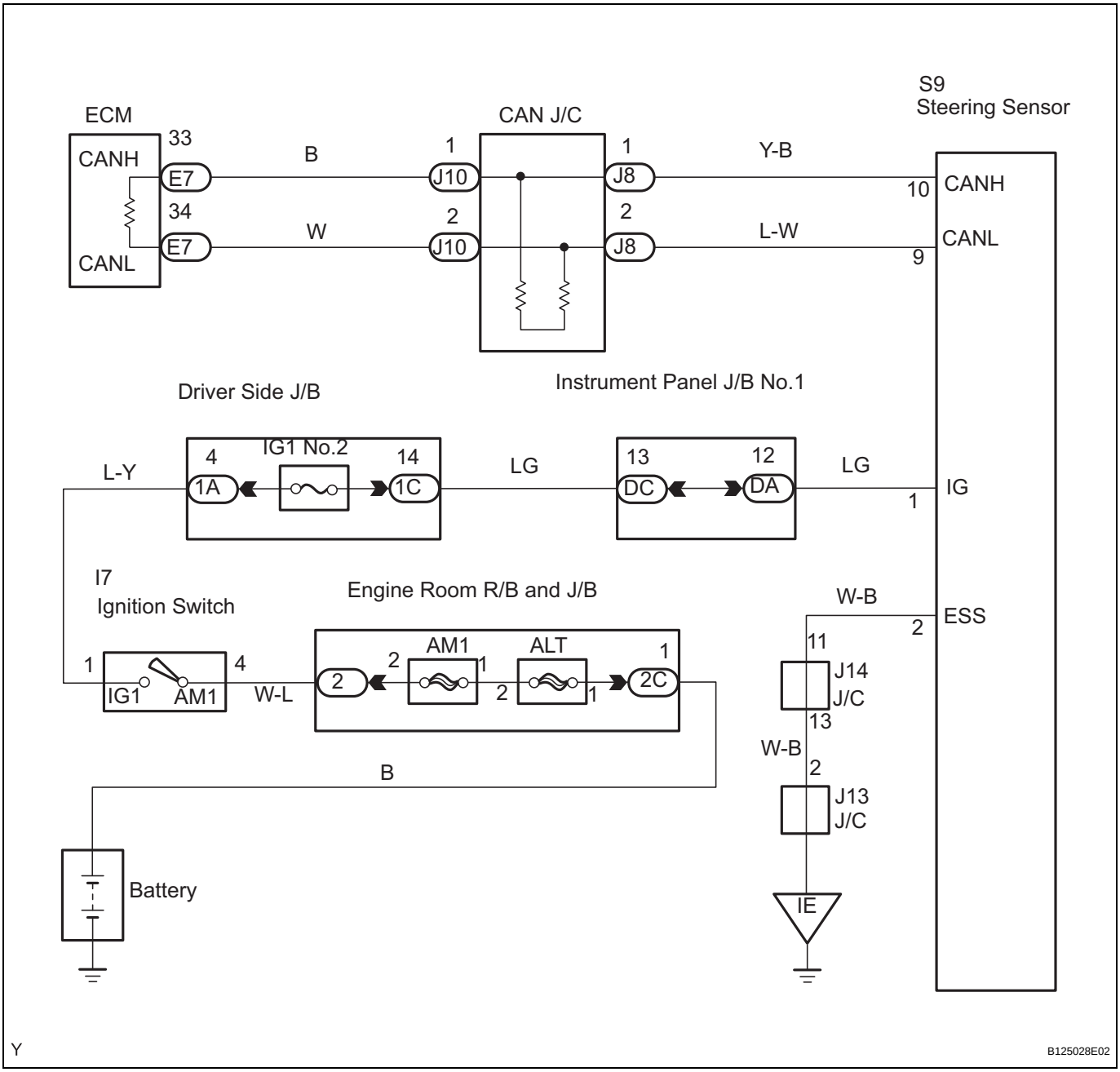

1	**CHECK CAN BUS LINE FOR DISCONNECTION (STEERING ANGLE SENSOR SUB BUS LINE)**

Steering Angle Sensor Wire Harness View:

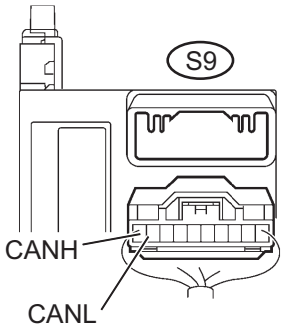

G030155E23

(a) Turn the ignition switch to the LOCK position.
(b) Disconnect the steering angle sensor connector (S9).
(c) Measure the resistance according to the value(s) in the table below.

Standard resistance

Tester Connection	Condition	Specified Value
S9-10 (CANH) - S9-9 (CANL)	• Ignition switch OFF • Stop light switch OFF	54 to 69 Ω

NG → **REPAIR OR REPLACE STEERING ANGLE SENSOR SUB BUS LINE OR CONNECTOR (CAN-H, CAN-L)**

OK

2	**CHECK WIRE HARNESS (IG1, ESS)**

Steering Angle Sensor Wire Harness View:

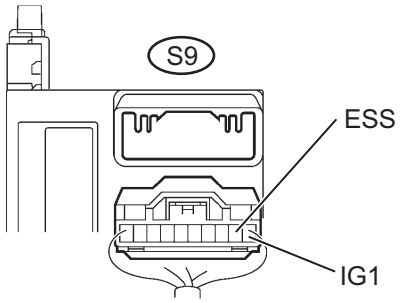

G030155E24

(a) Measure the resistance according to the value(s) in the table below.

Standard resistance

Tester Connection	Condition	Specified Value
S9-2 (ESS) - Body ground	Always	Below 1 Ω

(b) Measure the voltage according to the value(s) in the table below.

Standard voltage

Tester Connection	Condition	Specified Value
S9-1 (IG) - Body ground	• Ignition switch ON • Stop light switch OFF	10 to 14 V

NG → **REPAIR OR REPLACE WIRE HARNESS OR CONNECTOR**

OK

REPLACE STEERING ANGLE SENSOR

CA

Yaw Rate Sensor Communication Stop Mode

DESCRIPTION

Detection Item	Symptom	Trouble Area
YAW RATE SENSOR COMMUNICATION STOP MODE	• YAW/DECELERAT is not displayed on the" BUS CHECK" screen of the intelligent tester via the CAN VIM • "CHECK" screen of the intelligent tester via the CAN VIM. DTCs are output from each ECU in yaw rate sensor communication stop mode as shown in the "DTC COMBINATION TABLE" (See page CA-7).	• Power source or inside the yaw rate sensor • Yaw rate sensor sub bus line or connector

WIRING DIAGRAM

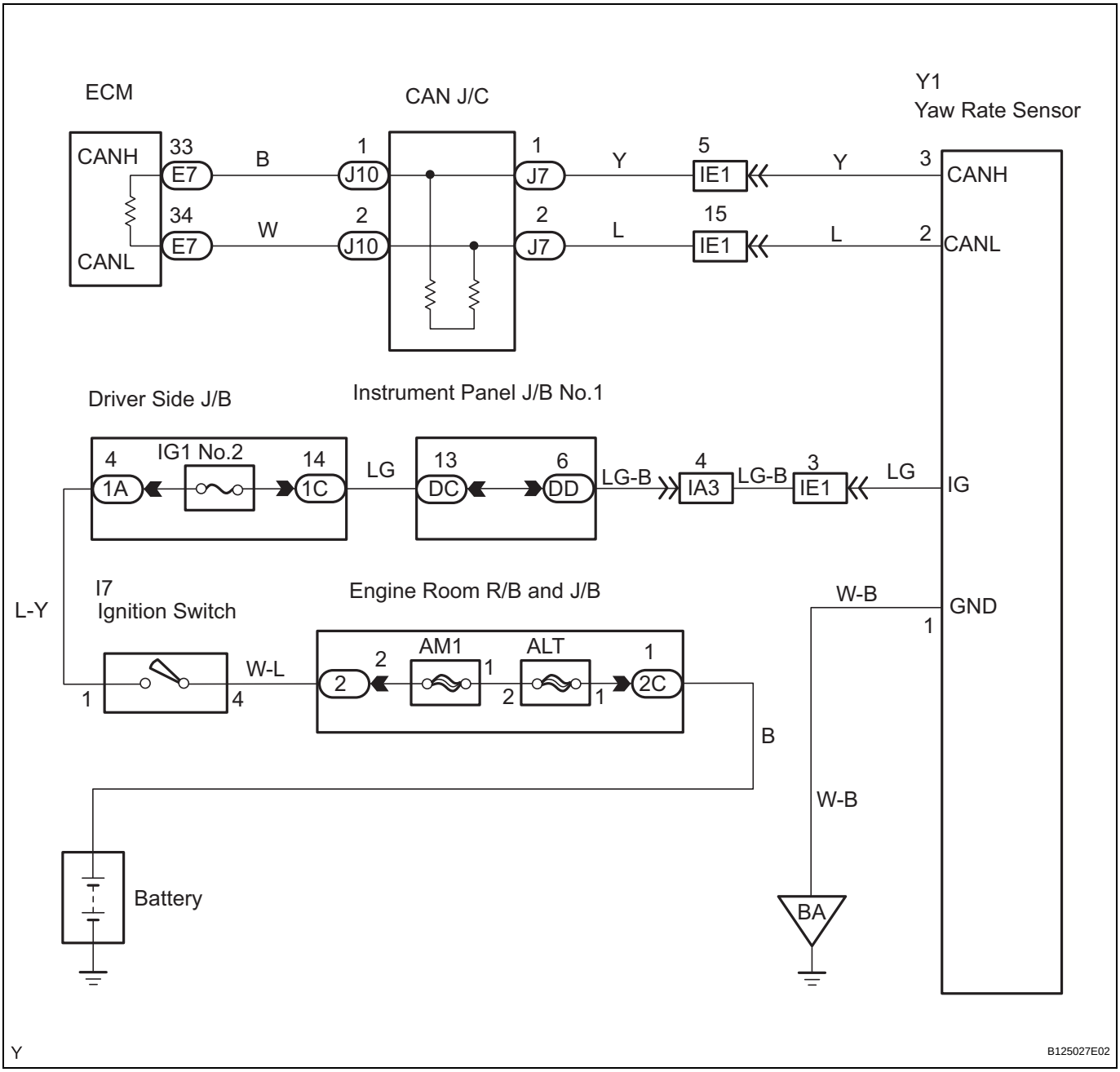

1	CHECK CAN BUS LINE FOR DISCONNECTION (YAW RATE SENSOR SUB BUS LINE)

Yaw Rate Sensor Wire Harness View:

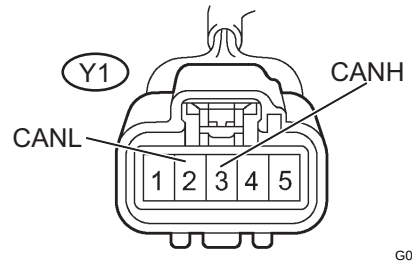

(a) Turn the ignition switch to the LOCK position.
(b) Disconnect the yaw rate sensor connector (Y1).
(c) Measure the resistance according to the value(s) in the table below.

Standard resistance

Tester Connection	Condition	Specified Value
Y1-2 (CANH) - Y1-3 (CANL)	• Ignition switch OFF • Stop light switch OFF	54 to 69 Ω

NG → **REPAIR OR REPLACE YAW RATE SENSOR SUB BUS LINE OR CONNECTOR (CAN-H, CAN-L)**

OK

2	CHECK WIRE HARNESS (IG, GND)

Yaw Rate Sensor Wire Harness View:

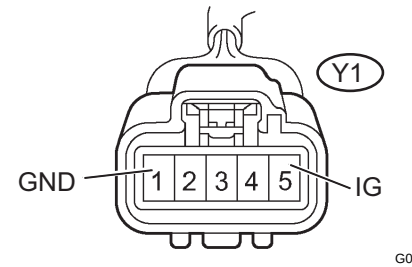

(a) Measure the resistance according to the value(s) in the table below.

Standard resistance

Tester Connection	Condition	Specified Value
Y1-1 (GND) - Body ground	Always	Below 1 Ω

(b) Measure the voltage according to the value(s) in the table below.

Standard Voltage

Tester Connection	Condition	Specified Value
Y1-5 (IG) - Body ground	• Ignition switch ON • Stop light switch OFF	10 to 14 V

OK → **REPAIR OR REPLACE HARNESS OR CONNECTOR**

OK

REPLACE YAW RATE SENSOR

CA

CAN Bus Line

DESCRIPTION

When any DTC of the CAN communication system is output, first measure the resistance between the terminals of the DLC3 and the yaw rate sensor connector to specify the trouble area.

WIRING DIAGRAM

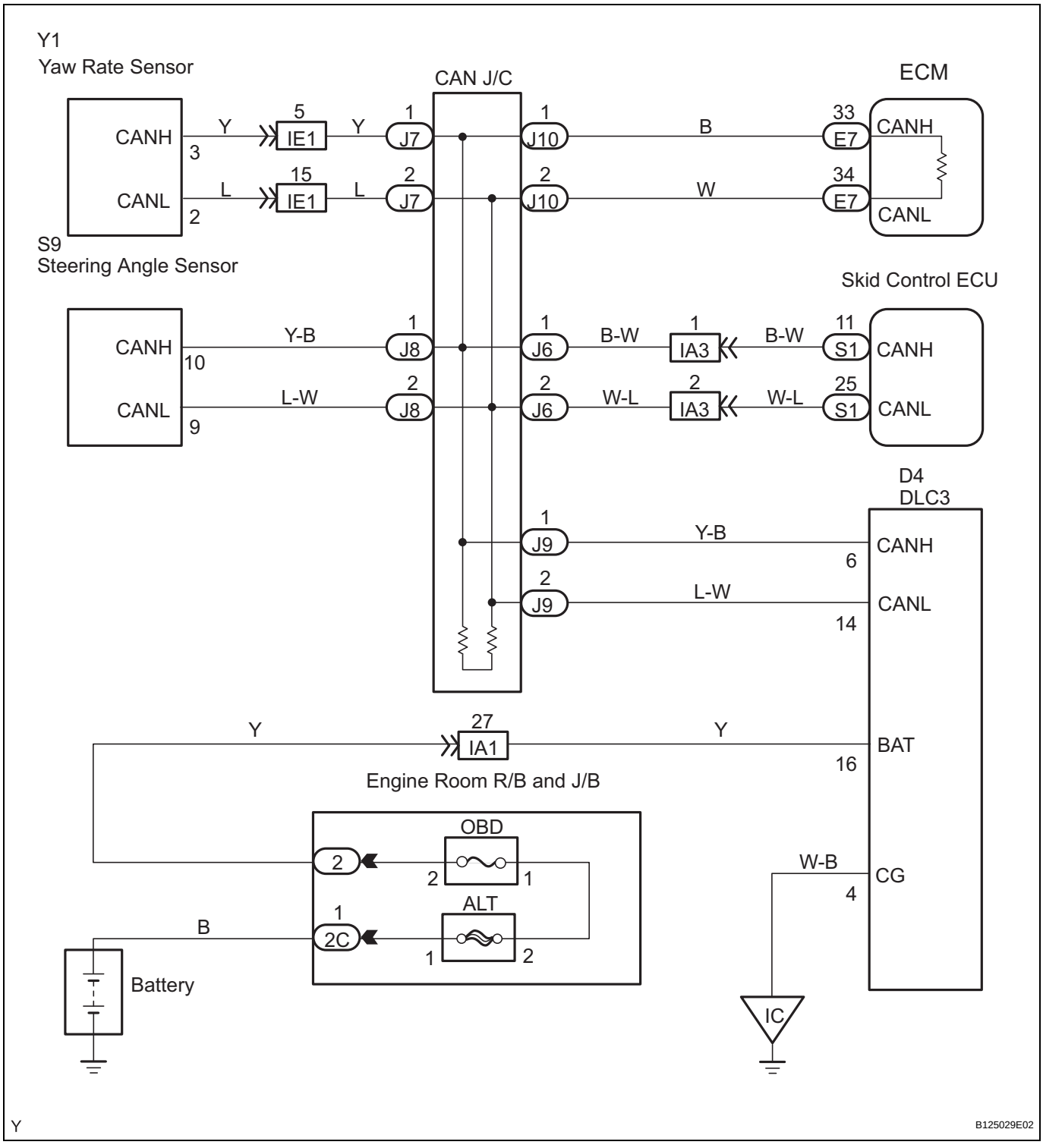

1	**CHECK CAN BUS LINE (MAIN BUS LINE FOR DISCONNECTION, BUS LINES FOR SHORT CIRCUIT)**

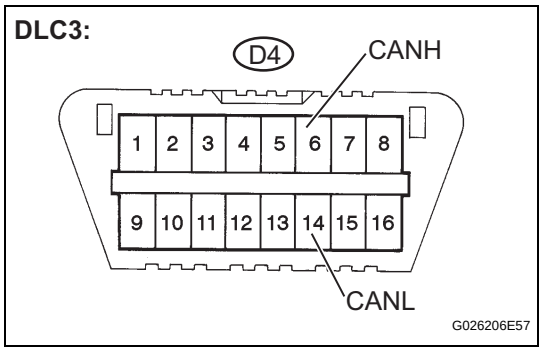

(a) Measure the resistance according to the value(s) in the table below.

Standard resistance

Tester Connection	Condition	Specified Value	Result
D4-6 (CANH) -D4-14 (CANL)	• Ignition switch OFF • Stop light switch OFF	54 to 69 Ω	OK
D4-6 (CANH) - D4-14 (CANL)	• Ignition switch OFF • Stop light switch OFF	69 Ω or higher	NG-A
D4-6 (CANH) - D4-14 (CANL)	• Ignition switch OFF • Stop light switch OFF	Below 54 Ω	NG-B

NG-A → **CHECK CAN MAIN BUS LINE (FOR DISCONNECTION)**

NG-B → **CHECK CAN BUS LINE (FOR SHORT CIRCUIT)**

CA

OK

2	**CHECK CAN BUS LINE (FOR SHORT TO +B)**

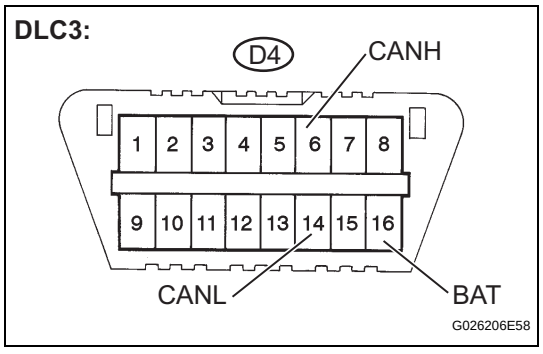

(a) Measure the resistance according to the value(s) in the table below.

Standard resistance

Tester Connection	Condition	Specified Value
D4-6 (CANH) - D4-16 (BAT)	• Ignition switch OFF • Stop light switch OFF	1 MΩ or higher
D4-14 (CANL) - D4-16 (BAT)	• Ignition switch OFF • Stop light switch OFF	1 MΩ or higher

NG → **CHECK CAN BUS LINE (FOR SHORT TO +B)**

OK

3	CHECK CAN BUS LINE (FOR SHORT TO GND)

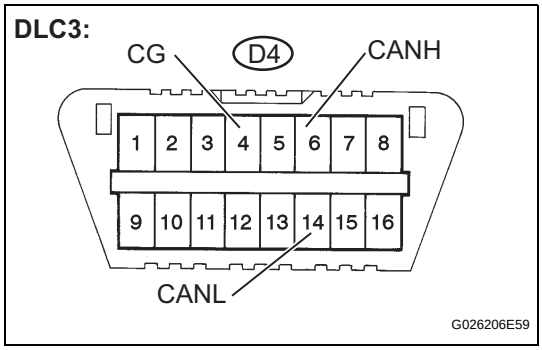

(a) Measure the resistance according to the value(s) in the table below.

Standard resistance

Tester Connection	Condition	Specified Value
D4-4 (CG) - D4-6 (CANH)	• Ignition switch OFF • Stop light switch OFF	3 kΩ or higher
D4-4 (CG) - D4-14 (CANL)	• Ignition switch OFF • Stop light switch OFF	3 kΩ or higher

NG → CHECK CAN BUS LINE (FOR SHORT TO GND)

OK

GO TO HOW TO PROCEED WITH TROUBLESHOOTING

CA

Can Main Bus Line for Disconnection

DESCRIPTION

The CAN main bus line and DLC3 sub bus line may have a disconnection when the resistance between terminals 6 (CANH) and 14 (CANL) of the DLC3 is more than 69 Ω.

Symptom	Trouble Area
Resistance between terminals 6 (CANH) and 14 (CANL) of the DLC3 is more than 69 Ω.	• CAN main bus line • ECM • CAN J/C

WIRING DIAGRAM

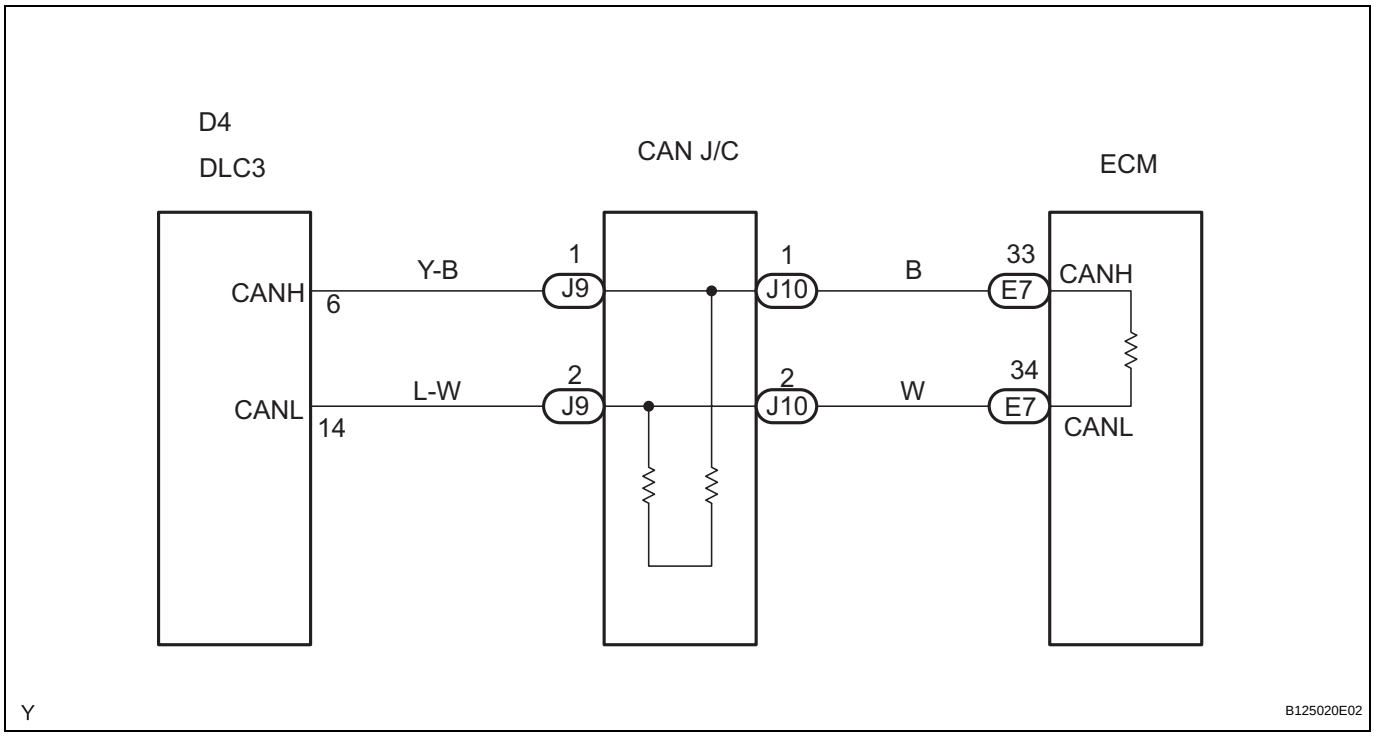

CA

1	CHECK DLC3

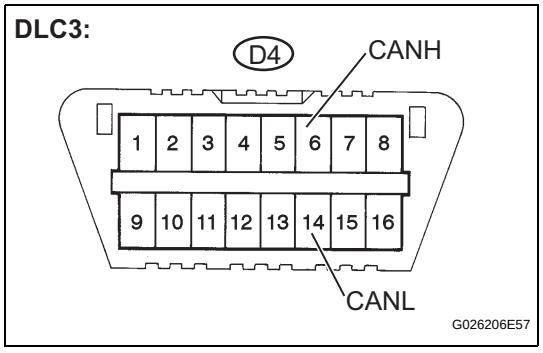

(a) Measure the resistance according to the value(s) in the table below.

Result

Tester connection	Condition	Specified value	Result
D4-6 (CANH) - D4-14 (CANL)	• IG switch OFF • Stop light switch OFF	108 to 132 Ω	A
D4-6 (CANH) - D4-14 (CANL)	• IG switch OFF • Stop light switch OFF	132 Ω or higher	B

NOTICE:
When the measured value is 132 Ωor more and a CAN communication system diagnostic code is output, there may be a fault other than a disconnection of the DLC3 sub bus line.
For that reason, troubleshooting should be performed again from "How to Proceed with Troubleshooting" after repairing the trouble area.

B → **REPAIR OR REPLACE DLC3 BRANCH LINE OR CONNECTOR (CAN-H, CAN-L)**

A

2 CHECK CAN MAIN BUS LINE FOR DISCONNECTION (ECM - CAN J/C)

ECM Wire Harness View 1GR-FE:

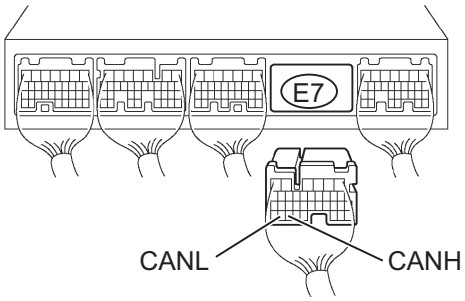

ECM Wire Harness View 2TR-FE:

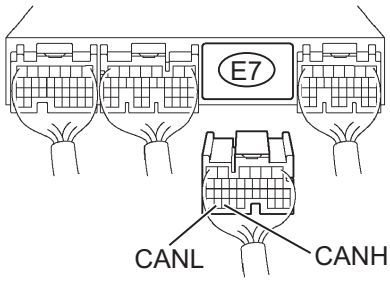

I101322E03

(a) Disconnect the connector (E7) from the ECM.
(b) Measure the resistance according to the value(s) in the table below.

Standard resistance

Tester Connection	Condition	Specified Condition
E7-33 (CANH) - E7-34 (CANL)	• IG switch OFF • Stop light switch OFF	108 to 132 Ω

OK → **REPLACE ECM**

NG

CA

3	INSPECT CAN J/C

CAN J/C "A" Side (w/ Earth Terminal) Wire Harness View:

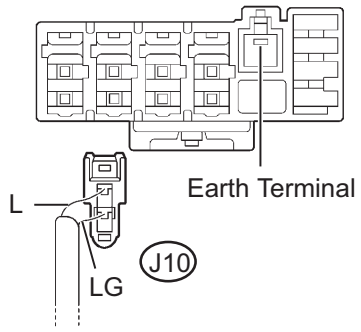

G031933E12

(a) Disconnect the CAN main bus line connector (J10) from the CAN J/C.

NOTICE:

- **Before disconnecting the connector, make a note of where it is connected.**
- **Reconnect the connector to its original position.**

CAN J/C "A" Side (w/ Earth Terminal):

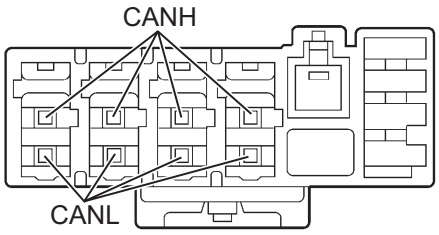

G026370E02

(b) Measure the resistance according to the value in the table below.

Standard resistance

Between the terminals where the connector (J10) was connected	Condition	Specified value
CANH - CANL	•IG switch OFF •Stop light switch OFF	108 to 132 Ω

CA

NG → **REPLACE CAN J/C**

OK

REPAIR OR REPLACE CAN MAIN BUS LINE OR CONNECTOR (CAN J/C - ECM)

Short in CAN Bus Lines

DESCRIPTION

The CAN bus lines are considered to be shorted when the resistance between terminals 6 (CANH) and 14 (CANL) of the DLC3 is below 54 Ω.

Symptom	Trouble Area
Resistance between terminals 6(CANH) and 14(CANL) of the DLC3 is below 54 Ω.	• Short in CAN bus lines • Skid control ECU • Steering angle sensor • Yaw rate sensor • ECM • CAN junction connector

WIRING DIAGRAM

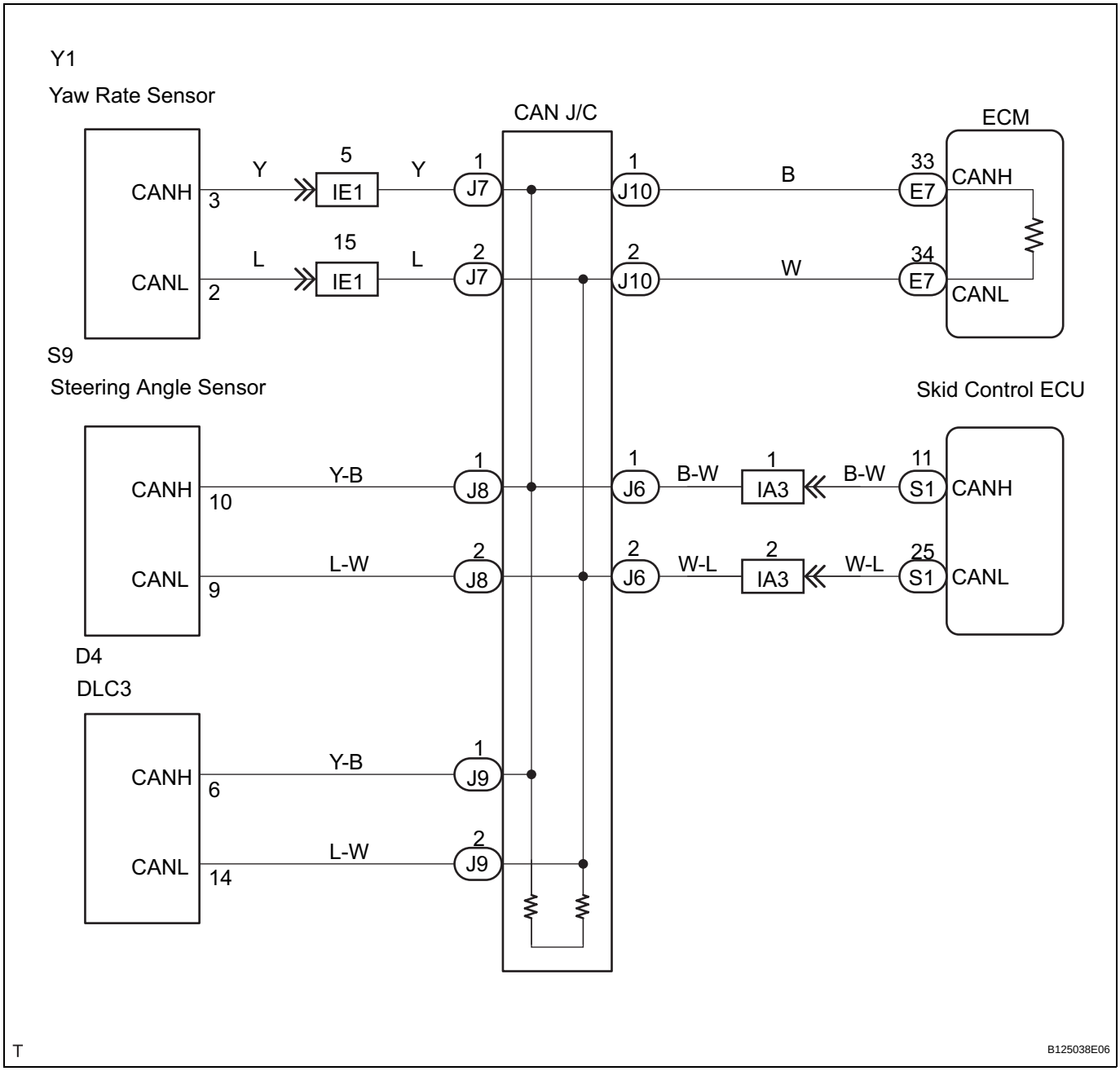

1	**CHECK CAN BUS LINES FOR SHORT CIRCUIT (DLC3 SUB BUS LINE)**

CAN J/C "A" Side (w/ Earth Terminal) Wire Harness View:

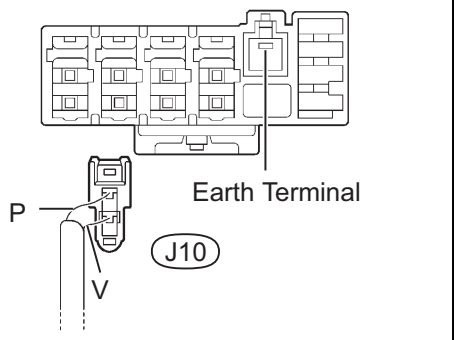

G031933E09

(a) Disconnect the DLC3 sub bus line connector (J10) from the CAN J/C.

NOTICE:

- **Before disconnecting the connector, make a note of where it is connected.**
- **Reconnect the connector to its original position.**

DLC3:

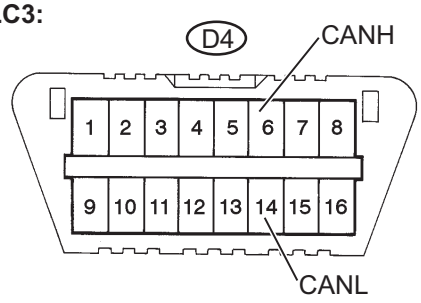

G026206E57

(b) Measure the resistance according to the value(s) in the table below.

Standard resistance

Tester Connection	Condition	Specified Value
D4-6 (CANH) - D4-14 (CANL)	• Ignition switch OFF • Stop light switch OFF	1 MΩ or more

CA

NG → **REPAIR OR REPLACE DLC3 BRANCH LINE OR CONNECTOR (CAN-H, CAN-L)**

OK

2	**CONNECT CONNECTOR**

(a) Reconnect the DLC3 sub bus line connector (J10) to the CAN J/C.

NEXT

3	CHECK CAN BUS LINES FOR SHORT CIRCUIT (SKID CONTROL ECU SUB BUS LINE)

CAN J/C "B" Side (w/o Earth Terminal) Wire Harness View:

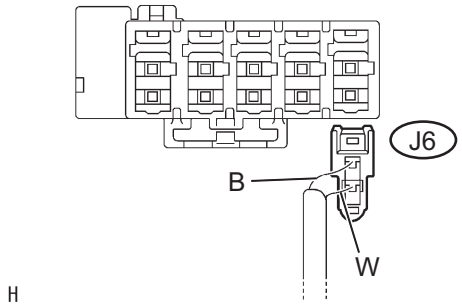

G031932E78

(a) Disconnect the skid control ECU sub bus line connector (J6) from the CAN J/C.

NOTICE:

- **Before disconnecting the connector, make a note of where it is connected.**
- **Reconnect the connector to its original position.**

DLC3:

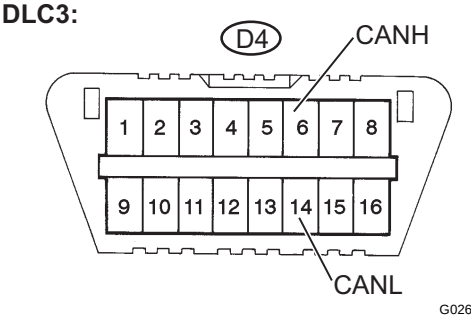

G026206E57

(b) Measure the resistance according to the value(s) in the table below.

Standard resistance

Tester Connection	Condition	Specified Value
D4-6 (CANH) - D4-14 (CANL)	•Ignition switch OFF •Stop light switch OFF	54 to 69 Ω

OK → **Go to step 10**

NG

4	CONNECT CONNECTOR

(a) Reconnect the skid control ECU sub bus line connector (J6) to the CAN J/C.

NEXT

CA

5	CHECK CAN BUS LINES FOR SHORT CIRCUIT (YAW RATE SENSOR SUB BUS LINE)

CAN J/C "A" Side (w/ Earth Terminal) Wire Harness View:

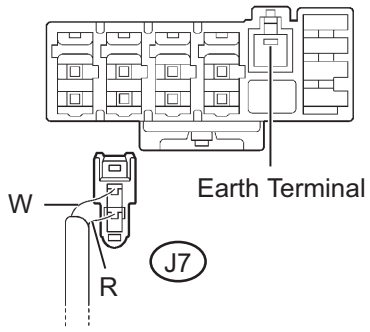

G031933E10

(a) Disconnect the yaw rate sensor sub bus line connector (J7) from the CAN J/C.

NOTICE:

- **Before disconnecting the connector, make a note of where it is connected.**
- **Reconnect the connector to its original position.**

DLC3:

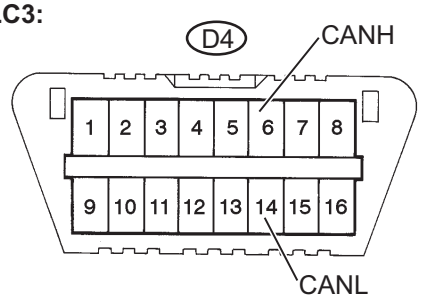

G026206E57

(b) Measure the resistance according to the value(s) in the table below.

Standard resistance

Tester Connection	Condition	Specified Value
D4-6 (CANH) - D4-14 (CANL)	•Ignition switch OFF •Stop light switch OFF	54 to 69 Ω

CA

OK → **Go to step 12**

NG

6	CONNECT CONNECTOR

(a) Reconnect the yaw rate sensor sub bus line connector (J7) to the CAN J/C.

NEXT

7	CHECK CAN BUS LINES FOR SHORT CIRCUIT (STEERING ANGLE SENSOR SUB BUS LINE)

CAN J/C "A" Side (w/ Earth Terminal) Wire Harness View:

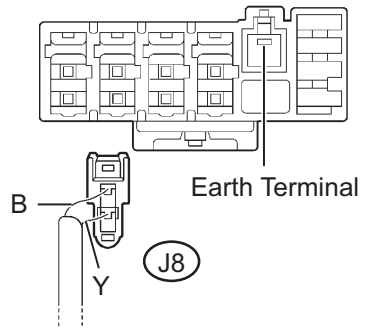

G031933E11

(a) Disconnect the steering angle sensor sub bus line connector (J8) from the CAN J/C.

NOTICE:

- **Before disconnecting the connector, make a note of where it is connected.**
- **Reconnect the connector to its original position.**

DLC3:

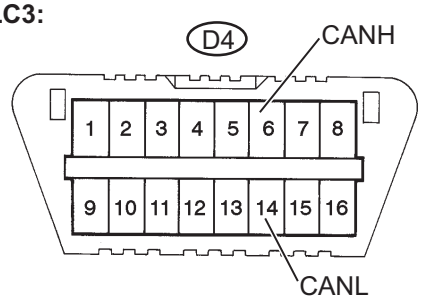

G026206E57

(b) Measure the resistance according to the value(s) in the table below.

Standard resistance

Tester Connection	Condition	Specified Value
D4-6 (CANH) - D4-14 (CANL)	•Ignition switch OFF •Stop light switch OFF	54 to 69 Ω

OK → **Go to step 14**

NG

8	CONNECT CONNECTOR

(a) Reconnect the steering angle sensor sub bus line connector (J8) to the CAN J/C.

NEXT

CA

9	CHECK CAN BUS LINES FOR SHORT CIRCUIT (ECM MAIN BUS LINE)

CAN J/C "A" Side (w/ Earth Terminal) Wire Harness View:

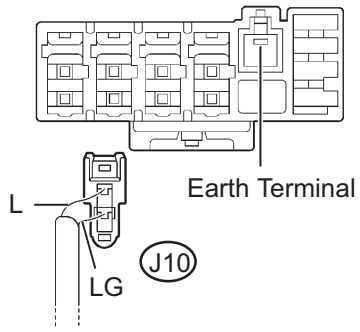

G031933E12

(a) Disconnect the ECM main bus line connector (J10) from the CAN J/C.

NOTICE:

- **Before disconnecting the connector, make a note of where it is connected.**
- **Reconnect the connector to its original position.**

DLC3:

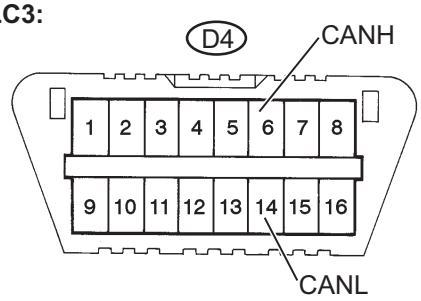

G026206E57

(b) Measure the resistance according to the value(s) in the table below.

Standard resistance

Tester Connection	Condition	Specified Value
D4-6 (CANH) - D4-14 (CANL)	•Ignition switch OFF •Stop light switch OFF	108 to 132 Ω

CA

OK → **Go to step 16**

NG

REPLACE CAN J/C

10	CONNECT CONNECTOR

(a) Reconnect the skid control ECU sub bus line connector (J6) to the CAN J/C.

NEXT

11	CHECK CAN BUS LINES FOR SHORT CIRCUIT (SKID CONTROL ECU SUB BUS LINE)

(a) Disconnect the skid control ECU connector (S1).

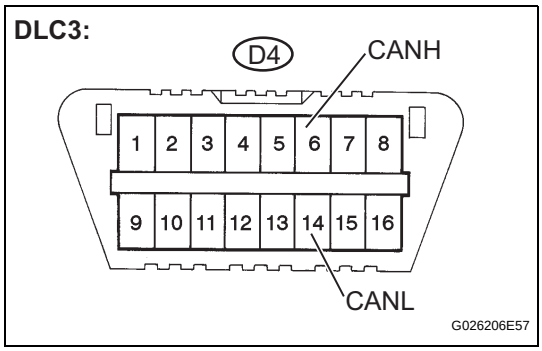

(b) Measure the resistance according to the value(s) in the table below.

Standard resistance

Tester Connection	Condition	Specified Value
D4-6 (CANH) - D4-14 (CANL)	• Ignition switch OFF • Stop light switch OFF	54 to 69 Ω

OK → **REPLACE MASTER CYLINDER SOLENOID**

NG

REPAIR OR REPLACE SKID CONTROL ECU WITH ACTUATOR SUB BUS LINE OR CONNECTOR (CAN-H, CAN-L)

12 CONNECT CONNECTOR

(a) Reconnect the yaw rate sensor sub bus line connector (J7) to the CAN J/C.

NEXT

13 CHECK CAN BUS LINES FOR SHORT CIRCUIT (YAW RATE SENSOR SUB BUS LINE)

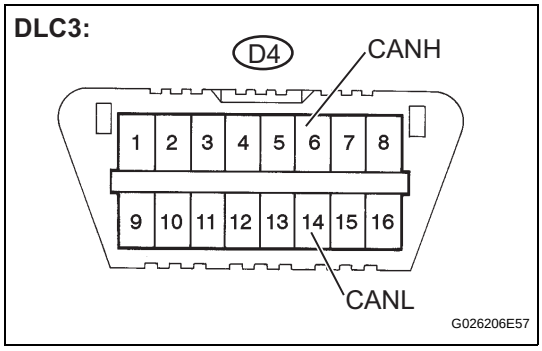

(a) Disconnect the yaw rate sensor connector (Y1).

(b) Measure the resistance according to the value(s) in the table below.

Standard resistance

Tester Connection	Condition	Specified Value
D4-6 (CANH) - D4-14 (CANL)	• Ignition switch OFF • Stop light switch OFF	54 to 69 Ω

OK → **REPLACE YAW RATE SENSOR**

NG

REPAIR OR REPLACE YAW RATE SENSOR SUB BUS LINE OR CONNECTOR (CAN-H, CAN-L)

14 CONNECT CONNECTOR

(a) Reconnect the steering angle sensor sub bus line connector (J8) to the CAN J/C.

NEXT

15	CHECK CAN BUS LINES FOR SHORT CIRCUIT (STEERING ANGLE SENSOR SUB BUS LINE)

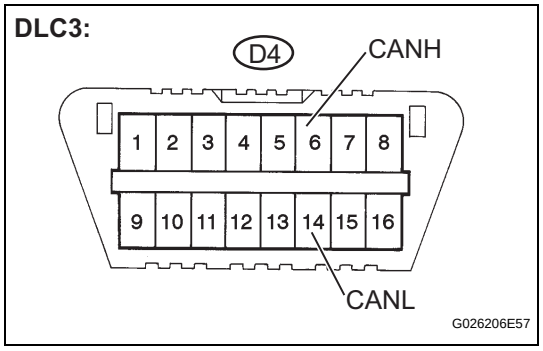

(a) Disconnect the steering angle sensor connector (S9).
(b) Measure the resistance according to the value(s) in the table below.

Standard resistance

Tester Connection	Condition	Specified Value
D4-6 (CANH) - D4-14 (CANL)	• Ignition switch OFF • Stop light switch OFF	54 to 69 Ω

OK → REPLACE STEERING ANGLE SENSOR

NG

REPAIR OR REPLACE STEERING ANGLE SENSOR BRANCH LINE OR CONNECTOR (CAN-H, CAN-L)

16	CONNECT CONNECTOR

(a) Reconnect the ECM main bus line connector (J10) to the CAN J/C.

NEXT

17	CHECK CAN BUS LINES FOR SHORT CIRCUIT (ECM MAIN BUS LINE)

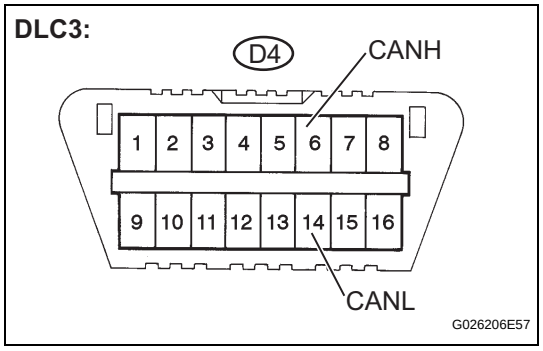

(a) Disconnect the ECM connector (E7).
(b) Measure the resistance according to the value(s) in the table below.

Standard Resistance

Tester Connection	Condition	Specified Value
D4-6 (CANH) - D4-14 (CANL)	• Ignition switch OFF • Stop light switch OFF	108 to 132 Ω

OK → REPLACE ECM

NG

REPAIR OR REPLACE ECM MAIN BUS LINE OR CONNECTOR (CAN -H, CAN-L)

REMOVAL

1. **DISCHARGE FUEL SYSTEM PRESSURE**
   (See page FU-1)
2. **REMOVE BATTERY**
3. **DRAIN ENGINE COOLANT (See page CO-3)**
4. **DRAIN ENGINE OIL (See page LU-4)**
5. **REMOVE POWER STEERING LINK ASSEMBLY**
   (See page PS-53)
6. **REMOVE FRONT DIFFERENTIAL CARRIER ASSEMBLY (for 4WD)**
   (See page DF-19)
7. **REMOVE TIMING CHAIN OR BELT COVER SUB-ASSEMBLY**
   (See page LU-34)
8. **REMOVE CHAIN SUB-ASSEMBLY**
   (See page EM-44)
9. **REMOVE NO.1 COOL AIR INLET**
   (a) Remove the 2 bolts, then remove the cool air inlet.
10. **REMOVE FRONT EXHAUST PIPE ASSEMBLY**
    (See page EX-3)
11. **REMOVE MANIFOLD STAY**
    (a) Remove the 3 bolts, then remove the exhaust manifold stay.
12. **REMOVE EXHAUST MANIFOLD SUB-ASSEMBLY**
    (a) Disconnect the air fuel ratio sensor connector.
    (b) Remove the 6 nuts, then remove the exhaust manifold and gasket.
13. **DISCONNECT NO.1 FUEL PIPE SUB-ASSEMBLY (See page FU-13)**
14. **DISCONNECT NO.2 FUEL PIPE SUB-ASSEMBLY (See page FU-13)**
15. **REMOVE INTAKE MANIFOLD**
    (a) Disconnect the 6 fuel injector connectors.
    (b) Remove the 10 bolts, then remove the intake manifold and gasket.
16. **REMOVE WATER BY-PASS JOINT RR**
    (a) Disconnect the engine coolant temperature sensor connector.
    (b) Disconnect the heater hose.

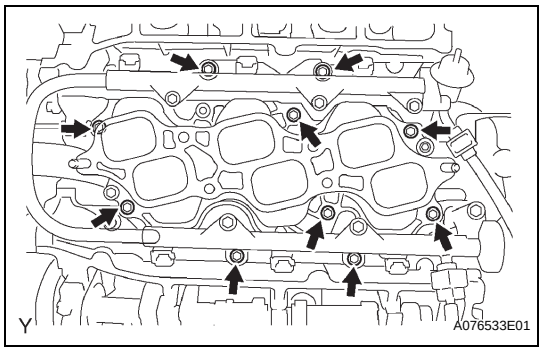

EM

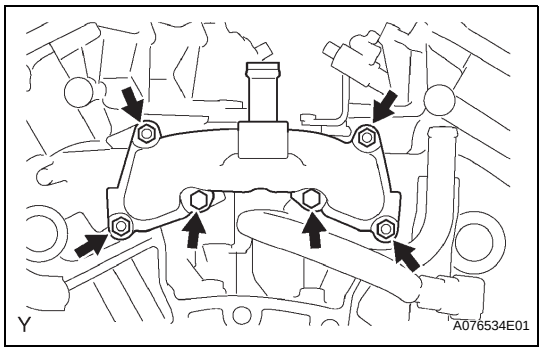

(c) Remove the 2 bolts and 4 nuts, then remove the water by-pass joint RR and 2 gaskets.
(d) Remove the O-ring from the water outlet hose.

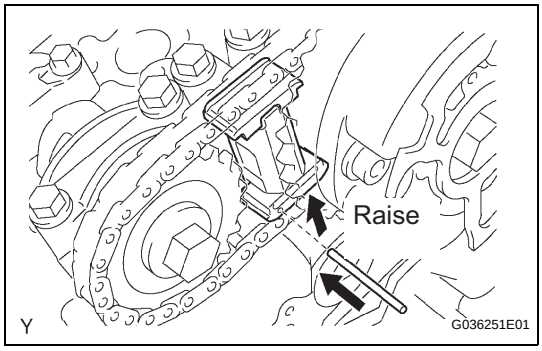

17. REMOVE CAMSHAFT TIMING GEARS AND NO.2 CHAIN (for Bank 1)

(a) While raising the chain tensioner No. 2, insert a pin of ϕ 1.0 mm (0.039 in.) into the hole to fix it.

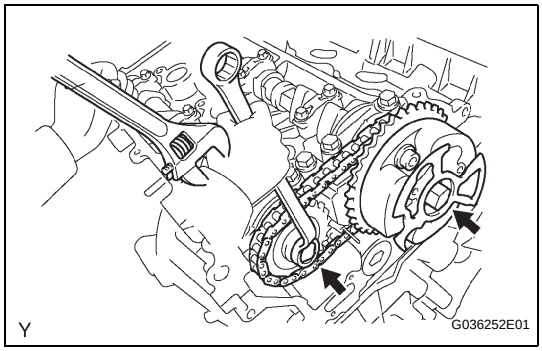

(b) Hold the hexagonal portion of the camshaft with a wrench.
NOTICE:
Be careful not to damage the cylinder head and valve lifter with the wrench.
(c) Remove the 2 bolts, then remove the camshaft timing gear, camshaft timing gear assembly and timing chain No. 2.
NOTICE:
Do not disassemble the camshaft timing gear assembly.

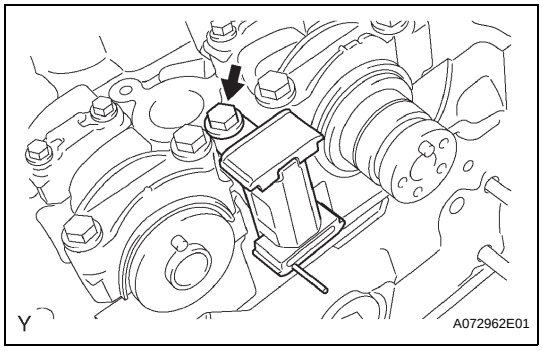

18. REMOVE NO.2 CHAIN TENSIONER ASSEMBLY

(a) Remove the bolt, then remove the chain tensioner No. 2.

19. REMOVE CAMSHAFTS
NOTICE:
Keep the camshaft level while it is being removed. The camshaft thrust clearance is very small and failing to keep it level could crack or damage the cylinder head journal surface, which receives the thrust. This could subsequently lead the camshaft to seize or break. Perform the following steps to avoid such problems.

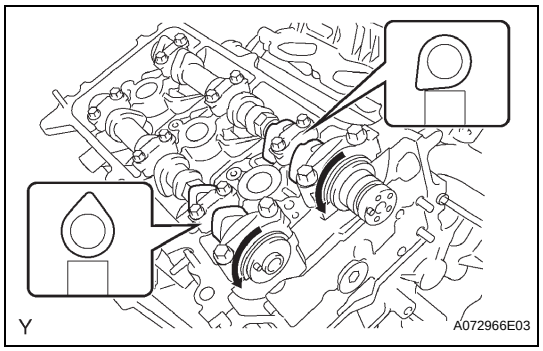

(a) Rotate the camshafts counterclockwise using a wrench so that the cam lobes of No. 1 cylinder face in the directions shown in the illustration.

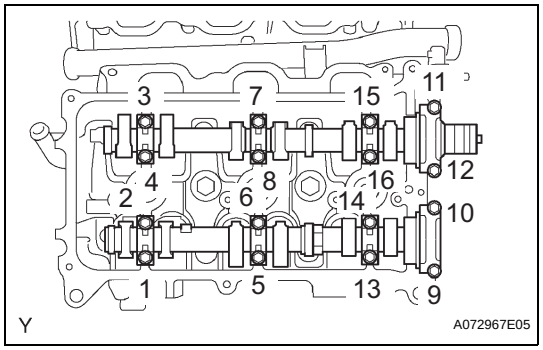

(b) Using several steps, loosen and remove the 16 bearing cap bolts uniformly in the sequence shown in the illustration.

(c) Remove the 8 bearing caps and 2 camshafts.

20. REMOVE NO.2 CAMSHAFT BEARING

21. REMOVE CYLINDER HEAD SUB-ASSEMBLY

(a) Remove the 2 bolts and separate the 2 ground cables.

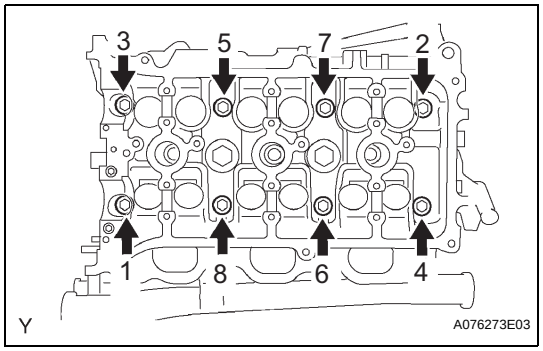

(b) Using several steps, loosen the 8 cylinder head bolts on the cylinder head uniformly with a 10 mm bi-hexagon wrench in the sequence shown in the illustration. Remove the 8 cylinder head bolts and 8 plate washers.

NOTICE:

- **Be careful not to drop the plate washers into the cylinder head.**
- **Cylinder head warpage or cracking could result from removing the bolts in the wrong order.**

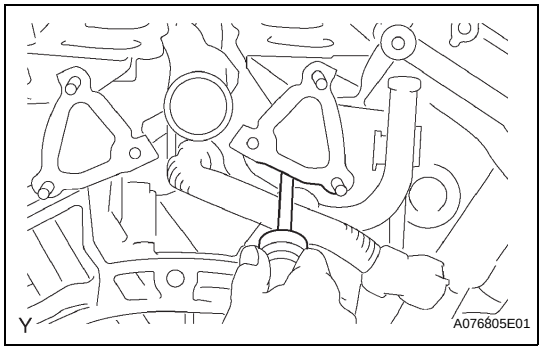

(c) Lift the cylinder head from the dowels on the cylinder block, and place the cylinder head on wooden blocks on a bench.

NOTICE:

Be careful not to drop the plate washers into the cylinder head.

If the cylinder head is difficult to lift off, pry between the cylinder head and cylinder block with a screwdriver.

22. REMOVE CYLINDER HEAD GASKET

INSPECTION

1. INSPECT CYLINDER HEAD SET BOLT

(a) Using a vernier caliper, measure the outside diameter of the bolt thread.

Standard outside diameter:
10.85 to 11.00 mm (0.4272 to 0.4331 in.)

Minimum outside diameter:
10.7 mm (0.421 in.)

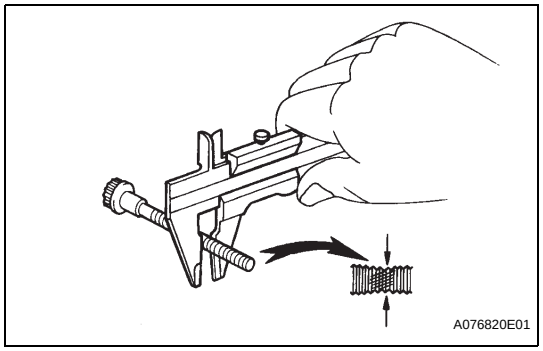

INSTALLATION

1. INSTALL CYLINDER HEAD GASKET

(a) Remove any old packing (FIPG) material and be careful not to drop any oil on the contact surfaces of the cylinder head and cylinder block.

(b) Apply a continuous bead of the seal packing (diameter 2.5 to 3 mm (0.098 to 0.118 in.)) to a new cylinder head gasket as shown in the illustration.
Seal packing:
Part No. 08826-00080 or equivalent
NOTICE:
Install the cylinder head within 3 minutes of applying seal packing. Tighten the cylinder head bolts within 15 minutes of installing the cylinder head. Otherwise, the seal packing must be removed and reapplied.

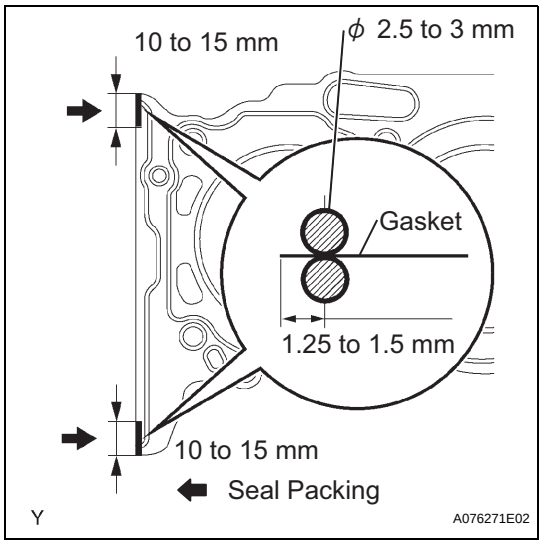

(c) Place the cylinder head gasket on the cylinder block surface with the Lot No. stamp upward.
NOTICE:
- **Be careful of the installation direction.**
- **Place the cylinder head carefully in order not to damage the gasket with the bottom part of the head.**

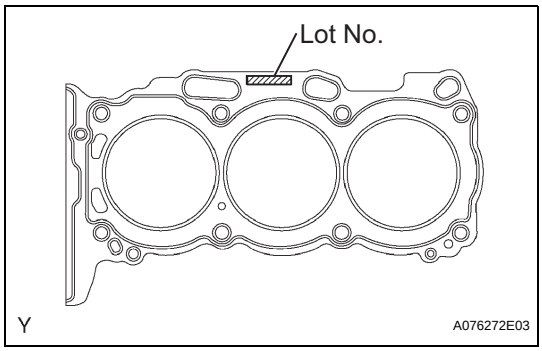

2. INSTALL CYLINDER HEAD SUB-ASSEMBLY

(a) Place the cylinder head on the cylinder head gasket.

(b) Install the 8 cylinder head bolts.
HINT:
- The cylinder head bolts are tightened in 2 successive steps (steps (3) and (5)).
- If any cylinder head bolts are broken or deformed, replace them.

(1) Apply a light coat of engine oil to the threads of the cylinder head bolts.

(2) Install the plate washer onto the cylinder head bolt.

(3) Using several steps, tighten each bolt uniformly with a 10 mm bi-hexagon wrench in the sequence shown in the illustration.
Torque: 36 N*m (367 kgf*cm, 27 ft.*lbf)
If any cylinder head bolts do not meet the torque specification, replace them.
NOTICE:
Do not drop the washers into the cylinder head.

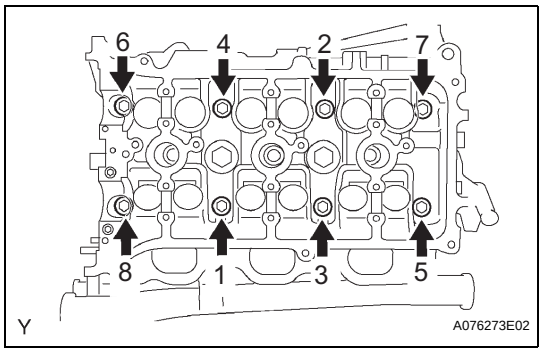

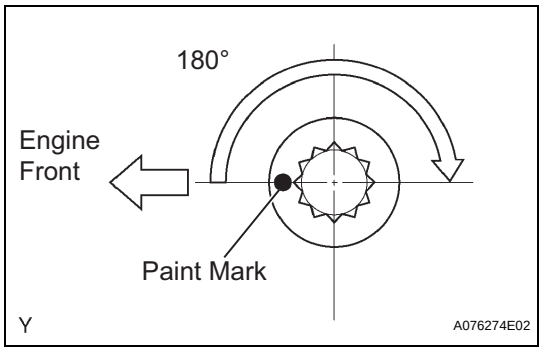

(4) Mark the front side of each cylinder head bolt with paint.
(5) Retighten the cylinder head bolts 180° as shown.
(6) Check that the painted marks are now at 180° from the engine front.

(c) Install the ground cables with the 2 bolts.
Torque: 8.0 N*m (82 kgf*cm, 71 in.*lbf)

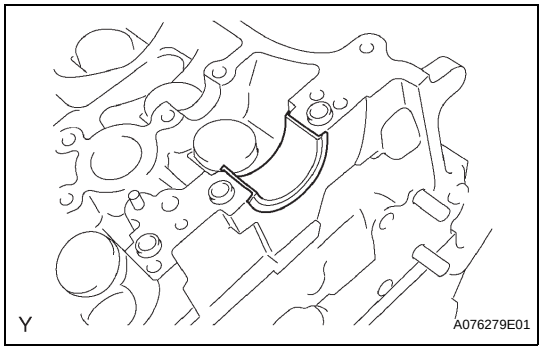

3. INSTALL NO.2 CAMSHAFT BEARING

(a) Install the camshaft bearing No. 2 onto the cylinder head.
NOTICE:
Clean the installation planes of the back side of the bearing and cylinder head and keep them free of oils and fats.

4. INSTALL CAMSHAFTS
NOTICE:
Keep the camshaft level while it is being removed. The camshaft thrust clearance is very small and failing to keep it level could crack or damage the cylinder head journal surface, which receives the thrust. This could subsequently lead the camshaft to seize or break. Perform the following steps to avoid such problems.

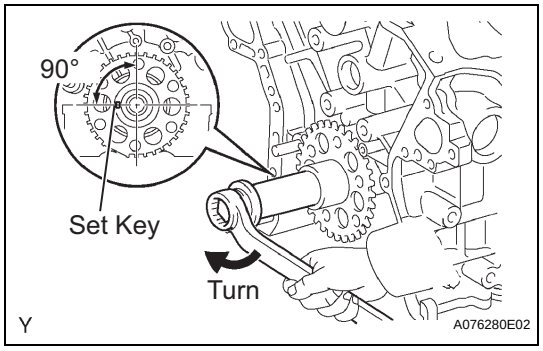

(a) Set the crankshaft position.
(1) Using the crankshaft pulley set bolt, turn the crankshaft, and set the crankshaft set key in the left horizontal position.
NOTICE:
Installing the crankshaft at the wrong angle could cause the piston head and valve head to come into contact with each other when installing the camshaft. This could cause damage, so always set the crankshaft at the correct angle.

(b) Apply new engine oil to the thrust portion and journal of the camshafts.

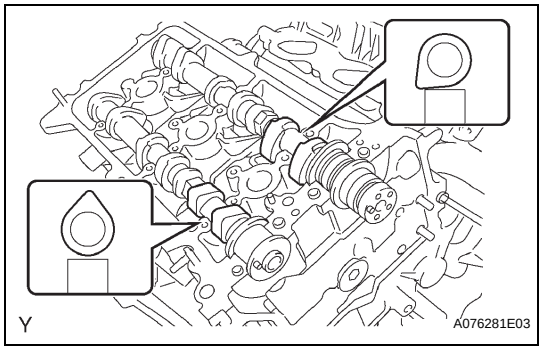

(c) Place the 2 camshafts onto the cylinder head with the cam lobes of No. 1 cylinder facing in the directions shown in the illustration.

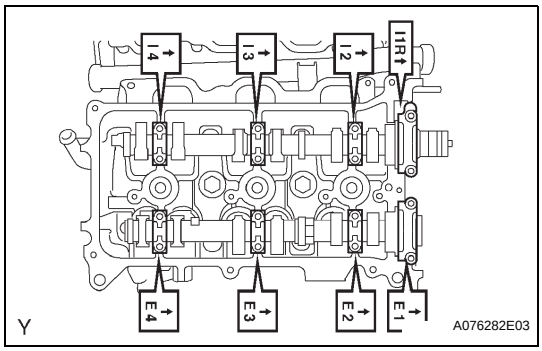

(d) Install the 8 bearing caps in the proper locations as shown.

(e) Apply a light coat of engine oil to the threads and under the heads of the bearing cap bolts.

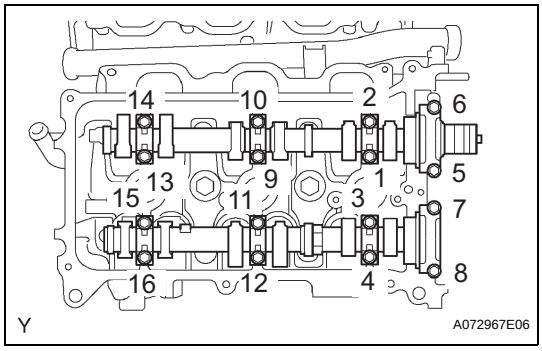

(f) Using several steps, uniformly install and tighten the 16 bearing cap bolts in the sequence shown in the illustration.

Torque: 9.0 N*m (92 kgf*cm, 80 in.*lbf) for 10 mm (0.39 in.) head
24 N*m (245 kgf*cm, 18 ft.*lbf) for 12 mm (0.47 in.) head

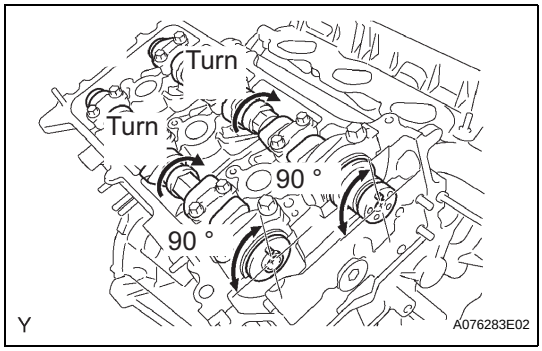

(g) Turn the camshafts clockwise until the knock pin comes to a position 90° to the cylinder head.

5. INSTALL NO.2 CHAIN TENSIONER ASSEMBLY

(a) While pushing in the tensioner, insert a pin of ϕ 1.0 mm (0.039 in.) into the hole to fix it.

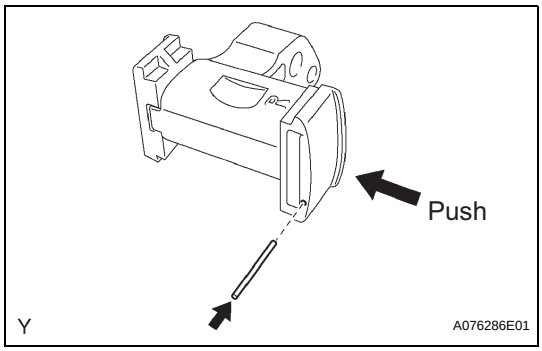

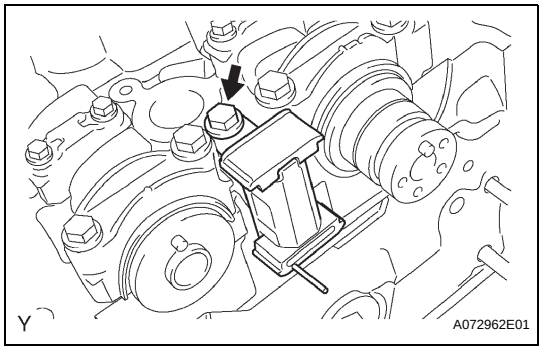

(b) Install the chain tensioner No. 2 with the bolt.
Torque: 19 N*m (194 kgf*cm, 14 ft.*lbf)

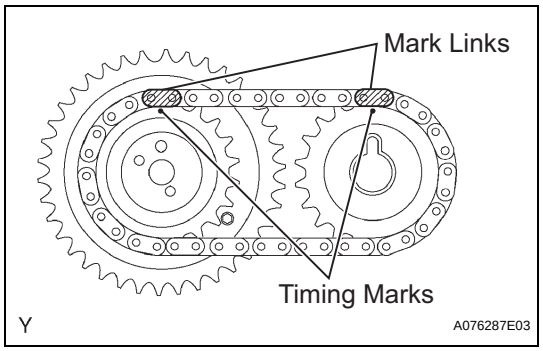

6. INSTALL CAMSHAFT TIMING GEARS AND NO.2 CHAIN (for Bank 1)

(a) Align the yellow mark links with the timing marks (1 dot mark) of camshaft timing gears as shown in the illustration.

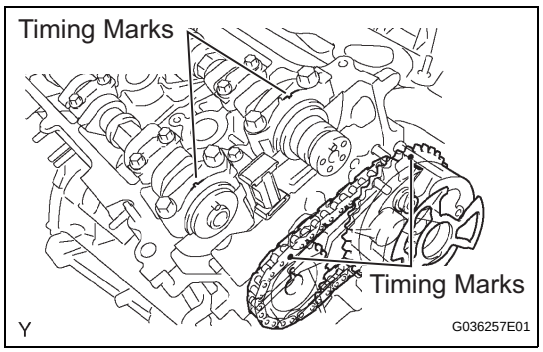

(b) Align the timing marks on the camshaft timing gears with the timing marks on the bearing caps, and install the camshaft timing gears with the chain onto the RH camshafts.

(c) Temporarily install the 2 camshaft timing gear bolts.

NOTICE:

Do not push the camshaft timing gear assembly onto the camshaft forcibly when installing it.

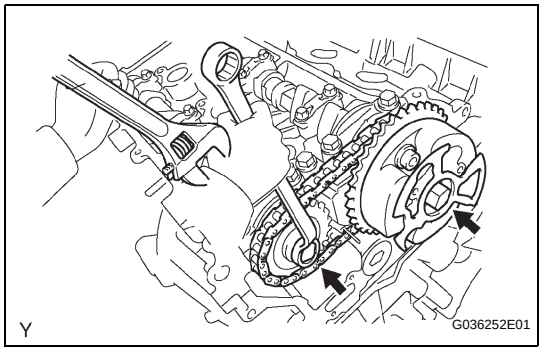

(d) Hold the hexagonal portion of the camshaft with a wrench, and tighten the 2 bolts.

Torque: 100 N*m (1,020 kgf*cm, 74 ft.*lbf)

(e) Remove the pin from the tensioner No. 2.

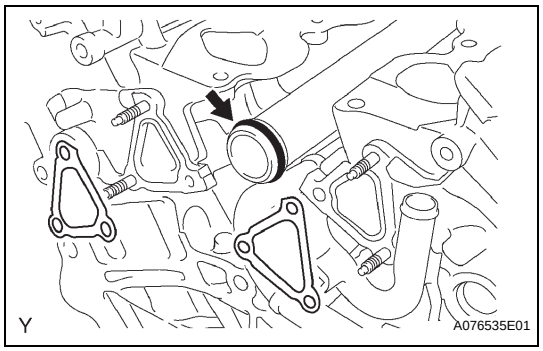

7. INSTALL WATER BY-PASS JOINT RR

(a) Install a new O-ring onto the water outlet pipe.

(b) Apply soapy water to the O-ring.

(c) Install 2 new gaskets and water by-pass joint rear with the 2 bolts and 4 nuts.

Torque: 9.0 N*m (92 kgf*cm, 80 in.*lbf)

(d) Connect the heater hose.

(e) Connect the engine coolant temperature sensor connector.

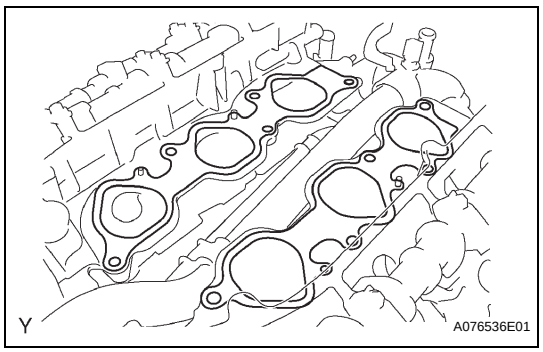

8. INSTALL INTAKE MANIFOLD

(a) Set a new gasket on each cylinder head.

NOTICE:

- **Align the port holes of the gasket and cylinder head.**
- **Be careful of the installation direction.**

(b) Set the intake manifold on the cylinder heads.

(c) Install and tighten the 10 bolts uniformly in several steps.

Torque: 26 N*m (265 kgf*cm, 19 ft.*lbf)

(d) Connect the 6 fuel injector connectors.

EM

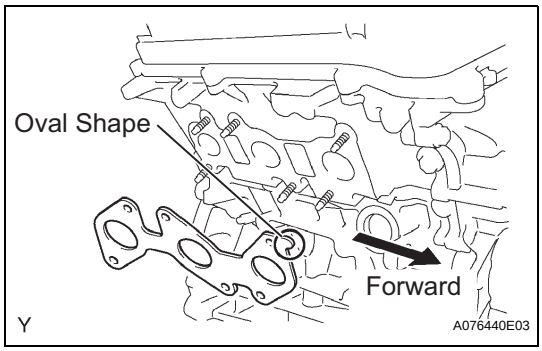

9. **CONNECT NO.2 FUEL PIPE SUB-ASSEMBLY**
10. **CONNECT NO.1 FUEL PIPE SUB-ASSEMBLY (See page FU-17)**
11. **INSTALL EXHAUST MANIFOLD SUB-ASSEMBLY RH**
    (a) Set a new gasket to the RH cylinder head with the oval shape facing forward.
    NOTICE:
    Be careful of the installation direction.
    (b) Install the exhaust manifold with the 6 nuts. Tighten the nuts uniformly in several steps.
    Torque: 21 N*m (214 kgf*cm, 16 ft.*lbf)
    (c) Connect the air fuel ratio sensor connector.
12. **INSTALL MANIFOLD STAY**
    (a) Install the manifold stay with the 3 bolts.
    Torque: 40 N*m (408 kgf*cm, 30 ft.*lbf)
13. **INSTALL FRONT EXHAUST PIPE ASSEMBLY**
    (See page EX-3)
14. **INSTALL NO.1 COOL AIR INLET**
    (a) Install the cool air inlet with the 2 bolts.
    Torque: 12 N*m (122 kgf*cm, 9.0 ft.*lbf)
15. **INSTALL CHAIN TENSIONER SLIPPER**
16. **INSTALL NO.1 CHAIN TENSIONER ASSEMBLY (See page EM-27)**
17. **INSTALL CHAIN SUB-ASSEMBLY**
    (See page EM-48)
18. **INSTALL TIMING CHIAN OR BELT COVER SUB-ASSEMBLY**
    LU-38
19. **INSTALL FRONT DIFFERENTIAL CARRIER ASSEMBLY (for 4WD)**
    (See page DF-38)
20. **INSTALL POWER STEERING LINK ASSEMBLY**
    (See page PS-67)
21. **INSTALL BATTERY**
22. **ADD ENGINE OIL (See page LU-5)**
23. **ADD ENGINE COOLANT (See page CO-3)**
24. **ADD DIFFERENTIAL OIL (for 4WD)**
25. **INSPECT DIFFERENTIAL OIL (for 4WD) (See page DF-8)**
26. **ADD POWER STEERING FLUID**
27. **BLEED POWER STEERING FLUID (See page PS-2)**
28. **CHECK FOR ENGINE OIL LEAKAGE**
29. **CHECK FOR ENGINE COOLANT LEAKAGE (See page CO-4)**
30. **CHECK FOR FUEL LEAKAGE**

31. **CHECK FOR EXHAUST GAS LEAKAGE**
32. **CHECK FOR POWER STEERING FLUID LEAKAGE**
33. **INSPECT AND ADJUST FRONT WHEEL ALIGNMENT** (See page SP-7)
34. **INSPECT IGNITION TIMING (See page EM-1)**
35. **INSPECT ENGINE IDLING SPEED (See page EM-2)**
36. **INSPECT CO/HC (See page EM-3)**
37. **REMOVE COMPRESSION (See page EM-2)**

MADE BY VB-SERVICES

HOW TO USE THIS MANUAL

GENERAL INFORMATION

1. GENERAL DESCRIPTION

(a) This manual is written in accordance with SAE J2008.
  (1) Diagnosis
  (2) Removing / Installing, Replacing, Disassembling / Reassembling, Checking and Adjusting
  (3) Final Inspection

(b) The following procedures are omitted from this manual. However, these procedures must be performed.
  (1) Use a jack or lift to perform operations.
  (2) Clean all removed parts.
  (3) Perform a visual check.

2. INDEX

(a) An alphabetical INDEX section is provided at the end of the manual as a reference to help you find the item to be repaired.

3. PREPARATION

(a) Use of Special Service Tools (SST) and Special Service Materials (SSM) may be required, depending on the repair procedure. Be sure to use SST and SSM when they are required and follow the working procedures properly. A list of SST and SSM is in the "Preparation" section of this manual.

4. REPAIR PROCEDURES

(a) A component illustration is placed under the title where necessary.

(b) Non-reusable parts, grease application areas, precoated parts and torque specifications are noted in the component illustrations.
The following illustration is an example.

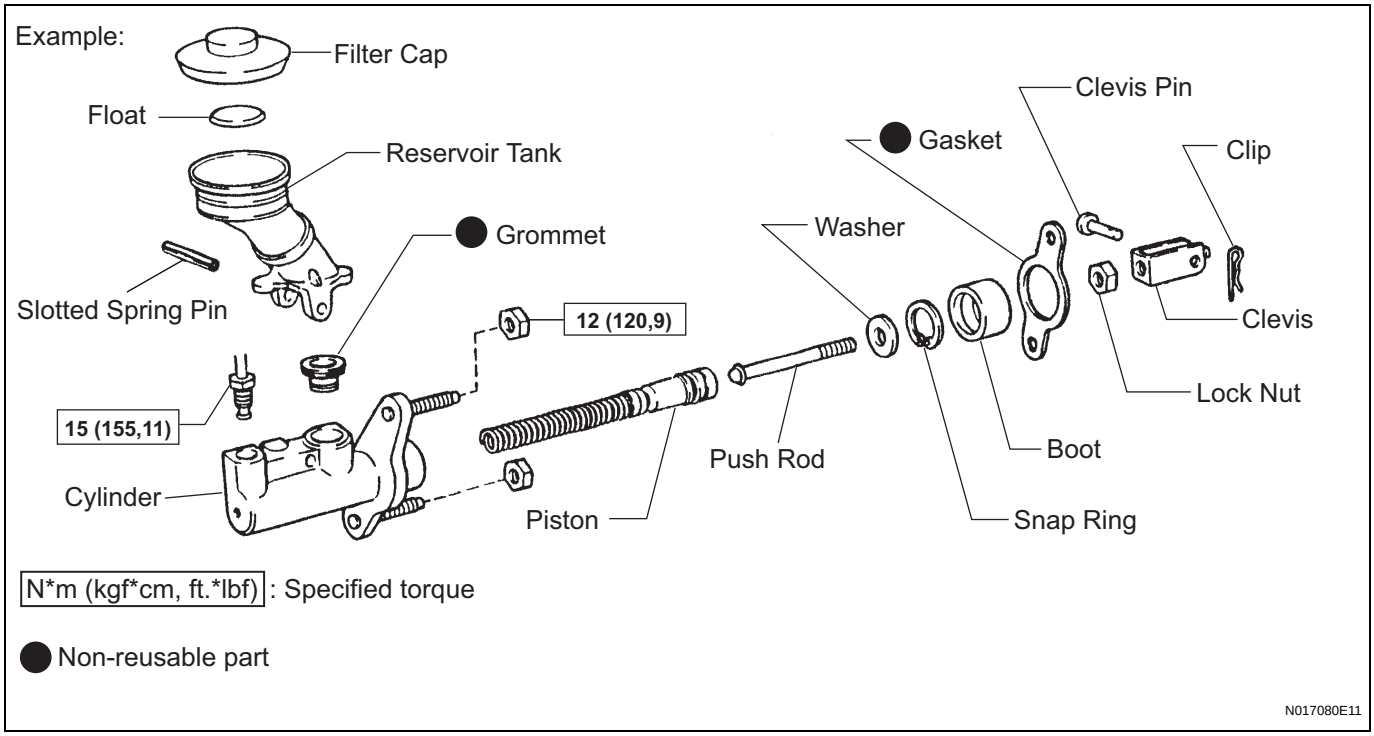

(c) Torque specifications, grease application areas and non-reusable parts are emphasized in the procedures.
HINT:
There are cases where such information can only be explained by using an illustration. In these cases, torque, oil and other information are described in the illustration.

(d) Only items with key points are described in the text. What to do and other details are explained using illustrations next to the text. Both the text and illustrations are accompanied by standard values and notices.

Illustration	What to do and where to do it
Task heading	What work will be performed
Explanation text	• How to perform the task • Information such as specifications and warnings, which are written in boldface text

(e) Illustrations of similar vehicle models are sometimes used. In these cases, minor details may be different from the actual vehicle.

(f) Procedures are presented in a step-by-step format.

5. SERVICE SPECIFICATIONS

(a) SPECIFICATIONS are presented in boldface text throughout the manual. The specifications are also found in the "Service Specifications" section for reference.

6. TERM DEFINITIONS

CAUTION	Possibility of injury to you or other people.
NOTICE	Possibility of damage to components being repaired.
HINT	Provides additional information to help you perform repairs.

7. INTERNATIONAL SYSTEM OF UNITS

(a) The units used in this manual comply with the International System of Units (SI UNIT) standard. Units from the metric system and the English system are also provided.
Example:
Torque: 30 N*m (310 kgf*cm, 22 ft.*lbf)

 MADE BY VB-SERVICES

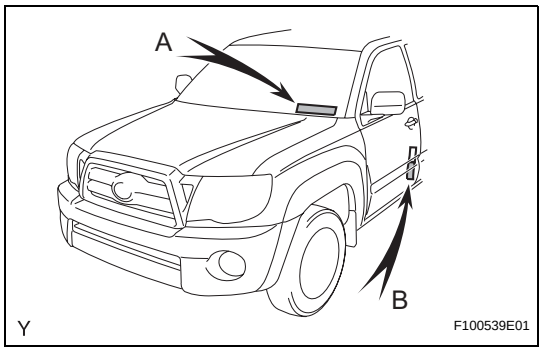

IDENTIFICATION INFORMATION

VEHICLE IDENTIFICATION AND SERIAL NUMBERS

1. VEHICLE IDENTIFICATION NUMBER

(a) The vehicle identification number is stamped on the vehicle body and on the certification label, as shown in the illustration.

A:
Vehicle Identification Number

B:
Certification Label

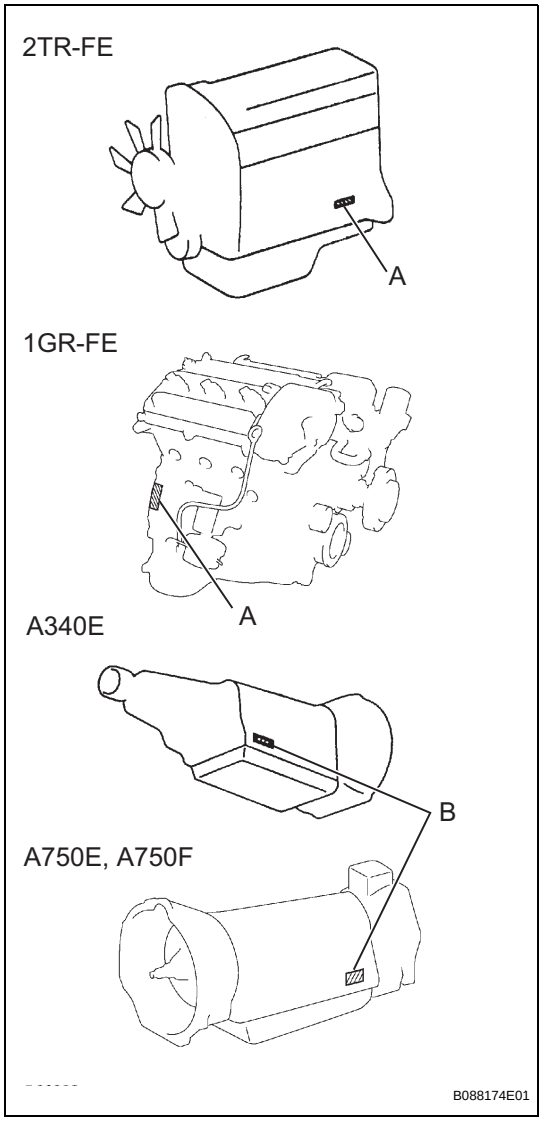

2. ENGINE SERIAL NUMBER AND TRANSMISSION SERIAL NUMBER

(a) The engine serial number is stamped on the cylinder block of the engine and the transmission serial number is stamped on the housing as shown in the illustration.

A:
Engine Serial Number

B:
Transmission Serial Number

REPAIR INSTRUCTION

PRECAUTION

1. BASIC REPAIR HINT

(a) HINTS ON OPERATIONS

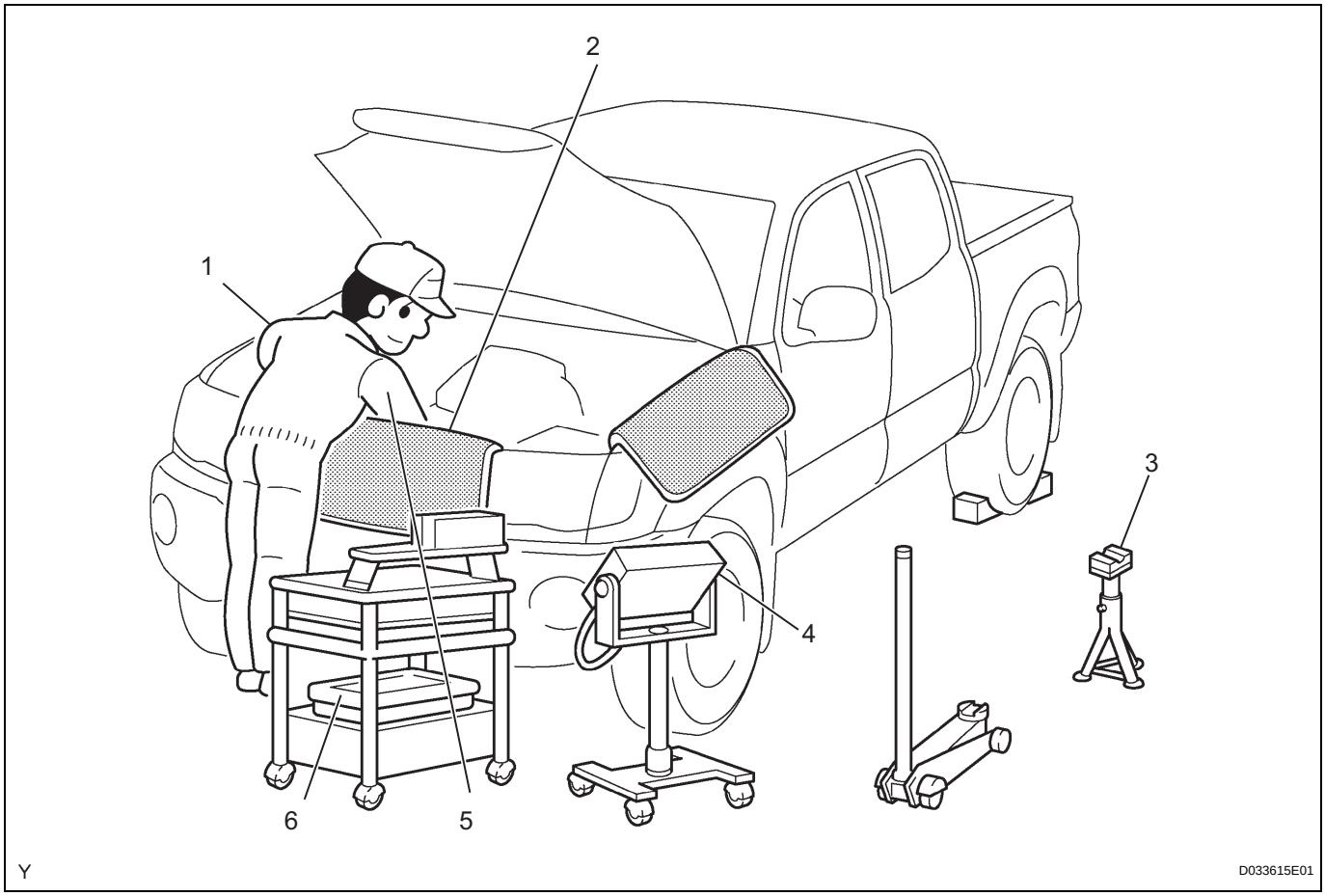

1	Attire	• Always wear a clean uniform. • A hat and safety shoes must be worn.
2	Vehicle protection	Prepare a grille cover, fender cover, seat cover and floor mat before starting the operation.
3	Safe operation	• When working with 2 or more persons, be sure to check safety for one another. • When working with the engine running, make sure to provide ventilation for exhaust fumes in the workshop. • If working on high temperature, high pressure, rotating, moving, or vibrating parts, wear appropriate safety equipment and take extra care not to injure yourself or others. • When jacking up the vehicle, be sure to support the specified location with a safety stand. • When lifting up the vehicle, use appropriate safety equipment.
4	Preparation of tools and measuring gauge	Before starting the operation, prepare a tool stand, SST, gauge, oil and parts for replacement.
5	Removal and installation, disassembly and assembly operations	• Diagnose with a thorough understanding of proper procedures and of the reported problem. • Before removing parts, check the general condition of the assembly and for deformation and damage. • When the assembly is complicated, take notes. For example, note the total number of electrical connections, bolts, or hoses removed. Add matchmarks to ensure reassembly of components to their original positions. Temporarily mark hoses and their fittings if needed. • Clean and wash the removed parts if necessary and assemble them after a thorough check.

6	Removed parts	• Place removed parts in a separate box to avoid mixing them up with new parts or contaminating new parts. • For non-reusable parts such as gaskets, O-rings, and self-locking nuts, replace them with new ones as instructed in this manual. • Retain the removed parts for customer inspection, if requested.

IN

(b) JACKING UP AND SUPPORTING VEHICLE
(1) Care must be taken when jacking up and supporting the vehicle. Be sure to lift and support the vehicle at the proper locations.

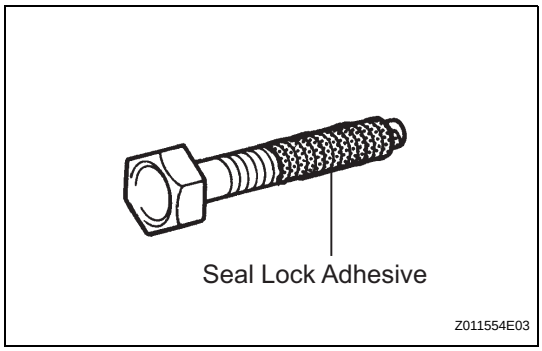

(c) PRECOATED PARTS
(1) Precoated parts are bolts and nuts that are coated with a seal lock adhesive at the factory.
(2) If a precoated part is retightened, loosened or moved in any way, it must be recoated with the specified adhesive.
(3) When reusing a precoated part, clean off the old adhesive and dry the part with compressed air. Then apply new seal lock adhesive appropriate to that part.
(4) Some seal lock agents harden slowly. You may have to wait for the seal lock adhesive to harden.

(d) GASKETS
(1) When necessary, use a sealer on gaskets to prevent leaks.

(e) BOLTS, NUTS AND SCREWS
(1) Carefully follow all the specifications for tightening torques. Always use a torque wrench.

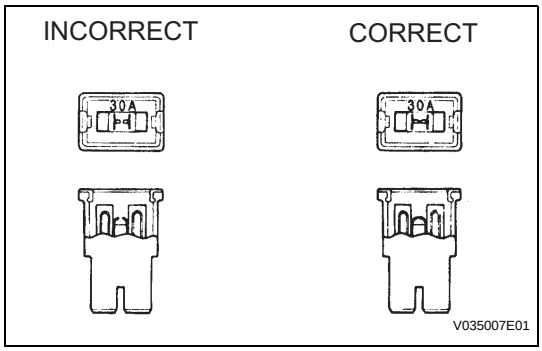

(f) FUSES
(1) When inspecting a fuse, check that the wire of the fuse is not broken.
(2) When replacing fuses, be sure that the new fuse has the correct amperage rating. Do not exceed the rating or use one with a lower rating.

Illustration	Symbol	Part Name	Abbreviation
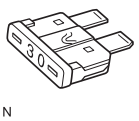 N	N	FUSE	FUSE

Illustration	Symbol	Part Name	Abbreviation
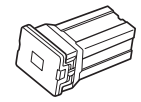 N	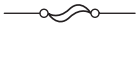 N	MEDIUM CURRENT FUSE	M-FUSE
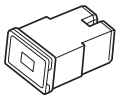 N	 N	HIGH CURRENT FUSE	H-FUSE
 N	 N	FUSIBLE LINK	FL
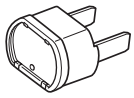 N	 N	CIRCUIT BREAKER	CB

(g) CLIPS

(1) The removal and installation methods of typical clips used for vehicle body parts are shown in the table below.

HINT:

If clips are damaged during a procedure, always replace the damaged clip with a new clip.

IN

Shape (Example)	Illustration	Procedures
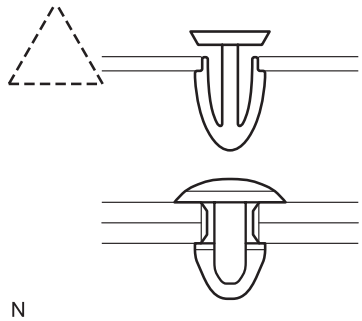 N	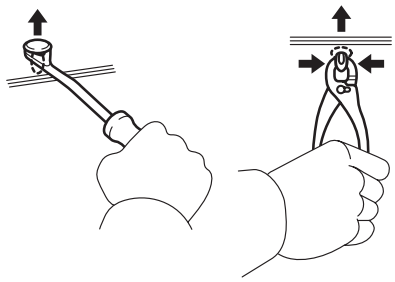 N	1. Remove the clips with a clip remover or pliers.
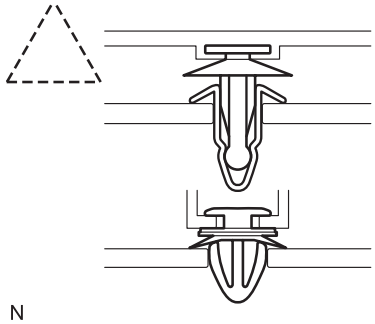 N	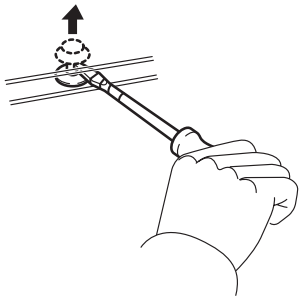 N	1. Remove the clips with a clip remover or screwdriver.
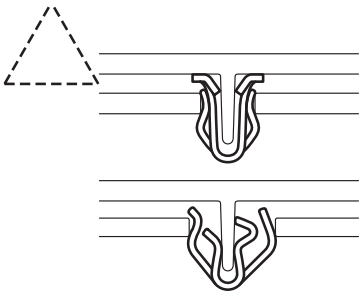 N	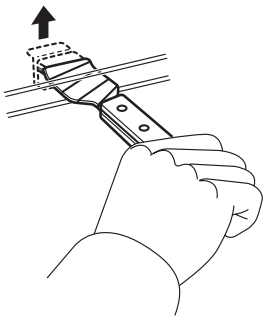 N	1. Remove the clips with a wide scraper to prevent panel damage.
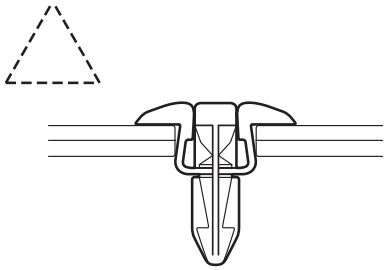 N	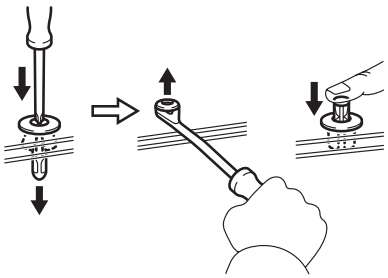 N	1. Remove the clips by pushing the center pin through and prying out the shell.

Shape (Example)	Illustration	Procedures
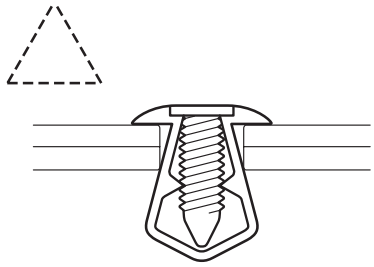 N	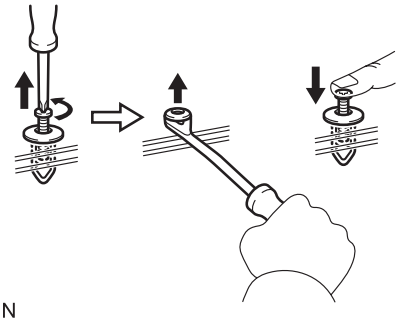 N	1. Remove the clips by unscrewing the center pin and prying out the shell.
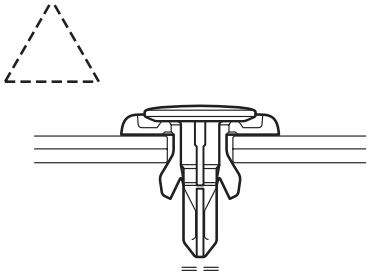 N	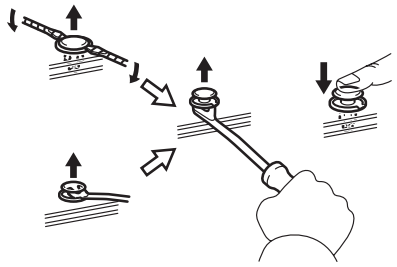 N	1. Remove the clips by prying out the pin and then prying out the shell.

(h) CLAWS

(1) The removal and installation methods of typical claws used for vehicle body parts are shown in the table below.

HINT:

If claws are damaged during a procedure, always replace the damaged claws with new caps or covers.

Shape (Example)	Illustration	Procedures
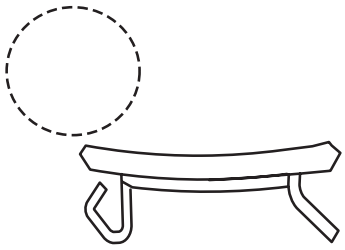	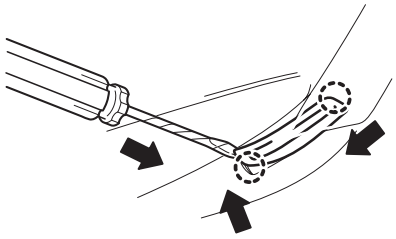	1. Using a screwdriver, detach the claws and remove the cap or covers.
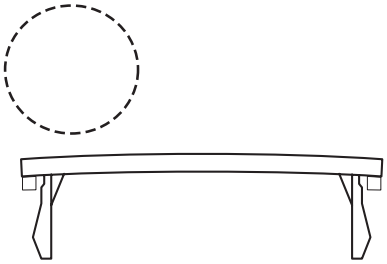	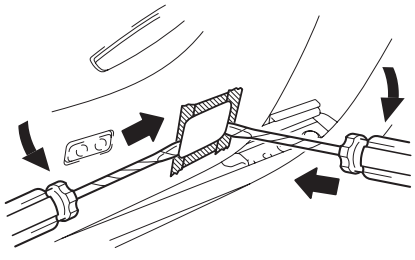	1. Using a screwdriver, detach the claws and remove the cap or covers.

IN

Shape (Example)	Illustration	Procedures
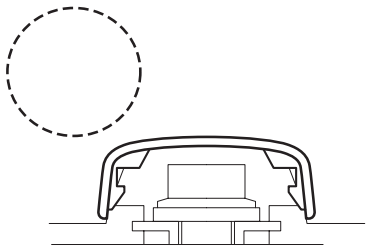	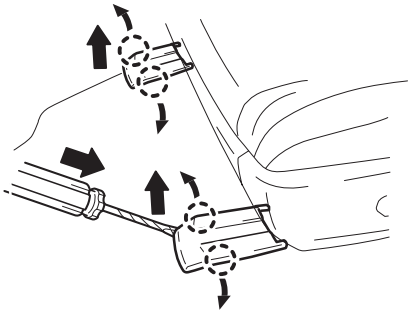	1. Using a screwdriver, detach the claws and remove the cap or covers.

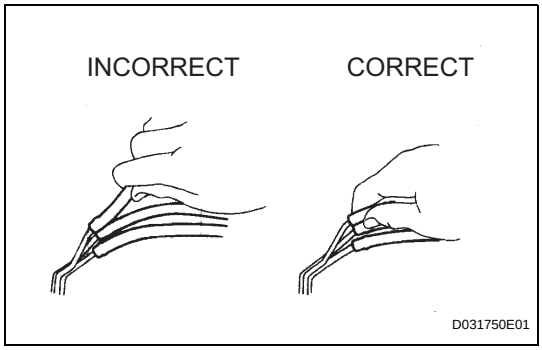

(i) REMOVAL AND INSTALLATION OF VACUUM HOSES

(1) To disconnect a vacuum hose, pull and twist from the end of the hose. Do not pull from the middle of the hose as this may cause damage.

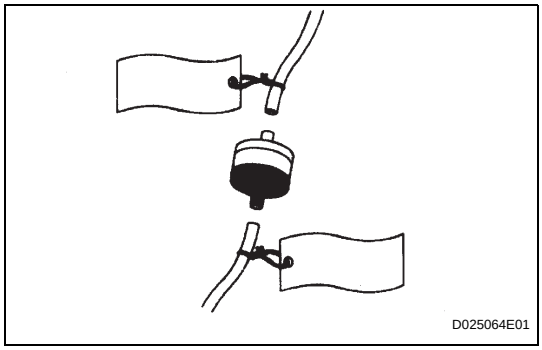

(2) When disconnecting vacuum hoses, use tags to identify where they should be reconnected.

(3) After completing any hose related repairs, double check that the vacuum hoses are properly connected. The label under the hood shows the proper layout.

(4) When using a vacuum gauge, never force the hose onto a connector that is too large. If a hose has been stretched, it may leak air. Use a step-down adapter if necessary.

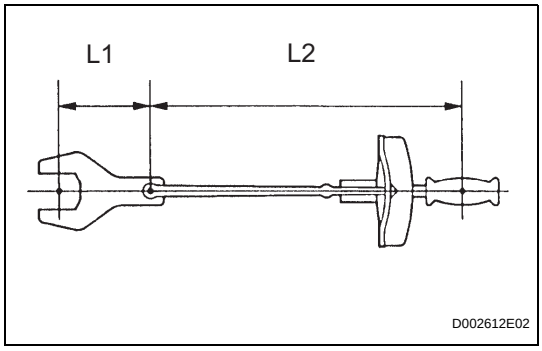

(j) TORQUE WHEN USING TORQUE WRENCH WITH EXTENSION TOOL

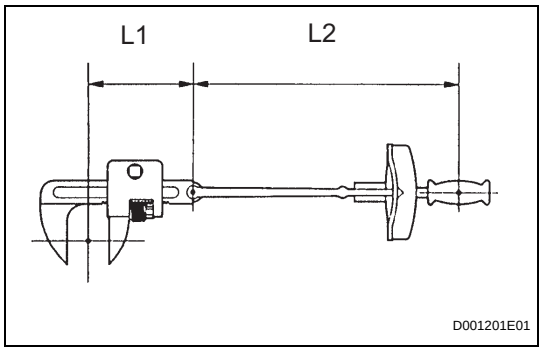

(1) Use the formula below to calculate special torque values for situations where SST or an extension tool is combined with a torque wrench.
Formula:
T' = L2 / (L1 + L2) * T

T'	**Reading of torque wrench {N*m (kgf*cm, ft.*lbf)}**
T	**Torque {N*m (kgf*cm, ft.*lbf)}**
L1	**Length of SST or extension tool {cm (in.)}**
L2	**Length of torque wrench {cm (in.)}**

NOTICE:
If an extension tool or SST is combined with a torque wrench and the wrench is used to tighten to a torque specification in this manual, the actual torque will be excessive and parts will be damaged.

2. FOR VEHICLES EQUIPPED WITH SRS AIRBAG AND FRONT SEAT OUTER BELT ASSEMBLY WITH PRETENSIONER

The TOYOTA TACOMA is equipped with a Supplemental Restraint System (SRS).

CAUTION:
Failure to carry out the service operations in the correct sequence could cause the SRS to unexpectedly deploy during servicing and lead to serious injury. Furthermore, if a mistake is made when servicing the SRS, it is possible that the SRS may fail to operate properly. Before servicing (including removal or installation of parts, inspection or replacement), be sure to read the following section carefully.

(a) GENERAL NOTICE

(1) As malfunctions of the SRS are difficult to confirm, the Diagnostic Trouble Codes (DTCs) become the most important source of information when troubleshooting. When troubleshooting the SRS, always check the DTCs before disconnecting the battery.

IN

(2) Work must be started at least 90 seconds after the ignition switch is turned OFF and after the cable is disconnected from the negative (-) battery terminal.
(The SRS is equipped with a backup power source. If work is started within 90 seconds after turning the ignition switch OFF and disconnecting the cable from the negative (-) battery terminal, the SRS may deploy.
When the cable is disconnected from the negative (-) battery terminal, clock and audio system memory is erased. Before starting work, make a note of the settings of each memory system. When work is finished, reset the clock and audio system as before.
CAUTION:
Never use a backup power source (battery or other) to avoid erasing system memory. The backup power source may inadvertently power the SRS and cause it to deploy.

(3) Even in cases of a minor collision where the SRS does not deploy, the steering wheel pad, front passenger airbag assembly, front seat side airbag assembly, curtain shield airbag assembly and seat belt pretensioner should be inspected

(4) In minor collisions where the SRS does not deploy, the steering wheel pad, front passenger airbag assembly, front seat side airbag assembly, curtain shield airbag assembly and seat belt pretensioner should be inspected before further use of the vehicle.

(5) Never use SRS parts from another vehicle. When replacing parts, use new parts.

(6) Before repairs, remove the airbag sensor assemblies if impacts are likely to be applied to the sensor during repairs.

(7) Never disassemble and attempt to repair the steering wheel pad, front passenger airbag assembly, side airbag assembly, curtain shield airbag assembly and seat belt pretensioner.

(8) Replace the steering wheel pad, front passenger airbag assembly, front seat side airbag assembly, curtain shield airbag assembly and seat belt pretensioner if: 1) damage has occurred from being dropped, or 2) cracks, dents or other defects in the case, bracket or connector are present.

(9) Do not directly expose the airbag sensor assemblies or airbag assemblies to hot air or flames.

(10) Use an ohmmeter / voltmeter with high impedance (10 kΩ/V minimum) for troubleshooting electrical circuits.

(11)Information labels are attached to the SRS components. Follow the instructions on the labels.

(12)After work on the SRS is completed, check the SRS warning light.

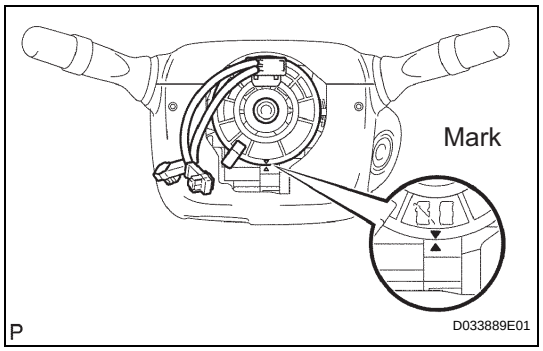

(b) SPIRAL CABLE

(1) The steering wheel must be fitted correctly to the steering column with the spiral cable at the neutral position, as cable disconnection and other problems may occur. Refer to the information about correct installation of the steering wheel.

(c) STEERING PAD

(1) Always place a removed or new steering pad surface upward as shown in the illustration. Placing the horn button with the pad surface facing down could cause a serious accident if the airbag inflates. Also, do not place anything on top of the horn button.

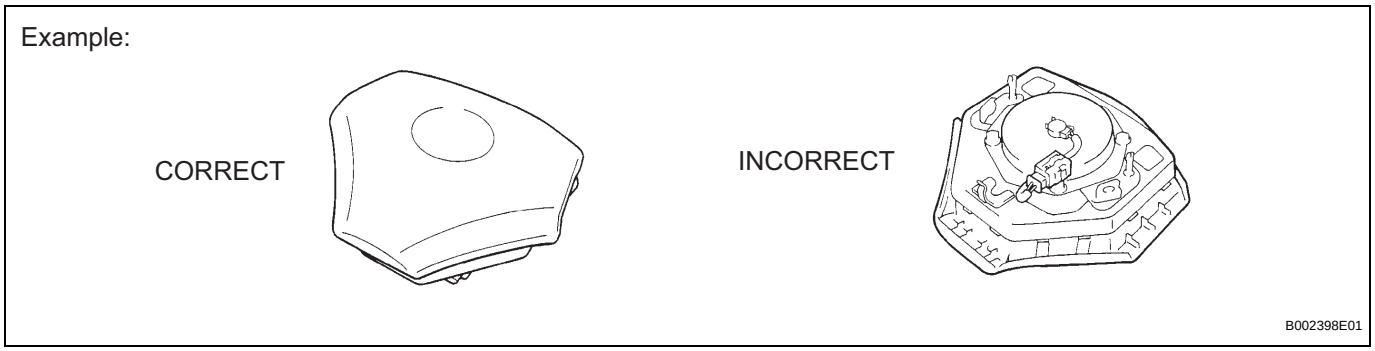

(2) Never measure the resistance of the airbag squib. This may cause the airbag to inflate, which could cause serious injury.

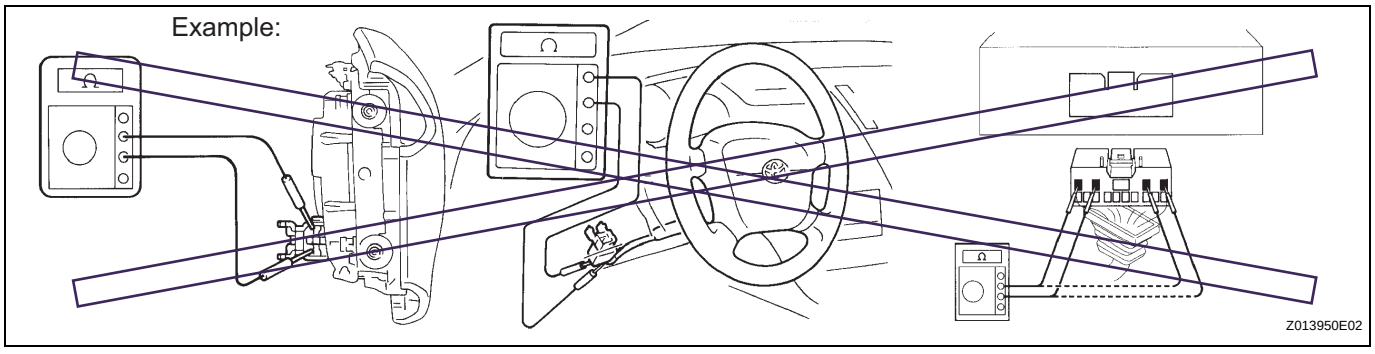

(3) Grease or detergents of any kind should not be applied to the horn button.

(4) Store the horn button assembly in an area where the ambient temperature is below 93°C (200°F), the humidity is not high and there is no electrical noise.

(5) When using electric welding anywhere on the vehicle, disconnect the airbag ECU connectors (4 pins). These connectors contain shorting springs. This feature reduces the possibility of the airbag deploying due to currents entering the squib wiring.

(6) When disposing of the vehicle or the horn button assembly by itself, the airbag should be deployed using SST before disposal. Activate the airbag in a safe place away from electrical noise.

(d) FRONT PASSENGER AIRBAG ASSEMBLY

(1) Always place a removed or new front passenger airbag assembly with the pad surface facing upward as shown in the illustration. Placing the airbag assembly with the airbag inflation direction facing down could cause a serious accident if the airbag inflates.

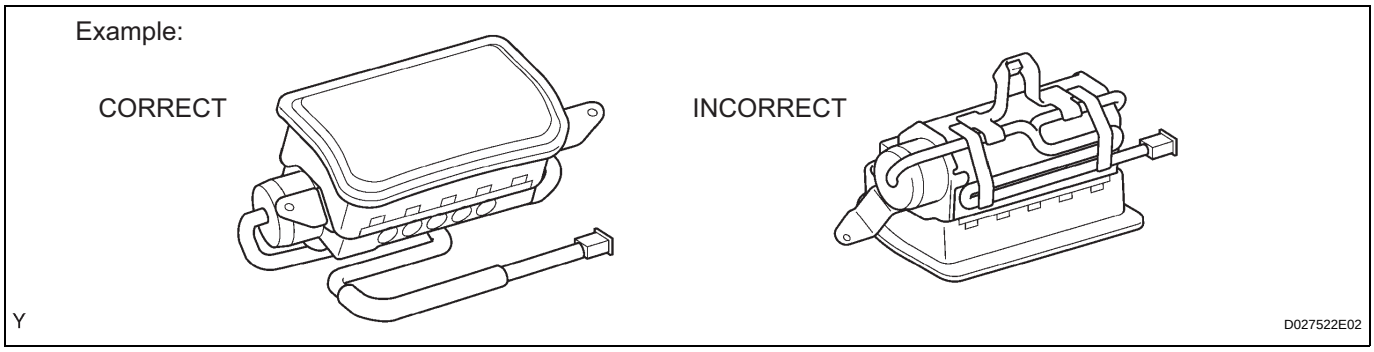

(2) Never measure the resistance of the airbag squib. This may cause the airbag to inflate, which could cause serious injury.

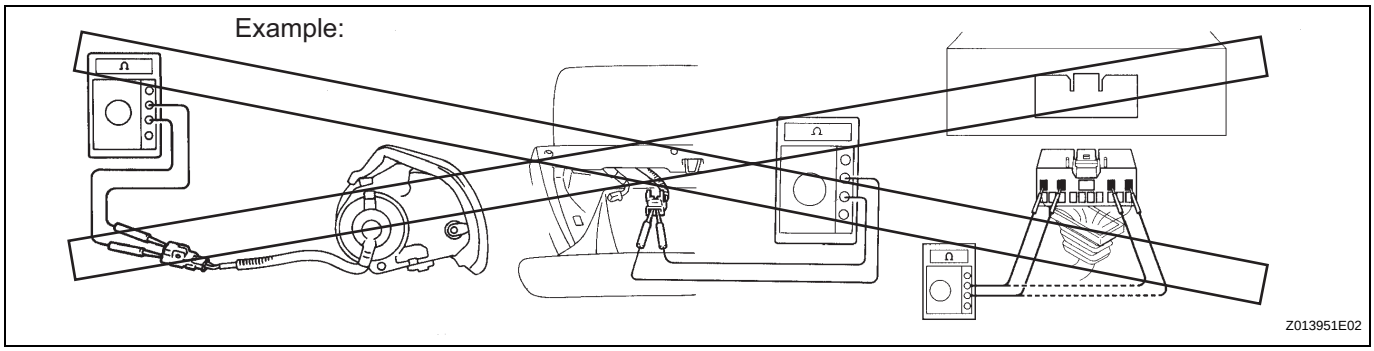

(3) Grease or detergents of any kind should not be applied to the front passenger airbag assembly.

(4) Store the airbag assembly in an area where the ambient temperature is below 93°C (200°F), the humidity is not high and there is no electrical noise.

(5) When using electric welding anywhere on the vehicle, disconnect the airbag ECU connectors (4 pins). These connectors contain shorting springs. This feature reduces the possibility of the airbag deploying due to currents entering the squib wiring.

(6) When disposing of the vehicle or the airbag assembly unit by itself, the airbag should be deployed using SST before disposal. Activate the airbag in a safe place away from electrical noise.

(e) CURTAIN SHIELD AIRBAG ASSEMBLY

(1) Always place a removed or new curtain shield airbag assembly in a clear plastic bag, and keep it in a safe place.

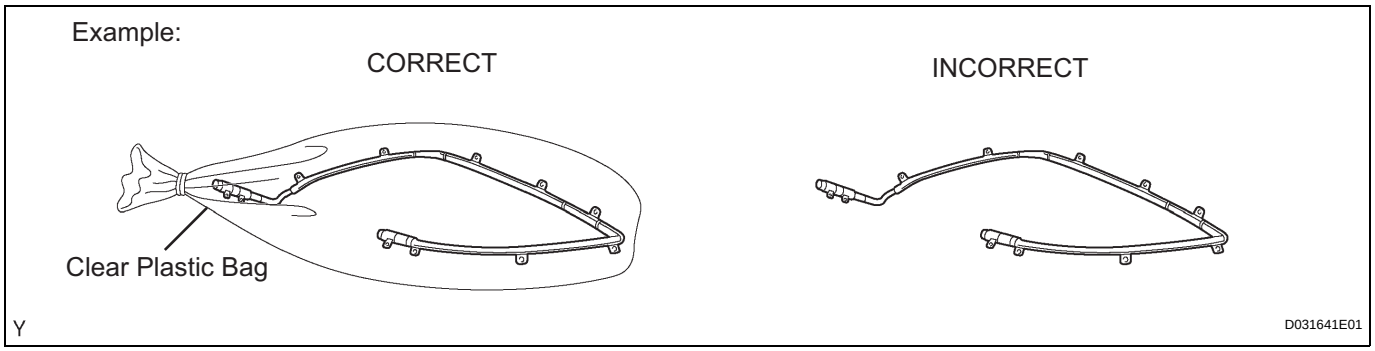

CAUTION:
The plastic bag is not reusable.
NOTICE:
Never disassemble the curtain shield airbag assembly.

(2) Never measure the resistance of the airbag squib. This may cause the airbag to inflate, which could cause serious injury.

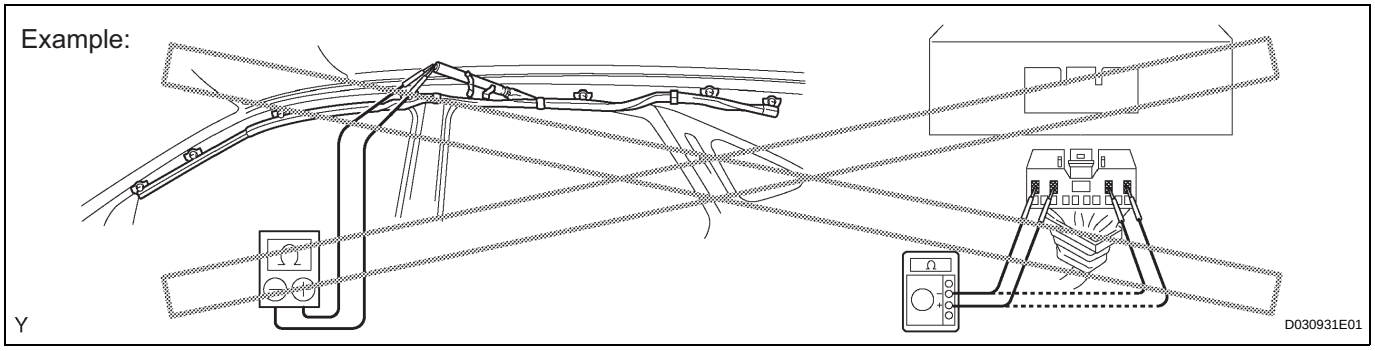

(3) Grease or detergents of any kind should not be applied to the curtain shield airbag assembly.

(4) Store the airbag assembly in an area where the ambient temperature is below 93°C (200°F), the humidity is not high and there is no electrical noise.

(5) When using electric welding anywhere on the vehicle, disconnect the airbag ECU connectors (4 pins). These connectors contain shorting springs. This feature reduces the possibility of the airbag deploying due to currents entering the squib wiring.

(6) When disposing of a vehicle or the airbag assembly unit by itself, the airbag should be deployed using SST before disposal. Activate the airbag in a safe place away from electrical noise.

(f) FRONT SEAT SIDE AIRBAG ASSEMBLY

(1) Always place a removed or new front seat airbag assembly with the airbag inflation direction facing up.

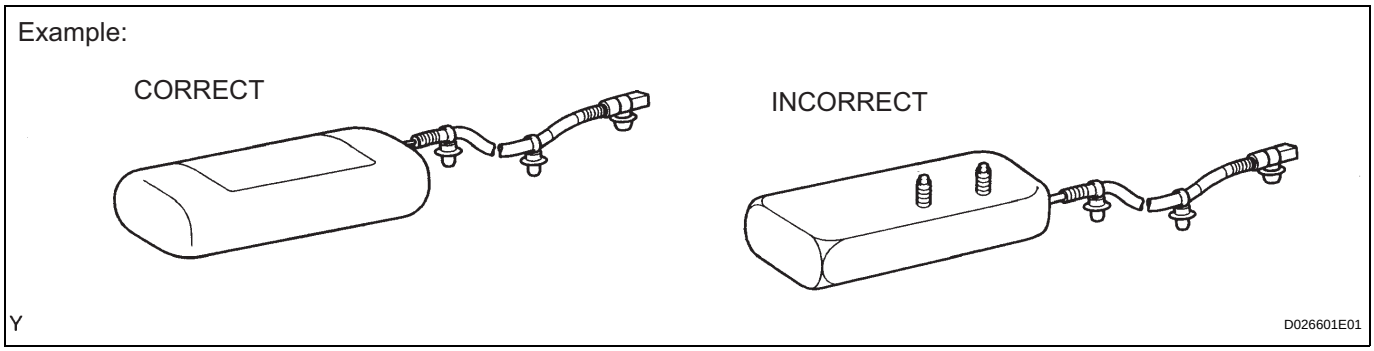

(2) Never measure the resistance of the airbag squib. This may cause the airbag to inflate, which could cause serious injury.

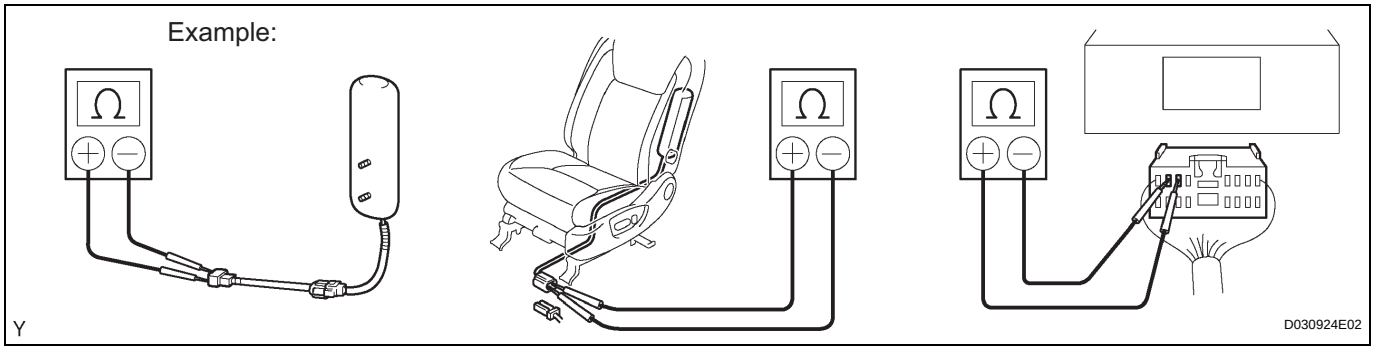

(3) Grease or detergents of any kind should not be applied to the front seat airbag assembly.

(4) Store the airbag assembly in an area where the ambient temperature is below 93°C (200°F), the humidity is not high and there is no electrical noise.

(5) When using electric welding anywhere on the vehicle, disconnect the airbag ECU connectors (2 pins). These connectors contain shorting springs. This feature reduces the possibility of the airbag deploying due to currents entering the squib wiring.

(6) When disposing of a vehicle or the airbag assembly unit by itself, the airbag should be deployed using SST before disposal. Activate the airbag in a safe place away from electrical noise.

(g) FRONT SEAT OUTER BELT ASSEMBLY WITH PRETENSIONER

(1) Never measure the resistance of the seat outer belt. This may cause the pretensioner of the seat belt to activate, which could cause serious injury.

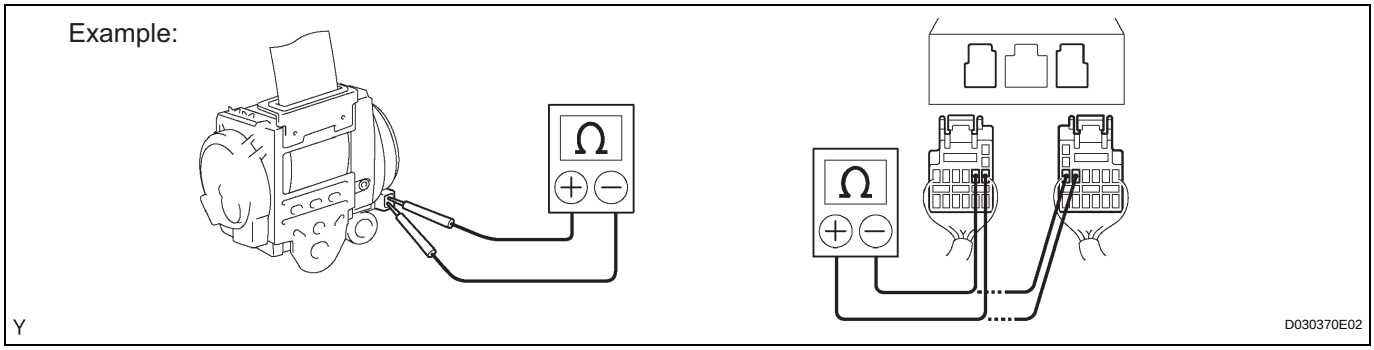

(2) Never disassemble the seat outer belt.

(3) Never install the seat outer belt on another vehicle.

(4) Store the seat outer belt in an area where the ambient temperature is below 80°C (176°F), the humidity is not high and there is no electrical noise.

(5) When using electric welding anywhere on the vehicle, disconnect the airbag ECU connectors (2 pins). These connectors contain shorting springs. This feature reduces the possibility of the pretensioner deploying due to currents entering the squib wiring.

(6) When disposing of a vehicle or the seat outer belt assembly by itself, the seat outer belt should be activated before disposal. Activate it in a safe place away from electrical noise.

(7) As the seat outer belt is hot after the pretensioner is activated, allow some time for it to cool down sufficiently before disposal. Never apply water to try to cool down the seat outer belt.

(8) Grease, detergents, oil or water should not be applied to the front seat outer belt.

(h) AIRBAG SENSOR ASSEMBLY

(1) Never reuse an airbag sensor assembly that has been involved in a collision where the SRS has deployed.

(2) The connectors to the airbag sensor assembly should be connected or disconnected with the sensor placed on the floor. If the connectors are connected or disconnected while the airbag sensor assembly is not placed on the floor, the SRS may activate.

(3) Work must be started at least 90 seconds after the ignition switch is turned OFF and the cable is disconnected from the negative (-) battery terminal, even if only loosening the set bolts of the airbag sensor assembly.

(i) WIRE HARNESS AND CONNECTOR
(1) The SRS wire harness is integrated with the instrument panel wire harness assembly. All the connectors in the system are a standard yellow color. If the SRS wire harness becomes disconnected or the connector becomes broken, repair or replace it.

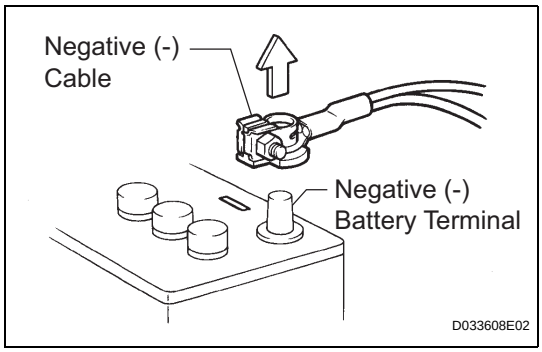

3. ELECTRONIC CONTROL

(a) REMOVAL AND INSTALLATION OF BATTERY TERMINAL

NOTICE:

Certain systems need to be initialized after disconnecting and reconnecting the cable from the negative (-) battery terminal.

(1) Before performing electronic work, disconnect the cable from the negative (-) battery terminal to prevent component and wire damage caused by accidental short circuits.
(2) When disconnecting the cable, turn the ignition switch off and the headlight dimmer switch OFF and loosen the cable nut completely. Perform these operations without twisting or prying the cable. Then disconnect the cable.
(3) Clock settings, radio settings, audio system memory, DTCs and other data are erased when the cable is disconnected from the negative (-) battery terminal. Write down any necessary data before disconnecting the cable.

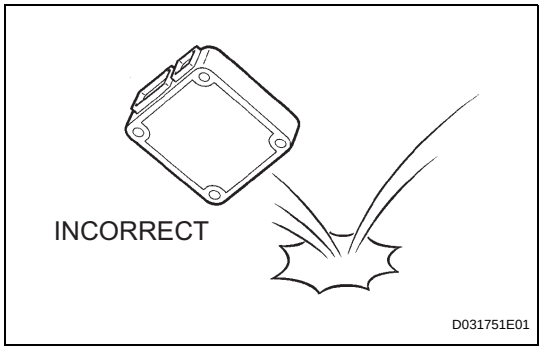

(b) HANDLING OF ELECTRONIC PARTS
(1) Do not open the cover or case of the ECU unless absolutely necessary. If the IC terminals are touched, the IC may be rendered inoperative by static electricity.
(2) Do not pull the wires when disconnecting electronic connectors. Pull the connector.
(3) Be careful not to drop electronic components, such as sensors or relays. If they are dropped on a hard surface, they should be replaced.
(4) When cleaning the engine with steam, protect the electronic components, air filter and emission-related components from water.
(5) Never use an impact wrench to remove or install temperature switches or temperature sensors.
(6) When measuring the resistance of a wire connector, insert the tester probe carefully to prevent terminals from bending.

4. REMOVAL AND INSTALLATION OF FUEL CONTROL PARTS

(a) PLACE FOR REMOVING AND INSTALLING FUEL SYSTEM PARTS
(1) Work in a location with good air ventilation that does not have welders, grinders, drills, electric motors, stoves, or any other ignition sources.

(2) Never work in a pit or near a pit as vaporized fuel will collect in those places.

(b) REMOVING AND INSTALLING FUEL SYSTEM PARTS

(1) Prepare a fire extinguisher before starting the operation.

(2) To prevent static electricity, install a ground wire to the fuel changer, vehicle and fuel tank, and do not spray the surrounding area with water. Be careful when performing work in this area, as the work surface will become slippery. Do not clean up gasoline spills with water, as this may cause the gasoline to spread, and possibly create a fire hazard.

(3) Avoid using electric motors, working lights and other electric equipment that can cause sparks or high temperatures.

(4) Avoid using iron hammers as they may create sparks.

(5) Dispose of fuel-contaminated cloth separately using a fire resistant container.

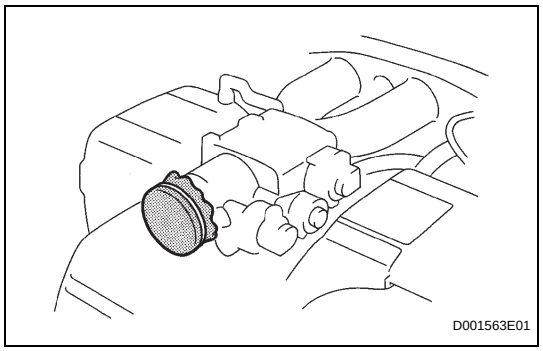

5. REMOVAL AND INSTALLATION OF ENGINE INTAKE PARTS

(a) If any metal particles enter inlet system parts, they may damage the engine.

(b) When removing and installing inlet system parts, cover the openings of the removed parts and engine openings. Use gummed tape or other suitable materials.

(c) When installing inlet system parts, check that no metal particles have entered the engine or the installed parts.

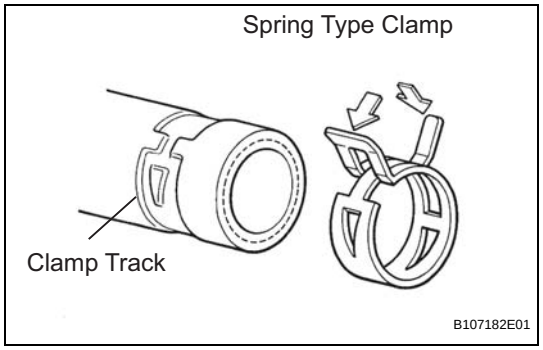

6. HANDLING OF HOSE CLAMPS

(a) Before removing the hose, check the clamp position so that it can be reinstalled in the same position.

(b) Replace any deformed or dented clamps with new ones.

(c) When reusing a hose, attach the clamp on the clamp track portion of the hose.

(d) For a spring type clamp, you may want to spread the tabs slightly after installation by pushing in the direction of the arrows as shown in the illustration.

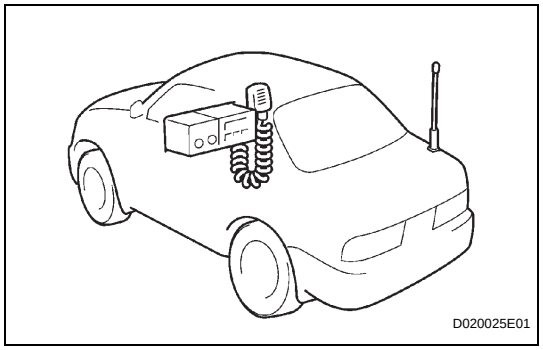

7. FOR VEHICLES EQUIPPED WITH MOBILE COMMUNICATION SYSTEMS

(a) Install the antenna as far away from the ECU and sensors of the vehicle electronic systems as possible.

(b) Install an antenna feeder at least 20 cm (7.87 in.) away from the ECU and sensors of the vehicle electronic systems. For details about ECU and sensor locations, refer to the section of the applicable components.

(c) Keep the antenna and feeder separate from other wiring as much as possible. This will prevent signals from the communication equipment from affecting vehicle equipment and vice versa.
(d) Check that the antenna and feeder are correctly adjusted.
(e) Do not install a high-powered mobile communication system.

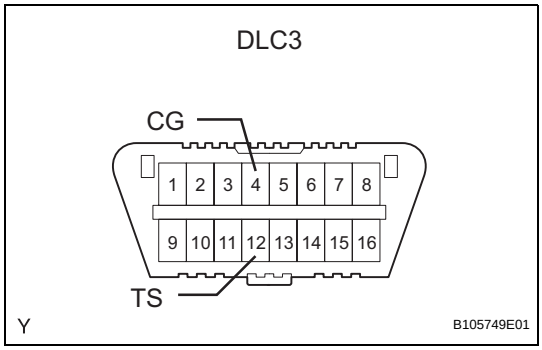

8. FOR VEHICLES EQUIPPED WITH TRACTION CONTROL (TRAC) SYSTEM

When testing with a 2-wheel drum tester such as a speedometer tester, a combination tester of the speedometer and brake, a chassis dynamometer, or when jacking up the front wheels and driving the wheels, always turn the TRAC system OFF.

(a) Confirm that the TRAC system is OFF.
  (1) Ignition switch to OFF.
  (2) Connect SST to terminals TS and CG of DLC3.
  NOTICE:
  Confirm that the VSC/TRAC warning light blinks.
(b) Begin testing.
(c) Disconnect SST from DLC3.
(d) Check that the VSC/TRAC warning light turns OFF.
  HINT:
  The SLIP indicator light blinks when the TRAC system is operating.

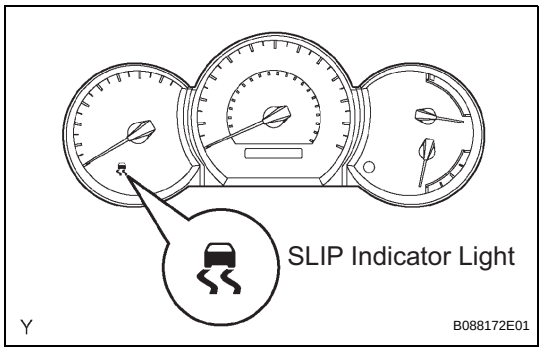

9. FOR VEHICLES EQUIPPED WITH VEHICLE STABILITY CONTROL (VSC) SYSTEM

(a) NOTICES WHEN USING DRUM TESTER
  (1) Before beginning testing, to disable the VSC, turn the ignition switch OFF and connect SST to terminals TS and CG of the DLC3.
  SST 09843-18040
  NOTICE:
  - **Confirm that the VSC warning light blinks.**
  - **VSC system will be reset when the engine is restarted.**
  - **For safety, secure the vehicle with restraint chains while using a wheel dynamometer.**
(b) NOTICES OF RELATED OPERATIONS TO VSC
  (1) Do not carry out unnecessary installation and removal as it might affect the adjustment of VSC related parts.
  (2) Be sure to follow the instructions for work preparation and final confirmation of proper operation of the VSC system.

10. FOR VEHICLES EQUIPPED WITH CATALYTIC CONVERTER

CAUTION:

If a large amount of unburned gasoline or gasoline vapors flow into the converter, it may cause overheating and create a fire hazard. To prevent this, observe the following precautions.

(a) Use only unleaded gasoline.

(b) Avoid idling the engine for more than 20 minutes.

(c) Avoid performing unnecessary spark jump tests.

(1) Perform a spark jump test only when absolutely necessary. Perform this test as rapidly as possible.

(2) While testing, never race the engine.

(d) Avoid a prolonged engine compression measurement. Engine compression measurements must be performed as rapidly as possible.

(e) Do not run the engine when the fuel tank is nearly empty. This may cause the engine to misfire and create an extra load on the converter.

HOW TO TROUBLESHOOT ECU CONTROLLED SYSTEMS

GENERAL INFORMATION

IN

A large number of ECU controlled systems are used in the TOYOTA TACOMA. In general, ECU controlled systems are considered to be very intricate, requiring a high level of technical knowledge to troubleshoot. However, most problem checking procedures only involve inspecting the ECU controlled system's circuits one by one. An adequate understanding of the system and a basic knowledge of electricity is enough to perform effective troubleshooting, accurate diagnoses and necessary repairs.

FOR USING INTELLIGENT TESTER

Connect the cable of the intelligent tester (with CAN VIM) to the DLC3, turn the ignition switch ON and attempt to use the tester. If the display indicates that a communication error has occurred, there is a problem either with the vehicle or with the tester.

* If communication is normal when the tester is connected to another vehicle, inspect the DLC3 of the original vehicle.
* If communication is still not possible when the tester is connected to another vehicle, the problem may be in the tester itself. Consult the Service Department listed in the tester's instruction manual.

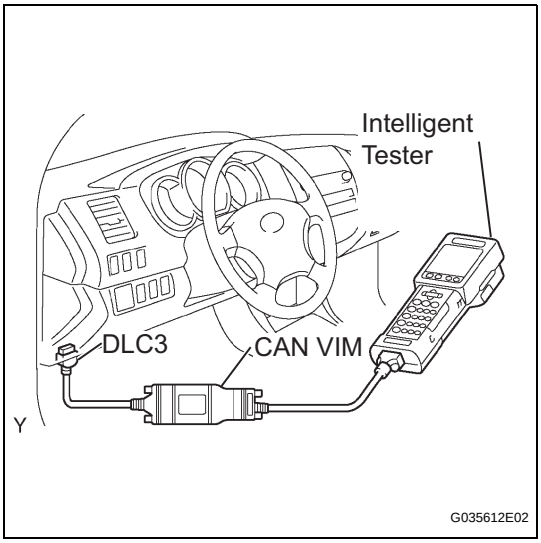

HOW TO PROCEED WITH TROUBLESHOOTING

1. OPERATION FLOW

HINT:
Perform troubleshooting in accordance with the procedures below. The following is an outline of basic troubleshooting procedures. Confirm the troubleshooting procedures for the circuit you are working on before beginning troubleshooting.

1 VEHICLE BROUGHT TO WORKSHOP

NEXT

2 CUSTOMER PROBLEM ANALYSIS

(a) Ask the customer about the conditions and environment when the problem occurred.

NEXT

3 INSPECT BATTERY VOLTAGE

Standard voltage:
11 to 14 V
If the voltage is below 11 V, recharge or replace the battery before proceeding.

NEXT

4 SYMPTOM CONFIRMATION AND DTC (AND FREEZE FRAME DATA) CHECK

(a) Visually check the wire harnesses, connectors and fuses for open and short circuits.
(b) Warm up the engine to the normal operating temperature.
(c) Confirm the problem symptoms and conditions, and check for DTCs.

Result

Result	Proceed to
DTC is output	A
DTC is not output	B

B → **Go to step 6**

A

5	DTC CHART

(a) Check the results obtained in "SYMPTOM CONFIRMATION AND DTC (AND FREEZE FRAME DATA) CHECK". Then find the output DTC in the DTC chart. Look at the "Trouble Area" column for a list of potentially malfunctioning circuits and / or parts.

NEXT → **Go to step 7**

6	PROBLEM SYMPTOMS CHART

(a) Check the results obtained in "SYMPTOM CONFIRMATION AND DTC (AND FREEZE FRAME DATA) CHECK". Then find the problem symptoms in the problem symptoms table. Look at the "Suspected Area" column for a list of potentially malfunctioning circuits and / or parts.

NEXT

7	CIRCUIT INSPECTION OR PARTS INSPECTION

(a) Confirm the malfunctioning circuit or part.

NEXT

8	ADJUST, REPAIR OR REPLACE

(a) Adjust, repair or replace the malfunctioning circuit or parts.

NEXT

9	CONFIRMATION TEST

(a) After the adjustment, repairs or replacement, confirm that the malfunction no longer exists. If the malfunction does not reoccur, perform a confirmation test under the same conditions and in the same environment as when the malfunction occurred the first time.

NEXT

END

2. CUSTOMER PROBLEM ANALYSIS

HINT:

- In troubleshooting, confirm that the problem symptoms have been accurately identified. Preconceptions should be discarded in order to make an accurate judgment. To clearly understand what the problem symptoms are, it is extremely important to ask the customer about the problem and the conditions at the time the malfunction occurred.
- Gather as much information as possible for reference. Past problems that seem unrelated may also help in some cases.
- The following 5 items are important points in the problem analysis:

What	Vehicle model, system name
When	Date, time, occurrence frequency
Where	Road conditions
Under what conditions?	Running conditions, driving conditions, weather conditions
How did it happen?	Problem symptoms

3. SYMPTOM CONFIRMATION AND DIAGNOSTIC TROUBLE CODE

HINT:

The diagnostic system in the TOYOTA TACOMA has various functions.

- The first function is the Diagnostic Trouble Code (DTC) check. A DTC is a code stored in the ECU memory whenever a malfunction in the signal circuits to the ECU occurs. In a DTC check, a previous malfunction's DTC can be checked by a technician during troubleshooting.
- Another function is the Input Signal Check, which checks if the signals from various switches are sent to the ECU correctly.

  By using these functions, the problem areas can be narrowed down and troubleshooting is more effective. Diagnostic functions are incorporated in the following system in the TOYOTA TACOMA.

System	DTC Check (Normal Mode)	DTC Check (Check Mode)	Freeze-frame Data	Sensor Check / Test Mode (Input Signal Check)	Data List	Active Test	Customize Parameter
1GR-FE SFI SYSTEM	○	○	○	-	○	○	-
2TR-FE SFI SYSTEM	○	○	○	-	○	○	-
A340E AUTOMATIC TRANSAXLE SYSTEM	○	○	-	-	○	○	-
A750E AUTOMATIC TRANSAXLE SYSTEM	○	○	-	-	○	○	-
A750F AUTOMATIC TRANSAXLE SYSTEM	○	○	-	-	○	○	-

System	DTC Check (Normal Mode)	DTC Check (Check Mode)	Freeze-frame Data	Sensor Check / Test Mode (Input Signal Check)	Data List	Active Test	Customize Parameter
TIRE PRESSURE WARNING SYSTEM	○	-	-	-	○	-	-
ANTI-LOCK BRAKE SYSTEM	○	-	○	○	○	○	-
VEHICLE STABILITY CONTROL SYSTEM	○	-	○	○	○	○	-
AIRBAG SYSTEM	○	○	-	-	○	-	-
OCCUPANT CLASSIFICATION SYSTEM	○	-	-	-	○	-	-
ENGINE IMMOBILISER SYSTEM	○	-	-	-	○	-	-
CRUISE CONTROL SYSTEM	○	-	-	-	○	-	-
AUDIO AND VISUAL SYSTEM	○	○	-	-	-	-	-
CAN COMMUNICATION SYSTEM	○	-	-	-	-	-	-

- In the DTC check, it is very important to determine whether the problem indicated by the DTC is either: 1) still occurring, or 2) occurred in the past but has since returned to normal. In addition, the DTC should be compared to the problem symptom to see if they are related. For this reason, DTCs should be checked before and after confirmation of symptoms (i.e., whether or not problem symptoms exist) to determine current system conditions, as shown in the flowchart below.
- Never skip the DTC check. Failing to check DTCs may, depending on the case, result in unnecessary troubleshooting for systems operating normally or lead to repairs not related to the problem. Follow the procedures listed in the flowchart in the correct order.
- The following flowchart shows how to proceed with troubleshooting using the DTC check. Directions from the flowchart will indicate how to proceed either to DTC troubleshooting or to the troubleshooting of each problem symptom.

1	DTC CHECK

NEXT

2	MAKE A NOTE OF DTCS DISPLAYED AND THEN CLEAR MEMORY

NEXT

3	SYMPTOM CONFIRMATION

Result

Result	Proceed to
No symptoms exist	A
Symptoms exist	B

B → Go to step 5

A

4	SIMULATION TEST USING SYMPTOM SIMULATION METHODS

NEXT

5	DTC CHECK

Result

Result	Proceed to
DTC is not output	A
DTC is output	B

B → TROUBLESHOOTING OF PROBLEM INDICATED BY DTC

A

6	SYMPTOM CONFIRMATION

Result

Result	Proceed to
Symptoms exist	A
No symptoms exist	B

If a DTC was displayed in the initial DTC check, the problem may have occurred in a wire harness or connector in that circuit in the past. Check the wire harness and connectors.

B → SYSTEM NORMAL

A

TROUBLESHOOTING OF EACH PROBLEM SYMPTOM

The problem is still occurring in a place other than the diagnostic circuit (the DTC displayed first is either for a past problem or a secondary problem).

4. SYMPTOM SIMULATION

HINT:

The most difficult case in troubleshooting is when no problem symptoms occur. In such a case, a thorough problem analysis must be carried out. A simulation of the same or similar conditions and environment in which the problem occurred in the customer's vehicle should be carried out. No matter how much skill or experience a technician has, troubleshooting without confirming the problem symptoms will lead to important repairs being overlooked and mistakes or delays.

For example:

With a problem that only occurs when the engine is cold or as a result of vibration caused by the road during driving, the problem can never be determined if the symptoms are being checked on a stationary vehicle or on a vehicle with a warmed-up engine. Vibration, heat or water penetration (moisture) is difficult to reproduce. The symptom simulation tests below are effective substitutes for the conditions and can be applied on a stationary vehicle. Important points in the symptom simulation test:

In the symptom simulation test, the problem symptoms as well as the problem area or parts must be confirmed. First, narrow down the possible problem circuits according to the symptoms. Then, connect the tester and carry out the symptom simulation test, judging whether the circuit being tested is defective or normal. Also, confirm the problem symptoms at the same time. Refer to the problem symptoms table for each system to narrow down the possible causes.

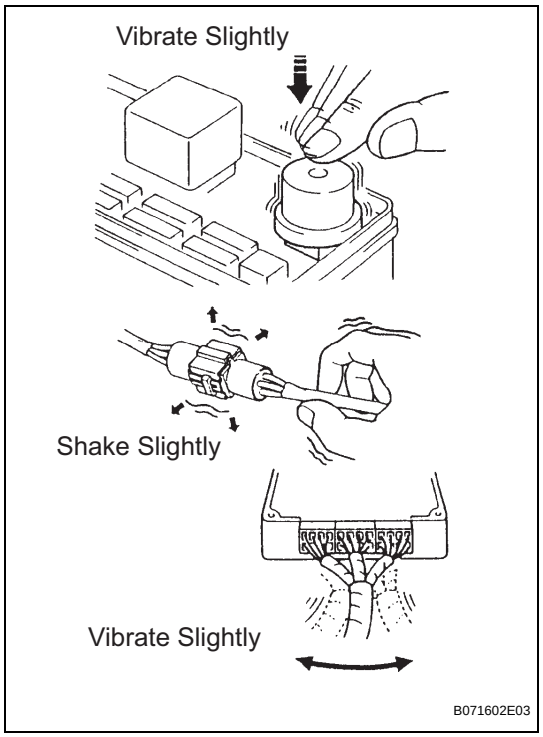

(a) VIBRATION METHOD:
When a malfunction seems to occur as a result of vibration.
(1) PART AND SENSOR
Apply slight vibration with a finger to the part of the sensor suspected to be the cause of the problem, and check whether or not the malfunction occurs.
NOTICE:
Applying strong vibration to relays may open them.
(2) CONNECTORS
Slightly shake the connector vertically and horizontally.
(3) WIRE HARNESS
Slightly shake the wire harness vertically and horizontally.
HINT:
The connector joint and fulcrum of the vibration are the major areas that should be checked thoroughly.

(b) HEAT METHOD:
When a malfunction seems to occur when the area in question is heated.
(1) Heat the component that is the possible cause of the malfunction with a hair dryer or similar device. Check if the malfunction occurs.
NOTICE:
- **Do not heat to more than 60°C (140°F). Exceeding this temperature may damage components.**
- **Do not apply heat directly to the parts in the ECU.**

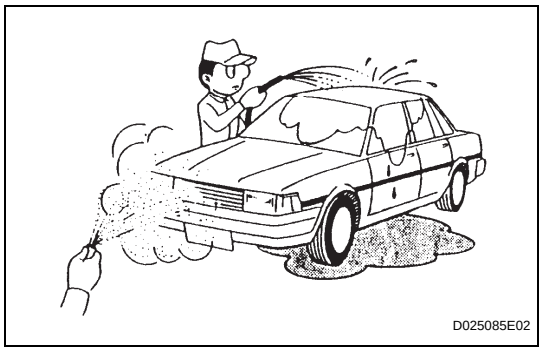

(c) WATER SPRINKLING METHOD:
When a malfunction seems to occur on a rainy day or in high-humidity.
(1) Sprinkle water onto the vehicle and check if the malfunction occurs.
NOTICE:
- **Never sprinkle water directly into the engine compartment. Indirectly change the temperature and humidity by spraying water onto the front of the radiator.**
- **Never apply water directly onto the electronic components.**

HINT:
If the vehicle has or had a water leakage problem, the leakage may have damaged the ECU or connections. Look for evidence of corrosion or short circuits. Proceed with caution during water tests.

IN

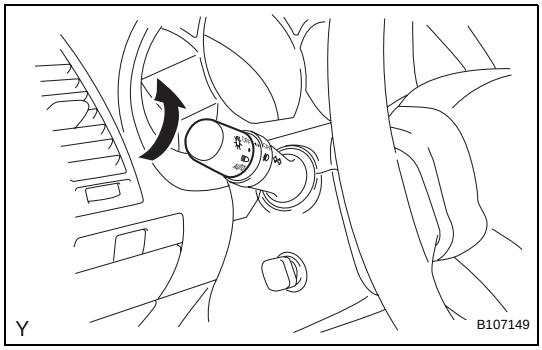

(d) HIGH ELECTRICAL LOAD METHOD:
When a malfunction seems to occur when electrical load is excessive.
(1) Turn on the heater blower, headlight, rear window defogger and all other electrical loads. Check if the malfunction reoccurs.

5. DIAGNOSTIC TROUBLE CODE CHART

Look for output Diagnostic Trouble Codes (DTCs) (from the DTC checks) in the appropriate section's Diagnostic Trouble Code Chart. Use the chart to determine the trouble area and the proper inspection procedure. A description of each of the chart's columns are below.

Item	Description
DTC No.	Indicates the diagnostic trouble code
Detection Item	Indicates the system or details of the problem
Trouble Area	Indicates the suspect areas of the problem
See Page	Indicates the page where the inspection procedures for each circuit is to be found, or gives instruction for checking and repairs.

6. PROBLEM SYMPTOMS TABLE

When a "Normal" code is output during a DTC check but the problem is still occurring, use the Problem Symptoms Table. The suspected areas (circuits or parts) for each problem symptom are in the table. The suspected areas are listed in order of probability. A description of each of the chart's columns are below.

HINT:

In some cases, the problem is not detected by the diagnostic system even though a problem symptom is present. It is possible that the problem is occurring outside the detection range of the diagnostic system, or that the problem is occurring in a completely different system.

Item	Description
Problem Symptom	-
Circuit Inspection, Inspection Order	Indicates the order in which the circuits need to be checked
Circuit or Part Name	Indicates the circuit or part which needs to be checked
See Page	Indicates the page where the flowchart for each circuit is located

7. CIRCUIT INSPECTION

A description of the main areas of each circuit inspection is below.

Item	Description
Circuit Description	The major role, operation of the circuit and its component parts are explained.
Diagnostic Trouble Code No. and Detection Item	Indicates the diagnostic trouble codes, diagnostic trouble code settings and suspected areas for a problem

Item	Description
Wiring Diagram	This shows a wiring diagram of the circuit. Use this diagram together with ELECTRICAL WIRING DIAGRAM to thoroughly understand the circuit. Wire colors are indicated by an alphabetical code: • B = Black • L = Blue • R = Red • BR = Brown • LG = Light Green • V = Violet • G = Green • O = Orange • W = White • GR = Gray • P = Pink • Y = Yellow • SB = Sky Blue The first letter indicates the basic wire color and the second letter indicates the color of the stripe.
Inspection Procedures	Use the inspection procedures to determine if the circuit is normal or abnormal. If abnormal, use the inspection procedures to determine whether the problem is located in the sensors, actuators, wire harnesses or ECU.
Indicates the condition of the connector of the ECU during the check	Connector being checked is connected. Connections of tester are indicated by (+) or (-) after the terminal name. Connector being checked is disconnected. For illustrations of inspections between a connector and body ground, information about the body ground is not shown in the illustration.

TERMS

ABBREVIATIONS USED IN MANUAL

ABBREVIATIONS	MEANING
1st	First
2nd	Second
2WD	Two Wheel Drive Vehicle (4 x 2)
3rd	Third
4th	Fourth
4WD	Four Wheel Drive Vehicle (4 x 4)
4WS	Four Wheel Steering System
5th	Fifth
A.D.D.	Automatic Disconnecting Differential
A/C	Air Conditioner
A/F	Air-Fuel Ratio
A/T, ATM	Automatic Transmission (Transaxle)
ABS	Anti-Lock Brake System
AC	Alternating Current
ACC	Accessory
ACIS	Acoustic Control Induction System
ACM	Active Control Engine Mount
ACSD	Automatic Cold Start Device
AFS	Adaptive Front-Lighting System
AHC	Active Height Control Suspension
AID	Air Injection Control Driver
ALR	Automatic Locking Retractor
ALT	Alternator
AMP	Amplifier
ANT	Antenna
APPROX.	Approximately
ASSB	Assembly Services Sdn. Bhd.
ASSY	Assembly
ATF	Automatic Transmission Fluid
AUTO	Automatic
AUX	Auxiliary
AVG	Average
AVS	Adaptive Variable Suspension
B/L	Bi-Level
B/S	Bore-Stroke Ratio
B+	Battery Voltage
BA	Brake Assist
BACS	Boost Altitude Compensation System
BAT	Battery
BDC	Bottom Dead Center
BTDC	Before Top Dead Center
BVSV	Bimetallic Vacuum Switching Valve
C/V	Check Valve
Calif.	California
CAN	Controller Area Network
CB	Circuit Breaker

ABBREVIATIONS	MEANING
CCo	Catalytic Converter For Oxidation
CCV	Canister Closed Valve
CD	Compact Disc
CF	Cornering Force
CG	Center Of Gravity
CH	Channel
CKD	Complete Knock Down
COMB.	Combination
CPE	Coupe
CPS	Combustion Pressure Sensor
CPU	Central Processing Unit
CRS	Child Restraint System
CTR	Center
CV	Control Valve
CW	Curb Weight
D/INJ	Direct Injection
DC	Direct Current
DEF	Defogger
DFL	Deflector
DIFF.	Differential
DIFF. LOCK	Differential Lock
DLC	Data Link Connector
DLI	Distributorless Ignition
DOHC	Double Overhead Camshaft
DP	Dash Pot
DS	Dead Soak
DSP	Digital Signal Processor
DTC	Diagnostic Trouble Code
DVD	Digital Versatile Disc
E/G	Engine
EBD	Electronic Brake Force Distribution
EC	Electrochromic
ECAM	Engine Control And Measurement System
ECD	Electronically Controlled Diesel
ECDY	Eddy Current Dynamometer
ECT	Electronic Controlled Automatic Transmission/Transaxle
ECU	Electronic Control Unit
ED	Electro-Deposited Coating
EDIC	Electronic Diesel Injection Control
EDU	Electronic Driving Unit
EFI	Electronic Fuel Injection
EGR	Electronic Gas Recirculation
EGR	Exhaust Gas Recirculation
EGR-VM	EGR-Vacuum Modulator
ELR	Emergency Locking Retractor
EMPS	Electric Motor Power Steering
ENG	Engine
ES	Easy & Smooth
ESA	Electronic Spark Advance

ABBREVIATIONS	MEANING
ETCS-i	Electronic Throttle Control System-intelligent
EVAP	Evaporative Emission Control
EVP	Evaporator
E-VRV	Electric Vacuum Regulating Valve
EX	Exhaust
F/G	Fuel Gauge
F/P	Fuel Pump
F/W	Flywheel
FE	Fuel Economy
FF	Front-Engine Front-Wheel-Drive
FIPG	Formed In Place Gasket
FL	Fusible Link
FPU	Fuel Pressure Up
FR / Fr	Front
FW/D	Flywheel Damper
FWD	Front-Wheel-Drive
GAS	Gasoline
GND	Ground
GPS	Global Positioning System
GSA	Gear Shift Actuator
H/B	Hatchback
HAC	High Altitude Compensator
H-FUSE	High Current Fuse
HI	High
HID	High Intensity Discharge (Headlamp)
HPU	Hydraulic Power Unit
HSG	Housing
HT	Hard Top
HV	Hybrid Vehicle
HWS	Heated Windshield System
I/P	Instrument Panel
IC	Integrated Circuit
IDI	Indirect Diesel Injection
IFS	Independent Front Suspension
IG	Ignition
IIA	Integrated Ignition Assembly
IN	Intake (Manifold, Valve)
INT	Intermittent
IRS	Independent Rear Suspension
ISC	Idle Speed Control
J/B	Junction Block
J/C	Junction Connector
KD	Kick-Down
L/H/W	Length, Height, Width
LAN	Local Area Network
LB	Liftback
LCD	Liquid Crystal Display
LED	Light Emitting Diode
LH	Left-Hand

ABBREVIATIONS	MEANING
LHD	Left-Hand Drive
LLC	Long-Life Coolant
LNG	Liquefied Natural Gas
LO	Low
LPG	Liquefied Petroleum Gas
LSD	Limited Slip Differential
LSP & PV	Load Sensing Proportioning and Bypass Valve
LSPV	Load Sensing Proportioning Valve
M/T, MTM	Manual Transmission (Transaxle)
MAP	Manifold Absolute Pressure
MAX.	Maximum
MG1	Motor Generator No.1
MG2	Motor Generator No.2
MIC	Microphone
MIL	Malfunction Indicator Lamp
MIN.	Minimum
MMT	Multi-mode Manual Transmission
MP	Multipurpose
MPI	Multipoint Electronic Injection
MPX	Multiplex Communication System
MT	Mount
MTG	Mounting
N	Neutral
NA	Natural Aspiration
NO. / No.	Number
O/D	Overdrive
O/S	Oversize
O2S	Oxygen Sensor
OC	Oxidation Catalyst
OCV	Oil Control Valve
OEM	Original Equipment Manufacturing
OHC	Overhead Camshaft
OHV	Overhead Valve
OPT	Option
ORVR	On-board Refilling Vapor Recovery
P & BV	Proportioning And Bypass Valve
P/W	Power Window
PBD	Power Back Door
PCS	Power Control System
PCV	Positive Crankcase Ventilation
PKB	Parking Brake
PPS	Progressive Power Steering
PROM	Programmable Read Only Memory
PS	Power Steering
PSD	Power Slide Door
PTC	Positive Temperature Coefficient
PTO	Power Take-Off
PZEV	Partial Zero Emission Vehicle
R & P	Rack and Pinion

ABBREVIATIONS	MEANING
R/B	Relay Block
R/F	Reinforcement
RAM	Random Access Memory
RBS	Recirculating Ball Type Steering
RFS	Rigid Front Suspension
RH	Right-Hand
RHD	Right-Hand Drive
RLY	Relay
ROM	Read Only Memory
RR / Rr	Rear
RRS	Rigid Rear Suspension
RSE	Rear Seat Entertainment
RWD	Rear-Wheel Drive
SC	Supercharger
SCV	Swirl Control Valve
SDN	Sedan
SEN	Sensor
SICS	Starting Injection Control System
SOC	State Of Charge
SOHC	Single Overhead Camshaft
SPEC	Specification
SPI	Single Point Injection
SRS	Supplemental Restraint System
SSM	Special Service Materials
SST	Special Service Tools
STD	Standard
STJ	Cold-Start Fuel Injection
SW	Switch
SYS	System
T/A	Transaxle
T/M	Transmission
TACH	Tachometer
TAM	P.T. TOYOTA-Astra Motor
TASA	TOYOTA Argentina S.A.
TAT	TOYOTA Motor Thailand Co. Ltd.
TAW	TOYOTA Auto Works Co. Ltd.
TBI	Throttle Body Electronic Fuel Injection
TC	Turbocharger
TCCS	TOYOTA Computer-Controlled System
TCV	Timing Control Valve
TDC	Top Dead Center
TDV	TOYOTA de Venezuela C.A.
TEMP.	Temperature
TEMS	TOYOTA Electronic Modulated Suspension
TFT	TOYOTA Free-Tronic
TIS	Total Information System For Vehicle Development
TKM	TOYOTA Kirloskar Motor Ltd.
TMC	TOYOTA Motor Corporation
TMMIN	PT. TOYOTA Motor Manufacturing Indonesia

ABBREVIATIONS	MEANING
TMMK	TOYOTA Motor Manufacturing Kentucky, Inc.
TMP	TOYOTA Motor Philippines Corp.
TMT	TOYOTA Motor Thailand Co. Ltd.
TRAC	Traction Control System
TRC	Traction Control System
TSAM	TOYOTA South Africa Motors (Pty) Ltd.
TURBO	Turbocharge
TWC	Three-Way Catalyst
U/D	Underdrive
U/S	Undersize
VCV	Vacuum Control Valve
VENT	Ventilator
VGRS	Variable Gear Ratio Steering
VIM	Vehicle Interface Module
VIN	Vehicle Identification Number
VPS	Variable Power Steering
VSC	Vehicle Skid Control
VSC	Vehicle Stability Control
VSV	Vacuum Switching Valve
VTV	Vacuum Transmitting Valve
VVT-i	Variable Valve Timing-intelligent
W/ / w/	With
W/H	Wire Harness
W/O / w/o	Without
WGN	Wagon

1GR-FE ENGINE CONTROL SYSTEM

RECOMMENDED TOOLS

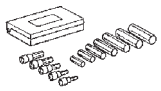	09040-00011	Hexagon Wrench Set	
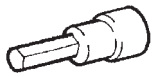	(09043-20080)	Socket Hexagon Wrench 8	
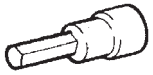	(09043-20100)	Socket Hexagon Wrench 10	
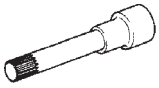	09043-50100	Bi-hexagon Wrench 10 mm	
	09082-00040	TOYOTA Electrical Tester	
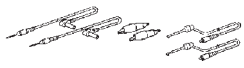	(09083-00150)	Test Lead Set	

PP

EQUIPMENT

Bar	
Ohmmeter	
Torque wrench	
Vernier caliper	
Voltmeter	
Dial indicator	
Wooden block	

2TR-FE ENGINE CONTROL SYSTEM

RECOMMENDED TOOLS

PP

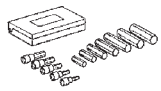	09040-00011	Hexagon Wrench Set	
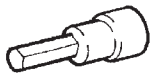	(09043-20080)	Socket Hexagon Wrench 8	
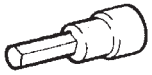	(09043-20100)	Socket Hexagon Wrench 10	
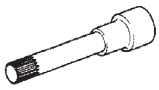	09043-50100	Bi-hexagon Wrench 10 mm	
	09082-00040	TOYOTA Electrical Tester	
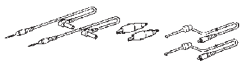	(09083-00150)	Test Lead Set	

EQUIPMENT

Bar	
Ohmmeter	
Torque wrench	
Vernier caliper	
Voltmeter	
Dial indicator	
Wooden block	

1GR-FE ENGINE MECHANICAL

SST

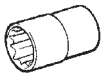	09011-38121	12 mm Socket Wrench for 12 Pointed Head	
	09032-00100	Oil Pan Seal Cutter	
	09201-01055	Valve Guide Bushing Remover & Replacer 5.5	
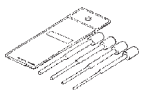	09201-10000	Valve Guide Bushing Remover & Replacer Set	
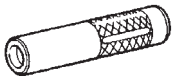	09201-41020	Valve Stem Oil Seal Replacer	
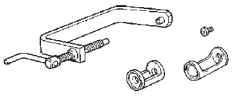	09202-70020	Valve Spring Compressor	
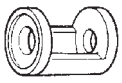	(09202-00010)	Attachment	
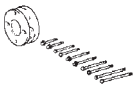	09213-54015	Crankshaft Pulley Holding Tool	
	(91651-60855)	Bolt	
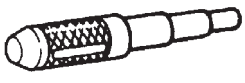	09222-30010	Connecting Rod Bushing Remover & Replacer	
	09223-78010	Crankshaft Oil Seal Replacer	

PP

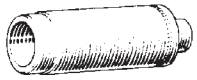	09226-10010	Crankshaft Front & Rear Bearing Replacer	
	09330-00021	Companion Flange Holding Tool	
	09550-60010	Differential Side Bearing Replacer	
	(09951-00350)	Replacer 35	
	09843-18030	Tacho-pulse Pickup Wire No.2	
	09843-18040	Diagnosis Check Wire No.2	
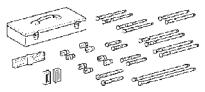	09950-50013	Puller C Set	
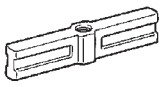	(09951-05010)	Hanger 150	
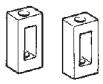	(09952-05010)	Slide Arm	
	(09953-05020)	Center Bolt 150	
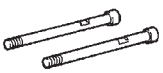	(09954-05030)	Claw No.3	
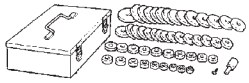	09950-60010	Replacer Set	

	(09951-00250)	Replacer 25	
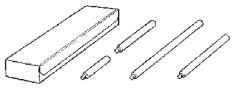	09950-70010	Handle Set	
	(09951-07100)	Handle 100	
	(09951-07150)	Handle 150	
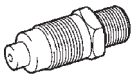	09992-00500	Compression Gauge Attachment	

2TR-FE ENGINE MECHANICAL

SST

	09032-00100	Oil Pan Seal Cutter	
	09201-01055	Valve Guide Bushing Remover & Replacer 5.5	
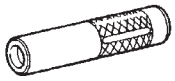	09201-41020	Valve Stem Oil Seal Replacer	
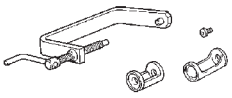	09202-70020	Valve Spring Compressor	
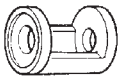	(09202-00010)	Attachment	
	09213-54015	Crankshaft Pulley Holding Tool	
	(91651-60855)	Bolt	
	09222-30010	Connecting Rod Bushing Remover & Replacer	
	09223-15030	Oil Seal & Bearing Replacer	
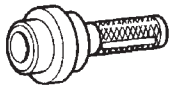	09223-50010	Crankshaft Front Oil Seal Replacer	
	09228-07501	Oil Filter Wrench	

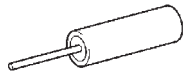	09276-75010	Valve Lifter Tool	
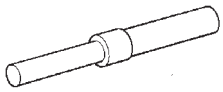	09301-00210	Clutch Guide Tool	
	09330-00021	Companion Flange Holding Tool	
	09843-18030	Tacho-pulse Pickup Wire No.2	
	09843-18040	Diagnosis Check Wire No.2	
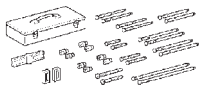	09950-50013	Puller C Set	
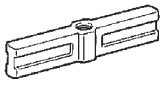	(09951-05010)	Hanger 150	
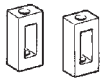	(09952-05010)	Slide Arm	
	(09953-05010)	Center Bolt 100	
	(09954-05021)	Claw No.2	
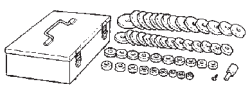	09950-60010	Replacer Set	
	(09951-00250)	Replacer 25	

	(09951-00300)	Replacer 30	
	(09951-00350)	Replacer 35	
	(09951-00400)	Replacer 40	
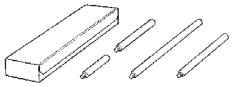	09950-70010	Handle Set	
	(09951-07100)	Handle 100	
	(09951-07150)	Handle 150	

1GR-FE FUEL

SST

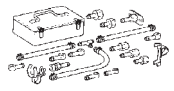	09268-41047	Injection Measuring Tool Set	
	(09268-41091)	NO.7 Union	
	(95336-08070)	Hose	
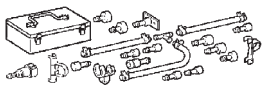	09268-41048	Injection Measuring Tool Set	
	(09268-41500)	Fuel Tube Connector	
	(90467-13001)	Clip	
	(95336-08070)	Hose	
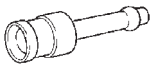	09268-41140	Adapter	
	09268-41400	Clamp	
	09268-45014	EFI Fuel Pressure Gauge	
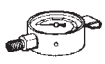	(09268-41200)	Gauge	

PP

	(09268-41220)	Hose	
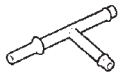	(09268-41250)	T Joint	
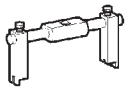	09808-14020	Retainer Tool,Fuel Pump	
	(09808-01410)	Holder	
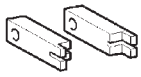	(09808-01420)	Claw	
	(09808-01430)	Bolt	
	09842-30080	Wire H EFI Inspection	

2TR-FE FUEL

SST

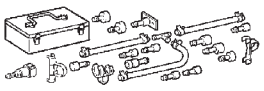	09268-41048	Injection Measuring Tool Set	
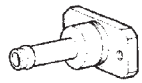	(09268-41091)	NO.7 Union	
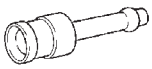	(09268-41110)	Adaptor	
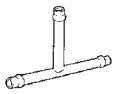	(09268-41120)	3 Way	
	(09268-41310)	Clamp	
	(09268-41500)	Fuel Tube Connector	
	(90467-13001)	Clip	
	(95336-08070)	Hose	
	09268-45014	EFI Fuel Pressure Gauge	
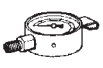	(09268-41200)	Gauge	
	(09268-41220)	Hose	

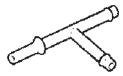	(09268-41250)	T Joint	
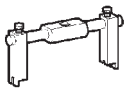	09808-14020	Retainer Tool,Fuel Pump	
	(09808-01410)	Holder	
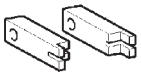	(09808-01420)	Claw	
	(09808-01430)	Bolt	
	09842-30080	Wire H EFI Inspection	

1GR-FE EMISSION CONTROL

SST

	09224-00010	O2 Sensor Wrench	
	09992-00242	Turbocharger Pressure Gauge	

RECOMMENDED TOOLS

	09082-00040	TOYOTA Electrical Tester	
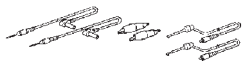	(09083-00150)	Test Lead Set	

2TR-FE EMISSION CONTROL

SST

	09224-00010	O2 Sensor Wrench	
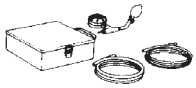	09992-00242	Turbocharger Pressure Gauge	

RECOMMENDED TOOLS

	09082-00040	TOYOTA Electrical Tester	
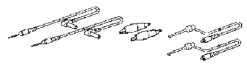	(09083-00150)	Test Lead Set	

1GR-FE INTAKE

EQUIPMENT

Service Wire Harness	
Ohmmeter	
Hand-held Vacuum Pump	

1GR-FE EXHAUST

EQUIPMENT

Torque wrench	
Vernier calipers	
Wooden block	

2TR-FE EXHAUST

EQUIPMENT

Torque wrench	
Vernier calipers	
Wooden block	

1GR-FE COOLING

SST

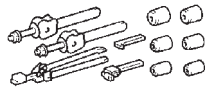	09230-01010	Radiator Service Tool Set	
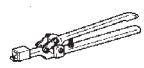	(09231-01010)	Overhaul Handle	
	(09231-01020)	Punch Assembly	
	(09231-01030)	Claw	

EQUIPMENT

Torque wrench	
Radiator cap tester	
Thermometer	
Slide calipers	
Heater	
Vernier calipers	

2TR-FE COOLING

SST

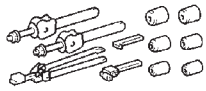	09230-01010	Radiator Service Tool Set	
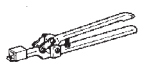	(09231-01010)	Overhaul Handle	
	(09231-01020)	Punch Assembly	
	(09231-01030)	Claw	

EQUIPMENT

Torque wrench	
Radiator cap tester	
Thermometer	
Slide calipers	
Heater	
Vernier calipers	

1GR-FE LUBRICATION

SST

	09228-07501	Oil Filter Wrench	

RECOMMENDED TOOLS

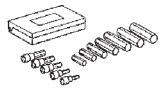	09040-00011	Hexagon Wrench Set	
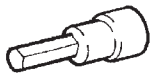	(09043-20080)	Socket Hexagon Wrench 8	

2TR-FE LUBRICATION

SST

	09228-07501	Oil Filter Wrench	

RECOMMENDED TOOLS

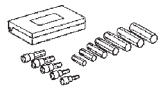	09040-00011	Hexagon Wrench Set	
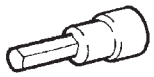	(09043-20080)	Socket Hexagon Wrench 8	
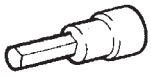	(09043-20100)	Socket Hexagon Wrench 10	
	09090-04020	Engine Sling Device	

1GR-FE IGNITION

RECOMMENDED TOOLS

	09082-00040	TOYOTA Electrical Tester	
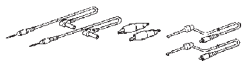	(09083-00150)	Test Lead Set	
	09200-00010	Engine Adjust Kit	
	(09857-00031)	Spark Plug Gap Gauge	

EQUIPMENT

Ohmmeter	
Torque wrench	
Spark plug cleaner	

2TR-FE IGNITION

RECOMMENDED TOOLS

PP

	09082-00040	TOYOTA Electrical Tester	
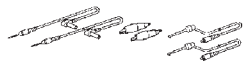	(09083-00150)	Test Lead Set	
	09200-00010	Engine Adjust Kit	
	(09857-00031)	Spark Plug Gap Gauge	

EQUIPMENT

Ohmmeter	
Torque wrench	
Spark plug cleaner	

1GR-FE STARTING

RECOMMENDED TOOLS

	09082-00040	TOYOTA Electrical Tester	
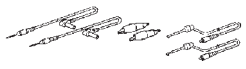	(09083-00150)	Test Lead Set	

EQUIPMENT

Service wire harness	
V-block	
Ammeter	
Dial indicator	
Ohmmeter	
Torque wrench	
Vernier calipers	

2TR-FE STARTING

RECOMMENDED TOOLS

	09082-00040	TOYOTA Electrical Tester	
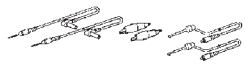	(09083-00150)	Test Lead Set	

EQUIPMENT

Service wire harness	
V-block	
Ammeter	
Dial indicator	
Ohmmeter	
Torque wrench	
Vernier calipers	

1GR-FE CHARGING

SST

	09285-76010	Injection Pump Camshaft Bearing Cone Replacer	
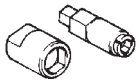	09820-63010	Alternator Pulley Set Nut Wrench Set	
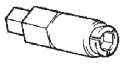	(09820-06010)	Alternator Rotor Shaft Wrench	
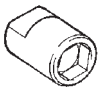	(09820-06020)	Alternator Pulley Set Nut 22 mm Wrench	
	09950-40011	Puller B Set	
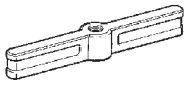	(09951-04020)	Hanger 200	
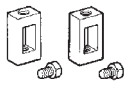	(09952-04010)	Slide Arm	
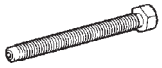	(09953-04020)	Center Bolt 150	
	(09954-04010)	Arm 25	
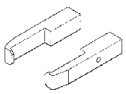	(09955-04071)	Claw No.7	
	(09957-04010)	Attachment	

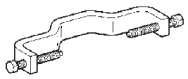	(09958-04011)	Holder	
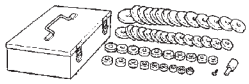	09950-60010	Replacer Set	
	(09951-00250)	Replacer 25	
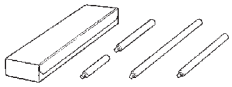	09950-70010	Handle Set	
	(09951-07100)	Handle 100	

2TR-FE CHARGING

SST

	09286-46011	Injection Pump Spline Shaft Puller	
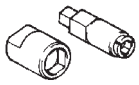	09820-63010	Alternator Pulley Set Nut Wrench Set	
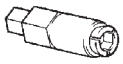	(09820-06010)	Alternator Rotor Shaft Wrench	
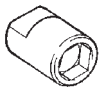	(09820-06020)	Alternator Pulley Set Nut 22 mm Wrench	

RECOMMENDED TOOLS

	09082-00040	TOYOTA Electrical Tester	
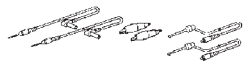	(09083-00150)	Test Lead Set	

A340E AUTOMATIC TRANSMISSION

SST

PP

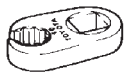	09023-12701	Union Nut Wrench 17mm	
	09032-00100	Oil Pan Seal Cutter	
	09308-00010	Oil Seal Puller	
	09325-40010	Transmission Oil Plug	
	09350-32014	TOYOTA Automatic Transmission Tool Set	
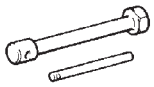	(09351-32010)	One-way Clutch Test Tool	
	(09351-32020)	Stator Stopper	

RECOMMENDED TOOLS

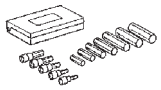	09040-00011	Hexagon Wrench Set	
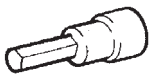	(09043-20100)	Socket Hexagon Wrench 10	
	09082-00040	TOYOTA Electrical Tester	
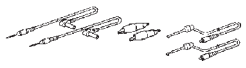	(09083-00150)	Test Lead Set	

A750E AUTOMATIC TRANSMISSION

SST

	09023-12701	Union Nut Wrench 17mm	
	09308-00010	Oil Seal Puller	
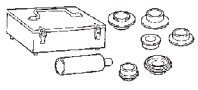	09316-60011	Transmission & Transfer Bearing Replacer	
	(09316-00011)	Replacer Pipe	
	(09316-00051)	Replacer D	
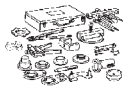	09350-32014	TOYOTA Automatic Transmission Tool Set	
	(09351-32020)	Stator Stopper	
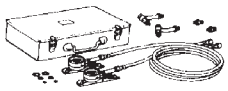	09992-00095	Automatic Transmission Oil Pressure Gauge Set	
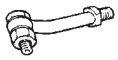	(09992-00231)	Adaptor C	
	(09992-00271)	Gauge Assy	

RECOMMENDED TOOLS

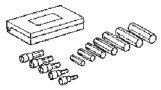	09040-00011	Hexagon Wrench Set	
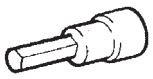	(09043-20100)	Socket Hexagon Wrench 10	
	09082-00040	TOYOTA Electrical Tester	
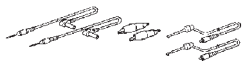	(09083-00150)	Test Lead Set	

A750F AUTOMATIC TRANSMISSION

SST

	09023-12701	Union Nut Wrench 17mm	
	09350-32014	TOYOTA Automatic Transmission Tool Set	
	(09351-32020)	Stator Stopper	
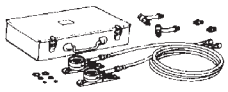	09992-00095	Automatic Transmission Oil Pressure Gauge Set	
	(09992-00231)	Adaptor C	
	(09992-00271)	Gauge Assy	

RECOMMENDED TOOLS

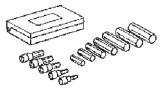	09040-00011	Hexagon Wrench Set	
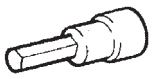	(09043-20100)	Socket Hexagon Wrench 10	
	09082-00040	TOYOTA Electrical Tester	
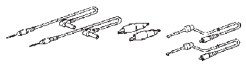	(09083-00150)	Test Lead Set	

CLUTCH

SST

	09023-00101	Union Nut Wrench 10 mm	
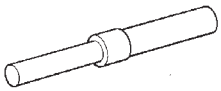	09301-00210	Clutch Guide Tool	
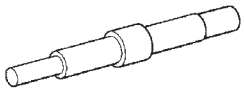	09301-00220	Clutch Guide Tool	
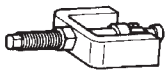	09303-35011	Input Shaft Front Bearing Puller	
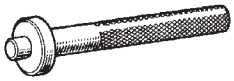	09304-30012	Input Shaft Front Bearing Replacer	
	09333-00013	Universal Joint Bearing Remover & Replacer	

RECOMMENDED TOOLS

	09082-00040	TOYOTA Electrical Tester	
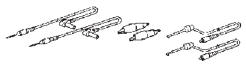	(09083-00150)	Test Lead Set	

R155 MANUAL TRANSMISSION

SST

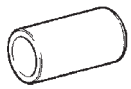	09223-00010	Cover & Seal Replacer	
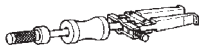	09308-00010	Oil Seal Puller	
	09309-35010	Transmission Rear Bearing Replacer	
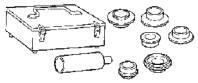	09316-60011	Transmission & Transfer Bearing Replacer	
	(09316-00011)	Replacer Pipe	
	(09316-00031)	Replacer B	
	(09316-00041)	Replacer C	
	09515-10010	Rear Axle Bearing Replacer	
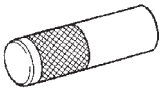	09608-06041	Front Hub Inner Bearing Cone Replacer	
	09710-30050	Suspension Arm Bushing Replacer	
	09817-16011	Back-up Light Switch Tool	

PP

PP

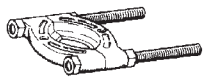	09950-00020	Bearing Remover	
	09950-40011	Puller B Set	
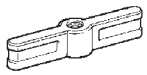	(09951-04010)	Hanger 150	
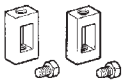	(09952-04010)	Slide Arm	
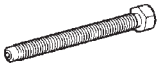	(09953-04020)	Center Bolt 150	
	(09954-04010)	Arm 25	
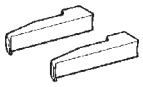	(09955-04011)	Claw No.1	
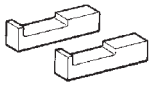	(09955-04051)	Claw No.5	
	(09957-04010)	Attachment	
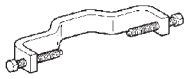	(09958-04011)	Holder	
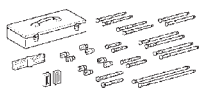	09950-50013	Puller C Set	
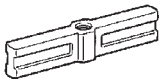	(09951-05010)	Hanger 150	

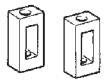	(09952-05010)	Slide Arm	
	(09953-05020)	Center Bolt 150	
	(09954-05021)	Claw No.2	
	(09957-04010)	Attachment	
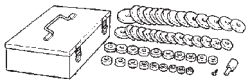	09950-60010	Replacer Set	
	(09951-00220)	Replacer 22	
	(09951-00300)	Replacer 30	
	(09951-00520)	Replacer 52	
	(09951-00570)	Replacer 57	
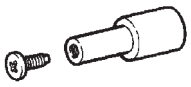	(09952-06010)	Adapter	
	09950-70010	Handle Set	
	(09951-07100)	Handle 100	

PP

R155F MANUAL TRANSMISSION

SST

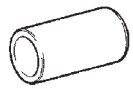	09223-00010	Cover & Seal Replacer	
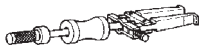	09308-00010	Oil Seal Puller	
	09309-35010	Transmission Rear Bearing Replacer	
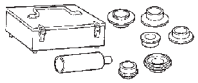	09316-60011	Transmission & Transfer Bearing Replacer	
	(09316-00011)	Replacer Pipe	
	(09316-00031)	Replacer B	
	(09316-00041)	Replacer C	
	09515-10010	Rear Axle Bearing Replacer	
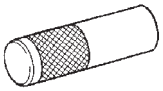	09608-06041	Front Hub Inner Bearing Cone Replacer	
	09710-30050	Suspension Arm Bushing Replacer	
	09817-16011	Back-up Light Switch Tool	

PP

PP

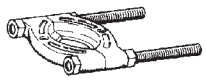	09950-00020	Bearing Remover	
	09950-40011	Puller B Set	
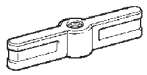	(09951-04010)	Hanger 150	
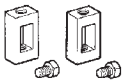	(09952-04010)	Slide Arm	
	(09953-04020)	Center Bolt 150	
	(09954-04010)	Arm 25	
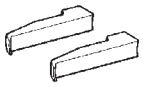	(09955-04011)	Claw No.1	
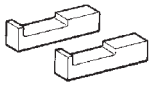	(09955-04051)	Claw No.5	
	(09957-04010)	Attachment	
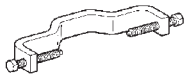	(09958-04011)	Holder	
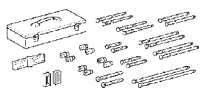	09950-50013	Puller C Set	
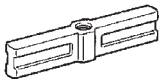	(09951-05010)	Hanger 150	

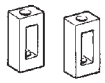	(09952-05010)	Slide Arm	
	(09953-05020)	Center Bolt 150	
	(09954-05021)	Claw No.2	
	(09957-04010)	Attachment	
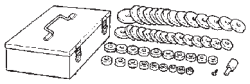	09950-60010	Replacer Set	
	(09951-00220)	Replacer 22	
	(09951-00300)	Replacer 30	
	(09951-00520)	Replacer 52	
	(09951-00570)	Replacer 57	
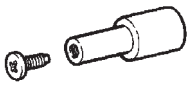	(09952-06010)	Adapter	
	09950-70010	Handle Set	
	(09951-07100)	Handle 100	

RA60 MANUAL TRANSMISSION

SST

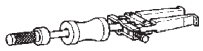	09308-00010	Oil Seal Puller	
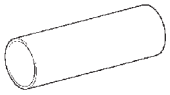	09308-14010	Replacer Pipe A	
	09309-37010	Transmission Bearing Replacer	
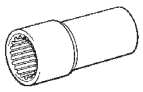	09556-16030	Differential Drive Pinion Holding Tool 28	
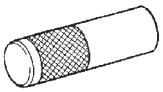	09608-06041	Front Hub Inner Bearing Cone Replacer	
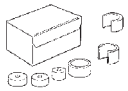	09710-20011	Front Suspension Bushing Tool Set	
	(09710-06061)	Spacer	
	09817-16011	Back-up Light Switch Tool	
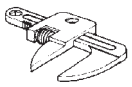	09922-10010	Variable Open Wrench	
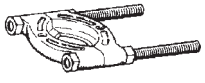	09950-00020	Bearing Remover	
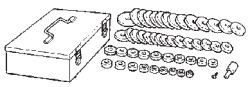	09950-60010	Replacer Set	

PP

PP

	(09951-00300)	Replacer 30	
	(09951-00320)	Replacer 32	
	(09951-00470)	Replacer 47	
	(09951-00540)	Replacer 54	
	(09951-00650)	Replacer 65	
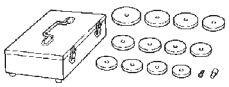	09950-60020	Replacer Set No.2	
	(09951-00640)	Replacer 64	
	(09951-00790)	Replacer 79	
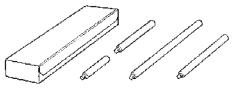	09950-70010	Handle Set	
	(09951-07100)	Handle 100	
	(09951-07200)	Handle 200	
	(09951-07360)	Handle 360	

RA60F MANUAL TRANSMISSION

SST

PP

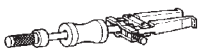	09308-00010	Oil Seal Puller	
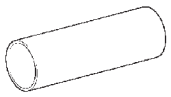	09308-14010	Replacer Pipe A	
	09309-37010	Transmission Bearing Replacer	
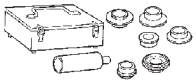	09316-60011	Transmission & Transfer Bearing Replacer	
	(09316-00011)	Replacer Pipe	
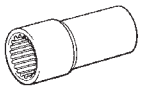	09556-16030	Differential Drive Pinion Holding Tool 28	
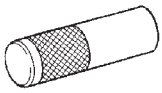	09608-06041	Front Hub Inner Bearing Cone Replacer	
	09817-16011	Back-up Light Switch Tool	
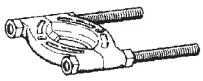	09950-00020	Bearing Remover	
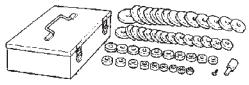	09950-60010	Replacer Set	
	(09951-00300)	Replacer 30	

	(09951-00320)	Replacer 32	
	(09951-00470)	Replacer 47	
	(09951-00510)	Replacer 51	
	(09951-00540)	Replacer 54	
	(09951-00650)	Replacer 65	
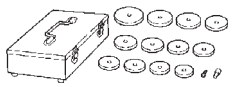	09950-60020	Replacer Set No.2	
	(09951-00790)	Replacer 79	
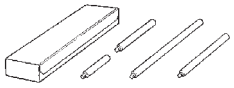	09950-70010	Handle Set	
	(09951-07100)	Handle 100	
	(09951-07200)	Handle 200	
	(09951-07360)	Handle 360	

PP

VF2BM TRANSFER

SST

	09223-15020	Oil Seal & Bearing Replacer	
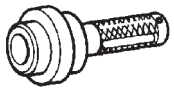	09223-46011	Crankshaft Front Oil Seal Replacer	
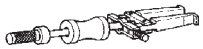	09308-00010	Oil Seal Puller	
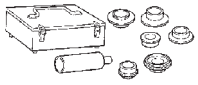	09316-60011	Transmission & Transfer Bearing Replacer	
	(09316-00011)	Replacer Pipe	
	(09316-00031)	Replacer B	
	(09316-00071)	Replacer F	
	09330-00021	Companion Flange Holding Tool	
	09515-30010	Rear Wheel Bearing Replacer	
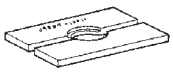	09527-10011	Rear Axle Shaft Bearing Remover	
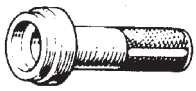	09554-22010	Differential Oil Seal Replacer	

PP

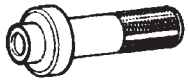	09554-30011	Differential Oil Seal Replacer	
	09555-55010	Differential Drive Pinion Bearing Replacer	
	09612-65014	Steering Worm Bearing Puller	
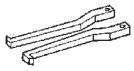	(09612-01030)	Claw C	
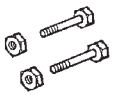	(09612-01050)	Hanger Pin with Nut	
	09631-32020	Seal Ring Tool	
	09950-40011	Puller B Set	
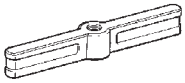	(09951-04020)	Hanger 200	
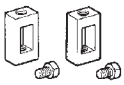	(09952-04010)	Slide Arm	
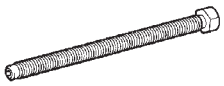	(09953-04030)	Center Bolt 200	
	(09954-04010)	Arm 25	
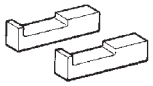	(09955-04051)	Claw No.5	

	(09957-04010)	Attachment	
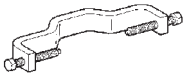	(09958-04011)	Holder	
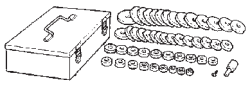	09950-60010	Replacer Set	
	(09951-00320)	Replacer 32	
	(09951-00570)	Replacer 57	
	(09951-00580)	Replacer 58	
	(09951-00590)	Replacer 59	
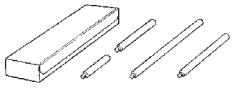	09950-70010	Handle Set	
	(09951-07100)	Handle 100	

PP

PROPELLER SHAFT

SST

	09325-40010	Transmission Oil Plug	
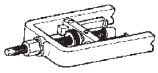	09332-25010	Propeller Shaft Center Bearing Replacer	

EQUIPMENT

Dial indicator with magnetic base	
Torque wrench	
V-block	

DRIVE SHAFT

SST

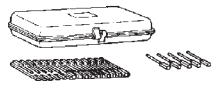	09240-00020	Wire Gauge Set	
	09520-01010	Drive Shaft Remover Attachment	
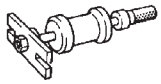	09520-24010	Differential Side Gear Shaft Puller	
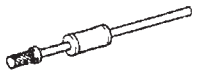	(09520-32040)	Shocker Set	
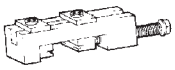	09521-24010	Rear Axle Shaft Puller	
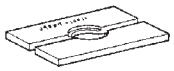	09527-10011	Rear Axle Shaft Bearing Remover	
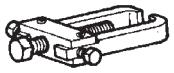	09628-62011	Boll Joint Puller	
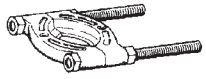	09950-00020	Bearing Remover	

RECOMMENDED TOOLS

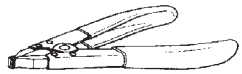	09905-00012	Snap Ring No.1 Expander	

DIFFERENTIAL

SST

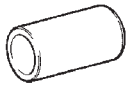	09223-00010	Cover & Seal Replacer	
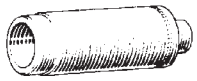	09226-10010	Crankshaft Front & Rear Bearing Replacer	
	09308-00010	Oil Seal Puller	
	09308-10010	Oil Seal Puller	
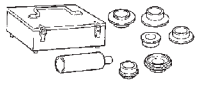	09316-60011	Transmission & Transfer Bearing Replacer	
	(09316-00011)	Replacer Pipe	
	(09316-00021)	Replacer A	
	(09316-00041)	Replacer C	
	09330-00021	Companion Flange Holding Tool	
	09350-20015	TOYOTA Automatic Transmission Tool Set	
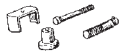	(09369-20040)	Piston Spring Compressor Set	

	09502-12010	Differential Bearing Replacer	
	09504-00011	Differential Side Bearing Adjusting Nut Wrench	
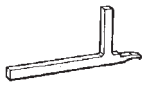	09504-22011	Differential Side Bearing Replacer	
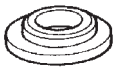	09506-30012	Differential Drive Pinion Rear Bearing Cone Replacer	
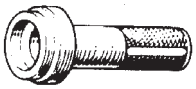	09554-22010	Differential Oil Seal Replacer	
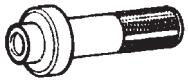	09554-30011	Differential Oil Seal Replacer	
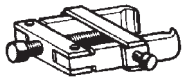	09556-22010	Drive Pinion Front Bearing Remover	
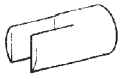	09564-32011	Differential Preload Adaptor	
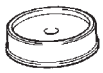	09608-32010	Steering Knuckle Oil Seal Replacer	
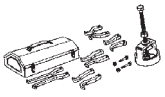	09612-65014	Steering Worm Bearing Puller	
	(09612-01020)	Claw B	
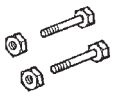	(09612-01050)	Hanger Pin with Nut	

PP

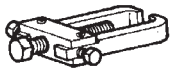	09628-62011	Boll Joint Puller	
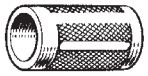	09636-20010	Upper Ball Joint Dust Cover Replacer	
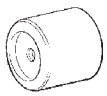	09649-17010	Steering Knuckle Tool	
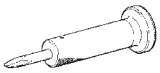	09930-00010	Drive Shaft Nut Chisel	
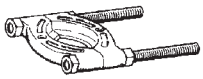	09950-00020	Bearing Remover	
	(09951-00680)	Replacer 68	
	(09951-00890)	Replacer 89	
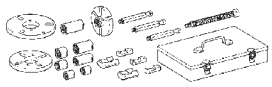	09950-30012	Puller A Set	
	(09951-03010)	Upper Plate	
	(09953-03010)	Center Bolt	
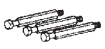	(09954-03010)	Arm	
	(09955-03030)	Lower Plate 130	

	(09956-03020)	Adapter 18	
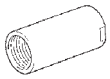	(09956-03030)	Adaptor 20	
	09950-40011	Puller B Set	
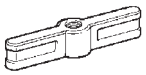	(09951-04010)	Hanger 150	
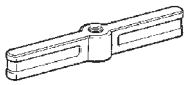	(09951-04020)	Hanger 200	
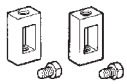	(09952-04010)	Slide Arm	
	(09953-04020)	Center Bolt 150	
	(09953-04030)	Center Bolt 200	
	(09954-04010)	Arm 25	
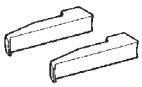	(09955-04011)	Claw No.1	
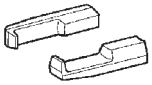	(09955-04061)	Claw No.6	
	(09957-04010)	Attachment	

PP

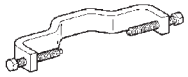	(09958-04011)	Holder	
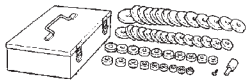	09950-60010	Replacer Set	
	(09951-00360)	Replacer 36	
	(09951-00380)	Replacer 38	
	(09951-00390)	Replacer 39	
	(09951-00480)	Replacer 48	
	(09951-00560)	Replacer 56	
	(09951-00570)	Replacer 57	
	(09951-00640)	Replacer 64	
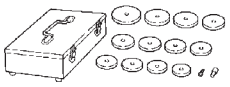	09950-60020	Replacer Set No.2	
	(09951-00680)	Replacer 68	
	(09951-00810)	Replacer 81	

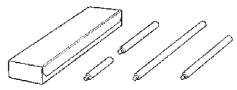	09950-70010	Handle Set	
	(09951-07150)	Handle 150	
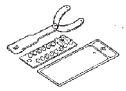	09960-10010	Variable Pin Wrench Set	
	(09962-01000)	Variable Pin Wrench Arm Assembly	
	(09963-00700)	Pin 7	

AXLE

SST

	09023-00101	Union Nut Wrench 10 mm	
	09223-15020	Oil Seal & Bearing Replacer	
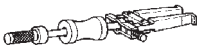	09308-00010	Oil Seal Puller	
	09318-12010	Transfer Bearing Adjusting Nut Wrench	
	09521-25011	Rear Axle Shaft Puller	
	09521-25021	Rear Axle Shaft Puller Attachment	
	09527-17011	Rear Axle Shaft Bearing Remover	
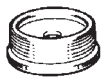	09608-10010	Steering Knuckle Oil Seal Replacer	
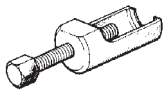	09610-20012	Pitman Arm Puller	
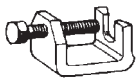	09611-12010	Tie Rod End Puller	
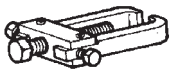	09628-62011	Boll Joint Puller	

PP

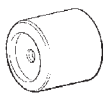	09649-17010	Steering Knuckle Tool	
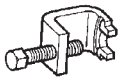	09650-17011	Hub Bolt Remover	
	09710-30021	Suspension Bushing Tool Set	
	(09710-03051)	Bushing Replacer	
	(09710-03131)	Bushing Remover	
	09710-30050	Suspension Arm Bushing Replacer	
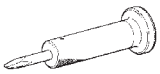	09930-00010	Drive Shaft Nut Chisel	
	09950-40011	Puller B Set	
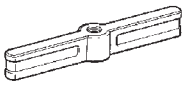	(09951-04020)	Hanger 200	
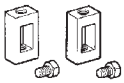	(09952-04010)	Slide Arm	
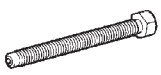	(09953-04020)	Center Bolt 150	
	(09954-04010)	Arm 25	

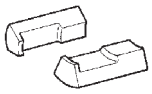	(09955-04031)	Claw No.3	
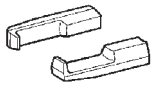	(09955-04061)	Claw No.6	
	(09957-04010)	Attachment	
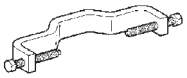	(09958-04011)	Holder	
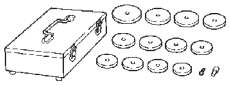	09950-60020	Replacer Set No.2	
	(09951-00710)	Replacer 71	
	(09951-00770)	Replacer 77	
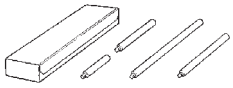	09950-70010	Handle Set	
	(09951-07100)	Handle 100	
	(09951-07150)	Handle 150	
	09951-01000	Replacer 100	

PP

SUSPENSION

SST

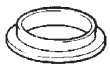	09502-12010	Differential Bearing Replacer	
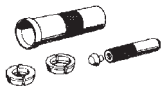	09613-26010	Steering Worm Bearing Cone Remover	
	09628-00011	Ball Joint Puller	
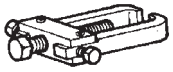	09628-62011	Boll Joint Puller	
	09631-12090	Seal Ring Tool	
	09631-20081	Seal Ring Tool	
	09631-32020	Seal Ring Tool	
	09710-04081	Base	
	09710-22021	Front Suspension Bushing Tool Set	
	(09710-01031)	Upper Arm Bushing Replacer	
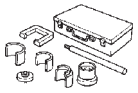	09710-26010	Rear Suspension Bushing Tool Set	

PP

PP

	(09710-05061)	Replacer	
	09710-28012	Front Suspension Bushing Tool Set	
	(09710-07062)	Bushing Replacer	
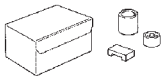	09710-30041	Rear Suspension Bushing Tool Set	
	(09710-03211)	Remover	
	09727-00060	Arm Set C	
	09727-30021	Coil Spring Compressor	
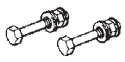	(09727-00010)	Bolt Set	
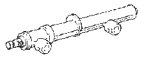	(09727-00031)	Compressor	
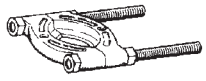	09950-00020	Bearing Remover	
	09950-40011	Puller B Set	
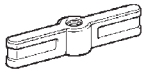	(09951-04010)	Hanger 150	

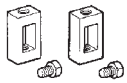	(09952-04010)	Slide Arm	
	(09953-04020)	Center Bolt 150	
	(09954-04010)	Arm 25	
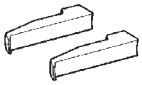	(09955-04011)	Claw No.1	
	(09957-04010)	Attachment	
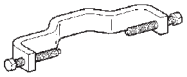	(09958-04011)	Holder	
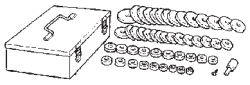	09950-60010	Replacer Set	
	(09951-00350)	Replacer 35	
	(09951-00380)	Replacer 38	
	(09951-00450)	Replacer 45	
	(09951-00470)	Replacer 47	
	(09951-00520)	Replacer 52	

PP

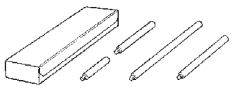	09950-70010	Handle Set	
	(09951-07100)	Handle 100	

TIRE AND WHEEL

RECOMMENDED TOOLS

	09082-00040	TOYOTA Electrical Tester	
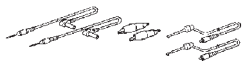	(09083-00150)	Test Lead Set	

EQUIPMENT

Dial indicator with magnetic base	
Tire pressure gauge	
Wheel balancer	
Torque wrench	

BRAKE CONTROL

SST

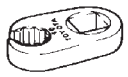	09023-00101	Union Nut Wrench 10 mm	

RECOMMENDED TOOLS

	09082-00040	TOYOTA Electrical Tester	
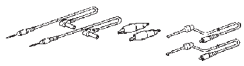	(09083-00150)	Test Lead Set	

BRAKE

SST

	09023-00101	Union Nut Wrench 10 mm	
	09709-29018	LSPV Gauge Set	
	09718-00010	Shoe Hold Down Spring Driver	
	09737-00020	Brake Booster Push Rod Wrench	
	09921-00010	Spring Tension Tool	

RECOMMENDED TOOLS

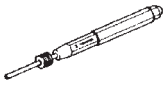	09031-00030	Pin Punch	
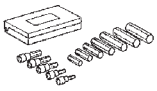	09040-00011	Hexagon Wrench Set	
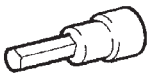	(09043-20050)	Socket Hexagon Wrench 5	

PARKING BRAKE

EQUIPMENT

Torque wrench	
Slide calipers	

STEERING COLUMN

SST

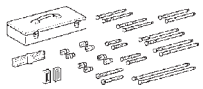	09950-50013	Puller C Set	
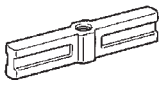	(09951-05010)	Hanger 150	
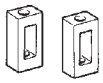	(09952-05010)	Slide Arm	
	(09953-05020)	Center Bolt 150	
	(09954-05021)	Claw No.2	

RECOMMENDED TOOLS

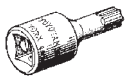	09042-00010	Torx Socket T30	

POWER STEERING

SST

	09023-12701	Union Nut Wrench 17mm	
	09023-38401	Union Nut Wrench 14mm	
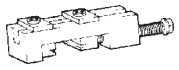	09521-24010	Rear Axle Shaft Puller	
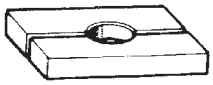	09527-21011	Rear Axle Shaft Bearing Remover	
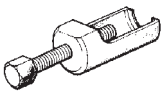	09610-20012	Pitman Arm Puller	
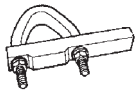	09612-00012	Rack & Pinion Steering Rack Housing Stand	
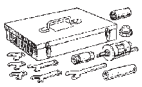	09612-24014	Steering Gear Housing Overhaul Tool Set	
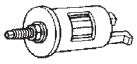	(09613-22011)	Steering Rack Shaft Bushing Puller	
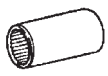	09616-00011	Steering Worm Bearing Adjusting Socket	
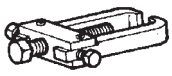	09628-62011	Boll Joint Puller	
	09630-00014	Power Steering Gear Housing Overhaul Tool Set	

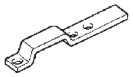	(09631-00132)	Vane Pump Bracket	
	09631-10021	Rack Stopper Wrench	
	09631-20081	Seal Ring Tool	
	09631-20111	Steering Rack Cover G	
	09631-33010	Steering Rack Cover I	
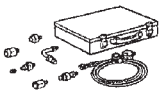	09640-10010	Power Steering Pressure Gauge Set	
	(09641-01010)	Gauge Assy	
	(09641-01030)	Attachment B	
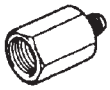	(09641-01060)	Attachment E	
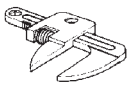	09922-10010	Variable Open Wrench	
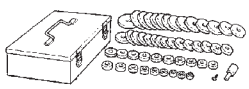	09950-60010	Replacer Set	
	(09951-00180)	Replacer 18	

	(09951-00250)	Replacer 25	
	(09951-00280)	Replacer 28	
	(09951-00290)	Replacer 29	
	(09951-00320)	Replacer 32	
	(09951-00340)	Replacer 34	
	(09951-00400)	Replacer 40	
	(09951-00440)	Replacer 44	
	(09951-00480)	Replacer 48	
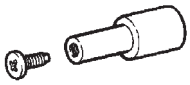	(09952-06010)	Adapter	
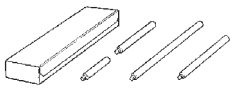	09950-70010	Handle Set	
	(09951-07100)	Handle 100	
	(09951-07150)	Handle 150	

	(09951-07360)	Handle 360	

AIR CONDITIONING

SST

	07110-58060	Air Conditioner Service Tool Set	-
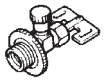	(07117-58060)	Refrigerant Drain Service Valve	-
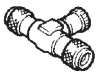	(07117-58070)	T-Joint	-
	(07117-58080)	Quick Disconnect Adapter	-
	(07117-58090)	Quick Disconnect Adapter	-
	(07117-78050)	Refrigerant Charging Gauge	-
	(07117-88060)	Refrigerant Charging Hose	-
	(07117-88070)	Refrigerant Charging Hose	-
	(07117-88080)	Refrigerant Charging Hose	-
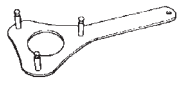	07112-76060	Magnetic Clutch Stopper	-
	95994-10020	Snap Ring Pliers (DENSO Part No.)	-

PP

RECOMMENDED TOOLS

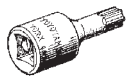	09042-00010	Torx Socket T30	-
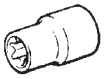	09044-00020	Torx Socket E10	-
	09082-00040	TOYOTA Electrical Tester	-
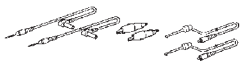	(09083-00150)	Test Lead Set	-
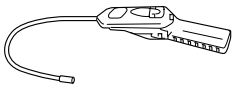	95146-00180	Halogen Leak Detector DENSO Part No.	-

SUPPLEMENTAL RESTRAINT SYSTEM

SST

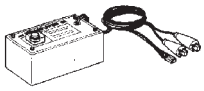	09082-00700	SRS Airbag Deployment Tool	
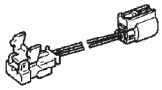	09082-00750	Airbag Deployment Wire Sub-harness No.3	
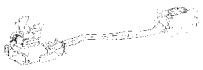	09082-00780	Airbag Deployment Wire Sub-harness No.6	
	09082-00802	Airbag Deployment Wire Sub-Harness No. 8	
	(09082-10801)	Wire A	
	(09082-20801)	Wire B	
	(09082-30801)	Wire C	
	09843-18040	Diagnosis Check Wire No.2	

PP

RECOMMENDED TOOLS

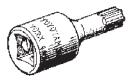	09042-00010	Torx Socket T30	
	09082-00040	TOYOTA Electrical Tester	
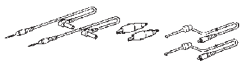	(09083-00150)	Test Lead Set	

SEAT BELT

SST

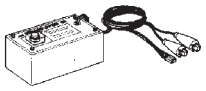	09082-00700	SRS Airbag Deployment Tool	
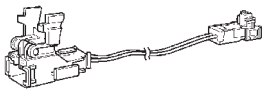	09082-00770	Airbag Deployment Wire Sub-harness No.5	

RECOMMENDED TOOLS

	09082-00040	TOYOTA Electrical Tester	
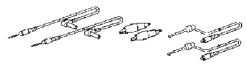	(09083-00150)	Test Lead Set	

ENGINE IMMOBILISER

RECOMMENDED TOOLS

	09082-00040	TOYOTA Electrical Tester	
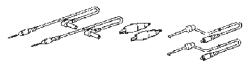	(09083-00150)	Test Lead Set	

CRUISE CONTROL

RECOMMENDED TOOLS

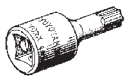	09042-00010	Torx Socket T30	-

EQUIPMENT

Torque wrench	

LIGHTING

RECOMMENDED TOOLS

PP

	09082-00040	TOYOTA Electrical Tester	
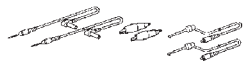	(09083-00150)	Test Lead Set	

EQUIPMENT

Ohmmeter	
Torque wrench	
Sandpaper	

WIPER AND WASHER

RECOMMENDED TOOLS

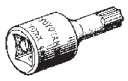	09042-00010	Torx Socket T30	
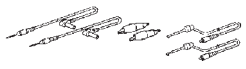	(09083-00150)	Test Lead Set	

EQUIPMENT

Ohmmeter	
Torque wrench	

DOOR LOCK

RECOMMENDED TOOLS

	09082-00040	TOYOTA Electrical Tester	
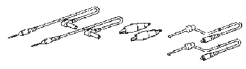	(09083-00150)	Test Lead Set	

METER

EQUIPMENT

Torque wrench	
Tape	To avoid surface damage

AUDIO / VISUAL

RECOMMENDED TOOLS

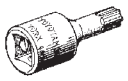	09042-00010	Torx Socket T30	
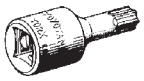	09042-00030	Torx Socket T20	

EQUIPMENT

Torque wrench	
Ohmmeter	

HORN

RECOMMENDED TOOLS

	09082-00040	TOYOTA Electrical Tester	
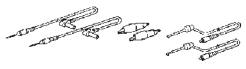	(09083-00150)	Test Lead Set	

EQUIPMENT

Torque wrench	
Ohmmeter	

WINDSHIELD / WINDOWGLASS

EQUIPMENT

Brush	
Knife	
Piano wire	
Protective tape	
Sealer gun	
Suction cup	
Torque wrench	
Wooden block	

SSM

	08833-00030	Three cement black or equivalent	
	08850-00801	Windshield Glass Adhesive Set or equivalent	

MIRROR

RECOMMENDED TOOLS

	09082-00040	TOYOTA Electrical Tester	
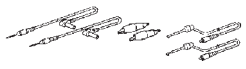	(09083-00150)	Test Lead Set	

EQUIPMENT

Black colored tape	
Ohmmeter	
Torque wrench	
Protective tape	
Service wire	

INSTRUMENT PANEL

EQUIPMENT

Torque wrench	
Tape	To avoid surface damage

SEAT

RECOMMENDED TOOLS

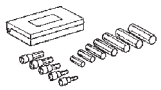	09040-00011	Hexagon Wrench Set	
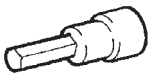	(09043-20050)	Socket Hexagon Wrench 5	
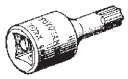	09042-00010	Torx Socket T30	

EQUIPMENT

Hog ring pliers	
Protective tape	
Torque wrench	

ENGINE HOOD / DOOR

SST

	09812-00010	Door Hinge Set Bolt Wrench	

RECOMMENDED TOOLS

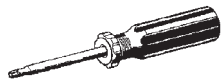	09041-00020	Torx Driver T25	
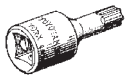	09042-00010	Torx Socket T30	
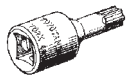	09042-00020	Torx Socket T40	

EXTERIOR

RECOMMENDED TOOLS

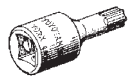	09042-00010	Torx Socket T30	
	09070-20010	Moulding Remover	

EQUIPMENT

Clip remover	
Protective tape	
Torque wrench	

INTERIOR

EQUIPMENT

Protective tape	
Torque wrench	

CAN COMMUNICATION

RECOMMENDED TOOLS

	09082-00040	TOYOTA Electrical Tester	
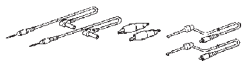	(09083-00150)	Test Lead Set	

CHECK MODE PROCEDURE

1. DESCRIPTION

Check mode has a higher sensitivity to malfunctions and can detect malfunctions that normal mode cannot detect. Check mode can also detect all the malfunctions that normal mode can detect. In check mode, DTCs are detected with 1-trip detection logic.

2. CHECK MODE PROCEDURE

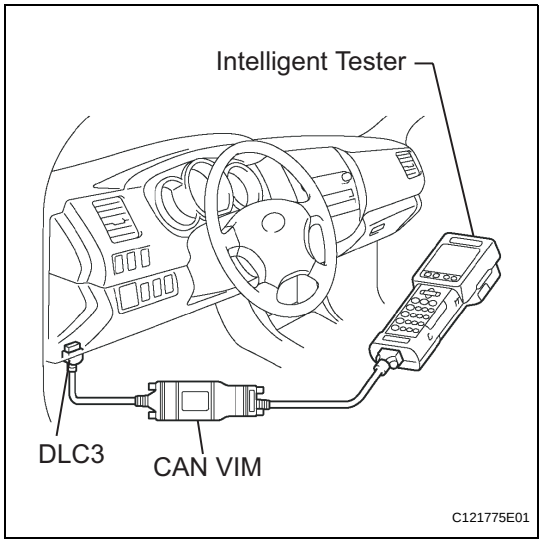

(a) Ensure the following conditions:
  (1) Battery positive voltage 11 V or more
  (2) Throttle valve fully closed
  (3) Transmission in the P or N position
  (4) A/C switched OFF

(b) Turn the ignition switch off.

(c) Connect the intelligent tester together with the Controller Area Network Vehicle Interface Module (CAN VIM) to the DLC3.

(d) Turn the ignition switch to the ON position.

(e) Enter the following menus: DIAGNOSIS/ ENHANCED OBD II/ CHECK MODE.

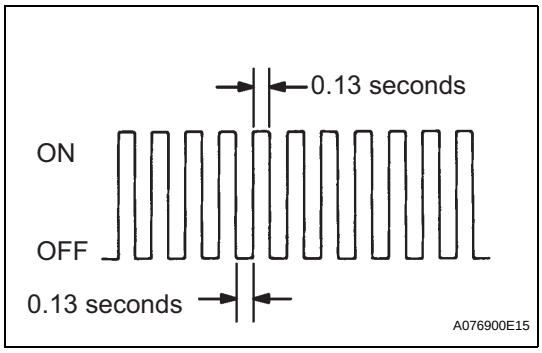

(f) Change the ECM to check mode. Make sure the MIL flashes as shown in the illustration.

NOTICE:

All recorded DTCs and freeze frame data will be erased if:

1) the intelligent tester is used to change the ECM from normal mode to check mode or vice-versa; or 2) during check mode, the ignition switch is turned from ON to ACC or LOCK.

Before entering check mode, make notes of the DTCs and freeze frame data.

(g) Start the engine. The MIL should turn off after the engine starts.

(h) Perform "MONITOR DRIVE PATTERN" for the ECT test. (See page AT-15).
(Or, simulate the conditions of the malfunction described by the customer).

(i) After simulating the malfunction conditions, use the intelligent tester diagnosis selector to check the DTC and freeze frame data.

FAIL-SAFE CHART

1. FAIL-SAFE

This function minimizes the loss of the ECT (Electronic Controlled Automatic Transmission) functions when any malfunction occurs in each sensor or solenoid.

Malfunction Part	Function
Input Speed Sensor (NCO)	During an input speed sensor malfunction, shift control is effected through the output speed sensor signal (SP2). During an input speed sensor malfunction, AI-SHIFT*1 and flex lock-up clutch control are prohibited.
Output Speed Sensor (SP2)	During an output speed sensor malfunction, shift control is effected through the input speed sensor signal (NCO). During an output speed sensor malfunction, AI-SHIFT*1 and flex lock-up clutch control are prohibited.
No. 1 ATF Temperature Sensor	During an No. 1 ATF temperature sensor malfunction, flex lock-up clutch control is prohibited.
Shift Solenoid Valve S1 and S2	The current to the failed solenoid valve is cut off and control is effected by operating the other solenoid valves with normal operation. Shift control is effected depending on the failed solenoid as described in the table on the next page.
Shift Solenoid Valve SLU	During a solenoid valve SLU malfunction, the current to the solenoid valve is stopped. This stops lock-up control and flex lock-up control, and fuel economy decreases.
Shift Solenoid Valve SLT	During a solenoid valve SLT malfunction, the current to the solenoid valve is stopped. This stops line pressure optimal control, and the shift shock increases. However, shifting is effected through normal clutch pressure control.

*1: AI (Artificial Intelligence) -SHIFT control
In addition to switching of the shift pattern through the pattern select switch, the AI-SHIFT control enables the ECM to estimate the road conditions and the driver's intention in order to automatically select the optimal shift pattern. As a result, a comfortable ride has been realized.

2. FAIL-SAFE FUNCTION:

If either of the shift solenoid valve circuits has an open or short failure, the ECM turns the other shift solenoid "ON" and "OFF" in order to shift into the gear positions shown in the table below.
When a short circuit occurs, the ECM cuts the supply of current to the short circuited solenoid.
Even if starting the engine again in fail-safe mode, the gear position remains in the same position.

Position	NORMAL			SHIFT SOLENOID S1 MALFUNCTIONING			SHIFT SOLENOID S2 MALFUNCTIONING			BOTH SOLENOIDS MALFUNCTIONING
	Solenoid valve		Gear	Solenoid valve		Gear	Solenoid valve		Gear	Gear when shift selector is manually operated
	S1	S2		S1	S2		S1	S2		
D	ON	OFF	1st	X	ON	3rd	ON	X	1st	4th
	ON	ON	2nd	X	ON	3rd	OFF	X	4th	4th
	OFF	ON	3rd	X	ON	3rd	OFF	X	4th	4th
	OFF	OFF	4th	X	OFF	4th	OFF	X	4th	4th
3	ON	OFF	1st	X	ON	3rd	ON	X	1st	4th
	ON	ON	2nd	X	ON	3rd	OFF	X	4th	4th
	OFF	ON	3rd	X	ON	3rd	OFF	X	4th	4th

2	ON	OFF	1st	X	ON	3rd	ON	X	1st	3rd
	ON	ON	2nd	X	ON	3rd	OFF	X	3rd	3rd
L	ON	OFF	1st	X	OFF	1st	ON	X	1st	1st

X: Malfunctions

DATA LIST / ACTIVE TEST

1. DATA LIST

HINT:

According to the DATA LIST displayed on the intelligent tester, you can read the values of components, such as the switches, sensors and actuators, without removing any parts. Reading the DATA LIST as the first step of troubleshooting is one method of shortening labor time.

NOTICE:

In the table below, the values listed under "Normal Condition" are for reference only. Do not depend solely on these reference values when judging whether a part is faulty or not.

(a) Warm up the engine.
(b) Turn the ignition switch off.
(c) Connect the intelligent tester together with the CAN VIM (controller area network vehicle interface module) to the DLC3.
(d) Turn the ignition switch to the ON position.
(e) Push the "ON" button of the tester.
(f) Select the items "DIAGNOSIS/ ENHANCED OBD II/ DATA LIST/ A/T".
(g) According to the display on the tester, read the "DATA LIST".

Item	Measurement Item/ Display (Range)	Normal Condition	Diagnostic Note
SPD (NCO)	Input Speed display: 50 rpm	HINT: • 3rd Gear Lock-up ON (After warming up the engine); Input turbine speed (NCO) equal to the engine speed • 4th Gear Lock-up ON (After warming up the engine); Input turbine speed (NCO): 0 rpm • Lock-up OFF (Idling at N position); Input turbine speed (NCO) nearly equal to the engine speed	-
SPD (SP2)	Counter Gear Speed display/ min.: 0 mph (0 km/h) max.: 158 mph (255 km/h)	Vehicle stopped: 0 mph (0 km/h)	-
PNP SW [NSW]	PNP SW Status/ ON or OFF	Shift lever position is; P or N: ON Except P and N: OFF	When the shift lever position displayed on the intelligent tester differs from the actual position, adjustment of the PNP switch or the shift cable may be incorrect. HINT: When the failure still occurs even after adjusting these parts, see page AT-34.
STOP LIGHT SW	Stop Lamp Switch Status/ ON or OFF	• Brake Pedal is depressed: ON • Brake Pedal is released: OFF	-
SHIFT	Actual Gear Position/ 1st, 2nd, 3rd or 4th	Shift Lever Position is; • L: 1st • 2: 1st or 2nd • 3: 1st, 2nd or 3rd • D: 1st, 2nd, 3rd or 4th	-

Item	Measurement Item/ Display (Range)	Normal Condition	Diagnostic Note
REVERSE	PNP SW Status/ ON or OFF	Shift lever position is; R: ON Except R: OFF	When the shift lever position displayed on the intelligent tester differs from the actual position, adjustment of the PNP switch or the shift cable may be incorrect. HINT: When the failure still occurs even after adjusting these parts, see page AT-34.
DRIVE	PNP SW Status/ ON or OFF	Shift lever position is; D and 3: ON Except D and 3: OFF	
3RD	PNP SW Status/ ON or OFF	Shift lever position is; 3: ON Except 3: OFF	
2ND	PNP SW Status/ ON or OFF	Shift lever position is; 2: ON Except 2: OFF	
LOW	PNP SW Status/ ON or OFF	Shift lever position is; L: ON Except L: OFF	
A/T OIL TEMP1	ATF Temperature Sensor Value/ min.: -40°C (-40°F) max.: 215°C (419°F)	• After Stall Test; Approximately 80°C (176°F) • Equal to ambient temperature when cold soak	If the value is "-40°C (-40°F)" or "215°C (419°F)", ATF temperature sensor circuit is open or short.
A/T OIL TEMP3	ATF Temperature Sensor Value/ min.: -40°C (-40°F) max.: 215°C (419°F)	• After Stall Test; Approximately 80°C (176°F) • Equal to ambient temperature during cold soak	If the value is "-40°C (-40°F)" or "215°C (419°F)", ATF temperature sensor circuit is open or short.
ATF	ATF Condition	ATF Condition NG: ON OK: OFF	Replace ATF when ATF condition is ON.
LOCK UP SOL	Lock-up solenoid status/ ON or OFF	• Lock-up: ON • Except lock-up: OFF	-
SOLENOID (SLT)	Shift Solenoid SLT Status/ ON or OFF	• Accelerator pedal is depressed: OFF • Accelerator pedal is released: ON	-
SOLENOID (SLU)	Shift Solenoid SLU Status/ ON or OFF	• Lock-up: ON • Except Lock-up: OFF	-

2. ACTIVE TEST

HINT:

Performing the ACTIVE TEST using the intelligent tester allows components, such as the relay, VSV, and actuator, to be operated without removing any parts. Performing the ACTIVE TEST as the first step of troubleshooting is one method of shortening labor time. It is possible to display the DATA LIST during the ACTIVE TEST.

(a) Warm up the engine.
(b) Turn the ignition switch off.
(c) Connect the intelligent tester together with the CAN VIM (controller area network vehicle interface module) to the DLC3.
(d) Turn the ignition switch to the ON position.
(e) Push the "ON" button of the tester.
(f) Select the items "DIAGNOSIS/ ENHANCED OBD II/ ACTIVE TEST".

(g) According to the display on the tester, perform the "ACTIVE TEST".

Item	Test Details	Diagnostic Note
SHIFT	[Test Details] Operate the shift solenoid valve and set each shift position manually. [Vehicle Condition] • IDL: ON • Less than 31 mph (50 km/h) [Others] • Press → button: Shift up • Press ← button: Shift down	Possible to check the operation of the shift solenoid valves.
LOCK UP	[Test Details] Control the shift solenoid SLU to set the automatic transmission to the lock-up condition. [Vehicle Condition] Vehicle Speed: 37 mph (60 km/h) or more	Possible to check the SLU operation.
LINE PRESS UP *	[Test Details] Operate the shift solenoid SLT to raise the line pressure. [Vehicle Condition] • Vehicle Stopped • IDL: ON HINT: OFF: Line pressure up (When the active test of "LINE PRESS UP" is performed, the ECM commands the SLT solenoid to turn off). ON: No action (normal operation)	-

*: "LINE PRESS UP" in the ACTIVE TEST is performed to check the line pressure changes by connecting SST to the automatic transmission, which is used in the HYDRAULIC TEST (See page AT-14) as well.

HINT:

The pressure values in the ACTIVE TEST and HYDRAULIC TEST are different from each other.

DIAGNOSTIC TROUBLE CODE CHART

If a DTC is displayed during the DTC check, check the parts listed in the table below and proceed to the page given.
HINT:

- *1: "Comes on" means the MIL (Malfunction Indicator Lamp) illuminates.
- *2: "DTC stored" means the ECM stores the malfunction code if the ECM detects the DTC detection condition.
- These DTCs may be output when the clutch, brake and gear components etc. inside the automatic transmission are damaged.

AUTOMATIC TRANSMISSION SYSTEM

DTC No.	Detection Item	Trouble Area	MIL *1	Memory *2	See page
P0705	Transmission Range Sensor Circuit Malfunction (PRNDL Input)	1. Open or short in park/neutral position switch circuit 2. Park/neutral position switch 3. ECM	Comes on	DTC stored	AT-34
P0710	Transmission Fluid Temperature Sensor "A" Circuit	1. Open or short in No. 2 ATF temperature sensor circuit 2. No. 2 ATF temperature sensor 3. ECM	Comes on	DTC stored	AT-40
P0712	Transmission Fluid Temperature Sensor "A" Circuit Low Input	1. Short in No. 2 ATF temperature sensor circuit 2. No. 2 ATF temperature sensor 3. ECM	Comes on	DTC stored	AT-40
P0713	Transmission Fluid Temperature Sensor "A" Circuit High Input	1. Open in No. 2 ATF temperature sensor circuit 2. No. 2 ATF temperature sensor 3. ECM	Comes on	DTC stored	AT-40
P0717	Turbine Speed Sensor Circuit No Signal	1. Open or short in speed sensor (NCO) circuit 2. Speed sensor (NCO) 3. ECM	Comes on	DTC stored	AT-44
P0722	Output Speed Sensor Circuit No Signal	1. Open or short in speed sensor (SP2) circuit 2. Speed sensor (SP2) 3. ECM	Comes on	DTC stored	AT-48
P0724	Brake Switch "B" Circuit High	1. Short in stop light switch signal circuit 2. Stop light switch 3. ECM	Comes on	DTC stored	AT-52

DTC No.	Detection Item	Trouble Area	MIL *1	Memory *2	See page
P0751	Shift Solenoid "A" Performance (Shift Solenoid Valve S1)	1. Shift solenoid valve S1 is stuck open or closed 2. Valve body is blocked 3. Shift solenoid valve S1 4. Automatic transmission (clutch, brake or gear, etc.)	Comes on	DTC stored	AT-55
P0756	Shift Solenoid "B" Performance (Shift Solenoid Valve S2)	1. Shift solenoid valve S2 is stuck open or closed 2. Valve body is blocked 3. Shift solenoid valve S2 4. Automatic transmission (clutch, brake or gear, etc.)	Comes on	DTC stored	AT-59
P0850	Park / Neutral Switch Input Circuit	1. Short in park/ neutral position switch circuit 2. Park/neutral position switch 3. ECM	Comes on	DTC stored	AT-34
P0973	Shift Solenoid "A" Control Circuit Low (Shift Solenoid Valve S1)	1. Short in shift solenoid valve S1 circuit 2. Shift solenoid valve S1 3. ECM	Comes on	DTC stored	AT-64
P0974	Shift Solenoid "A" Control Circuit High (Shift Solenoid Valve S1)	1. Open in shift solenoid valve S1 circuit 2. Shift solenoid valve S1 3. ECM	Comes on	DTC stored	AT-64
P0976	Shift Solenoid "B" Control Circuit Low (Shift Solenoid Valve S2)	1. Short in shift solenoid valve S2 circuit 2. Shift solenoid valve S2 3. ECM	Comes on	DTC stored	AT-64
P0977	Shift Solenoid "B" Control Circuit High (Shift Solenoid Valve S2)	1. Open in shift solenoid valve S2 circuit 2. Shift solenoid valve S2 3. ECM	Comes on	DTC stored	AT-64
P2716	Pressure Control Solenoid "D" Electrical (Shift Solenoid Valve SLT)	1. Open or short in shift solenoid valve SLT circuit 2. Shift solenoid valve SLT 3. ECM	Comes on	DTC stored	AT-68
P2740	Transmission Fluid Temperature Sensor "B" Circuit	1. Open or short in No. 1 ATF temperature sensor circuit 2. Transmission wire (No. 1 ATF temperature sensor) 3. ECM	Comes on	DTC stored	AT-72

DTC No.	Detection Item	Trouble Area	MIL *1	Memory *2	See page
P2742	Transmission Fluid Temperature Sensor "B" Circuit Low Input	1. Short in No. 1 ATF temperature sensor circuit 2. Transmission wire (No. 1 ATF temperature sensor) 3. ECM	Comes on	DTC stored	AT-72
P2743	Transmission Fluid Temperature Sensor "B" Circuit High Input	1. Open in No. 1 ATF temperature sensor circuit 2. Transmission wire (No. 1 ATF temperature sensor) 3. ECM	Comes on	DTC stored	AT-72
P2757	Torque Converter Clutch Pressure Control Solenoid Performance (Shift Solenoid Valve SLU)	1. Shift solenoid valve SLU remains open or closed 2. Valve body is blocked 3. Shift solenoid valve SLU 4. Torque converter clutch 5. Automatic transmission (clutch, brake or gear, etc.) 6. Line pressure is too low	Comes on	DTC stored	AT-76
P2759	Torque Converter Clutch Pressure Control Solenoid Control Circuit Electrical (Shift Solenoid Valve SLU)	1. Open or short in shift solenoid valve SLU circuit 2. Shift solenoid valve SLU 3. ECM	Comes on	DTC stored	AT-81

DTC	P0705	Transmission Range Sensor Circuit Malfunction (PRNDL Input)

DTC	P0850	Park / Neutral Switch Input Circuit

DESCRIPTION

The park/neutral position switch detects the shift lever position and sends signals to the ECM.

DTC No.	DTC Detection Conditions	Trouble Areas
P0705	Either of the following conditions is met: (a) Any 2 or more of the following signals are ON simultaneously. (2-trip detection logic) • Park/neutral position switch input signal is ON • R input signal is ON • D input signal is ON • 2 input signal is ON (b) Any 2 or more of the following signals are ON simultaneously. (2-trip detection logic) • Park/neutral position switch input signal is ON • R input signal is ON • 3 input signal is ON • L input signal is ON	• Open or short in park/neutral position switch circuit • Park/neutral position switch • ECM
P0850	Park/neutral position switch remains ON (P, N position) while driving under conditions (a) and (b) for 15 seconds. (2-trip detection logic) (a) Vehicle speed: 43.5 mph (70 km/h) or more (b) Engine speed: 1,500 to 2,500 rpm	• Short in park/neutral position switch circuit • Park/neutral position switch • ECM

MONITOR DESCRIPTION

These DTCs indicate a problem with the park/neutral position switch and the wire harness in the park/neutral position switch circuit.

For security, the park/neutral position switch detects the shift lever position so that the engine can be started only when the vehicle is in the P or N shift position.

When the park/neutral position switch sends more than one signal at a time from switch positions P, R, N or D, the ECM interprets this as a fault in the switch. The ECM turns on the MIL and store a DTC.

MONITOR STRATEGY

P0705:

Related DTCs	P0705: Park/neutral position switch/Verify switch input
Required sensors/Components	Park/neutral position switch
Frequency of operation	Continuous
Duration	2 seconds
MIL operation	2 driving cycles
Sequence of operation	None

P0850:

Related DTCs	P0850: Park/Neutral position switch/Verify switch cycling
Required sensors/Components	Park/Neutral position switch
Frequency of operation	Continuous
Duration	15 seconds
MIL operation	2 driving cycles
Sequence of operation	None

TYPICAL ENABLING CONDITIONS

P0705:

The monitor will run whenever the following DTCs are not present.	None
Ignition switch	ON
Battery voltage	10.5 V or more

P0850:

The monitor will run whenever the following DTCs are not present.	None
Vehicle speed	43.5 mph (70 km/h) or more
Engine speed	1,500 rpm or more and 2,500 rpm or less
Intake air amount per revolution	0.6 g/rev. or more

TYPICAL MALFUNCTION THRESHOLDS

P0705: One of the following conditions is met: Condition (A) or (B)

Condition (A)

Number of the following signal input at the same time	2 or more
Park/neutral position switch	ON
R switch	ON
D switch	ON
2 switch	ON

Condition (B)

Number of the following signal input at the same time	2 or more
Park/neutral position switch	ON
R switch	ON
3 switch	ON
L switch	ON

P0850:

Park/neutral position switch	ON

COMPONENT OPERATING RANGE

P0705:

Park/neutral position switch	The park/neutral position switch sends only one signal to the ECM.

P0850:

Park/neutral position switch	The park/neutral position switch is OFF when vehicle speed is 43.5 mph (70 km/h) or more and engine speed is between 1,500 rpm and 2,500 rpm.

WIRING DIAGRAM

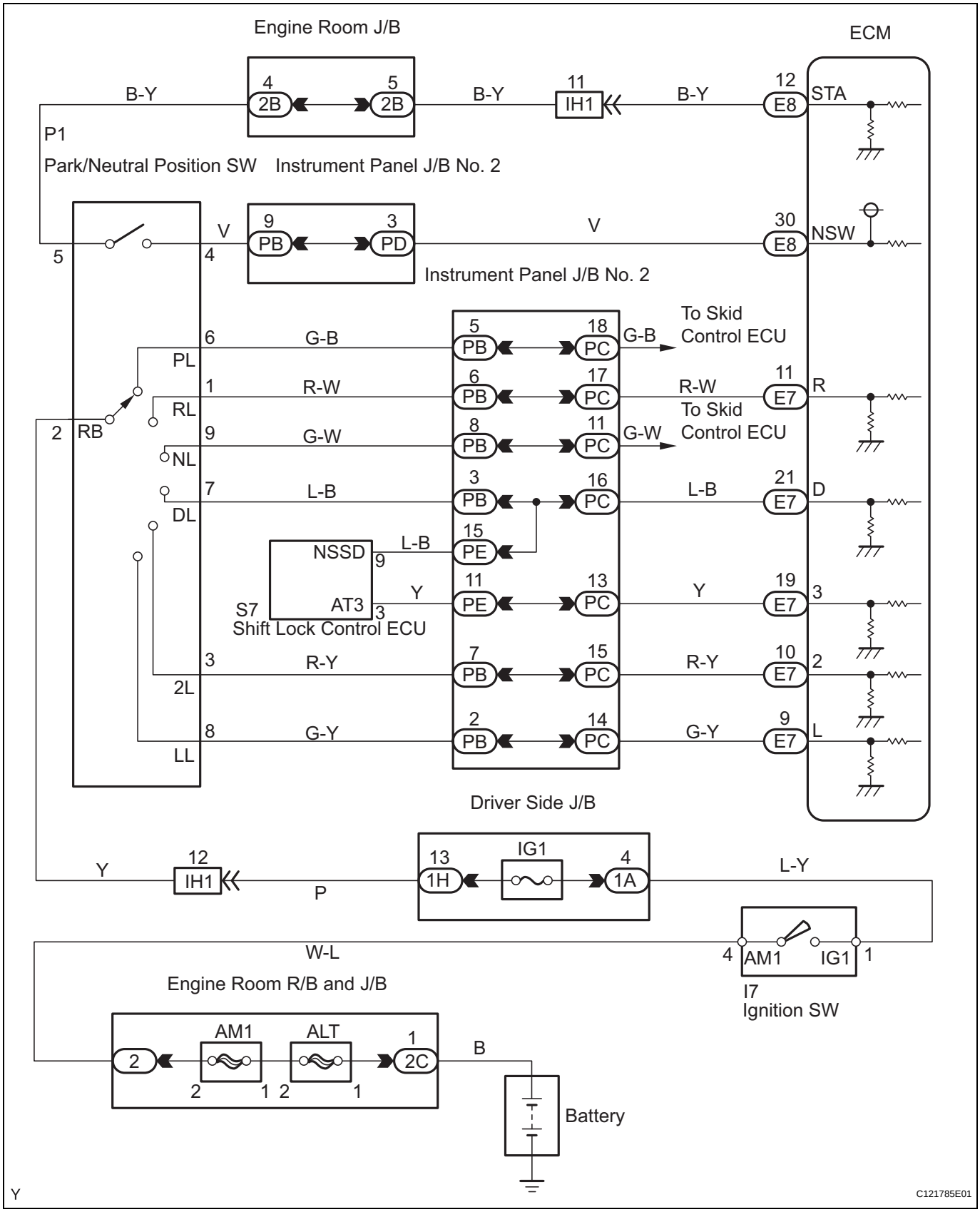

1. DATA LIST

HINT:

According to the DATA LIST displayed on the intelligent tester, you can read the values of components, such as the switches, sensors and actuators, without removing any parts. Reading the DATA LIST as the first step of troubleshooting is one method of shortening labor time.

NOTICE:

In the table below, the values listed under "Normal Condition" are for reference only. Do not depend solely on these reference values when judging whether a part is faulty or not.

(a) Connect the intelligent tester together with the CAN VIM (controller area network vehicle interface module) to the DLC3.
(b) Turn the ignition switch to the ON position.
(c) Push the "ON" button of the tester.
(d) Select the items "DIAGNOSIS/ ENHANCED OBD II/ DATA LIST/ A/T".
(e) According to the display on the tester, read the "DATA LIST".

Item	Measurement Item/ Range (display)	Normal Condition	Diagnostic Note
PNP SW [NSW]	PNP SW Status/ ON or OFF	Shift lever position is; P or N: ON Except P and N: OFF	When the shift lever position displayed on the intelligent tester differs from the actual position, adjustment of the PNP switch or the shift cable may be incorrect.
REVERSE	PNP SW Status/ ON or OFF	Shift lever position is; R: ON Except R: OFF	
DRIVE	PNP SW Status/ ON or OFF	Shift lever position is; D: ON Except D: OFF	
3RD	PNP SW Status/ ON or OFF	Shift lever position is; 3: ON Except 3: OFF	
2ND	PNP SW Status/ ON or OFF	Shift lever position is; 2: ON Except 2: OFF	
LOW	PNP SW Status/ ON or OFF	Shift lever position is; L: ON Except L: OFF	

1	INSPECT SHIFT LOCK CONTROL ECU SUB-ASSEMBLY (TRANSMISSION CONTROL SWITCH)

Component Side:

(Connector Front View): S7

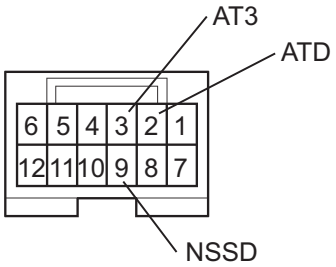

C121789E01

(a) Disconnect the shift lock control ECU connector.
(b) Measure the resistance when the shift lever is moved to each position.

Standard resistance

Shift Position	Tester Connection	Specified Condition
D	9 (NSSD) - 2 (ATD)	Below 1 Ω
3	9 (NSSD) - 2 (ATD)	10 kΩ or higher
D	9 (NSSD) - 3 (AT3)	10 kΩ or higher
3	9 (NSSD) - 3 (AT3)	Below 1 Ω

NG → **REPLACE SHIFT LOCK CONTROL ECU SUB-ASSEMBLY**

AT

OK

2 INSPECT PARK/NEUTRAL POSITION SWITCH ASSEMBLY

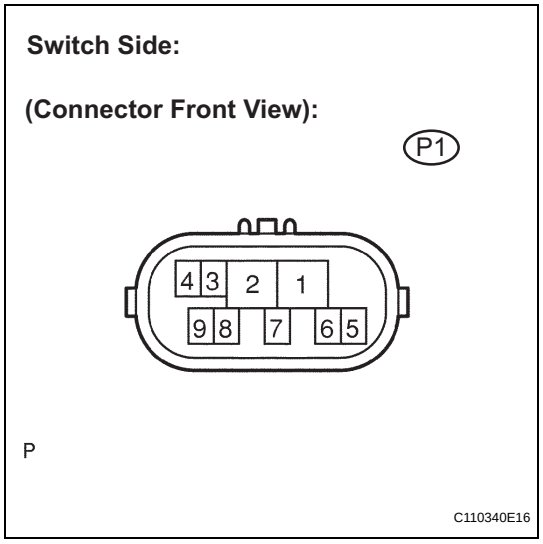

(a) Connect the shift lock control ECM connector.
(b) Disconnect the park/neutral position switch connector.
(c) Measure the resistance when the shift lever is moved to each position.

Standard resistance

Shift Position	Tester Connection	Specified Condition
P	2 - 6 and 4 - 5	Below 1 Ω
Except P	2 - 6 and 4 - 5	10 kΩ or higher
R	1 - 2	Below 1 Ω
Except R	1 - 2	10 kΩ or higher
N	2 - 9 and 4 - 5	Below 1 Ω
Except N	2 - 9 and 4 - 5	10 kΩ or higher
D, 3	2 - 7	Below 1 Ω
Except D, 3	2 - 7	10 kΩ or higher
2	2 - 3	Below 1 Ω
Except 2	2 - 3	10 kΩ or higher
L	2 - 8	Below 1 Ω
Except L	2 - 8	10 kΩ or higher

NG → REPLACE PARK/NEUTRAL POSITION SWITCH ASSEMBLY

OK

3 CHECK HARNESS AND CONNECTOR (PARK/NEUTRAL POSITION SWITCH - ECM)

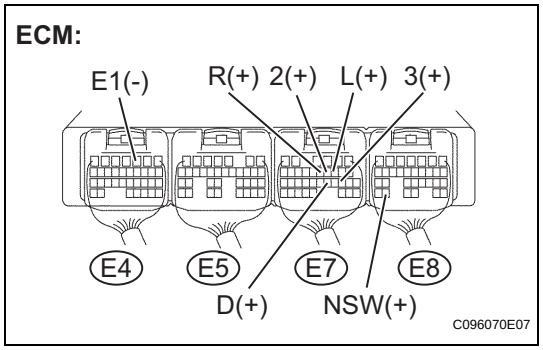

(a) Connect the park/neutral position switch connector.
(b) Turn the ignition switch to the ON position.
(c) Measure the voltage when the shift lever is moved to each position.

Standard voltage

Shift Position	Tester Connection	Specified Condition
P and N	E8-30 (NSW) - E4-3 (E1)	Below 1 V
Except P and N	E8-30 (NSW) - E4-3 (E1)	10 to 14 V
R	E7-11 (R) - E4-3 (E1)	10 to 14 V*
Except R	E7-11 (R) - E4-3 (E1)	Below 1 V
D	E7-21 (D) - E4-3 (E1)	10 to 14 V
Except D	E7-21 (D) - E4-3 (E1)	Below 1 V
3	E7-19 (3) - E4-3 (E1)	10 to 14 V
Except 3	E7-19 (3) - E4-3 (E1)	Below 1 V
2	E7-10 (2) - E4-3 (E1)	10 to 14 V
Except 2	E7-10 (2) - E4-3 (E1)	Below 1 V
L	E7-9 (L) - E4-3 (E1)	10 to 14 V
Except L	E7-9 (L) - E4-3 (E1)	Below 1 V

HINT:
*: The voltage will drop slightly due to illumination of the back up light.

NG → **REPAIR OR REPLACE HARNESS OR CONNECTOR**

OK

REPLACE ECM

DTC	P0710	Transmission Fluid Temperature Sensor "A" Circuit

DTC	P0712	Transmission Fluid Temperature Sensor "A" Circuit Low Input

DTC	P0713	Transmission Fluid Temperature Sensor "A" Circuit High Input

DESCRIPTION

The ATF (Automatic Transmission Fluid) temperature sensor converts the fluid temperature into a resistance value which is input into the ECM. The No. 2 ATF temperature sensor is on the transmission and just before the oil cooler inlet pipeline.

HINT:

- The ATF temperature is liable to increase under conditions such as towing, climbing hills and in traffic.

The symptoms and recovery conditions, when the sensor is normal or there is a short malfunction in the sensor, are as shown in the table below.

No. 2 ATF temperature sensor Status	Detection Condition	Symptom	Recovery Condition
Sensor is normal	• ATF temperature more than 130°C (266°F)	• Shift point too low	• ATF temperature less than 125°C (257°F)
Sensor is normal	When conditions (a) and (b) are satisfied continuously. (a) ATF temperature more than 130°C (266°F) (b) Engine coolant temperature more than 98°C (208.4°F)	• Lock-up in 4th or 3rd gear *1	• ATF temperature less than 110°C (230°F) and engine coolant temperature less than 98°C (208.4°F)
Sensor circuit is short	• Any conditions	• Shift point too low	• Symptom still occurs
Sensor circuit is short	• Engine coolant temperature more than 95°C (203°F)	• Lock-up in 4th or 3rd gear *1	• Symptom still occurs

HINT:

*1: When the ATF temperature is normal, the transmission locks up in 4th gear with the shift lever in the D position and in 3rd gear with the shift lever in the 3rd position.

DTC No.	DTC Detection Conditions	Trouble Areas
P0710	(a) and (b) are detected momentarily within 0.5 seconds when neither P0712 nor P0713 is detected. (1-trip detection logic) (a) No. 2 ATF temperature sensor resistance is less than 79 Ω. (b) No. 2 ATF temperature sensor resistance is more than 156 kΩ. HINT: Within 0.5 seconds the malfunction changes from (a) to (b) or from (b) to (a).	• Open or short in No. 2 ATF temperature sensor circuit • No. 2 ATF temperature sensor • ECM
P0712	No. 2 ATF temperature sensor resistance is less than 79 Ωfor 0.5 seconds or more. (1-trip detection logic)	• Short in No. 2 ATF temperature sensor circuit • No. 2 ATF temperature sensor • ECM
P0713	No. 2 ATF temperature sensor resistance is more than 156 kΩ for 0.5 seconds or more 15 minutes or more after starting engine. (1-trip detection logic)	• Open in No. 2 ATF temperature sensor circuit • No. 2 ATF temperature sensor • ECM

MONITOR DESCRIPTION

The Automatic Transmission Fluid (ATF) temperature sensor converts the ATF temperature to an electrical resistance value. Based on the resistance, the ECM determines the ATF temperature, and detects any open or short malfunctions in the AFT temperature circuit. If the resistance of the ATF temperature is less than 79 Ωor more than 156 kΩ, the ECM interprets this as a fault in the ATF temperature sensor or its wiring. The ECM turns on the MIL and stores a DTC.

MONITOR STRATEGY

Related DTCs	P0710: ATF temperature sensor/Range check (Fluttering) P0712: ATF temperature sensor/Range check (Low resistance) P0713: ATF temperature sensor/Range check (High resistance)
Required sensors/Components	ATF temperature sensor
Frequency of operation	Continuous
Duration	0.5 seconds
MIL operation	Immediate
Sequence of operation	None

TYPICAL ENABLING CONDITIONS

P0710: Range check (Fluttering)

The monitor will run whenever the following DTCs are not present.	None
The typical enabling condition is not available.	-

P0712: Range check (Low resistance)

The monitor will run whenever the following DTCs are not present.	None
The typical enabling condition is not available.	-

P0713: Range check (High resistance)

The monitor will run whenever the following DTCs are not present.	None
Time after engine start	15 minutes or more

TYPICAL MALFUNCTION THRESHOLDS

P0710: Range check (Fluttering)

TFT Sensor resistance	Less than 79 Ω or more than 156 kΩ

P0712: Range check (Low resistance)

TFT Sensor resistance	Less than 79 Ω

P0713: Range check (High resistance)

TFT Sensor resistance	More than 156 kΩ

COMPONENT OPERATING RANGE

ATF temperature sensor	Atmospheric temperature - approximately 130°C (266°F)

WIRING DIAGRAM

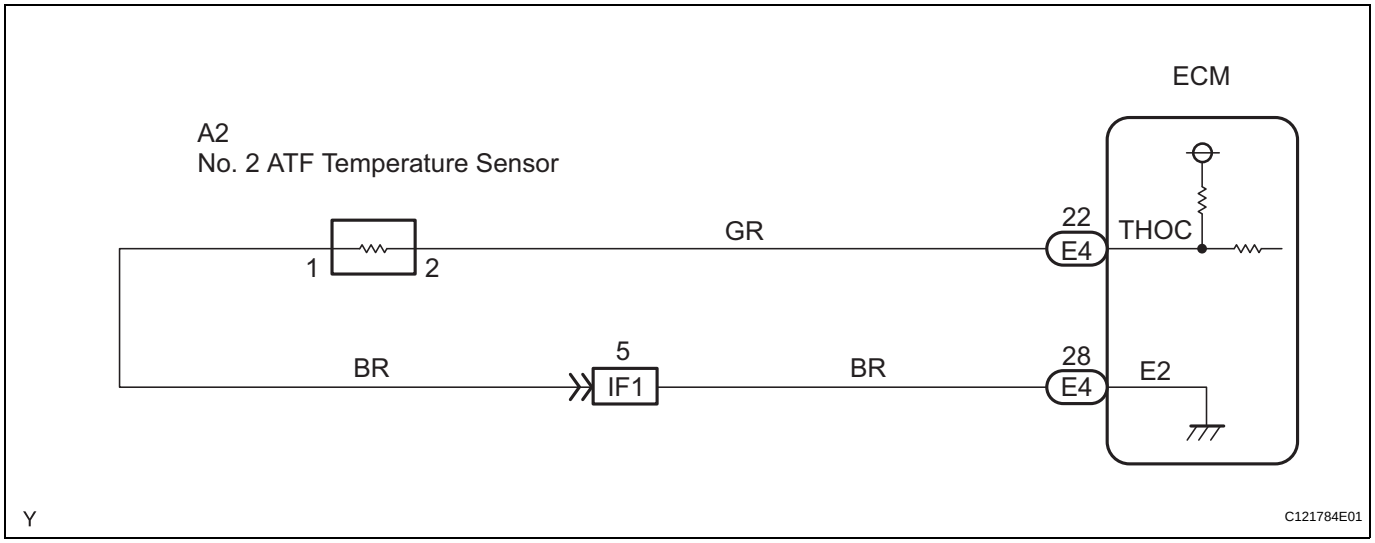

1. DATA LIST

HINT:

According to the DATA LIST displayed on the intelligent tester, you can read the values of components, such as the switches, sensors and actuators, without removing any parts. Reading the DATA LIST as the first step of troubleshooting is one method of shortening labor time.

NOTICE:

In the table below, the values listed under "Normal Condition" are for reference only. Do not depend solely on these reference values when judging whether a part is faulty or not.

(a) Warm up the engine.
(b) Turn the ignition switch off.
(c) Connect the intelligent tester together with the CAN VIM (controller area network vehicle interface module) to the DLC3.
(d) Turn the ignition switch to the ON position.
(e) Push the "ON" button of the tester.
(f) Select the items "DIAGNOSIS/ ENHANCED OBD II/ DATA LIST/ A/T".
(g) According to the display on the tester, read the "DATA LIST".

Item	Measurement Item/ Range (display)	Normal Condition
A/T OIL TEMP3	ATF Temperature Sensor Value/ min.: -40°C (-40°F) max.: 215°C (419°F)	• After Stall Test; Approximately 80°C (176°F) • Equal to ambient temperature when cold soak

HINT:

When DTC P0712 is output and the intelligent tester reading is 150°C (302°F) or more, there is an short circuit.

When DTC P0713 is output and the intelligent tester reading is -40°C (-40°F), there is a open circuit.

Measure the resistance between terminal THOC and the body ground.

Temperature Displayed	Malfunction
-40°C (-40°F)	Open circuit
160 °C (320°F) or more	Short circuit

HINT:

If a circuit related to the ATF temperature sensor becomes open, P0713 is immediately set (in 0.5 seconds).

1	INSPECT TEMPERATURE SENSOR

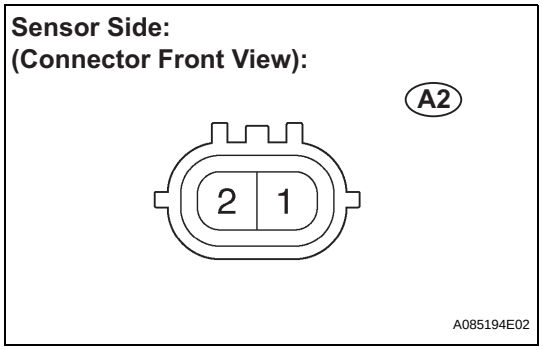

(a) Disconnect the ATF temperature sensor connector from the transmission.
(b) Measure the resistance between the sensor connector terminals.

Standard resistance

Tester Connection	Specified Condition
1 - 2	79 Ω to 156 kΩ
1 - Body ground	10 kΩ or higher
2 - Body ground	10 kΩ or higher

HINT:
If the resistance is outside the specified range at either of the ATF temperatures shown in the table below, the driveability of the vehicle may decrease.

ATF Temperature:	Resistance:
20 °C (68°F)	10.3 to 13.9 kΩ
110°C (230°F)	0.68 to 0.88 kΩ

NG → **REPAIR OR REPLACE TRANSMISSION WIRE**

OK

2	CHECK HARNESS AND CONNECTOR (ATF TEMPERATURE - ECM)

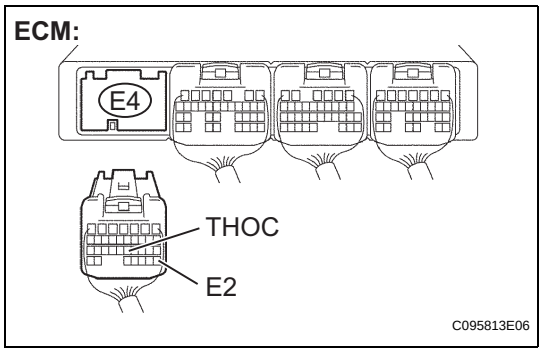

(a) Connect the transmission wire connector.
(b) Disconnect the ECM connector.
(c) Measure the resistance.

Standard resistance

Tester Connection	Specified Condition
E4-22 (THOC) - E4-28 (E2)	79 Ω to 156 kΩ
E4-22 (THOC) - Body ground	10 kΩ or higher
E4-28 (E2) - Body ground	10 kΩ or higher

NG → **REPAIR OR REPLACE HARNESS OR CONNECTOR**

OK

REPLACE ECM

DTC	P0717	Turbine Speed Sensor Circuit No Signal

DESCRIPTION

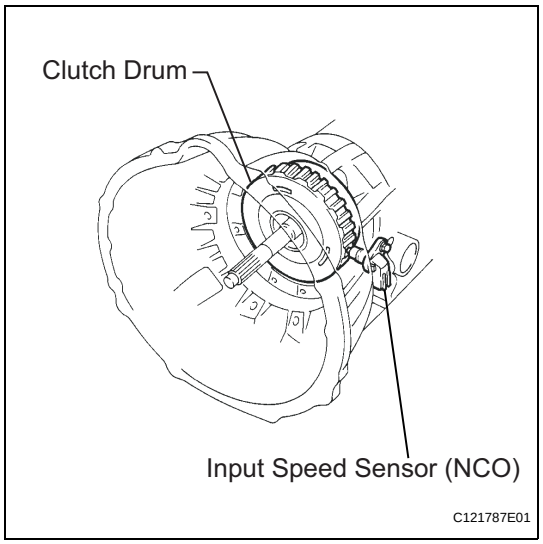

The sensor detects the rotation speed of the turbine which shows the input revolution of the transmission. By comparing the input turbine speed signal (NCO) with the counter gear speed sensor signal (SP2), the ECM detects the shift timing of the gears and appropriately controls the engine torque and hydraulic pressure according to various conditions. Thus, providing smooth gear shift.

DTC No.	DTC Detection Conditions	Trouble Areas
P0717	ECM detects conditions (a), (b) and (c) continuously for 5 seconds or more. (1-trip detection logic) (a) Output shaft speed is 500 rpm or more. (Vehicle speed: 31 mph (50 km/h) or more) (b) Park/neutral position switch: NSW input signal is OFF R input signal is OFF (c) Speed sensor (NCO): Less than 300 rpm	• Open or short in speed sensor (NCO) circuit • Speed sensor (NCO) • ECM

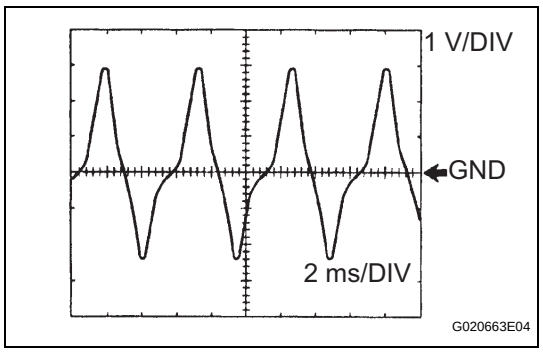

1. Reference (Using an oscilloscope):
Check the waveform between terminals NCO+ and NCO- of the ECM connector.
Standard:
Refer to the illustration.

Item	Content
Terminal	**NCO+ (E5-34) - NCO- (E5-26)**
Tool setting	**1 V/DIV** **2 ms/DIV**
Vehicle condition	**Engine idling speed (P or N position)**

MONITOR DESCRIPTION

This DTC indicates that a pulse is not output from the speed sensor NCO (Turbine (input) speed sensor) or is weak. The NCO terminal of the ECM detects the revolving signal from speed sensor (NCO) (input RPM). The ECM outputs a gearshift signal comparing the speed sensor (NCO) with the output speed sensor (SP2).

If the input shaft revolution is less than 300 rpm*1 although the output shaft revolution is more than 500 rpm or more*2, the ECM detects the trouble, illuminates the MIL and stores the DTC.

*1: Pulse is not output or is irregularly output.

AT

*2: The vehicle speed is approximately 31 mph (50 km/h) or more.

MONITOR STRATEGY

Related DTCs	P0717: Speed sensor (NCO)/ Verify pulse input
Required sensors/Components	Speed sensor (NCO)
Frequency of operation	Continuous
Duration	5 seconds
MIL operation	Immediate
Sequence of operation	None

TYPICAL ENABLING CONDITIONS

The monitor will run whenever the following DTCs are not present.	P0500 (VSS) P0748 - P0798 (Trans solenoid (range))
Shift change	Each shift change is completed before starting next shift change operation
Output shaft rpm	500 rpm or more
Turbine speed sensor malfunction	Not detected
R switch	OFF
Park/neutral position switch	OFF

TYPICAL MALFUNCTION THRESHOLDS

Sensor signal rpm	Less than 300 rpm

COMPONENT OPERATING RANGE

Speed sensor (NCO)	Input speed is equal to engine speed when lock-up ON.

WIRING DIAGRAM

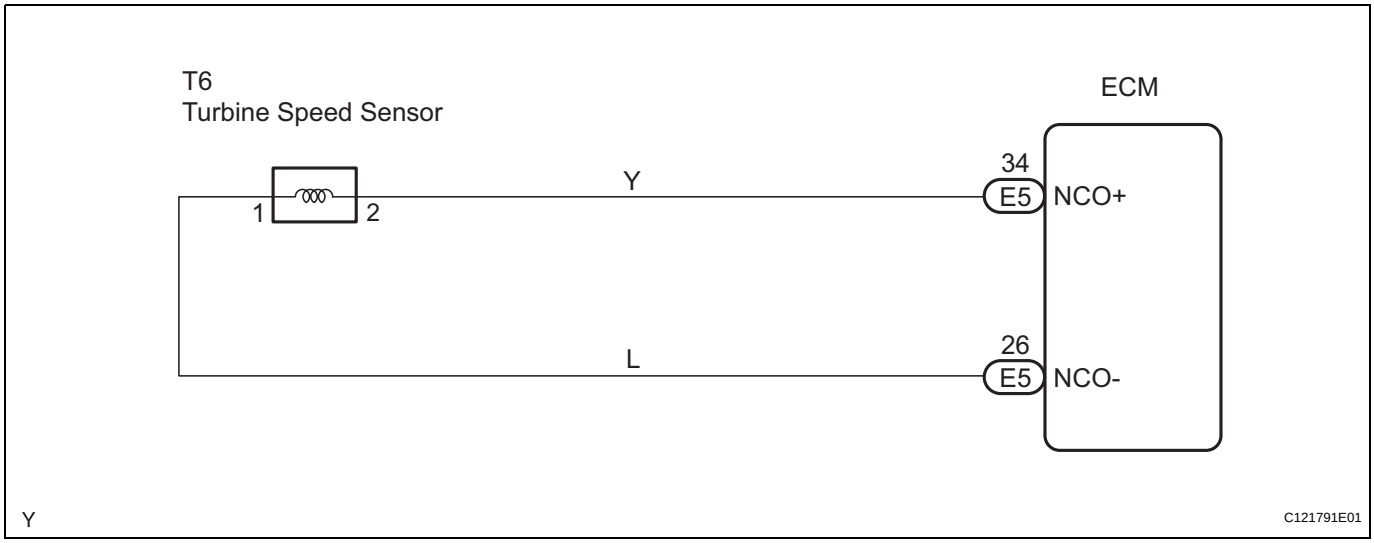

AT

1. DATA LIST

HINT:

According to the DATA LIST displayed on the intelligent tester, you can read the values of components, such as the switches, sensors and actuators, without removing any parts. Reading the DATA LIST as the first step of troubleshooting is one method of shortening labor time.

(a) Warm up the engine.
(b) Turn the ignition switch off.
(c) Connect the intelligent tester together with the CAN VIM (controller area network vehicle interface module) to the DLC3.
(d) Turn the ignition switch to the ON position.
(e) Push the "ON" button of the tester.
(f) Select the items "DIAGNOSIS/ ENHANCED OBD II/ DATA LIST/ A/T".
(g) According to the display on the tester, read the "DATA LIST".

Item	Measurement Item/ Range (display)	Normal Condition
SPD (NCO)	Input Turbine Speed/ display: 50 rpm	HINT: • 3rd gear lock-up ON (After warming up the engine); Input turbine speed (NCO) equal to the engine speed • 4th gear lock-up ON (After warming up the engine); Input turbine speed (NCO): 0 rpm • Lock-up OFF (Idling at N position); Input turbine speed (NCO) nearly equal to the engine speed

HINT:
- SPD (NCO) is always 0 while driving indicates:
  3rd Gear: Open or short in the sensor or circuit.
  4th Gear: Engine speed 0 rpm
- SPD (NCO) is always less than 300 rpm while driving the vehicle at 31 mph (50 km/h) or more indicates:
  Sensor trouble, improper installation, or intermittent connection trouble of the circuit.

1 INSPECT SPEED SENSOR INSTALLATION

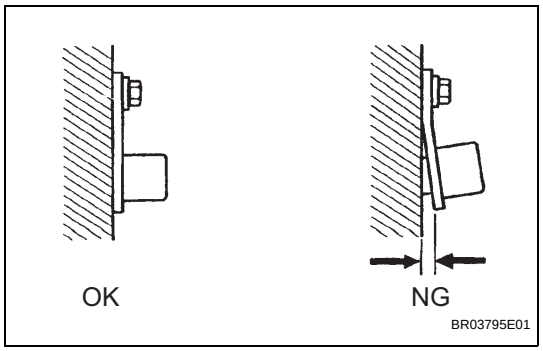

(a) Check the speed sensor (NCO) installation.
OK:
The installation bolt is tightened properly and there is no clearance between the sensor and transmission case.

NG → **REPLACE SPEED SENSOR (NCO)**

OK

2 INSPECT SPEED SENSOR (NCO)

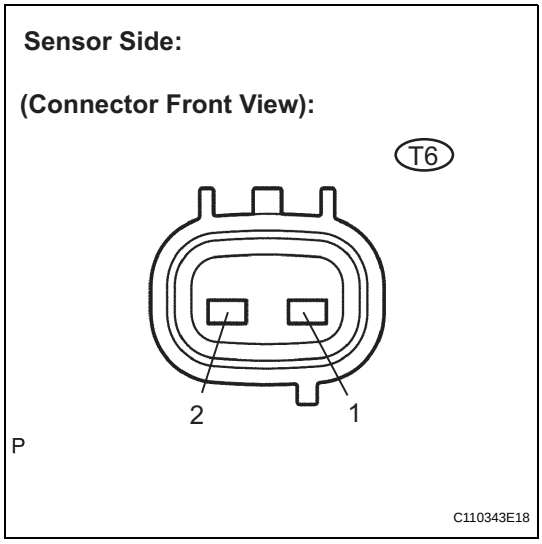

(a) Disconnect the speed sensor connector from the transmission.
(b) Measure the resistance.
Standard resistance

Tester Connection	Specified Condition
1 - 2	560 to 680 Ω at 20 °C (68 °F)

NG → **REPLACE SPEED SENSOR (NCO)**

OK

3 CHECK HARNESS AND CONNECTOR (SPEED SENSOR - ECM)

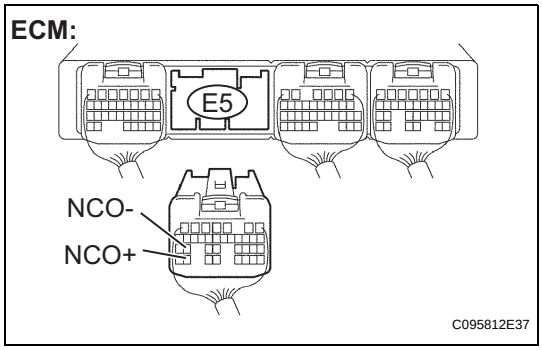

(a) Connect the speed sensor connector.
(b) Disconnect the ECM connector.
(c) Measure the resistance.
Standard resistance

Tester Connection	Specified Condition
E5-34 (NCO+) - E5-26 (NCO-)	560 to 680 Ω at 20 °C (68 °F)
E5-34 (NCO+) - Body ground	10 kΩ or higher
E5-26 (NCO-) - Body ground	10 kΩ or higher

NG → **REPAIR OR REPLACE HARNESS OR CONNECTOR**

OK

REPLACE ECM

DTC	P0722	Output Speed Sensor Circuit No Signal

DESCRIPTION

The speed sensor SP2 detects the rotation speed of the transmission output shaft and sends signals to the ECM. The ECM determines the vehicle speed based on these signals.
An AC voltage is generated in the speed sensor SP2 coil as the rotor mounted on the output shaft rotates, and this voltage is sent to the ECM.
The gear shift point and lock-up timing are controlled by the ECM based on the signals from the speed sensor and the throttle position sensor.

DTC No.	DTC Detection Conditions	Trouble Areas
P0722	All conditions below are detected 500 times or more continuously. (2-trip detection logic) • No signal from speed sensor (SP2) is input to ECM while 4 pulses of No. 1 vehicle speed sensor signal are sent • Vehicle speed is 5.6 mph (9 km/h) or more for at least 4 seconds • Park/neutral position switch is OFF	• Open or short in speed sensor (SP2) circuit • Speed sensor (SP2) • ECM

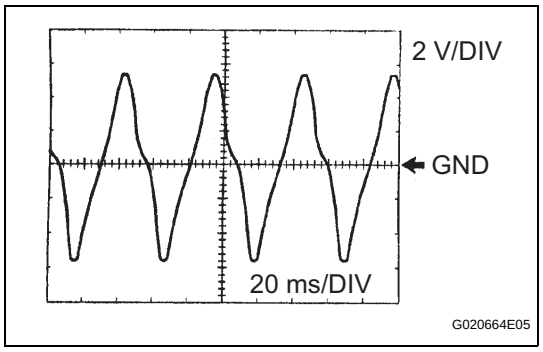

1. Reference (Using an oscilloscope):
Check the waveform between terminals SP2+ and SP2- of the ECM connector.
Standard:
Refer to the illustration.

Item	Content
Terminal	**SP2+ (E5-35) - SP2- (E5-27)**
Tool setting	**2 V/DIV** **20 ms/DIV**
Vehicle condition	**Vehicle speed 12 mph (20 km/h)**

MONITOR DESCRIPTION

The output speed sensor monitors the output shaft speed. The ECM controls the gearshift point and the lock up timing based on the signals from the output speed sensor and throttle position sensor.
If the ECM detects no signal from the output speed sensor even while the vehicle is moving, it will conclude that there is a malfunction in the output speed sensor. The ECM will illuminate the MIL and set the DTC.

MONITOR STRATEGY

Related DTCs	P0722: Speed sensor SP2/Verify pulse input
Required sensors/Components	Speed sensor SP2
Frequency of operation	Continuous
Duration	500 output shaft revolutions
MIL operation	2 driving cycles
Sequence of operation	None

TYPICAL ENABLING CONDITIONS

The monitor will run whenever the following DTCs are not present.	P0500 (VSS) P0748 - P0798 (Trans solenoid (range))
Vehicle speed range (4 seconds or more)	5.6 mph (9 km/h) or more
Park/neutral position switch	OFF

TYPICAL MALFUNCTION THRESHOLDS

No pulse input during 4 vehicle speed sensor pulse inputs	500 times or more

WIRING DIAGRAM

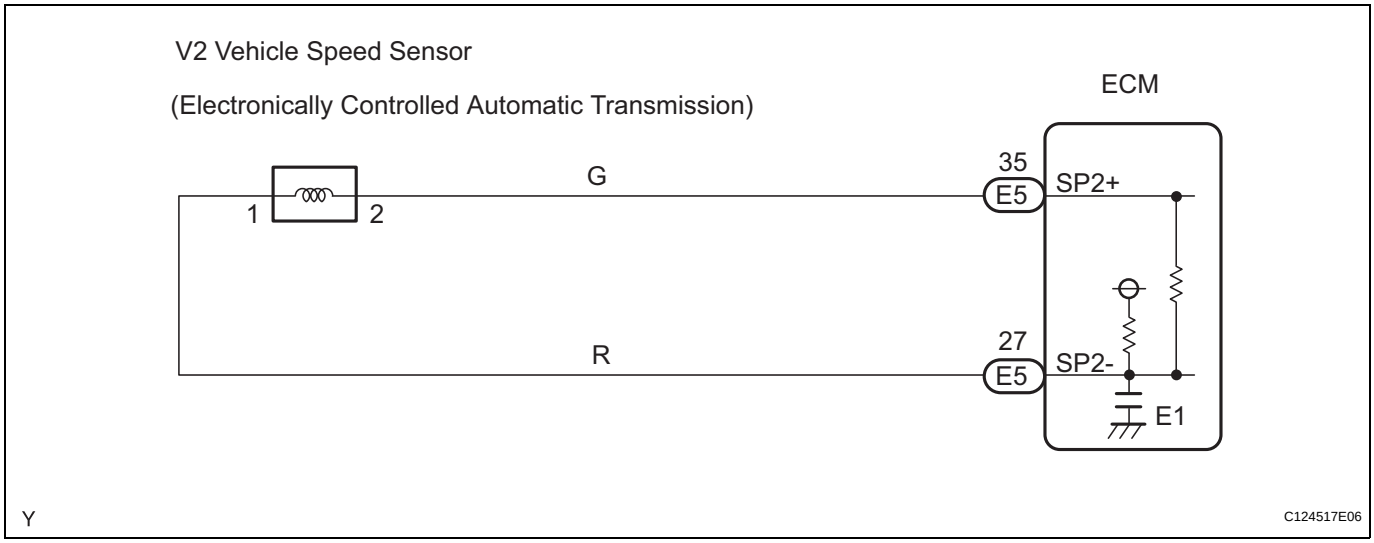

HINT:
According to the DATA LIST displayed on the intelligent tester, you can read the values of components, such as the switches, sensors and actuators, without removing any parts. Reading the DATA LIST as the first step of troubleshooting is one method of shortening labor time.
NOTICE:
In the table below, the values listed under "Normal Condition" are for reference only. Do not depend solely on these reference values when judging whether a part is faulty or not.
(a) Connect the intelligent tester together with the CAN VIM (controller area network vehicle interface module) to the DLC3.
(b) Turn the ignition switch to the ON position.
(c) Push the "ON" button of the tester.
(d) Select the items "DIAGNOSIS/ ENHANCED OBD II/ DATA LIST/ A/T".
(e) According to the display on the tester, read the "DATA LIST".

Item	Measurement Item/ Range (display)	Normal Condition
SPD (SP2)	Counter Gear Speed display/ min.: 0 mph (0 km/h) max.: 158 mph (255 km/h)	Vehicle stopped: 0 mph (0 km/h) [HINT] Equal to vehicle speed

HINT:
- SPD (SP2) is always 0 while driving:
  Open or short in the sensor or circuit.
- The SPD (SP2) value displayed on the tester is much lower than the actual vehicle speed:
  Sensor trouble, improper installation, or intermittent connection trouble of the circuit.

1 INSPECT SPEED SENSOR INSTALLATION

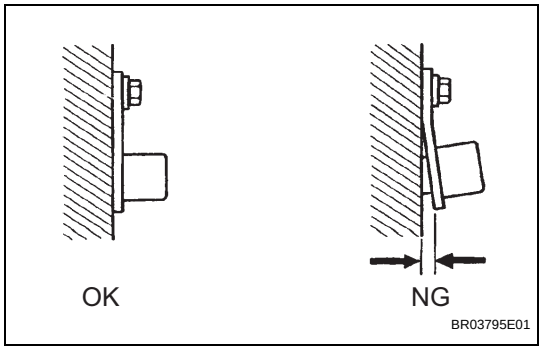

(a) Check the speed sensor (SP2) installation.

OK:

The installation bolt is tightened properly and there is no clearance between the sensor and transmission case.

NG → **REPLACE SPEED SENSOR (SP2)**

OK

2 INSPECT SPEED SENSOR (SP2)

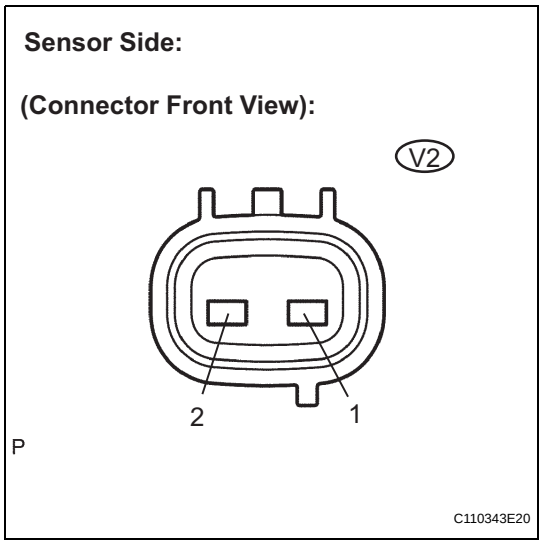

(a) Disconnect the speed sensor connector from the transmission.

(b) Measure the resistance.

Standard resistance

Tester Connection	Specified Condition
1 - 2	560 to 680 Ω at 20 °C (68 °F)

NG → **REPLACE SPEED SENSOR (SP2)**

OK

3 CHECK HARNESS AND CONNECTOR (SPEED SENSOR - ECM)

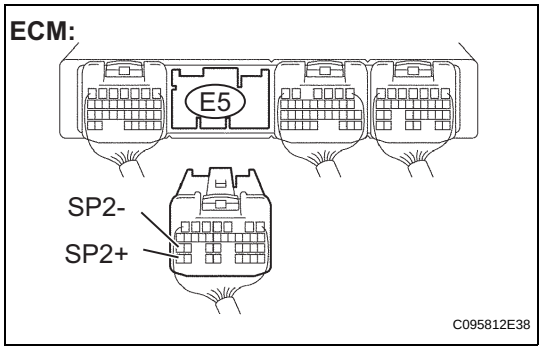

(a) Connect the speed sensor connector.

(b) Disconnect the ECM connector.

(c) Measure the resistance.

Standard resistance

Tester Connection	Specified Condition
E5-35 (SP2+) - E5-27 (SP2-)	560 to 680 Ωat 20 °C (68 °F)
E5-35 (SP2+) - Body ground	10 kΩ or higher
E5-27 (SP2-) - Body ground	10 kΩ or higher

NG → **REPAIR OR REPLACE HARNESS OR CONNECTOR**

OK

REPLACE ECM

DTC	P0724	Brake Switch "B" Circuit High

DESCRIPTION

The purpose of this circuit is to prevent the engine from stalling while driving in lock-up condition, when the brakes are suddenly applied.
When the brake pedal is depressed, this switch sends signals to the ECM. Then the ECM cancels the operation of the lock-up clutch while braking is in progress.

DTC No.	DTC Detection Condition	Trouble Area
P0724	The stop light switch remains ON even when the vehicle is driven in a GO (18.6 mph (30 km/h) or more) and STOP (less than 1.9 mph (3 km/h)) pattern 5 times. (2-trip detection logic)	• Short in stop light switch signal circuit • Stop light switch • ECM

MONITOR DESCRIPTION

This DTC indicates that the stop light switch remains ON. When the stop light switch remains ON during STOP and GO driving, the ECM interprets this as a fault in the stop light switch and the MIL comes on and the ECM stores the DTC. The vehicle must stop (less than 1.9 mph (3 km/h)) and go (18.6 mph (30 km/h) or more) 5 times during 2 driving cycles, in order to detect a malfunction.

MONITOR STRATEGY

Related DTCs	P0724: Stop light switch/Range check/Rationality
Required sensors/Components	Stop light switch
Frequency of operation	Continuous
Duration	GO and STOP 5 times
MIL operation	2 driving cycles
Sequence of operation	None

TYPICAL ENABLING CONDITIONS

The stop light switch remains ON during GO and STOP 5 times.
GO and STOP are defined as follows;

The monitor will run whenever the following DTCs are not present.	None
GO: Vehicle speed	18.6 mph (30 km/h) or more
STOP: Vehicle speed	Less than 1.9 mph (3 km/h)

TYPICAL MALFUNCTION THRESHOLDS

Stop light switch status	Stuck ON

WIRING DIAGRAM

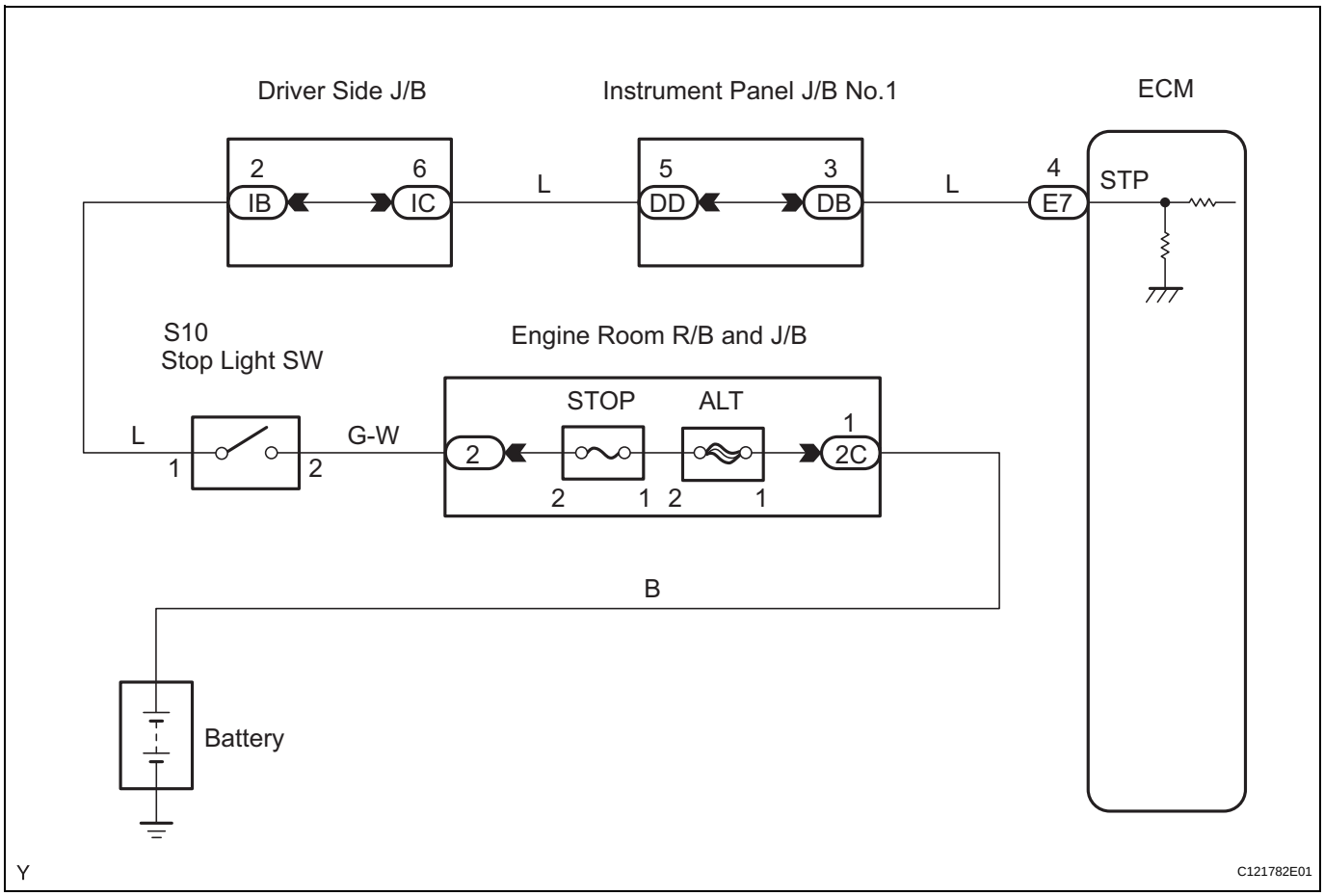

HINT:
According to the DATA LIST displayed on the intelligent tester, you can read the values of components, such as the switches, sensors and actuators, without removing any parts. Reading the DATA LIST as the first step of troubleshooting is one method of shortening labor time.

NOTICE:

In the table below, the values listed under "Normal Condition" are for reference only. Do not depend solely on these reference values when judging whether a part is faulty or not.

(a) Connect the intelligent tester together with the CAN VIM (controller area network vehicle interface module) to the DLC3.
(b) Turn the ignition switch to the ON position.
(c) Push the "ON" button of the tester.
(d) Select the items "DIAGNOSIS/ ENHANCED OBD II/ DATA LIST/ A/T".
(e) According to the display on the tester, read the "DATA LIST".

Item	Measurement Item/ Range (display)	Normal Condition
STOP LIGHT SW	Stop light Switch Status/ ON or OFF	• Brake Pedal is depressed: ON • Brake Pedal is released: OFF

1 INSPECT STOP LIGHT SWITCH ASSEMBLY

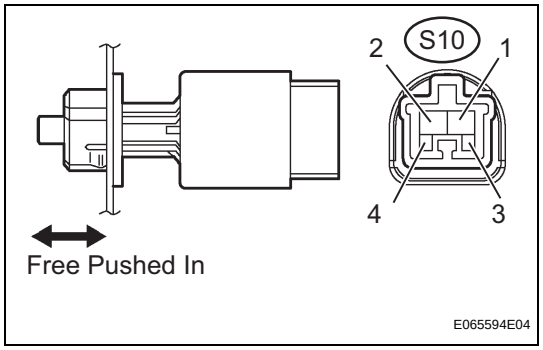

(a) Remove the stop light switch assembly.
(b) Measure the resistance.
Standard resistance

Switch position	Tester Connection	Specified Condition
Switch pin free	1 - 2	Below 1 Ω
Switch pin pushed in	1 - 2	10 kΩ or higher
Switch pin free	3 - 4	10 kΩ or higher
Switch pin pushed in	3 - 4	Below 1 Ω

NG → **REPLACE STOP LIGHT SWITCH ASSEMBLY**

OK

2 CHECK HARNESS AND CONNECTOR (STOP LIGHT SWITCH ASSEMBLY - ECM)

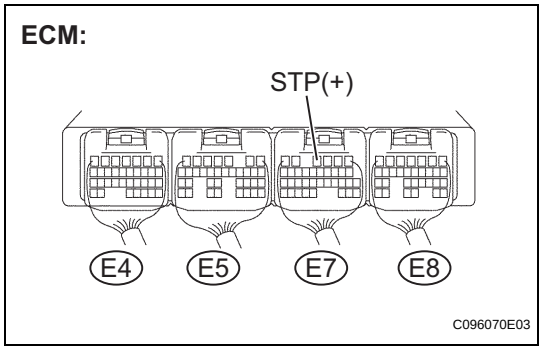

(a) Install the stop light switch assembly.
(b) Measure the voltage when the brake pedal is depressed and released.
Standard voltage

Condition	Tester Connection	Specified Condition
Brake pedal is depressed	E7-4 (STP) - Body ground	10 to 14 V
Brake pedal is released	E7-4 (STP) - Body ground	Below 1 V

NG → **REPAIR OR REPLACE HARNESS OR CONNECTOR**

OK

REPLACE ECM

DTC	P0751	Shift Solenoid "A" Performance (Shift Solenoid Valve S1)

SYSTEM DESCRIPTION

The ECM uses signals from the output shaft speed sensor and input speed sensor to detect the actual gear position (1st, 2nd, 3rd or 4th gear).
Then the ECM compares the actual gear with the shift schedule in the ECM memory to detect mechanical problems of the shift solenoid valves, valve body or automatic transmission (clutch, brake or gear, etc.).

DTC No.	DTC Detection Conditions	Trouble Areas
P0751	S1 stuck ON malfunction*1: The ECM determines that there is a malfunction when the following conditions are met: (a) When the ECM directs the gearshift to switch to 4th gear, the engine overruns (clutch slips). (b) When the ECM directs the gearshift to switch to 4th gear, the actual gear is shifted to 1st.	• Shift solenoid valve S1 is stuck open • Valve body is blocked • Shift solenoid valve S1 • Automatic transmission (clutch, brake or gear, etc.)
P0751	S1 stuck OFF malfunction*2: The ECM determines that there is a malfunction when the following conditions are met: (a) When the ECM directs the gearshift to switch to 1st gear, the actual gear is shifted to 4th. (b) When the ECM directs the gearshift to switch to 4th gear, the actual gear is also shifted to 4th.	• Shift solenoid valve S1 is stuck closed • Valve body is blocked • Shift solenoid valve S1 • Automatic transmission (clutch, brake or gear, etc.)

HINT:

- Gear positions in the event of a solenoid valve mechanical problem:

Gearshift controlled by ECM	1st	2nd	3rd	4th
*1: Actual gear position under S1 stuck ON malfunction	1st	2nd	2nd	1st
*2: Actual gear position under S1 stuck OFF malfunction	4th	3rd	3rd	4th

MONITOR DESCRIPTION

This DTC indicates "stuck ON malfunction" or "stuck OFF malfunction" of the shift solenoid valve S1.
The ECM controls the gearshifts by turning the shift solenoid valves "ON/OFF". When the gear position directed by the ECM and the actual gear position do not match, the ECM illuminates the MIL and stores the DTC.

MONITOR STRATEGY

Related DTCs	P0751: Shift solenoid valve S1/OFF malfunction Shift solenoid valve S1/ON malfunction
Required sensors/Components	Shift solenoid valve S1, Speed sensor (SP2), Speed sensor (NCO), Crankshaft position sensor (NE), Throttle position sensor, MAF
Frequency of operation	Continuous
Duration	OFF malfunction (A): 1.0 second OFF malfunction (B): 0.4 seconds ON malfunction (A): 0.8 seconds
MIL operation	2 driving cycles
Sequence of operation	None

TYPICAL ENABLING CONDITIONS

The following conditions are common to all OFF malfunctions (A), (B) and ON malfunctions (A), (B).

The monitor will run whenever the following DTCs are not present.	P0115 - P0118 (ECT sensor) P0125 (Insufficient ECT for closed loop) P0500 (VSS) P0748 - P0798 (Trans solenoid (range))
Shift solenoid "A" (S1) circuit Shift solenoid "B" (S2) circuit ECT (Engine Coolant Temperature) sensor circuit Input speed sensor (NCO) circuit Output speed sensor (SP2) circuit	There is no malfunction in the sensor circuits shown on the left
Transmission shift position	"D"
ECT (Engine Coolant Temperature)	40°C (104°F) or more
Spark advance from max. retard timing by knock control	0° CA or more
Engine	Running

OFF malfunction (A)

ECM selected gear	1st
Vehicle speed	6.2 mph (10 km/h) or more and Less than 24.8 mph (40 km/h)
Throttle valve opening angle	15 % or more and 6.5 % or more at engine speed of 2,000 rpm (Conditions vary with engine speed)

OFF malfunction (B)

Current ECM selected gear	4th
Last ECM selected gear	3rd
Actual gear when ECM selected 3th gear	3rd

ON malfunction (A)

ECM selected gear	4th
Vehicle speed at current ECM selected gear - Vehicle speed at last ECM selected gear	Less than 6.2 mph (10 km/h)
Throttle valve opening angle at current ECM selected gear - Throttle valve opening angle at last ECM selected gear	Less than 10 %
Throttle valve opening angle	Less than 20 %
Vehicle speed	Less than 52.8 mph (85 km/h)

ON malfunction (B)

Current ECM selected gear	4th
Last ECM selected gear	3rd

TYPICAL MALFUNCTION THRESHOLDS

[OFF malfunction]

Both of the following conditions are met: OFF malfunctions (A) and (B)
2 detections are necessary in 1 driving cycle.
1st detection: Temporary flag ON
2nd detection: Pending fault code ON

OFF malfunctions (A) and (B)

Input speed/Output speed (NC0/SP2)	0.00 or more and 0.22 or less (This means actual gear is 4th)

[ON malfunction]

Both of the following conditions are met: ON malfunctions (A) and (B)

ON malfunction (A)

NE current - NE last NE current: Engine speed at current ECM selected gear NE last: Engine speed at last ECM selected gear	950 rpm or more

ON malfunction (B)

Input speed/Output speed (NC0/SP2)	Not change as follows 0.93 or more and 1.07 or less (This means actual gear is 3rd) ↓ 0.00 or more and 0.22 or less (This means actual gear is 4th)

1. ACTIVE TEST

HINT:

Performing the ACTIVE TEST using the intelligent tester allows components, such as the relay, VSV, and actuator, to be operated without removing any parts. Performing the ACTIVE TEST as the first step of troubleshooting is one method of shortening labor time.

It is possible to display the DATA LIST during the ACTIVE TEST.

(a) Warm up the engine.

(b) Turn the ignition switch off.

(c) Connect the intelligent tester together with the CAN VIM (controller area network vehicle interface module) to the DLC3.

(d) Turn the ignition switch to the ON position.

(e) Push the "ON" button of the tester.

(f) Select the items "DIAGNOSIS/ ENHANCED OBD II/ ACTIVE TEST/ SHIFT".

(g) According to the display on the tester, perform the "ACTIVE TEST".

HINT:

While driving, the shift position can be changed with the intelligent tester.

Comparing the shift position directed by the ACTIVE TEST with the actual shift position enables you to confirm the problem (See page AT-27).

Item	Test Details	Diagnostic Note
SHIFT	[Test Details] Operate the shift solenoid valve and set each shift position by manually. [Vehicle Condition] • IDL: ON • Less than 31 mph (50 km/h) [Others] • Press → button: Shift up • Press ← button: Shift down	Possible to check the operation of the shift solenoid valves.

HINT:

- This test can be conducted when the vehicle speed is 31 mph (50 km/h) or less.
- The 3rd to 4th up-shifting must be performed with the accelerator pedal released.
- The 4th to 3rd down-shifting must be performed with the accelerator pedal released.
- Do not operate the accelerator pedal for at least 2 seconds after shifting and do not shift successively.
- The shift position directed by the ECM is shown in the DATA LIST/ SHIFT display on the intelligent tester.
- The shift solenoid valve S1 is turned on/off normally when the shift lever is in the D position:

Gearshift controlled by ECM	1st	2nd	3rd	4th
Shift solenoid valve S1	ON	ON	OFF	OFF

1	CHECK ANY OTHER DTCS OUTPUT (IN ADDITION TO DTC P0751)

(a) Connect the intelligent tester to the DLC3.
(b) Turn the ignition switch to the ON position and push the intelligent tester main switch ON.
(c) Select the items "DIAGNOSIS/ ENHANCED OBD II/ DTC INFO/ CURRENT CODES".
(d) Read the DTCs using the intelligent tester.

Result

Display (DTC Output)	Proceed to
Only "P0751" is output	A
"P0751" and other DTCs	B

HINT:
If any codes besides "P0751" are output, perform troubleshooting for those DTCs first.

B → GO TO DTC CHART

A

2	INSPECT SHIFT SOLENOID VALVE S1

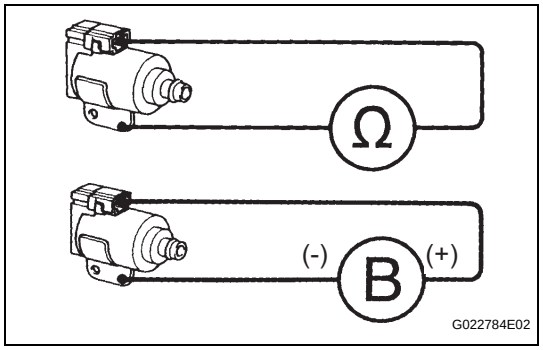

(a) Remove the shift solenoid valve S1.
(b) Measure the resistance.
Standard resistance

Tester Connection	Specified Condition
Solenoid Connector (S1) - Solenoid Body (S1)	11 to 15 Ω at 20°C (68°F)

(c) Connect positive (+) lead to the terminal of the solenoid connector, negative (-) lead to the solenoid body.
OK:
The solenoid makes an operating sound.

NG → REPLACE SHIFT SOLENOID VALVE S1

OK

3	INSPECT TRANSMISSION VALVE BODY ASSEMBLY

OK:
There are no foreign objects on any valves and they operate smoothly.

NG → REPAIR OR REPLACE TRANSMISSION VALVE BODY ASSEMBLY

OK

REPAIR OR REPLACE AUTOMATIC TRANSMISSION ASSEMBLY

DTC	P0756	Shift Solenoid "B" Performance (Shift Solenoid Valve S2)

SYSTEM DESCRIPTION

The ECM uses signals from the output shaft speed sensor and input speed sensor to detect the actual gear position (1st, 2nd, 3rd or 4th gear).
Then the ECM compares the actual gear with the shift schedule in the ECM memory to detect mechanical problems of the shift solenoid valves, valve body or automatic transmission (clutch, brake or gear, etc.).

DTC No.	DTC Detection Conditions	Trouble Areas
P0756	S2 stuck OFF malfunction*2: Shifting to 1st and 4th gears is impossible. The ECM determines that there is a malfunction when the following conditions are met: (a) When the ECM directs the gearshift to switch to 2nd gear, the actual gear is shifted to 1st. (b) When the ECM directs the gearshift to switch to 3rd gear, the actual gear is shifted to 4th.	• Shift solenoid valve S2 is stuck open • Valve body is blocked • Shift solenoid valve S2 • Automatic transmission (clutch, brake or gear, etc.)
P0756	S2 stuck ON malfunction*1: The vehicle starts in 2nd gear and shifting to 3rd gear is impossible. The ECM determines that there is a malfunction when the following conditions are met: (a) When the ECM directs the gearshift to switch to 1st gear, the actual gear is shifted to 2nd. (b) When the ECM directs the gearshift to switch to 4th gear, the actual gear is shifted to 3rd.	• Shift solenoid valve S2 is stuck closed • Valve body is blocked • Shift solenoid valve S2 • Automatic transmission (clutch, brake or gear, etc.)

HINT:

- Gear positions in the event of a solenoid valve mechanical problem:

Gearshift controlled by ECM	1st	2nd	3rd	4th
*1: Actual gear position under S2 stuck ON malfunction	2nd	2nd	3rd	3rd
*2: Actual gear position under S2 stuck OFF malfunction	1st	1st	4th	4th

MONITOR DESCRIPTION

This DTC indicates "stuck ON malfunction" or "stuck OFF malfunction" of the shift solenoid valve S1.
The ECM controls the gearshifts by turning the shift solenoid valves "ON/OFF". When the gear position directed by the ECM and the actual gear position do not match, the ECM illuminates the MIL and stores the DTC.

MONITOR STRATEGY

Related DTCs	P0756: Shift solenoid valve S2/OFF malfunction Shift solenoid valve S2/ON malfunction
Required sensors/Components	Shift solenoid valve S2
Frequency of operation	Continuous
Duration	1.0 second
MIL operation	2 driving cycles
Sequence of operation	None

TYPICAL ENABLING CONDITIONS

The following conditions are common to all OFF malfunctions (A), (B), (C) and ON malfunctions (A), (B), (C).

The monitor will run whenever the following DTCs are not present.	P0115 - P0118 (ECT sensor) P0125 (Insufficient ECT for closed loop) P0500 (VSS) P0748 - P0798 (Trans solenoid (range))
Shift solenoid "A" (S1) circuit Shift solenoid "B" (S2) circuit ECT (Engine Coolant Temperature) sensor circuit Input speed sensor circuit Output speed sensor circuit	There is no malfunction in the sensor circuits shown on the left
Transmission shift position	"D"
ECT (Engine Coolant Temperature)	40°C (104°F) or more
Spark advance from max. retard timing by knock control	0°CA or more
Engine	Running

OFF malfunction (A)

ECM selected gear	2nd
Vehicle speed	6.2 mph (10 km/h) or more
Throttle valve opening angle	6.5 % or more at engine speed of 2,000 rpm (Conditions vary with engine speed)

OFF malfunction (B)

ECM selected gear	3rd
Vehicle speed	6.2 mph (10 km/h) or more
Throttle valve opening angle	6.5 % or more at engine speed of 2,000 rpm (Conditions vary with engine speed)

OFF malfunction (C)

ECM selected gear	4th
Vehicle speed	6.2 mph (10 km/h) or more
Throttle valve opening angle	6.5 % or more at engine speed of 2,000 rpm (Conditions vary with engine speed)

ON malfunction (A)

ECM selected gear	1st
Vehicle speed	6.2 mph (10 km/h) or more and Less than 24.8 mph (40 km/h)
Throttle valve opening angle	6.5 % or more at engine speed of 2,000 rpm (Conditions vary with engine speed)

ON malfunction (B)

ECM selected gear	3rd
Vehicle speed	6.2 mph (10 km/h) or more
Throttle valve opening angle	6.5 % or more at engine speed of 2,000 rpm (Conditions vary with engine speed)

ON malfunction (C)

ECM selected gear	4th
Vehicle speed	6.2 mph (10 km/h) or more
Throttle valve opening angle	6.5 % or more at engine speed of 2,000 rpm (Conditions vary with engine speed)

TYPICAL MALFUNCTION THRESHOLDS

[OFF malfunction]

All of the following conditions are met: OFF malfunctions (A), (B) and (C)
2 detections are necessary in 1 driving cycle.
1st detection: Temporary flag ON
2nd detection: Pending fault code ON

OFF malfunction (A)

Input speed/Output speed (NC0/SP2)	2.63 or more and 3.20 or less (This means actual gear is 1st)

OFF malfunction (B)

Input speed/Output speed (NC0/SP2)	0.00 or more and 0.22 or less (This means actual gear is 4th)

OFF malfunction (C)

Input speed/Output speed (NC0/SP2)	0.00 or more and 0.22 or less (This means actual gear is 4th)

[ON malfunction]

All of the following conditions are met: ON malfunctions (A), (B) and (C)

ON malfunction (A)

Input speed/Output speed (NC0/SP2)	1.40 or more and 1.67 or less (This means actual gear is 2nd)

ON malfunction (B)

Input speed/Output speed (NC0/SP2)	0.93 or more and 1.07 or less (This means actual gear is 3rd)

ON malfunction (C)

Input speed/Output speed (NC0/SP2)	0.93 or more and 1.07 or less (This means actual gear is 3rd)

1. ACTIVE TEST

HINT:
Performing the ACTIVE TEST using the intelligent tester allows components, such as the relay, VSV, and actuator, to be operated without removing any parts. Performing the ACTIVE TEST as the first step of troubleshooting is one method of shortening labor time.
It is possible to display the DATA LIST during the ACTIVE TEST.

(a) Warm up the engine.
(b) Turn the ignition switch off.
(c) Connect the intelligent tester together with the CAN VIM (controller area network vehicle interface module) to the DLC3.
(d) Turn the ignition switch to the ON position.
(e) Push the "ON" button of the tester.
(f) Select the items "DIAGNOSIS/ ENHANCED OBD II/ ACTIVE TEST/ SHIFT".
(g) According to the display on the tester, perform the "ACTIVE TEST".
HINT:
While driving, the shift position can be changed with the intelligent tester.
Comparing the shift position directed by the ACTIVE TEST with the actual shift position enables you to confirm the problem (See page AT-27).

Item	Test Details	Diagnostic Note
SHIFT	[Test Details] Operate the shift solenoid valve and set each shift position by manually. [Vehicle Condition] • IDL: ON • Less than 31 mph (50 km/h) [Others] • Press "→" button: Shift up • Press "←" button: Shift down	Possible to check the operation of the shift solenoid valves.

HINT:
- This test can be conducted when the vehicle speed is 31 mph (50 km/h) or less.
- The 3rd to 4th up-shifting must be performed with the accelerator pedal released.
- The 4th to 3rd down-shifting must be performed with the accelerator pedal released.
- Do not operate the accelerator pedal for at least 2 seconds after shifting and do not shift successively.
- The shift position directed by the ECM is shown in the DATA LIST/ SHIFT display on the intelligent tester.
- The shift solenoid valve S2 is turned on/off normally when the shift lever is in the D position:

Gearshift controlled by ECM	1st	2nd	3rd	4th
Shift solenoid valve S2	OFF	ON	ON	OFF

1 CHECK ANY OTHER DTCS OUTPUT (IN ADDITION TO DTC P0756)

(a) Connect the intelligent tester to the DLC3.
(b) Turn the ignition switch to the ON position and push the intelligent tester main switch ON.
(c) Select the items "DIAGNOSIS/ ENHANCED OBD II/ DTC INFO/ CURRENT CODES".
(d) Read the DTCs using the intelligent tester.

Result

Display (DTC Output)	Proceed to
Only "P0756" is output	**A**
"P0756" and other DTCs	**B**

HINT:
If any codes besides "P0756" are output, perform troubleshooting for those DTCs first.

B → **GO TO DTC CHART**

A

2	INSPECT SHIFT SOLENOID VALVE S2

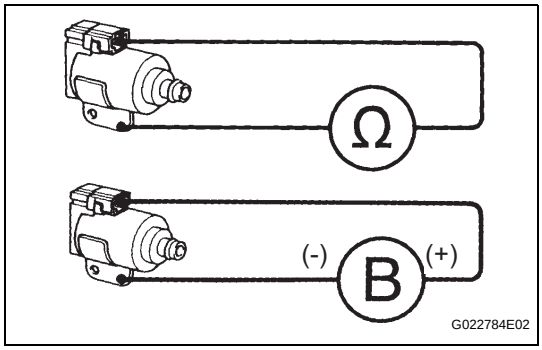

(a) Remove the shift solenoid valve S2.
(b) Measure the resistance.
Standard resistance

Tester Connection	Specified Condition
Solenoid Connector (S2) - Solenoid Body (S2)	11 to 15 Ω at 20°C (68°F)

(c) Connect positive (+) lead to the terminal of the solenoid connector, negative (-) lead to the solenoid body.
OK:
The solenoid makes an operating sound.

NG → **REPLACE SHIFT SOLENOID VALVE S2**

OK

3	INSPECT TRANSMISSION VALVE BODY ASSEMBLY

OK:
There are no foreign objects on any valves and they operate smoothly.

NG → **REPAIR OR REPLACE TRANSMISSION VALVE BODY ASSEMBLY**

OK

REPAIR OR REPLACE AUTOMATIC TRANSMISSION ASSEMBLY

DTC	P0973	Shift Solenoid "A" Control Circuit Low (Shift Solenoid Valve S1)

DTC	P0974	Shift Solenoid "A" Control Circuit High (Shift Solenoid Valve S1)

DTC	P0976	Shift Solenoid "B" Control Circuit Low (Shift Solenoid Valve S2)

DTC	P0977	Shift Solenoid "B" Control Circuit High (Shift Solenoid Valve S2)

DESCRIPTION

Shifting from 1st to 4th is performed in combination with the ON and OFF operation of the shift solenoid valves No. 1 and No. 2 which are controlled by the ECM. If an open or short circuit occurs in either of the shift solenoid valves, the ECM controls the remaining normal shift solenoid valve to allow the vehicle to be driven smoothly. (In case of an open or short circuit, the ECM stops sending current to the circuit.)
Fail-safe functions (See page AT-27)

DTC No.	DTC Detection Conditions	Trouble Areas
P0973	ECM detects short in solenoid valve S1 circuit 2 times when solenoid valve S1 is operated. (1-detection logic)	• Short in shift solenoid valve S1 circuit • Shift solenoid valve S1 • ECM
P0974	ECM detects open in solenoid valve S1 circuit 2 times when solenoid valve S1 is not operated. (1-detection logic)	• Open in shift solenoid valve S1 circuit • Shift solenoid valve S1 • ECM
P0976	ECM detects short in solenoid valve S2 circuit 2 times when solenoid valve S2 is operated. (1-trip detection logic)	• Short in shift solenoid valve S2 circuit • Shift solenoid valve S2 • ECM
P0977	ECM detects open in solenoid valve S2 circuit 2 times when solenoid valve S2 is not operated. (1-trip detection logic)	• Open in shift solenoid valve S2 circuit • Shift solenoid valve S2 • ECM

MONITOR DESCRIPTION

The ECM controls the gearshift by turning the shift solenoid valves "ON/OFF". When there is an open or short circuit in either shift solenoid valve circuit, the ECM detects the problem and illuminates the MIL and stores a DTC. And the ECM performs the fail-safe function and turns the other shift solenoid valves in good condition "ON/OFF". (In case of an open or short circuit, the ECM stops sending current to the circuit.)

MONITOR STRATEGY

P0973, P0974:

Related DTCs	P0973: Shift solenoid valve S1/Range check (Low resistance) P0974: Shift solenoid valve S1/Range check (High resistance)
Required sensors/Components	Shift solenoid valve S1
Frequency of operation	Continuous
Duration	0.1 seconds x 2 (times) or more
MIL operation	Immediate
Sequence of operation	None

P0976, P0977:

Related DTCs	P0976: Shift solenoid valve S2/Range check (Low resistance) P0977: Shift solenoid valve S2/Range check (High resistance)
Required sensors/Components	Shift solenoid valve S2
Frequency of operation	Continuous
Duration	0.1 seconds x 2 (times) or more
MIL operation	1 driving cycle
Sequence of operation	None

TYPICAL ENABLING CONDITIONS

P0973: Range check (Low resistance)

Range check (Low resistance)

The monitor will run whenever the following DTCs are not present.	None
Solenoid	ON

P0974: Range check (High resistance)

The monitor will run whenever the following DTCs are not present.	None
Solenoid	OFF

P0976: Range check (Low resistance)

The monitor will run whenever the following DTCs are not present.	None
Solenoid	ON

P0977: Range check (High resistance)

The monitor will run whenever the following DTCs are not present.	None
Solenoid	OFF

TYPICAL MALFUNCTION THRESHOLDS

P0973: Range check (Low resistance)

Intelligent power MOS diagnosis fail signals detected while the solenoid is operated	Fail: Solenoid resistance 8 Ω or less

P0974: Range check (High resistance)

Intelligent power MOS diagnosis fail signals detected while the solenoid is not operated	Fail: Solenoid resistance 100 kΩ or more

P0976: Range check (Low resistance)

Intelligent power MOS diagnosis fail signals detected while the solenoid is operated	Fail: Solenoid resistance 8 Ω or less

P0977: Range check (High resistance)

Intelligent power MOS diagnosis fail signals detected while the solenoid is not operated	Fail: Solenoid resistance 100 kΩ or more

COMPONENT OPERATING RANGE

P0973, P0974:

Shift solenoid valve S1 resistance	11 to 15 Ω at 20°C (68°F)

P0976, P0977:

Shift solenoid valve S2 resistance	11 to 15 Ω at 20°C (68°F)

WIRING DIAGRAM

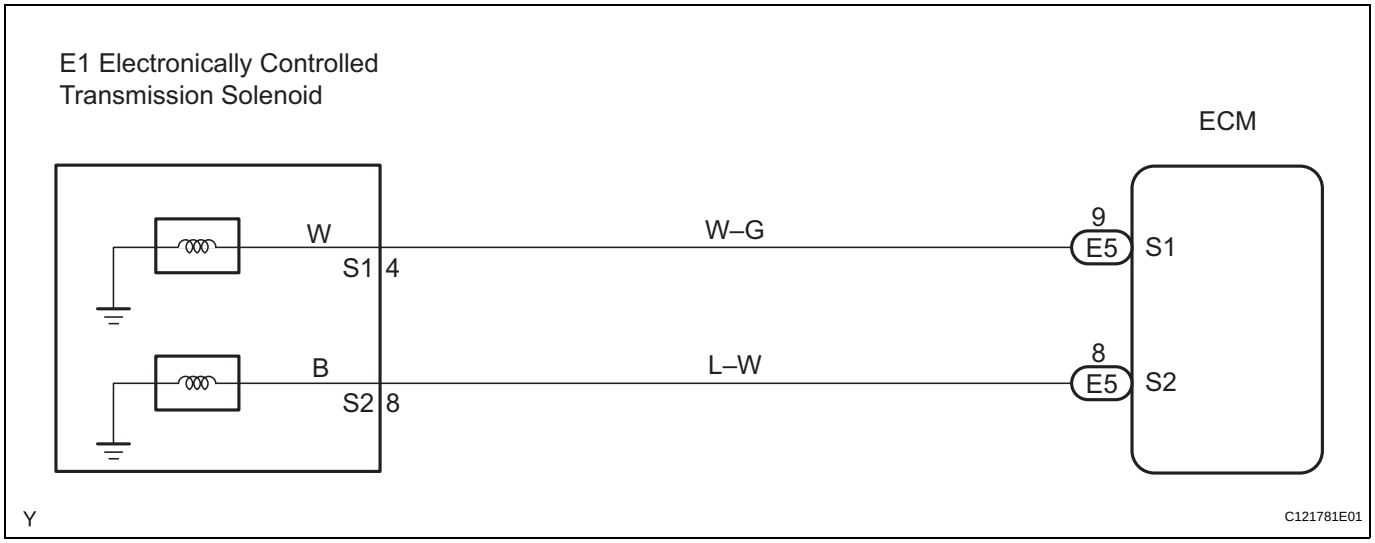

HINT:

- The shift solenoid valve S1 or S2 is turned on/off normally when the shift lever is in the D position:

Gearshift controlled by ECM	1st	2nd	3rd	4th
Shift solenoid valve S1	ON	ON	OFF	OFF
Shift solenoid valve S2	OFF	ON	ON	OFF

1	INSPECT TRANSMISSION WIRE (S1/S2)

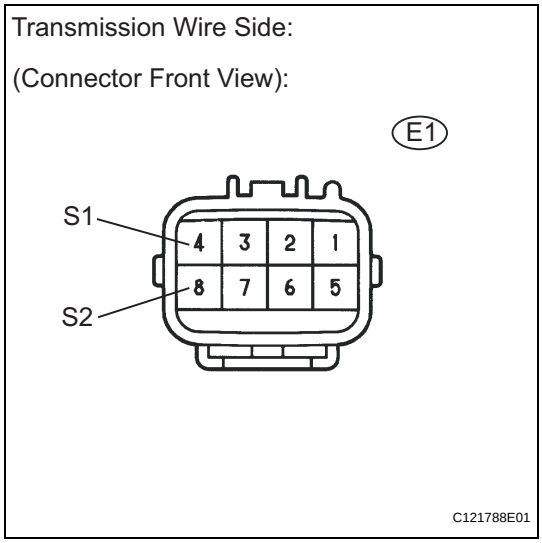

(a) Disconnect the transmission wire connector from the transmission.

(b) Measure the resistance.

Standard resistance

Tester Connection	Specified Condition
4 - Body ground	11 to 15 Ω at 20°C (68°F)
8 - Body ground	11 to 15 Ω at 20°C (68°F)

NG → **Go to step 3**

OK

AT

2	CHECK HARNESS AND CONNECTOR (TRANSMISSION WIRE - ECM)

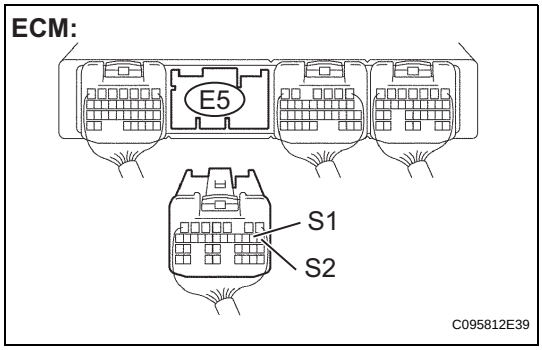

(a) Connect the transmission connector to the transmission.
(b) Disconnect the ECM connector.
(c) Measure the resistance.
Standard resistance

Tester Connection	Specified Condition
E5-9 (S1) - Body ground	11 to 15 Ω at 20°C (68°F)
E5-8 (S2) - Body ground	11 to 15 Ω at 20°C (68°F)

NG → **REPAIR OR REPLACE HARNESS OR CONNECTOR**

OK

REPLACE ECM

3	INSPECT SHIFT SOLENOID VALVE (S1/S2)

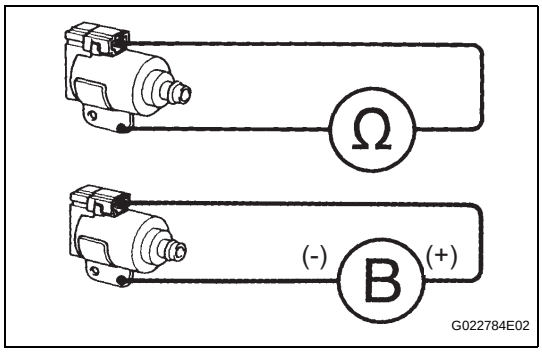

(a) Remove the shift solenoid valve S1 or S2.
(b) Measure the resistance.
Standard resistance

Tester Connection	Specified Condition
Solenoid Connector (S1) - Solenoid Body (S1)	11 to 15 Ω at 20°C (68°F)
Solenoid Connector (S2) - Solenoid Body (S2)	11 to 15 Ω at 20°C (68°F)

(c) Connect positive (+) lead to the terminal of the solenoid connector, negative (-) lead to the solenoid body.
OK:
The solenoid makes an operating sound.

NG → **REPLACE SHIFT SOLENOID VALVE (S1/S2)**

OK

REPAIR OR REPLACE TRANSMISSION WIRE

DTC	P2716	Pressure Control Solenoid "D" Electrical (Shift Solenoid Valve SLT)

DESCRIPTION

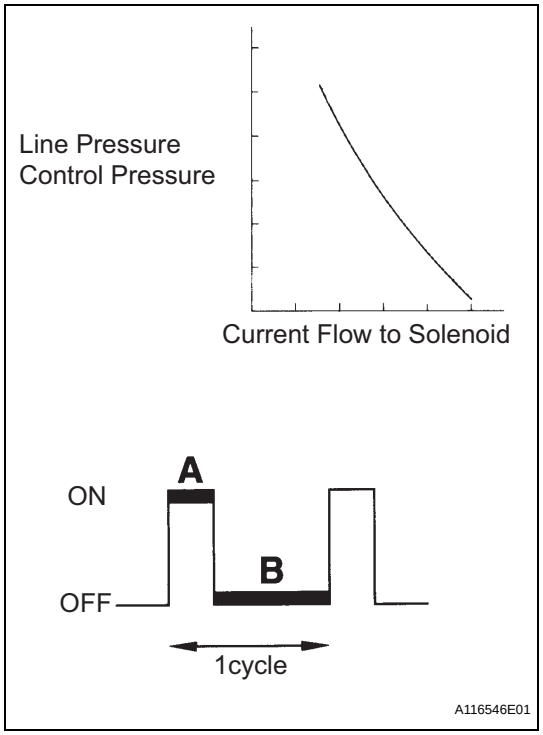

The linear solenoid valve (SLT) controls the transmission line pressure for smooth transmission operation based on signals from the throttle position sensor and the vehicle speed sensor. The ECM adjusts the duty cycle of the SLT solenoid valve to control the hydraulic line pressure coming from the primary regulator valve. Appropriate line pressure assures smooth shifting with varying engine outputs.
Duty Ratio:
The duty ratio is the ratio of the period of continuity in one cycle. For example, if A is the period of continuity in one cycle, and B is the period of non-continuity, then Duty Ratio = A / (A + B) x 100 (%).

DTC No.	DTC Detection Conditions	Trouble Areas
P2716	Open or short is detected in shift solenoid valve SLT circuit for 1 second or more while driving. (1-trip detection logic)	• Open or short in shift solenoid valve SLT circuit • Shift solenoid valve SLT • ECM

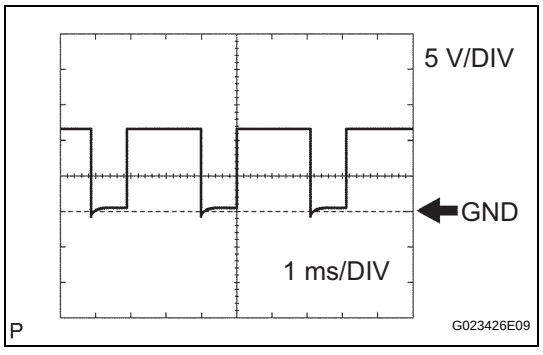

1. Reference (Using an oscilloscope):
Check the waveform between terminals SLT+ and SLT- of the ECM connector.
Standard:
Refer to the illustration.

Item	Content
Terminal	**SLT+ (E5-12) - SLT- (E5-13)**
Tool setting	**5 V/DIV** **1 ms/DIV**
Vehicle condition	**Engine idle speed**

AT

MONITOR DESCRIPTION

When an open or short is detected in the linear solenoid valve (SLT) circuit, the ECM interprets this as a fault. The ECM turns on the MIL and stores the DTC.

MONITOR STRATEGY

Related DTCs	P2716: Shift solenoid valve SLT/Range check
Required sensors/Components	Shift solenoid valve SLT
Frequency of operation	Continuous
Duration	1 second
MIL operation	Immediate
Sequence of operation	None

TYPICAL ENABLING CONDITIONS

The monitor will run whenever the following DTCs are not present.	None
Solenoid current cut status	Not cut
Battery voltage	11 V or more
CPU command duty ratio to SLT	19 % or more

TYPICAL MALFUNCTION THRESHOLDS

Solenoid status (SLT) from IC	Fail (Open or short) (Output signal duty ratio equal to 100 %)

COMPONENT OPERATING RANGE

Output signal duty ratio	Less than 100 %

WIRING DIAGRAM

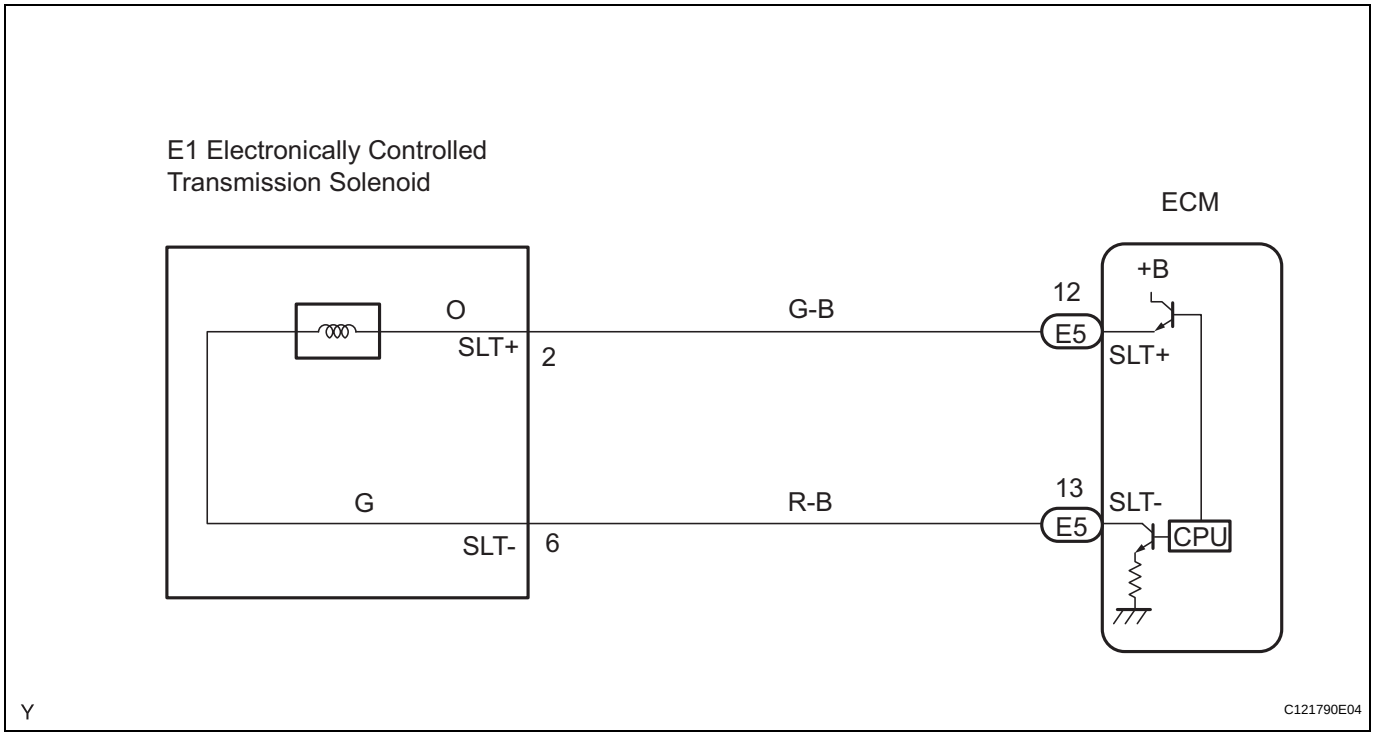

1	INSPECT TRANSMISSION WIRE (SLT)

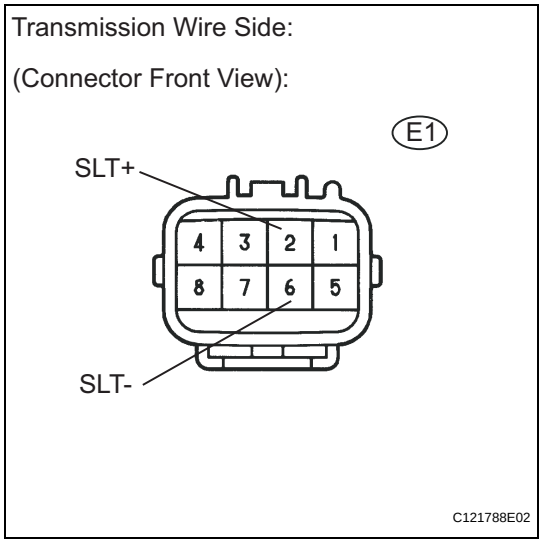

(a) Disconnect the transmission wire connector from the transmission.
(b) Measure the resistance.
Standard resistance

Tester Connection	Specified Condition
2 (SLT+) - 6 (SLT-)	5.0 to 5.6 Ω at 20°C (68°F)
2 (SLT+) - Body ground	10 kΩ or higher
6 (SLT-) - Body ground	10 kΩ or higher

NG → **Go to step 3**

OK

2	CHECK HARNESS AND CONNECTOR (TRANSMISSION WIRE - ECM)

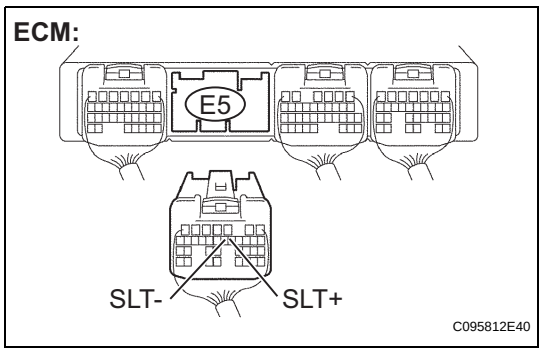

(a) Connect the transmission wire connector to the transmission.
(b) Disconnect the ECM connector.
(c) Measure the resistance.
Standard resistance

Tester Connection	Specified Condition
E5-12 (SLT+) - E5-13 (SLT-)	5.0 to 5.6 Ω at 20°C (68°F)
E5-12 (SLT+) - Body ground	10 kΩ or higher
E5-13 (SLT-) - Body ground	10 kΩ or higher

NG → **REPAIR OR REPLACE HARNESS OR CONNECTOR**

OK

REPLACE ECM

3	INSPECT SHIFT SOLENOID VALVE (SLT)

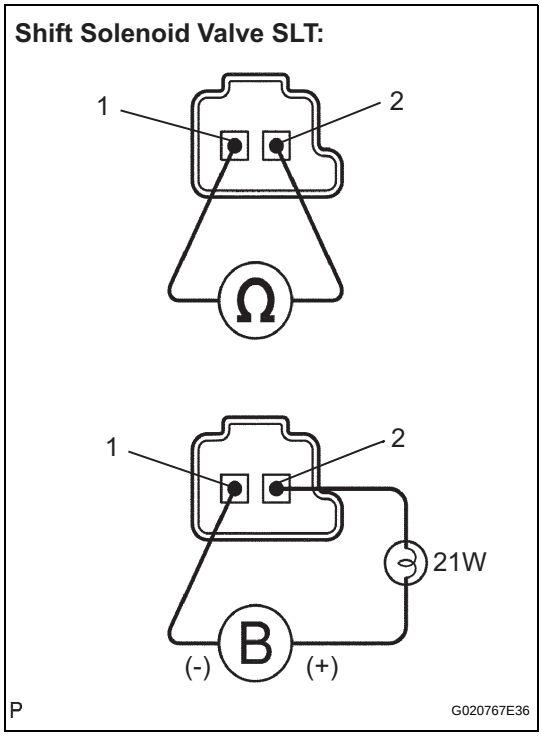

(a) Remove the shift solenoid valve (SLT).
(b) Measure the resistance.
Standard resistance

Tester Connection	Specified Condition
1 - 2	5.0 to 5.6 Ω at 20°C (68°F)

(c) Connect the positive (+) lead with a 21 W bulb to terminal 2 and the negative (-) lead to terminal 1 of the solenoid valve connector, then check the movement of the valve.
OK:
The solenoid makes an operating sound.

NG → **REPLACE SHIFT SOLENOID VALVE (SLT)**

OK

REPAIR OR REPLACE TRANSMISSION WIRE

DTC	P2740	Transmission Fluid Temperature Sensor "B" Circuit

DTC	P2742	Transmission Fluid Temperature Sensor "B" Circuit Low Input

DTC	P2743	Transmission Fluid Temperature Sensor "B" Circuit High Input

DESCRIPTION

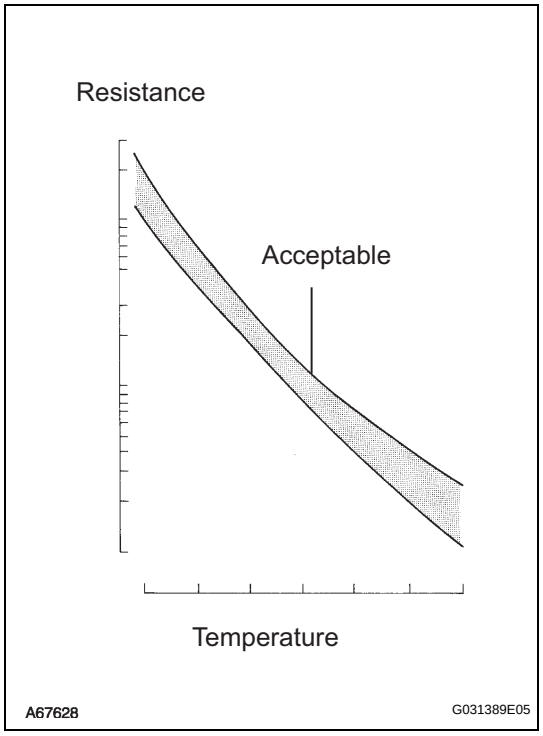

The ATF (Automatic Transmission Fluid) temperature sensor converts the fluid temperature into a resistance value which is input into the ECM.
The ECM applies a voltage to the temperature sensor through ECM terminal THO1.
The sensor resistance changes with the transmission fluid temperature. As the temperature becomes higher, the sensor resistance decreases.
One terminal of the sensor is grounded so that the sensor resistance and the voltage decrease as the temperature becomes higher.
The ECM calculates the fluid temperature based on the voltage signal.

DTC No.	DTC Detecting Conditions	Trouble Areas
P2740	Conditions (a) and (b) are detected momentarily within 0.5 seconds when neither P2742 nor P2743 is detected. (1-trip detection logic) (a) No. 1 ATF temperature sensor voltage is less than 0.142 V. (b) No. 1 ATF temperature sensor voltage is more than 4.915 V. HINT: Within 0.5 seconds the malfunction changes from (a) to (b) or (b) to (a).	• Open or short in No. 1 ATF temperature sensor circuit • Transmission wire (No. 1 ATF temperature sensor) • ECM

DTC No.	DTC Detecting Conditions	Trouble Areas
P2742	No. 1 ATF temperature sensor voltage is less than 0.142 V for 0.5 seconds or more. (1-trip detection logic)	• Short in No. 1 ATF temperature sensor circuit • Transmission wire (No. 1 ATF temperature sensor) • ECM
P2743	No. 1 ATF temperature sensor voltage is more than 4.915 V for 0.5 seconds or more 15 minutes or more after starting engine. (1-trip detection logic)	• Open in No. 1 ATF temperature sensor circuit • Transmission wire (No. 1 ATF temperature sensor) • ECM

MONITOR DESCRIPTION

The Automatic Transmission Fluid (ATF) temperature sensor converts the ATF temperature to an electrical resistance value. Based on the resistance, the ECM determines the ATF temperature, and detects any open or short malfunctions in the AFT temperature circuit. If the output voltage of the ATF temperature is less than 0.142 V*1 or more than 4.915 V*2, the ECM interprets this as a fault in the ATF temperature sensor or its wiring. The ECM turns on the MIL and stores a DTC.

*1: 150°C (302°F) or more is indicated regardless of the actual ATF temperature.

*2: -40°C (-40°F) is indicated regardless of the actual ATF temperature.

HINT:

The ATF temperature can be checked on the intelligent tester display.

MONITOR STRATEGY

Related DTCs	P2740: ATF temperature sensor/Range check (Fluttering) P2742: ATF temperature sensor/Range check (Low voltage) P2743: ATF temperature sensor/Range check (High voltage)
Required sensors/Components	ATF temperature sensor
Frequency of operation	Continuous
Duration	0.5 seconds
MIL operation	Immediate
Sequence of operation	None

TYPICAL ENABLING CONDITIONS

P2740: Range check (Fluttering)

The monitor will run whenever the following DTCs are not present.	None
The typical enabling condition is not available.	-

P2742: Range check (Low voltage)

The monitor will run whenever the following DTCs are not present.	None
The typical enabling condition is not available.	-

P2743: Range check (High voltage)

The monitor will run whenever the following DTCs are not present.	None
Time after engine start	15 minutes or more

TYPICAL MALFUNCTION THRESHOLDS

P2740: Range check (Fluttering)

TFT Sensor voltage	Less than 0.142 V or More than 4.915 V

AT

P2742: Range check (Low voltage)

TFT Sensor voltage	Less than 0.142 V

P2743: Range check (High voltage)

TFT Sensor voltage	More than 4.915 V

COMPONENT OPERATING RANGE

ATF temperature sensor	Atmospheric temperature - approximately 130°C (266°F)

WIRING DIAGRAM

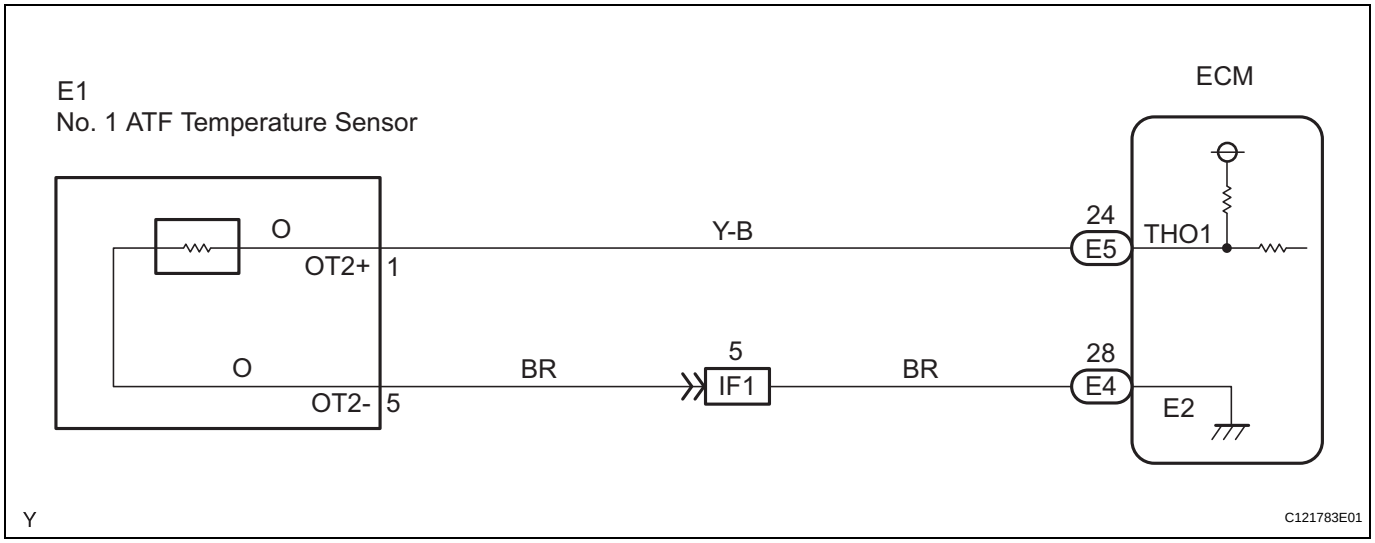

HINT:
According to the DATA LIST displayed on the intelligent tester, you can read the values of components, such as the switches, sensors and actuators, without removing any parts. Reading the DATA LIST as the first step of troubleshooting is one method of shortening labor time.
NOTICE:
In the table below, the values listed under "Normal Condition" are for reference only. Do not depend solely on these reference values when judging whether a part is faulty or not.
(a) Warm up the engine.
(b) Turn the ignition switch off.
(c) Connect the intelligent tester together with the CAN VIM (controller area network vehicle interface module) to the DLC3.
(d) Turn the ignition switch to the ON position.
(e) Push the "ON" button of the tester.
(f) Select the items "DIAGNOSIS/ ENHANCED OBD II/ DATA LIST/ A/T".
(g) According to the display on the tester, read the "DATA LIST".

Item	Measurement Item/ Range (display)	Normal Condition
A/T OIL TEMP1	ATF Temperature Sensor Value/ min.: -40°C (-40°F) max.: 215°C (419°F)	• After Stall Test: Approximately 80°C (176°F) • Equal to ambient temperature when cold soak

HINT:
When DTC P2742 is output and the intelligent tester reading is 150°C (302°F) or more, there is a short circuit.
When DTC P2743 is output and the intelligent tester reading is -40°C (-40°F), there is an open circuit.
Measure the resistance between terminal THO1 and the body ground.

Temperature Displayed	Malfunction
-40°C (-40°F)	Open circuit
150°C (302°F) or more	Short circuit

1 INSPECT TRANSMISSION WIRE (ATF TEMPERATURE SENSOR)

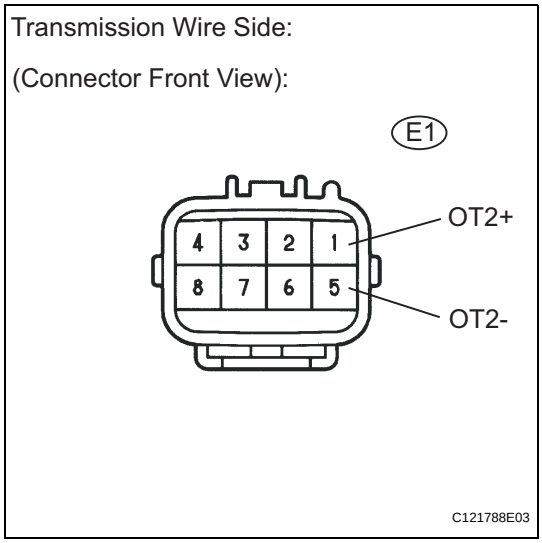

(a) Disconnect the transmission wire connector from the transmission.
(b) Measure the resistance.
Standard resistance

Tester Connection	Specified Condition
1 (OT2+) - 5 (OT2-)	79 Ω to 156 kΩ
1 (OT2+) - Body ground	10 kΩ or higher
5 (OT2-) - Body ground	10 kΩ or higher

HINT:
If the resistance is outside the specified range at either of the ATF temperatures shown in the table below, the driveability of the vehicle may decrease.

ATF Temperature:	Resistance:
20 °C (68°F)	3 to 4 kΩ
110 °C (230°F)	0.22 to 0.28 kΩ

NG → **REPAIR OR REPLACE TRANSMISSION WIRE**

OK

2 CHECK HARNESS AND CONNECTOR (TRANSMISSION WIRE - ECM)

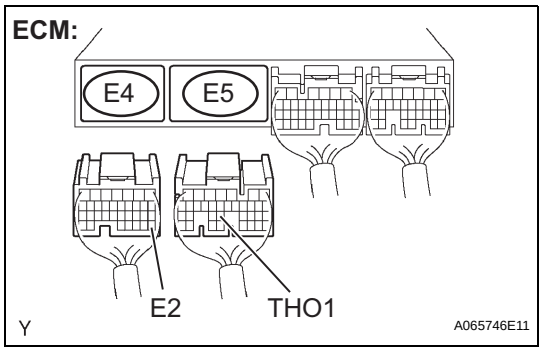

(a) Connect the transmission wire connector to the transmission.
(b) Disconnect the ECM connectors.
(c) Measure the resistance.
Standard resistance

Tester Connection	Specified Condition
E5-24 (THO1) - E4-28 (E2)	79 Ω to 156 kΩ
E5-24 (THO1) - Body ground	10 kΩ or higher
E4-28 (E2) - Body ground	10 kΩ or higher

NG → **REPAIR OR REPLACE HARNESS OR CONNECTOR**

OK

REPLACE ECM

DTC	P2757	Torque Converter Clutch Pressure Control Solenoid Performance (Shift Solenoid Valve SLU)

SYSTEM DESCRIPTION

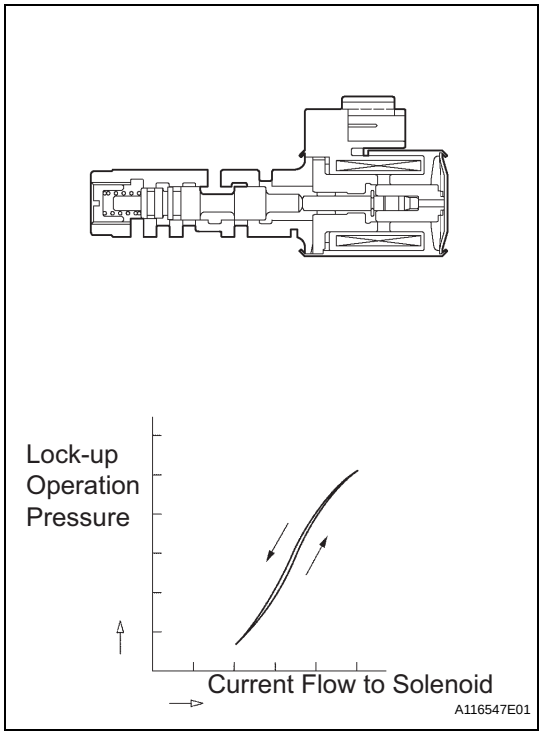

The ECM uses the signals from the throttle position sensor, mass air-flow meter, turbine (input) speed sensor, output speed sensor and crankshaft position sensor, to monitor the engagement condition of the lock-up clutch.
Then the ECM compares the engagement condition of the lock-up clutch with the lock-up schedule in the ECM memory to detect any mechanical problems with the shift solenoid valve SLU, valve body or torque converter clutch.

DTC No.	DTC Detection Conditions	Trouble Areas
P2757	Lock-up does not occur when driving in the lock-up range (normal driving at 50 mph [80 km/h]), or lock-up remains ON in the lock-up OFF range. (2-trip detection logic)	• Shift solenoid valve SLU remains open or closed • Valve body is blocked • Shift solenoid valve SLU • Torque converter clutch • Automatic transmission (clutch, brake or gear, etc.) • Line pressure is too low

MONITOR DESCRIPTION

Torque converter lock-up is controlled by the ECM based on turbine (input) speed sensor NCO, output speed sensor SP2, engine rpm, engine load, engine coolant temperature, vehicle speed, transmission fluid temperature, and gear selection. The ECM determines the lock-up status of the torque converter by comparing the engine rpm (NE) with the input turbine rpm (NCO). The ECM calculates the actual transmission gear by comparing the input turbine rpm (NCO) with output shaft rpm (SP2). When the conditions are appropriate, the ECM requests "lock-up" by applying the control voltage to the shift solenoid SLU. When the SLU is turned on, the solenoid SLU applies pressure to the lock-up relay valve and locks the torque converter clutch.
If the ECM detects no lock-up after lock-up has been requested or if it detects lock-up when it is not requested, the ECM interprets this as a fault in the shift solenoid valve SLU or lock-up system performance.

The ECM turns on the MIL and stores the DTC.
Example:
When any of the following are met, the ECM interprets it as a malfunction.
(a) There is a difference in rotation between before and after the torque converter even when the ECM requests lock-up.
(Engine speed is at least 70 rpm greater than the input turbine speed.)
(b) There is no difference in rotation between before and after the torque converter even when the ECM requests lock-up off.
(The difference between the engine speed and input turbine speed is less than 35 rpm.)

MONITOR STRATEGY

Related DTCs	P2757: Shift solenoid valve SLU/OFF malfunction Shift solenoid valve SLU/ON malfunction
Required sensors/Components	Shift solenoid valve SLU
Frequency of operation	Continuous
Duration	OFF malfunction: 2 seconds ON malfunction: 1.8 seconds
MIL operation	2 driving cycles
Sequence of operation	None

TYPICAL ENABLING CONDITIONS

The following items are common to all conditions below:

OFF malfunction and ON malfunction

The monitor will run whenever the following DTCs are not present.	None
Shift solenoid "A" (S1) circuit Shift solenoid "B" (S2) circuit ECT (Engine Coolant Temperature) sensor circuit Input speed sensor (NCO) circuit Output speed sensor (SP2) circuit	There is no malfunction in the sensor circuits shown on the left
ETCS (Electronic Throttle Control System)	System not down
Transmission shift position	"D"
ECT (Engine Coolant Temperature)	40°C (104°F) or more
Spark advance from max. retard timing by knock control	0°CA or more
Engine	Engine is running
ECM selected gear	3rd or 4th
Vehicle speed	15.5 mph (25 km/h) or more
Transfer neutral position switch	OFF

OFF malfunction

ECM lock-up request	ON (SLU pressure: 90 % or more)
Duration time from lock-up on request	3 seconds or more
Vehicle speed	6.2 mph (10 km/h) or more and Less than 62.2 mph (100 km/h)

ON malfunction

ECM lock-up request	OFF (SLU pressure: less than 10 %)
Throttle valve opening angle	10 % or more
Duration time from lock-up off request	1 second or more
Vehicle speed	Less than 37.3 mph (60 km/h)

TYPICAL MALFUNCTION THRESHOLDS

OFF malfunction

Engine speed - Output speed x 4th gear ratio	70 rpm or more

ON malfunction

2 detections are necessary in 1 driving cycle.
1st detection; temporary flag ON
2nd detection; pending fault code ON
Vehicle speed must be under 6 mph (10 km/h) once before the 2nd detection.

Engine speed - Input speed	Less than 35 rpm

COMPONENT OPERATING RANGE

Speed sensor (NCO)	Input speed is equal to engine speed when lock-up ON.

1. ACTIVE TEST

HINT:
Performing the ACTIVE TEST using the intelligent tester allows components, such as the relay, VSV, and actuator, to be operated without removing any parts. Performing the ACTIVE TEST as the first step of troubleshooting is one method of shortening labor time.
It is possible to display the DATA LIST during the ACTIVE TEST.

(a) Warm up the engine.
(b) Turn the ignition switch off.
(c) Connect the intelligent tester together with the CAN VIM (controller area network vehicle interface module) to the DLC3.
(d) Turn the ignition switch to the ON position.
(e) Push the "ON" button of the tester.
(f) Select the items "DIAGNOSIS/ ENHANCED OBD II/ ACTIVE TEST/ LOCK UP".
(g) According to the display on the tester, perform the "ACTIVE TEST".

Item	Test Details	Diagnostic Note
LOCK UP	[Test Details] Control the shift solenoid SLU to set the automatic transmission to the lock-up condition. [Vehicle Condition] Vehicle Speed: 37.3 mph (60 km/h) or more	Possible to check the SLU operation.

HINT:
This test can be conducted when the vehicle speed is 37 mph (60 km/h) or more.

(h) Lightly depress the accelerator pedal and check that the engine speed does not change abruptly.
HINT:
- When changing the accelerator pedal opening angle while driving, if the engine speed does not change, lock-up is on.
- Slowly release, but not fully, the accelerator pedal in order to decelerate. (Fully releasing the pedal causes closure of the throttle valve and lock-up may be turned off automatically.)

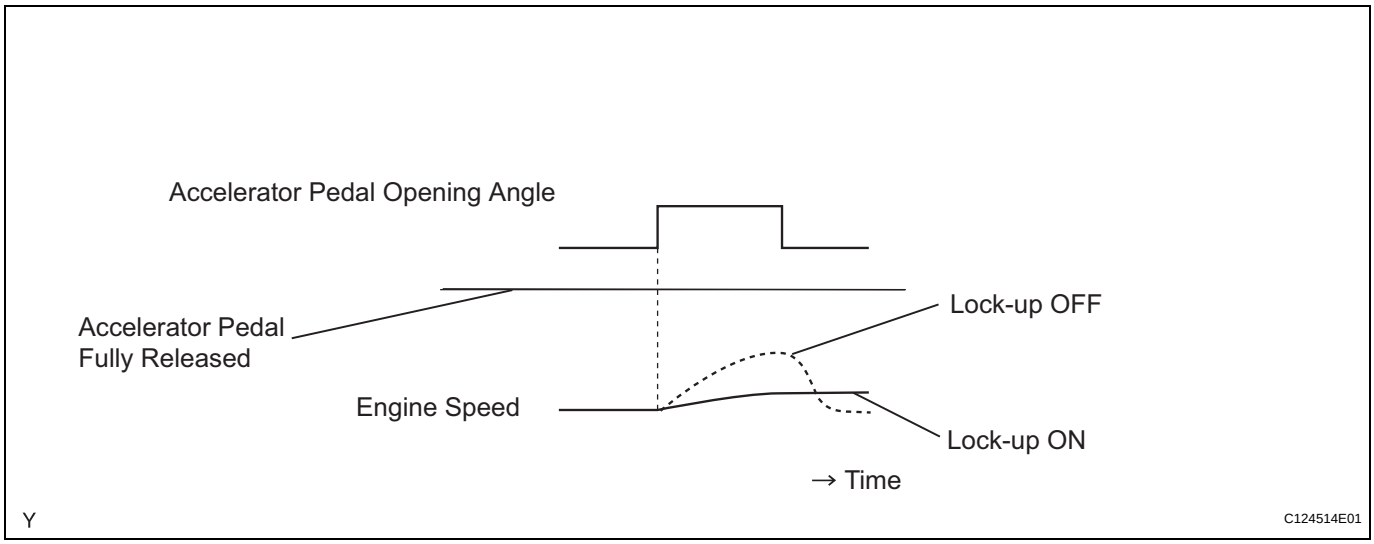

1	CHECK ANY OTHER DTCS OUTPUT (IN ADDITION TO DTC P2757)

(a) Connect the intelligent tester to the DLC3.
(b) Turn the ignition switch to the ON position and push the intelligent tester main switch ON.
(c) Select the items "DIAGNOSIS/ ENHANCED OBD II/ DTC INFO/ CURRENT CODES".
(d) Read the DTCs using the intelligent tester.

Result

Display (DTC Output)	Proceed to
Only "P2757" is output	A
"P2757" and other DTCs	B

HINT:
If any codes besides "P2757" are output, perform troubleshooting for those DTCs first.

B → GO TO DTC CHART

A

2 **INSPECT SHIFT SOLENOID VALVE SLU**

Shift Solenoid Valve SLU:

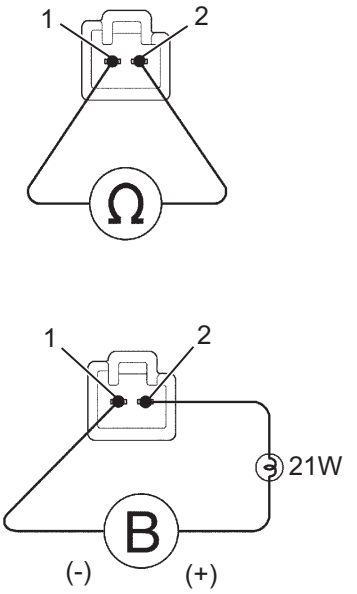

(a) Remove the shift solenoid valve SLU.
(b) Measure the resistance.
Standard resistance

Tester Connection	Specified Condition
1 - 2	5.1 to 5.5 Ω at 20°C (68°F)

(c) Connect the positive (+) lead with a 21 W bulb to terminal 2 and the negative (-) lead to terminal 1 of the solenoid valve connector, then check the movement of the valve.
OK:
The solenoid makes an operating sound.

NG → **REPLACE SHIFT SOLENOID VALVE SLU**

OK

3 **INSPECT TRANSMISSION VALVE BODY ASSEMBLY**

OK:
There are no foreign objects on any valves and they operate smoothly.

NG → **REPAIR OR REPLACE TRANSMISSION VALVE BODY ASSEMBLY**

OK

4 **INSPECT TORQUE CONVERTER CLUTCH ASSEMBLY**

OK:
The torque converter clutch operates normally.

NG → **REPLACE TORQUE CONVERTER CLUTCH ASSEMBLY**

OK

REPAIR OR REPLACE AUTOMATIC TRANSMISSION ASSEMBLY

DTC	P2759	Torque Converter Clutch Pressure Control Solenoid Control Circuit Electrical (Shift Solenoid Valve SLU)

DESCRIPTION

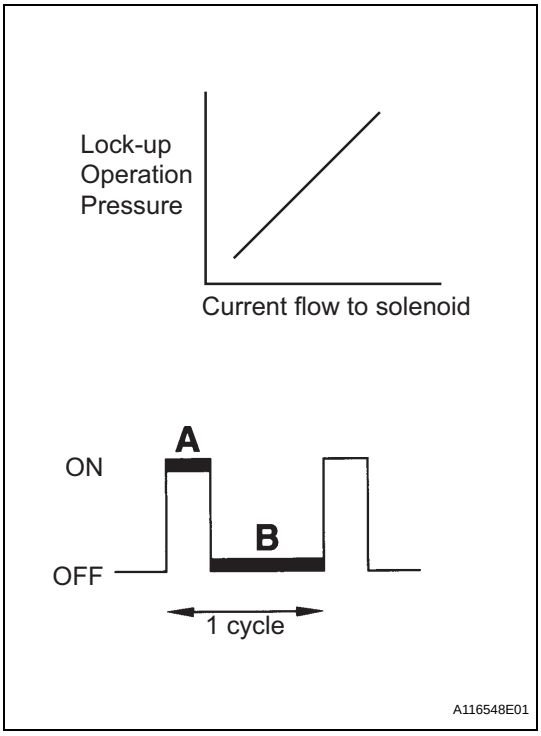

The current flow to the solenoid is controlled by the duty ratio* of the ECM output signal. The higher the duty ratio becomes, the higher the lock-up hydraulic pressure becomes during the lock-up operation.

*: The duty ratio is the ratio of the period of continuity in one cycle.

For example, if A is the period of continuity in one cycle, and B is the period of non-continuity, then Duty Ratio = A/(A+B) x 100(%).

DTC No.	DTC Detection Condition	Trouble Area
P2759	Open or short is detected in shift solenoid valve SLU circuit for 1 second or more while driving. (1-trip detection logic)	• Open or short in shift solenoid valve SLU circuit • Shift solenoid valve SLU • ECM

MONITOR DESCRIPTION

When an open or short is detected in the shift solenoid valve (SLU) circuit, the ECM determines that there is a malfunction. The ECM turns on the MIL and stores this DTC.

MONITOR STRATEGY

Related DTCs	P2759: Shift solenoid valve SLU/Range check
Required sensors/Components	Shift solenoid valve SLU
Frequency of operation	Continuous
Duration	1 second
MIL operation	Immediate
Sequence of operation	None

TYPICAL ENABLING CONDITIONS

The monitor will run whenever the following DTCs are not present.	None
Solenoid current cut status	Not cut
Battery voltage	11 V or more
CPU commanded duty ratio to SLU	19 % or more

TYPICAL MALFUNCTION THRESHOLDS

Solenoid status (SLU) from IC	Fail (Open or short) (Output signal duty ratio equal to 100 %)

COMPONENT OPERATING RANGE

Output signal duty ratio	Less than 100 %

WIRING DIAGRAM

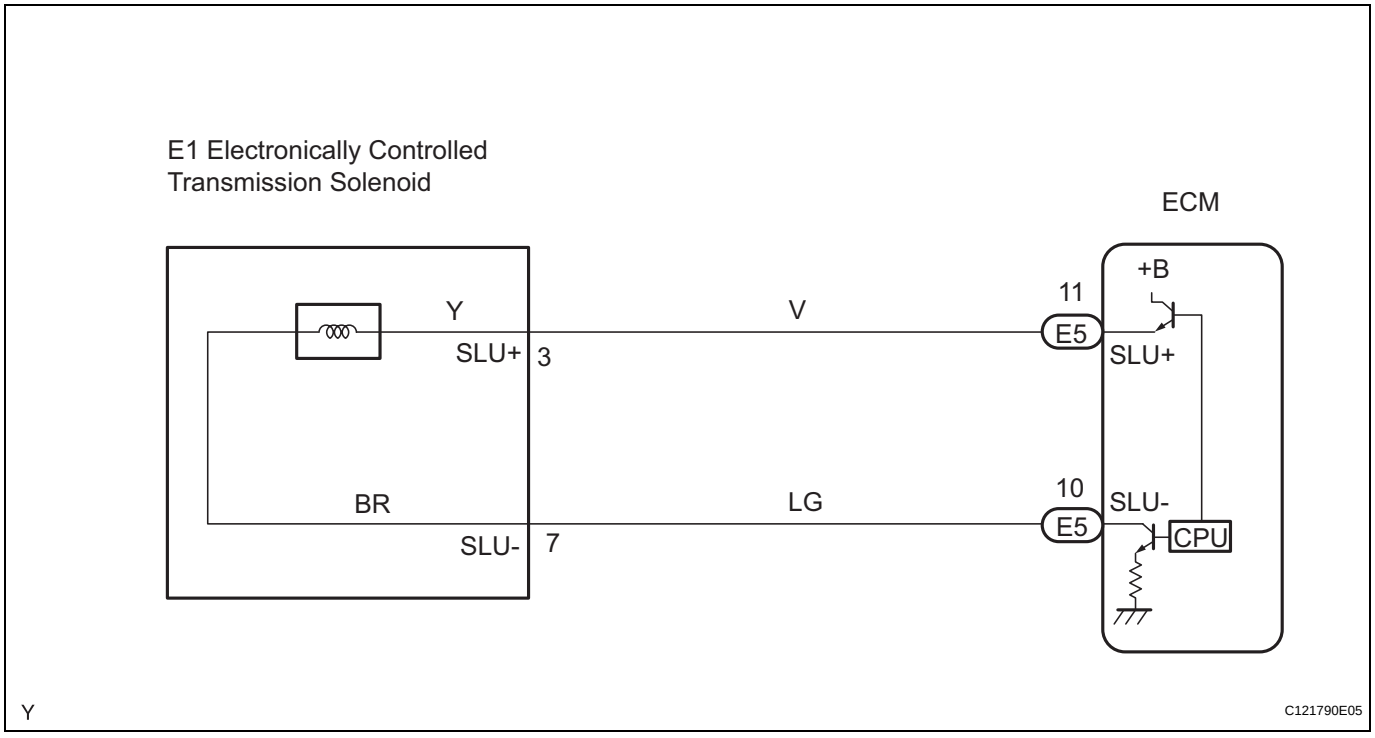

1 INSPECT TRANSMISSION WIRE (SLU)

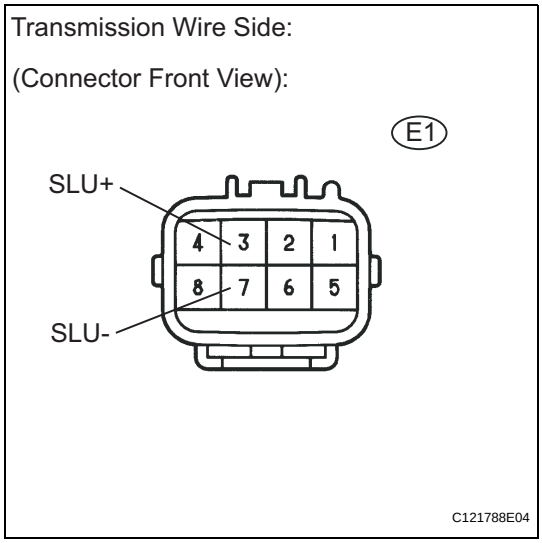

(a) Disconnect the transmission wire connector from the transmission.
(b) Measure the resistance.
Standard resistance

Tester Connection	Specified Condition
3 (SLU+) - 7 (SLU-)	5.1 to 5.5 Ω at 20°C (68°F)
3 (SLU+) - Body ground	10 kΩ or higher
7 (SLU-) - Body ground	10 kΩ or higher

NG → **Go to step 3**

OK

2 CHECK HARNESS AND CONNECTOR (TRANSMISSION WIRE - ECM)

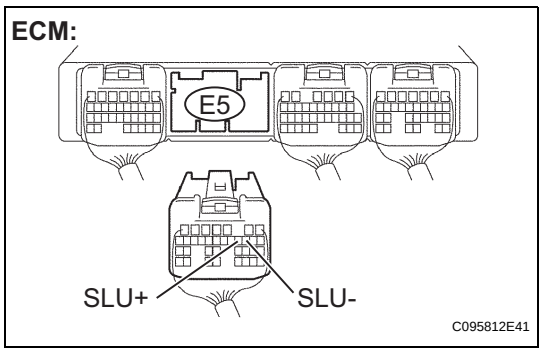

(a) Connect the transmission wire connector to the transmission.
(b) Disconnect the ECM connector.
(c) Measure the resistance.
Standard resistance

Tester Connection	Specified Condition
E5-11 (SLU+) - E5-10 (SLU-)	5.1 to 5.5 Ω at 20°C (68°F)
E5-11 (SLU+) - Body ground	10 kΩ or higher
E5-10 (SLU-) - Body ground	10 kΩ or higher

NG → **REPAIR OR REPLACE HARNESS OR CONNECTOR**

OK

REPLACE ECM

3	INSPECT SHIFT SOLENOID VALVE SLU

Shift Solenoid Valve SLU:

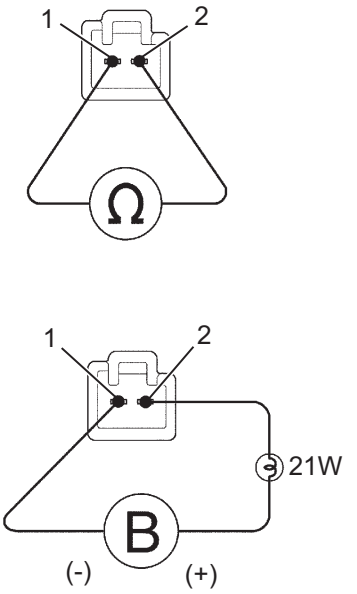

(a) Remove the shift solenoid valve SLU.
(b) Measure the resistance.
Standard resistance

Tester Connection	Specified Condition
1 - 2	5.1 to 5.5 Ω at 20°C (68°F)

(c) Connect the positive (+) lead with a 21 W bulb to terminal 2 and the negative (-) lead to terminal 1 of the solenoid valve connector, then check the movement of the valve.
OK:
The solenoid makes an operating sound.

NG → **REPLACE SHIFT SOLENOID VALVE SLU**

OK

REPAIR OR REPLACE TRANSMISSION WIRE

INSTALLATION

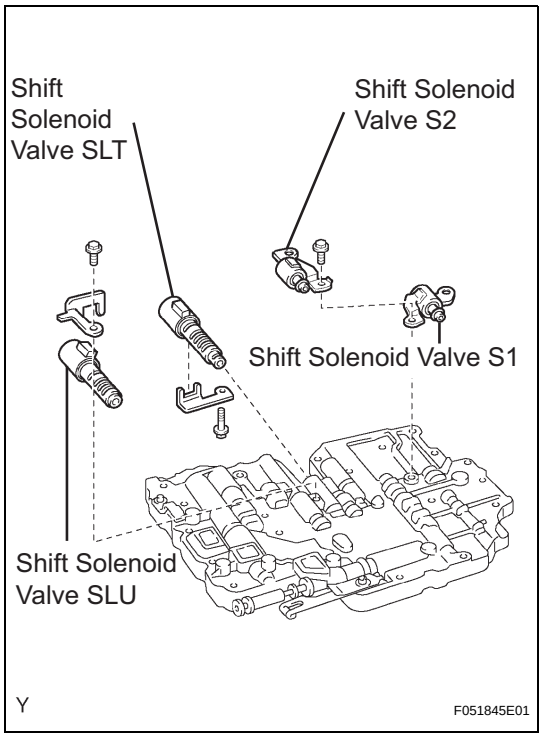

1. INSTALL TRANSMISSION VALVE BODY ASSEMBLY

(a) Install the shift solenoid valve SLU with the bolt.
Torque: 6.4 N*m (65 kgf*cm, 56 in.*lbf)

(b) Install the shift solenoid valves S1 and S2 with the bolt.
Torque: 6.4 N*m (65 kgf*cm, 56 in.*lbf)

(c) Install the shift solenoid valve SLT with the bolt.
Torque: 6.4 N*m (65 kgf*cm, 56 in.*lbf)

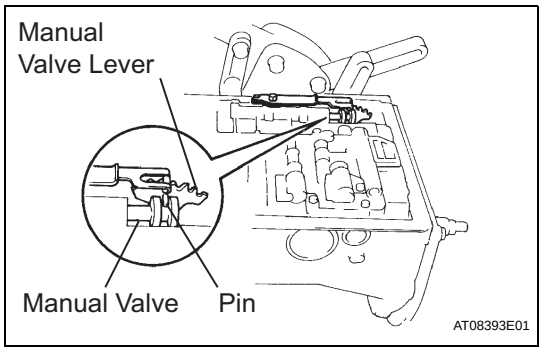

(d) Align the groove of the manual valve with the pin of the lever.

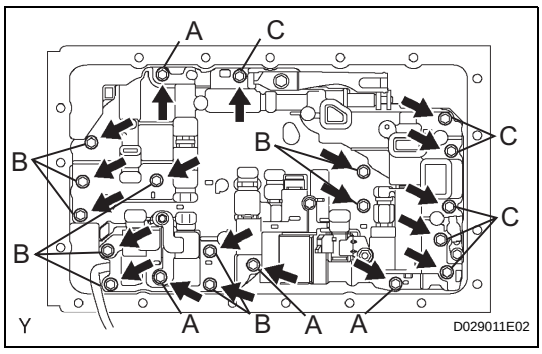

(e) Install the 20 bolts.
Torque: 11 N*m (110 kgf*cm, 8 ft.*lbf)
Bolt length:
Bolt A: 23 mm (0.91 in.)
Bolt B: 28 mm (1.10 in.)
Bolt C: 36 mm (1.42 in.)

2. INSTALL TRANSMISSION WIRE (See page AT-89)

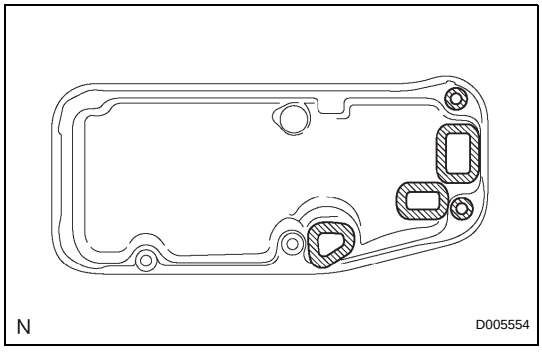

3. INSTALL VALVE BODY OIL STRAINER ASSEMBLY

(a) Install 5 new gaskets.

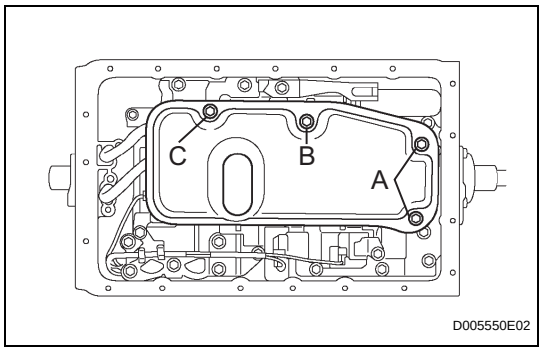

(b) Install the oil strainer with the 4 bolts.
Torque: 10 N*m (100 kgf*cm, 7 ft.*lbf)
Bolt length:
Bolt A: 14 mm (0.55 in.)
Bolt B: 20 mm (0.79 in.)
Bolt C: 23 mm (0.91 in.)

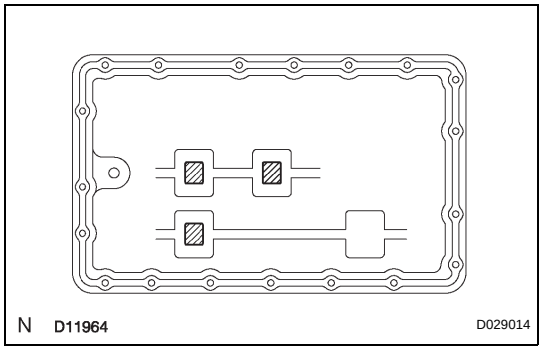

4. INSTALL AUTOMATIC TRANSMISSION OIL PAN SUB-ASSEMBLY
HINT:
Remove any packing material and be careful not to drop oil on the contact surfaces of the transmission case and oil pan sub-assembly.
(a) Install the 3 magnets onto the oil pan sub-assembly, in the portions indicated in the illustration.

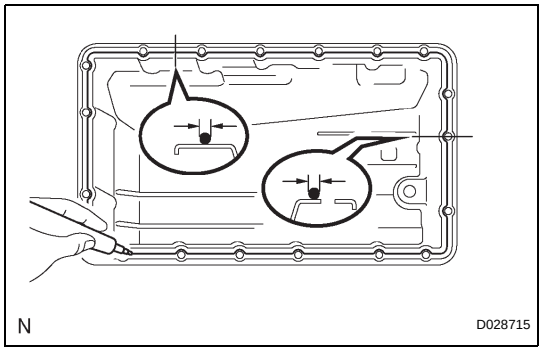

(b) Apply FIPG to the oil pan, as shown in the illustration.
FIPG:
Part No.08826-00090, THREE BOND 1281 or equivalent
(c) Install the oil pan sub-assembly with the 19 bolts.
Torque: 7.4 N*m (75 kgf*cm, 65 in.*lbf)

5. INSTALL TRANSMISSION OIL FILLER TUBE SUB-ASSEMBLY (See page AT-116)

6. CONNECT CABLE TO NEGATIVE BATTERY TERMINAL
Torque: 3.9 N*m (40 kgf*cm, 35 in.*lbf)

7. ADD AUTOMATIC TRANSMISSION FLUID

8. INSPECT AUTOMATIC TRANSMISSION FLUID (See page AT-85)

CHECK MODE PROCEDURE

1. DESCRIPTION

Check mode has a higher sensitivity to malfunctions and can detect malfunctions that normal mode cannot detect. Check mode can also detect all the malfunctions that normal mode can detect. In check mode, DTCs are detected with 1 trip detection logic.

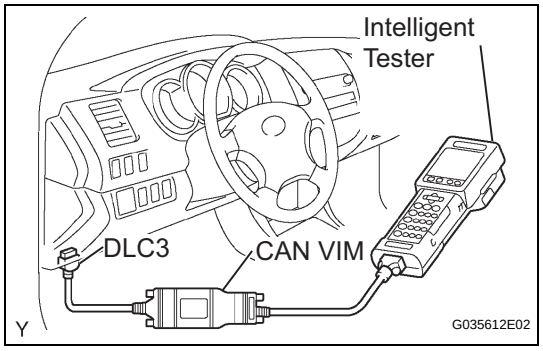

2. CHECK MODE PROCEDURE

(a) Ensure the following conditions:
  (1) Battery positive voltage 11 V or more
  (2) Throttle valve fully closed
  (3) Transmission in the P or N position
  (4) A/C switched off

(b) Turn the ignition switch off.

(c) Connect the intelligent tester together with the Controller Area Network Vehicle Interface Module (CAN VIM) to the DLC3.

(d) Turn the ignition switch to the ON position.

(e) Enter the following menus: DIAGNOSIS/ ENHANCED OBD II/ CHECK MODE.

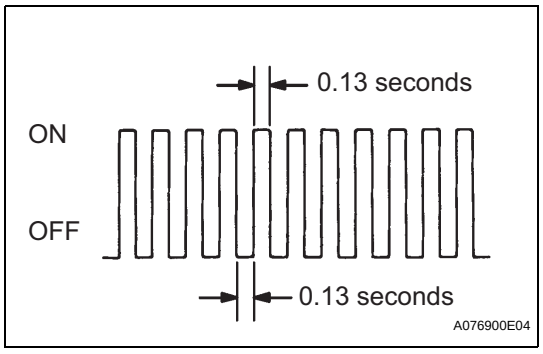

(f) Change the ECM to check mode. Make sure the MIL flashes as shown in the illustration.

NOTICE:

All recorded DTCs and freeze frame data will be erased if: 1) the intelligent tester is used to change the ECM from normal mode to check mode or vice-versa; or 2) during check mode, the ignition switch is turned from ON to ACC or LOCK.

Before entering check mode, make notes of the DTCs and freeze frame data.

(g) Start the engine. The MIL should turn off after the engine starts.

(h) Perform "MONITOR DRIVE PATTERN" for the ECT test (See page AT-19).

(Or, simulate the conditions of the malfunction described by the customer).

(i) After simulating the malfunction conditions, use the intelligent tester diagnosis selector to check the DTC and freeze frame data.

FAIL-SAFE CHART

1. FAIL-SAFE CHART

This function minimizes the loss of the ECT functions when a malfunction occurs in each sensor or solenoid.

Malfunction Part	Function
DTC P0710, P0712 and P0713: No. 1 ATF Temperature Sensor	During a No. 1 ATF temperature sensor malfunction, up-shift to the 5th gear and flex lock-up clutch control are prohibited.
DTC P0722: Output Speed Sensor (SP2)	During an output speed sensor malfunction, shift control is effected through the input speed sensor signal (NT).
DTC P0751, P0756, P0771, P0973, P0974, P0976, P0977, P0985 and P0986: Shift Solenoid Valve S1, S2 and SR	The current to the failed solenoid valve is cut off and control is effected by operating the other solenoid valves with normal operation. Shift control is effected depending on the failed solenoid as described in the table below.
DTC P0748, P0776 and P0778: Shift Solenoid Valve SL1 and SL2	During a solenoid valve SL1 or SL2 malfunction, up-shift to the 5th gear is prohibited.
DTC P02714 and P2716: Shift Solenoid Valve SLT	During a solenoid valve SLT malfunction, the current to the solenoid valve is stopped. This stops line pressure optimal control, and shift shock increases. However, shifting is effected through normal clutch pressure control.
DTC P2757: Shift Solenoid Valve SLU	During a solenoid valve SLU malfunction, the current to the solenoid valve is stopped. This stops lock-up control and flex lock-up control, and fuel economy decreases.

Fail-safe function:

If either of the shift solenoid valve circuits has an open or short failure, the ECM turns the other shift solenoid ON and OFF in order to shift into the gear positions shown in the table below.

In case of a short circuit, the ECM stops sending current to the short circuit solenoid.

Even if starting the engine again in the fail-safe mode, the gear position remains in the same position.

Position	NORMAL						S1 OFF					
	Gear	S1	S2	SR	SL1	SL2	Gear	S1	S2	SR	SL1	SL2
R	R	ON	OFF	OFF	OFF	ON	R	OFF	OFF	OFF	OFF	ON
D	1st	ON	OFF	OFF	OFF	ON	4th ↓ 3rd	OFF	OFF ↓ ON	OFF	OFF	ON
	2nd	ON	ON	OFF	OFF	ON	3rd	OFF	ON	OFF	OFF	ON
	3rd	OFF	ON	OFF	OFF	ON	3rd	OFF	ON	OFF	OFF	ON
	4th	OFF	OFF	OFF	OFF	ON	4th	OFF	OFF	OFF	OFF	ON
	5th	OFF	OFF	ON	ON	OFF	5th	OFF	OFF	ON	ON	OFF
3	1st	ON	OFF	OFF	OFF	ON	3rd ↓ 3rd E/B	OFF	OFF ↓ ON	OFF	OFF	ON ↓ OFF
	2nd	ON	ON	OFF	OFF	ON	3rd ↓ 3rd E/B	OFF	ON	OFF	OFF	ON ↓ OFF
	3rd E/B	OFF	ON	OFF	OFF	OFF	3rd E/B	OFF	ON	OFF	OFF	OFF
	4th	OFF	OFF	ON	OFF	ON	4th	OFF	OFF	ON	OFF	ON
	5th	OFF	OFF	ON	ON	OFF	5th	OFF	OFF	ON	ON	OFF
2	1st	ON	OFF	OFF	OFF	ON	1st	OFF	OFF	OFF	OFF	ON
	2nd E/B	ON	ON	ON	OFF	OFF	3rd E/B	OFF	ON	ON	OFF	OFF
	3rd E/B	OFF	ON	ON	OFF	OFF	3rd E/B	OFF	ON	ON	OFF	OFF
	4th	OFF	OFF	ON	OFF	ON	4th	OFF	OFF	ON	OFF	ON
	5th	OFF	OFF	ON	ON	OFF	5th	OFF	OFF	ON	ON	OFF

Position	NORMAL						S1 OFF					
	Gear	S1	S2	SR	SL1	SL2	Gear	S1	S2	SR	SL1	SL2
L	1st E/B	ON	OFF	OFF	OFF	OFF	1st E/B	OFF	OFF	OFF	OFF	OFF
	2nd E/B	ON	ON	ON	OFF	OFF	3rd E/B	OFF	ON	ON	OFF	OFF
	3rd E/B	OFF	ON	ON	OFF	OFF	3rd E/B	OFF	ON	ON	OFF	OFF
	4th	OFF	OFF	ON	OFF	ON	4th	OFF	OFF	ON	OFF	ON
	5th	OFF	OFF	ON	ON	OFF	5th	OFF	OFF	ON	ON	OFF

Position	S2 OFF						SR OFF					
	Gear	S1	S2	SR	SL1	SL2	Gear	S1	S2	SR	SL1	SL2
R	R	ON	OFF	OFF	OFF	ON	R	ON	OFF	OFF	OFF	ON
D	1st	ON	OFF	OFF	OFF	ON	1st	ON	OFF	OFF	OFF	ON
	1st ↓ 4th	ON ↓ OFF	OFF	OFF	OFF	ON	2nd	ON	ON	OFF	OFF	ON
	4th	OFF	OFF	OFF	OFF	ON	3rd	OFF	ON	OFF	OFF	ON
	4th	OFF	OFF	OFF	OFF	ON	4th	OFF	OFF	OFF	OFF	ON
	5th	OFF	OFF	ON	ON	OFF	4th	OFF	OFF	OFF	ON	OFF
3	1st	ON	OFF	OFF	OFF	ON	1st	ON	OFF	OFF	OFF	ON
	1st ↓ 3rd E/B	ON ↓ OFF	OFF	OFF	OFF	ON ↓ OFF	2nd	ON	ON	OFF	OFF	ON
	3rd E/B	OFF	OFF	OFF	OFF	OFF	3rd E/B ↓ 3rd	OFF	ON	OFF	OFF	OFF ↓ ON
	4th	OFF	OFF	ON	OFF	ON	3rd	OFF	OFF ↓ ON	OFF	OFF	ON ↓ ON
	5th	OFF	OFF	ON	ON	OFF	3rd E/B ↓ 3rd	OFF	OFF ↓ ON	OFF	ON ↓ OFF	OFF ↓ ON
2	1st	ON	OFF	OFF	OFF	ON	1st	ON	OFF	OFF	OFF	ON
	2nd E/B ↓ 4th	ON ↓ OFF	OFF	ON	OFF	OFF ↓ ON	2nd	ON	ON	OFF	OFF	OFF
	Fail 4th	OFF	OFF	ON	OFF	OFF ↓ ON	2nd	OFF ↓ ON	ON	OFF	OFF	OFF
	4th	OFF	OFF	ON	OFF	ON	1st ↓ 2nd	OFF ↓ ON	OFF ↓ ON	OFF	OFF	ON ↓ OFF
	5th	OFF	OFF	ON	ON	OFF	1st E/B ↓ 2nd	OFF ↓ ON	ON	OFF	ON ↓ OFF	OFF
L	1st E/B	ON	OFF	OFF	OFF	OFF	1st E/B	ON	OFF	OFF	OFF	OFF
	2nd E/B ↓ 4th	ON ↓ OFF	OFF	ON	OFF	OFF ↓ ON	2nd	ON	ON	OFF	OFF	OFF
	Fail 4th	OFF	OFF	ON	OFF	OFF ↓ ON	2nd	OFF ↓ ON	ON	OFF	OFF	OFF
	4th	OFF	OFF	ON	OFF	ON	1st ↓ 2nd	OFF ↓ ON	OFF ↓ ON	OFF	OFF	ON ↓ OFF
	5th	OFF	OFF	ON	ON	OFF	1st E/B ↓ 2nd	OFF ↓ ON	OFF ↓ ON	OFF	ON ↓ OFF	OFF

Position	S1 S2 OFF						S2 SR OFF					
	Gear	S1	S2	SR	SL1	SL2	Gear	S1	S2	SR	SL1	SL2
R	R	OFF	OFF	OFF	OFF	ON	R	ON	OFF	OFF	OFF	ON
D	4th	OFF	OFF	OFF	OFF	ON	1st	ON	OFF	OFF	OFF	ON
	4th	OFF	OFF	OFF	OFF	ON	1st ↓ 4th	ON ↓ OFF	OFF	OFF	OFF	ON
	4th	OFF	OFF	OFF	OFF	ON	4th	OFF	OFF	OFF	OFF	ON
	4th	OFF	OFF	OFF	OFF	ON	4th	OFF	OFF	OFF	OFF	ON
	5th	OFF	OFF	ON	ON	OFF	4th	OFF	OFF	OFF	ON ↓ OFF	OFF ↓ ON
3	3rd ↓ 3rd E/B	OFF	OFF	OFF	OFF	ON ↓ OFF	1st	ON	OFF	OFF	OFF	ON
	3rd ↓ 3rd E/B	OFF	OFF	OFF	OFF	ON ↓ OFF	1st ↓ 3rd	ON ↓ OFF	OFF	OFF	OFF	ON ↓ ON
	3rd E/B	OFF	OFF	OFF	OFF	OFF	3rd E/B ↓ 3rd	OFF	OFF	OFF	OFF	OFF ↓ ON
	4th	OFF	OFF	ON	OFF	ON	3rd	OFF	OFF	OFF	OFF	ON ↓ ON
	5th	OFF	OFF	ON	ON	OFF	1st E/B ↓ 3rd	OFF	OFF	OFF	ON ↓ OFF	OFF ↓ ON
2	1st	OFF	OFF	OFF	OFF	ON	1st	ON	OFF	OFF	OFF	ON
	Fail 4th	OFF	OFF	ON	OFF	OFF ↓ ON	1st E/B ↓ 1st	ON	OFF	OFF	OFF	OFF ↓ ON
	Fail 4th	OFF	OFF	ON	OFF	OFF ↓ ON	1st E/B ↓ 1st	OFF ↓ ON	OFF	OFF	OFF	OFF ↓ ON
	4th	OFF	OFF	ON	OFF	ON	1st	OFF ↓ ON	OFF	OFF	OFF	ON
	5th	OFF	OFF	ON	ON	OFF	1st E/B ↓ 1st	OFF ↓ ON	OFF	OFF	ON ↓ OFF	OFF ↓ ON
L	1st E/B	OFF	OFF	OFF	OFF	OFF	1st E/B	ON	OFF	OFF	OFF	OFF
	Fail 4th	OFF	OFF	ON	OFF	OFF ↓ ON	1st E/B ↓ 1st	ON	OFF	OFF	OFF	OFF ↓ ON
	Fail 4th	OFF	OFF	ON	OFF	OFF ↓ ON	1st E/B ↓ 1st	OFF ↓ ON	OFF	OFF	OFF	OFF ↓ ON
	4th	OFF	OFF	ON	OFF	ON	1st	OFF ↓ ON	OFF	OFF	OFF	ON
	5th	OFF	OFF	ON	ON	OFF	1st E/B ↓ 1st	OFF ↓ ON	OFF	OFF	ON ↓ OFF	OFF ↓ ON

Position	S1 SR OFF						S1 S2 SR OFF					
	Gear	S1	S2	SR	SL1	SL2	Gear	S1	S2	SR	SL1	SL2
R	R	OFF	OFF	OFF	OFF	ON	R	OFF	OFF	OFF	OFF	ON

Position	S1 SR OFF						S1 S2 SR OFF					
	Gear	S1	S2	SR	SL1	SL2	Gear	S1	S2	SR	SL1	SL2
D	4th ↓ 3rd	OFF	OFF ↓ ON	OFF	OFF	ON	4th	OFF	OFF	OFF	OFF	ON
	3rd	OFF	ON	OFF	OFF	ON	4th	OFF	OFF	OFF	OFF	ON
	3rd	OFF	ON	OFF	OFF	ON	4th	OFF	OFF	OFF	OFF	ON
	4th	OFF	OFF	OFF	OFF	ON	4th	OFF	OFF	OFF	OFF	ON
	4th	OFF	OFF	OFF	ON ↓ OFF	OFF ↓ ON	4th	OFF	OFF	OFF	ON ↓ OFF	OFF ↓ ON
3	3rd	OFF	OFF ↓ ON	OFF	OFF	ON ↓ ON	3rd	OFF	OFF	OFF	OFF	ON ↓ ON
	3rd	OFF	ON	OFF	OFF	ON ↓ ON	3rd	OFF	OFF	OFF	OFF	ON ↓ ON
	3rd E/B ↓ 3rd	OFF	ON	OFF	OFF	OFF ↓ ON	3rd E/B ↓ 3rd	OFF	OFF	OFF	OFF	OFF ↓ ON
	3rd	OFF	OFF ↓ ON	OFF	OFF	ON ↓ ON	3rd	OFF	OFF	OFF	OFF	ON ↓ ON
	3rd E/B ↓ 3rd	OFF	OFF ↓ ON	OFF	ON ↓ OFF	OFF ↓ ON	3rd E/B ↓ 3rd	OFF	OFF	OFF	ON ↓ OFF	OFF ↓ ON
2	1st	OFF	OFF	OFF	OFF	ON	1st	OFF	OFF	OFF	OFF	ON
	2nd	OFF	ON	OFF	OFF	OFF	1st E/B ↓ 1st	OFF	OFF	OFF	OFF	OFF ↓ ON
	2nd	OFF	ON	OFF	OFF	OFF	1st E/B ↓ 1st	OFF	OFF	OFF	OFF	OFF ↓ ON
	1st ↓ 2nd	OFF	OFF ↓ ON	OFF	OFF	ON ↓ OFF	1st	OFF	OFF	OFF	OFF	ON
	1st E/B ↓ 2nd	OFF	OFF ↓ ON	OFF	ON ↓ OFF	OFF	1st E/B ↓ 1st	OFF	OFF	OFF	ON ↓ OFF	OFF ↓ ON
L	1st E/B	OFF	OFF	OFF	OFF	OFF	1st E/B	OFF	OFF	OFF	OFF	OFF
	2nd	OFF	ON	OFF	OFF	OFF	1st E/B ↓ 1st	OFF	OFF	OFF	OFF	OFF ↓ ON
	2nd	OFF	ON	OFF	OFF	OFF	1st E/B ↓ 1st	OFF	OFF	OFF	OFF	OFF ↓ ON
	1st ↓ 2nd	OFF	OFF ↓ ON	OFF	OFF	ON ↓ OFF	1st	OFF	OFF	OFF	OFF	ON
	1st E/B ↓ 2nd	OFF	OFF ↓ ON	OFF	ON ↓ OFF	OFF	1st E/B ↓ 1st	OFF	OFF	OFF	ON ↓ OFF	OFF ↓ ON

HINT:

- ↓: Condition in the electrical malfunction is shown above "↓".
- ↓: Condition in the fail-safe mode is shown below "↓".
- E/B: Engine brake.

AT

DATA LIST / ACTIVE TEST

1. DATA LIST

HINT:

According to the DATA LIST displayed on the intelligent tester, you can read the values of components, such as the switches, sensors and actuators, without removing any parts. Reading the DATA LIST as a first step of troubleshooting is one method of shortening labor time.

NOTICE:

In the table below, the values listed under "Normal Condition" are for reference only. Do not depend solely on these reference values when judging whether a part is faulty or not.

(a) Warm up the engine.

(b) Turn the ignition switch off.

(c) Connect the intelligent tester together with the CAN VIM (controller area network vehicle interface module) to the DLC3.

(d) Turn the ignition switch to the ON position.

(e) Push the "ON" button of the tester.

(f) Select the items "DIAGNOSIS/ ENHANCED OBD II/ DATA LIST/ A/T".

(g) According to the display on the tester, read the "DATA LIST".

Item	Measurement Item/ Display (Range)	Normal Condition	Diagnostic Note
SPD (SP2)	Counter Gear Speed / min.: 0 mph (0 km/h) max.: 158 mph (255 km/h)	Vehicle stopped: 0 mph (0 km/h)	-
SPD (NT)	Input Turbine Speed/ display: 50 rpm	[HINT] • Lock-up ON (After warming up the engine); Input turbine speed (NT) equal to the engine speed. • Lock-up OFF (Idling in N position); Input turbine speed (NT) nearly equal to the engine speed.	-
PNP SW [NSW]	PNP Switch Status/ ON or OFF	Shift lever position is; P or N: ON Except P or N: OFF	When the shift lever position displayed on the intelligent tester differs from the actual position, adjustment of the PNP switch or the shift cable may be incorrect. HINT: When the failure still occurs even after adjusting these parts. (See page AT-142)
STOP LIGHT SW	Stop Light Switch Status/ ON or OFF	• Brake Pedal is depressed: ON • Brake Pedal is released: OFF	-
SHIFT	ECM gear shift command/ 1st, 2nd, 3rd, 4th or 5th	Shift Lever Position is; • L: 1st • 2: 1st or 2nd • 3: 1st, 2nd or 3rd • 4: 1st, 2nd, 3rd or 4th • D: 1st, 2nd, 3rd, 4th or 5th	-
REVERSE	PNP Switch Status/ ON or OFF	Shift lever position is; R: ON Except R: OFF	Same as PNP SW [NSW]

Item	Measurement Item/ Display (Range)	Normal Condition	Diagnostic Note
DRIVE	PNP Switch Status/ ON or OFF	Shift lever position is; D and 4: ON Except D and 4: OFF	Same as PNP SW [NSW]
4th/DRIVE	PNP Switch Status/ ON or OFF	Shift lever position is; 4: ON Except 4: OFF	Same as PNP SW [NSW]
3RD	PNP Switch Status/ ON or OFF	Shift lever position is; 3: ON Except 3: OFF	Same as PNP SW [NSW]
2ND	PNP Switch Status/ ON or OFF	Shift lever position is; 2 and L: ON Except 2 and L: OFF	Same as PNP SW [NSW]
LOW	PNP Switch Status/ ON or OFF	Shift lever position is; L: ON Except L: OFF	Same as PNP SW [NSW]
AT OIL TEMP1	No. 1 ATF Temperature Sensor Value/ min.: -40°C (-40°F) max.: 215°C (419°F)	• After Stall Test; Approximately 80°C (176°F) • Equal to ambient temperature during cold soak	If the value is "-40°C (-40°F)" or "150°C (302°F) or more", No. 1 ATF temperature sensor circuit is open or short.
AT OIL TEMP2	No. 2 ATF Temperature Sensor Value/ min.: -40°C (-40°F) max.: 215°C (419°F)	• After Stall Test; Approximately 80°C (176°F) • Equal to ambient temperature during cold soak	If the value is "-40°C (-40°F)" or "150°C (302°F) or more", No. 2 ATF temperature sensor circuit is open or short.
LOCK UP SOL	Lock Up Solenoid Status/ ON or OFF	• Lock Up: ON • Except Lock Up: OFF	-
SOLENOID (SLU)	Shift Solenoid SLU Status/ ON or OFF	• Lock Up: ON • Except Lock Up: OFF	-
SOLENOID (SLT)	Shift Solenoid SLT Status/ ON or OFF	IG SW ON: ON	-

2. ACTIVE TEST

HINT:

Performing the ACTIVE TEST using the intelligent tester allows components, such as the relay, VSV, and actuator, to be operated without removing any parts. Performing the ACTIVE TEST as a first step of troubleshooting is one method of shortening labor time. It is possible to display the DATA LIST during the ACTIVE TEST.

(a) Warm up the engine.
(b) Turn the ignition switch off.
(c) Connect the intelligent tester together with the CAN VIM (controller area network vehicle interface module) to the DLC3.
(d) Turn the ignition switch to the ON position.
(e) Push the "ON" button of the tester.
(f) Select the items "DIAGNOSIS/ ENHANCED OBD II/ ACTIVE TEST".

(g) According to the display on the tester, perform the "ACTIVE TEST".

Item	Test Details	Diagnostic Note
LINE PRESS UP *	[Test Details] Operate the shift solenoid SLT to raise the line pressure. [Vehicle Condition] • Vehicle Stopped • IDL: ON [HINT] OFF: Line pressure up (When the active test of "LINE PRESS UP" is performed, the ECM commands the SLT solenoid to turn off). ON: No action (normal operation)	-
LOCK UP	[Test Details] Control the shift solenoid SLU to set the automatic transmission to the lock-up condition. [Vehicle Condition] Vehicle Speed: 36 mph (60 km/h) or more	Possible to check the SLU operation.
SHIFT	[Test Details] Operate the shift solenoid valve and set each shift position manually. [Vehicle Condition] Vehicle Speed: Less than 30 mph (50 km/h) [Others] • Press →button: Shift up • Press ←button: Shift down	Possible to check the operation of the shift solenoid valves. HINT: Shifting to the 5th gear is possible only when the vehicle is stationary with the engine idling.

*: "LINE PRESS UP" in the ACTIVE TEST is performed to check the line pressure changes by connecting SST to the automatic transmission, which is used in the HYDRAULIC TEST (See page AT-16) as well.
HINT:
The pressure values in ACTIVE TEST and HYDRAULIC TEST are different from each other.

DIAGNOSTIC TROUBLE CODE CHART

If a DTC is displayed during the DTC check, check the circuit listed in the table below and proceed to the page given.
HINT:

- *1: "Comes on" means that the MIL will illuminate.
- *2: "DTC stored" means that the ECM memorizes the malfunction code if the DTC detection condition(s) are met.
- These DTCs may be output when the clutch, brake and gear components, etc., inside the automatic transmission are damaged.

DTC No.	Detection Item	Trouble Areas	MIL *1	Memory *2	See page
P0705	Transmission Range Sensor Circuit Malfunction (PRNDL Input)	- Open or short in park/neutral position switch circuit - Park/neutral position switch - ECM	Comes on	DTC stored	AT-43
P0710	Transmission Fluid Temperature Sensor "A" Circuit	- Open or short in No. 1 ATF temperature sensor circuit - Transmission wire (No. 1 ATF temperature sensor) - ECM	Comes on	DTC stored	AT-49
P0711	Transmission Fluid Temperature Sensor "A" Performance	- Transmission wire (No. 1 ATF temperature sensor) - ECM	Comes on	DTC stored	AT-54
P0712	Transmission Fluid Temperature Sensor "A" Circuit Low Input	- Short in No. 1 ATF temperature sensor circuit - Transmission wire (No. 1 ATF temperature sensor) - ECM	Comes on	DTC stored	AT-49
P0713	Transmission Fluid Temperature Sensor "A" Circuit High Input	- Open in No. 1 ATF temperature sensor circuit - Transmission wire (No. 1 ATF temperature sensor) - ECM	Comes on	DTC stored	AT-49
P0717	Input Speed Sensor Circuit No Signal	- Open or short in speed sensor (NT) circuit - Speed sensor (NT) - ECM	Comes on	DTC stored	AT-57
P0722	Output Speed Sensor Circuit No Signal	- Open or short in speed sensor (SP2) circuit - Speed sensor (SP2) - ECM	Comes on	DTC stored	AT-62
P0748	Pressure Control Solenoid "A" Electrical (Shift Solenoid Valve SL1)	- Open or short in shift solenoid valve SL1 circuit - Shift solenoid valve SL1 - ECM	Comes on	DTC stored	AT-66

DTC No.	Detection Item	Trouble Areas	MIL *1	Memory *2	See page
P0751	Shift Solenoid "A" Performance (Shift Solenoid Valve S1)	- Shift solenoid valve S1 remains open or closed - Shift solenoid valve SLT remains open or closed - Valve body is blocked - Automatic transmission (clutch, brake or gear, etc.)	Comes on	DTC stored	AT-69
P0756	Shift Solenoid "B" Performance (Shift Solenoid Valve S2)	- Shift solenoid valve S2 remains open or closed - Shift solenoid valve SLT remains open or closed - Valve body is blocked - Automatic transmission (clutch, brake or gear, etc.)	Comes on	DTC stored	AT-75
P0771	Shift Solenoid "E" Performance (Shift Solenoid Valve SR)	- Shift solenoid valve SR remains open or closed - Shift solenoid valve SL1 remains open or closed - Shift solenoid valve SLT remains open or closed - Valve body is blocked - Automatic transmission (clutch, brake or gear, etc.)	Comes on	DTC stored	AT-81
P0776	Pressure Control Solenoid "B" Performance (Shift Solenoid Valve SL2)	- Shift solenoid valve SL2 remains open or closed - Shift solenoid valve SLT remains open or closed - Valve body is blocked - Automatic transmission (clutch, brake or gear, etc.)	Comes on	DTC stored	AT-86
P0778	Pressure Control Solenoid "B" Electrical (Shift Solenoid Valve SL2)	- Open or short in shift solenoid valve SL2 circuit - Shift solenoid valve SL2 - ECM	Comes on	DTC stored	AT-91
P0781	1-2 Shift (1-2 Shift Valve)	- Valve body is blocked up or stuck (1-2 shift valve) - Shift solenoid valve SLT remains open or closed - Automatic transmission (clutch, brake or gear, etc.)	Comes on	DTC stored	AT-95

DTC No.	Detection Item	Trouble Areas	MIL *1	Memory *2	See page
P0973	Shift Solenoid "A" Control Circuit Low (Shift Solenoid Valve S1)	- Short in shift solenoid valve S1 circuit - Shift solenoid valve S1 - ECM	Comes on	DTC stored	AT-100
P0974	Shift Solenoid "A" Control Circuit High (Shift Solenoid Valve S1)	- Open in shift solenoid valve S1 circuit - Shift solenoid valve S1 - ECM	Comes on	DTC stored	AT-100
P0976	Shift Solenoid "B" Control Circuit Low (Shift Solenoid Valve S2)	- Short in shift solenoid valve S2 circuit - Shift solenoid valve S2 - ECM	Comes on	DTC stored	AT-103
P0977	Shift Solenoid "B" Control Circuit High (Shift Solenoid Valve S2)	- Open in shift solenoid valve S2 circuit - Shift solenoid valve S2 - ECM	Comes on	DTC stored	AT-103
P0985	Shift Solenoid "E" Control Circuit Low (Shift Solenoid Valve SR)	- Short in shift solenoid valve SR circuit - Shift solenoid valve SR - ECM	Comes on	DTC stored	AT-106
P0986	Shift Solenoid "E" Control Circuit High (Shift Solenoid Valve SR)	- Open in shift solenoid valve SR circuit - Shift solenoid valve SR - ECM	Comes on	DTC stored	AT-106
P2714	Pressure Control Solenoid "D" Performance (Shift Solenoid Valve SLT)	- Shift solenoid valve SLT remains open or closed - Shift solenoid valve S1, S2, SR, SL1 or SL2 remains open or closed - Valve body is blocked - Automatic transmission (clutch, brake or gear, etc.)	Comes on	DTC stored	AT-110
P2716	Pressure Control Solenoid "D" Electrical (Shift Solenoid Valve SLT)	- Open or short in shift solenoid valve SLT circuit - Shift solenoid valve SLT - ECM	Comes on	DTC stored	AT-117
P2740	Transmission Fluid Temperature Sensor "B" Circuit	- Open or short in No. 2 ATF temperature sensor circuit - No. 2 ATF temperature sensor - ECM	Comes on	DTC stored	AT-121

DTC No.	Detection Item	Trouble Areas	MIL *1	Memory *2	See page
P2742	Transmission Fluid Temperature Sensor "B" Circuit Low Input	- Short in No. 2 ATF temperature sensor circuit - No. 2 ATF temperature sensor - ECM	Comes on	DTC stored	AT-121
P2743	Transmission Fluid Temperature Sensor "B" Circuit High Input	- Open in No. 2 ATF temperature sensor circuit - No. 2 ATF temperature sensor - ECM	Comes on	DTC stored	AT-121
P2757	Torque Converter Clutch Pressure Control Solenoid Performance (Shift Solenoid Valve SLU)	- Shift solenoid valve SLU remains open or closed - Valve body is blocked - Shift solenoid valve SLU - Torque converter clutch - Automatic transmission (clutch, brake or gear, etc.) - Line pressure is too low	Comes on	DTC stored	AT-126
P2759	Torque Converter Clutch Pressure Control Solenoid Control Circuit Electrical (Shift Solenoid Valve SLU)	- Open or short in shift solenoid valve SLU circuit - Shift solenoid valve SLU - ECM	Comes on	DTC stored	AT-131

DTC	P0705	Transmission Range Sensor Circuit Malfunction (PRNDL Input)

DESCRIPTION

The park/neutral position switch detects the shift lever position and sends signals to the ECM.

DTC No.	DTC Detection Conditions	Trouble Areas
P0705	When any one of following conditions (A) to (C) is met (2-trip detection logic): (A) Any 2 or more signals of the following are ON simultaneously • NSW input signal is ON. • R input signal is ON. • D input signal is ON. • 3 input signal is ON. • 2 input signal is ON. (B) All switches are OFF simultaneously for P (NSW), R, N (NSW), D, 3 and 2 positions (C) When NSW or R input signal is ON, 4 or L input signal is ON	• Open or short in park/neutral position switch circuit • Park/neutral position switch • ECM

MONITOR DESCRIPTION

The DTC indicates a problem with the park/neutral position switch and the wire harness in the park/neutral position switch circuit.
For security, the park/neutral position switch detects the shift lever position so that the engine can be started only when the vehicle is in the P or N shift position.
When the park/neutral position switch sends more than one signal at a time from switch positions P, R, N, D, 3 or 2, the ECM interprets this as a fault in the switch. The ECM will turn on the MIL and store the DTC.

MONITOR STRATEGY

Related DTCs	P0705: Park/neutral position switch/Verify switch input
Required sensors/Components	Park/neutral position switch
Frequency of operation	Continuous
Duration	Conditions (A) and (C): 2 seconds Condition (B): 60 seconds
MIL operation	2 driving cycles
Sequence of operation	None

TYPICAL ENABLING CONDITIONS

The monitor will run whenever the following DTCs are not present.	None
Ignition switch	ON
Battery voltage	10.5 V or more

TYPICAL MALFUNCTION THRESHOLDS

One of the following conditions is met: Condition (A), (B) or (C)

Condition (A)

Number of the following signals input at the same time	2 or more
Park/neutral position switch	ON
R switch	ON
D switch	ON
3 switch	ON
2 switch	ON

Condition (B)

All of following conditions are met

Park/neutral position switch	OFF
R switch	OFF
D switch	OFF
3 switch	OFF
2 switch	OFF

Condition (C)

Both (i) and (ii) are met

(i) One of following conditions is met

Park/neutral position switch	ON
R switch	ON

(ii) One of following conditions is met

4 switch	ON
L switch	ON

COMPONENT OPERATING RANGE

Park/neutral position switch	The park/neutral position switch sends only one signal to the ECM

WIRING DIAGRAM

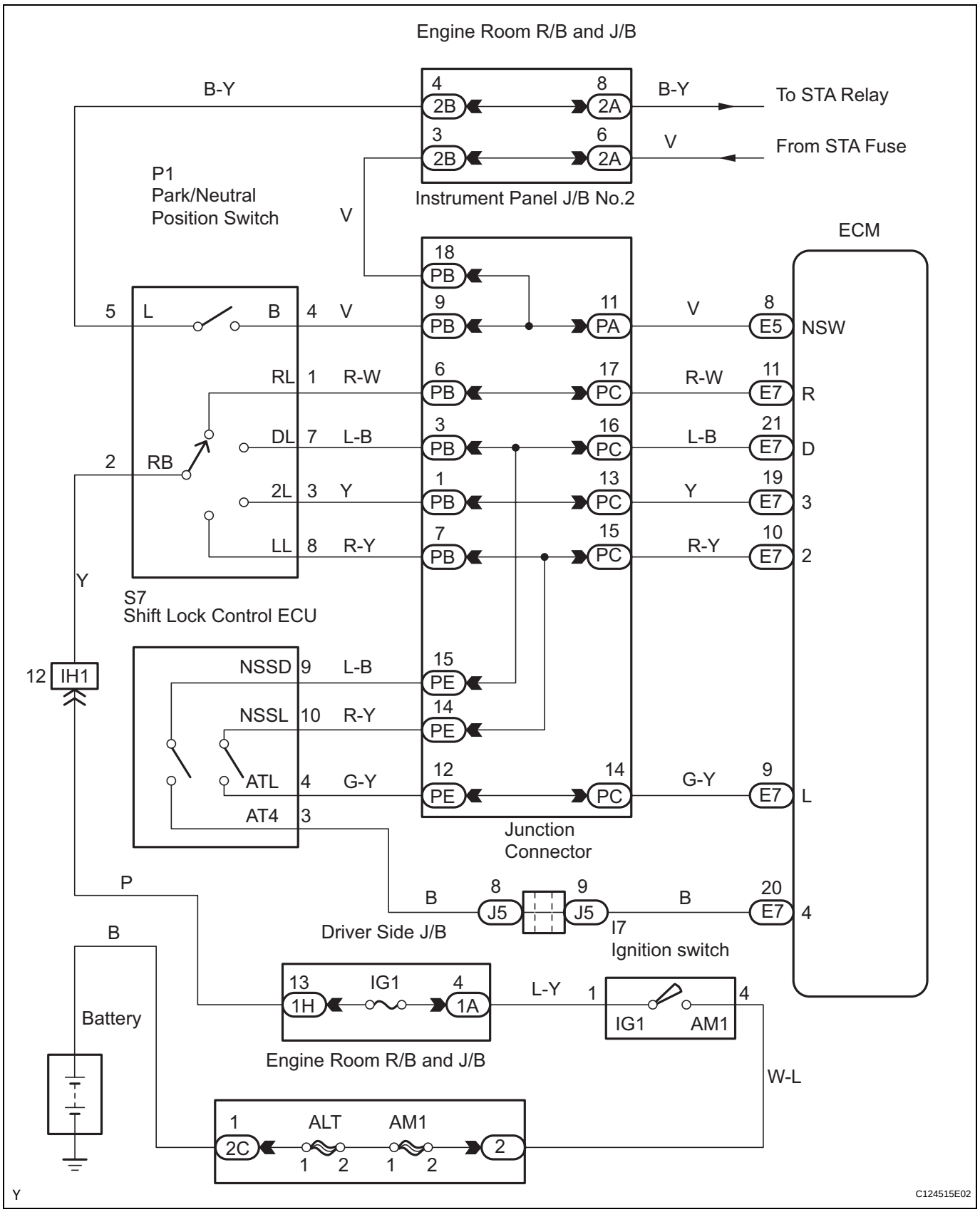

AT

HINT:
According to the DATA LIST displayed on the intelligent tester, you can read the values of components, such as the switches, sensors and actuators, without removing any parts. Reading the DATA LIST as a first step of troubleshooting is one method of shortening labor time.

NOTICE:

In the table below, the values listed under "Normal Condition" are for reference only. Do not depend solely on these reference values when judging whether a part is faulty or not.

1. Connect the intelligent tester together with the CAN VIM (controller area network vehicle interface module) to the DLC3.
2. Turn the ignition switch to the ON position.
3. Push the "ON" button of the tester.
4. Select the items "DIAGNOSIS/ ENHANCED OBD II/ DATA LIST/ A/T".
5. According to the display on the tester, read the "DATA LIST".

Item	Measurement Item/ Display (Range)	Normal Condition	Diagnostic Note
PNP SW [NSW]	PNP Switch Status/ ON or OFF	Shift lever position is; P or N: ON Except P or N: OFF	When the shift lever position displayed on the intelligent tester differs from the actual position, adjustment of the PNP switch or the shift cable may be incorrect.
REVERSE	PNP Switch Status/ ON or OFF	Shift lever position is; R: ON Except R: OFF	
DRIVE	PNP Switch Status/ ON or OFF	Shift lever position is; D and 4: ON Except D and 4: OFF	
4th/DRIVE	PNP Switch Status/ ON or OFF	Shift lever position is; 4: ON Except 4: OFF	
3RD	PNP Switch Status/ ON or OFF	Shift lever position is; 3: ON Except 3: OFF	
2ND	PNP Switch Status/ ON or OFF	Shift lever position is; 2 and L: ON Except 2 and L: OFF	
LOW	PNP Switch Status/ ON or OFF	Shift lever position is; L: ON Except L: OFF	

1 INSPECT PARK / NEUTRAL POSITION SWITCH ASSEMBLY

Switch side (Connector Front View):

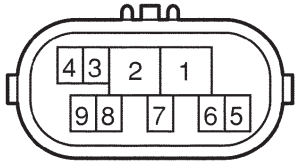

P G026080E19

(a) Disconnect the park/neutral position switch connector.
(b) Measure the resistance when the shift lever is moved to each position.

Standard resistance

Shift Position	Tester Connection	Specified Condition
P	2 - 6 and 4 - 5	Below 1 Ω
Except P	2 - 6 and 4 - 5	10 kΩ or higher
R	1 - 2	Below 1 Ω
Except R	1 - 2	10 kΩ or higher
N	2 - 9 and 4 - 5	Below 1 Ω
Except N	2 - 9 and 4 - 5	10 kΩ or higher
D, 4	2 - 7	Below 1 Ω
Except D, 4	2 - 7	10 kΩ or higher
3	2 - 3	Below 1 Ω
Except 3	2 - 3	10 kΩ or higher
2, L	2 - 8	Below 1 Ω

Shift Position	Tester Connection	Specified Condition
Except 2, L	2 - 8	10 kΩ or higher

NG → REPLACE PARK / NEUTRAL POSITION SWITCH ASSEMBLY

OK

2 INSPECT SHIFT LOCK CONTROL ECU SUB-ASSEMBLY

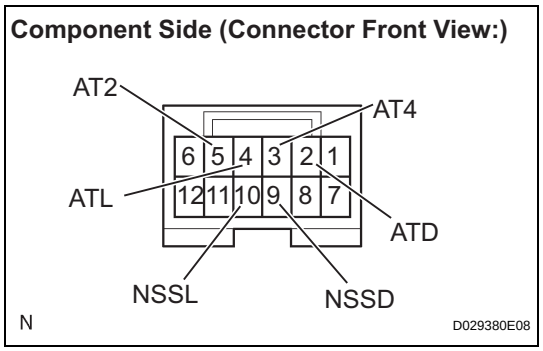

(a) Connect the park/neutral position switch connector.
(b) Disconnect the shift lock control ECU connector.
(c) Measure the resistance when the shift lever is moved to each position.

Standard resistance

Shift Position	Tester Connection	Specified Condition
D	9 (NSSD) - 2 (ATD)	Below 1 Ω
4	9 (NSSD) - 2 (ATD)	10 kΩ or higher
D	9 (NSSD) - 3 (AT4)	10 kΩ or higher
4	9 (NSSD) - 3 (AT4)	Below 1 Ω
2	10 (NSSL) - 5 (AT2)	Below 1 Ω
L	10 (NSSL) - 5 (AT2)	10 kΩ or higher
2	10 (NSSL) - 4 (ATL)	10 kΩ or higher
L	10 (NSSL) - 4 (ATL)	Below 1 Ω

NG → REPLACE SHIFT LOCK CONTROL ECU SUB-ASSEMBLY

OK

3 CHECK HARNESS AND CONNECTOR (PARK/NEUTRAL POSITION SWITCH - ECM)

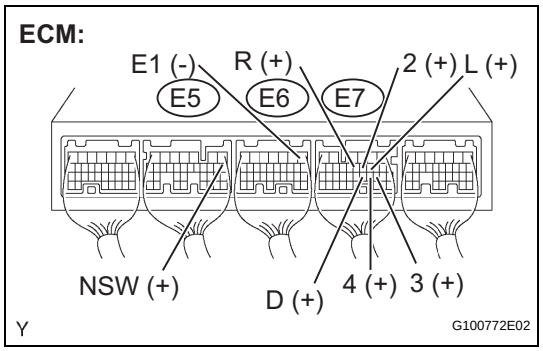

(a) Connect the shift lock control ECU connector.
(b) Turn the ignition switch to the ON position.
(c) Measure the voltage when the shift lever is moved to each position.

Standard voltage

Shift Position	Tester Connection	Specified Condition
P and N	E5-8 (NSW) - E6-1 (E1)	Below 2 V
Except P and N	E5-8 (NSW) - E6-1 (E1)	10 to 14 V
R	E7-11 (R) - E6-1 (E1)	10 to 14 V*
Except R	E7-11 (R) - E6-1 (E1)	Below 1 V
D and 4	E7-21 (D) - E6-1 (E1)	10 to 14 V
Except D and 4	E7-21 (D) - E6-1 (E1)	Below 1 V
4	E7-20 (4) - E6-1 (E1)	10 to 14 V
Except 4	E7-20 (4) - E6-1 (E1)	Below 1 V
3	E7-19 (3) - E6-1 (E1)	10 to 14 V
Except 3	E7-19 (3) - E6-1 (E1)	Below 1 V
2 and L	E7-10 (2) - E6-1 (E1)	10 to 14 V
Except 2 and L	E7-10 (2) - E6-1 (E1)	Below 1 V

Shift Position	Tester Connection	Specified Condition
L	E7-9 (L) - E6-1 (E1)	10 to 14 V
Except L	E7-9 (L) - E6-1 (E1)	Below 1 V

HINT:
*: The voltage will drop slightly due to illumination of the back up light.

NG → **REPAIR OR REPLACE HARNESS OR CONNECTOR**

OK

REPLACE ECM

DTC	P0710	Transmission Fluid Temperature Sensor "A" Circuit

DTC	P0712	Transmission Fluid Temperature Sensor "A" Circuit Low Input

DTC	P0713	Transmission Fluid Temperature Sensor "A" Circuit High Input

DESCRIPTION

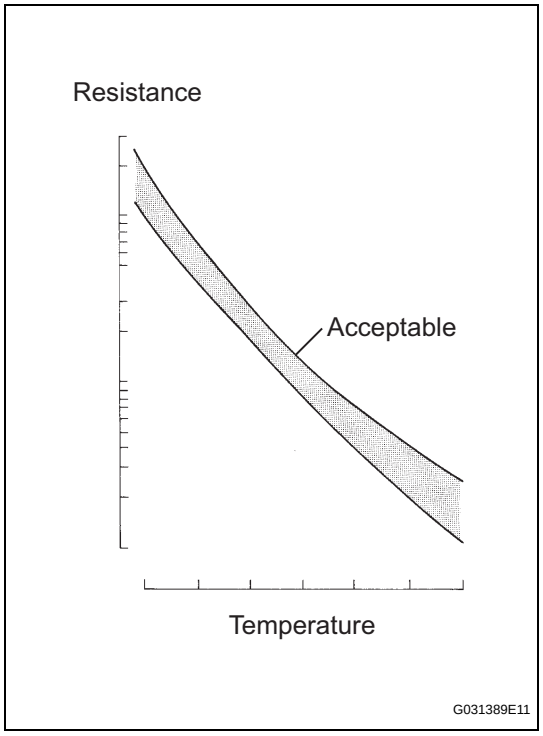

The ATF (Automatic Transmission Fluid) temperature sensor converts the fluid temperature into a resistance value which is input into the ECM.
The ECM applies a voltage to the temperature sensor through ECM terminal THO1.
The sensor resistance changes with the transmission fluid temperature. As the temperature becomes higher, the sensor resistance decreases.
One terminal of the sensor is grounded so that the sensor resistance and the voltage decrease as the temperature becomes higher.
The ECM calculates the fluid temperature based on the voltage signal.

DTC No.	DTC Detection Conditions	Trouble Areas
P0710	(a) and (b) are detected momentarily within 0.5 seconds when neither P0712 nor P0713 is detected (1-trip detection logic) (a) No. 1 ATF temperature sensor resistance is less than 79 Ω. (b) No. 1 ATF temperature sensor resistance is more than 156 kΩ. HINT: Within 0.5 seconds, the malfunction changes from (a) to (b) or from (b) to (a)	• Open or short in No. 1 ATF temperature sensor circuit • Transmission wire (No. 1 ATF temperature sensor) • ECM

DTC No.	DTC Detection Conditions	Trouble Areas
P0712	No. 1 ATF temperature sensor resistance is less than 79 Ω for 0.5 seconds or more (1-trip detection logic)	• Short in No. 1 ATF temperature sensor circuit • Transmission wire (No. 1 ATF temperature sensor) • ECM
P0713	No. 1 ATF temperature sensor resistance is more than 156 kΩ for 0.5 seconds or more 15 minutes or more after starting engine (1-trip detection logic)	• Open in No. 1 ATF temperature sensor circuit • Transmission wire (No. 1 ATF temperature sensor) • ECM

MONITOR DESCRIPTION

These DTCs indicate an open or short in the Automatic Transmission Fluid (ATF) temperature sensor circuit.
The ATF temperature sensor converts ATF temperature to an electrical resistance value. Based on the resistance, the ECM determines the ATF temperature, and detects any open or short malfunctions in the ATF temperature circuit. If the resistance value of the ATF temperature is less than 79 Ω*1 or more than 156 kΩ*2, the ECM interprets this as a fault in the ATF sensor or its wiring. The ECM turns on the MIL and stores a DTC.
*1: 150°C (302°F) or more is indicated regardless of the actual ATF temperature.
*2: -40°C (-40°F) is indicated regardless of the actual ATF temperature.
HINT:
The ATF temperature can be checked on the intelligent tester display.

MONITOR STRATEGY

Related DTCs	P0710: ATF temperature sensor/Range check (Fluttering) P0712: ATF temperature sensor/Range check (Low resistance) P0713: ATF temperature sensor/Range check (High resistance)
Required sensors/Components	ATF temperature sensor
Frequency of operation	Continuous
Duration	0.5 seconds
MIL operation	Immediate
Sequence of operation	None

TYPICAL ENABLING CONDITIONS

P0710: Range check (Fluttering)

The monitor will run whenever the following DTCs are not present.	None
The typical enabling condition is not available.	-

P0712: Range check (Low resistance)

The monitor will run whenever the following DTCs are not present.	None
The typical enabling condition is not available.	-

P0713: Range check (High resistance)

The monitor will run whenever the following DTCs are not present.	None
Time after engine start	15 minutes or more

TYPICAL MALFUNCTION THRESHOLDS

P0710: Range check (Fluttering)

ATF temperature sensor resistance	Less than 79 Ω or More than 156 kΩ

AT

P0712: Range check (Low resistance)

ATF temperature sensor resistance	Less than 79 Ω

P0713: Range check (High resistance)

ATF temperature sensor resistance	More than 156 kΩ

COMPONENT OPERATING RANGE

ATF temperature sensor	Atmospheric temperature up to approximately 130°C (266°F)

WIRING DIAGRAM

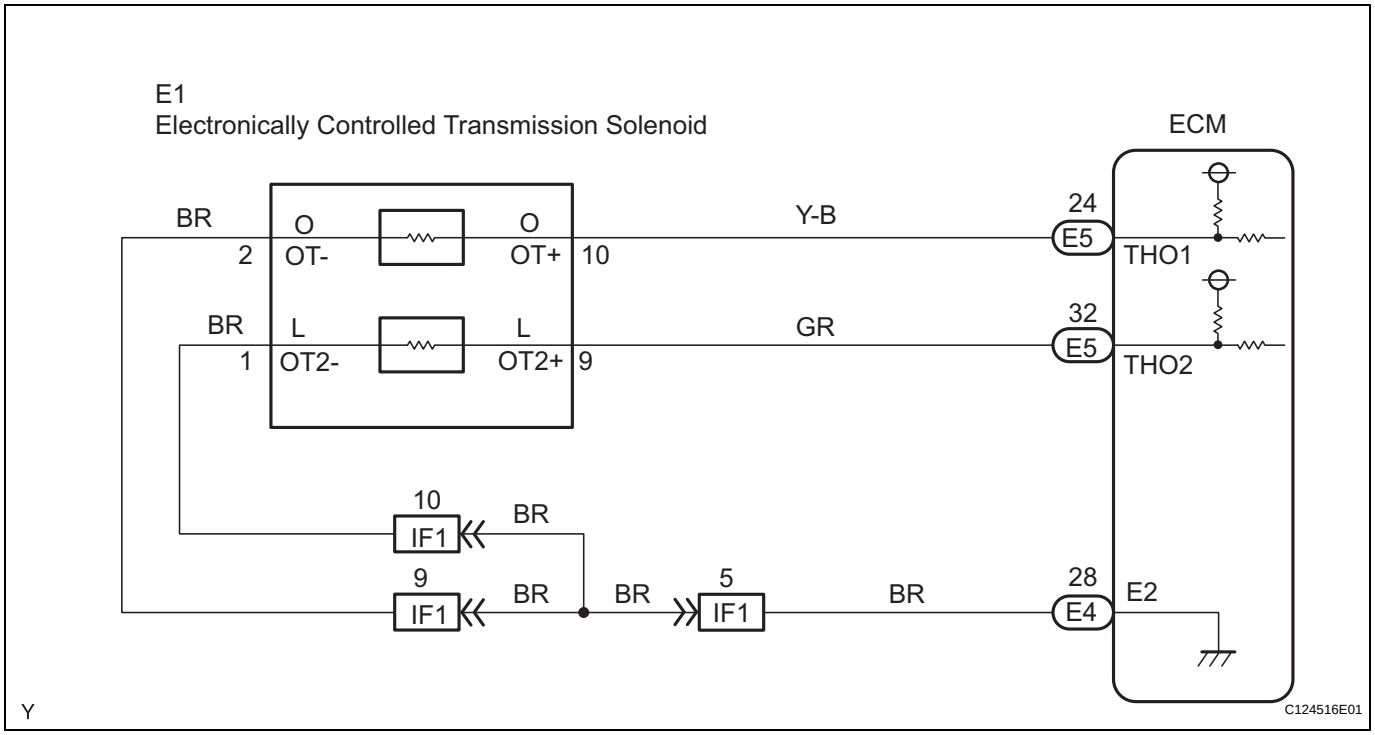

HINT:
According to the DATA LIST displayed on the intelligent tester, you can read the values of components, such as the switches, sensors and actuators, without removing any parts. Reading the DATA LIST as a first step of troubleshooting is one method of shortening labor time.

NOTICE:

In the table below, the values listed under "Normal Condition" are for reference only. Do not depend solely on these reference values when judging whether a part is faulty or not.

1. Warm up the engine.
2. Turn the ignition switch off.
3. Connect the intelligent tester together with the CAN VIM (controller area network vehicle interface module) to the DLC3.
4. Turn the ignition switch to the ON position.
5. Push the "ON" button of the tester.
6. Select the items "DIAGNOSIS/ ENHANCED OBD II/ DATA LIST/ A/T".
7. According to the display on the tester, read the "DATA LIST".

Item	Measurement Item/ Range (display)	Normal Condition
AT OIL TEMP1	No. 1 ATF Temperature Sensor Value/ min.: -40°C (-40°F) max.: 215°C (419°F)	• After Stall Test: Approximately 80°C (176°F) • Equal to ambient temperature during cold soak

HINT:
When DTC P0712 is output and intelligent tester reading is 150°C (302°F) or more, there is a short circuit.
When DTC P0713 is output and intelligent tester reading is -40°C (-40°F), there is an open circuit.
Measure the resistance between terminal THO1 (OT) and the body ground.

Temperature Displayed	Malfunction
-40°C (-40°F)	Open circuit
150°C (302°F) or more	Short circuit

HINT:
If a circuit related to the ATF temperature sensor becomes open, P0713 is immediately set (in 0.5 seconds). When P0713 is set, P0711 cannot be detected.
It is not necessary to inspect the circuit when P0711 is set.

1 INSPECT TRANSMISSION WIRE (ATF TEMPERATURE SENSOR)

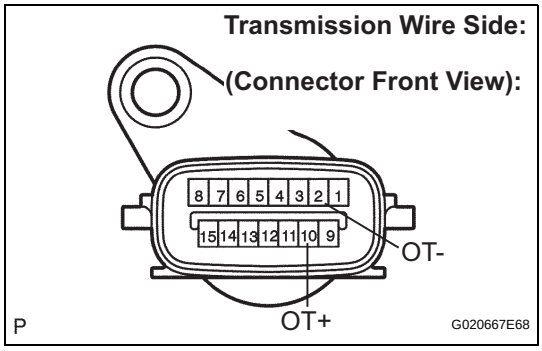

(a) Disconnect the transmission wire connector from the transmission.
(b) Measure the resistance.
Standard resistance

Tester Connection	Specified Condition
2 (OT-) - 10 (OT+)	**79 Ω to 156 kΩ**

(c) Measure the resistance.
Standard resistance (Check for short)

Tester Connection	Specified Condition
2 (OT-) - Body ground	**10 kΩ or higher**
10 (OT+) - Body ground	**10 kΩ or higher**

HINT:
If the resistance is outside the specified range at either of the ATF temperatures shown in the table below, the driveability of the vehicle may decrease.

ATF Temperature	Specified Condition
20°C (68°F)	3 to 4 kΩ
110°C (230°F)	0.22 to 0.28 kΩ

NG → **REPAIR OR REPLACE TRANSMISSION WIRE**

OK

2	CHECK HARNESS AND CONNECTOR (TRANSMISSION WIRE - ECM)

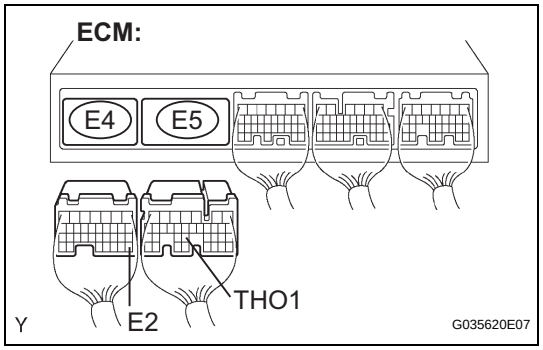

(a) Connect the transmission wire connector to the transmission.
(b) Disconnect the ECM connectors.
(c) Measure the resistance.
Standard resistance

Tester Connection	Specified Condition
E5-24 (THO1) - E4-28 (E2)	79 Ω to 156 kΩ

(d) Measure the resistance.
Standard resistance (Check for short)

Tester Connection	Specified Condition
E5-24 (THO1) - Body ground	10 kΩ or higher
E4-28 (E2) - Body ground	10 kΩ or higher

NG → **REPAIR OR REPLACE HARNESS OR CONNECTOR**

OK

REPLACE ECM

DTC	P0711	Transmission Fluid Temperature Sensor "A" Performance

DESCRIPTION

Refer to DTC P0710 (See page AT-49).

DTC No.	DTC Detection Conditions	Trouble Areas
P0711	Both (a) and (b) are detected (2-trip detection logic): (a) Intake air and engine coolant temperatures are more than -10°C (14°F) at engine start (b) After normal driving for over 22 minutes and 5.6 miles (9 km) or more, ATF temperature is less than 20°C (68°F)	• Transmission wire (No. 1 ATF temperature sensor) • ECM

MONITOR DESCRIPTION

This DTC indicates that there is a problem with the output from the automatic transmission fluid (ATF) temperature sensor and that the sensor itself is defective. The ATF temperature sensor converts the ATF temperature to an electrical resistance value. Based on the resistance, the ECM determines the ATF temperature and detects any open or short malfunctions in the ATF temperature circuit or a fault of the ATF temperature sensor.

After running the vehicle for a certain period, the ATF temperature should increase. If the ATF temperature is below 20°C (68°F) after running the vehicle for a certain period, the ECM interprets this as a fault, and turns on the MIL.

MONITOR STRATEGY

Related DTCs	P0711: ATF temperature sensor/Rationality check
Required sensors/Components	ATF temperature sensor
Frequency of operation	Continuous
Duration	3 seconds
MIL operation	2 driving cycles
Sequence of operation	None

TYPICAL ENABLING CONDITIONS

The monitor will run whenever the following DTCs are not present.	None
ATF temperature sensor "A" circuit	Functioning normally
ECT (Engine coolant temperature) sensor circuit	Functioning normally
IAT (Intake air temperature) sensor circuit	Functioning normally
Time after engine start	21 minutes and 40 seconds or more
Driving distance after engine start	5.6 miles (9 km) or more
IAT (12 seconds after engine start)	-10°C (14°F) or more
ECT (12 seconds after engine start)	-10°C (14°F) or more

TYPICAL MALFUNCTION THRESHOLDS

ATF temperature	Less than 20°C (68°F) (Conditions vary with ATF temperature at engine start)

WIRING DIAGRAM

Refer to DTC P0710 (See page AT-51).

HINT:
According to the DATA LIST displayed on the intelligent tester, you can read the values of components, such as the switches, sensors and actuators, without removing any parts. Reading the DATA LIST as a first step of troubleshooting is one method of shortening labor time.
NOTICE:
In the table below, the values listed under "Normal Condition" are for reference only. Do not depend solely on these reference values when judging whether a part is faulty or not.
1. Warm up the engine.
2. Turn the ignition switch off.
3. Connect the intelligent tester together with the CAN VIM (controller area network vehicle interface module) to the DLC3.
4. Turn the ignition switch to the ON position.
5. Push the "ON" button of the tester.
6. Select the items "DIAGNOSIS/ ENHANCED OBD II/ DATA LIST/ A/T".
7. According to the display on the tester, read the "DATA LIST".

Item	Measurement Item/ Range (display)	Normal Condition
AT OIL TEMP1	No. 1 ATF Temperature Sensor Value/ min.: -40°C (-40°F) max.: 215°C (419°F)	• After Stall Test: Approximately 80°C (176°F) • Equal to ambient temperature during cold soak

HINT:
When DTC P0712 is output and intelligent tester reading is 150°C (302°F) or more, there is a short circuit.
When DTC P0713 is output and intelligent tester reading is -40°C (-40°F), there is an open circuit.
Measure the resistance between terminal THO1 (OT) and the body ground.

Temperature Displayed	Malfunction
-40°C (-40°F)	Open circuit
150°C (302°F) or more	Short circuit

HINT:
If a circuit related to the ATF temperature sensor becomes open, P0713 is immediately set (in 0.5 seconds). When P0713 is set, P0711 cannot be detected.
It is not necessary to inspect the circuit when P0711 is set.

1	CHECK ANY OTHER DTCS OUTPUT (IN ADDITION TO DTC P0711)

(a) Connect the intelligent tester to the DLC3.
(b) Turn the ignition switch to the ON position and push the intelligent tester main switch ON.
(c) Select the items "DIAGNOSIS/ ENHANCED OBD II/ DTC INFO/ CURRENT CODES".
(d) Read the DTCs using the intelligent tester.

Result:

Display (DTC Output)	Proceed to
Only "P0711" is output	A
"P0711" and other DTCs	B

HINT:
If any codes besides "P0711" are output, perform troubleshooting for those DTCs first.

B → GO TO DTC CHART

A

2	CHECK TRANSMISSION FLUID LEVEL

OK:
Automatic transmission fluid level is correct.

NG → **ADD FLUID**

OK

REPLACE TRANSMISSION WIRE (ATF TEMPERATURE SENSOR)

DTC	P0717	Input Speed Sensor Circuit No Signal

DESCRIPTION

This sensor detects the rotation speed of the turbine which shows the input revolution of the transmission. By comparing the input turbine speed signal (NT) with the counter gear speed sensor signal (SP2), the ECM detects the shift timing of the gears and appropriately controls the engine torque and hydraulic pressure according to various conditions. Thus, providing smooth gear shift.

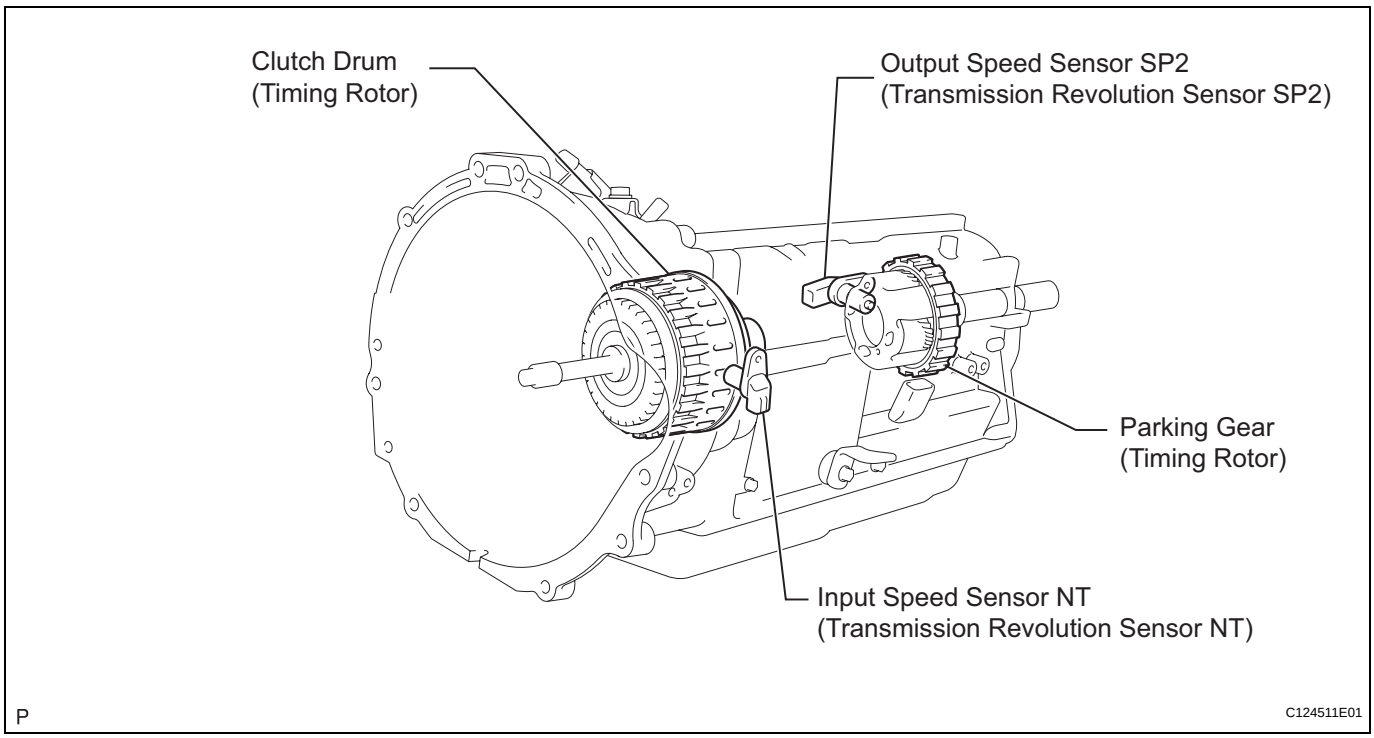

DTC No.	DTC Detection Conditions	Trouble Areas
P0717	All conditions below are detected for 5 seconds or more (1-trip detection logic): (a) Gear change not being performed (b) Gear position: 4th or 5th (c) T/M input shaft rpm: 300 rpm or less (d) T/M output shaft rpm: 1,000 rpm or more (e) Park/neutral position switch: OFF (f) Shift solenoid valves, park/neutral position switch and vehicle speed sensor are in normal operation	• Open or short in speed sensor (NT) circuit • Speed sensor (NT) • ECM

Reference (Using an oscilloscope):

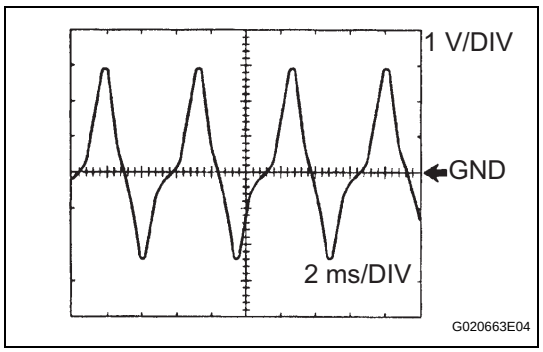

Check the waveform between terminals NT+ and NT- of the ECM connector.

Standard:

Refer to the illustration.

Terminal	NT+ - NT-
Tool setting	1 V/DIV, 2 ms/DIV
Vehicle condition	Engine idling speed (P or N position)

MONITOR DESCRIPTION

This DTC indicates that a pulse is not output from the speed sensor NT (Turbine (input) sped sensor) or is weak. The NT terminal of the ECM detects the revolving signal from speed sensor (NT) (input RPM). The ECM outputs a gearshift signal comparing the input speed sensor (NT) with the output speed sensor (SP2). While the vehicle is operating in the 4th or 5th gear position in the shift position of D, if the input shaft revolution is less than 300 rpm*1 although the output shaft revolution is more than 1,000 rpm or more*2, the ECM detects the trouble, illuminates the MIL and stores the DTC.
*1: Pulse is not output or is irregularly output.
*2: The vehicle speed is approximately 31 mph (50 km/h) or more.

MONITOR STRATEGY

Related DTCs	P0717: Speed sensor (NT)/Verify pulse input
Required sensors/Components (Main)	Speed sensor (NT)
Required sensors/Components (Related)	Speed sensor (SP2)
Frequency of operation	Continuous
Duration	5 seconds
MIL operation	Immediate
Sequence of operation	None

TYPICAL ENABLING CONDITIONS

The monitor will run whenever the following DTCs are not present.	P0500: VSS P0748 - P0799: Trans solenoid (range)
Shift change	Each shift change is completed before starting next shift change operation
ECM selected gear	4th or 5th
Output shaft rpm	1,000 rpm or more
Park/neutral position switch	OFF
R switch	OFF
L switch	OFF
Engine	Running
Ignition Switch	ON
Starter	OFF

TYPICAL MALFUNCTION THRESHOLDS

Sensor signal rpm	Less than 300 rpm

COMPONENT OPERATING RANGE

Speed sensor (NT)	Input speed is equal to engine speed when lock-up ON

WIRING DIAGRAM



HINT:
According to the DATA LIST displayed on the intelligent tester, you can read the values of components, such as the switches, sensors and actuators, without removing any parts. Reading the DATA LIST as a first step of troubleshooting is one method of shortening labor time.

1. Warm up the engine.
2. Turn the ignition switch off.
3. Connect the intelligent tester together with the CAN VIM (controller area network vehicle interface module) to the DLC3.
4. Turn the ignition switch to the ON position.
5. Push the "ON" button of the tester.
6. Select the items "DIAGNOSIS/ ENHANCED OBD II/ DATA LIST/ A/T".
7. According to the display on the tester, read the "DATA LIST".

Item	Measurement Item/ Range (display)	Normal Condition
SPD (NT)	Input Turbine Speed/ display: 50 rpm	[HINT] • Lock-up ON (After warming up the engine); Input turbine speed (NT) equal to the engine speed. • Lock-up OFF (Idling at N position); Input turbine speed (NT) nearly equal to the engine speed.

HINT:

- SPD (NT) is always 0 while driving:
  Open or short in the sensor or circuit.
- SPD (NT) is always less than 300 rpm while driving the vehicle at 31 mph (50 km/h) or more:
  Sensor trouble, improper installation, or intermittent connection trouble of the circuit.

1 INSPECT SPEED SENSOR INSTALLATION

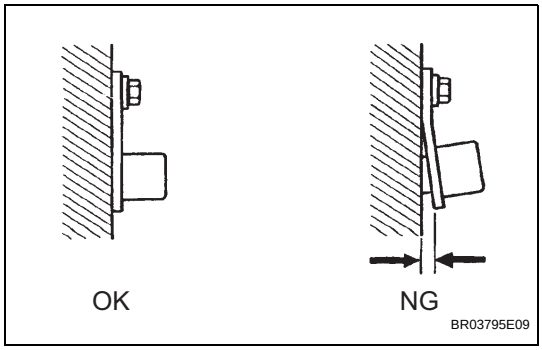

(a) Check the speed sensor (NT) installation.
OK:
The installation bolt is tightened properly and there is no clearance between the sensor and transmission case.

NG → **REPLACE SPEED SENSOR (NT)**

OK

2 INSPECT SPEED SENSOR (NT)

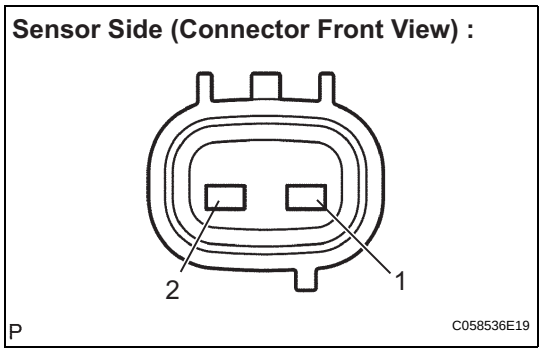

(a) Disconnect the speed sensor (NT) connector from the transmission.
(b) Measure the resistance.
Standard resistance

Tester Connection	Specified Condition
1 - 2	560 to 680 Ωat 20°C (68°F)

NG → **REPLACE SPEED SENSOR (NT)**

OK

3 CHECK HARNESS AND CONNECTOR (SPEED SENSOR - ECM)

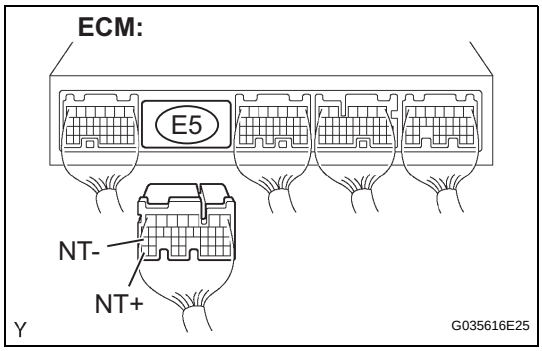

(a) Connect the speed sensor connector.
(b) Disconnect the ECM connector.
(c) Measure the resistance.
Standard resistance

Tester Connection	Specified Condition
E5-35 (NT+) - E5-27 (NT-)	560 to 680 Ω at 20°C (68°F)

(d) Measure the resistance.
Standard resistance (Check for short)

Tester Connection	Specified Condition
E5-35 (NT+) - Body ground	10 kΩ or higher
E5-27 (NT-) - Body ground	10 kΩ or higher

NG → **REPAIR OR REPLACE HARNESS OR CONNECTOR**

OK

REPLACE ECM

DTC	P0722	Output Speed Sensor Circuit No Signal

DESCRIPTION

The speed sensor SP2 detects the rotation speed of the transmission output shaft and sends signals to the ECM. The ECM determines the vehicle speed based on these signals. An AC voltage is generated in the speed sensor SP2 coil as the parking gear mounted on the rear planetary gear assembly rotates, and this voltage is sent to the ECM. The parking gear on the rear planetary gear is used as the timing rotor for this sensor. The gear shift point and lock-up timing are controlled by the ECM based on the signals from the vehicle speed sensor and the throttle position sensor.

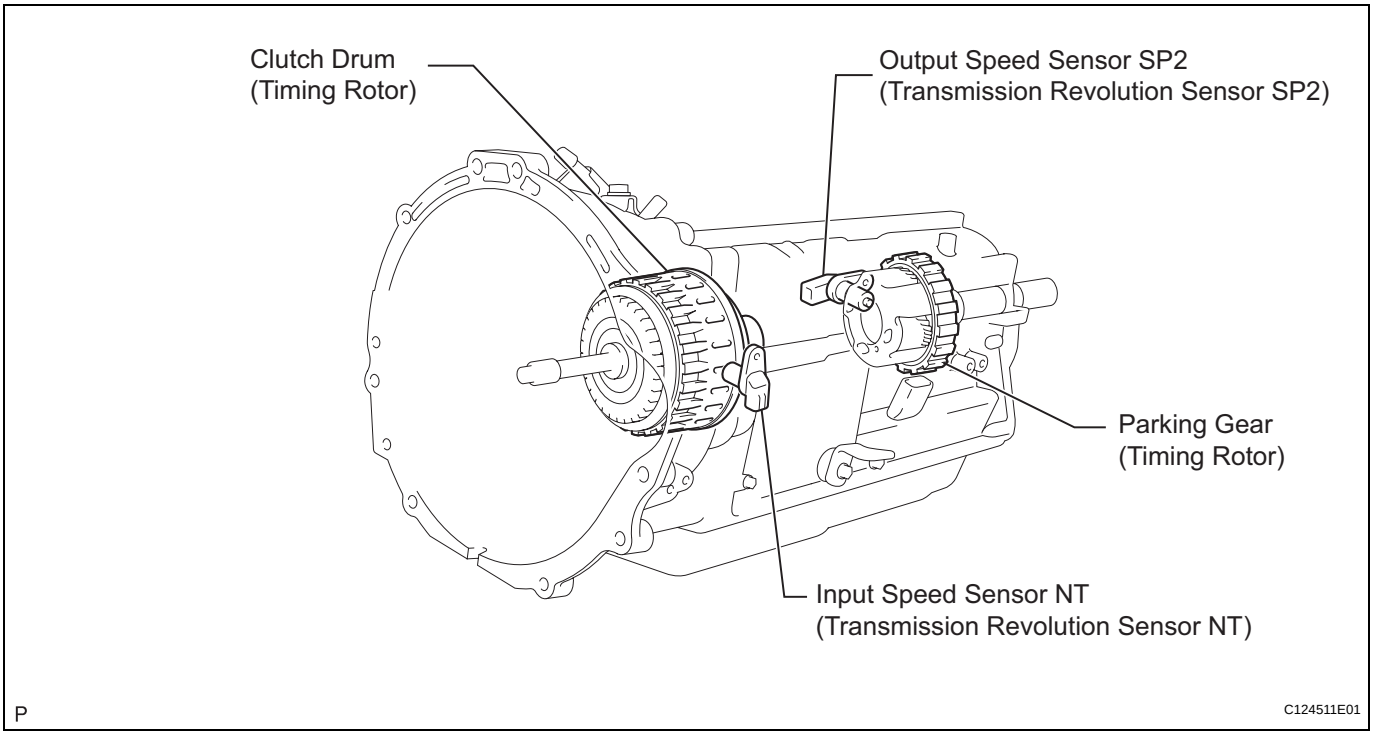

DTC No.	DTC Detection Conditions	Trouble Areas
P0722	All conditions below are detected 500 times or more continuously (1-trip detection logic) (a) No signal from speed sensor (SP2) is input to ECM while 4 pulses of No. 1 vehicle speed sensor signal are sent (b) Vehicle speed is 5.59 mph (9 km/h) or more for at least 4 seconds (c) Park/neutral position switch is OFF	• Open or short in speed sensor (SP2) circuit • Speed sensor (SP2) • ECM

Reference (Using an oscilloscope):

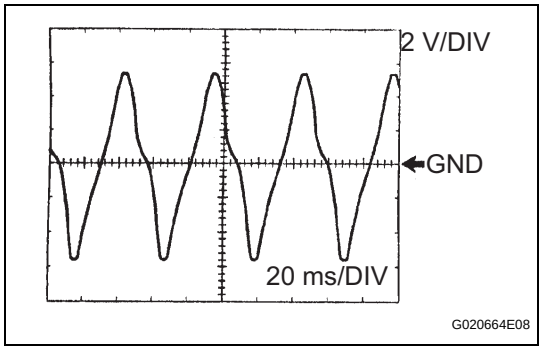

AT

Check the waveform between terminals SP2+ and SP2- of the ECM connector.

Standard:

Refer to the illustration.

Terminal	SP2+ - SP2-
Tool setting	2 V/DIV, 20 ms/DIV
Vehicle condition	Vehicle speed 12 mph (20 km/h)

MONITOR DESCRIPTION

The output speed sensor monitors the output shaft speed. The ECM controls the gearshift point and the lock up timing based on the signals from the output speed sensor and throttle position sensor.
If the ECM detects no signal from the output shaft speed sensor even while the vehicle is moving, it will conclude that is a malfunction in the output speed sensor. The ECM will illuminate the MIL and set the DTC.

MONITOR STRATEGY

Related DTCs	P0722: Speed sensor SP2/Verify pulse input
Required sensors/Components	Speed sensor SP2
Frequency of operation	Continuous
Duration	500 output shaft revolutions
MIL operation	Immediate
Sequence of operation	None

TYPICAL ENABLING CONDITIONS

The monitor will run whenever the following DTCs are not present.	P0500: VSS P0748 - P0799: Trans solenoid (range)
Vehicle speed sensor pulse input	4 times
Vehicle speed range (4 seconds or more)	5.59 mph (9 km/h) or more
Park/neutral position switch	OFF
Battery voltage	8 V or more
Ignition switch	ON
Starter	OFF

TYPICAL MALFUNCTION THRESHOLDS

Output speed sensor pulse input	No input

WIRING DIAGRAM

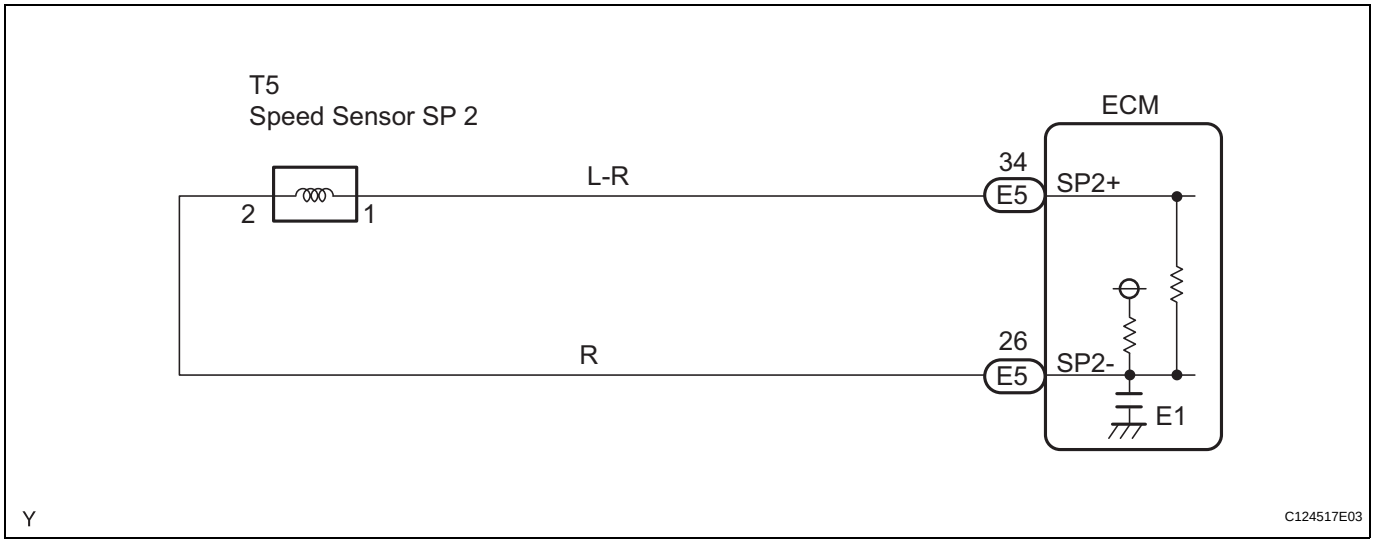

AT

HINT:
According to the DATA LIST displayed on the intelligent tester, you can read the values of components, such as the switches, sensors and actuators, without removing any parts. Reading the DATA LIST as a first step of troubleshooting is one method of shortening labor time.
NOTICE:
In the table below, the values listed under "Normal Condition" are for reference only. Do not depend solely on these reference values when judging whether a part is faulty or not.
1. Connect the intelligent tester together with the CAN VIM (controller area network vehicle interface module) to the DLC3.
2. Turn the ignition switch to the ON position.
3. Push the "ON" button of the tester.
4. Select the items "DIAGNOSIS/ ENHANCED OBD II/ DATA LIST/ A/T".
5. According to the display on the tester, read the "DATA LIST".

Item	Measurement Item/ Range (display)	Normal Condition
SPD (SP2)	Counter Gear Speed display/ min.: 0 mph (0 km/h) max.: 158 mph (255 km/h)	Vehicle stopped: 0 mph (0 km/h) [HINT] Equal to vehicle speed

HINT:
- SPD (SP2) is always 0 while driving:
  Open or short in the sensor or circuit.
- The SPD (SP2) value displayed on the tester is much lower than the actual vehicle speed:
  Sensor trouble, improper installation, or intermittent connection trouble of the circuit.

1 INSPECT SPEED SENSOR INSTALLATION

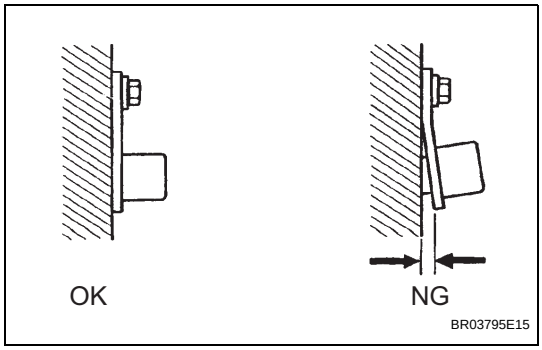

(a) Check the speed sensor (SP2) installation.
OK:
The installation bolt is tightened properly and there is no clearance between the sensor and transmission case.

NG → **REPLACE SPEED SENSOR (SP2)**

OK

2 INSPECT SPEED SENSOR (SP2)

Sensor Side (Connector Front View) :

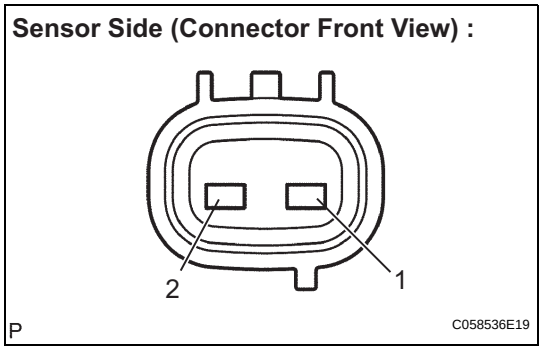

(a) Disconnect the speed sensor (SP2) connector from the transmission.
(b) Measure the resistance.
Standard resistance

Tester Connection	Specified Condition
1 - 2	560 to 680 Ω at 20°C (68°F)

NG → **REPLACE SPEED SENSOR (SP2)**

AT

OK

3	CHECK HARNESS AND CONNECTOR (SPEED SENSOR - ECM)

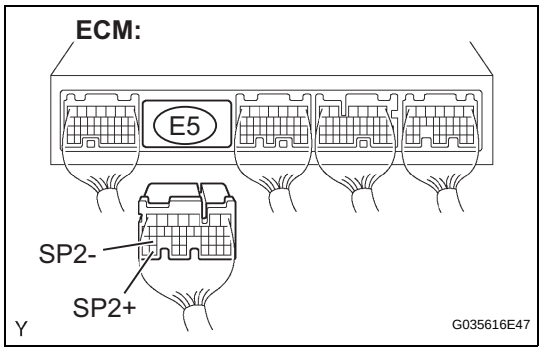

(a) Connect the speed sensor connector.
(b) Disconnect the ECM connector.
(c) Measure the resistance.
Standard resistance

Tester Connection	Specified Condition
E5-34 (SP2+) - E5-26 (SP2-)	560 to 680 Ω at 20°C (68°F)

(d) Measure the resistance.
Standard resistance (Check for short)

Tester Connection	Specified Condition
E5-34 (SP2+) - Body ground	10 kΩ or higher
E5-26 (SP2-) - Body ground	10 kΩ or higher

NG → **REPAIR OR REPLACE HARNESS OR CONNECTOR**

OK

REPLACE ECM

DTC	P0748	Pressure Control Solenoid "A" Electrical (Shift Solenoid Valve SL1)

DESCRIPTION

Shifting from 1st to 5th is performed in combination with the ON and OFF operation of the shift solenoid valves S1, S2, SR, SL1 and SL2 which are controlled by the ECM. If an open or short circuit occurs in any of the shift solenoid valves, the ECM controls the remaining normal shift solenoid valves to allow the vehicle to be driven smoothly (See page AT-32).

DTC No.	DTC Detection Conditions	Trouble Areas
P0748	The ECM checks for an open or short in the shift solenoid valve SL1 circuit (1-trip detection logic) • Output signal duty equals to 100 %. (NOTE: SL1 output signal duty is less than 100 % under normal condition.)	• Open or short in shift solenoid valve SL1 circuit • Shift solenoid valve SL1 • ECM

MONITOR DESCRIPTION

This DTC indicates an open or short in the shift solenoid valve SL1 circuit. The ECM controls the gearshift by turning the shift solenoid valves "ON/OFF". When there is an open or short circuit in any shift solenoid valve circuit, the ECM detects the problem, illuminates the MIL and stores the DTC. And the ECM performs the fail-safe function and turns the other functioning shift solenoid valves "ON/OFF". (If an open or short circuit is detected, the ECM cuts the current to the circuit.)
If the ECM detects an open or short in the shift solenoid valve SL1 circuit, the ECM determines that there is a malfunction (See page AT-32).

MONITOR STRATEGY

Related DTCs	P0748 : Shift solenoid valve SL1/Range check
Required sensors/Components	Shift solenoid valve SL1
Frequency of operation	Continuous
Duration	1 second
MIL operation	Immediate
Sequence of operation	None

TYPICAL ENABLING CONDITIONS

The monitor will run whenever the following DTCs are not present.	None
Battery voltage	10 V or more
CPU commanded duty	Less than 75 %
Ignition switch	ON
Starter	OFF

TYPICAL MALFUNCTION THRESHOLDS

Output signal duty	100 %

COMPONENT OPERATING RANGE

Output signal duty	Less than 100 %

WIRING DIAGRAM

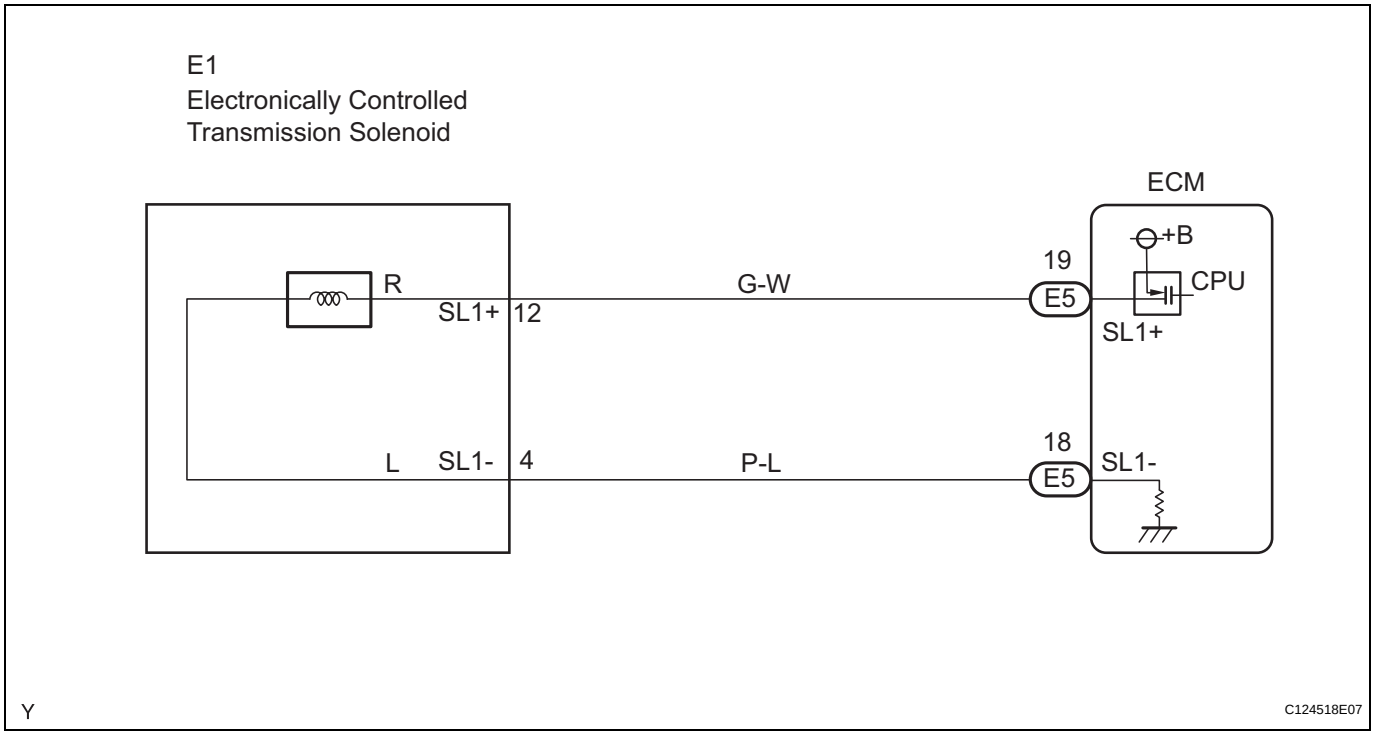

HINT:
The shift solenoid valve SL1 is turned on/off normally when the shift lever is in the D position:

Gearshift controlled by ECM	1st	2nd	3rd	4th	5th
Shift solenoid valve SL1	OFF	OFF	OFF	OFF	ON

1	INSPECT TRANSMISSION WIRE (SL1)

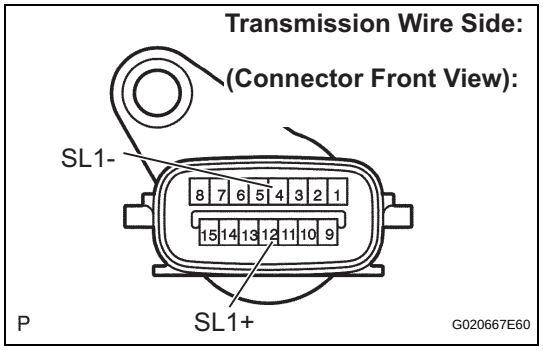

(a) Disconnect the transmission wire connector from the transmission.
(b) Measure the resistance.
Standard resistance

Tester Connection	Specified Condition
12 (SL1+) - 4 (SL1-)	5.0 to 5.6 Ωat 20°C (68°F)

(c) Measure the resistance.
Standard resistance (Check for short)

Tester Connection	Specified Condition
12 (SL1+) - Body ground	10 kΩ or higher
4 (SL1-) - Body ground	10 kΩ or higher

NG → **Go to step 3**

OK

AT

2	CHECK HARNESS AND CONNECTOR (TRANSMISSION WIRE - ECM)

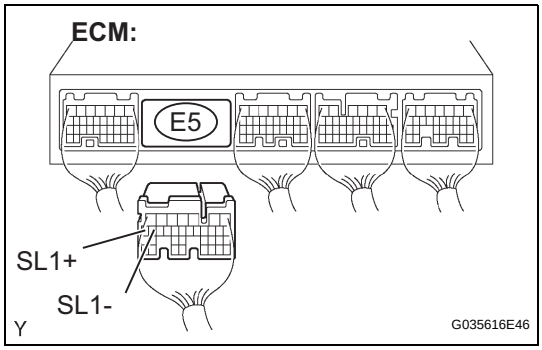

(a) Connect the transmission connector to the transmission.
(b) Disconnect the connector from the ECM.
(c) Measure the resistance.
Standard resistance

Tester Connection	Specified Condition
E5-19 (SL1+) - E5-18 (SL1-)	5.0 to 5.6 Ω at 20°C (68°F)

(d) Measure the resistance.
Standard resistance (Check for short)

Tester Connection	Specified Condition
E5-19 (SL1+) - Body ground	10 kΩ or higher
E5-18 (SL1-) - Body ground	10 kΩ or higher

NG → **REPAIR OR REPLACE HARNESS OR CONNECTOR**

OK

REPLACE ECM

3	INSPECT SHIFT SOLENOID VALVE SL1

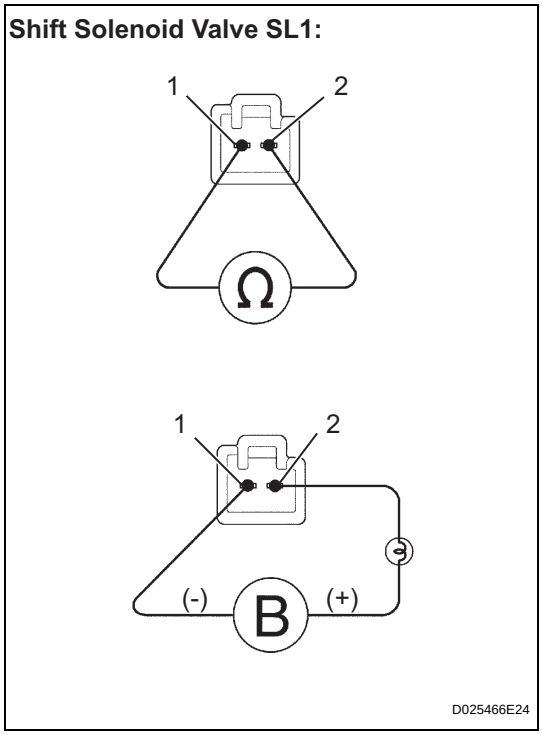

(a) Remove the shift solenoid valve SL1.
(b) Measure the resistance.
Standard resistance

Tester Connection	Specified Condition
1 - 2	5.0 to 5.6 Ω at 20°C (68°F)

(c) Connect the positive (+) lead with a 21 W bulb to terminal 2 and the negative (-) lead to terminal 1 of the solenoid valve connector, then check the movement of the valve.
OK:
The solenoid makes an operating noise.

NG → **REPLACE SHIFT SOLENOID VALVE SL1**

OK

REPAIR OR REPLACE TRANSMISSION WIRE

AT

DTC	P0751	Shift Solenoid "A" Performance (Shift Solenoid Valve S1)

DESCRIPTION

The ECM uses signals from the output shaft speed sensor and input speed sensor to detect the actual gear position (1st, 2nd, 3rd, 4th or 5th gear).
Then the ECM compares the actual gear with the shift schedule in the ECM memory to detect mechanical problems of the shift solenoid valves, valve body or automatic transmission (clutch, brake or gear, etc.).

DTC No.	DTC Detection Conditions	Trouble Areas
P0751	S1 stuck ON malfunction*1: The ECM determines that there is a malfunction when the following conditions are met (2-trip detection logic): (a) When the ECM directs the gearshift to switch to 4th gear, the actual gear is shifted to 1st. (b) When the ECM directs the gearshift to switch to 1st gear, the actual gear is also shifted to 1st.	• Shift solenoid valve S1 remains open • Shift solenoid valve SLT remains open or closed • Valve body is blocked • Automatic transmission (clutch, brake or gear, etc.)
	S1 stuck OFF malfunction*2: The ECM determines that there is a malfunction when the following conditions are met (2-trip detection logic): (a) When the ECM directs the gearshift to switch to 1st gear, the actual gear is shifted to 4th. (b) When the ECM directs the gearshift to switch to 5th gear, the actual gear is also shifted to 5th.	• Shift solenoid valve S1 remains closed • Shift solenoid valve SLT remains open or closed • Valve body is blocked • Automatic transmission (clutch, brake or gear, etc.)

HINT:
Gear positions in the event of a solenoid valve mechanical problem:

Gearshift controlled by ECM	1st	2nd	3rd	4th	5th
*1: Actual gear position under S1 stuck ON malfunction	1st	2nd	2nd	1st	N*
*2: Actual gear position under S1 stuck OFF malfunction	4th	3rd	3rd	4th	5th

N*: Neutral

MONITOR DESCRIPTION

This DTC indicates "stuck ON malfunction" or "stuck OFF malfunction" of the shift solenoid valve S1. The ECM controls the gearshifts by turning the shift solenoid valves "ON/OFF". When the gear position directed by the ECM and the actual gear position do not match, the ECM illuminates the MIL and stores the DTC.

MONITOR STRATEGY

Related DTCs	P0751: Shift solenoid valve S1/OFF malfunction Shift solenoid valve S1/ON malfunction
Required sensors/Components (Main)	Shift solenoid valve S1
Required sensors/Components (Related)	Vehicle speed sensor, Throttle position sensor, Speed sensor (NT), Speed sensor (SP2)
Frequency of operation	Continuous
Duration	OFF malfunctions (A) and (B): 0.4 seconds OFF malfunction (C): Immediate ON malfunctions (A), (B) and (C): 0.4 seconds ON malfunction (D): 3 seconds ON malfunction (E): 0.5 seconds
MIL operation	2 driving cycles

Sequence of operation	None

TYPICAL ENABLING CONDITIONS

The following conditions are common to all OFF malfunctions (A), (B), (C) and ON malfunctions (A), (B), (C), (D), (E).

The monitor will run whenever the following DTCs are not present.	P0115 - P0118: ECT sensor P0125: Insufficient ECT for Closed Loop P0500: VSS P0748 - P0799: Trans solenoid (range)
Turbine speed sensor (NT) circuit	Functioning normally
Output speed sensor (SP2) circuit	Functioning normally
Shift solenoid "A" (S1) circuit	Functioning normally
Shift solenoid "B" (S2) circuit	Functioning normally
Shift solenoid "E" (SR) circuit	Functioning normally
Pressure control solenoid "A" (SL1) circuit	Functioning normally
Pressure control solenoid "B" (SL2) circuit	Functioning normally
ECT (Engine coolant temperature) sensor circuit	Functioning normally
Knock sensor circuit	Functioning normally
ETCS (Electronic throttle control system)	System not down
Transmission shift position	"D"
ECT	40°C (104°F) or more
Spark advance from max. retard timing by knock sensor control	0° CA or more
Engine	Starting

OFF malfunction (A)

ECM selected gear	1st
Vehicle speed	1.2 to 24.9 mph (2 to 40 km/h)
Throttle valve opening angle	8 % or more and 6.5 % or more at engine speed of 2,000 rpm (Conditions vary with engine speed)

OFF malfunction (B)

Current ECM selected gear	5th
Last ECM selected gear	4th
Continuous time of ECM selecting 4th gear	2 seconds or more
Actual gear when ECM selected 4th gear	4th

OFF malfunction (C)

Current ECM selected gear	5th
Last ECM selected gear	4th

ON malfunction (A)

ECM selected gear	1st
Vehicle speed	1.2 to 24.9 mph (2 to 40 km/h)
Throttle valve opening angle	6.5 % or more at engine speed of 2,000 rpm (Conditions vary with engine speed)

ON malfunction (B)

ECM selected gear	4th
Vehicle speed	1.2 mph (2 km/h) or more
Throttle valve opening angle	6.5 % or more at engine speed of 2,000 rpm (Conditions vary with engine speed)

ON malfunction (C)

ECM selected gear	3rd
Vehicle speed	1.2 mph (2 km/h) or more
Throttle valve opening angle	6.5 % or more at engine speed of 2,000 rpm (Conditions vary with engine speed)

ON malfunction (D)

Current ECM selected gear	5th
Last ECM selected gear	4th
Vehicle speed (During transition from 4th to 5th gear)	Less than 62.2 mph (100 km/h)

ON malfunction (E)

ECM selected gear	5th
Engine speed - Turbine speed (NE - NT) (After transition from 4th to 5th gear)	150 rpm or less
Vehicle speed (After transition from 4th to 5th gear)	Less than 62.2 mph (100 km/h)

TYPICAL MALFUNCTION THRESHOLDS

[OFF malfunction]
All of the following conditions are met: OFF malfunctions (A), (B) and (C)
2 detections are necessary in 1 driving cycle.
1st detection; temporary flag ON
2nd detection; pending fault code ON

OFF malfunction (A)

Turbine speed/Output speed	0.93 to 1.07 (Actual gear is 4th)

OFF malfunction (B)

Turbine speed/Output speed	0.65 to 0.79 (Actual gear is 5th)

OFF malfunction (C)

Output record from ECM for 4th → 5th upshifting	Recorded

[ON malfunction]
Either of the following conditions is met:

- ON malfunctions (A) and (B)
- ON malfunction (B) or (C) and ON malfunction (D) or (E)

ON malfunction (A)

Turbine speed/Output speed	3.30 to 7.50 (Actual gear is 1st)

ON malfunction (B)

Turbine speed/Output speed	3.30 to 7.50 (Actual gear is 1st)

ON malfunction (C)

Turbine speed/Output speed	1.91 to 2.35 (Actual gear is 2nd)

ON malfunction (D)

Turbine speed - Output speed x 4th gear ratio	1,000 rpm or more

ON malfunction (E)

Turbine speed - Output speed x 5th gear ratio	1,000 rpm or more

HINT:
Performing the ACTIVE TEST using the intelligent tester allows components, such as the relay, VSV, and actuator, to be operated without removing any parts. Performing the ACTIVE TEST as a first step of troubleshooting is one method of shortening labor time.
It is possible to display the DATA LIST during the ACTIVE TEST.
1. Warm up the engine.
2. Turn the ignition switch off.
3. Connect the intelligent tester together with the CAN VIM (controller area network vehicle interface module) to the DLC3.
4. Turn the ignition switch to the ON position.
5. Push the "ON" button of the tester.
6. Clear the DTC.
7. Select the items "DIAGNOSIS/ ENHANCED OBD II/ ACTIVE TEST/ SHIFT".
8. According to the display on the tester, perform the "ACTIVE TEST".

HINT:
While driving, the shift position can be changed with the intelligent tester.
Comparing the shift position directed by the ACTIVE TEST with the actual shift position enables the problem to be confirmed (See page AT-32).

Item	Test Details	Diagnostic Note
SHIFT	[Test Details] Operate the shift solenoid valve and set each shift position manually. [Vehicle Condition] Vehicle Speed: Less than 30 mph (50 km/h) [Others] • Press → button: Shift up • Press ← button: Shift down	Possible to check the operation of the shift solenoid valves. HINT: Shifting to the 5th gear is possible only when the vehicle is stationary with the engine idling.

HINT:
- This test can be conducted when the vehicle speed is 30 mph (50 km/h) or less.
- The 4th to 5th up-shifting must be performed with the accelerator pedal released.
- The 5th to 4th down-shifting must be performed with the accelerator pedal released.
- Do not operate the accelerator pedal for at least 2 seconds after shifting and do not shift successively.
- The shift position directed by the ECM is shown in the DATA LIST/ SHIFT display on the intelligent tester.
- The shift solenoid valve S1 is turned on/off normally when the shift lever is in the D position:

Gearshift controlled by ECM	1st	2nd	3rd	4th	5th
Shift solenoid valve S1	ON	ON	OFF	OFF	OFF

1	CHECK ANY OTHER DTCS OUTPUT (IN ADDITION TO DTC P0751)

(a) Connect the the intelligent tester to the DLC3.
(b) Turn the ignition switch to the ON position and push the intelligent tester main switch ON.
(c) Select the items "DIAGNOSIS/ ENHANCED OBD II/ DTC INFO/ CURRENT CODES".
(d) Read the DTCs using the intelligent tester.

Result:

Display (DTC Output)	Proceed to
Only "P0751" is output	A
"P0751" and other DTCs	B

HINT:
If any codes besides "P0751" are output, perform troubleshooting for those DTCs first.

B → GO TO DTC CHART

A

2	PERFORM ACTIVE TEST USING INTELLIGENT TESTER (LINE PRESS UP)

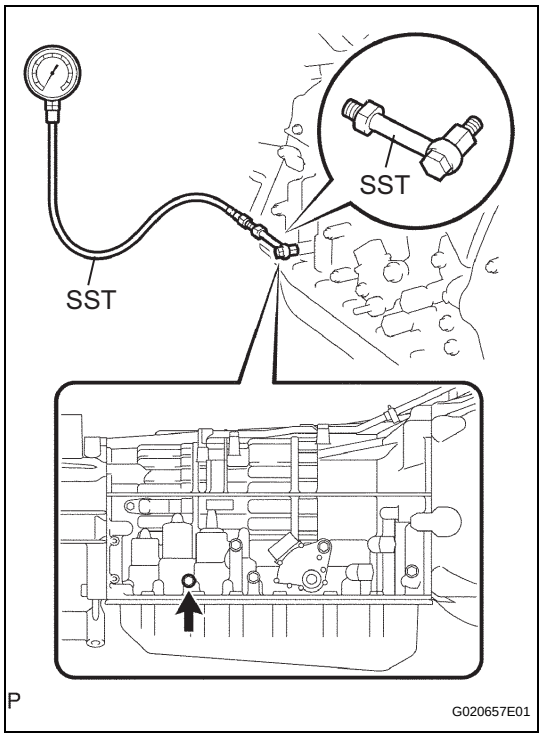

NOTICE:

- **Perform the test at the normal operating ATF (Automatic Transmission Fluid) temperature: 50 to 80°C (122 to 176°F).**
- **Be careful to prevent SST's hose from interfering with the exhaust pipe.**
- **Perform the test with the A/C OFF.**

HINT:

Performing the intelligent tester's ACTIVE TEST allows relay, VSV, actuator and other items to be operated without removing any parts. Performing the ACTIVE TEST early in troubleshooting is one way to save time.

The DATA LIST can be displayed during the ACTIVE TEST.

(a) Remove the test plug on the transmission case center right side and connect SST.

SST 09992-00095 (09992-00231, 09992-00271)

(b) Connect the intelligent tester to the DLC3.

(c) Start the engine and warm it up.

(d) Measure the line pressure with SST.

(e) Turn the intelligent tester ON.

(f) Enter the following menus: DIAGNOSIS / ENHANCED OBD II / ACTIVE TEST.

(g) Follow the instructions on the tester and perform the ACTIVE TEST.

(h) Measure the line pressure with SST.

Item	Test Details	Diagnostic Note
LINE PRESS UP*	[Test Details] Operate shift solenoid SLT and raise line pressure. [Vehicle Condition] • Vehicle stopped • IDL: ON HINT: OFF: Line pressure up (when Active Test of "LINE PRESS UP" is performed, ECM commands SLT solenoid to turn OFF) ON: No action (normal operation)	-

*: "LINE PRESS UP" in the ACTIVE TEST is performed to check the line pressure changes by connecting SST to the automatic transmission, which is used in the HYDRAULIC TEST (See page AT-16) as well. Please note that the pressure values in the ACTIVE TEST and HYDRAULIC TEST are different.

NG → REPLACE SHIFT SOLENOID VALVE SLT

OK

3	INSPECT SHIFT SOLENOID VALVE S1

Shift Solenoid Valve S1:

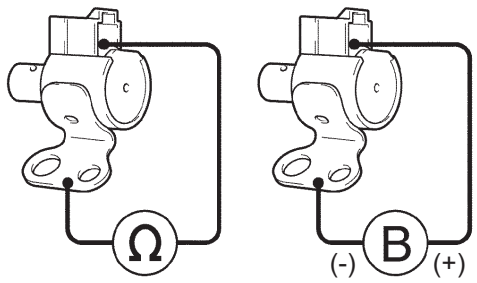

A110986E04

(a) Remove the shift solenoid valve S1.
(b) Measure the resistance.
Standard resistance

Tester Connection	Specified Condition
Solenoid Connector (S1) - Solenoid Body (S1)	11 to 15 Ω at 20°C (68°F)

(c) Connect the positive (+) lead to the terminal of the solenoid connector, and the negative (-) lead to the solenoid body.
OK:
The solenoid makes an operating noise.

NG → **REPLACE SHIFT SOLENOID VALVE S1**

OK

4	INSPECT TRANSMISSION VALVE BODY ASSEMBLY (See chapter 2 in the problem symptoms table)

OK:
There are no foreign objects on any valves and they operate smoothly.

NG → **REPAIR OR REPLACE TRANSMISSION VALVE BODY ASSEMBLY**

OK

REPAIR OR REPLACE AUTOMATIC TRANSMISSION ASSEMBLY

DTC	P0756	Shift Solenoid "B" Performance (Shift Solenoid Valve S2)

DESCRIPTION

The ECM uses signals from the output shaft speed sensor and input speed sensor to detect the actual gear position (1st, 2nd, 3rd, 4th or 5th gear).
Then the ECM compares the actual gear with the shift schedule in the ECM memory to detect mechanical problems of the shift solenoid valves, valve body or automatic transmission (clutch, brake or gear, etc.).

DTC No.	DTC Detection Conditions	Trouble Areas
P0756	S2 stuck ON malfunction*1; The ECM determines that there is a malfunction when the following conditions are met (2-trip detection logic): (a) When the ECM directs the gearshift to switch to 1st gear, the actual gear is shifted to 2nd. (b) When the ECM directs the gearshift to switch to 5th gear, the engine overruns (clutch slips)	• Shift solenoid valve S2 remains open • Shift solenoid valve SLT remains open or closed • Valve body is blocked • Automatic transmission (clutch, brake or gear, etc.)
	S2 stuck OFF malfunction*2: The ECM determines that there is a malfunction when the following conditions are met (2-trip detection logic): (a) When the ECM directs the gearshift to switch to 1st gear, the actual gear is also shifted to 1st. (b) When the ECM directs the gearshift to switch to 2nd gear, the actual gear is shifted to 1st. (c) When the ECM directs the gearshift to switch to 5th gear, the actual gear is also shifted to 5th.	• Shift solenoid valve S2 remains closed • Shift solenoid valve SLT remains open or closed • Valve body is blocked • Automatic transmission (clutch, brake or gear, etc.)

HINT:
Gear positions in the event of a solenoid valve mechanical problem:

Gearshift controlled by ECM	1st	2nd	3rd	4th	5th
*1: Actual gear position under S2 stuck ON malfunction	2nd	2nd	3rd	3rd	N*
*2: Actual gear position under S2 stuck OFF malfunction	2nd	1st	4th	4th	5th

N*: Neutral

MONITOR DESCRIPTION

This DTC indicates "stuck ON malfunction" or "stuck OFF malfunction" of the shift solenoid valve S2. The ECM controls the gearshifts by turning the shift solenoid valves "ON/OFF". When the gear position directed by the ECM and the actual gear position do not match, the ECM illuminates the MIL and stores the DTC.

MONITOR STRATEGY

Related DTCs	P0756: Shift solenoid valve S2/OFF malfunction Shift solenoid valve S2/ON malfunction
Required sensors/Components (Main)	Shift solenoid valve S2
Required sensors/Components (Related)	Vehicle speed sensor, Throttle position sensor, Speed sensor (NT), Speed sensor (SP2)
Frequency of operation	Continuous

Duration	OFF malfunctions (A), (B) and (C): 0.4 seconds OFF malfunction (D): Immediate ON malfunctions (A) and (B): 0.4 seconds ON malfunction (C): 3 seconds ON malfunction (D): 0.5 seconds
MIL operation	2 driving cycles
Sequence of operation	None

TYPICAL ENABLING CONDITIONS

The following conditions are common to all OFF malfunctions (A), (B), (C), (D) and ON malfunctions (A), (B), (C), (D).

The monitor will run whenever the following DTCs are not present.	P0115 - P0118: ECT sensor P0125: Insufficient ECT for Closed Loop P0500: VSS P0748 - P799: Trans solenoid (range)
Turbine speed sensor (NT) circuit	Functioning normally
Output speed sensor (SP2) circuit	Functioning normally
Shift solenoid "A" (S1) circuit	Functioning normally
Shift solenoid "B" (S2) circuit	Functioning normally
Shift solenoid "E" (SR) circuit	Functioning normally
Pressure control solenoid "A" (SL1) circuit	Functioning normally
Pressure control solenoid "B" (SL2) circuit	Functioning normally
ECT (Engine coolant temperature) sensor circuit	Functioning normally
Knock sensor circuit	Functioning normally
ETCS (Electronic throttle control system)	System not down
Transmission shift position	"D"
ECT	40°C (104°F) or more
Spark advance from max. retard timing by knock sensor control	0° CA or more
Engine	Starting

OFF malfunction (A)

ECM selected gear	1st
Vehicle speed	1.2 to 24.9 mph (2 to 40 km/h)
Throttle valve opening angle	6.5 % or more at engine speed of 2,000 rpm (Conditions vary with engine speed)

OFF malfunction (B)

ECM selected gear	2nd
Vehicle speed	1.2 mph (2 km/h) or more
Output speed	2nd → 1st down shift point or more
Throttle valve opening angle	6.5 % or more at engine speed of 2,000 rpm (Conditions vary with engine speed)

OFF malfunction (C)

Current ECM selected gear	5th
Last ECM selected gear	4th
Continuous time of ECM selecting 4th gear	2 seconds or more
Actual gear when ECM selected 4th gear	4th

OFF malfunction (D)

Current ECM selected gear	5th

Last ECM selected gear	4th

ON malfunction (A)

ECM selected gear	1st
Vehicle speed	1.2 to 24.9 mph (2 to 40 km/h)
Throttle valve opening angle	6.5 % or more at engine speed of 2,000 rpm (Conditions vary with engine speed)

ON malfunction (B)

ECM selected gear	4th
Vehicle speed	1.2 mph (2 km/h) or more
Throttle valve opening angle	6.5 % or more at engine speed of 2,000 rpm (Conditions vary with engine speed)

ON malfunction (C)

Current ECM selected gear	5th
Last ECM selected gear	4th
Vehicle speed (During transition from 4th to 5th gear)	Less than 62.2 mph (100 km/h)

ON malfunction (D)

ECM selected gear	5th
Engine speed - Turbine speed (NE - NT) (After transition from 4th to 5th gear)	150 rpm or less
Vehicle speed (After transition from 4th to 5th gear)	Less than 62.2 mph (100 km/h)

TYPICAL MALFUNCTION THRESHOLDS

[OFF malfunction]
All of the following conditions are met: OFF malfunctions (A), (B), (C) and (D)
2 detections are necessary in 1 driving cycle.
1st detection; temporary flag ON
2nd detection; pending fault code ON

OFF malfunction (A)

Turbine speed/Output speed	3.30 to 7.50 (Actual gear is 1st)

OFF malfunction (B)

Turbine speed/Output speed	3.30 to 7.50 (Actual gear is 1st)

OFF malfunction (C)

Turbine speed/Output speed	0.65 to 0.79 (Actual gear is 5th)

OFF malfunction (D)

Output record from ECM for 4th → 5th upshifting	Recorded

[ON malfunction]
ON malfunction (A) or (B) and ON malfunction (C) or (D) are met:

ON malfunction (A)

Turbine speed/Output speed	1.91 to 2.35 (Actual gear is 2nd)

ON malfunction (B)

Turbine speed/Output speed	1.28 to 1.53 (Actual gear is 3rd)

ON malfunction (C)

Turbine speed - Output speed x 4th gear ratio	1,000 rpm or more

ON malfunction (D)

Turbine speed - Output speed x 5th gear ratio	1,000 rpm or more

HINT:
Performing the ACTIVE TEST using the intelligent tester allows components, such as the relay, VSV, and actuator, to be operated without removing any parts. Performing the ACTIVE TEST as a first step of troubleshooting is one method of shortening labor time.
It is possible to display the DATA LIST during the ACTIVE TEST.

1. Warm up the engine.
2. Turn the ignition switch off.
3. Connect the intelligent tester together with the CAN VIM (controller area network vehicle interface module) to the DLC3.
4. Turn the ignition switch to the ON position.
5. Push the "ON" button of the tester.
6. Clear the DTC.
7. Select the items "DIAGNOSIS/ ENHANCED OBD II/ ACTIVE TEST/ SHIFT".
8. According to the display on the tester, perform the "ACTIVE TEST".

HINT:
While driving, the shift position can be changed with the intelligent tester.
Comparing the shift position directed by the ACTIVE TEST with the actual shift position enables the problem to be confirmed (See page AT-32).

Item	Test Details	Diagnostic Note
SHIFT	[Test Details] Operate the shift solenoid valve and set each shift position manually. [Vehicle Condition] Vehicle Speed: Less than 30 mph (50 km/h) [Others] • Press → button: Shift up • Press ← button: Shift down	Possible to check the operation of the shift solenoid valves. HINT: Shifting to the 5th gear is possible only when the vehicle is stationary with the engine idling.

HINT:

- This test can be conducted when the vehicle speed is 30 mph (50 km/h) or less.
- The 4th to 5th up-shifting must be performed with the accelerator pedal released.
- The 5th to 4th down-shifting must be performed with the accelerator pedal released.
- Do not operate the accelerator pedal for at least 2 seconds after shifting and do not shift successively.
- The shift position directed by the ECM is shown in the DATA LIST/ SHIFT display on the intelligent tester.
- The shift solenoid valve S2 is turned on/off normally when the shift lever is in the D position:

Gearshift controlled by ECM	1st	2nd	3rd	4th	5th
Shift solenoid valve S2	OFF	ON	ON	OFF	OFF

1	CHECK ANY OTHER DTCS OUTPUT (IN ADDITION TO DTC P0756)

(a) Connect the intelligent tester to the DLC3.
(b) Turn the ignition switch to the ON position and push the intelligent tester main switch ON.
(c) Select the items "DIAGNOSIS/ ENHANCED OBD II/ DTC INFO/ CURRENT CODES".

(d) Read the DTCs using the intelligent tester.

Result:

Display (DTC Output)	Proceed to
Only "P0756" is output	A
"P0756" and other DTCs	B

HINT:
If any codes besides "P0756" are output, perform troubleshooting for those DTCs first.

B → **GO TO DTC CHART**

A

2 **PERFORM ACTIVE TEST USING INTELLIGENT TESTER (LINE PRESS UP) (See page AT-79)**

NG → **REPLACE SHIFT SOLENOID VALVE SLT**

OK

3 **INSPECT SHIFT SOLENOID VALVE S2**

Shift Solenoid Valve S2:

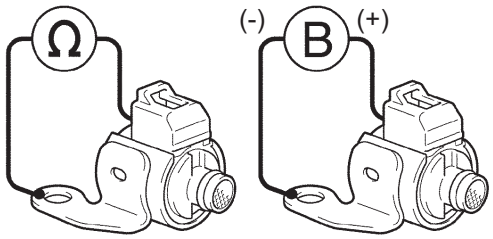

A110987E04

(a) Remove the shift solenoid valve S2.
(b) Measure the resistance.
Standard resistance

Tester Connection	Specified Condition
Solenoid Connector (S2) - Solenoid Body (S2)	11 to 15 Ωat 20°C (68°F)

(c) Connect the positive (+) lead to the terminal of the solenoid connector, and the negative (-) lead to the solenoid body.
OK:
The solenoid makes an operating noise.

NG → **REPLACE SHIFT SOLENOID VALVE S2**

OK

4 **INSPECT TRANSMISSION VALVE BODY ASSEMBLY (See chapter 2 in the problem symptoms table)**

OK:
There are no foreign objects on any valves and they operate smoothly.

NG → **REPAIR OR REPLACE TRANSMISSION VALVE BODY ASSEMBLY**

OK

REPAIR OR REPLACE AUTOMATIC TRANSMISSION ASSEMBLY

DTC	P0771	Shift Solenoid "E" Performance (Shift Solenoid Valve SR)

DESCRIPTION

The ECM uses signals from the output shaft speed sensor and input speed sensor to detect the actual gear position (1st, 2nd, 3rd, 4th or 5th gear).
Then the ECM compares the actual gear with the shift schedule in the ECM memory to detect mechanical problems of the shift solenoid valves, valve body or automatic transmission (clutch, brake or gear, etc.).

DTC No.	DTC Detection Conditions	Trouble Areas
P0771	SR stuck ON malfunction*1: The ECM determines that there is a malfunction when the following condition is met (2-trip detection logic): (a) When the ECM directs the gearshift to switch to 2nd gear, the engine overruns (clutch slips)	• Shift solenoid valve SR remains open • Shift solenoid valve SL1 remains open • Shift solenoid valve SLT remains open or closed • Valve body is blocked • Automatic transmission (clutch, brake or gear, etc.)
	SR stuck OFF malfunction*2: The ECM determines that there is a malfunction when the following condition is met (2-trip detection logic): (a) When the ECM directs the gearshift to switch to 5th gear, the actual gear is shifted to 4th.	• Shift solenoid valve SR remains closed • Shift solenoid valve SL1 remains closed • Shift solenoid valve SLT remains open or closed • Valve body is blocked • Automatic transmission (clutch, brake or gear, etc.)

HINT:
Gear positions in the event of a solenoid valve mechanical problem:

Gearshift controlled by ECM	1st	2nd	3rd	4th	5th
*1: Actual gear position under SR stuck ON malfunction	1st	N*	3rd	4th	5th
*2: Actual gear position under SR stuck OFF malfunction	1st	2nd	3rd	4th	4th

N*: Neutral

MONITOR DESCRIPTION

This DTC indicates "stuck ON malfunction" or "stuck OFF malfunction" of the shift solenoid valve SR or SL1. The ECM controls the gearshifts by turning the shift solenoid valves "ON/OFF". When the gear position directed by the ECM and the actual gear position do not match, the ECM illuminates the MIL and stores the DTC.

MONITOR STRATEGY

Related DTCs	P0771: Shift solenoid valve SR/OFF malfunction Shift solenoid valve SR/ON malfunction
Required sensors/Components (Main)	Shift solenoid valve SR
Required sensors/Components (Related)	Speed sensor (NT), Speed sensor (SP2), Crankshaft position sensor (NE)
Frequency of operation	Continuous
Duration	OFF malfunction (A): 0.4 seconds OFF malfunctions (B) and (C): Immediate ON malfunction: 0.15 seconds
MIL operation	2 driving cycles
Sequence of operation	None

TYPICAL ENABLING CONDITIONS

The following conditions are common to all OFF malfunctions (A), (B), (C) and ON malfunction.

The monitor will run whenever the following DTCs are not present.	P0115 - P0118: ECT sensor P0125: Insufficient ECT for Closed Loop P0500: VSS P0748 - P0799: Trans solenoid (range)
Turbine speed sensor (NT) circuit	Functioning normally
Output speed sensor (SP2) circuit	Functioning normally
Shift solenoid "A" (S1) circuit	Functioning normally
Shift solenoid "B" (S2) circuit	Functioning normally
Shift solenoid "E" (SR) circuit	Functioning normally
Pressure control solenoid "A" (SL1) circuit	Functioning normally
Pressure control solenoid "B" (SL2) circuit	Functioning normally
ECT (Engine coolant temperature) sensor circuit	Functioning normally
Knock sensor circuit	Functioning normally
ETCS (Electronic throttle control system)	System not down
Transmission shift position	"D"
ECT	40°C (104°F) or more
Spark advance from max. retard timing by knock sensor control	0° CA or more
Engine	Starting

OFF malfunction (A)

ECM selected gear	5th
Vehicle speed	1.2 mph (2 km/h) or more
Throttle valve opening angle	6.5 % or more at engine speed of 2,000 rpm (Conditions vary with engine speed)

OFF malfunction (B)

Current ECM selected gear	5th
Last ECM selected gear	4th
Continuous time of ECM selecting 4th gear	2 seconds or more

OFF malfunction (C)

Current ECM selected gear	5th
Last ECM selected gear	4th

ON malfunction

Current ECM selected gear	2nd
Last ECM selected gear	1st
Throttle valve opening angle (During transition from 1st to 2nd gear)	5.5 % or more at engine speed of 3,000 rpm (Conditions vary with engine speed)

TYPICAL MALFUNCTION THRESHOLDS

[OFF malfunction]

All of the following conditions are met: OFF malfunctions (A), (B) and (C)

2 detections are necessary in 1 driving cycle.

1st detection; temporary flag ON

2nd detection; pending fault code ON

OFF malfunction (A)

Turbine speed/Output speed	0.93 to 1.07 (Actual gear is 4th)

OFF malfunction (B)

Turbine speed/Output speed	No change as follow: 0.93 to 1.07 (Actual gear is 4th) ↓ 0.65 to 0.79 (Actual gear is 5th)

OFF malfunction (C)

Output record from ECM for 4th → 5th upshifting	Recorded

[ON malfunction]
2 detections are necessary in 1 driving cycle.
1st detection; temporary flag ON
2nd detection; pending fault code ON

Turbine speed - Output speed x 1st gear ratio	150 rpm or more

HINT:
Performing the ACTIVE TEST using the intelligent tester allows components, such as the relay, VSV, and actuator, to be operated without removing any parts. Performing the ACTIVE TEST as a first step of troubleshooting is one method of shortening labor time.
It is possible to display the DATA LIST during the ACTIVE TEST.

1. Warm up the engine.
2. Turn the ignition switch off.
3. Connect the intelligent tester together with the CAN VIM (controller area network vehicle interface module) to the DLC3.
4. Turn the ignition switch to the ON position.
5. Push the "ON" button of the tester.
6. Clear the DTC.
7. Select the items "DIAGNOSIS/ ENHANCED OBD II/ ACTIVE TEST/ SHIFT".
8. According to the display on the tester, perform the "ACTIVE TEST".

HINT:
While driving, the shift position can be changed with the intelligent tester.
Comparing the shift position directed by the ACTIVE TEST with the actual shift position enables the problem to be confirmed (See page AT-32).

Item	Test Details	Diagnostic Note
SHIFT	[Test Details] Operate the shift solenoid valve and set each shift position manually. [Vehicle Condition] Vehicle Speed: Less than 30 mph (50 km/h) [Others] • Press → button: Shift up • Press ← button: Shift down	Possible to check the operation of the shift solenoid valves. HINT: Shifting to the 5th gear is possible only when the vehicle is stationary with the engine idling.

HINT:

- This test can be conducted when the vehicle speed is 30 mph (50 km/h) or less.
- The 4th to 5th up-shifting must be performed with the accelerator pedal released.
- The 5th to 4th down-shifting must be performed with the accelerator pedal released.
- Do not operate the accelerator pedal for at least 2 seconds after shifting and do not shift successively.
- The shift position directed by the ECM is shown in the DATA LIST/ SHIFT display on the intelligent tester.
- The shift solenoid valve SR and S1 are turned on/off normally when the shift lever is in the D position:

Gearshift controlled by ECM	1st	2nd	3rd	4th	5th
Shift solenoid valve SR	OFF	OFF	OFF	OFF	ON
Shift solenoid valve SL1	OFF	OFF	OFF	OFF	ON

1	CHECK ANY OTHER DTCS OUTPUT (IN ADDITION TO DTC P0771)

(a) Connect the intelligent tester to the DLC3.
(b) Turn the ignition switch to the ON position and push the intelligent tester main switch ON.
(c) Select the items "DIAGNOSIS/ ENHANCED OBD II/ DTC INFO/ CURRENT CODES".
(d) Read the DTCs using the intelligent tester.

Result:

Display (DTC Output)	Proceed to
Only "P0771" is output	A
P0771" and other DTCs	B

HINT:
If any codes besides "P0771" are output, perform troubleshooting for those DTCs first

B → GO TO DTC CHART

A

2	PERFORM ACTIVE TEST USING INTELLIGENT TESTER (LINE PRESS UP) (See page AT-79)

NG → REPLACE SHIFT SOLENOID VALVE SLT

OK

3	INSPECT SHIFT SOLENOID VALVE SR

Shift Solenoid Valve SR:

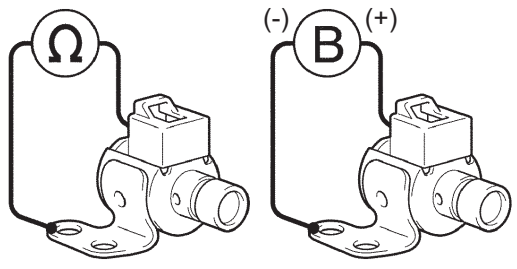

A110988E05

(a) Remove the shift solenoid valve SR.
(b) Measure the resistance.
Standard resistance

Tester Connection	Specified Condition
Solenoid Connector (SR) - Solenoid Body (SR)	11 to 15 Ω at 20°C (68°F)

(c) Connect the positive (+) lead to the terminal of the solenoid connector, and the negative (-) lead to the solenoid body.
OK:
The solenoid makes an operating noise

NG → REPLACE SHIFT SOLENOID VALVE SR

OK

AT

4	INSPECT SHIFT SOLENOID VALVE SL1

Shift Solenoid Valve SL1:

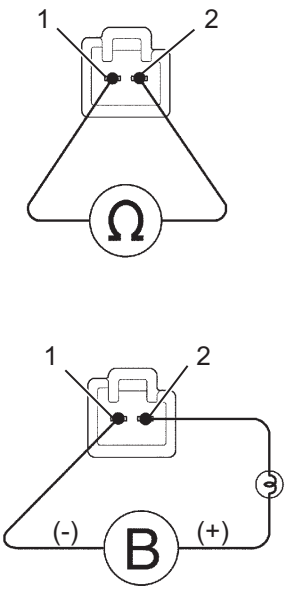

D025466E24

(a) Remove the shift solenoid valve SL1.
(b) Measure the resistance.
Standard resistance

Tester Connection	Specified Condition
1 - 2	5.0 to 5.6 Ω at 20°C (68°F)

(c) Connect the positive (+) lead with a 21 W bulb to terminal 2 and the negative (-) lead to terminal 1 of the solenoid valve connector, then check the movement of the valve.
OK:
The solenoid makes an operating noise.

NG → **REPLACE SHIFT SOLENOID VALVE SL1**

OK

5	INSPECT TRANSMISSION VALVE BODY ASSEMBLY (See chapter 2 in the problem symptoms table)

OK:
There are no foreign objects on any valves and they operate smoothly.

NG → **REPAIR OR REPLACE TRANSMISSION VALVE BODY ASSEMBLY**

OK

REPAIR OR REPLACE AUTOMATIC TRANSMISSION ASSEMBLY

DTC	P0776	Pressure Control Solenoid "B" Performance (Shift Solenoid Valve SL2)

DESCRIPTION

The ECM uses signals from the output shaft speed sensor and input speed sensor to detect the actual gear position (1st, 2nd, 3rd, 4th or 5th gear).
Then the ECM compares the actual gear with the shift schedule in the ECM memory to detect mechanical problems of the shift solenoid valves, valve body or automatic transmission (clutch, brake or gear, etc.).

DTC No.	DTC Detection Conditions	Trouble Areas
P0776	SL2 stuck ON malfunction*1: The ECM determines that there is a malfunction when the following conditions are met (2-trip detection logic): (a) When the ECM directs the gearshift to switch to 4th gear, the actual gear is also shifted to 4th. (b) When the ECM directs the gearshift to switch to 5th gear, the engine overruns (clutch slips)	• Shift solenoid valve SL2 remains open • Shift solenoid valve SLT remains open or closed • Valve body is blocked • Automatic transmission (clutch, brake or gear, etc.)

HINT:
Gear positions in the event of a solenoid valve mechanical problem:

Gearshift controlled by ECM	1st	2nd	3rd	4th	5th
*1: Actual gear position under SL2 stuck ON malfunction	1st	2nd	3rd	4th	N*

N*: Neutral

MONITOR DESCRIPTION

This DTC indicates "stuck ON malfunction" of the shift solenoid valve SL2.
The ECM controls the gearshifts by turning the shift solenoid valves "ON/OFF". When the gear position directed by the ECM and the actual gear position do not match, the ECM illuminates the MIL and stores the DTC.

MONITOR STRATEGY

Related DTCs	P0776: Shift solenoid valve SL2/ON malfunction
Required sensors/Components (Main)	Shift solenoid valve SL2
Required sensors/Components (Related)	Speed sensor (NT), Speed sensor (SP2), Crankshaft position sensor (NE)
Frequency of operation	Continuous
Duration	ON malfunctions (A), (B) and (C): 0.4 seconds ON malfunction (D): 3 seconds ON malfunction (E): 0.5 seconds
MIL operation	2 driving cycles
Sequence of operation	None

TYPICAL ENABLING CONDITIONS

The following conditions are common to all ON malfunctions (A), (B), (C), (D) and (E).

The monitor will run whenever the following DTCs are not present.	P0115 - P0118: ECT sensor P0125: Insufficient ECT for Closed Loop P0500: VSS P0748 - P0799: Trans solenoid (range)
Turbine speed sensor (NT) circuit	Functioning normally
Output speed sensor (SP2) circuit	Functioning normally
Shift solenoid "A" (S1) circuit	Functioning normally

Shift solenoid "B" (S2) circuit	Functioning normally
Shift solenoid "E" (SR) circuit	Functioning normally
Pressure control solenoid "A" (SL1) circuit	Functioning normally
Pressure control solenoid "B" (SL2) circuit	Functioning normally
ECT (Engine coolant temperature) sensor circuit	Functioning normally
Knock sensor circuit	Functioning normally
ETCS (Electronic throttle control system)	System not down
Transmission shift position	"D"
ECT	40°C (104°F) or more
Spark advance from max. retard timing by knock sensor control	0° CA or more
Engine	Starting

ON malfunction (A)

ECM selected gear	1st
Vehicle speed	1.2 to 24.9 mph (2 to 40 km/h)
Throttle valve opening angle	6.5 % or more at engine speed of 2,000 rpm (Conditions vary with engine speed)

ON malfunction (B)

ECM selected gear	3rd
Vehicle speed	1.2 mph (2 km/h) or more
Throttle valve opening angle	6.5 % or more at engine speed of 2,000 rpm (Conditions vary with engine speed)

ON malfunction (C)

ECM selected gear	4th
Vehicle speed	1.2 mph (2 km/h) or more
Throttle valve opening angle	6.5 % or more at engine speed of 2,000 rpm (Conditions vary with engine speed)

ON malfunction (D)

Current ECM selected gear	5th
Last ECM selected gear	4th
Vehicle speed (During transition from 4th to 5th gear)	Less than 62.2 mph (100 km/h)

ON malfunction (E)

ECM selected gear	5th
Engine speed - Turbine speed (NE - NT) (After transition from 4th to 5th gear)	150 rpm or less
Vehicle speed (After transition from 4th to 5th gear)	Less than 62.2 mph (100 km/h)

TYPICAL MALFUNCTION THRESHOLDS

[ON malfunction]

Both of the following conditions are met:

- ON malfunctions (A) and (B), or ON malfunction (C)
- ON malfunction (D) or (E)

ON malfunction (A)

Turbine speed/Output speed	3.30 to 7.50 (Actual gear is 1st)

ON malfunction (B)

Turbine speed/Output speed	1.28 to 1.53 (Actual gear is 3rd)

ON malfunction (C)

Turbine speed/Output speed	0.93 to 1.07 (Actual gear is 4th)

ON malfunction (D)

Turbine speed - Output speed x 4th gear ratio	1,000 rpm or more

ON malfunction (E)

Turbine speed - Output speed x 5th gear ratio	1,000 rpm or more

HINT:
Performing the ACTIVE TEST using the intelligent tester allows components, such as the relay, VSV, and actuator, to be operated without removing any parts. Performing the ACTIVE TEST as a first step of troubleshooting is one method of shortening labor time.
It is possible to display the DATA LIST during the ACTIVE TEST.

1. Warm up the engine.
2. Turn the ignition switch off.
3. Connect the intelligent tester together with the CAN VIM (controller area network vehicle interface module) to the DLC3.
4. Turn the ignition switch to the ON position.
5. Push the "ON" button of the tester.
6. Clear the DTC.
7. Select the items "DIAGNOSIS/ ENHANCED OBD II/ ACTIVE TEST/ SHIFT".
8. According to the display on the tester, perform the "ACTIVE TEST".

HINT:
While driving, the shift position can be changed with the intelligent tester.
Comparing the shift position directed by the ACTIVE TEST with the actual shift position enables the problem to be confirmed (See page AT-32).

Item	Test Details	Diagnostic Note
SHIFT	[Test Details] Operate the shift solenoid valve and set each shift position manually. [Vehicle Condition] Vehicle Speed: Less than 30 mph (50 km/h) [Others] • Press → button: Shift up • Press ← button: Shift down	Possible to check the operation of the shift solenoid valves. HINT: Shifting to the 5th gear is possible only when the vehicle is stationary with the engine idling.

HINT:

- This test can be conducted when the vehicle speed is 30 mph (50 km/h) or less.
- The 4th to 5th up-shifting must be performed with the accelerator pedal released.
- The 5th to 4th down-shifting must be performed with the accelerator pedal released.
- Do not operate the accelerator pedal for at least 2 seconds after shifting and do not shift successively.
- The shift position directed by the ECM is shown in the DATA LIST/ SHIFT display on the intelligent tester.
- The shift solenoid valve SL2 is turned on/off normally when the shift lever is in the D position:

Gearshift controlled by ECM	1st	2nd	3rd	4th	5th
Shift solenoid valve SL2	ON	ON	ON	ON	OFF

1	**CHECK ANY OTHER DTCS OUTPUT (IN ADDITION TO DTC P0776)**

(a) Connect the intelligent tester to the DLC3.
(b) Turn the ignition switch to the ON position and push the intelligent tester main switch ON.

(c) Select the items "DIAGNOSIS/ ENHANCED OBD II/ DTC INFO/ CURRENT CODES".
(d) Read the DTCs using the intelligent tester.

Result:

Display (DTC Output)	Proceed to
Only "P0776" is output	A
"P0776" and other DTCs	B

HINT:
If any codes besides "P0776" are output, perform troubleshooting for those DTCs first.

B → **GO TO DTC CHART**

A

2 **PERFORM ACTIVE TEST USING INTELLIGENT TESTER (LINE PRESS UP) (See page AT-79)**

NG → **REPLACE SHIFT SOLENOID VALVE SLT**

OK

3 **INSPECT SHIFT SOLENOID VALVE SL2**

Shift Solenoid Valve SL2:

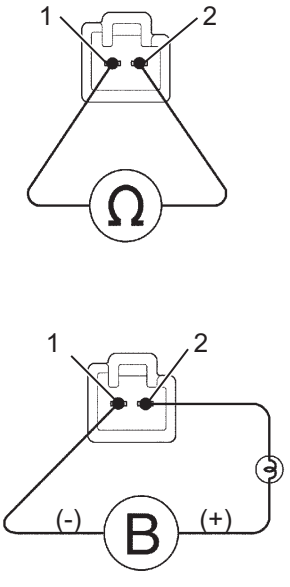

D025466E25

(a) Remove the shift solenoid valve SL2.
(b) Measure the resistance.
Standard resistance

Tester Connection	Specified Condition
1 - 2	5.0 to 5.6 Ωat 20°C (68°F)

(c) Connect the positive (+) lead with a 21 W bulb to terminal 2 and the negative (-) lead to terminal 1 of the solenoid valve connector, then check the movement of the valve.
OK:
The solenoid makes an operating noise.

NG → **REPLACE SHIFT SOLENOID VALVE SL2**

OK

4	**INSPECT TRANSMISSION VALVE BODY ASSEMBLY (See chapter 2 in the problem symptoms table)**

OK:
There are no foreign objects on any valves and they operate smoothly.

NG → **REPAIR OR REPLACE TRANSMISSION VALVE BODY ASSEMBLY**

OK

REPAIR OR REPLACE AUTOMATIC TRANSMISSION ASSEMBLY

DTC	P0778	Pressure Control Solenoid "B" Electrical (Shift Solenoid Valve SL2)

DESCRIPTION

Shifting from 1st to 5th is performed in combination with the ON and OFF operation of the shift solenoid valves S1, S2, SR, SL1 and SL2 which are controlled by the ECM. If an open or short circuit occurs in any of the shift solenoid valves, the ECM controls the remaining normal shift solenoid valves to allow the vehicle to be driven smoothly (See page AT-32).

DTC No.	DTC Detection Conditions	Trouble Areas
P0778	The ECM checks for an open or short in the shift solenoid valve SL2 circuit (1-trip detection logic): • Output signal duty equals 100 %. (NOTE: SL2 output signal duty is less than 100 % under normal conditions)	• Open or short in shift solenoid valve SL2 circuit • Shift solenoid valve SL2 • ECM

MONITOR DESCRIPTION

This DTC indicates an open or short in the shift solenoid valve SL2 circuit. The ECM controls the gearshift by turning the shift solenoid valves "ON/OFF". When there is an open or short circuit in any shift solenoid valve circuit, the ECM detects the problem, illuminates the MIL and stores the DTC. And the ECM performs the fail-safe function and turns the other functioning shift solenoid valves "ON/OFF". (If an open or short circuit is detected, the ECM cuts the current to the circuit.)
If the ECM detects an open or short in the shift solenoid valve SL2 circuit, the ECM determines that there is a malfunction (See page AT-32).

MONITOR STRATEGY

Related DTCs	P0778: Shift solenoid valve SL2/Range check
Required sensors/Components	Shift solenoid valve SL2
Frequency of operation	Continuous
Duration	1 second
MIL operation	Immediate
Sequence of operation	None

TYPICAL ENABLING CONDITIONS

The monitor will run whenever the following DTCs are not present.	None
Battery voltage	10 V or more
CPU requested duty ratio to SL2	Less than 75 %
Ignition switch	ON
Starter	OFF

TYPICAL MALFUNCTION THRESHOLDS

Output signal duty	100 %

COMPONENT OPERATING RANGE

Output signal duty	Less than 100 %

WIRING DIAGRAM

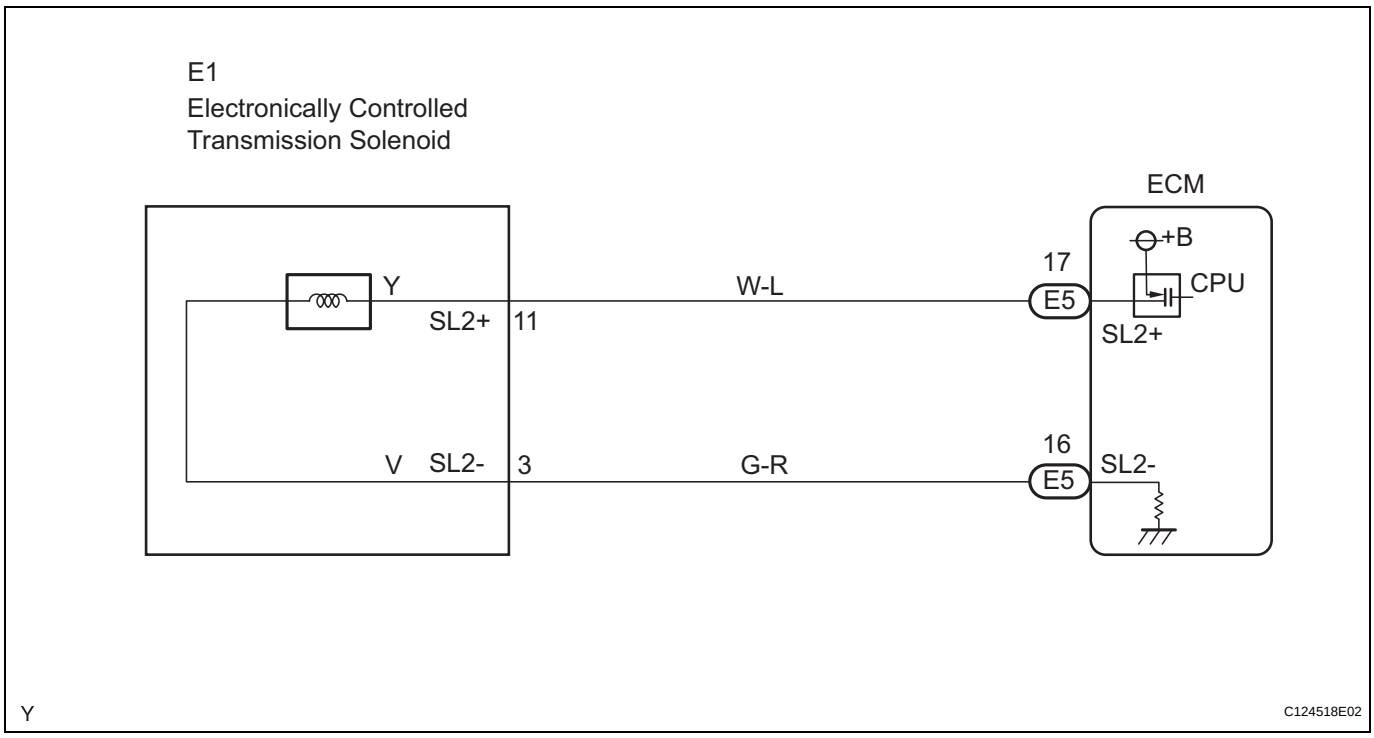

HINT:
The shift solenoid valve SL2 is turned on/off normally when the shift lever is in the D position:

Gearshift controlled by ECM	1st	2nd	3rd	4th	5th
Shift solenoid valve SL2	ON	ON	ON	ON	OFF

1	INSPECT TRANSMISSION WIRE (SL2)

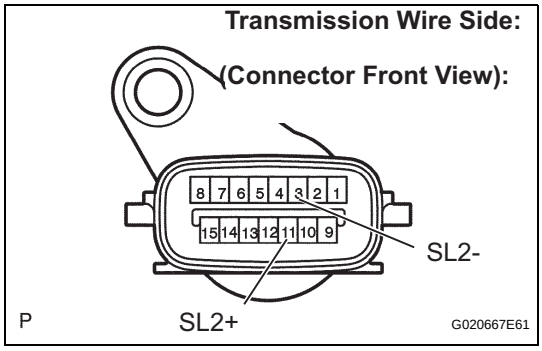

(a) Disconnect the transmission wire connector from the transmission.
(b) Measure the resistance.
Standard resistance

Tester Connection	Specified Condition
11 (SL2+) - 3 (SL2-)	5.0 to 5.6 Ωat 20°C (68°F)

(c) Measure the resistance.
Standard resistance (Check for short):

Tester Connection	Specified Condition
11 (SL2+) - Body ground	10 kΩ or higher
3 (SL2-) - Body ground	10 kΩ or higher

NG → **Go to step 3**

OK

2 CHECK HARNESS AND CONNECTOR (TRANSMISSION WIRE - ECM)

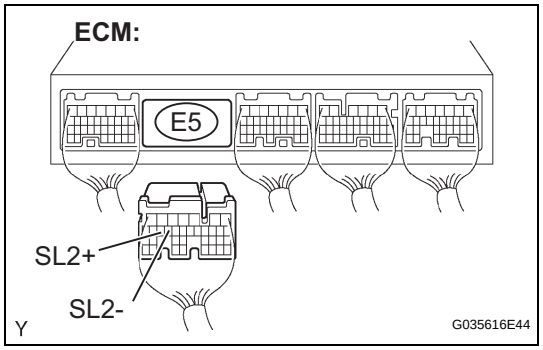

(a) Connect the transmission wire connector to the transmission.
(b) Disconnect the ECM connector.
(c) Measure the resistance.
Standard resistance

Tester Connection	Specified Condition
E5-17 (SL2+) - E5-16 (SL2-)	5.0 to 5.6 Ω at 20°C (68°F)

(d) Measure the resistance.
Standard resistance (Check for short)

Tester Connection	Specified Condition
E5-17 (SL2+) - Body ground	10 kΩ or higher
E5-16 (SL2-) - Body ground	10 kΩ or higher

NG → **REPAIR OR REPLACE HARNESS OR CONNECTOR**

OK

REPLACE ECM

3 INSPECT SHIFT SOLENOID VALVE SL2

Shift Solenoid Valve SL2:

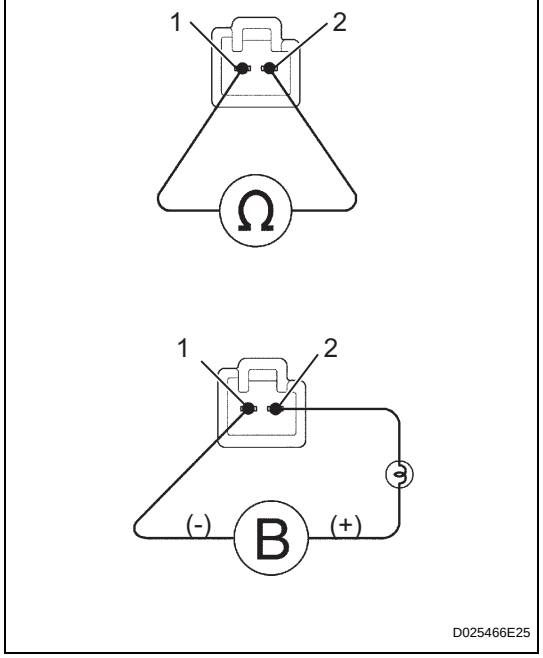

(a) Remove the shift solenoid valve SL2.
(b) Measure the resistance.
Standard resistance

Tester Connection	Specified Condition
1 - 2	5.0 to 5.6 Ω at 20°C (68°F)

(c) Connect the positive (+) lead with a 21 W bulb to terminal 2 and the negative (-) lead to terminal 1 of the solenoid valve connector, then check the movement of the valve.
OK:
The solenoid makes an operating noise.

NG → **REPLACE SHIFT SOLENOID VALVE SL2**

OK

REPAIR OR REPLACE TRANSMISSION WIRE

DTC	P0781	1-2 Shift (1-2 Shift Valve)

DESCRIPTION

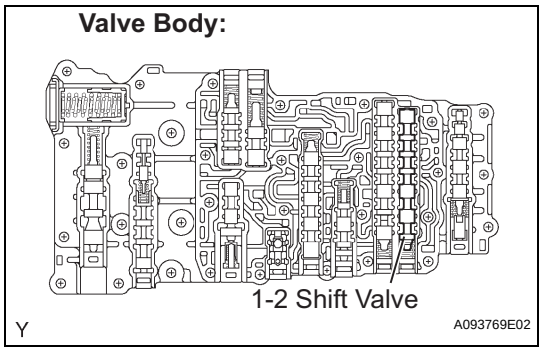

The 1-2 shift valve performs shifting to 1st gear and other gears.

DTC No.	DTC Detection Conditions	Trouble Areas
P0781	1-2 shift valve malfunction: The ECM determines that there is a malfunction when the following conditions (a) and (b), or (a) and (c) are met (2-trip detection logic): (a) When the ECM directs the gearshift to switch to 2nd gear, the actual gear is shifted to 1st. (b) When the ECM directs the gearshift to switch to 4th gear, the actual gear is shifted to 3rd. (c) When the ECM directs the gearshift to switch to 5th gear, the engine overruns (clutch slips)	• Valve body is blocked up or stuck (1-2 shift valve) • Shift solenoid valve SLT remains open or closed • Automatic transmission (clutch, brake or gear, etc.)

HINT:
Gear positions in the event of a 1-2 shift valve mechanical problem:

Gearshift controlled by ECM	1st	2nd	3rd	4th	5th
Actual gear position under malfunction	1st	1st	3rd	3rd	N*

N*: Neutral

MONITOR DESCRIPTION

This DTC indicates that the 1-2 shift valve in the valve body is locked in the direction of the spring compression. The ECM controls the gearshifts by turning the shift solenoid valves "ON/OFF" and switching oil pressure to the valves in the valve body.
The ECM calculates the "actual" transmission gear by comparing the signals from the input speed sensor (NT) and the output speed sensor (SP2). The ECM can detect many mechanical problems in the shift solenoids, valve body, and the transmission clutches, brakes, and gears. If the ECM detects that the actual gear position and the commanded gear position are different, it will illuminate the MIL and store the DTC .

MONITOR STRATEGY

Related DTCs	P0781: Valve body/Rationality check
Required sensors/Components (Main)	Valve body
Required sensors/Components (Related)	Automatic transmission assembly, Speed sensor (NT), Speed sensor (SP2), Vehicle speed sensor, Throttle position sensor
Frequency of operation	Continuous
Duration	Conditions (A) and (B) 0.4 seconds Condition (C) 3 seconds Condition (D) 0.5 seconds
MIL operation	2 driving cycles

Sequence of operation	None

TYPICAL ENABLING CONDITIONS

The following conditions are common to all Conditions (A), (B), (C) and (D).

The monitor will run whenever the following DTCs are not present.	P0115 - P0118: ECT sensor P0125: Insufficient ECT for Closed Loop P0500: VSS P0748 - P0799: Trans Solenoid (range)
Turbine speed sensor (NT) circuit	Functioning normally
Output speed sensor (SP2) circuit	Functioning normally
Shift solenoid "A" (S1) circuit	Functioning normally
Shift solenoid "B" (S2) circuit	Functioning normally
Shift solenoid "E" (SR) circuit	Functioning normally
Pressure control solenoid "A" (SL1) circuit	Functioning normally
Pressure control solenoid "B" (SL2) circuit	Functioning normally
ECT (Engine coolant temperature) sensor circuit	Functioning normally
Knock sensor circuit	Functioning normally
ETCS (Electronic throttle control system)	System not down
Transmission shift position	"D"
ECT	40°C (104°F) or more
Spark advance from max. retard timing by knock sensor control	0°CA or more
Engine	Starting

Condition (A)

ECM selected gear	2nd
Vehicle speed	1.2 mph (2 km/h) or more
Output speed	2nd → 1st down shift point or more
Throttle valve opening angle	6.5 % or more at engine speed of 2,000 rpm (Conditions vary with engine speed)

Condition (B)

ECM selected gear	4th
Vehicle speed	1.2 mph (2 km/h) or more
Throttle valve opening angle	6.5 % or more at engine speed of 2,000 rpm (Conditions vary with engine speed)

Condition (C)

Current ECM selected gear	5th
Last ECM selected gear	4th
Vehicle speed (During transition from 4th to 5th gear)	Less than 62.2 mph (100 km/h)

Condition (D)

ECM selected gear	5th
Engine speed - Turbine speed (NE - NT) After transition from 4th to 5th gear)	150 rpm or less
Vehicle speed After transition from 4th to 5th gear)	Less than 62.2 mph (100 km/h)

TYPICAL MALFUNCTION THRESHOLDS

Condition (A) and Conditions (B), (C) or (D) are met:

Condition (A)

Turbine speed/Output speed	3.30 to 7.50 (Actual gear is 1st)

Condition (B)

Turbine speed/Output speed	1.28 to 1.53 (Actual gear is 3rd)

Condition (C)

Turbine speed - Output speed x 4th gear ratio	1,000 rpm or more

Condition (D)

Turbine speed - Output speed x 5th gear ratio	1,000 rpm or more

1	CHECK ANY OTHER DTCS OUTPUT (IN ADDITION TO DTC P0781)

(a) Connect the intelligent tester to the DLC3.
(b) Turn the ignition switch to the ON position and push the main switch ON.
(c) Select the items "DIAGNOSIS/ ENHANCED OBD II/ DTC INFO/ CURRENT CODES".
(d) Read the DTCs using the intelligent tester.

Result:

Display (DTC Output)	Proceed to
Only "P0781" is output	A
"P0781" and other DTCs	B

HINT:
If any codes besides "P0781" are output, perform troubleshooting for those DTCs first.

B → GO TO DTC CHART

A

2	PERFORM ACTIVE TEST USING INTELLIGENT TESTER (SHIFT)

HINT:
Performing the ACTIVE TEST using the intelligent tester allows components, such as the relay, VSV, and actuator, to be operated without removing any parts. Performing the ACTIVE TEST as a first step of troubleshooting is one method of shortening labor time.
It is possible to display the DATA LIST during the ACTIVE TEST.

1. Warm up the engine.
2. Turn the ignition switch off.
3. Connect the intelligent tester together with the CAN VIM (controller area network vehicle interface module) to the DLC3.
4. Turn the ignition switch to the ON position.
5. Push the "ON" button of the tester.
6. Clear the DTC.
7. Select the items "DIAGNOSIS/ ENHANCED OBD II/ ACTIVE TEST/ SHIFT".
8. According to the display on the tester, perform the "ACTIVE TEST".

HINT:
While driving, the shift position can be changed with the intelligent tester.
Comparing the shift position directed by the ACTIVE TEST with the actual shift position enables the problem to be confirmed (See page AT-32).

Item	Test Details	Diagnostic Note
SHIFT	[Test Details] Operate the shift solenoid valve and set each shift position manually. [Vehicle Condition] Vehicle Speed: Less than 30 mph (50 km/h) [Others] • Press →button: Shift up • Press ←button: Shift down	Possible to check the operation of the shift solenoid valves. HINT: Shifting to the 5th gear is possible only when the vehicle is stationary with the engine idling.

HINT:
- This test can be conducted when the vehicle speed is 30 mph (50 km/h) or less.
- The 4th to 5th up-shifting must be performed with the accelerator pedal released.
- The 5th to 4th down-shifting must be performed with the accelerator pedal released.
- Do not operate the accelerator pedal for at least 2 seconds after shifting and do not shift successively.
- The shift position directed by the ECM is shown in the DATA LIST/ SHIFT display on the intelligent tester.
- Gear positions in the event of a solenoid valve mechanical problem:

Gearshift operated by tester	1st	2nd	3rd	4th	5th
Actual gear position under malfunction	1st	1st	3rd	3rd	N*

N*: Neutral
OK:
Gear position changes in accordance with the tester operation.

NG → **REPAIR OR REPLACE TRANSMISSION VALVE BODY ASSEMBLY**

OK

3	**PERFORM ACTIVE TEST USING INTELLIGENT TESTER (LINE PRESS UP) (See page AT-79)**

NG → **REPLACE SHIFT SOLENOID VALVE SLT**

OK

4	**CLEAR DTC AND PERFORM RUNNING TEST**

(a) Clear the DTC, and check for the DTC again after conducting the "MONITOR DRIVE PATTERN FOR ECT TEST" (See page AT-19).
OK:
No DTC

AT

NG → **REPAIR OR REPLACE TRANSMISSION VALVE BODY ASSEMBLY**

OK

END

DTC	P0973	Shift Solenoid "A" Control Circuit Low (Shift Solenoid Valve S1)

DTC	P0974	Shift Solenoid "A" Control Circuit High (Shift Solenoid Valve S1)

DESCRIPTION

Shifting from 1st to 5th is performed in combination with the ON and OFF operation of the shift solenoid valves S1, S2, SR, SL1 and SL2 which are controlled by the ECM. If an open or short circuit occurs in any of the shift solenoid valves, the ECM controls the remaining normal shift solenoid valve to allow the vehicle to be driven smoothly (See page AT-32).

DTC No.	DTC Detection Conditions	Trouble Areas
P0973	ECM detects short in solenoid valve S1 circuit 2 times when solenoid valve S1 is operated (1-trip detection logic)	• Short in shift solenoid valve S1 circuit • Shift solenoid valve S1 • ECM
P0974	ECM detects open in solenoid valve S1 circuit 2 times when solenoid valve S1 is not operated (1-trip detection logic)	• Open in shift solenoid valve S1 circuit • Shift solenoid valve S1 • ECM

MONITOR DESCRIPTION

These DTCs indicate an open or short in the shift solenoid valve S1 circuit. When there is an open or short circuit in any shift solenoid valve circuits, the ECM detects the problem and illuminates the MIL and stores the DTC. When the shift solenoid valve S1 is on, if the resistance is 8 Ω or less, the ECM determines that there is a short malfunction in the shift solenoid valve S1 circuit.
When the shift solenoid valve S1 is off, if the resistance is 100 kΩ or more, the ECM determines that the shift solenoid valve S1 circuit is open (See page AT-32).

MONITOR STRATEGY

Related DTCs	P0973: Shift solenoid valve S1/Range check (Low resistance) P0974: Shift solenoid valve S1/Range check (High resistance)
Required sensors/Components	Shift solenoid valve S1
Frequency of operation	Continuous
Duration	0.064 seconds
MIL operation	Immediate
Sequence of operation	None

TYPICAL ENABLING CONDITIONS

P0973: Range check (Low resistance)

The monitor will run whenever the following DTCs are not present.	None
Shift solenoid valve S1	ON

P0974: Range check (High resistance)

The monitor will run whenever the following DTCs are not present.	None
Shift solenoid valve S1	OFF

TYPICAL MALFUNCTION THRESHOLDS

AT

P0973: Range check (Low resistance)

Shift solenoid valve S1 resistance	8 Ω or less

P0974: Range check (High resistance)

Shift solenoid valve S1 resistance	100 kΩ or more

COMPONENT OPERATING RANGE

Shift solenoid valve S1 resistance	11 to 15 Ω at 20°C (68°F)

WIRING DIAGRAM

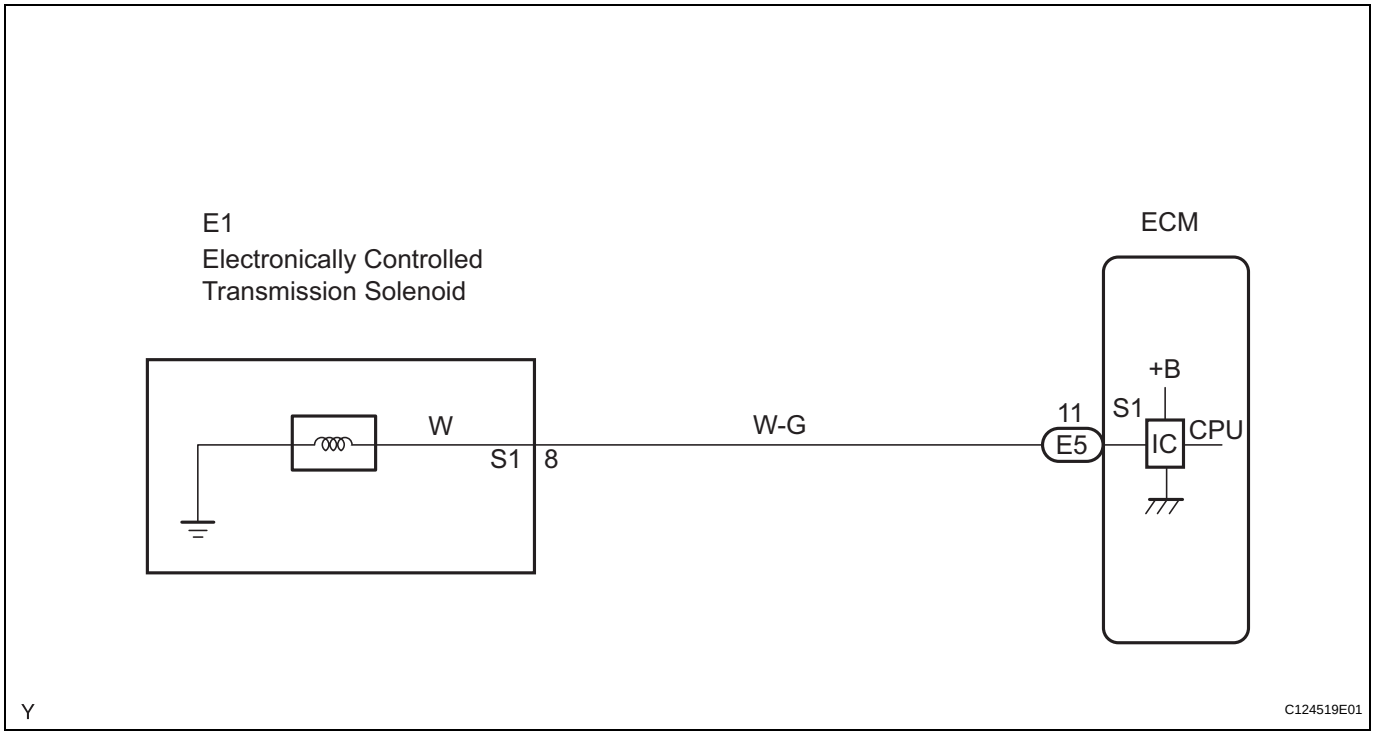

HINT:
The shift solenoid valve S1 is turned on/off normally when the shift lever is in the D position:

Gearshift controlled by ECM	1st	2nd	3rd	4th	5th
Shift solenoid valve S1	ON	ON	OFF	OFF	OFF

1	INSPECT TRANSMISSION WIRE (S1)

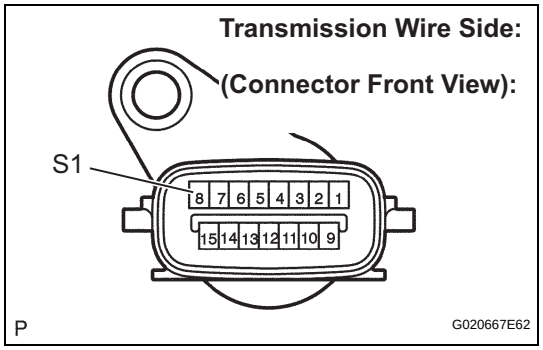

(a) Disconnect the transmission wire connector from the transmission.
(b) Measure the resistance.
Standard resistance

Tester Connection	Specified Condition
8 - Body ground	11 to 15 Ω at 20°C (68°F)

NG → **Go to step 3**

OK

2 CHECK HARNESS AND CONNECTOR (TRANSMISSION WIRE - ECM)

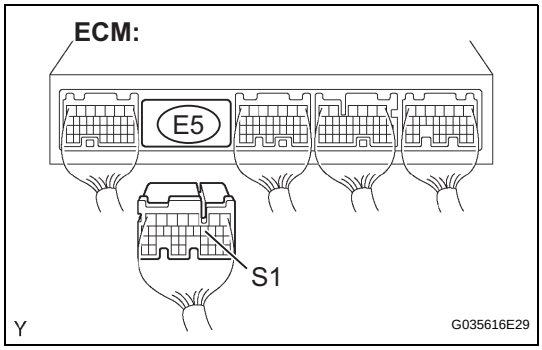

(a) Connect the transmission wire connector to the transmission.
(b) Disconnect the ECM connector.
(c) Measure the resistance.
Standard resistance

Tester Connection	Specified Condition
E5-11 (S1) - Body ground	11 to 15 Ω at 20°C (68°F)

NG → **REPAIR OR REPLACE HARNESS OR CONNECTOR**

OK

REPLACE ECM

3 INSPECT SHIFT SOLENOID VALVE S1

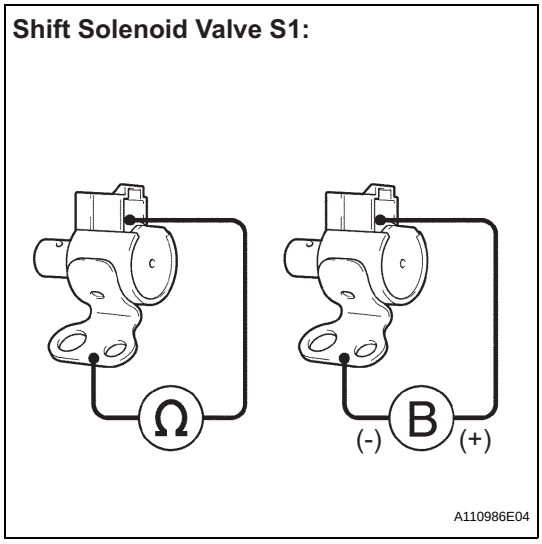

(a) Remove the shift solenoid valve S1.
(b) Measure the resistance.
Standard resistance

Tester Connection	Specified Condition
Solenoid Connector (S1) - Solenoid Body (S1)	11 to 15 Ω at 20°C (68°F)

(c) Connect the positive (+) lead to the terminal of the solenoid connector, and the negative (-) lead to the solenoid body.
OK:
The solenoid makes an operating noise.

NG → **REPLACE SHIFT SOLENOID VALVE S1**

OK

REPAIR OR REPLACE TRANSMISSION WIRE

DTC	P0976	Shift Solenoid "B" Control Circuit Low (Shift Solenoid Valve S2)

DTC	P0977	Shift Solenoid "B" Control Circuit High (Shift Solenoid Valve S2)

DESCRIPTION

Shifting from 1st to 5th is performed in combination with the ON and OFF operation of the shift solenoid valves S1, S2, SR, SL1 and SL2 which are controlled by the ECM. If an open or short circuit occurs in any of the shift solenoid valves, the ECM controls the remaining normal shift solenoid valve to allow the vehicle to be driven smoothly (See page AT-32).

DTC No.	DTC Detection Conditions	Trouble Areas
P0976	ECM detects short in solenoid valve S2 circuit 2 times when solenoid valve S2 is operated (1-trip detection logic)	• Short in shift solenoid valve S2 circuit • Shift solenoid valve S2 • ECM
P0977	ECM detects open in solenoid valve S2 circuit 2 times when solenoid valve S2 is not operated (1-trip detection logic)	• Open in shift solenoid valve S2 circuit • Shift solenoid valve S2 • ECM

MONITOR DESCRIPTION

These DTCs indicate an open or short in the shift solenoid valve S2 circuit. When there is an open or short circuit in any shift solenoid valve circuits, the ECM detects the problem and illuminates the MIL and stores the DTC. When the shift solenoid valve S2 is on, if the resistance is 8 Ω or less, the ECM determines that there is a short malfunction in the shift solenoid valve S2 circuit.
When the shift solenoid valve S2 is off, if the resistance is 100 kΩ or more, the ECM determines that the shift solenoid valve S2 circuit is open (See page AT-32).

MONITOR STRATEGY

Related DTCs	P0976: Shift solenoid valve S2/Range check (Low resistance) P0977: Shift solenoid valve S2/Range check (High resistance)
Required sensors/Components	Shift solenoid valve S2
Frequency of operation	Continuous
Duration	0.064 seconds
MIL operation	Immediate
Sequence of operation	None

TYPICAL ENABLING CONDITIONS

P0976: Range check (Low resistance)

The monitor will run whenever the following DTCs are not present.	None
Shift solenoid valve S2	ON

P0977: Range check (High resistance)

The monitor will run whenever the following DTCs are not present.	None
Shift solenoid valve S2	OFF

TYPICAL MALFUNCTION THRESHOLDS

P0976: Range check (Low resistance)

Shift solenoid valve S2 resistance	8 Ω or less

P0977: Range check (High resistance)

Shift solenoid valve S2 resistance	100 kΩ or more

COMPONENT OPERATING RANGE

Shift solenoid valve S2 resistance	11 to 15 Ω at 20°C (68°F)

WIRING DIAGRAM

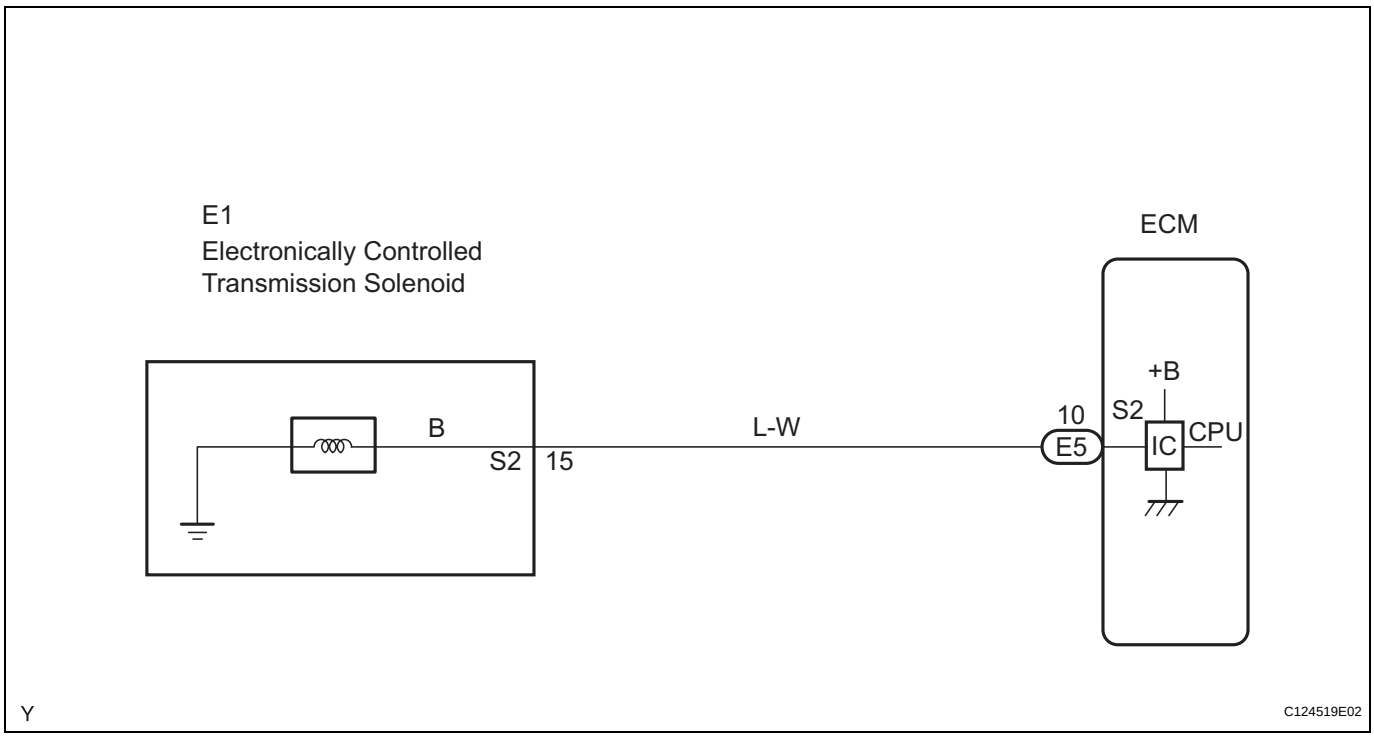

HINT:
The shift solenoid valve S2 is turned on/off normally when the shift lever is in the D position:

Gearshift controlled by ECM	1st	2nd	3rd	4th	5th
Shift solenoid valve S2	OFF	ON	ON	OFF	OFF

1	INSPECT TRANSMISSION WIRE (S2)

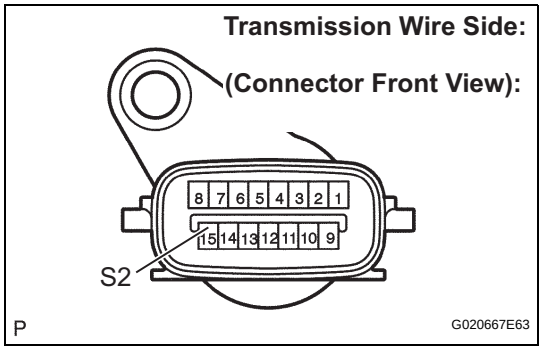

(a) Disconnect the transmission wire connector from the transmission.
(b) Measure the resistance.
Standard resistance

Tester Connection	Specified Condition
15 - Body ground	11 to 15 Ω at 20°C (68°F)

NG → **Go to step 3**

OK

AT

2 CHECK HARNESS AND CONNECTOR (TRANSMISSION WIRE - ECM)

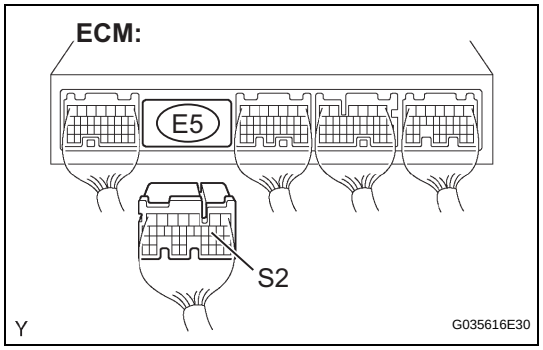

(a) Connect the transmission wire connector to the transmission.
(b) Disconnect the ECM connector.
(c) Measure the resistance.
Standard resistance

Tester Connection	Specified Condition
E5-10 (S2) - Body ground	11 to 15 Ω at 20°C (68°F)

NG → **REPAIR OR REPLACE HARNESS OR CONNECTOR**

OK

REPLACE ECM

3 INSPECT SHIFT SOLENOID VALVE S2

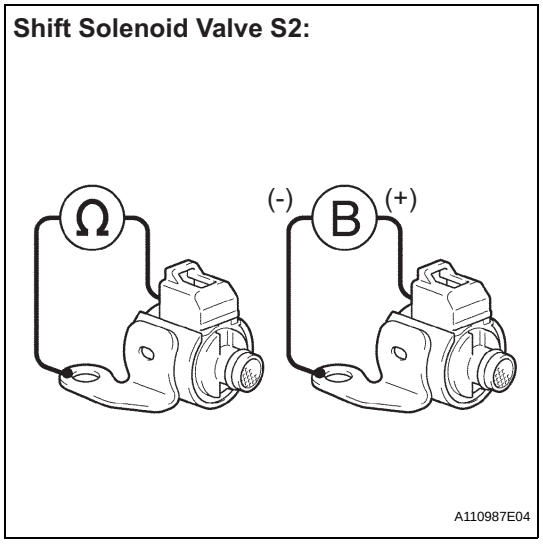

(a) Remove the shift solenoid valve S2.
(b) Measure the resistance.
Standard resistance

Tester Connection	Specified Condition
Solenoid Connector (S2) - Solenoid Body (S2)	11 to 15 Ω at 20°C (68°F)

(c) Connect the positive (+) lead to the terminal of the solenoid connector, and the negative (-) lead to the solenoid body.
OK:
The solenoid makes an operating noise.

NG → **REPLACE SHIFT SOLENOID VALVE S2**

OK

REPAIR OR REPLACE TRANSMISSION WIRE

DTC	P0985	Shift Solenoid "E" Control Circuit Low (Shift Solenoid Valve SR)

DTC	P0986	Shift Solenoid "E" Control Circuit High (Shift Solenoid Valve SR)

DESCRIPTION

Shifting from 1st to 5th is performed in combination with the ON and OFF operation of the shift solenoid valves S1, S2, SR, SL1 and SL2 which are controlled by the ECM. If an open or short circuit occurs in any of the shift solenoid valves, the ECM controls the remaining normal shift solenoid valves to allow the vehicle to be driven smoothly (See page AT-32).

DTC No.	DTC Detection Conditions	Trouble Areas
P0985	ECM detects short in solenoid valve SR circuit 2 times when solenoid valve SR is operated (1-trip detection logic)	• Short in shift solenoid valve SR circuit • Shift solenoid valve SR • ECM
P0986	ECM detects open in solenoid valve SR circuit 2 times when solenoid valve SR is not operated (1-trip detection logic)	• Open in shift solenoid valve SR circuit • Shift solenoid valve SR • ECM

MONITOR DESCRIPTION

These DTCs indicate an open or short in the shift solenoid valve SR circuit. When there is an open or short circuit in any shift solenoid valve circuits, the ECM detects the problem and illuminates the MIL and stores the DTC. When the shift solenoid valve SR is on, if the resistance is 8 Ω or less, the ECM determines that there is a short malfunction in the shift solenoid valve SR circuit.
When the shift solenoid valve SR is off, if the resistance is 100 kΩ or more, the ECM determines that the shift solenoid valve SR circuit is open (See page AT-32).

MONITOR STRATEGY

Related DTCs	P0985: Shift solenoid valve SR/Range check (Low resistance) P0986: Shift solenoid valve SR/Range check (High resistance)
Required sensors/Components	Shift solenoid valve SR
Frequency of operation	Continuous
Duration	0.064 seconds
MIL operation	Immediate
Sequence of operation	None

TYPICAL ENABLING CONDITIONS

P0985: Range check (Low resistance)

The monitor will run whenever the following DTCs are not present.	None
Shift solenoid valve SR	ON
Battery voltage	8 V or more
Ignition switch	ON
Starter	OFF

P0986: Range check (High resistance)

The monitor will run whenever the following DTCs are not present.	None
Shift solenoid valve SR	OFF
Battery voltage	8 V or more
Ignition switch	ON
Starter	OFF

TYPICAL MALFUNCTION THRESHOLDS

P0985: Range check (Low resistance)

Shift solenoid valve SR resistance	8 Ω or less

P0986: Range check (High resistance)

Shift solenoid valve SR resistance	100 kΩ or more

COMPONENT OPERATING RANGE

Shift solenoid valve SR resistance	11 to 15 Ω at 20°C (68°F)

WIRING DIAGRAM

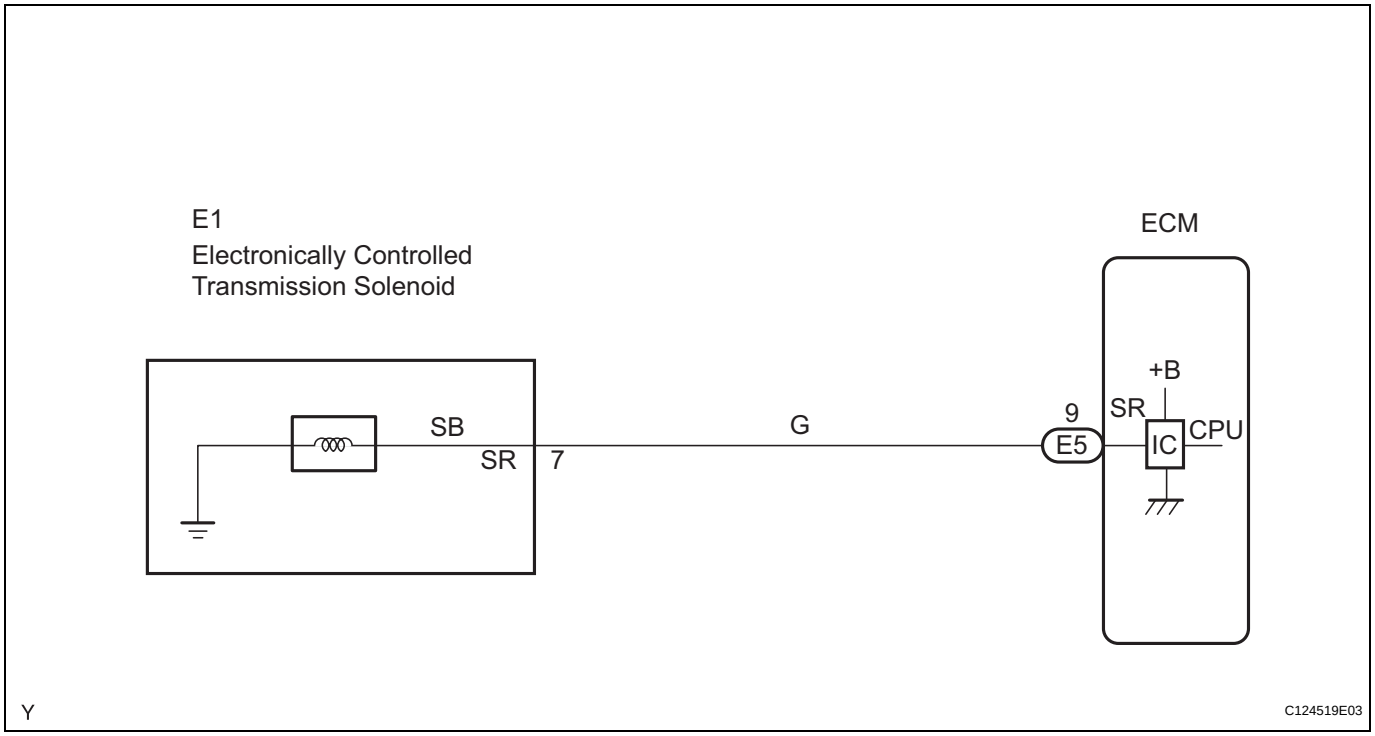

HINT:
The shift solenoid valve SR is turned on/off normally when the shift lever is in the D position:

Gearshift controlled by ECM	1st	2nd	3rd	4th	5th
Shift solenoid valve SR	OFF	OFF	OFF	OFF	ON

1	INSPECT TRANSMISSION WIRE (SR)

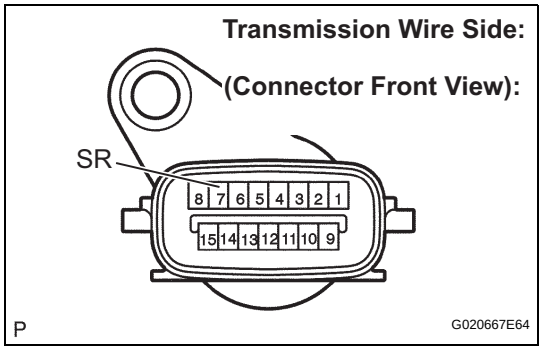

(a) Disconnect the transmission wire connector from the transmission.
(b) Measure the resistance.
Standard resistance

Tester Connection	Specified Condition
7 - Body ground	11 to 15 Ω at 20°C (68°F)

NG → **Go to step 3**

OK

2	CHECK HARNESS AND CONNECTOR (TRANSMISSION WIRE - ECM)

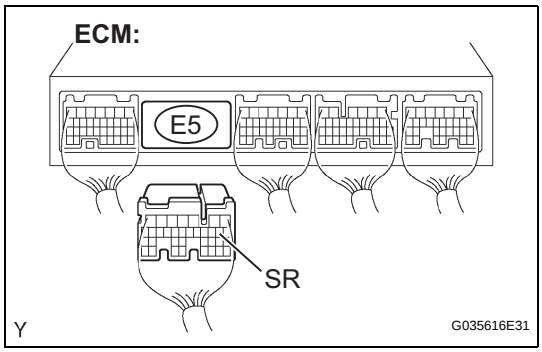

(a) Connect the transmission wire connector to the transmission.
(b) Disconnect the ECM connector.
(c) Measure the resistance.
Standard resistance

Tester Connection	Specified Condition
E5-9 (SR) - Body ground	11 to 15 Ω at 20°C (68°F)

NG → **REPAIR OR REPLACE HARNESS OR CONNECTOR**

OK

REPLACE ECM

3	INSPECT SHIFT SOLENOID VALVE SR

Shift Solenoid Valve SR:

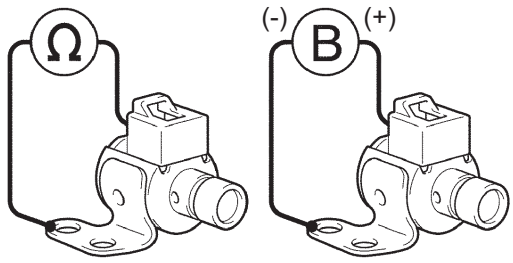

A110988E05

(a) Remove the shift solenoid valve SR.
(b) Measure the resistance.
Standard resistance

Tester Connection	Specified Condition
Solenoid Connector (SR) - Solenoid Body (SR)	11 to 15 Ω at 20°C (68°F)

(c) Connect the positive (+) lead to the terminal of the solenoid connector, and the negative (-) lead to the solenoid body.
OK:
The solenoid makes an operating noise.

NG → **REPLACE SHIFT SOLENOID VALVE SR**

OK

REPAIR OR REPLACE TRANSMISSION WIRE

DTC	P2714	Pressure Control Solenoid "D" Performance (Shift Solenoid Valve SLT)

DESCRIPTION

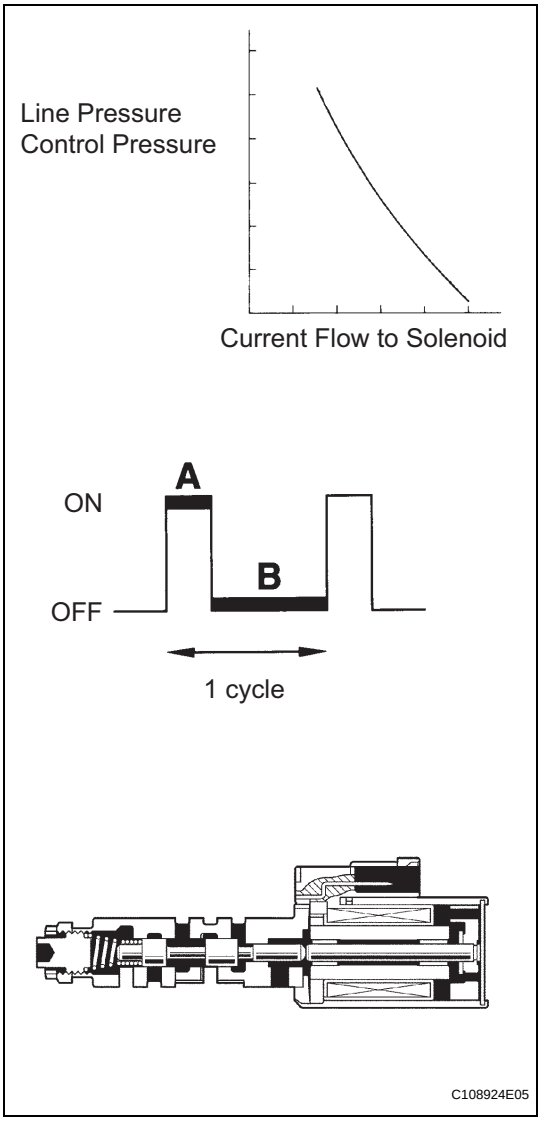

The linear solenoid valve (SLT) controls the transmission line pressure for smooth transmission operation based on signals from the throttle position sensor and the vehicle speed sensor. The ECM adjusts the duty ratio* of the SLT solenoid valve output signal to control the hydraulic line pressure coming from the primary regulator valve. Appropriate line pressure assures smooth shifting with varying engine outputs.
*: The duty ratio is the ratio of the period of continuity in one cycle.
For example, if A is the period of continuity in one cycle, and B is the period of non-continuity, then Duty Ratio=A/(A+B) x 100 (%)

DTC No.	DTC Detection Condition	Trouble Area
P2714	ECM detects malfunctions on SLT (ON side) according to the revolution difference between the turbine and the output shaft, and also by monitoring the oil pressure. (2 trip detection logic)	• Shift solenoid valve SLT remains open or closed • Shift solenoid valve S1, S2, SR, SL1 or SL2 remains open or closed • Valve body is blocked • Automatic transmission (clutch, brake or gear, etc.)

MONITOR DESCRIPTION

The ECM calculates the amount of heat absorbed by the friction material based on the difference in revolution (clutch slippage) between the turbine and output shaft. The ECM turns on the MIL and outputs this DTC when the amount of heat absorption exceeds the specified value.
When the shift solenoid valve SLT remains on, the oil pressure goes down and the clutch engagement force decreases.
NOTE: If driving continues under these conditions, the clutch will burn out and the vehicle will no longer be drivable.

MONITOR STRATEGY

Related DTCs	P2714 : Shift solenoid valve SLT/ON malfunction
Required sensors/Components (Main)	Shift solenoid valve SLT
Required sensors/Components (Related)	Valve body, ATF temperature sensor, Speed sensor (NT), Speed sensor (SP2)
Frequency of operation	Continuous
Duration	Immediate
MIL operation	2 driving cycles
Sequence of operation	None

TYPICAL ENABLING CONDITIONS

The monitor will run whenever the following DTCs are not present.	None
Turbine speed sensor (NT) circuit	Functioning normally
Output speed sensor (SP2) circuit	Functioning normally
Transmission fluid temperature sensor "A" circuit	Functioning normally
Shift solenoid "A" (S1) circuit	Functioning normally
Shift solenoid "B" (S2) circuit	Functioning normally
Shift solenoid "E" (SR) circuit	Functioning normally
Pressure control solenoid "A" (SL1) circuit	Functioning normally
Pressure control solenoid "B" (SL2) circuit	Functioning normally
Pressure control solenoid "D" (SLT) circuit	Functioning normally
ECT (Engine coolant temperature) sensor circuit	Functioning normally
Knock sensor circuit	Functioning normally
ETCS (Electronic throttle control system)	System not down
Transmission shift position	"D"
ECT	40°C (104°F) or more
Spark advance from max. retard timing by knock sensor control	0° CA or more
Engine	Starting
ATF temperature	10°C (50°F) or more

TYPICAL MALFUNCTION THRESHOLDS

Summation of C1 clutch heat generations = SUM (Turbine speed - Output speed x Temporary gear ratio)	Specified value

HINT:
Performing the ACTIVE TEST using the intelligent tester allows components, such as the relay, VSV, and actuator, to be operated without removing any parts. Performing the ACTIVE TEST as a first step of troubleshooting is one method of shortening labor time.
It is possible to display the DATA LIST during the ACTIVE TEST.
1. Warm up the engine.

2. Turn the ignition switch off.
3. Connect the intelligent tester together with the CAN VIM (controller area network vehicle interface module) to the DLC3.
4. Turn the ignition switch to the ON position.
5. Push the "ON" button of the tester.
6. Clear the DTC.
7. Select the items "DIAGNOSIS/ ENHANCED OBD II/ ACTIVE TEST/ LINE PRESS UP".
8. According to the display on the tester, perform the "ACTIVE TEST".

Item	Test Details	Diagnostic Note
LINE PRESS UP *	[Test Details] Operate the shift solenoid SLT to raise the line pressure. [Vehicle Condition] • Vehicle Stopped • IDL: ON [HINT] OFF: Line pressure up (When the active test of "LINE PRESS UP" is performed the ECM commands the SLT solenoid to turn off). ON: No action (normal operation)	-

*: "LINE PRESS UP" in the ACTIVE TEST is performed to check the line pressure changes by connecting SST to the automatic transmission, which is used in the HYDRAULIC TEST (See page AT-16) as well.

HINT:

- The pressure values in ACTIVE TEST and HYDRAULIC TEST are different from each other.
- Normally, the line pressure detected in the ACTIVE TEST is approximately half of the value detected in the HYDRAULIC TEST's stall test.

1 CHECK ANY OTHER DTCS OUTPUT (IN ADDITION TO DTC P2714)

(a) Connect the intelligent tester to the DLC3.
(b) Turn the ignition switch to the ON position and push the intelligent tester main switch ON.
(c) Select the items "DIAGNOSIS/ ENHANCED OBD II/ DTC INFO/ CURRENT CODES".
(d) Read the DTCs using the intelligent tester.

Result:

Display (DTC Output)	Proceed to
Only "P2714" is output	A
"P2714" and other DTCs	B

HINT:
If any codes besides "P2714" are output, perform troubleshooting for those DTCs first.

B → **GO TO DTC CHART**

A

2 PERFORM ACTIVE TEST USING INTELLIGENT TESTER (LINE PRESS UP) (See page AT-79)

NG → **Go to step 9**

OK

3	PERFORM ACTIVE TEST USING INTELLIGENT TESTER (SHIFT)

(a) Connect the intelligent tester to the DLC3.
(b) Turn the ignition switch ON.
(c) Turn the intelligent tester ON.
(d) Clear the DTC (See page AT-30).
(e) Enter the following menus: DIAGNOSIS / ENHANCED OBD II / ACTIVE TEST.
(f) Follow the instructions on the tester and perform the ACTIVE TEST.

HINT:
While driving, the shift position can be forcibly changed with the intelligent tester.

Item	Test Details	Diagnostic Note
SHIFT	[Test Details] Operate the shift solenoid valve and set each shift position. [Vehicle Condition] • IDL: ON • Less than 30 mph (50 km/h) [Other information] • Press "→" button: Shift up • Press "←" button: Shift down	The operation of the shift solenoid valves can be checked.

HINT:
- This test can be conducted when the vehicle speed is 30 mph (50 km/h) or less.
- The 4th to 5th up-shift must be performed with the accelerator pedal released.
- The 5th to 4th down-shift must be performed with the accelerator pedal released.
- Do not operate the accelerator pedal for at least 2 seconds after shifting and do not shift successively.
- The shift position commanded by the ECM is shown in the DATA LIST (SHIFT) display on the intelligent tester.

(g) Compare the ECM gear shift command and the actual gear position.

ECM gear shift command			1st	2nd	3rd	4th	5th	Proceed to
Actual gear position under malfunction	Shift solenoid S1	Stuck ON	1st	2nd	2nd	1st	N*1	A
		Stuck OFF	4th	3rd	3rd	4th	5th	
	Shift solenoid S2	Stuck ON	2nd	2nd	3rd	3rd	N*1	B
		Stuck OFF	1st	1st	4th	4th	5th	
	Shift solenoid SL2	Stuck ON	1st	2nd	3rd	4th	N*1	C
		Stuck OFF	1st	2nd	3rd	4th	5th	
	Shift solenoid SR	Stuck ON*2	1st	2nd	3rd	4th	5th	D
		Stuck OFF	1st	2nd	3rd	4th	4th	

HINT:
- *1: Neutral
- *2: Shift shock increases extremely when a malfunction occurs.
- Gear shift can be determined by paying attention to changes in rpm.

B	Go to step 5
C	Go to step 6
D	Go to step 7
OK	Go to step 9

A

4	INSPECT SHIFT SOLENOID VALVE S1 (See page AT-108)

OK	Go to step 10

NG

REPLACE SHIFT SOLENOID VALVE S1

5	INSPECT SHIFT SOLENOID VALVE S2 (See page AT-111)

OK	Go to step 10

NG

REPLACE SHIFT SOLENOID VALVE S2

6	INSPECT SHIFT SOLENOID VALVE SL2 (See page AT-99)

OK	Go to step 10

NG

REPLACE SHIFT SOLENOID VALVE SL2

7	INSPECT SHIFT SOLENOID VALVE SR (See page AT-115)

NG	REPLACE SHIFT SOLENOID VALVE SR

OK

8	INSPECT SHIFT SOLENOID VALVE SL1 (See page AT-74)

OK	Go to step 10

NG

REPLACE SHIFT SOLENOID VALVE SL1

9 **INSPECT SHIFT SOLENOID VALVE SLT**

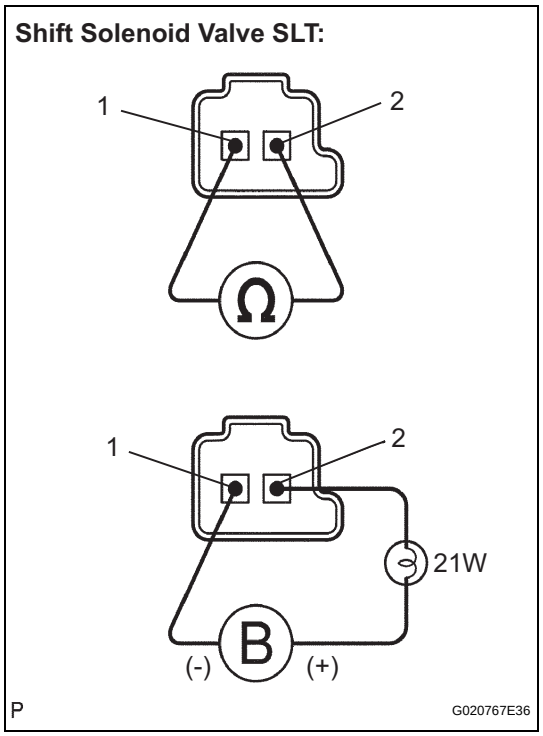

(a) Remove the shift solenoid valve SLT.
(b) Measure the resistance.
Standard resistance

Tester Connection	Specified Condition
1 - 2	5.0 to 5.6 Ω at 20°C (68°F)

(c) Connect the positive (+) lead with a 21 W bulb to terminal 2 and the negative (-) lead to terminal 1 of the solenoid valve connector, then check the movement of the valve.
OK:
The solenoid makes an operating noise.

NG → **REPLACE SHIFT SOLENOID VALVE SLT**

OK

10 **INSPECT TRANSMISSION VALVE BODY ASSEMBLY (See chapter 2 in the problem symptoms table)**

OK:
There are no foreign objects on any valves and they operate smoothly.

NG → **REPAIR OR REPLACE TRANSMISSION VALVE BODY ASSEMBLY**

OK

11 **INSPECT TORQUE CONVERTER CLUTCH ASSEMBLY**

(a) Check the torque converter clutch assembly (See page AT-166).
OK:
The torque converter clutch operates normally.

NG → **REPLACE TORQUE CONVERTER CLUTCH ASSEMBLY**

OK

REPAIR OR REPLACE AUTOMATIC TRANSMISSION ASSEMBLY

DTC	P2716	Pressure Control Solenoid "D" Electrical (Shift Solenoid Valve SLT)

DESCRIPTION

Refer to DTC P2714 (See page AT-110).

DTC No.	DTC Detection Conditions	Trouble Areas
P2716	Open or short is detected in shift solenoid valve SLT circuit for 1 second or more while driving (1-trip detection logic)	• Open or short in shift solenoid valve SLT circuit • Shift solenoid valve SLT • ECM

MONITOR DESCRIPTION

When an open or short is detected in the linear solenoid valve (SLT) circuit, the ECM interprets this as a fault.
The ECM turns on the MIL and stores the DTC.

MONITOR STRATEGY

Related DTCs	P2716: Shift solenoid valve SLT/Range check
Required sensors/Components	Shift solenoid valve SLT
Frequency of operation	Continuous
Duration	1 second
MIL operation	Immediate
Sequence of operation	None

TYPICAL ENABLING CONDITIONS

The monitor will run whenever the following DTCs are not present.	None
Battery voltage	10 V or more
CPU requested duty ratio to SLT	Less than 75 %
Ignition switch	ON
Starter	OFF

TYPICAL MALFUNCTION THRESHOLDS

Output signal duty	100 %

COMPONENT OPERATING RANGE

Output signal duty ratio	Less than 100 %

WIRING DIAGRAM

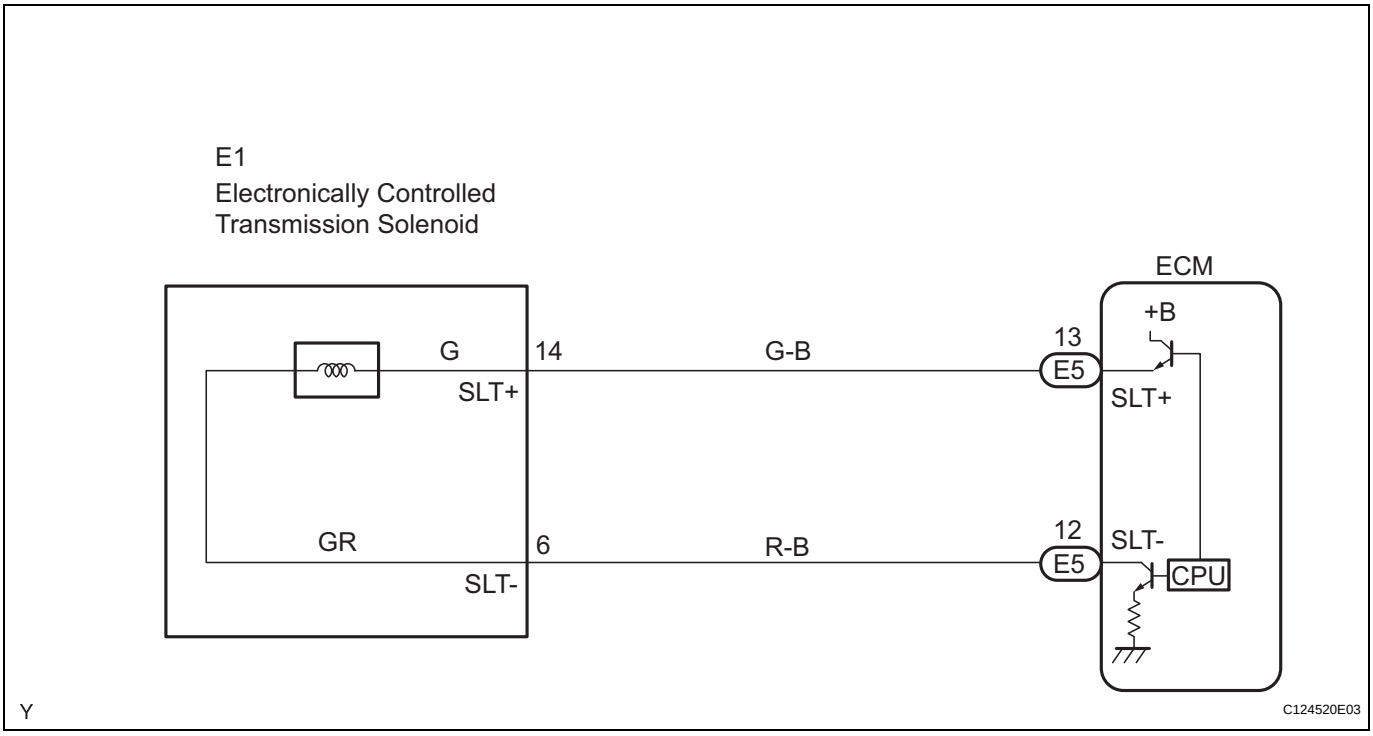

1	INSPECT TRANSMISSION WIRE (SLT)

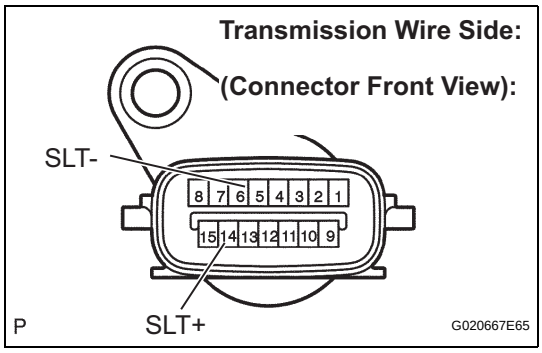

(a) Disconnect the transmission wire connector from the transmission.

(b) Measure the resistance.

Standard resistance

Tester Connection	Specified Condition
14 (SLT+) - 6 (SLT-)	5.0 to 5.6 Ω at 20°C (68°F)

(c) Measure the resistance.

Standard resistance (Check for short)

Tester Connection	Specified Condition
14 (SLT+) - Body ground	10 kΩ or higher
6 (SLT-) - Body ground	10 kΩ or higher

NG → **Go to step 3**

OK

2 CHECK HARNESS AND CONNECTOR (TRANSMISSION WIRE - ECM)

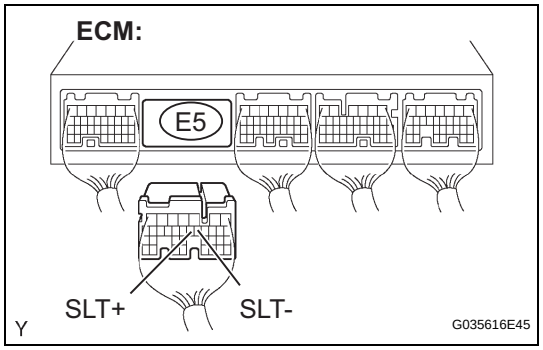

(a) Connect the transmission wire connector to the transmission.
(b) Disconnect the ECM connector.
(c) Measure the resistance.
Standard resistance

Tester Connection	Specified Condition
E5-13 (SLT+) - E5-12 (SLT-)	5.0 to 5.6 Ω at 20°C (68°F)

(d) Measure the resistance.
Standard resistance (Check for short)

Tester Connection	Specified Condition
E5-13 (SLT+) - Body ground	10 kΩ or higher
E5-12 (SLT-) - Body ground	10 kΩ or higher

NG → **REPAIR OR REPLACE HARNESS OR CONNECTOR**

OK

REPLACE ECM

3 INSPECT SHIFT SOLENOID VALVE SLT

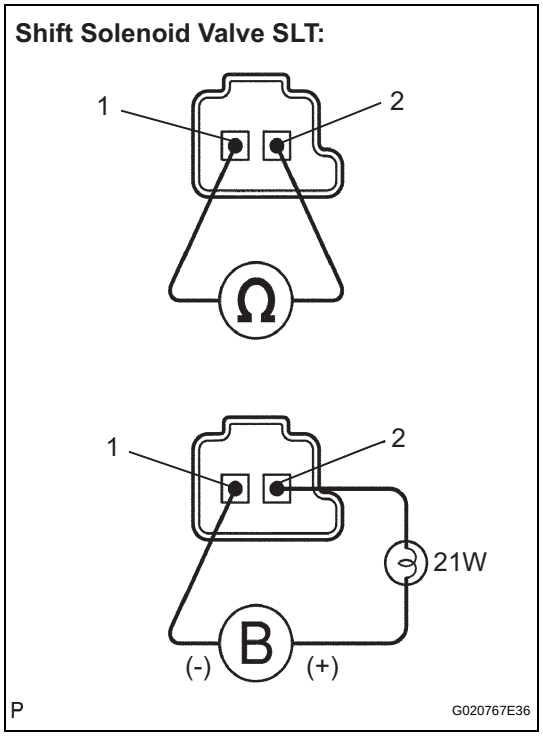

(a) Remove the shift solenoid valve SLT.
(b) Measure the resistance.
Standard resistance

Tester Connection	Specified Condition
1 - 2	5.0 to 5.6 Ω at 20°C (68°F)

(c) Connect the positive (+) lead with a 21 W bulb to terminal 2 and the negative (-) lead to terminal 1 of the solenoid valve connector, then check the movement of the valve.
OK:
The solenoid makes an operating noise.

NG → **REPLACE SHIFT SOLENOID VALVE SLT**

OK

REPAIR OR REPLACE TRANSMISSION WIRE

DTC	P2740	Transmission Fluid Temperature Sensor "B" Circuit

DTC	P2742	Transmission Fluid Temperature Sensor "B" Circuit Low Input

DTC	P2743	Transmission Fluid Temperature Sensor "B" Circuit High Input

DESCRIPTION

The No. 2 Automatic Transmission Fluid (ATF) temperature sensor is on the transmission, just before the oil cooler inlet pipeline.

If the ECM detects an abnormally high ATF temperature through this sensor, it illuminates the warning light to indicate the problem to the driver.

HINT:

- The ATF temperature is liable to increase under vehicle conditions such as towing, climbing hills and in traffic.
- If there is a short malfunction in the No. 2 ATF temperature sensor, the ECM receives signals from the sensor, which indicate that the ATF temperature is 150°C (302°F) or more.

The symptoms and recovery conditions, when the sensor is normal or there is a short malfunction in the sensor, are as shown in the table below.

No.2 ATF Temperature Sensor Status	Detection Condition	Symptom	Recovery Condition
Sensor is normal	• ATF temperature more than 150°C (302°F)	• ATF temperature warning light remains on	• ATF temperature less than 135°C (275°F) *2
	• ATF temperature more than 130°C (266°F)	• Shift point too high	• ATF temperature less than 110°C (230°F)
	When the conditions (a) and (b) are satisfied continually (a) ATF temperature more than130°C (266°F) (b) Engine coolant temperature more than 95°C (203°F)	• Lock-up in 3rd gear *1	• ATF temperature less than 110°C (230°F) *2 and engine coolant temperature less than 95°C (203°F)
Sensor is short	• Any conditions	• ATF temperature warning light remains on • Shift point too high	• Symptoms still occur
	• Engine coolant temperature more than 95°C (203°F)	• Lock-up in 3rd gear *1	• Symptom still occurs

HINT:

*1: When the ATF temperature is normal, the transmission locks up in 5th gear with the shift lever in the D position and in 4th gear with the shift lever in the 4th position.

*2: When the ATF temperature is in the normal range, it decreases to less than 135°C (275°F) within 5 minutes of the shift lever being moved to the P or N position, while idling.

DTC No.	DTC Detection Conditions	Trouble Areas
P2740	Conditions (a) and (b) are detected momentarily within 0.5 seconds when neither P2742 nor P2743 is detected (1-trip detection logic) (a) No. 2 ATF temperature sensor resistance (voltage) is less than 25 Ω (0.046 V) (b) No. 2 ATF temperature sensor resistance (voltage) is more than 156 kΩ (4.915 V) HINT: Within 0.5 seconds the malfunction changes from (a) to (b) or (b) to (a)	• Open or short in No.2 ATF temperature sensor circuit • No.2 ATF temperature sensor • ECM

DTC No.	DTC Detection Conditions	Trouble Areas
P2742	No. 2 ATF temperature sensor resistance (voltage) is less than 25 Ω (0.046 V) for 0.5 seconds or more (1-trip detection logic)	• Short in No.2 ATF temperature sensor circuit • No.2 ATF temperature sensor • ECM
P2743	No. 2 ATF temperature sensor resistance (voltage) is more than 156 kΩ (4.915 V) for 0.5 seconds or more 15 minutes or more after starting engine (1-tip detection logic)	• Open in No.2 ATF temperature sensor circuit • No.2 ATF temperature sensor • ECM

MONITOR DESCRIPTION

These DTCs indicate an open or short in the No. 2 Automatic Transmission Fluid (ATF) temperature sensor circuit. The No. 2 ATF temperature sensor converts the ATF temperature to an electrical resistance value. Based on the resistance, the ECM determines the ATF temperature, and detects any open or short malfunctions in the No. 2 ATF temperature sensor circuit. If the resistance (voltage) of the No. 2 ATF temperature sensor is less than 25 Ω (0.046 V) or more than 156 kΩ (4.915 V), the ECM interprets this as a fault in the No. 2 ATF temperature sensor or its wiring. The ECM turns on the MIL and stores a DTC.

MONITOR STRATEGY

Related DTCs	P2740 : No. 2 ATF temperature sensor/Range check (Fluttering) P2742 : No. 2 ATF temperature sensor/Range check (Low voltage) P2743 : No. 2 ATF temperature sensor/Range check (High voltage)
Required sensors/Components	No. 2 ATF temperature sensor
Frequency of operation	Continuous
Duration	0.5 seconds
MIL operation	Immediate
Sequence of operation	None

TYPICAL ENABLING CONDITIONS

P2740: Range check (Fluttering)

The monitor will run whenever the following DTCs are not present.	None
The typical enabling condition is not available.	-

P2742: Range check (Low voltage)

The monitor will run whenever the following DTCs are not present.	None
The typical enabling condition is not available.	-

P2743: Range check (High voltage)

The monitor will run whenever the following DTCs are not present.	None
Time after engine start	15 minutes or more

TYPICAL MALFUNCTION THRESHOLDS

P2740: Range check (Fluttering)

No. 2 ATF temperature sensor voltage	Less than 0.046 V or More than 4.915 V

P2742: Range check (Low voltage)

No. 2 ATF temperature sensor voltage	Less than 0.046 V

P2743: Range check (High voltage)

No. 2 ATF temperature sensor voltage	More than 4.915 V

COMPONENT OPERATING RANGE

ATF temperature sensor	Atmospheric temperature up to approximately 130°C (266°F)

WIRING DIAGRAM

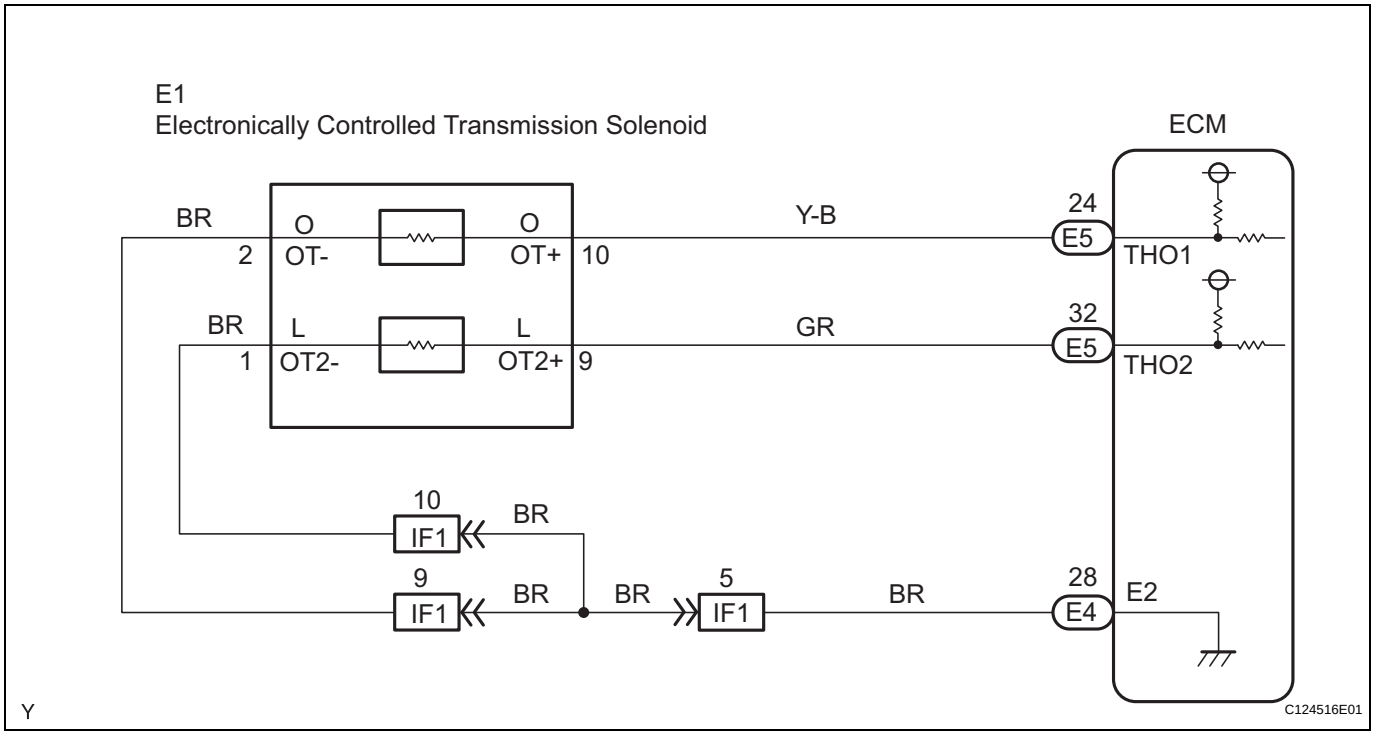

HINT:
According to the DATA LIST displayed on the intelligent tester, you can read the values of components, such as the switches, sensors, actuators, without removing any parts. Reading the DATA LIST as a first step of troubleshooting is one method of shortening labor time.
NOTICE:
In the table below, the values listed under "Normal Condition" are for reference only. Do not depend solely on these reference values when judging whether a part is faulty or not.
1. Warm up the engine.
2. Turn the ignition switch off.
3. Connect the intelligent tester together with the CAN VIM (controller area network vehicle interface module) to the DLC3.
4. Turn the ignition switch to the ON position.
5. Push the "ON" button of the tester.
6. Select the items "DIAGNOSIS/ ENHANCED OBD II/ DATA LIST"/ A/T.
7. According to the display on the tester, read the "DATA LIST".

Item	Measurement Item/ Range (display)	Normal Condition
AT OIL TEMP2	No. 2 ATF Temperature Sensor Value/ min.: -40°C (-40°F) max.: 215°C (419°F)	• After Stall Test: Approximately 80°C (176°F) • Equal to ambient temperature during cold soak

HINT:
When DTC P2742 is output and intelligent tester reading is 150°C (302°F) or more, there is a short circuit.
When DTC P2743 is output and intelligent tester reading is -40°C (-40°F), there is an open circuit.

Measure the resistance between terminal THO2 (OT2) and the body ground.

Temperature Displayed	Malfunction
-40°C (-40°F)	Open circuit
150°C (302°F) or more	Short circuit

1 INSPECT TRANSMISSION WIRE (NO.2 ATF TEMPERATURE SENSOR)

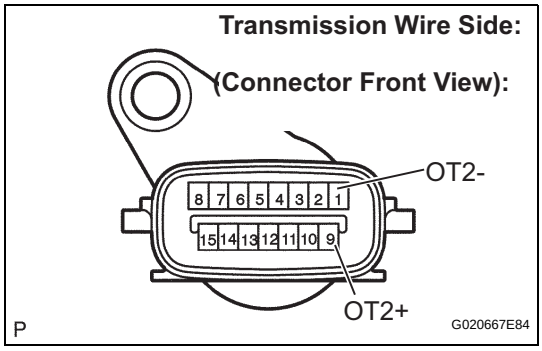

(a) Disconnect the transmission wire connector from the transmission.
(b) Measure the resistance.
Standard resistance

Tester Connection	Specified Condition
1 (OT2-) - 9 (OT2+)	79 Ω to 156 kΩ

(c) Measure the resistance.
Standard resistance (Check for short)

Tester Connection	Specified Condition
1 (OT2-) - Body ground	10 kΩ or higher
9 (OT2+) - Body ground	10 kΩ or higher

HINT:
If the resistance is out of the specified range with either the ATF temperature shown in the table below, the driveability of the vehicle may decrease.

ATF Temperature	Specified Condition
20°C (68°F)	3 to 4 kΩ
110°C (230°F)	0.22 to 0.28 kΩ

NG → **REPAIR OR REPLACE TRANSMISSION WIRE**

OK

2 CHECK HARNESS AND CONNECTOR (TRANSMISSION WIRE - ECM)

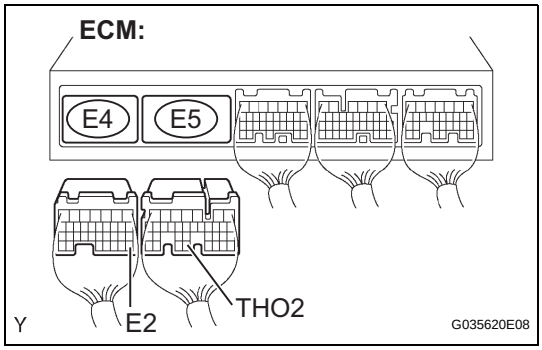

(a) Connect the transmission wire connector to the transmission.
(b) Disconnect the ECM connectors.
(c) Measure the resistance.
Standard resistance

Tester Connection	Specified Condition
E5-32 (THO2) - E4-28 (E2)	79 Ω to 156 kΩ

(d) Measure the resistance.
Standard resistance (Check for short)

Tester Connection	Specified Condition
E5-32 (THO2) - Body ground	10 kΩ or higher
E4-28 (E2) - Body ground	10 kΩ or higher

NG → REPAIR OR REPLACE HARNESS OR CONNECTOR

OK

REPLACE ECM

DTC	P2757	Torque Converter Clutch Pressure Control Solenoid Performance (Shift Solenoid Valve SLU)

DESCRIPTION

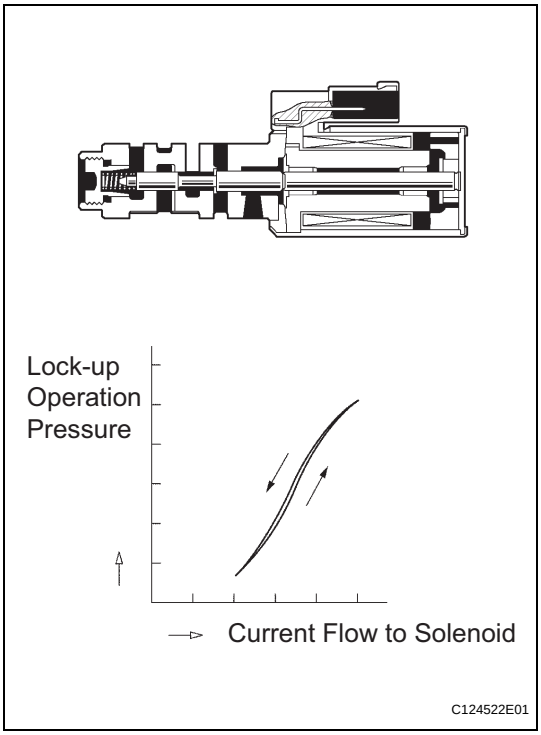

The ECM uses the signals from the throttle position sensor, mass air flow meter, turbine (input) speed sensor, output speed sensor and crankshaft position sensor, to monitor the engagement condition of the lock-up clutch.
Then the ECM compares the engagement condition of the lock-up clutch with the lock-up schedule in the ECM memory to detect any mechanical problems with the shift solenoid valve SLU, valve body or torque converter clutch.

DTC No.	DTC Detection Conditions	Trouble Areas
P2757	Lock-up does not occur when driving in the lock-up range (normal driving at 50 mph [80 km/h]), or lock-up remains ON in the lock-up OFF range. (2-trip detection logic)	• Shift solenoid valve SLU remains open or closed • Valve body is blocked • Shift solenoid valve SLU • Torque converter clutch • Automatic transmission (clutch, brake or gear, etc.) • Line pressure is too low

MONITOR DESCRIPTION

Torque converter lock-up is controlled by the ECM based on turbine (input) speed sensor NT, output speed sensor SP2, engine rpm, engine load, engine coolant temperature, vehicle speed, transmission fluid temperature, and gear selection. The ECM determines the lock-up status of the torque converter by comparing the engine rpm (NE) with the input turbine rpm (NT). The ECM calculates the actual transmission gear by comparing input turbine rpm (NT) with output shaft rpm (SP2). When the conditions are appropriate, the ECM requests "lock-up" by applying the control voltage to the shift solenoid SLU. When the SLU is turned on, solenoid SLU applies pressure to the lock-up relay valve and locks the torque converter clutch.

AT

If the ECM detects no lock-up after lock-up has been requested or if it detects lock-up when it is not requested, the ECM interprets this as a fault in the shift solenoid valve SLU or lock-up system performance. The ECM turns on the MIL and stores the DTC.

Example:
When any of the following are met, the ECM interprets it as a malfunction.
1. There is a difference in rotation between before and after the torque converter even when the ECM requests lock-up.
   (Engine speed is at least 70 rpm greater than the input turbine speed.)
2. There is no difference in rotation between before and after the torque converter even when the ECM requests lock-up off.
   (The difference between the engine speed and input turbine speed is less than 35 rpm.)

MONITOR STRATEGY

Related DTCs	P2757: Shift solenoid valve SLU/OFF malfunction Shift solenoid valve SLU/ON malfunction
Required sensors/Components (Main)	Shift solenoid valve SLU
Required sensors/Components (Related)	Valve body, Vehicle speed sensor, Throttle position sensor, Speed sensor (NT), Speed sensor (SP2)
Frequency of operation	Continuous
Duration	OFF malfunction (A): 2 seconds OFF malfunction (B): 0.4 seconds ON malfunction: 1.8 seconds
MIL operation	2 driving cycles
Sequence of operation	None

TYPICAL ENABLING CONDITIONS

The following conditions are common to all OFF malfunctions (A), (B) and ON malfunction.

The monitor will run whenever the following DTCs are not present.	None
Turbine speed sensor (NT) circuit	Functioning normally
Output speed sensor (SP2) circuit	Functioning normally
Shift solenoid "A" (S1) circuit	Functioning normally
Shift solenoid "B" (S2) circuit	Functioning normally
Shift solenoid "E" (SR) circuit	Functioning normally
Torque converter clutch pressure control solenoid circuit	Functioning normally
Knock sensor circuit	Functioning normally
ETCS (Electronic throttle control system)	System not down
Transmission shift position	"D"
ECT	40°C (104°F) or more
Spark advance from max. retard timing by knock sensor control	0° CA or more
Engine	Starting
ECM selected gear	4th or 5th
Vehicle speed	15.5 mph (25 km/h) or more
Shift solenoid "A" (S1) circuit	Functioning normally
Shift solenoid "B" (S2) circuit	Functioning normally
Pressure control solenoid "B" (SL2) circuit	Functioning normally
1-2 shift valve	Functioning normally

OFF malfunction (A)

ECM lock-up request	ON (SLU pressure: 513 kPa or more)
Vehicle speed	Less than 62.2 mph (100 km/h)

OFF malfunction (B)

ECM selected gear	2nd
Vehicle speed	1.2 mph (2 km/h) or more
Output speed	2nd → 1st down shift point or more
Throttle valve opening angle	6.5 % or more at engine speed of 2,000 rpm (Conditions vary with engine speed)

ON malfunction

ECM lock-up request	OFF (SLU pressure: less than 4 kPa)
Throttle valve opening angle	7 % or more
Vehicle speed	Less than 37.3 mph (60 km/h)

TYPICAL MALFUNCTION THRESHOLDS

Both of the following conditions are met: OFF malfunction (A) and (B)

OFF malfunction (A)

Engine speed - Turbine speed	70 rpm or more

OFF malfunction (B)

Turbine speed/Output speed	Not 3.3 to 7.50

ON malfunction
2 detections are necessary in 1 driving cycle.
1st detection; temporary flag ON
2nd detection; pending fault code ON
Vehicle speed must be under 6.2 mph (10 km/h) once before the 2nd detection.

Difference between engine speed and turbine speed	Less than 35 rpm

HINT:
Performing the ACTIVE TEST using the intelligent tester allows components, such as, the relay, VSV, and actuator, to be operated without removing any parts. Performing the ACTIVE TEST as a first step of troubleshooting is one method of shortening labor time.
It is possible to display the DATA LIST during the ACTIVE TEST.

1. Warm up the engine.
2. Turn the ignition switch off.
3. Connect the intelligent tester together with the CAN VIM (controller area network vehicle interface module) to the DLC3.
4. Turn the ignition switch to the ON position.
5. Push the "ON" button of the tester.
6. Clear the DTC.
7. Select the items "DIAGNOSIS/ ENHANCED OBD II/ ACTIVE TEST/ LOCK UP".
8. According to the display on the tester, perform the "ACTIVE TEST".

Item	Test Details	Diagnostic Note
LOCK UP	[Test Details] Control the shift solenoid SLU to set the automatic transmission to the lock-up condition. [Vehicle Condition] Vehicle Speed: 36 mph (60 km/h) or more	Possible to check the SLU operation.

HINT:
This test can be conducted when the vehicle speed is 36 mph (60 km/h) or more.

9. Lightly depress the accelerator pedal and check that the engine speed does not change abruptly.

HINT:
- When changing the accelerator pedal opening angle while driving, if the engine speed does not change, lock-up is on.
- Slowly release, but not fully, the accelerator pedal in order to decelerate. (Fully releasing the pedal causes closure of the throttle valve and lock-up may be turned off automatically.)

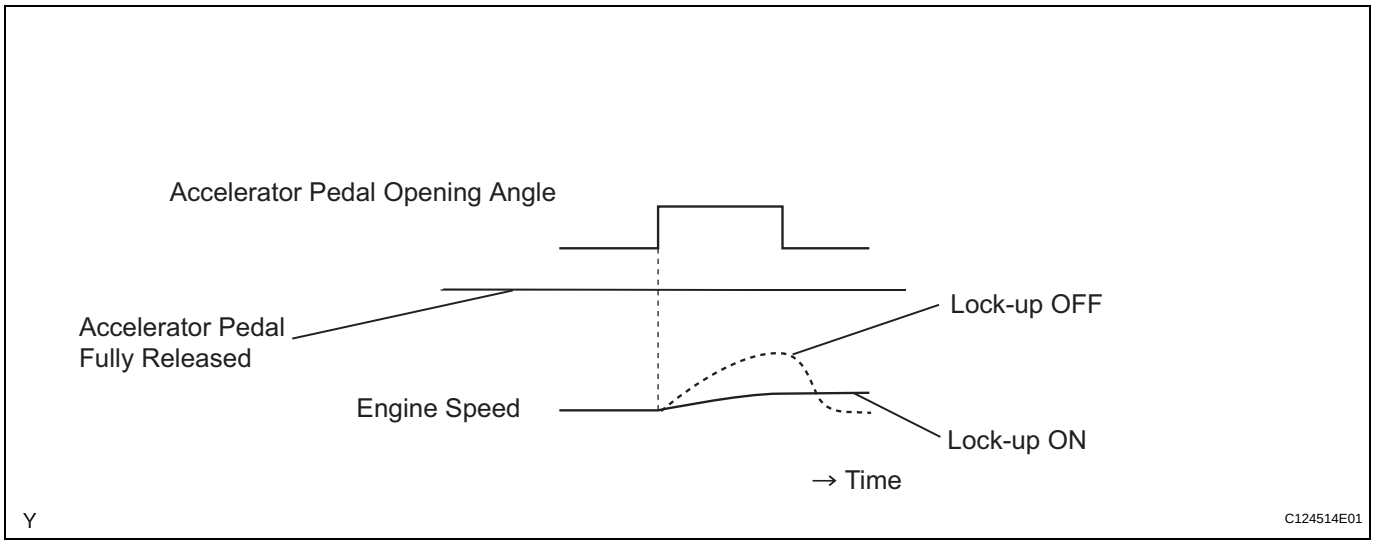

1	CHECK ANY OTHER DTCS OUTPUT (IN ADDITION TO DTC P2757)

(a) Connect the intelligent tester to the DLC3.
(b) Turn the ignition switch to the ON position and push the intelligent tester main switch ON.
(c) Select the items "DIAGNOSIS/ ENHANCED OBD II/ DTC INFO/ CURRENT CODES".
(d) Read the DTCs using the intelligent tester.

Result:

Display (DTC Output)	Proceed to
Only "P2757" is output	A
P2757" and other DTCs	B

HINT:
If any codes besides "P2757" are output, perform troubleshooting for those DTCs first.

B → GO TO DTC CHART

A

2 INSPECT SHIFT SOLENOID VALVE SLU

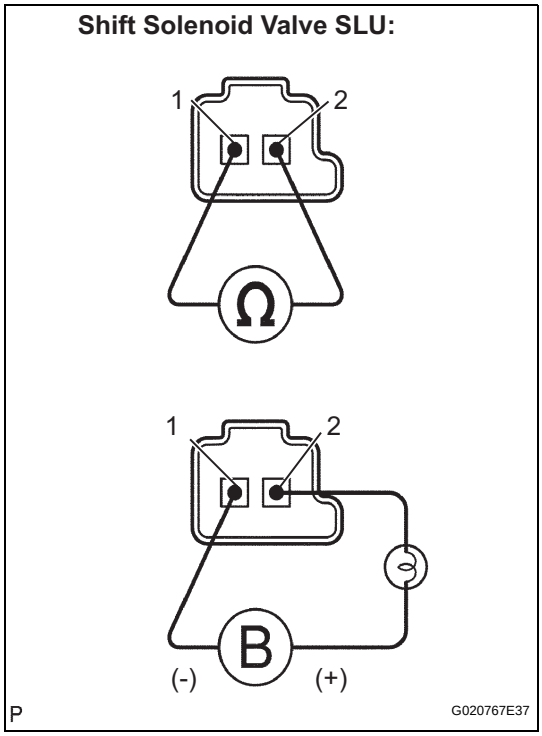

(a) Remove the shift solenoid valve SLU.
(b) Measure the resistance.
Standard resistance

Tester Connection	Specified Condition
1 - 2	5.0 to 5.6 Ω at 20°C (68°F)

(c) Connect the positive (+) lead with a 21 W bulb to terminal 2 and the negative (-) lead to terminal 1 of the solenoid valve connector, then check the movement of the valve.
OK:
The solenoid makes an operating noise.

NG → **REPLACE SHIFT SOLENOID VALVE SLU**

OK

3 INSPECT TRANSMISSION VALVE BODY ASSEMBLY (See chapter 2 in the problem symptoms table)

OK:
There are no foreign objects on any valves and they operate smoothly.

NG → **REPAIR OR REPLACE TRANSMISSION VALVE BODY ASSEMBLY**

OK

4 INSPECT TORQUE CONVERTER CLUTCH ASSEMBLY

(a) Inspect the torque converter clutch assembly (See page AT-166).

OK:
The torque converter clutch operates normally.

NG → **REPLACE TORQUE CONVERTER CLUTCH ASSEMBLY**

OK

REPAIR OR REPLACE AUTOMATIC TRANSMISSION ASSEMBLY

DTC	P2759	Torque Converter Clutch Pressure Control Solenoid Control Circuit Electrical (Shift Solenoid Valve SLU)

DESCRIPTION

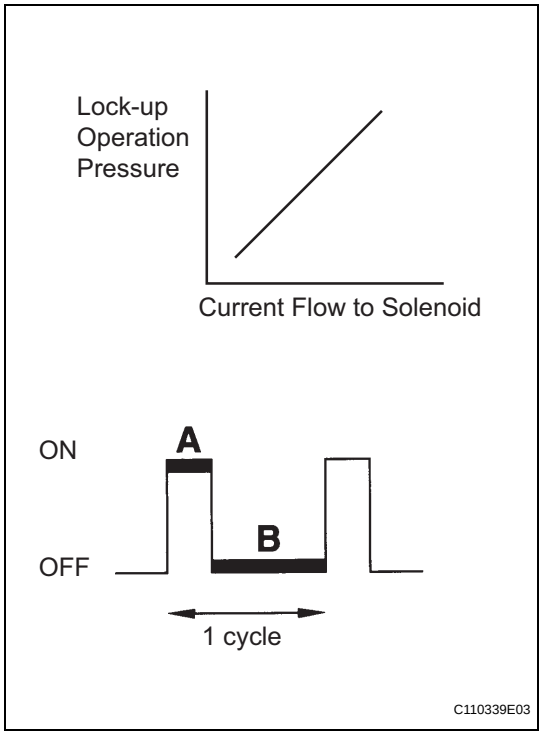

The current flow to the solenoid is controlled by the duty ratio* of the ECM output signal. The higher the duty ratio becomes, the higher the lock-up hydraulic pressure becomes during the lock-up operation.
*: The duty ratio is the ratio of the period of continuity in one cycle.
For example, if A is the period of continuity in one cycle, and B is the period of non-continuity, then Duty Ratio = A/(A+B) x 100(%).

DTC No.	DTC Detection Conditions	Trouble Areas
P2759	Open or short is detected in shift solenoid valve SLU circuit for 1 second or more while driving (1-trip detection logic)	• Open or short in shift solenoid valve SLU circuit • Shift solenoid valve SLU • ECM

MONITOR DESCRIPTION

When an open or short is detected in the shift solenoid valve (SLU) circuit, the ECM determines that there is a malfunction. The ECM turns on the MIL and stores this DTC.

MONITOR STRATEGY

Related DTCs	P2759: Shift solenoid valve SLU/Range check
Required sensors/Components	Shift solenoid valve SLU
Frequency of operation	Continuous
Duration	1 second
MIL operation	Immediate
Sequence of operation	None

TYPICAL ENABLING CONDITIONS

The monitor will run whenever the following DTCs are not present.	None
Battery voltage	10 V or more
CPU requested duty ratio to SLU	75 % or more
Ignition switch	ON
Starter	OFF

TYPICAL MALFUNCTION THRESHOLDS

Output signal duty	100 %

COMPONENT OPERATING RANGE

Output signal duty	Less than 100 %

WIRING DIAGRAM

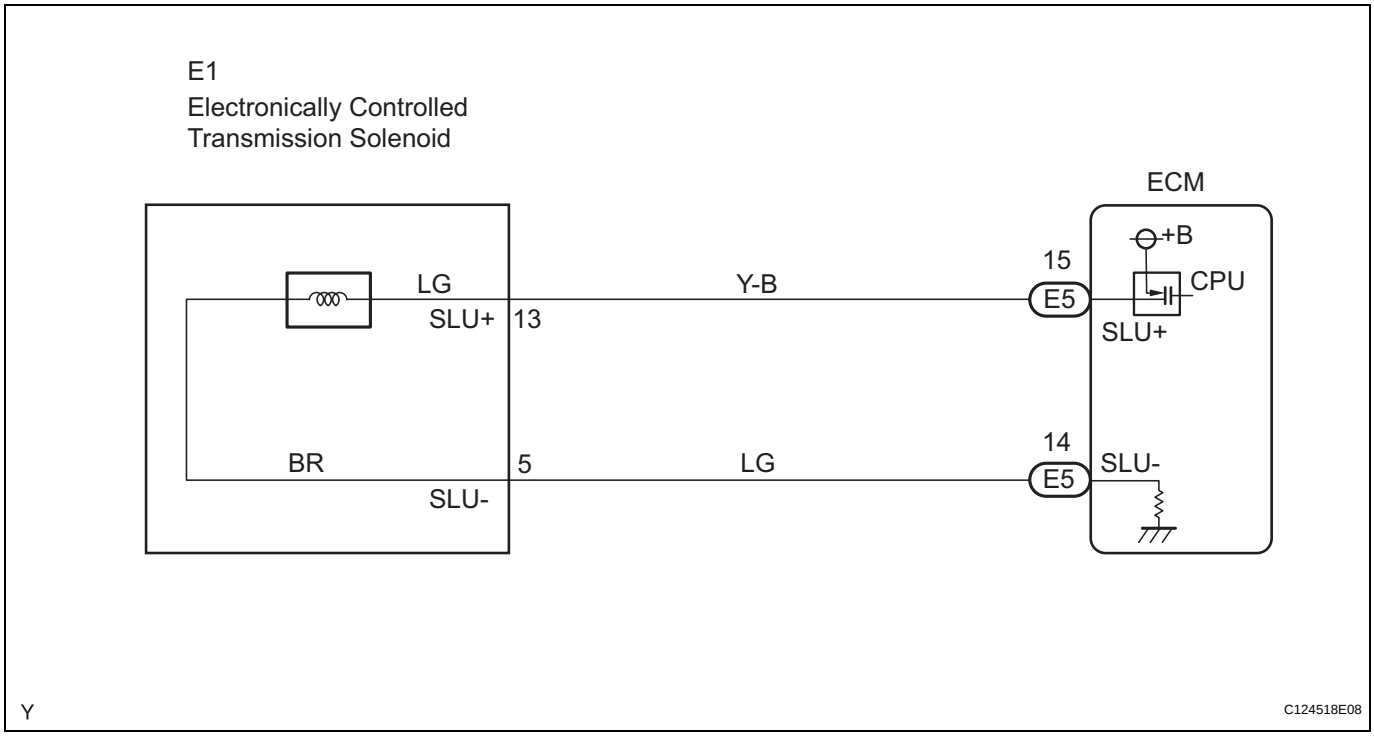

1	INSPECT TRANSMISSION WIRE (SLU)

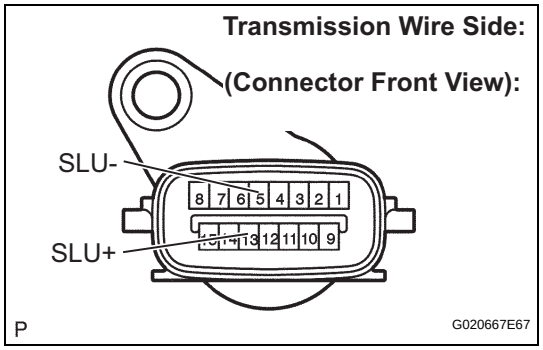

(a) Disconnect the transmission wire connector from the transmission.
(b) Measure the resistance.
Standard resistance

Tester Connection	Specified Condition
13 (SLU+) - 5 (SLU-)	5.0 to 5.6 Ω at 20°C (68°F)

(c) Measure the resistance.
Standard resistance (Check for short)

Tester Connection	Specified Condition
13 (SLU+) - Body ground	10 kΩ or higher
5 (SLU-) - Body ground	10 kΩ or higher

NG → **Go to step 3**

OK

2	CHECK HARNESS AND CONNECTOR (TRANSMISSION WIRE - ECM)

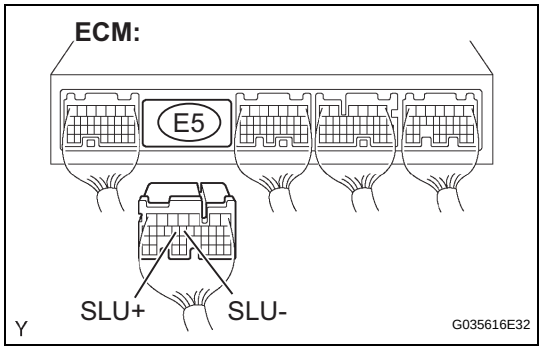

(a) Connect the transmission wire connector to the transmission.
(b) Disconnect the ECM connector.
(c) Measure the resistance.
Standard resistance

Tester Connection	Specified Condition
E5-15 (SLU+) - E5-14 (SLU-)	5.0 to 5.6 Ω at 20°C (68°F)

(d) Measure the resistance.
Standard resistance (Check for short)

Tester Connection	Specified Condition
E5-15 (SLU+) - Body ground	10 kΩ or higher
E5-14 (SLU-) - Body ground	10 kΩ or higher

NG → **REPAIR OR REPLACE HARNESS OR CONNECTOR**

OK

REPLACE ECM

3	INSPECT SHIFT SOLENOID VALVE SLU

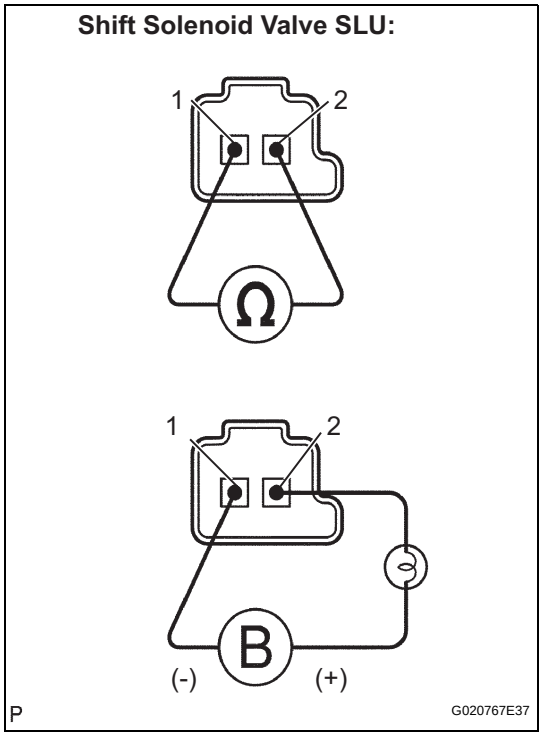

(a) Remove the shift solenoid valve SLU.
(b) Measure the resistance.
Standard resistance

Tester Connection	Specified Condition
1 - 2	5.0 to 5.6 Ω at 20°C (68°F)

(c) Connect the positive (+) lead with a 21 W bulb to terminal 2 and the negative (-) lead to terminal 1 of the solenoid valve connector, then check the movement of the valve.
OK:
The solenoid makes an operating noise.

NG → **REPLACE SHIFT SOLENOID VALVE SLU**

OK

REPAIR OR REPLACE TRANSMISSION WIRE

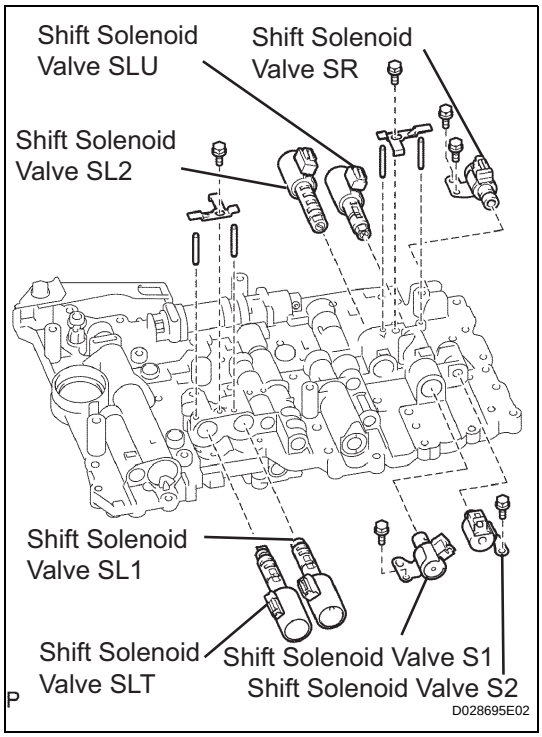

INSTALLATION

1. INSTALL TRANSMISSION VALVE BODY ASSEMBLY

(a) Install the shift solenoid valve S2 with the bolt.
Torque: 10 N*m (102 kgf*cm, 7 ft.*lbf)

(b) Install the shift solenoid valve S1 with the bolt.
Torque: 6.4 N*m (65 kgf*cm, 56 in.*lbf)

(c) Install the shift solenoid valve SR with the 2 bolts.
Torque: 6.4 N*m (65 kgf*cm, 56 in.*lbf)

(d) Install the shift solenoid valves SLU and SL2 with the pin, lock plate and bolt.
Torque: 6.4 N*m (65 kgf*cm, 56 in.*lbf)

(e) Install the shift solenoid valves SLT and SL1 with the pin, lock plate and bolt.
Torque: 6.4 N*m (65 kgf*cm, 56 in.*lbf)

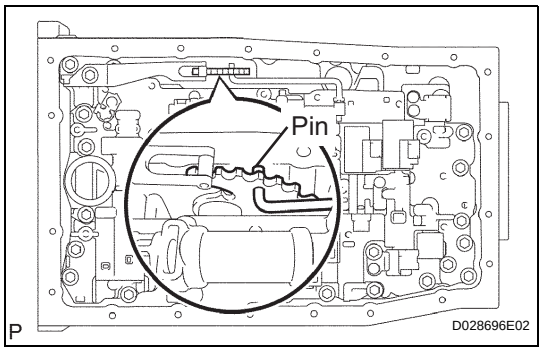

(f) Insert the pin of the lever into the hole of the manual valve.

(g) Install 3 new drum seal gaskets onto the transmission case.

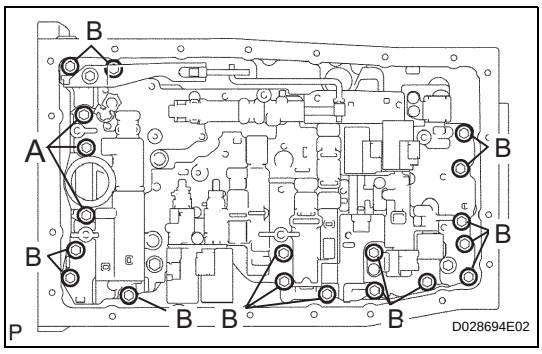

(h) Install the 19 bolts.
Torque: 11 N*m (110 kgf*cm, 8 ft.*lbf)
Bolt length:
Bolt A: 36 mm (1.42 in.)
Bolt B: 25 mm (0.98 in.)

2. INSTALL TRANSMISSION WIRE (See page AT-141)

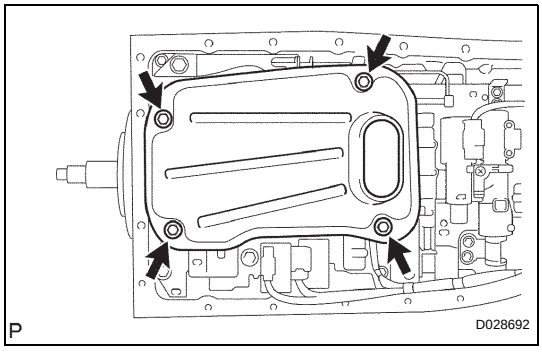

3. INSTALL VALVE BODY OIL STRAINER ASSEMBLY

(a) Install a new O-ring and the oil strainer with the 4 bolts.
Torque: 10 N*m (102 kgf*cm, 7 ft.*lbf)

4. INSTALL AUTOMATIC TRANSMISSION OIL PAN SUB-ASSEMBLY

HINT:
Remove all packing material and be careful not to drop oil on the contact surfaces of the transmission case and oil pan.

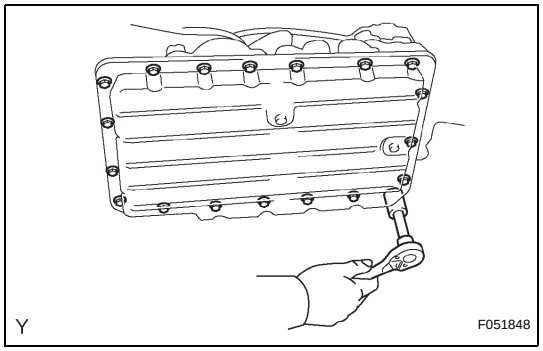

(a) Install a new gasket and the oil pan sub-assembly.

(b) Install the oil pan with the 20 bolts.
Torque: 4.4 N*m (45 kgf*cm, 39 in.*lbf)

5. **CONNECT CABLE TO NEGATIVE BATTERY TERMINAL**
Torque: 3.9 N*m (40 kgf*cm, 35 in.*lbf)

6. **PERFORM INITIALIZATION**
(See page AT-17)

7. **ADD AUTOMATIC TRANSMISSION FLUID**
(See page AT-135)

CHECK MODE PROCEDURE

1. DESCRIPTION

Check mode has a higher sensitivity to malfunctions and can detect malfunctions that normal mode cannot detect. Check mode can also detect all the malfunctions that normal mode can detect. In check mode, DTCs are detected with 1 trip detection logic.

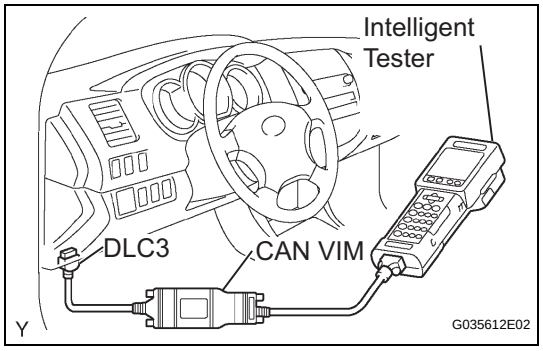

2. CHECK MODE PROCEDURE

(a) Ensure the following conditions:
  (1) Battery positive voltage 11 V or more
  (2) Throttle valve fully closed
  (3) Transmission in the P or N position
  (4) A/C switched off

(b) Turn the ignition switch off.

(c) Connect the intelligent tester together with the Controller Area Network Vehicle Interface Module (CAN VIM) to the DLC3.

(d) Turn the ignition switch to the ON position.

(e) Enter the following menus: DIAGNOSIS/ ENHANCED OBD II/ CHECK MODE.

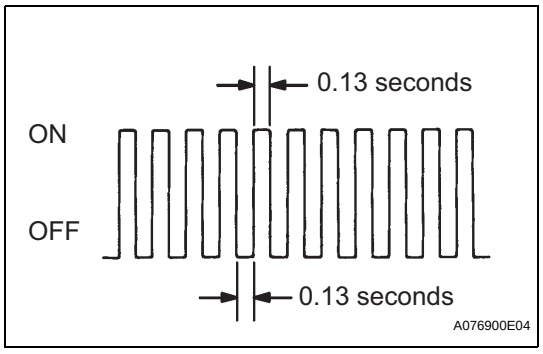

(f) Change the ECM to check mode. Make sure the MIL flashes as shown in the illustration.

NOTICE:

All recorded DTCs and freeze frame data will be erased if: 1) the intelligent tester is used to change the ECM from normal mode to check mode or vice-versa; or 2) during check mode, the ignition switch is turned from ON to ACC or LOCK.

Before entering check mode, make notes of the DTCs and freeze frame data.

(g) Start the engine. The MIL should turn off after the engine starts.

(h) Perform "MONITOR DRIVE PATTERN" for the ECT test (See page AT-19).

(Or, simulate the conditions of the malfunction described by the customer).

(i) After simulating the malfunction conditions, use the intelligent tester diagnosis selector to check the DTC and freeze frame data.

FAIL-SAFE CHART

1. FAIL-SAFE CHART

This function minimizes the loss of the ECT functions when a malfunction occurs in each sensor or solenoid.

AT

Malfunction Part	Function
DTC P0710, P0712 and P0713: No. 1 ATF Temperature Sensor	During a No. 1 ATF temperature sensor malfunction, up-shift to the 5th gear and flex lock-up clutch control are prohibited.
DTC P0722: Output Speed Sensor (SP2)	During an output speed sensor malfunction, shift control is effected through the input speed sensor signal (NT).
DTC P0751, P0756, P0771, P0973, P0974, P0976, P0977, P0985 and P0986: Shift Solenoid Valve S1, S2 and SR	The current to the failed solenoid valve is cut off and control is effected by operating the other solenoid valves with normal operation. Shift control is effected depending on the failed solenoid as described in the table below.
DTC P0748, P0776 and P0778: Shift Solenoid Valve SL1 and SL2	During a solenoid valve SL1 or SL2 malfunction, up-shift to the 5th gear is prohibited.
DTC P02714 and P2716: Shift Solenoid Valve SLT	During a solenoid valve SLT malfunction, the current to the solenoid valve is stopped. This stops line pressure optimal control, and shift shock increases. However, shifting is effected through normal clutch pressure control.
DTC P2757: Shift Solenoid Valve SLU	During a solenoid valve SLU malfunction, the current to the solenoid valve is stopped. This stops lock-up control and flex lock-up control, and fuel economy decreases.

Fail-safe function:

If either of the shift solenoid valve circuits has an open or short failure, the ECM turns the other shift solenoid ON and OFF in order to shift into the gear positions shown in the table below.

In case of a short circuit, the ECM stops sending current to the short circuit solenoid.

Even if starting the engine again in the fail-safe mode, the gear position remains in the same position.

Position	NORMAL						S1 OFF					
	Gear	S1	S2	SR	SL1	SL2	Gear	S1	S2	SR	SL1	SL2
R	R	ON	OFF	OFF	OFF	ON	R	OFF	OFF	OFF	OFF	ON
D	1st	ON	OFF	OFF	OFF	ON	4th ↓ 3rd	OFF	OFF ↓ ON	OFF	OFF	ON
	2nd	ON	ON	OFF	OFF	ON	3rd	OFF	ON	OFF	OFF	ON
	3rd	OFF	ON	OFF	OFF	ON	3rd	OFF	ON	OFF	OFF	ON
	4th	OFF	OFF	OFF	OFF	ON	4th	OFF	OFF	OFF	OFF	ON
	5th	OFF	OFF	ON	ON	OFF	5th	OFF	OFF	ON	ON	OFF
3	1st	ON	OFF	OFF	OFF	ON	3rd ↓ 3rd E/B	OFF	OFF ↓ ON	OFF	OFF	ON ↓ OFF
	2nd	ON	ON	OFF	OFF	ON	3rd ↓ 3rd E/B	OFF	ON	OFF	OFF	ON ↓ OFF
	3rd E/B	OFF	ON	OFF	OFF	OFF	3rd E/B	OFF	ON	OFF	OFF	OFF
	4th	OFF	OFF	ON	OFF	ON	4th	OFF	OFF	ON	OFF	ON
	5th	OFF	OFF	ON	ON	OFF	5th	OFF	OFF	ON	ON	OFF
2	1st	ON	OFF	OFF	OFF	ON	1st	OFF	OFF	OFF	OFF	ON
	2nd E/B	ON	ON	ON	OFF	OFF	3rd E/B	OFF	ON	ON	OFF	OFF
	3rd E/B	OFF	ON	ON	OFF	OFF	3rd E/B	OFF	ON	ON	OFF	OFF
	4th	OFF	OFF	ON	OFF	ON	4th	OFF	OFF	ON	OFF	ON
	5th	OFF	OFF	ON	ON	OFF	5th	OFF	OFF	ON	ON	OFF

Position	NORMAL						S1 OFF					
	Gear	S1	S2	SR	SL1	SL2	Gear	S1	S2	SR	SL1	SL2
L	1st E/B	ON	OFF	OFF	OFF	OFF	1st E/B	OFF	OFF	OFF	OFF	OFF
	2nd E/B	ON	ON	ON	OFF	OFF	3rd E/B	OFF	ON	ON	OFF	OFF
	3rd E/B	OFF	ON	ON	OFF	OFF	3rd E/B	OFF	ON	ON	OFF	OFF
	4th	OFF	OFF	ON	OFF	ON	4th	OFF	OFF	ON	OFF	ON
	5th	OFF	OFF	ON	ON	OFF	5th	OFF	OFF	ON	ON	OFF

AT

Position	S2 OFF						SR OFF					
	Gear	S1	S2	SR	SL1	SL2	Gear	S1	S2	SR	SL1	SL2
R	R	ON	OFF	OFF	OFF	ON	R	ON	OFF	OFF	OFF	ON
D	1st	ON	OFF	OFF	OFF	ON	1st	ON	OFF	OFF	OFF	ON
	1st ↓ 4th	ON ↓ OFF	OFF	OFF	OFF	ON	2nd	ON	ON	OFF	OFF	ON
	4th	OFF	OFF	OFF	OFF	ON	3rd	OFF	ON	OFF	OFF	ON
	4th	OFF	OFF	OFF	OFF	ON	4th	OFF	OFF	OFF	OFF	ON
	5th	OFF	OFF	ON	ON	OFF	4th	OFF	OFF	OFF	ON	OFF
3	1st	ON	OFF	OFF	OFF	ON	1st	ON	OFF	OFF	OFF	ON
	1st ↓ 3rd E/B	ON ↓ OFF	OFF	OFF	OFF	ON ↓ OFF	2nd	ON	ON	OFF	OFF	ON
	3rd E/B	OFF	OFF	OFF	OFF	OFF	3rd E/B ↓ 3rd	OFF	ON	OFF	OFF	OFF ↓ ON
	4th	OFF	OFF	ON	OFF	ON	3rd	OFF	OFF ↓ ON	OFF	OFF	ON ↓ ON
	5th	OFF	OFF	ON	ON	OFF	3rd E/B ↓ 3rd	OFF	OFF ↓ ON	OFF	ON ↓ OFF	OFF ↓ ON
2	1st	ON	OFF	OFF	OFF	ON	1st	ON	OFF	OFF	OFF	ON
	2nd E/B ↓ 4th	ON ↓ OFF	OFF	ON	OFF	OFF ↓ ON	2nd	ON	ON	OFF	OFF	OFF
	Fail 4th	OFF	OFF	ON	OFF	OFF ↓ ON	2nd	OFF ↓ ON	ON	OFF	OFF	OFF
	4th	OFF	OFF	ON	OFF	ON	1st ↓ 2nd	OFF ↓ ON	OFF ↓ ON	OFF	OFF	ON ↓ OFF
	5th	OFF	OFF	ON	ON	OFF	1st E/B ↓ 2nd	OFF ↓ ON	ON	OFF	ON ↓ OFF	OFF
L	1st E/B	ON	OFF	OFF	OFF	OFF	1st E/B	ON	OFF	OFF	OFF	OFF
	2nd E/B ↓ 4th	ON ↓ OFF	OFF	ON	OFF	OFF ↓ ON	2nd	ON	ON	OFF	OFF	OFF
	Fail 4th	OFF	OFF	ON	OFF	OFF ↓ ON	2nd	OFF ↓ ON	ON	OFF	OFF	OFF
	4th	OFF	OFF	ON	OFF	ON	1st ↓ 2nd	OFF ↓ ON	OFF ↓ ON	OFF	OFF	ON ↓ OFF
	5th	OFF	OFF	ON	ON	OFF	1st E/B ↓ 2nd	OFF ↓ ON	OFF ↓ ON	OFF	ON ↓ OFF	OFF

AT

Position	S1 S2 OFF						S2 SR OFF					
	Gear	S1	S2	SR	SL1	SL2	Gear	S1	S2	SR	SL1	SL2
R	R	OFF	OFF	OFF	OFF	ON	R	ON	OFF	OFF	OFF	ON
D	4th	OFF	OFF	OFF	OFF	ON	1st	ON	OFF	OFF	OFF	ON
	4th	OFF	OFF	OFF	OFF	ON	1st ↓ 4th	ON ↓ OFF	OFF	OFF	OFF	ON
	4th	OFF	OFF	OFF	OFF	ON	4th	OFF	OFF	OFF	OFF	ON
	4th	OFF	OFF	OFF	OFF	ON	4th	OFF	OFF	OFF	OFF	ON
	5th	OFF	OFF	ON	ON	OFF	4th	OFF	OFF	OFF	ON ↓ OFF	OFF ↓ ON
3	3rd ↓ 3rd E/B	OFF	OFF	OFF	OFF	ON ↓ OFF	1st	ON	OFF	OFF	OFF	ON
	3rd ↓ 3rd E/B	OFF	OFF	OFF	OFF	ON ↓ OFF	1st ↓ 3rd	ON ↓ OFF	OFF	OFF	OFF	ON ↓ ON
	3rd E/B	OFF	OFF	OFF	OFF	OFF	3rd E/B ↓ 3rd	OFF	OFF	OFF	OFF	OFF ↓ ON
	4th	OFF	OFF	ON	OFF	ON	3rd	OFF	OFF	OFF	OFF	ON ↓ ON
	5th	OFF	OFF	ON	ON	OFF	1st E/B ↓ 3rd	OFF	OFF	OFF	ON ↓ OFF	OFF ↓ ON
2	1st	OFF	OFF	OFF	OFF	ON	1st	ON	OFF	OFF	OFF	ON
	Fail 4th	OFF	OFF	ON	OFF	OFF ↓ ON	1st E/B ↓ 1st	ON	OFF	OFF	OFF	OFF ↓ ON
	Fail 4th	OFF	OFF	ON	OFF	OFF ↓ ON	1st E/B ↓ 1st	OFF ↓ ON	OFF	OFF	OFF	OFF ↓ ON
	4th	OFF	OFF	ON	OFF	ON	1st	OFF ↓ ON	OFF	OFF	OFF	ON
	5th	OFF	OFF	ON	ON	OFF	1st E/B ↓ 1st	OFF ↓ ON	OFF	OFF	ON ↓ OFF	OFF ↓ ON
L	1st E/B	OFF	OFF	OFF	OFF	OFF	1st E/B	ON	OFF	OFF	OFF	OFF
	Fail 4th	OFF	OFF	ON	OFF	OFF ↓ ON	1st E/B ↓ 1st	ON	OFF	OFF	OFF	OFF ↓ ON
	Fail 4th	OFF	OFF	ON	OFF	OFF ↓ ON	1st E/B ↓ 1st	OFF ↓ ON	OFF	OFF	OFF	OFF ↓ ON
	4th	OFF	OFF	ON	OFF	ON	1st	OFF ↓ ON	OFF	OFF	OFF	ON
	5th	OFF	OFF	ON	ON	OFF	1st E/B ↓ 1st	OFF ↓ ON	OFF	OFF	ON ↓ OFF	OFF ↓ ON

Position	S1 SR OFF						S1 S2 SR OFF					
	Gear	S1	S2	SR	SL1	SL2	Gear	S1	S2	SR	SL1	SL2
R	R	OFF	OFF	OFF	OFF	ON	R	OFF	OFF	OFF	OFF	ON

Position	S1 SR OFF						S1 S2 SR OFF					
	Gear	S1	S2	SR	SL1	SL2	Gear	S1	S2	SR	SL1	SL2
D	4th ↓ 3rd	OFF	OFF ↓ ON	OFF	OFF	ON	4th	OFF	OFF	OFF	OFF	ON
	3rd	OFF	ON	OFF	OFF	ON	4th	OFF	OFF	OFF	OFF	ON
	3rd	OFF	ON	OFF	OFF	ON	4th	OFF	OFF	OFF	OFF	ON
	4th	OFF	OFF	OFF	OFF	ON	4th	OFF	OFF	OFF	OFF	ON
	4th	OFF	OFF	OFF	ON ↓ OFF	OFF ↓ ON	4th	OFF	OFF	OFF	ON ↓ OFF	OFF ↓ ON
3	3rd	OFF	OFF ↓ ON	OFF	OFF	ON ↓ ON	3rd	OFF	OFF	OFF	OFF	ON ↓ ON
	3rd	OFF	ON	OFF	OFF	ON ↓ ON	3rd	OFF	OFF	OFF	OFF	ON ↓ ON
	3rd E/B ↓ 3rd	OFF	ON	OFF	OFF	OFF ↓ ON	3rd E/B ↓ 3rd	OFF	OFF	OFF	OFF	OFF ↓ ON
	3rd	OFF	OFF ↓ ON	OFF	OFF	ON ↓ ON	3rd	OFF	OFF	OFF	OFF	ON ↓ ON
	3rd E/B ↓ 3rd	OFF	OFF ↓ ON	OFF	ON ↓ OFF	OFF ↓ ON	3rd E/B ↓ 3rd	OFF	OFF	OFF	ON ↓ OFF	OFF ↓ ON
2	1st	OFF	OFF	OFF	OFF	ON	1st	OFF	OFF	OFF	OFF	ON
	2nd	OFF	ON	OFF	OFF	OFF	1st E/B ↓ 1st	OFF	OFF	OFF	OFF	OFF ↓ ON
	2nd	OFF	ON	OFF	OFF	OFF	1st E/B ↓ 1st	OFF	OFF	OFF	OFF	OFF ↓ ON
	1st ↓ 2nd	OFF	OFF ↓ ON	OFF	OFF	ON ↓ OFF	1st	OFF	OFF	OFF	OFF	ON
	1st E/B ↓ 2nd	OFF	OFF ↓ ON	OFF	ON ↓ OFF	OFF	1st E/B ↓ 1st	OFF	OFF	OFF	ON ↓ OFF	OFF ↓ ON
L	1st E/B	OFF	OFF	OFF	OFF	OFF	1st E/B	OFF	OFF	OFF	OFF	OFF
	2nd	OFF	ON	OFF	OFF	OFF	1st E/B ↓ 1st	OFF	OFF	OFF	OFF	OFF ↓ ON
	2nd	OFF	ON	OFF	OFF	OFF	1st E/B ↓ 1st	OFF	OFF	OFF	OFF	OFF ↓ ON
	1st ↓ 2nd	OFF	OFF ↓ ON	OFF	OFF	ON ↓ OFF	1st	OFF	OFF	OFF	OFF	ON
	1st E/B ↓ 2nd	OFF	OFF ↓ ON	OFF	ON ↓ OFF	OFF	1st E/B ↓ 1st	OFF	OFF	OFF	ON ↓ OFF	OFF ↓ ON

HINT:

- ↓: Condition in the electrical malfunction is shown above "↓".
- ↓: Condition in the fail-safe mode is shown below "↓".
- E/B: Engine brake.

AT

DATA LIST / ACTIVE TEST

1. DATA LIST

HINT:

According to the DATA LIST displayed on the intelligent tester, you can read the values of components, such as the switches, sensors and actuators, without removing any parts. Reading the DATA LIST as a first step of troubleshooting is one method of shortening labor time.

NOTICE:

In the table below, the values listed under "Normal Condition" are for reference only. Do not depend solely on these reference values when judging whether a part is faulty or not.

(a) Warm up the engine.

(b) Turn the ignition switch off.

(c) Connect the intelligent tester together with the CAN VIM (controller area network vehicle interface module) to the DLC3.

(d) Turn the ignition switch to the ON position.

(e) Push the "ON" button of the tester.

(f) Select the items "DIAGNOSIS/ ENHANCED OBD II/ DATA LIST/ A/T".

(g) According to the display on the tester, read the "DATA LIST".

Item	Measurement Item/ Display (Range)	Normal Condition	Diagnostic Note
SPD (SP2)	Counter Gear Speed / min.: 0 mph (0 km/h) max.: 158 mph (255 km/h)	Vehicle stopped: 0 mph (0 km/h)	-
SPD (NT)	Input Turbine Speed/ display: 50 rpm	[HINT] • Lock-up ON (After warming up the engine); Input turbine speed (NT) equal to the engine speed. • Lock-up OFF (Idling in N position); Input turbine speed (NT) nearly equal to the engine speed.	-
PNP SW [NSW]	PNP Switch Status/ ON or OFF	Shift lever position is; P or N: ON Except P or N: OFF	When the shift lever position displayed on the intelligent tester differs from the actual position, adjustment of the PNP switch or the shift cable may be incorrect. HINT: When the failure still occurs even after adjusting these parts. (See page AT-145)
STOP LIGHT SW	Stop Light Switch Status/ ON or OFF	• Brake Pedal is depressed: ON • Brake Pedal is released: OFF	-
SHIFT	ECM gear shift command/ 1st, 2nd, 3rd, 4th or 5th	Shift Lever Position is; • L: 1st • 2: 1st or 2nd • 3: 1st, 2nd or 3rd • 4: 1st, 2nd, 3rd or 4th • D: 1st, 2nd, 3rd, 4th or 5th	-
REVERSE	PNP Switch Status/ ON or OFF	Shift lever position is; R: ON Except R: OFF	Same as PNP SW [NSW]

Item	Measurement Item/ Display (Range)	Normal Condition	Diagnostic Note
DRIVE	PNP Switch Status/ ON or OFF	Shift lever position is; D and 4: ON Except D and 4: OFF	Same as PNP SW [NSW]
4th/DRIVE	PNP Switch Status/ ON or OFF	Shift lever position is; 4: ON Except 4: OFF	Same as PNP SW [NSW]
3RD	PNP Switch Status/ ON or OFF	Shift lever position is; 3: ON Except 3: OFF	Same as PNP SW [NSW]
2ND	PNP Switch Status/ ON or OFF	Shift lever position is; 2 and L: ON Except 2 and L: OFF	Same as PNP SW [NSW]
LOW	PNP Switch Status/ ON or OFF	Shift lever position is; L: ON Except L: OFF	Same as PNP SW [NSW]
AT OIL TEMP1	No. 1 ATF Temperature Sensor Value/ min.: -40°C (-40°F) max.: 215°C (419°F)	• After Stall Test; Approximately 80°C (176°F) • Equal to ambient temperature during cold soak	If the value is "-40°C (-40°F)" or "150°C (302°F) or more", No. 1 ATF temperature sensor circuit is open or short.
AT OIL TEMP2	No. 2 ATF Temperature Sensor Value/ min.: -40°C (-40°F) max.: 215°C (419°F)	• After Stall Test; Approximately 80°C (176°F) • Equal to ambient temperature during cold soak	If the value is "-40°C (-40°F)" or "150°C (302°F) or more", No. 2 ATF temperature sensor circuit is open or short.
LOCK UP SOL	Lock Up Solenoid Status/ ON or OFF	• Lock Up: ON • Except Lock Up: OFF	-
SOLENOID (SLU)	Shift Solenoid SLU Status/ ON or OFF	• Lock Up: ON • Except Lock Up: OFF	-
SOLENOID (SLT)	Shift Solenoid SLT Status/ ON or OFF	IG SW ON: ON	-

AT

2. ACTIVE TEST

HINT:

Performing the ACTIVE TEST using the intelligent tester allows components, such as the relay, VSV, and actuator, to be operated without removing any parts. Performing the ACTIVE TEST as a first step of troubleshooting is one method of shortening labor time. It is possible to display the DATA LIST during the ACTIVE TEST.

(a) Warm up the engine.
(b) Turn the ignition switch off.
(c) Connect the intelligent tester together with the CAN VIM (controller area network vehicle interface module) to the DLC3.
(d) Turn the ignition switch to the ON position.
(e) Push the "ON" button of the tester.
(f) Select the items "DIAGNOSIS/ ENHANCED OBD II/ ACTIVE TEST".

(g) According to the display on the tester, perform the "ACTIVE TEST".

Item	Test Details	Diagnostic Note
LINE PRESS UP *	[Test Details] Operate the shift solenoid SLT to raise the line pressure. [Vehicle Condition] • Vehicle Stopped • IDL: ON [HINT] OFF: Line pressure up (When the active test of "LINE PRESS UP" is performed, the ECM commands the SLT solenoid to turn off). ON: No action (normal operation)	-
LOCK UP	[Test Details] Control the shift solenoid SLU to set the automatic transmission to the lock-up condition. [Vehicle Condition] Vehicle Speed: 36 mph (60 km/h) or more	Possible to check the SLU operation.
SHIFT	[Test Details] Operate the shift solenoid valve and set each shift position manually. [Vehicle Condition] Vehicle Speed: Less than 30 mph (50 km/h) [Others] • Press →button: Shift up • Press ←button: Shift down	Possible to check the operation of the shift solenoid valves. HINT: Shifting to the 5th gear is possible only when the vehicle is stationary with the engine idling.

*: "LINE PRESS UP" in the ACTIVE TEST is performed to check the line pressure changes by connecting SST to the automatic transmission, which is used in the HYDRAULIC TEST (See page AT-16) as well.
HINT:
The pressure values in ACTIVE TEST and HYDRAULIC TEST are different from each other.

DIAGNOSTIC TROUBLE CODE CHART

If a DTC is displayed during the DTC check, check the circuit listed in the table below and proceed to the page given.
HINT:

- *1: "Comes on" means that the MIL will illuminate.
- *2: "DTC stored" means that the ECM memorizes the malfunction code if the DTC detection condition(s) are met.
- These DTCs may be output when the clutch, brake and gear components, etc., inside the automatic transmission are damaged.

DTC No.	Detection Item	Trouble Areas	MIL *1	Memory *2	See page
P0705	Transmission Range Sensor Circuit Malfunction (PRNDL Input)	- Open or short in park/neutral position switch circuit - Park/neutral position switch - ECM	Comes on	DTC stored	AT-43
P0710	Transmission Fluid Temperature Sensor "A" Circuit	- Open or short in No. 1 ATF temperature sensor circuit - Transmission wire (No. 1 ATF temperature sensor) - ECM	Comes on	DTC stored	AT-49
P0711	Transmission Fluid Temperature Sensor "A" Performance	- Transmission wire (No. 1 ATF temperature sensor) - ECM	Comes on	DTC stored	AT-54
P0712	Transmission Fluid Temperature Sensor "A" Circuit Low Input	- Short in No. 1 ATF temperature sensor circuit - Transmission wire (No. 1 ATF temperature sensor) - ECM	Comes on	DTC stored	AT-49
P0713	Transmission Fluid Temperature Sensor "A" Circuit High Input	- Open in No. 1 ATF temperature sensor circuit - Transmission wire (No. 1 ATF temperature sensor) - ECM	Comes on	DTC stored	AT-49
P0717	Input Speed Sensor Circuit No Signal	- Open or short in speed sensor (NT) circuit - Speed sensor (NT) - ECM	Comes on	DTC stored	AT-57
P0722	Output Speed Sensor Circuit No Signal	- Open or short in speed sensor (SP2) circuit - Speed sensor (SP2) - ECM	Comes on	DTC stored	AT-62
P0748	Pressure Control Solenoid "A" Electrical (Shift Solenoid Valve SL1)	- Open or short in shift solenoid valve SL1 circuit - Shift solenoid valve SL1 - ECM	Comes on	DTC stored	AT-67

DTC No.	Detection Item	Trouble Areas	MIL *1	Memory *2	See page
P0751	Shift Solenoid "A" Performance (Shift Solenoid Valve S1)	- Shift solenoid valve S1 remains open or closed - Shift solenoid valve SLT remains open or closed - Valve body is blocked - Automatic transmission (clutch, brake or gear, etc.)	Comes on	DTC stored	AT-70
P0756	Shift Solenoid "B" Performance (Shift Solenoid Valve S2)	- Shift solenoid valve S2 remains open or closed - Shift solenoid valve SLT remains open or closed - Valve body is blocked - Automatic transmission (clutch, brake or gear, etc.)	Comes on	DTC stored	AT-76
P0771	Shift Solenoid "E" Performance (Shift Solenoid Valve SR)	- Shift solenoid valve SR remains open or closed - Shift solenoid valve SL1 remains open or closed - Shift solenoid valve SLT remains open or closed - Valve body is blocked - Automatic transmission (clutch, brake or gear, etc.)	Comes on	DTC stored	AT-82
P0776	Pressure Control Solenoid "B" Performance (Shift Solenoid Valve SL2)	- Shift solenoid valve SL2 remains open or closed - Shift solenoid valve SLT remains open or closed - Valve body is blocked - Automatic transmission (clutch, brake or gear, etc.)	Comes on	DTC stored	AT-87
P0778	Pressure Control Solenoid "B" Electrical (Shift Solenoid Valve SL2)	- Open or short in shift solenoid valve SL2 circuit - Shift solenoid valve SL2 - ECM	Comes on	DTC stored	AT-92
P0781	1-2 Shift (1-2 Shift Valve)	- Valve body is blocked up or stuck (1-2 shift valve) - Shift solenoid valve SLT remains open or closed - Automatic transmission (clutch, brake or gear, etc.)	Comes on	DTC stored	AT-96

DTC No.	Detection Item	Trouble Areas	MIL *1	Memory *2	See page
P0973	Shift Solenoid "A" Control Circuit Low (Shift Solenoid Valve S1)	- Short in shift solenoid valve S1 circuit - Shift solenoid valve S1 - ECM	Comes on	DTC stored	AT-101
P0974	Shift Solenoid "A" Control Circuit High (Shift Solenoid Valve S1)	- Open in shift solenoid valve S1 circuit - Shift solenoid valve S1 - ECM	Comes on	DTC stored	AT-101
P0976	Shift Solenoid "B" Control Circuit Low (Shift Solenoid Valve S2)	- Short in shift solenoid valve S2 circuit - Shift solenoid valve S2 - ECM	Comes on	DTC stored	AT-104
P0977	Shift Solenoid "B" Control Circuit High (Shift Solenoid Valve S2)	- Open in shift solenoid valve S2 circuit - Shift solenoid valve S2 - ECM	Comes on	DTC stored	AT-104
P0985	Shift Solenoid "E" Control Circuit Low (Shift Solenoid Valve SR)	- Short in shift solenoid valve SR circuit - Shift solenoid valve SR - ECM	Comes on	DTC stored	AT-107
P0986	Shift Solenoid "E" Control Circuit High (Shift Solenoid Valve SR)	- Open in shift solenoid valve SR circuit - Shift solenoid valve SR - ECM	Comes on	DTC stored	AT-107
P2714	Pressure Control Solenoid "D" Performance (Shift Solenoid Valve SLT)	- Shift solenoid valve SLT remains open or closed - Shift solenoid valve S1, S2, SR, SL1 or SL2 remains open or closed - Valve body is blocked - Automatic transmission (clutch, brake or gear, etc.)	Comes on	DTC stored	AT-111
P2716	Pressure Control Solenoid "D" Electrical (Shift Solenoid Valve SLT)	- Open or short in shift solenoid valve SLT circuit - Shift solenoid valve SLT - ECM	Comes on	DTC stored	AT-118
P2740	Transmission Fluid Temperature Sensor "B" Circuit	- Open or short in No. 2 ATF temperature sensor circuit - No. 2 ATF temperature sensor - ECM	Comes on	DTC stored	AT-122

DTC No.	Detection Item	Trouble Areas	MIL *1	Memory *2	See page
P2742	Transmission Fluid Temperature Sensor "B" Circuit Low Input	- Short in No. 2 ATF temperature sensor circuit - No. 2 ATF temperature sensor - ECM	Comes on	DTC stored	AT-122
P2743	Transmission Fluid Temperature Sensor "B" Circuit High Input	- Open in No. 2 ATF temperature sensor circuit - No. 2 ATF temperature sensor - ECM	Comes on	DTC stored	AT-122
P2757	Torque Converter Clutch Pressure Control Solenoid Performance (Shift Solenoid Valve SLU)	- Shift solenoid valve SLU remains open or closed - Valve body is blocked - Shift solenoid valve SLU - Torque converter clutch - Automatic transmission (clutch, brake or gear, etc.) - Line pressure is too low	Comes on	DTC stored	AT-127
P2759	Torque Converter Clutch Pressure Control Solenoid Control Circuit Electrical (Shift Solenoid Valve SLU)	- Open or short in shift solenoid valve SLU circuit - Shift solenoid valve SLU - ECM	Comes on	DTC stored	AT-132
P2772	Transfer "L4" Switch Circuit	- Short in transfer L4 position switch circuit - Transfer L4 position switch - ECM	Comes on	DTC stored	AT-136

DTC	P0705	Transmission Range Sensor Circuit Malfunction (PRNDL Input)

DESCRIPTION

The park/neutral position switch detects the shift lever position and sends signals to the ECM.

DTC No.	DTC Detection Conditions	Trouble Areas
P0705	When any one of following conditions (A) to (C) is met (2-trip detection logic): (A) Any 2 or more signals of the following are ON simultaneously • NSW input signal is ON. • R input signal is ON. • D input signal is ON. • 3 input signal is ON. • 2 input signal is ON. (B) All switches are OFF simultaneously for P (NSW), R, N (NSW), D, 3 and 2 positions (C) When NSW or R input signal is ON, 4 or L input signal is ON	• Open or short in park/neutral position switch circuit • Park/neutral position switch • ECM

MONITOR DESCRIPTION

The DTC indicates a problem with the park/neutral position switch and the wire harness in the park/neutral position switch circuit.
For security, the park/neutral position switch detects the shift lever position so that the engine can be started only when the vehicle is in the P or N shift position.
When the park/neutral position switch sends more than one signal at a time from switch positions P, R, N, D, 3 or 2, the ECM interprets this as a fault in the switch. The ECM will turn on the MIL and store the DTC.

MONITOR STRATEGY

Related DTCs	P0705: Park/neutral position switch/Verify switch input
Required sensors/Components	Park/neutral position switch
Frequency of operation	Continuous
Duration	Conditions (A) and (C): 2 seconds Condition (B): 60 seconds
MIL operation	2 driving cycles
Sequence of operation	None

TYPICAL ENABLING CONDITIONS

The monitor will run whenever the following DTCs are not present.	None
Ignition switch	ON
Battery voltage	10.5 V or more

TYPICAL MALFUNCTION THRESHOLDS

One of the following conditions is met: Condition (A), (B) or (C)

Condition (A)

Number of the following signals input at the same time	2 or more
Park/neutral position switch	ON
R switch	ON
D switch	ON
3 switch	ON
2 switch	ON

Condition (B)

All of following conditions are met

Park/neutral position switch	OFF
R switch	OFF
D switch	OFF
3 switch	OFF
2 switch	OFF

Condition (C)

Both (i) and (ii) are met

(i) One of following conditions is met

Park/neutral position switch	ON
R switch	ON

(ii) One of following conditions is met

4 switch	ON
L switch	ON

COMPONENT OPERATING RANGE

Park/neutral position switch	The park/neutral position switch sends only one signal to the ECM

WIRING DIAGRAM

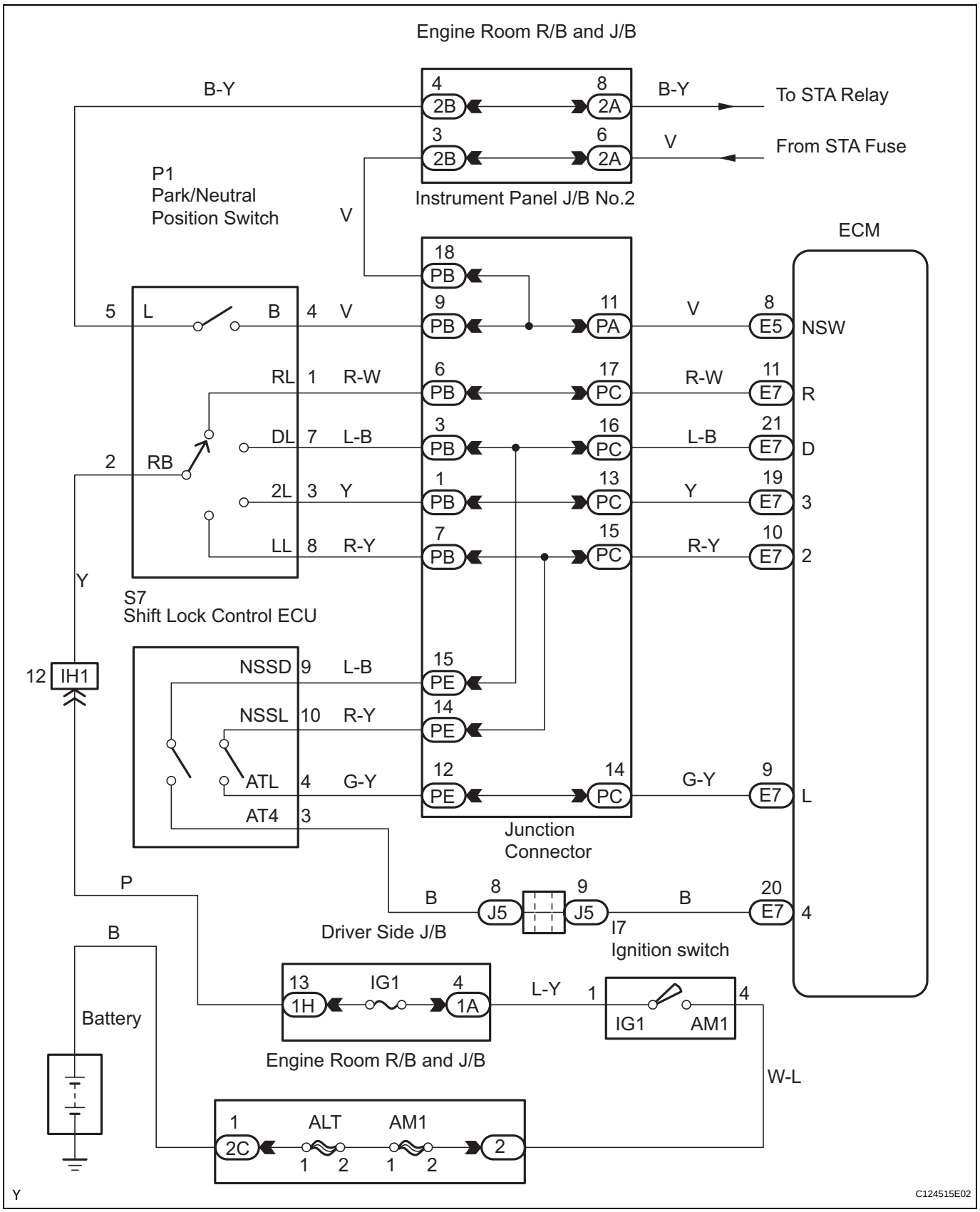

HINT:
According to the DATA LIST displayed on the intelligent tester, you can read the values of components, such as the switches, sensors and actuators, without removing any parts. Reading the DATA LIST as a first step of troubleshooting is one method of shortening labor time.

NOTICE:

In the table below, the values listed under "Normal Condition" are for reference only. Do not depend solely on these reference values when judging whether a part is faulty or not.

AT

1. Connect the intelligent tester together with the CAN VIM (controller area network vehicle interface module) to the DLC3.
2. Turn the ignition switch to the ON position.
3. Push the "ON" button of the tester.
4. Select the items "DIAGNOSIS/ ENHANCED OBD II/ DATA LIST/ A/T".
5. According to the display on the tester, read the "DATA LIST".

Item	Measurement Item/ Display (Range)	Normal Condition	Diagnostic Note
PNP SW [NSW]	PNP Switch Status/ ON or OFF	Shift lever position is; P or N: ON Except P or N: OFF	When the shift lever position displayed on the intelligent tester differs from the actual position, adjustment of the PNP switch or the shift cable may be incorrect.
REVERSE	PNP Switch Status/ ON or OFF	Shift lever position is; R: ON Except R: OFF	
DRIVE	PNP Switch Status/ ON or OFF	Shift lever position is; D and 4: ON Except D and 4: OFF	
4th/DRIVE	PNP Switch Status/ ON or OFF	Shift lever position is; 4: ON Except 4: OFF	
3RD	PNP Switch Status/ ON or OFF	Shift lever position is; 3: ON Except 3: OFF	
2ND	PNP Switch Status/ ON or OFF	Shift lever position is; 2 and L: ON Except 2 and L: OFF	
LOW	PNP Switch Status/ ON or OFF	Shift lever position is; L: ON Except L: OFF	

1 INSPECT PARK / NEUTRAL POSITION SWITCH ASSEMBLY

Switch side (Connector Front View):

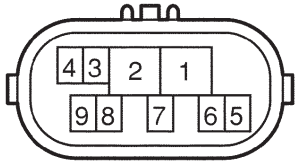

P G026080E19

(a) Disconnect the park/neutral position switch connector.
(b) Measure the resistance when the shift lever is moved to each position.

Standard resistance

Shift Position	Tester Connection	Specified Condition
P	2 - 6 and 4 - 5	Below 1 Ω
Except P	2 - 6 and 4 - 5	10 kΩ or higher
R	1 - 2	Below 1 Ω
Except R	1 - 2	10 kΩ or higher
N	2 - 9 and 4 - 5	Below 1 Ω
Except N	2 - 9 and 4 - 5	10 kΩ or higher
D, 4	2 - 7	Below 1 Ω
Except D, 4	2 - 7	10 kΩ or higher
3	2 - 3	Below 1 Ω
Except 3	2 - 3	10 kΩ or higher
2, L	2 - 8	Below 1 Ω

Shift Position	Tester Connection	Specified Condition
Except 2, L	2 - 8	10 kΩ or higher

NG → REPLACE PARK / NEUTRAL POSITION SWITCH ASSEMBLY

OK

AT

2 INSPECT SHIFT LOCK CONTROL ECU SUB-ASSEMBLY

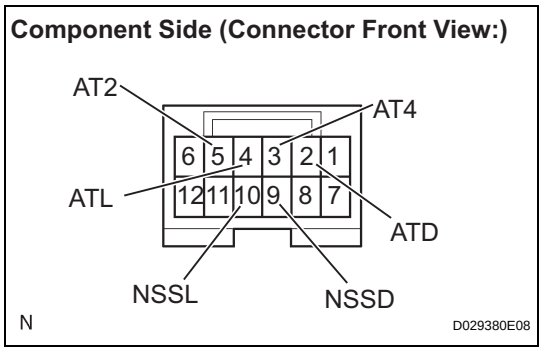

(a) Connect the park/neutral position switch connector.
(b) Disconnect the shift lock control ECU connector.
(c) Measure the resistance when the shift lever is moved to each position.

Standard resistance

Shift Position	Tester Connection	Specified Condition
D	9 (NSSD) - 2 (ATD)	Below 1 Ω
4	9 (NSSD) - 2 (ATD)	10 kΩ or higher
D	9 (NSSD) - 3 (AT4)	10 kΩ or higher
4	9 (NSSD) - 3 (AT4)	Below 1 Ω
2	10 (NSSL) - 5 (AT2)	Below 1 Ω
L	10 (NSSL) - 5 (AT2)	10 kΩ or higher
2	10 (NSSL) - 4 (ATL)	10 kΩ or higher
L	10 (NSSL) - 4 (ATL)	Below 1 Ω

NG → REPLACE SHIFT LOCK CONTROL ECU SUB-ASSEMBLY

OK

3 CHECK HARNESS AND CONNECTOR (PARK/NEUTRAL POSITION SWITCH - ECM)

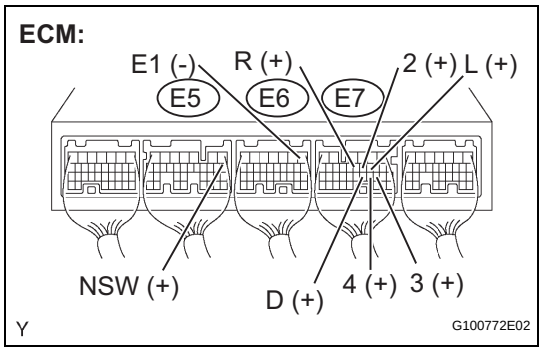

(a) Connect the shift lock control ECU connector.
(b) Turn the ignition switch to the ON position.
(c) Measure the voltage when the shift lever is moved to each position.

Standard voltage

Shift Position	Tester Connection	Specified Condition
P and N	E5-8 (NSW) - E6-1 (E1)	Below 2 V
Except P and N	E5-8 (NSW) - E6-1 (E1)	10 to 14 V
R	E7-11 (R) - E6-1 (E1)	10 to 14 V*
Except R	E7-11 (R) - E6-1 (E1)	Below 1 V
D and 4	E7-21 (D) - E6-1 (E1)	10 to 14 V
Except D and 4	E7-21 (D) - E6-1 (E1)	Below 1 V
4	E7-20 (4) - E6-1 (E1)	10 to 14 V
Except 4	E7-20 (4) - E6-1 (E1)	Below 1 V
3	E7-19 (3) - E6-1 (E1)	10 to 14 V
Except 3	E7-19 (3) - E6-1 (E1)	Below 1 V
2 and L	E7-10 (2) - E6-1 (E1)	10 to 14 V
Except 2 and L	E7-10 (2) - E6-1 (E1)	Below 1 V

Shift Position	Tester Connection	Specified Condition
L	E7-9 (L) - E6-1 (E1)	10 to 14 V
Except L	E7-9 (L) - E6-1 (E1)	Below 1 V

HINT:
*: The voltage will drop slightly due to illumination of the back up light.

AT

NG → **REPAIR OR REPLACE HARNESS OR CONNECTOR**

OK

REPLACE ECM

DTC	P0710	Transmission Fluid Temperature Sensor "A" Circuit

DTC	P0712	Transmission Fluid Temperature Sensor "A" Circuit Low Input

DTC	P0713	Transmission Fluid Temperature Sensor "A" Circuit High Input

DESCRIPTION

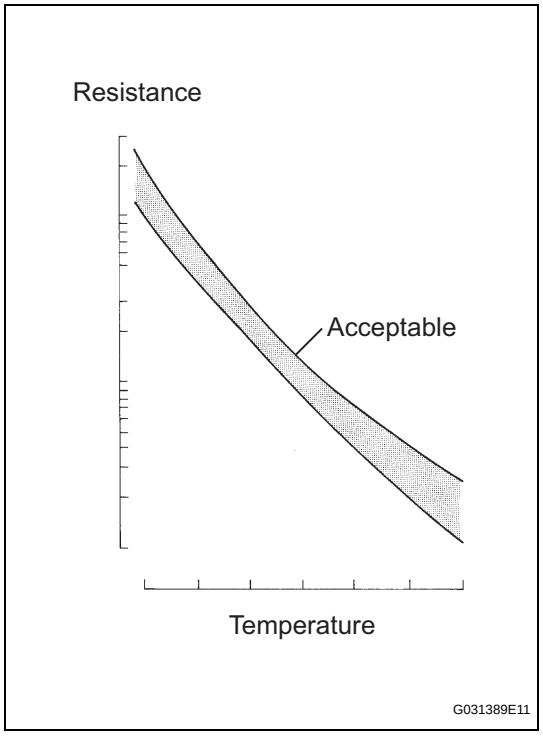

The ATF (Automatic Transmission Fluid) temperature sensor converts the fluid temperature into a resistance value which is input into the ECM.
The ECM applies a voltage to the temperature sensor through ECM terminal THO1.
The sensor resistance changes with the transmission fluid temperature. As the temperature becomes higher, the sensor resistance decreases.
One terminal of the sensor is grounded so that the sensor resistance and the voltage decrease as the temperature becomes higher.
The ECM calculates the fluid temperature based on the voltage signal.

DTC No.	DTC Detection Conditions	Trouble Areas
P0710	(a) and (b) are detected momentarily within 0.5 seconds when neither P0712 nor P0713 is detected (1-trip detection logic) (a) No. 1 ATF temperature sensor resistance is less than 79 Ω. (b) No. 1 ATF temperature sensor resistance is more than 156 kΩ. HINT: Within 0.5 seconds, the malfunction changes from (a) to (b) or from (b) to (a)	• Open or short in No. 1 ATF temperature sensor circuit • Transmission wire (No. 1 ATF temperature sensor) • ECM

DTC No.	DTC Detection Conditions	Trouble Areas
P0712	No. 1 ATF temperature sensor resistance is less than 79 Ω for 0.5 seconds or more (1-trip detection logic)	• Short in No. 1 ATF temperature sensor circuit • Transmission wire (No. 1 ATF temperature sensor) • ECM
P0713	No. 1 ATF temperature sensor resistance is more than 156 kΩ for 0.5 seconds or more 15 minutes or more after starting engine (1-trip detection logic)	• Open in No. 1 ATF temperature sensor circuit • Transmission wire (No. 1 ATF temperature sensor) • ECM

AT

MONITOR DESCRIPTION

These DTCs indicate an open or short in the Automatic Transmission Fluid (ATF) temperature sensor circuit.
The ATF temperature sensor converts ATF temperature to an electrical resistance value. Based on the resistance, the ECM determines the ATF temperature, and detects any open or short malfunctions in the ATF temperature circuit. If the resistance value of the ATF temperature is less than 79 Ω*1 or more than 156 kΩ*2, the ECM interprets this as a fault in the ATF sensor or its wiring. The ECM turns on the MIL and stores a DTC.
*1: 150°C (302°F) or more is indicated regardless of the actual ATF temperature.
*2: -40°C (-40°F) is indicated regardless of the actual ATF temperature.
HINT:
The ATF temperature can be checked on the intelligent tester display.

MONITOR STRATEGY

Related DTCs	P0710: ATF temperature sensor/Range check (Fluttering) P0712: ATF temperature sensor/Range check (Low resistance) P0713: ATF temperature sensor/Range check (High resistance)
Required sensors/Components	ATF temperature sensor
Frequency of operation	Continuous
Duration	0.5 seconds
MIL operation	Immediate
Sequence of operation	None

TYPICAL ENABLING CONDITIONS

P0710: Range check (Fluttering)

The monitor will run whenever the following DTCs are not present.	None
The typical enabling condition is not available.	-

P0712: Range check (Low resistance)

The monitor will run whenever the following DTCs are not present.	None
The typical enabling condition is not available.	-

P0713: Range check (High resistance)

The monitor will run whenever the following DTCs are not present.	None
Time after engine start	15 minutes or more

TYPICAL MALFUNCTION THRESHOLDS

P0710: Range check (Fluttering)

ATF temperature sensor resistance	Less than 79 Ω or More than 156 kΩ

P0712: Range check (Low resistance)

ATF temperature sensor resistance	Less than 79 Ω

P0713: Range check (High resistance)

ATF temperature sensor resistance	More than 156 kΩ

COMPONENT OPERATING RANGE

ATF temperature sensor	Atmospheric temperature up to approximately 130°C (266°F)

AT

WIRING DIAGRAM

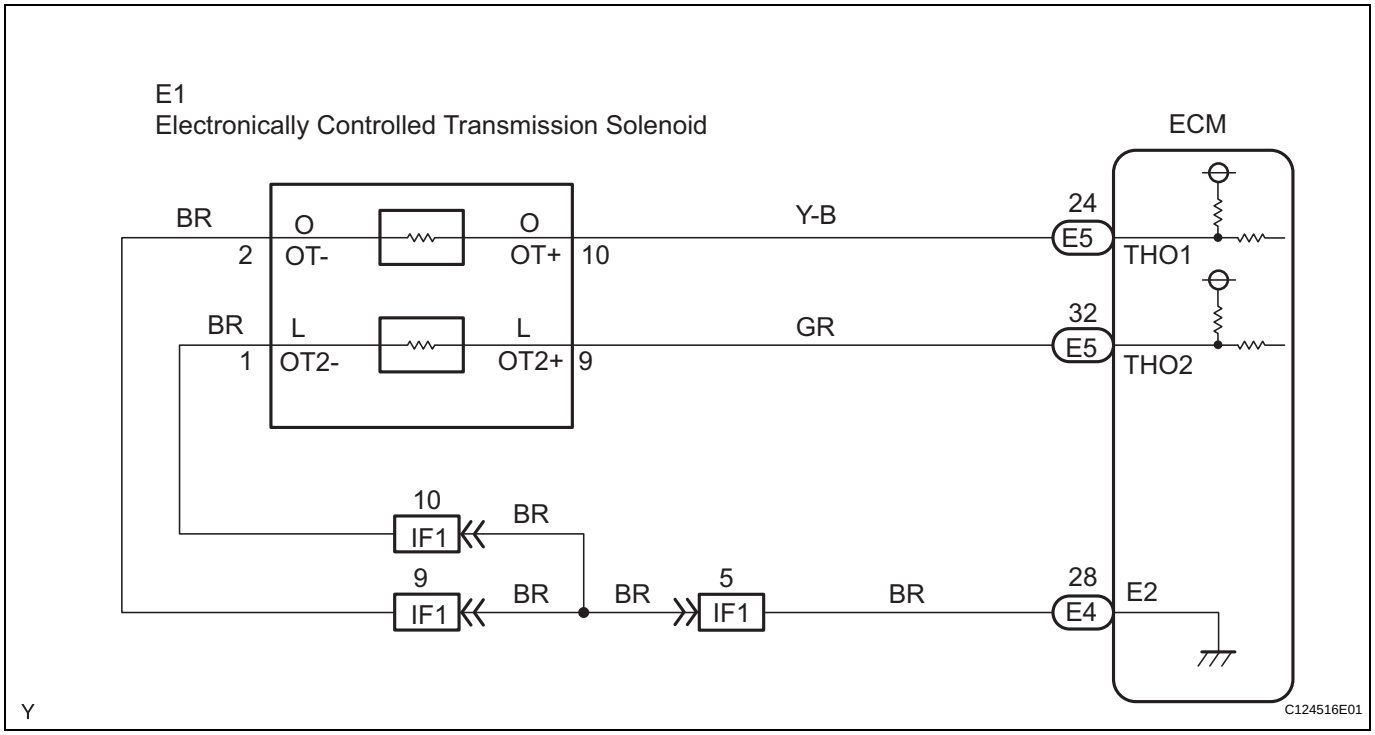

HINT:
According to the DATA LIST displayed on the intelligent tester, you can read the values of components, such as the switches, sensors and actuators, without removing any parts. Reading the DATA LIST as a first step of troubleshooting is one method of shortening labor time.

NOTICE:

In the table below, the values listed under "Normal Condition" are for reference only. Do not depend solely on these reference values when judging whether a part is faulty or not.

1. Warm up the engine.
2. Turn the ignition switch off.
3. Connect the intelligent tester together with the CAN VIM (controller area network vehicle interface module) to the DLC3.
4. Turn the ignition switch to the ON position.
5. Push the "ON" button of the tester.
6. Select the items "DIAGNOSIS/ ENHANCED OBD II/ DATA LIST/ A/T".
7. According to the display on the tester, read the "DATA LIST".

Item	Measurement Item/ Range (display)	Normal Condition
AT OIL TEMP1	No. 1 ATF Temperature Sensor Value/ min.: -40°C (-40°F) max.: 215°C (419°F)	• After Stall Test: Approximately 80°C (176°F) • Equal to ambient temperature during cold soak

HINT:
When DTC P0712 is output and intelligent tester reading is 150°C (302°F) or more, there is a short circuit.
When DTC P0713 is output and intelligent tester reading is -40°C (-40°F), there is an open circuit.
Measure the resistance between terminal THO1 (OT) and the body ground.

Temperature Displayed	Malfunction
-40°C (-40°F)	Open circuit
150°C (302°F) or more	Short circuit

AT

HINT:
If a circuit related to the ATF temperature sensor becomes open, P0713 is immediately set (in 0.5 seconds). When P0713 is set, P0711 cannot be detected.
It is not necessary to inspect the circuit when P0711 is set.

1 INSPECT TRANSMISSION WIRE (ATF TEMPERATURE SENSOR)

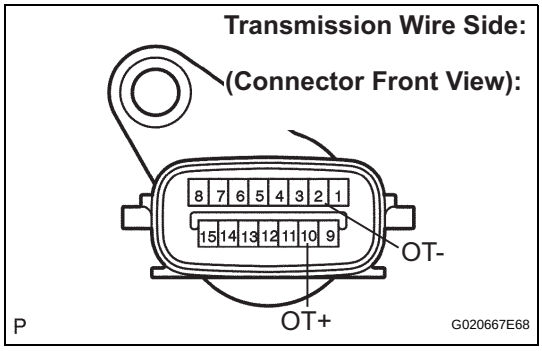

(a) Disconnect the transmission wire connector from the transmission.
(b) Measure the resistance.
Standard resistance

Tester Connection	Specified Condition
2 (OT-) - 10 (OT+)	79 Ω to 156 kΩ

(c) Measure the resistance.
Standard resistance (Check for short)

Tester Connection	Specified Condition
2 (OT-) - Body ground	10 kΩ or higher
10 (OT+) - Body ground	10 kΩ or higher

HINT:
If the resistance is outside the specified range at either of the ATF temperatures shown in the table below, the driveability of the vehicle may decrease.

ATF Temperature	Specified Condition
20°C (68°F)	3 to 4 kΩ
110°C (230°F)	0.22 to 0.28 kΩ

NG → **REPAIR OR REPLACE TRANSMISSION WIRE**

OK

2	CHECK HARNESS AND CONNECTOR (TRANSMISSION WIRE - ECM)

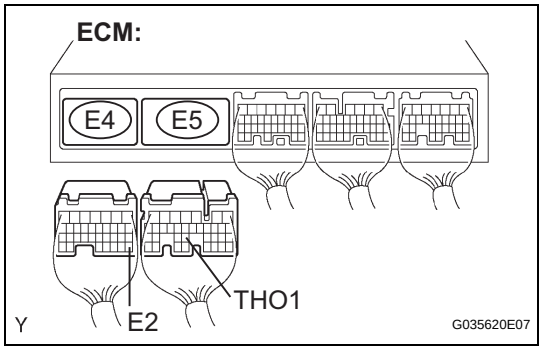

(a) Connect the transmission wire connector to the transmission.
(b) Disconnect the ECM connectors.
(c) Measure the resistance.
Standard resistance

Tester Connection	Specified Condition
E5-24 (THO1) - E4-28 (E2)	79 Ω to 156 kΩ

(d) Measure the resistance.
Standard resistance (Check for short)

Tester Connection	Specified Condition
E5-24 (THO1) - Body ground	10 kΩ or higher
E4-28 (E2) - Body ground	10 kΩ or higher

NG → **REPAIR OR REPLACE HARNESS OR CONNECTOR**

OK

REPLACE ECM

AT

DTC	P0711	Transmission Fluid Temperature Sensor "A" Performance

DESCRIPTION

Refer to DTC P0710 (See page AT-49).

DTC No.	DTC Detection Conditions	Trouble Areas
P0711	Both (a) and (b) are detected (2-trip detection logic): (a) Intake air and engine coolant temperatures are more than -10°C (14°F) at engine start (b) After normal driving for over 22 minutes and 5.6 miles (9 km) or more, ATF temperature is less than 20°C (68°F)	• Transmission wire (No. 1 ATF temperature sensor) • ECM

MONITOR DESCRIPTION

This DTC indicates that there is a problem with the output from the automatic transmission fluid (ATF) temperature sensor and that the sensor itself is defective. The ATF temperature sensor converts the ATF temperature to an electrical resistance value. Based on the resistance, the ECM determines the ATF temperature and detects any open or short malfunctions in the ATF temperature circuit or a fault of the ATF temperature sensor.

After running the vehicle for a certain period, the ATF temperature should increase. If the ATF temperature is below 20°C (68°F) after running the vehicle for a certain period, the ECM interprets this as a fault, and turns on the MIL.

MONITOR STRATEGY

Related DTCs	P0711: ATF temperature sensor/Rationality check
Required sensors/Components	ATF temperature sensor
Frequency of operation	Continuous
Duration	3 seconds
MIL operation	2 driving cycles
Sequence of operation	None

TYPICAL ENABLING CONDITIONS

The monitor will run whenever the following DTCs are not present.	None
ATF temperature sensor "A" circuit	Functioning normally
ECT (Engine coolant temperature) sensor circuit	Functioning normally
IAT (Intake air temperature) sensor circuit	Functioning normally
Time after engine start	21 minutes and 40 seconds or more
Driving distance after engine start	5.6 miles (9 km) or more
IAT (12 seconds after engine start)	-10°C (14°F) or more
ECT (12 seconds after engine start)	-10°C (14°F) or more

TYPICAL MALFUNCTION THRESHOLDS

ATF temperature	Less than 20°C (68°F) (Conditions vary with ATF temperature at engine start)

WIRING DIAGRAM

Refer to DTC P0710 (See page AT-51).

HINT:
According to the DATA LIST displayed on the intelligent tester, you can read the values of components, such as the switches, sensors and actuators, without removing any parts. Reading the DATA LIST as a first step of troubleshooting is one method of shortening labor time.
NOTICE:
In the table below, the values listed under "Normal Condition" are for reference only. Do not depend solely on these reference values when judging whether a part is faulty or not.

1. Warm up the engine.
2. Turn the ignition switch off.
3. Connect the intelligent tester together with the CAN VIM (controller area network vehicle interface module) to the DLC3.
4. Turn the ignition switch to the ON position.
5. Push the "ON" button of the tester.
6. Select the items "DIAGNOSIS/ ENHANCED OBD II/ DATA LIST/ A/T".
7. According to the display on the tester, read the "DATA LIST".

Item	Measurement Item/ Range (display)	Normal Condition
AT OIL TEMP1	No. 1 ATF Temperature Sensor Value/ min.: -40°C (-40°F) max.: 215°C (419°F)	• After Stall Test: Approximately 80°C (176°F) • Equal to ambient temperature during cold soak

HINT:
When DTC P0712 is output and intelligent tester reading is 150°C (302°F) or more, there is a short circuit.
When DTC P0713 is output and intelligent tester reading is -40°C (-40°F), there is an open circuit.
Measure the resistance between terminal THO1 (OT) and the body ground.

Temperature Displayed	Malfunction
-40°C (-40°F)	Open circuit
150°C (302°F) or more	Short circuit

HINT:
If a circuit related to the ATF temperature sensor becomes open, P0713 is immediately set (in 0.5 seconds). When P0713 is set, P0711 cannot be detected.
It is not necessary to inspect the circuit when P0711 is set.

1	CHECK ANY OTHER DTCS OUTPUT (IN ADDITION TO DTC P0711)

(a) Connect the intelligent tester to the DLC3.
(b) Turn the ignition switch to the ON position and push the intelligent tester main switch ON.
(c) Select the items "DIAGNOSIS/ ENHANCED OBD II/ DTC INFO/ CURRENT CODES".
(d) Read the DTCs using the intelligent tester.

Result:

Display (DTC Output)	Proceed to
Only "P0711" is output	A
"P0711" and other DTCs	B

HINT:
If any codes besides "P0711" are output, perform troubleshooting for those DTCs first.

B → GO TO DTC CHART

A

2	CHECK TRANSMISSION FLUID LEVEL

AT

OK:
Automatic transmission fluid level is correct.

NG → **ADD FLUID**

OK

REPLACE TRANSMISSION WIRE (ATF TEMPERATURE SENSOR)

DTC	P0717	Input Speed Sensor Circuit No Signal

DESCRIPTION

This sensor detects the rotation speed of the turbine which shows the input revolution of the transmission. By comparing the input turbine speed signal (NT) with the counter gear speed sensor signal (SP2), the ECM detects the shift timing of the gears and appropriately controls the engine torque and hydraulic pressure according to various conditions. Thus, providing smooth gear shift.

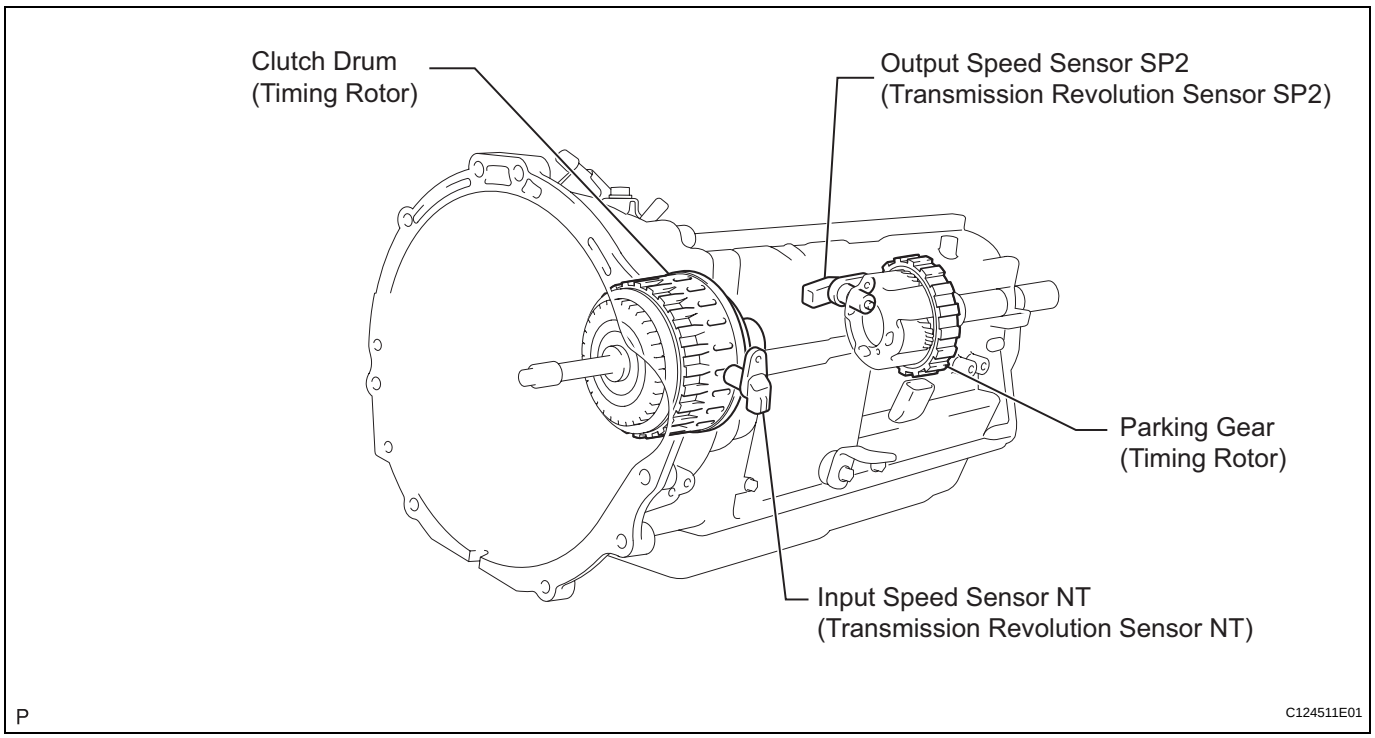

DTC No.	DTC Detection Conditions	Trouble Areas
P0717	All conditions below are detected for 5 seconds or more (1-trip detection logic): (a) Gear change not being performed (b) Gear position: 4th or 5th (c) T/M input shaft rpm: 300 rpm or less (d) T/M output shaft rpm: 1,000 rpm or more (e) Park/neutral position switch: OFF (f) Shift solenoid valves, park/neutral position switch and vehicle speed sensor are in normal operation	• Open or short in speed sensor (NT) circuit • Speed sensor (NT) • ECM

Reference (Using an oscilloscope):

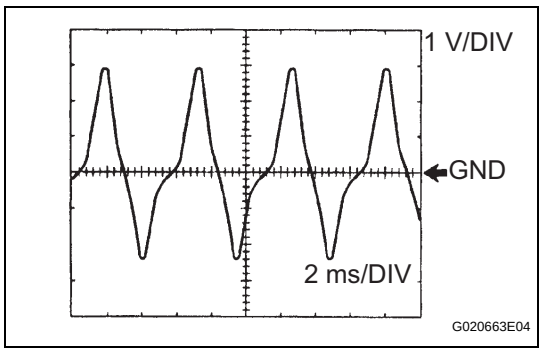

Check the waveform between terminals NT+ and NT- of the ECM connector.

Standard:

Refer to the illustration.

Terminal	NT+ - NT-
Tool setting	1 V/DIV, 2 ms/DIV
Vehicle condition	Engine idling speed (P or N position)

MONITOR DESCRIPTION

This DTC indicates that a pulse is not output from the speed sensor NT (Turbine (input) sped sensor) or is weak. The NT terminal of the ECM detects the revolving signal from speed sensor (NT) (input RPM). The ECM outputs a gearshift signal comparing the input speed sensor (NT) with the output speed sensor (SP2). While the vehicle is operating in the 4th or 5th gear position in the shift position of D, if the input shaft revolution is less than 300 rpm*1 although the output shaft revolution is more than 1,000 rpm or more*2, the ECM detects the trouble, illuminates the MIL and stores the DTC.
*1: Pulse is not output or is irregularly output.
*2: The vehicle speed is approximately 31 mph (50 km/h) or more.

MONITOR STRATEGY

Related DTCs	P0717: Speed sensor (NT)/Verify pulse input
Required sensors/Components (Main)	Speed sensor (NT)
Required sensors/Components (Related)	Speed sensor (SP2)
Frequency of operation	Continuous
Duration	5 seconds
MIL operation	Immediate
Sequence of operation	None

TYPICAL ENABLING CONDITIONS

The monitor will run whenever the following DTCs are not present.	P0500: VSS P0748 - P0799: Trans solenoid (range)
Shift change	Each shift change is completed before starting next shift change operation
ECM selected gear	4th or 5th
Output shaft rpm	1,000 rpm or more
Park/neutral position switch	OFF
R switch	OFF
L switch	OFF
Engine	Running
Ignition Switch	ON
Starter	OFF

TYPICAL MALFUNCTION THRESHOLDS

Sensor signal rpm	Less than 300 rpm

COMPONENT OPERATING RANGE

Speed sensor (NT)	Input speed is equal to engine speed when lock-up ON

WIRING DIAGRAM



HINT:
According to the DATA LIST displayed on the intelligent tester, you can read the values of components, such as the switches, sensors and actuators, without removing any parts. Reading the DATA LIST as a first step of troubleshooting is one method of shortening labor time.

1. Warm up the engine.
2. Turn the ignition switch off.
3. Connect the intelligent tester together with the CAN VIM (controller area network vehicle interface module) to the DLC3.
4. Turn the ignition switch to the ON position.
5. Push the "ON" button of the tester.
6. Select the items "DIAGNOSIS/ ENHANCED OBD II/ DATA LIST/ A/T".
7. According to the display on the tester, read the "DATA LIST".

Item	Measurement Item/ Range (display)	Normal Condition
SPD (NT)	Input Turbine Speed/ display: 50 rpm	[HINT] • Lock-up ON (After warming up the engine); Input turbine speed (NT) equal to the engine speed. • Lock-up OFF (Idling at N position); Input turbine speed (NT) nearly equal to the engine speed.

HINT:

- SPD (NT) is always 0 while driving:
  Open or short in the sensor or circuit.
- SPD (NT) is always less than 300 rpm while driving the vehicle at 31 mph (50 km/h) or more:
  Sensor trouble, improper installation, or intermittent connection trouble of the circuit.

AT

1 INSPECT SPEED SENSOR INSTALLATION

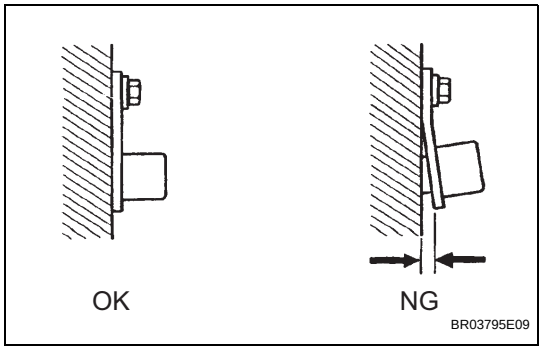

(a) Check the speed sensor (NT) installation.
OK:
The installation bolt is tightened properly and there is no clearance between the sensor and transmission case.

NG → **REPLACE SPEED SENSOR (NT)**

OK

2 INSPECT SPEED SENSOR (NT)

Sensor Side (Connector Front View) :

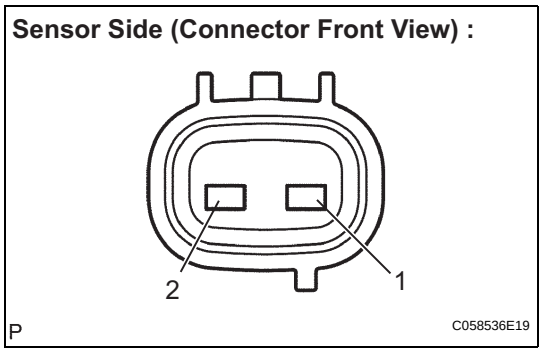

(a) Disconnect the speed sensor (NT) connector from the transmission.
(b) Measure the resistance.
Standard resistance

Tester Connection	Specified Condition
1 - 2	560 to 680 Ωat 20°C (68°F)

NG → **REPLACE SPEED SENSOR (NT)**

OK

3 CHECK HARNESS AND CONNECTOR (SPEED SENSOR - ECM)

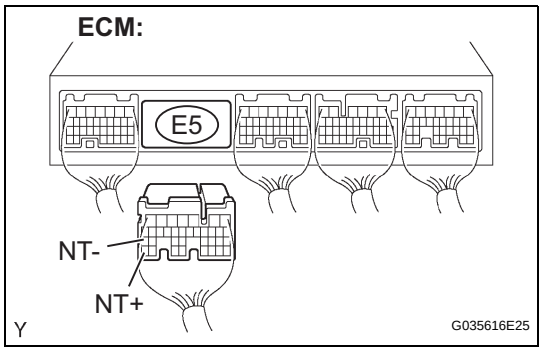

(a) Connect the speed sensor connector.
(b) Disconnect the ECM connector.
(c) Measure the resistance.
Standard resistance

Tester Connection	Specified Condition
E5-35 (NT+) - E5-27 (NT-)	560 to 680 Ω at 20°C (68°F)

(d) Measure the resistance.
Standard resistance (Check for short)

Tester Connection	Specified Condition
E5-35 (NT+) - Body ground	10 kΩ or higher
E5-27 (NT-) - Body ground	10 kΩ or higher

NG → **REPAIR OR REPLACE HARNESS OR CONNECTOR**

OK

REPLACE ECM

DTC	P0722	Output Speed Sensor Circuit No Signal

DESCRIPTION

The speed sensor SP2 detects the rotation speed of the transmission output shaft and sends signals to the ECM. The ECM determines the vehicle speed based on these signals. An AC voltage is generated in the speed sensor SP2 coil as the parking gear mounted on the rear planetary gear assembly rotates, and this voltage is sent to the ECM. The parking gear on the rear planetary gear is used as the timing rotor for this sensor. The gear shift point and lock-up timing are controlled by the ECM based on the signals from the vehicle speed sensor and the throttle position sensor.

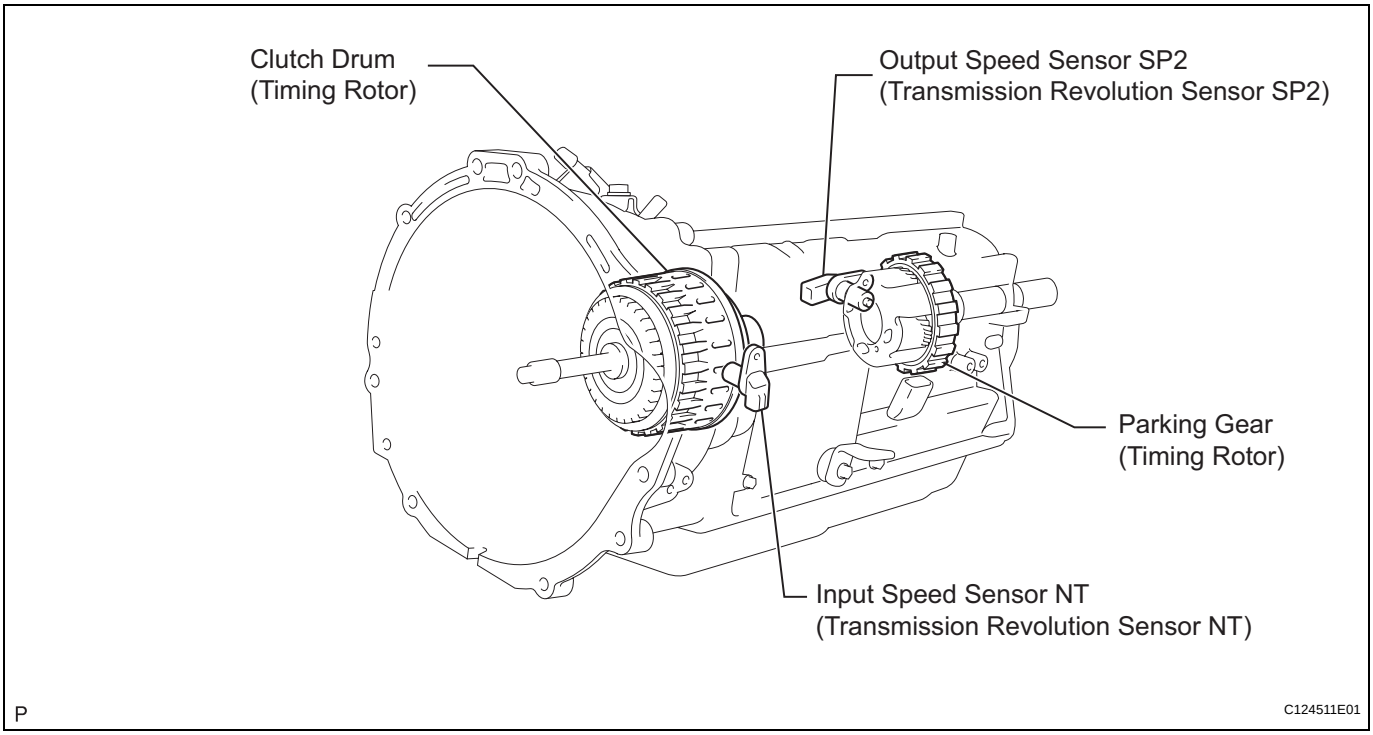

DTC No.	DTC Detection Conditions	Trouble Areas
P0722	All conditions below are detected 500 times or more continuously (1-trip detection logic) (a) No signal from speed sensor (SP2) is input to ECM while 4 pulses of No. 1 vehicle speed sensor signal are sent (b) Vehicle speed is 5.59 mph (9 km/h) or more for at least 4 seconds (c) Park/neutral position switch is OFF (d) Transfer is in any position other than neutral position	• Open or short in speed sensor (SP2) circuit • Speed sensor (SP2) • ECM

Reference (Using an oscilloscope):

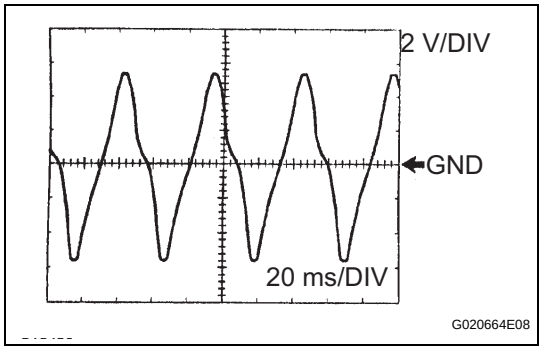

Check the waveform between terminals SP2+ and SP2- of the ECM connector.

Standard:
Refer to the illustration.

Terminal	SP2+ - SP2-
Tool setting	2 V/DIV, 20 ms/DIV
Vehicle condition	Vehicle speed 12 mph (20 km/h)

MONITOR DESCRIPTION

The output speed sensor monitors the output shaft speed. The ECM controls the gearshift point and the lock up timing based on the signals from the output speed sensor and throttle position sensor.
If the ECM detects no signal from the output shaft speed sensor even while the vehicle is moving, it will conclude that is a malfunction in the output speed sensor. The ECM will illuminate the MIL and set the DTC.

MONITOR STRATEGY

Related DTCs	P0722: Speed sensor SP2/Verify pulse input
Required sensors/Components	Speed sensor SP2
Frequency of operation	Continuous
Duration	500 output shaft revolutions
MIL operation	Immediate
Sequence of operation	None

TYPICAL ENABLING CONDITIONS

The monitor will run whenever the following DTCs are not present.	P0500: VSS P0748 - P0799: Trans solenoid (range)
Vehicle speed sensor pulse input	4 times
Vehicle speed range (4 seconds or more)	5.59 mph (9 km/h) or more
Park/neutral position switch	OFF
Battery voltage	8 V or more
Ignition switch	ON
Starter	OFF

TYPICAL MALFUNCTION THRESHOLDS

Output speed sensor pulse input	No input

AT

WIRING DIAGRAM

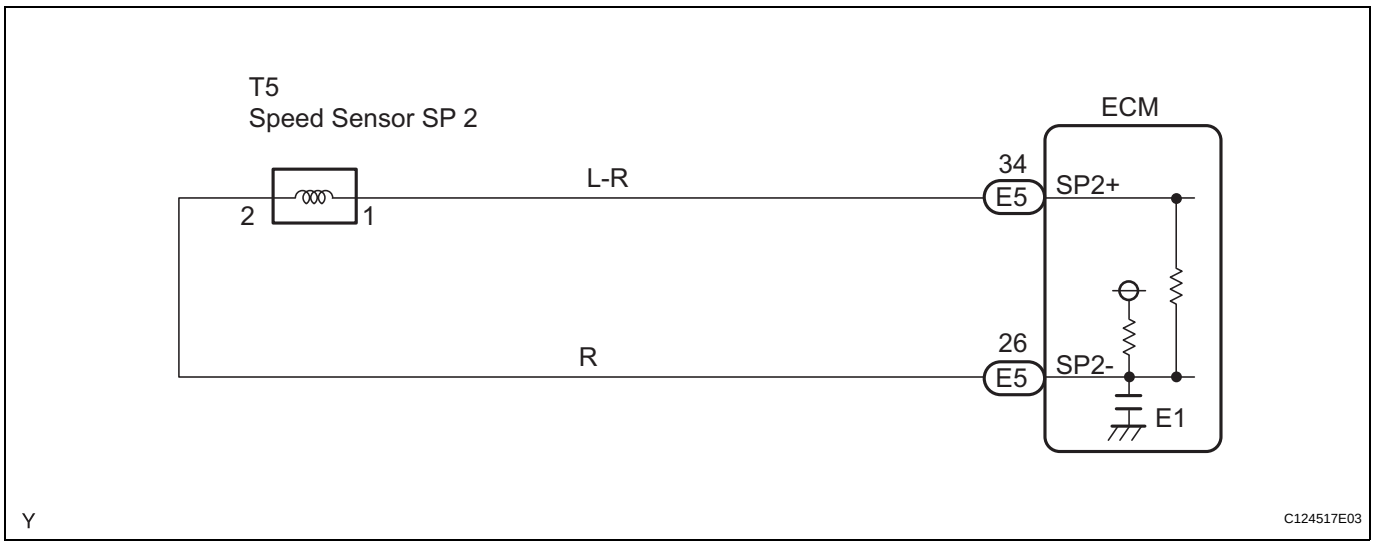

HINT:
According to the DATA LIST displayed on the intelligent tester, you can read the values of components, such as the switches, sensors and actuators, without removing any parts. Reading the DATA LIST as a first step of troubleshooting is one method of shortening labor time.

NOTICE:

In the table below, the values listed under "Normal Condition" are for reference only. Do not depend solely on these reference values when judging whether a part is faulty or not.

1. Connect the intelligent tester together with the CAN VIM (controller area network vehicle interface module) to the DLC3.
2. Turn the ignition switch to the ON position.
3. Push the "ON" button of the tester.
4. Select the items "DIAGNOSIS/ ENHANCED OBD II/ DATA LIST/ A/T".
5. According to the display on the tester, read the "DATA LIST".

Item	Measurement Item/ Range (display)	Normal Condition
SPD (SP2)	Counter Gear Speed display/ min.: 0 mph (0 km/h) max.: 158 mph (255 km/h)	Vehicle stopped: 0 mph (0 km/h) [HINT] Equal to vehicle speed

HINT:

- SPD (SP2) is always 0 while driving:
  Open or short in the sensor or circuit.
- The SPD (SP2) value displayed on the tester is much lower than the actual vehicle speed:
  Sensor trouble, improper installation, or intermittent connection trouble of the circuit.

1 INSPECT SPEED SENSOR INSTALLATION

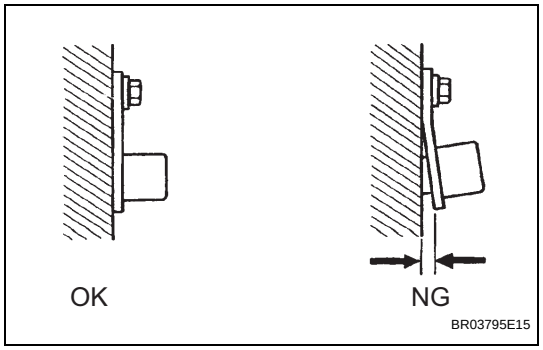

(a) Check the speed sensor (SP2) installation.
OK:
The installation bolt is tightened properly and there is no clearance between the sensor and transmission case.

NG → **REPLACE SPEED SENSOR (SP2)**

OK

2 INSPECT SPEED SENSOR (SP2)

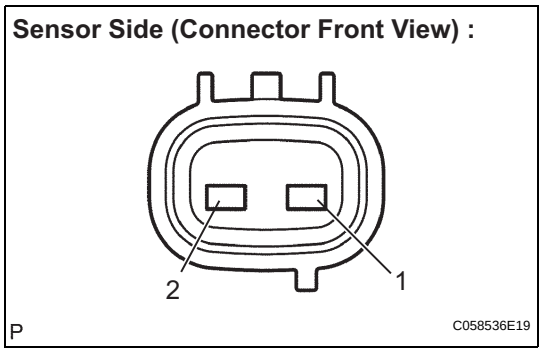

(a) Disconnect the speed sensor (SP2) connector from the transmission.
(b) Measure the resistance.
Standard resistance

Tester Connection	Specified Condition
1 - 2	560 to 680 Ω at 20°C (68°F)

NG → **REPLACE SPEED SENSOR (SP2)**

OK

3 CHECK HARNESS AND CONNECTOR (SPEED SENSOR - ECM)

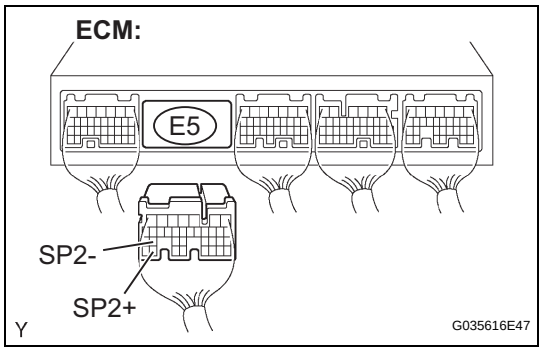

(a) Connect the speed sensor connector.
(b) Disconnect the ECM connector.
(c) Measure the resistance.
Standard resistance

Tester Connection	Specified Condition
E5-34 (SP2+) - E5-26 (SP2-)	560 to 680 Ω at 20°C (68°F)

(d) Measure the resistance.
Standard resistance (Check for short)

Tester Connection	Specified Condition
E5-34 (SP2+) - Body ground	10 kΩ or higher
E5-26 (SP2-) - Body ground	10 kΩ or higher

NG → **REPAIR OR REPLACE HARNESS OR CONNECTOR**

OK

REPLACE ECM

DTC	P0748	Pressure Control Solenoid "A" Electrical (Shift Solenoid Valve SL1)

DESCRIPTION

Shifting from 1st to 5th is performed in combination with the ON and OFF operation of the shift solenoid valves S1, S2, SR, SL1 and SL2 which are controlled by the ECM. If an open or short circuit occurs in any of the shift solenoid valves, the ECM controls the remaining normal shift solenoid valves to allow the vehicle to be driven smoothly (See page AT-32).

DTC No.	DTC Detection Conditions	Trouble Areas
P0748	The ECM checks for an open or short in the shift solenoid valve SL1 circuit (1-trip detection logic) • Output signal duty equals to 100 %. (NOTE: SL1 output signal duty is less than 100 % under normal condition.)	• Open or short in shift solenoid valve SL1 circuit • Shift solenoid valve SL1 • ECM

MONITOR DESCRIPTION

This DTC indicates an open or short in the shift solenoid valve SL1 circuit. The ECM controls the gearshift by turning the shift solenoid valves "ON/OFF". When there is an open or short circuit in any shift solenoid valve circuit, the ECM detects the problem, illuminates the MIL and stores the DTC. And the ECM performs the fail-safe function and turns the other functioning shift solenoid valves "ON/OFF". (If an open or short circuit is detected, the ECM cuts the current to the circuit.)
If the ECM detects an open or short in the shift solenoid valve SL1 circuit, the ECM determines that there is a malfunction (See page AT-32).

MONITOR STRATEGY

Related DTCs	P0748 : Shift solenoid valve SL1/Range check
Required sensors/Components	Shift solenoid valve SL1
Frequency of operation	Continuous
Duration	1 second
MIL operation	Immediate
Sequence of operation	None

TYPICAL ENABLING CONDITIONS

The monitor will run whenever the following DTCs are not present.	None
Battery voltage	10 V or more
CPU commanded duty	Less than 75 %
Ignition switch	ON
Starter	OFF

TYPICAL MALFUNCTION THRESHOLDS

Output signal duty	100 %

COMPONENT OPERATING RANGE

Output signal duty	Less than 100 %

AT

WIRING DIAGRAM

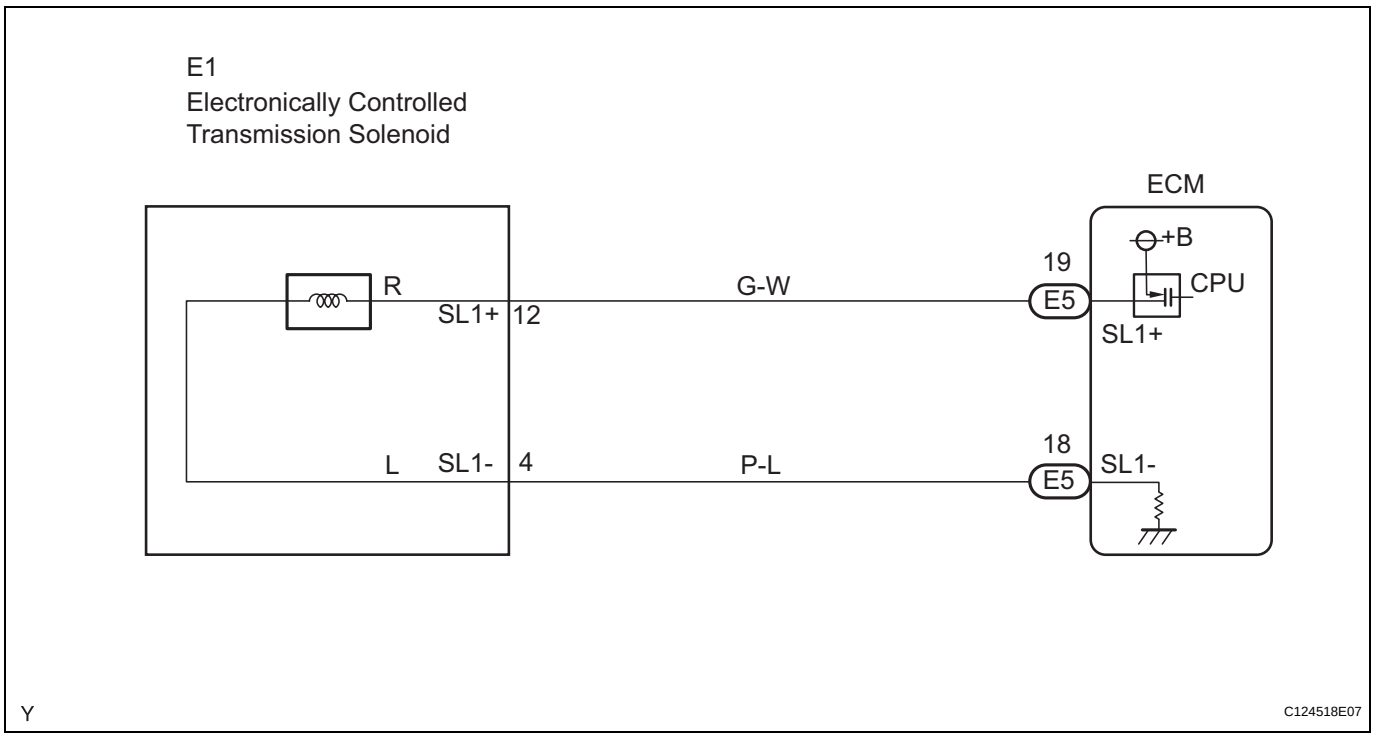

HINT:
The shift solenoid valve SL1 is turned on/off normally when the shift lever is in the D position:

Gearshift controlled by ECM	1st	2nd	3rd	4th	5th
Shift solenoid valve SL1	OFF	OFF	OFF	OFF	ON

1	INSPECT TRANSMISSION WIRE (SL1)

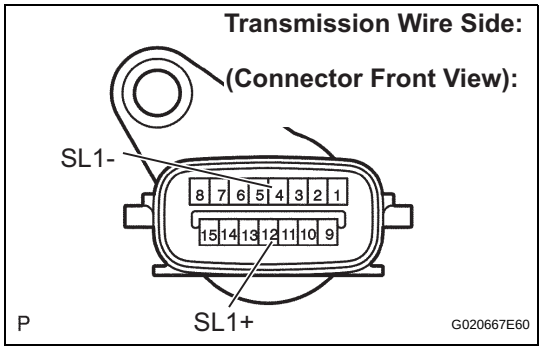

(a) Disconnect the transmission wire connector from the transmission.
(b) Measure the resistance.
Standard resistance

Tester Connection	Specified Condition
12 (SL1+) - 4 (SL1-)	5.0 to 5.6 Ωat 20°C (68°F)

(c) Measure the resistance.
Standard resistance (Check for short)

Tester Connection	Specified Condition
12 (SL1+) - Body ground	10 kΩ or higher
4 (SL1-) - Body ground	10 kΩ or higher

NG → **Go to step 3**

OK

2 CHECK HARNESS AND CONNECTOR (TRANSMISSION WIRE - ECM)

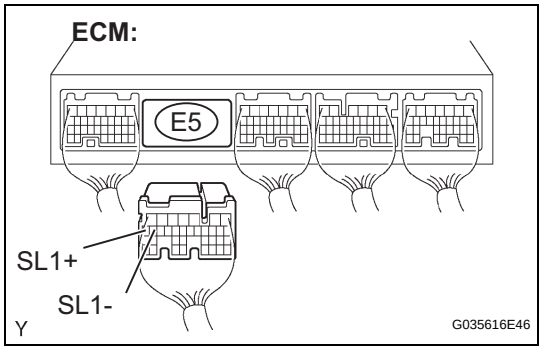

(a) Connect the transmission connector to the transmission.
(b) Disconnect the connector from the ECM.
(c) Measure the resistance.
Standard resistance

Tester Connection	Specified Condition
E5-19 (SL1+) - E5-18 (SL1-)	5.0 to 5.6 Ω at 20°C (68°F)

(d) Measure the resistance.
Standard resistance (Check for short)

Tester Connection	Specified Condition
E5-19 (SL1+) - Body ground	10 kΩ or higher
E5-18 (SL1-) - Body ground	10 kΩ or higher

NG → **REPAIR OR REPLACE HARNESS OR CONNECTOR**

OK

REPLACE ECM

3 INSPECT SHIFT SOLENOID VALVE SL1

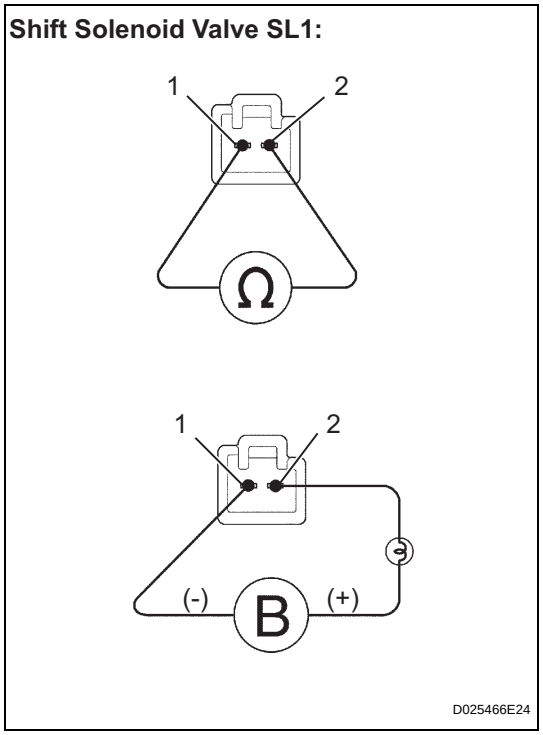

(a) Remove the shift solenoid valve SL1.
(b) Measure the resistance.
Standard resistance

Tester Connection	Specified Condition
1 - 2	5.0 to 5.6 Ω at 20°C (68°F)

(c) Connect the positive (+) lead with a 21 W bulb to terminal 2 and the negative (-) lead to terminal 1 of the solenoid valve connector, then check the movement of the valve.
OK:
The solenoid makes an operating noise.

NG → **REPLACE SHIFT SOLENOID VALVE SL1**

OK

REPAIR OR REPLACE TRANSMISSION WIRE

DTC	P0751	Shift Solenoid "A" Performance (Shift Solenoid Valve S1)

DESCRIPTION

AT

The ECM uses signals from the output shaft speed sensor and input speed sensor to detect the actual gear position (1st, 2nd, 3rd, 4th or 5th gear).
Then the ECM compares the actual gear with the shift schedule in the ECM memory to detect mechanical problems of the shift solenoid valves, valve body or automatic transmission (clutch, brake or gear, etc.).

DTC No.	DTC Detection Conditions	Trouble Areas
P0751	S1 stuck ON malfunction*1: The ECM determines that there is a malfunction when the following conditions are met (2-trip detection logic): (a) When the ECM directs the gearshift to switch to 4th gear, the actual gear is shifted to 1st. (b) When the ECM directs the gearshift to switch to 1st gear, the actual gear is also shifted to 1st.	• Shift solenoid valve S1 remains open • Shift solenoid valve SLT remains open or closed • Valve body is blocked • Automatic transmission (clutch, brake or gear, etc.)
	S1 stuck OFF malfunction*2: The ECM determines that there is a malfunction when the following conditions are met (2-trip detection logic): (a) When the ECM directs the gearshift to switch to 1st gear, the actual gear is shifted to 4th. (b) When the ECM directs the gearshift to switch to 5th gear, the actual gear is also shifted to 5th.	• Shift solenoid valve S1 remains closed • Shift solenoid valve SLT remains open or closed • Valve body is blocked • Automatic transmission (clutch, brake or gear, etc.)

HINT:
Gear positions in the event of a solenoid valve mechanical problem:

Gearshift controlled by ECM	1st	2nd	3rd	4th	5th
*1: Actual gear position under S1 stuck ON malfunction	1st	2nd	2nd	1st	N*
*2: Actual gear position under S1 stuck OFF malfunction	4th	3rd	3rd	4th	5th

N*: Neutral

MONITOR DESCRIPTION

This DTC indicates "stuck ON malfunction" or "stuck OFF malfunction" of the shift solenoid valve S1. The ECM controls the gearshifts by turning the shift solenoid valves "ON/OFF". When the gear position directed by the ECM and the actual gear position do not match, the ECM illuminates the MIL and stores the DTC.

MONITOR STRATEGY

Related DTCs	P0751: Shift solenoid valve S1/OFF malfunction Shift solenoid valve S1/ON malfunction
Required sensors/Components (Main)	Shift solenoid valve S1
Required sensors/Components (Related)	Vehicle speed sensor, Throttle position sensor, Speed sensor (NT), Speed sensor (SP2)
Frequency of operation	Continuous
Duration	OFF malfunctions (A) and (B): 0.4 seconds OFF malfunction (C): Immediate ON malfunctions (A), (B) and (C): 0.4 seconds ON malfunction (D): 3 seconds ON malfunction (E): 0.5 seconds
MIL operation	2 driving cycles

Sequence of operation	None

TYPICAL ENABLING CONDITIONS

The following conditions are common to all OFF malfunctions (A), (B), (C) and ON malfunctions (A), (B), (C), (D), (E).

The monitor will run whenever the following DTCs are not present.	P0115 - P0118: ECT sensor P0125: Insufficient ECT for Closed Loop P0500: VSS P0748 - P0799: Trans solenoid (range)
Turbine speed sensor (NT) circuit	Functioning normally
Output speed sensor (SP2) circuit	Functioning normally
Shift solenoid "A" (S1) circuit	Functioning normally
Shift solenoid "B" (S2) circuit	Functioning normally
Shift solenoid "E" (SR) circuit	Functioning normally
Pressure control solenoid "A" (SL1) circuit	Functioning normally
Pressure control solenoid "B" (SL2) circuit	Functioning normally
ECT (Engine coolant temperature) sensor circuit	Functioning normally
Knock sensor circuit	Functioning normally
ETCS (Electronic throttle control system)	System not down
Transmission shift position	"D"
ECT	40°C (104°F) or more
Spark advance from max. retard timing by knock sensor control	0° CA or more
Engine	Starting
Transfer range	"High" *1

*1: Following conditions are met

Vehicle speed sensor "A" circuit	Functioning normally
Output speed sensor circuit	Functioning normally
Transfer output speed	143 rpm or more
Transfer input speed/Transfer output speed	0.9 to 1.1

OFF malfunction (A)

ECM selected gear	1st
Vehicle speed	1.2 to 24.9 mph (2 to 40 km/h)
Throttle valve opening angle	8 % or more and 6.5 % or more at engine speed of 2,000 rpm (Conditions vary with engine speed)

OFF malfunction (B)

Current ECM selected gear	5th
Last ECM selected gear	4th
Continuous time of ECM selecting 4th gear	2 seconds or more
Actual gear when ECM selected 4th gear	4th

OFF malfunction (C)

Current ECM selected gear	5th
Last ECM selected gear	4th

ON malfunction (A)

ECM selected gear	1st
Vehicle speed	1.2 to 24.9 mph (2 to 40 km/h)
Throttle valve opening angle	6.5 % or more at engine speed of 2,000 rpm (Conditions vary with engine speed)

ON malfunction (B)

ECM selected gear	4th
Vehicle speed	1.2 mph (2 km/h) or more
Throttle valve opening angle	6.5 % or more at engine speed of 2,000 rpm (Conditions vary with engine speed)

AT

ON malfunction (C)

ECM selected gear	3rd
Vehicle speed	1.2 mph (2 km/h) or more
Throttle valve opening angle	6.5 % or more at engine speed of 2,000 rpm (Conditions vary with engine speed)

ON malfunction (D)

Current ECM selected gear	5th
Last ECM selected gear	4th
Vehicle speed (During transition from 4th to 5th gear)	Less than 62.2 mph (100 km/h)

ON malfunction (E)

ECM selected gear	5th
Engine speed - Turbine speed (NE - NT) (After transition from 4th to 5th gear)	150 rpm or less
Vehicle speed (After transition from 4th to 5th gear)	Less than 62.2 mph (100 km/h)

TYPICAL MALFUNCTION THRESHOLDS

[OFF malfunction]
All of the following conditions are met: OFF malfunctions (A), (B) and (C)
2 detections are necessary in 1 driving cycle.
1st detection; temporary flag ON
2nd detection; pending fault code ON

OFF malfunction (A)

Turbine speed/Output speed	0.93 to 1.07 (Actual gear is 4th)

OFF malfunction (B)

Turbine speed/Output speed	0.65 to 0.79 (Actual gear is 5th)

OFF malfunction (C)

Output record from ECM for 4th → 5th upshifting	Recorded

[ON malfunction]
Either of the following conditions is met:

- ON malfunctions (A) and (B)
- ON malfunction (B) or (C) and ON malfunction (D) or (E)

ON malfunction (A)

Turbine speed/Output speed	3.30 to 7.50 (Actual gear is 1st)

ON malfunction (B)

Turbine speed/Output speed	3.30 to 7.50 (Actual gear is 1st)

ON malfunction (C)

Turbine speed/Output speed	1.91 to 2.35 (Actual gear is 2nd)

ON malfunction (D)

Turbine speed - Output speed x 4th gear ratio	1,000 rpm or more

ON malfunction (E)

Turbine speed - Output speed x 5th gear ratio	1,000 rpm or more

HINT:
Performing the ACTIVE TEST using the intelligent tester allows components, such as the relay, VSV, and actuator, to be operated without removing any parts. Performing the ACTIVE TEST as a first step of troubleshooting is one method of shortening labor time.
It is possible to display the DATA LIST during the ACTIVE TEST.
1. Warm up the engine.
2. Turn the ignition switch off.
3. Connect the intelligent tester together with the CAN VIM (controller area network vehicle interface module) to the DLC3.
4. Turn the ignition switch to the ON position.
5. Push the "ON" button of the tester.
6. Clear the DTC.
7. Select the items "DIAGNOSIS/ ENHANCED OBD II/ ACTIVE TEST/ SHIFT".
8. According to the display on the tester, perform the "ACTIVE TEST".

HINT:
While driving, the shift position can be changed with the intelligent tester.
Comparing the shift position directed by the ACTIVE TEST with the actual shift position enables the problem to be confirmed (See page AT-32).

Item	Test Details	Diagnostic Note
SHIFT	[Test Details] Operate the shift solenoid valve and set each shift position manually. [Vehicle Condition] Vehicle Speed: Less than 30 mph (50 km/h) [Others] • Press → button: Shift up • Press ← button: Shift down	Possible to check the operation of the shift solenoid valves. HINT: Shifting to the 5th gear is possible only when the vehicle is stationary with the engine idling.

HINT:
- This test can be conducted when the vehicle speed is 30 mph (50 km/h) or less.
- The 4th to 5th up-shifting must be performed with the accelerator pedal released.
- The 5th to 4th down-shifting must be performed with the accelerator pedal released.
- Do not operate the accelerator pedal for at least 2 seconds after shifting and do not shift successively.
- The shift position directed by the ECM is shown in the DATA LIST/ SHIFT display on the intelligent tester.
- The shift solenoid valve S1 is turned on/off normally when the shift lever is in the D position:

Gearshift controlled by ECM	1st	2nd	3rd	4th	5th
Shift solenoid valve S1	ON	ON	OFF	OFF	OFF

1	**CHECK ANY OTHER DTCS OUTPUT (IN ADDITION TO DTC P0751)**

(a) Connect the the intelligent tester to the DLC3.
(b) Turn the ignition switch to the ON position and push the intelligent tester main switch ON.
(c) Select the items "DIAGNOSIS/ ENHANCED OBD II/ DTC INFO/ CURRENT CODES".

(d) Read the DTCs using the intelligent tester.

Result:

Display (DTC Output)	Proceed to
Only "P0751" is output	A
"P0751" and other DTCs	B

AT

HINT:
If any codes besides "P0751" are output, perform troubleshooting for those DTCs first.

B → **GO TO DTC CHART**

A

2 PERFORM ACTIVE TEST USING INTELLIGENT TESTER (LINE PRESS UP)

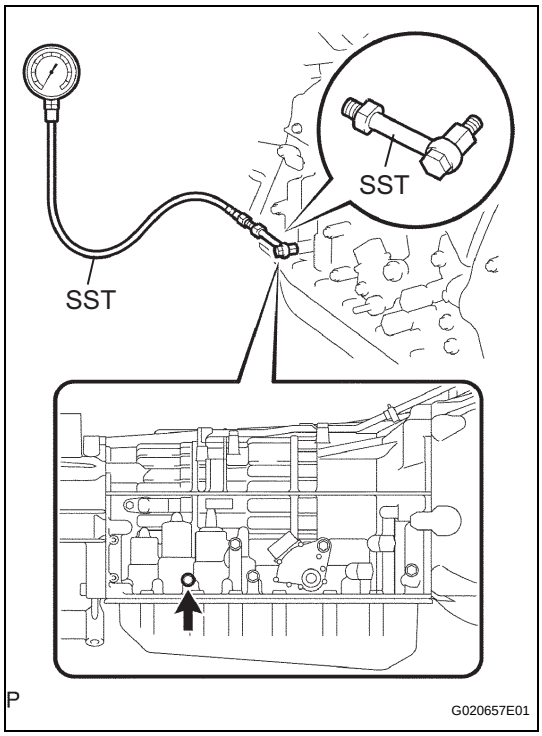

NOTICE:
- **Perform the test at the normal operating ATF (Automatic Transmission Fluid) temperature: 50 to 80°C (122 to 176°F).**
- **Be careful to prevent SST's hose from interfering with the exhaust pipe.**
- **Perform the test with the A/C OFF.**

HINT:
Performing the intelligent tester's ACTIVE TEST allows relay, VSV, actuator and other items to be operated without removing any parts. Performing the ACTIVE TEST early in troubleshooting is one way to save time.
The DATA LIST can be displayed during the ACTIVE TEST.

(a) Remove the test plug on the transmission case center right side and connect SST.
SST 09992-00095 (09992-00231, 09992-00271)
(b) Connect the intelligent tester to the DLC3.
(c) Start the engine and warm it up.
(d) Measure the line pressure with SST.
(e) Turn the intelligent tester ON.
(f) Enter the following menus: DIAGNOSIS / ENHANCED OBD II / ACTIVE TEST.
(g) Follow the instructions on the tester and perform the ACTIVE TEST.
(h) Measure the line pressure with SST.

Item	Test Details	Diagnostic Note
LINE PRESS UP*	[Test Details] Operate shift solenoid SLT and raise line pressure. [Vehicle Condition] • Vehicle stopped • IDL: ON HINT: OFF: Line pressure up (when Active Test of "LINE PRESS UP" is performed, ECM commands SLT solenoid to turn OFF) ON: No action (normal operation)	-

*: "LINE PRESS UP" in the ACTIVE TEST is performed to check the line pressure changes by connecting SST to the automatic transmission, which is used in the HYDRAULIC TEST (See page AT-16) as well. Please note that the pressure values in the ACTIVE TEST and HYDRAULIC TEST are different.

NG → **REPLACE SHIFT SOLENOID VALVE SLT**

OK

3 INSPECT SHIFT SOLENOID VALVE S1

Shift Solenoid Valve S1:

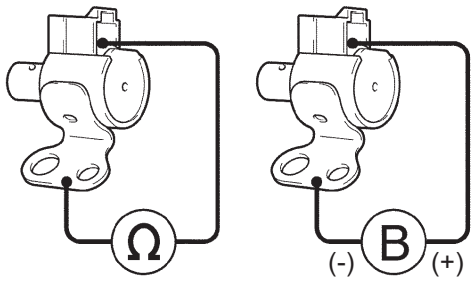

A110986E04

(a) Remove the shift solenoid valve S1.
(b) Measure the resistance.
Standard resistance

Tester Connection	Specified Condition
Solenoid Connector (S1) - Solenoid Body (S1)	11 to 15 Ω at 20°C (68°F)

(c) Connect the positive (+) lead to the terminal of the solenoid connector, and the negative (-) lead to the solenoid body.
OK:
The solenoid makes an operating noise.

NG → **REPLACE SHIFT SOLENOID VALVE S1**

OK

4 INSPECT TRANSMISSION VALVE BODY ASSEMBLY (See chapter 2 in the problem symptoms table)

OK:
There are no foreign objects on any valves and they operate smoothly.

NG → **REPAIR OR REPLACE TRANSMISSION VALVE BODY ASSEMBLY**

OK

REPAIR OR REPLACE AUTOMATIC TRANSMISSION ASSEMBLY

DTC	P0756	Shift Solenoid "B" Performance (Shift Solenoid Valve S2)

DESCRIPTION

AT

The ECM uses signals from the output shaft speed sensor and input speed sensor to detect the actual gear position (1st, 2nd, 3rd, 4th or 5th gear).
Then the ECM compares the actual gear with the shift schedule in the ECM memory to detect mechanical problems of the shift solenoid valves, valve body or automatic transmission (clutch, brake or gear, etc.).

DTC No.	DTC Detection Conditions	Trouble Areas
P0756	S2 stuck ON malfunction*1; The ECM determines that there is a malfunction when the following conditions are met (2-trip detection logic): (a) When the ECM directs the gearshift to switch to 1st gear, the actual gear is shifted to 2nd. (b) When the ECM directs the gearshift to switch to 5th gear, the engine overruns (clutch slips)	• Shift solenoid valve S2 remains open • Shift solenoid valve SLT remains open or closed • Valve body is blocked • Automatic transmission (clutch, brake or gear, etc.)
	S2 stuck OFF malfunction*2: The ECM determines that there is a malfunction when the following conditions are met (2-trip detection logic): (a) When the ECM directs the gearshift to switch to 1st gear, the actual gear is also shifted to 1st. (b) When the ECM directs the gearshift to switch to 2nd gear, the actual gear is shifted to 1st. (c) When the ECM directs the gearshift to switch to 5th gear, the actual gear is also shifted to 5th.	• Shift solenoid valve S2 remains closed • Shift solenoid valve SLT remains open or closed • Valve body is blocked • Automatic transmission (clutch, brake or gear, etc.)

HINT:
Gear positions in the event of a solenoid valve mechanical problem:

Gearshift controlled by ECM	1st	2nd	3rd	4th	5th
*1: Actual gear position under S2 stuck ON malfunction	2nd	2nd	3rd	3rd	N*
*2: Actual gear position under S2 stuck OFF malfunction	2nd	1st	4th	4th	5th

N*: Neutral

MONITOR DESCRIPTION

This DTC indicates "stuck ON malfunction" or "stuck OFF malfunction" of the shift solenoid valve S2. The ECM controls the gearshifts by turning the shift solenoid valves "ON/OFF". When the gear position directed by the ECM and the actual gear position do not match, the ECM illuminates the MIL and stores the DTC.

MONITOR STRATEGY

Related DTCs	P0756: Shift solenoid valve S2/OFF malfunction Shift solenoid valve S2/ON malfunction
Required sensors/Components (Main)	Shift solenoid valve S2
Required sensors/Components (Related)	Vehicle speed sensor, Throttle position sensor, Speed sensor (NT), Speed sensor (SP2)
Frequency of operation	Continuous

Duration	OFF malfunctions (A), (B) and (C): 0.4 seconds OFF malfunction (D): Immediate ON malfunctions (A) and (B): 0.4 seconds ON malfunction (C): 3 seconds ON malfunction (D): 0.5 seconds
MIL operation	2 driving cycles
Sequence of operation	None

TYPICAL ENABLING CONDITIONS

The following conditions are common to all OFF malfunctions (A), (B), (C), (D) and ON malfunctions (A), (B), (C), (D).

The monitor will run whenever the following DTCs are not present.	P0115 - P0118: ECT sensor P0125: Insufficient ECT for Closed Loop P0500: VSS P0748 - P799: Trans solenoid (range)
Turbine speed sensor (NT) circuit	Functioning normally
Output speed sensor (SP2) circuit	Functioning normally
Shift solenoid "A" (S1) circuit	Functioning normally
Shift solenoid "B" (S2) circuit	Functioning normally
Shift solenoid "E" (SR) circuit	Functioning normally
Pressure control solenoid "A" (SL1) circuit	Functioning normally
Pressure control solenoid "B" (SL2) circuit	Functioning normally
ECT (Engine coolant temperature) sensor circuit	Functioning normally
Knock sensor circuit	Functioning normally
ETCS (Electronic throttle control system)	System not down
Transmission shift position	"D"
ECT	40°C (104°F) or more
Spark advance from max. retard timing by knock sensor control	0° CA or more
Engine	Starting
Transfer range	"High" *1

*1: Following conditions are met

Vehicle speed sensor "A" circuit	Functioning normally
Output speed sensor circuit	Functioning normally
Transfer output speed	143 rpm or more
Transfer input speed/Transfer output speed	0.9 to 1.1

OFF malfunction (A)

ECM selected gear	1st
Vehicle speed	1.2 to 24.9 mph (2 to 40 km/h)
Throttle valve opening angle	6.5 % or more at engine speed of 2,000 rpm (Conditions vary with engine speed)

OFF malfunction (B)

ECM selected gear	2nd
Vehicle speed	1.2 mph (2 km/h) or more
Output speed	2nd → 1st down shift point or more
Throttle valve opening angle	6.5 % or more at engine speed of 2,000 rpm (Conditions vary with engine speed)

OFF malfunction (C)

Current ECM selected gear	5th
Last ECM selected gear	4th
Continuous time of ECM selecting 4th gear	2 seconds or more
Actual gear when ECM selected 4th gear	4th

OFF malfunction (D)

Current ECM selected gear	5th
Last ECM selected gear	4th

ON malfunction (A)

ECM selected gear	1st
Vehicle speed	1.2 to 24.9 mph (2 to 40 km/h)
Throttle valve opening angle	6.5 % or more at engine speed of 2,000 rpm (Conditions vary with engine speed)

ON malfunction (B)

ECM selected gear	4th
Vehicle speed	1.2 mph (2 km/h) or more
Throttle valve opening angle	6.5 % or more at engine speed of 2,000 rpm (Conditions vary with engine speed)

ON malfunction (C)

Current ECM selected gear	5th
Last ECM selected gear	4th
Vehicle speed (During transition from 4th to 5th gear)	Less than 62.2 mph (100 km/h)

ON malfunction (D)

ECM selected gear	5th
Engine speed - Turbine speed (NE - NT) (After transition from 4th to 5th gear)	150 rpm or less
Vehicle speed (After transition from 4th to 5th gear)	Less than 62.2 mph (100 km/h)

TYPICAL MALFUNCTION THRESHOLDS

[OFF malfunction]

All of the following conditions are met: OFF malfunctions (A), (B), (C) and (D)

2 detections are necessary in 1 driving cycle.

1st detection; temporary flag ON

2nd detection; pending fault code ON

OFF malfunction (A)

Turbine speed/Output speed	3.30 to 7.50 (Actual gear is 1st)

OFF malfunction (B)

Turbine speed/Output speed	3.30 to 7.50 (Actual gear is 1st)

OFF malfunction (C)

Turbine speed/Output speed	0.65 to 0.79 (Actual gear is 5th)

OFF malfunction (D)

Output record from ECM for 4th → 5th upshifting	Recorded

[ON malfunction]

ON malfunction (A) or (B) and ON malfunction (C) or (D) are met:

ON malfunction (A)

Turbine speed/Output speed	1.91 to 2.35 (Actual gear is 2nd)

ON malfunction (B)

Turbine speed/Output speed	1.28 to 1.53 (Actual gear is 3rd)

ON malfunction (C)

Turbine speed - Output speed x 4th gear ratio	1,000 rpm or more

ON malfunction (D)

Turbine speed - Output speed x 5th gear ratio	1,000 rpm or more

HINT:
Performing the ACTIVE TEST using the intelligent tester allows components, such as the relay, VSV, and actuator, to be operated without removing any parts. Performing the ACTIVE TEST as a first step of troubleshooting is one method of shortening labor time.
It is possible to display the DATA LIST during the ACTIVE TEST.

1. Warm up the engine.
2. Turn the ignition switch off.
3. Connect the intelligent tester together with the CAN VIM (controller area network vehicle interface module) to the DLC3.
4. Turn the ignition switch to the ON position.
5. Push the "ON" button of the tester.
6. Clear the DTC.
7. Select the items "DIAGNOSIS/ ENHANCED OBD II/ ACTIVE TEST/ SHIFT".
8. According to the display on the tester, perform the "ACTIVE TEST".

HINT:
While driving, the shift position can be changed with the intelligent tester.
Comparing the shift position directed by the ACTIVE TEST with the actual shift position enables the problem to be confirmed (See page AT-32).

Item	Test Details	Diagnostic Note
SHIFT	[Test Details] Operate the shift solenoid valve and set each shift position manually. [Vehicle Condition] Vehicle Speed: Less than 30 mph (50 km/h) [Others] • Press → button: Shift up • Press ← button: Shift down	Possible to check the operation of the shift solenoid valves. HINT: Shifting to the 5th gear is possible only when the vehicle is stationary with the engine idling.

HINT:

- This test can be conducted when the vehicle speed is 30 mph (50 km/h) or less.
- The 4th to 5th up-shifting must be performed with the accelerator pedal released.
- The 5th to 4th down-shifting must be performed with the accelerator pedal released.
- Do not operate the accelerator pedal for at least 2 seconds after shifting and do not shift successively.
- The shift position directed by the ECM is shown in the DATA LIST/ SHIFT display on the intelligent tester.
- The shift solenoid valve S2 is turned on/off normally when the shift lever is in the D position:

Gearshift controlled by ECM	1st	2nd	3rd	4th	5th
Shift solenoid valve S2	OFF	ON	ON	OFF	OFF

AT

1	CHECK ANY OTHER DTCS OUTPUT (IN ADDITION TO DTC P0756)

(a) Connect the intelligent tester to the DLC3.
(b) Turn the ignition switch to the ON position and push the intelligent tester main switch ON.
(c) Select the items "DIAGNOSIS/ ENHANCED OBD II/ DTC INFO/ CURRENT CODES".
(d) Read the DTCs using the intelligent tester.

Result:

Display (DTC Output)	Proceed to
Only "P0756" is output	A
"P0756" and other DTCs	B

HINT:
If any codes besides "P0756" are output, perform troubleshooting for those DTCs first.

B → GO TO DTC CHART

A

2	PERFORM ACTIVE TEST USING INTELLIGENT TESTER (LINE PRESS UP) (See page AT-82)

NG → REPLACE SHIFT SOLENOID VALVE SLT

OK

3	INSPECT SHIFT SOLENOID VALVE S2

Shift Solenoid Valve S2:

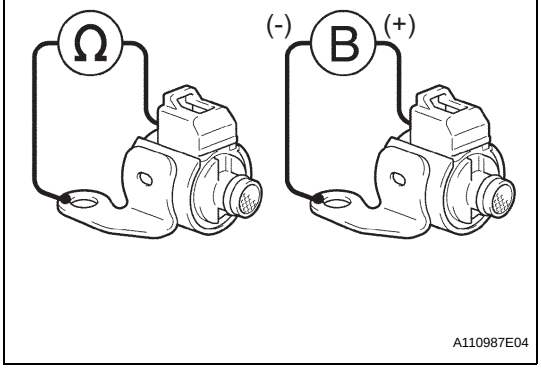

(a) Remove the shift solenoid valve S2.
(b) Measure the resistance.
Standard resistance

Tester Connection	Specified Condition
Solenoid Connector (S2) - Solenoid Body (S2)	11 to 15 Ωat 20°C (68°F)

(c) Connect the positive (+) lead to the terminal of the solenoid connector, and the negative (-) lead to the solenoid body.
OK:
The solenoid makes an operating noise.

NG → REPLACE SHIFT SOLENOID VALVE S2

OK

4	**INSPECT TRANSMISSION VALVE BODY ASSEMBLY (See chapter 2 in the problem symptoms table)**

OK:
There are no foreign objects on any valves and they operate smoothly.

NG → **REPAIR OR REPLACE TRANSMISSION VALVE BODY ASSEMBLY**

OK

REPAIR OR REPLACE AUTOMATIC TRANSMISSION ASSEMBLY

DTC	P0771	Shift Solenoid "E" Performance (Shift Solenoid Valve SR)

DESCRIPTION

AT

The ECM uses signals from the output shaft speed sensor and input speed sensor to detect the actual gear position (1st, 2nd, 3rd, 4th or 5th gear).
Then the ECM compares the actual gear with the shift schedule in the ECM memory to detect mechanical problems of the shift solenoid valves, valve body or automatic transmission (clutch, brake or gear, etc.).

DTC No.	DTC Detection Conditions	Trouble Areas
P0771	SR stuck ON malfunction*1: The ECM determines that there is a malfunction when the following condition is met (2-trip detection logic): (a) When the ECM directs the gearshift to switch to 2nd gear, the engine overruns (clutch slips)	• Shift solenoid valve SR remains open • Shift solenoid valve SL1 remains open • Shift solenoid valve SLT remains open or closed • Valve body is blocked • Automatic transmission (clutch, brake or gear, etc.)
	SR stuck OFF malfunction*2: The ECM determines that there is a malfunction when the following condition is met (2-trip detection logic): (a) When the ECM directs the gearshift to switch to 5th gear, the actual gear is shifted to 4th.	• Shift solenoid valve SR remains closed • Shift solenoid valve SL1 remains closed • Shift solenoid valve SLT remains open or closed • Valve body is blocked • Automatic transmission (clutch, brake or gear, etc.)

HINT:
Gear positions in the event of a solenoid valve mechanical problem:

Gearshift controlled by ECM	1st	2nd	3rd	4th	5th
*1: Actual gear position under SR stuck ON malfunction	1st	N*	3rd	4th	5th
*2: Actual gear position under SR stuck OFF malfunction	1st	2nd	3rd	4th	4th

N*: Neutral

MONITOR DESCRIPTION

This DTC indicates "stuck ON malfunction" or "stuck OFF malfunction" of the shift solenoid valve SR or SL1. The ECM controls the gearshifts by turning the shift solenoid valves "ON/OFF". When the gear position directed by the ECM and the actual gear position do not match, the ECM illuminates the MIL and stores the DTC.

MONITOR STRATEGY

Related DTCs	P0771: Shift solenoid valve SR/OFF malfunction Shift solenoid valve SR/ON malfunction
Required sensors/Components (Main)	Shift solenoid valve SR
Required sensors/Components (Related)	Speed sensor (NT), Speed sensor (SP2), Crankshaft position sensor (NE)
Frequency of operation	Continuous
Duration	OFF malfunction (A): 0.4 seconds OFF malfunctions (B) and (C): Immediate ON malfunction: 0.15 seconds
MIL operation	2 driving cycles
Sequence of operation	None

TYPICAL ENABLING CONDITIONS

The following conditions are common to all OFF malfunctions (A), (B), (C) and ON malfunction.

The monitor will run whenever the following DTCs are not present.	P0115 - P0118: ECT sensor P0125: Insufficient ECT for Closed Loop P0500: VSS P0748 - P0799: Trans solenoid (range)
Turbine speed sensor (NT) circuit	Functioning normally
Output speed sensor (SP2) circuit	Functioning normally
Shift solenoid "A" (S1) circuit	Functioning normally
Shift solenoid "B" (S2) circuit	Functioning normally
Shift solenoid "E" (SR) circuit	Functioning normally
Pressure control solenoid "A" (SL1) circuit	Functioning normally
Pressure control solenoid "B" (SL2) circuit	Functioning normally
ECT (Engine coolant temperature) sensor circuit	Functioning normally
Knock sensor circuit	Functioning normally
ETCS (Electronic throttle control system)	System not down
Transmission shift position	"D"
ECT	40°C (104°F) or more
Spark advance from max. retard timing by knock sensor control	0° CA or more
Engine	Starting
Transfer range	"High" *1

*1: Following conditions are met

Vehicle speed sensor "A" circuit	Functioning normally
Output speed sensor circuit	Functioning normally
Transfer output speed	143 rpm or more
Transfer input speed/Transfer output speed	0.9 to 1.1

OFF malfunction (A)

ECM selected gear	5th
Vehicle speed	1.2 mph (2 km/h) or more
Throttle valve opening angle	6.5 % or more at engine speed of 2,000 rpm (Conditions vary with engine speed)

OFF malfunction (B)

Current ECM selected gear	5th
Last ECM selected gear	4th
Continuous time of ECM selecting 4th gear	2 seconds or more

OFF malfunction (C)

Current ECM selected gear	5th
Last ECM selected gear	4th

ON malfunction

Current ECM selected gear	2nd
Last ECM selected gear	1st
Throttle valve opening angle (During transition from 1st to 2nd gear)	5.5 % or more at engine speed of 3,000 rpm (Conditions vary with engine speed)

TYPICAL MALFUNCTION THRESHOLDS

[OFF malfunction]

All of the following conditions are met: OFF malfunctions (A), (B) and (C)

2 detections are necessary in 1 driving cycle.

1st detection; temporary flag ON

2nd detection; pending fault code ON

OFF malfunction (A)

Turbine speed/Output speed	0.93 to 1.07 (Actual gear is 4th)

OFF malfunction (B)

Turbine speed/Output speed	No change as follow: 0.93 to 1.07 (Actual gear is 4th) ↓ 0.65 to 0.79 (Actual gear is 5th)

OFF malfunction (C)

Output record from ECM for 4th → 5th upshifting	Recorded

[ON malfunction]
2 detections are necessary in 1 driving cycle.
1st detection; temporary flag ON
2nd detection; pending fault code ON

Turbine speed - Output speed x 1st gear ratio	150 rpm or more

HINT:
Performing the ACTIVE TEST using the intelligent tester allows components, such as the relay, VSV, and actuator, to be operated without removing any parts. Performing the ACTIVE TEST as a first step of troubleshooting is one method of shortening labor time.
It is possible to display the DATA LIST during the ACTIVE TEST.

1. Warm up the engine.
2. Turn the ignition switch off.
3. Connect the intelligent tester together with the CAN VIM (controller area network vehicle interface module) to the DLC3.
4. Turn the ignition switch to the ON position.
5. Push the "ON" button of the tester.
6. Clear the DTC.
7. Select the items "DIAGNOSIS/ ENHANCED OBD II/ ACTIVE TEST/ SHIFT".
8. According to the display on the tester, perform the "ACTIVE TEST".

HINT:
While driving, the shift position can be changed with the intelligent tester.
Comparing the shift position directed by the ACTIVE TEST with the actual shift position enables the problem to be confirmed (See page AT-32).

Item	Test Details	Diagnostic Note
SHIFT	[Test Details] Operate the shift solenoid valve and set each shift position manually. [Vehicle Condition] Vehicle Speed: Less than 30 mph (50 km/h) [Others] • Press → button: Shift up • Press ← button: Shift down	Possible to check the operation of the shift solenoid valves. HINT: Shifting to the 5th gear is possible only when the vehicle is stationary with the engine idling.

HINT:

- This test can be conducted when the vehicle speed is 30 mph (50 km/h) or less.
- The 4th to 5th up-shifting must be performed with the accelerator pedal released.
- The 5th to 4th down-shifting must be performed with the accelerator pedal released.
- Do not operate the accelerator pedal for at least 2 seconds after shifting and do not shift successively.
- The shift position directed by the ECM is shown in the DATA LIST/ SHIFT display on the intelligent tester.
- The shift solenoid valve SR and S1 are turned on/off normally when the shift lever is in the D position:

Gearshift controlled by ECM	1st	2nd	3rd	4th	5th

Shift solenoid valve SR	OFF	OFF	OFF	OFF	ON
Shift solenoid valve SL1	OFF	OFF	OFF	OFF	ON

1 CHECK ANY OTHER DTCS OUTPUT (IN ADDITION TO DTC P0771)

(a) Connect the intelligent tester to the DLC3.
(b) Turn the ignition switch to the ON position and push the intelligent tester main switch ON.
(c) Select the items "DIAGNOSIS/ ENHANCED OBD II/ DTC INFO/ CURRENT CODES".
(d) Read the DTCs using the intelligent tester.

Result:

Display (DTC Output)	Proceed to
Only "P0771" is output	A
P0771" and other DTCs	B

HINT:
If any codes besides "P0771" are output, perform troubleshooting for those DTCs first

B → **GO TO DTC CHART**

A

2 PERFORM ACTIVE TEST USING INTELLIGENT TESTER (LINE PRESS UP) (See page AT-82)

NG → **REPLACE SHIFT SOLENOID VALVE SLT**

OK

3 INSPECT SHIFT SOLENOID VALVE SR

Shift Solenoid Valve SR:

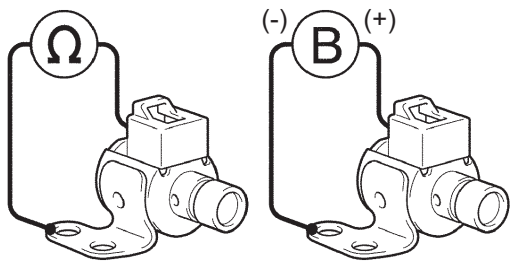

A110988E05

(a) Remove the shift solenoid valve SR.
(b) Measure the resistance.
Standard resistance

Tester Connection	Specified Condition
Solenoid Connector (SR) - Solenoid Body (SR)	11 to 15 Ω at 20°C (68°F)

(c) Connect the positive (+) lead to the terminal of the solenoid connector, and the negative (-) lead to the solenoid body.
OK:
The solenoid makes an operating noise

NG → **REPLACE SHIFT SOLENOID VALVE SR**

OK

AT

4	INSPECT SHIFT SOLENOID VALVE SL1

Shift Solenoid Valve SL1:

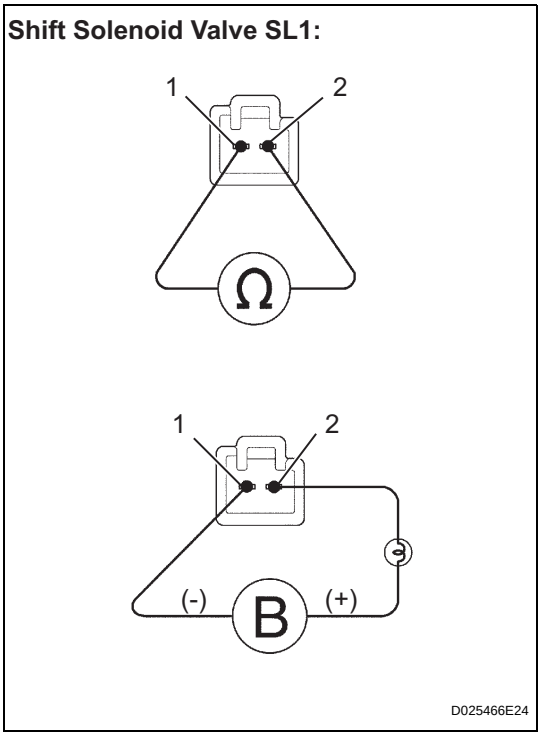

(a) Remove the shift solenoid valve SL1.
(b) Measure the resistance.
Standard resistance

Tester Connection	Specified Condition
1 - 2	5.0 to 5.6 Ω at 20°C (68°F)

(c) Connect the positive (+) lead with a 21 W bulb to terminal 2 and the negative (-) lead to terminal 1 of the solenoid valve connector, then check the movement of the valve.
OK:
The solenoid makes an operating noise.

NG → **REPLACE SHIFT SOLENOID VALVE SL1**

OK

5	INSPECT TRANSMISSION VALVE BODY ASSEMBLY (See chapter 2 in the problem symptoms table)

OK:
There are no foreign objects on any valves and they operate smoothly.

NG → **REPAIR OR REPLACE TRANSMISSION VALVE BODY ASSEMBLY**

OK

REPAIR OR REPLACE AUTOMATIC TRANSMISSION ASSEMBLY

DTC	P0776	Pressure Control Solenoid "B" Performance (Shift Solenoid Valve SL2)

DESCRIPTION

The ECM uses signals from the output shaft speed sensor and input speed sensor to detect the actual gear position (1st, 2nd, 3rd, 4th or 5th gear).
Then the ECM compares the actual gear with the shift schedule in the ECM memory to detect mechanical problems of the shift solenoid valves, valve body or automatic transmission (clutch, brake or gear, etc.).

DTC No.	DTC Detection Conditions	Trouble Areas
P0776	SL2 stuck ON malfunction*1: The ECM determines that there is a malfunction when the following conditions are met (2-trip detection logic): (a) When the ECM directs the gearshift to switch to 4th gear, the actual gear is also shifted to 4th. (b) When the ECM directs the gearshift to switch to 5th gear, the engine overruns (clutch slips)	• Shift solenoid valve SL2 remains open • Shift solenoid valve SLT remains open or closed • Valve body is blocked • Automatic transmission (clutch, brake or gear, etc.)

HINT:
Gear positions in the event of a solenoid valve mechanical problem:

Gearshift controlled by ECM	1st	2nd	3rd	4th	5th
*1: Actual gear position under SL2 stuck ON malfunction	1st	2nd	3rd	4th	N*

N*: Neutral

MONITOR DESCRIPTION

This DTC indicates "stuck ON malfunction" of the shift solenoid valve SL2.
The ECM controls the gearshifts by turning the shift solenoid valves "ON/OFF". When the gear position directed by the ECM and the actual gear position do not match, the ECM illuminates the MIL and stores the DTC.

MONITOR STRATEGY

Related DTCs	P0776: Shift solenoid valve SL2/ON malfunction
Required sensors/Components (Main)	Shift solenoid valve SL2
Required sensors/Components (Related)	Speed sensor (NT), Speed sensor (SP2), Crankshaft position sensor (NE)
Frequency of operation	Continuous
Duration	ON malfunctions (A), (B) and (C): 0.4 seconds ON malfunction (D): 3 seconds ON malfunction (E): 0.5 seconds
MIL operation	2 driving cycles
Sequence of operation	None

TYPICAL ENABLING CONDITIONS

The following conditions are common to all ON malfunctions (A), (B), (C), (D) and (E).

The monitor will run whenever the following DTCs are not present.	P0115 - P0118: ECT sensor P0125: Insufficient ECT for Closed Loop P0500: VSS P0748 - P0799: Trans solenoid (range)
Turbine speed sensor (NT) circuit	Functioning normally
Output speed sensor (SP2) circuit	Functioning normally
Shift solenoid "A" (S1) circuit	Functioning normally

Shift solenoid "B" (S2) circuit	Functioning normally
Shift solenoid "E" (SR) circuit	Functioning normally
Pressure control solenoid "A" (SL1) circuit	Functioning normally
Pressure control solenoid "B" (SL2) circuit	Functioning normally
ECT (Engine coolant temperature) sensor circuit	Functioning normally
Knock sensor circuit	Functioning normally
ETCS (Electronic throttle control system)	System not down
Transmission shift position	"D"
ECT	40°C (104°F) or more
Spark advance from max. retard timing by knock sensor control	0° CA or more
Engine	Starting
Transfer range	"High" *1

*1: Following conditions are met

Vehicle speed sensor "A" circuit	Functioning normally
Output speed sensor circuit	Functioning normally
Transfer output speed	143 rpm or more
Transfer input speed/Transfer output speed	0.9 to 1.1

ON malfunction (A)

ECM selected gear	1st
Vehicle speed	1.2 to 24.9 mph (2 to 40 km/h)
Throttle valve opening angle	6.5 % or more at engine speed of 2,000 rpm (Conditions vary with engine speed)

ON malfunction (B)

ECM selected gear	3rd
Vehicle speed	1.2 mph (2 km/h) or more
Throttle valve opening angle	6.5 % or more at engine speed of 2,000 rpm (Conditions vary with engine speed)

ON malfunction (C)

ECM selected gear	4th
Vehicle speed	1.2 mph (2 km/h) or more
Throttle valve opening angle	6.5 % or more at engine speed of 2,000 rpm (Conditions vary with engine speed)

ON malfunction (D)

Current ECM selected gear	5th
Last ECM selected gear	4th
Vehicle speed (During transition from 4th to 5th gear)	Less than 62.2 mph (100 km/h)

ON malfunction (E)

ECM selected gear	5th
Engine speed - Turbine speed (NE - NT) (After transition from 4th to 5th gear)	150 rpm or less
Vehicle speed (After transition from 4th to 5th gear)	Less than 62.2 mph (100 km/h)

TYPICAL MALFUNCTION THRESHOLDS

[ON malfunction]

Both of the following conditions are met:

- ON malfunctions (A) and (B), or ON malfunction (C)

- ON malfunction (D) or (E)

ON malfunction (A)

Turbine speed/Output speed	3.30 to 7.50 (Actual gear is 1st)

ON malfunction (B)

Turbine speed/Output speed	1.28 to 1.53 (Actual gear is 3rd)

ON malfunction (C)

Turbine speed/Output speed	0.93 to 1.07 (Actual gear is 4th)

ON malfunction (D)

Turbine speed - Output speed x 4th gear ratio	1,000 rpm or more

ON malfunction (E)

Turbine speed - Output speed x 5th gear ratio	1,000 rpm or more

HINT:
Performing the ACTIVE TEST using the intelligent tester allows components, such as the relay, VSV, and actuator, to be operated without removing any parts. Performing the ACTIVE TEST as a first step of troubleshooting is one method of shortening labor time.
It is possible to display the DATA LIST during the ACTIVE TEST.

1. Warm up the engine.
2. Turn the ignition switch off.
3. Connect the intelligent tester together with the CAN VIM (controller area network vehicle interface module) to the DLC3.
4. Turn the ignition switch to the ON position.
5. Push the "ON" button of the tester.
6. Clear the DTC.
7. Select the items "DIAGNOSIS/ ENHANCED OBD II/ ACTIVE TEST/ SHIFT".
8. According to the display on the tester, perform the "ACTIVE TEST".

HINT:
While driving, the shift position can be changed with the intelligent tester.
Comparing the shift position directed by the ACTIVE TEST with the actual shift position enables the problem to be confirmed (See page AT-32).

Item	Test Details	Diagnostic Note
SHIFT	[Test Details] Operate the shift solenoid valve and set each shift position manually. [Vehicle Condition] Vehicle Speed: Less than 30 mph (50 km/h) [Others] • Press → button: Shift up • Press ← button: Shift down	Possible to check the operation of the shift solenoid valves. HINT: Shifting to the 5th gear is possible only when the vehicle is stationary with the engine idling.

HINT:

- This test can be conducted when the vehicle speed is 30 mph (50 km/h) or less.
- The 4th to 5th up-shifting must be performed with the accelerator pedal released.
- The 5th to 4th down-shifting must be performed with the accelerator pedal released.
- Do not operate the accelerator pedal for at least 2 seconds after shifting and do not shift successively.
- The shift position directed by the ECM is shown in the DATA LIST/ SHIFT display on the intelligent tester.
- The shift solenoid valve SL2 is turned on/off normally when the shift lever is in the D position:

Gearshift controlled by ECM	1st	2nd	3rd	4th	5th
Shift solenoid valve SL2	ON	ON	ON	ON	OFF

AT

1	CHECK ANY OTHER DTCS OUTPUT (IN ADDITION TO DTC P0776)

(a) Connect the intelligent tester to the DLC3.
(b) Turn the ignition switch to the ON position and push the intelligent tester main switch ON.
(c) Select the items "DIAGNOSIS/ ENHANCED OBD II/ DTC INFO/ CURRENT CODES".
(d) Read the DTCs using the intelligent tester.

Result:

Display (DTC Output)	Proceed to
Only "P0776" is output	A
"P0776" and other DTCs	B

HINT:
If any codes besides "P0776" are output, perform troubleshooting for those DTCs first.

B → GO TO DTC CHART

A

2	PERFORM ACTIVE TEST USING INTELLIGENT TESTER (LINE PRESS UP) (See page AT-82)

NG → REPLACE SHIFT SOLENOID VALVE SLT

OK

3	INSPECT SHIFT SOLENOID VALVE SL2

Shift Solenoid Valve SL2:

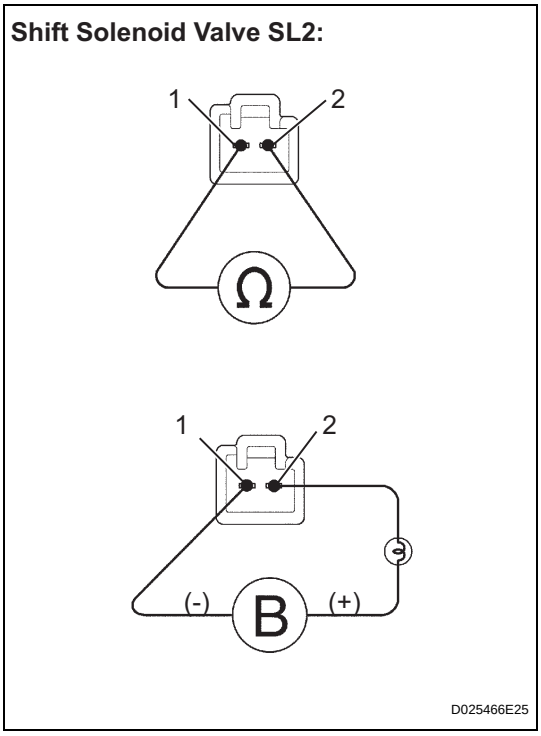

(a) Remove the shift solenoid valve SL2.
(b) Measure the resistance.
Standard resistance

Tester Connection	Specified Condition
1 - 2	5.0 to 5.6 Ωat 20°C (68°F)

(c) Connect the positive (+) lead with a 21 W bulb to terminal 2 and the negative (-) lead to terminal 1 of the solenoid valve connector, then check the movement of the valve.
OK:
The solenoid makes an operating noise.

NG → REPLACE SHIFT SOLENOID VALVE SL2

OK

4	INSPECT TRANSMISSION VALVE BODY ASSEMBLY (See chapter 2 in the problem symptoms table)

OK:
There are no foreign objects on any valves and they operate smoothly.

NG → REPAIR OR REPLACE TRANSMISSION VALVE BODY ASSEMBLY

OK

REPAIR OR REPLACE AUTOMATIC TRANSMISSION ASSEMBLY

DTC	P0778	Pressure Control Solenoid "B" Electrical (Shift Solenoid Valve SL2)

DESCRIPTION

AT

Shifting from 1st to 5th is performed in combination with the ON and OFF operation of the shift solenoid valves S1, S2, SR, SL1 and SL2 which are controlled by the ECM. If an open or short circuit occurs in any of the shift solenoid valves, the ECM controls the remaining normal shift solenoid valves to allow the vehicle to be driven smoothly (See page AT-32).

DTC No.	DTC Detection Conditions	Trouble Areas
P0778	The ECM checks for an open or short in the shift solenoid valve SL2 circuit (1-trip detection logic): • Output signal duty equals 100 %. (NOTE: SL2 output signal duty is less than 100 % under normal conditions)	• Open or short in shift solenoid valve SL2 circuit • Shift solenoid valve SL2 • ECM

MONITOR DESCRIPTION

This DTC indicates an open or short in the shift solenoid valve SL2 circuit. The ECM controls the gearshift by turning the shift solenoid valves "ON/OFF". When there is an open or short circuit in any shift solenoid valve circuit, the ECM detects the problem, illuminates the MIL and stores the DTC. And the ECM performs the fail-safe function and turns the other functioning shift solenoid valves "ON/OFF". (If an open or short circuit is detected, the ECM cuts the current to the circuit.)
If the ECM detects an open or short in the shift solenoid valve SL2 circuit, the ECM determines that there is a malfunction (See page AT-32).

MONITOR STRATEGY

Related DTCs	P0778: Shift solenoid valve SL2/Range check
Required sensors/Components	Shift solenoid valve SL2
Frequency of operation	Continuous
Duration	1 second
MIL operation	Immediate
Sequence of operation	None

TYPICAL ENABLING CONDITIONS

The monitor will run whenever the following DTCs are not present.	None
Battery voltage	10 V or more
CPU requested duty ratio to SL2	Less than 75 %
Ignition switch	ON
Starter	OFF

TYPICAL MALFUNCTION THRESHOLDS

Output signal duty	100 %

COMPONENT OPERATING RANGE

Output signal duty	Less than 100 %

WIRING DIAGRAM

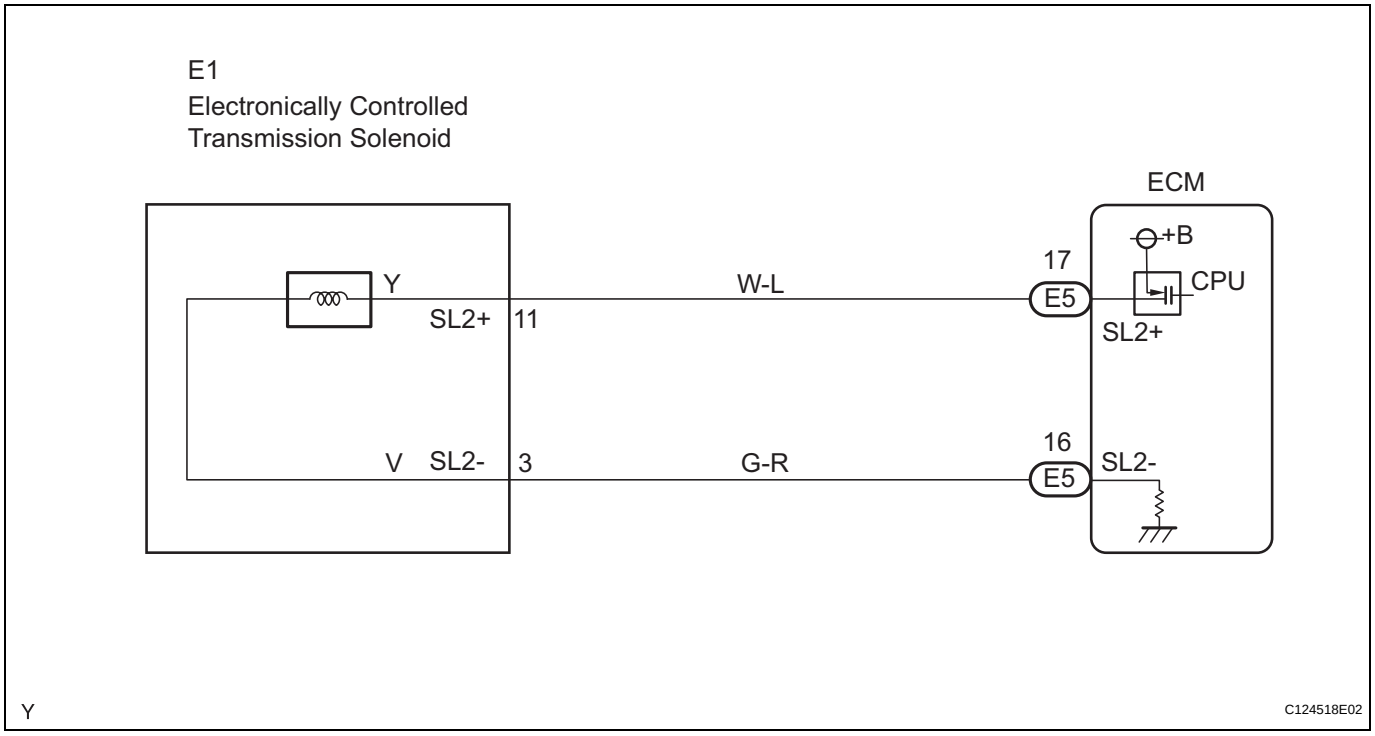

HINT:
The shift solenoid valve SL2 is turned on/off normally when the shift lever is in the D position:

Gearshift controlled by ECM	1st	2nd	3rd	4th	5th
Shift solenoid valve SL2	ON	ON	ON	ON	OFF

1	INSPECT TRANSMISSION WIRE (SL2)

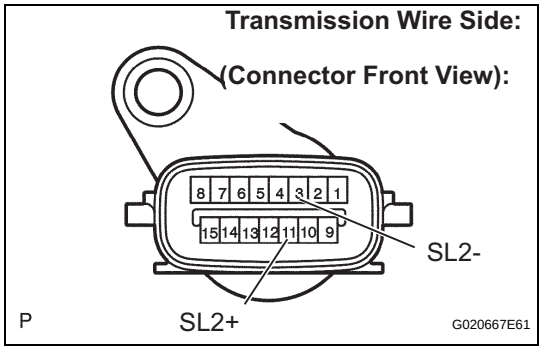

(a) Disconnect the transmission wire connector from the transmission.
(b) Measure the resistance.
Standard resistance

Tester Connection	Specified Condition
11 (SL2+) - 3 (SL2-)	5.0 to 5.6 Ωat 20°C (68°F)

(c) Measure the resistance.
Standard resistance (Check for short):

Tester Connection	Specified Condition
11 (SL2+) - Body ground	10 kΩ or higher
3 (SL2-) - Body ground	10 kΩ or higher

NG → **Go to step 3**

OK

AT

2 CHECK HARNESS AND CONNECTOR (TRANSMISSION WIRE - ECM)

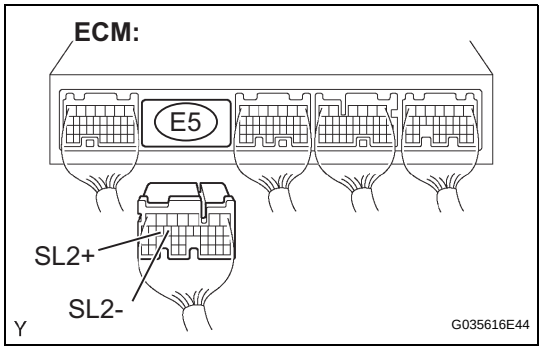

(a) Connect the transmission wire connector to the transmission.
(b) Disconnect the ECM connector.
(c) Measure the resistance.
Standard resistance

Tester Connection	Specified Condition
E5-17 (SL2+) - E5-16 (SL2-)	5.0 to 5.6 Ω at 20°C (68°F)

(d) Measure the resistance.
Standard resistance (Check for short)

Tester Connection	Specified Condition
E5-17 (SL2+) - Body ground	10 kΩ or higher
E5-16 (SL2-) - Body ground	10 kΩ or higher

NG → **REPAIR OR REPLACE HARNESS OR CONNECTOR**

OK

REPLACE ECM

3 INSPECT SHIFT SOLENOID VALVE SL2

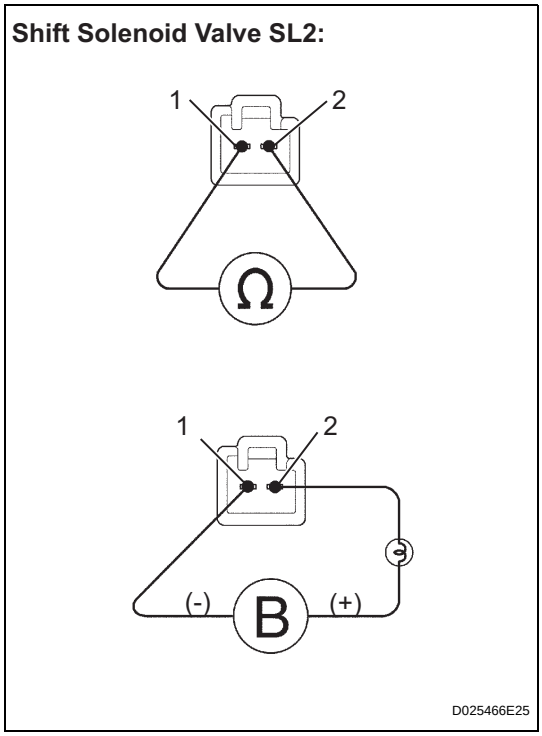

(a) Remove the shift solenoid valve SL2.
(b) Measure the resistance.
Standard resistance

Tester Connection	Specified Condition
1 - 2	5.0 to 5.6 Ω at 20°C (68°F)

(c) Connect the positive (+) lead with a 21 W bulb to terminal 2 and the negative (-) lead to terminal 1 of the solenoid valve connector, then check the movement of the valve.
OK:
The solenoid makes an operating noise.

NG → **REPLACE SHIFT SOLENOID VALVE SL2**

OK

REPAIR OR REPLACE TRANSMISSION WIRE

DTC	P0781	1-2 Shift (1-2 Shift Valve)

DESCRIPTION

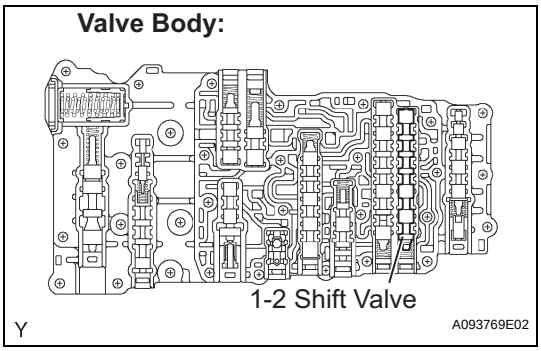

The 1-2 shift valve performs shifting to 1st gear and other gears.

DTC No.	DTC Detection Conditions	Trouble Areas
P0781	1-2 shift valve malfunction: The ECM determines that there is a malfunction when the following conditions (a) and (b), or (a) and (c) are met (2-trip detection logic): (a) When the ECM directs the gearshift to switch to 2nd gear, the actual gear is shifted to 1st. (b) When the ECM directs the gearshift to switch to 4th gear, the actual gear is shifted to 3rd. (c) When the ECM directs the gearshift to switch to 5th gear, the engine overruns (clutch slips)	• Valve body is blocked up or stuck (1-2 shift valve) • Shift solenoid valve SLT remains open or closed • Automatic transmission (clutch, brake or gear, etc.)

HINT:
Gear positions in the event of a 1-2 shift valve mechanical problem:

Gearshift controlled by ECM	1st	2nd	3rd	4th	5th
Actual gear position under malfunction	1st	1st	3rd	3rd	N*

N*: Neutral

MONITOR DESCRIPTION

This DTC indicates that the 1-2 shift valve in the valve body is locked in the direction of the spring compression. The ECM controls the gearshifts by turning the shift solenoid valves "ON/OFF" and switching oil pressure to the valves in the valve body.
The ECM calculates the "actual" transmission gear by comparing the signals from the input speed sensor (NT) and the output speed sensor (SP2). The ECM can detect many mechanical problems in the shift solenoids, valve body, and the transmission clutches, brakes, and gears. If the ECM detects that the actual gear position and the commanded gear position are different, it will illuminate the MIL and store the DTC .

MONITOR STRATEGY

Related DTCs	P0781: Valve body/Rationality check
Required sensors/Components (Main)	Valve body
Required sensors/Components (Related)	Automatic transmission assembly, Speed sensor (NT), Speed sensor (SP2), Vehicle speed sensor, Throttle position sensor
Frequency of operation	Continuous
Duration	Conditions (A) and (B) 0.4 seconds Condition (C) 3 seconds Condition (D) 0.5 seconds
MIL operation	2 driving cycles

Sequence of operation	None

TYPICAL ENABLING CONDITIONS

The following conditions are common to all Conditions (A), (B), (C) and (D).

The monitor will run whenever the following DTCs are not present.	P0115 - P0118: ECT sensor P0125: Insufficient ECT for Closed Loop P0500: VSS P0748 - P0799: Trans Solenoid (range)
Turbine speed sensor (NT) circuit	Functioning normally
Output speed sensor (SP2) circuit	Functioning normally
Shift solenoid "A" (S1) circuit	Functioning normally
Shift solenoid "B" (S2) circuit	Functioning normally
Shift solenoid "E" (SR) circuit	Functioning normally
Pressure control solenoid "A" (SL1) circuit	Functioning normally
Pressure control solenoid "B" (SL2) circuit	Functioning normally
ECT (Engine coolant temperature) sensor circuit	Functioning normally
Knock sensor circuit	Functioning normally
ETCS (Electronic throttle control system)	System not down
Transmission shift position	"D"
ECT	40°C (104°F) or more
Spark advance from max. retard timing by knock sensor control	0°CA or more
Engine	Starting
Transfer range	"High" *1

*1: Following conditions are met

Vehicle speed sensor "A" circuit	Functioning normally
Output speed sensor circuit	Functioning normally
Transfer output speed	143 rpm or more
Transfer input speed/Transfer output speed	0.9 to 1.1

Condition (A)

ECM selected gear	2nd
Vehicle speed	1.2 mph (2 km/h) or more
Output speed	2nd → 1st down shift point or more
Throttle valve opening angle	6.5 % or more at engine speed of 2,000 rpm (Conditions vary with engine speed)

Condition (B)

ECM selected gear	4th
Vehicle speed	1.2 mph (2 km/h) or more
Throttle valve opening angle	6.5 % or more at engine speed of 2,000 rpm (Conditions vary with engine speed)

Condition (C)

Current ECM selected gear	5th
Last ECM selected gear	4th
Vehicle speed (During transition from 4th to 5th gear)	Less than 62.2 mph (100 km/h)

Condition (D)

ECM selected gear	5th
Engine speed - Turbine speed (NE - NT) After transition from 4th to 5th gear)	150 rpm or less

Vehicle speed After transition from 4th to 5th gear)	Less than 62.2 mph (100 km/h)

TYPICAL MALFUNCTION THRESHOLDS

Condition (A) and Conditions (B), (C) or (D) are met:

AT

Condition (A)

Turbine speed/Output speed	3.30 to 7.50 (Actual gear is 1st)

Condition (B)

Turbine speed/Output speed	1.28 to 1.53 (Actual gear is 3rd)

Condition (C)

Turbine speed - Output speed x 4th gear ratio	1,000 rpm or more

Condition (D)

Turbine speed - Output speed x 5th gear ratio	1,000 rpm or more

1	CHECK ANY OTHER DTCS OUTPUT (IN ADDITION TO DTC P0781)

(a) Connect the intelligent tester to the DLC3.
(b) Turn the ignition switch to the ON position and push the main switch ON.
(c) Select the items "DIAGNOSIS/ ENHANCED OBD II/ DTC INFO/ CURRENT CODES".
(d) Read the DTCs using the intelligent tester.

Result:

Display (DTC Output)	Proceed to
Only "P0781" is output	A
"P0781" and other DTCs	B

HINT:
If any codes besides "P0781" are output, perform troubleshooting for those DTCs first.

B → **GO TO DTC CHART**

A

2	PERFORM ACTIVE TEST USING INTELLIGENT TESTER (SHIFT)

HINT:
Performing the ACTIVE TEST using the intelligent tester allows components, such as the relay, VSV, and actuator, to be operated without removing any parts. Performing the ACTIVE TEST as a first step of troubleshooting is one method of shortening labor time.
It is possible to display the DATA LIST during the ACTIVE TEST.

1. Warm up the engine.
2. Turn the ignition switch off.

3. Connect the intelligent tester together with the CAN VIM (controller area network vehicle interface module) to the DLC3.
4. Turn the ignition switch to the ON position.
5. Push the "ON" button of the tester.
6. Clear the DTC.
7. Select the items "DIAGNOSIS/ ENHANCED OBD II/ ACTIVE TEST/ SHIFT".
8. According to the display on the tester, perform the "ACTIVE TEST".

HINT:
While driving, the shift position can be changed with the intelligent tester.
Comparing the shift position directed by the ACTIVE TEST with the actual shift position enables the problem to be confirmed (See page AT-32).

Item	Test Details	Diagnostic Note
SHIFT	[Test Details] Operate the shift solenoid valve and set each shift position manually. [Vehicle Condition] Vehicle Speed: Less than 30 mph (50 km/h) [Others] • Press →button: Shift up • Press ←button: Shift down	Possible to check the operation of the shift solenoid valves. HINT: Shifting to the 5th gear is possible only when the vehicle is stationary with the engine idling.

HINT:
- This test can be conducted when the vehicle speed is 30 mph (50 km/h) or less.
- The 4th to 5th up-shifting must be performed with the accelerator pedal released.
- The 5th to 4th down-shifting must be performed with the accelerator pedal released.
- Do not operate the accelerator pedal for at least 2 seconds after shifting and do not shift successively.
- The shift position directed by the ECM is shown in the DATA LIST/ SHIFT display on the intelligent tester.
- Gear positions in the event of a solenoid valve mechanical problem:

Gearshift operated by tester	1st	2nd	3rd	4th	5th
Actual gear position under malfunction	1st	1st	3rd	3rd	N*

N*: Neutral

OK:

Gear position changes in accordance with the tester operation.

NG → **REPAIR OR REPLACE TRANSMISSION VALVE BODY ASSEMBLY**

OK ↓

3	**PERFORM ACTIVE TEST USING INTELLIGENT TESTER (LINE PRESS UP) (See page AT-82)**

NG → **REPLACE SHIFT SOLENOID VALVE SLT**

OK

4	CLEAR DTC AND PERFORM RUNNING TEST

AT

(a) Clear the DTC, and check for the DTC again after conducting the "MONITOR DRIVE PATTERN FOR ECT TEST" (See page AT-19).

OK:

No DTC

NG → **REPAIR OR REPLACE TRANSMISSION VALVE BODY ASSEMBLY**

OK

END

DTC	P0973	Shift Solenoid "A" Control Circuit Low (Shift Solenoid Valve S1)

DTC	P0974	Shift Solenoid "A" Control Circuit High (Shift Solenoid Valve S1)

DESCRIPTION

Shifting from 1st to 5th is performed in combination with the ON and OFF operation of the shift solenoid valves S1, S2, SR, SL1 and SL2 which are controlled by the ECM. If an open or short circuit occurs in any of the shift solenoid valves, the ECM controls the remaining normal shift solenoid valve to allow the vehicle to be driven smoothly (See page AT-32).

DTC No.	DTC Detection Conditions	Trouble Areas
P0973	ECM detects short in solenoid valve S1 circuit 2 times when solenoid valve S1 is operated (1-trip detection logic)	• Short in shift solenoid valve S1 circuit • Shift solenoid valve S1 • ECM
P0974	ECM detects open in solenoid valve S1 circuit 2 times when solenoid valve S1 is not operated (1-trip detection logic)	• Open in shift solenoid valve S1 circuit • Shift solenoid valve S1 • ECM

MONITOR DESCRIPTION

These DTCs indicate an open or short in the shift solenoid valve S1 circuit. When there is an open or short circuit in any shift solenoid valve circuits, the ECM detects the problem and illuminates the MIL and stores the DTC. When the shift solenoid valve S1 is on, if the resistance is 8 Ω or less, the ECM determines that there is a short malfunction in the shift solenoid valve S1 circuit.
When the shift solenoid valve S1 is off, if the resistance is 100 kΩ or more, the ECM determines that the shift solenoid valve S1 circuit is open (See page AT-32).

MONITOR STRATEGY

Related DTCs	P0973: Shift solenoid valve S1/Range check (Low resistance) P0974: Shift solenoid valve S1/Range check (High resistance)
Required sensors/Components	Shift solenoid valve S1
Frequency of operation	Continuous
Duration	0.064 seconds
MIL operation	Immediate
Sequence of operation	None

TYPICAL ENABLING CONDITIONS

P0973: Range check (Low resistance)

The monitor will run whenever the following DTCs are not present.	None
Shift solenoid valve S1	ON

P0974: Range check (High resistance)

The monitor will run whenever the following DTCs are not present.	None
Shift solenoid valve S1	OFF

TYPICAL MALFUNCTION THRESHOLDS

P0973: Range check (Low resistance)

Shift solenoid valve S1 resistance	8 Ω or less

P0974: Range check (High resistance)

Shift solenoid valve S1 resistance	100 kΩ or more

COMPONENT OPERATING RANGE

Shift solenoid valve S1 resistance	11 to 15 Ω at 20°C (68°F)

AT

WIRING DIAGRAM

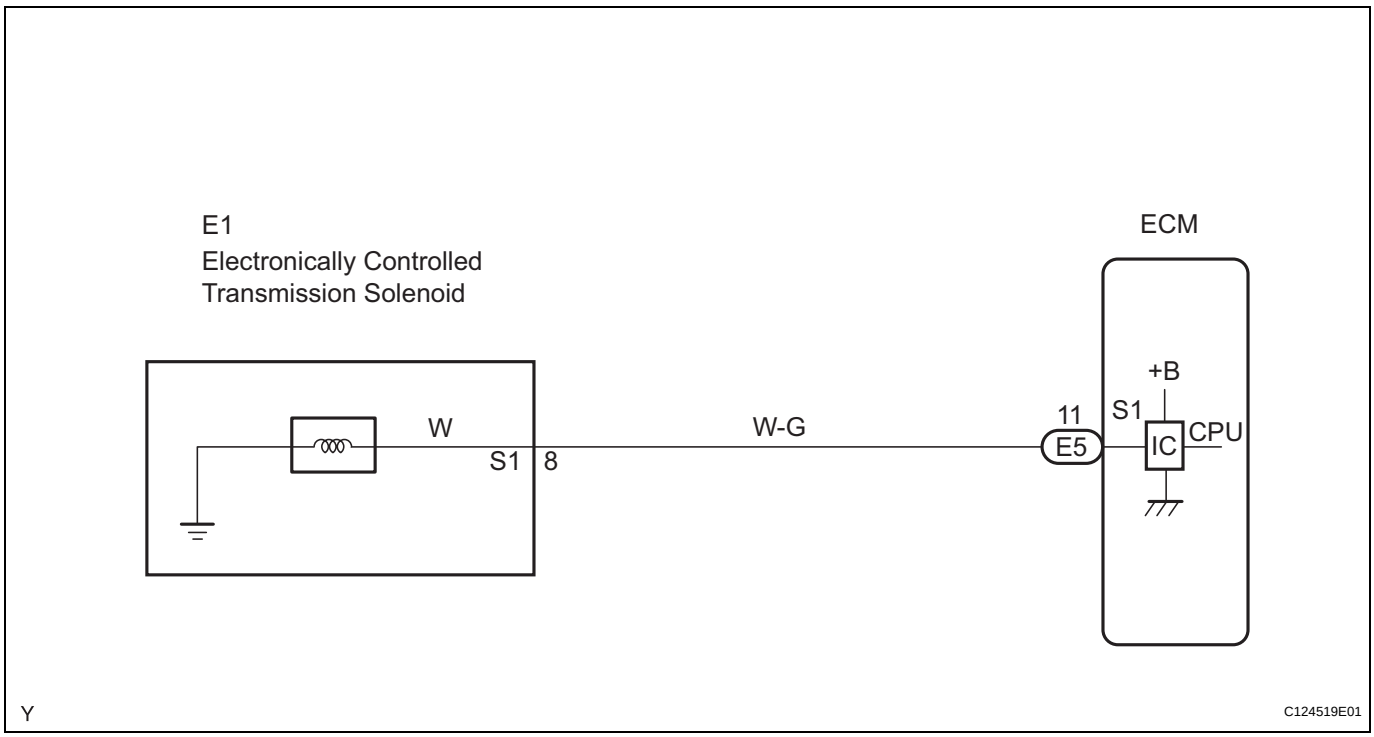

HINT:
The shift solenoid valve S1 is turned on/off normally when the shift lever is in the D position:

Gearshift controlled by ECM	1st	2nd	3rd	4th	5th
Shift solenoid valve S1	ON	ON	OFF	OFF	OFF

1	INSPECT TRANSMISSION WIRE (S1)

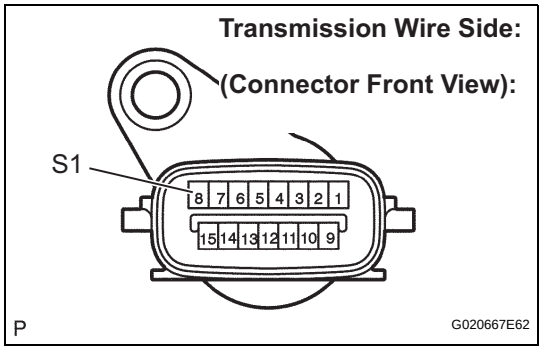

(a) Disconnect the transmission wire connector from the transmission.
(b) Measure the resistance.
Standard resistance

Tester Connection	Specified Condition
8 - Body ground	11 to 15 Ω at 20°C (68°F)

NG → **Go to step 3**

OK

2 CHECK HARNESS AND CONNECTOR (TRANSMISSION WIRE - ECM)

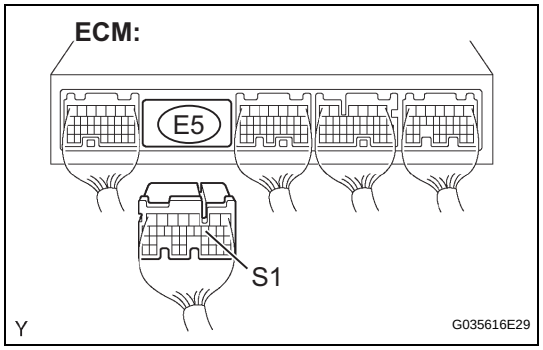

(a) Connect the transmission wire connector to the transmission.
(b) Disconnect the ECM connector.
(c) Measure the resistance.
Standard resistance

Tester Connection	Specified Condition
E5-11 (S1) - Body ground	11 to 15 Ω at 20°C (68°F)

NG → **REPAIR OR REPLACE HARNESS OR CONNECTOR**

OK

REPLACE ECM

3 INSPECT SHIFT SOLENOID VALVE S1

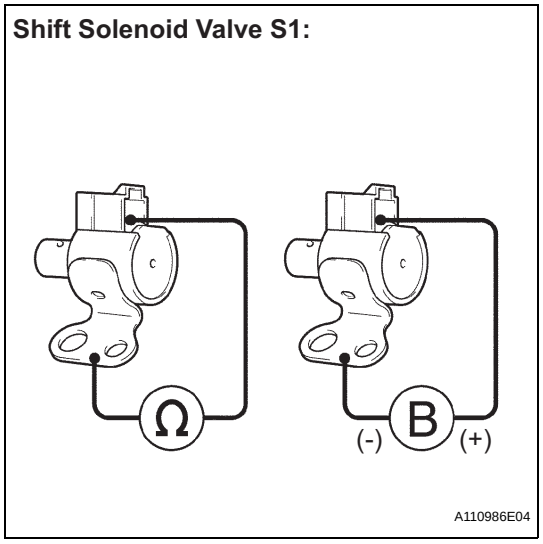

(a) Remove the shift solenoid valve S1.
(b) Measure the resistance.
Standard resistance

Tester Connection	Specified Condition
Solenoid Connector (S1) - Solenoid Body (S1)	11 to 15 Ω at 20°C (68°F)

(c) Connect the positive (+) lead to the terminal of the solenoid connector, and the negative (-) lead to the solenoid body.
OK:
The solenoid makes an operating noise.

NG → **REPLACE SHIFT SOLENOID VALVE S1**

OK

REPAIR OR REPLACE TRANSMISSION WIRE

DTC	P0976	Shift Solenoid "B" Control Circuit Low (Shift Solenoid Valve S2)

DTC	P0977	Shift Solenoid "B" Control Circuit High (Shift Solenoid Valve S2)

AT

DESCRIPTION

Shifting from 1st to 5th is performed in combination with the ON and OFF operation of the shift solenoid valves S1, S2, SR, SL1 and SL2 which are controlled by the ECM. If an open or short circuit occurs in any of the shift solenoid valves, the ECM controls the remaining normal shift solenoid valve to allow the vehicle to be driven smoothly (See page AT-32).

DTC No.	DTC Detection Conditions	Trouble Areas
P0976	ECM detects short in solenoid valve S2 circuit 2 times when solenoid valve S2 is operated (1-trip detection logic)	• Short in shift solenoid valve S2 circuit • Shift solenoid valve S2 • ECM
P0977	ECM detects open in solenoid valve S2 circuit 2 times when solenoid valve S2 is not operated (1-trip detection logic)	• Open in shift solenoid valve S2 circuit • Shift solenoid valve S2 • ECM

MONITOR DESCRIPTION

These DTCs indicate an open or short in the shift solenoid valve S2 circuit. When there is an open or short circuit in any shift solenoid valve circuits, the ECM detects the problem and illuminates the MIL and stores the DTC. When the shift solenoid valve S2 is on, if the resistance is 8 Ω or less, the ECM determines that there is a short malfunction in the shift solenoid valve S2 circuit.
When the shift solenoid valve S2 is off, if the resistance is 100 kΩ or more, the ECM determines that the shift solenoid valve S2 circuit is open (See page AT-32).

MONITOR STRATEGY

Related DTCs	P0976: Shift solenoid valve S2/Range check (Low resistance) P0977: Shift solenoid valve S2/Range check (High resistance)
Required sensors/Components	Shift solenoid valve S2
Frequency of operation	Continuous
Duration	0.064 seconds
MIL operation	Immediate
Sequence of operation	None

TYPICAL ENABLING CONDITIONS

P0976: Range check (Low resistance)

The monitor will run whenever the following DTCs are not present.	None
Shift solenoid valve S2	ON

P0977: Range check (High resistance)

The monitor will run whenever the following DTCs are not present.	None
Shift solenoid valve S2	OFF

TYPICAL MALFUNCTION THRESHOLDS

P0976: Range check (Low resistance)

Shift solenoid valve S2 resistance	8 Ω or less

P0977: Range check (High resistance)

Shift solenoid valve S2 resistance	100 kΩ or more

COMPONENT OPERATING RANGE

Shift solenoid valve S2 resistance	11 to 15 Ω at 20°C (68°F)

AT

WIRING DIAGRAM

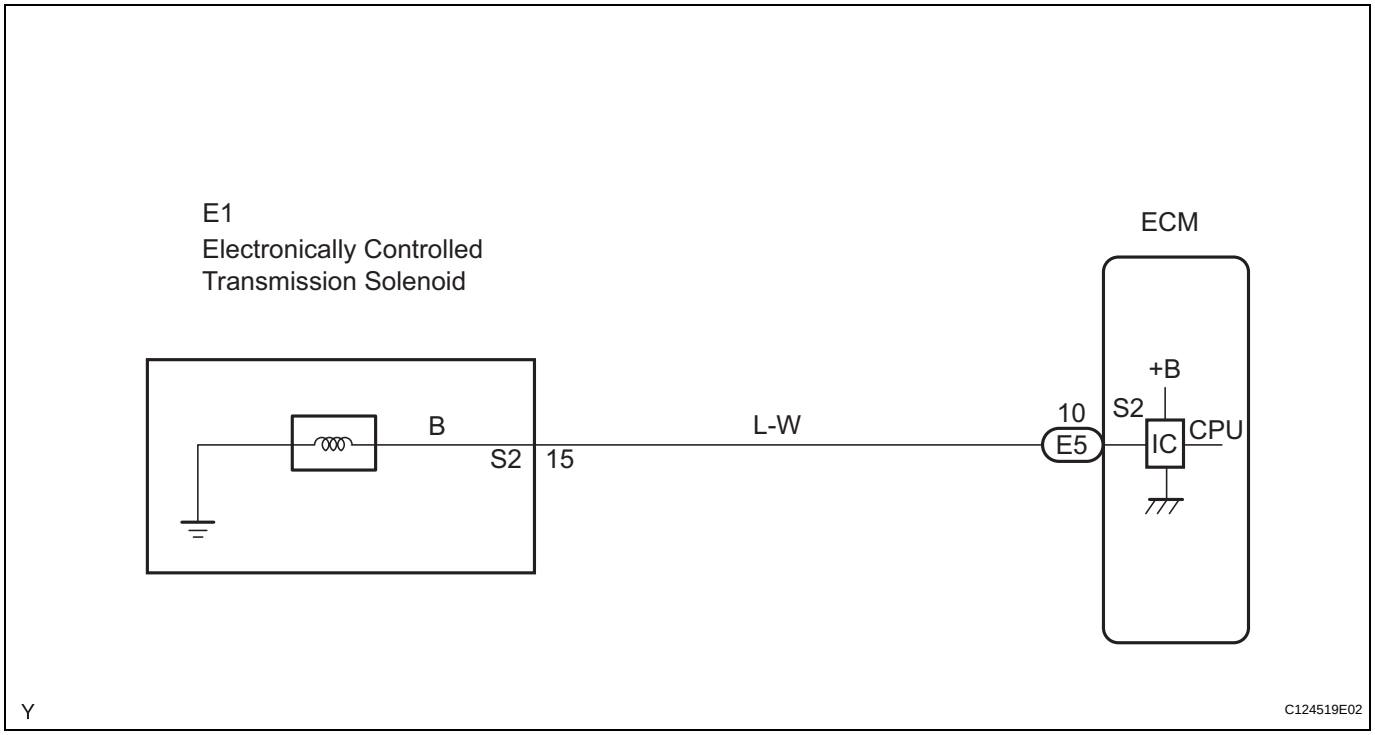

HINT:
The shift solenoid valve S2 is turned on/off normally when the shift lever is in the D position:

Gearshift controlled by ECM	1st	2nd	3rd	4th	5th
Shift solenoid valve S2	OFF	ON	ON	OFF	OFF

1	INSPECT TRANSMISSION WIRE (S2)

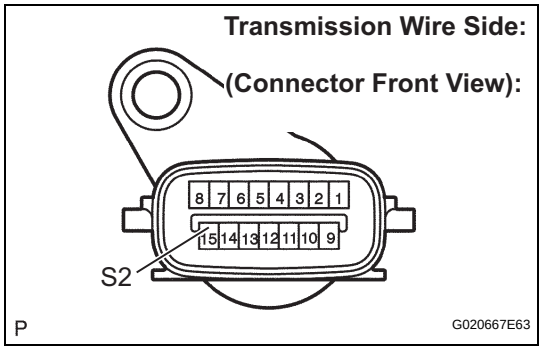

(a) Disconnect the transmission wire connector from the transmission.
(b) Measure the resistance.
Standard resistance

Tester Connection	Specified Condition
15 - Body ground	11 to 15 Ω at 20°C (68°F)

NG → **Go to step 3**

OK

AT

2	CHECK HARNESS AND CONNECTOR (TRANSMISSION WIRE - ECM)

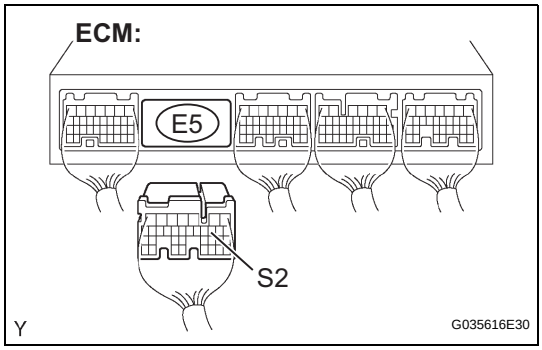

(a) Connect the transmission wire connector to the transmission.
(b) Disconnect the ECM connector.
(c) Measure the resistance.
Standard resistance

Tester Connection	Specified Condition
E5-10 (S2) - Body ground	11 to 15 Ω at 20°C (68°F)

NG → **REPAIR OR REPLACE HARNESS OR CONNECTOR**

OK

REPLACE ECM

3	INSPECT SHIFT SOLENOID VALVE S2

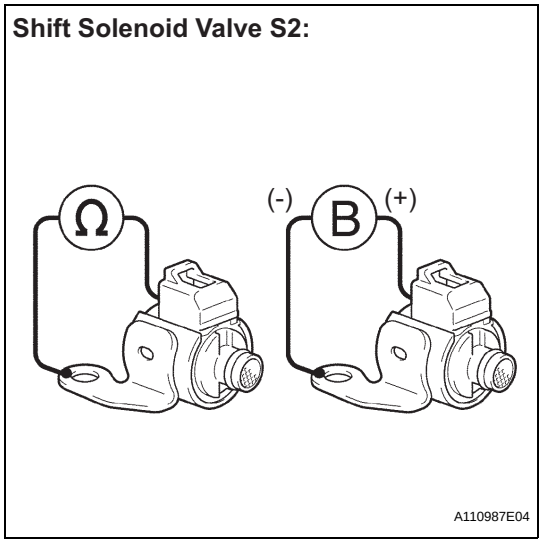

(a) Remove the shift solenoid valve S2.
(b) Measure the resistance.
Standard resistance

Tester Connection	Specified Condition
Solenoid Connector (S2) - Solenoid Body (S2)	11 to 15 Ω at 20°C (68°F)

(c) Connect the positive (+) lead to the terminal of the solenoid connector, and the negative (-) lead to the solenoid body.
OK:
The solenoid makes an operating noise.

NG → **REPLACE SHIFT SOLENOID VALVE S2**

OK

REPAIR OR REPLACE TRANSMISSION WIRE

DTC	P0985	Shift Solenoid "E" Control Circuit Low (Shift Solenoid Valve SR)

DTC	P0986	Shift Solenoid "E" Control Circuit High (Shift Solenoid Valve SR)

DESCRIPTION

Shifting from 1st to 5th is performed in combination with the ON and OFF operation of the shift solenoid valves S1, S2, SR, SL1 and SL2 which are controlled by the ECM. If an open or short circuit occurs in any of the shift solenoid valves, the ECM controls the remaining normal shift solenoid valves to allow the vehicle to be driven smoothly (See page AT-32).

DTC No.	DTC Detection Conditions	Trouble Areas
P0985	ECM detects short in solenoid valve SR circuit 2 times when solenoid valve SR is operated (1-trip detection logic)	• Short in shift solenoid valve SR circuit • Shift solenoid valve SR • ECM
P0986	ECM detects open in solenoid valve SR circuit 2 times when solenoid valve SR is not operated (1-trip detection logic)	• Open in shift solenoid valve SR circuit • Shift solenoid valve SR • ECM

MONITOR DESCRIPTION

These DTCs indicate an open or short in the shift solenoid valve SR circuit. When there is an open or short circuit in any shift solenoid valve circuits, the ECM detects the problem and illuminates the MIL and stores the DTC. When the shift solenoid valve SR is on, if the resistance is 8 Ω or less, the ECM determines that there is a short malfunction in the shift solenoid valve SR circuit.
When the shift solenoid valve SR is off, if the resistance is 100 kΩ or more, the ECM determines that the shift solenoid valve SR circuit is open (See page AT-32).

MONITOR STRATEGY

Related DTCs	P0985: Shift solenoid valve SR/Range check (Low resistance) P0986: Shift solenoid valve SR/Range check (High resistance)
Required sensors/Components	Shift solenoid valve SR
Frequency of operation	Continuous
Duration	0.064 seconds
MIL operation	Immediate
Sequence of operation	None

TYPICAL ENABLING CONDITIONS

P0985: Range check (Low resistance)

The monitor will run whenever the following DTCs are not present.	None
Shift solenoid valve SR	ON
Battery voltage	8 V or more
Ignition switch	ON
Starter	OFF

P0986: Range check (High resistance)

The monitor will run whenever the following DTCs are not present.	None
Shift solenoid valve SR	OFF
Battery voltage	8 V or more
Ignition switch	ON
Starter	OFF

TYPICAL MALFUNCTION THRESHOLDS

P0985: Range check (Low resistance)

Shift solenoid valve SR resistance	8 Ω or less

P0986: Range check (High resistance)

AT

Shift solenoid valve SR resistance	100 kΩ or more

COMPONENT OPERATING RANGE

Shift solenoid valve SR resistance	11 to 15 Ω at 20°C (68°F)

WIRING DIAGRAM

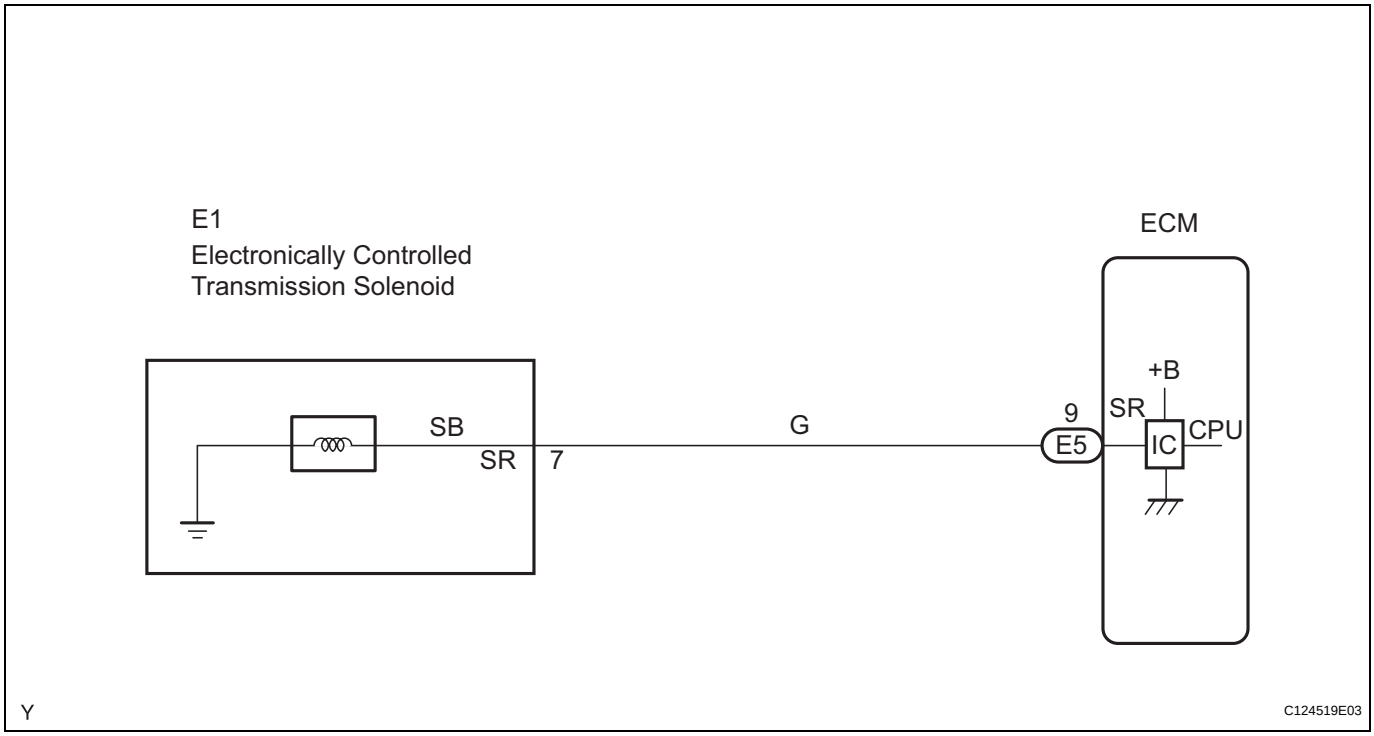

HINT:
The shift solenoid valve SR is turned on/off normally when the shift lever is in the D position:

Gearshift controlled by ECM	1st	2nd	3rd	4th	5th
Shift solenoid valve SR	OFF	OFF	OFF	OFF	ON

1	INSPECT TRANSMISSION WIRE (SR)

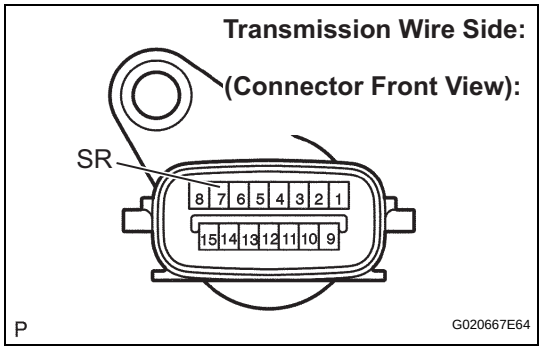

(a) Disconnect the transmission wire connector from the transmission.
(b) Measure the resistance.
Standard resistance

Tester Connection	Specified Condition
7 - Body ground	11 to 15 Ω at 20°C (68°F)

NG → **Go to step 3**

OK

2	CHECK HARNESS AND CONNECTOR (TRANSMISSION WIRE - ECM)

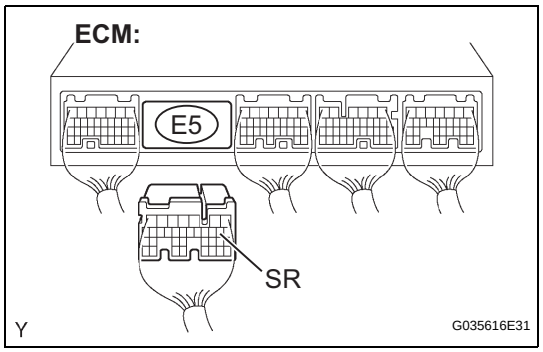

(a) Connect the transmission wire connector to the transmission.
(b) Disconnect the ECM connector.
(c) Measure the resistance.
Standard resistance

Tester Connection	Specified Condition
E5-9 (SR) - Body ground	11 to 15 Ω at 20°C (68°F)

NG → **REPAIR OR REPLACE HARNESS OR CONNECTOR**

OK

REPLACE ECM

3	INSPECT SHIFT SOLENOID VALVE SR

AT

Shift Solenoid Valve SR:

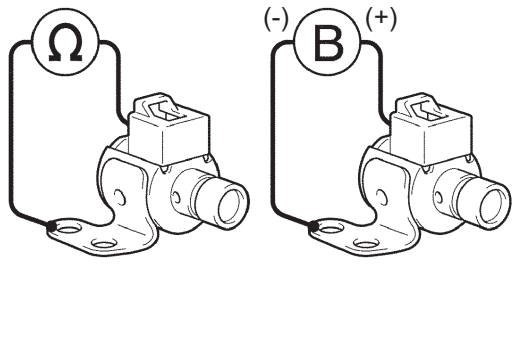

A110988E05

(a) Remove the shift solenoid valve SR.
(b) Measure the resistance.
Standard resistance

Tester Connection	Specified Condition
Solenoid Connector (SR) - Solenoid Body (SR)	11 to 15 Ω at 20°C (68°F)

(c) Connect the positive (+) lead to the terminal of the solenoid connector, and the negative (-) lead to the solenoid body.
OK:
The solenoid makes an operating noise.

NG → **REPLACE SHIFT SOLENOID VALVE SR**

OK

REPAIR OR REPLACE TRANSMISSION WIRE

DTC	P2714	Pressure Control Solenoid "D" Performance (Shift Solenoid Valve SLT)

DESCRIPTION

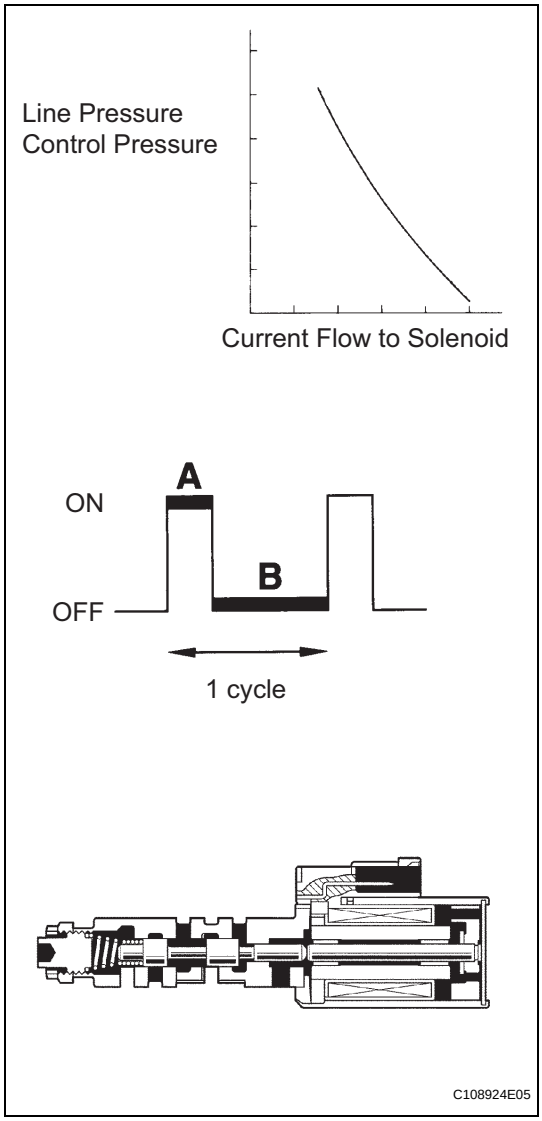

The linear solenoid valve (SLT) controls the transmission line pressure for smooth transmission operation based on signals from the throttle position sensor and the vehicle speed sensor. The ECM adjusts the duty ratio* of the SLT solenoid valve output signal to control the hydraulic line pressure coming from the primary regulator valve. Appropriate line pressure assures smooth shifting with varying engine outputs.
*: The duty ratio is the ratio of the period of continuity in one cycle.
For example, if A is the period of continuity in one cycle, and B is the period of non-continuity, then Duty Ratio=A/(A+B) x 100 (%)

DTC No.	DTC Detection Condition	Trouble Area
P2714	ECM detects malfunctions on SLT (ON side) according to the revolution difference between the turbine and the output shaft, and also by monitoring the oil pressure. (2 trip detection logic)	• Shift solenoid valve SLT remains open or closed • Shift solenoid valve S1, S2, SR, SL1 or SL2 remains open or closed • Valve body is blocked • Automatic transmission (clutch, brake or gear, etc.)

MONITOR DESCRIPTION

The ECM calculates the amount of heat absorbed by the friction material based on the difference in revolution (clutch slippage) between the turbine and output shaft. The ECM turns on the MIL and outputs this DTC when the amount of heat absorption exceeds the specified value.
When the shift solenoid valve SLT remains on, the oil pressure goes down and the clutch engagement force decreases.
NOTE: If driving continues under these conditions, the clutch will burn out and the vehicle will no longer be drivable.

MONITOR STRATEGY

Related DTCs	P2714 : Shift solenoid valve SLT/ON malfunction
Required sensors/Components (Main)	Shift solenoid valve SLT
Required sensors/Components (Related)	Valve body, ATF temperature sensor, Speed sensor (NT), Speed sensor (SP2)
Frequency of operation	Continuous
Duration	Immediate
MIL operation	2 driving cycles
Sequence of operation	None

TYPICAL ENABLING CONDITIONS

The monitor will run whenever the following DTCs are not present.	None
Turbine speed sensor (NT) circuit	Functioning normally
Output speed sensor (SP2) circuit	Functioning normally
Transmission fluid temperature sensor "A" circuit	Functioning normally
Shift solenoid "A" (S1) circuit	Functioning normally
Shift solenoid "B" (S2) circuit	Functioning normally
Shift solenoid "E" (SR) circuit	Functioning normally
Pressure control solenoid "A" (SL1) circuit	Functioning normally
Pressure control solenoid "B" (SL2) circuit	Functioning normally
Pressure control solenoid "D" (SLT) circuit	Functioning normally
ECT (Engine coolant temperature) sensor circuit	Functioning normally
Knock sensor circuit	Functioning normally
ETCS (Electronic throttle control system)	System not down
Transmission shift position	"D"
ECT	40°C (104°F) or more
Spark advance from max. retard timing by knock sensor control	0° CA or more
Engine	Starting
Transfer range	"High"*1
ATF temperature	10°C (50°F) or more

*1: Following conditions are met

Vehicle speed sensor "A" circuit	Functioning normally
Output speed sensor circuit	Functioning normally
Transfer output speed	143 rpm or more
Transfer input speed/Transfer output speed	0.9 to 1.1

TYPICAL MALFUNCTION THRESHOLDS

Summation of C1 clutch heat generations = SUM (Turbine speed - Output speed x Temporary gear ratio)	Specified value

HINT:
Performing the ACTIVE TEST using the intelligent tester allows components, such as the relay, VSV, and actuator, to be operated without removing any parts. Performing the ACTIVE TEST as a first step of troubleshooting is one method of shortening labor time.
It is possible to display the DATA LIST during the ACTIVE TEST.

1. Warm up the engine.
2. Turn the ignition switch off.
3. Connect the intelligent tester together with the CAN VIM (controller area network vehicle interface module) to the DLC3.
4. Turn the ignition switch to the ON position.
5. Push the "ON" button of the tester.
6. Clear the DTC.
7. Select the items "DIAGNOSIS/ ENHANCED OBD II/ ACTIVE TEST/ LINE PRESS UP".
8. According to the display on the tester, perform the "ACTIVE TEST".

Item	Test Details	Diagnostic Note
LINE PRESS UP *	[Test Details] Operate the shift solenoid SLT to raise the line pressure. [Vehicle Condition] • Vehicle Stopped • IDL: ON [HINT] OFF: Line pressure up (When the active test of "LINE PRESS UP" is performed the ECM commands the SLT solenoid to turn off). ON: No action (normal operation)	-

*: "LINE PRESS UP" in the ACTIVE TEST is performed to check the line pressure changes by connecting SST to the automatic transmission, which is used in the HYDRAULIC TEST (See page AT-16) as well.

HINT:
- The pressure values in ACTIVE TEST and HYDRAULIC TEST are different from each other.
- Normally, the line pressure detected in the ACTIVE TEST is approximately half of the value detected in the HYDRAULIC TEST's stall test.

1	CHECK ANY OTHER DTCS OUTPUT (IN ADDITION TO DTC P2714)

(a) Connect the intelligent tester to the DLC3.
(b) Turn the ignition switch to the ON position and push the intelligent tester main switch ON.
(c) Select the items "DIAGNOSIS/ ENHANCED OBD II/ DTC INFO/ CURRENT CODES".
(d) Read the DTCs using the intelligent tester.

Result:

Display (DTC Output)	Proceed to
Only "P2714" is output	A
"P2714" and other DTCs	B

HINT:
If any codes besides "P2714" are output, perform troubleshooting for those DTCs first.

B → GO TO DTC CHART

A

2	PERFORM ACTIVE TEST USING INTELLIGENT TESTER (LINE PRESS UP) (See page AT-82)

NG → Go to step 9

AT

OK

3	PERFORM ACTIVE TEST USING INTELLIGENT TESTER (SHIFT)

(a) Connect the intelligent tester to the DLC3.
(b) Turn the ignition switch ON.
(c) Turn the intelligent tester ON.
(d) Clear the DTC (See page AT-31).
(e) Enter the following menus: DIAGNOSIS / ENHANCED OBD II / ACTIVE TEST.
(f) Follow the instructions on the tester and perform the ACTIVE TEST.

HINT:
While driving, the shift position can be forcibly changed with the intelligent tester.

Item	Test Details	Diagnostic Note
SHIFT	[Test Details] Operate the shift solenoid valve and set each shift position. [Vehicle Condition] • IDL: ON • Less than 30 mph (50 km/h) [Other information] • Press "→" button: Shift up • Press "←" button: Shift down	The operation of the shift solenoid valves can be checked.

HINT:
- This test can be conducted when the vehicle speed is 30 mph (50 km/h) or less.
- The 4th to 5th up-shift must be performed with the accelerator pedal released.
- The 5th to 4th down-shift must be performed with the accelerator pedal released.
- Do not operate the accelerator pedal for at least 2 seconds after shifting and do not shift successively.
- The shift position commanded by the ECM is shown in the DATA LIST (SHIFT) display on the intelligent tester.

(g) Compare the ECM gear shift command and the actual gear position.

ECM gear shift command			1st	2nd	3rd	4th	5th	Proceed to
Actual gear position under malfunction	Shift solenoid S1	Stuck ON	1st	2nd	2nd	1st	N*1	A
		Stuck OFF	4th	3rd	3rd	4th	5th	
	Shift solenoid S2	Stuck ON	2nd	2nd	3rd	3rd	N*1	B
		Stuck OFF	1st	1st	4th	4th	5th	
	Shift solenoid SL2	Stuck ON	1st	2nd	3rd	4th	N*1	C
		Stuck OFF	1st	2nd	3rd	4th	5th	
	Shift solenoid SR	Stuck ON*2	1st	2nd	3rd	4th	5th	D
		Stuck OFF	1st	2nd	3rd	4th	4th	

HINT:
- *1: Neutral
- *2: Shift shock increases extremely when a malfunction occurs.
- Gear shift can be determined by paying attention to changes in rpm.

B	Go to step 5
C	Go to step 6
D	Go to step 7
OK	Go to step 9

A

4	INSPECT SHIFT SOLENOID VALVE S1 (See page AT-111)

OK	Go to step 10

NG

REPLACE SHIFT SOLENOID VALVE S1

5	INSPECT SHIFT SOLENOID VALVE S2 (See page AT-114)

OK	Go to step 10

NG

REPLACE SHIFT SOLENOID VALVE S2

6	INSPECT SHIFT SOLENOID VALVE SL2 (See page AT-102)

OK	Go to step 10

NG

REPLACE SHIFT SOLENOID VALVE SL2

7	INSPECT SHIFT SOLENOID VALVE SR (See page AT-118)

NG	REPLACE SHIFT SOLENOID VALVE SR

OK

8	INSPECT SHIFT SOLENOID VALVE SL1 (See page AT-77)

AT

OK → Go to step 10

NG

REPLACE SHIFT SOLENOID VALVE SL1

9	INSPECT SHIFT SOLENOID VALVE SLT

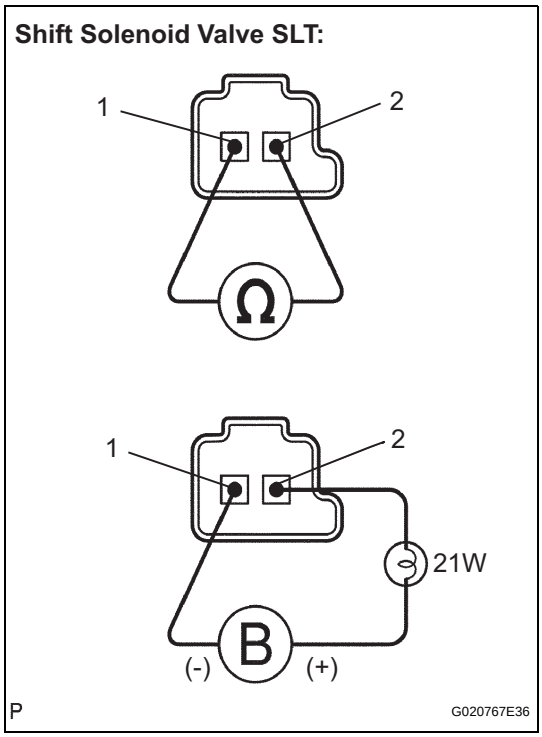

(a) Remove the shift solenoid valve SLT.
(b) Measure the resistance.
Standard resistance

Tester Connection	Specified Condition
1 - 2	5.0 to 5.6 Ω at 20°C (68°F)

(c) Connect the positive (+) lead with a 21 W bulb to terminal 2 and the negative (-) lead to terminal 1 of the solenoid valve connector, then check the movement of the valve.
OK:
The solenoid makes an operating noise.

NG → REPLACE SHIFT SOLENOID VALVE SLT

OK

10	INSPECT TRANSMISSION VALVE BODY ASSEMBLY (See chapter 2 in the problem symptoms table)

OK:
There are no foreign objects on any valves and they operate smoothly.

NG → REPAIR OR REPLACE TRANSMISSION VALVE BODY ASSEMBLY

OK

11	INSPECT TORQUE CONVERTER CLUTCH ASSEMBLY

(a) Check the torque converter clutch assembly (See page AT-169).

OK:

The torque converter clutch operates normally.

NG → **REPLACE TORQUE CONVERTER CLUTCH ASSEMBLY**

OK

REPAIR OR REPLACE AUTOMATIC TRANSMISSION ASSEMBLY

DTC	P2716	Pressure Control Solenoid "D" Electrical (Shift Solenoid Valve SLT)

DESCRIPTION

Refer to DTC P2714 (See page AT-111).

DTC No.	DTC Detection Conditions	Trouble Areas
P2716	Open or short is detected in shift solenoid valve SLT circuit for 1 second or more while driving (1-trip detection logic)	• Open or short in shift solenoid valve SLT circuit • Shift solenoid valve SLT • ECM

MONITOR DESCRIPTION

When an open or short is detected in the linear solenoid valve (SLT) circuit, the ECM interprets this as a fault.
The ECM turns on the MIL and stores the DTC.

MONITOR STRATEGY

Related DTCs	P2716: Shift solenoid valve SLT/Range check
Required sensors/Components	Shift solenoid valve SLT
Frequency of operation	Continuous
Duration	1 second
MIL operation	Immediate
Sequence of operation	None

TYPICAL ENABLING CONDITIONS

The monitor will run whenever the following DTCs are not present.	None
Battery voltage	10 V or more
CPU requested duty ratio to SLT	Less than 75 %
Ignition switch	ON
Starter	OFF

TYPICAL MALFUNCTION THRESHOLDS

Output signal duty	100 %

COMPONENT OPERATING RANGE

Output signal duty ratio	Less than 100 %

WIRING DIAGRAM

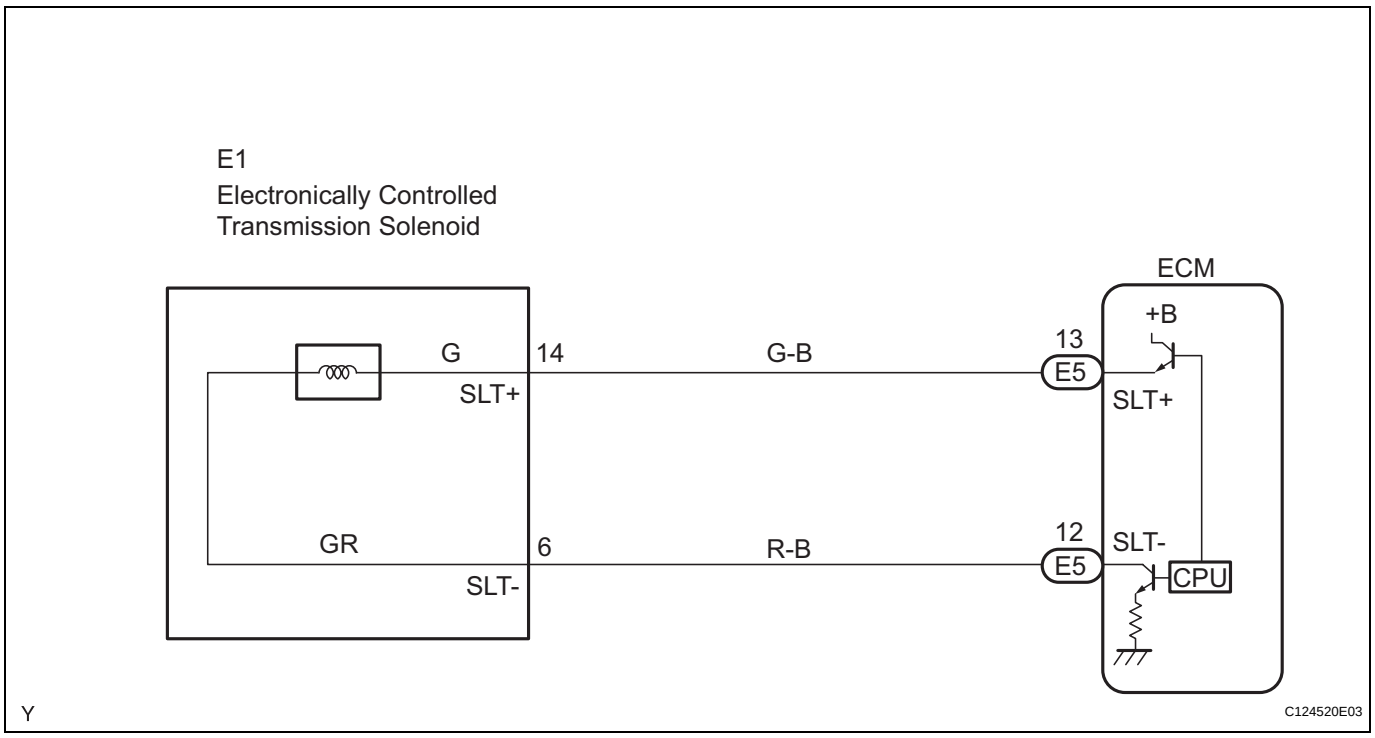

1	INSPECT TRANSMISSION WIRE (SLT)

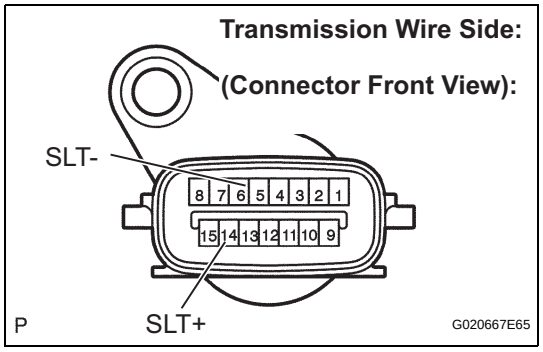

(a) Disconnect the transmission wire connector from the transmission.

(b) Measure the resistance.

Standard resistance

Tester Connection	Specified Condition
14 (SLT+) - 6 (SLT-)	5.0 to 5.6 Ω at 20°C (68°F)

(c) Measure the resistance.

Standard resistance (Check for short)

Tester Connection	Specified Condition
14 (SLT+) - Body ground	10 kΩ or higher
6 (SLT-) - Body ground	10 kΩ or higher

NG → **Go to step 3**

OK

AT

2 CHECK HARNESS AND CONNECTOR (TRANSMISSION WIRE - ECM)

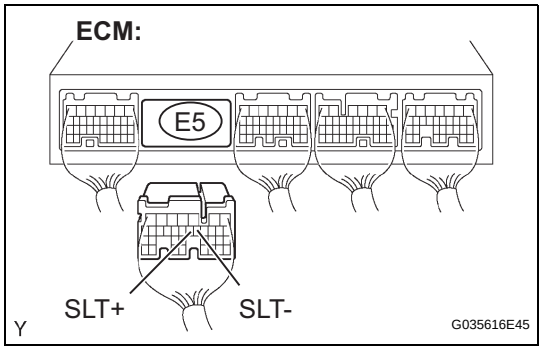

(a) Connect the transmission wire connector to the transmission.
(b) Disconnect the ECM connector.
(c) Measure the resistance.
Standard resistance

Tester Connection	Specified Condition
E5-13 (SLT+) - E5-12 (SLT-)	5.0 to 5.6 Ω at 20°C (68°F)

(d) Measure the resistance.
Standard resistance (Check for short)

Tester Connection	Specified Condition
E5-13 (SLT+) - Body ground	10 kΩ or higher
E5-12 (SLT-) - Body ground	10 kΩ or higher

NG → **REPAIR OR REPLACE HARNESS OR CONNECTOR**

OK

REPLACE ECM

3 INSPECT SHIFT SOLENOID VALVE SLT

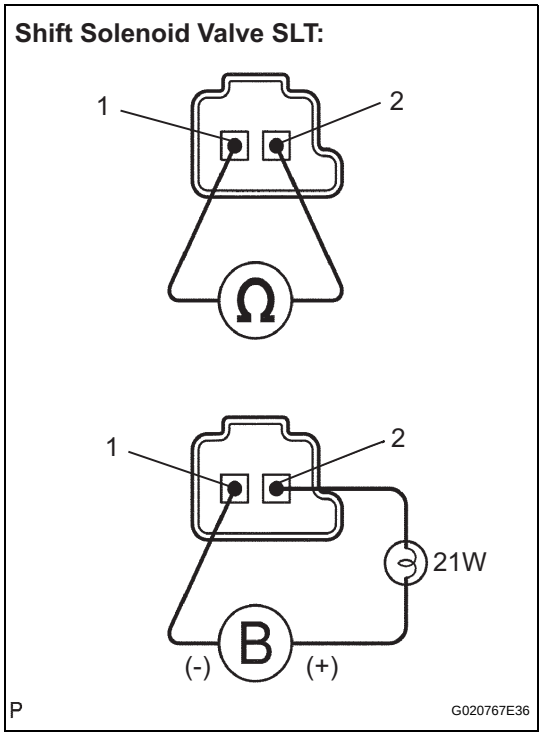

(a) Remove the shift solenoid valve SLT.
(b) Measure the resistance.
Standard resistance

Tester Connection	Specified Condition
1 - 2	5.0 to 5.6 Ω at 20°C (68°F)

(c) Connect the positive (+) lead with a 21 W bulb to terminal 2 and the negative (-) lead to terminal 1 of the solenoid valve connector, then check the movement of the valve.
OK:
The solenoid makes an operating noise.

NG → **REPLACE SHIFT SOLENOID VALVE SLT**

OK

REPAIR OR REPLACE TRANSMISSION WIRE

DTC	P2740	Transmission Fluid Temperature Sensor "B" Circuit

DTC	P2742	Transmission Fluid Temperature Sensor "B" Circuit Low Input

DTC	P2743	Transmission Fluid Temperature Sensor "B" Circuit High Input

AT

DESCRIPTION

The No. 2 Automatic Transmission Fluid (ATF) temperature sensor is on the transmission, just before the oil cooler inlet pipeline.

If the ECM detects an abnormally high ATF temperature through this sensor, it illuminates the warning light to indicate the problem to the driver.

HINT:

- The ATF temperature is liable to increase under vehicle conditions such as towing, climbing hills and in traffic.
- If there is a short malfunction in the No. 2 ATF temperature sensor, the ECM receives signals from the sensor, which indicate that the ATF temperature is 150°C (302°F) or more.

The symptoms and recovery conditions, when the sensor is normal or there is a short malfunction in the sensor, are as shown in the table below.

No.2 ATF Temperature Sensor Status	Detection Condition	Symptom	Recovery Condition
Sensor is normal	• ATF temperature more than 150°C (302°F)	• ATF temperature warning light remains on	• ATF temperature less than 135°C (275°F) *2
	• ATF temperature more than 130°C (266°F)	• Shift point too high	• ATF temperature less than 110°C (230°F)
	When the conditions (a) and (b) are satisfied continually (a) ATF temperature more than130°C (266°F) (b) Engine coolant temperature more than 95°C (203°F)	• Lock-up in 3rd gear *1	• ATF temperature less than 110°C (230°F) *2 and engine coolant temperature less than 95°C (203°F)
Sensor is short	• Any conditions	• ATF temperature warning light remains on • Shift point too high	• Symptoms still occur
	• Engine coolant temperature more than 95°C (203°F)	• Lock-up in 3rd gear *1	• Symptom still occurs

HINT:

*1: When the ATF temperature is normal, the transmission locks up in 5th gear with the shift lever in the D position and in 4th gear with the shift lever in the 4th position.

*2: When the ATF temperature is in the normal range, it decreases to less than 135°C (275°F) within 5 minutes of the shift lever being moved to the P or N position, while idling.

DTC No.	DTC Detection Conditions	Trouble Areas
P2740	Conditions (a) and (b) are detected momentarily within 0.5 seconds when neither P2742 nor P2743 is detected (1-trip detection logic) (a) No. 2 ATF temperature sensor resistance (voltage) is less than 25 Ω (0.046 V) (b) No. 2 ATF temperature sensor resistance (voltage) is more than 156 kΩ (4.915 V) HINT: Within 0.5 seconds the malfunction changes from (a) to (b) or (b) to (a)	• Open or short in No.2 ATF temperature sensor circuit • No.2 ATF temperature sensor • ECM

DTC No.	DTC Detection Conditions	Trouble Areas
P2742	No. 2 ATF temperature sensor resistance (voltage) is less than 25 Ω (0.046 V) for 0.5 seconds or more (1-trip detection logic)	• Short in No.2 ATF temperature sensor circuit • No.2 ATF temperature sensor • ECM
P2743	No. 2 ATF temperature sensor resistance (voltage) is more than 156 kΩ (4.915 V) for 0.5 seconds or more 15 minutes or more after starting engine (1-tip detection logic)	• Open in No.2 ATF temperature sensor circuit • No.2 ATF temperature sensor • ECM

MONITOR DESCRIPTION

These DTCs indicate an open or short in the No. 2 Automatic Transmission Fluid (ATF) temperature sensor circuit. The No. 2 ATF temperature sensor converts the ATF temperature to an electrical resistance value. Based on the resistance, the ECM determines the ATF temperature, and detects any open or short malfunctions in the No. 2 ATF temperature sensor circuit. If the resistance (voltage) of the No. 2 ATF temperature sensor is less than 25 Ω (0.046 V) or more than 156 kΩ (4.915 V), the ECM interprets this as a fault in the No. 2 ATF temperature sensor or its wiring. The ECM turns on the MIL and stores a DTC.

MONITOR STRATEGY

Related DTCs	P2740 : No. 2 ATF temperature sensor/Range check (Fluttering) P2742 : No. 2 ATF temperature sensor/Range check (Low voltage) P2743 : No. 2 ATF temperature sensor/Range check (High voltage)
Required sensors/Components	No. 2 ATF temperature sensor
Frequency of operation	Continuous
Duration	0.5 seconds
MIL operation	Immediate
Sequence of operation	None

TYPICAL ENABLING CONDITIONS

P2740: Range check (Fluttering)

The monitor will run whenever the following DTCs are not present.	None
The typical enabling condition is not available.	-

P2742: Range check (Low voltage)

The monitor will run whenever the following DTCs are not present.	None
The typical enabling condition is not available.	-

P2743: Range check (High voltage)

The monitor will run whenever the following DTCs are not present.	None
Time after engine start	15 minutes or more

TYPICAL MALFUNCTION THRESHOLDS

P2740: Range check (Fluttering)

No. 2 ATF temperature sensor voltage	Less than 0.046 V or More than 4.915 V

P2742: Range check (Low voltage)

No. 2 ATF temperature sensor voltage	Less than 0.046 V

P2743: Range check (High voltage)

No. 2 ATF temperature sensor voltage	More than 4.915 V

COMPONENT OPERATING RANGE

ATF temperature sensor	Atmospheric temperature up to approximately 130°C (266°F)

WIRING DIAGRAM

AT

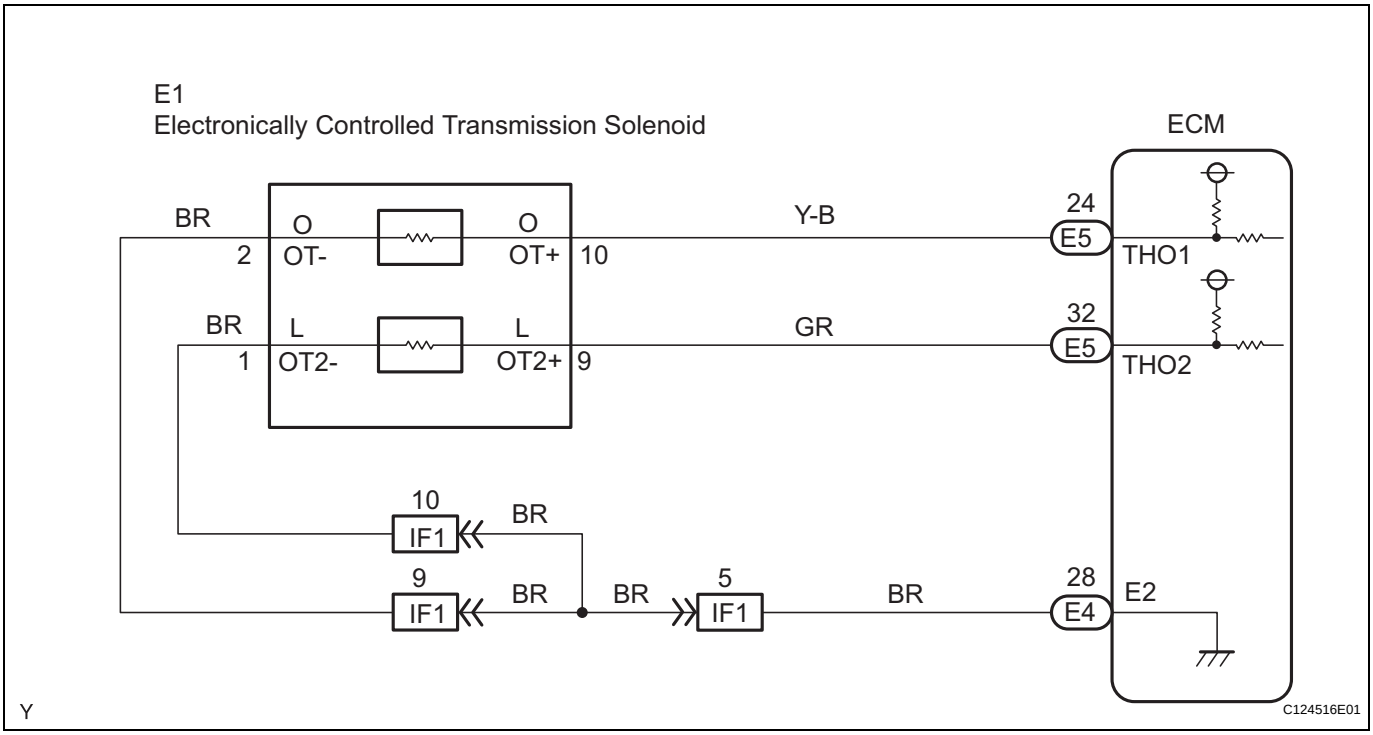

HINT:
According to the DATA LIST displayed on the intelligent tester, you can read the values of components, such as the switches, sensors, actuators, without removing any parts. Reading the DATA LIST as a first step of troubleshooting is one method of shortening labor time.

NOTICE:

In the table below, the values listed under "Normal Condition" are for reference only. Do not depend solely on these reference values when judging whether a part is faulty or not.

1. Warm up the engine.
2. Turn the ignition switch off.
3. Connect the intelligent tester together with the CAN VIM (controller area network vehicle interface module) to the DLC3.
4. Turn the ignition switch to the ON position.
5. Push the "ON" button of the tester.
6. Select the items "DIAGNOSIS/ ENHANCED OBD II/ DATA LIST"/ A/T.
7. According to the display on the tester, read the "DATA LIST".

Item	Measurement Item/ Range (display)	Normal Condition
AT OIL TEMP2	No. 2 ATF Temperature Sensor Value/ min.: -40°C (-40°F) max.: 215°C (419°F)	• After Stall Test: Approximately 80°C (176°F) • Equal to ambient temperature during cold soak

HINT:
When DTC P2742 is output and intelligent tester reading is 150°C (302°F) or more, there is a short circuit.
When DTC P2743 is output and intelligent tester reading is -40°C (-40°F), there is an open circuit.

Measure the resistance between terminal THO2 (OT2) and the body ground.

Temperature Displayed	Malfunction
-40°C (-40°F)	Open circuit
150°C (302°F) or more	Short circuit

1 INSPECT TRANSMISSION WIRE (NO.2 ATF TEMPERATURE SENSOR)

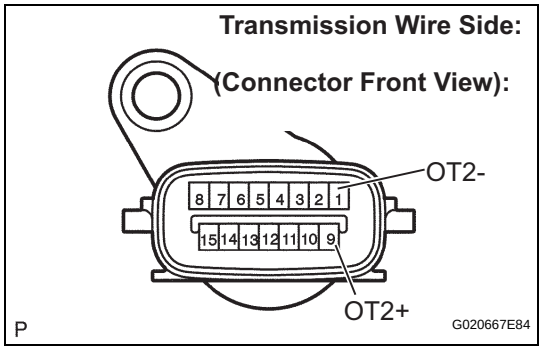

(a) Disconnect the transmission wire connector from the transmission.
(b) Measure the resistance.
Standard resistance

Tester Connection	Specified Condition
1 (OT2-) - 9 (OT2+)	79 Ω to 156 kΩ

(c) Measure the resistance.
Standard resistance (Check for short)

Tester Connection	Specified Condition
1 (OT2-) - Body ground	10 kΩ or higher
9 (OT2+) - Body ground	10 kΩ or higher

HINT:
If the resistance is out of the specified range with either the ATF temperature shown in the table below, the driveability of the vehicle may decrease.

ATF Temperature	Specified Condition
20°C (68°F)	3 to 4 kΩ
110°C (230°F)	0.22 to 0.28 kΩ

NG → **REPAIR OR REPLACE TRANSMISSION WIRE**

OK

2 CHECK HARNESS AND CONNECTOR (TRANSMISSION WIRE - ECM)

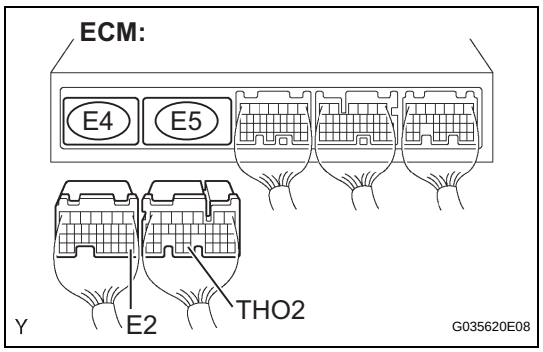

(a) Connect the transmission wire connector to the transmission.
(b) Disconnect the ECM connectors.
(c) Measure the resistance.
Standard resistance

Tester Connection	Specified Condition
E5-32 (THO2) - E4-28 (E2)	79 Ω to 156 kΩ

(d) Measure the resistance.
Standard resistance (Check for short)

Tester Connection	Specified Condition
E5-32 (THO2) - Body ground	10 kΩ or higher
E4-28 (E2) - Body ground	10 kΩ or higher

NG → **REPAIR OR REPLACE HARNESS OR CONNECTOR**

OK

AT

REPLACE ECM

DTC	P2757	Torque Converter Clutch Pressure Control Solenoid Performance (Shift Solenoid Valve SLU)

DESCRIPTION

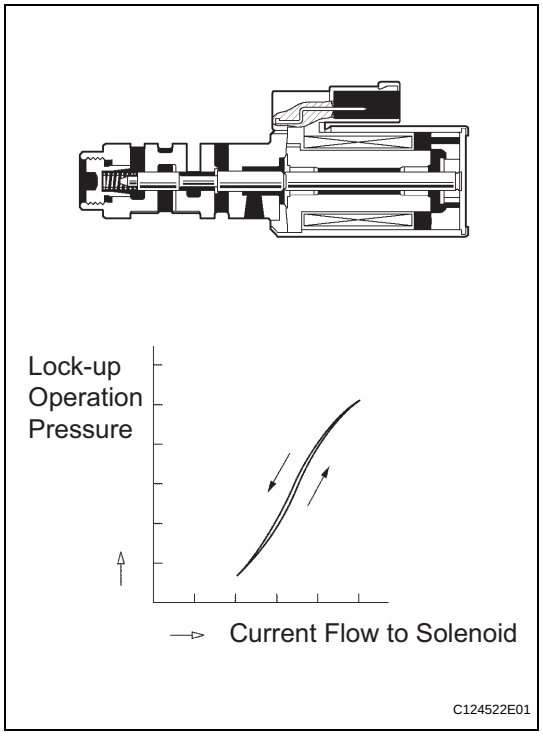

The ECM uses the signals from the throttle position sensor, mass air flow meter, turbine (input) speed sensor, output speed sensor and crankshaft position sensor, to monitor the engagement condition of the lock-up clutch.
Then the ECM compares the engagement condition of the lock-up clutch with the lock-up schedule in the ECM memory to detect any mechanical problems with the shift solenoid valve SLU, valve body or torque converter clutch.

DTC No.	DTC Detection Conditions	Trouble Areas
P2757	Lock-up does not occur when driving in the lock-up range (normal driving at 50 mph [80 km/h]), or lock-up remains ON in the lock-up OFF range. (2-trip detection logic)	• Shift solenoid valve SLU remains open or closed • Valve body is blocked • Shift solenoid valve SLU • Torque converter clutch • Automatic transmission (clutch, brake or gear, etc.) • Line pressure is too low

MONITOR DESCRIPTION

Torque converter lock-up is controlled by the ECM based on turbine (input) speed sensor NT, output speed sensor SP2, engine rpm, engine load, engine coolant temperature, vehicle speed, transmission fluid temperature, and gear selection. The ECM determines the lock-up status of the torque converter by comparing the engine rpm (NE) with the input turbine rpm (NT). The ECM calculates the actual transmission gear by comparing input turbine rpm (NT) with output shaft rpm (SP2). When the conditions are appropriate, the ECM requests "lock-up" by applying the control voltage to the shift solenoid SLU. When the SLU is turned on, solenoid SLU applies pressure to the lock-up relay valve and locks the torque converter clutch.
If the ECM detects no lock-up after lock-up has been requested or if it detects lock-up when it is not requested, the ECM interprets this as a fault in the shift solenoid valve SLU or lock-up system performance. The ECM turns on the MIL and stores the DTC.

Example:
When any of the following are met, the ECM interprets it as a malfunction.
1. There is a difference in rotation between before and after the torque converter even when the ECM requests lock-up.
   (Engine speed is at least 70 rpm greater than the input turbine speed.)
2. There is no difference in rotation between before and after the torque converter even when the ECM requests lock-up off.
   (The difference between the engine speed and input turbine speed is less than 35 rpm.)

MONITOR STRATEGY

Related DTCs	P2757: Shift solenoid valve SLU/OFF malfunction Shift solenoid valve SLU/ON malfunction
Required sensors/Components (Main)	Shift solenoid valve SLU
Required sensors/Components (Related)	Valve body, Vehicle speed sensor, Throttle position sensor, Speed sensor (NT), Speed sensor (SP2)
Frequency of operation	Continuous
Duration	OFF malfunction (A): 2 seconds OFF malfunction (B): 0.4 seconds ON malfunction: 1.8 seconds
MIL operation	2 driving cycles
Sequence of operation	None

TYPICAL ENABLING CONDITIONS

The following conditions are common to all OFF malfunctions (A), (B) and ON malfunction.

The monitor will run whenever the following DTCs are not present.	None
Turbine speed sensor (NT) circuit	Functioning normally
Output speed sensor (SP2) circuit	Functioning normally
Shift solenoid "A" (S1) circuit	Functioning normally
Shift solenoid "B" (S2) circuit	Functioning normally
Shift solenoid "E" (SR) circuit	Functioning normally
Torque converter clutch pressure control solenoid circuit	Functioning normally
Knock sensor circuit	Functioning normally
ETCS (Electronic throttle control system)	System not down
Transmission shift position	"D"
ECT	40°C (104°F) or more
Spark advance from max. retard timing by knock sensor control	0° CA or more
Engine	Starting
ECM selected gear	4th or 5th
Vehicle speed	15.5 mph (25 km/h) or more
Shift solenoid "A" (S1) circuit	Functioning normally
Shift solenoid "B" (S2) circuit	Functioning normally
Pressure control solenoid "B" (SL2) circuit	Functioning normally
1-2 shift valve	Functioning normally
Transfer neutral position switch	OFF
Transfer range	"High" *1

*1: Following conditions are met

Vehicle speed sensor "A" circuit	Functioning normally

Output speed sensor circuit	Functioning normally
Transfer output speed	143 rpm or more
Transfer input speed/Transfer output speed	0.9 to 1.1

OFF malfunction (A)

ECM lock-up request	ON (SLU pressure: 513 kPa or more)
Vehicle speed	Less than 62.2 mph (100 km/h)

OFF malfunction (B)

ECM selected gear	2nd
Vehicle speed	1.2 mph (2 km/h) or more
Output speed	2nd → 1st down shift point or more
Throttle valve opening angle	6.5 % or more at engine speed of 2,000 rpm (Conditions vary with engine speed)

ON malfunction

ECM lock-up request	OFF (SLU pressure: less than 4 kPa)
Throttle valve opening angle	7 % or more
Vehicle speed	Less than 37.3 mph (60 km/h)

TYPICAL MALFUNCTION THRESHOLDS

Both of the following conditions are met: OFF malfunction (A) and (B)

OFF malfunction (A)

Engine speed - Turbine speed	70 rpm or more

OFF malfunction (B)

Turbine speed/Output speed	Not 3.3 to 7.50

ON malfunction
2 detections are necessary in 1 driving cycle.
1st detection; temporary flag ON
2nd detection; pending fault code ON
Vehicle speed must be under 6.2 mph (10 km/h) once before the 2nd detection.

Difference between engine speed and turbine speed	Less than 35 rpm

HINT:
Performing the ACTIVE TEST using the intelligent tester allows components, such as, the relay, VSV, and actuator, to be operated without removing any parts. Performing the ACTIVE TEST as a first step of troubleshooting is one method of shortening labor time.
It is possible to display the DATA LIST during the ACTIVE TEST.

1. Warm up the engine.
2. Turn the ignition switch off.
3. Connect the intelligent tester together with the CAN VIM (controller area network vehicle interface module) to the DLC3.
4. Turn the ignition switch to the ON position.
5. Push the "ON" button of the tester.
6. Clear the DTC.
7. Select the items "DIAGNOSIS/ ENHANCED OBD II/ ACTIVE TEST/ LOCK UP".

8. According to the display on the tester, perform the "ACTIVE TEST".

Item	Test Details	Diagnostic Note
LOCK UP	[Test Details] Control the shift solenoid SLU to set the automatic transmission to the lock-up condition. [Vehicle Condition] Vehicle Speed: 36 mph (60 km/h) or more	Possible to check the SLU operation.

AT

HINT:
This test can be conducted when the vehicle speed is 36 mph (60 km/h) or more.

9. Lightly depress the accelerator pedal and check that the engine speed does not change abruptly.

HINT:

- When changing the accelerator pedal opening angle while driving, if the engine speed does not change, lock-up is on.
- Slowly release, but not fully, the accelerator pedal in order to decelerate. (Fully releasing the pedal causes closure of the throttle valve and lock-up may be turned off automatically.)

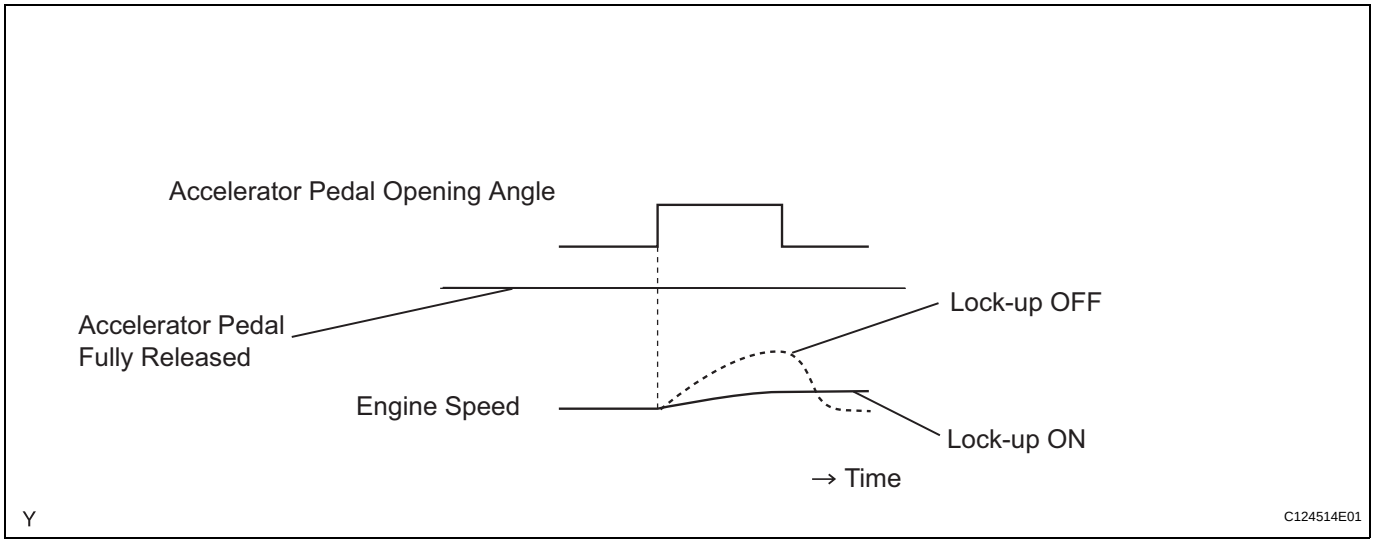

1	CHECK ANY OTHER DTCS OUTPUT (IN ADDITION TO DTC P2757)

(a) Connect the intelligent tester to the DLC3.
(b) Turn the ignition switch to the ON position and push the intelligent tester main switch ON.
(c) Select the items "DIAGNOSIS/ ENHANCED OBD II/ DTC INFO/ CURRENT CODES".
(d) Read the DTCs using the intelligent tester.

Result:

Display (DTC Output)	Proceed to
Only "P2757" is output	A
P2757" and other DTCs	B

HINT:
If any codes besides "P2757" are output, perform troubleshooting for those DTCs first.

B → **GO TO DTC CHART**

A

2	INSPECT SHIFT SOLENOID VALVE SLU

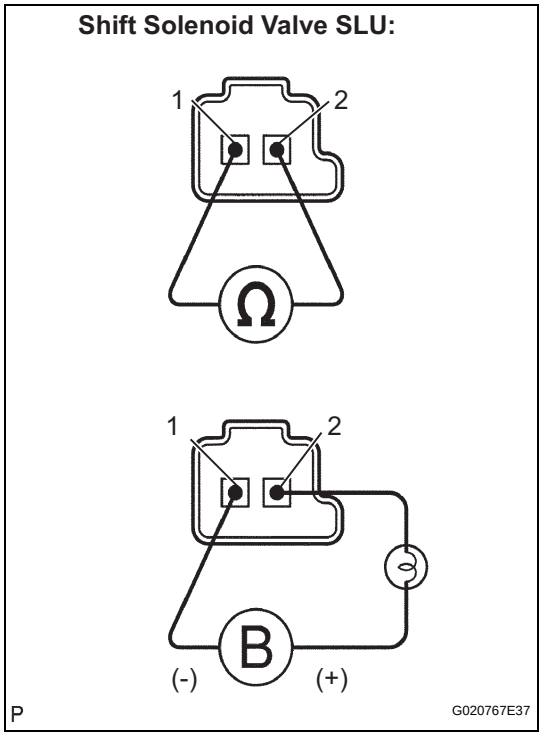

(a) Remove the shift solenoid valve SLU.
(b) Measure the resistance.
Standard resistance

Tester Connection	Specified Condition
1 - 2	5.0 to 5.6 Ω at 20°C (68°F)

(c) Connect the positive (+) lead with a 21 W bulb to terminal 2 and the negative (-) lead to terminal 1 of the solenoid valve connector, then check the movement of the valve.
OK:
The solenoid makes an operating noise.

NG → **REPLACE SHIFT SOLENOID VALVE SLU**

OK

3	INSPECT TRANSMISSION VALVE BODY ASSEMBLY (See chapter 2 in the problem symptoms table)

OK:
There are no foreign objects on any valves and they operate smoothly.

NG → **REPAIR OR REPLACE TRANSMISSION VALVE BODY ASSEMBLY**

OK

4	INSPECT TORQUE CONVERTER CLUTCH ASSEMBLY

(a) Inspect the torque converter clutch assembly (See page AT-169).
OK:
The torque converter clutch operates normally.

NG → **REPLACE TORQUE CONVERTER CLUTCH ASSEMBLY**

OK

REPAIR OR REPLACE AUTOMATIC TRANSMISSION ASSEMBLY

DTC	P2759	Torque Converter Clutch Pressure Control Solenoid Control Circuit Electrical (Shift Solenoid Valve SLU)

AT

DESCRIPTION

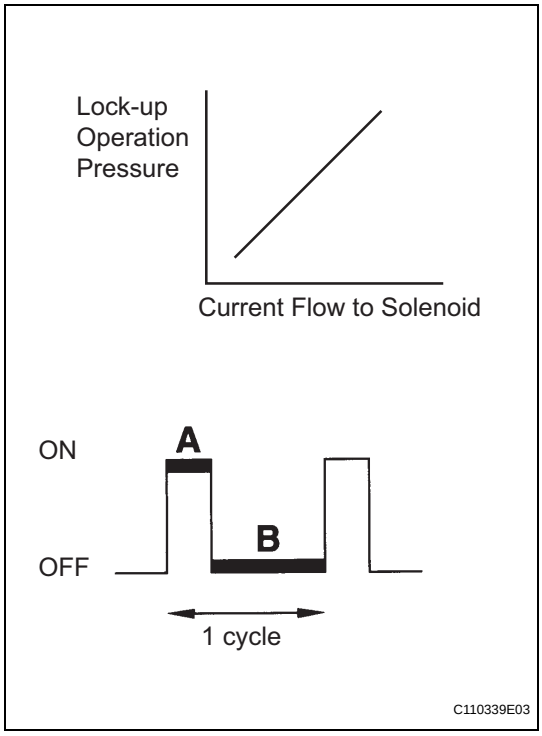

The current flow to the solenoid is controlled by the duty ratio* of the ECM output signal. The higher the duty ratio becomes, the higher the lock-up hydraulic pressure becomes during the lock-up operation.
*: The duty ratio is the ratio of the period of continuity in one cycle.
For example, if A is the period of continuity in one cycle, and B is the period of non-continuity, then Duty Ratio = A/(A+B) x 100(%).

DTC No.	DTC Detection Conditions	Trouble Areas
P2759	Open or short is detected in shift solenoid valve SLU circuit for 1 second or more while driving (1-trip detection logic)	• Open or short in shift solenoid valve SLU circuit • Shift solenoid valve SLU • ECM

MONITOR DESCRIPTION

When an open or short is detected in the shift solenoid valve (SLU) circuit, the ECM determines that there is a malfunction. The ECM turns on the MIL and stores this DTC.

MONITOR STRATEGY

Related DTCs	P2759: Shift solenoid valve SLU/Range check
Required sensors/Components	Shift solenoid valve SLU
Frequency of operation	Continuous
Duration	1 second
MIL operation	Immediate
Sequence of operation	None

TYPICAL ENABLING CONDITIONS

The monitor will run whenever the following DTCs are not present.	None
Battery voltage	10 V or more
CPU requested duty ratio to SLU	75 % or more
Ignition switch	ON
Starter	OFF

AT

TYPICAL MALFUNCTION THRESHOLDS

Output signal duty	100 %

COMPONENT OPERATING RANGE

Output signal duty	Less than 100 %

WIRING DIAGRAM

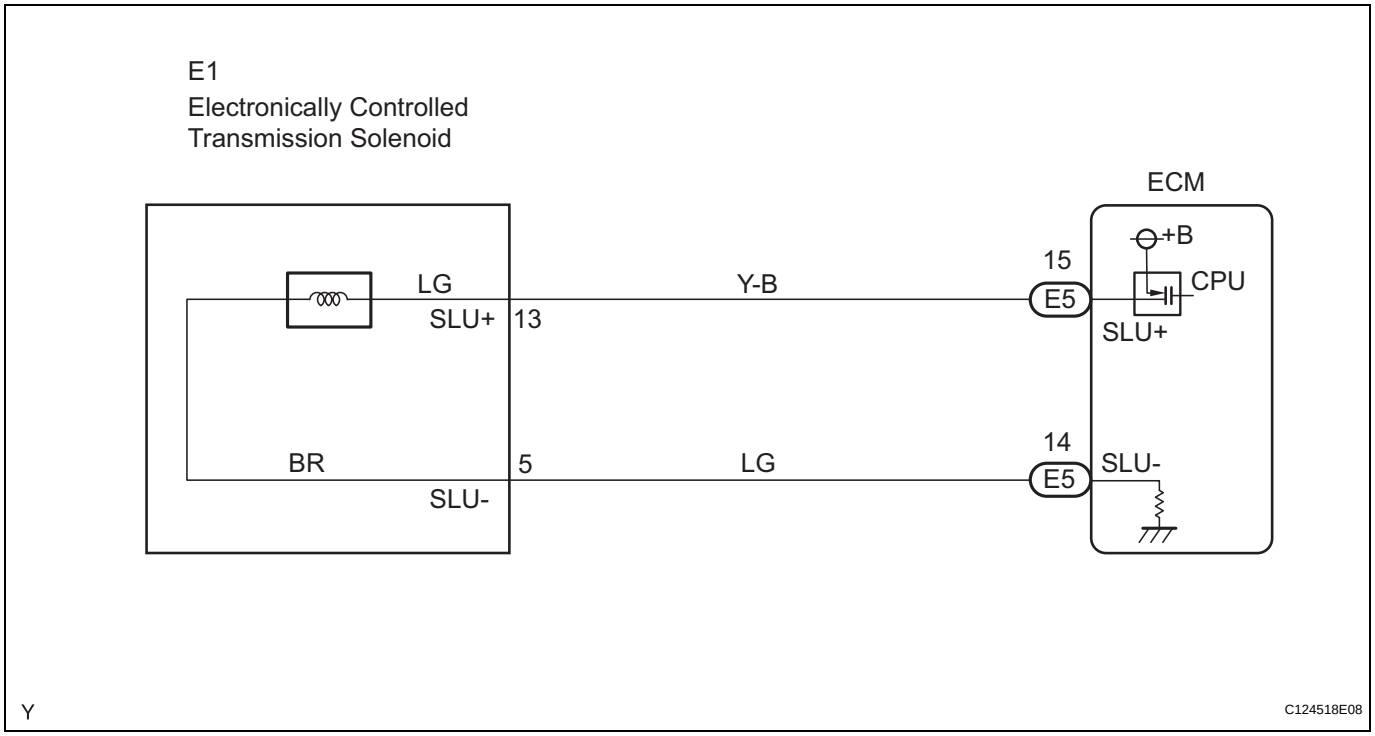

AT

1	INSPECT TRANSMISSION WIRE (SLU)

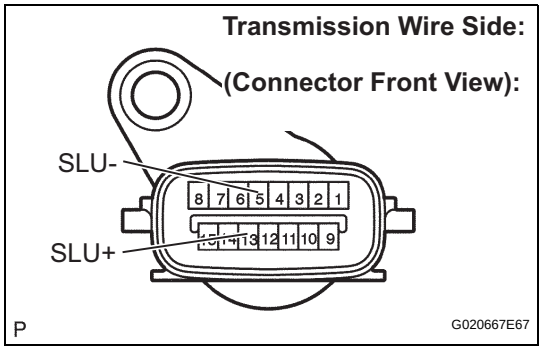

(a) Disconnect the transmission wire connector from the transmission.
(b) Measure the resistance.
Standard resistance

Tester Connection	Specified Condition
13 (SLU+) - 5 (SLU-)	5.0 to 5.6 Ω at 20°C (68°F)

(c) Measure the resistance.
Standard resistance (Check for short)

Tester Connection	Specified Condition
13 (SLU+) - Body ground	10 kΩ or higher
5 (SLU-) - Body ground	10 kΩ or higher

NG → **Go to step 3**

OK

2	CHECK HARNESS AND CONNECTOR (TRANSMISSION WIRE - ECM)

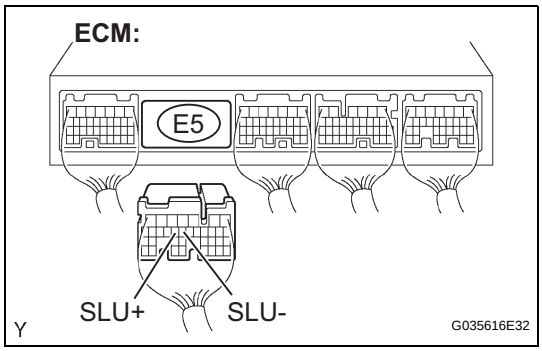

(a) Connect the transmission wire connector to the transmission.
(b) Disconnect the ECM connector.
(c) Measure the resistance.
Standard resistance

Tester Connection	Specified Condition
E5-15 (SLU+) - E5-14 (SLU-)	5.0 to 5.6 Ω at 20°C (68°F)

(d) Measure the resistance.
Standard resistance (Check for short)

Tester Connection	Specified Condition
E5-15 (SLU+) - Body ground	10 kΩ or higher
E5-14 (SLU-) - Body ground	10 kΩ or higher

NG → **REPAIR OR REPLACE HARNESS OR CONNECTOR**

OK

REPLACE ECM

3	INSPECT SHIFT SOLENOID VALVE SLU

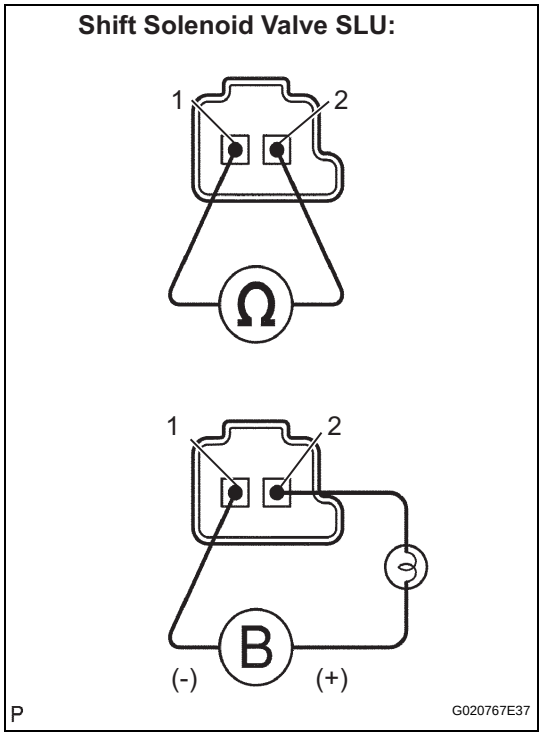

(a) Remove the shift solenoid valve SLU.
(b) Measure the resistance.
Standard resistance

Tester Connection	Specified Condition
1 - 2	5.0 to 5.6 Ω at 20°C (68°F)

(c) Connect the positive (+) lead with a 21 W bulb to terminal 2 and the negative (-) lead to terminal 1 of the solenoid valve connector, then check the movement of the valve.
OK:
The solenoid makes an operating noise.

NG → **REPLACE SHIFT SOLENOID VALVE SLU**

OK

REPAIR OR REPLACE TRANSMISSION WIRE

AT

DTC P2772 Transfer "L4" Switch Circuit

DESCRIPTION

The ECM detects the signal from the transfer L4 position switch.
This DTC indicates that the transfer L4 position switch remains ON.

AT

DTC No.	DTC Detection Conditions	Trouble Areas
P2772	Transfer L4 position switch remains ON while vehicle running under following conditions for 1.8 seconds or more (1-trip detection logic) (a) Output shaft speed: between 1,000 rpm and 3,000 rpm (b) Transfer shift position: H	• Short in transfer L4 position switch circuit • Transfer L4 position switch • ECM

MONITOR DESCRIPTION

The ECM monitors the transfer-case L4 position switch to determine whether the transfer-case L4 gear is engaged. If the transfer-case L4 gears remain engaged under the following conditions, the ECM determines that there is a malfunction of the L4 position switch:

- L4 switch indicates that the L4 transfer-case gears are engaged.
- Transfer-case shifter is in the "H" position.
- Transfer-case output shaft rpm is between 1,000 and 3,000 rpm.
- The specified time period has elapsed.

If all of the above conditions are met, the ECM determines that there is a malfunction of the L4 switch, illuminates the MIL and stores the DTC.

MONITOR STRATEGY

Related DTCs	P2772 : Transfer L4 position switch/ON malfunction
Required sensors/Components	Transfer L4 position switch
Frequency of operation	Continuous
Duration	ON malfunction (A) 1.8 seconds ON malfunction (B) 0.5 seconds
MIL operation	1 driving cycle
Sequence of operation	None

TYPICAL ENABLING CONDITIONS

The following conditions are common to all ON malfunctions (A) and (B).

The monitor will run whenever the following DTCs are not present.	None
Output speed sensor (SP2) circuit	Functioning normally
Vehicle speed sensor "A" circuit	Functioning normally
Transmission neutral position switch	OFF

ON malfunction (A)

Output speed (Transfer output speed)	1,000 to 3,000 rpm

ON malfunction (B)

Output speed (Transfer output speed)	143 rpm or more

TYPICAL MALFUNCTION THRESHOLDS

Both of the following conditions are met: ON malfunctions (A) and (B)

ON malfunction (A)

L4 switch	ON

ON malfunction (B)

Actual transfer gear ratio Transfer input speed/Transfer output speed	0.9 to 1.1

WIRING DIAGRAM

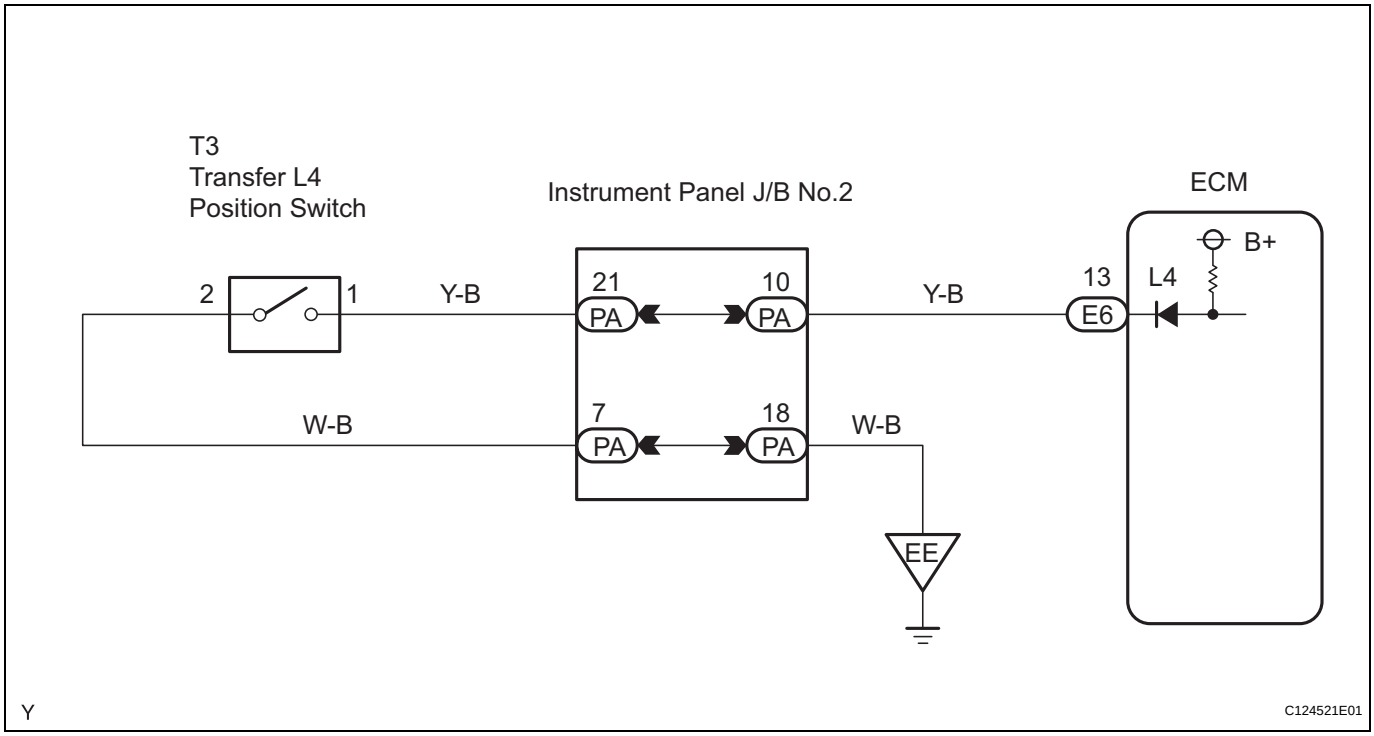

1	INSPECT NO. 2 TRANSFER INDICATOR SWITCH (TRANSFER L4 POSITION SWITCH)

Transfer L4 Position Switch:

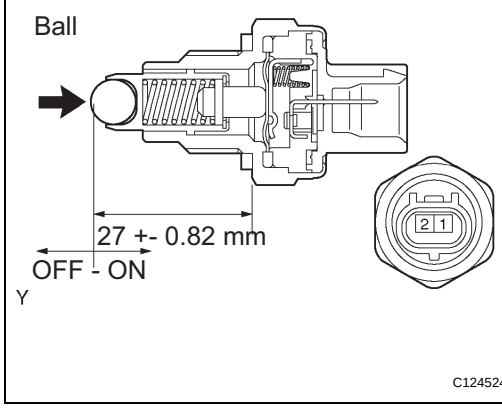

(a) Remove the transfer L4 position switch.
(b) Measure the resistance when pushing the ball at the tip of the switch.

Standard resistance

Switch Ball	Tester Connection	Specified Condition
Push	1 - 2	Below 1 Ω
Free	1 - 2	10 kΩ or higher

NG → **REPLACE NO. 2 TRANSFER INDICATOR SWITCH (TRANSFER L4 POSITION SWITCH)**

OK

2	CHECK HARNESS AND CONNECTOR (ECM - L4 POSITION SWITCH, L4 POSITION SWITCH - BODY GROUND)

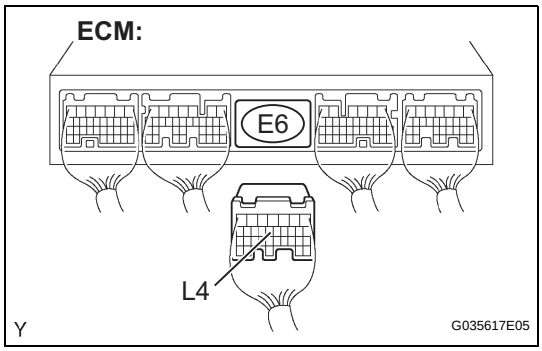

(a) Install the transfer L4 position switch.
(b) Disconnect the ECM connector.
(c) Measure the resistance when the transfer shift lever is in any position other than the L position.

Standard resistance

Condition	Tester Connection	Specified Condition
Transfer shift lever other than L position	E6-13 (L4) - Body ground	10 kΩ or higher

NG → **REPAIR OR REPLACE HARNESS OR CONNECTOR**

OK

REPLACE ECM

INSTALLATION

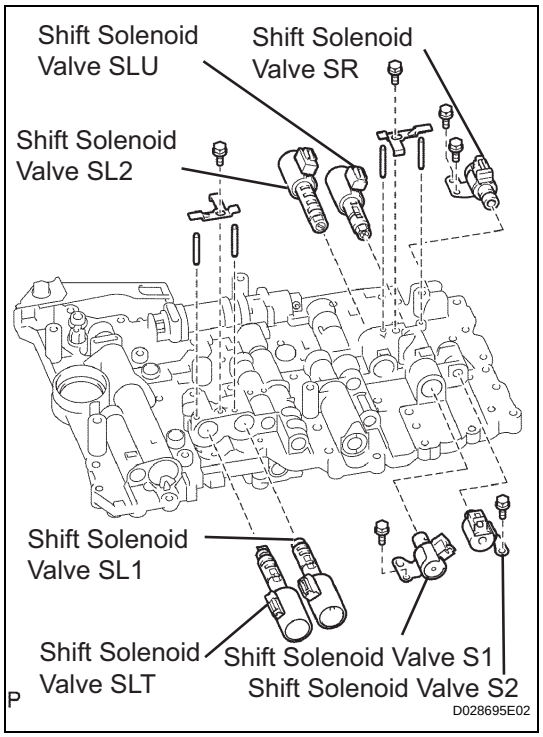

1. INSTALL TRANSMISSION VALVE BODY ASSEMBLY

(a) Install the shift solenoid valve S2 with the bolt.
Torque: 10 N*m (100 kgf*cm, 7 ft.*lbf)

(b) Install the shift solenoid valve S1 with the bolt.
Torque: 6.4 N*m (65 kgf*cm, 56 in.*lbf)

(c) Install the shift solenoid valve SR with the 2 bolts.
Torque: 6.4 N*m (65 kgf*cm, 56 in.*lbf)

(d) Install the shift solenoid valves SLU and SL2 with the pin, lock plate and bolt.
Torque: 6.4 N*m (65 kgf*cm, 56 in.*lbf)

(e) Install the shift solenoid valves SLT and SL1 with the pin, lock plate and bolt.
Torque: 6.4 N*m (65 kgf*cm, 56 in.*lbf)

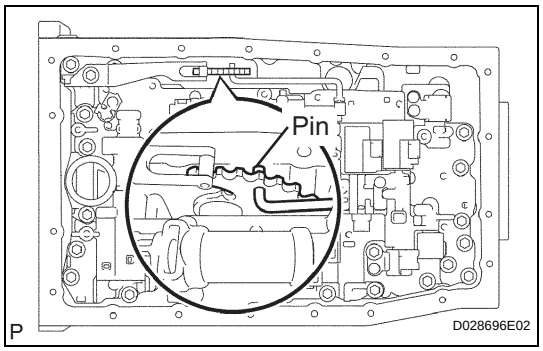

(f) Insert the pin of the lever into the hole of the manual valve.

(g) Install 3 new drum seal gaskets onto the transmission case.

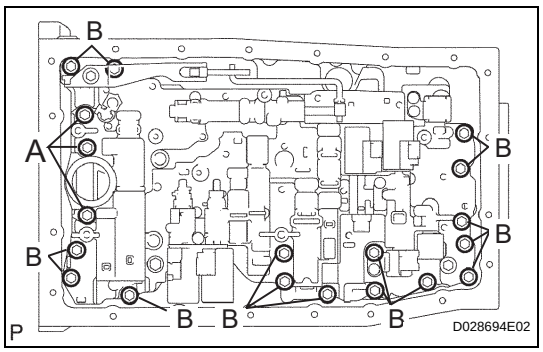

(h) Install the 19 bolts.
Torque: 11 N*m (110 kgf*cm, 8 ft.*lbf)
Bolt length:
Bolt A: 36 mm (1.42 in.)
Bolt B: 25 mm (0.98 in.)

2. INSTALL TRANSMISSION WIRE (See page AT-144)

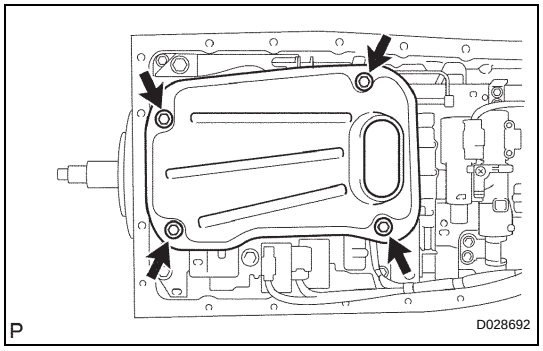

3. INSTALL VALVE BODY OIL STRAINER ASSEMBLY

(a) Install a new O-ring and the oil strainer with the 4 bolts.
Torque: 10 N*m (100 kgf*cm, 7 ft.*lbf)

4. INSTALL AUTOMATIC TRANSMISSION OIL PAN SUB-ASSEMBLY

HINT:
Remove all packing material and be careful not to drop oil on the contact surfaces of the transmission case and oil pan.

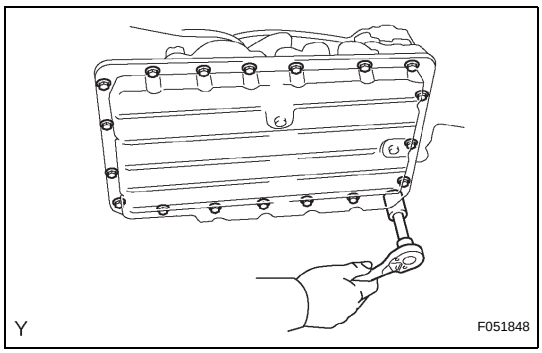

(a) Install a new gasket and the oil pan sub-assembly.

(b) Install the oil pan with the 20 bolts.
Torque: 4.4 N*m (45 kgf*cm, 39 in.*lbf)

5. **CONNECT CABLE TO NEGATIVE BATTERY TERMINAL**
Torque: 3.9 N*m (40 kgf*cm, 35 in.*lbf)

6. **PERFORM INITIALIZATION**
(See page AT-17)

7. **ADD AUTOMATIC TRANSMISSION FLUID**
(See page AT-139)

AT

REMOVAL

1. **REMOVE CONSOLE UPPER REAR PANEL SUB-ASSEMBLY (for Separate Seat Type) (See page IP-9)**
2. **REMOVE REAR CONSOLE BOX ASSEMBLY (for Separate Seat Type) (See page IP-10)**
3. **REMOVE INSTRUMENT PANEL CUP HOLDER TRAY (for Separate Seat Type) (See page IP-10)**
4. **REMOVE FRONT CONSOLE BOX (for Separate Seat Type) (See page IP-10)**
5. **REMOVE FRONT CONSOLE BOX (for Bench Seat Type) (See page IP-11)**
6. **DISCONNECT TRANSMISSION CONTROL CABLE ASSEMBLY**
   (a) CABLE TYPE:
      (1) Disconnect the transmission control cable assembly from the shift lever assembly.
      (2) Remove the clip and disconnect the transmission control cable.

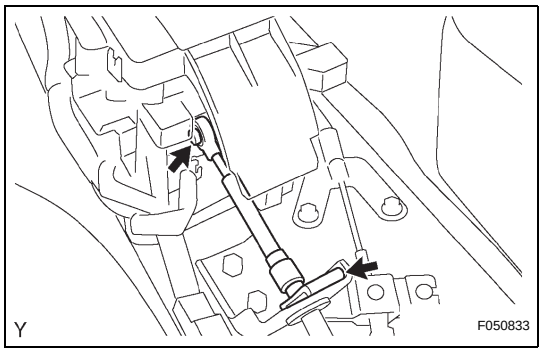

7. **SEPARATE FLOOR SHIFT GEAR SHIFTING ROD SUB-ASSEMBLY**
   (a) ROD TYPE:
      (1) Remove the nut, then separate the floor shift gear shifting rod.

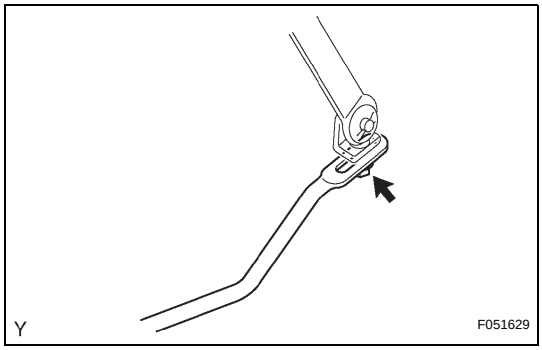

8. **REMOVE FLOOR SHIFT ASSEMBLY**
   (a) Disconnect the 2 connectors and 2 clamps.
   (b) Remove the 4 bolts and floor shift assembly.

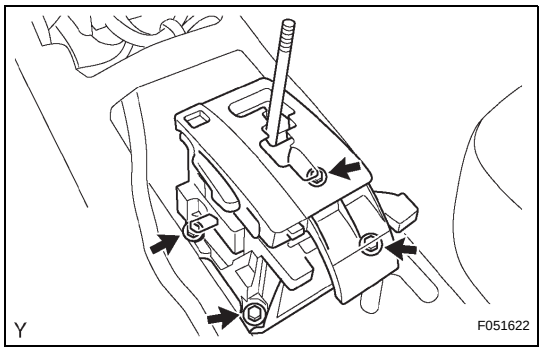

DISASSEMBLY

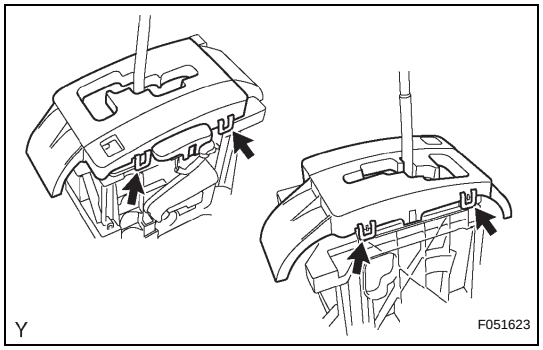

1. REMOVE UPPER POSITION INDICATOR HOUSING

(a) Release the 4 claws with a screwdriver and remove the position indicator housing and slide cover.

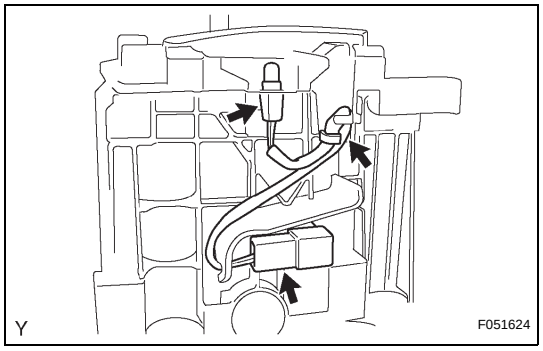

2. REMOVE INDICATOR LAMP WIRE SUB-ASSEMBLY

(a) Remove the indicator lamp wire sub-assembly.

(b) Remove the bulb from the indicator lamp wire sub-assembly.

3. REMOVE SHIFT LOCK RELEASE BUTTON

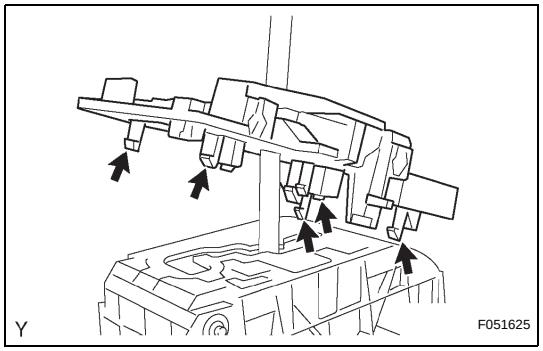

4. REMOVE LOWER POSITION INDICATOR HOUSING

(a) CABLE TYPE:

(1) Release the 5 claws with a screwdriver and remove the position indicator housing lower.

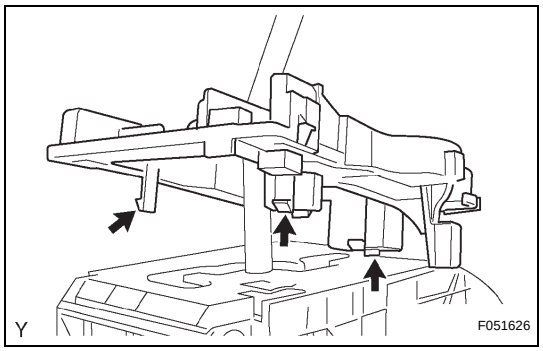

(b) ROD TYPE:

(1) Release the 3 claws with a screwdriver and remove the position indicator housing lower.

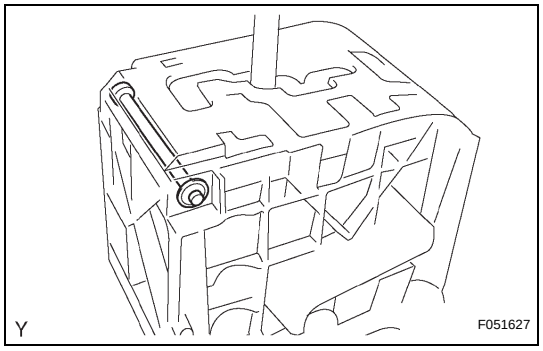

5. REMOVE SHIFT LOCK CONTROL ECU SUB-ASSEMBLY

(a) Remove the shift lever nut and shift lever lock pin.

(b) Remove the shift lever guide housing.

(c) Release the 2 claws with a screwdriver and remove the shift lock release link and spring.

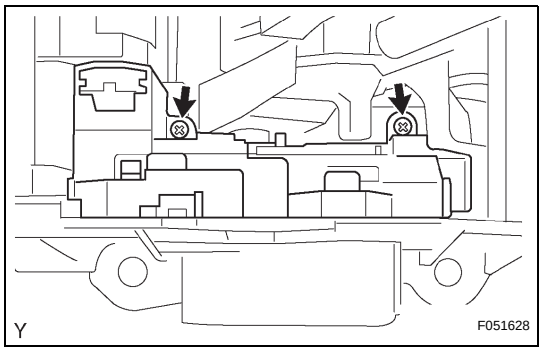

(d) Remove the 2 screws and the shift lock control ECU.

ADJUSTMENT

1. INSPECT SHIFT LEVER POSITION

(a) Check that the shift lever moves smoothly and appropriately from the P to R position, only when the ignition switch is turned to ON and the brake pedal is depressed.

(b) When starting the engine, make sure that the vehicle moves forward when shifting the lever from the N to D position and moves rearward when shifting the lever to the R position.

2. ADJUST SHIFT LEVER POSITION

(a) Push the control shaft fully rearward.

(b) Turn the control shaft lever 2 notches counterclockwise to the N position.

(c) Set the shift lever to the N position.

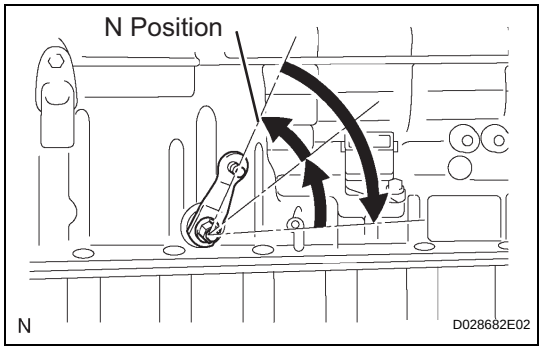

REASSEMBLY

1. INSTALL SHIFT LOCK CONTROL ECU SUB-ASSEMBLY

(a) Install the shift lock control ECU with the 2 screws.

(b) Install the spring and shift lock release link.

(c) Install the shift lever guide housing.

(d) Install the lever lock and new shift lever nut.

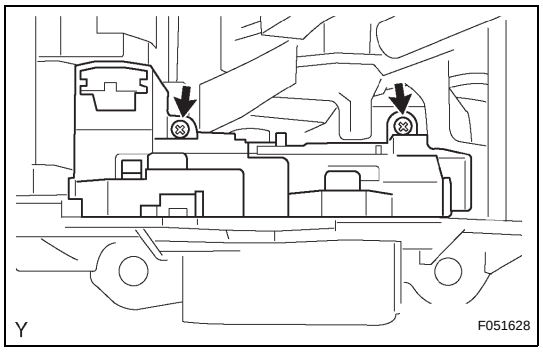

2. INSTALL POSITION INDICATOR HOUSING LOWER

(a) CABLE TYPE:

(1) Install the position indicator housing lower.

HINT:

Firmly make the claws fit.

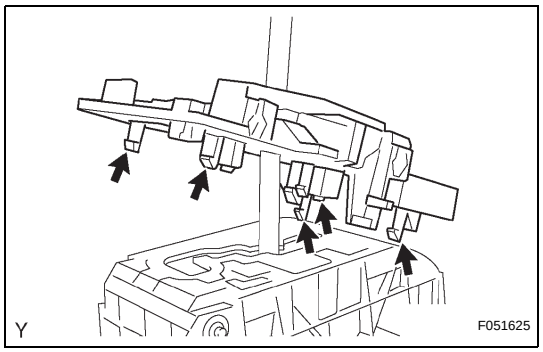

(b) ROD TYPE:

(1) Install the position indicator housing lower.

HINT:

Firmly make the claws fit.

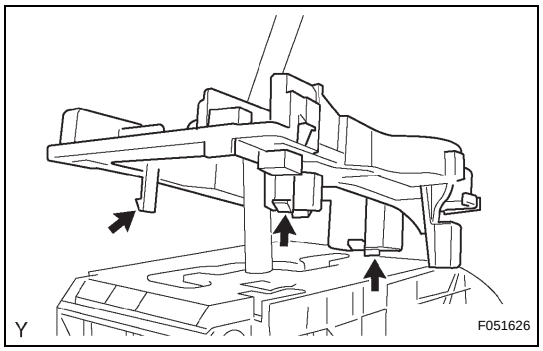

3. INSTALL SHIFT LOCK RELEASE BUTTON

AT

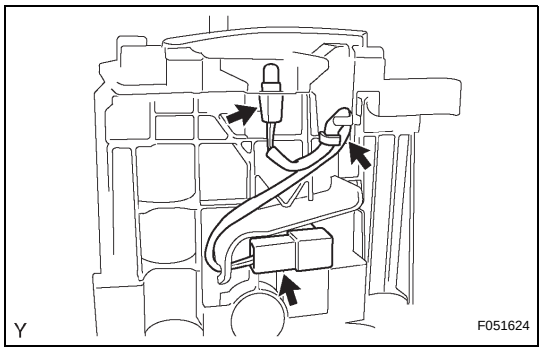

4. INSTALL INDICATOR LAMP WIRE SUB-ASSEMBLY

(a) Install the bulb into the indicator lamp wire sub-assembly.

(b) Install the indicator lamp wire sub-assembly.

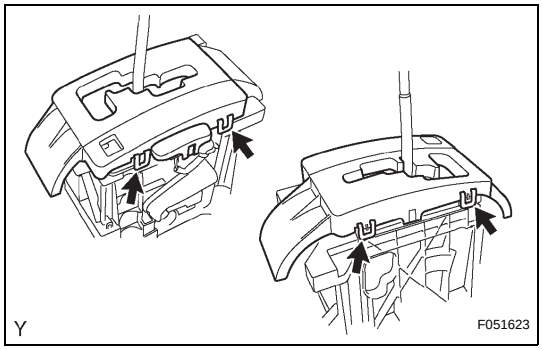

5. INSTALL POSITION INDICATOR HOUSING UPPER

(a) Install the slide cover and position indicator housing sub-assembly onto the shift lever guide housing.
HINT:
Firmly make the claws fit.

INSTALLATION

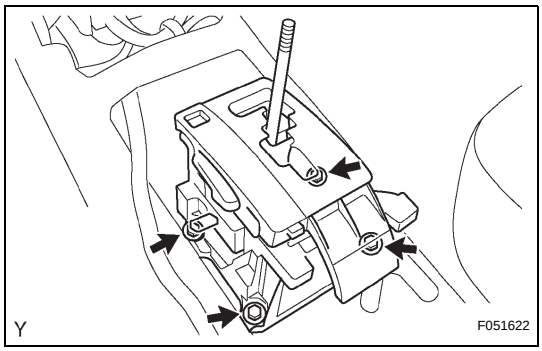

1. INSTALL FLOOR SHIFT ASSEMBLY

(a) Install the floor shift with the 4 bolts.
Torque: 14 N*m (143 kgf*cm, 10 ft.*lbf)

(b) Connect the 2 clamps and 2 connectors.

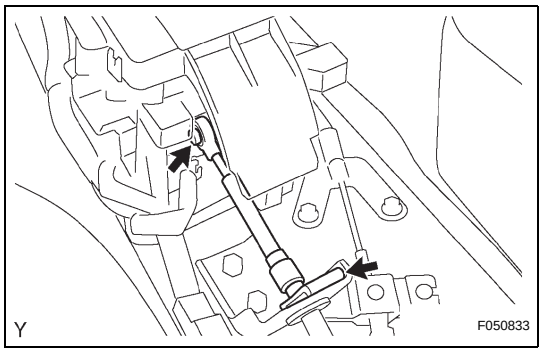

2. INSTALL TRANSMISSION CONTROL CABLE ASSEMBLY

(a) CABLE TYPE:

(1) Connect the transmission control cable with the clip to floor shift assembly.

(2) Install the transmission control cable onto the floor shift assembly.

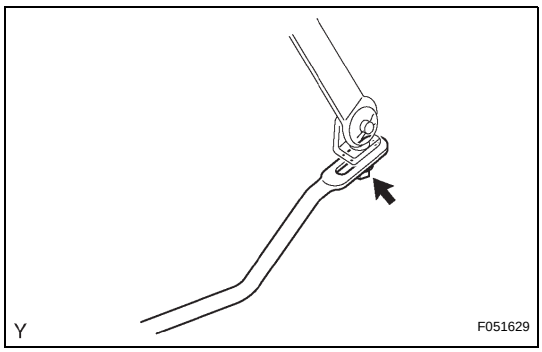

3. INSTALL FLOOR SHIFT GEAR SHIFTING ROD SUB-ASSEMBLY

(a) ROD TYPE:

(1) Install the floor shift gear shifting rod with nut.
Torque: 5.5 N*m (56 kgf*cm, 49 in.*lbf)

4. REMOVE FRONT CONSOLE BOX (for Bench Seat Type) (See page IP-23)

5. INSTALL FRONT CONSOLE BOX (for Separate Seat Type) (See page IP-24)

6. **INSTALL INSTRUMENT PANEL CUP HOLDER TRAY (for Separate Seat Type) (See page IP-24)**
7. **INSTALL REAR CONSOLE BOX ASSEMBLY (for Separate Seat Type) (See page IP-24)**
8. **INSTALL CONSOLE UPPER REAR PANEL SUB-ASSEMBLY (for Separate Seat Type) (See page IP-25)**
9. **ADJUST SHIFT LEVER POSITION (See page AT-105)**
10. **INSPECT SHIFT LEVER POSITION (See page AT-105)**

STANDARD BOLT

HOW TO DETERMINE BOLT STRENGTH

Bolt Type

Hexagon Head Bolt			Stud Bolt	Weld Bolt	Class
Normal Recess Bolt		Deep Recess Bolt			
	 No Mark	 No Mark	 No Mark	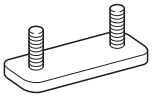	4T
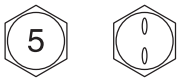					5T
	 w/ Washer	 w/ Washer			6T
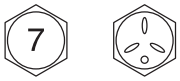		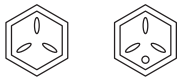			7T
					8T
					9T
					10T
					11T

SS

SPECIFIED TORQUE FOR STANDARD BOLTS

Class	Diameter (mm)	Pitch (mm)	Specified torque					
			Hexagon head bolt			Hexagon flange bolt		
			N*m	kgf*cm	ft.*lbf	N*m	kgf*cm	ft.*lbf
4T	6	1	5	55	48 in.*lbf	6	60	52 in.*lbf
	8	1.25	12.5	130	9	14	145	10
	10	1.25	26	260	19	29	290	21
	12	1.25	47	480	35	53	540	39
	14	1.5	74	760	55	84	850	61
	16	1.5	115	1,150	83	-	-	-
5T	6	1	6.5	65	56 in.*lbf	7.5	75	65 in.*lbf
	8	1.25	15.5	160	12	17.5	175	13
	10	1.25	32	330	24	36	360	26
	12	1.25	59	600	43	65	670	48
	14	1.5	91	930	67	100	1,050	76
	16	1.5	140	1,400	101	-	-	-
6T	6	1	8	80	69 in.*lbf	9	90	78 in.*lbf
	8	1.25	19	195	14	21	210	15
	10	1.25	39	400	29	44	440	32
	12	1.25	71	730	53	80	810	59
	14	1.5	110	1,100	80	125	1,250	90
	16	1.5	170	1,750	127	-	-	-
7T	6	1	10.5	110	8	12	120	9
	8	1.25	25	260	19	28	290	21
	10	1.25	52	530	38	58	590	43
	12	1.25	95	970	70	105	1,050	76
	14	1.5	145	1,500	108	165	1,700	123
	16	1.5	230	2,300	166	-	-	-
8T	8	1.25	29	300	22	33	330	24
	10	1.25	61	620	45	68	690	50
	12	1.25	110	1,100	80	120	1,250	90
9T	8	1.25	34	340	25	37	380	27
	10	1.25	70	710	51	78	790	57
	12	1.25	125	1,300	94	140	1,450	105
10T	8	1.25	38	390	28	42	430	31
	10	1.25	78	800	58	88	890	64
	12	1.25	140	1,450	105	155	1,600	116
11T	8	1.25	42	430	31	47	480	35
	10	1.25	87	890	64	97	990	72
	12	1.25	155	1,600	116	175	1,800	130

1GR-FE ENGINE CONTROL SYSTEM

SERVICE DATA

SS

Camshaft timing oil control valve assembly		VVT system is OFF (OCV is OFF)	Normal engine speed
		VVT system is ON (OCV is ON)	Rough idle or engine stalled
Throttle body		Standard throttle valve opening percentage	60 % or more
Accelerator pedal position sensor	Voltage (ACCEL POS#1)	Accelerator pedal released	0.5 to 1.1 V
		Accelerator pedal depress	2.5 to 4.5 V
	Voltage (ACCEL POS#2)	Accelerator pedal released	1.2 to 2.0 V
		Accelerator pedal depress	3.4 to 5.0 V
Camshaft timing oil control valve assembly	Resistance	at 20°C (68°F)	6.9 to 7.9 Ω
Mass air flow meter	Resistance	at -20°C (-4°F)	13.6 to 18.4 kΩ
		at 20°C (68°F)	2.21 to 2.69 kΩ
		at 60°C (140°F)	0.493 to 0.667 kΩ
Engine coolant temperature sensor	Resistance	at 20°C (68°F)	2.32 to 2.59 kΩ
		at 80°C (176°F)	0.310 to 0.326 kΩ
Throttle With Motor body	Resistance	1 (M-) - 2 (M+)	0.3 to 100 Ω at 20 °C (68 °F)
Knock sensor	Resistance	at 20°C (68°F)	120 to 180 kΩ
Circuit opening relay	Resistance (3 - 5)	Standard	10 kΩ or higher
			Below 1 Ω (Apply battery voltage to terminals 1 and 2)
EFI relay	Specified condition	Standard	10 kΩ or higher
	Resistance (3 - 5)		Below 1 Ω (Apply battery voltage to terminals 1 and 2)

TORQUE SPECIFICATIONS

Part Tightened	N*m	kgf*cm	ft.*lbf
Throttle with motor body assembly x Intake air surge tank	11	112	9
Air cleaner assembly x Cylinder head cover sub-assembly	8.0	82	71 in.*lbf
Air cleaner assembly x Intake air surge tank	8.0	82	71 in.*lbf
V-bank cover x Air cleaner assembly	7.5	76	66 in.*lbf
V-bank cover x Intake air surge tank	7.5	76	66 in.*lbf
Knock sensor x Cylinder block sub-assembly	20	204	15
Water outlet pipe No. 1 x Cylinder block sub-assembly	9.0	92	80 in.*lbf
Camshaft timing oil control valve x Cylinder head	9.0	92	80 in.*lbf
E.F.I. engine coolant temperature sensor x Cylinder block	20	204	15
Manifold stay x Exhaust manifold	40	408	30
Manifold stay x Transmission	40	408	30
Cool air inlet No. 1 x Body	12	122	9.0
ECM bracket x ECM	3	32	28 in.*lbf
ECM bracket No. 2 x ECM	3	32	28 in.*lbf
ECM x Body	13	133	10
Accelerator pedal rod assembly x Body	5.0	51	44 in.*lbf
Negative battery terminal	3.9	40	35 in.*lbf

2TR-FE ENGINE CONTROL SYSTEM

SERVICE DATA

Intake air flow meter sub-assembly	Resistance 4 (THA) - 5 (E2)	Standard	12.5 to 16.9 kΩ at -20°C (-4°F)
			2.19 to 2.67 kΩ at 20°C (68°F)
			0.50 to 0.68 kΩ at 60°C (140°F)
Camshaft timing oil control valve assembly	Resistance 1 (+B) - 2 (GND)	Standard	6.9 to 7.9 kΩ at 20°C (68°F)
Throttle with motor body assembly	Resistance	1 (M-) - 2 (M+)	0.3 to 100 Ω at 20°C (68°F)
		3 (E2) - 5 (VC)	2.0 to 4.0 kΩ at 20°C (68°F)
Accelerator pedal rod assembly	Resistance	5 (EP1) - 4 (VCP1)	1 MΩ or higher
		2 (EP2) - 1 (VCP2)	1 MΩ or higher
E.F.I. Engine coolant temperature sensor	Resistance	1 (E2) - 2 (THW)	2.23 to 2.59 kΩ at 20°C (68°F)
		1 (E2) - 2 (THW)	0.310 to 0.326 kΩ at 80°C (176°F)
Knock sensor	Resistance 1 (Ground) - 2 (Output)	Standard	120 to 280 kΩ at 20°C (68°F)
E.F.I. Circuit opening relay assembly	Resistance (3 - 5)	Standard	10 kΩ or higher
			Below 1 Ω (Apply battery voltage to terminal 1 and 2)
E.F.I. Relay	Resistance (3 - 5)	Standard	10 kΩ or higher
			Below 1 Ω (Apply battery voltage to terminal 1 and 2)

TORQUE SPECIFICATIONS

Part Tightened	N*m	kgf*cm	ft.*lbf
Throttle body assembly x Intake manifold	9	92	80 in.*lbf
Intake air connector x Cylinder head cover sub-assembly	8	82	71 in.*lbf
Intake air connector x Throttle body assembly	5	51	44 in.*lbf
Intake air connector x Air cleaner hose	5	51	44 in.*lbf
Battery x Battery negative terminal	3.9	40	35 in.*lbf
Knock control sensor x Cylinder block sub-assembly	20	204	15
Intake manifold x Cylinder head sub-assembly	25	255	18
Intake manifold x Cylinder block sub-assembly	25	255	18
Intake manifold x Wire harness clamp bracket	8.2	84	73 in.*lbf
Accelerator pedal rod assembly x Body	5	51	44 in.*lbf
ECM x ECM bracket	3	32	28 in.*lbf
ECM x ECM bracket No. 2	3	32	28 in.*lbf
ECM x Blower assembly	5	51	44 in.*lbf

1GR-FE ENGINE MECHANICAL

SERVICE DATA

Ignition timing		Terminals TC and CG of DLC3 connected	8 to 12° BTDC @ idle (Transmission in neutral position)
		Terminals TC and CG of DLC3 disconnected	7 to 24° BTDC @ idle (Transmission in neutral position)
Idle speed			650 to 750 rpm (Transmission in neutral position)
Compression		Compression pressure	1,300 kPa (13.3 kgf/cm^2, 189 psi) or more
		Minimum pressure	1,000 kPa (10.2 kgf/cm^2, 145 psi)
		Difference between each cylinder	100 kPa (1.0 kgf/cm^2, 15 psi) or less
Valve clearance	Intake	(cold)	0.15 to 0.25 mm (0.006 to 0.010 in.)
	Exhaust		0.29 to 0.39 mm (0.011 to 0.015 in.)
Intake manifold	Intake air surge tank side warpage	Maximum	0.8 mm (0.031 in.)
	Cylinder head side warpage		0.2 mm (0.008 in.)
Exhaust manifold	Warpage	Maximum	0.7 mm (0.028 in.)
Camshaft timing gear assembly	Diameter (with chain)	Large gear	115.5 mm (4.547 in.)
		Small gear	73.1 mm (2.878 in.)
Camshaft timing gear or sprocket	Diameter (with chain)		73.1 mm (2.878 in.)
Crankshaft timing gear or sprocket	Diameter (with chain)		61.0 mm (2.402 in.)
Idle sprocket	Diameter (with chain)		61.0 mm (2.402 in.)
Cylinder head set bolt	Outer diameter	Standard	10.85 to 11.00 mm (0.4272 to 0.4331 in.)
		Minimum	10.7 mm (0.421 in.)
Chain	Length	Maximum	146.8 mm (5.780 in.)
No. 2 chain	Length	Maximum	146.8 mm (5.780 in.)
Idle gear shaft	Idle gear shaft diameter		22.987 to 23.000 mm (0.9050 to 0.9055 in.)
	Idle gear internal diameter		23.02 to 23.03 mm (0.9063 to 0.9067 in.)
	Oil clearance	Standard	0.020 to 0.043 mm (0.0008 to 0.0017 in.)
		Maximum	0.093 mm (0.0037 in.)
Chain tensioner assembly No. 2	Wear	Maximum	1.0 mm (0.039 in.)
Chain tensioner assembly No. 3	Wear	Maximum	1.0 mm (0.039 in.)
Chain tensioner slipper	Wear	Maximum	1.0 mm (0.039 in.)
Chain vibration damper No. 1	Wear	Maximum	1.0 mm (0.039 in.)
Chain vibration damper No. 2	Wear	Maximum	1.0 mm (0.039 in.)
Cylinder head sub-assembly	Warpage	Maximum	0.10 mm (0.0039 in.)
Intake valve	Valve stem diameter		5.470 to 5.485 mm (0.2154 to 0.2159 in.)
	Valve face angle		44.5°
	Margin thickness	Standard	1.0 mm (0.039 in.)
		Minimum	0.5 mm (0.020 in.)
	Overall length	Standard	106.95 mm (4.2106 in.)
		Minimum	106.70 mm (4.2008 in.)

Exhaust valve	Valve stem diameter		5.465 to 5.480 mm (0.2152 to 0.2158 in.)
	Valve face angle		44.5°
	Margin thickness	Standard	1.0 mm (0.039 in.)
		Minimum	0.5 mm (0.020 in.)
	Overall length	Standard	105.80 mm (41654 in.)
		Minimum	105.55 mm (4.1555 in.)
Inner compression spring	Deviation	Maximum	2.0 mm (0.079 in.)
	Free length	Maximum	47.80 mm (1.8819 in.)
	Tension	at 33.3 mm (1.311 in.)	186.2 to 205.8 N (19.0 to 21.0 kgf, 41.9 to 46.3 lbf)
Intake valve guide bush	Inside diameter		5.51 to 5.53 mm (0.2169 to 0.2177 in.)
	Oil clearance	Standard	0.025 to 0.060 mm (0.0010 to 0.0024 in.)
		Maximum	0.08 mm (0.0031 in.)
	Bush bore diameter		10.295 to 10.315 mm (0.4053 to 0.4061 in.)
	Protrusion height		9.3 to 9.7 mm (0.366 to 0.382 in.)
Exhaust valve guide bush	Inside diameter		5.51 to 5.53 mm (0.2169 to 0.2177 in.)
	Oil clearance	Standard	0.030 to 0.065 mm (0.0012 to 0.0026 in.)
		Maximum	0.10 mm (0.0039 in.)
	Bush bore diameter		10.295 to 10.315 mm (0.4053 to 0.4061 in.)
	Protrusion height		9.3 to 9.7 mm (0.366 to 0.382 in.)
Valve lifter	Diameter		30.966 to 30.976 mm (1.2191 to 1.2195 in.)
	Lifter bore diameter		31.009 to 31.025 mm (1.2208 to 1.2215 in.)
	Oil clearance	Standard	0.033 to 0.059 mm (0.0013 to 0.0023 in.)
		Maximum	0.08 mm (0.0031 in.)
No. 1 camshaft	Journal diameter	No. 1 journal	35.971 to 35.985 mm (1.4162 to 1.4167 in.)
		Other journals	22.959 to 22.975 mm (0.9039 to 0.9045 in.)
	Circle runout	Maximum	0.06 mm (0.0024 in.)
	Cam lobe height	Standard	44.168 to 44.268 mm (1.7389 to 1.7428 in.)
		Minimum	44.018 mm (1.7330 in.)
	Oil clearance	Standard No. 1 journal	0.008 to 0.038 mm (0.0003 to 0.0015 in.)
		Other journals	0.025 to 0.062 mm (0.0010 to 0.0024 in.)
		Maximum No. 1 journal	0.07 mm (0.0028 in.)
		Other journals	0.10 mm (0.0039 in.)
	Thrust clearance	Standard	0.04 to 0.09 mm (0.016 to 0.035 in.)
		Maximum	0.11 mm (0.0043 in.)
No. 2 camshaft	Journal diameter	No. 1 journal	35.971 to 35.985 mm (1.4162 to 1.4167 in.)
		Other journals	22.959 to 22.975 mm (0.9039 to 0.9045 in.)
	Circle runout	Maximum	0.06 mm (0.0024 in.)
	Cam lobe height	Standard	44.580 to 44.680 mm (1.7551 to 1.7591 in.)
		Minimum	44.430 mm (1.7492 in.)
	Oil clearance	Standard No. 1 journal	0.040 to 0.079 mm (0.0016 to 0.0031 in.)
		Other journals	0.025 to 0.062 mm (0.0010 to 0.0024 in.)
		Maximum	0.10 mm (0.0039 in.)
	Thrust clearance	Standard	0.04 to 0.09 mm (0.016 to 0.035 in.)
		Maximum	0.11 mm (0.0043 in.)

No. 3 camshaft sub-assembly	Journal diameter	No. 1 journal	35.971 to 35.985 mm (1.4162 to 1.4167 in.)
		Other journals	22.959 to 22.975 mm (0.9039 to 0.9045 in.)
	Circle runout	Maximum	0.06 mm (0.0024 in.)
	Cam lobe height	Standard	44.168 to 44.268 mm (1.7389 to 1.7428 in.)
		Minimum	44.018 mm (1.7330 in.)
	Oil clearance	Standard No. 1 journal	0.040 to 0.079 mm (0.0016 to 0.0031 in.)
		Other journals	0.025 to 0.062 mm (0.0010 to 0.0024 in.)
		Maximum	0.10 mm (0.0039 in.)
	Thrust clearance	Standard	0.04 to 0.09 mm (0.016 to 0.035 in.)
		Maximum	0.11 mm (0.0043 in.)
No. 4 camshaft sub-assembly	Journal diameter	No. 1 journal	35.971 to 35.985 mm (1.4162 to 1.4167 in.)
		Other journals	22.959 to 22.975 mm (0.9039 to 0.9045 in.)
	Circle runout	Maximum	0.06 mm (0.0024 in.)
	Cam lobe height	Standard	44.580 to 44.680 mm (1.7551 to 1.7591 in.)
		Minimum	44.430 mm (1.7492 in.)
	Oil clearance	Standard No. 1 journal	0.040 to 0.079 mm (0.0016 to 0.0031 in.)
		Other journals	0.025 to 0.062 mm (0.0010 to 0.0024 in.)
		Maximum	0.10 mm (0.0039 in.)
	Thrust clearance	Standard	0.04 to 0.09 mm (0.016 to 0.035 in.)
		Maximum	0.11 mm (0.0043 in.)
Ring pin for cylinder head sub-assembly and cylinder head LH	Protrusion height		2.7 to 3.3 mm (0.106 to 0.130 in.)
Straight pin for cylinder head sub-assembly and cylinder head LH	Protrusion height	A	17.5 to 19.5 mm (0.689 to 0.768 in.)
		B	7.5 to 8.5 mm (0.295 to 0.335 in.)
		C	7.0 to 9.0 mm (0.276 to 0.354 in.)
Tight plug for cylinder head sub-assembly and cylinder head LH	Depth		1.5 mm (0.059 in.)
Connecting rod	Thrust clearance	Standard	0.15 to 0.30 mm (0.0059 to 0.0118 in.)
		Maximum	0.35 mm (0.0138 in.)
	Oil clearance	Standard	0.026 to 0.046 mm (0.0010 to 0.0018 in.)
		Maximum	0.066 mm (0.0025 in.)
Crankshaft thrust clearance		Standard	0.04 to 0.24 mm (0.0016 to 0.0094 in.)
		Maximum	0.30 mm (0.0118 in.)
Cylinder block warpage		Maximum	0.05 mm (0.0020 in.)
Cylinder bore diameter		Standard	94.000 to 94.012 mm (3.7008 to 3.7013 in.)
		Maximum	94.132 mm (3.7060 in.)
Piston	Diameter		93.910 to 93.940 mm (3.6972 to 3.6984 in.)
	Oil clearance	Standard	0.060 to 0.102 mm (0.0031 to 0.0040 in.)
		Maximum	0.13 mm (0.0051 in.)
Connecting rod out-of alignment		Maximum	0.05 mm (0.0020 in.) per 100 mm (3.94 in.)
Connecting rod twist		Maximum	0.15 mm (0.0059 in.) per 100 mm (3.94 in.)
Connecting rod bushing inside diameter			22.001 to 22.010 mm (0.8662 to 0.8665 in.)
Piston pin diameter			21.997 to 22.006 mm (0.8660 to 0.8664 in.)
Oil clearance		Standard	0.005 to 0.011 mm (0.0002 to 0.0004 in.)
		Maximum	0.050 mm (0.0020 in.)
Piston ring groove clearance		No. 1	0.02 to 0.07 mm (0.0008 to 0.0028 in.)
		No. 2	0.02 to 0.06 mm (0.0008 to 0.0024 in.)
		Oil	0.07 to 0.15 mm (0.0028 to 0.0060 in.)

Piston ring end gap	Standard	No. 1	0.30 to 0.40 mm (0.0118 to 0.0157 in.)
		No. 2	0.40 to 0.50 mm (0.0157 to 0.0197 in.)
		Oil (Side rail)	0.10 to 0.40 mm (0.0039 to 0.0157 in.)
	Maximum	No. 1	1.0 mm (0.039 in.)
		No. 2	1.1 mm (0.043 in.)
		Oil (Side rail)	1.0 mm (0.039 in.)
Connecting rod bolt diameter		Standard	7.2 to 7.3 mm (0.283 to 0.287 in.)
		Minimum	7.0 mm (0.276 in.)
Crankshaft bearing cap set bolt diameter		Standard	10.0 to 10.2 mm (0.393 to 0.402 in.)
Crankshaft circle runout		Maximum	0.06 mm (0.0024 in.)
Main journal diameter			71.988 to 72.000 mm (2.8342 to 2.8346 in.)
Main journal taper and out-of-round		Maximum	0.02 mm (0.0008 in.)
Crank pin diameter			55.992 to 56.000 mm (2.2044 to 2.2047 in.)
Crank pin taper and out-of-round		Maximum	0.02 mm (0.0008 in.)
Crankshaft oil clearance		Standard	0.018 to 0.030 mm (0.0007 to 0.0012 in.)
		Maximum	0.046 mm (0.0018 in.)
Straight pin	Standard protrusion	Pin A	22.5 to 23.5 mm (0.886 to 0.925 in.)
		Pin B	10.5 to 11.5 mm (0.413 to 0.453 in.)
		Pin C	8.5 to 9.5 mm (0.335 to 0.374 in.)
		Pin D	5.5 to 6.5 mm (0.217 to 0.256 in.)

2TR-FE ENGINE MECHANICAL

SERVICE DATA

Idling speed			600 to 700 rpm
Compression		Compression pressure	1,230 kPa (12.5 kgf/cm^2, 178 psi)
		Minimum pressure	880 kPa (9.0 kgf/cm^2, 128 psi) or more
		Difference between each cylinder	68 kPa (0.7 kgf/cm^2, 10 psi) or less
Ignition timing		Terminals TC and CG of DLC3 connected	3 to 7° BTDC idle
Cylinder head set bolt outside diameter		Standard	10.76 to 10.97 mm (0.4236 to 0.4319 in.)
		Minimum	10.40 mm (0.4094 in.)
Timing chain	Chain elongation	Maximum	147.5 mm (5.807 in.)
	Camshaft sprocket diameter (with chain)	Maximum	113.8 mm (4.480 in.)
	Crankshaft sprocket diameter (with chain)	Maximum	59.4 mm (2.339 in.)
	Sprocket worn distance	Minimum	1.0 mm (0.039 in.)
	Tensioner slipper wear	Maximum	2.0 mm (0.079 in.)
	Vibration damper wear	Maximum	2.0 mm (0.079 in.)
	Guide wear	Maximum	0.5 mm (0.020 in.)
Timing chain No. 2	Chain elongation No. 2	Maximum	123.6 mm (4.866 in.)
	Camshaft sprocket No. 2 diameter (with chain)	Maximum	96.7 mm (3.807 in.)
	Balanceshaft drive gear No. 2 diameter (with chain)	Maximum	75.9 mm (2.988 in.)
	Vibration damper No. 2 wear	Minimum	1.0 mm (0.039 in.)
	Vibration damper No. 3 wear	Maximum	1.0 mm (0.039 in.)
	Vibration damper No. 4 wear	Maximum	1.0 mm (0.039 in.)

Cylinder head	Cylinder block surface warpage	Maximum	0.05 mm (0.0020 in.)
	Intake manifold surface warpage	Maximum	0.05 mm (0.0020 in.)
	Exhaust manifold surface warpage	Maximum	0.05 mm (0.0020 in.)
	Valve seat	Refacing angle	30°, 45°, 60°
		Contacting angle	45°
		Contacting width	1.0 to 1.4 mm (0.039 to 0.055 in.)
	Valve guide bush bore diameter	STD	10.285 to 10.306 mm (0.4049 to 0.4057 in.)
		O/S 0.05	10.335 to 10.356 mm (0.4069 to 0.4077 in.)
	Cylinder head set bolt outside diameter	STD	10.76 to 10.97 mm (0.4236 to 0.4319 in.)
		Minimum	10.40 mm (0.4094 in.)
Valve guide bush	Inside diameter		5.510 to 5.530 mm (0.2169 to 0.2177 in.)
	Outside diameter (for repair part)	STD	10.285 to 10.306 mm (0.4049 to 0.4057 in.)
		O/S 0.05	10.335 to 10.356 mm (0.4069 to 0.4077 in.)
Valve	Valve overall length	STD Intake	106.26 mm (4.1835 in.)
		STD Exhaust	106.74 mm (4.2024 in.)
		Minimum Intake	105.96 mm (4.1716 in.)
		Minimum Exhaust	106.44 mm (4.1905 in.)
	Stem diameter	Intake	5.470 to 5.485 mm (0.2154 to 0.2159 in.)
		Exhaust	5.465 to 5.480 mm (0.2151 to 0.2157 in.)
	Stem oil clearance	STD Intake	0.025 to 0.060 mm (0.0010 to 0.0024 in.)
		STD Exhaust	0.030 to 0.065 mm (0.0012 to 0.0026 in.)
		Maximum Intake	0.08 mm (0.0032 in.)
		Maximum Exhaust	0.10 mm (0.0039 in.)
	Margin thickness	STD Intake	1.05 to 1.45 mm (0.0413 to 0.0571 in.)
		STD Exhaust	1.2 to 1.6 mm (0.0472 to 0.0630 in.)
		Minimum Intake	0.50 mm (0.0197 in.)
		Minimum Exhaust	0.50 mm (0.0197 in.)
Valve compression spring	Deviation	Maximum	1.5 mm (0.059 in.)
	Free length		48.53 mm (1.9106 in.)
Camshaft	Thrust clearance	STD	0.10 to 0.24 mm (0.0039 to 0.009 in.)
		Maximum	0.26 mm (0.010 in.)
	Journal oil clearance	STD No. 1	0.035 to 0.072 mm (0.0014 to 0.0029 in.)
		Others	0.025 to 0.062 mm (0.0010 to 0.0024 in.)
		Maximum	0.08 mm (0.003 in.)
	Journal diameter	STD No. 1	35.949 to 35.965 mm (1.4153 to 1.4159 in.)
		Others	26.959 to 26.975 mm (1.0614 to 1.0620 in.)
	Circle runout	Maximum	0.03 mm (0.0012 in.)
	Cam lobe height	STD Intake	42.855 to 42.955 mm (1.6872 to 1.6911 in.)
		STD Exhaust	42.854 to 42.954 mm (1.6872 to 1.6911 in.)
		Minimum Intake	42.855 mm (1.6872 in.)
		Minimum Exhaust	42.854 mm (1.6872 in.)
Cylinder block	Cylinder head surface warpage	Maximum	0.05 mm (0.0020 in.)
	Cylinder bore diameter	STD	94.990 to 95.003 mm (3.7398 to 3.7403 in.)
	Crankshaft bearing cap bolt outside diameter	STD	10.76 to 10.97 mm (0.4236 to 0.4319 in.)
		Minimum	10.66 mm (0.4197 in.)

Piston and piston ring	Piston diameter	STD	94.941 to 94.971 mm (3.7378 to 3.7390 in.)
		O/S 0.50	95.441 to 95.471 mm (3.7575 to 3.7587 in.)
	Piston oil clearance		0.019 to 0.052 mm (0.0007 to 0.0020 in.)
	Piston ring groove clearance	No. 1	0.020 to 0.075 mm (0.0008 to 0.0030 in.)
		No. 2	0.020 to 0.065 mm (0.0008 to 0.0026 in.)
		Oil	0.020 to 0.070 mm (0.0008 to 0.0028 in.)
	Piston ring end gap	STD No. 1	0.22 to 0.034 mm (0.0087 to 0.0134 in.)
		No. 2	0.45 to 0.57 mm (0.0177 to 0.0224 in.)
		Oil	0.10 to 0.40 mm (0.0039 to 0.0157 in.)
No. 1 balanceshaft	Thrust clearance	Standard	0.07 to 0.13 mm (0.0027 to 0.0051 in.)
		Maximum	0.20 mm (0.0079 in.)
	Main journal diameter	A	37.969 to 37.985 mm (1.4948 to 1.4955 in.)
		B	37.449 to 37.465 mm (1.4744 to 1.4750 in.)
	Bearing inside diameter	A	38.025 to 38.045 mm (1.4970 to 1.4978 in.)
		B	37.525 to 37.545 mm (1.4774 to 1.4781 in.)
	Oil clearance	Standard A	0.040 to 0.076 mm (0.0016 to 0.0031 in.)
		B	0.060 to 0.096 mm (0.0024 to 0.0038 in.)
		Maximum	0.15 mm (0.0059 in.)
No. 2 balanceshaft	Thrust clearance	Standard	0.07 to 0.13 mm (0.0027 to 0.0051 in.)
		Maximum	0.20 mm (0.0079 in.)
	Main journal diameter	A	37.969 to 37.985 mm (1.4948 to 1.4955 in.)
		B	37.449 to 37.465 mm (1.4744 to 1.4750 in.)
	Bearing inside diameter	A	38.025 to 38.045 mm (1.4970 to 1.4978 in.)
		B	37.525 to 37.545 mm (1.4774 to 1.4781 in.)
	Oil clearance	Standard A	0.040 to 0.076 mm (0.0016 to 0.0031 in.)
		B	0.060 to 0.096 mm (0.0024 to 0.0038 in.)
		Maximum	0.15 mm (0.0059 in.)
Crankshaft bearing	Lower bearing dimension	No. 1, 5	3.75 mm (0.1476 in.)
		No. 3	1.75 mm (0.0689 in.)
		No. 2, 4	2.75 mm (0.1083 in.)
Connecting rod	Thrust clearance	STD	0.150 to 0.350 mm (0.0059 to 0.0138 in.)
		Maximum	0.4 mm (0.016 in.)
	Connecting rod oil clearance	STD	0.024 to 0.049 mm (0.0009 to 0.0019 in.)
	Connecting rod bearing center wall thickness (Reference)	Mark 4	1.484 to 1.487 mm (0.0584 to 0.0585 in.)
		5	1.488 to 1.490 mm (0.0586 to 0.0587 in.)
		6	1.491 to 1.493 mm (0.0587 to 0.0588 in.)
	Rod bend	Maximum per 100 mm (3.94 in.)	0.03 mm (0.0012 in.)
	Rod twist	Maximum per 100 mm (3.94 in.)	0.15 mm (0.0059 in.)
	Bush inside diameter		22.005 to 22.014 mm (0.8663 to 0.8667 in.)
	Piston pin diameter	Mark A	21.997 to 22.000 mm (0.8660 to 0.8661 in.)
		Mark B	22.001 to 22.003 mm (0.8662 to 0.8663 in.)
		Mark C	22.004 to 22.006 mm (0.8663 to 0.8664 in.)
		Mark D	22.007 to 22.009 mm (0.8664 to 0.8665 in.)
	Bush oil clearance	STD	0.001 to 0.007 mm (0.00004 to 0.00028 in)
		Maximum	0.010 mm (0.0039 in.)
	Connecting rod bolt tension portion diameter	STD	7.2 to 7.3 mm (0.283 to 0.287 in.)
		Maximum	7.0 mm (0.276 in.)

SS

Crankshaft	Thrust clearance	STD	0.020 to 0.220 mm (0.0008 to 0.0087 in.)
		Maximum	0.30 mm (0.0118 in.)
	Thrust washer thickness		2.440 to 2.490 mm (0.0961 to 0.0980 in.)
	Crankshaft journal bore diameter on cylinder block with bearing (Reference)	Mark 1	64.004 to 64.010 mm (2.5198 to 2.5201 in.)
		Mark 2	64.011 to 64.016 mm (2.5201 to 2.5203 in.)
		Mark 3	64.017 to 64.022 mm (2.5203 to 2.5206 in.)
	Crankshaft journal oil clearance	STD No. 3	0.030 to 0.055 mm (0.0012 to 0.0022 in.)
		STD Others	0.024 to 0.049 mm (0.0009 to 0.0019 in.)
		Maximum	0.10 mm (0.0039 in.)
	Crankshaft journal diameter	No. 3	59.981 to 59.994 mm (2.3615 to 2.3620 in.)
		Others	59.987 to 60.000 mm (2.3619 to 2.3622 in.)
	Crankshaft bearing center wall thickness (Reference)	Mark 1	1.987 to 1.990 mm (0.0782 to 0.0783 in.)
		Mark 2	1.990 to 1.993 mm (0.0784 to 0.0785 in.)
		Mark 3	1.943 to 1.996 mm (0.0785 to 0.0786 in.)
	Crank pin diameter		52.989 to 53.002 mm (2.0862 to 2.0867 in.)
	Circle runout	Maximum	0.03 mm (0.0012 in.)
	Crankshaft journal taper and out-of-round	Maximum	0.005 mm (0.0002 in.)
	Crank pin taper and out-of-round	Maximum	0.003 mm (0.0001 in.)

SS

1GR-FE FUEL

SERVICE DATA

Fuel pressure			281 to 287 kPa (2.87 to 2.93 kgf*cm^2, 40.8 to 41.7 psi)
Fuel pressure			147 kPa (1.5 kgf*cm^2, 21 psi) or more
Fuel injector	Resistance	at 20°C (68°F)	11.6 to 12.4 Ω
	Injection volume		76 to 91 cm2 (4.6 to 5.5 cu in.) per 15 seconds
	Difference between each cylinder		15 cm^3 (0.9 cu in.) or less
	Fuel leakage		1 drop or less every 12 minutes
Fuel pump resister	Resistance	at 20°C (68°F)	0.71 to 0.75 Ω
Fuel Pump	Resistance	at 20°C (68°F)	0.2 to 3.0 Ω
Fuel pump relay assembly	Resistance		
	3 - 4	Apply battery voltage to terminal 1 and 2	Below 1 Ω
			10 kΩ or higher
	3 - 5	Apply battery voltage to terminal 1 and 2	10 kΩ or higher
			Below 1 Ω

SS

TORQUE SPECIFICATIONS

Part Tightened	N*m	kgf*cm	ft.*lbf
Fuel tank x Body	62	632	46
Fuel tank protector sub-assembly No. 1 x Body (with OFF ROAD PACKAGE)	20	204	15
Fuel delivery pipe sub-assembly x Intake manifold	15	153	11
Intake air surge tank x Intake manifold	28	286	21
Intake air surge tank x Throttle body bracket	21	214	16
Intake air surge tank x Surge tank stay No. 1	21	214	16
Intake air surge tank x Surge tank stay No. 2	21	214	16
Fuel pressure regulator assembly x Fuel delivery pipe sub-assembly	9.0	92	80 in.*lbf
Negative battery terminal	3.9	40	35 in.*lbf

2TR-FE FUEL

SERVICE DATA

Fuel pressure		Standard	281 to 287 kPa (2.87 to 2.93 kgf*cm^2, 40.8 to 41.7 psi)
Fuel injector assembly	Resistance (1 - 2)		11.6 to 12.4 Ω at 20°C (68°F)
	Injection volume		71 to 86 cm^3 (4.3 to 5.2 cu in.) per 15 seconds
	Difference between each injector		15 cm^3 (0.9 cu in.) or less
	Leakage		1 drop or less in 12 minutes
Fuel pump assembly	Resistance		0.2 to 3.0 kΩ at 20°C (68°F)

TORQUE SPECIFICATIONS

Part Tightened	N*m	kgf*cm	ft.*lbf
Fuel tank x Body	62	632	46
Fuel tank protector sub-assembly No. 1 x Body (with OFF ROAD PACKAGE)	20	204	15
Fuel delivery pipe x Cylinder head cover sub-assembly	12	122	9
Intake manifold x Wire harness clamp bracket	8.2	84	73 in.*lbf
Fuel delivery pipe x Fuel pressure pulsation damper assembly	8.5	87	75 in.*lbf
Fuel delivery pipe x Fuel pressure regulator assembly	8.5	87	75 in.*lbf
Battery x Battery negative terminal	3.9	40	35 in.*lbf

1GR-FE EMISSION CONTROL

SERVICE DATA

Air-fuel ratio compensation system	Voltage	B22 (A1A+) - A28 (E2)	3.3 V
		B23 (A2A+) - A28 (E2)	3.3 V
		B30 (A1A-) - A28 (E2)	2.9 V
		B31 (A2A-) - A28 (E2)	2.9 V
Fuel cut off rpm	Cut off		2,500 rpm
	Return		1,400 rpm
Lead detection pump	Voltage	A23 (VC) - A28 (E2)	4.5 to 5.5 V
		E22 (PPMP) - A28 (E2)	1.425 to 4.150 V
Vacuum Switching Valve No. 1	Resistance	at 20 °C (68 °F)	26 to 30 Ω
Air fuel ratio sensor (Bank 1, Bank 2)	Resistance	1 (HT) - 2 (+B)	1.8 to 3.4 Ω at 20°C (68°F)
		1 (HT) - 4 (E1)	10 kΩ or higher
Heated oxygen sensor No. 2 (Bank 1, Bank 2)	Resistance	1 (HT) - 2 (+B)	11 to 16 Ω at 20°C (68°F)
	Resistance	1 (HT) - 4 (E1)	10 kΩ or higher

SS

TORQUE SPECIFICATIONS

Part Tightened	N*m	kgf*cm	ft.*lbf
Duty vacuum switching valve x Intake air surge tank	9.0	92	80 in.*lbf
Ventilation valve x Cylinder head cover	27	275	20
Heated oxygen sensor x Exhaust pipe	3.9	40	35 in.*lbf
Air fuel ratio sensor x Exhaust manifold	44	449	33
Negative battery terminal	3.9	40	35 in.*lbf
Charcoal canister x Body	20	204	15
Charcoal canister filter No. 2 x Body	20	204	15

2TR-FE EMISSION CONTROL

SERVICE DATA

Duty vacuum switching valve	Resistance	1 - 2	26 to 30 Ω at 20°C (68°F)
		1 - Body	10 MΩ or higher
		2 - Body	10 MΩ or higher
Air fuel ratio sensor	Resistance	1 (HT) - 2 (+B)	1.8 to 3.4 Ω at 20°C (68°F)
		1 (HT) - 4 (AF-)	10 kΩ or higher
Heated oxygen sensor	Resistance	1 (HT) - 2 (+B)	11 to 16 Ω at 20°C (68°F)
		1 (HT) - 4 (E)	10 kΩ or higher
Pressure sensor	Voltage	VC - E2	4.5 to 5.5 V
Air switching valve assembly	Resistance	1 - 2	4.5 to 5.5 Ω at 20°C (68°F)
Air pump assembly	Resistance	1 - 2	0.4 to 1.0 Ω at 20°C (68°F)

TORQUE SPECIFICATIONS

Part Tightened	N*m	kgf*cm	ft.*lbf
Air fuel ratio sensor x Exhaust pipe assembly front	44	449	33
Battery x Battery negative terminal	3.9	40	35 in.*lbf
Heated oxygen sensor x Exhaust pipe assembly tail	44	449	33
Air pump assembly x Body	18	184	13
Washer jar assembly x Body	6	56	49 in.*lbf
Air switching valve assembly x Cylinder head sub-assembly	20	204	15
Intake pipe insulator x Air switching valve assembly	20	204	15
Intake pipe insulator x Cylinder head sub-assembly	20	204	15
Exhaust manifold heat insulator No. 1 x Exhaust manifold	12	122	9
Charcoal canister x Body	20	204	15
Charcoal canister filter No. 2 x Body	20	204	15

1GR-FE INTAKE

SERVICE DATA

VSV for ACIS	Resistance	at 20 °C (68 °F)	37 to 44 Ω

1GR-FE EXHAUST

SERVICE DATA

Compression spring	Length	Minimum	40.5 mm (1.594 in.)

TORQUE SPECIFICATIONS

Part Tightened		N*m	kgf*cm	ft.*lbf
Exhaust pipe assembly front x Exhaust manifold		62	632	46
Exhaust front pipe assembly No. 2 x Exhaust pipe assembly center	Bolt	48	489	35
	Nut	62	632	46
Exhaust pipe assembly center x Tail pipe		48	490	35
Heated oxygen sensor x Exhaust pipe assembly front		43	438	32
Heated oxygen sensor x Exhaust front pipe assembly No. 2		43	438	32
Negative battery terminal		3.9	40	35 in.*lbf

2TR-FE EXHAUST

SERVICE DATA

Compression spring (Exhaust pipe assembly front x Exhaust manifold)	Free length	Minimum	40.5 mm (1.594 in.)

TORQUE SPECIFICATIONS

Part Tightened	N*m	kgf*cm	ft.*lbf
Exhaust pipe assembly front x Exhaust manifold	43	438	32
Exhaust pipe assembly front x Exhaust pipe assembly tail	48	489	35
Battery x Battery negative terminal	3.9	40	35 in.*lbf

1GR-FE COOLING

SERVICE DATA

Water inlet w/ thermostat	Valve opening temperature		80 to 84 °C (176 to 183 °F)
	Valve lift	at 95 °C (203 °F)	8 mm (0.31 in.) or more
Radiator cap	Relief valve opening pressure	Standard	93 to 123 kPa (0.95 to 1.25 kgf/cm^2, 13.5 to 17.8 psi)
		Minimum	78 kPa (0.8 kgf/cm^2, 11.4 psi)

TORQUE SPECIFICATIONS

Part Tightened		N*m	kgf*cm	ft.*lbf
Cylinder block water drain cock plug x Cylinder block water drain cock		13	130	9
Water pump assembly x Timing chain or belt cover sub-assembly	10 mm (0.39 in.) head	9.0	92	80 in.*lbf
	12 mm (0.47 in.) head	23	235	17
Idler pulley sub-assembly No. 2 x Timing chain or belt cover sub-assembly		39	398	29
Water inlet x Timing chain or belt cover sub-assembly		9.0	92	80 in.*lbf
Fan shroud x Radiator		5.0	51	44 in.*lbf
Fan w/ fluid coupling x Water pump		21	214	15
V-bank cover x Intake air surge tank		7.5	76	66 in.*lbf
Engine under cover sub-assembly No. 1 x Frame assembly		30	306	22
Water inlet w/ thermostat x Water inlet		9.0	92	80 in.*lbf
Radiator x Radiator support		18	184	13
Negative battery terminal		3.9	40	35 in.*lbf

2TR-FE COOLING

SERVICE DATA

Thermostat	Valve opening temperature		80 to 84°C (176 to 183°F)
	Valve lift	at 95°C (203°F)	8.5 mm (0.355 in.) or more
Radiator cap sub-assembly	Standard opening pressure		93 to 123 kPa (0.95 to 1.25 kgf/cm^2, 13.5 to 17.8 psi)
	Minimum opening pressure		78 kPa (0.8 kgf/cm^2, 11.4 psi)

TORQUE SPECIFICATIONS

Part Tightened		N*m	kgf*cm	ft.*lbf
Cylinder block water drain cock plug x Cylinder block water drain cock sub-assembly		13	130	9
Engine under cover No. 1 x Body		30	306	22
Water pump assembly x Timing chain cover	Bolt A	21	214	15
	Bolt B	9	92	80 in.*lbf
V-ribbed belt tensioner assembly x Cylinder block sub-assembly	Bolt A	21	214	16
	Bolt B	40	408	30
	Bolt C	43	434	32
Battery x Battery negative terminal		3.9	40	35 in.*lbf
Timing chain cover x Water inlet		20	204	15
Radiator assembly x Body		18	184	13
Radiator assembly x Fan shroud		5	51	44 in.*lbf
Fan w/ Fluid coupling x Water pump assembly		25	255	18

1GR-FE LUBRICATION

SERVICE DATA

Oil pressure		at idle speed	29 kPa (0.3 kgf/cm^2, 4.2 psi) or more
		at 3,000 rpm	294 to 588 kPa (3.0 to 6.0 kgf/cm^2, 43 to 85 psi)
Oil pump	Tip clearance	Standard	0.06 to 0.16 mm (0.0024 to 0.0063 in.)
		Maximum	0.16 mm (0.0063 in.)
	Side clearance	Standard	0.03 to 0.09 mm (0.0012 to 0.0035 in.)
		Maximum	0.09 mm (0.0035 in.)
	Body clearance	Standard	0.250 to 0.325 mm (0.0098 to 0.0128 in.)
		Maximum	0.325 mm (0.0128 in.)

TORQUE SPECIFICATIONS

Part Tightened	N*m	kgf*cm	ft.*lbf
Oil pressure switch x Oil filter bracket sub-assembly	15	153	11
Oil pan drain plug x Oil pan sub-assembly No. 2	40	408	30
Timing chain or belt cover sub-assembly x Cylinder head and block	23	235	17
Oil filter bracket sub-assembly x Timing chain or belt cover sub-assembly	19	194	14
V-bank cover x Intake air surge tank	7.5	76	66 in.*lbf
Oil pump relief valve x Oil pump cover	49	500	36
Oil pump cover x Timing chain or belt cover sub-assembly	9.0	92	80 in.*lbf
Oil cooler assembly x Oil filter bracket sub-assembly	68	693	50

2TR-FE LUBRICATION

SERVICE DATA

Oil pressure		at idle speed	29 kPa (0.3 kgf/cm^2, 4.3 psi) or more
		at 3,000 rpm	160 to 490 kPa (1.6 to 5.3 kgf/cm^2, 23 to 75 psi)
Oil pump	Tip clearance	STD	0.040 to 0.160 mm (0.0016 to 0.0063 in.)
		Minimum	0.26 mm (0.0102 in.)
	Side clearance	STD	0.025 to 0.075 mm (0.0010 to 0.0030 in.)
		Minimum	0.130 mm (0.0051 in.)
	Body clearance	STD	0.250 to 0.325 mm (0.0098 to 0.0128 in.)
		Minimum	0.425 mm (0.0167 in.)

TORQUE SPECIFICATIONS

Part Tightened		N*m	kgf*cm	ft.*lbf
Oil pressure switch x Cylinder block sub-assembly		15	153	11
Oil pan drain plug x Oil pan sub-assembly No. 2		38	382	28
Timing chain cover x Head straight screw plug		17	170	12
Timing chain cover x Cylinder head sub-assembly and Cylinder block sub-assembly	Bolt A	46	469	34
	Bolt B	21	214	15
	Bolt C	21	214	15
	Bolt D	21	214	15
	Bolt E	21	214	15
	Nut	21	214	15
Air cleaner case x Body		12	122	9
Engine under cover No. 1 x Body		30	306	22
Engine under cover No. 2 x Body		30	306	22
Oil pump cover x Timing chain cover		9.0	92	80 in.*lbf
Oil pump relief valve x Timing chain cover		49	500	36

1GR-FE IGNITION

SERVICE DATA

Spark plug	Recommended spark plug	DENSO made	K20HR-U11
		NGK made	LFR6C-11
	Electrode gap		1.0 to 1.1 mm (0.039 to 0.043 in.)
	Maximum electrode gap		1.46 mm (0.057 in.)
Crankshaft position sensor	Resistance	at 20°C (68°F)	1,850 to 2,450 Ω

TORQUE SPECIFICATIONS

Part Tightened	N*m	kgf*cm	ft.*lbf
Ignition coil x Cylinder head cover	10	102	7.4
VVT sensor x Cylinder head sub-assembly	8.0	82	71 in.*lbf
V-bank cover x Intake air surge tank sub-assembly and Air cleaner assembly	7.5	76	66 in.*lbf
Crankshaft position sensor x Cylinder block	10	102	7.4
V-ribbed belt tensioner and Cooler compressor assembly	25	255	18
Negative battery terminal	3.9	40	35 in.*lbf

2TR-FE IGNITION

SERVICE DATA

Spark plug	Recommended spark plug	DENSO made	SK20HR11
		NGK made	ILFR6C11
	Electrode gap	standard	1.0 to 1.1 mm (0.039 to 0.043 in.)
Camshaft position sensor	Resistance	at cold	835 to 1,400 Ω
		at hot	1,060 to 1,645 Ω
Crankshaft position sensor	Resistance	at cold	1,630 to 2,740 Ω
		at hot	2,065 to 3,225 Ω

TORQUE SPECIFICATIONS

Part Tightened		N*m	kgf*cm	ft.*lbf
Spark plug x Cylinder head cover sub-assembly		18	184	13
Ignition coil x Cylinder head cover sub-assembly		9	92	80 in.*lbf
Camshaft position sensor x Timing chain cover		8.5	87	75 in.*lbf
Crankshaft position sensor x Timing chain cover		8.5	87	75 in.*lbf
Idle pulley assembly with bracket x Cylinder block sub-assembly	Bolt A	21	214	16
	Bolt B, C	43	438	32
Battery x Battery negative terminal		3.9	40	35 in.*lbf

1GR-FE STARTING

SERVICE DATA

Starter	No-load characteristics		Current	100 A or less at 11.5 V
	Starter armature assembly	Circle runout	Maximum	0.05 mm (0.0020 in.)
		Commutator diameter	Standard	35.0 mm (1.378 in.)
			Minimum	34.0 mm (1.339 in.)
		Undercut depth	Standard	0.7 mm (0.028 in.)
			Minimum	0.2 mm (0.008 in.)
	Starter yoke	Shunt coil resistance	at 20°C (68°F)	1.5 to 1.9 Ω
	Brush	Brush length	Standard	15.0 mm (0.591 in.
			Minimum	9.0 mm (0.354 in.)
	Starter brush holder assembly	Brush spring load	Standard	21.5 to 27.5 N (2.2 to 2.8 kgf, 4.8 to 6.2 lbf)
			Minimum	12.7 N (1.3 kgf, 2.9 lbf)
Starter relay assembly	Resistance (3 - 5)		Apply battery voltage to terminal 1 and 2	10 kΩ or higher
				Below 1 Ω
Ignition or starter switch	Standard			10 kΩ or higher
	LOCK		1 (AM1) - 3 (ACC)	Below 1 Ω
	ACC		1 (AM1) - 3 (ACC) - 4 (IG1)	Below 1 Ω
	ON		7 (IG2) - 8 (AM2)	Below 1 Ω
	START		1 (AM1) - 2 (ST1) - 4 (IG1)	Below 1 Ω
			6 (ST2) - 7 (IG2) - 8 (AM2)	Below 1 Ω

TORQUE SPECIFICATIONS

Part Tightened	N*m	kgf*cm	ft.*lbf
Starter assembly x Transmission housing	37	377	27
Starter assembly x Terminal 30	9.8	100	7
Commutator end frame x Brush holder	3.8	39	34 in.*lbf
Starter drive housing assembly x Magnetic Starter Switch	9.3	95	82 in.*lbf
Commutator end frame x Starter drive housing assembly	9.3	95	82 in.*lbf
Lead wire x Terminal C of starter	5.9	60	52 in.*lbf
Engine wire x Cylinder block	13	133	10
Manifold stay x Transmission housing and Exhaust manifold	40	408	30
Steering sliding yoke x Steering intermediate shaft No. 2	36	370	27

2TR-FE STARTING

SERVICE DATA

Starter assembly	Specified current			100 A or less at 11.5 V
Starter relay assembly	Resistance (3-5)		Standard	10 kΩ or higher
				Below 1 Ω (Apply battery voltage to terminal 1 and 2)
Ignition or starter switch assembly	Resistance		LOCK	10 kΩ or higher
			ACC	Below 1 Ω
			ON	Below 1 Ω
			START	Below 1 Ω
Magnetic switch resistance	Terminal 50 - C			1 Ω or lower
	Terminal 50 - Switch body			2 Ω or lower
Starter armature	Resistance		Segments	1 Ω or lower
			Commutator-Armature coil	10 kΩ or higher
	Diameter		Standard	35.0 mm (1.378 in.)
			Minimum	34.0 mm (1.339 in.)
	Undercut depth		Standard	0.7 mm (0.028 in.)
			Minimum	0.2 mm (0.008 in.)
Starter yoke assembly	Brush length		Standard	15.0 mm (0.591 in.)
			Minimum	9.0 mm (0.354 in.)
	Resistance	Lead wire - brush	Standard	1 Ω or lower
		Shunt coil	Standard	1.5 to 1.9 Ω at 20°C (68°F)
Starter brush holder	Resistance		Standard	10 kΩ or higher
	Spring load		Standard	21.5 to 27.5 N (2.2 to kgf, 4.8 to 6.2 lbf)
			Minimum	12.7 N (1.3 kgf, 2.9)

SS

TORQUE SPECIFICATIONS

Part Tightened	N*m	kgf*cm	ft.*lbf
Lead wire x Terminal C	5.9	60	52 in.*lbf
Starter assembly x Transmission housing assembly	37	377	27
Starter wire x Starter assembly	9.8	100	7
Lead wire x Terminal C	5.9	60	52
Starter commutator end frame assembly x Starter brush holder	3.8	39	34 in.*lbf
Starter commutator end frame assembly x Starter drive housing assembly	9.3	95	82 in.*lbf
Magnet switch x Starter drive housing assembly	9.3	95	82 in.*lbf

1GR-FE CHARGING

SERVICE DATA

SS

Battery	Voltage		at 20°C (68°F)	12.6 to 12.9 V
Voltage regulator	Regulating voltage			13.2 to 14.8 V
Generator (DENSO made)	Generator brush holder assembly	Brush length	Standard	10.5 mm (0.413 in.)
			Minimum	4.5 mm (0.177 in.)
	Generator rotor assembly	Resistance	at 20°C (68°F)	2.3 to 2.7 Ω
		Slip ring diameter	Standard	14.2 to 14.4 mm (0.559 to 0.567 in.)
			Minimum	14.0 mm (0.551 in.)
Generator (BOSCH made)	Generator rotor assembly	Rotor coil resistance	at 20°C (68°F)	2.27 to 2.53 Ω
		Slip ring diameter	Standard	15.3 to 15.5 mm (0.602 to 0.610 in.)
			Minimum	14.9 mm (0.587 in.)
	Starter sub-assembly generator with rectifier	Positive rectifier	Positive (+) tester probe - Positive (+) terminal	Below 1 Ω
			Negative (-) tester probe - Rectifier terminal	
			Negative (-) tester probe - Positive (+) terminal	10 kΩ or higher
			Positive (+) tester probe - Rectifier terminal	
		Negative rectifier	Positive (+) tester probe - Negative (-) terminal	10 kΩ or higher
			Negative ( ) tester probe Rectifier terminal	
			Negative (-) tester probe - Negative (-) terminal	Below 1 Ω
			Positive (+) tester probe - Rectifier terminal	
		Starter for open circuit	Between rectifier terminals	Below 1 Ω
	Generator brush holder assembly	Brush exposed length	Minimum	6.0 mm (0.236 in.)

TORQUE SPECIFICATIONS

Part Tightened		N*m	kgf*cm	ft.*lbf
Generator assembly x V-ribbed belt tensioner and cylinder head		43	438	32
Generator assembly x Wire harness clamp bracket		8.0	82	71 in.*lbf
Generator assembly x Terminal B		9.8	100	7
Wire harness stay x Body		8.0	82	71 in.*lbf
V-bank cover x Intake air surge tank sub-assembly and Air cleaner assembly		7.5	76	66 in.*lbf
Engine under cover sub-assembly No. 1 x Frame assembly		30	306	22
Engine under cover assembly rear x Frame assembly		30	306	22
Retainer plate x Drive end frame assembly generator (Denso made)		2.2	22	19 in.*lbf
Generator coil assembly x Drive frame assembly generator (Denso made)		5.8	59	51 in.*lbf
Generator brush holder assembly x Generator coil assembly (Denso made)		1.8	18	16 in.*lbf
Generator rear end cover x Generator coil assembly (Denso made)		4.6	47	41 in.*lbf
Generator pulley x Generator rotor assembly (Denso made)		111	1,125	81
Pulley x Generator rotor assembly (BOSCH made)		65	663	48
Starter sub-assembly generator w/ rectifier x Drive end frame assembly (BOSCH made)		4.3	44	38 in.*lbf
Regulator sub-assembly generator w/ brush x Starter sub-assembly generator w/ rectifier (BOSCH made)	Screw A	2.5	25	22 in.*lbf
	Screw B	1.2	12	11 in.*lbf
Generator rear end cover x Starter sub-assembly generator w/ rectifier (BOSCH made)	Nut A	19	194	14
	Nut B	12	122	9.0
	Screw	2.8	29	25 in.*lbf

SS

2TR-FE CHARGING

SERVICE DATA

Battery	Voltage		Standard	12.5 to 12.9 V at 20°C (68°F)
Charging circuit without load	Amperage		Standard	10 A or less
	Voltage		Standard	13.2 to 14.8
Charging circuit with load	Amperage		Standard	30 A or more
Generator assembly	Generator brush holder assembly	Brush length	Standard	9.5 to 11.5 mm (0.374 to 0.453 in.)
			Minimum	4.5 mm (0.177 in.)
	Generator rotor assembly	Resistance	at 20°C (68°F)	1.7 to 2.1 Ω
	Slip ring diameter		Standard	14.2 to 14.4 mm (0.559 to 0.567 in.)
			Minimum	14.0 mm (0.551 in.)

TORQUE SPECIFICATIONS

Part Tightened		N*m	kgf*cm	ft.*lbf
Generator assembly x Generator wire		9.8	100	7
Generator assembly x Timing chain cover		43	438	32
Generator assembly x V-ribbed belt tensioner assembly		43	438	32
Battery x Battery negative terminal		3.9	40	35 in.*lbf
Generator drive end frame assembly x Generator rectifier end frame		4.5	46	40 in.*lbf
Generator holder w/ rectifier x Generator drive end frame assembly		2.0	20	17 in.*lbf
Generator regulator assembly x Generator rectifier end frame		2.0	20	17 in.*lbf
Generator brush holder assembly x Generator rectifier end frame		2.0	20	17 in.*lbf
Generator rear end cover x Generator regulator end frame		4.4	45	39 in.*lbf
Terminal plate x Generator rectifier end frame assembly	Bolt	3.9	40	34 in.*lbf
	Nut	4.4	45	39 in.*lbf
Generator pulley x Generator rotor assembly		137	1,397	101

A340E AUTOMATIC TRANSMISSION

SERVICE DATA

Line pressure (Wheel locked)		
Engine idling	D position	363 to 422 kPa (3.7 to 4.3 kgf/cm^2, 53 to 61 psi)
	R position	608 to 708 kPa (6.2 to 7.2 kgf/cm^2, 88 to 102 psi)
At stall (Throttle valve fully opened)	D position	932 to 1,177 kPa (9.5 to 12.0 kgf/cm^2, 135 to 171 psi)
	R position	1,569 to 1,912 kPa (16.0 to 19.0 kgf/cm^2, 228 to 277 psi)
Engine stall revolution	D and R positions	1,850 to 2,150 rpm
Time lag	N → D position	Less than 1.2 seconds
	N → R position	Less than 1.5 seconds
Engine idle speed	A/C OFF and N position	650 to 750 rpm
Drive plate runout	Max	0.20 mm (0.0079 in.)
Torque converter runout	Max	0.30 mm (0.0118 in.)
Torque converter installation distance	-	More than 17.1 mm (0.673 in.)
Lock-up point		
D position (Throttle valve opening 5%)	Lock-up ON	71 to 76 km/h (44 to 47 mph)
	Lock-up OFF	64 to 69 km/h (40 to 43 mph)
3 position (Throttle valve opening 5%)	Lock-up ON	71 to 76 km/h (44 to 47 mph)
	Lock-up OFF	64 to 69 km/h (40 to 43 mph)
Shift point		
D position (Throttle valve fully opened)	1 → 2	60 to 71 km/h (37 to 44 mph)
	2 → 3	119 to 129 km/h (74 to 80 mph)
	3 → O/D	154 to 167 km/h (95 to 103 mph)
	O/D → 3	142 to 152 km/h (88 to 94 mph)
	3 → 2	107 to 113 km/h (66 to 70 mph)
	2 → 1	43 to 48 km/h (27 to 30 mph)
D position (Throttle valve fully closed)	3 → O/D	59 to 68 km/h (37 to 42 mph)
	O/D → 3	27 to 31 km/h (17 to 19 mph)
2 position (Throttle valve fully opened)	1 → 2	60 to 71 km/h (37 to 44 mph)
	3 → 2	119 to 125 km/h (74 to 77 mph)
	2 → 1	43 to 48 km/h (27 to 30 mph)
L position (Throttle valve fully opened)	2 → 1	57 to 62 km/h (35 to 38 mph)

TORQUE SPECIFICATIONS

Part Tightened	N*m	kgf*cm	ft.*lbf
Transmission control cable x Automatic transmission	14	143	10
Transmission control cable bracket No.1 x Automatic transmission	28	286	21
Engine mounting insulator rear No.1 x Automatic transmission	65	663	48
Automatic transmission x Engine (For bolt A)	71	724	52
Automatic transmission x Engine (For bolt B)	37	377	27
Torque converter clutch x Drive plate	48	489	35
Oil cooler tube clamp x Cylinder block (For bolt A)	12	122	8.9
Oil cooler tube clamp x Cylinder block (For bolt B)	5.0	51	44 in. *lbf
Oil cooler outlet tube No.1 x Automatic transmission	34	350	25
Oil cooler inlet tube No.1 x Automatic transmission	34	350	25
Oil filler tube x Automatic transmission	12	122	8.9
Front suspension member bracket x Body	33	336	24
Manifold stay x Automatic transmission (For bolt A)	71	724	52
Manifold stay x Automatic transmission (For bolt B)	44	449	33
Manifold stay x Exhaust manifold	30	306	22
Speed sensor x Automatic transmission	5.4	55	48 in. *lbf
Drain plug x Oil pan	20	204	15
Transmission wire set bolt x Automatic transmission	5.4	55	48 in. *lbf
Oil strainer x Valve body	10	100	7.0
Oil pan x Transmission case	7.4	75	65 in. *lbf
Shift solenoid valve SLU x Valve body	6.4	65	56 in. *lbf
Shift solenoid valve S1 x Valve body	6.4	65	56 in. *lbf
Shift solenoid valve S2 x Valve body	6.4	65	56 in. *lbf
Shift solenoid valve SLT x Valve body	6.4	65	56 in. *lbf
Valve body x Transmission case	11	110	8.0
Frame crossmember sub-assembly No. 3 x Engine mounting insulator rear No. 1	19	189	14
Frame crossmember sub-assembly No. 3 x Body	40	408	30
Park/neutral position switch x Automatic transmission (For nut)	6.9	70	61 in. *lbf
Park/neutral position switch x Automatic transmission (For bolt)	13	130	9.0
Battery x Negative battery terminal	3.9	40	35 in. *lbf
Temperature sensor x Automatic transmission	29	300	22
Floor shift assembly x Body	14	143	10
Floor shift gear shifting rod sub-assembly x Floor shift assembly	5.5	56	49 in. *lbf
Transmission control cable x Body	5.5	56	49 in. *lbf

A750E AUTOMATIC TRANSMISSION

SERVICE DATA

Line pressure (Wheel locked)		
Engine idling	D position	363 to 423 kPa (3.7 to 4.3 kgf/cm^2, 53 to 61 psi)
	R position	484 to 564 kPa (4.9 to 5.8 kgf/cm^2, 70 to 82 psi)
AT stall (Throttle valve fully opened)	D position	1,282 to 1,381 kPa (13.0 to 14.0 kgf/cm^2, 186 to 200 psi)
	R position	1,218 to 1,338 kPa (12.0 to 14.0 kgf/cm^2, 177 to 194 psi)
Engine stall revolution	D and R positions	2,250 to 2,550 rpm
Time lag	N → D position	Less than 1.2 seconds
	N → R position	Less than 1.5 seconds
Engine idle speed (A/C OFF)	N position	650 to 750 rpm
Drive plate runout	Max	0.20 mm (0.0079 in.)
Torque converter runout	Max	0.30 mm (0.0118 in.)
Torque converter clutch installation distance	-	More than 17.1 mm (0.673 in.)
Shift schedule		
D position (Throttle valve fully opened)	1 → 2	49 to 61 km/h (30 to 38 mph)
	2 → 3	96 to 107 km/h (59 to 66 mph)
	3 → 4	139 to 155 km/h (86 to 96 mph)
	4 → 5	177 to 190 km/h (110 to 118 mph)
	5 → 4	183 to 170 km/h (113 to 105 mph)
	4 → 3	135 to 124 km/h (84 to 77 mph)
	3 → 2	90 to 83 km/h (56 to 51 mph)
	2 → 1	44 to 38 km/h (27 to 24 mph)
D position (Throttle valve fully closed)	4 → 5	46 to 52 km/h (28 to 32 mph)
	5 → 4	27 to 33 km/h (17 to 20 mph)
4 position (Throttle valve fully opened)	1 → 2	49 to 61 km/h (30 to 38 mph)
	2 → 3	96 to 107 km/h (59 to 66 mph)
	3 → 4	139 to 155 km/h (86 to 96 mph)
	5 → 4	190 to 203 km/h (117 to 125 mph)
	4 → 3	124 to 135 km/h (77 to 84 mph)
	3 → 2	90 to 83 km/h (56 to 51 mph)
	2 → 1	44 to 38 km/h (27 to 24 mph)
3 position (Throttle valve fully opened)	1 → 2	49 to 61 km/h (30 to 38 mph)
	2 → 3	96 to 107 km/h (59 to 66 mph)
	4 → 3	133 to 145 km/h (82 to 90 mph)
	3 → 2	90 to 83 km/h (56 to 51 mph)
	2 → 1	44 to 38 km/h (27 to 24 mph)
2 position (Throttle valve fully opened)	1 → 2	49 to 61 km/h (30 to 38 mph)
	3 → 2	99 to 88 km/h (61 to 54 mph)
	2 → 1	44 to 38 km/h (27 to 24 mph)
L position (Throttle valve fully opened)	2 → 1	48 to 42 km/h (30 to 26 mph)
Lock-up point		

D position (Throttle valve opening 5 %)	5th gear (Lock-up ON)	57 to 63 km/h (35 to 39 mph)
	5th gear (Lock-up OFF)	56 to 49 km/h (35 to 30 mph)
4 position (Throttle valve opening 5 %)	4th gear (Lock-up ON)	59 to 53 km/h (37 to 33 mph)
	4th gear (Lock-up OFF)	46 to 52 km/h (28 to 32 mph)

A750F AUTOMATIC TRANSMISSION

SERVICE DATA

Line pressure (Wheel locked)		
Engine idling	D position	363 to 423 kPa (3.7 to 4.3 kgf/cm^2, 53 to 61 psi)
	R position	484 to 564 kPa (4.9 to 5.8 kgf/cm^2, 70 to 82 psi)
AT stall (Throttle valve fully opened)	D position	1,282 to 1,381 kPa (13.0 to 14.0 kgf/cm^2, 186 to 200 psi)
	R position	1,218 to 1,338 kPa (12.0 to 14.0 kgf/cm^2, 177 to 194 psi)
Engine stall revolution	D and R positions	2,250 to 2,550 rpm
Time lag	N → D position	Less than 1.2 seconds
	N → R position	Less than 1.5 seconds
Engine idle speed (A/C OFF)	N position	650 to 750 rpm
Drive plate runout	Max	0.20 mm (0.0079 in.)
Torque converter runout	Max	0.30 mm (0.0118 in.)
Torque converter clutch installation distance	-	More than 17.1 mm (0.673 in.)
Shift schedule		
D position (Throttle valve fully opened)	1 → 2	49 to 61 km/h (30 to 38 mph)
	2 → 3	96 to 107 km/h (59 to 66 mph)
	3 → 4	139 to 155 km/h (86 to 96 mph)
	4 → 5	177 to 190 km/h (110 to 118 mph)
	5 → 4	183 to 170 km/h (113 to 105 mph)
	4 → 3	135 to 124 km/h (84 to 77 mph)
	3 → 2	90 to 83 km/h (56 to 51 mph)
	2 → 1	44 to 38 km/h (27 to 24 mph)
D position (Throttle valve fully closed)	4 → 5	46 to 52 km/h (28 to 32 mph)
	5 → 4	27 to 33 km/h (17 to 20 mph)
4 position (Throttle valve fully opened)	1 → 2	49 to 61 km/h (30 to 38 mph)
	2 → 3	96 to 107 km/h (59 to 66 mph)
	3 → 4	139 to 155 km/h (86 to 96 mph)
	5 → 4	190 to 203 km/h (117 to 125 mph)
	4 → 3	124 to 135 km/h (77 to 84 mph)
	3 → 2	90 to 83 km/h (56 to 51 mph)
	2 → 1	44 to 38 km/h (27 to 24 mph)
3 position (Throttle valve fully opened)	1 → 2	49 to 61 km/h (30 to 38 mph)
	2 → 3	96 to 107 km/h (59 to 66 mph)
	4 → 3	133 to 145 km/h (82 to 90 mph)
	3 → 2	90 to 83 km/h (56 to 51 mph)
	2 → 1	44 to 38 km/h (27 to 24 mph)
2 position (Throttle valve fully opened)	1 → 2	49 to 61 km/h (30 to 38 mph)
	3 → 2	99 to 88 km/h (61 to 54 mph)
	2 → 1	44 to 38 km/h (27 to 24 mph)
L position (Throttle valve fully opened)	2 → 1	48 to 42 km/h (30 to 26 mph)
Lock-up point		

D position (Throttle valve opening 5 %)	5th gear (Lock-up ON)	57 to 63 km/h (35 to 39 mph)
	5th gear (Lock-up OFF)	56 to 49 km/h (35 to 30 mph)
4 position (Throttle valve opening 5 %)	4th gear (Lock-up ON)	59 to 53 km/h (37 to 33 mph)
	4th gear (Lock-up OFF)	46 to 52 km/h (28 to 32 mph)

CLUTCH

SERVICE DATA

Pedal height from asphalt sheet	-	168.5 to 178.5 mm (6.634 to 7.028 in.)
Clutch pedal free play	-	5.0 to 15.0 mm (0.197 to 0.591 in.)
Clutch pedal push rod play at pedal top	-	1.0 to 5.0 mm (0.039 to 0.197 in.)
Disc rivet head depth	Maximum	0.3 mm (0.012 in.)
Flywheel sub-assembly runout	Maximum	0.1 mm (0.004 in.)
Clutch release point from pedal full stroke end position	-	25 mm (0.984 in.) or more
Clutch cover	Minimum depth Minimum width	0.5 mm (0.020 in.) 6.0 mm (0.236 in.)
Clutch disc runout	Minimum	1.0 mm (0.039 in.)
Clutch start cancel switch Resistance	S/W OFF 2 - 4 2 - 4 (Apply battery voltage to terminals 1 and 3) S/W ON 2 - 4 (Apply battery voltage to terminals 1 and 3)	10 kΩ or higher 10 kΩ or higher Below 1 Ω

TORQUE SPECIFICATIONS

Part tightened	N*m	kgf*cm	ft.*lbf
Clutch pedal sub-assembly x Clutch pedal support	34	347	25
Clutch pedal support set bolt x Body for bolt	24	245	18
Clutch pedal support set bolt x Body for nut	14	145	10
Clutch master cylinder assembly x Clutch pedal support	16	158	11
Clutch master cylinder assembly x Clutch master cylinder to 2 way tube	15	155	11
Release cylinder bleeder plug x Clutch release cylinder assembly	11	110	8.0
Clutch release cylinder assembly x Transmission housing	12	120	8.7
Clutch release cylinder assembly x Clutch master cylinder to 2 way tube	15	155	11
Clutch release cylinder assembly x Clutch master cylinder to 2 way tube bracket	12	120	8.7
Clutch cover assembly x Flywheel sub-assembly	19	195	14
Release fork support x Transmission assembly	47	479	35
Clutch start switch assembly x Clutch pedal support	16	160	12
Clutch housing cover No. 1 x Transmission housing	12	120	8.7
Flywheel x Crankshaft 1st 2nd	27 Turn 90 °	270 Turn 90°	20 Turn 90 °
Clutch accumulator x Transmission housing	12	120	8.7
Clutch accumulator x Flexible hose tube	15	155	11

R155 MANUAL TRANSMISSION

SERVICE DATA

Synchronizer ring outer No. 3 to gear spline piece No. 5 clearance	STD	0.68 to 1.32 mm (0.0267 to 0.0610 in.)
Hub sleeve No. 3 to shift fork No. 3 clearance	STD	0.62 to 0.84 mm (0.0102 to 0.0331 in.)
Counter 5th gear inner diameter	STD Max.	38.015 to 38.040 mm (1.4967 to 1.4976 in.) 38.040 mm (1.4976 in.)
Reverse idler gear inner diameter	STD Max.	24.040 to 24.061 mm (0.9465 to 0.9473 in.) 24.061 mm (0.9473 in.)
Reverse idler gear shaft outer diameter	STD Min.	23.979 to 24.000 mm (0.9441 to 0.9449 in.) 23.979 mm (0.9441 in.)
Reverse idler gear to reverse idler gear shaft clearance	STD	0.040 to 0.082 mm (0.0016 to 0.0032 in.)
Reverse idler gear to reverse shift arm	STD	0.05 to 0.35 mm (0.0020 to 0.0138 in.)
Counter gear snap ring thickness Rear	STD Mark A Mark B Mark C Mark D Mark E Mark F Mark G	0.1 mm (0.0039 in.) or less 2.80 to 2.85 mm (0.1102 to 0.1122 in.) 2.85 to 2.90 mm (0.1122 to 0.1142 in.) 2.90 to 2.95 mm (0.1142 to 0.1161 in.) 2.95 to 3.00 mm (0.1161 to 0.1181 in.) 3.00 to 3.05 mm (0.1181 to 0.1201 in.) 3.05 to 3.10 mm (0.1201 to 0.1220 in.) 3.10 to 3.15 mm (0.1220 to 0.1240 in.)
Counter 5th gear thrust clearance	STD	0.10 to 0.35 mm (0.0039 to 0.0138 in.)
Counter 5th gear radial clearance	STD	0.015 to 0.068 mm (0.0006 to 0.0027 in.)
Output shaft snap ring thickness Snap ring	STD Mark A Mark B Mark C Mark D Mark E Mark F Mark G Mark H Mark J Mark K Mark L Mark M Mark N Mark P Mark Q Mark R Mark S	0.10 mm (0.0039 in.) or less 2.65 to 2.70 mm (0.1043 to 0.1063 in.) 2.70 to 2.75 mm (0.1063 to 0.1083 in.) 2.75 to 2.80 mm (0.1083 to 0.1102 in.) 2.80 to 2.85 mm (0.1102 to 0.1122 in.) 2.85 to 2.90 mm (0.1122 to 0.1142 in.) 2.90 to 2.95 mm (0.1142 to 0.1161 in.) 2.95 to 3.00 mm (0.1161 to 0.1181 in.) 3.00 to 3.05 mm (0.1181 to 0.1201 in.) 3.05 to 3.10 mm (0.1201 to 0.1220 in.) 3.10 to 3.15 mm (0.1220 to 0.1240 in.) 3.15 to 3.20 mm (0.1240 to 0.1260 in.) 3.20 to 3.25 mm (0.1260 to 0.1280 in.) 3.25 to 3.30 mm (0.1280 to 0.1299 in.) 3.30 to 3.35 mm (0.1299 to 0.1319 in.) 3.35 to 3.40 mm (0.1319 to 0.1339 in.) 3.40 to 3.45 mm (0.1339 to 0.1358 in.) 3.45 to 3.50 mm (0.1358 to 0.1378 in.)
Front bearing retainer oil seal drive in depth	-	11.2 to 12.2 mm (0.4409 to 0.4803 in.)
Extension housing oil seal drive in depth	-	- 0.5 to 0.5 mm (- 0.020 to 0.020 in.)
Transfer adapter oil sea drive in depth	-	45.4 to 46.4 mm (1.7874 to 1.8268 in.)
Synchronizer ring No. 2 to input shaft clearance	STD	0.70 to 1.70 mm (0.0276 to 0.0669 in.)
Input shaft snap ring thickness Snap ring	STD Mark A Mark B Mark C Mark D Mark E Mark F Mark G	0.1 mm (0.0039 in.) or less 2.10 to 2.15 mm (0.0827 to 0.0846 in.) 2.15 to 2.20 mm (0.0846 to 0.0866 in.) 2.20 to 2.25 mm (0.0866 to 0.0886 in.) 2.25 to 2.30 mm (0.0886 to 0.0906 in. 2.30 to 2.35 mm (0.0906 to 0.0925 in.) 2.35 to 2.40 mm (0.0925 to 0.0945 in.) 2.40 to 2.45 mm (0.0945 to 0.0965 in.)
1st gear thrust clearance	STD	0.20 to 0.45 mm (0.0079 to 0.0177 in.)
2nd gear thrust clearance	STD	0.10 to 0.25 mm (0.0039 to 0.0098 in.)
3rd gear thrust clearance	STD	0.10 to 0.25 mm (0.0039 to 0.0098 in.)
1st gear radial clearance	STD	0.020 to 0.073 mm (0.0008 to 0.0029 in.)
2rd gear radial clearance	STD	0.015 to 0.068 mm (0.0006 to 0.0027 in.)

3rd gear radial clearance	STD	0.015 to 0.068 mm (0.0006 to 0.0027 in.)
Output shaft circle runout	Max.	0.03 mm (0.0012 in.)
Output shaft outer diameter	(A) STD (B) STD (C) STD (A) Min. (B) Min. (C) Min.	38.979 to 38.995 mm (1.5334 to 1.5352 in.) 46.984 to 47.000 mm (1.8498 to 1.8504 in.) 37.984 to 38.000 mm (1.4954 to 1.4961 in.) 38.979 mm (1.5334 in.) 46.984 mm (1.8498 in.) 37.984 mm (1.4954 in.)
Output shaft flange	STD	4.8 to 5.2 mm (0.1890 to 0.2047 in.)
3rd gear inner diameter	STD Max.	44.015 to 44.040 mm (1.7329 to 1.7339 in.) 44.040 mm (1.7339 in.)
2rd gear inner diameter	STD Max.	53.015 to 53.040 mm (2.0872 to 2.0881 in.) 53.040 mm (2.0881 in.)
1st gear inner diameter	STD Max.	46.015 to 46.046 mm (1.812 to 1.8126 in.) 46.040 mm (1.8126 in.)
1st gear thrust washer thickness	STD	5.95 to 6.05 mm (0.2346 to 0.2382 in.)
Synchronizer ring set No. 1 to 1st gear clearance	STD	0.75 to 1.65 mm (0.0295 to 0.0649 in.)
Synchronizer ring set No. 1 to 2nd gear clearance	STD	0.65 to 1.75 mm (0.0256 to 0.0689 in.)
Synchronizer ring No. 2 to 3rd gear clearance	STD	0.75 to 1.65 mm (0.0295 to 0.0649 in.)
Reverse gear to shift fork No. 1	STD	0.15 to 0.41 mm (0.0060 to 0.0161 in.)
Hub sleeve No. 2 to shift fork No. 2 clearance	STD	0.15 to 0.35 mm (0.0059 to 0.0138 in.)
Output shaft snap ring thickness (clutch hub No. 2) Snap ring	STD Mark A Mark B Mark C Mark D Mark E Mark F Mark G	0.1 mm (0.0039 in.) or less 1.80 to 1.85 mm (0.0709 to 0.0728 in.) 1.85 to 1.90 mm (0.0728 to 0.0748 in.) 1.90 to 1.95 mm (0.0748 to 0.0768 in.) 1.95 to 2.00 mm (0.0768 to 0.0787 in.) 2.00 to 2.05 mm (0.0787 to 0.0807 in.) 2.05 to 2.10 mm (0.0807 to 0.0827 in.) 2.10 to 2.15 mm (0.0827 to 0.0846 in.)
Output shaft snap ring thickness Clutch hub No. 1	STD Mark A Mark B Mark C Mark D Mark E Mark F Mark G	0.1 mm (0.0039 in.) or less 2.30 to 2.35 mm (0.0906 to 0.0925 in.) 2.35 to 2.40 mm (0.0925 to 0.0945 in.) 2.40 to 2.45 mm (0.0945 to 0.0965 in.) 2.45 to 2.50 mm (0.0965 to 0.0984 in.) 2.50 to 2.55 mm (0.0984 to 0.1004 in.) 2.55 to 2.60 mm (0.1004 to 0.1024 in.) 2.60 to 2.65 mm (0.1024 to 0.1043 in.)

R155F MANUAL TRANSMISSION

SERVICE DATA

Synchronizer ring outer No. 3 to gear spline piece No. 5 clearance	STD	0.68 to 1.32 mm (0.0267 to 0.0610 in.)
Hub sleeve No. 3 to shift fork No. 3 clearance	STD	0.62 to 0.84 mm (0.0102 to 0.0331 in.)
Counter 5th gear inner diameter	STD Max.	38.015 to 38.040 mm (1.4967 to 1.4976 in.) 38.040 mm (1.4976 in.)
Reverse idler gear inner diameter	STD Max.	24.040 to 24.061 mm (0.9465 to 0.9473 in.) 24.061 mm (0.9473 in.)
Reverse idler gear shaft outer diameter	STD Min.	23.979 to 24.000 mm (0.9441 to 0.9449 in.) 23.979 mm (0.9441 in.)
Reverse idler gear to reverse idler gear shaft clearance	STD	0.040 to 0.082 mm (0.0016 to 0.0032 in.)
Reverse idler gear to reverse shift arm	STD	0.05 to 0.35 mm (0.0020 to 0.0138 in.)
Counter gear snap ring thickness Rear	STD Mark A Mark B Mark C Mark D Mark E Mark F Mark G	0.1 mm (0.0039 in.) or less 2.80 to 2.85 mm (0.1102 to 0.1122 in.) 2.85 to 2.90 mm (0.1122 to 0.1142 in.) 2.90 to 2.95 mm (0.1142 to 0.1161 in.) 2.95 to 3.00 mm (0.1161 to 0.1181 in.) 3.00 to 3.05 mm (0.1181 to 0.1201 in.) 3.05 to 3.10 mm (0.1201 to 0.1220 in.) 3.10 to 3.15 mm (0.1220 to 0.1240 in.)
Counter 5th gear thrust clearance	STD	0.10 to 0.35 mm (0.0039 to 0.0138 in.)
Counter 5th gear radial clearance	STD	0.015 to 0.068 mm (0.0006 to 0.0027 in.)
Output shaft snap ring thickness Snap ring	STD Mark A Mark B Mark C Mark D Mark E Mark F Mark G Mark H Mark J Mark K Mark L Mark M Mark N Mark P Mark Q Mark R Mark S	0.1 mm (0.0039 in.) or less 2.65 to 2.70 mm (0.1043 to 0.1063 in.) 2.70 to 2.75 mm (0.1063 to 0.1083 in.) 2.75 to 2.80 mm (0.1083 to 0.1102 in.) 2.80 to 2.85 mm (0.1102 to 0.1122 in.) 2.85 to 2.90 mm (0.1122 to 0.1142 in.) 2.90 to 2.95 mm (0.1142 to 0.1161 in.) 2.95 to 3.00 mm (0.1161 to 0.1181 in.) 3.00 to 3.05 mm (0.1181 to 0.1201 in.) 3.05 to 3.10 mm (0.1201 to 0.1220 in.) 3.10 to 3.15 mm (0.1220 to 0.1240 in.) 3.15 to 3.20 mm (0.1240 to 0.1260 in.) 3.20 to 3.25 mm (0.1260 to 0.1280 in.) 3.25 to 3.30 mm (0.1280 to 0.1299 in.) 3.30 to 3.35 mm (0.1299 to 0.1319 in.) 3.35 to 3.40 mm (0.1319 to 0.1339 in.) 3.40 to 3.45 mm (0.1339 to 0.1358 in.) 3.45 to 3.50 mm (0.1358 to 0.1378 in.)
Front bearing retainer oil seal drive in depth	-	11.2 to 12.2 mm (0.4409 to 0.4803 in.)
Extension housing oil seal drive in depth	-	- 0.5 to 0.5 mm (- 0.020 to 0.020 in.)
Transfer adapter oil sea drive in depth	-	45.4 to 46.4 mm (1.7874 to 1.8268 in.)
Synchronizer ring No. 2 to input shaft clearance	STD	0.70 to 1.70 mm (0.0276 to 0.0669 in.)
Input shaft snap ring thickness Snap ring	STD Mark A Mark B Mark C Mark D Mark E Mark F Mark G	0.1 mm (0.0039 in.) or less 2.10 to 2.15 mm (0.0827 to 0.0846 in.) 2.15 to 2.20 mm (0.0846 to 0.0866 in.) 2.20 to 2.25 mm (0.0866 to 0.0886 in.) 2.25 to 2.30 mm (0.0886 to 0.0906 in.) 2.30 to 2.35 mm (0.0906 to 0.0925 in.) 2.35 to 2.40 mm (0.0925 to 0.0945 in.) 2.40 to 2.45 mm (0.0945 to 0.0965 in.)
1st gear thrust clearance	STD	0.20 to 0.45 mm (0.0079 to 0.0177 in.)
2nd gear thrust clearance	STD	0.10 to 0.25 mm (0.0039 to 0.0098 in.)
3rd gear thrust clearance	STD	0.10 to 0.25 mm (0.0039 to 0.0098 in.)
1st gear radial clearance	STD	0.020 to 0.073 mm (0.0008 to 0.0029 in.)
2rd gear radial clearance	STD	0.015 to 0.068 mm (0.0006 to 0.0027 in.)
3rd gear radial clearance	STD	0.015 to 0.068 mm (0.0006 to 0.0027 in.)

Output shaft circle runout	Max.	0.03 mm (0.0012 in.)
Output shaft outer diameter	(A) STD (B) STD (C) STD (A) Min. (B) Min. (C) Min.	38.979 to 38.995 mm (1.5334 to 1.5352 in.) 46.984 to 47.000 mm (1.8498 to 1.8504 in.) 37.984 to 38.000 mm (1.4954 to 1.4961 in.) 38.979 mm (1.5334 in.) 46.984 mm (1.8498 in.) 37.984 mm (1.4954 in.)
Output shaft flange	STD	4.8 to 5.2 mm (0.1890 to 0.2047 in.)
3rd gear inner diameter	STD Max.	44.015 to 44.040 mm (1.7329 to 1.7339 in.) 44.040 mm (1.7339 in.)
2rd gear inner diameter	STD Max.	53.015 to 53.040 mm (2.0872 to 2.0881 in.) 53.040 mm (2.0881 in.)
1st gear inner diameter	STD Max.	46.015 to 46.046 mm (1.812 to 1.8126 in.) 46.040 mm (1.8126 in.)
1st gear thrust washer thickness	STD	5.95 to 6.05 mm (0.2346 to 0.2382 in.)
Synchronizer ring set No. 1 to 1st gear clearance	STD	0.75 to 1.65 mm (0.0295 to 0.0649 in.)
Synchronizer ring set No. 1 to 2nd gear clearance	STD	0.65 to 1.75 mm (0.0256 to 0.0689 in.)
Synchronizer ring No. 2 to 3rd gear clearance	STD	0.75 to 1.65 mm (0.0295 to 0.0649 in.)
Reverse gear to shift fork No. 1	STD	0.15 to 0.41 mm (0.0060 to 0.0161 in.)
Hub sleeve No. 2 to shift fork No. 2 clearance	STD	0.15 to 0.35 mm (0.0059 to 0.0138 in.)
Output shaft snap ring thickness (clutch hub No. 2) Snap ring	STD Mark A Mark B Mark C Mark D Mark E Mark F Mark G	0.1 mm (0.0039 in.) or less 1.80 to 1.85 mm (0.0709 to 0.0728 in.) 1.85 to 1.90 mm (0.0728 to 0.0748 in.) 1.90 to 1.95 mm (0.0748 to 0.0768 in.) 1.95 to 2.00 mm (0.0768 to 0.0787 in.) 2.00 to 2.05 mm (0.0787 to 0.0807 in.) 2.05 to 2.10 mm (0.0807 to 0.0827 in.) 2.10 to 2.15 mm (0.0827 to 0.0846 in.)
Output shaft snap ring thickness (clutch hub No. 1)	STD Mark A Mark B Mark C Mark D Mark E Mark F Mark G	0.1 mm (0.0039 in.) or less 2.30 to 2.35 mm (0.0906 to 0.0925 in.) 2.35 to 2.40 mm (0.0925 to 0.0945 in.) 2.40 to 2.45 mm (0.0945 to 0.0965 in.) 2.45 to 2.50 mm (0.0965 to 0.0984 in.) 2.50 to 2.55 mm (0.0984 to 0.1004 in.) 2.55 to 2.60 mm (0.1004 to 0.1024 in.) 2.60 to 2.65 mm (0.1024 to 0.1043 in.)

RA60 MANUAL TRANSMISSION

SERVICE DATA

Reverse idler gear thrust clearance	STD: MAX:	0.10 to 0.55 mm (0.0039 to 0.0217 in.) 0.55 mm (0.0217 in.)
Reverse idler gear radial clearance	STD: MAX:	0.015 to 0.050 mm (0.0006 to 0.0020 in.) 0.050 mm (0.0020 in.)
Slotted pin drive in depth	-	0 to 0.5 mm (0 to 0.050 in.)
Transmission case oil seal dimension A	-	60.0 to 60.8 mm (2.362 to 2.394 in.)
Preload	-	0.45 to 1.35 N*m (4.59 to 13.77 kgf*cm, 3.98 to 11.95 in.*lbf)
Manual Transmission extension housing oil seal dimension A	-	- 0.5 to 0.5 mm (- 0.197 to 0.197 in.)
6th gear thrust clearance	-	0.20 to 0.49 mm (0.0079 to 0.0193 in.)
3rd gear thrust clearance	-	0.09 to 0.52 mm (0.0035 to 0.0205 in.)
4th gear thrust clearance	-	0.12 to 0.38 mm (0.0047 to 0.0150 in.)
6th gear radial clearance	-	0.015 to 0.065 mm (0.0006 to 0.0026 in.)
3rd gear radial clearance	-	0.015 to 0.067 mm (0.0006 to 0.0026 in.)
4th gear radial clearance	-	0.015 to 0.067 mm (0.0006 to 0.0026 in.)
Input shaft runout	MAX:	0.03 mm (0.0012 in.)
Input shaft outer diameter	STD: A B C D E MIN: A B C D E	34.002 to 34.015 mm (1.3387 to 1.3392 in.) 44.985 to 45.000 mm (1.7711 to 1.7717 in.) 44.985 to 45.000 mm (1.7711 to 1.7717 in.) 41.985 to 42.000 mm (1.6530 to 1.6535 in.) 32.967 to 32.980 mm (1.2979 to 1.2984 in.) 34.002 mm (1.3387 in.) 44.985 mm (1.7711 in.) 44.985 mm (1.7711 in.) 41.985 mm (1.6530 in.) 32.967 mm (1.2979 in.)
6th gear inside diameter	STD: MAX	51.015 to 51.040 mm (2.0085 to 2.0095 in.) 51.015 to 51.040 mm (2.0085 to 2.0095 in.)
3rd gear inside diameter	STD: MAX:	51.015 to 51.040 mm (2.0085 to 2.0095 in.) 51.040 mm (2.0095 in.)
4th gear inside diameter	STD: MAX:	51.015 to 51.040 mm (2.0085 to 2.0095 in.) 51.040 mm (2.0095 in.)
Gear shift fork No. 2 or No. 3 claw and glove of the transmission hub sleeve No. 2 clearance	-	0.26 to 0.84 mm (0.0102 to 0.0331 in.)
6th gear synchronizer ring back and 6th gear spline end clearance	STD: MIN:	0.70 to 1.50 mm (0.0276 to 0.0591 in.) 0.70 mm (0.0276 in.)
3rd gear synchronizer ring back and 3rd gear spline end clearance	STD: Inner Middle Outer MIN: Inner Middle Outer	1.20 to 2.20 mm (0.0472 to 0.0866 in.) 0.60 to 1.80 mm (0.0236 to 0.0709 in.) 0.80 to 1.80 mm (0.0315 to 0.0709 in.) 1.20 mm (0.0472 in.) 0.60 mm (0.0236 in.) 0.80 mm (0.0315 in.)
6th gear synchronizer ring back and 6th gear spline end clearance	STD: MIN:	0.70 to 1.50 mm (0.0276 to 0.0591 in. 0.70 mm (0.0276 in.)
3rd gear thrust washer thickness	STD: MIN	7.12 to 7.18 mm (0.2803 to 0.2827 in.) 7.12 mm (0.2803 in.)
Input shaft front bearing snap ring	Mark A B C D E F	2.65 to 2.70 mm (0.1043 to 0.1063 in.) 2.70 to 2.75 mm (0.1063 to 0.1083 in.) 2.75 to 2.80 mm (0.1083 to 0.1102 in.) 2.80 to 2.85 mm (0.1102 to 0.1122 in.) 2.85 to 2.90 mm (0.1122 to 0.1142 in.) 2.90 to 2.95 mm (0.1142 to 0.1161 in.)

Clutch hub No. 2 setting shaft snap ring	Mark A B C D E F G	1.77 to 1.82 mm (0.0697 to 0.0717 in.) 1.82 to 1.87 mm (0.0717 to 0.0736 in.) 1.87 to 1.92 mm (0.0736 to 0.0756 in.) 1.92 to 1.97 mm (0.0756 to 0.0776 in.) 1.97 to 2.02 mm (0.0776 to 0.0795 in.) 2.02 to 2.07 mm (0.0795 to 0.0815 in.) 2.07 to 2.12 mm (0.0815 to 0.0835 in.)
Gear thrust washer shaft snap ring	Mark A B C D E F	2.07 to 2.12 mm (0.0815 to 0.0835 in.) 2.12 to 2.17 mm (0.0835 to 0.0854 in.) 2.17 to 2.22 mm (0.0854 to 0.0874 in.) 2.22 to 2.27 mm (0.0874 to 0.0894 in.) 2.27 to 2.32 mm (0.0894 to 0.0913 in.) 2.32 to 2.37 mm (0.0913 to 0.0933 in.)
Transmission clutch hub No. 3 shaft snap ring	Mark A B C D E F G	2.10 to 2.15 mm (0.0827 to 0.0847 in.) 2.15 to 2.20 mm (0.0847 to 0.0866 in.) 2.20 to 2.25 mm (0.0866 to 0.0886 in.) 2.25 to 2.30 mm (0.0886 to 0.0906 in.) 2.30 to 2.35 mm (0.0906 to 0.0925 in.) 2.35 to 2.40 mm (0.0925 to 0.0945 in.) 2.40 to 2.45 mm (0.0945 to 0.0965 in.)
Output shaft inside diameter	STD: MAX:	45.009 to 45.025 mm (1.7720 to 1.7726 in.) 45.025 mm (1.7726 in.)
Synchronizer ring back and gear spline end clearance	STD: MIN:	0.70 to 1.50 mm (0.0276 to 0.0591 in.) 0.70 mm (0.0276 in.)
Reverse gear thrust clearance	-	0.12 to 0.37 mm (0.0047 to 0.0146 in.)
1st gear thrust clearance	-	0.10 to 0.43 mm (0.0039 to 0.0169 in.)
2nd gear thrust clearance	-	0.10 to 0.43 mm (0.0039 to 0.0169 in.
Reverse gear radial clearance	-	0.015 to 0.065 mm (0.0006 to 0.0026 in.)
1st gear radial clearance	-	0.015 to 0.067 mm (0.0006 to 0.0026 in.)
2nd gear radial clearance	-	0.015 to 0.067 mm (0.0006 to 0.0026 in.)
Counter gear runout	MAX:	0.03 mm (0.0012 in.)
Counter gear outer diameter	STD: A B C D E MIN: A B C D E	34.002 to 34.015 mm (1.3387 to 1.3392 in.) 36.985 to 37.000 mm (1.4561 to 1.4567 in.) 47.985 to 48.000 mm (1.8892 to 1.8898 in.) 53.985 to 54.000 mm (2.1254 to 2.1260 in.) 34.002 to 34.015 mm (1.3387 to 1.3392 in.) 34.002 mm (1.3387 in.) 36.985 mm (1.4561 in.) 47.985 mm (1.8892 in.) 53.985 mm (2.1254 in.) 34.002 mm (1.3387 in.)
Reverse gear inside diameter	STD: MAX:	51.015 to 51.040 mm (2.0085 to 2.0095 in.) 51.040 mm (2.0095 in.)
1st gear inside diameter	STD: MAX:	54.015 to 54.040 mm (2.1266 to 2.1276 in.) 54.040 mm (2.1276 in.)
2nd gear inside diameter	STD: MAX:	60.015 to 60.040 mm (2.3628 to 2.3638 in.) 60.040 mm (2.3638 in.)
Gear shift fork No. 4 claw and glove of the transmission hub sleeve No. 3 clearance	-	0.26 to 0.84 mm (0.0102 to 0.0331 in.)
Gear shift fork No. 1 claw and glove of the transmission hub sleeve No. 1 clearance	-	0.15 to 0.35 mm (0.0059 to 0.0138 in.)
Reverse gear synchronizer ring back and reverse gear spline end clearance	STD: MIN:	0.70 to 1.30 mm (0.0276 to 0.0512 in.) 0.70 mm (0.0276 in.)
1st gear synchronizer ring back and 1st gear spline end clearance	STD: Inner Middle Outer MIN: Inner Middle Outer	1.48 to 2.12 mm (0.0583 to 0.0835 in.) 0.68 to 1.92 mm (0.0268 to 0.0756 in.) 0.88 to 1.72 mm (0.0346 to 0.0677 in.) 1.48 mm (0.0583 in.) 0.68 mm (0.0268 in.) 0.88 mm (0.0346 in.)

SS

2nd gear synchronizer ring back and 2nd gear spline end clearance	STD: Inner	1.48 to 2.12 mm (0.0583 to 0.0835 in.)
	Middle	0.68 to 1.92 mm (0.0268 to 0.0756 in.)
	Outer	0.88 to 1.72 mm (0.0346 to 0.0677 in.)
	MIN: Inner	1.48 mm (0.0583 in.)
	Middle	0.68 mm (0.0268 in.)
	Outer	0.88 mm (0.0346 in.)
Counter gear rear bearing snap ring	Mark A	2.35 to 2.40 mm (0.0925 to 0.0945 in.)
	B	2.40 to 2.45 mm (0.0945 to 0.0965 in.)
	C	2.45 to 2.50 mm (0.0965 to 0.0984 in.)
	D	2.50 to 2.55 mm (0.0984 to 0.1004 in.)
	E	2.55 to 2.60 mm (0.1004 to 0.1024 in.)
	F	2.60 to 2.65 mm (0.1024 to 0.1043 in.)
	G	2.65 to 2.70 mm (0.1043 to 0.1063 in.)
	H	2.70 to 2.75 mm (0.1063 to 0.1083 in.)
	J	2.75 to 2.80 mm (0.1083 to 0.1102 in.)
	K	2.80 to 2.85 mm (0.1102 to 0.1122 in.)
	L	2.85 to 2.90 mm (0.1122 to 0.1142 in.)
	M	2.90 to 2.95 mm (0.1142 to 0.1161 in.)
Clutch hub No. 1 shaft snap ring	Mark A	2.28 to 2.33 mm (0.0898 to 0.0917 in.)
	B	2.33 to 2.38 mm (0.0917 to 0.0937 in.)
	C	2.38 to 2.43 mm (0.0937 to 0.0957 in.)
	D	2.43 to 2.48 mm (0.0957 to 0.0976 in.)
	E	2.48 to 2.53 mm (0.0976 to 0.0996 in.)
	F	2.53 to 2.58 mm (0.0996 to 0.1016 in.)
	G	2.58 to 2.63 mm (0.1016 to 0.1035 in.)
Counter gear front bearing snap ring	Mark A	2.35 to 2.40 mm (0.0925 to 0.0945 in.)
	B	2.40 to 2.45 mm (0.0945 to 0.0965 in.)
	C	2.45 to 2.50 mm (0.0965 to 0.0984 in.)
	D	2.50 to 2.55 mm (0.0984 to 0.1004 in.)
	E	2.55 to 2.60 mm (0.1004 to 0.1024 in.)
	F	2.60 to 2.65 mm (0.1024 to 0.1043 in.)
	G	2.65 to 2.70 mm (0.1043 to 0.1063 in.)
	H	2.70 to 2.75 mm (0.1063 to 0.1083 in.)
	J	2.75 to 2.80 mm (0.1083 to 0.1102 in.)
	K	2.80 to 2.85 mm (0.1102 to 0.1122 in.)
	L	2.85 to 2.90 mm (0.1122 to 0.1142 in.)
	M	2.90 to 2.95 mm (0.1142 to 0.1161 in.)

RA60F MANUAL TRANSMISSION

SERVICE DATA

Reverse idler gear thrust clearance	STD: MAX:	0.10 to 0.55 mm (0.0039 to 0.0217 in.) 0.55 mm (0.0217 in.)
Reverse idler gear radial clearance	STD: MAX:	0.015 to 0.050 mm (0.0006 to 0.0020 in.) 0.050 mm (0.0020 in.)
Slotted pin drive in depth	-	0 to 0.5 mm (0 to 0.050 in.)
Transmission case oil seal dimension A	-	60.0 to 60.8 mm (2.362 to 2.394 in.)
Preload	-	0.45 to 1.35 N*m (4.59 to 13.77 kgf*cm, 3.98 to 11.95 in.*lbf)
Manual Transmission extension housing oil seal dimension A	-	- 0.5 to 0.5 mm (- 0.197 to 0.197 in.)
6th gear thrust clearance	-	0.20 to 0.49 mm (0.0079 to 0.0193 in.)
3rd gear thrust clearance	-	0.09 to 0.52 mm (0.0035 to 0.0205 in.)
4th gear thrust clearance	-	0.12 to 0.38 mm (0.0047 to 0.0150 in.)
6th gear radial clearance	-	0.015 to 0.065 mm (0.0006 to 0.0026 in.)
3rd gear radial clearance	-	0.015 to 0.067 mm (0.0006 to 0.0026 in.)
4th gear radial clearance	-	0.015 to 0.067 mm (0.0006 to 0.0026 in.)
Input shaft runout	MAX:	0.03 mm (0.0012 in.)
Input shaft outer diameter	STD: A B C D E MIN: A B C D E	34.002 to 34.015 mm (1.3387 to 1.3392 in.) 44.985 to 45.000 mm (1.7711 to 1.7717 in.) 44.985 to 45.000 mm (1.7711 to 1.7717 in.) 41.985 to 42.000 mm (1.6530 to 1.6535 in.) 32.967 to 32.980 mm (1.2979 to 1.2984 in.) 34.002 mm (1.3387 in.) 44.985 mm (1.7711 in.) 44.985 mm (1.7711 in.) 41.985 mm (1.6530 in.) 32.967 mm (1.2979 in.
6th gear inside diameter	STD: MAX:	51.015 to 51.040 mm (2.0085 to 2.0095 in.) 51.040 mm (2.0095 in.)
3rd gear inside diameter	STD: MAX:	51.015 to 51.040 mm (2.0085 to 2.0095 in.) 51.040 mm (2.0095 in.)
4th gear inside diameter	STD: MAX:	51.015 to 51.040 mm (2.0085 to 2.0095 in.) 51.040 mm (2.0095 in.)
Gear shift fork No. 2 or No. 3 claw and glove of the transmission hub sleeve No. 2 clearance	-	0.26 to 0.84 mm (0.0102 to 0.0331 in.)
6th gear synchronizer ring back and 6th gear spline end clearance	STD: MIN:	0.70 to 1.50 mm (0.0276 to 0.0591 in.) 0.70 mm (0.0276 in.)
3rd gear synchronizer ring back and 3rd gear spline end clearance	STD: Inner Middle Outer MIN: Inner Middle Outer	1.20 to 2.20 mm (0.0472 to 0.0866 in.) 0.60 to 1.80 mm (0.0236 to 0.0709 in.) 0.80 to 1.80 mm (0.0315 to 0.0709 in.) 1.20 mm (0.0472 in.) 0.60 mm (0.0236 in.) 0.80 mm (0.0315 in.)
6th gear synchronizer ring back and 6th gear spline end clearance	STD: MIN:	0.70 to 1.50 mm (0.0276 to 0.0591 in.) 0.70 mm (0.0276 in.)
3rd gear thrust washer thickness	STD: MIN:	7.12 to 7.18 mm (0.2803 to 0.2827 in.) 7.12 mm (0.2803 in.)
Input shaft front bearing snap ring	Mark A B C D E F	2.65 to 2.70 mm (0.1043 to 0.1063 in.) 2.70 to 2.75 mm (0.1063 to 0.1083 in.) 2.75 to 2.80 mm (0.1083 to 0.1102 in.) 2.80 to 2.85 mm (0.1102 to 0.1122 in.) 2.85 to 2.90 mm (0.1122 to 0.1142 in.) 2.90 to 2.95 mm (0.1142 to 0.1161 in.)

Clutch hub No. 2 setting shaft snap ring	Mark A B C D E F G	1.77 to 1.82 mm (0.0697 to 0.0717 in.) 1.82 to 1.87 mm (0.0717 to 0.0736 in.) 1.87 to 1.92 mm (0.0736 to 0.0756 in.) 1.92 to 1.97 mm (0.0756 to 0.0776 in.) 1.97 to 2.02 mm (0.0776 to 0.0795 in.) 2.02 to 2.07 mm (0.0795 to 0.0815 in.) 2.07 to 2.12 mm (0.0815 to 0.0835 in.)
Gear thrust washer shaft snap ring	Mark A B C D E F	2.07 to 2.12 mm (0.0815 to 0.0835 in.) 2.12 to 2.17 mm (0.0835 to 0.0854 in.) 2.17 to 2.22 mm (0.0854 to 0.0874 in.) 2.22 to 2.27 mm (0.0874 to 0.0894 in.) 2.27 to 2.32 mm (0.0894 to 0.0913 in.) 2.32 to 2.37 mm (0.0913 to 0.0933 in.)
Transmission clutch hub No. 3 shaft snap ring	Mark A B C D E F G	2.10 to 2.15 mm (0.0827 to 0.0847 in.) 2.15 to 2.20 mm (0.0847 to 0.0866 in.) 2.20 to 2.25 mm (0.0866 to 0.0886 in.) 2.25 to 2.30 mm (0.0886 to 0.0906 in.) 2.30 to 2.35 mm (0.0906 to 0.0925 in.) 2.35 to 2.40 mm (0.0925 to 0.0945 in.) 2.40 to 2.45 mm (0.0945 to 0.0965 in.)
Output shaft inside diameter	STD: MAX:	45.009 to 45.025 mm (1.7720 to 1.7726 in.) 45.025 mm (1.7726 in.)
Synchronizer ring back and gear spline end clearance	STD: MIN:	0.70 to 1.50 mm (0.0276 to 0.0591 in.) 0.70 mm (0.0276 in.)
Reverse gear thrust clearance	-	0.12 to 0.37 mm (0.0047 to 0.0146 in.)
1st gear thrust clearance	-	0.10 to 0.43 mm (0.0039 to 0.0169 in.)
2nd gear thrust clearance	-	0.10 to 0.43 mm (0.0039 to 0.0169 in.)
Reverse gear radial clearance	-	0.015 to 0.065 mm (0.0006 to 0.0026 in.)
1st gear radial clearance	-	0.015 to 0.067 mm (0.0006 to 0.0026 in.)
2nd gear radial clearance	-	0.015 to 0.067 mm (0.0006 to 0.0026 in.)
Counter gear runout	MAX:	0.03 mm (0.0012 in.)
Counter gear outer diameter	STD: A B C D E MIN: A B C D E	34.002 to 34.015 mm (1.3387 to 1.3392 in.) 36.985 to 37.000 mm (1.4561 to 1.4567 in.) 47.985 to 48.000 mm (1.8892 to 1.8898 in.) 53.985 to 54.000 mm (2.1254 to 2.1260 in.) 34.002 to 34.015 mm (1.3387 to 1.3392 in.) 34.002 mm (1.3387 in.) 36.985 mm (1.4561 in.) 47.985 mm (1.8892 in.) 53.985 mm (2.1254 in.) 34.002 mm (1.3387 in.)
Reverse gear inside diameter	STD: MAX:	51.015 to 51.040 mm (2.0085 to 2.0095 in.) 51.040 mm (2.0095 in.)
1st gear inside diameter	STD: MAX:	54.015 to 54.040 mm (2.1266 to 2.1276 in.) 54.040 mm (2.1276 in.)
2nd gear inside diameter	STD: MAX:	60.015 to 60.040 mm (2.3628 to 2.3638 in.) 60.040 mm (2.3638 in.)
Gear shift fork No. 4 claw and glove of the transmission hub sleeve No. 3 clearance	-	0.26 to 0.84 mm (0.0102 to 0.0331 in.)
Gear shift fork No. 1 claw and glove of the transmission hub sleeve No. 1 clearance	-	0.15 to 0.35 mm (0.0059 to 0.0138 in.)
Reverse gear synchronizer ring back and reverse gear spline end clearance	STD: MIN:	0.70 to 1.30 mm (0.0276 to 0.0512 in.) 0.70 mm (0.0276 in.)
1st gear synchronizer ring back and 1st gear spline end clearance	STD: Inner Middle Outer MIN: Inner Middle Outer	1.48 to 2.12 mm (0.0583 to 0.0835 in.) 0.68 to 1.92 mm (0.0268 to 0.0756 in.) 0.88 to 1.72 mm (0.0346 to 0.0677 in.) 1.48 mm (0.0583 in.) 0.68 mm (0.0268 in.) 0.88 mm (0.0346 in.)

SS

2nd gear synchronizer ring back and 2nd gear spline end clearance	STD: Inner Middle Outer MIN: Inner Middle Outer	1.48 to 2.12 mm (0.0583 to 0.0835 in.) 0.68 to 1.92 mm (0.0268 to 0.0756 in.) 0.88 to 1.72 mm (0.0346 to 0.0677 in.) 1.48 mm (0.0583 in.) 0.68 mm (0.0268 in.) 0.88 mm (0.0346 in.)
Counter gear rear bearing snap ring	Mark A B C D E F G H J K L M	2.35 to 2.40 mm (0.0925 to 0.0945 in.) 2.40 to 2.45 mm (0.0945 to 0.0965 in.) 2.45 to 2.50 mm (0.0965 to 0.0984 in.) 2.50 to 2.55 mm (0.0984 to 0.1004 in.) 2.55 to 2.60 mm (0.1004 to 0.1024 in.) 2.60 to 2.65 mm (0.1024 to 0.1043 in.) 2.65 to 2.70 mm (0.1043 to 0.1063 in.) 2.70 to 2.75 mm (0.1063 to 0.1083 in.) 2.75 to 2.80 mm (0.1083 to 0.1102 in. 2.80 to 2.85 mm (0.1102 to 0.1122 in.) 2.85 to 2.90 mm (0.1122 to 0.1142 in.) 2.90 to 2.95 mm (0.1142 to 0.1161 in.)
Clutch hub No. 1 shaft snap ring	Mark A B C D E F G	2.28 to 2.33 mm (0.0898 to 0.0917 in.) 2.33 to 2.38 mm (0.0917 to 0.0937 in.) 2.38 to 2.43 mm (0.0937 to 0.0957 in.) 2.43 to 2.48 mm (0.0957 to 0.0976 in.) 2.48 to 2.53 mm (0.0976 to 0.0996 in.) 2.53 to 2.58 mm (0.0996 to 0.1016 in.) 2.58 to 2.63 mm (0.1016 to 0.1035 in.)
Counter gear front bearing snap ring	Mark A B C D E F G H J K L M	2.35 to 2.40 mm (0.0925 to 0.0945 in.) 2.40 to 2.45 mm (0.0945 to 0.0965 in.) 2.45 to 2.50 mm (0.0965 to 0.0984 in.) 2.50 to 2.55 mm (0.0984 to 0.1004 in.) 2.55 to 2.60 mm (0.1004 to 0.1024 in.) 2.60 to 2.65 mm (0.1024 to 0.1043 in.) 2.65 to 2.70 mm (0.1043 to 0.1063 in.) 2.70 to 2.75 mm (0.1063 to 0.1083 in.) 2.75 to 2.80 mm (0.1083 to 0.1102 in.) 2.80 to 2.85 mm (0.1102 to 0.1122 in.) 2.85 to 2.90 mm (0.1122 to 0.1142 in.) 2.90 to 2.95 mm (0.1142 to 0.1161 in.)

VF2BM TRANSFER

SERVICE DATA

Rear output shaft		
Drive sprocket thrust clearance	Standard	0.10 to 0.25 mm (0.0039 to 0.0098 in.)
	Maximum	0.25 mm (0.0098 in.)
Rear output shaft journal outer diameter (Part A)	Minimum	27.98 mm (1.1016 in.)
Rear output shaft journal outer diameter (Part B)	Minimum	36.98 mm (1.4561 in.)
Drive sprocket radial clearance	Standard	0.010 to 0.055 mm (0.0004 to 0.0022 in.)
	Maximum	0.055 mm (0.0022 in.)
Shift fork No. 1 to drive clutch sleeve clearance	Maximum	1.0 mm (0.039 in.)
Shift fork No. 2 to high and low clutch sleeve clearance	Maximum	1.0 mm (0.039 in.)
Rear output shaft snap ring thickness	Mark A	2.10 to 2.15 mm (0.0827 to 0.0846 in.)
	Mark B	2.15 to 2.20 mm (0.0846 to 0.0866 in.)
	Mark C	2.20 to 2.25 mm (0.0866 to 0.0886 in.)
	Mark D	2.25 to 2.30 mm (0.0886 to 0.0906 in.)
	Mark E	2.30 to 2.35 mm (0.0906 to 0.0925 in.)
	Mark F	2.35 to 2.40 mm (0.0925 to 0.0945 in.)
	Mark G	2.40 to 2.45 mm (0.0945 to 0.0965 in.)
	Mark H	2.45 to 2.50 mm (0.0965 to 0.0984 in.)
	Mark J	2.50 to 2.55 mm (0.0984 to 0.1004 in.)
	Mark K	2.00 to 2.05 mm (0.0787 to 0.0807 in.)
	Mark L	2.05 to 2.10 mm (0.0807 to 0.0827 in.)
Input shaft		
Input shaft journal outer diameter	Minimum	47.59 mm (1.8736 in.)
Input shaft bushing diameter	Maximum	39.14 mm (1.5409 in.)
Input gear stopper shaft snap ring thickness	Mark A	2.10 to 2.15 mm (0.0827 to 0.0846 in.)
	Mark B	2.15 to 2.20 mm (0.0846 to 0.0866 in.)
	Mark C	2.20 to 2.25 mm (0.0866 to 0.0886 in.)
	Mark D	2.25 to 2.30 mm (0.0886 to 0.0906 in.)
	Mark E	2.30 to 2.35 mm (0.0906 to 0.0925 in.)
	Mark F	2.35 to 2.40 mm (0.0925 to 0.0945 in.)
	Mark G	2.40 to 2.45 mm (0.0945 to 0.0965 in.)
	Mark H	2.45 to 2.50 mm (0.0965 to 0.0984 in.)
	Mark J	2.50 to 2.55 mm (0.0984 to 0.1004 in.)
	Mark K	2.55 to 2.60 mm (0.1004 to 0.1024 in.)
	Mark L	2.60 to 2.65 mm (0.1024 to 0.1043 in.)
	Mark M	2.65 to 2.70 mm (0.1043 to 0.1063 in.)
	Mark N	2.70 to 2.75 mm (0.1063 to 0.1083 in.)
	Mark P	2.75 to 2.80 mm (0.1083 to 0.1102 in.)
	Mark Q	2.80 to 2.85 mm (0.1102 to 0.1122 in.)
	Mark R	2.85 to 2.90 mm (0.1122 to 0.1142 in.)
	Mark S	2.90 to 2.95 mm (0.1142 to 0.1161 in.)
	Mark T	2.95 to 3.00 mm (0.1161 to 0.1181 in.)
	Mark U	3.00 to 3.05 mm (0.1181 to 0.1201 in.)
Transfer RH bearing retainer oil seal drive in depth (RA60F transmission)	Oil seal A	10.5 to 11.5 mm (0.413 to 0.453 in.)
	Oil seal B	0.5 to 1.0 mm (0.020 to 0.039 in.)
Planetary gear		

Pinion gear thrust clearance	Standard	0.11 to 0.84 mm (0.0043 to 0.0331 in.)
	Maximum	0.84 mm (0.0331 in.)
Pinion gear radial clearance	Standard	0.009 to 0.038 mm (0.0004 to 0.0015 in.)
	Maximum	0.038 mm (0.0015 in.)
Outer bearing snap ring thickness	Mark 1	1.45 to 1.50 mm (0.0571 to 0.0591 in.)
	Mark 2	1.50 to 1.55 mm (0.0591 to 0.0610 in.)
	Mark 3	1.55 to 1.60 mm (0.0610 to 0.0630 in.)
	Mark 4	1.60 to 1.65 mm (0.0630 to 0.0650 in.)
	Mark 5	1.65 to 1.70 mm (0.0650 to 0.0669 in.)
Low planetary gear bearing press in depth	-	7.7 to 8.3 mm (0.303 to 0.327 in.)

PROPELLER SHAFT

SERVICE DATA

Universal joint spider bearing axial play	Maximum	0 to 0.05 mm (0 to 0.002 in.)
Propeller shaft runout	Maximum	0.6 mm (0.024 in.)

TORQUE SPECIFICATIONS

Part Tightened	N*m	kgf*cm	ft.*lbf
Propeller shaft assembly x Rear differential carrier assembly	88	899	65
Universal joint yoke x Propeller with center bearing shaft assembly (1st)	182	1,850	134
Universal joint yoke x Propeller with center bearing shaft assembly (2nd)	69	700	51
Center support bearing No. 2 x Body	36	369	27
Front propeller shaft assembly x Transfer assembly	88	899	65
Front propeller shaft assembly x Front differential carrier assembly	88	899	65
Propeller shaft heat insulator bracket sub-assembly x Front crossmember sub-assembly No. 3	16	160	12
Rear propeller shaft assembly x Transfer assembly	88	899	65
Rear propeller shaft assembly x Rear differential carrier assembly	88	899	65

DRIVE SHAFT

SERVICE DATA

Front axle outboard joint boot clamp clearance	1.0 to 5.0 mm (0.039 to 0.197 in.)
Front drive inboard joint boot clamp clearance	1.0 to 4.0 mm (0.039 to 0.157 in.)
Front drive shaft standard length	484.4 to 488.4 mm (19.071 to 19.266 in.)

TORQUE SPECIFICATIONS

Part Tightened	N*m	kgf*cm	ft.*lbf
Front lower ball joint attachment x Steering knuckle	160	1,631	118
Front axle hub nut x Front drive shaft	235	2,396	173
Tie rod end sub-assembly x Steering knuckle	91	928	67
Front speed sensor harness bracket x Steering knuckle	13	133	10
Front speed sensor x Steering knuckle	8.3	85	73 in.*lbf
Front wheel	113	1,152	83
Battery negative terminal x Battery	3.9	40	35 in.*lbf

DIFFERENTIAL

SERVICE DATA

Front differential carrier assembly (1GR-FE (4WD))	Differential drive pinion preload (at starting)	New bearing Reused bearing	0.98 to 1.57 N*m (10 to 16 kgf*cm, 8.7 to 13.9 in.*lbf) 0.49 to 0.78 N*m (5.0 to 8.0 kgf*cm, 4.3 to 6.9 in.*lbf)
	Total preload (at starting)		Drive pinion preload plus 0.22 to 0.88 N*m (2.2 to 8.8 kgf*cm, 2.0 to 7.8 in.*lbf)
	Differential ring gear backlash		0.11 to 0.21 mm (0.0043 to 0.0083 in.)
	Differential side gear backlash		0 to 0.15 mm (0 to 0.0059 in.)
	Front differential carrier oil seal	Oil seal drive in depth	3.9 to 4.8 mm (0.153 to 0.189 in.)
	Front differential side oil seal	Oil seal drive in depth	-0.45 to 0.45 mm (-0.0177 to 0.0177 in.)
	Front differential side tube oil seal	Oil seal drive in depth	4.8 to 5.8 mm (0.189 to 0.2284 in.)
	Front differential side gear needle roller bearing	Bearing press in depth	1.4 to 2.0 mm (0.055 to 0.079 in.)
	Differential clutch sleeve and clutch sleeve hork clearance	Max.	0.35 mm (0.0138 in.)
Front differential carrier assembly (4WD)	Front differential side gear thrust washer thickness		1.50 mm (0.0591 in.) 1.55 mm (0.0610 in.) 1.60 mm (0.0630 in.) 1.65 mm (0.0650 in.) 1.70 mm (0.0669 in.) 1.75 mm (0.0689 in.) 1.80 mm (0.0709 in.) 1.85 mm (0.0728 in.) 1.90 mm (0.0748 in.)
	Front differential ring gear thrust washer thickness		1.58 mm (0.0622 in.) 1.60 mm (0.0630 in.) 1.62 mm (0.0638 in.) 1.64 mm (0.0646 in.) 1.66 mm (0.0654 in.) 1.68 mm (0.0661 in.) 1.70 mm (0.0669 in.) 1.72 mm (0.0677 in.) 1.74 mm (0.0685 in.) 1.76 mm (0.0693 in.) 1.78 mm (0.0701 in.) 1.80 mm (0.0709 in.) 1.82 mm (0.0717 in.) 1.84 mm (0.0724 in.) 1.86 mm (0.0732 in.) 1.88 mm (0.0740 in.) 1.90 mm (0.0748 in.) 1.92 mm (0.0756 in.) 1.94 mm (0.0764 in.) 1.96 mm (0.0772 in.) 1.98 mm (0.0780 in.) 2.00 mm (0.0787 in.) 2.02 mm (0.0800 in.) 2.04 mm (0.0803 in.) 2.06 mm (0.0811 in.) 2.08 mm (0.0819 in.) 2.10 mm (0.0827 in.) 2.12 mm (0.0835 in.) 2.14 mm (0.0843 in.) 2.16 mm (0.0850 in.)

Front differential carrier assembly (4WD)	Rear differential drive pinion plate washer thickness		1.70 mm (0.0669 in.) 1.73 mm (0.0681 in.) 1.76 mm (0.0693 in.) 1.79 mm (0.0705 in.) 1.82 mm (0.0717 in.) 1.85 mm (0.0728 in.) 1.88 mm (0.0740 in.) 1.91 mm (0.0752 in.) 1.94 mm (0.0764 in.) 1.97 mm (0.0776 in.) 2.00 mm (0.0787 in.) 2.03 mm (0.0799 in.) 2.06 mm (0.0811 in.) 2.09 mm (0.0823 in.) 2.12 mm (0.0835 in.) 2.15 mm (0.0847 in.) 2.18 mm (0.0858 in.) 2.21 mm (0.0870 in.) 2.24 mm (0.0882 in.) 2.27 mm (0.0894 in.) 2.30 mm (0.0906 in.) 2.33 mm (0.0917 in.)
Rear differential carrier assembly (w/ differential lock)	Companion flange vertical runout	Max	0.10 mm (0.0039 in.)
	Companion flange lateral runout	Max	0.10 mm (0.0039 in.)
	Differential ring gear runout	Max	0.07 mm (0.0028 in.)
	Rear differential case runout	Max	0.07 mm (0.0028 in.)
	Differential drive pinion preload (at starting)	New bearing Reused bearing	1.05 to 1.64 N*m (10.7 to 16.7 kgf*cm, 9.3 to 14.5 in.*lbf) 0.56 to 0.85 N*m (5.7 to 8.7 kgf*cm, 5.0 to 7.5 in.*lbf)
	Total preload (at starting)		Drive pinion preload plus 0.39 to 0.59 N*m (4.0 to 6.0 kgf*cm, 3.5 to 5.2 in.*lbf)
	Differential ring gear backlash		0.13 to 0.18 mm (0.0051 to 0.0071 in.)
	Rear differential case side gear backlash LH		0.05 to 0.20 mm (0.0002 to 0.008 in.)
	Rear differential case side gear backlash RH		0.05 to 0.20 mm (0.0002 to 0.008 in.)
	Rear differential carrier oil seal	Oil seal drive in depth	0.55 to 1.45 mm (0.021 to 0.057 in)
	Rear differential side gear thrust washer thickness		0.9 mm (0.0354 in.) 1.0 mm (0.0394 in.) 1.1 mm (0.0433 in.) 1.2 mm (0.0472 in.) 1.3 mm (0.0512 in.)
	Rear differential lock sleeve clearance		0.15 to 0.35 mm (0.0059 to 0.0138 in.)
Rear differential carrier assembly (w/ differential lock)	Rear differential drive pinion plate washer thickness		1.70 mm (0.0669 in.) 1.73 mm (0.0681 in.) 1.76 mm (0.0693 in.) 1.79 mm (0.0705 in.) 1.82 mm (0.0717 in.) 1.85 mm (0.0728 in.) 1.88 mm (0.0740 in.) 1.91 mm (0.0752 in.) 1.94 mm (0.0764 in.) 1.97 mm (0.0776 in.) 2.00 mm (0.0787 in.) 2.03 mm (0.0799 in.) 2.06 mm (0.0811 in.) 2.09 mm (0.0823 in.) 2.12 mm (0.0835 in.) 2.15 mm (0.0847 in.) 2.18 mm (0.0853 in.) 2.21 mm (0.0870 in.) 2.24 mm (0.0882 in.) 2.27 mm (0.0894 in.) 2.30 mm (0.0906 in.) 2.33 mm (0.0917 in.)

Rear differential carrier assembly	Companion flange vertical runout	Max	0.10 mm (0.0039 in.)
	Companion flange lateral runout	Max	0.10 mm (0.0039 in.)
	Differential ring gear runout	Max	0.05 mm (0.002 in.)
	Rear differential case runout	Max	0.05 mm (0.002 in.)
	Differential drive pinion preload (at starting)	New bearing Reused bearing	1.27 to 1.86 N*m (113 to 20 kgf*cm, 11 to 16 in.*lbf) 0.786 to 1.07 N*m (8.0 to 11 kgf*cm, 6.9 to 9.3 in.*lbf)
	Total preload (at starting)		Drive pinion preload plus 0.39 to 0.59 N*m (4.0 to 6.0 kgf*cm, 3.5 to 5.2 in.*lbf)
	Differential ring gear backlash		0.13 to 0.18 mm (0.0051 to 0.0071 in.)
	Rear differential case side gear backlash LH		0.05 to 0.20 mm (0.0020 to 0.0079 in.)
	Rear differential case side gear backlash RH		0.05 to 0.20 mm (0.0020 to 0.0079 in.)
	Rear differential carrier oil seal	Oil seal drive in depth	-0.5 to 0.5 mm (-0.0197 to 0.0197 in.)
	Rear differential side gear thrust washer thickness		1.50 mm (0.0590 in.) 1.55 mm (0.0610 in.) 1.60 mm (0.0630 in.) 1.65 mm (0.0650 in.) 1.70 mm (0.0669 in)) 1.75 mm (0.0689 in.) 1.80 mm (0.0709 in.) 1.85 mm (0.0728 in.) 1.90 mm (0.0748 in.)
	Rear differential side gear thrust No. 1 washer standard thickness (LSD)		1.77 to 1.86 mm (0.0697 to 0.0732 in.)
	Rear differential clutch plate standard thickness (LSD)		1.57 to 1.63 mm (0.0618 to 0.0642 in.)
	Rear differential lock retainer compression spring free length (LSD)		26.35 mm (1.037in.)
Rear differential carrier assembly	Rear differential side gear thrust washer thickness (LSD)		0.13 to 0.17 mm (0.0051 to 0.0067 in.) 0.18 to 0.22 mm (0.0071 to 0.0087 in.) 0.23 to 0.27 mm (0.0091 to 0.0106 in.) 0.28 to 0.32 mm (0.0110 to 0.0126 in.) 0.33 to 0.37 mm (0.0130 to 0.0146 in.)
	Rear differential ring gear		0.05 mm (0.0020 in.)

Rear differential carrier assembly	Rear differential side bearing preload washer thickness	Mark58	2.58 mm (0.1016 in.)
		60	2.60 mm (0.1024 in.)
		62	2.62 mm (0.1032 in.)
		64	2.64 mm (0.1039 in.)
		66	2.66 mm (0.1047 in.)
		68	2.68 mm (0.1055 in.)
		70	2.70 mm (0.1063 in.)
		72	2.72 mm (0.1071 in.)
		74	2.74 mm (0.1079 in.)
		76	2.76 mm (0.1087 in.)
		78	2.78 mm (0.1095 in.)
		80	2.80 mm (0.1102 in.)
		82	2.82 mm (0.1110 in.)
		84	2.84 mm (0.1118 in.)
		86	2.86 mm (0.1126 in.)
		88	2.88 mm (0.1134 in.)
		90	2.90 mm (0.1142 in.)
		92	2.92 mm (0.1150 in.)
		94	2.94 mm (0.1158 in.)
		96	2.96 mm (0.1165 in.)
		98	2.98 mm (0.1173 in.)
		00	3.00 mm (0.1181 in.)
		02	3.02 mm (0.1189 in.)
		04	3.04 mm (0.1197 in.)
		06	3.06 mm (0.1205 in.)
		08	3.08 mm (0.1213 in.)
		10	3.10 mm (0.1221 in.)
		12	3.12 mm (0.1228in.)
		14	3.14 mm (0.1236 in.)
		16	3.16 mm (0.1244 in.)
		18	3.18 mm (0.1257 in.)
		20	3.20 mm (0.1260 in.)
		22	3.22 mm (0.1268 in.)
		24	3.24 mm (0.1276 in.)
		26	3.26 mm (0.1284 in.)
		28	3.28 mm (0.1291 in.)
		30	3.30 mm (0.1299 in.)
		32	3.32 mm (0.1307 in.)
		34	3.34 mm (0.1315 in.)
		36	3.36 mm (0.1323 in.)
		38	3.38 mm (0.1331 in.)
		40	3.40 mm (0.1339 in.)
		42	3.42 mm (0.1347 in.)
		44	3.44 mm (0.1354 in.)
		46	3.46 mm (0.1362 in.)
		48	3.48 mm (0.1370 in.)

SS

Rear differential carrier assembly	Rear differential drive pinion thrust washer thickness	Mark 87	1.87 mm (0.0736 in.)
		88	1.88 mm (0.0740 in.)
		89	1.89 mm (0.0744 in.)
		90	1.90 mm (0.0748 in.)
		91	1.91 mm (0.0752 in.)
		92	1.92 mm (0.0756 in.)
		93	1.93 mm (0.0760 in.)
		94	1.94 mm (0.0764 in.)
		95	1.95 mm (0.0768 in.)
		96	1.96 mm (0.0772 in.)
		97	1.97 mm (0.0776 in.)
		98	1.98 mm (00.780 in.)
		99	1.99 mm (0.0784 in.)
		00	2.00 mm (0.0787 in.)
		01	2.01 mm (0.0791 in.)
		02	2.02 mm (0.0795 in.)
		03	2.03 mm (0.0799 in.)
		04	2.04 mm (0.0803 in.)
		05	2.05 mm (0.0807 in.)
		06	2.06 mm (0.0811 in.)
		07	2.07 mm (0.0815 in.)
		08	2.08 mm (0.0819 in.)
		09	2.09 mm (0.0823 in.)
		10	2.10 mm (0.0827 in.)
		11	2.11 mm (0.0831 in.)
		12	2.12 mm (0.0835 in.)
		13	2.13 mm (0.0839 in.)
		14	2.14 mm (0.0843 in.)
		15	2.15 mm (0.0847 in.)
		16	2.16 mm (0.0850 in.)
		17	2.17 mm (0.0854 in.)
		18	2.18 mm (0.0858 in.)
		19	2.19 mm (0.0862 in.)
		20	2.20 mm (0.0866 in.)
		21	2.21 mm (0.0870 in.)
		22	2.22 mm (0.0874 in.)
		23	2.23 mm (0.0878 in.)
		24	2.24 mm (0.0882 in.)
		25	2.25 mm (0.0886 in.)
		26	2.26 mm (0.0890 in.)
		27	2.27 mm (0.0894 in.)
		28	2.28 mm (0.0898 in.)

AXLE

SERVICE DATA

Front axle hub bearing deviation	Maximum	0.05 mm (0.0020 in.)
Front axle hub bearing runout	Maximum	0.05 mm (0.0020 in.)
Rear axle hub bearing deviation	Maximum	0.05 mm (0.0020 in.)
Rear axle hub and bearing runout	Maximum	0.05 mm (0.0020 in.)
Rear axle shaft runout	Maximum	1.5 mm (0.0591 in.)
Rear axle shaft flange runout	Maximum	0.05 mm (0.0020 in.)

TORQUE SPECIFICATIONS

Part Tightened	N*m	kgf*cm	ft.*lbf
Front wheel	113	1,152	83
Battery negative terminal x Battery	3.9	40	35 in.*lbf
Steering knuckle x Front disc dust cover	8.3	85	73 in.*lbf
Steering knuckle x Front axle hub	199	2,029	147
Front suspension upper arm x Steering knuckle	110	1,122	81
Front lower ball joint attachment x Steering knuckle	160	1,631	118
Tie rod end sub-assembly x Steering knuckle (2WD)	49	500	36
Front disc brake caliper assembly x Steering knuckle (2WD)	108	1,101	80
Front flexible hose x Front disc brake caliper assembly	30	306	22
Front flexible hose x Shock absorber assembly front	32	326	24
Front speed sensor x Steering knuckle	8.3	85	73 in.*lbf
Skid control sensor wire x Steering knuckle	5.0	51	44 in.*lbf
Skid control sensor wire x Front suspension upper arm	5.0	51	44 in.*lbf
Front axle hub x Steering knuckle	80	816	59
Front wheel adjusting nut x Steering knuckle	275	2,804	203
Tie rod end sub-assembly x Steering knuckle (4WD and Pre-Runner)	91	928	67
Front stabilizer link assembly x Steering knuckle	70	714	52
Front axle hub nut x Front drive shaft	235	2,396	173
Front disc brake caliper assembly x Steering knuckle (4WD and Pre-Runner)	123	1,254	91
Brake tube bracket x Steering knuckle	29	296	21
Brake tube x Front disc brake caliper assembly	15	155	11
Front speed sensor harness bracket x Steering knuckle	13	133	10
Front speed sensor x Steering knuckle	8.3	85	73 in.*lbf
Rear wheel	113	1,152	83
Rear axle shaft with backing plate x Rear axle housing	36	367	27
Rear brake tube No. 8 x Rear wheel brake cylinder	15	155	11
Parking brake cable assembly No. 3 x Backing plate	8.0	82	71 in.*lbf

SUSPENSION

SERVICE DATA

2WD

Vehicle height	TRN220L-TRMDKA (P215/70R15)	A-B C-D	87 mm (3.43 in.) 48 mm (1.89 in.)
	TRN220L-TRPDKA (P215/70R15)	A-B C-D	88 mm (3.46 in.) 48 mm (1.89 in.)
	TRN225L-CRMDKA (P215/70R15)	A-B C-D	86 mm (3.39 in.) 50 mm (1.97 in.)
	TRN225L-CRPDKA (P215/70R15)	A-B C-D	87 mm (3.43 in.) 50 mm (1.97 in.)
	GRN225L-CRFDKA (P255/45R18)	A-B C-D	118 mm (4.65 in.) 85 mm (3.35 in.)
Toe-in	TRN220L-TRMDKA (P215/70R15)	A+B C-D	4.8' +- 6.5' (0.081° +- 0.108°) 0.96 +- 2 mm (0.038 +- 0.08 in.)
	TRN220L-TRPDKA (P215/70R15)	A+B C-D	4.3' +- 6.5' (0.072° +- 0.108°) 0.86 +- 2 mm (0.034 +- 0.08 in.)
	TRN225L-CRMDKA (P215/70R15)	A+B C-D	5.3' +- 6.5' (0.089° +- 0.108°) 1.06 +- 2 mm (0.042 +- 0.08 in.)
	TRN225L-CRPDKA (P215/70R15)	A+B C-D	4.8' +- 6.5' (0.081° +- 0.108°) 0.96 +- 2 mm (0.038 +- 0.08 in.)
	GRN225L-CRFDKA (P255/45R18)	A+B C-D	1.8' +- 6.5' (0.030° +- 0.108°) 0.36 +- 2 mm (0.014 +- 0.08 in.)
Wheel turning angle		Inside wheel	38°48' (36°48' to 39°48') 38.80° (36.80° to 39.80°)
		Outside wheel (Reference)	32°30' (30°30' to 33°30') 32.50° (30.50° to 33.50°)
Camber	TRN220L-TRMDKA (P215/70R15)		0°13' +- 45' (0.22° +- 0.75°)
	TRN220L-TRPDKA (P215/70R15)		0°12' +- 45' (0.20° +- 0.75°)
	TRN225L-CRMDKA (P215/70R15)		0°14' +- 45' (0.24° +- 0.75°)
	TRN225L-CRPDKA (P215/70R15)		0°13' +- 45' (0.22° +- 0.75°)
	GRN225L-CRFDKA (P255/45R18)		-0°40' +- 45' (-0.66° +- 0.75°)
		Right-left error	30' (0.50°) or less
Caster	TRN220L-TRMDKA (P215/70R15)		3°52' +- 45' (3.86° +- 0.75°)
	TRN220L-TRPDKA (P215/70R15)		3°52' +- 45' (3.86° +- 0.75°)
	TRN225L-CRMDKA (P215/70R15)		4°01' +- 45' (4.01° +- 0.75°)
	TRN225L-CRPDKA (P215/70R15)		4°01' +- 45' (4.02° +- 0.75°)
	GRN225L-CRFDKA (P255/45R18)		5°09' +- 45' (5.15° +- 0.75°)
		Right-left error	30' (0.50°) or less

Steering axis inclination	TRN220L-TRMDKA (P215/70R15)		10°42' +- 45' (10.70° +- 0.75°)
	TRN220L-TRPDKA (P215/70R15)		10°44' +- 45' (10.73° +- 0.75°)
	TRN225L-CRMDKA (P215/70R15)		10°41' +- 45' (10.69° +- 0.75°)
	TRN225L-CRPDKA (P215/70R15)		10°42' +- 45' (10.70° +- 0.75°)
	GRN225L-CRFDKA (P255/45R18)		11°34' +- 45' (11.56° +- 0.75°)
Upper arm ball joint turning torque			4.5 N*m (46 kgf*cm, 40 in.*lbf) or less
Lower arm ball joint turning torque			3.0 N*m (31 kgf*cm, 27 in.*lbf) or less
Stabilizer link ball joint turning torque			2.0 N*m (20 kgf*cm, 18 in.*lbf) or less

SS

Pre-Runner (North America)

Vehicle height	TRN260L-TRMDKA (P245/75R16)	A-B C-D	62 mm (2.44 in.) -47 mm (-1.85 in.)
	TRN265L-CRMDKA (P245/75R16)	A-B C-D	60 mm (2.36 in.) -47 mm (-1.85 in.)
	GRN265L-CRFDKA (P245/75R16)	A-B C-D	66 mm (2.60 in.) -44 mm (-1.73 in.)
	GRN265L-CRFDKA (P265/70R16)	A-B C-D	69 mm (2.72 in.) -46 mm (-1.81 in.)
	GRN265L-CRFDKA (P265/65R17)	A-B C-D	66 mm (2.60 in.) -44 mm (-1.73 in.)
	GRN265L-CRADKA (P245/75R16)	A-B C-D	63 mm (2.48 in.) -44 mm (-1.73 in.)
	GRN265L-CRADKA (P265/70R16)	A-B C-D	70 mm (2.76 in.) -45 mm (-1.77 in.)
	GRN265L-CRADKA (P265/65R17)	A-B C-D	63 mm (2.48 in.) -44 mm (-1.73 in.)
	GRN265L-PRADKA (P245/75R16)	A-B C-D	64 mm (2.52 in.) -39 mm (-1.54 in.)
	GRN265L-PRADKA (P265/70R16)	A-B C-D	62 mm (2.44 in.) -43 mm (-1.69 in.)
	GRN265L-PRADKA (P265/65R17)	A-B C-D	64 mm (2.52 in.) -39 mm (-1.54 in.)
	GRN270L-PRADKA (P245/75R16)	A-B C-D	65 mm (2.56 in.) -38 mm (-1.50 in.)
	GRN270L-PRADKA (P265/65R17)	A-B C-D	65 mm (2.56 in.) -38 mm (-1.50 in.)

Toe-in	TRN260L-TRMDKA (P245/75R16)	A+B C-D	7.3' +- 6.5' (0.121° +- 0.108°) 1.64 +- 2 mm (0.065 +- 0.08 in.)
	TRN265L-CRMDKA (P245/75R16)	A+B C-D	8.6' +- 6.5' (0.144° +- 0.108°) 1.94 +- 2 mm (0.076 +- 0.08 in.)
	GRN265L-CRFDKA (P245/75R16)	A+B C-D	4.6' +- 6.5' (0.077° +- 0.108°) 1.04 +- 2 mm (0.041 +- 0.08 in.)
	GRN265L-CRFDKA (P265/70R16)	A+B C-D	2.7' +- 6.5' (0.044° +- 0.108°) 0.60 +- 2 mm (0.024 +- 0.08 in.)
	GRN265L-CRFDKA (P265/65R17)	A+B C-D	4.6' +- 6.5' (0.077° +- 0.108°) 1.05 +- 2 mm (0.041 +- 0.08 in.)
	GRN265L-CRADKA (P245/75R16)	A+B C-D	6.6' +- 6.5' (0.110° +- 0.108°) 1.48 +- 2 mm (0.058 +- 0.08 in.)
	GRN265L-CRADKA (P265/70R16)	A+B C-D	2.0' +- 6.5' (0.033° +- 0.108°) 0.45 +- 2 mm (0.018 +- 0.08 in.)
	GRN265L-CRADKA (P265/65R17)	A+B C-D	6.6' +- 6.5' (0.111° +- 0.108°) 1.50 +- 2 mm (0.059 +- 0.08 in.)
	GRN265L-PRADKA (P245/75R16)	A+B C-D	5.2' +- 6.5' (0.087° +- 0.108°) 1.18 +- 2 mm (0.046 +- 0.08 in.)
	GRN265L-PRADKA (P265/70R16)	A+B C-D	6.6' +- 6.5' (0.110° +- 0.108°) 1.49 +- 2 mm (0.059 +- 0.08 in.)
	GRN265L-PRADKA (P265/65R17)	A+B C-D	5.3' +- 6.5' (0.089° +- 0.108°) 1.20 +- 2 mm (0.047 +- 0.08 in.)
	GRN270L-PRADKA (P245/75R16)	A+B C-D	4.6' +- 6.5' (0.077° +- 0.108°) 1.04 +- 2 mm (0.041 +- 0.08 in.)
	GRN270L-PRADKA (P265/65R17)	A+B C-D	4.6' +- 6.5' (0.077° +- 0.108°) 1.05 +- 2 mm (0.041 +- 0.08 in.)
Wheel turning angle		Inside wheel	40°18' (38°18' to 41°18') 40.30° (38.30° to 41.30°)
		Outside wheel (Reference)	35°54' (33°54' to 36°54') 35.90° (33.90° to 36.90°)
Camber	TRN260L-TRMDKA (P245/75R16)		0°35' +- 45' (0.59° +- 0.75°)
	TRN265L-CRMDKA (P245/75R16)		0°37' +- 45' (0.62° +- 0.75°)
	GRN265L-CRFDKA (P245/75R16)		0°31' +- 45' (0.52° +- 0.75°)
	GRN265L-CRFDKA (P265/70R16)		0°28' +- 45' (0.47° +- 0.75°)
	GRN265L-CRFDKA (P265/65R17)		0°31' +- 45' (0.52° +- 0.75°)
	GRN265L-CRADKA (P245/75R16)		0°35' +- 45' (0.58° +- 0.75°)
	GRN265L-CRADKA (P265/70R16)		0°27' +- 45' (0.45° +- 0.75°)
	GRN265L-CRADKA (P265/65R17)		0°35' +- 45' (0.58° +- 0.75°)
	GRN265L-PRADKA (P245/75R16)		0°32' +- 45' (0.54° +- 0.75°)
	GRN265L-PRADKA (P265/70R16)		0°35' +- 45' (0.58° +- 0.75°)
	GRN265L-PRADKA (P265/65R17)		0°32' +- 45' (0.54° +- 0.75°)
	GRN270L-PRADKA (P245/75R16)		0°31' +- 45' (0.52° +- 0.75°)
	GRN270L-PRADKA (P265/65R17)		0°31' +- 45' (0.52° +- 0.75°)
		Right-left error	30' (0.50°) or less

SS

Caster	TRN260L-TRMDKA (P245/75R16)		1°41' +- 45' (1.68° +- 0.75°)
	TRN265L-CRMDKA (P245/75R16)		1°46' +- 45' (1.77° +- 0.75°)
	GRN265L-CRFDKA (P245/75R16)		1°55' +- 45' (1.92° +- 0.75°)
	GRN265L-CRFDKA (P265/70R16)		1°56' +- 45' (1.93° +- 0.75°)
	GRN265L-CRFDKA (P265/65R17)		1°56' +- 45' (1.94° +- 0.75°)
	GRN265L-CRADKA (P245/75R16)		1°53' +- 45' (1.89° +- 0.75°)
	GRN265L-CRADKA (P265/70R16)		1°59' +- 45' (1.98° +- 0.75°)
	GRN265L-CRADKA (P265/65R17)		1°53' +- 45' (1.89° +- 0.75°)
	GRN265L-PRADKA (P245/75R16)		2°01' +- 45' (2.01° +- 0.75°)
	GRN265L-PRADKA (P265/70R16)		1°58' +- 45' (1.96° +- 0.75°)
	GRN265L-PRADKA (P265/65R17)		2°01' +- 45' (2.01° +- 0.75°)
	GRN270L-PRADKA (P245/75R16)		2°07' +- 45' (2.11° +- 0.75°)
	GRN270L-PRADKA (P265/65R17)		2°08' +- 45' (2.13° +- 0.75°)
		Right-left error	30' (0.50°) or less
Steering axis inclination	TRN260L-TRMDKA (P245/75R16)		11°52' +- 45' (11.86° +- 0.75°)
	TRN265L-CRMDKA (P245/75R16)		11°50' +- 45' (11.83° +- 0.75°)
	GRN265L-CRFDKA (P245/75R16)		11°56' +- 45' (11.93° +- 0.75°)
	GRN265L-CRFDKA (P265/70R16)		11°59' +- 45' (11.99° +- 0.75°)
	GRN265L-CRFDKA (P265/65R17)		11°56' +- 45' (11.93° +- 0.75°)
	GRN265L-CRADKA (P245/75R16)		11°53' +- 45' (11.88° +- 0.75°)
	GRN265L-CRADKA (P265/70R16)		12°00' +- 45' (12.00° +- 0.75°)
	GRN265L-CRADKA (P265/65R17)		11°53' +- 45' (11.88° +- 0.75°)
	GRN265L-PRADKA (P245/75R16)		11°55' +- 45' (11.91° +- 0.75°)
	GRN265L-PRADKA (P265/70R16)		11°53' +- 45' (11.88° +- 0.75°)
	GRN265L-PRADKA (P265/65R17)		11°55' +- 45' (11.91° +- 0.75°)
	GRN270L-PRADKA (P245/75R16)		11°56' +- 45' (11.93° +- 0.75°)
	GRN270L-PRADKA (P265/65R17)		11°56' +- 45' (11.93° +- 0.75°)
Upper arm ball joint turning torque			4.5 N*m (46 kgf*cm, 40 in.*lbf) or less
Lower arm ball joint turning torque			3.0 N*m (31 kgf*cm, 27 in.*lbf) or less
Stabilizer link ball joint turning torque			2.0 N*m (20 kgf*cm, 18 in.*lbf) or less

Pre-Runner (Mexico)

Vehicle height	GRN265L-PRADKA (P245/75R16)	A-B C-D	53 mm (2.09 in.) -51 mm (-2.01 in.)
	GRN265L-PRADKA (P265/65R17)	A-B C-D	53 mm (2.09 in.) -51 mm (-2.01 in.)
Toe-in	GRN265L-PRADKA (P245/75R16)	A+B C-D	12.7' +- 6.5' (0.212° +- 0.108°) 2.87 +- 2 mm (0.113 +- 0.08 in.)
	GRN265L-PRADKA (P265/65R17)	A+B C-D	12.9' +- 6.5' (0.215° +- 0.108°) 2.91 +- 2 mm (0.115 +- 0.08 in.)
Wheel turning angle		Inside wheel	40°18' (38°18' to 41°18') 40.30° (38.30° to 41.30°)
		Outside wheel (Reference)	35°54' (33°54' to 36°54') 35.90° (33.90° to 36.90°)
Camber	GRN265L-PRADKA (P245/75R16)		0°43' +- 45' (0.71° +- 0.75°)
	GRN265L-PRADKA (P265/65R17)		0°43' +- 45' (0.71° +- 0.75°)
		Right-left error	30' (0.50°) or less
Caster	GRN265L-PRADKA (P245/75R16)		1°38' +- 45' (1.64° +- 0.75°)
	GRN265L-PRADKA (P265/65R17)		1°38' +- 45' (1.64° +- 0.75°)
		Right-left error	30' (0.50°) or less
Steering axis inclination	GRN265L-PRADKA (P245/75R16)		11°44' +- 45' (11.74° +- 0.75°)
	GRN265L-PRADKA (P265/65R17)		11°44' +- 45' (11.74° +- 0.75°)
Upper arm ball joint turning torque			4.5 N*m (46 kgf*cm, 40 in.*lbf) or less
Lower arm ball joint turning torque			3.0 N*m (31 kgf*cm, 27 in.*lbf) or less
Stabilizer link ball joint turning torque			2.0 N*m (20 kgf*cm, 18 in.*lbf) or less

4WD

SS

Vehicle height	TRN240L-TRMDKA (P245/75R16)	A-B C-D	63 mm (2.48 in.) -45 mm (-1.77 in.)
	TRN245L-CRMDKA (P245/75R16)	A-B C-D	63 mm (2.48 in.) -44 mm (-1.73 in.)
	GRN245L-CRFDKA (P245/75R16)	A-B C-D	69 mm (2.72 in.) -40 mm (-1.57 in.)
	GRN245L-CRFDKA (P265/70R16)	A-B C-D	71 mm (2.80 in.) -43 mm (-1.69 in.)
	GRN245L-CRFDKA (P265/65R17)	A-B C-D	69 mm (2.72 in.) -41 mm (-1.61 in.)
	GRN245L-CRADKA (P245/75R16)	A-B C-D	65 mm (2.56 in.) -41 mm (-1.61 in.)
	GRN245L-CRADKA (P265/70R16)	A-B C-D	71 mm (2.80 in.) -43 mm (-1.69 in.)
	GRN245L-CRADKA (P265/65R17)	A-B C-D	65 mm (2.56 in.) -41 mm (-1.61 in.)
	GRN245L-PRFDKA (P245/75R16)	A-B C-D	64 mm (2.52 in.) -38 mm (-1.50 in.)
	GRN245L-PRFDKA (P265/70R16)	A-B C-D	69 mm (2.72 in.) -39 mm (-1.54 in.)
	GRN245L-PRFDKA (P265/65R17)	A-B C-D	64 mm (2.52 in.) -38 mm (-1.50 in.)
	GRN245L-PRADKA (P245/75R16)	A-B C-D	65 mm (2.56 in.) -37 mm (-1.46 in.)
	GRN245L-PRADKA (P265/70R16)	A-B C-D	70 mm (2.76 in.) -38 mm (-1.50 in.)
	GRN245L-PRADKA (P265/65R17)	A-B C-D	65 mm (2.56 in.) -37 mm (-1.46 in.)
	GRN250L-PRADKA (P245/75R16)	A-B C-D	66 mm (2.60 in.) -35 mm (-1.38 in.)
	GRN250L-PRADKA (P265/65R17)	A-B C-D	66 mm (2.60 in.) -35 mm (-1.38 in.)

Toe-in	TRN240L-TRMDKA (P245/75R16)	A+B C-D	6.6' +- 6.5' (0.110° +- 0.108°) 1.48 +- 2 mm (0.058 +- 0.08 in.)
	TRN245L-CRMDKA (P245/75R16)	A+B C-D	6.6' +- 6.5' (0.110° +- 0.108°) 1.48 +- 2 mm (0.058 +- 0.08 in.)
	GRN245L-CRFDKA (P245/75R16)	A+B C-D	2.6' +- 6.5' (0.044° +- 0.108°) 0.59 +- 2 mm (0.023 +- 0.08 in.)
	GRN245L-CRFDKA (P265/70R16)	A+B C-D	1.3' +- 6.5' (0.022° +- 0.108°) 0.30 +- 2 mm (0.012 +- 0.08 in.)
	GRN245L-CRFDKA (P265/65R17)	A+B C-D	2.7' +- 6.5' (0.044° +- 0.108°) 0.60 +- 2 mm (0.024 +- 0.08 in.)
	GRN245L-CRADKA (P245/75R16)	A+B C-D	5.2' +- 6.5' (0.087° +- 0.108°) 1.18 +- 2 mm (0.046 +- 0.08 in.)
	GRN245L-CRADKA (P265/70R16)	A+B C-D	1.3' +- 6.5' (0.022° +- 0.108°) 0.30 +- 2 mm (0.012 +- 0.08 in.)
	GRN245L-CRADKA (P265/65R17)	A+B C-D	5.3' +- 6.5' (0.089° +- 0.108°) 1.20 +- 2 mm (0.047 +- 0.08 in.)
	GRN245L-PRFDKA (P245/75R16)	A+B C-D	5.2' +- 6.5' (0.087° +- 0.108°) 1.18 +- 2 mm (0.046 +- 0.08 in.)
	GRN245L-PRFDKA (P265/70R16)	A+B C-D	2.7' +- 6.5' (0.044° +- 0.108°) 0.60 +- 2 mm (0.024 +- 0.08 in.)
	GRN245L-PRFDKA (P265/65R17)	A+B C-D	5.3' +- 6.5' (0.089° +- 0.108°) 1.20 +- 2 mm (0.047 +- 0.08 in.)
	GRN245L-PRADKA (P245/75R16)	A+B C-D	4.6' +- 6.5' (0.077° +- 0.108°) 1.04 +- 2 mm (0.041 +- 0.08 in.)
	GRN245L-PRADKA (P265/70R16)	A+B C-D	2.0' +- 6.5' (0.033° +- 0.108°) 0.45 +- 2 mm (0.018 +- 0.08 in.)
	GRN245L-PRADKA (P265/65R17)	A+B C-D	4.6' +- 6.5' (0.077° +- 0.108°) 1.05 +- 2 mm (0.041 +- 0.08 in.)
	GRN250L-PRADKA (P245/75R16)	A+B C-D	4.0' +- 6.5' (0.066° +- 0.108°) 0.89 +- 2 mm (0.035 +- 0.08 in.)
	GRN250L-PRADKA (P265/65R17)	A+B C-D	4.0' +- 6.5' (0.066° +- 0.108°) 0.90 +- 2 mm (0.035 +- 0.08 in.)
Wheel turning angle		Inside wheel	40°18' (38°18' to 41°18') 40.30° (38.30° to 41.30°)
		Outside wheel (Reference)	35°54' (33°54' to 36°54') 35.90° (33.90° to 36.90°)

SS

Camber	TRN240L-TRMDKA (P245/75R16)		0°35' +- 45' (0.58° +- 0.75°)
	TRN245L-CRMDKA (P245/75R16)		0°35' +- 45' (0.58° +- 0.75°)
	GRN245L-CRFDKA (P245/75R16)		0°28' +- 45' (0.47° +- 0.75°)
	GRN245L-CRFDKA (P265/70R16)		0°26' +- 45' (0.43° +- 0.75°)
	GRN245L-CRFDKA (P265/65R17)		0°28' +- 45' (0.47° +- 0.75°)
	GRN245L-CRADKA (P245/75R16)		0°32' +- 45' (0.54° +- 0.75°)
	GRN245L-CRADKA (P265/70R16)		0°26' +- 45' (0.43° +- 0.75°)
	GRN245L-CRADKA (P265/65R17)		0°32' +- 45' (0.54° +- 0.75°)
	GRN245L-PRFDKA (P245/75R16)		0°32' +- 45' (0.54° +- 0.75°)
	GRN245L-PRFDKA (P265/70R16)		0°28' +- 45' (0.47° +- 0.75°)
	GRN245L-PRFDKA (P265/65R17)		0°32' +- 45' (0.54° +- 0.75°)
	GRN245L-PRADKA (P245/75R16)		0°31' +- 45' (0.52° +- 0.75°)
	GRN245L-PRADKA (P265/70R16)		0°27' +- 45' (0.45° +- 0.75°)
	GRN245L-PRADKA (P265/65R17)		0°31' +- 45' (0.52° +- 0.75°)
	GRN250L-PRADKA (P245/75R16)		0°30' +- 45' (0.50° +- 0.75°)
	GRN250L-PRADKA (P265/65R17)		0°30' +- 45' (0.50° +- 0.75°)
		Right-left error	30' (0.50°) or less

Caster	TRN240L-TRMDKA (P245/75R16)		1°44' +- 45' (1.73° +- 0.75°)
	TRN245L-CRMDKA (P245/75R16)		1°51' +- 45' (1.85° +- 0.75°)
	GRN245L-CRFDKA (P245/75R16)		1°59' +- 45' (1.99° +- 0.75°)
	GRN245L-CRFDKA (P265/70R16)		2°00' +- 45' (2.00° +- 0.75°)
	GRN245L-CRFDKA (P265/65R17)		2°00' +- 45' (2.00° +- 0.75°)
	GRN245L-CRADKA (P245/75R16)		1°55' +- 45' (1.92° +- 0.75°)
	GRN245L-CRADKA (P265/70R16)		2°00' +- 45' (2.00° +- 0.75°)
	GRN245L-CRADKA (P265/65R17)		1°55' +- 45' (1.92° +- 0.75°)
	GRN245L-PRFDKA (P245/75R16)		2°02' +- 45' (2.03° +- 0.75°)
	GRN245L-PRFDKA (P265/70R16)		2°04' +- 45' (2.06° +- 0.75°)
	GRN245L-PRFDKA (P265/65R17)		2°02' +- 45' (2.03° +- 0.75°)
	GRN245L-PRADKA (P245/75R16)		2°04' +- 45' (2.06° +- 0.75°)
	GRN245L-PRADKA (P265/70R16)		2°05' +- 45' (2.09° +- 0.75°)
	GRN245L-PRADKA (P265/65R17)		2°04' +- 45' (2.06° +- 0.75°)
	GRN250L-PRADKA (P245/75R16)		2°08' +- 45' (2.14° +- 0.75°)
	GRN250L-PRADKA (P265/65R17)		2°10' +- 45' (2.16° +- 0.75°)
		Right-left error	30' (0.50°) or less

SS

Steering axis inclination	TRN240L-TRMDKA (P245/75R16)		11°52' +- 45' (11.86° +- 0.75°)
	TRN245L-CRMDKA (P245/75R16)		11°53' +- 45' (11.88° +- 0.75°)
	GRN245L-CRFDKA (P245/75R16)		11°59' +- 45' (11.99° +- 0.75°)
	GRN245L-CRFDKA (P265/70R16)		12°01' +- 45' (12.02° +- 0.75°)
	GRN245L-CRFDKA (P265/65R17)		11°59' +- 45' (11.99° +- 0.75°)
	GRN245L-CRADKA (P245/75R16)		11°55' +- 45' (11.91° +- 0.75°)
	GRN245L-CRADKA (P265/70R16)		12°01' +- 45' (12.02° +- 0.75°)
	GRN245L-CRADKA (P265/65R17)		11°55' +- 45' (11.91° +- 0.75°)
	GRN245L-PRFDKA (P245/75R16)		11°55' +- 45' (11.91° +- 0.75°)
	GRN245L-PRFDKA (P265/70R16)		11°59' +- 45' (11.99° +- 0.75°)
	GRN245L-PRFDKA (P265/65R17)		11°55' +- 45' (11.91° +- 0.75°)
	GRN245L-PRADKA (P245/75R16)		11°56' +- 45' (11.93° +- 0.75°)
	GRN245L-PRADKA (P265/70R16)		12°00' +- 45' (12.00° +- 0.75°)
	GRN245L-PRADKA (P265/65R17)		11°56' +- 45' (11.93° +- 0.75°)
	GRN250L-PRADKA (P245/75R16)		11°57' +- 45' (11.95° +- 0.75°)
	GRN250L-PRADKA (P265/65R17)		11°57' +- 45' (11.95° +- 0.75°)
Upper arm ball joint turning torque			4.5 N*m (46 kgf*cm, 40 in.*lbf) or less
Lower arm ball joint turning torque			3.0 N*m (31 kgf*cm, 27 in.*lbf) or less
Stabilizer link ball joint turning torque			2.0 N*m (20 kgf*cm, 18 in.*lbf) or less

TIRE AND WHEEL

SERVICE DATA

Cold tire inflation pressure	P215/70R15 97S	Front wheel	200 kPa (2.0 kgf/cm^2, 29 psi)
		Rear wheel	220 kPa (2.2 kgf/cm^2, 32 psi)
		Spare wheel	220 kPa (2.2 kgf/cm^2, 32 psi)
	P255/45R18 99V	Front wheel	240 kPa (2.4 kgf/cm^2, 35psi)
		Rear wheel	240 kPa (2.4 kgf/cm^2, 35psi)
		Spare wheel	240 kPa (2.4 kgf/cm^2, 35psi)
	P245/75R16 109S	Front wheel	200 kPa (2.0 kgf/cm^2, 29 psi)
		Rear wheel	200 kPa (2.0 kgf/cm^2, 29 psi)
		Spare wheel	200 kPa (2.0 kgf/cm^2, 29 psi)
	P265/70R16 111T	Front wheel	200 kPa (2.0 kgf/cm^2, 29 psi)
		Rear wheel	220 kPa (2.2 kgf/cm^2, 32 psi)
		Spare wheel	220 kPa (2.2 kgf/cm^2, 32 psi)
	P265/65R17 110S	Front wheel	200 kPa (2.0 kgf/cm^2, 29 psi)
		Rear wheel	200 kPa (2.0 kgf/cm^2, 29 psi)
		Spare wheel	200 kPa (2.0 kgf/cm^2, 29 psi)
Tire runout			3.0 mm (0118 in.) or less
Imbalance after adjustment			8 g (0.018 lb) or less

TORQUE SPECIFICATIONS

Part Tightened	N*m	kgf*cm	ft.*lbf
Tire pressure warning antenna and receiver x Body	5.0	51	44 in.*lbf
Battery negative terminal x Battery	3.9	40	35 in.*lbf
Tire pressure warning valve and transmitter x Wheel	4.0	41	35 in.*lbf
Front wheel	113	1,152	83
Rear wheel	113	1,152	83
Tire pressure warning ECU x Body	5.5	56	49 in.*lbf

BRAKE CONTROL

TORQUE SPECIFICATIONS

Part Tightened	N*m	kgf*cm	ft.*lbf
Brake actuator bracket assembly x Brake actuator	5.4	55	48 in.*lbf
Brake actuator x Body	19	194	14
Brake tube x Brake actuator	15.2	155	11
Air injection control driver x Body	10	102	7
Battery negative terminal x Battery	3.9	40	35 in.*lbf
Front speed sensor x Steering knuckle	8.3	85	73 in.*lbf
Front wheel	113	1,152	83
Rear speed sensor x Steering knuckle	8.0	82	71 in.*lbf
Deceleration sensor x Body	12.5	127	9
Sensor bracket x Body	12.5	127	9
Yaw rate and deceleration sensor x Body	12.5	127	9

BRAKE

SERVICE DATA

Brake pedal height (from dash panel)		158.1 to 168.1 mm (6.224 to 6.618 in.)
Rod operating adapter length	w/ VSC w/o VSC	214 to 224 mm (8.425 to 8.818 in.) 212 to 222 mm (8.346 to 8.740 in.)
Stop light switch clearance		1.5 to 2.5 mm (0.059 to 0.098 in.)
Brake pedal free play		1 to 6 mm (0.04 to 0.24 in.)
Brake pedal reserve distance (from asphalt sheet) at 490 N (50 kgf, 110.2 lbf)		More than 55 mm (2.17 in.)
Brake booster push rod to piston clearance		0 mm (0 in.)
Front disc thickness (2WD)	Standard Minimum	25.0 mm (0.984 in.) 23.0 mm (0.906 in.)
Front disc brake pad lining thickness (2WD)	Standard Minimum	12.0 mm (0.472 in.) 1.0 mm (0.039 in.)
Front disc runout	Maximum	0.05 mm (0.0020 in.)
Front disc thickness (4WD and Pre-Runner)	Standard Minimum	28.0 mm (1.102 in.) 26.0 mm (1.024 in.)
Front disc brake pad lining thickness (4WD and Pre-Runner)	Standard Minimum	11.5 mm (0.453 in.) 1.0 mm (0.039 in.)
Rear brake drum inside diameter	Standard Maximum	254 mm (10.00 in.) 256 mm (10.08 in.)
Rear drum brake shoe lining thickness	Standard Minimum	5.0 mm (0.197 in.) 1.0 mm (0.039 in.)
Rear brake shoe clearance		0.5 mm (0.020 in.)

TORQUE SPECIFICATIONS

Part Tightened	N*m	kgf*cm	ft.*lbf
Bleeder plug	11	112	8
Brake booster clevis lock nut	25.5	260	19
Brake pedal x Brake pedal support sub-assembly	34.3	350	25
Brake pedal support sub-assembly x Brake booster	14.2	145	10
Brake pedal support sub-assembly x Hydraulic brake booster	14.2	145	10
Brake pedal support reinforcement x Reinforcement	34.3	350	25
Driver side junction block x Reinforcement	8.0	82	71 in.*lbf
Battery negative terminal x Battery	3.9	40	35 in.*lbf
Brake master cylinder x Brake booster	12.5	127	9
Brake tube x Brake master cylinder	15	153	11
Brake booster accumulator assembly x Brake booster pump assembly	57.4	585	42
Master cylinder solenoid x Master cylinder body	31.9	325	24
Brake booster pump bracket x Master cylinder solenoid	7.8	80	69 in.*lbf
Brake actuator bracket x Master cylinder body	7.8	80	69 in.*lbf
Pin x Brake booster pump assembly	7.8	80	69 in.*lbf
Brake booster pump wire harness x Master cylinder solenoid	2.9	30	26 in.*lbf
Brake actuator tube No. 1 x Brake booster pump assembly	14 (15.2)	143 (155)	10 (11)
Brake actuator tube No. 1 x Master cylinder body	14 (15.2)	143 (155)	10 (11)
Brake master cylinder reservoir sub-assembly x Master cylinder body	1.7	17	15 in.*lbf
Brake actuator bracket No. 1 x Master cylinder solenoid	7.8	80	69 in.*lbf
Brake tube x Hydraulic brake booster	15.2	155	11
Front Wheel	113	1,152	83
Front disc brake cylinder mounting x Steering knuckle (2WD)	108	1,101	80
Disc brake cylinder assembly x Front disc brake cylinder mounting (2WD)	36.3	370	27
Front flexible hose x Disc brake cylinder assembly (2WD)	30	306	22
Disc brake cylinder assembly x Steering knuckle (4WD and Pre-Runner)	123	1,254	91
Brake tube x Disc brake cylinder assembly (4WD and Pre-Runner)	15.2	155	11
Rear wheel brake cylinder x Backing plate	9.5	97	84 in.*lbf
Brake tube x Rear wheel brake cylinder	15.2	155	11
Rear Wheel	113	1,152	83

( ): For use without SST

PARKING BRAKE

SERVICE DATA

Parking brake pedal travel at 300 N (31 kgf, 67 lbf)	7 to 10 clicks
Parking brake lever travel at 200 N (20 kgf, 45 lbf)	7 to 10 clicks

TORQUE SPECIFICATIONS

Part Tightened	N*m	kgf*cm	ft.*lbf
Rear wheel	113	1,152	83
Wire adjusting nut x Lock nut	13	127	9
Parking brake cable joint protector x Body	13	127	9
Parking brake lever x Instrument panel reinforcement	6.0	61	53 in.*lbf
Battery negative terminal x Battery	3.9	40	35 in.*lbf
Parking brake pedal x Body	13	127	9
Parking brake cable assembly No. 3 x Frame	13	127	9
Parking brake cable assembly No. 3 x Backing plate	8.0	82	71 in.*lbf
Parking brake cable assembly No. 1 x Body (Bolt)	13	127	9
Parking brake cable assembly No. 1 x Body (Nut)	6.0	61	53 in.*lbf

STEERING COLUMN

SERVICE DATA

Steering wheel free play	Maximum	30 mm (1.18 in.)

TORQUE SPECIFICATIONS

Part Tightened	N*m	kgf*cm	ft.*lbf
Steering wheel set nut	50	510	37
Steering column assembly set nut and bolt	21	210	16
Main shaft assembly x Steering intermediate shaft	36	270	20
Steering sliding yoke x No. 2 Intermediate shaft	35	357	26
Power steering gear box x No. 2 intermediate shaft	35	357	26
Steering sliding yoke x intermediate shaft	35	357	26

POWER STEERING

SERVICE DATA

Power steering fluid		
Fluid level rise	Maximum	5 mm (0.20 in.)
Fluid pressure at idle speed with valve closed		8,300 to 8,800 kPa (85 to 90 kgf/cm^2, 1,209 to 1280 psi)
Steering Wheel		
Steering effort at idle speed	(Reference)	6.0 N*m (60 kgf*cm, 53 in.*lbf) or less
Vane pump assembly		
Pulley shaft and vane pump housing front oil clearance	Standard Maximum	0.021 to 0.043 mm (0.0008 to 0.0017 in.) 0.07 mm (0.0028 in.)
Vane plate height	Minimum	7.7 mm (0.303 in.)
Vane plate thickness	Minimum	1.408 mm (0.0554 in.)
Vane plate length	Minimum	11.993 mm (0.4722 in.)
Vane pump rotor and vane plate clearance	Maximum	0.025 mm (0.0012 in.)
Compression spring free length	Minimum	36.9 mm (1.453 in.)
Vane pump rotating torque		0.27 N*m (2.8 kgf*cm, 2.4 in.*lbf) or less
Power steering link assembly (2WD)		
Tie rod end turning torque		0.83 to 3.43 N*m (8.5 to 35.0 kgf*cm, 7.35 to 30.36 in.*lbf)
Power steering rack runout	Maximum	0.3 mm (0.012 in.)
Power steering control valve turning torque		0.8 to 1.1 N*m (8.2 to 11.2 kgf*cm, 7.1 to 9.7 in.*lbf)
Steering rack boot No. 1 clamp clearance		3.0 mm (0.118 in.) or less
Power steering link assembly (4WD and Pre-Runner)		
Tie rod end turning torque		0.49 to 3.43 N*m (5.0 to 35.0 kgf*cm, 4.34 to 30.36 in.*lbf)
Power steering rack runout	Maximum	0.3 mm (0.012 in.)
Power steering control valve turning torque		0.9 to 1.5 N*m (9.2 to 15.3 kgf*cm, 8.0 to 13.3 in.*lbf)
Steering rack boot No. 1 clamp clearance		3.0 mm (0.118 in.) or less

TORQUE SPECIFICATIONS

Part Tightened	N*m	kgf*cm	ft.*lbf
Steering wheel assembly x Steering column assembly	50	510	37
Vane pump housing rear x Vane pump housing front	22	224	16
Power steering oil pressure switch x Vane pump housing front	21	214	15
Pressure port union sub-assembly x Vane pump housing front	69	704	51
Vane pump oil reservoir sub-assembly x Vane pump housing front (2TR-FE)	9.0	92	80 in.*lbf
Vane pump assembly x Engine	21	214	15
Pressure feed tube assembly x Vane pump assembly	51	520	38
Battery negative terminal x Battery	3.9	40	35 in.*lbf
Engine under cover sub-assembly No. 1 x Frame	30	306	22
Power steering suction port union x Vane pump housing front (1GR-FE)	12	122	9
Wire harness clamp bracket x Vane pump assembly (1GR-FE)	8.0	82	71 in.*lbf
Control valve housing x Rack housing	18	184	13
Steering rack guide spring cap nut x Steering rack guide spring cap	43 (59)	440 (601)	32 (44)
Steering rack end sub-assembly x Power steering rack	61 (84)	619 (851)	45 (62)
Tie rod end lock nut x Steering rack end sub-assembly	55.5	566	41
Steering turn pressure tube x Control valve housing	14 (15)	141 (153)	10 (11)
Steering turn pressure tube x Rack housing	14 (15)	141 (153)	10 (11)
Steering gear outlet return tube x Control valve housing	22 (24)	222 (245)	16 (18)
Power steering link assembly x Suspension cross member	92	938	68
Pressure feed tube assembly union nut x Power steering link assembly	22 (24)	222 (245)	16 (18)
Pressure feed tube assembly bracket x Power steering link assembly	28	286	21
Tie rod end sub-assembly x Steering knuckle (2WD)	49	500	36
Steering intermediate shaft No. 2 x Power steering link assembly	35	357	26
Steering sliding yoke x Steering intermediate shaft No. 2	35	357	26
Steering sliding yoke x Steering intermediate shaft	35	357	26
Front wheel	113	1,152	83
Tie rod end sub-assembly x Steering knuckle (4WD and Pre-Runner)	91	928	67

( ): For use without SST

AIR CONDITIONING

SERVICE DATA

Refrigerant charge volume	570 to 630 g (20.10 to 22.22 oz.)
Magnetic clutch clearance	0.30 to 0.60 mm (0.012 to 0.024 in.)
Magnetic clutch relay	3 - 5 : 10kΩ or higher 3 - 5 : Below 1Ω(Apply battery voltage to terminals 1 and 2)
Heater relay	3 - 4 : Below 1Ω 3 - 4 : 10kΩ or higher (Apply battery voltage to terminals 1 and 2) 3 - 5 : 10kΩ or higher 3 - 5 : Below 1Ω(Apply battery voltage to terminals 1 and 2)

TORQUE SPECIFICATIONS

Part Tightened	N*m	kgf*cm	ft.*lbf
Negative battery terminal x Battery	3.9	40	35 in.*lbf

AIR CONDITIONING UNIT

Part Tightened	N*m	kgf*cm	ft.*lbf
Expansion valve x Evaporator core	7.0	71	62 in.*lbf
Valve to connector tube x Expansion valve	25	255	18
Mode case x Main case	2.0	20	18 in.*lbf
Heater pivot x Main case	2.0	20	18 in.*lbf
Mode mounting plate x Main case	2.0	20	18 in.*lbf
Mode mounting plate x Mode case	2.0	20	18 in.*lbf
Blower motor x Main case	2.0	20	18 in.*lbf
Blower resister x Main case	2.0	20	18 in.*lbf
Heater radiator assembly x Main case	2.0	20	18 in.*lbf
Temperature mounting plate x Main case	2.0	20	18 in.*lbf
Temperature mounting plate x Heater radiator	2.0	20	18 in.*lbf
Air inlet control servo motor x Main case	2.0	20	18 in.*lbf
Air mix control servo motor x Temperature mounting plate	2.0	20	18 in.*lbf
Mode control servo motor x Mode mounting plate	2.0	20	18 in.*lbf
No. 1 air duct x Mode case	2.0	20	18 in.*lbf
Heater to register center duct x Mode case	2.0	20	18 in.*lbf
Defroster nozzle assembly lower x Mode case	2.0	20	18 in.*lbf
Air conditioning unit assembly x Body	5.0	51	44 in.*lbf
Air conditioning unit assembly x Instrument panel reinforcement	5.0	51	44 in.*lbf
Air conditioning amplifier assembly x Instrument panel reinforcement	7.0	71	62 in.*lbf
Driver side junction block x Instrument panel reinforcement	8.0	82	71 in.*lbf
Bracket x Driver side junction block	8.0	82	71 in.*lbf
Air conditioning tube assembly x Body	7.5	76	66 in.*lbf
Suction hose sub-assembly x Body	7.5	76	66 in.*lbf

COMPRESSOR AND MAGNETIC CLUTCH

Part Tightened	N*m	kgf*cm	ft.*lbf
Magnet clutch hub x Cooler compressor assembly	13.5	138	10
Pressure relief valve x Cooler compressor assembly	8.0	82	71 in.*lbf
Compressor pick up sensor x Cooler compressor assembly	4.0	41	35 in.*lbf
Compressor and magnetic clutch x Compressor bracket	21	214	16
Discharge hose sub-assembly x Compressor and magnetic clutch	19	194	14
Suction hose sub-assembly x Compressor and magnetic clutch	19	194	14
Suction hose sub-assembly x Timing chain cover	7.5	76	66

CONDENSER

Part Tightened	N*m	kgf*cm	ft.*lbf
Condenser assembly x Body	7.5	76	66 in.*lbf
Air conditioning tube assembly x Condenser assembly	7.5	76	66 in.*lbf
Discharge hose sub-assembly x Condenser assembly	7.5	76	66 in.*lbf

SUPPLEMENTAL RESTRAINT SYSTEM

TORQUE SPECIFICATIONS

Part Tightened	N*m	kgf*cm	ft.*lbf
Steering pad x Steering wheel assembly	8.8	90	78 in.*lbf
Steering wheel assembly x Steering column assembly	50	510	37
Front passenger airbag assembly x Instrument panel reinforcement	20	200	14
Curtain shield airbag x Body	9.8	100	7
Center airbag sensor x Body	18	179	13
Front airbag sensor set bolt	7.5	76	66 in.*lbf
Side airbag sensor x Body	9.0	92	80 in.*lbf
Rear airbag sensor x Body	9.0	92	80 in.*lbf
Seat position sensor x Front seat	8.0	82	71 in.*lbf
Occupant classification ECU (Bench seat type) x Seat	3.0	30	27 in.*lbf

SEAT BELT

SERVICE DATA

FRONT SEAT INNER BELT ASSEMBLY (for Separate Seat Type LH Side):

Item	Tester Connection	Condition	Specified Condition
Standard resistance	1 - 2	Fasten seat belt	10 kΩ or higher
		Release seat belt	Below 1 Ω

FRONT SEAT INNER BELT ASSEMBLY (for Separate Seat Type RH Side):

Item	Tester Connection	Condition	Specified Condition
Standard resistance	1 - 2	Fasten seat belt	10 kΩ or higher
		Release seat belt	Below 1 Ω

FRONT SEAT INNER BELT ASSEMBLY (for Bench Seat Type LH Side):

Item	Tester Connection	Condition	Specified Condition
Standard resistance	1 - 2	Fasten seat belt	10 kΩ or higher
		Release seat belt	Below 1 Ω

TORQUE SPECIFICATIONS

FRONT SEAT INNER BELT ASSEMBLY (for Separate Seat Type):

Part Tightened	N*m	kgf*cm	ft.*lbf
Front seat inner belt assembly x Front seat frame adjuster assembly	42	430	31
Negative battery terminal x Battery	3.9	40	35 in.*lbf

FRONT SEAT INNER BELT ASSEMBLY (for Bench Seat Type):

Part Tightened	N*m	kgf*cm	ft.*lbf
Front seat inner belt assembly x Body	42	430	31
Negative battery terminal x Battery	3.9	40	35 in.*lbf

FRONT SEAT OUTER BELT ASSEMBLY (for Double Cab):

Part Tightened	N*m	kgf*cm	ft.*lbf
Front shoulder belt anchor adjuster assembly x Body	42	430	31
Front seat outer belt assembly x Body (for Retractor Upper)	8.5	85	75 in.*lbf
Front seat outer belt assembly x Front shoulder belt anchor adjuster assembly (for Shoulder Anchor)	42	430	31
Front seat outer belt assembly x Body (for Floor Anchor)	42	430	31
Negative battery terminal x Battery	3.9	40	35 in.*lbf

FRONT SEAT OUTER BELT ASSEMBLY (for Regular Cab):

Part Tightened	N*m	kgf*cm	ft.*lbf
Front shoulder belt anchor adjuster assembly x Body	42	430	31
Front seat outer belt assembly x Body (for Retractor Upper)	8.5	85	75 in.*lbf
Front seat outer belt assembly x Body (for Retractor Lower)	42	430	31
Front seat outer belt assembly x Front shoulder belt anchor adjuster assembly (for Shoulder Anchor)	42	430	31
Negative battery terminal x Battery	3.9	40	35 in.*lbf

FRONT SEAT OUTER BELT ASSEMBLY (for Access Cab):

Part Tightened	N*m	kgf*cm	ft.*lbf
Front shoulder belt anchor adjuster assembly x Rear door panel sub-assembly	42	430	31
Front seat outer belt assembly x Body (for Retractor Upper)	8.5	85	75 in.*lbf
Front seat outer belt assembly x Body (for Retractor Lower)	42	430	31
Front seat outer belt assembly x Front shoulder belt anchor adjuster assembly (for shoulder anchor)	42	430	31
Negative battery terminal x Battery	3.9	40	35 in.*lbf

REAR SEAT INNER ASSEMBLY (for Double Cab):

Part Tightened	N*m	kgf*cm	ft.*lbf
Rear seat inner belt assembly x Body	42	430	31

REAR SEAT INNER ASSEMBLY (for Access Cab):

Part Tightened	N*m	kgf*cm	ft.*lbf
Rear seat inner belt assembly x Body	42	430	31

FRONT CENTER SEAT OUTER ASSEMBLY (for Bench Seat Type):

Part Tightened	N*m	kgf*cm	ft.*lbf
Tether anchor bracket sub-assembly x Body	20	205	15
Seat belt bracket x Body	20	205	15
Front center seat outer belt assembly x Seat belt bracket (for Retractor Upper)	8.5	85	75 in.*lbf
Front center seat outer belt assembly x Seat belt bracket (for Retractor Lower)	42	430	31

Part Tightened	N*m	kgf*cm	ft.*lbf
Front center seat outer belt assembly x Body (for Shoulder Anchor)	42	430	31

REAR SEAT OUTER BELT ASSEMBLY (for Double Cab):

Part Tightened	N*m	kgf*cm	ft.*lbf
Rear seat outer belt assembly x Body (for Retractor Upper)	8.5	85	75 in.*lbf
Rear seat outer belt assembly x Body (for Retractor Lower)	42	430	31
Rear seat outer belt assembly x Body (for Shoulder Anchor)	42	430	31
Rear seat outer belt assembly x Body (for Floor Anchor)	42	430	31

REAR SEAT OUTER BELT ASSEMBLY (for Access Cab):

Part Tightened	N*m	kgf*cm	ft.*lbf
Tether anchor bracket sub-assembly x Body	20	205	15
Rear seat outer belt assembly x Body (for Retractor Upper)	8.5	85	75 in.*lbf
Rear seat outer belt assembly x Body (for Shoulder Anchor)	42	430	31
Rear seat outer belt assembly x Body (for Floor Anchor)	42	430	31

CRUISE CONTROL

TORQUE SPECIFICATIONS

Part Tightened	N*m	kgf*cm	ft.*lbft.*lbf
Driver side junction block assembly x Body	8.0	82	71 in.*lbf
Bracket x Driver side junction block assembly	8.0	82	71 in.*lbf
Bracket x Body	8.0	82	71 in.*lbf
Negative battery terminal x Battery	3.9	40	35 in.*lbf

LIGHTING

SERVICE DATA

Headlight relay	3 - 5: 10 kΩ or higher 3 - 5: Below 1 Ω (Battery voltage applied to terminals 1 and 2)
Headlight dimmer relay	3 - 4: Below 1 Ω 3 - 4: 10 kΩ or higher (Battery voltage applied to terminals 1 and 2) 3 - 5: 10 kΩ or higher 3 - 5: Below 1 Ω (Battery voltage applied to terminals 1 and 2)
Taillight relay	3 - 5: 10 kΩ or higher 3 - 5: Below 1 Ω (Battery voltage applied to terminals 1 and 2)
Fog light relay	3 - 5: 10 kΩ or higher 3 - 5: Below 1 Ω (Battery voltage applied to terminals 1 and 2)
Towing tail relay	3 - 5: 10 kΩ or higher 3 - 5: Below 1 Ω (Battery voltage applied to terminals 1 and 2)

TORQUE SPECIFICATIONS

Part Tightened	N*m	kgf*cm	ft.*lbf
Headlight assembly x Front fender panel	2.0	20	17 in.*lbf
Rear combination light assembly x Rear body side panel	5.4	55	48 in.*lbf
Towing converter relay x Body	7.0	71	62 in.*lbf
Wiring harness clamp bracket x Trailer socket	8.3	85	75 in.*lbf
Negative battery terminal x Battery	3.9	40	35 in.*lbf

WIPER AND WASHER

TORQUE SPECIFICATIONS

Part Tightened	N*m	kgf*cm	ft.*lbf
Front wiper motor x Windshield wiper motor and link	7.5	76	66 in.*lbf
Windshield wiper motor and link x Body	5.5	56	49 in.*lbf
Front wiper arm RH x Windshield wiper motor and link	21	209	15
Front wiper arm LH x Windshield wiper motor and link	21	209	15
Negative battery terminal x Battery	3.9	40	35 in.*lbf

METER

TORQUE SPECIFICATIONS

Part Tightened	N*m	kgf*cm	ft.*lbf
Combination meter assembly x Instrument panel assembly	7.0	71	66 in.*lbf
Negative battery terminal x Battery	3.9	40	35 in.*lbf

AUDIO / VISUAL

SERVICE DATA

Acc relay Resistance (3 - 5)	Standard	10 kΩ or higher Below 1 Ω (When battery voltage applied to terminal 1 and 2)

TORQUE SPECIFICATIONS

Part Tightened	N*m	kgf*cm	ft*lbf
Radio receiver assembly X Radio receiver bracket	2.5	25	22 in*lbf
Radio receiver with bracket X Body	2.5	25	22 in*lbf
Front No. 2 speaker assembly X Body	8.4	85	74 in*lbf
No. 1 speaker assembly with box X Body	8.4	85	74 in*lbf
Voltage inverter assembly X Body	15	153	11
Voltage inverter assembly X Body	7.5	76	66 in*lbf
Battery negative terminal X Battery	3.9	40	35 in*lbf

HORN

SERVICE DATA

Fuse (HORN)	Standard	Below 1 Ω
Relay (HORN) Resistance (3 - 5)	Standard	10 kΩ or higher Below 1 Ω (When battery applied to terminals 1 and 2)

OTHER SYSTEM

TORQUE SPECIFICATIONS

Part Tightened	N*m	kgf*cm	ft*lbf
Power outlet socket assembly X Deck side trim box RH	5.0	51	66 in*lbf
Battery negative terminal X Battery	3.9	40	35 in*lbf

WINDSHIELD / WINDOWGLASS

TORQUE SPECIFICATIONS

Part Tightened	N*m	kgf*cm	ft.*lbf
Back window assembly x Body	7.8	80	69 in.*lbf
Negative battery terminal x Battery	3.9	40	35 in.*lbf

MIRROR

SERVICE DATA

Outer mirror switch assembly	Resistance: L position 4 - 8: Below 1 Ω at switch position UP 6 - 7: Below 1 Ω at switch position UP 4 - 7: Below 1 Ω at switch position DOWN 6 - 8: Below 1 Ω at switch position DOWN 5 - 8: Below 1 Ω at switch position LEFT 6 - 7: Below 1 Ω at switch position LEFT 5 - 7: Below 1 Ω at switch position RIGHT 6 - 8: Below 1 Ω at switch position RIGHT Resistance: R position 3 - 8: Below 1 Ω at switch position UP 6 - 7: Below 1 Ω at switch position UP 3 - 7: Below 1 Ω at switch position DOWN 6 - 8: Below 1 Ω at switch position DOWN 2 - 8: Below 1 Ω at switch position LEFT 6 - 7: Below 1 Ω at switch position LEFT 2 - 7: Below 1 Ω at switch position RIGHT 6 - 8: Below 1 Ω at switch position RIGHT

TORQUE SPECIFICATIONS

Part Tightened	N*m	kgf*cm	ft.*lbf
Outer rear view mirror assembly x Front door panel sub-assembly	8.0	80	71 in.*lbf
Negative battery terminal x Battery	3.9	40	35 in.*lbf

INSTRUMENT PANEL

TORQUE SPECIFICATIONS

Part Tightened	N*m	kgf*cm	ft.*lbf
Front passenger airbag assembly x Instrument panel reinforcement	20	205	15
Combination meter assembly x Instrument panel assembly	7.0	76	66 in.*lbf
Negative battery terminal x Battery	3.9	40	35 in.*lbf

SEAT

TORQUE SPECIFICATIONS

FRONT SEAT ASSEMBLY (for Separate Seat Type Driver Side):

Part Tightened	N*m	kgf*cm	ft.*lbf
Seat position sensor x Front seat frame adjuster assembly	8.0	80	71 in.*lbf
Front seat back cover x Front seat frame adjuster assembly (for Front Seat Side Airbag)	5.5	55	49
Front seat inner belt assembly x Front seat frame adjuster assembly	42	430	31
Front seat assembly x Body	37	375	27
Negative battery terminal x Battery	3.9	40	35 in.*lbf

FRONT SEAT ASSEMBLY (for Separate Seat Type Front Passenger Side):

Part Tightened	N*m	kgf*cm	ft.*lbf
Front seat back cover x Front seat frame adjuster assembly (for Front Seat Side Airbag)	5.5	55	49
Front seat inner belt assembly x Front seat frame adjuster assembly	42	430	31
Front seat assembly x Body	37	375	27
Negative battery terminal x Battery	3.9	40	35 in.*lbf

FRONT SEAT ASSEMBLY (for Separate Folding Seat Type):

Part Tightened	N*m	kgf*cm	ft.*lbf
Front seat back cover x Front seat back spring assembly (for Front Seat Side Airbag)	5.5	55	49
Front seat back lock sub-assembly x Front seat back spring assembly	43	440	32
Front seat back assembly x Front seat frame adjuster assembly	43	440	32
Front seat assembly x Body	37	375	27
Negative battery terminal x Battery	3.9	40	35 in.*lbf

FRONT SEAT ASSEMBLY (for Bench Seat Type):

Part Tightened	N*m	kgf*cm	ft.*lbf
Seat track handle sub-assembly x Front seat cushion spring assembly	14	145	10
Front seat outer track assembly x Front seat cushion spring assembly	20	205	15
Front seat track rear bracket x Front seat outer track assembly	32	325	24
Front seat track front bracket x Front seat outer track assembly	32	325	24
Front seat back assembly x Front seat cushion spring assembly	42	430	31
Front seat assembly x Body	37	375	27
Negative battery terminal x Battery	3.9	40	35 in.*lbf

REAR SEAT ASSEMBLY (for Double Cab LH Side):

Part Tightened	N*m	kgf*cm	ft.*lbf
Rear seat back lock assembly x Rear seat back frame sub-assembly	30	305	22
Rear seat cushion hinge sub-assembly x Rear seat cushion frame sub-assembly	21	215	16
Rear seat back center hinge sub-assembly x Body	18	185	14
Rear seat back hinge sub-assembly x Body	18	185	14
Rear seat back assembly x Rear seat back center hinge sub-assembly	37	375	27
Rear seat back assembly x Rear seat back hinge sub-assembly	37	375	27
Rear seat cushion assembly x Body	37	375	27

REAR SEAT ASSEMBLY (for Double Cab RH Side):

Part Tightened	N*m	kgf*cm	ft.*lbf
Rear seat back lock assembly x Rear seat back frame sub-assembly	30	305	22
Rear center seat outer belt assembly x Rear seat back frame sub-assembly	44	450	33

Part Tightened	N*m	kgf*cm	ft.*lbf
Rear seat cushion hinge sub-assembly x Rear seat cushion frame sub-assembly	21	215	16
Rear seat back hinge sub-assembly x Body	18	185	14
Rear seat back assembly x Rear seat back center hinge sub-assembly	37	375	27
Rear seat back assembly x Rear seat back hinge sub-assembly	37	375	27
Rear center seat outer belt x Body	42	430	31
Rear seat cushion assembly x Body	37	375	27

SS

REAR SEAT ASSEMBLY (for Access Cab):

Part Tightened	N*m	kgf*cm	ft.*lbf
Rear seat back lock sub-assembly x Rear seat cushion frame sub-assembly	7.0	70	62 in.*lbf
Child restraint seat anchor bracket sub-assembly x Body	18	185	13
Rear seat back lock striker sub-assembly x Body	18	185	13
Rear seat assembly x Body	18	185	14

ENGINE HOOD / DOOR

TORQUE SPECIFICATIONS

Part Tightened	N*m	kgf*cm	ft.*lbf
Hood hinge x Hood sub-assembly	30	306	22
Hood lock assembly x Radiator support sub-assembly	12	122	9
Hood lock release lever protector No. 2 x Radiator support sub-assembly	12	122	9
Hood lock control cable protector sub-assembly x Radiator support sub-assembly	5.5	56	49 in.*lbf
Front door hinge assembly upper LH x Body	26	265	19
Front door hinge assembly upper LH x Door	26	265	19
Front door lock striker plate x Body	23	235	17
Front door check assembly LH x Door	5.5	56	49 in.*lbf
Front door check assembly LH x Body	30	306	22
Front door outside handle frame sub-assembly LH x Door	7.0	71	62 in.*lbf
Front door lock assembly LH x Door	12	122	9
Front door outside cover x Door	7.0	71	62 in.*lbf
Front door frame sub-assembly front lower LH x Door	5.5	56	49 in.*lbf
Front door frame sub-assembly rear lower LH x Door	8.0	82	70 in.*lbf
Power window regulator motor assembly LH x Front door window regulator sub-assembly LH	5.4	55	49 in.*lbf
Front door window regulator sub-assembly LH x Door	11	112	8
Front door glass sub-assembly LH x Front door window regulator sub-assembly LH	8.0	82	71 in.*lbf
Rear door hinge assembly upper LH x Body	26	265	19
Rear door hinge assembly upper LH x Door	26	265	19
Access panel upper lock striker assembly LH x Body	23	235	17
Rear door lock striker plate x Body	23	235	17
Rear door check assembly LH x Door	5.5	56	49 in.*lbf
Rear door check assembly LH x Body	30	306	22
Front door courtesy light switch assembly LH x Door	9.0	92	80 in.*lbf
Rear door inside locking LH cable assembly x Door	5.0	51	44 in.*lbf
Access panel lock remote control assembly LH x Door	12	122	9
Access panel lock assembly lower LH x Door	12	122	9
Access panel lock assembly upper LH x Door	12	122	9
Front seat belt assembly outer LH (floor side) x Door	42	428	31
Rear door lock striker plate assembly x Body	23	235	17
Rear door outside handle frame sub-assembly LH x Door	7.0	71	62 in.*lbf
Rear door outside handle cover LH x Door	7.0	71	62 in.*lbf
Rear door lock assembly LH x Door	12	122	9
Power window regulator motor assembly LH front x Rear door window regulator sub-assembly LH	5.4	55	49 in.*lbf
Rear door window regulator sub-assembly LH x Door	11	112	8
Rear door window guide sub-assembly front LH x Door	8.0	82	70 in.*lbf
Rear door window frame sub-assembly rear lower LH x Door	8.0	82	70 in.*lbf
Rear door glass sub-assembly LH x Rear door window regulator sub-assembly LH	8.0	82	70 in.*lbf
Tail gate hinge assembly LH x Tail gate	18	178	13
Tail gate stay assembly x Tail gate	14	143	10
Tail gate stay stopper x Rear body side panel LH	14	143	10
Tail gate lock striker x Rear body side panel LH	29	296	21

Part Tightened	N*m	kgf*cm	ft.*lbf
Tail gate hinge assembly x Tail gate	13	127	9
Tail gate lock assembly LH x Tail gate	29	296	21
Negative battery terminal x Battery	3.9	40	35 in.*lbf

EXTERIOR

TORQUE SPECIFICATIONS

FRONT BUMPER:

Part Tightened	N*m	kgf*cm	ft.*lbf
Front bumper extension sub-assembly x Body	58	590	43
Front bumper reinforcement sub-assembly x Front bumper extension sub-assembly	58	590	43
Front bumper arm mounting bracket x Body	13	135	10
Front bumper reinforcement extension x Body	13	135	10
Front bumper upper center retainer x Body	13	135	10
Front bumper upper center retainer x Front bumper arm mounting bracket	13	135	10
Negative battery terminal x Body	3.9	40	35 in.*lbf

REAR BUMPER:

Part Tightened	N*m	kgf*cm	ft.*lbf
Rear bumper bar corner reinforcement x Rear bumper bar	19	195	14
Rear bumper plate x Rear bumper bar	7.0	70	62 in.*lbf
Rear bumper arm sub-assembly x Rear bumper bar reinforcement sub-assembly (w/o Towing Hitch)	65	665	48
Rear bumper bar reinforcement sub-assembly x Rear bumper bar (w/o Towing Hitch)	19	195	14
No. 3 frame wire x Receiver hitch bracket sub-assembly (w/ Towing Hitch)	19	195	14
Receiver hitch bracket sub-assembly x Rear bumper bar (w/ Towing Hitch)	19	195	14
Rear bumper bar x Body	90	920	67
Negative battery terminal x Body	3.9	40	35 in.*lbf

FRONT DOOR BELT MOULDING:

Part Tightened	N*m	kgf*cm	ft.*lbf
Negative battery terminal x Body	3.9	40	35 in.*lbf

REAR DOOR BELT MOULDING:

Part Tightened	N*m	kgf*cm	ft.*lbf
Negative battery terminal x Body	3.9	40	35 in.*lbf

INTERIOR

TORQUE SPECIFICATIONS

ROOF HEADLINING (for Double Cab):

Part Tightened	N*m	kgf*cm	ft.*lbf
Rear seat outer belt assembly x Body	42	430	31
Front seat outer belt assembly x Body	42	430	31
Negative battery terminal x Battery	3.9	40	35 in.*lbf

ROOF HEADLINING (for Regular Cab):

Part Tightened	N*m	kgf*cm	ft.*lbf
Front seat outer belt assembly x Body	42	430	31
Negative battery terminal x Battery	3.9	40	35 in.*lbf

ROOF HEADLINING (for Access Cab):

Part Tightened	N*m	kgf*cm	ft.*lbf
Rear seat outer belt assembly x Body	42	430	31
Negative battery terminal x Battery	3.9	40	35 in.*lbf

DTC	C2111/11	Transmitter ID1 Operation Stop

DTC	C2112/12	Transmitter ID2 Operation Stop

DTC	C2113/13	Transmitter ID3 Operation Stop

DTC	C2114/14	Transmitter ID4 Operation Stop

DTC	C2115/15	Transmitter ID5 Operation Stop

DESCRIPTION

Tire pressure warning valve and transmitters that are installed in the tire and wheel assemblies measure the air pressures of the tires. The measured values are transmitted to the tire pressure warning antenna and receiver on the body as radio waves and then sent to the tire pressure warning ECU. The ECU compares the measured air pressure values with the air pressure threshold. When the measured air pressure values are less than this threshold, the warning light in the combination meter comes on.
The tire pressure warning ECU stores a DTC when the tire pressure warning valve and transmitter stops transmitting signals. At this time, forcibly transmit the signals by releasing the tire pressure rapidly. The stored DTC is cleared when the signal transmission is resumed.

DTC No.	DTC Detecting Condition	Trouble Area
C2111/11 C2112/12 C2113/13 C2114/14 C2115/15	Tire pressure warning valve and transmitters stop transmitting signals	• Tire pressure warning valve and transmitter (Forced transmission of transmitter ID) • Tire pressure warning ECU

WIRING DIAGRAM

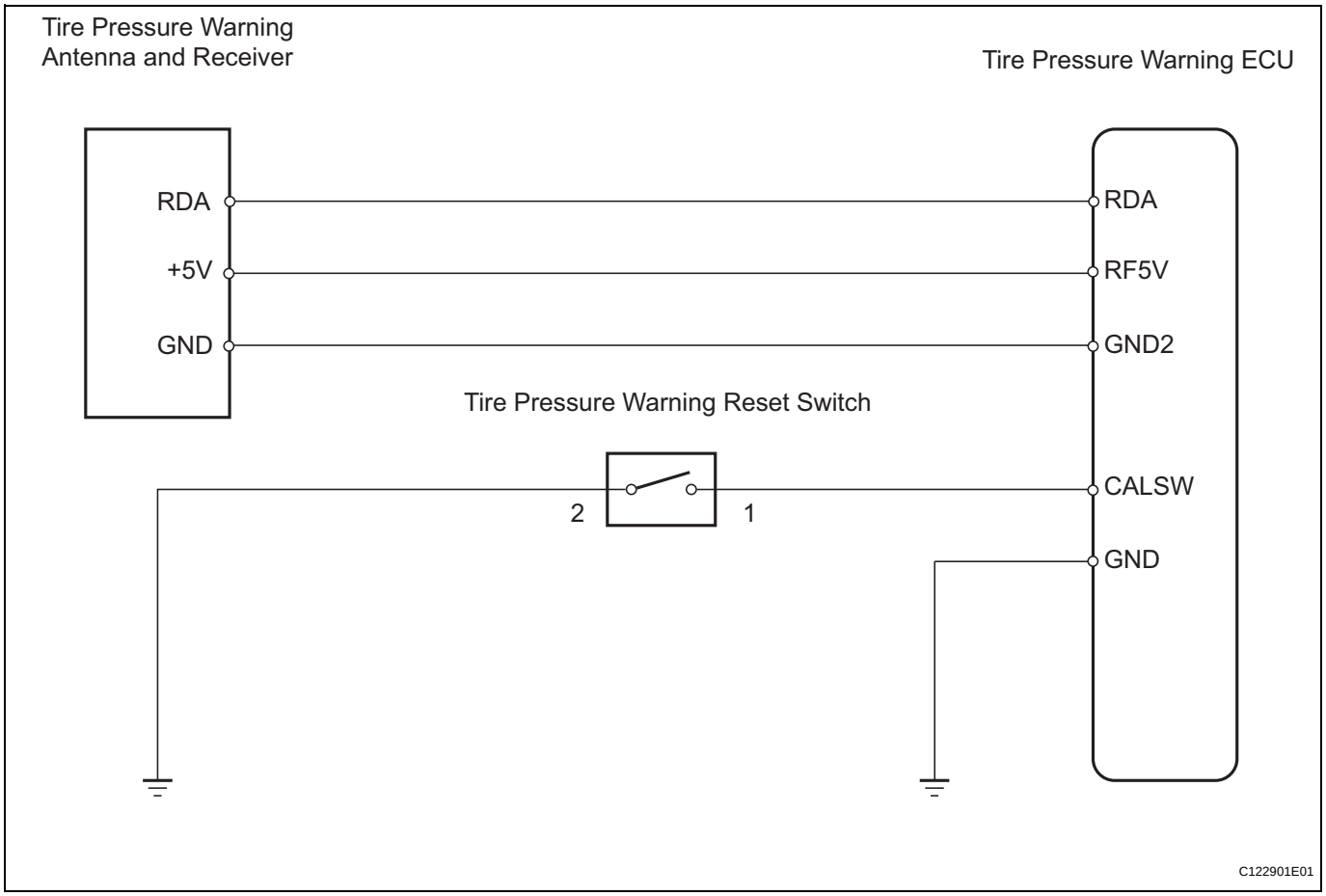

TW

NOTICE:

- **When replacing the tire pressure warning ECU, read the IDs stored in the ECU using the intelligent tester and note them down before removal (See page TW-28).**
- **It is necessary to perform initialization (See page TW-15) after registration (See pageTW-11) the transmitter IDs into the tire pressure warning ECU after the tire pressure warning ECU and/or tire pressure warning valve and transmitter have been replaced.**

1	**PERFORM FORCIBLY TRANSMIT TRANSMITTER ID (ALL WHEELS)**

(a) Set the tire pressures to the appropriate specified values.

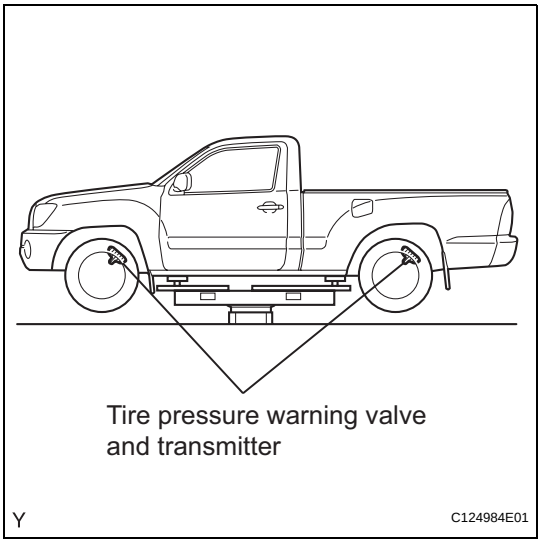

(b) Jack up the vehicle.
(c) Connect the intelligent tester to the DLC3.
(d) Turn the ignition switch ON and turn the tester ON.
(e) Select TIREPRESS by following the prompts displayed on the intelligent tester.

Items	Measurement Item/ Range (Display)
TIREPRESS1	ID1 tire pressure/ minimum: 0 kPa (0 kgf/cm^2, 0psi) maximum: 637.5 kPa (6.5 kgf/cm^2, 92.5 psi)
TIREPRESS2	ID2 tire pressure/ minimum: 0 kPa (0 kgf/cm^2, 0psi) maximum: 637.5 kPa (6.5 kgf/cm^2, 92.5 psi)
TIREPRESS3	ID3 tire pressure/ minimum: 0 kPa (0 kgf/cm^2, 0psi) maximum: 637.5 kPa (6.5 kgf/cm^2, 92.5 psi)
TIREPRESS4	ID4 tire pressure/ minimum: 0 kPa (0 kgf/cm^2, 0psi) maximum: 637.5 kPa (6.5 kgf/cm^2, 92.5 psi)
TIREPRESS5	ID5 tire pressure/ minimum: 0 kPa (0 kgf/cm^2, 0psi) maximum: 637.5 kPa (6.5 kgf/cm^2, 92.5 psi)

TW

(f) Rapidly release the pressures from each wheel by approximately 40 kPa (0.4 kgf/cm^2, 5.8 psi)/ 30 seconds or more.
  (1) Check that the each tire pressure data displayed on the intelligent tester screen changes.
  OK:
  The each tire pressure data displayed on the intelligent tester screen changes with the value of the tire pressure.
  NOTICE:
  - **It may take up to 1 minute to display the updated tire pressure data.**
  - **When none of the TIREPRESS data (IDs 1 to 5) change, reset the tire pressure to the appropriate specified value and rotate the tires 90 to 270 degrees and recheck.**
  (2) After confirming that the all of the tire pressure data displayed on the intelligent tester screen have changed, set the tire pressures to the appropriate specified values.
  HINT:
  If the tire pressure data displayed on the intelligent tester screen has not changed after rechecking, go to the other troubleshooting procedure related to DTCs C2121/21 to C2125/25 which indicate transmission or reception malfunctions (See page TW-37).

NG → **INSPECT OTHER PROBLEM (MALFUNCTION IN TRANSMISSION OR RECEPTION FUNCTION)**

OK

END

DTC	C2121/21	No Signal from Transmitter ID1
DTC	C2122/22	No Signal from Transmitter ID2
DTC	C2123/23	No Signal from Transmitter ID3
DTC	C2124/24	No Signal from Transmitter ID4
DTC	C2125/25	No Signal from Transmitter ID5
DTC	C2181/81	Transmitter ID1 not Received (Test Mode DTC)
DTC	C2182/82	Transmitter ID2 not Received (Test Mode DTC)
DTC	C2183/83	Transmitter ID3 not Received (Test Mode DTC)
DTC	C2184/84	Transmitter ID4 not Received (Test Mode DTC)
DTC	C2185/85	Transmitter ID5 not Received (Test Mode DTC)

DESCRIPTION

TW

Tire pressure warning valve and transmitters that are installed in the tire and wheel assemblies measure the air pressures of the tires. The measured values are transmitted to the tire pressure warning antenna and receiver on the body as radio waves and then sent to the tire pressure warning ECU. The ECU compares the measured air pressure values with the air pressure threshold. When the measured air pressure values are less than this threshold, the warning light in the combination meter comes on. The tire pressure warning valve and transmitter constantly sends radio waves to the tire pressure warning antenna and receiver.

Under the following conditions, the tire pressure warning antenna and receiver is unable to receive the signals from the tire pressure warning valve and transmitters, and a DTC is output.

– Areas, facilities, or devices that use similar radio frequencies are located in the vicinity of the vehicle.
– Devices using similar radio frequencies are used in the vehicle.

HINT:

When no signals are received for 30 minutes or more, a DTC is output.

DTCs C2121/21 to C2125/25 can only be cleared by using the tester. DTCs C2181/81 to C2185/85 can be cleared when the transmitter in the tire pressure warning valve and transmitter sends a forced transmission signal or test mode ends. DTCs C2181/81 to C2185/85 are output only in test mode.

DTC No.	DTC Detection Condition	Trouble Area
C2121/21 C2122/22 C2123/23 C2124/24 C2125/25	When no signals received for 30 minutes or more, vehicle speed of 5 mph (8 km/h) or more detected and still no signals received for 12 minutes or more.	• Tire pressure warning antenna and receiver • Tire pressure warning valve and transmitter • Tire pressure warning ECU
C2181/81 C2182/82 C2183/83 C2184/84 C2185/85	Malfunction in transmission / reception circuit	• Tire pressure warning antenna and receiver • Tire pressure warning valve and transmitter • Tire pressure warning ECU • Wire harness or connector

WIRING DIAGRAM

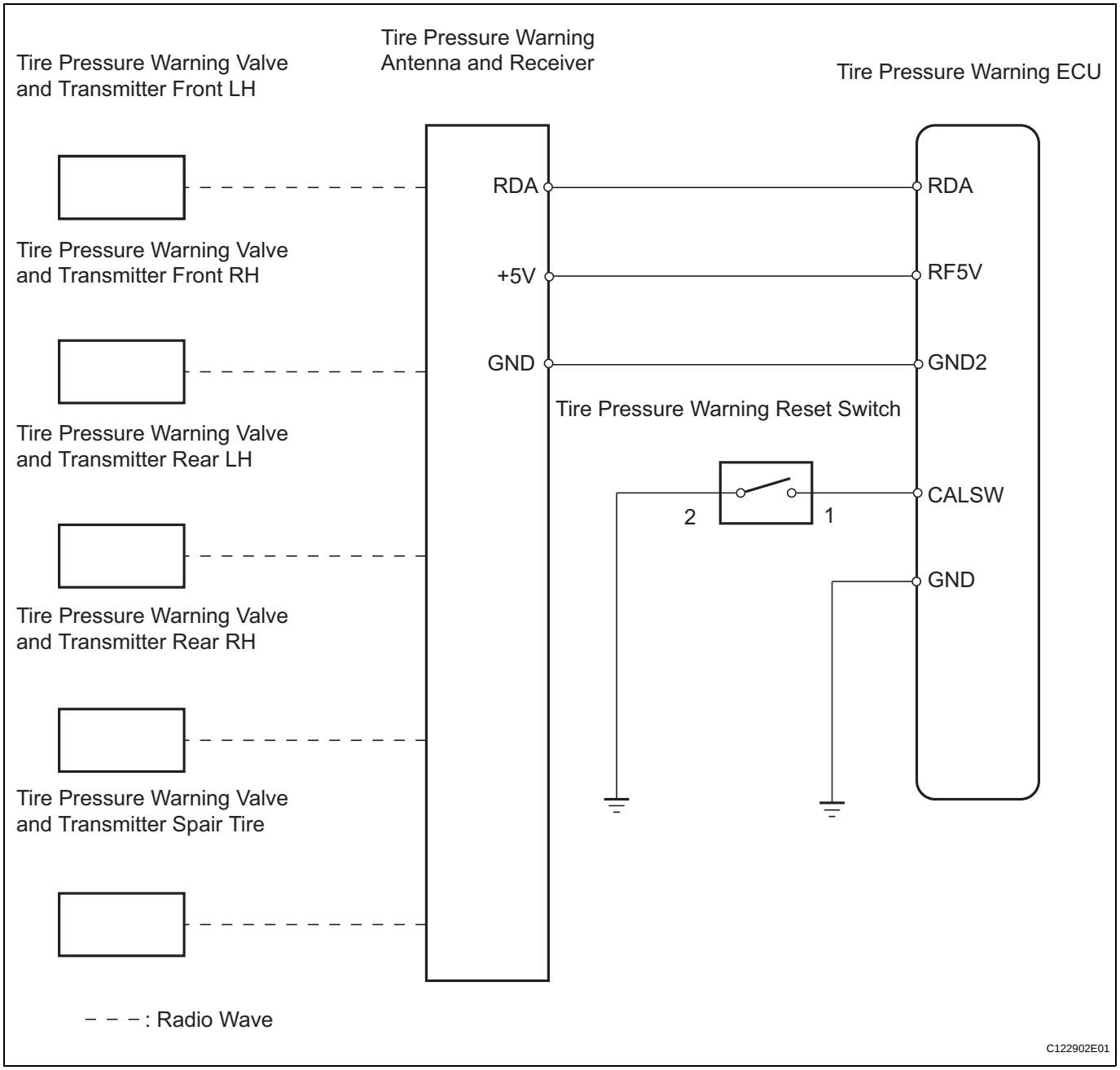

NOTICE:

- **Tires and wheels without tire pressure warning valves and transmitters are used.**
- **When replacing the tire pressure warning ECU, read the IDs stored in the ECU using the intelligent tester and note them down before removal (See page TW-28).**
- **It is necessary to perform initialization (See page TW-15) after registration (See page TW-11) the transmitter IDs into the tire pressure warning ECU after the tire pressure warning ECU and/or tire pressure warning valve and transmitter have been replaced.**

1	**IDENTIFY TRANSMITTER (CORRESPONDING TO DTC)**

(a) Set the tire pressures to the appropriate specified values.

TW

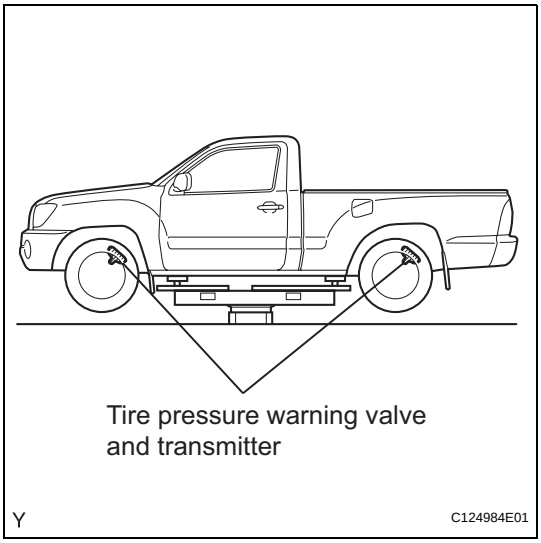

(b) Jack up the vehicle.
(c) Select TIREPRESS by following the prompts displayed on the intelligent tester.

Item	Measurement Item/ Range (Display)
TIREPRESS1	ID1 tire pressure/ minimum: 0 kPa (0 kgf/cm^2, 0 psi) maximum: 637.5 kPa (6.5 kgf/cm^2, 92.5 psi)
TIREPRESS2	ID2 tire pressure/ minimum: 0 kPa (0 kgf/cm^2, 0 psi) maximum: 637.5 kPa (6.5 kgf/cm^2, 92.5 psi)
TIREPRESS3	ID3 tire pressure/ minimum: 0 kPa (0 kgf/cm^2, 0 psi) maximum: 637.5 kPa (6.5 kgf/cm^2, 92.5 psi)
TIREPRESS4	ID4 tire pressure/ minimum: 0 kPa (0 kgf/cm^2, 0 psi) maximum: 637.5 kPa (6.5 kgf/cm^2, 92.5 psi)
TIREPRESS5	ID5 tire pressure/ minimum: 0 kPa (0 kgf/cm^2, 0 psi) maximum: 637.5 kPa (6.5 kgf/cm^2, 92.5 psi)

(d) Rapidly release the tire pressure from any tire to 40 kPa (0.4 kgf/cm^2, 5.8 psi)/ 30 seconds or more.
(e) Check the DATA LIST.

TW

Result

Condition	Detection Condition
One of TIREPRESS data (ID1 to ID5) changed	Normal
No TIREPRESS data changed	Transmitter corresponding to DTC

NOTICE:
- **It may take up to 1 minute to display the updated tire pressure data.**
- **When none of the TIREPRESS data (IDs 1 to 5) change, reset the tire pressure to the appropriate specified value and rotate the tires 90 to 270 degrees and recheck.**
- **When the transmitter is normal, record the tire location and the transmitter ID.**

(f) When one of TIREPRESS data (IDs 1 to 5) changes, repeat the same procedure on the rest of tires one by one to identify which tire pressure warning valve and transmitter the DTC corresponds to.
(g) Inspect all transmitters of the tires.

Result

Result	Proceed to
One or more of transmitters abnormal	A
All normal	B
All abnormal	C

B → END

C → Go to step 3

A

2 INSPECT TIRE PRESSURE WARNING VALVE AND TRANSMITTER

(a) Select REGIT ID CODE by following the prompts displayed on the intelligent tester.

Item	Measurement Item/ Range (Display)
REGIT ID1 CODE	Registered ID1 code/ minimum: 0 maximum: FFFFFFF
REGIT ID2 CODE	Registered ID2 code/ minimum: 0 maximum: FFFFFFF
REGIT ID3 CODE	Registered ID3 code/ minimum: 0 maximum: FFFFFFF
REGIT ID4 CODE	Registered ID4 code/ minimum: 0 maximum: FFFFFFF
REGIT ID5 CODE	Registered ID5 code/ minimum: 0 maximum: FFFFFFF

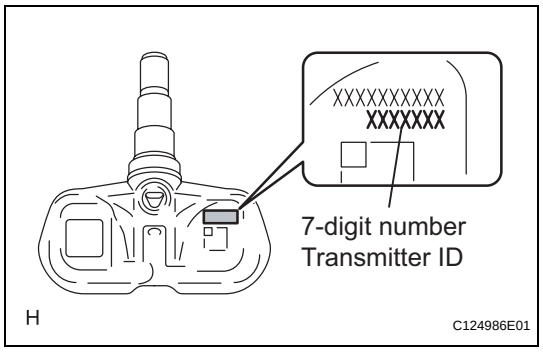

(b) Remove the identified tire pressure warning valve and transmitter from the tire, and check its ID number (See page TW-95).

(c) Check whether the recorded transmitter ID and the actual transmitter ID match.

Result

Result	Proceed to
Matched	A
Unmatched	B

A → REPLACE TIRE PRESSURE WARNING VALVE AND TRANSMITTER

B

PERFORM REGISTRATION (TRANSMITTER ID)

TW

3	CHECK HARNESS AND CONNECTOR (TIRE PRESSURE WARNING RECEIVER - TIRE PRESSURE WARNING ECU)

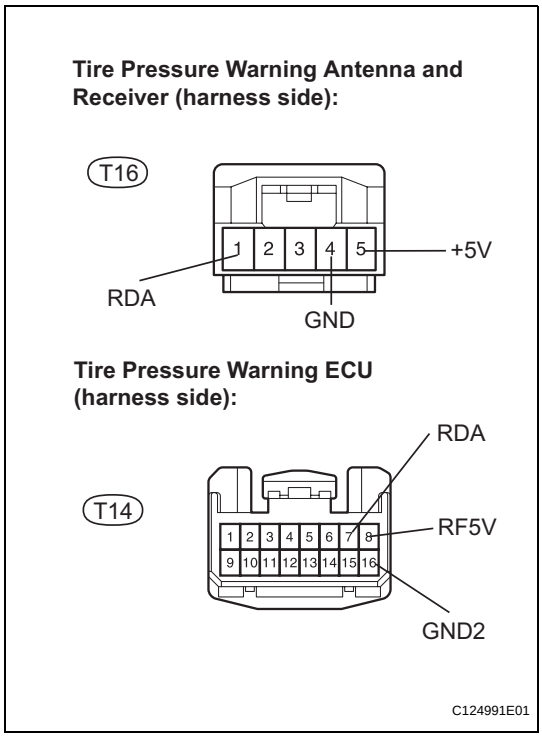

(a) Disconnect the connectors from the tire pressure warning ECU and tire pressure warning antenna and receiver.

(b) Measure the resistance.

Standard resistance

Tester Connection	Specified Condition
RDA (T14-7) - RDA (T16-1)	Below 1 Ω
RF5V (T14-8) - +5V (T16-5)	Below 1 Ω
GND2 (T14-16) - GND (T16-4)	Below 1 Ω
RDA (T14-7) - Body ground	10 kΩ or higher
RF5V (T14-8) - Body ground	10 kΩ or higher
GND2 (T14-16) - Body ground	10 kΩ or higher

NG → **REPAIR OR REPLACE HARNESS OR CONNECTOR**

OK

4	READ VALUE OF DATA LIST (TIREPRESS)

(a) Turn the ignition switch to the OFF position, and then turn it to the ON position.

(b) Read the TIREPRESS data on the intelligent tester screen.

OK:

All tire pressures readings are equal to the specified values.

NOTICE:

It may take up to 1 minute to display the data.

OK → **END**

NG

5	CHECK ID CODE (TIRE PRESSURE WARNING VALVE AND TRANSMITTER)

(a) Select REGIT ID CODE by following the prompts displayed on the intelligent tester.

Item	Measurement Item/ Range (Display)
REGIT ID1 CODE	Registered ID1 code/ minimum: 0 maximum: FFFFFFF

Item	Measurement Item/ Range (Display)
REGIT ID2 CODE	Registered ID2 code/ minimum: 0 maximum: FFFFFFF
REGIT ID3 CODE	Registered ID3 code/ minimum: 0 maximum: FFFFFFF
REGIT ID4 CODE	Registered ID4 code/ minimum: 0 maximum: FFFFFFF
REGIT ID5 CODE	Registered ID5 code/ minimum: 0 maximum: FFFFFFF

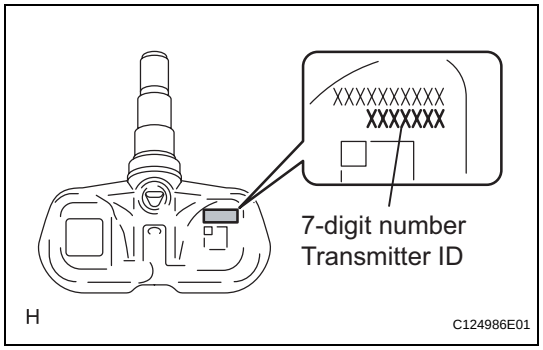

(b) Remove tire pressure warning valve and transmitter from any of tire, and check its ID number (See page TW-95).

(c) Check whether the recorded transmitter ID and the actual transmitter ID match.

Result

Result	Proceed to
Matched	**A**
Unmatched	**B**

A → **REPLACE TIRE PRESSURE WARNING ANTENNA AND RECEIVER**

B

PERFORM REGISTRATION (TRANSMITTER ID)

DTC	C2141/41	Transmitter ID1 Error

DTC	C2142/42	Transmitter ID2 Error

DTC	C2143/43	Transmitter ID3 Error

DTC	C2144/44	Transmitter ID4 Error

DTC	C2145/45	Transmitter ID5 Error

DESCRIPTION

Tire pressure warning valve and transmitters that are installed in the tire and wheel assemblies measure the air pressures of the tires. The measured values are transmitted to the tire pressure warning antenna and receiver on the body as radio waves and then sent to the tire pressure warning ECU. The ECU compares the measured air pressure values with the air pressure threshold. When the measured air pressure values are less than this threshold, the warning light in the combination meter comes on. When the internal circuits of the tire pressure warning valve and transmitters are defected, these DTCs are output.

DTC No.	DTC Detection Condition	Trouble Area
C2141/41 C2142/42 C2143/43 C2144/44 C2145/45	• If ERROR signal received 3 times consecutively, tire pressure warning valve and transmitter determined to be defective. • This occurs in situations where tire pressure outside range 0 to 637.5 kPa (0 to 6.5 kgf / cm^2, 0 to 92.5 psi), tire internal temperature outside specified range - 40 to 120°C (- 40 to 248°F), or error occurs in tire pressure warning valve and transmitter	• Tire pressure warning valve and transmitter

TW

NOTICE:

- **When replacing the tire pressure warning ECU, read the IDs stored in the ECU using the intelligent tester and note them down before removal (See page TW-28).**
- **It is necessary to perform initialization (See page TW-15) after registration (See page TW-11) the transmitter IDs into the tire pressure warning ECU after the tire pressure warning ECU and/ or tire pressure warning valve and transmitter have been replaced.**

1	IDENTIFY TRANSMITTER (CORRESPONDING TO DTC)

(a) Set the tire pressures to the appropriate specified values.

Tire Size	Front Wheel kPa (kgf/cm^2, psi)	Rear Wheel kPa (kgf/cm^2, psi)	Spare Wheel kPa (kgf/cm^2, psi)
P215/70 R15	200 (2.0, 29)	220 (2.2, 32)	220 (2.2, 32)
P255/45 R18	240 (2.4, 34)	240 (2.4, 34)	240 (2.4, 34)
P245/75 R16	200 (2.0, 29)	200 (2.0, 29)	200 (2.0, 29)
P265/70 R16 (ORP)*	200 (2.0, 29)	220 (2.2, 32)	220 (2.2, 32)
P265/65 R17	200 (2.0, 29)	200 (2.0, 29)	200 (2.0, 29)

*: Used on Off Road Package Models

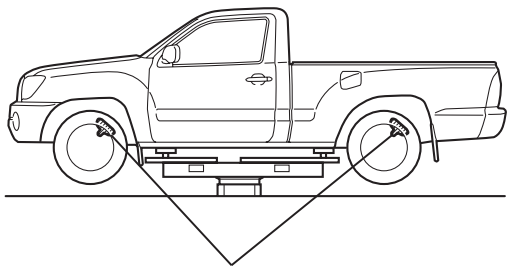

Tire pressure warning valve and transmitter

Y C124984E01

(b) Jack up the vehicle.

(c) Select TIREPRESS by following the prompts displayed on the intelligent tester.

Item	Measurement Item / Range (Display)
TIREPRESS1	ID1 tire inflation pressure/ minimum: 0 kPa (0 kgf/cm^2, 0 psi) maximum: 637.5 kPa (6.5 kgf/cm^2, 92.5 psi)
TIREPRESS2	ID2 tire inflation pressure/ minimum: 0 kPa (0 kgf/cm^2, 0 psi) maximum: 637.5 kPa (6.5 kgf/cm^2, 92.5 psi)
TIREPRESS3	ID3 tire inflation pressure/ minimum: 0 kPa (0 kgf/cm^2, 0 psi) maximum: 637.5 kPa (6.5 kgf/cm^2, 92.5 psi)
TIREPRESS4	ID4 tire inflation pressure/ minimum: 0 kPa (0 kgf/cm^2, 0 psi) maximum: 637.5 kPa (6.5 kgf/cm^2, 92.5 psi)
TIREPRESS5	ID5 tire inflation pressure/ minimum: 0 kPa (0 kgf/cm^2, 0 psi) maximum: 637.5 kPa (6.5 kgf/cm^2, 92.5 psi)

NOTICE:
It may take up to 1 minute to display the updated data.

(d) Rapidly release the tire pressure from any tire to 40 kPa (0.4 kgf/cm^2, 5.8 psi).
HINT:
- Identify the malfunctioning tire pressure warning valve and transmitter by rapidly releasing the tire pressures from each tire.
- Record which TIREPRESS data (ID1 to ID5) corresponds to each tire.

(e) Check the DATA LIST.
Result

Display	Detection Condition
One of TIREPRESS data (ID1 to ID5) changes	**Normal**
None of TIREPRESS data change	**Transmitter corresponding to DTC**

NOTICE:
- **When none of the TIREPRESS data (IDs 1 to 5) change, reset the tire pressure to the appropriate specified values and rotate the tires 90 to 270 degrees and recheck.**
- **When the transmitter is normal, record the tire location and the transmitter ID.**

(f) When one of the TIREPRESS data (IDs 1 to 5) changes, repeat the same procedure on the rest of tires one by one to identify which tire pressure warning valve and transmitter the DTC corresponds to.

TW

(g) When all the TIREPRESS data (IDs 1 to 5) has been changed, identify the malfunctioning tire pressure warning valve and transmitter by using recorded ID numbers and output DTC.
(h) Set the tire pressures to the appropriate specified values.

NEXT

REPLACE TIRE PRESSURE WARNING VALVE AND TRANSMITTER

DTC	C2165/65	Abnormal Temperature Inside ID1 Tire

DTC	C2166/66	Abnormal Temperature Inside ID2 Tire

DTC	C2167/67	Abnormal Temperature Inside ID3 Tire

DTC	C2168/68	Abnormal Temperature Inside ID4 Tire

DTC	C2169/69	Abnormal Temperature Inside ID5 Tire

DESCRIPTION

Tire pressure warning valve and transmitters that are installed in the tire and wheel assemblies measure the internal temperature of the tires. The measured values are transmitted to the tire pressure warning antenna and receiver on the body as radio waves and then sent to the tire pressure warning ECU. If the measured temperatures exceed the specified temperature, the tire pressure warning ECU determines it as a malfunction, outputs DTCs, and blinks the tire pressure warning light.

DTC No.	DTC Detecting Condition	Trouble Area
C2165/65 C2166/66 C2167/67 C2168/68 C2169/69	Tire internal temperature exceeds 119 °C (246.2°F) more than once.	• Tire • Tire pressure warning valve and transmitter

NOTICE:
It is necessary to perform initialization (See page TW-15) after registration (See page TW-11) the transmitter IDs into the tire pressure warning ECU after the tire pressure warning valve and transmitter have been replaced.

TW

1	IDENTIFY TRANSMITTER (CORRESPONDING TO DTC)

(a) Set the tire pressures to the appropriate specified values.

Tire Size	Front Wheel kPa (kgf/cm^2, psi)	Rear Wheel kPa (kgf/cm^2, psi)	Spare Wheel kPa (kgf/cm^2, psi)
P215/70R 15	200 (2.0, 29)	220 (2.2, 32)	220 (2.2, 32)
P255/45 R18	240 (2.4, 34)	240 (2.4, 34)	240 (2.4, 34)
P245/75 R16	200 (2.0, 29)	200 (2.0, 29)	200 (2.0, 29)
P265/70 R16 (ORP)*	200 (2.0, 29)	220 (2.2, 32)	220 (2.2, 32)
P265/65 R17	200 (2.0, 29)	200 (2.0, 29)	200 (2.0, 29)

*: Used on Off Road Package Models

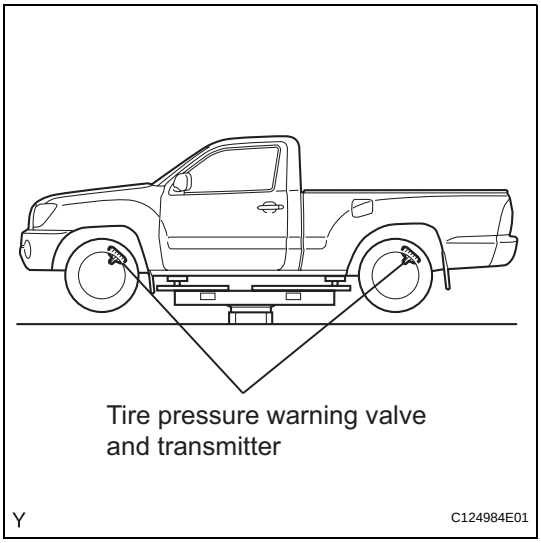

(b) Jack up the vehicle.
(c) Select TIREPRESS by following the prompts displayed on the intelligent tester.

Item	Measurement Item/ Range (Display)
TIREPRESS1	ID1 tire inflation pressure/ minimum: 0 kPa (0 kgf/cm^2, 0 psi) maximum: 637.5 kPa (6.5 kgf/cm^2, 92.5 psi)
TIREPRESS2	ID2 tire inflation pressure/ minimum: 0 kPa (0 kgf/cm^2, 0 psi) maximum: 637.5 kPa (6.5 kgf/cm^2, 92.5 psi)
TIREPRESS3	ID3 tire inflation pressure/ minimum: 0 kPa (0 kgf/cm^2, 0 psi) maximum: 637.5 kPa (6.5 kgf/cm^2, 92.5 psi)
TIREPRESS4	ID4 tire inflation pressure/ minimum: 0 kPa (0 kgf/cm^2, 0 psi) maximum: 637.5 kPa (6.5 kgf/cm^2, 92.5 psi)
TIREPRESS5	ID5 tire inflation pressure/ minimum: 0 kPa (0 kgf/cm^2, 0 psi) maximum: 637.5 kPa (6.5 kgf/cm^2, 92.5 psi)

(d) Rapidly release the tire pressure from any tire to 40 kPa (0.4 kgf/cm^2, 5.8 psi)/ 30 seconds or more.
Result

Display	Detection Condition
One of TIREPRESS data (ID1 to ID5) changed	**Normal**
No TIREPRESS data changed	**Transmitter corresponding to DTC**

NOTICE:
- **It may take up to 1 minute to display the updated data.**
- **When none of the TIREPRESS data (IDs 1 to 5) change, reset the tire pressure to the appropriate specified value and rotate the tires 90 to 270 degrees and recheck.**
- **When the transmitter is normal, record the tire location and the transmitter ID.**

(e) When one of the TIREPRESS data (IDs 1 to 5) changes, repeat the same procedure on the rest of tires one by one to identify which tire pressure warning valve and transmitter the DTC corresponds to. Set the tire pressures to the appropriate specified values.
(f) When all the TIREPRESS data (IDs 1 to 5) has been change, identify the malfunctioning tire pressure warning valve and transmitter by using recorded ID numbers and output DTC.

TW

NEXT

2	**CHECK TIRES**

Check the that the tires are not flat, and there are no indications of air pressure decreases.

NG → **REPLACE TIRES AND TIRE PRESSURE WARNING VALVE AND TRANSMITTERS**

OK

REPLACE TIRE PRESSURE WARNING VALVE AND TRANSMITTER

DTC	C2171/71	Transmitter ID not Registered

DESCRIPTION

The IDs of each tire pressure warning valve and transmitters are registered to the tire pressure warning ECU.
When the ECU detects that an ID is not the one of registered IDs, or cannot receive an ID signal, a DTC is output.

NOTICE:

- **When replacing the tire pressure warning ECU, read the IDs stored in the ECU using the intelligent tester and note them down before removal (See page TW-28).**
- **It is necessary to perform initialization (See page TW-15) after registration (See page TW-11) the transmitter IDs into the tire pressure warning ECU after the tire pressure warning ECU and/or tire pressure warning valve and transmitter have been replaced.**

1	CONFIRM REGISTRATION CONDITION (REGISTERED ID CODES)

(a) Connect the intelligent tester to the DLC3 connector.
(b) Turn the ignition switch to the ON position and turn the tester ON.
(c) Select REGIT ID CODE by following the prompts displayed on the intelligent tester.
OK:
The registered transmitter ID codes are displayed on the intelligent tester screen.

TW

OK → **REPLACE TIRE PRESSURE WARNING ECU**

NG

2	PERFORM REGISTRATION (TRANSMITTER ID)

(a) Register the transmitter IDs for all the wheels (See page TW-11).
(b) Set the tire pressures of all the wheels to the appropriate specified values.

NEXT

3	READ VALUE OF DATA LIST

(a) Check the DATA LIST (See page TW-28).
(b) Select TIREPRESS by following the prompts displayed on the intelligent tester.
HINT:
It may take up to 1 minute to display the tire pressure data.

Result

Condition	Proceed to
All tire pressure readings are equal to specified values.	A
Tire pressure values not display.	B

B → **REPLACE TIRE PRESSURE WARNING ECU**

A

END

DTC	C2176/76	Receiver Error

DESCRIPTION

The signals are transmitted to the tire pressure warning antenna and receiver on the body as radio waves and then sent to the tire pressure warning ECU.

DTC No.	DTC Detection Condition	Trouble Area
C2176/76	When either of following detected: • EEPROM in tire pressure warning ECU malfunction • Terminal RF5V shorted to ground	• Tire pressure warning antenna and receiver • Tire pressure warning ECU • Wire harness or connector

WIRING DIAGRAM

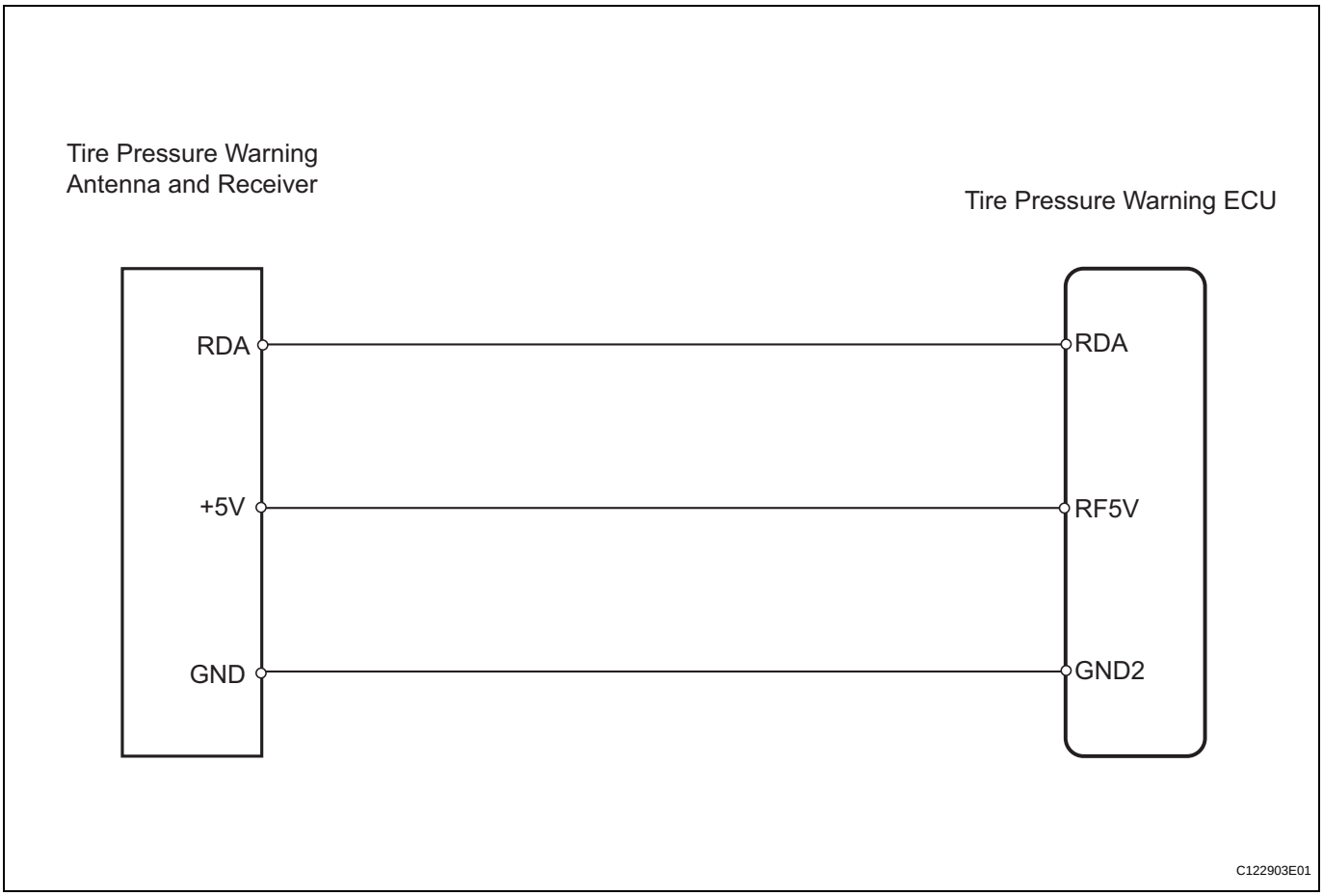

TW

NOTICE:

- **When replacing the tire pressure warning ECU, read the IDs stored in the ECU using the intelligent tester and note them down before removal (See page TW-28).**
- **It is necessary to perform initialization (See page TW-15) after registration (See page TW-11) the transmitter IDs into the tire pressure warning ECU after the ECU have been replaced.**

1 CHECK HARNESS AND CONNECTOR (TIRE PRESSURE WARNING ECU - TIRE PRESSURE WARNING RECEIVER)

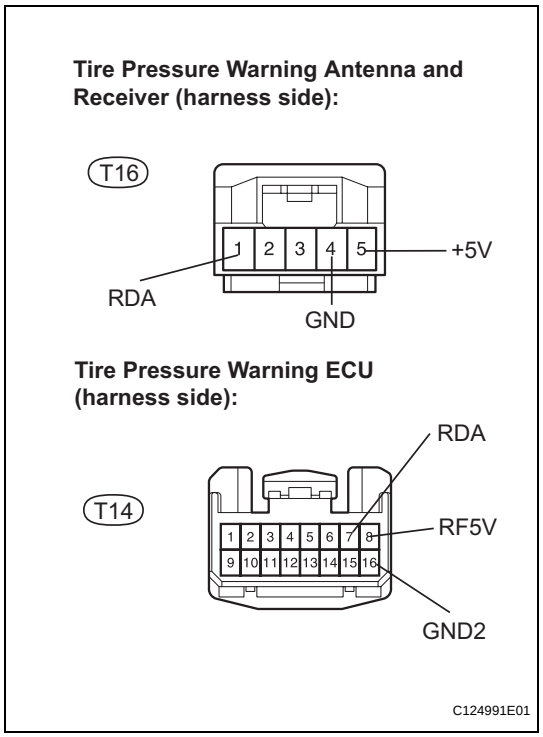

(a) Disconnect the connectors from the tire pressure warning antenna and receiver and tire pressure warning ECU.

(b) Measure the resistance.

Standard resistance

Tester Connection	Specified Condition
RDA (T14-7) - RDA (T16-1)	Below 1 Ω
RF5V (T14-8) - +5V (T16-5)	Below 1 Ω
GND2 (T14-16) - GND (T16-4)	Below 1 Ω
RDA (T14-7) - Body ground	10 k Ω or higher
RF5V (T14-8) - Body ground	10 k Ω or higher
GND2 (T14-16) - Body ground	10 k Ω or higher

(c) Reconnect the connectors.

NG → **REPAIR OR REPLACE HARNESS OR CONNECTOR**

OK

2 INSPECT TIRE PRESSURE WARNING ECU

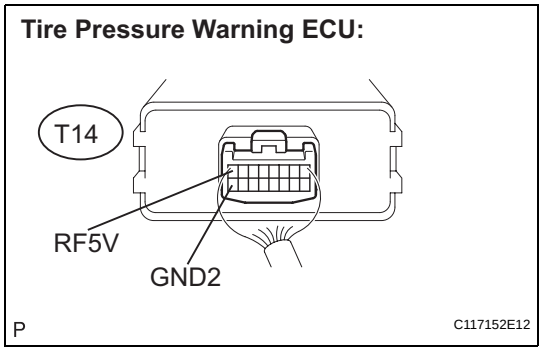

(a) Turn the ignition switch to the ON position.

(b) Measure the voltage of the terminals between RF5V and GND2 of the tire pressure warning ECU.

Standard voltage

Tester Connection	Specified Condition
GND2 (T14-16) - RF5V (T14-8)	4.5 to 5.5 V

NG → **REPLACE TIRE PRESSURE WARNING ECU**

OK

3 INSPECT TIRE PRESSURE WARNING ECU

(a) Replace the tire pressure warning ECU with a normally functioning or new one.

(b) Register the transmitter IDs again (See page TW-11).

(c) Perform TEST MODE PROCEDURE (See page TW-17).

(d) Perform the forcible transmission of all the transmitter IDs.

TW

(e) Confirm that DTCs C2181/81 to C2185/85 are cleared.
Result

Result	Proceed to
DTCs all cleared	A
DTCs not cleared	B

A → **REPLACE TIRE PRESSURE WARNING ECU**

B

REPLACE TIRE PRESSURE WARNING ANTENNA AND RECEIVER

DTC	C2177/77	Initialization not Completed

DESCRIPTION

The initialization procedure starts when the tire pressure warning reset switch is pressed for 3 seconds or more with the ignition switch in the ON position.
The tire pressure warning ECU registers the tire pressure data by the signals from the tire pressure warning valve and transmitter, and start the tire pressure warning light blinking 3 times at 1 second intervals.

DTC No.	DTC Detection Condition	Trouble Area
C2177/77	Initialization not complete after vehicle driven at 5 mph (8 km/h) or more for total of 20 minutes or more.	• Tire pressure warning valve and transmitter • Tire pressure warning ECU

NOTICE:

- **When replacing the tire pressure warning ECU, read the IDs stored in the ECU using the intelligent tester and note them down before removal (See page TW-28).**
- **It is necessary to perform initialization (See page TW-15) after registration (See page TW-11) the transmitter IDs into the tire pressure warning ECU after the tire pressure warning ECU and/or tire pressure warning valve and transmitter have been replaced.**

1	CHECK DTC

(a) Check for DTCs (See page TW-26).

Result

Result	Proceed to
DTC C2177 output with another DTCs	A
Only DTC C2177 output	B

HINT:

- When the tire pressure warning ECU receives no signals for several minutes after the initialization procedure has finished, a DTC is output.
- When only DTC C2177 is output, refer to the other troubleshooting procedure (See page TW-37).

B → **GO TO OTHER PROBLEM (MALFUNCTION IN TRANSMISSION OR RECEPTION)**

A

INSPECTION PROCEDURE RELEVANT TO OUTPUT DTC

DTC	C2191/91	Vehicle Speed Signal Error (Test Mode DTC)

DESCRIPTION

The tire pressure warning ECU receives a speed signal from the combination meter. This DTC is stored upon entering test mode, and cleared when a vehicle speed signal of 12 mph (20 km/h) is detected for 3 seconds or more. The DTC is output only during test mode.

DTC No.	DTC Detection Condition	Trouble Area
C2191/91	Speed sensor signal circuit malfunction.	• Combination meter • Vehicle speed sensor • Tire pressure warning ECU • Wire harness or connector

WIRING DIAGRAM

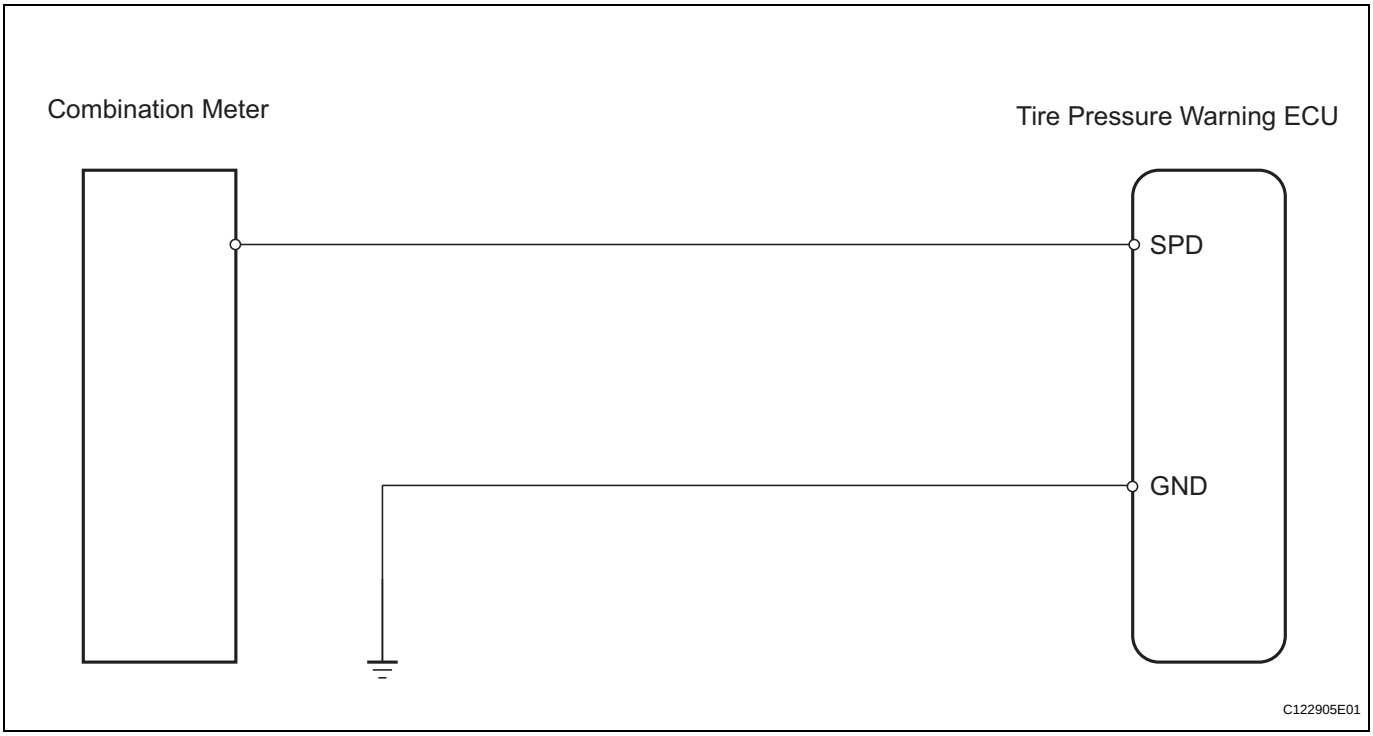

NOTICE:

- **When replacing the tire pressure warning ECU, read the IDs stored in the ECU using the intelligent tester and note them down before removal (See page TW-28).**
- **It is necessary to perform initialization (See page TW-15) after registration (See page TW-11) the transmitter IDs into the tire pressure warning ECU after the tire pressure warning ECU and/or tire pressure warning valve and transmitter have been replaced.**

HINT:

Start the inspection from step 1 when using the intelligent tester, and start from step 2 when not using the intelligent tester.

1	READ VALUE OF INTELLIGENT TESTER

(a) Connect the intelligent tester to the DLC3.
(b) Turn the ignition switch to the ON position, and turn the intelligent tester on.

(c) Select the item shown in the table below from the DATA LIST, and read the value displayed on the intelligent tester.
HINT:
Enter the following menus: Chassis/TPWS/DATA LIST

VEHICLE SPEED

Item	Normal Condition
VEHICLE SPEED	Actual vehicle speed

(d) Check that the values indicated on the tester and on the combination meter are the same.
OK:
Vehicle speed displayed on the intelligent tester indicates the actual vehicle speed.

OK → **REPLACE TIRE PRESSURE WARNING ECU**

NG

2 CHECK HARNESS AND CONNECTOR (TIRE PRESSURE WARNING ECU - COMBINATION METER)

Tire Pressure Warning ECU (harness side):

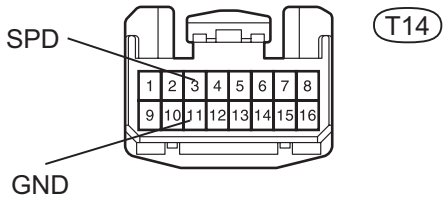

Combination Meter (harness side):

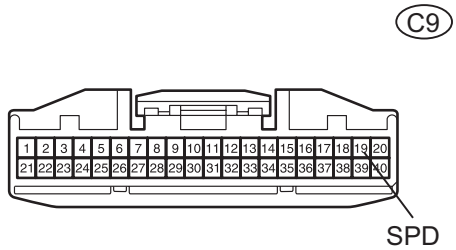

C124992E01

(a) Disconnect the connectors from the combination meter and tire pressure warning ECU.
(b) Measure the resistance.
Standard resistance

Tester Connection	Specified Condition
SPD (T14-3) - SPD (C9-19)	Below 1 Ω
SPD (T14-3) - Body ground	10 kΩ or higher
GND (T14-11) - Body ground	Below 1 Ω

Reconnect the connectors.

NG → **REPAIR OR REPLACE HARNESS OR CONNECTOR**

OK

TW

3	INSPECT TIRE PRESSURE WARNING ECU

Tire Pressure Warning ECU (harness side):

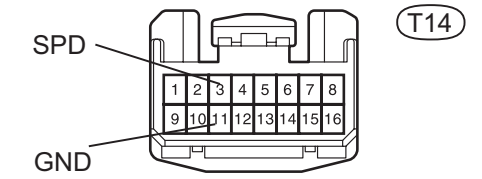

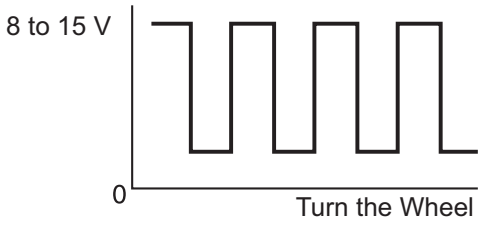

C124993E02

(a) Disconnect the connector from the tire pressure warning ECU.

(b) Check the voltage
  (1) Move the shift lever to the neutral position.
  (2) Jack up one of the rear wheels.
  (3) Turn the ignition switch to the ON position.
  (4) Measure the voltage between terminals SPD and GND of the tire pressure warning ECU as the rear tire is turned slowly.

OK:

Voltage is generated intermittently.

HINT:

As the vehicle speed (wheel revolution speed) increases, the cycle of the fluctuation in the waveform becomes faster.

NG → **CHECK COMBINATION METER (SPEED SIGNAL CIRCUIT)**

OK

REPLACE TIRE PRESSURE WARNING ECU

TW

Tire Pressure Warning Reset Switch Circuit

DESCRIPTION

Tire pressure warning reset switch is adopted for initialization of the tire pressure warning threshold. When the tire pressure warning reset switch is pressed for 3 seconds or more, the tire pressure data is registered in the tire pressure warning ECU.
The tire pressure warning reset switch condition is checked through the DATA MONITOR using the intelligent tester or by conducting the TEST MODE PROCEDURE.

WIRING DIAGRAM

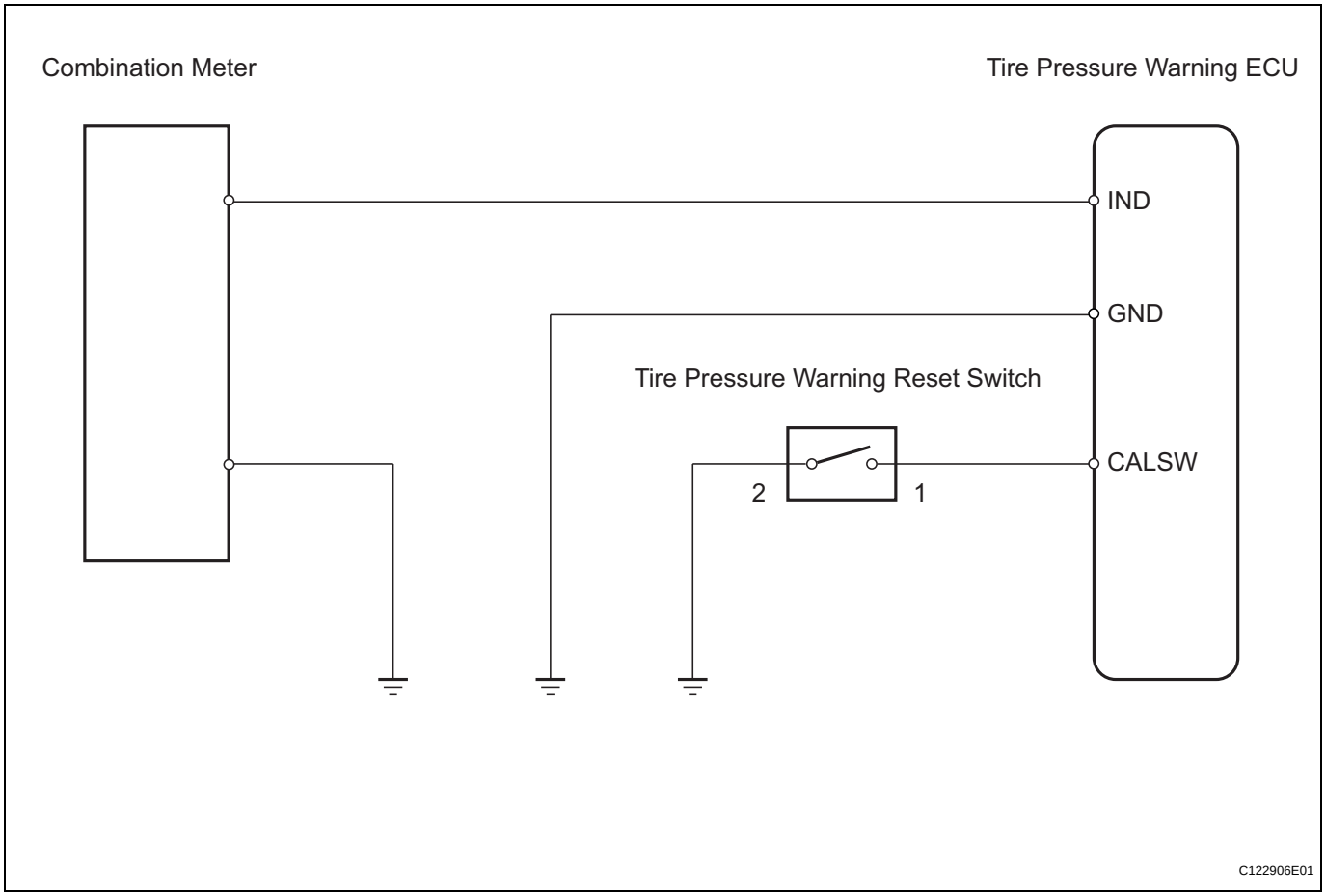

NOTICE:

- **When replacing the tire pressure warning ECU, read the IDs stored in the ECU using the intelligent tester and note them down before removal (See page TW-28).**
- **It is necessary to perform initialization (See page TW-15) after registration (See page TW-11) the transmitter IDs into the tire pressure warning ECU after the ECU have been replaced.**

1	READ VALUE OF DATA LIST (INITIAL SW)

(a) Connect the intelligent tester to the DLC3 connector.
(b) Turn the ignition switch to the ON position and turn the tester ON.
(c) Select INITIAL SW by following the prompts displayed on the intelligent tester.

TW

Standard

Item	Condition	Specified Condition
INITIAL SW	Tire pressure warning reset switch OFF → ON	Display OFF → ON

NG → Go to step 2

OK

PROCEED TO NEXT CIRCUIT INSPECTION SHOWN IN PROBLEM SYMPTOMS TABLE

2 INSPECT TIRE PRESSURE WARNING RESET SWITCH

Tire Pressure Warning Reset Switch:

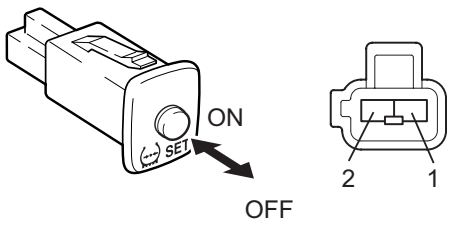

(a) Disconnect the connector from the tire pressure warning reset switch.
(b) Measure the resistance between terminals 1 and 2 of the tire pressure warning reset switch.
Standard resistance

Switch Condition	Specified Condition
ON	Below 1 Ω
OFF	10 kΩ or higher

NG → **REPLACE TIRE PRESSURE WARNING RESET SWITCH**

TW

OK

3 CHECK HARNESS AND CONNECTOR (TIRE PRESSURE WARNING RESET SWITCH-TIRE PRESSURE WARNING ECU)

Tire Pressure Warning Reset Switch (harness side):

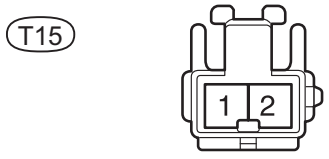

Tire Pressure Warning ECU (harness side):

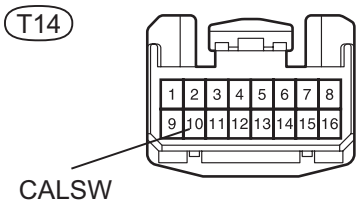

(a) Disconnect the connector from the tire pressure warning ECU.
(b) Measure the resistance.
Standard resistance

Tester Connection	Specified Condition
CALSW (T14-10) - T15-1	Below 1 Ω
CALSW (T14-10) - Body ground	10 kΩ or higher
T15-2 - Body ground	Below 1 Ω

NG → **REPAIR OR REPLACE HARNESS OR CONNECTOR**

OK

PROCEED TO NEXT CIRCUIT INSPECTION SHOWN IN PROBLEM SYMPTOMS TABLE

Tire Pressure Warning Light Circuit

DESCRIPTION

If the tire pressure warning ECU detects a malfunction, the tire pressure warning light comes on and the tire pressure monitor is cancelled simultaneously. At this time, the ECU stores DTCs in the memory. Connecting terminals TC and CG of the DLC3 causes the tire pressure warning light to blink and output DTCs.

WIRING DIAGRAM

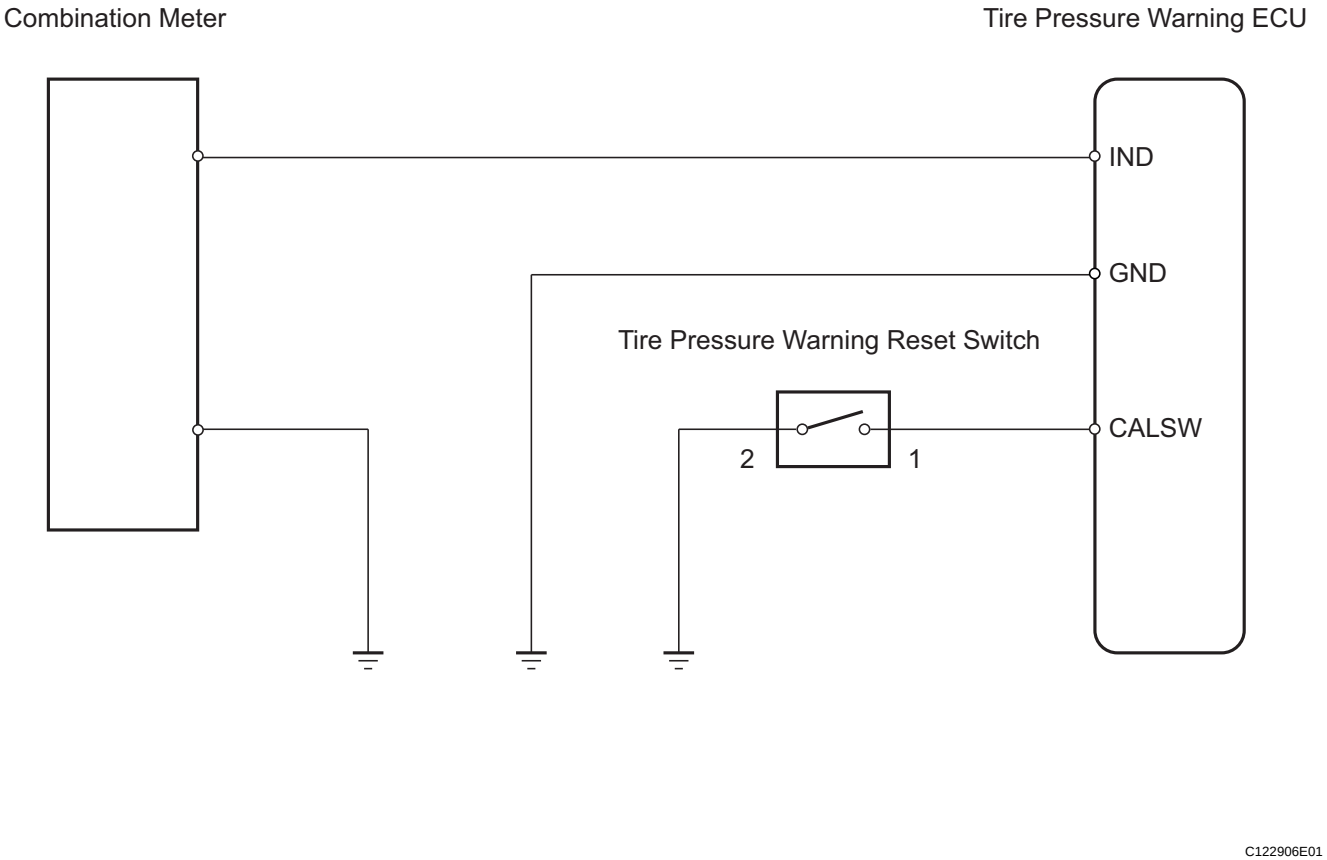

NOTICE:

- **When replacing the tire pressure warning ECU, read the IDs stored in the ECU using the intelligent tester and note them down before removal (See page TW-26).**
- **It is necessary to perform initialization (See page TW-15) after registration (See page TW-11) the transmitter IDs into the tire pressure warning ECU after the tire pressure warning ECU and/or tire pressure warning valve and transmitter have been replaced.**

TW

1	CHECK HARNESS AND CONNECTOR (TIRE PRESSURE WARNING ECU - COMBINATION METER)

Tire Pressure Warning ECU (harness side):

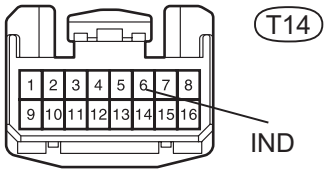

Combination Meter (harness side):

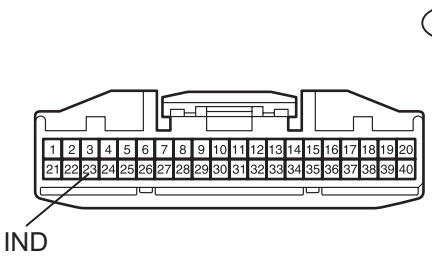

C124992E02

(a) Disconnect the connectors from the tire pressure warning ECU and combination meter.
(b) Measure the resistance.
Standard resistance

Tester Connection	Specified Condition
IND (T14-6) - IND (C9-23)	Below 1 Ω
IND (T14-6) - Body ground	10 kΩ or higher

(c) Reconnect the connectors.

NG → **REPAIR OR REPLACE HARNESS OR CONNECTOR**

OK

2	INSPECT COMBINATION METER

(a) Disconnect the connector from the tire pressure warning ECU.
(b) Turn the ignition switch to the ON position, check the condition of the tire pressure warning light illumination.
Result

Condition	Proceed to
Illuminates	A
Does not illuminate	B

B → **REPLACE COMBINATION METER**

A

REPLACE TIRE PRESSURE WARNING ECU

TW

ECU Power Source Circuit

DESCRIPTION

This circuit supplies power to the tire pressure warning ECU. The power is also supplied to the tire pressure warning antenna and receiver via the ECU.
The tire pressure warning system is disabled, when the system circuit has a defect. At This time the tire pressure warning light on the combination meter will come on.

WIRING DIAGRAM

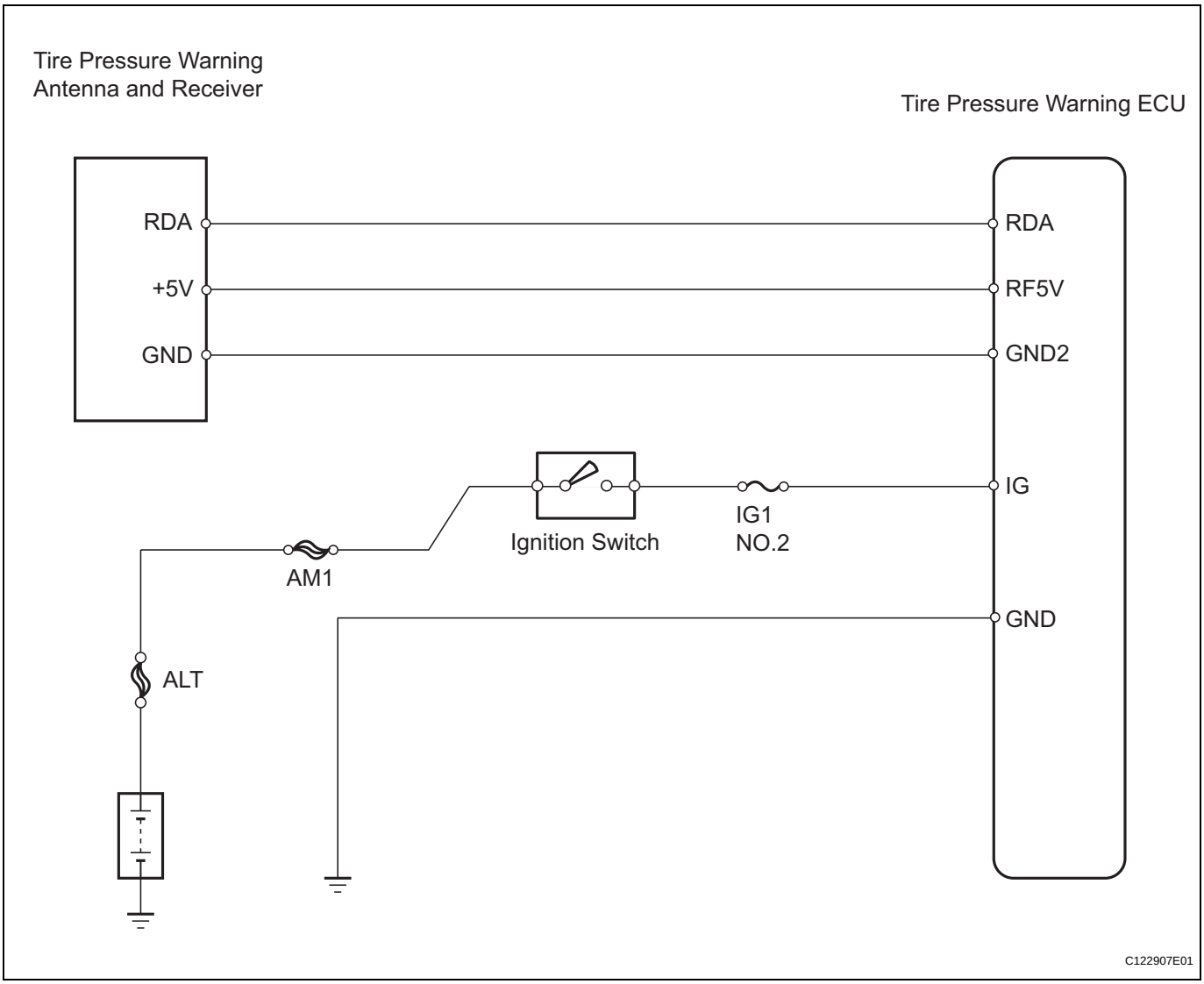

NOTICE:

- **When replacing the tire pressure warning ECU, read the IDs stored in the ECU using the intelligent tester and note them down before removal (See page TW-28).**
- **It is necessary to perform initialization (See page TW-15) after registration (See page TW-11) the transmitter IDs into the tire pressure warning ECU after the ECU have been replaced.**

1	**INSPECT BATTERY**

(a) Check the battery voltage.

Standard voltage:
11 to 14 V

NG → **CHECK AND REPAIR CHARGING SYSTEM**

OK

2 INSPECT FUSE (IG1 No.2)

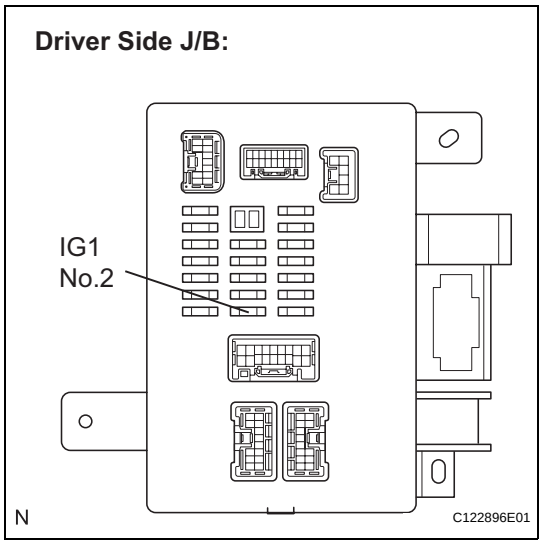

(a) Remove the IG1 No.2 fuse from the driver side J/B.
(b) Measure the resistance of the IG1 No.2 fuse.
Standard resistance:
Below 1 Ω
(c) Reinstall the IG1 No.2 fuse.

NG → **CHECK SHORT CIRCUIT IN COMPONENTS AND WIRES CONNECTED TO FUSE**

OK

3 INSPECT TIRE PRESSURE WARNING ECU

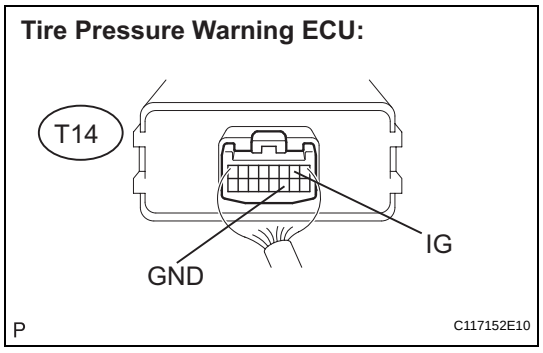

(a) Remove the tire pressure warning ECU with the connector connected.
(b) Turn the ignition switch to the ON position.
(c) Measure the voltage.
Standard voltage

Tester Connection	Specified Condition
IG (T14-2) - GND (T14-11)	10 to 16 V

NG → **Go to step 4**

OK

PROCEED TO NEXT CIRCUIT INSPECTION SHOWN IN PROBLEM SYMPTOMS TABLE

TW

4	CHECK HARNESS AND CONNECTOR (BATTERY - TIRE PRESSURE WARNING ECU)

Tire Pressure Warning ECU (Harness Side):

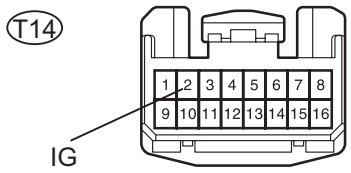

(a) Disconnect the connector from the tire pressure warning ECU.
(b) Turn the ignition switch to the ON position.
(c) Measure the voltage.
Standard voltage

Tester Connection	Specified Condition
IG (T14-2) - Body ground	10 to 16 V

(d) Reconnect the connector.

NG → **REPAIR OR REPLACE HARNESS OR CONNECTOR**

OK

5	CHECK HARNESS AND CONNECTOR (TIRE PRESSURE WARNING ECU - BODY GROUND)

Tire Pressure Warning ECU (Harness Side):

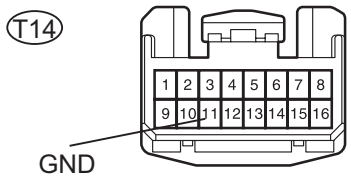

(a) Disconnect the connector from the tire pressure warning ECU.
(b) Measure the resistance.
Standard resistance

Tester connection	Specified Condition
GND (T14-11) - Body ground	Below 1 Ω

NG → **REPAIR OR REPLACE HARNESS OR CONNECTOR**

OK

PROCEED TO NEXT CIRCUIT INSPECTION SHOWN IN PROBLEM SYMPTOMS TABLE

TW

TC and CG Terminal Circuit

DESCRIPTION

DTC output mode is set by connecting terminals TC and CG of the DLC3. The stored DTCs are indicated by the blinking patterns of the tire pressure warning light.

WIRING DIAGRAM

HINT:
When all the warning lights continue blinking, a ground short in the wiring of terminal TC of the DLC3 is suspected.

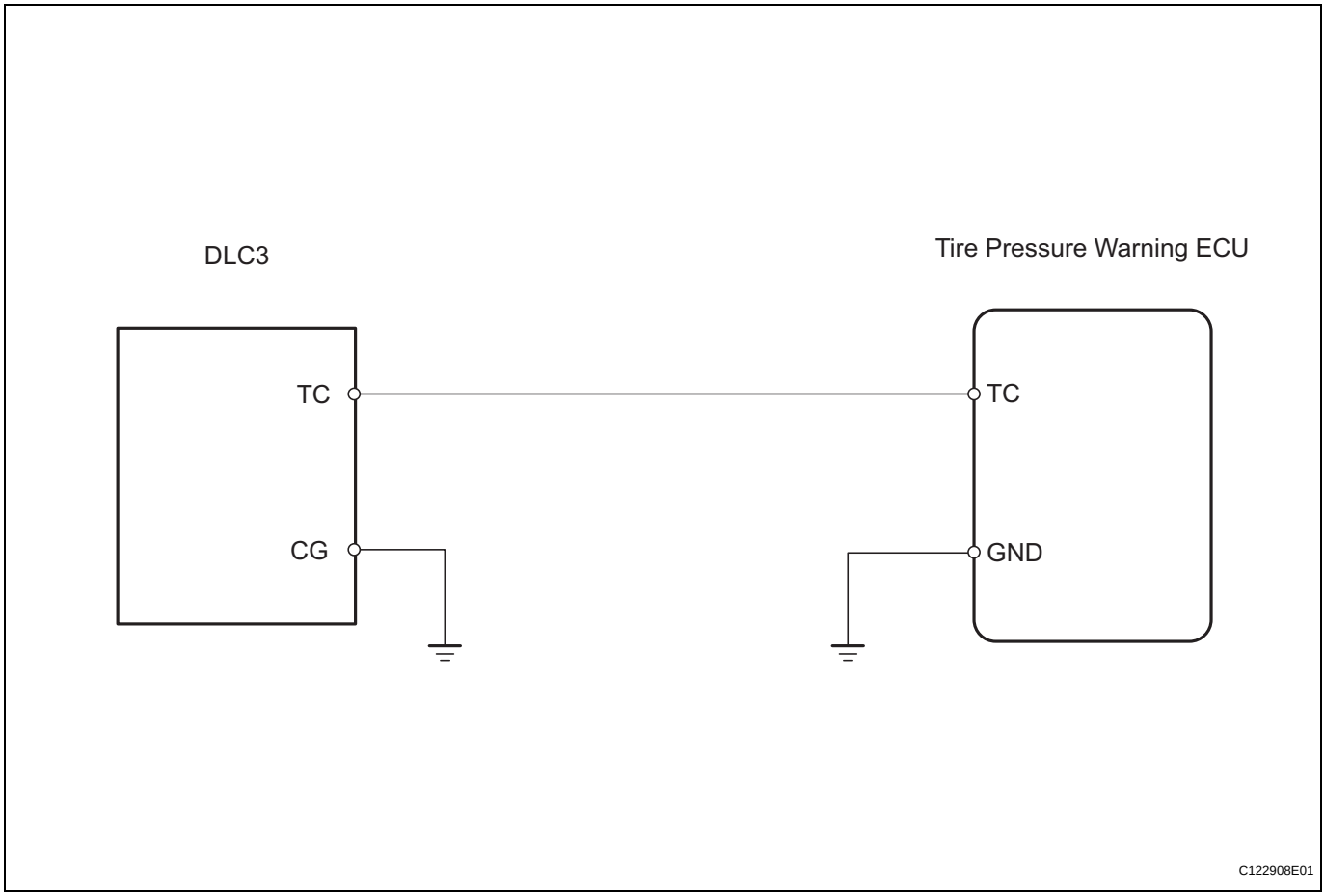

NOTICE:

- **When replacing the tire pressure warning ECU, read the IDs stored in the ECU using the intelligent tester and note them down before removal (See page TW-28).**
- **It is necessary to perform initialization (See page TW-15) after registration (See pageTW-11) the transmitter IDs into the tire pressure warning ECU after the tire pressure warning ECU and/or tire pressure warning valve and transmitter have been replaced.**

1	CHECK HARNESS AND CONNECTOR (DLC3 - TIRE PRESSURE WARNING ECU)

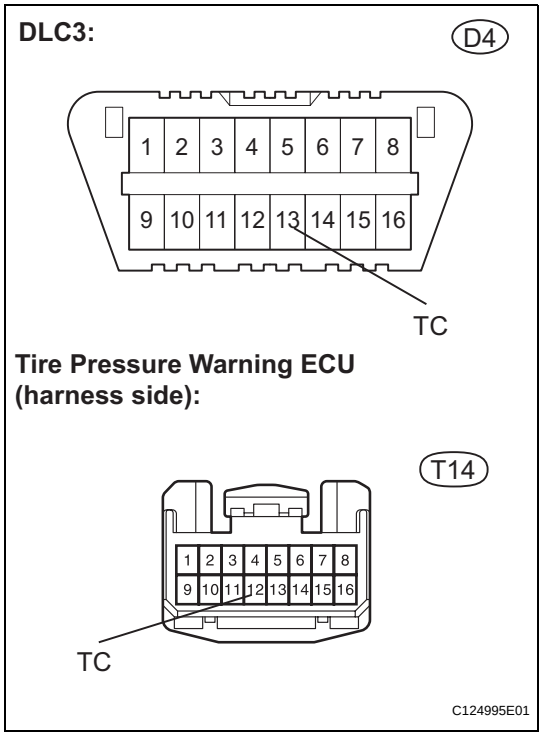

(a) Disconnect the connector from the tire pressure warning ECU.
(b) Measure the resistance.
Standard resistence

Tester Connection	Specified Condition
TC (T14-12) - TC (D4-13)	Below 1 Ω

(c) Reconnect the connector.

NG → **REPAIR OR REPLACE HARNESS OR CONNECTOR**

OK

TW

2	CHECK HARNESS AND CONNECTOR (DLC3 - BODY GROUND)

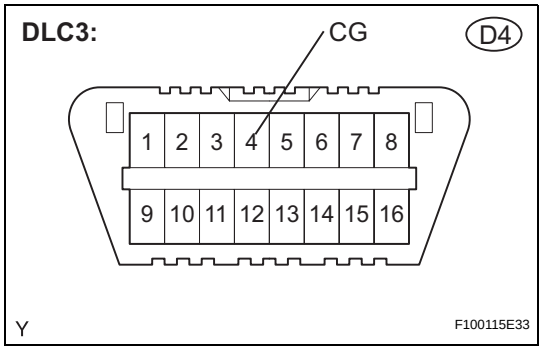

(a) Measure the resistance.
Standard resistance

Tester Connection	Specified Condition
CG (D4-4) - Body ground	Below 1 Ω

NG → **REPAIR OR REPLACE HARNESS OR CONNECTOR**

OK

3	CHECK HARNESS AND CONNECTOR (TIRE PRESSURE WARNING ECU - BODY GROUND)

Tire Pressure Warning ECU (Harness Side):

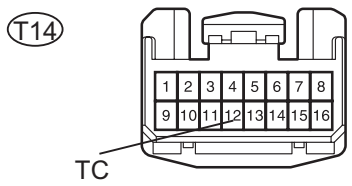

(a) Disconnect the connector from the tire pressure warning ECU.

(b) Measure the resistance.

Standard resistance

Tester Connection	Specified Condition
TC (T14-12) - Body ground	10 kΩ or higher

NG → **REPAIR OR REPLACE HARNESS OR CONNECTOR AND EACH ECU**

OK

REPLACE TIRE PRESSURE WARNING ECU

TW

REMOVAL

1. DISCONNECT CABLE FROM NEGATIVE BATTERY TERMINAL
2. REMOVE SEAT TRACK COVER LH (for Double Cab) (See page SE-23)
3. REMOVE SEAT TRACK COVER RH (for Double Cab) (See page SE-38)
4. REMOVE FRONT SEAT ASSEMBLY LH (for Double Cab) (See page SE-23)
5. REMOVE FRONT SEAT ASSEMBLY RH (for Double Cab) (See page SE-38)
6. REMOVE REAR SEAT CUSHION ASSEMBLY LH (for Double Cab) (See page SE-71)
7. REMOVE REAR SEAT CUSHION ASSEMBLY RH (for Double Cab) (See page SE-82)
8. REMOVE REAR SEAT BACK HINGE COVER (for Double Cab) (See page IR-12)
9. REMOVE REAR SEAT BACK ASSEMBLY LH (for Double Cab) (See page SE-71)
10. REMOVE REAR SEAT BACK ASSEMBLY RH (for Double Cab) (See page SE-82)
11. REMOVE REAR SEAT BACK HINGE SUB-ASSEMBLY LH (for Double Cab) (See page SE-71)
12. REMOVE REAR SEAT BACK HINGE SUB-ASSEMBLY RH (for Double Cab) (See page SE-82)
13. REMOVE REAR SEAT BACK CENTER HINGE SUB-ASSEMBLY (for Double Cab) (See page SE-71)
14. REMOVE LUGGAGE COMPARTMENT SIDE TRAY LH (for Double Cab) (See page IR-16)
15. REMOVE LUGGAGE COMPARTMENT SIDE TRAY RH (for Double Cab) (See page IR-16)
16. REMOVE BACK PANEL TRIM COVER (for Regular Cab) (See page IR-42)
17. REMOVE BACK PANEL TRIM COVER (for Access Cab) (See page IR-64)
18. REMOVE BACK PANEL UPPER GARNISH (for Regular Cab) (See page IR-43)
19. REMOVE JACK ASSEMBLY (for Regular Cab on Separate Seat Type)
20. REMOVE BACK PANEL TRIM COVER (for Regular Cab on Separate Seat Type) (See page IR-43)
21. REMOVE REAR SEAT INNER BELT ASSEMBLY (for Access Cab) (See page IR-64)

22. REMOVE BACK PANEL TRIM (for Regular Cab on Separate Seat Type) (See page IR-43)
23. REMOVE BACK PANEL TRIM (for Access Cab) (See page IR-64)
24. REMOVE FRONT FLOOR FOOTREST (See page IR-1)
25. REMOVE FRONT DOOR SCUFF PLATE LH (for Double Cab) (See page IR-12)
26. REMOVE FRONT DOOR SCUFF PLATE LH (for Regular Cab) (See page IR-40)
27. REMOVE FRONT DOOR SCUFF PLATE LH (for Access Cab) (See page IR-61)
28. REMOVE FRONT DOOR SCUFF PLATE RH (for Double Cab) (See page IR-12)
29. REMOVE FRONT DOOR SCUFF PLATE RH (for Regular Cab) (See page IR-40)
30. REMOVE FRONT DOOR SCUFF PLATE RH (for Access Cab) (See page IR-61)
31. REMOVE REAR DOOR SCUFF PLATE LH (for Double Cab) (See page IR-13)
32. REMOVE REAR DOOR SCUFF PLATE LH (for Access Cab) (See page IR-61)
33. REMOVE REAR DOOR SCUFF PLATE RH (for Double Cab) (See page IR-13)
34. REMOVE REAR DOOR SCUFF PLATE RH (for Access Cab) (See page IR-61)
35. REMOVE COWL SIDE TRIM BOARD LH (for Double Cab) (See page IR-12)
36. REMOVE COWL SIDE TRIM BOARD LH (for Regular Cab) (See page IR-40)
37. REMOVE COWL SIDE TRIM BOARD LH (for Access Cab) (See page IR-61)
38. REMOVE COWL SIDE TRIM BOARD RH (for Double Cab) (See page IR-12)
39. REMOVE COWL SIDE TRIM BOARD RH (for Regular Cab) (See page IR-40)
40. REMOVE COWL SIDE TRIM BOARD RH (for Access Cab) (See page IR-61)
41. REMOVE ROOF SIDE INNER GARNISH COVER LH (for Access Cab) (See page IR-62)
42. REMOVE ROOF SIDE INNER GARNISH COVER RH (for Access Cab) (See page IR-62)
43. REMOVE ROOF SIDE INNER GARNISH CAP LH (for Access Cab) (See page IR-62)

44. **REMOVE ROOF SIDE INNER GARNISH CAP RH (for Access Cab) (See page IR-62)**
45. **REMOVE ROOF SIDE INNER GARNISH LH (for Access Cab) (See page IR-65)**
46. **REMOVE ROOF SIDE INNER GARNISH RH (for Access Cab) (See page IR-65)**
47. **REMOVE FRONT DOOR OPENING TRIM WEATHERSTRIP LH (for Double Cab) (See page IR-13)**
48. **REMOVE FRONT DOOR OPENING TRIM WEATHERSTRIP LH (for Regular Cab) (See page IR-40)**
49. **REMOVE FRONT DOOR OPENING TRIM WEATHERSTRIP LH (for Access Cab) (See page IR-62)**
50. **REMOVE FRONT DOOR OPENING TRIM WEATHERSTRIP RH (for Double Cab) (See page IR-13)**
51. **REMOVE FRONT DOOR OPENING TRIM WEATHERSTRIP RH (for Regular Cab) (See page IR-40)**
52. **REMOVE FRONT DOOR OPENING TRIM WEATHERSTRIP RH (for Access Cab) (See page IR-62)**
53. **REMOVE REAR DOOR OPENING TRIM WEATHERSTRIP LH (for Double Cab) (See page IR-13)**
54. **REMOVE REAR DOOR OPENING TRIM WEATHERSTRIP RH (for Double Cab) (See page IR-13)**
55. **REMOVE FRONT PILLAR GARNISH LH (for Double Cab) (See page IR-13)**
56. **REMOVE FRONT PILLAR GARNISH LH (for Regular Cab) (See page IR-41)**
57. **REMOVE FRONT PILLAR GARNISH LH (for Access Cab) (See page IR-62)**
58. **REMOVE FRONT PILLAR GARNISH RH (for Double Cab) (See page IR-14)**
59. **REMOVE FRONT PILLAR GARNISH RH (for Regular Cab) (See page IR-41)**
60. **REMOVE FRONT PILLAR GARNISH RH (for Access Cab) (See page IR-63)**
61. **REMOVE LAP BELT OUTER ANCHOR COVER (for Double Cab) (See page IR-15)**
62. **REMOVE CENTER PILLAR LOWER GARNISH LH (for Double Cab) (See page IR-15)**

63. REMOVE CENTER PILLAR LOWER GARNISH RH (for Double Cab) (See page IR-16)
64. REMOVE CENTER PILLAR UPPER GARNISH LH (for Double Cab) (See page IR-16)
65. REMOVE CENTER PILLAR UPPER GARNISH RH (for Double Cab) (See page IR-16)
66. REMOVE QUARTER TRIM LOWER PANEL LH (for Double Cab) (See page IR-17)
67. REMOVE QUARTER TRIM LOWER PANEL LH (for Regular Cab) (See page IR-43)
68. REMOVE QUARTER TRIM LOWER PANEL LH (for Access Cab) (See page IR-65)
69. REMOVE QUARTER TRIM LOWER PANEL RH (for Double Cab) (See page IR-17)
70. REMOVE QUARTER TRIM LOWER PANEL RH (for Regular Cab) (See page IR-43)
71. REMOVE QUARTER TRIM LOWER PANEL RH (for Access Cab) (See page IR-65)
72. REMOVE QUARTER INSIDE TRIM BOARD LH (for Double Cab) (See page IR-17)
73. REMOVE QUARTER INSIDE TRIM BOARD LH (for Regular Cab) (See page IR-44)
74. REMOVE QUARTER INSIDE TRIM BOARD LH (for Access Cab) (See page IR-65)
75. REMOVE QUARTER INSIDE TRIM BOARD RH (for Double Cab) (See page IR-17)
76. REMOVE QUARTER INSIDE TRIM BOARD RH (for Regular Cab) (See page IR-44)
77. REMOVE QUARTER INSIDE TRIM BOARD RH (for Access Cab) (See page IR-65)
78. REMOVE INNER REAR VIEW MIRROR ASSEMBLY (w/ EC Mirror) (See page IR-11)
79. REMOVE ROOM LIGHT ASSEMBLY (for Double Cab) (See page IR-17)
80. REMOVE ROOM LIGHT ASSEMBLY (for Regular Cab) (See page IR-44)
81. REMOVE ROOM LIGHT ASSEMBLY (for Access Cab) (See page IR-66)
82. REMOVE ROOF CONSOLE BOX ASSEMBLY (for Double Cab) (See page IR-18)
83. REMOVE ROOF CONSOLE BOX ASSEMBLY (for Access Cab) (See page IR-66)
84. REMOVE ASSIST GRIP SUB-ASSEMBLY (for Double Cab) (See page IR-18)

85. REMOVE ASSIST GRIP PLUG (for Double Cab) (See page IR-19)

86. REMOVE VISOR ASSEMBLY LH (for Double Cab) (See page IR-19)

87. REMOVE VISOR ASSEMBLY LH (for Regular Cab) (See page IR-45)

88. REMOVE VISOR ASSEMBLY LH (for Access Cab) (See page IR-67)

89. REMOVE VISOR ASSEMBLY RH (for Double Cab) (See page IR-19)

90. REMOVE VISOR ASSEMBLY RH (for Regular Cab) (See page IR-45)

91. REMOVE VISOR ASSEMBLY RH (for Access Cab) (See page IR-67)

92. REMOVE VISOR HOLDER (for Double Cab) (See page IR-19)

93. REMOVE VISOR HOLDER (for Regular Cab) (See page IR-45)

94. REMOVE VISOR HOLDER (for Access Cab) (See page IR-67)

95. REMOVE COAT HOOK (for Regular Cab) (See page IR-45)

96. REMOVE COAT HOOK (for Access Cab) (See page IR-67)

97. REMOVE COAT HOOK (for Double Cab) (See page IR-20)

98. SEPARATE ROOF HEADLINING ASSEMBLY (for Regular Cab)

99. SEPARATE ROOF HEADLINING ASSEMBLY (for Double Cab)

100. SEPARATE ROOF HEADLINING ASSEMBLY (for Access Cab)

101. REMOVE TIRE PRESSURE WARNING RECEIVER

(a) Disconnect the connector.

(b) Remove the nut and the tire pressure warning receiver.

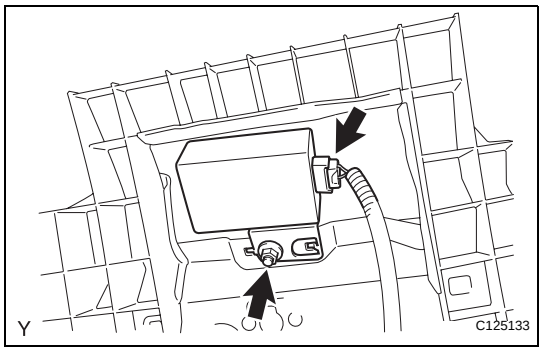

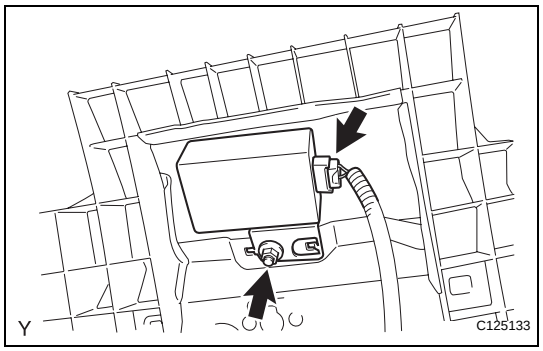

INSTALLATION

1. **INSTALL TIRE PRESSURE WARNING RECEIVER**
   (a) Install the tire pressure warning receiver with the nut.
   Torque: 5.0 N*m (51 kgf*cm, 44 in.*lbf)
   (b) Connect the connector.
2. **INSTALL ROOF HEADLINING ASSEMBLY (for Double Cab)**
3. **INSTALL ROOF HEADLINING ASSEMBLY (for Regular Cab)**
4. **INSTALL ROOF HEADLINING ASSEMBLY (for Access Cab)**
5. **INSTALL COAT HOOK (for Double Cab) (See page IR-22)**
6. **INSTALL COAT HOOK (for Regular Cab) (See page IR-47)**
7. **INSTALL COAT HOOK (for Access Cab) (See page IR-69)**
8. **INSTALL VISOR HOLDER (for Double Cab) (See page IR-22)**
9. **INSTALL VISOR HOLDER (for Regular Cab) (See page IR-47)**
10. **INSTALL VISOR HOLDER (for Access Cab) (See page IR-70)**
11. **INSTALL VISOR ASSEMBLY LH (for Double Cab) (See page IR-22)**
12. **INSTALL VISOR ASSEMBLY LH (for Regular Cab) (See page IR-48)**
13. **INSTALL VISOR ASSEMBLY LH (for Access Cab) (See page IR-70)**
14. **INSTALL VISOR ASSEMBLY RH (for Double Cab) (See page IR-22)**
15. **INSTALL VISOR ASSEMBLY RH (for Regular Cab) (See page IR-48)**
16. **INSTALL VISOR ASSEMBLY RH (for Access Cab) (See page IR-70)**
17. **INSTALL ASSIST GRIP PLUG (for Double Cab) (See page IR-23)**
18. **INSTALL ASSIST GRIP SUB-ASSEMBLY (for Double Cab) (See page IR-23)**
19. **INSTALL ROOF CONSOLE BOX ASSEMBLY (for Double Cab) (See page IR-23)**
20. **INSTALL ROOF CONSOLE BOX ASSEMBLY (for Access Cab) (See page IR-70)**

21. **INSTALL ROOM LIGHT ASSEMBLY (for Double Cab) (See page IR-24)**
22. **INSTALL ROOM LIGHT ASSEMBLY (for Regular Cab) (See page IR-48)**
23. **INSTALL ROOM LIGHT ASSEMBLY (for Access Cab) (See page IR-71)**
24. **INSTALL INNER REAR VIEW MIRROR ASSEMBLY (w/ EC Mirror) (See page IR-30)**
25. **INSTALL QUARTER INSIDE TRIM BOARD LH (for Double Cab) (See page IR-24)**
26. **INSTALL QUARTER INSIDE TRIM BOARD LH (for Regular Cab) (See page IR-48)**
27. **INSTALL QUARTER INSIDE TRIM BOARD LH (for Access Cab) (See page IR-71)**
28. **INSTALL QUARTER INSIDE TRIM BOARD RH (for Double Cab) (See page IR-25)**
29. **INSTALL QUARTER INSIDE TRIM BOARD RH (for Regular Cab) (See page IR-49)**
30. **INSTALL QUARTER INSIDE TRIM BOARD RH (for Access Cab) (See page IR-71)**
31. **INSTALL QUARTER TRIM LOWER PANEL LH (for Double Cab) (See page IR-25)**
32. **INSTALL QUARTER TRIM LOWER PANEL LH (for Regular Cab) (See page IR-49)**
33. **INSTALL QUARTER TRIM LOWER PANEL LH (for Access Cab) (See page IR-72)**
34. **INSTALL QUARTER TRIM LOWER PANEL RH (for Double Cab) (See page IR-25)**
35. **INSTALL QUARTER TRIM LOWER PANEL RH (for Regular Cab) (See page IR-49)**
36. **INSTALL QUARTER TRIM LOWER PANEL RH (for Access Cab) (See page IR-72)**
37. **INSTALL CENTER PILLAR UPPER GARNISH LH (for Double Cab) (See page IR-26)**
38. **INSTALL CENTER PILLAR UPPER GARNISH RH (for Double Cab) (See page IR-26)**
39. **INSTALL CENTER PILLAR LOWER GARNISH LH (for Double Cab) (See page IR-26)**
40. **INSTALL CENTER PILLAR LOWER GARNISH RH (for Double Cab) (See page IR-26)**
41. **INSTALL LAP BELT OUTER ANCHOR COVER (for Double Cab) (See page IR-27)**
42. **INSTALL FRONT PILLAR GARNISH LH (for Double Cab) (See page IR-28)**

43. INSTALL FRONT PILLAR GARNISH LH (for Regular Cab) (See page IR-51)
44. INSTALL FRONT PILLAR GARNISH LH (for Access Cab) (See page IR-74)
45. INSTALL FRONT PILLAR GARNISH RH (for Double Cab) (See page IR-28)
46. INSTALL FRONT PILLAR GARNISH RH (for Regular Cab) (See page IR-52)
47. INSTALL FRONT PILLAR GARNISH RH (for Access Cab) (See page IR-74)
48. INSTALL REAR DOOR OPENING TRIM WEATHERSTRIP LH (for Double Cab) (See page IR-28)
49. INSTALL REAR DOOR OPENING TRIM WEATHERSTRIP RH (for Double Cab) (See page IR-28)
50. INSTALL FRONT DOOR OPENING TRIM WEATHERSTRIP LH (for Double Cab) (See page IR-29)
51. INSTALL FRONT DOOR OPENING TRIM WEATHERSTRIP LH (for Regular Cab) (See page IR-52)
52. INSTALL FRONT DOOR OPENING TRIM WEATHERSTRIP LH (for Access Cab) (See page IR-74)
53. INSTALL FRONT DOOR OPENING TRIM WEATHERSTRIP RH (for Double Cab) (See page IR-29)
54. INSTALL FRONT DOOR OPENING TRIM WEATHERSTRIP RH (for Regular Cab) (See page IR-52)
55. INSTALL FRONT DOOR OPENING TRIM WEATHERSTRIP RH (for Access Cab) (See page IR-74)
56. INSTALL ROOF SIDE INNER GARNISH LH (for Access Cab) (See page IR-71)
57. INSTALL ROOF SIDE INNER GARNISH RH (for Access Cab) (See page IR-71)
58. INSTALL ROOF SIDE INNER GARNISH CAP LH (for Access Cab) (See page IR-75)
59. INSTALL ROOF SIDE INNER GARNISH CAP RH (for Access Cab) (See page IR-75)
60. INSTALL ROOF SIDE INNER GARNISH COVER LH (for Access Cab) (See page IR-75)
61. INSTALL ROOF SIDE INNER GARNISH COVER RH (for Access Cab) (See page IR-75)

62. **INSTALL COWL SIDE TRIM BOARD LH (for Double Cab) (See page IR-29)**
63. **INSTALL COWL SIDE TRIM BOARD LH (for Regular Cab) (See page IR-52)**
64. **INSTALL COWL SIDE TRIM BOARD LH (for Access Cab) (See page IR-75)**
65. **INSTALL COWL SIDE TRIM BOARD RH (for Double Cab) (See page IR-29)**
66. **INSTALL COWL SIDE TRIM BOARD RH (for Regular Cab) (See page IR-52)**
67. **INSTALL COWL SIDE TRIM BOARD RH (for Access Cab) (See page IR-75)**
68. **INSTALL REAR DOOR SCUFF PLATE LH (for Double Cab) (See page IR-29)**
69. **INSTALL REAR DOOR SCUFF PLATE LH (for Access Cab) (See page IR-75)**
70. **INSTALL REAR DOOR SCUFF PLATE RH (for Double Cab) (See page IR-29)**
71. **INSTALL REAR DOOR SCUFF PLATE RH (for Access Cab) (See page IR-75)**
72. **INSTALL FRONT DOOR SCUFF PLATE LH (for Double Cab) (See page IR-29)**
73. **INSTALL FRONT DOOR SCUFF PLATE LH (for Regular Cab) (See page IR-52)**
74. **INSTALL FRONT DOOR SCUFF PLATE LH (for Access Cab) (See page IR-75)**
75. **INSTALL FRONT DOOR SCUFF PLATE RH (for Double Cab) (See page IR-29)**
76. **INSTALL FRONT DOOR SCUFF PLATE RH (for Regular Cab) (See page IR-52)**
77. **INSTALL FRONT DOOR SCUFF PLATE RH (for Access Cab) (See page IR-75)**
78. **INSTALL FRONT FLOOR FOOTREST (See page IR-1)**
79. **INSTALL BACK PANEL TRIM (for Regular Cab on Separate Seat Type) (See page IR-49)**
80. **INSTALL BACK PANEL TRIM (for Access Cab) (See page IR-72)**
81. **INSTALL REAR SEAT INNER BELT ASSEMBLY (for Access Cab) (See page IR-72)**
82. **INSTALL BACK PANEL TRIM COVER (for Regular Cab on Separate Seat Type) (See page IR-50)**
83. **INSTALL JACK ASSEMBLY (for Regular Cab on Separate Seat Type)**

84. **INSTALL BACK PANEL UPPER GARNISH (for Regular Cab) (See page IR-50)**
85. **INSTALL BACK PANEL TRIM COVER (for Regular Cab) (See page IR-50)**
86. **INSTALL BACK PANEL TRIM COVER (for Access Cab) (See page IR-73)**
87. **INSTALL LUGGAGE COMPARTMENT SIDE TRAY RH (for Double Cab) (See page IR-25)**
88. **INSTALL LUGGAGE COMPARTMENT SIDE TRAY LH (for Double Cab) (See page IR-26)**
89. **INSTALL REAR SEAT BACK CENTER HINGE SUB-ASSEMBLY (for Double Cab) (See page SE-77)**
90. **INSTALL REAR SEAT BACK HINGE SUB-ASSEMBLY LH (for Double Cab) (See page SE-77)**
91. **INSTALL REAR SEAT BACK HINGE SUB-ASSEMBLY RH (for Double Cab) (See page SE-90)**
92. **INSTALL REAR SEAT BACK ASSEMBLY LH (for Double Cab) (See page SE-77)**
93. **INSTALL REAR SEAT BACK ASSEMBLY RH (for Double Cab) (See page SE-90)**
94. **INSTALL REAR SEAT BACK HINGE COVER (for Double Cab) (See page IR-30)**
95. **INSTALL REAR SEAT CUSHION ASSEMBLY LH (for Double Cab) (See page SE-78)**
96. **INSTALL REAR SEAT CUSHION ASSEMBLY RH (for Double Cab) (See page SE-90)**
97. **INSTALL FRONT SEAT ASSEMBLY LH (for Double Cab) (See page SE-34)**
98. **INSTALL FRONT SEAT ASSEMBLY RH (for Double Cab) (See page SE-47)**
99. **INSTALL SEAT TRACK COVER LH (for Double Cab) (See page SE-34)**
100. **INSTALL SEAT TRACK COVER RH (for Double Cab) (See page SE-48)**
101. **CONNECT CABLE TO NEGATIVE BATTERY TERMINAL**
Torque: 3.9 N*m (40 kgf*cm, 35 in.*lbf)
(See page IN-5)

TW

REMOVAL

1. BOLT, SCREW AND NUT TABLE (See page IP-7)
2. DISCONNECT CABLE FROM NEGATIVE BATTERY TERMINAL
3. REMOVE FRONT FLOOR FOOTREST (See page IR-1)
4. REMOVE FRONT DOOR SCUFF PLATE LH (for Regular Cab) (See page IR-40)
5. REMOVE FRONT DOOR SCUFF PLATE LH (for Access Cab) (See page IR-61)
6. REMOVE FRONT DOOR SCUFF PLATE LH (for Double Cab) (See page IR-12)
7. REMOVE COWL SIDE TRIM BOARD LH (for Regular Cab) (See page IR-40)
8. REMOVE COWL SIDE TRIM BOARD LH (for Access Cab) (See page IR-61)
9. REMOVE COWL SIDE TRIM BOARD LH (for Double Cab) (See page IR-12)
10. REMOVE INSTRUMENT PANEL UNDER TRAY (for Automatic Transmission) (See page IP-9)
11. REMOVE INSTRUMENT PANEL HOLE COVER (for Manual Transmission) (See page IP-9)
12. REMOVE CONSOLE UPPER REAR PANEL SUB-ASSEMBLY (for Automatic Transmission on Separate Seat Type) (See page IP-9)
13. REMOVE CONSOLE UPPER REAR PANEL SUB-ASSEMBLY (for Manual Transmission on Separate Seat Type) (See page IP-9)
14. REMOVE REAR CONSOLE BOX ASSEMBLY (for Separate Seat Type) (See page IP-10)
15. REMOVE INSTRUMENT PANEL CUP HOLDER TRAY (for Automatic Transmission on Separate Seat Type) (See page IP-10)
16. REMOVE FRONT CONSOLE BOX (for Automatic Transmission on Separate Seat Type) (See page IP-10)
17. REMOVE FRONT CONSOLE BOX (for Manual Transmission on Separate Seat Type) (See page IP-11)
18. REMOVE FRONT CONSOLE BOX (for Automatic Transmission on Bench Seat Type) (See page IP-11)
19. REMOVE FRONT CONSOLE BOX (for Manual Transmission on Bench Seat Type) (See page IP-11)
20. REMOVE AIR CONDITIONING CONTROL ASSEMBLY (See page IP-12)

21. **REMOVE RADIO RECEIVER ASSEMBLY (See page AV-69)**
22. **SEPARATE HOOD LOCK CONTROL LEVER SUB-ASSEMBLY (See page ED-3)**
23. **REMOVE LOWER NO. 1 INSTRUMENT PANEL FINISH PANEL (See page IP-12)**
24. **REMOVE INSTRUMENT CLUSTER FINISH PANEL SUB-ASSEMBLY (See page IP-12)**
25. **REMOVE INSTRUMENT CLUSTER CENTER FINISH PANEL SUB-ASSEMBLY (See page IP-13)**
26. **REMOVE GLOVE COMPARTMENT DOOR ASSEMBLY (See page IP-13)**
27. **REMOVE INSTRUMENT PANEL LOWER FINISH PANEL SUB-ASSEMBLY RH (See page IP-14)**
28. **REMOVE LOWER INSTRUMENT PANEL LH (See page IP-14)**
29. **REMOVE INSTRUMENT LOWER COVER SUB-ASSEMBLY (See page IP-14)**
30. **REMOVE TIRE PRESSURE WARNING ECU**
    (a) Disconnect the connector.
    (b) Remove the 2 screws and the tire pressure warning ECU.

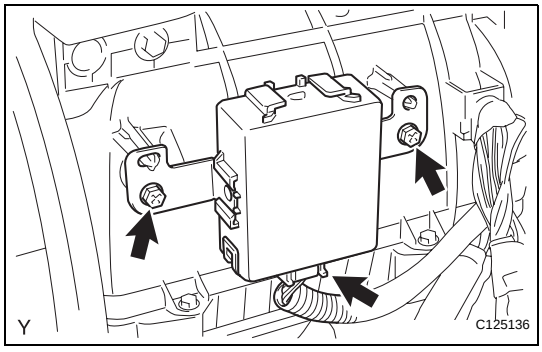

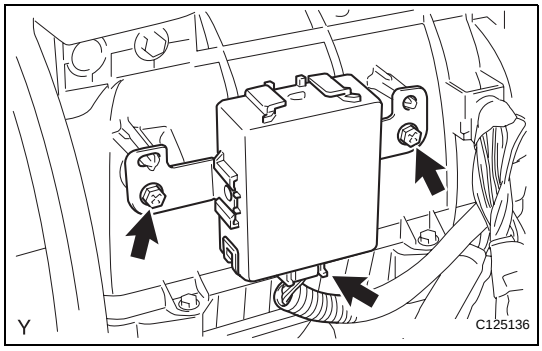

INSTALLATION

1. **INSTALL TIRE PRESSURE WARNING ECU**
    (a) Install the tire pressure warning ECU with the 2 screws.
    Torque: 5.5 N*m (56 kgf*cm, 49 in.*lbf)
    (b) Connect the connector.
2. **INSTALL INSTRUMENT LOWER COVER SUB-ASSEMBLY (See page IP-20)**
3. **INSTALL LOWER INSTRUMENT PANEL LH (See page IP-20)**
4. **INSTALL INSTRUMENT PANEL LOWER FINISH PANEL SUB-ASSEMBLY RH (See page IP-20)**
5. **INSTALL GLOVE COMPARTMENT DOOR ASSEMBLY (See page IP-20)**
6. **INSTALL INSTRUMENT CLUSTER CENTER FINISH PANEL SUB-ASSEMBLY (See page IP-21)**
7. **INSTALL INSTRUMENT CLUSTER FINISH PANEL SUB-ASSEMBLY (See page IP-21)**

8. INSTALL LOWER NO. 1 INSTRUMENT PANEL FINISH PANEL (See page IP-22)
9. CONNECT HOOD LOCK CONTROL LEVER SUB-ASSEMBLY (See page ED-8)
10. INSTALL RADIO RECEIVER ASSEMBLY (See page AV-70)
11. INSTALL AIR CONDITIONING CONTROL ASSEMBLY (See page IP-22)
12. INSTALL FRONT CONSOLE BOX (for Manual Transmission on Bench Seat Type) (See page IP-22)
13. INSTALL FRONT CONSOLE BOX (for Automatic Transmission on Bench Seat Type) (See page IP-23)
14. INSTALL FRONT CONSOLE BOX (for Manual Transmission on Separate Seat Type) (See page IP-23)
15. INSTALL FRONT CONSOLE BOX (for Automatic Transmission on Separate Seat Type) (See page IP-24)
16. INSTALL INSTRUMENT PANEL CUP HOLDER TRAY (for Automatic Transmission on Separate Seat Type) (See page IP-24)
17. INSTALL REAR CONSOLE BOX ASSEMBLY (for Separate Seat Type) (See page IP-24)
18. INSTALL CONSOLE UPPER REAR PANEL SUB-ASSEMBLY (for Manual Transmission on Separate Seat Type) (See page IP-25)
19. INSTALL CONSOLE UPPER REAR PANEL SUB-ASSEMBLY (for Automatic Transmission on Separate Seat Type) (See page IP-25)
20. INSTALL INSTRUMENT PANEL HOLE COVER (for Manual Transmission) (See page IP-25)
21. INSTALL INSTRUMENT PANEL UNDER TRAY (for Automatic Transmission) (See page IP-25)
22. INSTALL COWL SIDE TRIM BOARD LH (for Regular Cab) (See page IR-52)
23. INSTALL COWL SIDE TRIM BOARD LH (for Access Cab) (See page IR-75)
24. INSTALL COWL SIDE TRIM BOARD LH (for Double Cab) (See page IR-29)
25. INSTALL FRONT DOOR SCUFF PLATE LH (for Regular Cab) (See page IR-52)
26. INSTALL FRONT DOOR SCUFF PLATE LH (for Access Cab) (See page IR-75)
27. INSTALL FRONT DOOR SCUFF PLATE LH (for Double Cab) (See page IR-29)

28. **INSTALL FRONT FLOOR FOOTREST (See page IR-1)**
29. **CONNECT CABLE TO NEGATIVE BATTERY TERMINAL**
    Torque: 3.9 N*m (40 kgf*cm, 35 in.*lbf)
    (See page IN-5)
30. **REGISTER TRANSMITTER ID (See page TW-11)**
31. **INSPECT TIRE PRESSURE WARNING SYSTEM**
    (See page TW-11)

OUTSIDE VEHICLE

GENERAL MAINTENANCE

Performing these maintenance checks on the vehicle is the owner's responsibility. The owner may perform the maintenance or take the vehicle to a service center.
Check the parts of the vehicle described below on a daily basis. In most cases, special tools are not required. It is recommended that the owner perform these checks.
The procedures for general maintenance are as follows.

1. GENERAL NOTES

- Maintenance requirements vary depending on the country.
- Check the maintenance schedule in the owner's manual supplement.
- Following the maintenance schedule is mandatory.
- Determine the appropriate time to service the vehicle using either miles driven or time (month) elapsed, whichever reaches the specification first.
- Maintain similar intervals between periodic maintenance unless noted.
- Failing to check each vehicle part could lead to poor engine performance and increase exhaust emissions.

2. TIRES

(a) Check the tire pressure with a gauge. Make adjustments if necessary.
(b) Check the surfaces of tires for cuts, damage or excessive wear.

3. WHEEL NUTS

(a) Check for nuts that are loose or missing. Tighten them if necessary.

4. TIRE ROTATION

(a) Check the maintenance schedule in the owner's manual supplement.

5. WINDSHIELD WIPER BLADES

(a) Check the blades for wear or cracks when they are unable to wipe the windshield clean. Replace them if necessary.

6. FLUID LEAKS

(a) Check under the vehicle for leaking fuel, oil, water and other fluids.
(b) If you smell gasoline fumes or notice any leaks, locate the cause and correct it.

7. DOORS AND ENGINE HOOD

(a) Check if all of the doors and the tailgate operate smoothly and if all the latches lock securely.
(b) When the primary latch is released, check if the engine hood secondary latch prevents the hood from opening.

INSIDE VEHICLE

GENERAL MAINTENANCE

Performing these maintenance checks on the vehicle is the owner's responsibility. The owner may perform the maintenance or take the vehicle to a service center.
Check the parts of the vehicle described below on a daily basis. In most cases, special tools are not required. It is recommended that the owner perform these checks.
The procedures for general maintenance are as follows.

1. GENERAL NOTES

- Maintenance requirements vary depending on the country.
- Check the maintenance schedule in the owner's manual supplement.
- Following the maintenance schedule is mandatory.
- Determine the appropriate time to service the vehicle using either miles driven or time (month) elapsed, whichever reaches the specification first.
- Maintain similar intervals between periodic maintenance unless noted.
- Failing to check each vehicle part could lead to poor engine performance and increase exhaust emissions.

2. LIGHTS

(a) Check if the headlights, stop lights, taillights, turn signal lights, and other lights illuminate or blink. Also, check if they have enough brightness.
(b) Check if the headlights are aimed properly.

3. WARNING LIGHTS AND BUZZERS

(a) Check if all the warning lights and buzzers are working.

4. HORNS

(a) Check if the horn is working.

5. WINDSHIELD GLASS

(a) Check for scratches, pits or abrasions.

6. WINDSHIELD WIPERS AND WASHER

(a) Check if the wind washers are aimed properly. Also, check if the washer fluid hits the center of the operating rage of each wiper on the windshield.
(b) Check if the wipers streak or not.

7. WINDSHIELD DEFROSTER

(a) When the heater or air conditioner is on the defroster setting, check if air comes out of the defroster outlet.

8. REAR VIEW MIRROR

(a) Check if the rear view mirror is securely mounted.

9. SUN VISORS

(a) Check if the sun visors move freely and are securely mounted.

10. STEERING WHEEL

(a) Check if the steering wheel has the proper free play. Also check for steering difficulty, free play in the steering wheel and unusual noises.

11. SEATS

(a) Check if the seat adjusters, seatback recliner and other front seat controls operate smoothly.
(b) Check if all the latches lock securely in all positions.
(c) Check if the locks hold securely in all latched positions.
(d) Check if the head restraints move up and down smoothly and if the locks hold securely in all latched positions.
(e) When the rear seatbacks are folded down, check if the latches lock securely.

12. SEAT BELTS

(a) Check that the seat belt system such as the buckles, retractors and anchors operate properly and smoothly.
(b) Check if the belt webbing is not cut, frayed, worn or damaged. Replace if necessary.

13. ACCELERATOR PEDAL

(a) Check the pedal for smooth operation, uneven pedal effort and catching.

14. CLUTCH PEDAL

(a) Check the pedal for smooth operation.
(b) Check if the pedal has the proper free play.

15. BRAKE PEDAL

(a) Check the pedal for smooth operation.
(b) Check if the pedal has the proper reserve distance and free play.
(c) Start the engine and check the brake booster function.

16. BRAKES

(a) In a safe place, check if the vehicle remains straight when applying the brakes.

17. PARKING BRAKE

(a) Check that the lever has the proper range of motion.
(b) On a low incline, check if the parking brake alone can stabilize the vehicle.

18. AUTOMATIC TRANSMISSION "PARK" MECHANISM

(a) Check the lock release button of the selector lever for proper and smooth operation.
(b) On a low incline, check if the parking brake alone can stabilize the vehicle.

UNDER HOOD

GENERAL MAINTENANCE

1. GENERAL NOTES

- Maintenance items may vary from country to country. Check the owner's manual supplement in which the maintenance schedule is shown.
- Every service item in the periodic maintenance schedule must be performed.
- Periodic maintenance service must be performed according to whichever interval in the periodic maintenance schedule occurs first, the odometer reading (miles) or the time interval (months).
- Maintenance service after the last period should be performed at the same interval as before unless noted.
- Failure to do even one of the items can cause the engine to run poorly and increase the exhaust emissions.

2. WINDSHIELD WASHER FLUID

(a) Check if there is sufficient fluid in the tank.

3. ENGINE COOLANT LEVEL

(a) Check if the coolant level is between the "FULL" and "LOW" lines on the see-through reservoir.

4. RADIATOR AND HOSES

(a) Check if the front of the radiator is clean and not blocked by leaves, dirt or bugs.
(b) Check the hoses for cracks, kinks, rot or loose connections.

5. BATTERY ELECTROLYTE LEVEL

(a) Check if the electrolyte level of all the battery cells is between the upper and lower level lines on the case.

6. BRAKE FLUID LEVEL

(a) Check if the brake fluid levels are near the upper level line on the see-through reservoirs.

7. ENGINE DRIVE BELT

(a) Check the drive belt for fraying, cracks, wear or oiliness.

8. ENGINE OIL LEVEL

(a) Check the level on the dipstick with the engine turned off.

9. POWER STEERING FLUID LEVEL

(a) Check the level on the dipstick.
(b) The level should be in the "HOT" or "COLD" range depending on the fluid temperature.

10. AUTOMATIC TRANSMISSION FLUID LEVEL

(a) Visually check the overflow plug and oil pan for fluid leaks or traces of fluid.

11. EXHAUST SYSTEM

(a) If any change in the sound of the exhaust or the smell of the exhaust fumes is noticed, locate and correct the cause.

ENGINE

GENERAL MAINTENANCE

HINT:
Inspect these items when the engine is cold.

1. REPLACE CHAIN SUB-ASSEMBLY
HINT:
- 2TR-FE: See page EM-21
- 1GR-FE, 2WD: See page EM-23
- 1GR-FE, 4WD and Pre-runner: See page EM-44

2. INSPECT DRIVE BELT
HINT:
- 2TR-FE: See page EM-5
- 1GR-FE: See page EM-5

3. REPLACE SPARK PLUGS
HINT:
- 2TR-FE: See page IG-3
- 1GR-FE: See page IG-3

4. REPLACE AIR CLEANER FILTER
(a) Replace the air filter with a new one.

5. REPLACE ENGINE OIL AND OIL FILTER
HINT:
- 2TR-FE: See page LU-3
- 1GR-FE: See page LU-4

6. REPLACE ENGINE COOLANT
HINT:
- 2TR-FE: See page CO-3
- 1GR-FE: See page CO-3

7. INSPECT RADIATOR FIN
(a) Check that the radiator and condenser are not blocked with leaves, dirt, or insets, and clean the hose connection.

8. INSPECT GASKET IN FUEL TANK CAP
HINT:
- 2TR-FE: See page EC-29
- 1GR-FE: See page EC-21

9. INSPECT CHARCOAL CANISTER
HINT:
- 2TR-FE: See page EC-20
- 1GR-FE: See page EC-11

10. INSPECT FUEL LINES, CONNECTIONS AND FUEL TANK VAPOR VENT SYSTEM HOSES AND FUEL TANK BAND
(a) Visually check the fuel lines for cracks, leakage, loose connections, deformation or tank band looseness.

11. INSPECT EXHAUST PIPE AND MOUNTING

(a) Visually check the pipes, hangers and connections for severe corrosion, leaks or damage.

12. INSPECT VALVE CLEARANCE (for 1GR-FE)

HINT:

See page EM-7

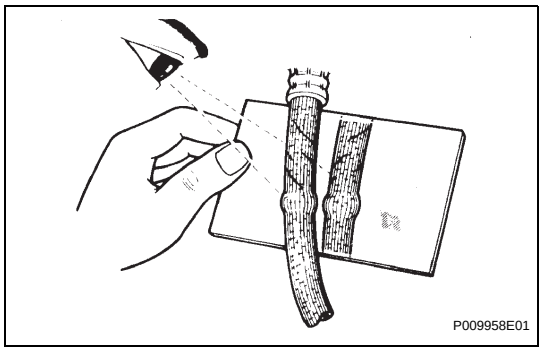
P009958E01

MA

BRAKE

GENERAL MAINTENANCE

1. INSPECT BRAKE LINE PIPES AND HOSES

HINT:

Work in a well-lighted area. Turn the front wheels fully to the right or left before beginning.

(a) Check all the brake lines and hoses for:
- Damage
- Wear
- Deformation
- Cracks
- Corrosion
- Leaks
- Bends
- Twists

(b) Check all the clamps for tightness and the connections for leakage.

(c) Check if the hoses and lines are not near sharp edges, moving parts and the exhaust system.

(d) Check if the lines are installed pass through the center of the grommets.

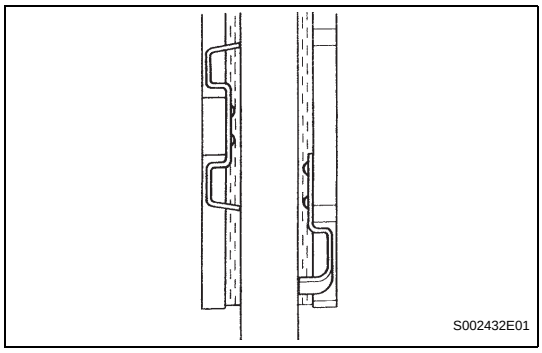
S002432E01

2. INSPECT FRONT BRAKE PADS AND DISCS

HINT:
- 2WD: See page BR-57
- 4WD and Pre-runner: See page BR-63
- If a squealing or scraping noise is heard from the brake while driving, check the pad wear indicator.
- If there are traces of the indicator contacting the disc rotor, the disc pad should be replaced.

3. INSPECT REAR BRAKE DRUM

HINT:

See page BR-70

4. INSPECT BRAKE FLUID

Fluid:

SAE J1703 or FMVSS No. 116 DOT3

HINT:
- w/ VSC (See page BR-4)
- w/o VSC (See page BR-7)

CHASSIS

GENERAL MAINTENANCE

1. INSPECT STEERING LINKAGE

(a) Check the steering wheel free play (See page SR-2).

(b) Check the steering linkage for looseness or damage.

(1) Check that the tie rod ends do not have excessive play.

(2) Check that the dust seals and boots are not damaged.

(3) Check that the boot clamps are not loose.

2. INSPECT STEERING GEAR HOUSING OIL

(a) Check the steering gear housing for oil leakage.

HINT:

If leakage is found, check and repair the cause.

3. INSPECT BALL JOINTS AND DUST COVERS

(a) Inspect the ball joints for excessive looseness.

(b) Check the dust cover for damage.

4. INSPECT DRIVE SHAFT BOOT (for 4WD)

(a) Check the drive shaft boots for clamp looseness, oil leakage or damage.

5. REPLACE TRANSFER OIL (for 4WD)

(a) Remove the filler plug and feel inside the hole with your finger.

(b) Check that the oil comes to within 5 mm (0.20 in.) from the bottom edge of the hole.

HINT:

If the level is low, add oil until it begins to run out of the filler hole.

6. REPLACE DIFFERENTIAL OIL

(a) Remove the filler plug and feel inside the hole with your finger.

(b) Check that the oil comes to within 5 mm (0.20 in.) from the bottom edge of the hole.

HINT:

If the level is low, add oil until it begins to run out of the filler hole.

7. INSPECT AUTOMATIC TRANSMISSION FLUID

HINT:

- A750E (See page AT-135)
- A750F (See page AT-139)
- A340E (See page AT-85)

MA

8. LUBRICATE PROPELLER SHAFT (for 4WD)

(a) Lubricate propeller shaft, referring to the lubrication chart. Before pumping in grease, wipe off any mud and dust on the grease fitting (See page PR-18, PR-24 or PR-29).

Grease grade:

Lithium base chassis grease NLGI No. 2

9. TIGHTEN PROPELLER SHAFT BOLT

(a) Tighten the bolts for propeller shaft.

HINT:

- Regular Cab 2WD (See page PR-6).
- Access Cab 2WD and Double Cab 2WD (See page PR-13).
- Front propeller shaft 4WD (See page PR-19).
- Rear propeller shaft Regular Cab 4WD (See page PR-25).
- Rear propeller shaft Access Cab 4WD and Double Cab 4WD (See page PR-31).

10. ROTATE TIRES (See page TW-2)

BODY

GENERAL MAINTENANCE

1. TIGHTEN BOLTS AND NUTS ON CHASSIS AND BODY

(a) Tighten the bolts and nuts on the chassis parts listed below, if necessary.
- Front axle and suspension
- Drive train
- Rear axle and suspension
- Brake system
- Engine mounting
- Other chassis parts

(b) Tighten the bolts and nuts on the body parts listed below, if necessary.
- Seat belt system
- Seats
- Doors and hood
- Body mountings
- Fuel tank
- Exhaust pipe system
- Other body parts

2. REPLACE CLEAN AIR FILTER SUB-ASSEMBLY

(a) Remove the glove compartment assembly.
(b) Remove the filter case from the filter outlet.
(c) Remove the filter from the filter case.
(d) Replace the filter with a new one.
(e) The installation procedures are the removal procedures in reverse order.

DTC	**C1235/35**	**Foreign Object is Attached on Tip of Front Speed Sensor RH**

DTC	**C1236/36**	**Foreign Object is Attached on Tip of Front Speed Sensor LH**

DTC	**C1238/38**	**Foreign Object is Attached on Tip of Rear Speed Sensor RH**

DTC	**C1239/39**	**Foreign Object is Attached on Tip of Rear Speed Sensor LH**

DESCRIPTION

The Skid Control ECU sets this DTC if, according to abnormal signals input by the sensor, it detects that foreign material is adhering to the speed sensor tip or the sensor rotor, or the rotor has any missing teeth. This DTC may be set if parts such as the speed sensor circuit connector or wire harness are malfunctioning.

DTC No.	DTC Detecting Conditions	Trouble Areas
C1235/35 C1236/36 C1238/38 C1239/39	• At vehicle speed of 12 mph (20 km/h) or more, noise in speed sensor signal continues for 5 seconds or more. • At vehicle speed of 6 mph (10 km/h) or more, noise detected as rotor turns, for 15 seconds or more.	• Speed sensor • Speed sensor circuit • Speed sensor rotor • Brake actuator (skid control ECU)

HINT:
DTC C1235/35 relates to the front right speed sensor.
DTC C1236/36 relates to the front left speed sensor.
DTC C1238/38 relates to the rear right speed sensor.
DTC C1239/39 relates to the rear left speed sensor.

WIRING DIAGRAM

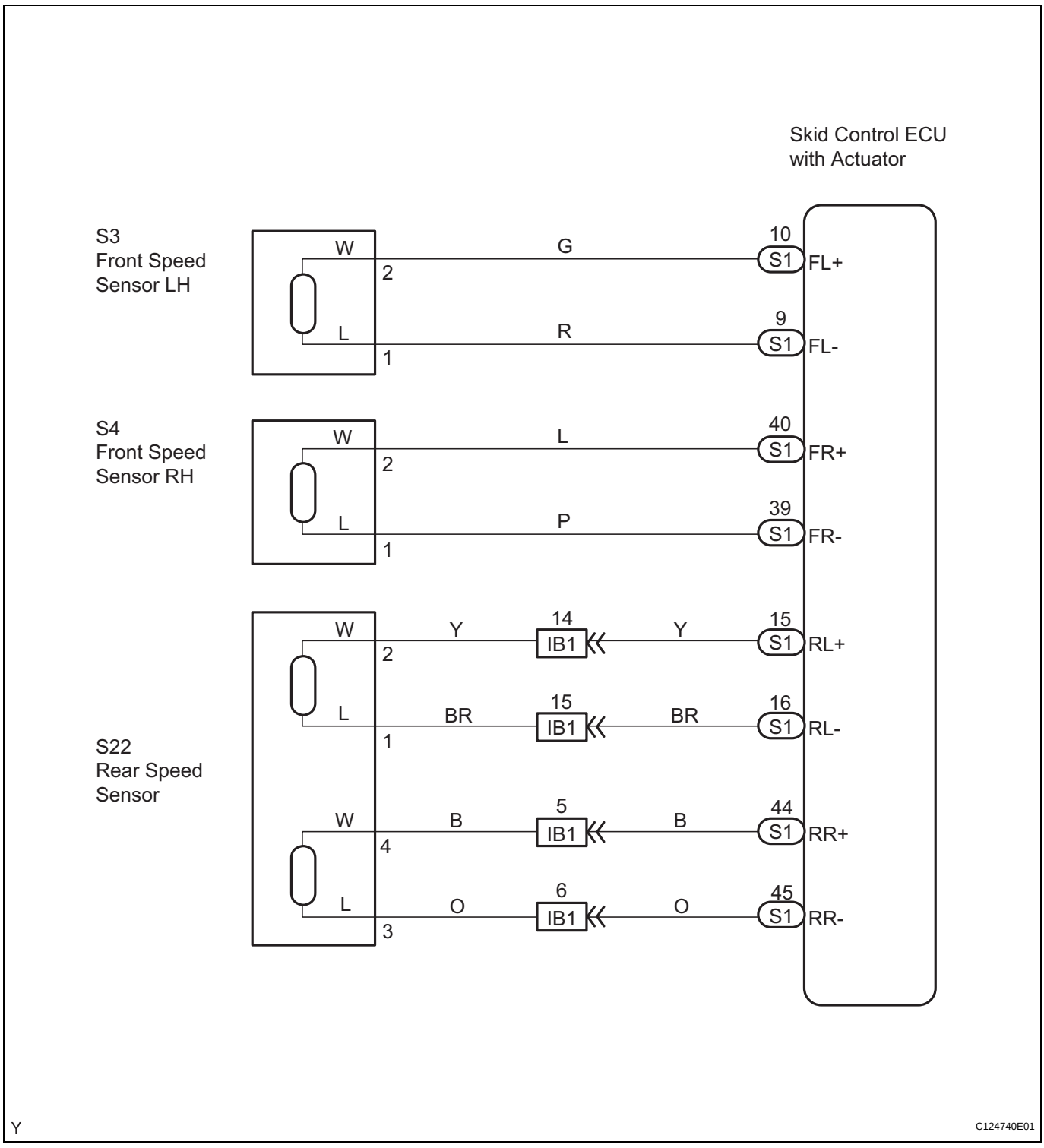

BC

1	CHECK HARNESS AND CONNECTOR (SKID CONTROL ECU - SPEED SENSOR)

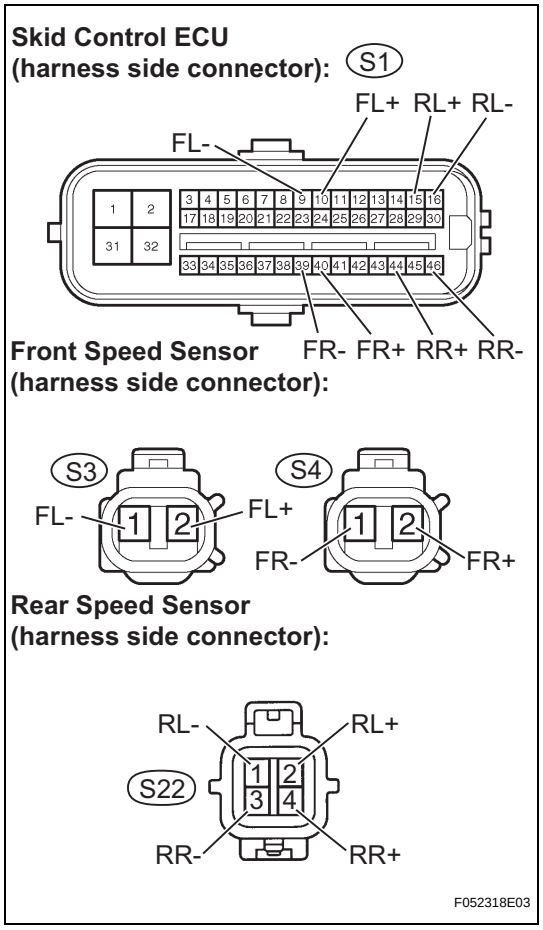

(a) Disconnect the skid control ECU connector.
(b) Disconnect speed sensor connectors.
(c) Measure the resistance.

Standard Resistance

Tester Connection	Specified Condition
S1-10 (FL+) - S3-2 (FL+)	Below 1 Ω
S1-9 (FL-) - S3-1 (FL-)	Below 1 Ω
S1-40 (FR+) - S4-2 (FR+)	Below 1 Ω
S1-39 (FR-) - S4-1 (FR-)	Below 1 Ω
S1-15 (RL+) - S22-2 (RL+)	Below 1 Ω
S1-16(RL-) - S22-1 (RL-)	Below 1 Ω
S1-44 (RR+) - S22-4 (RR+)	Below 1 Ω
S1-45 (RR-) - S22-3 (RR-)	Below 1 Ω

(d) Measure the resistance.

Standard Resistance

Tester Connection	Specified Condition
S1-10 (FL+) - Body ground	10 kΩ or higher
S1-9 (FL-) - Body ground	10 kΩ or higher
S1-40 (FR+) - Body ground	10 kΩ or higher
S1-39 (FR-) - Body ground	10 kΩ or higher
S1-15 (RL+) - Body ground	10 kΩ or higher
S1-16(RL-) - Body ground	10 kΩ or higher
S1-44 (RR+) - Body ground	10 kΩ or higher
S1-45 (RR-) - Body ground	10 kΩ or higher

(e) Reconnect speed sensor connectors.
(f) Reconnect the skid control ECU connector.

NG → **REPAIR OR REPLACE HARNESS OR CONNECTOR**

OK

BC

2 INSPECT BRAKE ACTUATOR (TERMINAL VOLTAGE)

Front Speed Sensor (harness side connector):

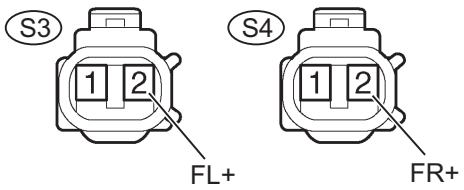

Rear Speed Sensor (harness side connector):

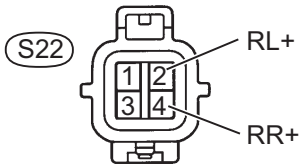

F052319E02

(a) Disconnect the speed sensor connectors.
(b) Turn the ignition switch to the ON position.
(c) Measure the voltage.
Standard Voltage

Tester Connection	Specified Condition
S3-2 (FL+) - Body ground	7.5 to 12 V
S4-2 (FR+) - Body ground	7.5 to 12 V
S22-2 (RL+) - Body ground	7.5 to 12 V
S22-4 (RR-) - Body ground	7.5 to 12 V

(d) Turn the ignition switch to OFF.
(e) Reconnect the speed sensor connectors.

NG → **REPLACE BRAKE ACTUATOR**

OK

BC

3 RECONFIRM DTC

(a) Clear the DTCs (See page BC-16).
(b) Drive the vehicle at 6 mph (10 km/h) or more to activate initial check.
(c) Check if the same DTCs are recorded.

Result	Proceed to
DTC output	A
DTC not output	B

B → **CHECK FOR INTERMITTENT PROBLEMS**

A

4 INSPECT SPEED SENSOR

(a) Remove the speed sensor (See page BC-303 or BC-304).
(b) Check the sensor tip.
OK:
No scratches or foreign matter on the sensor tip.

NG → **CLEAN OR REPLACE SPEED SENSOR**

OK

CLEAN OR REPLACE SPEED SENSOR

DTC	C1241/41	Low Battery Positive Voltage

DESCRIPTION

If there is a problem with the brake actuator (skid control ECU) power supply circuit, the skid control ECU outputs a DTC and prohibits operation under the fail safe function.
If the voltage supplied to the IG1 terminal is not within the DTC detection threshold due to malfunctions in parts such as the battery or alternator circuit, this DTC is stored.

DTC No.	DTC Detecting Conditions	Trouble Areas
C1241/41	• At vehicle speed of 2 mph (3 km/h) or more, voltage at IG1 terminal remains at 9.5 V or less for 10 seconds or more. • When solenoid relay ON, voltage at IG1 terminal 0.5 V or less, and contact of relay OFF for 0.2 seconds or more. • When voltage at IG1 terminal 9.5 V or less, voltage of speed sensor power supply decreases for 60 seconds or more.	• Battery • Charging system • Power source circuit

WIRING DIAGRAM

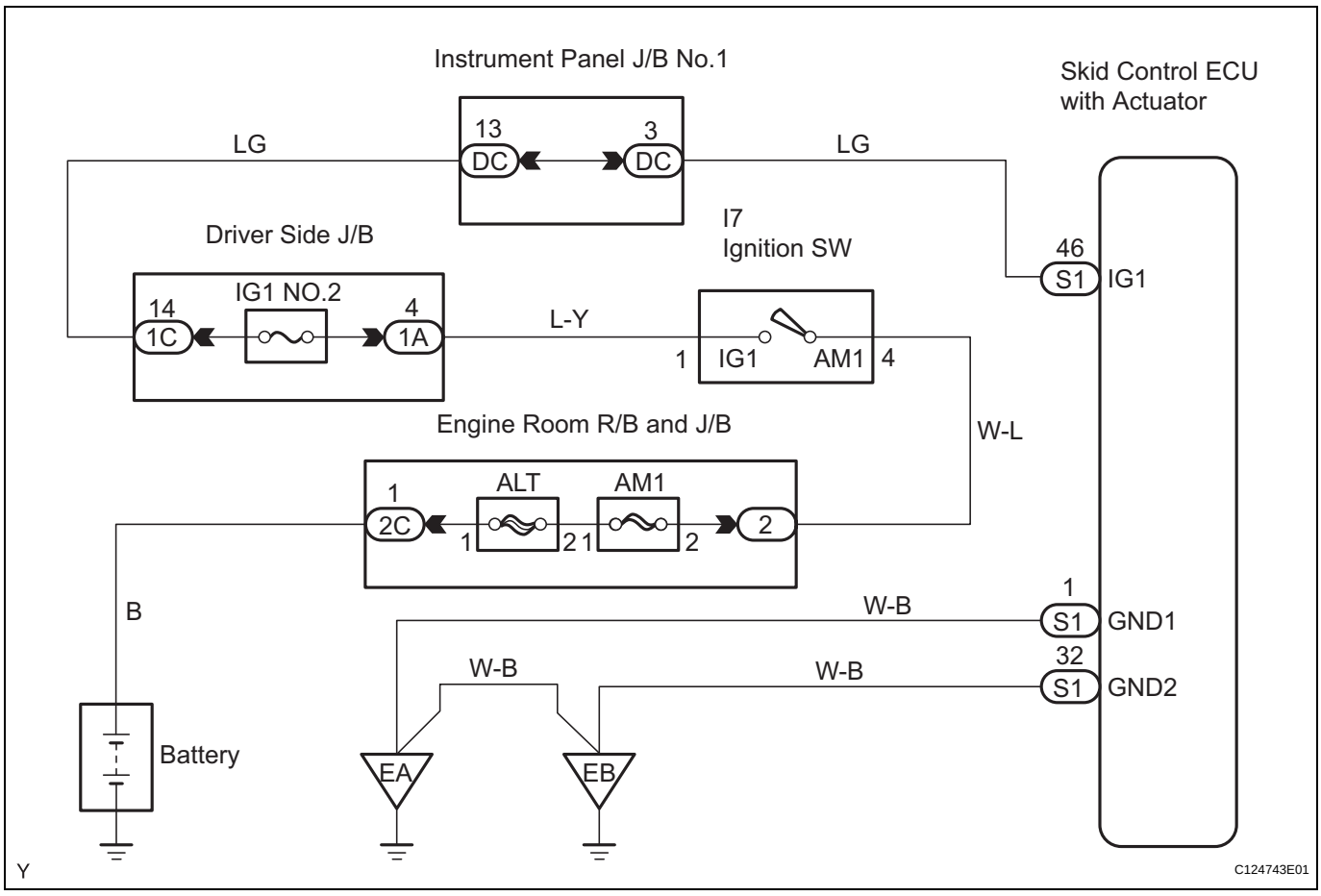

1	INSPECT BATTERY

(a) Check the battery voltage.
Standard Voltage:
11 to 14 V

NG → INSPECT CHARGING SYSTEM

OK

2 INSPECT FUSE (IG1 NO. 2)

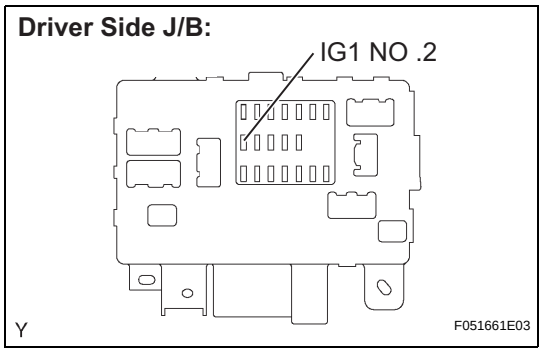

(a) Remove the IG1 NO . 2 fuse from the driver side J/B.
(b) Measure the resistance of the IG1 NO. 2 fuse.
Standard Resistance:
Below 1 Ω
(c) Reinstall the IG1 NO. 2 fuse.

NG → **CHECK FOR SHORTS IN ALL HARNESSES AND CONNECTORS CONNECTED TO FUSE AND REPLACE FUSE**

OK

3 INSPECT SKID CONTROL ECU TERMINAL VOLTAGE (IG1 TERMINAL)

(a) When using intelligent tester:
(1) Start the engine.
(2) Connect the intelligent tester to the DLC3.
(3) Turn the intelligent tester ON.
(4) Select the DATA LIST mode on the intelligent tester.
(5) Measure the voltage condition output from the ECU displayed on the intelligent tester.

BC

Item	Measurement Item / Range (Display)	Normal Condition	Diagnostic Note
IG VOLTAGE	ECU power supply voltage: TOO LOW / NORMAL / TOO HIGH	TOO HIGH: 14 V or more NORMAL: 9.5 V or 14 V TOO LOW: Below 9.5 V	-

OK:
"Normal" is displayed.

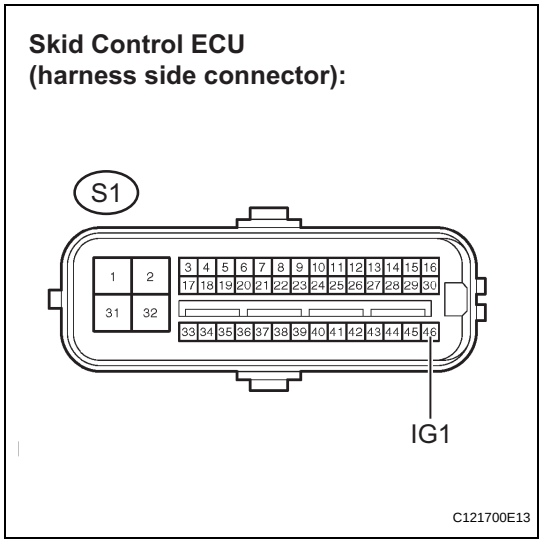

(b) When not using intelligent tester:
(1) Disconnect the skid control ECU connector.
(2) Turn the ignition switch to the ON position.
(3) Measure the voltage.
Standard Voltage

Tester Connection	Specified Condition
S1-46 (IG1) - Body ground	10 to 14 V

(4) Turn the ignition switch to OFF.
(5) Reconnect the skid control ECU connector.

NG → **REPAIR OR REPLACE HARNESS OR CONNECTOR**

OK

4	CHECK HARNESS AND CONNECTOR (GND TERMINAL CONTINUITY)

Skid Control ECU
(harness side connector):

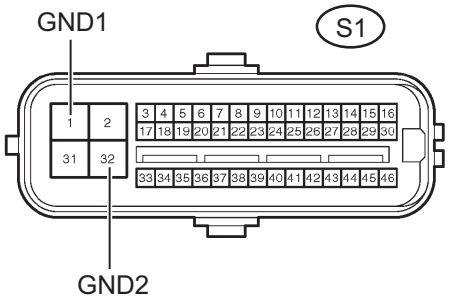

C121700E06

(a) Disconnect the skid control ECU connector.
(b) Measure the resistance.
Standard Resistance

Tester Connection	Specified Condition
S1-1 (GND1) - Body ground	Below 1 Ω
S1-32 (GND2) - Body ground	Below 1 Ω

(c) Reconnect the skid control ECU connector.

NG → **REPAIR OR REPLACE HARNESS OR CONNECTOR**

OK

5	RECONFIRM DTC

(a) Clear the DTCs (See page BC-16).
(b) Drive the vehicle at 1.9 mph (3 km/h) or more for 10 seconds or more.
(c) Check if the same DTCs are detected.

Result	Proceed to
DTC output	A
DTC not output	B

NG → **END**

A

REPLACE BRAKE ACTUATOR

BC

DTC	C1243/43	Acceleration Sensor Stuck Malfunction

DTC	C1244/44	Open or Short in Deceleration Sensor Circuit

DTC	C1245/45	Acceleration Sensor Output Malfunction

DESCRIPTION

This sensor detects deceleration of the vehicle speed. The sensor signal is used in ABS control. If the sensor functions abnormally, the ABS warning light turns on.

DTC No.	DTC Detecting Conditions	Trouble Areas
C1243/43	While vehicle speed decreases from 18 mph (30 km/h) to 0 mph (0 km/h), sensor signal does not change 16 times or more.	• Deceleration sensor • Deceleration sensor circuit • Brake actuator (skid control ECU)
C1244/44	When any of following 1 through 3 detected: 1. ECU terminal GL1 value of -1.5 G or less or 1.5 G or more continues for 1.2 seconds or more. 2. Deceleration sensor terminal VGS voltage of 4.4 V or less or 5.6 V or more continues for 1.2 seconds or more. 3. Deceleration sensor signal momentary open occurs 7 times or more.	• Deceleration sensor • Deceleration sensor circuit • Brake actuator (skid control ECU)
C1245/45	At vehicle speed of 18 mph (30 km/h) or more, difference between back and forth G value calculated using G sensor signals and back and forth G value calculated using vehicle speed, exceeds 0.35 G for 60 seconds or more.	• Deceleration sensor • Deceleration sensor circuit • Brake actuator (skid control ECU)

WIRING DIAGRAM

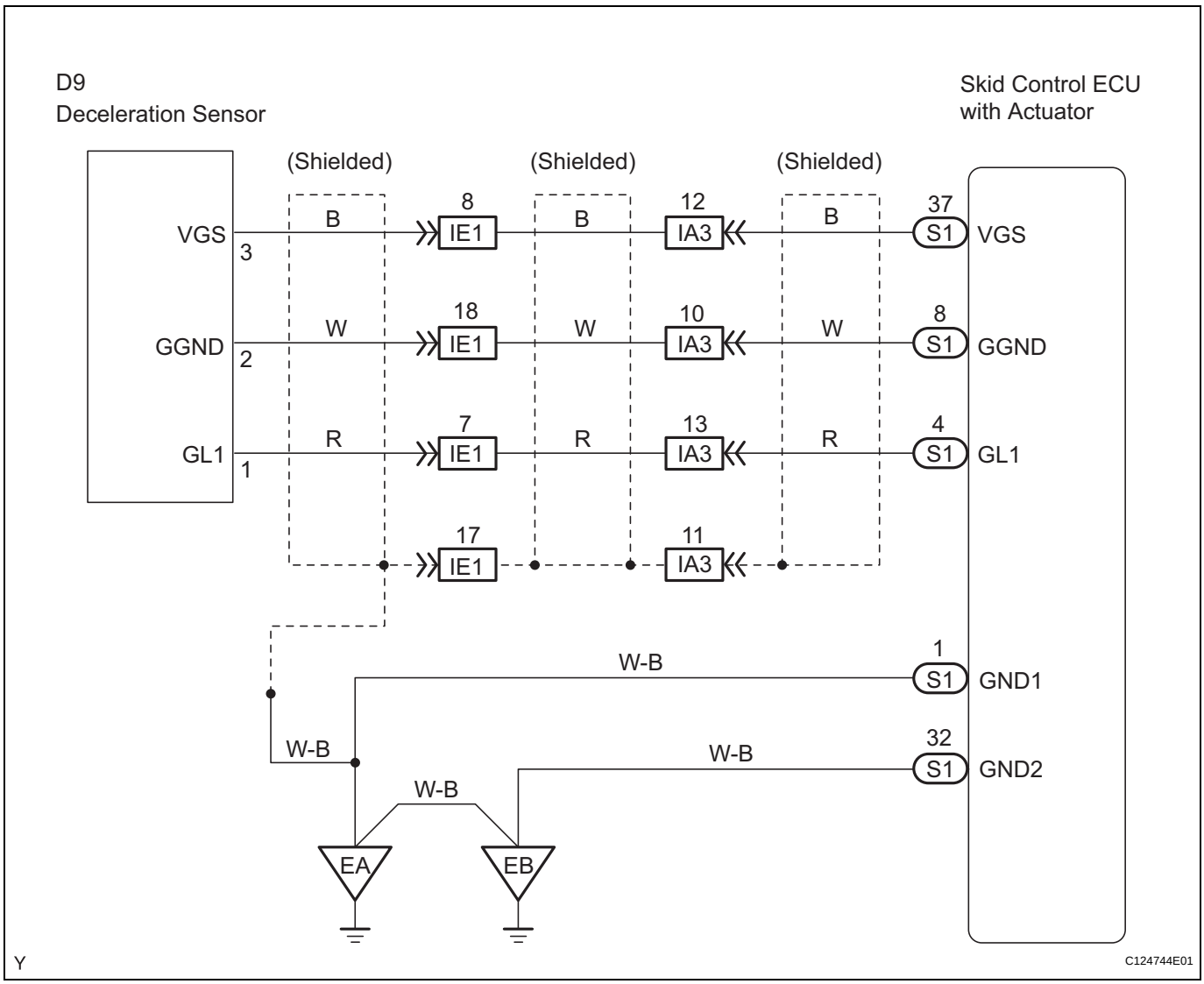

BC

1	READ VALUE OF DATA LIST (DECELERATION SENSOR)

(a) Connect the intelligent tester to the DLC3.
(b) Turn the ignition switch to the ON position.
(c) Turn the intelligent tester ON.
(d) Select the DATA LIST mode on the intelligent tester.

Item	Measurement Item / Range (Display)	Normal Condition	Diagnostic Note
DECELERAT SEN	Deceleration sensor 1 reading / min.: -1.869 G, max.: 1.869 G	Approximately 0 +-0.13G in still condition	Reading changes when vehicle bounced

(e) Check that the deceleration value of the deceleration sensor displayed on the intelligent tester changes when the vehicle is tilted.
OK:
Deceleration value must change.

NG	Go to step 3

OK

2 RECONFIRM DTC

(a) Clear the DTCs (See page BC-16).
(b) Check if the same DTCs are detected.

Result	Proceed to
DTC output	A
DTC not output	B

B → **END**

A

REPLACE BRAKE ACTUATOR

3 INSPECT DECELERATION SENSOR

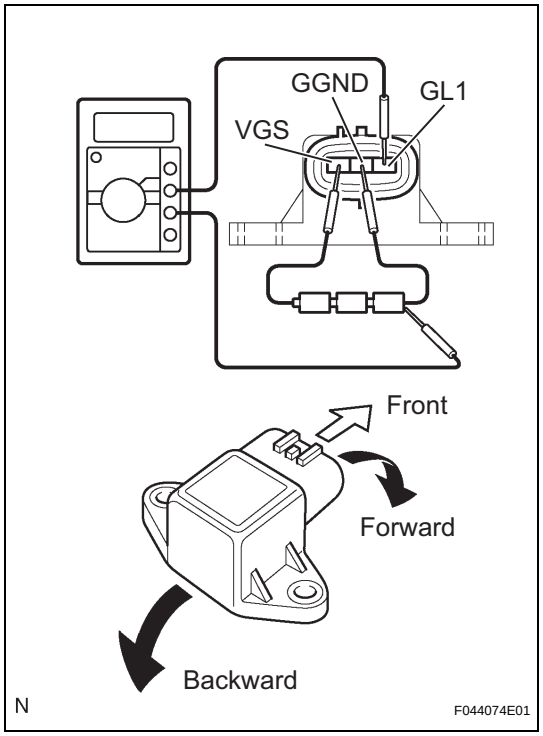

(a) Remove the deceleration sensor.
(b) Connect the 3 dry batteries of 1.5 V in series.
(c) Connect the VGS terminal to the batteries' positive (+) terminal and the GGND terminal to the batteries' negative (-) terminal.
(d) Apply about 4.5 V between the VGS and GGND terminals.
NOTICE:
Do not apply voltage of 6 V or more to terminals VGS and GGND.
(e) Check the output voltage of the GL1 terminal when the sensor is tilted forward and backward.
Standard Voltage

Sensor Condition	Specified Condition
Horizontal	About 2.3 V
Lean forward	0.4 to 2.3 V
Lean backward	2.3 to 4.0 V

HINT:
- If the sensor is tilted too much it may show the wrong value.
- If dropped, the sensor should be replaced with a new one.
- Check and ensure the correct installation direction of the deceleration sensor.

NG → **REPLACE DECELERATION SENSOR**

OK

BC

4	CHECK HARNESS AND CONNECTOR (SKID CONTROL ECU - DECELERATION SENSOR)

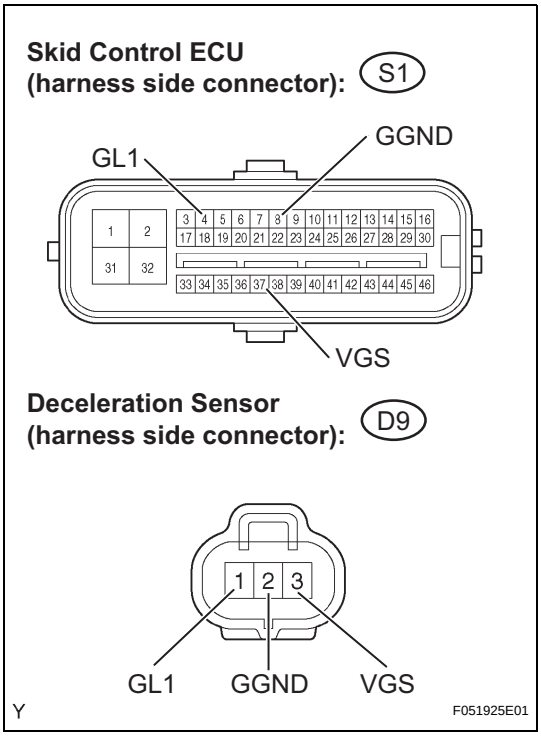

(a) Disconnect the skid control ECU connector.
(b) Disconnect the deceleration sensor connector.
(c) Measure the resistance.

Standard Resistance

Tester Connection	Specified Condition
S1-37 (VGS) - D9-3 (VGS)	Below 1 Ω
S1-8 (GGND) - D9-2 (GGND)	Below 1 Ω
S1-4 (GL1) - D9-1 (GL1)	Below 1 Ω

(d) Measure the resistance.

Standard Resistance

Tester Connection	Specified Condition
S1-37 (VGS) - Body ground	10 kΩ or higher
S1-8 (GGND) - Body ground	10 kΩ or higher
S1-4 (GL1) - Body ground	10 kΩ or higher

(e) Reconnect the deceleration sensor connector.
(f) Reconnect the skid control ECU connector.

NG → **REPAIR OR REPLACE HARNESS OR CONNECTOR**

OK

REPLACE BRAKE ACTUATOR

DTC	C1248/48	Open Circuit in Rear Differential Lock

DESCRIPTION

The 4WD control ECU stimulates the actuator to lock the rear differential in accordance with the rear diff. lock switch. The skid control ECU monitors the transfer indicator switch (rear diff. lock) and if the rear differential is locked, at which time the rear diff. lock indicator light is illuminated, prohibits ABS control. At the same time, the skid control ECU illuminates the ABS warning light.

DTC No.	DTC Detecting Condition	Trouble Areas
C1248/48	At vehicle speed of 31 mph (50 km/h) or more, 3 seconds or more elapse after rear differential changes from free to lock.	• Transfer indicator switch (rear diff. lock) • Rear differential lock circuit • Brake actuator (skid control ECU) • 4WD control ECU

WIRING DIAGRAM

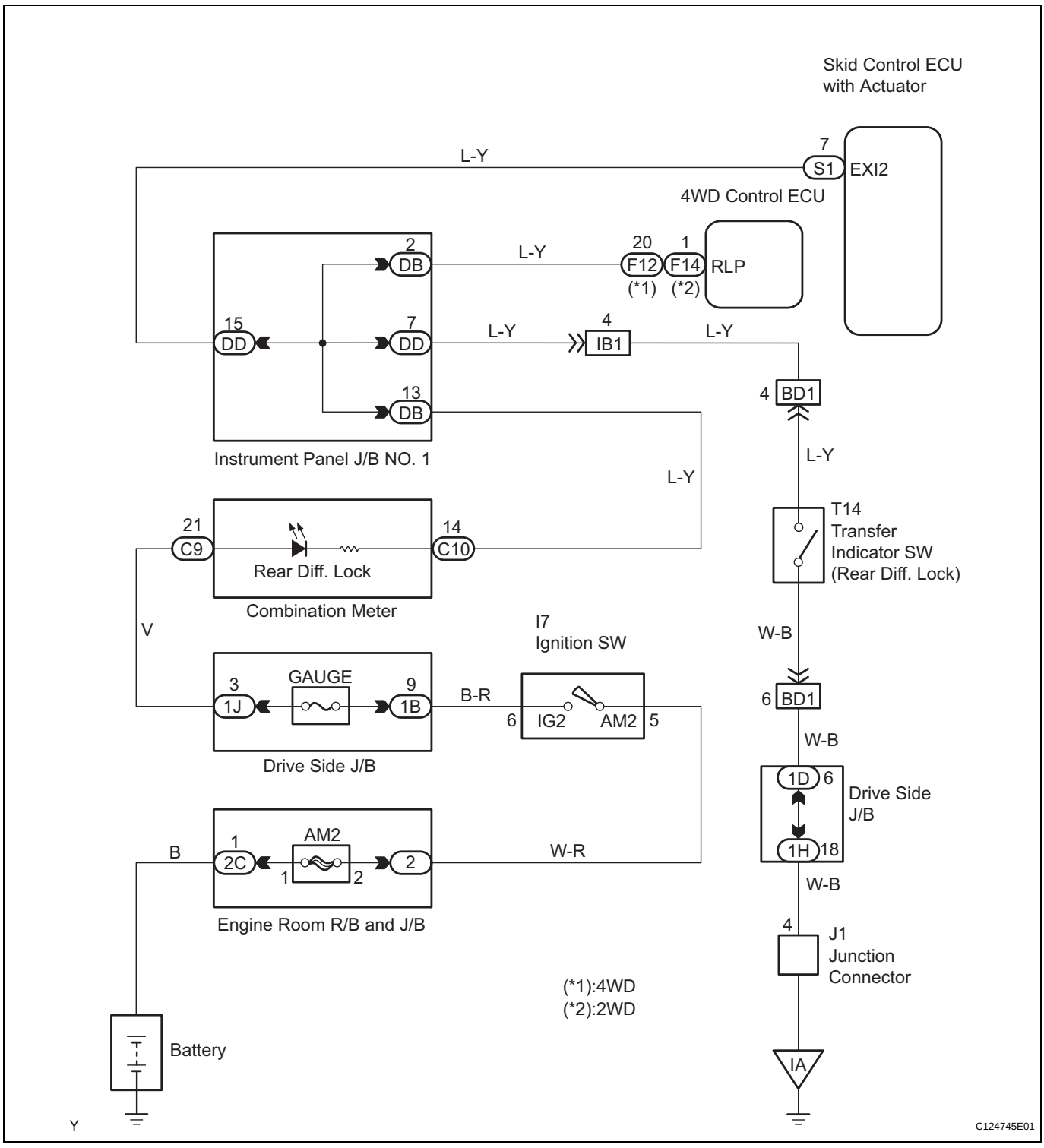

BC

1 INSPECT SKID CONTROL ECU (EXI2 TERMINAL VOLTAGE)

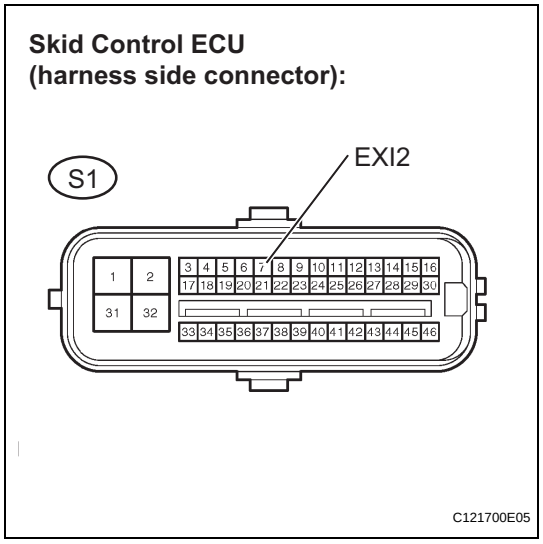

(a) Disconnect the skid control ECU connector.
(b) Turn the ignition switch to the ON position.
(c) Measure the voltage.
(d) Check the rear diff. lock indicator light.

Standard

Terminal Connection	Vehicle Condition	Specified Condition	Rear Diff. Indicator Light
S1-7 (EXI2) - Body ground	Rear Differential free	8 to 14 V	OFF
S1-7 (EXI2) - Body ground	Rear Differential locked	1.5 V	ON

(e) Turn the ignition switch to OFF.
(f) Reconnect the skid control ECU connector.

NG → Go to step 3

OK

2 RECONFIRM DTC

(a) Clear the DTCs (See page BC-16).
(b) Drive the vehicle at a speed of 31 mph (50 km/h) or more for 3 seconds or more with the rear differential free.
(c) Check if the same DTCs are detected.

Result	Proceed to
DTC output	A
DTC not output	B

B → END

A

REPLACE BRAKE ACTUATOR

BC

3 INSPECT TRANSFER INDICATOR SWITCH (REAR DIFF. LOCK)

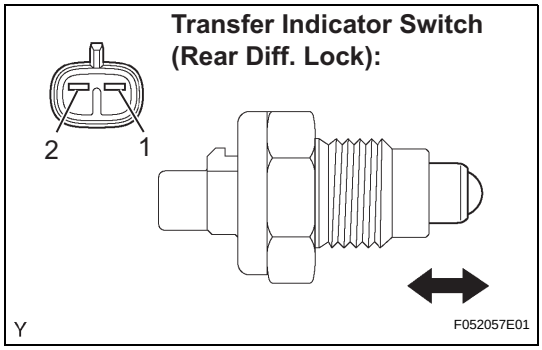

(a) Disconnect the transfer indicator switch connector.
(b) Remove the transfer indicator switch.
(c) Measure the resistance.

Standard Resistance

Tester Connection	Switch Position	Specified Condition
1 - 2	Push	Below 1 Ω
1 - 2	Free	10 kΩ or higher

(d) Reinstall the transfer indicator switch.
(e) Reconnect the transfer indicator switch connector.

NG → **REPLACE TRANSFER INDICATOR SWITCH**

OK

4 CHECK HARNESS AND CONNECTOR

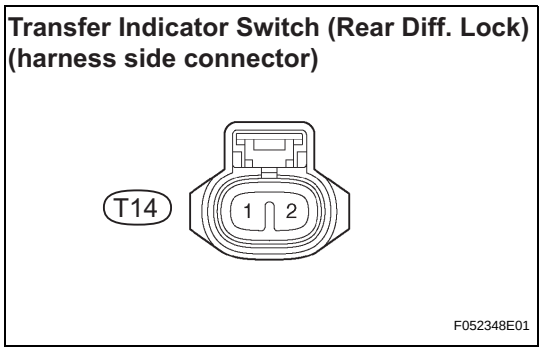

(a) Disconnect the skid control ECU connector.
(b) Disconnect the 4WD control ECU connector.
(c) Disconnect the transfer indicator switch connector.
(d) Turn the ignition switch to the ON position.
(e) Measure the voltage.

Standard Voltage

Tester Connection	Specified Condition
T14-2 - Body ground	8 to 14 V

(f) Turn the ignition switch to OFF.
(g) Reconnect the transfer indicator switch connector.
(h) Reconnect the 4WD control ECU connector.
(i) Reconnect the skid control ECU connector.

OK → **REPLACE 4WD CONTROL ECU**

NG

5 CHECK HARNESS AND CONNECTOR

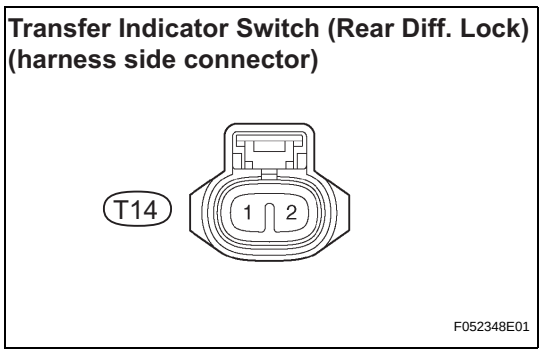

(a) Disconnect the skid control ECU connector.
(b) Disconnect the 4WD control ECU connector.
(c) Disconnect the transfer indicator switch connector.
(d) Disconnect the combination meter connector.
(e) Measure the resistance.

Standard Resistance

Tester Connection	Specified Condition
T14-2 - Body ground	10 kΩ or higher

(f) Reconnect the combination meter connector.
(g) Reconnect the transfer indicator switch connector.
(h) Reconnect the 4WD control ECU connector.
(i) Reconnect the skid control ECU connector.

BC

NG → **REPAIR OR REPLACE HARNESS OR CONNECTOR**

OK

REPLACE COMBINATION METER

DTC	C1249/49	Open in Stop Light Switch Circuit

DESCRIPTION

The skid control ECU inputs the stop light switch signal and detects the status of the brake operation.

DTC No.	DTC Detecting Condition	Trouble Areas
C1249/49	ECU terminal IG1 voltage 9.5 V to 17.2 V and open in stop light switch circuit for 0.3 seconds or more.	• Stop light assembly • Stop light switch circuit

WIRING DIAGRAM

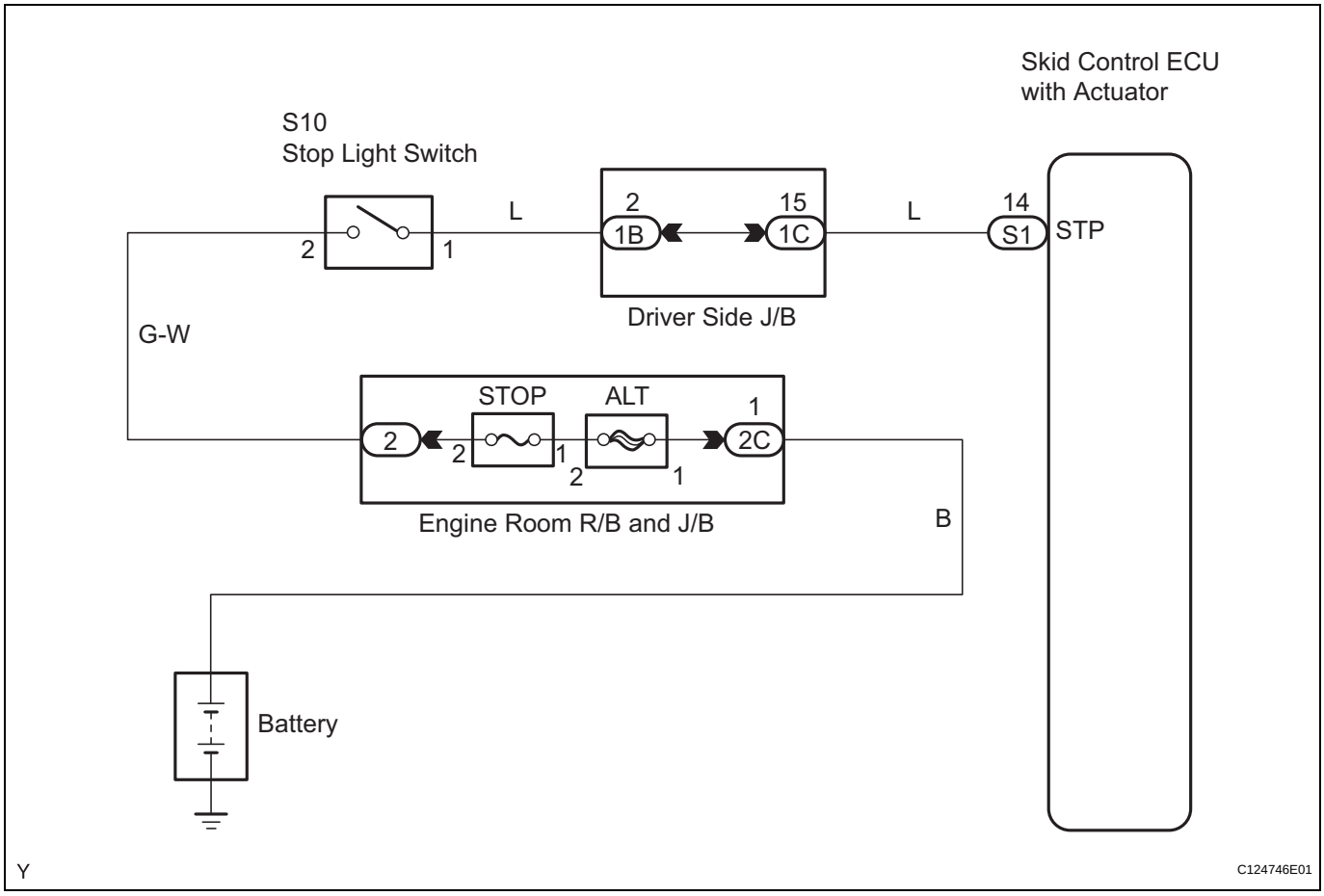

BC

1	CHECK STOP LIGHT SWITCH OPERATION

(a) Check that the stop lights come on when the brake pedal is depressed and go off when the brake pedal is released.

OK

Pedal Condition	Illumination condition
Brake pedal depressed	ON
Brake pedal released	OFF

HINT:
Check the stop light bulb as it may have burnt out.

NG → Go to step 4

OK

2 INSPECT SKID CONTROL ECU TERMINAL VOLTAGE (STP TERMINAL)

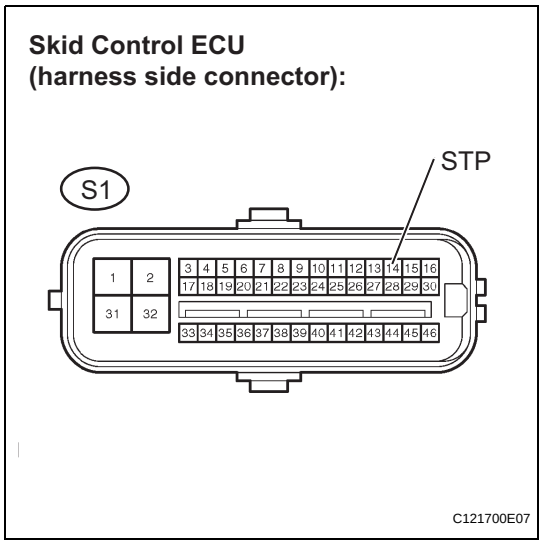

(a) Disconnect the skid control ECU connector.
(b) Measure the voltage.

Standard Voltage

Tester Connection	Switch Condition	Specified Condition
S1-14 (STP) - Body ground	Brake pedal depressed	8 to 16 V
S1-14 (STP) - Body ground	Brake pedal pressed	Below 1.5 V

(c) Reconnect the skid control ECU connector.

NG → REPAIR OR REPLACE HARNESS OR CONNECTOR

OK

3 RECONFIRM DTC

(a) Clear the DTCs (See page BC-16).
(b) Check if the same DTCs are detected.

Result	Proceed to
DTC output	A
DTC not output	B

NG → END

A

REPLACE BRAKE ACTUATOR

BC

4	INSPECT FUSE (STOP)

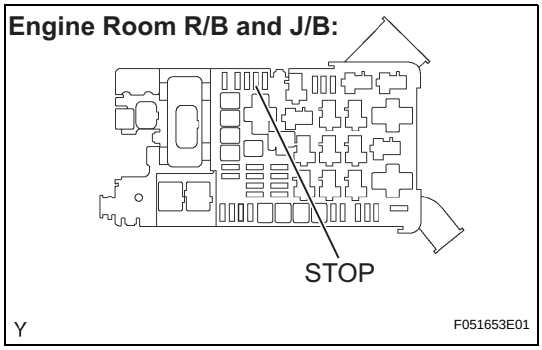

(a) Remove the STOP fuse from the engine room R/B and J/B.
(b) Measure the resistance of the STOP fuse.
Standard Resistance:
Below 1 Ω
(c) Reinstall the STOP fuse.

NG → **CHECK FOR SHORTS IN ALL HARNESSES AND CONNECTORS CONNECTED TO FUSE AND REPLACE FUSE**

OK

5	INSPECT STOP LIGHT SWITCH ASSEMBLY

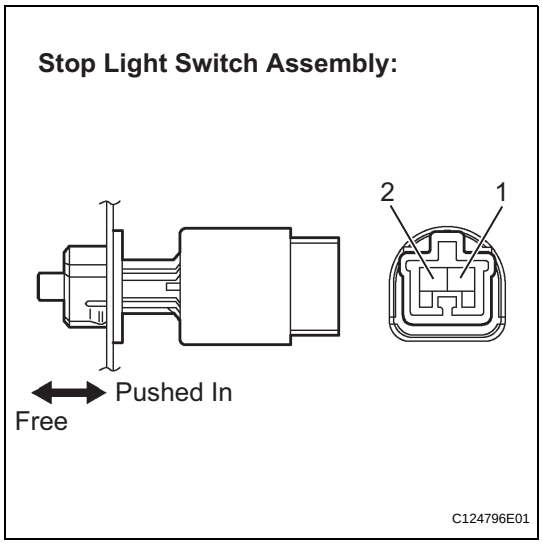

(a) Disconnect the stop light switch connector.
(b) Measure the resistance.
Standard Resistance

Tester Connection	Switch Condition	Specified Condition
1 - 2	Switch pin free	Below 1 Ω
1 - 2	Switch pin pushed in	10 kΩ or higher

(c) Reconnect the stop light switch connector.

NG → **REPLACE STOP LIGHT SWITCH ASSEMBLY**

OK

BC

6 CHECK HARNESS AND CONNECTOR (STOP LIGHT SWITCH - SKID CONTROL ECU)

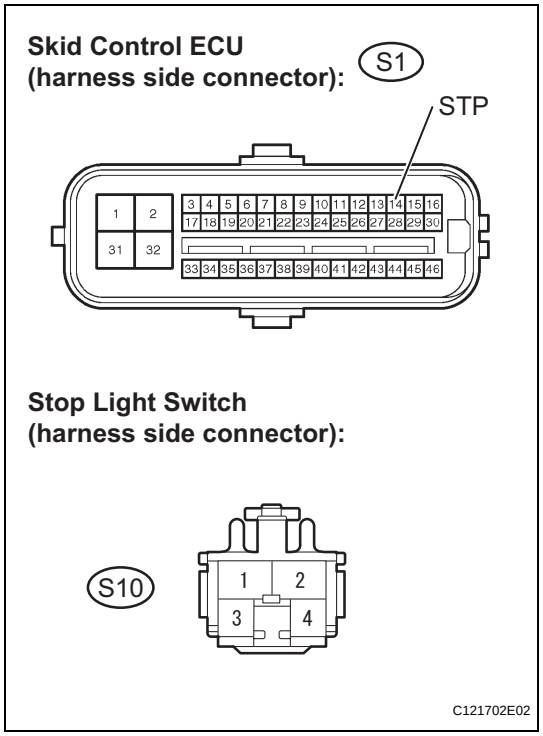

(a) Disconnect the skid control ECU connector.
(b) Disconnect the stop light switch connector.
(c) Measure the resistance.

Standard Resistance

Tester Connection	Specified Condition
S1-14 (STP) - S10-1 (STP)	Below 1 Ω

(d) Reconnect the stop light switch connector.
(e) Reconnect the skid control ECU connector.

NG → **REPAIR OR REPLACE HARNESS OR CONNECTOR**

OK

7 RECONFIRM DTC

BC

(a) Clear the DTCs (See page BC-16).
(b) Check if the same DTCs are detected.

Result	Proceed to
DTC output	A
DTC not output	B

NG → **END**

A

REPLACE BRAKE ACTUATOR

DTC	C1251/51	Open in Pump Motor Circuit

DESCRIPTION

DTC No.	DTC Detecting Conditions	Trouble Areas
C1251/51	• Actuator pump motor does not operate properly. • Open in actuator pump motor circuit continues for at least 2 seconds.	• Brake actuator • Brake actuator circuit

WIRING DIAGRAM

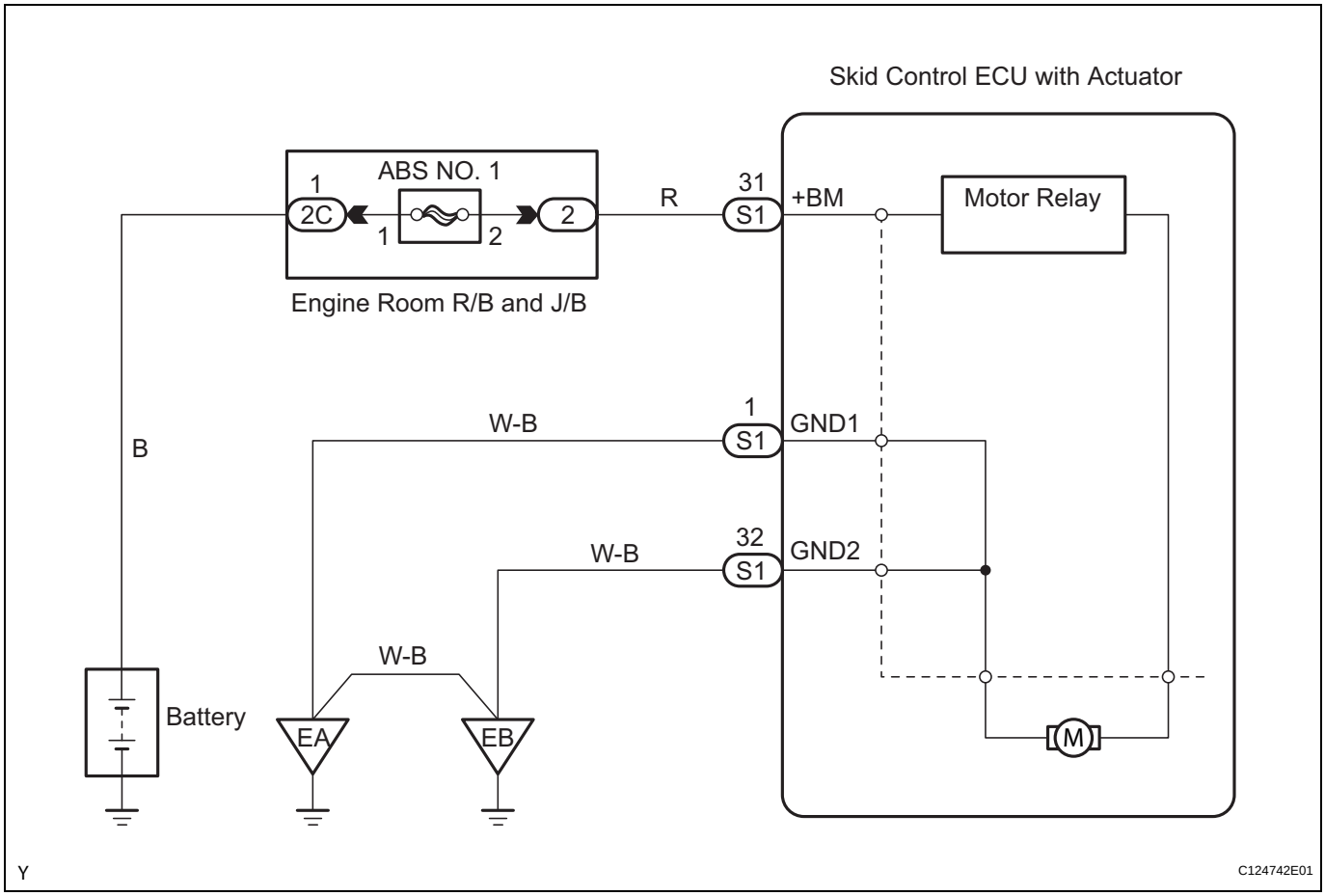

Start the inspection from step 1 when using a intelligent tester and start from step 3 when not using a intelligent tester.

1	PERFORM ACTIVE TEST BY INTELLIGENT TESTER

(a) Connect the intelligent tester to the DLC3.
(b) Start the engine.
(c) Turn the intelligent tester ON.
(d) Select the ACTIVE TEST mode on the intelligent tester.
(e) Check the operation sound of the ABS motor individually when operating it with the intelligent tester.

Item	Vehicle Condition / Test Details	Diagnostic Note
ABS MOT RELAY	Turns ABS motor relay ON / OFF	Operation of motor can be heard

OK:
The operation sound of the ABS motor should be heard.

NG → **Go to step 3**

OK

2 RECONFIRM DTC

(a) Clear the DTCs (See page BC-16).
(b) Check if the same DTCs are detected.

Result	Proceed to
DTC output	A
DTC not output	B

B → **END**

A

REPLACE BRAKE ACTUATOR

3 INSPECT FUSE (ABS NO. 1)

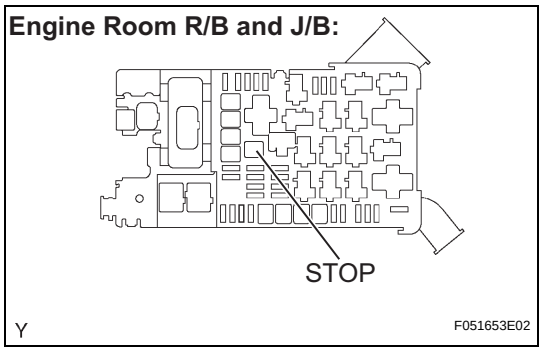

(a) Remove the ABS NO. 1 fuse from the engine room R/B and J/B.
(b) Measure the resistance of the ABS NO. 1 fuse.
Standard Resistance:
Below 1 Ω
(c) Reinstall the ABS NO. 1 fuse.

NG → **CHECK FOR SHORTS IN ALL HARNESSES AND CONNECTORS CONNECTED TO FUSE AND REPLACE FUSE**

OK

BC

4	INSPECT SKID CONTROL ECU TERMINAL VOLTAGE (+BM TERMINAL)

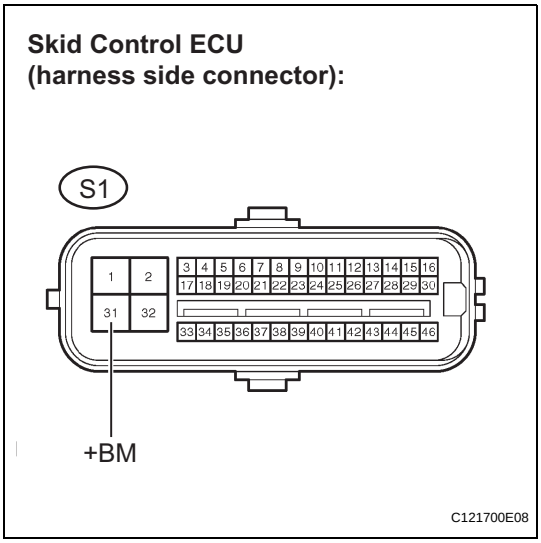

(a) Disconnect the skid control ECU connector.
(b) Measure the voltage.
Standard Voltage

Tester Connection	Specified Condition
S1-31 (+BM) - Body ground	10 to 14 V

(c) Reconnect the skid control ECU connector.

NG → **REPAIR OR REPLACE HARNESS OR CONNECTOR**

OK

5	CHECK HARNESS AND CONNECTOR (GND1, GND2 - BODY GROUND)

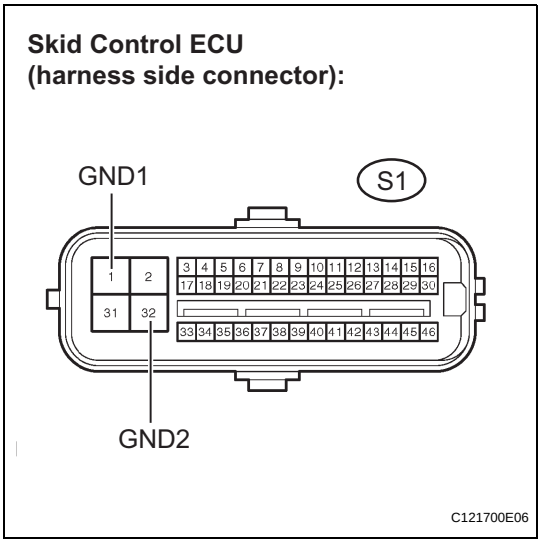

(a) Disconnect the skid control ECU connector.
(b) Measure the resistance.
Standard Resistance

Tester Connection	Specified Condition
S1-1 (GND1) - Body ground	Below 1 Ω
S1-32 (GND2) - Body ground	Below 1 Ω

(c) Reconnect the skid control ECU connector.

NG → **REPAIR OR REPLACE HARNESS OR CONNECTOR**

OK

REPLACE BRAKE ACTUATOR

BC

DTC	C1337/37	Different Diameter Tire Malfunction

DESCRIPTION

The skid control ECU measures the speed of each wheel by receiving signals from the speed sensor. These signals are used for recognizing whether all 4 wheels are operating properly. Therefore, all of the wheel signals must be equal.

DTC No.	DTC Detecting Condition	Trouble Areas
C1337/37	At vehicle speed of 18 mph (30 km/h) or more, difference of wheel speeds between front 2 wheels and rear 2 wheels, or front left and right wheels 20 % or more for 60 seconds or more.	• Speed sensor • Speed sensor rotor • Speed sensor circuit • Tire size • Brake actuator (skid control ECU)

1 CHECK TIRES

(a) Check tire size and condition of all 4 wheels.
OK:
All 4 wheels are in same condition.

NG → **REPLACE TIRES SO THAT ALL 4 TIRES ARE SAME IN SIZE**

OK ↓

2 CHECK SPEED SENSOR ROTOR

(a) Remove the drive shaft, and check around the speed sensor rotor.
OK:
No scratches or foreign matter on the sensor tip.

NG → **REPLACE SPEED SENSOR ROTOR**

OK ↓

3 CHECK SPEED SENSOR

NG → **REPLACE SPEED SENSOR**

OK ↓

4 CHECK HARNESS AND CONNECTOR (SKID CONTROL ECU - EACH SPEED SENSOR)

NG → **REPAIR OR REPLACE HARNESS OR CONNECTOR**

OK ↓

BC

5	RECONFIRM DTC

(a) Clear the DTCs (See page BC-16).
(b) Check if the same DTCs are detected.

Result	Proceed to
DTC output	A
DTC not output	B

B → END

A → REPLACE BRAKE ACTUATOR

ABS Warning Light Remains ON

DESCRIPTION

If any of the following is detected, the ABS warning light remains ON.

1. The skid control ECU connectors are disconnected from the skid control ECU.
2. There is a malfunction in the skid control ECU internal circuit.
3. There is an open in the harness between the combination meter and skid control ECU.

HINT:

- When reading DTCs by SST (CHECK WIRE), if the ABS warning light remains on, troubleshoot by following the inspection flow.
- The intelligent tester may not be usable when there is a malfunction in the skid control ECU.

WIRING DIAGRAM

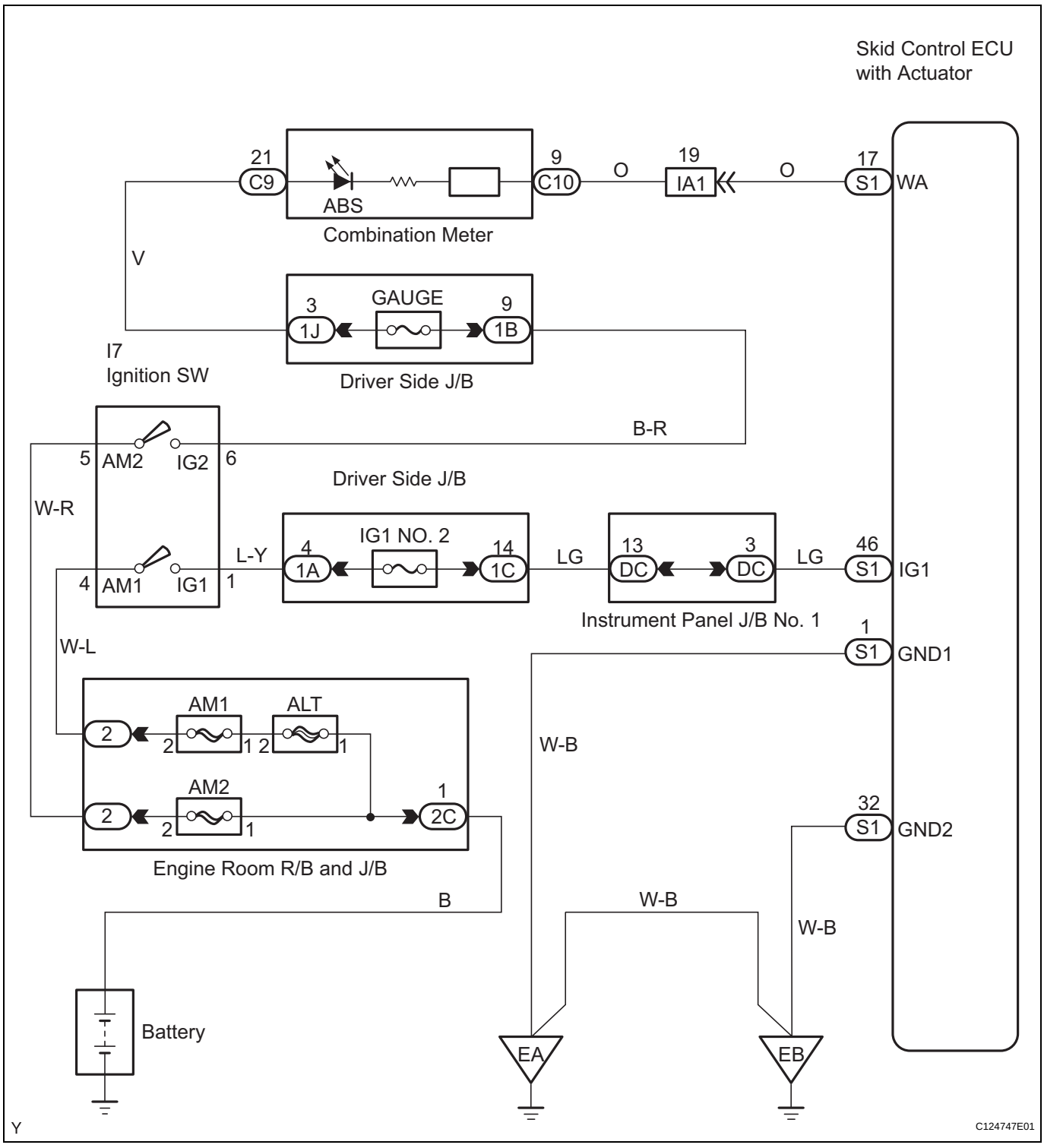

1	CHECK DTC

(a) Check if DTCs for ABS are recorded.

Result	Proceed to
Normal system code output	A
DTC output	B

Result	Proceed to
Other than above	C

B → REPAIR CIRCUITS INDICATED BY OUTPUT DTCS

C → Go to step 4

A

2 CHECK REAR DIFFERENTIAL LOCK SWITCH CONDITION

HINT:
Only for vehicles with rear differential locks.

(a) Check the rear diff. lock switch condition.

Result	Proceed to
Rear diff. lock switch OFF	A
Rear diff. lock switch ON	B

NG → SWITCH REAR DIFFERENTIAL LOCK SWITCH TO OFF (AFTER THIS FOLLOW TO STEP 3)

OK

3 CHECK ABS WARNING LIGHT

Skid Control ECU (harness side connector):

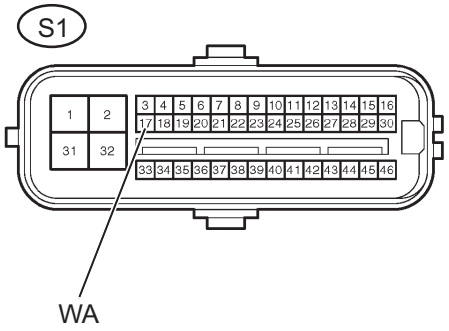

C121700E09

(a) Disconnect the skid control ECU connector.
(b) Turn the ignition switch to the ON position.
(c) Ground terminal WA of the skid control ECU.
(d) Check ABS warning light.

OK

WA - GND Condition	Illumination Condition
Connecting	OFF
Disconnecting	ON

(e) Turn the ignition switch to OFF.
(f) Reconnect the skid control ECU connector.

NG → REPAIR COMBINATION METER SYSTEM

OK

REPLACE BRAKE ACTUATOR

4 INSPECT SKID CONTROL ECU (IG1 TERMINAL VOLTAGE)

(a) When using intelligent tester:

BC

(1) Connect the intelligent tester to the DLC3.
(2) Start the engine.
(3) Turn the intelligent tester ON.
(4) Select the DATA LIST mode on the intelligent tester.
(5) Measure the voltage output from the ECU displayed on the intelligent tester.

Item	Measurement Item / Range (Display)	Normal Condition	Diagnostic Note
IG VOLTAGE	ECU power supply voltage / TOO LOW / NORMAL / TOO HIGH	TOO HIGH: 14 V or more NORMAL: 9.5 to 14V TOO LOW: Below 9.5 V	-

OK:

"Normal" is displayed.

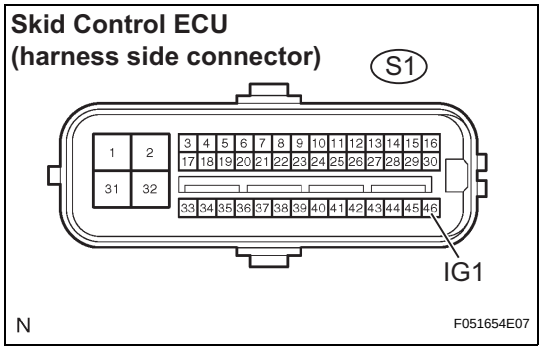

(b) When not using intelligent tester:
(1) Disconnect the skid control ECU connector.
(2) Turn the ignition switch to the ON position.
(3) Measure the voltage.

Standard Voltage

Tester Connection	Specified Condition
A9-46 (IG1) - Body ground	11 to 14 V

(4) Turn the ignition switch to OFF.
(5) Reconnect the skid control ECU connector.

NG → **REPAIR OR REPLACE HARNESS OR CONNECTOR**

OK ↓

REPLACE BRAKE ACTUATOR

BC

ABS Warning Light does not Come ON

DESCRIPTION

If the ECU detects trouble, it lights the ABS warning light while at the same time prohibiting ABS control. At this time, the ECU records a DTC in the memory.
Connecting terminals TC and CG of the DLC3 causes the ECU to display 2-digit DTCs by flashing the ABS warning light.

WIRING DIAGRAM

See page BC-26.

1 CHECK ABS WARNING LIGHT

(a) Disconnect the skid control ECU connector.
(b) Turn the ignition switch to the ON position.
(c) Check that the ABS warning light comes on.
OK:
ABS warning light comes on.
(d) Turn the ignition switch to OFF.
(e) Reconnect the skid control ECU connector.

OK → **REPLACE BRAKE ACTUATOR**

NG

2 CHECK HARNESS AND CONNECTOR (SKID CONTROL ECU - COMBINATION METER)

Skid Cotrol ECU (harness side connector):

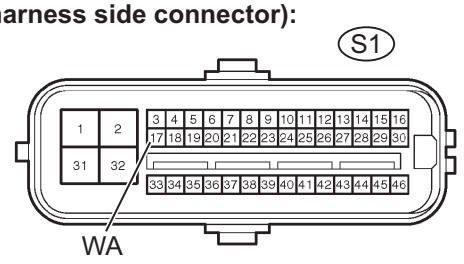

Combination Meter (harness side view):

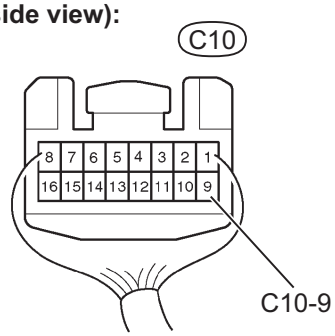

F049387E05

(a) Disconnect the skid control ECU connector.
(b) Disconnect the combination meter connector.
(c) Measure the resistance.
Standard Resistance

Tester Connection	Specified Condition
S1-17 (WA) - C10-9	Below 1 Ω
S1-17 (WA) - Body ground	10 kΩ or higher

(d) Reconnect the combination meter connector.
(e) Reconnect the skid control ECU connector.

NG → **REPAIR OR REPLACE HARNESS OR CONNECTOR**

OK

BC

3	INSPECT COMBINATION METER

(a) Check the combination meter system (See page ME-7).
OK:
Combination meter is normal.

NG → **REPLACE COMBINATION METER**

OK

CHECK FOR INTERMITTENT PROBLEMS

Brake Warning Light Circuit

DESCRIPTION

The BRAKE warning light lights up when the brake fluid is insufficient, the parking brake is applied or the EBD is defective.

WIRING DIAGRAM

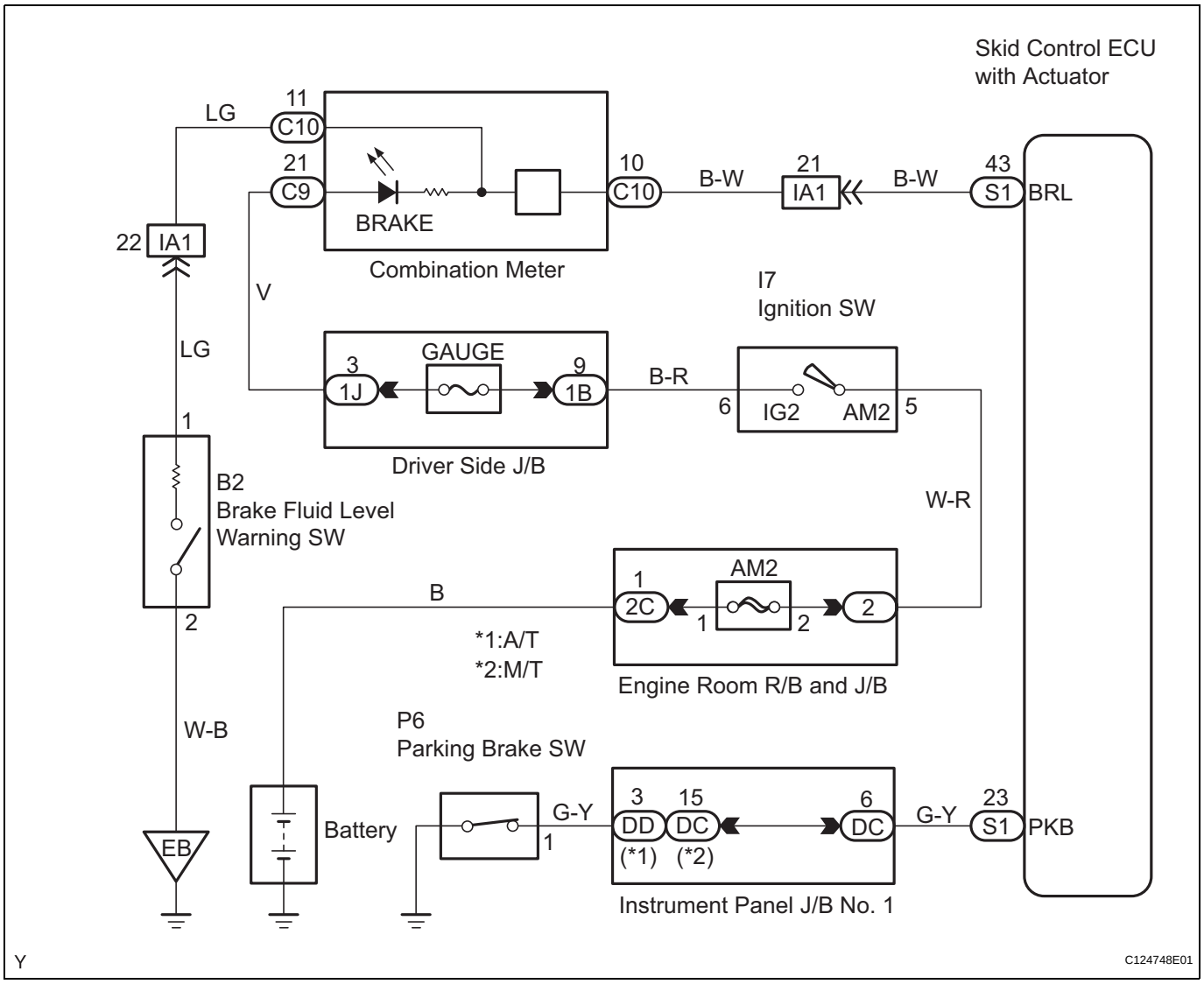

HINT:
Start the inspection from step 1 when using a intelligent tester and start from step 2 when not using a intelligent tester.

1	CHECK BRAKE FLUID LEVEL

(a) Check the amount of brake fluid in the brake reservoir.
OK:
Brake fluid level is correct.

NG	ADD BRAKE FLUID

BC

OK

2	INSPECT BRAKE WARNING LIGHT

(a) When using intelligent tester:
(1) Connect the intelligent tester to the DLC3.
(2) Turn the ignition switch to the ON position.
(3) Turn the intelligent tester ON.
(4) Select the item "BRAKE WARN LIGHT" in the ACTIVE TEST and operate the BRAKE warning light on the intelligent tester.

Item	Vehicle Condition / Test Details	Diagnostic Note
BRAKE WRN LIGHT	Turns BRAKE warning light ON / OFF	Observe combination meter

(5) Check that "ON" and "OFF" of the BRAKE warning light are indicated on the combination meter when using the intelligent tester.
OK:
The BRAKE warning light comes on or goes off according to the intelligent tester operations.

(b) When not using intelligent tester:
(1) Disconnect the skid control ECU connector.
(2) Turn the ignition switch to the ON position.
(3) Ground terminal BRL of the skid control ECU.
(4) Check the BRAKE warning light.
OK

BRL - GND Condition	Illumination Condition
Connecting	OFF
Disconnecting	ON

(5) Turn the ignition switch to OFF.
(6) Reconnect the skid control ECU connector.

Skid Control ECU
(harness side connector):

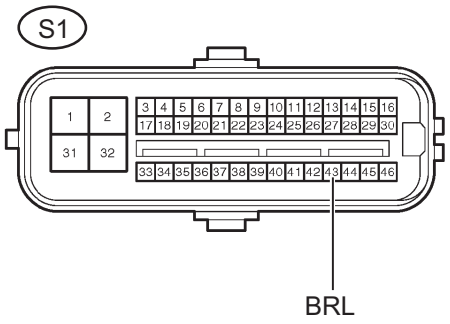

C121700E10

OK → **REPLACE BRAKE ACTUATOR**

NG

BC

3 INSPECT PARKING BRAKE SWITCH ASSEMBLY

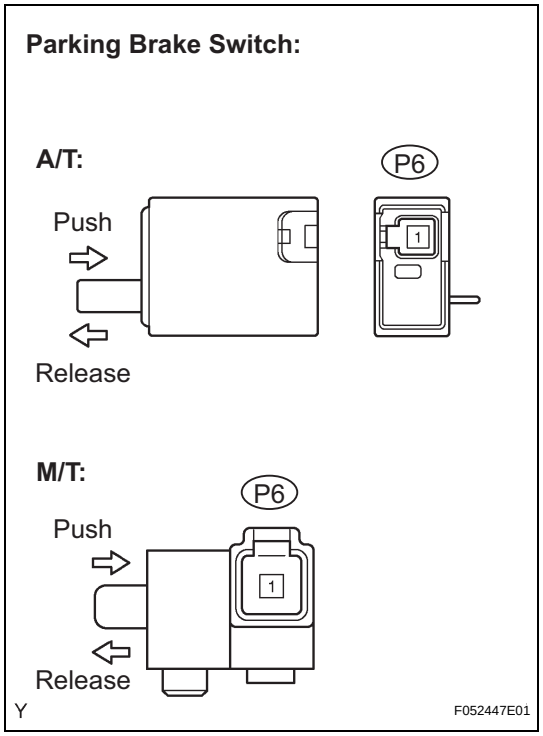

(a) Disconnect the parking brake switch connector.
(b) Measure the resistance.
Standard Resistance

Tester Connection	Condition	Specified Condition
P6-1 Body ground	Released	Below 1 Ω
P6-1 Body ground	Pushed in	10 kΩ or higher

(c) Reconnect the parking brake switch connector.

NG → **REPLACE PARKING BRAKE SWITCH ASSEMBLY**

OK

4 CHECK HARNESS AND CONNECTOR (SKID CONTROL ECU - PARKING BRAKE SWITCH)

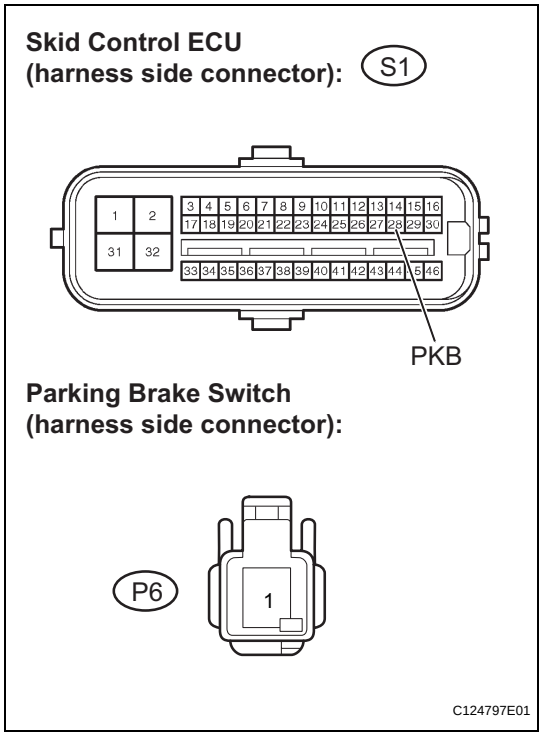

(a) Disconnect the skid control ECU connector.
(b) Disconnect the parking brake switch connector.
(c) Measure the resistance.
Standard Resistance

Tester Connection	Specified Condition
S1-23 (PKB) - P6-1	Below 1 Ω
S1-23 (PKB) - Body ground	10 kΩ or higher

(d) Reconnect the parking brake switch connector.
(e) Reconnect the skid control ECU connector.

NG → **REPAIR OR REPLACE HARNESS OR CONNECTOR**

OK

BC

5	INSPECT BRAKE FLUID LEVEL WARNING SWITCH CIRCUIT

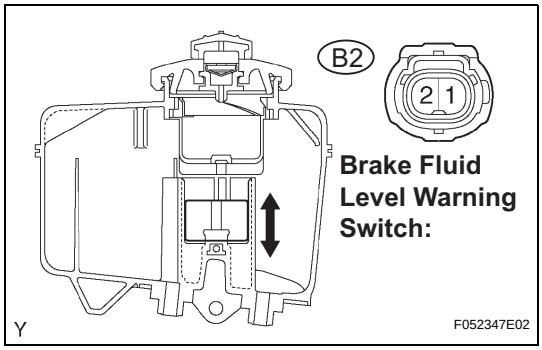

(a) Disconnect the brake fluid level warning switch connector.
(b) Measure the resistance.
Standard Resistance

Tester Connection	Condition	Specified Condition
B2-1 - B2-2	Float UP	10 kΩ or higher
B2-1 - B2-2	Float DOWN	Below 1 Ω

(c) Reconnect the brake fluid level warning switch connector.

NG → **REPLACE BRAKE FLUID RESERVOIR**

OK

6	CHECK HARNESS AND CONNECTOR (COMBINATION METER - BRAKE FLUID LEVEL WARNING SWITCH)

Combination Meter (harness side view):

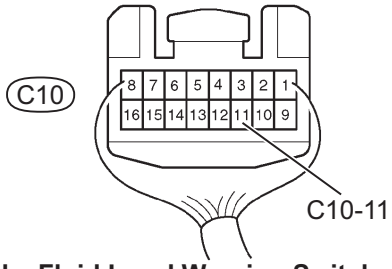

Brake Fluid Level Warning Switch (harness side connector):

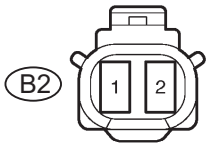

F052161E02

(a) Disconnect the combination meter connector.
(b) Disconnect the brake fluid level warning switch connector.
(c) Measure the resistance.
Standard Resistance

Tester Connection	Specified Condition
C10-11 - B2-1	Below 1 Ω
C10-11 - Body ground	10 kΩ or higher

(d) Reconnect the brake fluid level warning switch connector.
(e) Reconnect the combination meter connector.

NG → **REPAIR OR REPLACE HARNESS OR CONNECTOR**

OK

7	INSPECT COMBINATION METER ASSEMBLY

(a) Check the combination meter system (See page ME-7).
OK:
Combination meter is normal.

NG → **REPLACE COMBINATION METER**

OK

CHECK FOR INTERMITTENT PROBLEMS

TC and CG Terminal Circuit

DESCRIPTION

Connecting terminals TC and CG of the DLC3 causes the ECU to display 2-digit DTCs by flashing the ABS warning light.

WIRING DIAGRAM

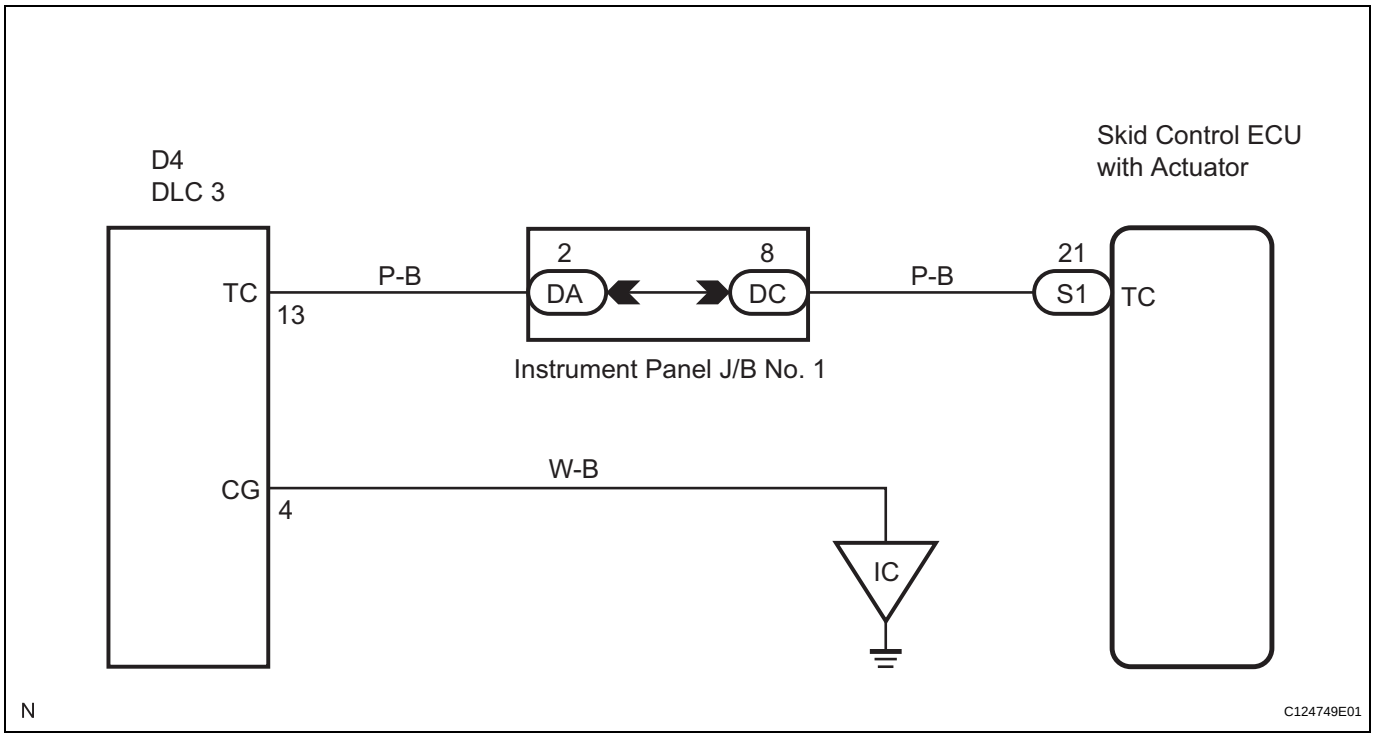

BC

1	INSPECT DLC3 TERMINAL VOLTAGE (TC TERMINAL)

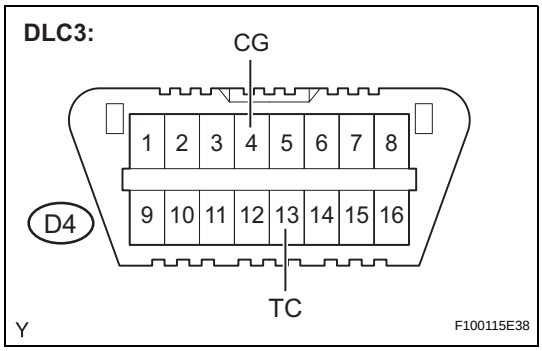

(a) Turn the ignition switch to the ON position.
(b) Measure the voltage.

Standard Voltage

Tester Connection	Specified Condition
D4-13 (TC) - D4-4 (CG)	10 to 14 V

NG → **Go to step 3**

OK

2 CHECK HARNESS AND CONNECTOR (SKID CONTROL ECU - DLC3)

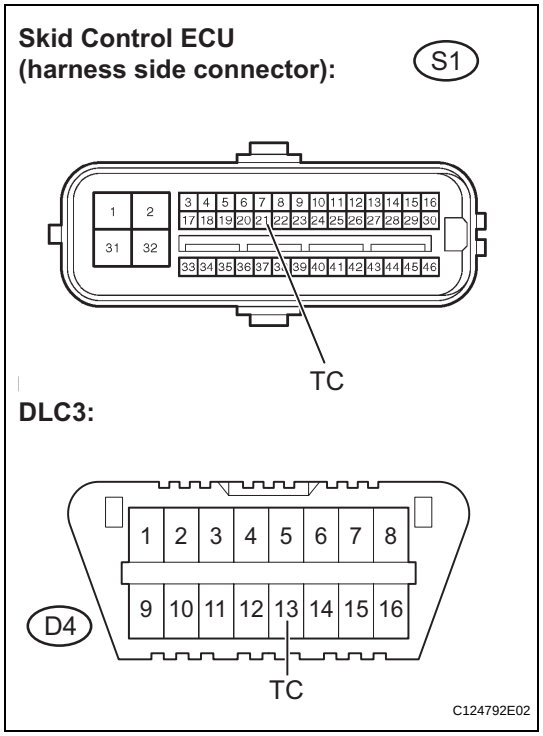

(a) Disconnect the skid control ECU connector.
(b) Measure the resistance.
Standard Resistance

Tester Connection	Specified Condition
S1-21 (TC) - D4-13 (TC)	Below 1 Ω
S1-21 (TC) - Body ground	10 kΩ or higher

(c) Reconnect the skid control ECU connector.

NG → **REPAIR OR REPLACE HARNESS OR CONNECTOR**

OK

REPLACE BRAKE ACTUATOR

BC

3 CHECK HARNESS AND CONNECTOR (DLC3 - BODY GROUND)

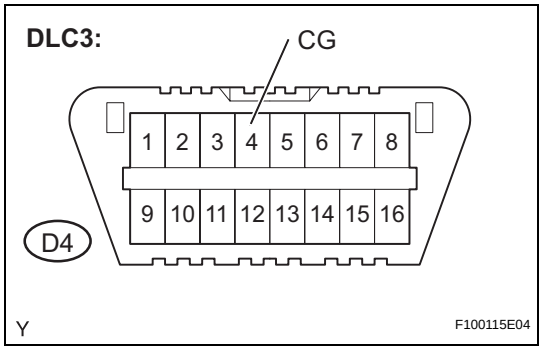

(a) Measure the resistance.
Standard Resistance

Tester Connection	Specified Condition
D4-4 (CG) - Body ground	Below 1 Ω

NG → **REPAIR OR REPLACE HARNESS OR CONNECTOR**

OK

4	CHECK HARNESS AND CONNECTOR (SKID CONTROL ECU - DLC3)

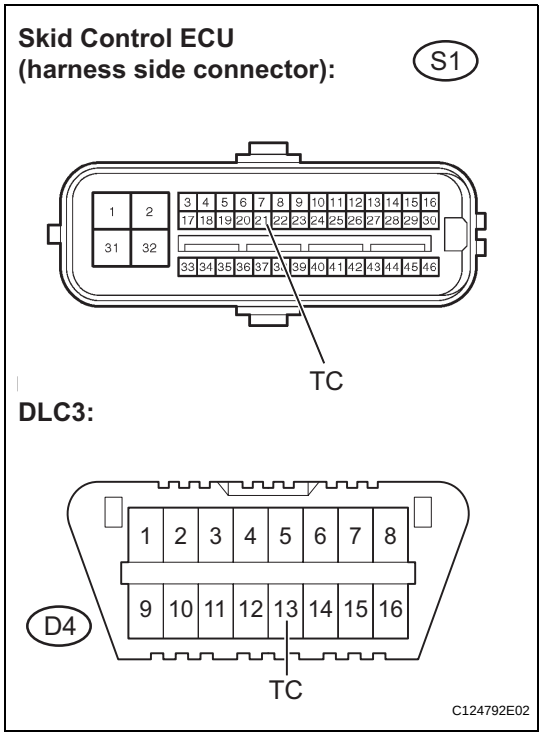

(a) Disconnect the skid control ECU connector.
(b) Measure the resistance.
Standard Resistance

Tester Connection	Specified Condition
S1-21 (TC) - D4-13 (TC)	Below 1 Ω
S1-21 (TC) - Body ground	10 kΩ or higher

(c) Reconnect the skid control ECU connector.

NG → **REPAIR OR REPLACE HARNESS OR CONNECTOR**

OK

BC

REPLACE BRAKE ACTUATOR

TS and CG Terminal Circuit

DESCRIPTION

In sensor check mode, malfunctions of the speed sensor that cannot be detected when the vehicle is stopped are detected while driving.
Transition to the sensor check mode can be performed by connecting terminals TS and CG of the DLC3 and turning the ignition switch from OFF to the ON position.

WIRING DIAGRAM

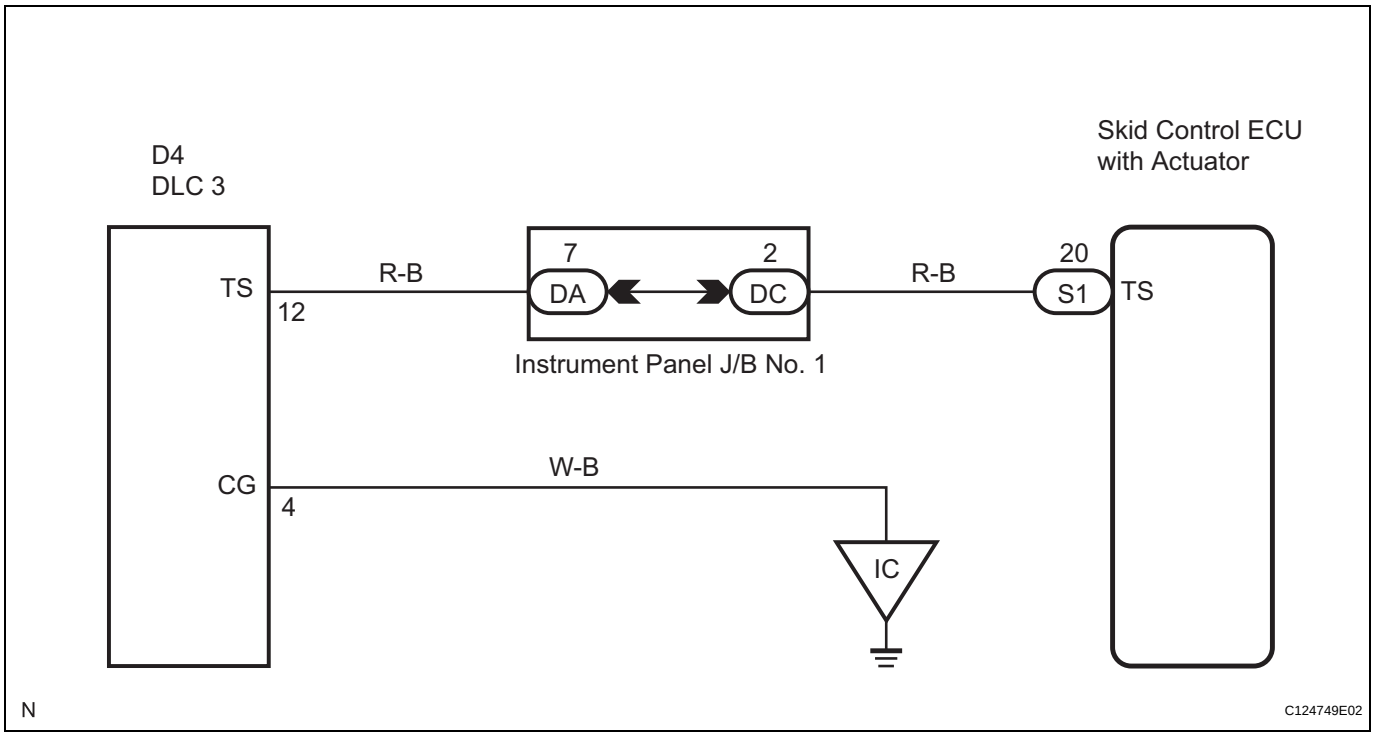

BC

1	INSPECT DLC3 TERMINAL VOLTAGE (TS TERMINAL)

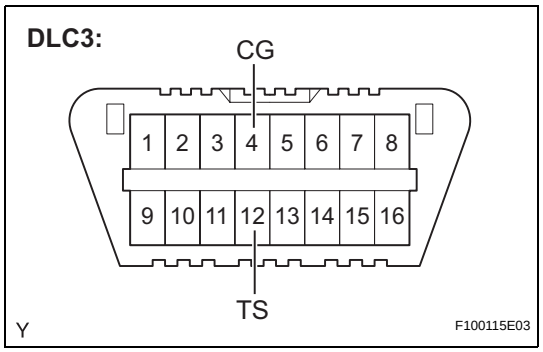

(a) Turn the ignition switch to the ON position.
(b) Measure the voltage.
Standard Voltage

Tester Connection	Specified Condition
D4-12 (TS) - D4-4 (CG)	10 to 14 V

NG → **Go to step 3**

OK

2	CHECK HARNESS AND CONNECTOR (SKID CONTROL ECU - DLC3)

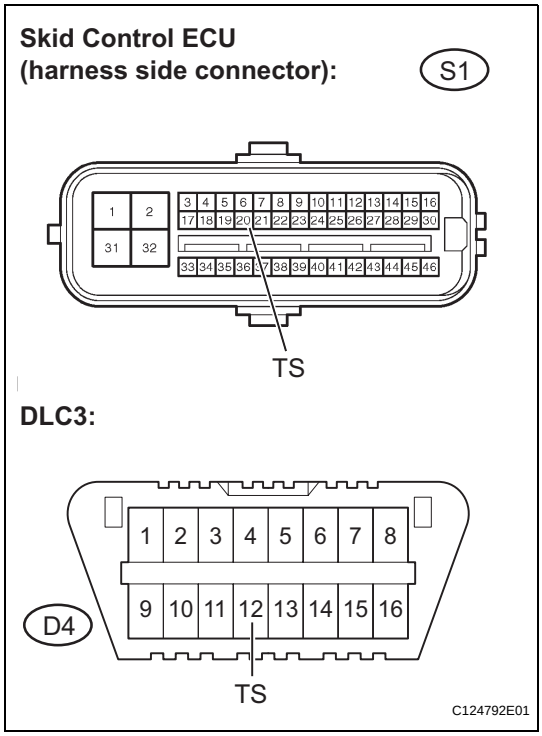

(a) Disconnect the skid control ECU connector.
(b) Measure the resistance.
Standard Resistance

Tester Connection	Specified Condition
S1-20 (TS) - D4-12 (TS)	Below 1 Ω
S1-20 (TS) - Body ground	10 kΩ or higher

(c) Reconnect the skid control ECU connector.

NG → **REPAIR OR REPLACE HARNESS OR CONNECTOR**

OK

BC

REPLACE BRAKE ACTUATOR

3	CHECK HARNESS AND CONNECTOR (BODY GROUND - DLC3)

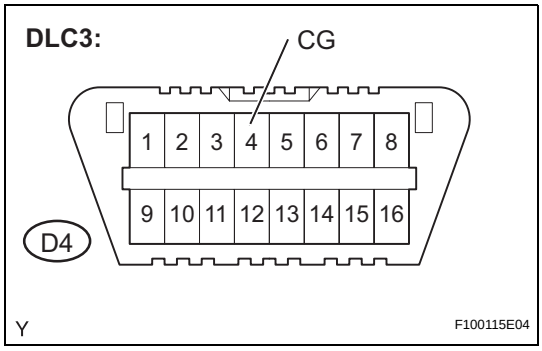

(a) Measure the resistance.
Standard Resistance

Tester Connection	Specified Condition
D4-4 (CG) - Body ground	Below 1 Ω

NG → **REPAIR OR REPLACE HARNESS OR CONNECTOR**

OK

4	CHECK HARNESS AND CONNECTOR (SKID CONTROL ECU - DLC3)

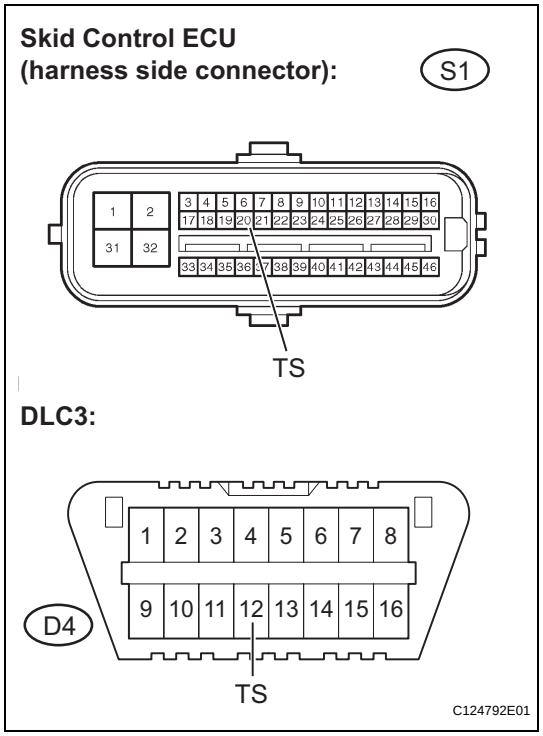

(a) Disconnect the skid control ECU connector.
(b) Measure the resistance.
Standard Resistance

Tester Connection	Specified Condition
S1-20 (TS) - D4-12 (TS)	Below 1 Ω
S1-20 (TS) - Body ground	10 kΩ or higher

(c) Reconnect the skid control ECU connector.

NG → **REPAIR OR REPLACE HARNESS OR CONNECTOR**

OK

REPLACE BRAKE ACTUATOR

SYSTEM DIAGRAM

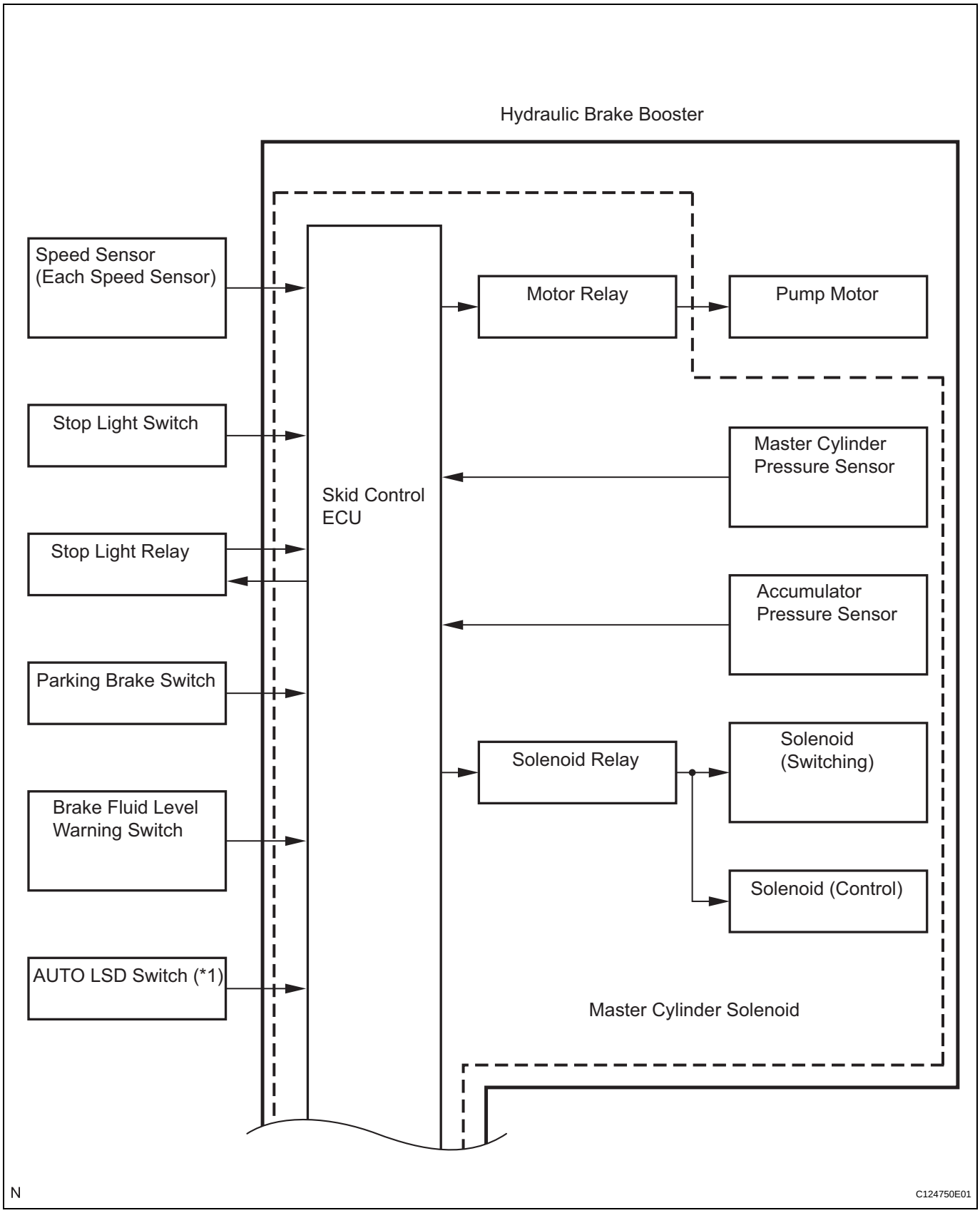

BC

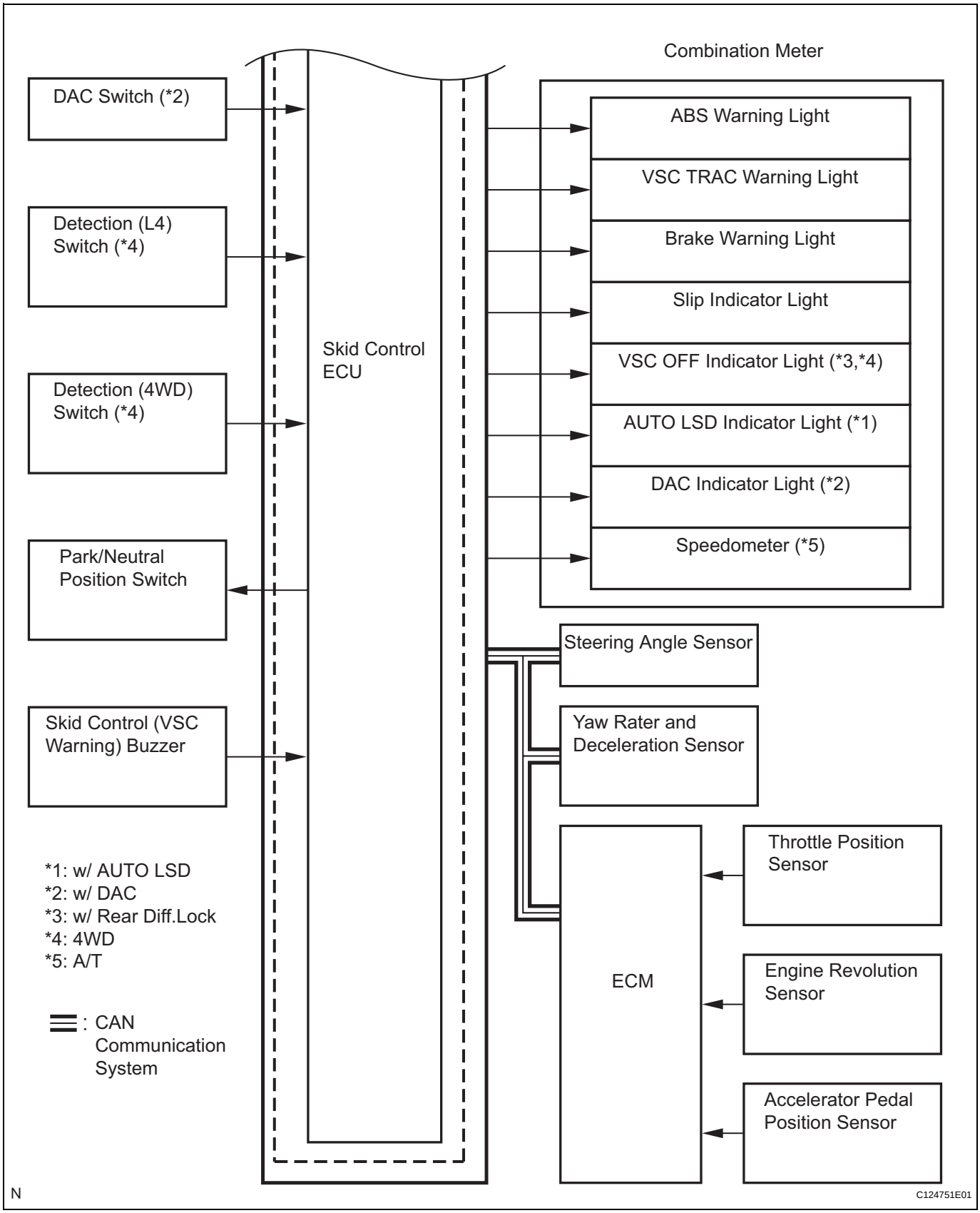

Transmitting ECU (Transmitter)	Receiving ECU	Signals	Communication Method
ECM	Skid control ECU	Throttle position signal	CAN communication system
ECM	Skid control ECU	Engine revolution signal	CAN communication system
ECM	Skid control ECU	Accelerator pedal position signal	CAN communication system

BC

Transmitting ECU (Transmitter)	Receiving ECU	Signals	Communication Method
ECM	Skid control ECU	Intake temperature signal	CAN communication system
Skid control ECU	ECM	Yaw rate and deceleration signal	CAN communication system
Skid control ECU	ECM	Steering angle signal	CAN communication system
Skid control ECU	ECM	Throttle opening angle request signal	CAN communication system

SYSTEM DESCRIPTION

1. SYSTEM DESCRIPTION

HINT:

- The skid control ECU forms a single unit with the hydraulic brake booster.
- The yaw rate sensor and deceleration sensor are combined in a single unit. This unit communicates with the skid control ECU through CAN communication.

(a) ABS with EBD & BA & TRAC & VSC operation

(1) The skid control ECU determines the wheel slipping conditions by receiving signals from each speed sensor, the yaw rate and deceleration sensor and the steering angle sensor. The ECU controls the engine output torque using electronic throttle control, and the wheel brake pressure using the brake actuator, according to these signals.

(2) The SLIP indicator blinks and the skid control buzzer sounds to inform the driver that the VSC system is operating. The SLIP indicator also blinks when TRAC is operating, and the operation being performed is displayed.

2. ACTIVE SAFETY

(a) ABS (Anti-lock Brake System)

The ABS helps prevent the wheels from locking when the brakes are applied firmly or when braking on a slippery surface.

BC

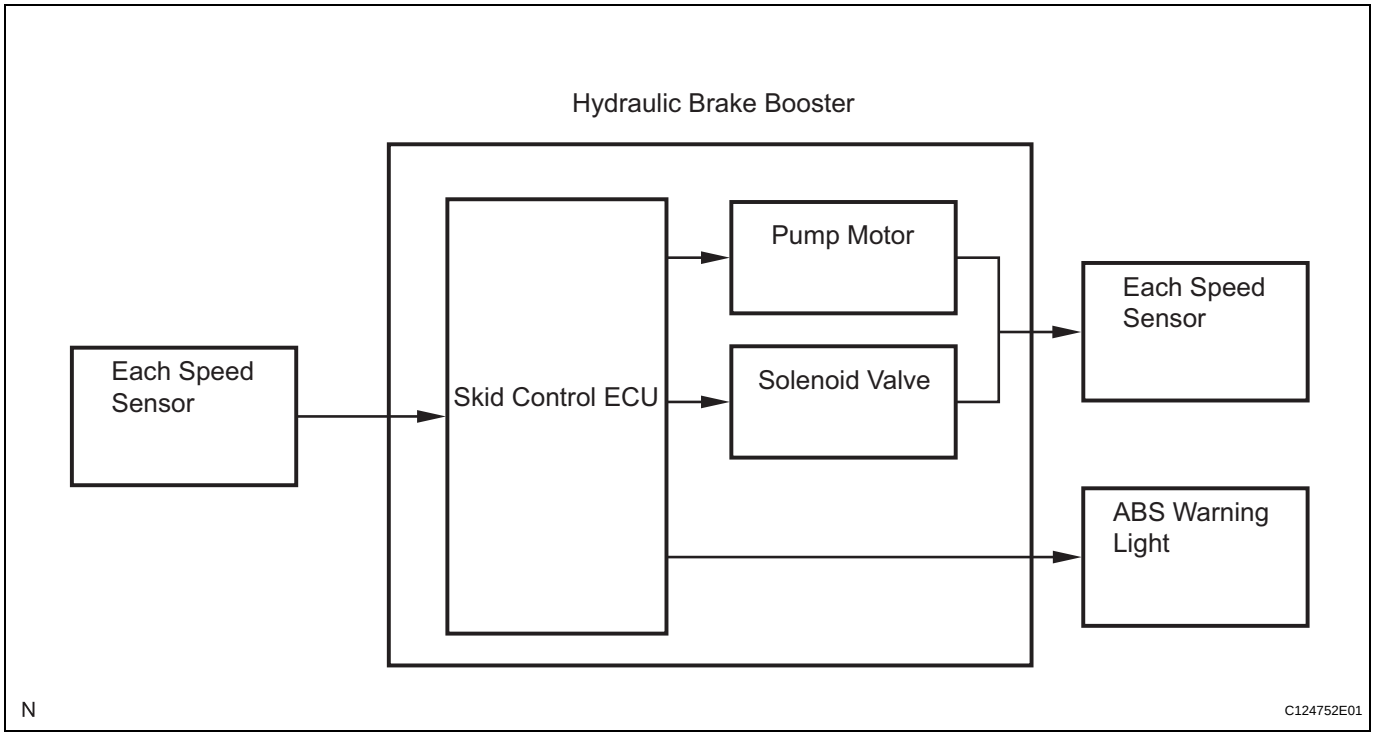

Operation description
The skid control ECU detects the wheel lock condition by receiving vehicle speed signals from each speed sensor, and sends control signals to the pump motor and solenoid valve. The pump motor and solenoid valve prevent the wheels from locking by controlling the oil pressure of each wheel cylinder.
The ABS warning light comes on when the ABS system malfunctions.

(b) EBD (Electronic Brake force Distribution)
The EBD control utilizes ABS, realizing proper brake force distribution between the front and rear wheels in accordance with the driving conditions. In addition, when braking while cornering, it also controls the brake forces of the right and left wheels, helping to control the vehicle behavior.

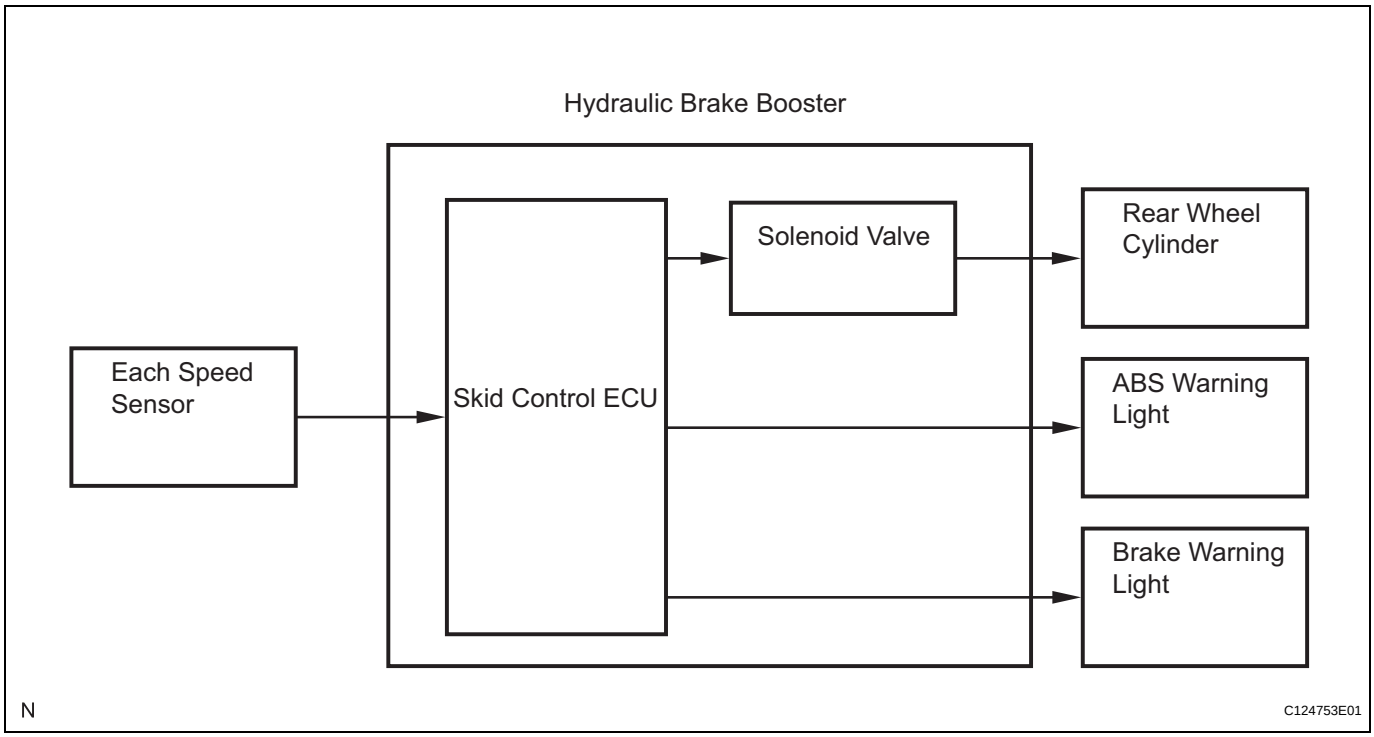

Operation description
The skid control ECU receives the speed signals from each speed sensor to detect the slip condition of the wheels and sends the control signal to the solenoid.
The solenoid valve controls the oil pressure of the rear wheel cylinder and divides the control power appropriately between the front and rear wheels and the right and left wheels.
Both of the ABS and the brake warning lights come on when the EBD system malfunctions.

(c) BA (Brake Assist)
The primary purpose of the brake assist system is to provide an auxiliary brake force to assist drivers who cannot generate a large enough brake force during emergency braking, thus helping to maximize the vehicle's brake performance.

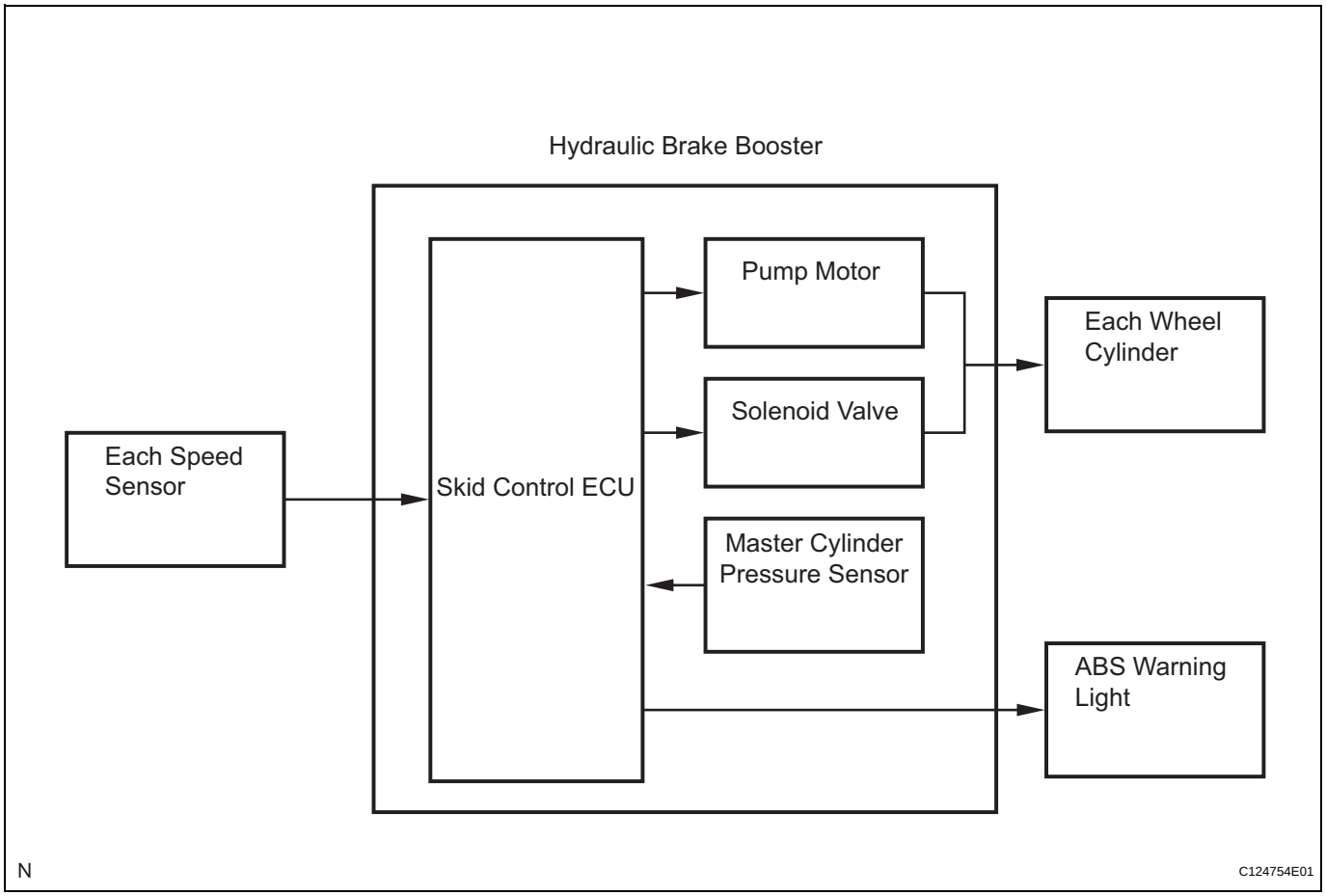

Operation description
The skid control ECU receives the speed signal from each speed sensor and the oil pressure signal from the master cylinder pressure sensor to determine whether brake assist is necessary or not. If brake assist is necessary, the skid control ECU sends control signals to the pump motor and solenoid. The pump and the solenoid valve then control the pressure applied to each wheel cylinder. The ABS warning light comes on when the BA system malfunctions.

(d) VSC (Vehicle Stability Control)
The VSC system helps prevent the vehicle from slipping sideways as a result of strong front wheel skid or strong rear wheel skid during cornering.

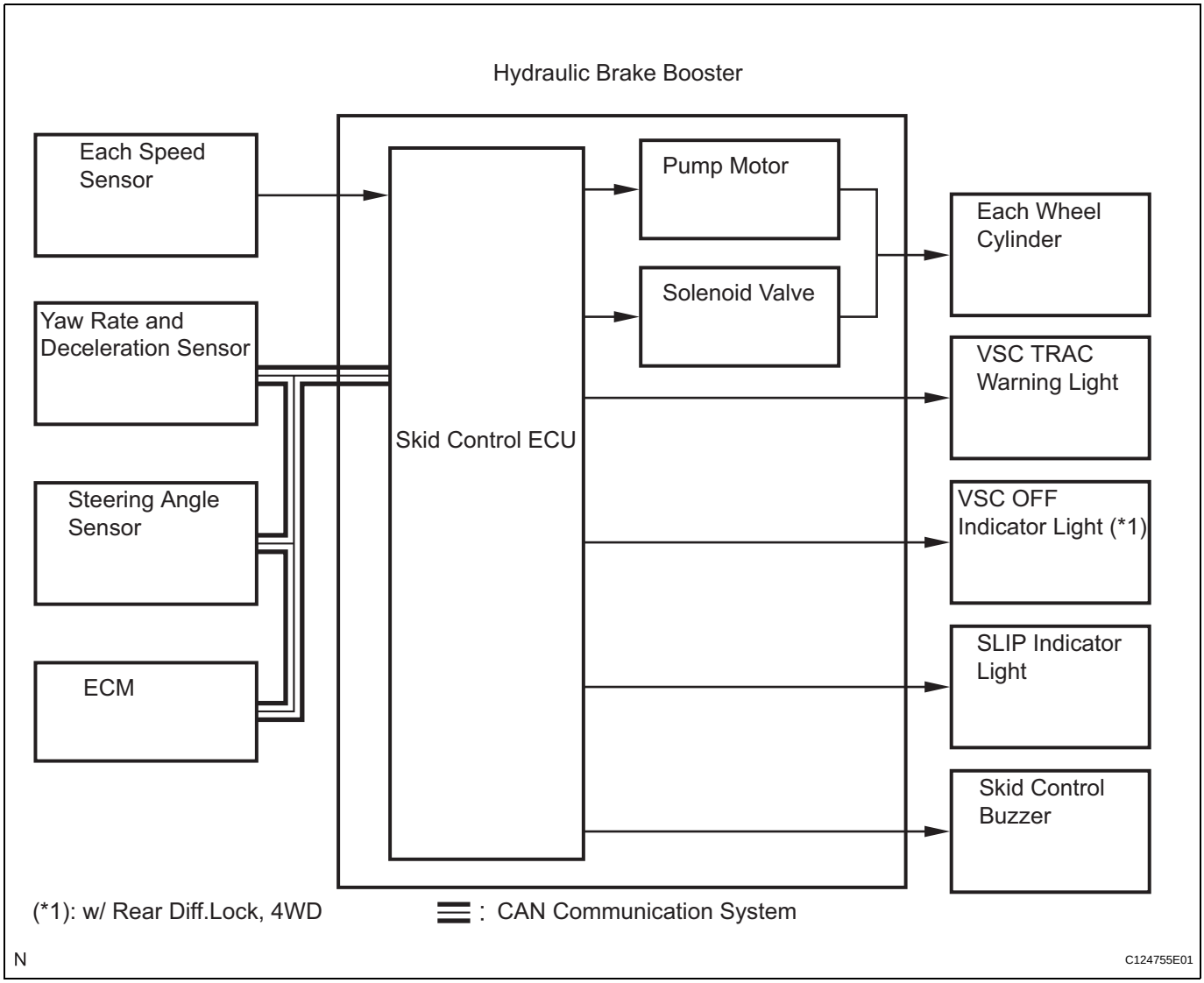

Operation description
The skid control ECU determines the vehicle condition by receiving signals from the speed sensors, yaw rate and deceleration sensor and steering angle sensor. The skid control ECU controls the engine torque through the ECM via CAN communication, and the oil pressure through the pump and solenoid valve.
The SLIP indicator light blinks and the skid control buzzer sounds when the system is operating. Both the VSC TRAC warning light and the VSC OFF indicator light (w/ rear diff. lock, 4WD) come on when the VSC system malfunctions.

BC

3. DRIVING PERFORMANCE

(a) TRAC (Traction Control)

The TRAC system helps prevent the drive wheels from slipping if the driver presses down on the accelerator pedal excessively when starting off or accelerating on a slippery surface.

HINT:

The TRAC system operates when 2WD mode is selected (4WD vehicles only).

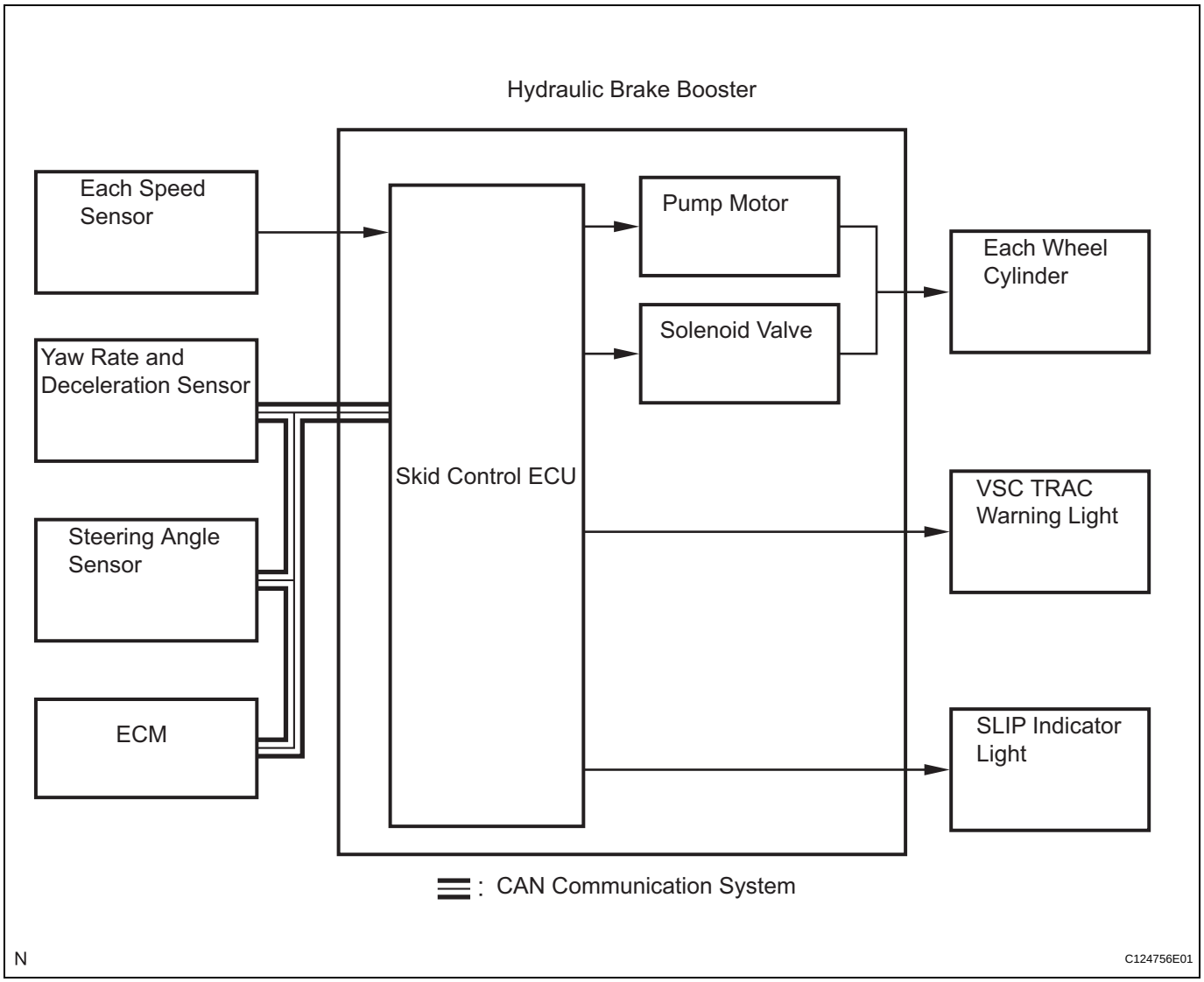

Operation description

The skid control ECU detects the vehicle's slip condition by receiving signals from the speed sensors and ECM via CAN communication. The skid control ECU controls the engine torque through the ECM via CAN communication, and the oil pressure through the pump and solenoid valve. The SLIP indicator light blinks when the system is operating. Both the VSC TRAC warning light and SLIP indicator light come on when the TRAC system malfunctions.

BC

(b) A-TRAC (Active Traction Control) (4WD)
During rugged off-road driving, this function controls the engine output and the brake fluid pressure that is applied to slipping wheels, and distributes the drive force that would have been lost through the slippage to the remaining wheels in order to achieve a LSD (Limited Slip Differential) effect. As a result, the vehicle's off-road drivability and ability to free itself from moguls have been increased.
HINT:
The A-TRAC system operates when 4WD mode is selected (4WD vehicles only).

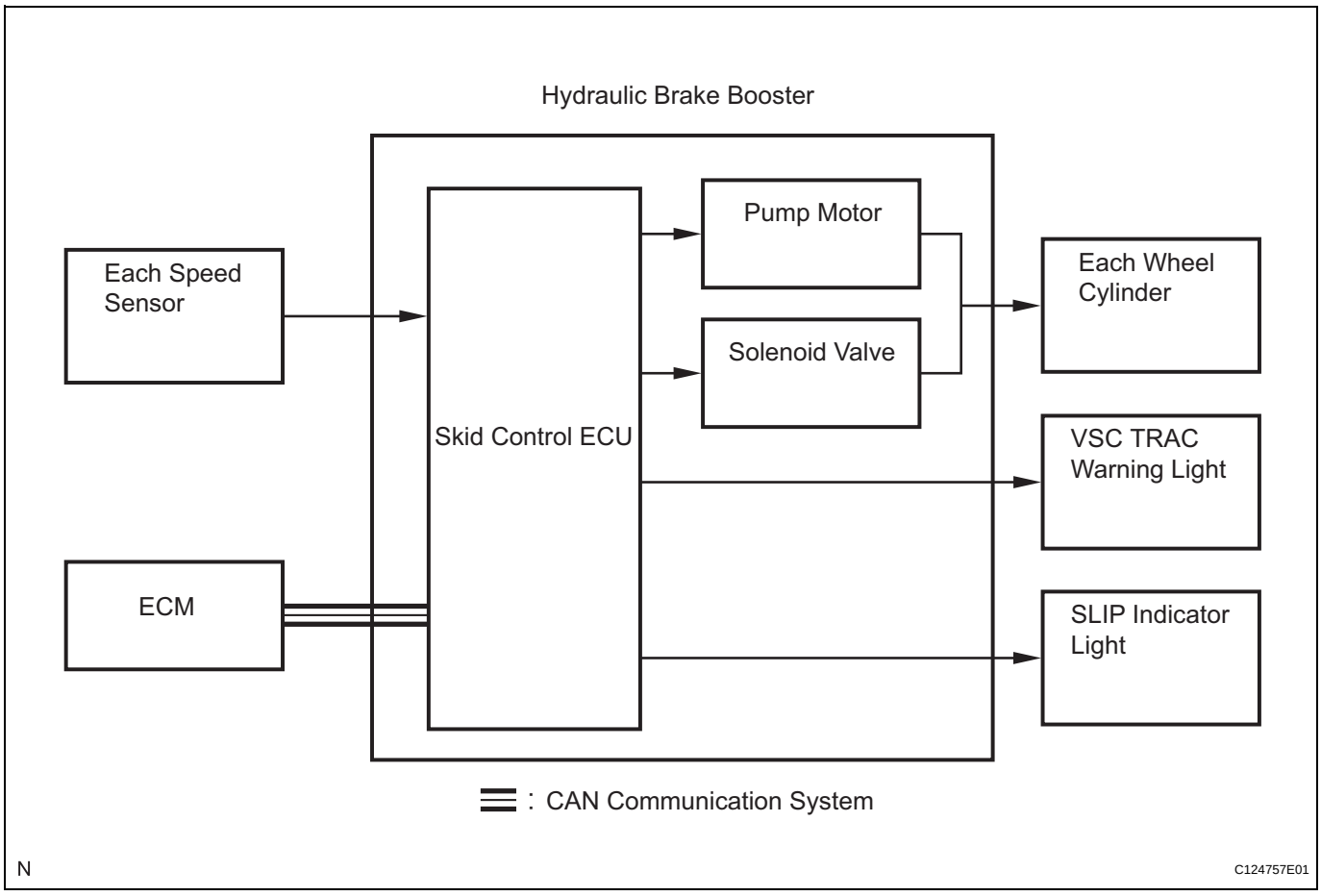

Operation description
The SLIP indicator light blinks when the system is operating. Both the VSC TRAC warning light and SLIP indicator light come on when the A-TRAC system malfunctions.

(c) AUTO-LSD (Auto Limited Slip Differential)
When the vehicle enters 2WD mode, the AUTO LSD operates with the AUTO LSD switch on and the accelerator pedal depressed.
The TRAC system restrains brake pressure and reduces differential move, thus transmitting the drive torque to the other drive wheel to ensure stability under the following conditions:
- Wheels run off the road.

BC

- Drive wheels run idle when starting on a slope with one wheel on snow/ice.

HINT:
Depressing the brake pedal cancels control of the AUTO LSD system.
The AUTO LSD system operates when 2WD mode is selected (4WD vehicles only).

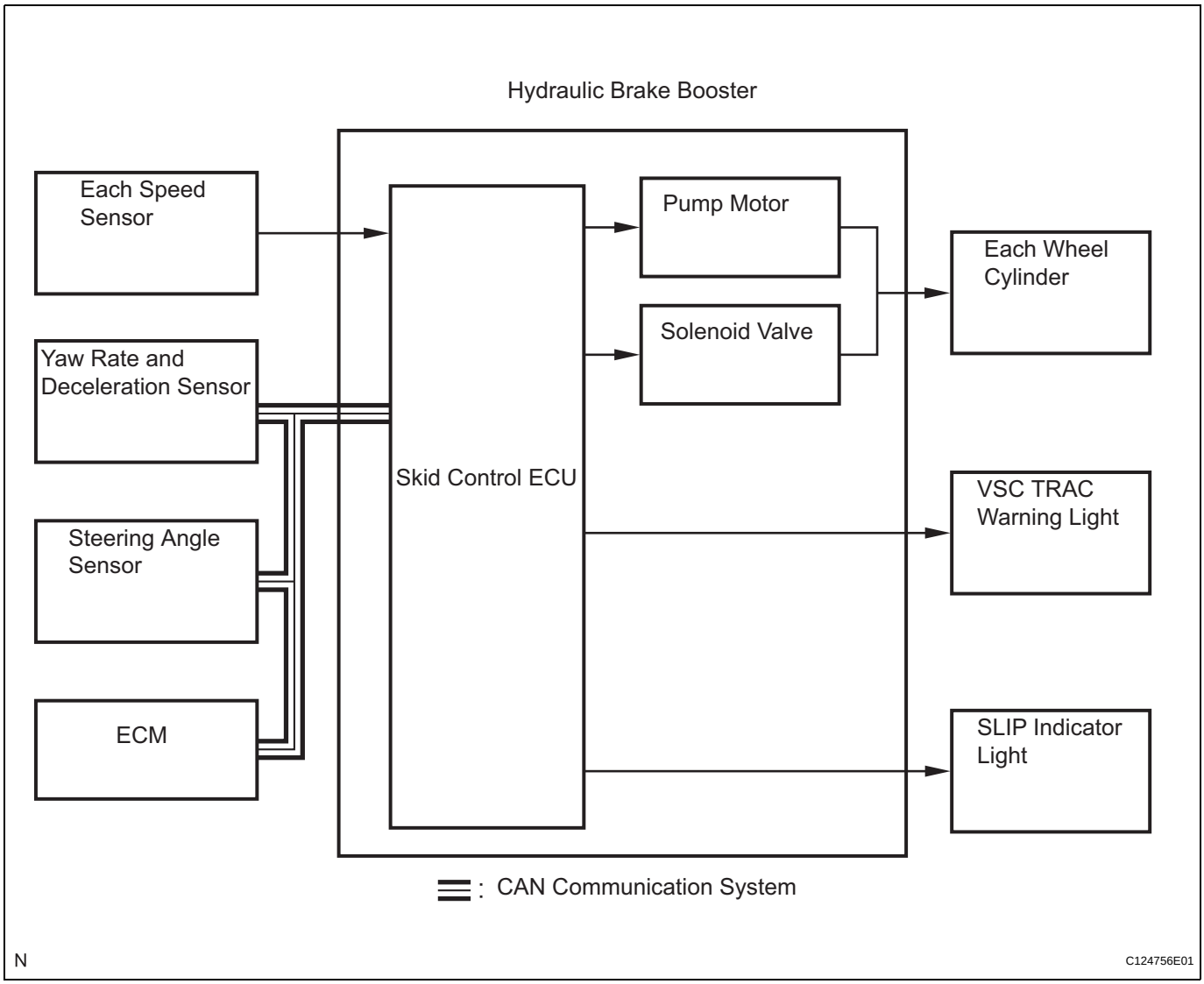

Operation description
The SLIP indicator light blinks and the AUTO LSD indicator light comes on when the system is operating.
Both the VSC TRAC warning light and SLIP indicator light come on when the AUTO LSD system malfunctions.

BC

(d) DAC (Downhill Assist Control) (4WD)
When the DAC switch is pressed with the transfer in low (L4) range and without the accelerator and brake pedals in operation, the DAC activates 4-wheel hydraulic pressure control, in order to maintain a constant low vehicle speed without causing the wheels to become locked. Thus, the vehicle can descend steep hills in a stable manner.
HINT:
Depressing the accelerator and brake pedals cancels control of the DAC system.
Begins operating when driving down slopes at a speed of 16 mph (25 km/h) or less with the engine brake applied.

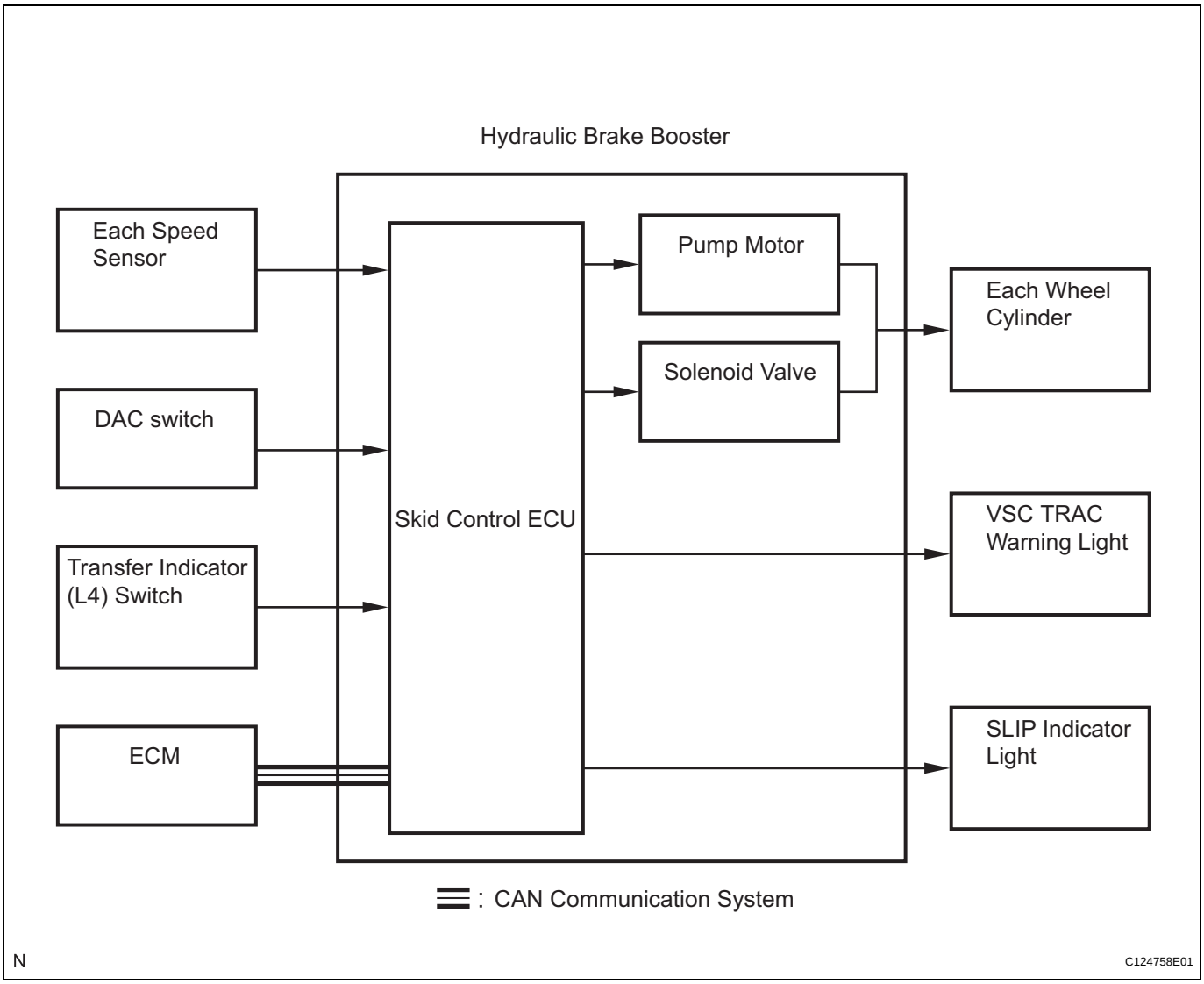

Operation description
The SLIP indicator light blinks and the DAC indicator light and BRAKE warning light come on when the system is operating.
The VSC TRAC warning light comes on and the DAC indicator light blinks when the DAC system malfunctions.

(e) HAC (Hill-start Assist Control)
When the vehicle starts off on a steep hill, HAC detects the backward descent of the vehicle and effects 4-wheel hydraulic pressure control to reduce the speed of the vehicle.
For a Maximum of 5 seconds after the control starts, fluid pressure is gradually released and the control is complete.
HINT:
Depressing the brake pedal cancels control of the HAC system.
Does not operate when the shift lever is in the P position or N position, or when the vehicle is running/rolling back up a slope with the shift lever in the R position.

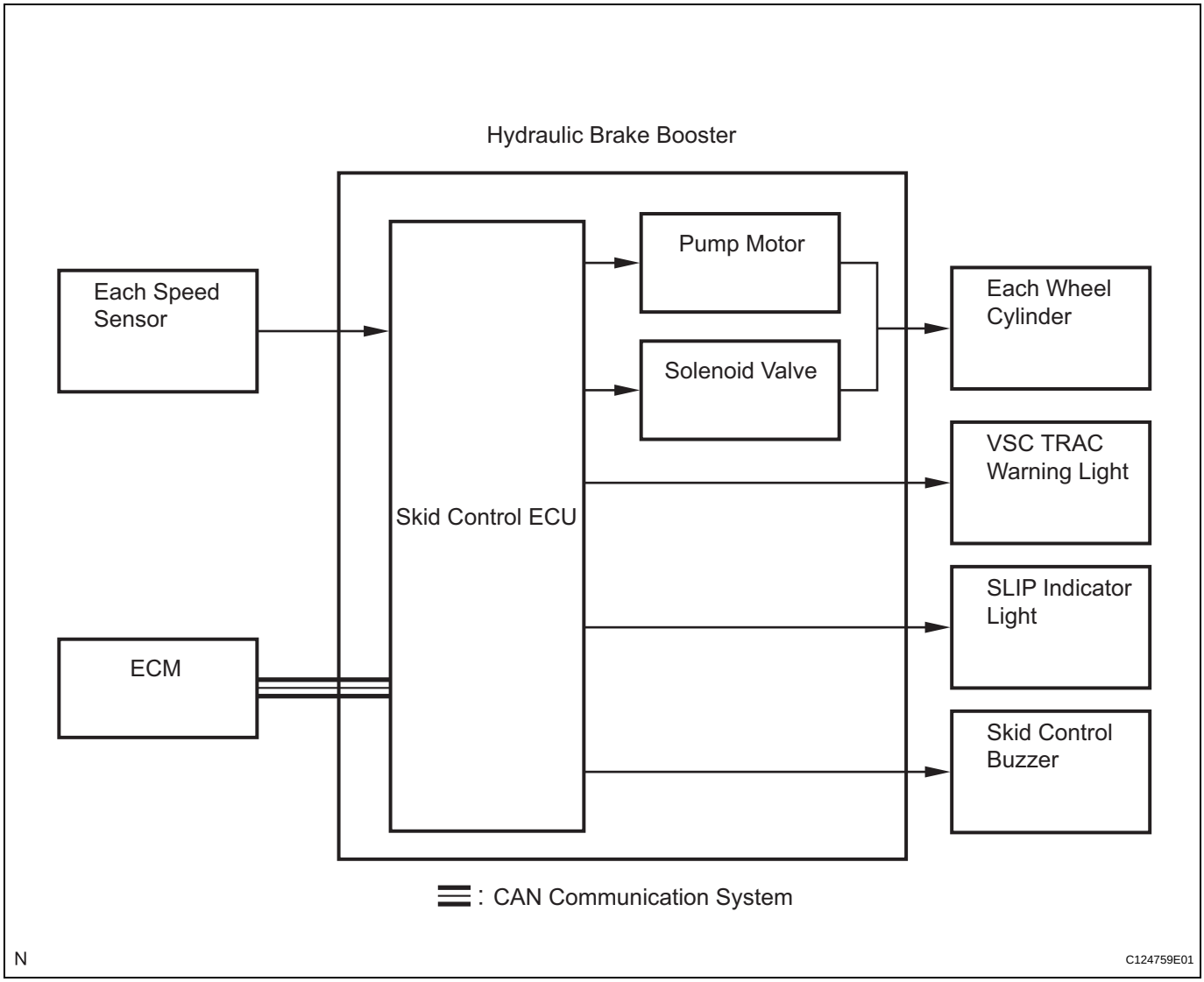

Operation description
The SLIP indicator light blinks, the BRAKE warning light comes on, and the skid control buzzer sounds when the system is operating.
The VSC TRAC warning light comes on when the HAC system malfunctions.

4. FUNCTION OF COMPONENTS

Components	Function
Speed sensor	Detects wheel speed of each wheel.
Hydraulic brake booster	Upon receiving brake control signal from skid control ECU, controls hydraulic circuit and sends hydraulic pressure to each wheel. Master cylinder solenoid (skid control ECU) removable.
Master cylinder solenoid Skid control ECU	Detects vehicle condition based on signals from sensors and sends brake control signal to hydraulic brake booster.
Motor relay	Supplies power source to pump motor.
Solenoid relay	Supplies power source to each solenoid.
ABS warning light	Illuminates to inform driver that skid control ECU has detected ABS system malfunction and terminated ABS system operation.
BRAKE warning light	Illuminates to inform driver that skid control ECU has detected BRAKE system malfunction.
VSC TRAC warning light	Illuminates to inform driver that skid control ECU has detected VSC system malfunction and terminated VSC system operation.
SLIP indicator light	Blinks to inform driver that TRAC or VSC in operation.
Yaw rate and deceleration sensor	Detects vehicle's yaw rate and deceleration and sends signal to skid control ECU.
Master cylinder pressure sensor	Built into hydraulic brake booster. Detects pressure inside master cylinder.
Steering angle sensor	Detects steering wheel's steering angle and amount of movement, then sends signal to skid control ECU.
ECM	• Sends sensor signals (throttle opening angle, engine rpm) to skid control ECU. • Engine controlled based on traction control signal from skid control ECU.

HOW TO PROCEED WITH TROUBLESHOOTING

The intelligent tester can be used in steps 3, 6, 9 and 12.

1 VEHICLE BROUGHT TO WORKSHOP

NEXT

2 CUSTOMER PROBLEM ANALYSIS

NEXT

3 CHECK AND CLEAR DTCS AND FREEZE FRAME DATA

NEXT

4 PROBLEM SYMPTOM CONFIRMATION

NEXT

5 CHECK CAN COMMUNICATION SYSTEM

BC

(a) Check for output DTCs.
HINT:
The ECM of this system is connected to the CAN communication system. Therefore, before starting troubleshooting, be sure to check that there is no trouble in the CAN communication system.

Result	Proceed to
CAN communication system DTC not output	A
CAN communication system DTC output	B

B → CAN COMMUNICATION SYSTEM

A

6 CHECK AND CLEAR DTCS

NEXT

7	PROBLEM SYMPTOM SIMULATION

Result	Proceed to
Symptom does not occur	A
Symptom occurs	B

B → GO TO STEP 9

A

8	SYMPTOM SIMULATION

NEXT

9	CHECK DTCS (OTHER THAN CAN SYSTEM DTCS)

Result	Proceed to
DTC not output	A
DTC output	B

B → GO TO STEP 11

A

10	PROBLEM SYMPTOMS TABLE

NEXT

GO TO STEP 12

11	DTC CHART

NEXT

12	**CIRCUIT INSPECTION**

NEXT

13	**PROBLEM IDENTIFICATION**

NEXT

14	**REPAIR OR REPLACE**

NEXT

15	**CONFIRMATION TEST**

NEXT

END

CHECK FOR INTERMITTENT PROBLEMS

1. DESCRIPTION

HINT:
A momentary interruption (open circuit) in the connectors and/ or wire harness between the sensors and ECUs can be detected through the ECU data monitor function of the intelligent tester.

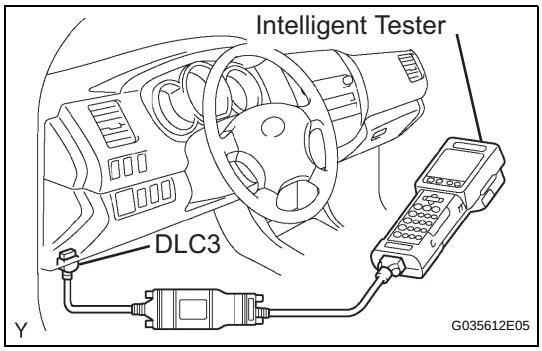

(a) Turn the ignition switch off and connect the intelligent tester to the DLC3.
(b) Turn the ignition switch on. Follow the on-screen directions on the intelligent tester to display the DATA LIST and select areas which should be monitored for momentary interruptions.
HINT:
A momentary interruption (open circuit) cannot be detected for 3 seconds after the ignition switch is turned on (initial check).

Item	Measurement Item / Range (Display)	Normal Condition	Diagnostic Note
SPD SEN FR	FR speed sensor open detection / OPEN or NORMAL	OPEN : momentary interruption	-
SPD SEN FL	FL speed sensor open detection / OPEN or NORMAL	OPEN : momentary interruption	-
SPD SEN RR	RR speed sensor open detection / OPEN or NORMAL	OPEN : momentary interruption	-
SPD SEN RL	RL speed sensor open detection / OPEN or NORMAL	OPEN : momentary interruption	-

BC

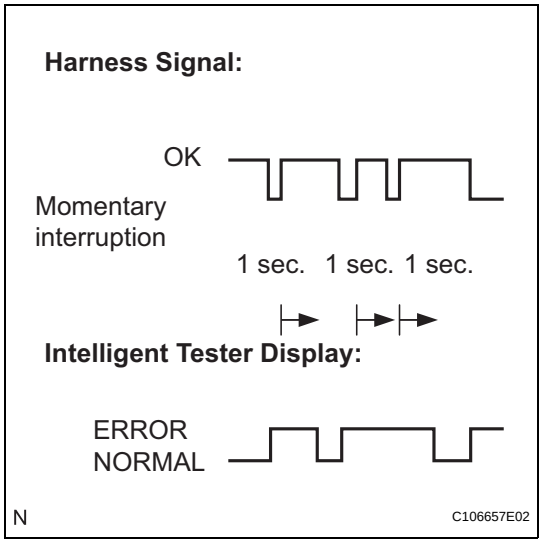

HINT:
- If the intelligent tester status remains open, check the continuity between the ECU and the sensors, or between ECUs.
- The OPEN display on the intelligent tester remains on for 1 second after the harness signal changes from momentary interruption (open circuit) to normal condition.

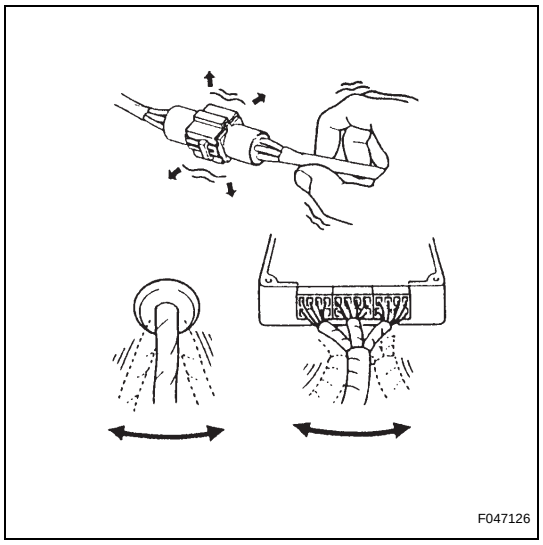

(c) While observing the screen, gently jiggle the connector or wire harness between the ECU and sensors, or between ECUs.
OK:
OPEN-screen display does not change.

CALIBRATION

1. DESCRIPTION

(a) After replacing the VSC relevant components or performing "Front wheel alignment adjustment", clearing and reading the sensor calibration data are necessary.

(b) Follow the chart to perform calibration.

Replacing Parts	Necessary Operations
Skid Control ECU	Yaw rate sensor and deceleration sensor zero point calibration.
Yaw Rate Sensor	1. Clearing zero point calibration data. 2. Yaw rate sensor and deceleration sensor zero point calibration.
Front Wheel Alignment	1. Clearing zero point calibration data. 2. Yaw rate sensor and deceleration sensor zero point calibration.

2. CLEAR ZERO POINT CALIBRATION (for Using a Intelligent Tester)

HINT:

After replacing the yaw rate and deceleration sensor, be sure to clear the zero point calibration data in the skid control ECU and perform zero point calibration.

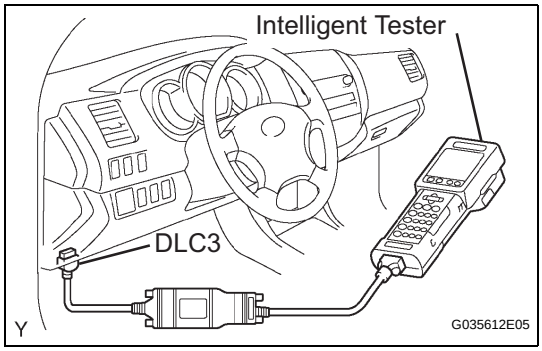

(a) Connect the intelligent tester to the DLC3.

(b) Turn the ignition switch to the ON position.

(c) Operate the intelligent tester to erase the DTCs.

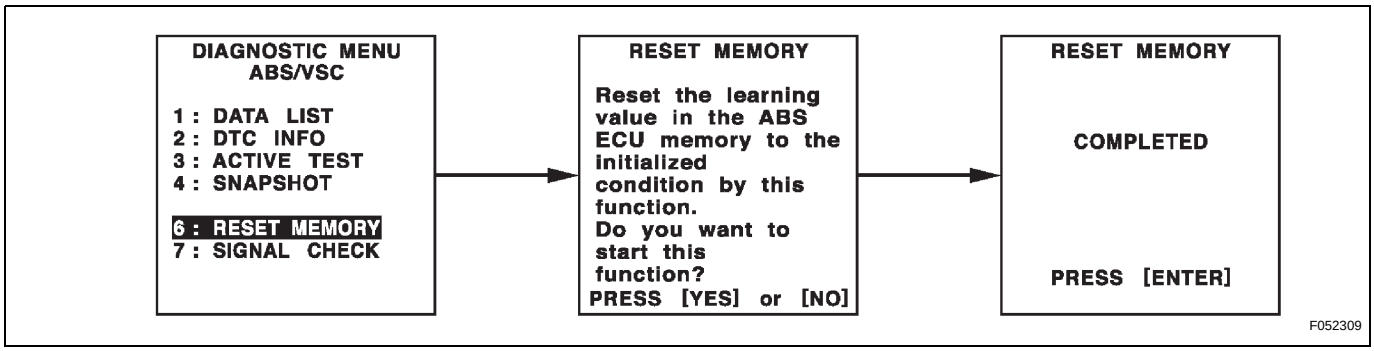

(d) Perform zero point calibration of the yaw rate and deceleration sensor using the intelligent tester.

3. PERFORM ZERO POINT CALIBRATION OF YAW RATE SENSOR AND DECELERATION SENSOR (for Using a Intelligent Tester)

HINT:

After replacing the yaw rate and deceleration sensor, be sure to clear the zero point calibration data in the skid control ECU and perform zero point calibration.

NOTICE:

- **While obtaining the zero point, do not vibrate the vehicle by tilting, moving or shaking it and keep it stationary. (Do not start the engine.)**
- **Be sure to do this on a level surface (with an inclination of less than 1 degree).**

(a) Procedures for test mode.

(1) Turn the ignition switch to OFF.

(2) Check that the steering wheel is in the straight-ahead position.

(3) A/T: Check that the shift lever is in the P position and apply the parking brake.
M/T: Check that the shift lever is in neutral and apply the parking brake.
NOTICE:
DTC C1210/36 and C1336/39 will be recorded if the shift lever is not in the P position.

(4) Connect the intelligent tester to the DLC3.

(5) Turn the ignition switch to the ON position.

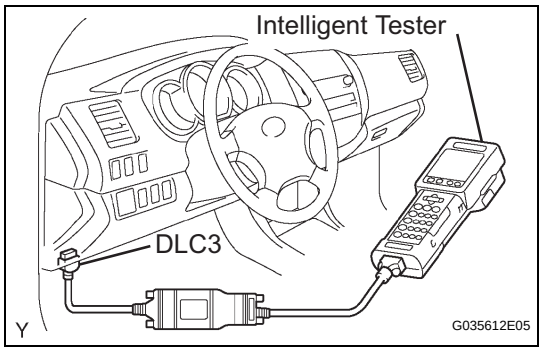

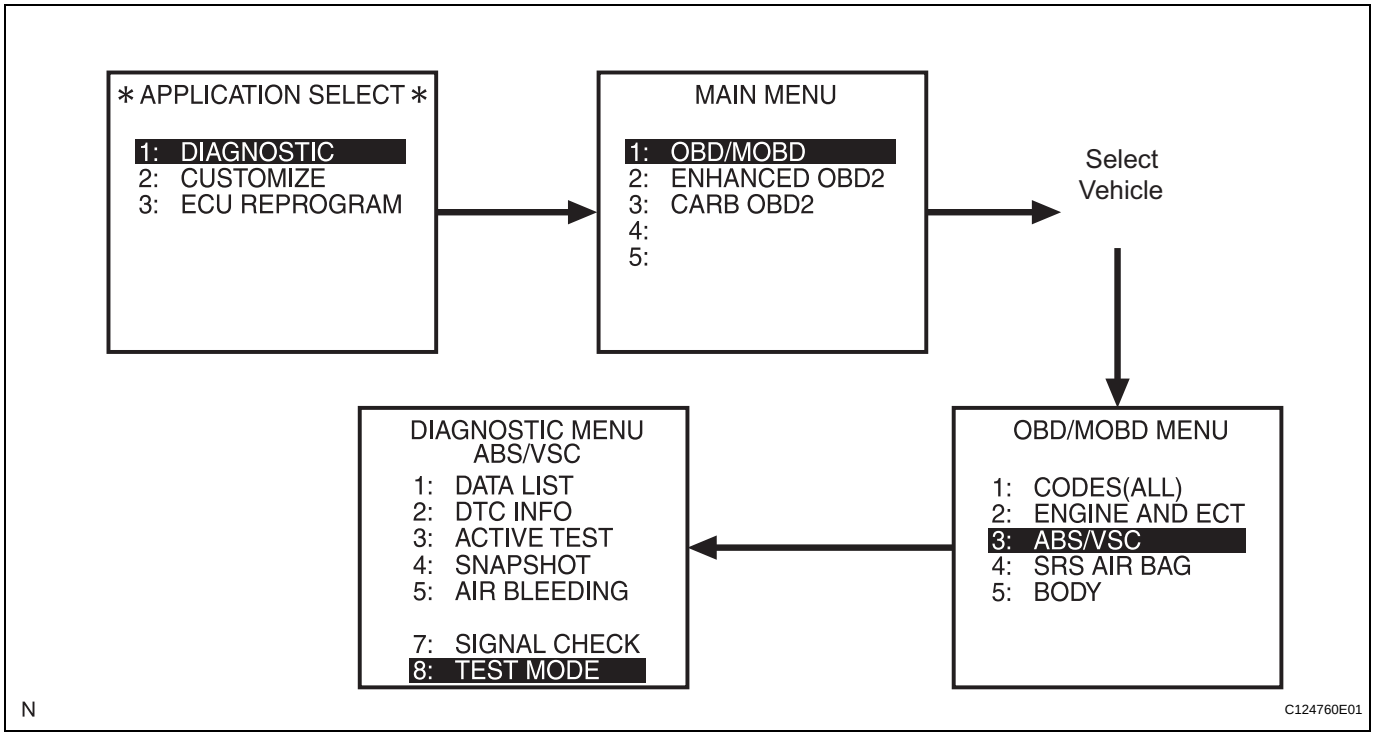

Switch the ECU to test mode using the intelligent tester. Select the following menu items: DIAGNOSTIC / OBD/MOBD / select vehicle / ABS/VSC / TEST MODE.

(7) Keep the vehicle stationary on a level surface for 2 seconds or more.

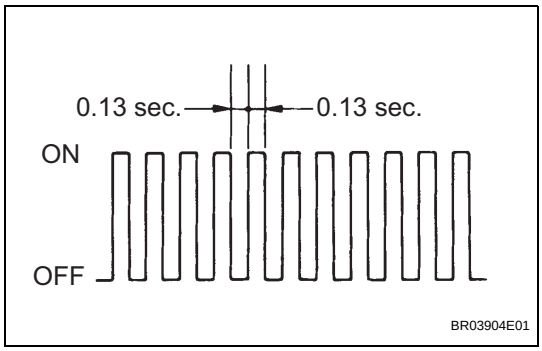

(8) Check that the VSC TRAC warning light blinks as shown in the illustration.
NOTICE:
The VSC TRAC warning light (and VSC OFF indicator light (4WD, with rear differential lock)) stay ON when obtaining the zero point.
HINT:
- If the VSC TRAC warning light does not blink, perform the zero point calibration again.
- The zero point calibration is performed only once after the system enters test mode.
- Calibration cannot be performed again until the stored data is cleared once.

(9) Turn the ignition switch to OFF.

4. CLEAR ZERO POINT CALIBRATION (for Using a Intelligent Tester)

HINT:
After replacing the yaw rate and deceleration sensor, be sure to clear the zero point calibration data in the skid control ECU and perform zero point calibration.

(a) Turn the ignition switch to the ON position.

(b) Using SST, connect and disconnect terminals TS and CG of the DLC3 4 times or more within 8 seconds.
SST 09843-18040

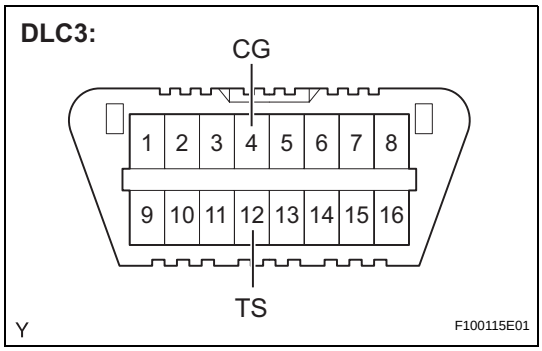

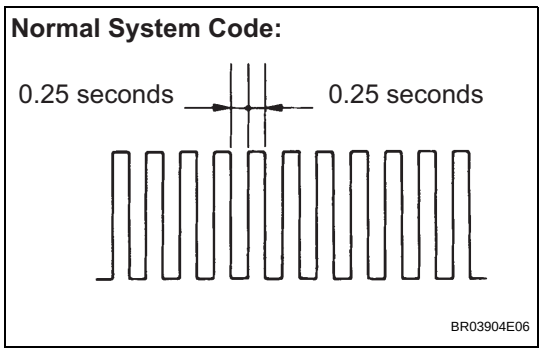

(c) Check that the warning light blinks in a normal system indication pattern.

(d) Remove the SST from the terminals of the DLC3.

(e) Perform zero point calibration of the yaw rate and deceleration sensor using a check wire.

5. PERFORM ZERO POINT CALIBRATION OF YAW RATE SENSOR AND DECELERATION SENSOR (for Using a SST Check Wire)

HINT:
After replacing the skid control ECU and/or yaw rate and deceleration sensor, be sure to perform yaw rate sensor and deceleration sensor zero point calibration.
NOTICE:
- **While obtaining the zero point, do not vibrate the vehicle by tilting, moving or shaking it and keep it stationary. (Do not start the engine.)**
- **Be sure to do this on a level surface (with an inclination less than 1 degree).**

(a) Procedures for test mode:
(1) Turn the ignition switch to OFF.

(2) Check that the steering wheel is in the straight-ahead position.
(3) A/T: Check that the shift lever is in the P position and apply the parking brake. M/T: Check that the shift lever is in neutral and apply the parking brake.
NOTICE:
DTC C1210/36 and C1336/39 will be recorded if the shift lever is not in the P position.

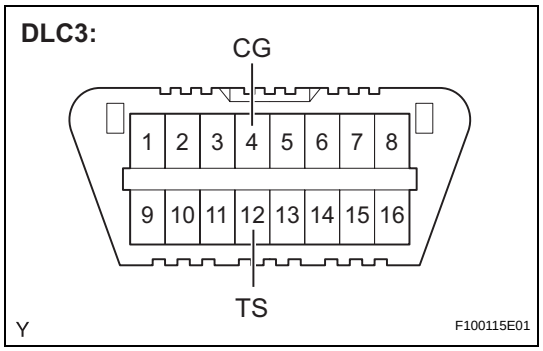

(4) Using SST, connect terminals TS and CG of the DLC3.
SST 09843-18040
(5) Turn the ignition switch to the ON position.
(6) Keep the vehicle stationary on a level surface for 2 seconds or more.

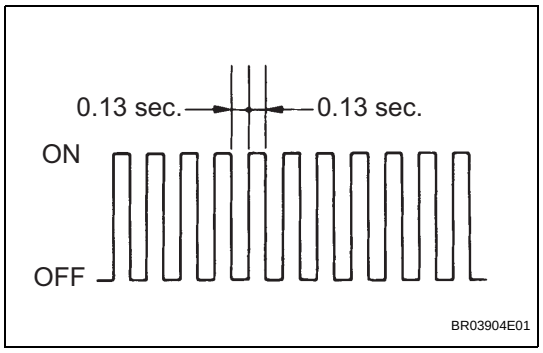

(7) Check that the VSC TRAC warning light blinks as shown in the illustration.
NOTICE:
The VSC TRAC warning light (and VSC OFF indicator light (4WD, with rear differential lock)) stay ON when obtaining the zero point.
HINT:
- If the VSC warning light does not blink, perform the zero point calibration again.
- The zero point calibration is performed only once after the system enters test mode.
- Calibration cannot be performed again until the stored data is cleared once.

TEST MODE PROCEDURE

1. TEST MODE PROCEDURE (for Using a Intelligent Tester)

HINT:

- If the ignition switch is turned from the ON to the ACC or LOCK position during test mode, DTCs related to the signal check function will be erased.
- During test mode, the skid control ECU records all DTCs related to the signal check function. By performing the signal check, the codes are erased if normality is confirmed. The codes left over are the codes where an abnormality was found.

(a) Turn the ignition switch to OFF.

(b) Check that the steering wheel is in the straight-ahead position.

(c) A/T: Check that the shift lever is in the P position and apply the parking brake.
M/T: Check that the shift lever is in neutral and apply the parking brake.

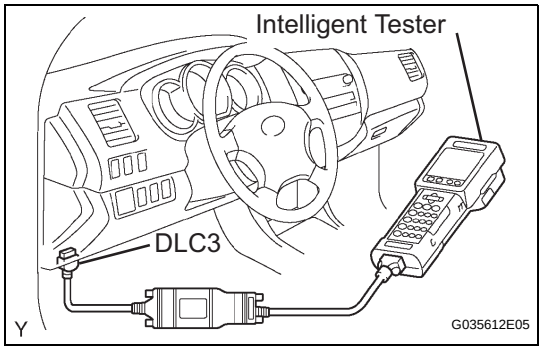

(d) Connect the intelligent tester to the DLC3.

(e) Turn the ignition switch to the ON position.

(f) Switch the ECU to test mode using the intelligent tester. Select the following menu items: DIAGNOSIS / OBD/MOBD /select vehicle / ABS/ VSC / SIGNAL CHECK.

BC

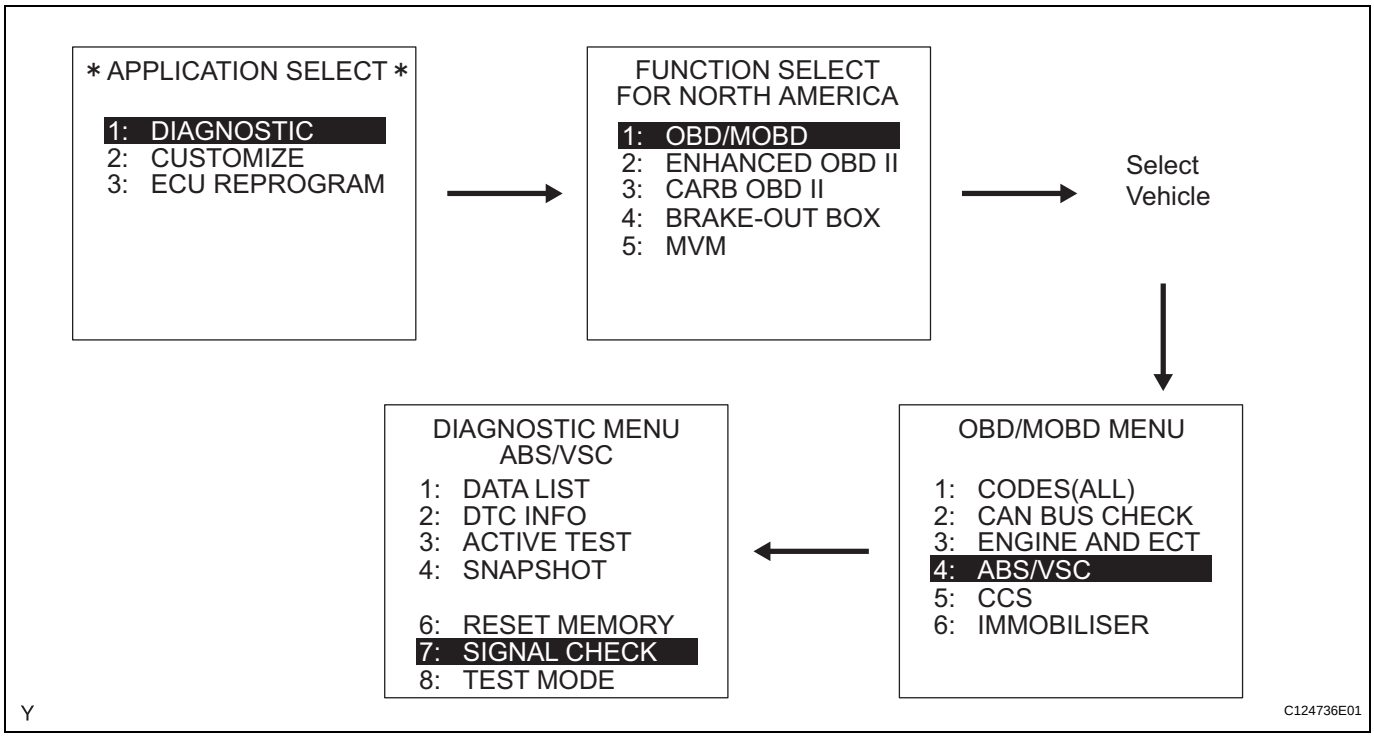

Blinking pattern in TEST MODE:

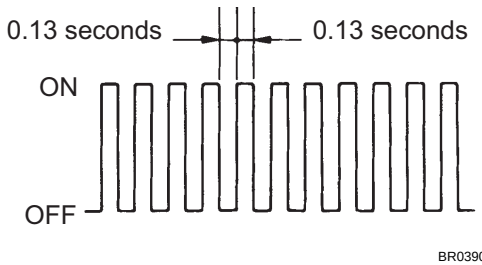

(g) Check that the ABS and VSC TRAC warning lights blink as shown in the illustration.
HINT:
If the ABS warning light and VSC TRAC warning light do not blink, inspect the TS and CG terminal circuit, the ABS warning light circuit and VSC TRAC warning light circuit.

Trouble area	See page
ABS warning light circuit	BC-233 BC-239
VSC TRAC warning light circuit	BC-241 BC-246
TS and CG terminal circuit	BC-296

(h) Start the engine.
(i) Activate the ABS sensor (deceleration sensor, master cylinder pressure sensor, 4WD detection switch, L4 detection switch and speed sensor) and VSC sensor (yaw rate and deceleration sensor) in test mode (SIGNAL CHECK) using a intelligent tester.

2. TEST MODE PROCEDURE (for Using a SST Check Wire)

HINT:

- After replacing the yaw rate and deceleration sensor, be sure to clear the zero point calibration data in the skid control ECU and perform zero point calibration.
- If the ignition switch is turned from the ON to the ACC or LOCK position during test mode, DTCs relating to the signal check function will be erased.
- During test mode, the skid control ECU records all DTCs relating to the signal check function. By performing the signal check, the codes are erased if normality is confirmed. The remaining codes are those indicating where an abnormality was found.

(a) Turn the ignition switch to OFF.
(b) Check that the steering wheel is in the straight-ahead position.
(c) A/T: Check that the shift lever is in the P position and apply the parking brake.
M/T: Check that the shift lever is in neutral and apply the parking brake.

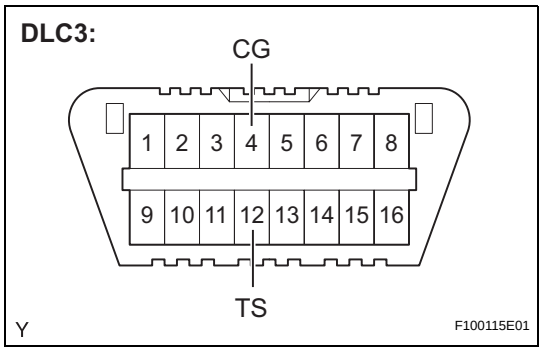

(d) Using SST, connect terminals TS and CG of the DLC3.
SST 09843-18040

(e) Turn the ignition switch to the ON position.

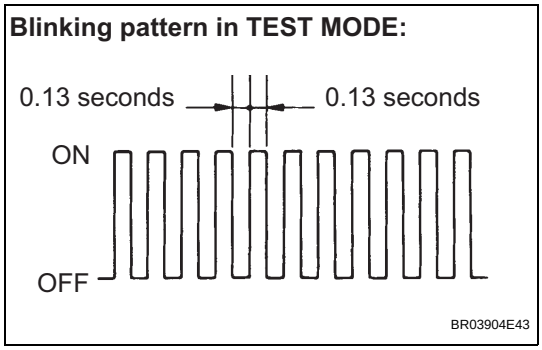

(f) Check that the ABS and VSC TRAC warning lights blink as shown in the illustration.
HINT:
If the ABS warning light and VSC TRAC warning light do not blink, inspect the TS and CG terminal circuit, the ABS warning light circuit and VSC TRAC warning light circuit.

Trouble area	See page
ABS warning light circuit	BC-233 BC-239
VSC TRAC warning light circuit	BC-241 BC-246
TS and CG terminal circuit	BC-296

BC

(g) Start the engine.

(h) Activate the ABS sensor (deceleration sensor, master cylinder pressure sensor, 4WD detection switch, L4 detection switch and speed sensor) and VSC sensor (yaw rate and deceleration sensor) in test mode (SIGNAL CHECK) using a check wire.

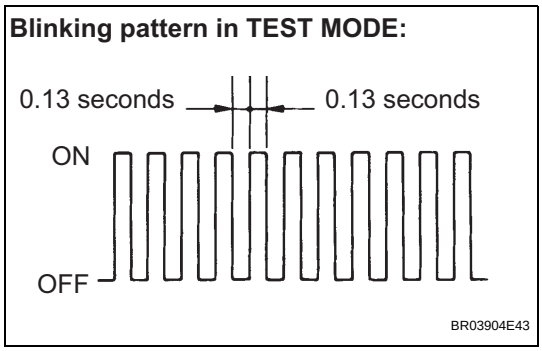

3. DECELERATION SENSOR SIGNAL CHECK

(a) Check that the ABS warning light is blinking as shown in the illustration.

(b) Keep the vehicle stationary on a level surface for 1 second or more.

Blinking pattern in TEST MODE:

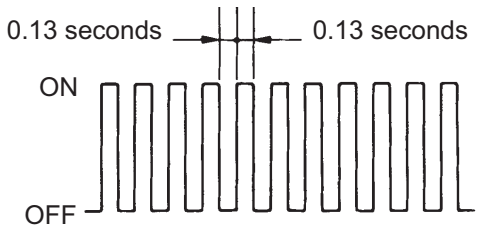

4. MASTER CYLINDER PRESSURE SENSOR CHECK

(a) Check that the ABS warning light is blinking as shown in the illustration.

(b) Keep the vehicle stationary and release the brake pedal for 1 second or more, and quickly depress the brake pedal with a force of 98 N (10 kgf) or more for 1 second or more.

- Keep the vehicle stationary and release the brake pedal for 1 second or more, and quickly depress the brake pedal with a force of 98 N (10 kgf) or more for 1 second or more.
- While the ABS warning light stays on, continue to depress the brake pedal with a force of 98 N (10 kgf) or more.
- The ABS warning light comes on for 3 seconds every time the above brake pedal operation is performed.

Blinking pattern in TEST MODE:

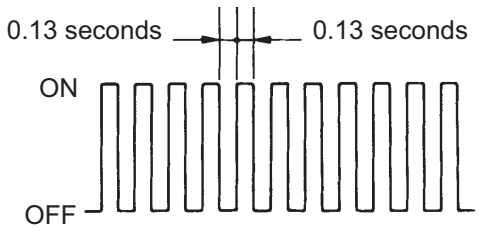

5. 4WD DETECTION SWITCH SIGNAL CHECK (for 4WD)

(a) Check that the ABS warning light is blinking as shown in the illustration.

(b) Check the transfer indicator switch (4WD position).

(1) Push the 4 wheel drive control switch on to put the vehicle in 4WD mode.

(2) Push the 4 wheel drive control switch off to put the vehicle in 2WD mode.

Blinking pattern in TEST MODE:

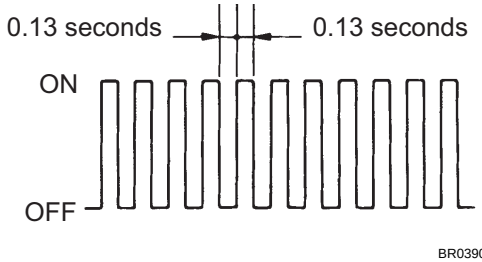

6. L4 DETECTION SWITCH SIGNAL CHECK (for 4WD)

(a) Check that the ABS warning light is blinking as shown in the illustration.

(b) Check the transfer indicator switch (L4 position).

(1) Turn the 4 wheel drive control switch to the L position to put the vehicle in L4 mode.

(2) Turn the 4 wheel drive control switch to the H position to put the vehicle in H4 mode.

HINT:

Move the vehicle either a little forward or a little backward to engage the L4 position.

Blinking pattern in TEST MODE:

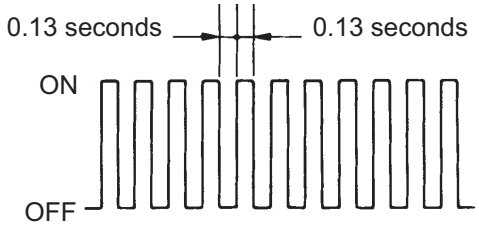

7. SPEED SENSOR CHECK

(a) Check that the ABS warning light is blinking as shown in the illustration.

(b) Check the speed sensor signal

(1) Drive the vehicle straight forward at a speed of 56 mph (90 km/h) or more.

(2) Drive the vehicle straight rearward at a speed of 1.9 mph (3 km/h) or more for 1 second or more.

(3) Check that the ABS warning light goes off.

HINT:

The sensor check may not be completed if the vehicle has its wheels spun or its steering wheel turned during this check.

BC

(4) Stop the vehicle.

NOTICE:

- **Before performing the speed sensor signal check, complete the deceleration sensor, master cylinder pressure sensor, 4WD detection switch and L4 detection switch signal checks.**
- **The speed sensor signal check may not be completed if the speed sensor signal check is started while turning the steering wheel or spinning the wheels.**
- **After the ABS warning light goes off, if the vehicle speed exceeds 28 mph (45 km/h), a signal check code will be stored again. Decelerate or stop the vehicle before the speed reaches 28 mph (45 km/h).**
- **If the signal check has not been completed, the ABS warning light blinks while driving and the ABS system does not operate.**

HINT:

When the signal check has been completed, the ABS warning light goes off while driving and blinks in test mode while stationary.

8. READ DTC OF ABS SENSOR (for Using a Intelligent Tester)

(a) Read the DTC(s) by following the tester screen.

HINT:

Refer to the intelligent tester operator's manual for further details.

9. READ DTC OF ABS SENSOR (for Using a SST Check Wire)

(a) Using SST, connect terminals TC and CG of the DLC3.

SST 09843-18040

(b) Turn the ignition switch to the ON position.

(c) Read the number of blinks of the ABS warning light.

- If every sensor is normal, the normal code is displayed (A cycle of 0.25 seconds ON and 0.25 seconds OFF is repeated).

Normal System Code:

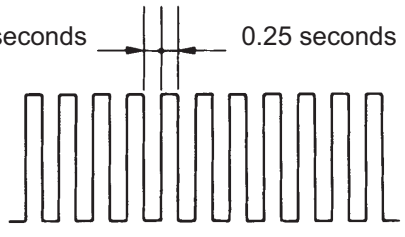

BR03904E06

BC

- If 2 or more malfunctions are detected at the same time, the lowest numbered DTC is displayed first.

Example: Indication of DTCs 72 and 76

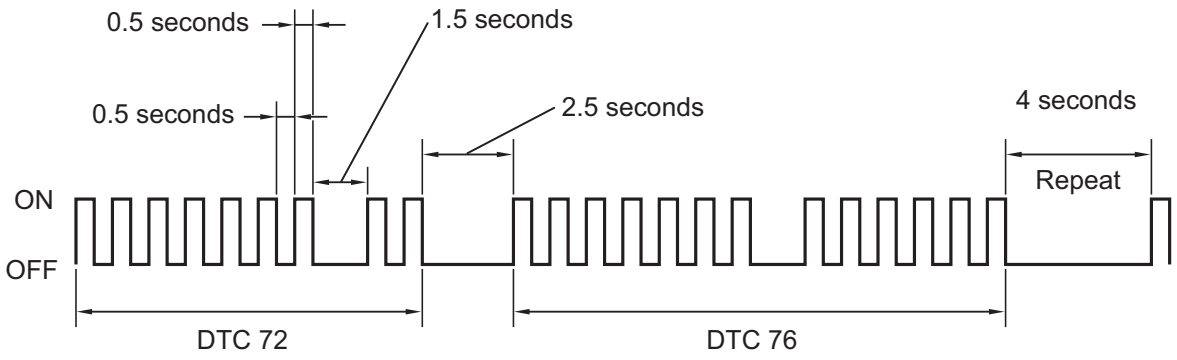

N

C124737E01

(d) After the check, disconnect the SST from terminals TC and CG of the DLC3.
(e) Turn the ignition switch to OFF.

Blinking pattern in TEST MODE:

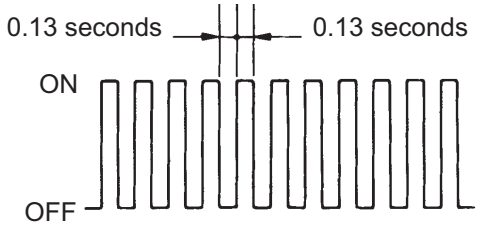

BR03904E43

10. YAW RATE SENSOR CHECK

(a) Check that the VSC TRAC warning light is blinking as shown in the illustration.
(b) Keep the vehicle stationary on a level surface for 1 second or more.

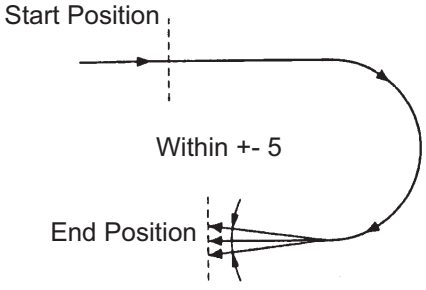

F002135E02

(c) Shift the shift lever to the D position (A/T) and drive the vehicle at a speed of approximately 3 mph (5 km/h), turn the steering wheel either to the left or right 90°or more, and turn the vehicle through 180 degrees.
(d) A/T: Stop the vehicle, check that the shift lever is in the P position, and then apply the parking brake.
M/T: Stop the vehicle, check that the shift lever is in neutral, and then apply the parking brake.
(e) Check that the skid control (VSC warning) buzzer sounds for 3 seconds.
HINT:

- If the skid control (VSC warning) buzzer sounds, the signal check has been completed normally.

BC

- If the skid control (VSC warning) buzzer does not sound, check the skid control buzzer circuit (See page BC-288), then perform the signal check again.
- If the skid control (VSC warning) buzzer still doesn't sound, there is a malfunction in the yaw rate sensor, so check the DTC.
- Drive the vehicle in a 180° semi circle. At the end of the turn, the direction of the vehicle should be within 180+-5° of its start position.
- The vehicle turn should be completed within 20 seconds.
- Do not spin the wheels.

Blinking pattern in TEST MODE:

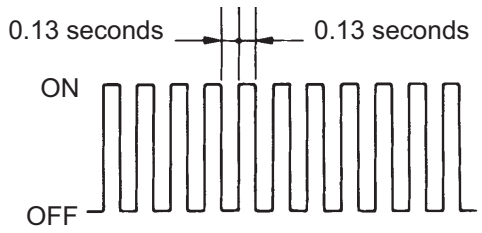

11. DAC OPERATION SWITCH SIGNAL CHECK (for 4WD)

(a) Check that the VSC TRAC warning light is blinking as shown in the illustration.

(b) Check the DAC switch.
(1) Push the DAC switch on.
(2) Push the DAC switch off.

12. READ DTC OF VSC SENSOR (for Using a Intelligent Tester)

(a) Read the DTC(s) by following the tester screen.
- Refer to the intelligent tester operator's manual for further details.

13. READ DTC OF VSC SENSOR (for Using a SST Check Wire)

(a) Using SST, connect terminals TC and CG of the DLC3.
SST 09843-18040

(b) Turn the ignition switch to the ON position.

(c) Read the number of blinks of the VSC TRAC warning light.
- If every sensor is normal, the normal code is displayed (A cycle of 0.25 seconds ON and 0.25 seconds OFF is repeated).

Normal System Code:

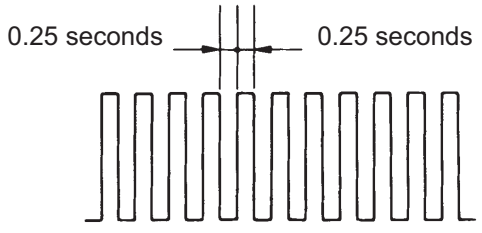

BC

- If 2 or more malfunctions are detected at the same time, the lowest numbered DTC is displayed first.

Example: Indication of DTCs 72 and 76

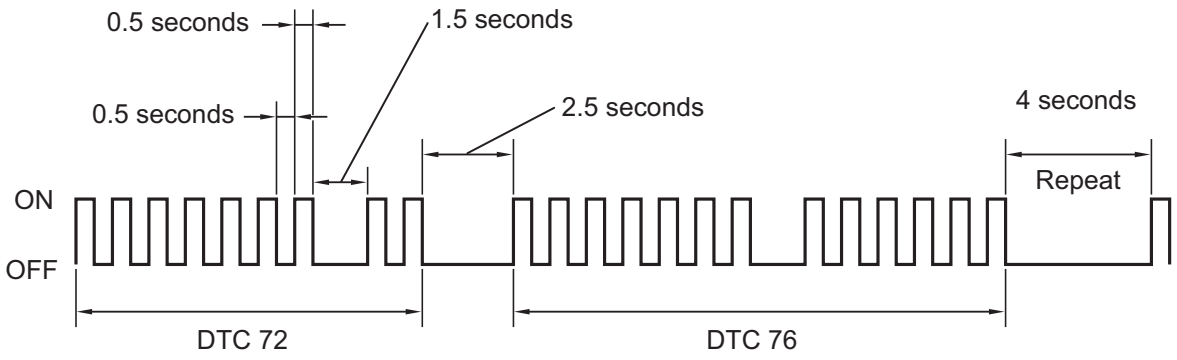

N

C124737E01

(d) After the check, disconnect the SST from terminals TC and CG of the DLC3.

(e) Turn the ignition switch to OFF.

14. DTC OF SIGNAL CHECK FUNCTION

BC

ABS sensor

DTC No.	Diagnosis	Trouble Areas
C1271/71	Low output voltage of right front speed sensor	• Right front speed sensor • Sensor installation • Speed sensor rotor
C1272/72	Low output voltage of left front speed sensor	• Left front speed sensor • Sensor installation • Speed sensor rotor
C1273/73	Low output voltage of right rear speed sensor	• Right rear speed sensor • Sensor installation • Speed sensor rotor
C1274/74	Low output voltage of left rear speed sensor	• Left rear speed sensor • Sensor installation • Speed sensor rotor
C1275/75	Abnormal change in output voltage of right front speed sensor	Right front speed sensor rotor
C1276/76	Abnormal change in output voltage of left front speed sensor	Left front speed sensor rotor
C1277/77	Abnormal change in output voltage of right rear speed sensor	Right rear speed sensor rotor
C1278/78	Abnormal change in output voltage of left rear speed sensor	Left rear speed sensor rotor
C1279/79 (*1), (*2)	Deceleration sensor faulty	• Deceleration sensor • Sensor installation
C1282/82 (*2)	Center differential lock position switch malfunction	Transfer indicator switch (4WD position)

DTC No.	Diagnosis	Trouble Areas
C1283/83 (*2)	L4 detection switch malfunction	Transfer indicator switch (L4 position)

HINT:
(*1): 4WD

VSC sensor

DTC No.	Diagnosis	Trouble Areas
C0371/71	Yaw rate sensor output signal malfunction	Yaw rate and deceleration sensor
C1379/74	Malfunction in DAC operation switch	DAC switch

HINT:
The codes in this table are output only in test mode (signal check).

TERMINALS OF ECU

1. TERMINALS OF ECU

Skid control ECU:

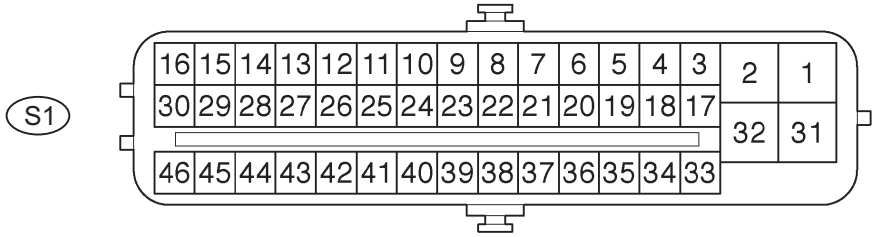

N

C110610E02

Symbols (Terminal No.)	Terminal Description
GND (1)	Skid control ECU ground
+BM1 (2)	Power supply for motor
FR+ (3)	Front RH wheel speed sensor power supply
FL- (4)	Front LH wheel speed signal input
RR+ (5)	Rear RH wheel speed sensor power supply
RL- (6)	Rear LH wheel speed signal input
STP (7)	Stop light switch input
CANH (11)	CAN communication line H
SP1 (12)	Speed signal output for combination meter
D/G (13)	Diagnosis tester communication line
P/R (14)	Shift position indicator P signal input
INFR (15) (*1)	AUTO LSD indicator light output
STPO (16)	Stop light operated relay output
FR- (17)	Front RH wheel speed sensor input
FL+ (18)	Front LH wheel speed sensor power supply output
RR- (19)	Rear RH wheel speed sensor input
RL+ (20)	Rear LH wheel speed sensor power supply output
EXI4 (21) (*2)	Detection (L4) switch input
TS (24)	Sensor test terminal (Sensor check switch) input
CANL (25)	CAN communication line L
EXI3 (26)	Rear differential lock detection switch input
EXI (27)	4WD switch input
PKB (28)	Parking brake switch input
WA (29)	ABS warning light input
BZ (30)	Buzzer output
+BS (31)	Power supply for solenoid
GND2 (32)	Skid control ECU ground
HDCW (33) (*3)	DAC operation indicator light output
IND (34)	SLIP indicator light output
WT (35)	VSC OFF indicator light output
VSCW (36)	VSC TRAC warning light output
LBL (41)	Brake fluid level warning switch input
WFSE (42)	Write flash enable input
CSW (43) (*3)	AUTO LSD switch input
HDCS (44) (*3)	DAC operation switch input
STP2 (45)	Stop light switch input

BC

Symbols (Terminal No.)	Terminal Description
IG1 (46)	IG1 power supply

Skid Control ECU:

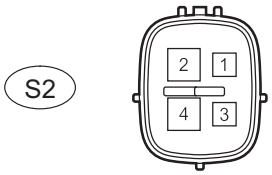

H

C124763E01

Symbols (Terminal No.)	Terminal Description
IG2 (1)	IG2 Power supply
+BM2 (2)	Power supply for motor
BRL (3)	BRAKE warning light output
GND3 (4)	Skid control ECU ground

(*1): with AUTO LSD

(*2): 4WD

(*3): with Downhill assist control

2. TERMINAL INSPECTION

Disconnect the connector and measure the voltage or resistance on the wire harness side.

HINT:

Voltage cannot be measured with the connector connected to the skid control ECU as the connector is water resistant.

BC

Skid Control ECU (Wire Harness Side)
Connector Front View:

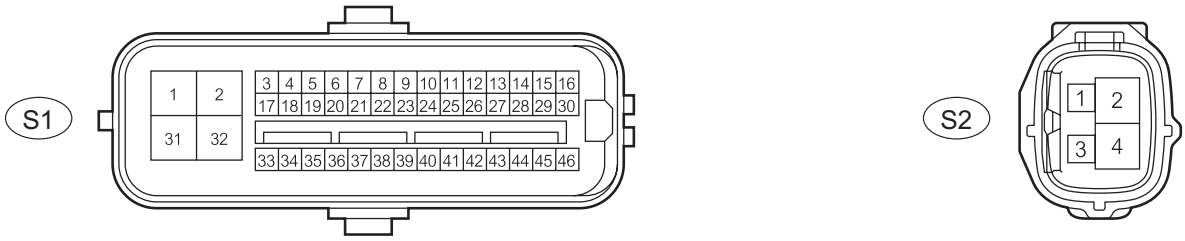

H

C124764E01

Symbols (Terminal No.)	Wiring Color	Terminal Description	Condition	Specified Condition
+BM1 (S1-2) - GND (S1-1, 32)	B - W-B	Power supply for motor From battery	Always	10 to 14 V
IG1 (S1-46) - GND (S1-1, 32)	LG - W-B	IG1 power supply	IG switch OFF	Below 1 V
IG1 (S1-46) - GND (S1-1, 32)	LG- B-W	IG1 power supply	IG switch ON	10 to 14 V
STP (S1-7) - GND (S1-1, 32)	G-W - W-B	Stop light switch input	Stop light switch OFF (Brake pedal released)	Below 1.5 V

Symbols (Terminal No.)	Wiring Color	Terminal Description	Condition	Specified Condition
STP (S1-7) - GND (S1-1, 32)	G-W - W-B	Stop light switch input	Stop light switch ON (Brake pedal released)	8 to 14 V
P/R (S1-14) - GND (S1-1, 32) (*1)	BR-W - W-B	Shift position indicator P signal input	IG switch ON, shift P position	8 to 14 V
P/R (S1-14) - GND (S1-1, 32) (*1)	BR-W - W-B	Shift position indicator P signal input	IG switch ON, any shift position except P	Below 1 V
PKB (S1-28) - GND (S1-1, 32)	G-Y - W-B	Parking brake switch input	IG switch ON, parking brake switch ON	Below 1.5 V
PKB (S1-28) - GND (S1-1, 32)	G-Y - W-B	Parking brake switch input	IG switch ON, parking brake switch OFF	10 to 14 V
+BS (S1-31) - GND (S1-1, 32)	R - W-B	Power supply for solenoid Form battery	Always	10 to 14 V
LBL (S1-41) - GND (S1-1, 32)	V-W - W-B	Brake fluid level warning switch input	Brake fluid level min. -5mm	Below 1 Ω
LBL (S1-41) - GND (S1-1, 32)	V-W - W-B	Brake fluid level warning switch input	Brake fluid level max.	1.9 to 2.1 Ω
STP2 (S1-45) - GND (S1-1, 32)	L - W-B	Stop light switch input	Stop light switch OFF (Brake pedal released)	Below 1.5 V
STP2 (S1-45) - GND (S1-1, 32)	L - W-B	Stop light switch input	Stop light switch ON (Brake pedal released)	8 to 14 V
IG2 (S2-1) - GND (S2-4)	O - W-B	IG2 power supply	IG switch OFF	Below 1 V
IG2 (S2-1) - GND (S2-4)	O - W-B	IG2 power supply	IG switch ON	10 to 14 V
+BM2 (S2-2) - GND (S2-4)	B - W-B	Power supply for motor From battery	Always	10 to 14 V

(*1): A/T

FREEZE FRAME DATA

HINT:

- Whenever a DTC is detected or the ABS operates, the skid control ECU stores the current vehicle (sensor) state as freeze frame data.
- The skid control ECU stores the number of times (maximum: 31) the ignition switch has been turned from off to the ON position since the last time ABS was activated. However, if the vehicle was stopped or at low speed (4.3 mph (7 km/h) or less), or if a DTC is detected, the skid control ECU will not count the number after that.
- Freeze frame data at the time the ABS operates: The skid control ECU stores and updates the data whenever the ABS system operates. When the ECU stores data at the time a DTC is detected, the data stored when the ABS operated is erased.
- Freeze frame data at the time a DTC is detected: When the skid control ECU stores data at the time a DTC is detected, no updates will be performed until the data is cleared.

(a) Connect the intelligent tester to the DLC3.
(b) Turn the ignition switch to the ON position.
(c) Turn the tester ON.
(d) From the display on the tester, select the FREEZE FRAME DATA.

Intelligent Tester	Measurement Item	Reference Value
TROUBLE CODE	Freeze DTC	min.: 0, max.: 65535
STOP LIGHT SW	Stop light switch signal	Stop light switch ON: ON, OFF: OFF
VSC/TRC OFF SW	VSC OFF switch signal	VSC OFF SW ON: ON, OFF: OFF
SHIFT POSITION	Shift lever position	FAIL P,N R D 4 3 2 L
SYSTEM	System status	ABS activated: ABS VSC/TRAC activated: VSC/TRAC BA activated: BA Fail safe mode activated: FAIL SF No system activated: NO SYS
# IG ON	Number of operations turning ignition switch to ON after strong freeze frame data	0 to 31
VEHICLE SPD	Wheel speed sensor reading	Speed indicated on speedometer
STEERING ANG	Steering sensor reading	Left turn: Increase Right turn: Drop (Deceleration
YAW RATE	Yaw rate angle sensor reading	-128 to 127
MAS CYL PRESS	Master cylinder pressure sensor reading	Brake pedal release: 0.3 to 0.9 V Brake pedal depress: 0.8 to 4.5 V
MAS PRESS GRADE	Master cylinder pressure sensor change	-30 to 225 MPa/s
G (RIGHT & LEFT)	Right and left G (Yaw Rate)	-1.869 to 1.869
G (BACK & FORTH)	Back and forth G (Deceleration)	-1.869 to 1.869
WHEEL DIR FR	Front right wheel direction	Wheel direction BACK: BACK Wheel direction FORWARD: FORWARD

Intelligent Tester	Measurement Item	Reference Value
WHEEL DIR FL	Front left wheel direction	Wheel direction BACK: BACK Wheel direction FORWARD: FORWARD
WHEEL DIR RR	Rear right wheel direction	Wheel direction BACK: BACK Wheel direction FORWARD: FORWARD
WHEEL DIR RL	Rear left wheel direction	Wheel direction BACK: BACK Wheel direction FORWARD: FORWARD
BUZZER	VSC buzzer signal	VSC buzzer ON: ON, OFF: OFF
RESERVOIR SW	Reservoir level warning switch signal	Reservoir level warning Switch ON: ON, OFF: OFF
PKB SW	Parking brake switch signal	Parking brake Switch ON: ON, OFF: OFF

FAIL-SAFE CHART

1. FAIL SAFE OPERATION

- If there is a problem with any sensor signals or hydraulic brake booster systems, the skid control ECU prohibits the power supply to the actuator in the hydraulic brake booster and informs the ECM of VSC system failure.
  The hydraulic brake booster turns off each solenoid and the ECM shuts off the VSC control (traction control signal) from the skid control ECU accordingly, which turns out to be as if the ABS, TRAC and VSC systems were not installed.
  The ABS control is prohibited, but EBD control continues as far as possible. If EBD control is impossible, the BRAKE warning light comes on to warn the driver (See page BC-116).
- If system components have any malfunctions before starting control, immediately stop the operation.
  If system components have any malfunctions during control, gradually stop the control so as not to trigger a sudden change in vehicle conditions.
  If it is impossible to control the systems, the warning light comes on to inform the driver of the termination of the systems (See page BC-116).

HINT:

- If the ABS, BA, TRAC, A-TRAC, VSC and AUTO LSD systems malfunction, the brake system will operate normally without ABS, BA, TRAC, VSC and AUTO LSD controls.
- If the hydraulic brake booster malfunctions, gradual loss of brake performance is expected, and ABS, BA, TRAC, A-TRAC, VSC and AUTO LSD system controls are prohibited.

(a) ABS & EBD & BA system:
HINT:
If the ABS, BA or EBD system malfunctions, the following controls are prohibited as shown in the table below.

Malfunction Area	Control Method
ABS system	Prohibit ABS, BA, TRAC, A-TRAC, VSC and AUTO LSD control
BA system	Prohibit ABS, BA, TRAC, A-TRAC, VSC and AUTO LSD control
EBD system	Prohibit ABS, BA, EBD, TRAC, A-TRAC, VSC and EBD control

(b) TRAC & A-TRAC & VSC & AUTO LSD system:
HINT:
If TRAC, A-TRAC, VSC and/or AUTO LSD malfunction, the following controls are prohibited as shown in the table below.

Malfunction Area	Control Method
Engine control system (TRAC, A-TRAC and VSC systems)	Before control: Disables control During control: Uses only brakes to effect control
Brake control system (VSC system)	Before control Disables control During control Uses only brakes to effect control

Malfunction Area	Control Method
Brake control system (TRAC, A-TRAC and AUTO LSD system)	Brake control: Disables control During control: Disables control (by gradually ending control)

2. SYSTEM TEMPERATURE PROTECTION OPERATION

If TRAC, A-TRAC, AUTO LSD, or HAC system has been used constantly for a long time, the temperature of the hydraulic brake booster, may increase excessively. If the temperature increases excessively, the skid control (VSC warning) buzzer sounds intermittently. If the temperature increases more, the skid control (VSC warning) buzzer sounds for 3 seconds repeatedly and the indicator light either comes on or blinks.

System	Indicator Condition
TRAC or A-TRAC system	SLIP indicator light comes on
AUTO LSD system	SLIP indicator light comes on AUTO LSD indicator light stays on

DATA LIST / ACTIVE TEST

1. DATA LIST

HINT:

With the intelligent tester connected to the DLC3 and the ignition switch in the ON position, the ABS, TRAC and VSC data list can be displayed. Follow the prompts on the tester screen to access the DATA LIST.

Item	Measurement Item / Range (Display)	Normal Condition	Diagnostic Note
HB MOT RELAY	HB motor relay / ON or OFF	ON : Motor relay ON OFF : Motor relay OFF	-
ABS MOT RELAY	ABS motor relay / ON or OFF	ON : Motor relay ON OFF : Motor relay OFF	-
SOL RELAY	Solenoid relay / ON or OFF	ON : Solenoid relay ON OFF : Solenoid relay OFF	-
VSC/TRAC OFF SW	TRAC control switch / ON or OFF	ON : TRAC control switch ON	-
IDLE SW	Main idle switch / ON or OFF	ON : Accelerator pedal released OFF : Accelerator pedal depressed	-
STOP LIGHT SW	Stop lamp switch / ON or OFF	ON : Brake pedal depressed OFF : Brake pedal released	-
PKB SW	Parking brake switch / ON or OFF	ON : Parking brake applied OFF : Parking brake released	-
RESERVOIR SW	Reservoir level warning switch / ON or OFF	ON : Switch ON OFF : Switch OFF	-
ABS OPERT FR	ABS operation (FR) / BEFORE or OPERATE	BEFORE : No ABS operation (FR) OPERATE : During ABS operation (FR)	-
ABS OPERT FL	ABS operation (FL) / BEFORE or OPERATE	BEFORE : No ABS operation (FL) OPERATE : During ABS operation (FL))	-
ABS OPERT RR	ABS operation (RR) / BEFORE or OPERATE	BEFORE : No ABS operation (RR) OPERATE : During ABS operation (RR)	-
ABS OPERT RL	ABS operation (RL) / BEFORE or OPERATE	BEFORE : No ABS operation (RL) OPERATE : During ABS operation (RL)	-
WHEEL SPD FR	Wheel speed sensor (FR) reading / min.: 0 MPH (0 km/h), max.: 202 MPH (326 km/h)	Actual wheel speed	Similar speed to that indicated on speedometer
WHEEL SPD FL	Wheel speed sensor (FL) reading / min.: 0 MPH (0 km/h), max.: 202 MPH (326 km/h)	Actual wheel speed	Similar speed to that indicated on speedometer
WHEEL SPD RR	Wheel speed sensor (RR) reading / min.: 0 MPH (0 km/h), max.: 202 MPH (326 km/h)	Actual wheel speed	Similar speed to that indicated on speedometer
WHEEL SPD RL	Wheel speed sensor (RL) reading / min.: 0 MPH (0 km/h), max.: 202 MPH (326 km/h)	Actual wheel speed	Similar speed to that indicated on speedometer
DECELERAT SEN	Deceleration sensor 1 reading / min.: -1.869 G, max.: 1.869 G	Approximately 0 +- 0.13G is still condition	Reading changes when vehicle bounced
DECELERAT SEN2	Deceleration sensor 2 reading / min.: -1.869 G, max.: 1.869 G	Approximately 0 +- 0.13G is still condition	Reading changes when vehicle bounced
IG VOLTAGE	ECU power supply voltage / TOO LOW / NORMAL / TOO HIGH	TOO HIGH: 14 V or more NORMAL: 9.5 V or 14V TOO LOW: Below 9.5 V	-

Item	Measurement Item / Range (Display)	Normal Condition	Diagnostic Note
SFRR	ABS solenoid (SFRR) / ON or OFF	ON: Operates OFF: Does not operate	-
SFRH	ABS solenoid (SFRH) / ON or OFF	ON: Operates OFF: Does not operate	-
SFLR	ABS solenoid (SFLR) / ON or OFF	ON: Operates OFF: Does not operate	-
SFLH	ABS solenoid (SFLH) / ON or OFF	ON: Operates OFF: Does not operate	-
SRRR (SRR)	ABS solenoid (SRRR [SRR]) / ON or OFF	ON: Operates OFF: Does not operate	-
SRRH (SRH)	ABS solenoid (SRRH [SRH]) / ON or OFF	ON: Operates OFF: Does not operate	-
SRLR	ABS solenoid (SRLR) / ON or OFF	ON: Operates OFF: Does not operate	-
SRLH	ABS solenoid (SRLH) / ON or OFF	ON: Operates OFF: Does not operate	-
SRCF (SA1)	TRAC solenoid (SRCF [SMCF]) / ON or OFF	ON: Operates OFF: Does not operate	-
SRCR (SA2)	TRAC solenoid (SRCR [SREA]) / ON or OFF	ON: Operates OFF: Does not operate	-
SRMF (SMCF, SA3)	TRAC solenoid (SRMF [SREC]) / ON or OFF	ON: Operates OFF: Does not operate	-
SRMR (SMCR, STR)	TRAC solenoid (SRMR [SMCR, STR]) / ON or OFF	ON: Operates OFF: Does not operate	-
ENGINE SPD	Engine Speed/ Min.: 0 rpm, Max.: 6000 rpm	Actual engine speed	-
VEHICLE SPD	Maximum wheel speed sensor reading / min.: 0 MPH (0 km/h), max.: 202 MPH (326 km/h)	Actual engine speed	Speed indicated on speedometer
YAW RATE	Yaw rate sensor/ Min.: -128 deg/s, Max.: 127 deg/s	Min: -128 deg/s Max: 127 deg/s	-
YAW ZERO VALUE	Memorized zero value/ Min.: -128 deg/s, Max.: 127 deg/s	Min: -128 deg/s Max: 127 deg/s	-
STEERING ANG	Steering sensor/ Min.: -1152 deg, Max.: 1150.875 deg	Left turn: Increase Right turn: Decrease	-
MAS CYL PRS 1	Master cylinder pressure sensor 1 reading / min.: 0V, max.: 5V	When brake pedal is released : 0.3 V to 0.9 V	Reading increases when brake pedal depressed
ACC PRESS SENS	Accumulator pressure sensor reading / min.: 0V, max.: 5V	min.: 3V max.: 5V	If value constant regardless of pump operation, accumulator pressure sensor malfunction suspected.
WHEEL DIR FR	Front right wheel direction	wheel direction BACK: BACK, FORWARD: FORWARD	-
WHEEL DIR FL	Front left wheel direction	wheel direction BACK: BACK, FORWARD: FORWARD	-
WHEEL DIR RR	Rear right wheel direction	wheel direction BACK: BACK, FORWARD: FORWARD	-
WHEEL DIR RL	Rear left wheel direction	wheel direction BACK: BACK, FORWARD: FORWARD	-
SPD SEN FR	FR speed sensor open detection / OPEN or NORMAL	OPEN: momentary interruption	-
SPD SEN FL	FL speed sensor open detection / OPEN or NORMAL	OPEN: momentary interruption	-
SPD SEN RR	RR speed sensor open detection / OPEN or NORMAL	OPEN: momentary interruption	-
SPD SEN RL	RL speed sensor open detection / OPEN or NORMAL	OPEN: momentary interruption	-

Item	Measurement Item / Range (Display)	Normal Condition	Diagnostic Note
ACCELERATOR %	Different % of present accelerator	min.: 0 max.: 128	-
TORQUE	Real output torque	min.: -1024 max.: 1016	-
TEST MODE	Test mode / Normal or TEST	NORMAL: Normal mode TEST: During test mode	-
MAS CYL PRESS 1	Master cylinder pressure sensor 1 reading / min.: 0V, max.: 5V	When brake pedal released: 0.3 to 0.9V	Reading increases when brake pedal depressed
#CODES	Number of DTC recorded / min.: 0, max.: 255	min.: 0 max.: 255	-

2. ACTIVE TEST

HINT:

Performing the ACTIVE TEST using the intelligent tester allows relays and actuators to be operated without removing any parts. Performing the ACTIVE TEST as the first step of troubleshooting is one method of shortening diagnostic time.

It is possible to display the DATA LIST during the ACTIVE TEST.

(a) Connect the intelligent tester to the DLC3.
(b) Turn the ignition switch to the ON position.
(c) Turn the tester ON.
(d) According to the display on the tester, perform the ACTIVE TEST.

HINT:

The ignition switch must be turned to the ON position to proceed to the Active Test using the intelligent tester.

BC

Item	Vehicle Condition / Test Details	Diagnostic Note
SFRR	Turns ABS solenoid (SFRR) ON / OFF	Operation of solenoid (clicking sound) can be heard
SFRH	Turns ABS solenoid (SFRH) ON / OFF	Operation of solenoid (clicking sound) can be heard
SFLR	Turns ABS solenoid (SFLR) ON / OFF	Operation of solenoid (clicking sound) can be heard
SFLH	Turns ABS solenoid (SFLH) ON / OFF	Operation of solenoid (clicking sound) can be heard
SRRR	Turns ABS solenoid (SrRR) ON / OFF	Operation of solenoid (clicking sound) can be heard
SRRH	Turns ABS solenoid (SRRH) ON / OFF	Operation of solenoid (clicking sound) can be heard
SRLR	Turns ABS solenoid (SRLR) ON / OFF	Operation of solenoid (clicking sound) can be heard
SRLH	Turns ABS solenoid (SFLH) ON / OFF	Operation of solenoid (clicking sound) can be heard
SRCF (SA1)	Turns TRAC solenoid SRCF (SMCF) ON / OFF	Operation of solenoid (clicking sound) can be heard
SRCR (SA2)	Turns TRAC solenoid SRCR (SREA) ON / OFF	Operation of solenoid (clicking sound) can be heard
SRMF (SMCF, SA3)	Turns TRAC solenoid SRCR (SREA) ON / OFF	Operation of solenoid (clicking sound) can be heard
SRMR (SMCR, STR)	Turns TRAC solenoid SRMF (SMEC) ON / OFF	Operation of solenoid (clicking sound) can be heard

Item	Vehicle Condition / Test Details	Diagnostic Note
SFLR & SFLH	Turns ABS solenoid SFLR & SFLH ON / OFF	Operation of solenoid (clicking sound) can be heard
SRH & SRR	Turns ABS solenoid SRH & SRR ON / OFF	Operation of solenoid (clicking sound) can be heard
SRLR & SRLH	Turns ABS solenoid SRLR & SRLH ON / OFF	Operation of solenoid (clicking sound) can be heard
SFRH & SFLH	Turns ABS solenoid SFRH & SFLH ON / OFF	Operation of solenoid (clicking sound) can be heard
SRCF & SRCR	Turns ABS solenoid SRCF & SRCR ON / OFF	Operation of solenoid (clicking sound) can be heard
SRMF & SRMR	Turns ABS solenoid SRMF & SRMR ON / OFF	Operation of solenoid (clicking sound) can be heard
SOL RELAY	Turns ABS solenoid relay ON / OFF	Operation of solenoid (clicking sound) can be heard
ABS MOT RELAY	Turns ABS motor relay ON / OFF	Operation of motor can be heard
TRAC MOT RELAY	Turns TRAC motor relay ON / OFF	Operation of motor can be heard
ABS WARN LIGHT	Turns ABS warning light ON / OFF	Operation of motor can be heard
VSC WARN LIGHT	Turns VSC TRAC warning light ON / OFF	Operation of motor can be heard
VSC / TRC OFF IND	Turns VSC OFF indicator ON / OFF	Operation of motor can be heard
SLIP INDI LIGHT	Turn SLIP indicator light ON / OFF	Operation of motor can be heard
BRAKE WRN LIGHT	Turns BRAKE warning light ON / OFF	Operation of motor can be heard
VSC / BR WARN BUZ	Turns VSC / BRAKE warning buzzer ON / OFF	Buzzer can be heard
H/B MOT RELAY	Turns H/B motor relay ON / OFF	Operation of motor can be heard
STP LIGHT RELAY	Turns stop light relay ON / OFF	Observe stop light

DIAGNOSTIC TROUBLE CODE CHART

DTC Chart of ABS:

DTC No.	Detection Item	Trouble Areas	See page
C0200/31 (*1)	Right Front Wheel Speed Sensor Signal Malfunction	1. Right front speed sensor 2. Speed sensor circuit 3. Speed sensor rotor 4. Sensor installation 5. Master cylinder solenoid (skid control ECU)	BC-130
C0205/32 (*1)	Left Front Wheel Speed Sensor Signal Malfunction	1. Left front speed sensor 2. Speed sensor circuit 3. Speed sensor rotor 4. Sensor installation 5. Master cylinder solenoid (skid control ECU)	BC-130
C0210/33 (*1)	Right Rear Wheel Speed Sensor Signal Malfunction	1. Right rear speed sensor 2. Speed sensor circuit 3. Speed sensor rotor 4. Sensor installation 5. Master cylinder solenoid (skid control ECU)	BC-130
C0215/34 (*1)	Left Rear Wheel Speed Sensor Signal Malfunction	1. Left rear speed sensor 2. Speed sensor circuit 3. Speed sensor rotor 4. Sensor installation 5. Master cylinder solenoid (skid control ECU)	BC-130
C0226/21	SFR Solenoid Circuit	1. Master cylinder solenoid (skid control ECU) 2. SFRH or SFRR circuit	BC-137
C0236/22	SFL Solenoid Circuit	1. Master cylinder solenoid (skid control ECU) 2. SFLH or SFLR circuit	BC-137
C0246/23	SRR Solenoid Circuit	1. Master cylinder solenoid (skid control ECU) 2. SRRH or SRRR circuit	BC-137
C0256/24	SRL Solenoid Circuit	1. Master cylinder solenoid (skid control ECU) 2. SRRH or SRLR circuit	BC-137
C0278/11	Open or Short Circuit in ABS Solenoid Relay Circuit	1. ABS NO. 2 fuse 2. ABS solenoid relay 3. ABS solenoid relay circuit 4. Master cylinder solenoid (skid control ECU)	BC-140
C0279/12	Short to B+ in ABS Solenoid Relay Circuit	1. ABS NO. 2 fuse 2. ABS solenoid relay 3. ABS solenoid relay circuit 4. Master cylinder solenoid (skid control ECU)	BC-140
C1225/25	SMC Solenoid Circuit	1. Master cylinder solenoid (skid control ECU) 2. SMCR circuit	BC-137
C1226/26	SPC Solenoid Circuit	1. Master cylinder solenoid 2. SREA circuit	BC-137
C1227/27	SRC Solenoid Circuit	1. Master cylinder solenoid 2. SREC circuit	BC-137
C1228/28	STR Solenoid Circuit	1. Master cylinder solenoid 2. STR circuit	BC-137
C1235/35	Foreign Object is Attached on Tip of Front Speed Sensor RH	1. Master cylinder solenoid (skid control ECU) 2. Speed sensor 3. Speed sensor rotor	BC-164

DTC No.	Detection Item	Trouble Areas	See page
C1236/36	Foreign Object is Attached on Tip of Front Speed Sensor LH	1. Master cylinder solenoid (skid control ECU) 2. Speed sensor 3. Speed sensor rotor	BC-164
C1238/38	Foreign Object is Attached on Tip of Rear Speed Sensor RH	1. Master cylinder solenoid (skid control ECU) 2. Speed sensor 3. Speed sensor rotor	BC-164
C1239/39	Foreign Object is Attached on Tip of Rear Speed Sensor LH	1. Master cylinder solenoid (skid control ECU) 2. Speed sensor 3. Speed sensor rotor	BC-164
C1241/41	Low Battery Positive Voltage	1. Battery 2. IG NO. 2 fuse 3. Charging system 4. Power source circuit	BC-169
C1242/42	IG2 Power Source Circuit	1. Battery 2. IC regulator 3. Power source circuit 4. Master cylinder solenoid (skid control ECU)	BC-174
C1243/43 (*1)	Acceleration Sensor Stuck Malfunction	1. Yaw rate and deceleration sensor 2. Yaw rate and deceleration sensor circuit	BC-161
C1244/44	Open or Short in Deceleration Sensor Circuit	1. Yaw rate and deceleration sensor 2. Yaw rate and deceleration sensor circuit	BC-161
C1245/45 (*1)	Acceleration Sensor Output Malfunction	1. Yaw rate and deceleration sensor 2. Yaw rate and deceleration sensor circuit	BC-161
C1246/46	Master Cylinder Pressure Sensor Malfunction	1. Master cylinder pressure sensor 2. Master cylinder pressure sensor circuit 3. Master cylinder solenoid (skid control ECU) 4. Stop light circuit	BC-177
C1248/48	Open Circuit in Rear Differential Lock	1. Transfer indicator switch (rear diff. lock) 2. Rear differential lock circuit 3. Master cylinder solenoid (skid control ECU)	BC-181
C1249/49	Open in Stop Light Switch Circuit	1. Stop light switch assembly 2. Stop light switch circuit 3. Master cylinder solenoid (skid control ECU)	BC-186
C1251/51 (*4)	Open in Pump Motor Circuit	Hydraulic brake booster pump motor circuit	BC-192
C1252/52 (*2) (*4)	Brake Booster Pump Motor on Time Abnormally Long	1. Hydraulic brake booster pump motor 2. Hydraulic brake booster pump motor circuit 3. Accumulator pressure	BC-194
C1253/53 (*2)	Hydro Booster Pump Motor Relay Malfunction	1. Hydraulic brake booster pump motor 2. Hydraulic brake booster pump motor circuit	BC-198

DTC No.	Detection Item	Trouble Areas	See page
C1254/54	Pressure Switch Circuit	1. Hydraulic brake booster 2. Accumulator pressure sensor 3. Master cylinder pressure sensor	BC-203
C1256/56 (*2) (*4)	Accumulator Low Pressure	1. Hydraulic brake booster 2. Hydraulic brake booster pump motor 3. Hydraulic brake booster pump motor circuit 4. Accumulator pressure sensor	BC-206
C1257/57	IG Power Source	Hydraulic brake booster pump motor circuit	BC-209
C1268/68 (*3)	Transfer "L4" Position Switch Circuit	1. Transfer indicator switch (L4 position) 2. Transfer indicator switch (L4 position) circuit 3. Master cylinder solenoid (skid control ECU)	BC-217
C1337/37	Different Diameter Tire Malfunction	1. Speed sensor 2. Speed sensor rotor 3. Speed sensor circuit 4. Tire sizes	BC-222
C1381/97	Yaw Rate and / or Acceleration Sensor Power Supply Voltage Malfunction	1. Yaw rate and deceleration sensor 2. Yaw rate and deceleration sensor circuit	BC-161

(*1), (*2):
Even after the trouble areas are repaired, the ABS warning light will not go off unless the following operations are performed.

- (*1):
  (a) Drive the vehicle at 12 mph (20 km/h) for 30 seconds or more and check that the ABS warning light goes off.
  (b) Clear the DTC.
- (*2):
  (a) Keep the vehicle stationary for 5 seconds or more and depress the brake pedal several times.
  (b) Repeat the above operation 3 times or more and check that the ABS warning light goes off.
  (c) Clear the DTC.

(*3): 4WD

(*4): Skid control (VSC control) buzzer sounds.
HINT:
In some cases, the intelligent tester cannot be used when the ABS warning light remains on.

DTC Chart of VSC:

DTC No.	Detection Item	Trouble Areas	See page
C1201/51	Engine Control System Malfunction	Engine control system	BC-144
C1202/52	Brake Fluid Level Low / Open Circuit in Brake Fluid Level Warning Switch Circuit	1. Brake fluid level 2. Brake fluid level warning switch 3. Brake fluid level warning switch circuit 4. Master cylinder solenoid (skid control ECU)	BC-145

DTC No.	Detection Item	Trouble Areas	See page
C1202/58	Brake Fluid Level Low / Open Circuit in Brake Fluid Level Warning Switch Circuit	1. Brake fluid level 2. Brake fluid level warning switch 3. Brake fluid level warning switch circuit 4. Master cylinder solenoid (skid control ECU)	BC-145
C1203/53	ECM Communication Circuit Malfunction	1. CAN communication system 2. ECM	BC-149
C1210/36	Zero Point Calibration of Yaw Rate Sensor Undone	1. Yaw rate sensor and deceleration sensor 2. Zero point calibration not complete 3. PNP switch circuit (P position) (A/T) 4. Parking brake switch circuit (M/T)	BC-150
C1223/43	ABS Control System Malfunction	ABS control system	BC-156
C1231/31	Steering Angle Sensor Circuit Malfunction	1. Master cylinder solenoid (skid control ECU) 2. Steering angle sensor 3. Steering angle sensor circuit 4. CAN communication system	BC-157
C1232/32	Stuck in Deceleration Sensor	1. Yaw rate and deceleration sensor 2. Yaw rate and deceleration sensor circuit	BC-161
C1234/34	Yaw Rate Sensor Malfunction	1. Yaw rate and deceleration sensor 2. Yaw rate and deceleration sensor circuit	BC-161
C1258/58	Transfer 4WD Position Switch Circuit	1. Transfer indicator switch (4WD position) 2. Transfer indicator switch (4WD position) circuit 3. Master cylinder solenoid (skid control ECU)	BC-210
C1290/66	Steering Angle Sensor Zero Point Malfunction	Steering angle sensor	BC-157
C1336/39	Zero Point Calibration of Acceleration Sensor Undone	1. Yaw rate sensor and deceleration sensor 2. Zero point calibration not complete 3. PNP switch circuit (P position) (A/T) 4. Parking brake switch circuit (M/T)	BC-150
C1380/64	Stop Light Control Relay Malfunction	1. Stop light switch assembly 2. Stop light switch circuit 3. STOP LP CTRL relay 4. Master cylinder solenoid (skid control ECU)	BC-224

HINT:
In some cases, the intelligent tester cannot be used when the VSC TRAC warning light remains on.

DTC	C0200/31	Right Front Wheel Speed Sensor Signal Malfunction
DTC	C0205/32	Left Front Wheel Speed Sensor Signal Malfunction
DTC	C0210/33	Right Rear Wheel Speed Sensor Signal Malfunction
DTC	C0215/34	Left Rear Wheel Speed Sensor Signal Malfunction

DESCRIPTION

The speed sensor detects the wheel speeds and sends the appropriate signals to the skid control ECU. Speed sensor rotors have rows of alternating N and S magnetic poles, and their magnetic fields change when the rotors turn.

Each speed sensor detects that magnetic change and sends a pulse signal to the skid control ECU. The ECU monitors the wheel speeds according to the speed signals to control the ABS, BA, TRAC, A-TRAC, VSC, AUTO LSD, DAC and HAC systems.

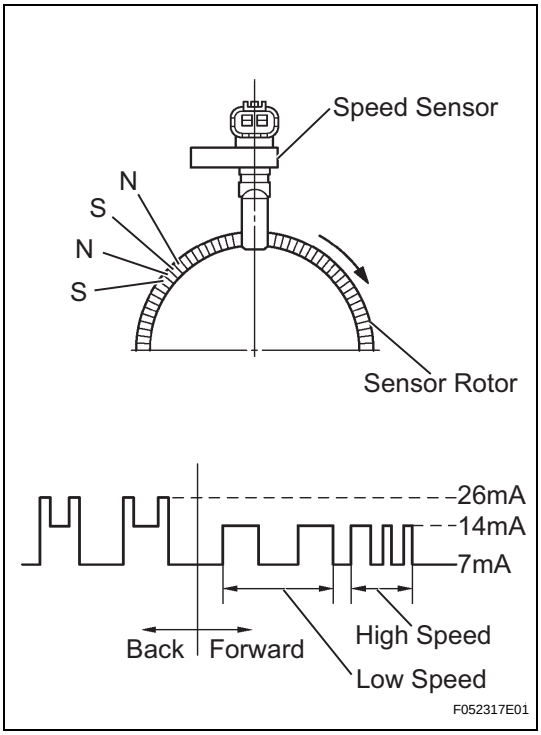

BC

DTC No.	DTC Detecting Conditions	Trouble Areas
C0200/31 C0205/32 C0210/33 C0215/34	When any one of following conditions met: 1. At vehicle speed of 6 mph (10 km/h) or more, speed sensor signal circuit open or short for 1 second or more. 2. Speed sensor signal open circuit occurs at least 255 times. 3. Speed sensor signal circuit open for 0.5 seconds or more. 4. With ignition switch ON and vehicle speed at 2 mph (3km/h) or more, 3 wheels output reverse rotation signal and 1 wheel outputs high-frequency pulse 75 times. 5. At vehicle speed of 6 mph (10 km/h) or more, speed sensor output halves for 5 seconds. 6. At vehicle speed of 6 mph (10 km/h) or more, changing of normal rotation signal and reverse rotation signal occur 7 times within 0.006 seconds while ignition switch ON. 7. Signal output of any one wheel different from signals of other 3 wheels for 1 second, at vehicle speed of 18 mph (30 km/h) or more. 8. Reverse rotation signal produced for 1 second or more at vehicle speed of 62 mph (100 km/h) or more. 9. At vehicle speed of 18 mph (30 km/h) or more, one speed sensor malfunctions and differs in signal direction from other 3 wheels. 10. When voltage at IG1 terminal 9.5 V or more, voltage of sensor power supply decreases for 0.5 seconds or more.	• Speed sensor • Speed sensor circuit • Master cylinder solenoid (skid control ECU)

HINT:
DTC C0200/31 relates to the front right speed sensor.
DTC C0205/32 relates to the front left speed sensor.
DTC C0210/33 relates to the rear right speed sensor.
DTC C0215/34 relates to the rear left speed sensor.

WIRING DIAGRAM

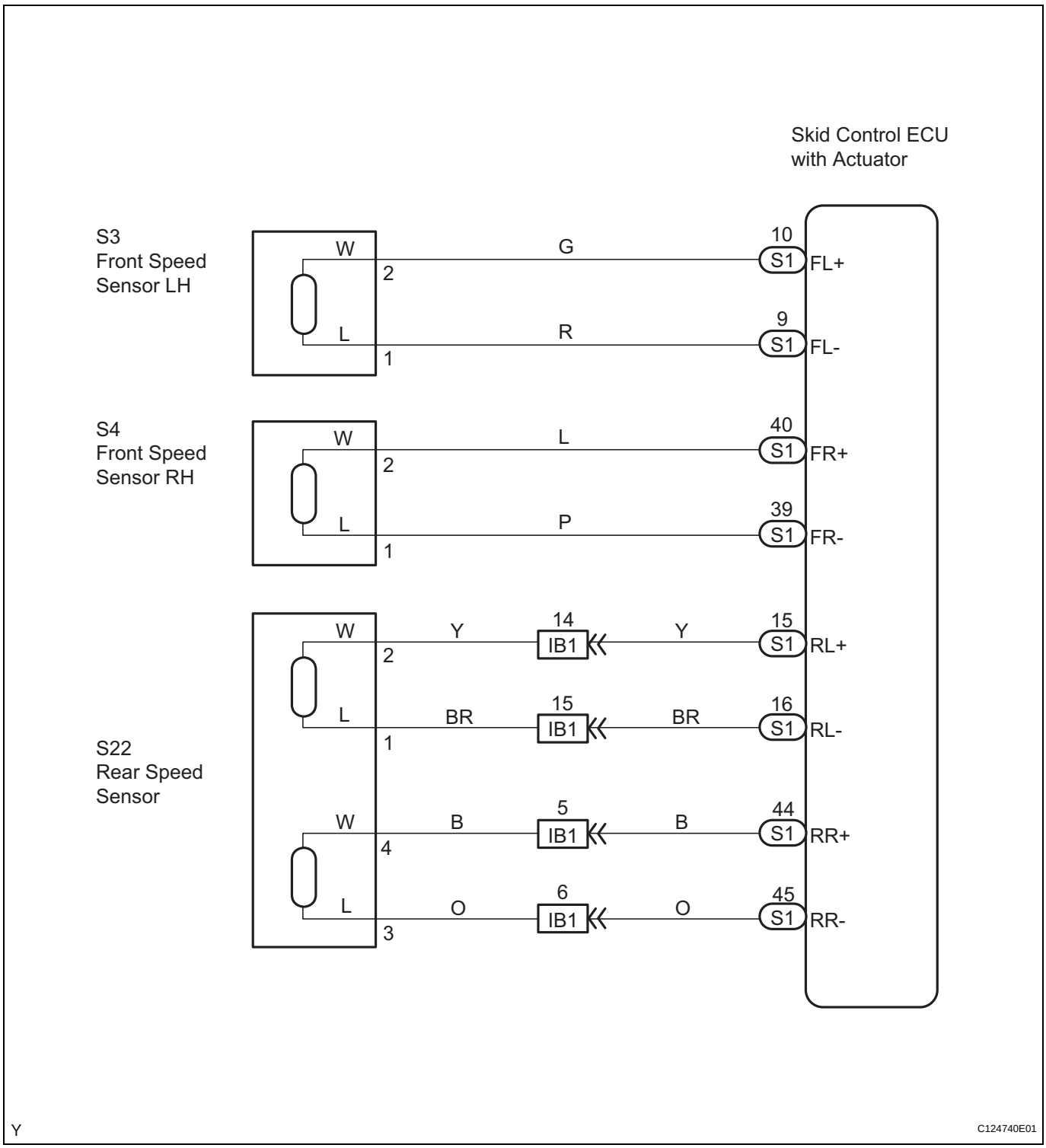

HINT:
Start the inspection from step 1 when using a intelligent tester and start from step 3 when not using a intelligent tester.

1 CHECK HARNESS AND CONNECTOR (MOMENTARY INTERRUPTION)

(a) Using a intelligent tester, check for any momentary interruption in the wire harness and connector corresponding to a DTC (See page BC-98).

Item	Measurement Item / Range (Display)	Normal Condition	Diagnostic Note
SPD SEN FR	FR speed sensor open detection / OPEN or NORMAL	OPEN: momentary interruption	-
SPD SEN FL	FL speed sensor open detection / OPEN or NORMAL	OPEN: momentary interruption	-
SPD SEN RR	RR speed sensor open detection / OPEN or NORMAL	OPEN: momentary interruption	-
SPD SEN RL	RL speed sensor open detection / OPEN or NORMAL	OPEN: momentary interruption	-

OK:
There are no momentary interruptions.

NG → **Go to step 7**

OK

2 READ VALUE OF DATA LIST (SPEED SENSOR)

(a) Connect the intelligent tester to the DLC3.
(b) Start the engine.
(c) Select the DATA LIST mode on the intelligent tester.

BC

Item	Measurement Item / Range (Display)	Normal Condition	Diagnostic Note
WHEEL SPD FR	Wheel speed sensor (FR) reading / min.: 0 MPH (0 km/h), max.: 202 MPH (326 km/h)	Actual wheel speed	Similar speed to that indicated on speedometer
WHEEL SPD FL	Wheel speed sensor (FR) reading / min.: 0 MPH (0 km/h), max.: 202 MPH (326 km/h)	Actual wheel speed	Similar speed to that indicated on speedometer
WHEEL SPD RR	Wheel speed sensor (FR) reading / min.: 0 MPH (0 km/h), max.: 202 MPH (326 km/h)	Actual wheel speed	Similar speed to that indicated on speedometer
WHEEL SPD RL	Wheel speed sensor (FR) reading / min.: 0 MPH (0 km/h), max.: 202 MPH (326 km/h)	Actual wheel speed	Similar speed to that indicated on speedometer

(d) Check that there is no difference between the speed value output from the speed sensor displayed on the intelligent tester and the speed value displayed on the speedometer when driving the vehicle.
OK:
There is almost no difference with the displayed speed value.
HINT:
There is tolerance of +-10% in the speedometer indication.

NG → **Go to step 5**

OK

3 PERFORM TEST MODE INSPECTION (SIGNAL CHECK)

(a) Check if test mode DTCs are detected (See page BC-103).

Result	Proceed to
Test mode DTC output	A
Test mode DTC not output	B

NG → **Go to step 5**

OK

4 RECONFIRM DTC

(a) Clear the DTCs (See page BC-118).
(b) Check if the same DTCs are recorded.

Result	Proceed to
DTC output	A
DTC not output	B

B → **CHECK FOR INTERMITTENT PROBLEMS**

A

BC

5 CHECK SPEED SENSOR INSTALLATION

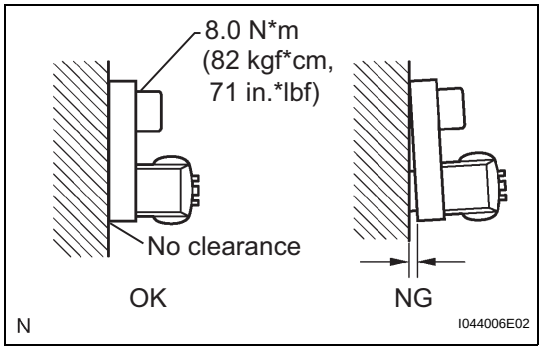

(a) Check the speed sensor installation.
OK:
The installation bolt is tightened properly and there is no clearance between the sensor and front steering knuckle.
Torque:
8.0 N*m (82 kgf*cm, 71 in.*lbf)

NG → **TIGHTEN BOLT PROPERLY**

OK

6 CHECK SPEED SENSOR

(a) Remove the speed sensor (See page BC-303 or BC-304).
(b) Check the sensor tip.
OK:
No scratches or foreign matter on the sensor tip.

NG → **CLEAN OR REPLACE SPEED SENSOR**

OK

7	CHECK HARNESS AND CONNECTOR (SKID CONTROL ECU - SPEED SENSOR)

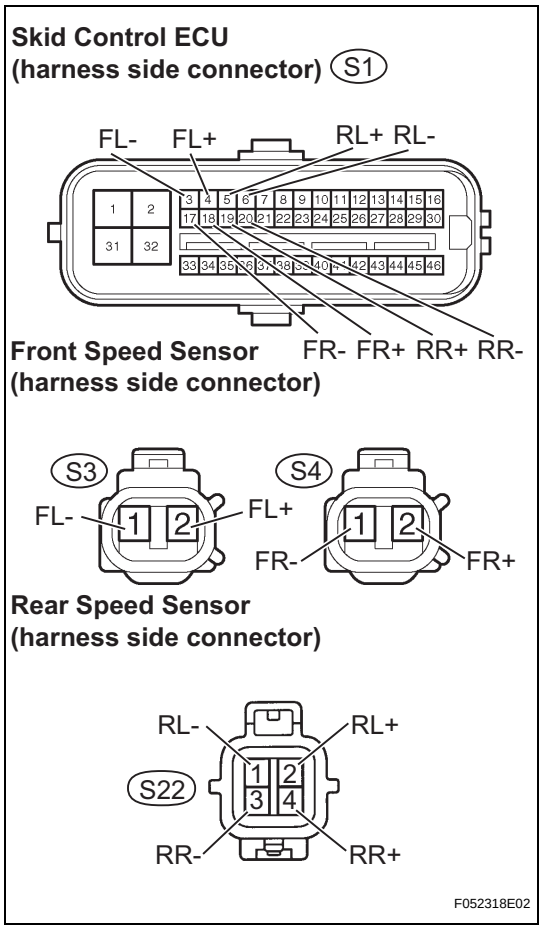

(a) Disconnect the skid control ECU connector.
(b) Disconnect the speed sensor connectors.
(c) Measure the resistance.

Standard Resistance

Tester Connection	Specified Condition
S1-18 (FL+) - S3-2 (FL+)	Below 1 Ω
S1-4 (FL-) - S3-1 (FL-)	Below 1 Ω
S1-3 (FR+) - S4-2 (FR+)	Below 1 Ω
S1-17 (FR-) - S4-1 (FR-)	Below 1 Ω
S1-20 (RL+) - S22-2 (RL+)	Below 1 Ω
S1-6 (RL-) - S22-1 (RL-)	Below 1 Ω
S1-5 (RR+) - S22-4 (RR+)	Below 1 Ω
S1-19 (RR-) - S22-3 (RR-)	Below 1 Ω

(d) Measure the resistance.

Standard Resistance

Tester Connection	Specified Condition
S1-18 (FL+) - Body ground	10 kΩ or higher
S1-4 (FL-) - Body ground	10 kΩ or higher
S1-3 (FR+) - Body ground	10 kΩ or higher
S1-17 (FR-) - Body ground	10 kΩ or higher
S1-20 (RL+) - Body ground	10 kΩ or higher
S1-6 (RL-) - Body ground	10 kΩ or higher
S1-5 (RR+) - Body ground	10 kΩ or higher
S1-19 (RR-) - Body ground	10 kΩ or higher

(e) Reconnect the speed sensor connectors.
(f) Reconnect the skid control ECU connector.

NG → **REPAIR OR REPLACE HARNESS OR CONNECTOR**

OK

BC

8 INSPECT MASTER CYLINDER SOLENOID (TERMINAL VOLTAGE)

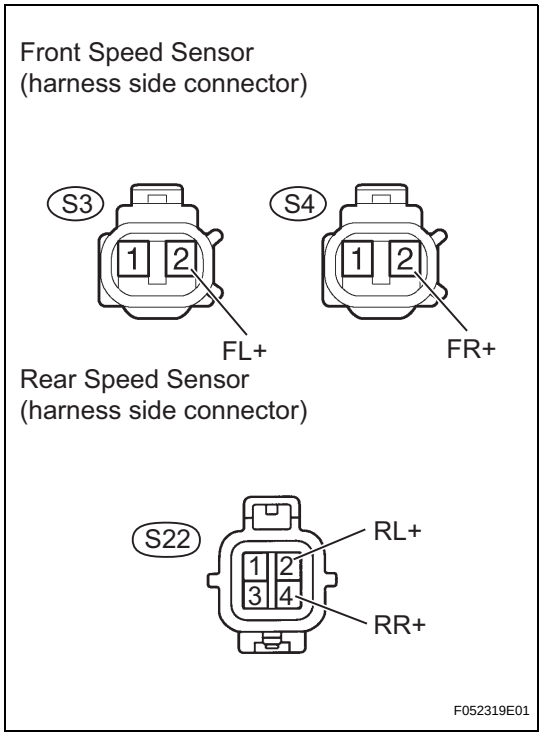

(a) Disconnect the speed sensor connectors.
(b) Turn the ignition switch to the ON position.
(c) Measure the voltage.

Standard Voltage

Tester Connection	Specified Condition
S3-2 (FL+) - Body ground	7.5 to 12 V
S4-2(FR+) - Body ground	7.5 to 12 V
S22-2 (RL+) - Body ground	7.5 to 12 V
S22-4 (RR+) - Body ground	7.5 to 12 V

(d) Turn the ignition switch to OFF.
(e) Reconnect the speed sensor connectors.

NG → **REPLACE MASTER CYLINDER SOLENOID**

OK

BC

9 RECONFIRM DTC

(a) Clear the DTCs (See page BC-118).
(b) Check if the same DTCs are recorded.

Result	Proceed to
DTC output	A
DTC not output	B

B → **CHECK FOR INTERMITTENT PROBLEMS**

A

REPLACE MASTER CYLINDER SOLENOID

DTC	C0226/21	SFR Solenoid Circuit

DTC	C0236/22	SFL Solenoid Circuit

DTC	C0246/23	SRR Solenoid Circuit

DTC	C0256/24	SRL Solenoid Circuit

DTC	C1225/25	SMC Solenoid Circuit

DTC	C1226/26	SPC Solenoid Circuit

DTC	C1227/27	SRC Solenoid Circuit

DTC	C1228/28	STR Solenoid Circuit

DESCRIPTION

The solenoid goes on when signals are received from the skid control ECU and controls the pressure action on the wheel cylinders thus controlling the braking force.

DTC No.	DTC Detecting Conditions	Trouble Areas
C0226/21	Open or short in SFRH or SFRR circuit continues for 0.05 seconds or more.	• Master cylinder solenoid (skid control ECU) • SFRH or SFRR circuit
C0226/21	Open or short in SFLH or SFLR circuit continues for 0.05 seconds or more.	• Master cylinder solenoid (skid control ECU) • SFLH or SFLR circuit
C0226/21	Open or short in SRRH or SRRR circuit continues for 0.05 seconds or more.	• Master cylinder solenoid (skid control ECU) • SRRH or SRRR circuit
C0226/21	Open or short in SRLH or SRLR circuit continues for 0.05 seconds or more.	• Master cylinder solenoid (skid control ECU) • SRLH or SRLR circuit
C0226/21	Open or short in SMCR circuit continues for 0.05 seconds or more.	• Master cylinder solenoid (skid control ECU) • SMCR circuit
C0226/21	Open or short in SREA circuit continues for 0.05 seconds or more.	• Master cylinder solenoid (skid control ECU) • SREA circuit
C0226/21	Open or short in SREC circuit continues for 0.05 seconds or more.	• Master cylinder solenoid (skid control ECU) • SREC circuit
C0226/21	Open or short in STR circuit continues for 0.05 seconds or more.	• Master cylinder solenoid (skid control ECU) • STR circuit

WIRING DIAGRAM

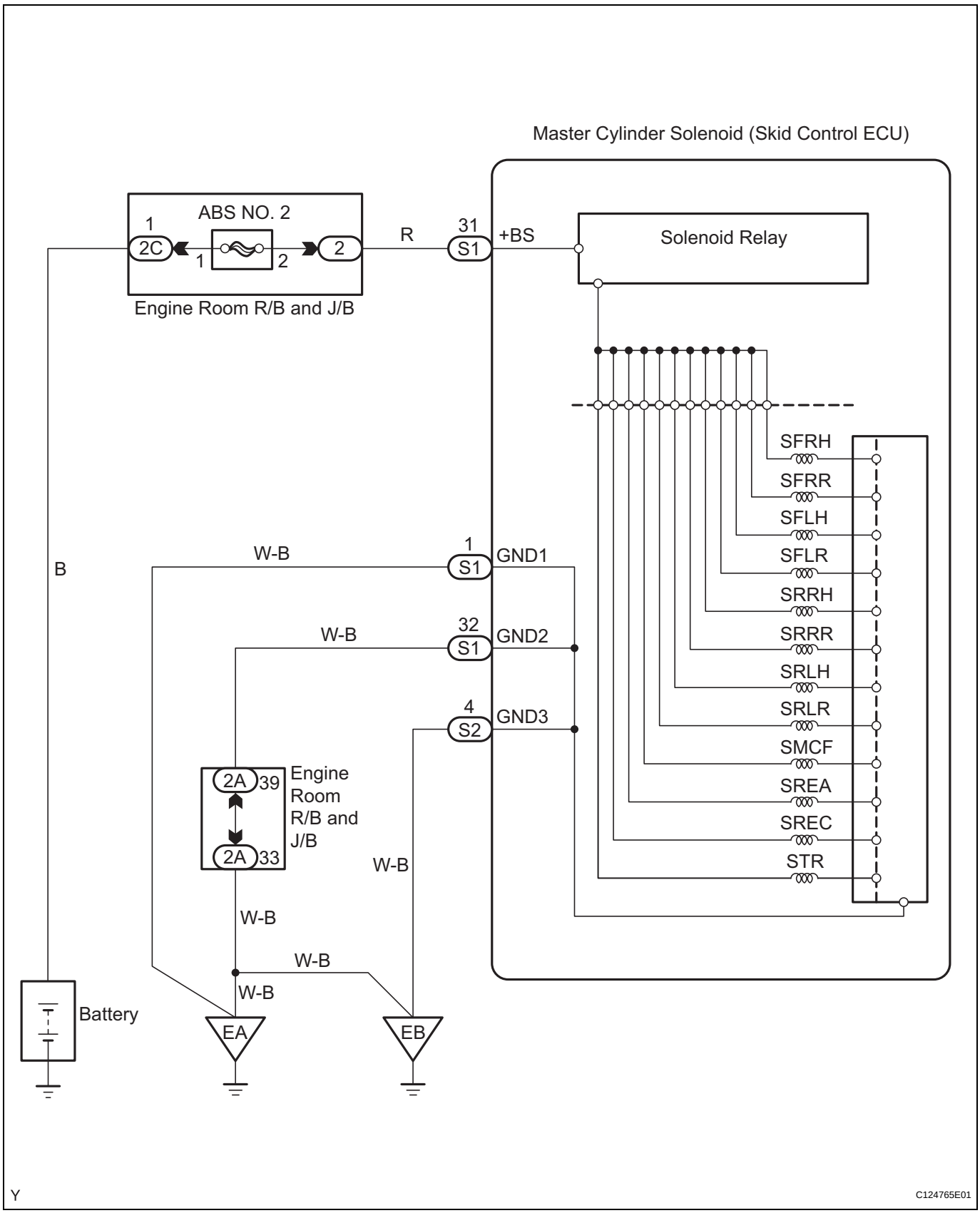

BC

1	**RECONFIRM DTC**

HINT:
This DTCs are set when a problem is identified in the master cylinder solenoid (skid control ECU).
The solenoid circuit is in the master cylinder solenoid. Therefore, solenoid circuit inspection and solenoid unit inspection cannot be performed. Be sure to check if the DTCs are output before replacing the master cylinder solenoid.

(a) Clear the DTC (See page BC-118).
(b) Check if the same DTCs are detected.

Result	Proceed to
DTC output	A
DTC not output	B

B → **END**

A

REPLACE MASTER CYLINDER SOLENOID

DTC	C0278/11	Open or Short Circuit in ABS Solenoid Relay Circuit

DTC	C0279/12	Short to B+ in ABS Solenoid Relay Circuit

DESCRIPTION

The ABS solenoid relay is built into the master cylinder solenoid.
This relay supplies power to each ABS solenoid. After the ignition switch is turned ON, if the initial check is OK, the relay turns on.

DTC No.	DTC Detecting Conditions	Trouble Areas
C0278/11	When either of following condition detected: 1. Both of following conditions continue for at least 0.2 seconds. (a) IG voltage between 9.5 V and 17 V. (b) Relay contact open when relay ON 2. Both of the following conditions continue for at least 0.2 seconds. (a) IG voltage 9.5 V or less when relay ON. (b) Relay contact remains open.	• ABS NO. 2 fuse • ABS solenoid relay • ABS solenoid relay circuit • Master cylinder solenoid (skid control ECU)
C0279/12	The following condition continues for at least 0.2 seconds. • Relay contact closed immediately after turning IG switch to the ON position when the relay OFF.	• ABS NO. 2 fuse • ABS solenoid relay • ABS solenoid relay circuit • Master cylinder solenoid (skid control ECU)

WIRING DIAGRAM

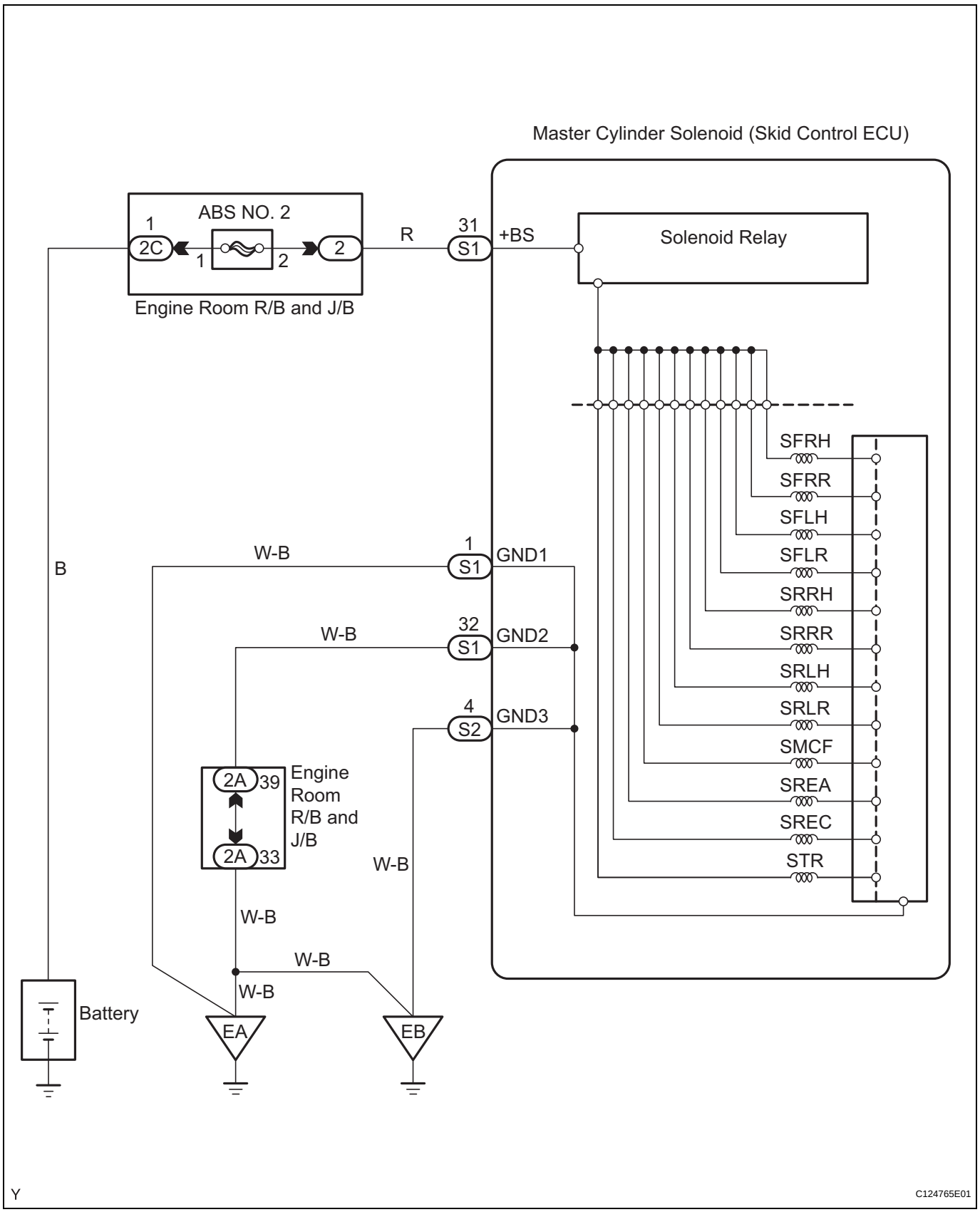

BC

1	INSPECT FUSE (ABS NO. 2)

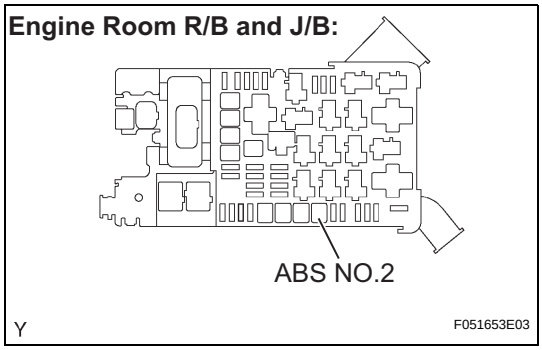

(a) Remove the ABS NO. 2 fuse from the engine room R/B and J/B.
(b) Measure the resistance of the ABS NO. 2 fuse.
Standard Resistance:
Below 1 Ω
(c) Reinstall the ABS NO. 2 fuse.

NG → **CHECK FOR SHORTS IN ALL HARNESSES AND CONNECTORS CONNECTED TO FUSE AND REPLACE FUSE**

OK

2	INSPECT SKID CONTROL ECU CONNECTOR (+BS TERMINAL VOLTAGE)

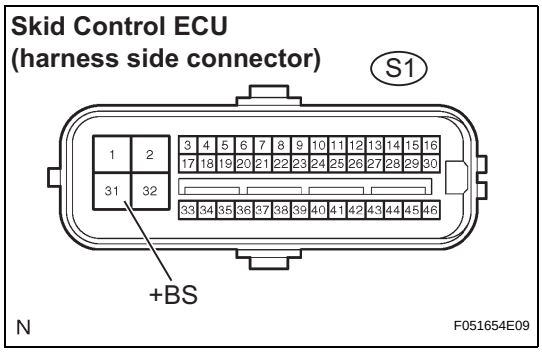

(a) Disconnect the skid control ECU connector.
(b) Measure the voltage.
Standard Voltage

Tester Connection	Specified Condition
S1-31 (+BS) - Body ground	10 to 14 V

(c) Reconnect the skid control ECU connector.

NG → **REPAIR OR REPLACE HARNESS OR CONNECTOR**

OK

BC

3	CHECK HARNESS OR CONNECTOR (GND - BODY GROUND)

Skid Control ECU
(harness side connector):

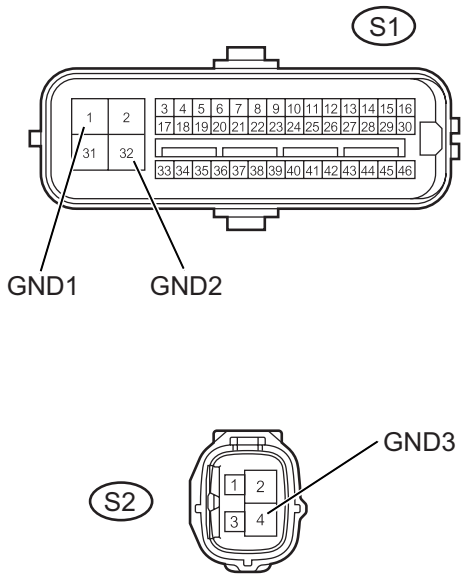

(a) Disconnect the skid control connectors.
(b) Measure the resistance.

Standard Resistance

Tester Connection	Specified Condition
S1-1, 32 (GND1, GND2) - Body ground	Below 1 Ω
S2-4 (GND3) - Body ground	Below 1 Ω

(c) Reconnect the skid control connectors.

NG → **REPAIR OR REPLACE HARNESS OR CONNECTOR (GND CIRCUIT)**

OK

4	RECONFIRM DTC

(a) Clear the DTCs (See page BC-118).
(b) Check if the same DTCs are recorded.

Result	Proceed to
DTC output	A
DTC not output	B

B → **END**

A

REPLACE MASTER CYLINDER SOLENOID

BC

DTC	C1201/51	Engine Control System Malfunction

DESCRIPTION

If trouble occurs in the engine control system, the skid control ECU disables TRAC, A-TRAC and VSC controls.

DTC No.	DTC Detecting Conditions	Trouble Areas
C1201/51	Malfunction signal received from ECM	Engine control system

1	CHECK DTC (ENGINE CONTROL SYSTEM)

(a) Check if any DTC is recorded for the engine control system (See page ES-40 or ES-38).

Result	Proceed to
DTC not output	A
DTC output	B

B → REPAIR ENGINE CONTROL SYSTEM

A

REPLACE ECM

DTC	C1202/52	Brake Fluid Level Low / Open Circuit in Brake Fluid Level Warning Switch Circuit

DTC	C1202/58	Brake Fluid Level Low / Open Circuit in Brake Fluid Level Warning Switch Circuit

DESCRIPTION

The brake fluid level warning switch sends the appropriate signal to the skid control ECU when the brake fluid level drops.

DTC No.	DTC Detecting Conditions	Trouble Areas
C1202/52 C1202/58	When any of the following conditions detected: 1. Fluid level of brake master cylinder reservoir tank stays low for 30 seconds or more when vehicle stops, or for 60 seconds or more when driving. 2. With ECU terminal IG1 voltage 9.5 V to 17.2 V, an open circuit for brake fluid level warning switch circuit continues for 2 seconds or more. 3. Fluid level of master cylinder reservoir tank LOW for 4 seconds or 40 seconds after ignition switch turned ON, of for 7 seconds during pump motor operation.	• Brake fluid level • Brake fluid level warning switch • Brake fluid level warning switch circuit • Master cylinder solenoid (skid control ECU)

WIRING DIAGRAM

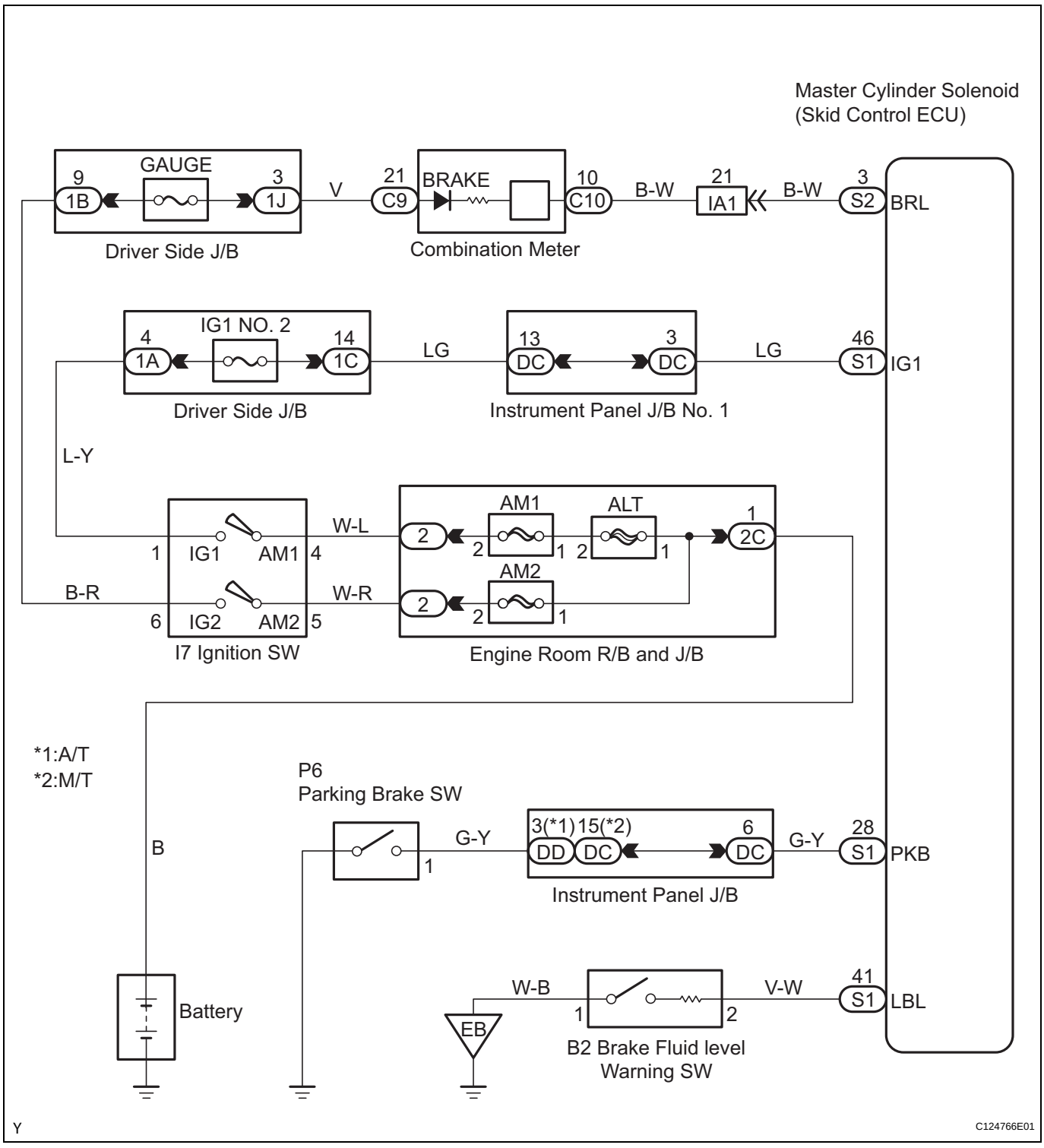

HINT:
When C1241/41 is output together with C1202/52 or C1202/58, inspect and repair the trouble areas indicated by C1241/41 first.

1	CHECK BRAKE FLUID LEVEL

(a) Turn the ignition switch to OFF.

(b) Depress the brake pedal 20 times or more (until the pedal reaction feels light and pedal stroke becomes longer).

(c) Check the amount of fluid in the brake reservoir.
HINT:
When the ignition switch is turned to the ON position, brake fluid is sent to the accumulator and the fluid level decreases by approximately 5 mm from the level when the ignition switch is off (normal).
NOTICE:
Do not move the wheels with the ignition switch off.
OK:
Brake fluid level is correct.

NG → **CHECK FOR LEAKAGE AND REPAIR**

OK

2 INSPECT BRAKE FLUID LEVEL WARNING SWITCH

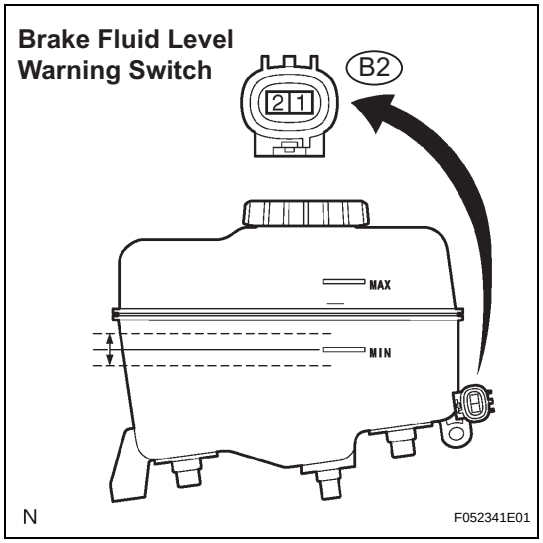

(a) Disconnect the brake fluid level warning switch connector.

(b) Measure the resistance.
Standard Resistance

Tester Connection	Condition	Specified Condition
B2-1 - B2-2	Float UP (Switch OFF)	1.9 to 2.1 kΩ
B2-1 - B2-2	Float DOWN (Switch ON)	Below 1 Ω

(c) Reconnect the brake fluid level warning switch connector.
HINT:
If there is no problem after finishing the above check, adjust the brake fluid level to the maximum level.

NG → **REPLACE BRAKE MASTER CYLINDER RESERVOIR SUB-ASSEMBLY**

OK

BC

3	CHECK HARNESS AND CONNECTOR (BRAKE FLUID LEVEL WARNING SWITCH - SKID CONTROL ECU)

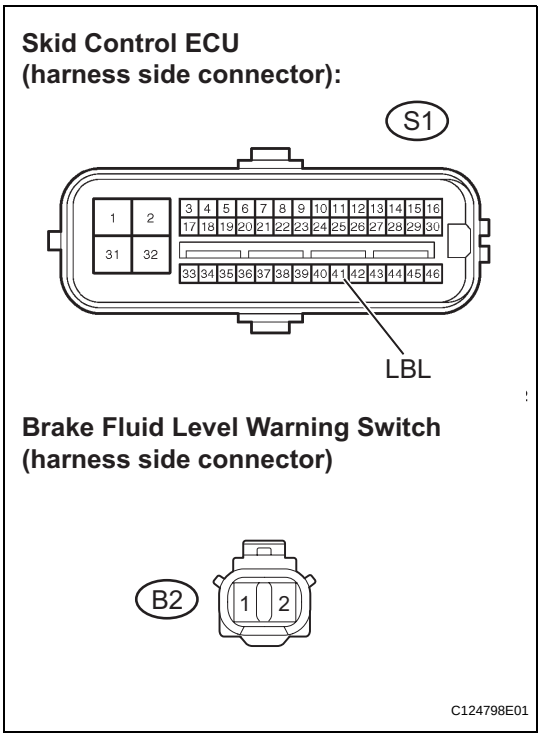

(a) Disconnect the skid control ECU connector.
(b) Disconnect the brake fluid level warning switch connector.
(c) Measure the resistance.
Standard Resistance

Tester Connection	Specified Condition
S1-41 (LBL) - B2-2	Below 1 Ω

(d) Reconnect the brake fluid level warning switch connector.
(e) Reconnect the skid control ECU connector.

NG → **REPAIR OR REPLACE HARNESS OR CONNECTOR**

OK

BC

4	RECONFIRM DTC

(a) Clear the DTCs (See page BC-118).
(b) Check if the same DTCs are detected.

Result	Proceed to
DTC output	A
DTC not output	B

B → **END**

A

REPLACE MASTER CYLINDER SOLENOID

DTC	C1203/53	ECM Communication Circuit Malfunction

DESCRIPTION

The circuit sends TRAC, A-TRAC and VSC control information from the skid control ECU to the ECM, and engine control information from the ECM to the skid control ECU via the CAN communication system.

DTC No.	DTC Detecting Condition	Trouble Areas
C1203/53	Information relating to engine drive source or destination stored in ECM does not match that stored in skid control ECU.	• CAN communication system • ECM

WIRING DIAGRAM

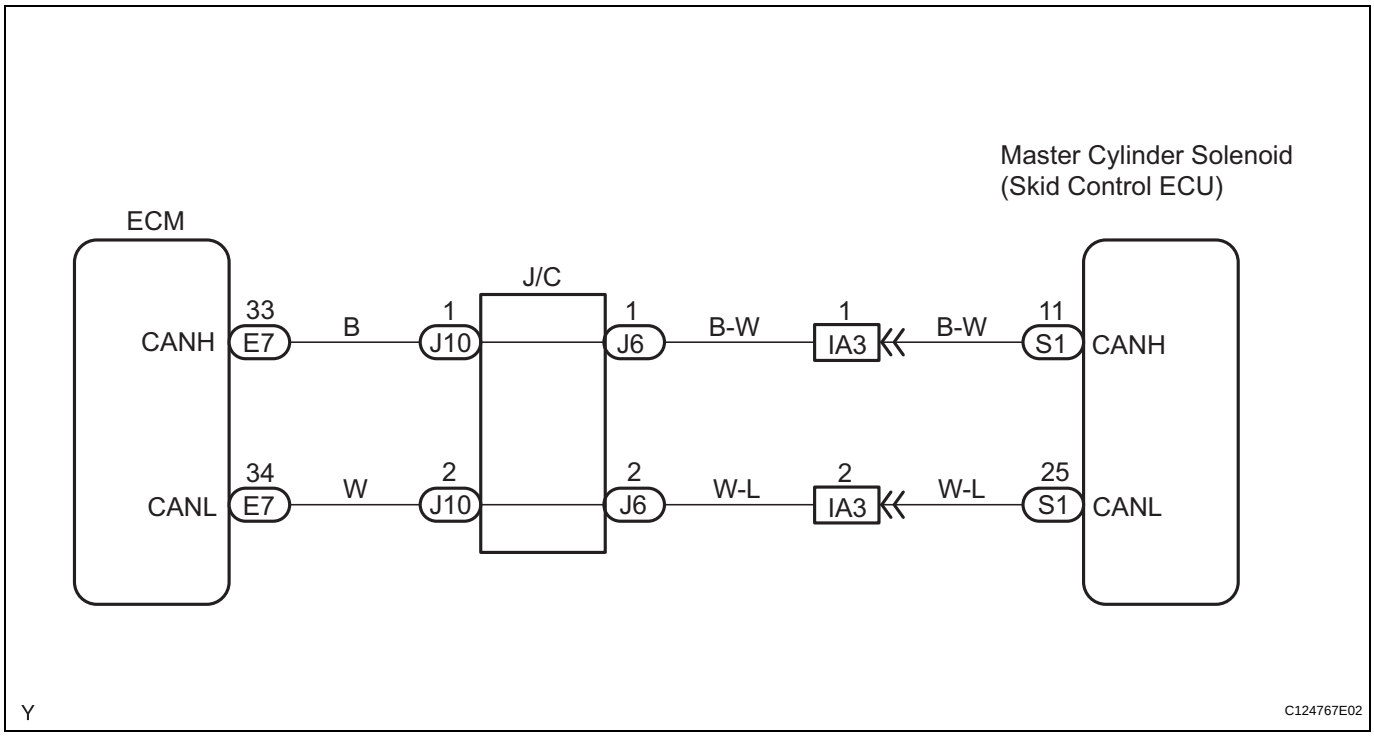

BC

1	CHECK DTC (ENGINE CONTROL SYSTEM)

(a) Check if any DTC is recorded for the engine control system (See page ES-40 or ES-38).

Result	Proceed to
DTC not output	A
DTC output	B

B → REPAIR ENGINE CONTROL SYSTEM

A

REPLACE ECM

DTC	C1210/36	Zero Point Calibration of Yaw Rate Sensor Undone

DTC	C1336/39	Zero Point Calibration of Acceleration Sensor Undone

DESCRIPTION

Skid control ECU receives signals from the yaw rate sensor and deceleration sensor via the CAN communication system.
The deceleration sensor is built into the yaw rate sensor.
If there is trouble in the bus lines between the yaw rate sensor and deceleration sensor and the CAN communication system, the DTCs U0123/62 (yaw rate sensor communication trouble) and U0124/95 (deceleration sensor communication trouble) are output.
These DTCs are also output when the calibration has not been completed.

DTC No.	DTC Detecting Conditions	Trouble Areas
C1210/36	When either of following 1 or 2 detected: 1. When battery terminal connected, shift lever moved to non-P position (A/T), parking brake OFF (M/T) within 15 seconds of ECU terminal IG1 initially turned ON. 2. Yaw rate sensor zero point recorded in ECU deleted.	• Yaw rate sensor and deceleration sensor • Zero point calibration not complete • PNP switch circuit (P position) (A/T) • Parking brake switch circuit (M/T)
C1336/39	When either of following 1 or 2 detected: 1. In TEST mode, shift lever shifted to non-P position (A/T), parking brake OFF (M/T) 2 seconds after ECU terminal IG1 initially turned ON. 2. Deceleration sensor zero point recorded in ECU deleted.	• Yaw rate sensor and deceleration sensor • Zero point calibration not complete • PNP switch circuit (P position) (A/T) • Parking brake switch circuit (M/T)

WIRING DIAGRAM

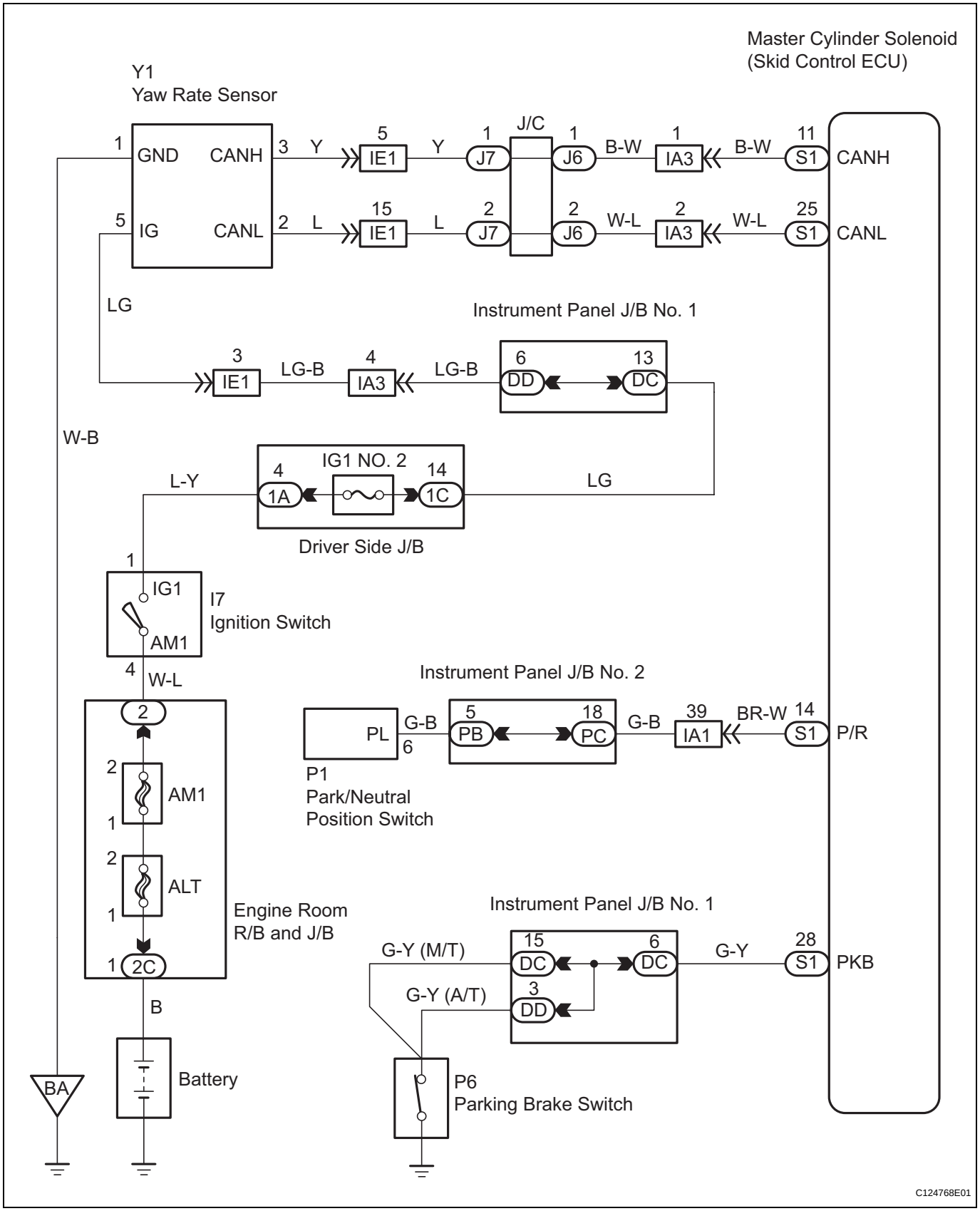

HINT:
When U0073/94, U0100/65, U0123/62, U0124/95 or U0126/63 are output accompanied by C1210/36 or C1336/39, inspect and repair the trouble areas indicated by U0073/94, U0100/65,U0123/62, U0124/95 or U0126/63 first.

1	PERFORM YAW RATE AND DECELERATION SENSOR ZERO POINT CALIBRATION

(a) Perform the zero point calibration of the yaw rate sensor and deceleration sensor (See page BC-99).

NEXT

2	RECONFIRM DTC

(a) Clear the DTCs (See page BC-118).
(b) Check if the same DTCs are recorded.

Result	Proceed to
DTC output	A
DTC not output	B

B → END

A

3	CHECK YAW RATE AND DECELERATION SENSOR INSTALLATION

BC

(a) Check that the yaw rate and deceleration sensor has been installed properly (See page BC-309).
OK:
The sensor is tightened to the specified torque.
The sensor is not tilted.

NG → INSTALL YAW RATE SENSOR CORRECTLY

OK

4	CHECK HARNESS AND CONNECTOR (ECU - PARK/NEUTRAL POSITION SWITCH OR PARKING BRAKE SWITCH)

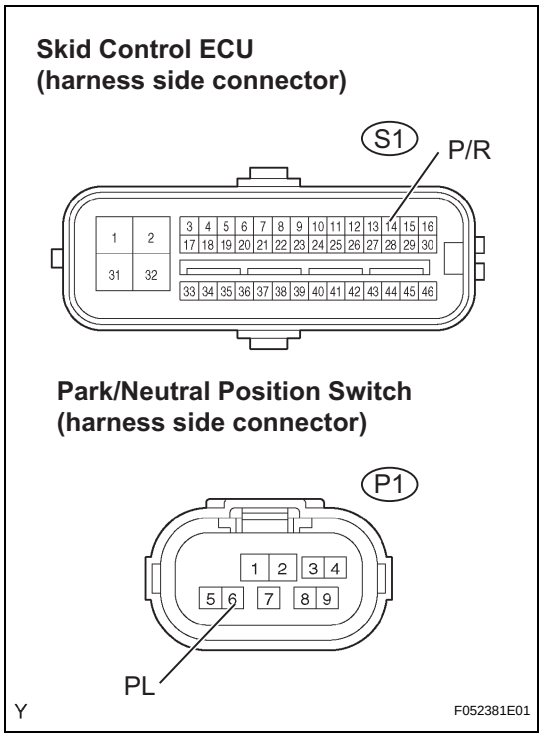

(a) A/T
(1) Disconnect the skid control ECU connector.
(2) Disconnect the Park/Neutral position switch connector.
(3) Measure the resistance.
Standard Resistance

Tester Connection	Specified Condition
S1-14 (P/R) - P1-6 (RL)	Below 1 Ω

(4) Reconnect the Park/Neutral position switch connector.
(5) Reconnect the skid control ECU connector.

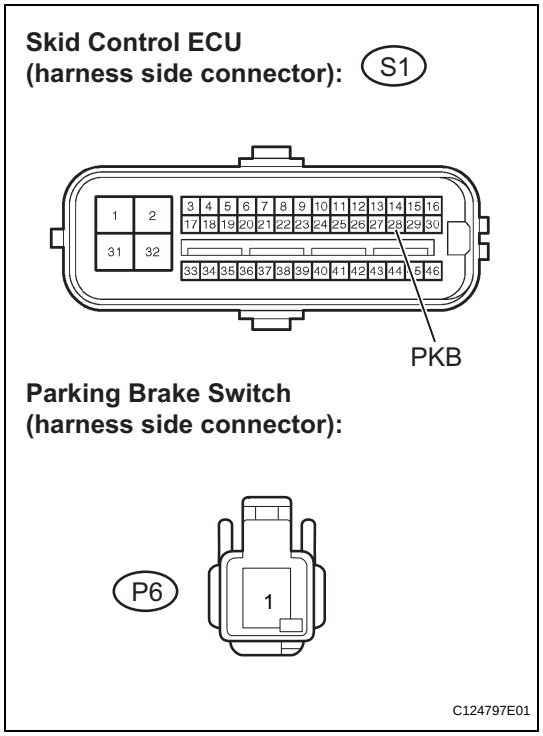

(b) M/T:
(1) Disconnect the skid control ECU connector.
(2) Disconnect the parking brake switch connector.
(3) Measure the resistance.
Standard Resistance

Tester Connection	Specified Condition
S1-28 (PKB) - P6-1	Below 1 Ω

(4) Reconnect the parking brake switch connector.
(5) Reconnect the skid control ECU connector.

BC

NG → **REPAIR OR REPLACE HARNESS OR CONNECTOR**

OK

5	INSPECT PARK/NEUTRAL POSITION SWITCH OR PARKING BRAKE SWITCH

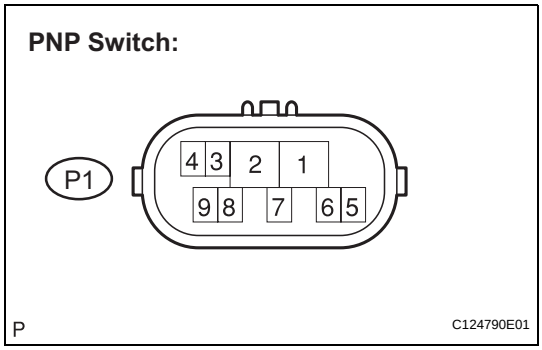

(a) Inspect the Park/Neutral Position (PNP) switch (for A/T models).
(1) Disconnect the P1 PNP switch connector.
(2) Check the resistance when the transmission gear selector lever is moved to each position.
Standard Resistance

Gear Selector Lever Positions	Tester Connections	Specified Conditions
P	2 - 6, 4 - 5	Below 1 Ω
R	1 - 2	Below 1 Ω
N	2 - 9, 4 - 5	Below 1 Ω
D	2 - 7	Below 1 Ω
2	2 - 3	Below 1 Ω
L	2 - 8	Below 1 Ω

(3) Reconnect the PNP switch connector.

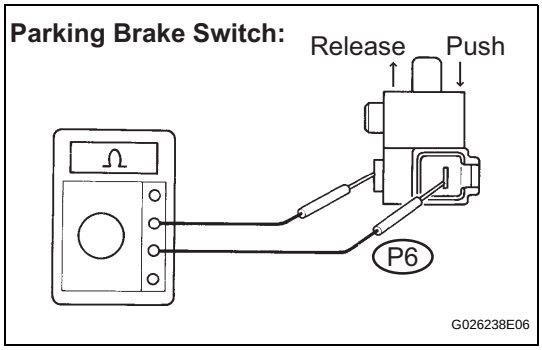

(b) Inspect the parking brake switch (for M/T models).
(1) Disconnect the parking brake switch connector.
(2) Measure the resistance.
Standard Resistance

Tester Connection	Condition	Specified Condition
P6-1 Ground part	Released	Below 1 Ω
P6-1 Ground part	Pushed in	Below 1 Ω

(3) Reconnect the parking brake switch connector.

NG → **REPLACE PARK/NEUTRAL POSITION SWITCH OR PARKING BRAKE SWITCH**

OK

6	REPLACE YAW RATE AND DECELERATION SENSOR

(a) Replace the yaw rate and deceleration sensor (See page BC-308).

NEXT

7	PERFORM YAW RATE AND DECELERATION SENSOR ZERO POINT CALIBRATION

(a) Perform the zero point calibration of the yaw rate sensor and deceleration sensor (See page BC-99).

NEXT

8	RECONFIRM DTC

(a) Clear the DTCs (See page BC-118).

BC

(b) Check if the same DTCs are recorded.

Result	Proceed to
DTC output	A
DTC not output	B

B → **END**

A

REPLACE MASTER CYLINDER SOLENOID

DTC	C1223/43	ABS Control System Malfunction

DESCRIPTION

This DTC is output when the VSC system detects a malfunction in the ABS system. When DTC C1223/43 is stored, there is no malfunction in the skid control ECU.

DTC No.	DTC Detecting Condition	Trouble Areas
C1223/43	ABS control system abnormal	ABS control system

1	CHECK DTC (ABS)

(a) Clear the DTC (See page BC-118).
(b) Check if the same DTC is recorded.

Result	Proceed to
DTC output	A
DTC not output	B

B → END

A

REPAIR CIRCUITS INDICATED BY OUTPUT DTCS

DTC	C1231/31	Steering Angle Sensor Circuit Malfunction

DTC	C1290/66	Steering Angle Sensor Zero Point Malfunction

DESCRIPTION

The steering angle sensor signal is sent to the skid control ECU via the CAN communication system. When there is a malfunction in the communication system, the DTC will be detected by the diagnosis function.

DTC No.	DTC Detecting Conditions	Trouble Areas
C1231/31	When ECU IG1 terminal voltage 9.5 V or more, steering angle sensor malfunction signal received.	• Master cylinder solenoid (skid control ECU) • Steering angle sensor • Steering angle sensor circuit • CAN communication system
C1290/66	Steering angle sensor zero point calibration position significantly differs from recorded value.	Steering angle sensor

WIRING DIAGRAM

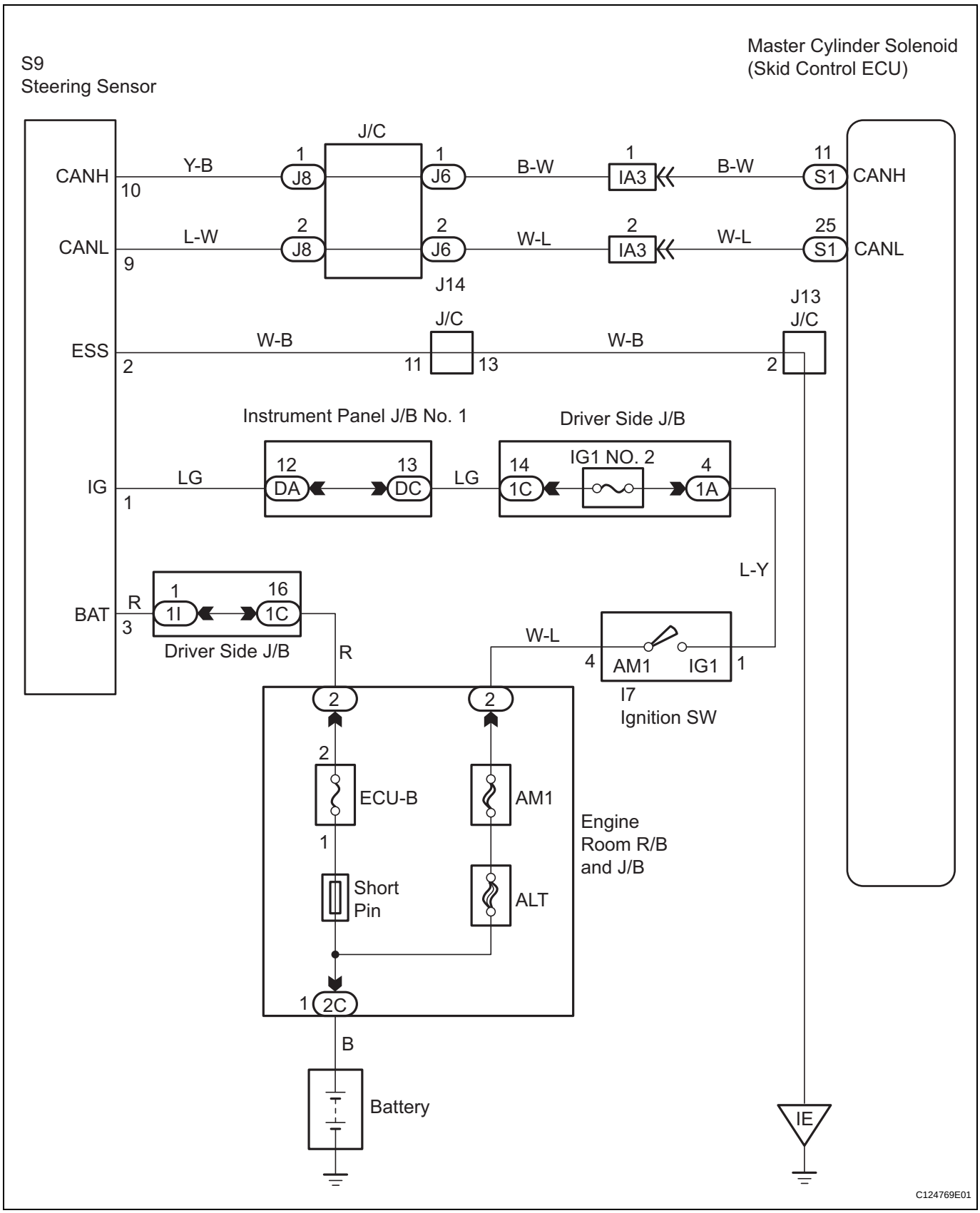

HINT:

- When U0073/94, U0123/62, U0124/95 or U0126/63 are output together with C1231/31, inspect and repair the trouble areas indicated by U0073/94, U0123/62, U0124/95 or U0126/63 first.

- When the speed sensor or the yaw rate sensor has trouble, DTCs relating to the steering angle sensor may be output even when the steering angle sensor is normal. When DTCs relating to the speed sensor (C0200/31, C0205/32, C0210/33, C0215/34, C1235/35, C1236/36, C1238/38, C1239/39) or yaw rate (deceleration) sensor (C1232/32, C1234/34, C1243/43, C1244/44, C1245/45, C1381/97) are output together with other DTCs relating to the steering angle sensor, inspect and repair the speed sensor and yaw rate (deceleration) sensor first, and then inspect and repair the steering angle sensor.

1 CHECK CAN COMMUNICATION SYSTEM

(a) Check CAN communication system DTC (See page CA-7).

Result	Proceed to
DTC not output	A
DTC output	B

NG → **REPAIR CAN COMMUNICATION SYSTEM**

OK

2 READ VALUE OF DATA LIST (STEERING ANGLE SENSOR)

(a) Connect the intelligent tester to the DLC3.
(b) Turn the ignition switch to the ON position.
(c) Turn the tester ON.
(d) Select "DATA LIST" mode on the intelligent tester.

Item	Measurement Item / Range (Display)	Normal Condition	Diagnostic Note
STEERING ANG	Steering sensor/ Min.: -1152 deg, Max.: 1150.875 deg	Left turn: Increase Right turn: Decrease	-

(e) Check that the steering angle sensor value displayed on the intelligent tester changes when turning the steering wheel.
OK:
Steering angle sensor value changes.

OK (When troubleshooting in accordance with DTC CHART)	A
OK (When troubleshooting in accordance with PROBLEM SYMPTOMS TABLE)	B
NG	C

B → **PROCEED TO NEXT CIRCUIT INSPECTION SHOWN IN PROBLEM SYMPTOMS TABLE**

C → **Go to step 4**

A

3 RECONFIRM DTC

(a) Clear the DTCs (See page BC-118).

BC

(b) Check if the same DTCs are recorded.

Result	Proceed to
DTC output	A
DTC not output	B

B → END

A

REPLACE MASTER CYLINDER SOLENOID

4 CHECK TERMINAL VOLTAGE (STEERING ANGLE SENSOR)

(a) Remove the steering wheel and the column lower cover.
(b) Disconnect the steering angle sensor connector.
(c) Turn the ignition switch to the ON position.
(d) Measure the voltage.

Standard Voltage

Tester Connection	Specified Condition
S9-1 (IG1) - S9-2 (ESS)	10 to 14 V
S9-3 (BAT) - S9-2 (ESS)	10 to 14 V

(e) Turn the ignition switch to OFF.
(f) Reconnect the steering angle sensor connector.
(g) Reinstall the steering wheel and the column lower cover.

NG → **REPAIR OR REPLACE HARNESS OR CONNECTOR**

OK

5 REPLACE STEERING ANGLE SENSOR

(a) Replace the steering angle sensor (See page BC-311).

NEXT

6 RECONFIRM DTC

(a) Clear the DTCs (See page BC-118).
(b) Check if the same DTCs are recorded.

Result	Proceed to
DTC output	A
DTC not output	B

B → END

A

REPLACE MASTER CYLINDER SOLENOID

DTC	C1232/32	Stuck in Deceleration Sensor

DTC	C1234/34	Yaw Rate Sensor Malfunction

DTC	C1243/43	Acceleration Sensor Stuck Malfunction

DTC	C1244/44	Open or Short in Deceleration Sensor Circuit

DTC	C1245/45	Acceleration Sensor Output Malfunction

DTC	C1381/97	Yaw Rate and / or Acceleration Sensor Power Supply Voltage Malfunction

DESCRIPTION

The skid control ECU receives signals from the yaw rate sensor and deceleration sensor via CAN communication system.
The deceleration sensor is built into the yaw rate sensor.
If there is trouble in the bus lines between the yaw rate sensor and deceleration sensor and the CAN communication system, DTC U0123/62 (yaw rate sensor communication trouble) and U0124/95 (G sensor communication trouble) are output.

DTC No.	DTC Detecting Conditions	Trouble Areas
C1232/32	At vehicle speed of 6 mph (10 km/h) or more, signal from either GL1 or GL2 does not change for 30 seconds or more.	• Yaw rate and deceleration sensor • Yaw rate and deceleration sensor circuit
C1234/34	Sensor malfunction signal received from yaw rater sensor.	• Yaw rate and deceleration sensor • Yaw rate and deceleration sensor circuit
C1243/43	Following condition repeats 16 times. • GL1 and GL2 do not change by more than 2LSB when vehicle decelerates from 19 mph (30 km/h) to 0 mph (0 km/h).	• Yaw rate and deceleration sensor • Yaw rate and deceleration sensor circuit
C1244/44	When either of following (1 or 2) detected: 1. Both of following conditions continue for at least 60 seconds. • Vehicle stopped. • Difference between GL1 and GL2 does not drop below 0.4 G once it reaches 0.6 G or more. 2. Data malfunction signal received from deceleration sensor.	• Yaw rate and deceleration sensor • Yaw rate and deceleration sensor circuit
C1245/45	Following condition continues for at least 60 seconds. • Difference between values calculated from deceleration sensor value and vehicle speed exceeds 0.35 G.	• Yaw rate and deceleration sensor • Yaw rate and deceleration sensor circuit
C1381/97	Deceleration sensor power source malfunction signal received for at least 10 seconds at a speed of more than 2 mph (3 km/h).	• Yaw rate and deceleration sensor • Yaw rate and deceleration sensor circuit

WIRING DIAGRAM

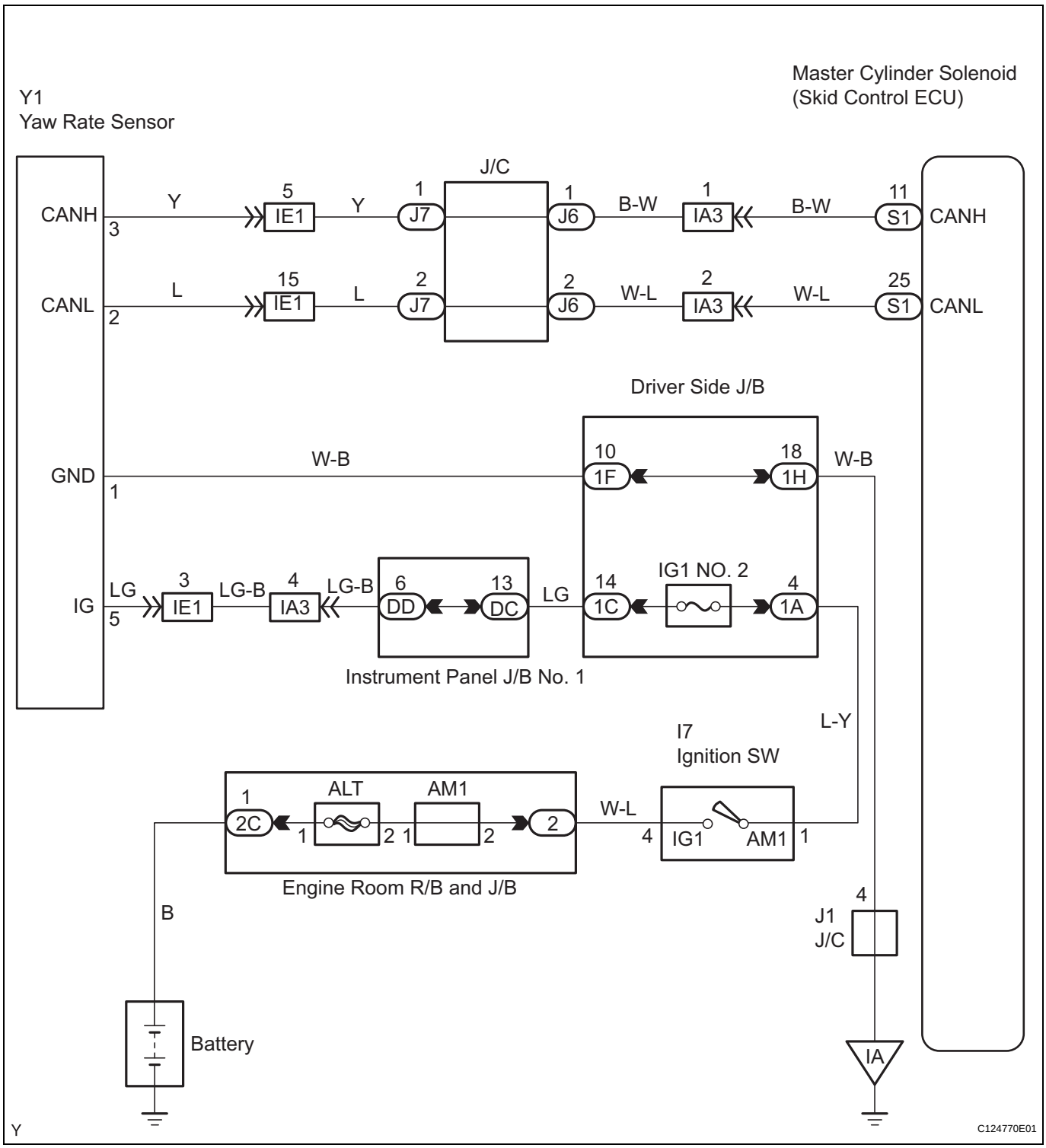

HINT:
When U0073/94, U0123/62, U0124/95 or U0126/63 are output together with C1232/32 or C1234/34, inspect and repair the trouble areas indicated by U0073/94, U0123/62, U0124/95 or U0126/63 first.

1	CHECK DTC

(a) Clear the DTCs (See page BC-118).

(b) Check if the DTCs U073/94, U0123/62, C1210/36 and/or C1336/39 are detected.

Result	Proceed to
DTC U073/94, U0123/62, U1210/36 and/or C1336/39 not output	A
DTC U073/94 and/or U0123/62 output	B
DTC C1210/36 and/or C1336/39 output	C

B → **REPAIR CAN COMMUNICATION SYSTEM**

C → **REPAIR CIRCUITS INDICATED BY OUTPUT DTCS**

A

2 INSPECT YAW RATE AND DECELERATION SENSOR (TERMINAL VOLTAGE AND CONTINUITY)

(a) Disconnect the yaw rate and deceleration sensor connector.

(b) Measure the voltage.

Standard Voltage

Tester Connection	Condition	Specified Condition
Y1-5 (IG) - Body ground	Ignition switch ON	10 to 14 V

(c) Measure the resistance.

Standard Resistance

Tester Connection	Condition	Specified Condition
Y1-1 (GND) - Body ground	Ignition switch OFF	Below 1 Ω

(d) Reconnect the yaw rate and deceleration sensor connector.

Result	Proceed to
OK (When troubleshooting in accordance with DTC CHART)	A
OK (When troubleshooting in accordance with PROBLEM SYMPTOMS TABLE)	B
NG	C

B → **PROCEED TO NEXT CIRCUIT INSPECTION SHOWN IN PROBLEM SYMPTOMS TABLE**

C → **REPAIR OR REPLACE HARNESS OR CONNECTOR**

A

REPLACE YAW RATE AND DECELERATION SENSOR

BC

DTC	**C1235/35**	**Foreign Object is Attached on Tip of Front Speed Sensor RH**

DTC	**C1236/36**	**Foreign Object is Attached on Tip of Front Speed Sensor LH**

DTC	**C1238/38**	**Foreign Object is Attached on Tip of Rear Speed Sensor RH**

DTC	**C1239/39**	**Foreign Object is Attached on Tip of Rear Speed Sensor LH**

DESCRIPTION

The Skid Control ECU sets this DTC if, according to abnormal signals input by the sensor, it detects that foreign material is adhering to the speed sensor tip or the sensor rotor, or the rotor has any missing teeth. This DTC may be set if parts such as the speed sensor circuit connector or wire harness are malfunctioning.

DTC No.	DTC Detecting Conditions	Trouble Areas
C1235/35 C1236/36 C1238/38 C1239/39	• At vehicle speed of 12 mph (20 km/h) or more, noise in speed sensor signal continues for 5 seconds or more. • At vehicle speed of 6 mph (10 km/h) or more, noise detected as rotor turns, for 15 seconds or more.	• Master cylinder solenoid (skid control ECU) • Speed sensor • Speed sensor rotor

HINT:

BC

DTC C1235/35 relates to the front right speed sensor.
DTC C1236/36 relates to the front left speed sensor.
DTC C1238/38 relates to the rear right speed sensor.
DTC C1239/39 relates to the rear left speed sensor.

WIRING DIAGRAM

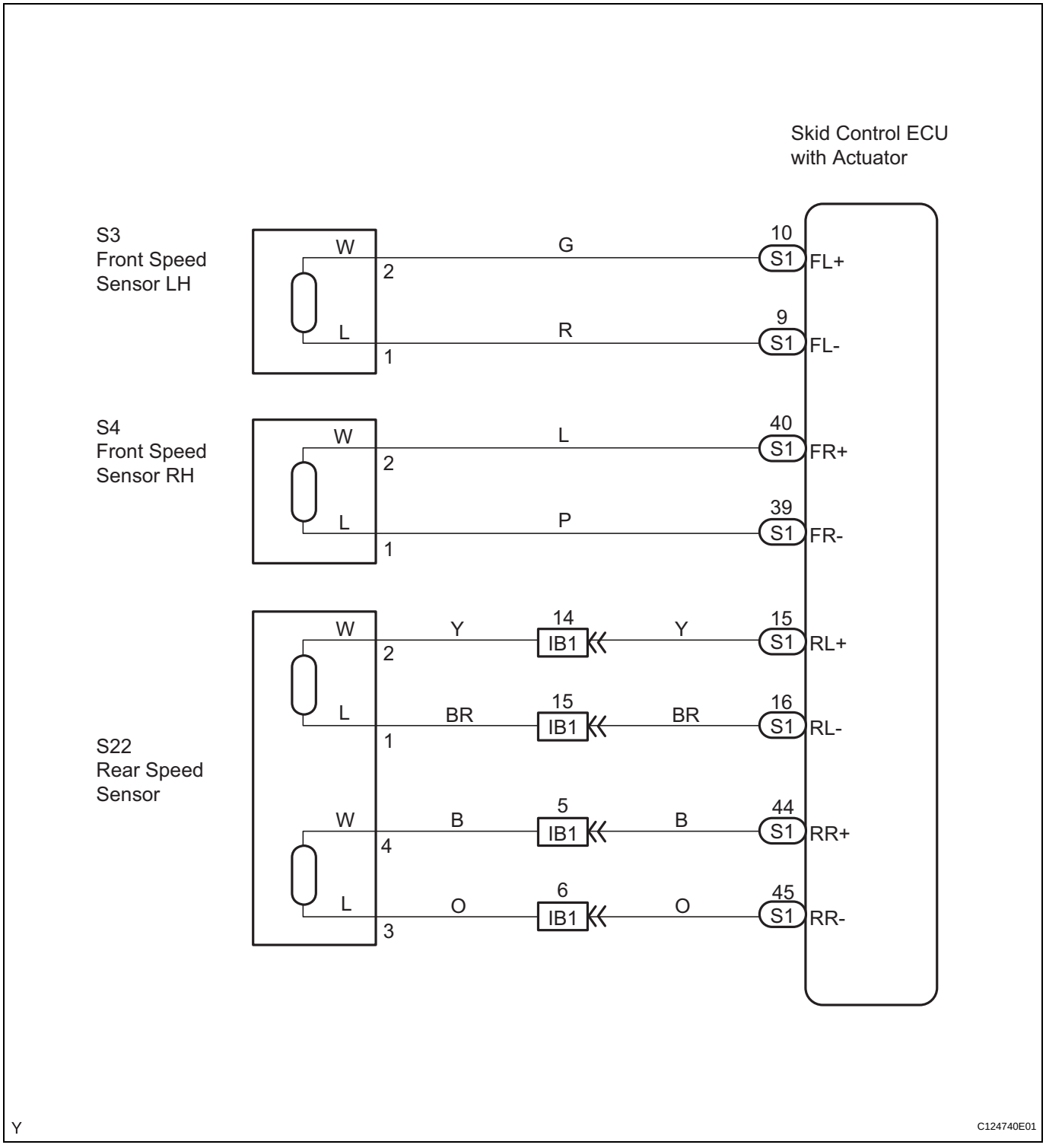

1	CHECK HARNESS AND CONNECTOR (SKID CONTROL ECU - SPEED SENSOR)

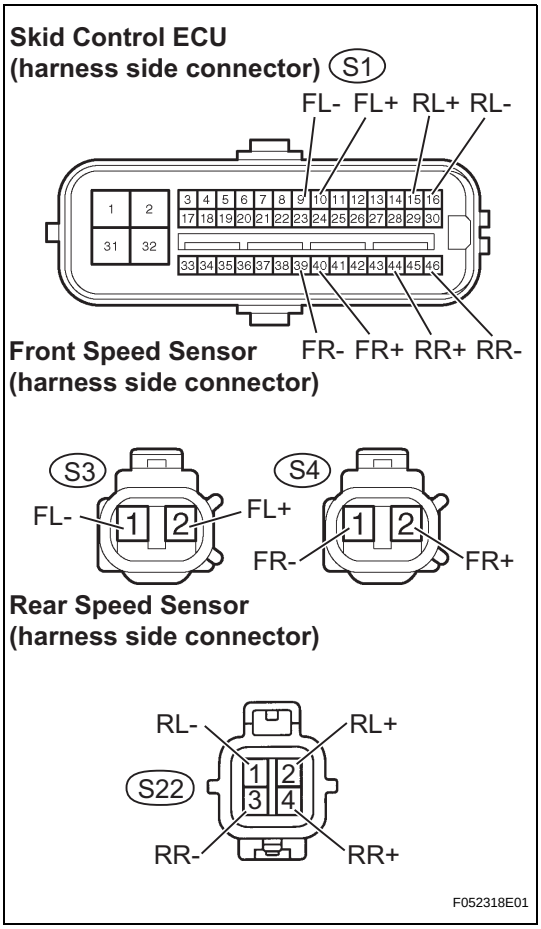

(a) Disconnect the skid control ECU connector.
(b) Disconnect the speed sensor connectors.
(c) Measure the resistance.

Standard Resistance

Tester Connection	Specified Condition
S1-10 (FL+) - S3-2 (FL+)	Below 1 Ω
S1-9 (FL-) - S3-1 (FL-)	Below 1 Ω
S1-40 (FR+) - S4-2 (FR+)	Below 1 Ω
S1-39 (FR-) - S4-1 (FR-)	Below 1 Ω
S1-15 (RL+) - S22-2 (RL+)	Below 1 Ω
S1-16 (RL-) - S22-1 (RL-)	Below 1 Ω
S1-44 (RR+) - S22-4 (RR+)	Below 1 Ω
S1-45 (RR-) - S22-3 (RR-)	Below 1 Ω

(d) Measure the resistance.

Standard Resistance

Tester Connection	Specified Condition
S1-10 (FL+) - Body ground	10 kΩ or higher
S1-9 (FL-) - Body ground	10 kΩ or higher
S1-40 (FR+) - Body ground	10 kΩ or higher
S1-39 (FR-) - Body ground	10 kΩ or higher
S1-15 (RL+) - Body ground	10 kΩ or higher
S1-16 (RL-) - Body ground	10 kΩ or higher
S1-44 (RR+) - Body ground	10 kΩ or higher
S1-45 (RR-) - Body ground	10 kΩ or higher

(e) Reconnect the speed sensor connectors.
(f) Reconnect the skid control ECU connector.

NG → **REPAIR OR REPLACE HARNESS OR CONNECTOR**

OK

BC

2 INSPECT MASTER CYLINDER SOLENOID (TERMINAL VOLTAGE)

Front Speed Sensor (harness side connector):

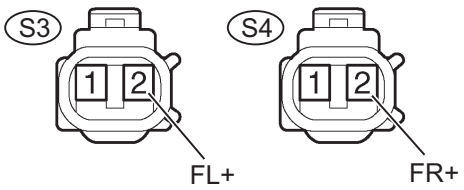

Rear Speed Sensor (harness side connector):

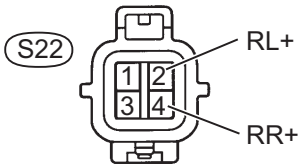

F052319E02

(a) Disconnect the speed sensor connectors.
(b) Turn the ignition switch to the ON position.
(c) Measure the voltage.

Standard Voltage

Tester Connection	Specified Condition
S3-2 (FL+) - Body ground	7.5 to 12 V
S4-2 (FR+) - Body ground	7.5 to 12 V
S22-2 (RL+) - Body ground	7.5 to 12 V
S22-4 (RR+) - Body ground	7.5 to 12 V

(d) Turn the ignition switch to OFF.
(e) Reconnect the speed sensor connectors.

NG → **REPLACE MASTER CYLINDER SOLENOID**

OK

3 RECONFIRM DTC

(a) Clear the DTCs (See page BC-118).
(b) Check if the same DTCs are recorded.

Result	Proceed to
DTC output	A
DTC not output	B

B → **CHECK FOR SHORTS IN ALL HARNESSES AND CONNECTORS CONNECTED TO FUSE AND REPLACE FUSE**

A

4 INSPECT SPEED SENSOR

(a) Remove the speed sensor (See page BC-303 or BC-304).
(b) Check the sensor tip.

OK:

No scratches or foreign matter on the sensor tip.

NG → **CLEAN OR REPLACE SPEED SENSOR**

BC

OK

CLEAN OR REPLACE SPEED SENSOR

DTC	C1241/41	Low Battery Positive Voltage

DESCRIPTION

If the voltage supplied to the IG1 terminal is not within the DTC detection threshold due to malfunctions in parts such as the battery and alternator circuit, this DTC is stored.

DTC No.	DTC Detecting Conditions	Trouble Areas
C1241/41	When either of following conditions detected: 1. Both of following conditions continue for at least 10 seconds. • Vehicle speed more than 2 mph (3 km/m). • IG1 terminal voltage less than 9.5 V. 2. All of following conditions continue for at least 0.2 seconds. • Solenoid relay remains ON. • IG1 terminal voltage less than 9.5 V. • Relay contact open.	• Battery • IG1 NO. 2 fuse • Charging system • Power source circuit

WIRING DIAGRAM

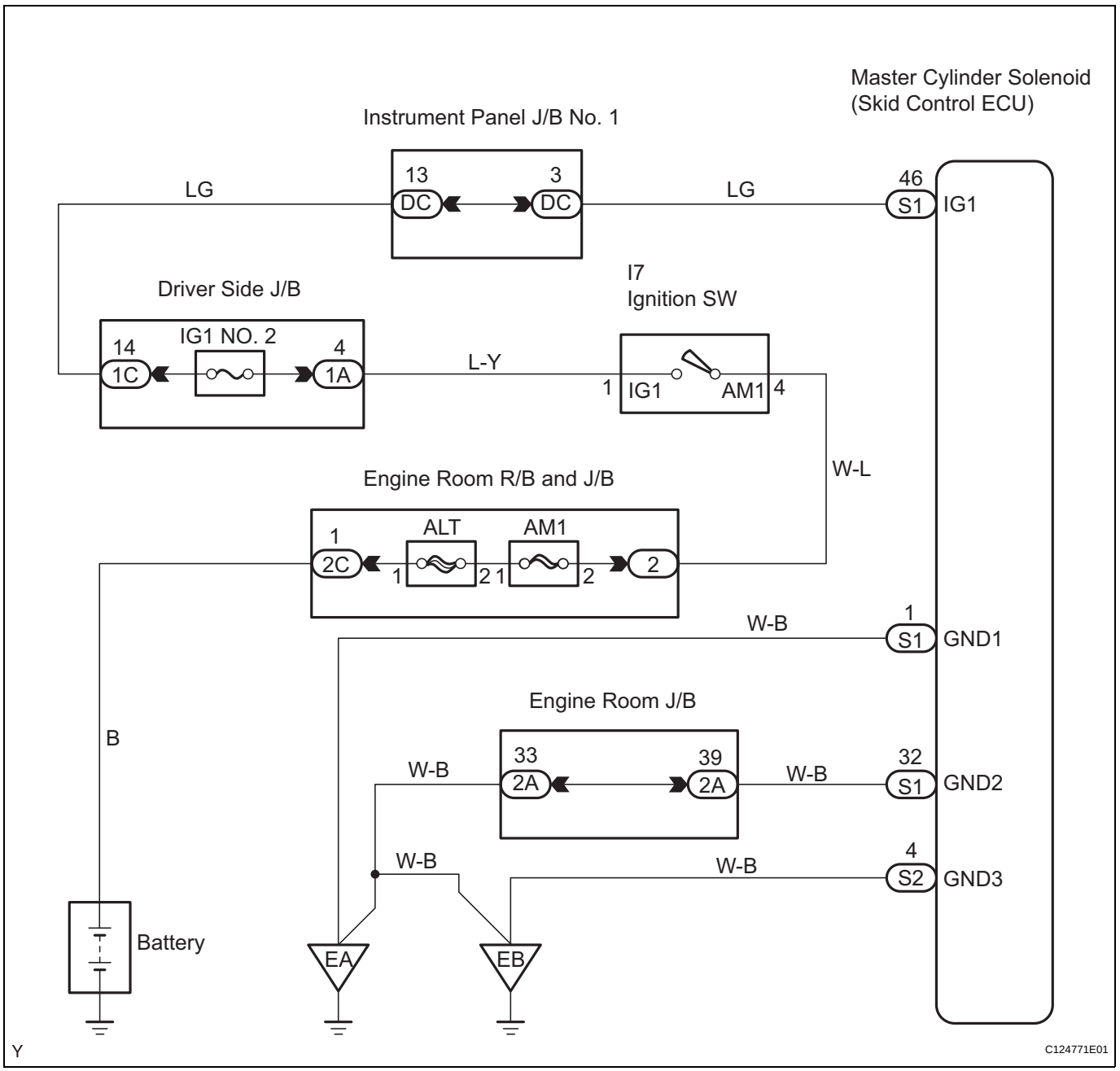

1	INSPECT BATTERY

(a) Check the battery voltage.
Standard Voltage:
11 to 14 V

NG → **INSPECT CHARGING SYSTEM**

OK

2	**INSPECT FUSE (IG1 NO. 2)**

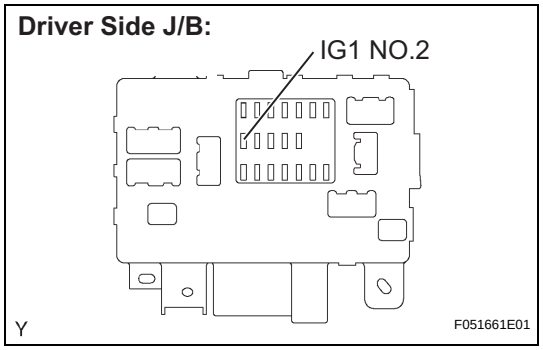

(a) Remove the IG1 NO. 2 fuse from the driver side J/B.
(b) Measure the resistance of the IG1 NO. 2 fuse.
Standard Resistance:
Below 1 Ω
(c) Reinstall the IG1 NO. 2 fuse.

NG → **CHECK FOR SHORTS IN ALL HARNESSES AND CONNECTORS CONNECTED TO FUSE AND REPLACE FUSE**

OK

3	**READ VALUE OF DATA LIST (IG VOLTAGE)**

(a) Connect the intelligent tester to the DLC3.
(b) Turn the ignition switch to the ON position.
(c) Turn the intelligent tester ON.
(d) Select "DATA LIST" mode on the intelligent tester.

Item	Measurement Item / Range (Display)	Normal Condition	Diagnostic Note
IG VOLTAGE	ECU power supply voltage / TOO LOW / NORMAL / TOO HIGH	TOO HIGH: 14 V or more NORMAL: 9.5 V or 14V TOO LOW: Below 9.5 V	-

(e) Measure the voltage output from the ECU displayed on the intelligent tester.
OK:
"Normal" is displayed.

NG → **REPAIR OR REPLACE HARNESS OR CONNECTOR**

OK

BC

4 INSPECT SKID CONTROL ECU (IG1 TERMINAL VOLTAGE)

Skid Control ECU (harness side connector):

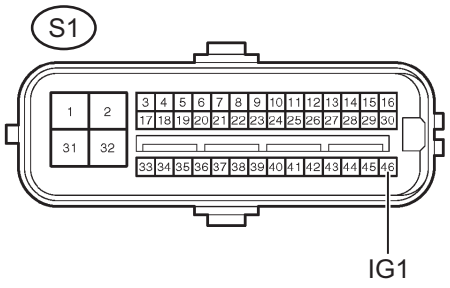

C121700E13

(a) Disconnect the skid control ECU connector.
(b) Turn the ignition switch to the ON position.
(c) Measure the voltage.

Standard Voltage

Tester Connection	Specified Condition
S1-46 (IG1) - Body ground	10 to 14 V

(d) Turn the ignition switch to OFF.
(e) Reconnect the skid control ECU connector.

NG → **REPAIR OR REPLACE HARNESS OR CONNECTOR**

OK

5 CHECK HARNESS AND CONNECTOR (GND TERMINAL CONTINUITY)

Skid Control ECU (harness side connector):

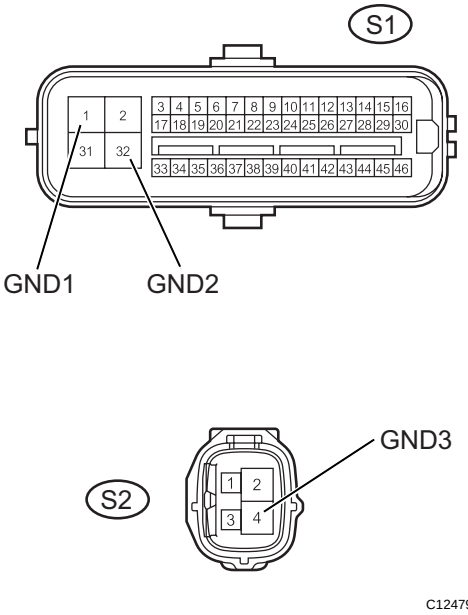

C124799E01

(a) Disconnect the skid control ECU connectors.
(b) Measure the resistance.

Standard Resistance

Tester Connection	Specified Condition
S1-1 (GND1) - Body ground	Below 1 Ω
S1-32 (GND2) - Body ground	Below 1 Ω
S1-4 (GND3) - Body ground	Below 1 Ω

(c) Reconnect the skid control ECU connectors.

NG → **REPAIR OR REPLACE HARNESS OR CONNECTOR**

OK

6 RECONFIRM DTC

(a) Clear the DTCs (See page BC-118).
(b) Drive the vehicle at a speed of 1.9 mph (3 km/h) or more for 10 seconds or more.

(c) Check if the same DTCs are detected.
HINT:
Reinstall the sensors, connectors, etc. and restore the vehicle to its previous condition, before rechecking for DTCs.

Result	Proceed to
DTC output	A
DTC not output (When troubleshooting in accordance with DTC CHART)	B
DTC not output (When troubleshooting in accordance with PROBLEM SYMPTOMS TABLE)	C

B → **END**

C → **PROCEED TO NEXT CIRCUIT INSPECTION SHOWN IN PROBLEM SYMPTOMS TABLE**

A

REPLACE MASTER CYLINDER SOLENOID

DTC	C1242/42	IG2 Power Source Circuit

DESCRIPTION

If there is a problem with the master cylinder solenoid (skid control ECU) power supply circuit, the skid control ECU outputs the DTC and prohibits operation under the fail safe function.
If the voltage supplied to terminal IG1 and/or IG2 is not within the DTC detection threshold due to malfunctions in parts such as the battery or alternator circuit, this DTC is stored.

DTC No.	DTC Detecting Condition	Trouble Areas
C1242/42	Vehicle speed 1.9 mph (3 km/h) or more and voltage of skid control ECU terminal IG1 and/or IG2 remains at below 6.5 V for more than 7 seconds.	• Battery • IC regulator • Power source circuit • Master cylinder solenoid (skid control ECU)

WIRING DIAGRAM

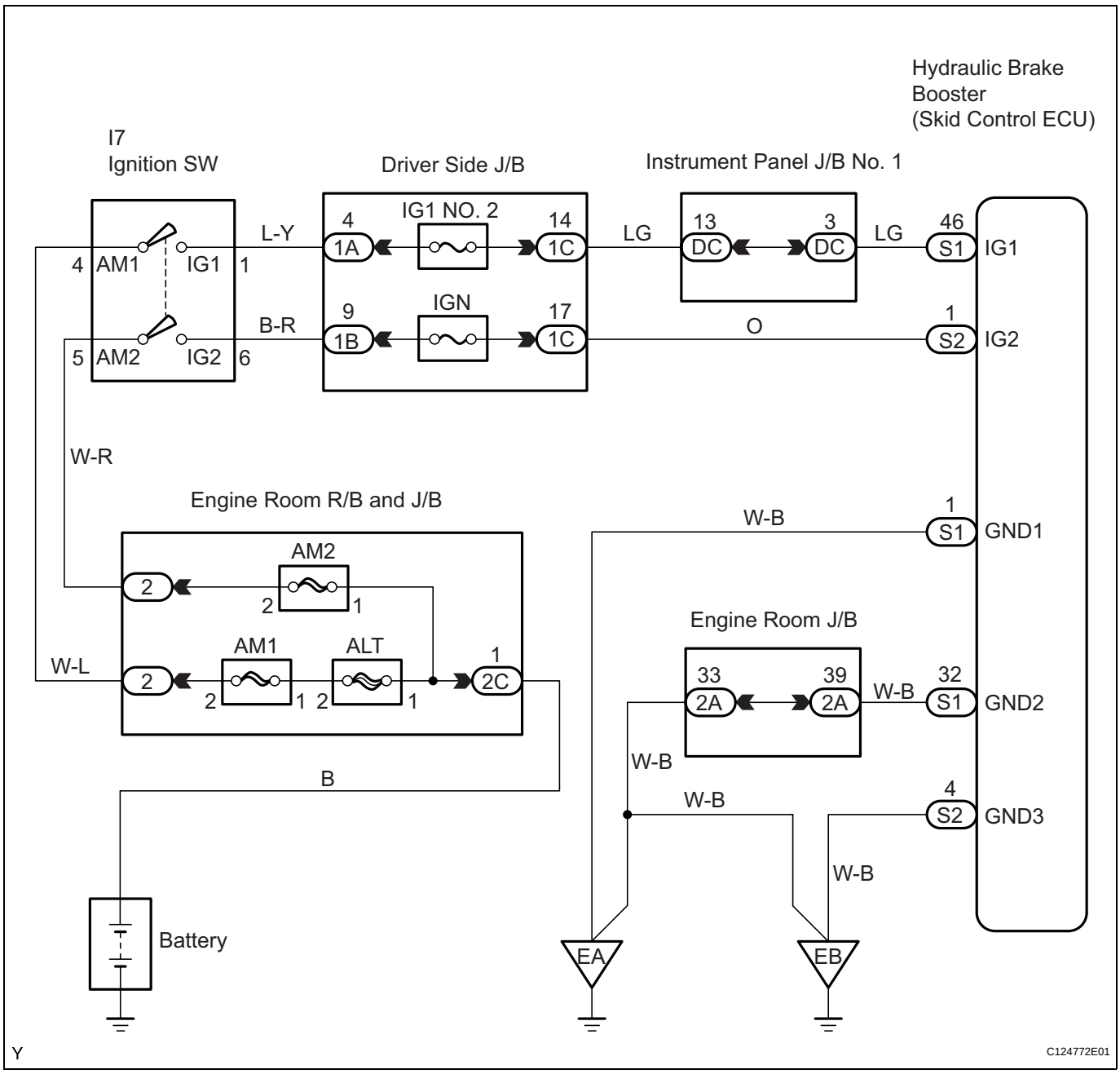

1	INSPECT BATTERY

(a) Check the battery voltage.
Standard Voltage:
10 to 14 V

NG → **INSPECT CHARGING SYSTEM**

OK

2	INSPECT FUSE (IGN FUSE)

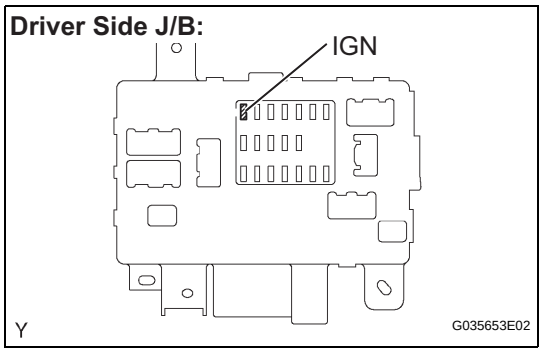

(a) Remove the IGN fuse from the driver side J/B.
(b) Measure the resistance of the IGN fuse.
Standard Voltage:
Below 1 Ω
(c) Reinstall the IGN fuse.

NG → **CHECK FOR SHORTS IN ALL HARNESSES AND CONNECTORS CONNECTED TO FUSE AND REPLACE FUSE**

OK

3	INSPECT SKID CONTROL ECU TERMINAL VOLTAGE (IG2 TERMINAL)

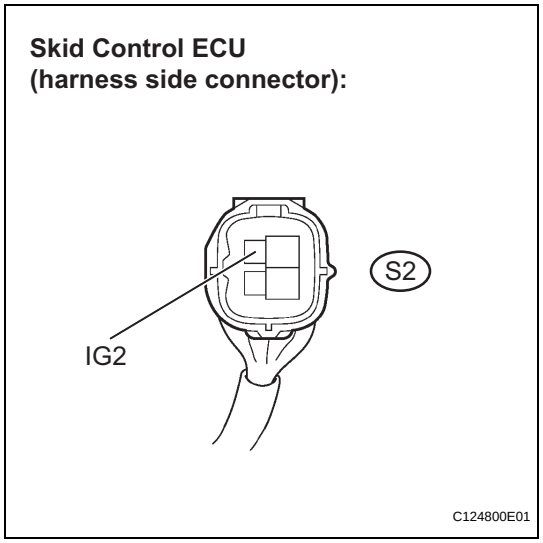

(a) Disconnect the skid control ECU connector.
(b) Turn the ignition switch to the ON position.
(c) Measure the voltage.
Standard Voltage

Tester Connection	Specified Condition
S2-1 (IG2) - Body ground	10 to 14 V

(d) Turn the ignition switch to OFF.
(e) Reconnect the skid control ECU connector.

NG → **REPAIR OR REPLACE HARNESS OR CONNECTOR**

OK

BC

4 INSPECT SKID CONTROL ECU CONNECTOR (GND TERMINAL)

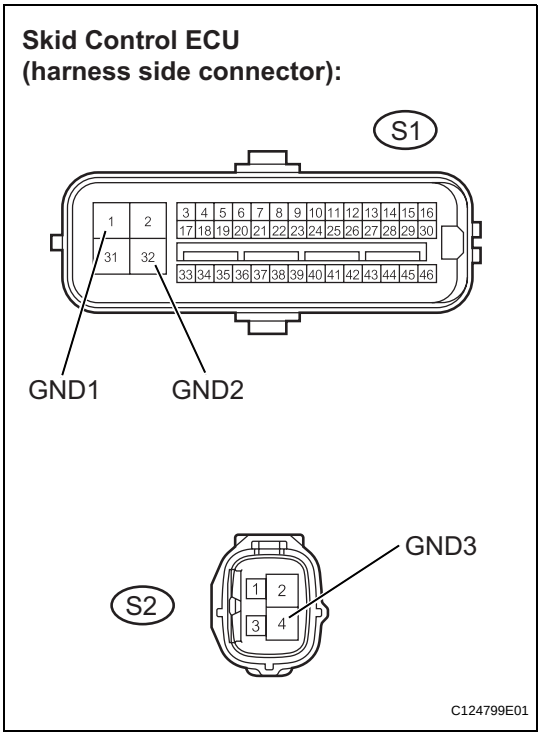

(a) Disconnect the skid control ECU connectors.
(b) Measure the resistance.

Standard Resistance

Tester Connection	Specified Condition
S1-1 (GND1) - Body ground	Below 1 Ω
S1-32 (GND2) - Body ground	Below 1 Ω
S2-4 (GND3) - Body ground	Below 1 Ω

(c) Reconnect the skid control ECU connectors.

NG → **REPAIR OR REPLACE HARNESS OR CONNECTOR**

OK

BC

5 RECONFIRM DTC

(a) Clear the DTCs (See page BC-118).
(b) Drive the vehicle at a speed of 1.9 mph (3 km/h) or more for 7 seconds or more.
(c) Check if the same DTCs are detected.

Result	Proceed to
DTC output	A
DTC not output	B

B → **END**

A

REPLACE MASTER CYLINDER SOLENOID

DTC	C1246/46	Master Cylinder Pressure Sensor Malfunction

DESCRIPTION

The master cylinder pressure sensor is connected to the skid control ECU in the master cylinder solenoid.

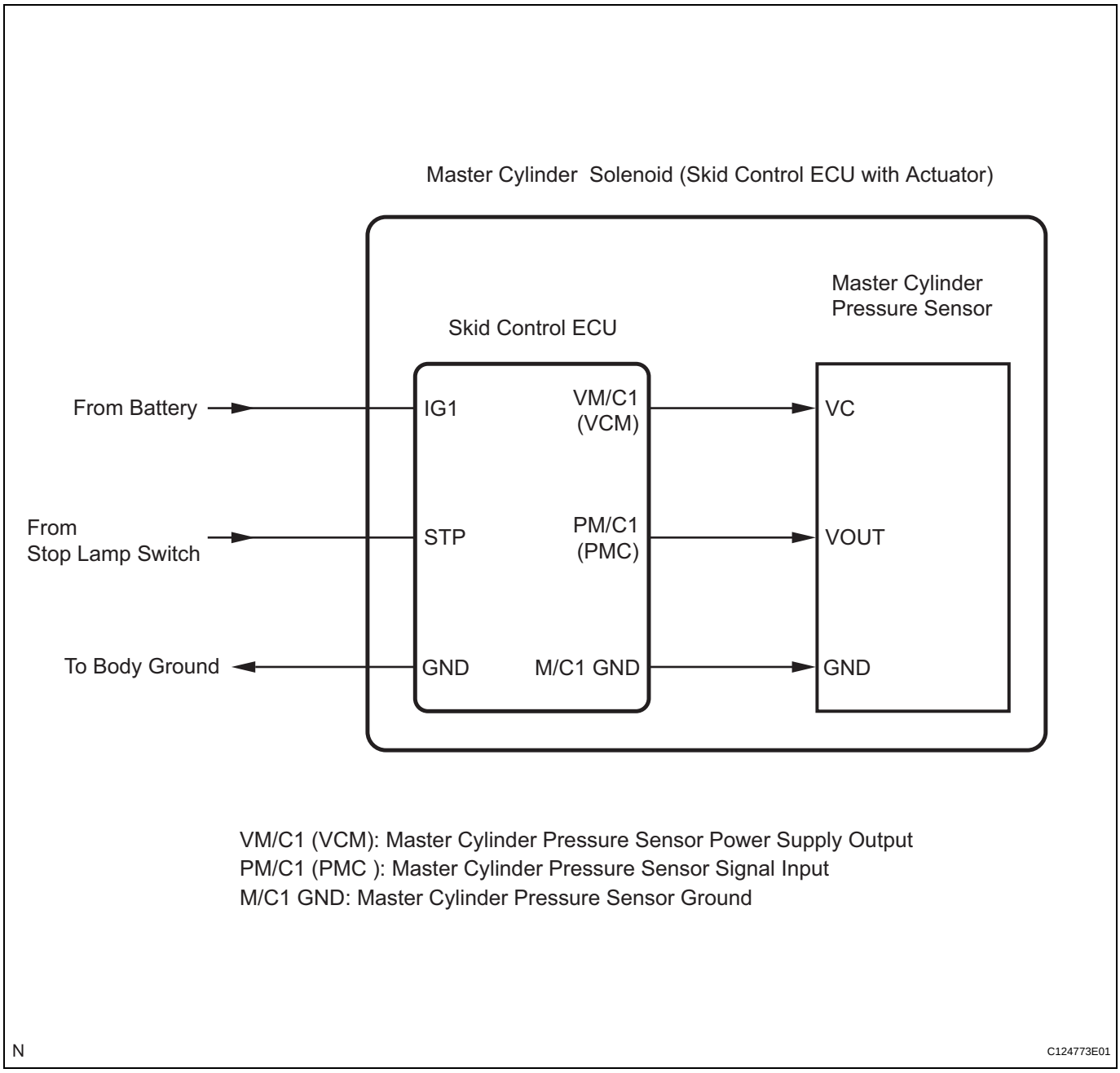

VM/C1 (VCM): Master Cylinder Pressure Sensor Power Supply Output
PM/C1 (PMC): Master Cylinder Pressure Sensor Signal Input

M/C1 GND: Master Cylinder Pressure Sensor Ground

DTC No.	DTC Detecting Conditions	Trouble Areas
C1246/46	When either of following conditions detected: 1. All of the following conditions continue for at least 30 seconds. • Vehicle speed more than 4 mph (7 km/h). • PM/C1 terminal voltage does not change by more than 0.005 V once it exceeds 0.86 V. 2. PM/C1 terminal receives noise at least 7 times within 5 seconds. 3. All of following conditions continue for at least 5 seconds. • Stop switch OFF. • PM/C1 terminal voltage more than 0.86 V or less than 0.3 V. 4. All of following conditions continue for at least 1.2 seconds. • IG1 terminal voltage between 9.5 V and 17.0 V. • VM/C1 terminal voltage not within 4.4 V and 5.6 V. 5. All of following conditions continue for at least 1.2 seconds. • VM/C1 terminal voltage between 4.4 V and 5.6 V. • PM/C1 terminal voltage not within 0.14 V and 4.85 V.	• Master cylinder pressure sensor • Master cylinder pressure sensor circuit • Master cylinder solenoid (skid control ECU) • Stop light circuit

HINT:
Start the inspection from step 1 when using a intelligent tester and start from step 3 when not using a intelligent tester.

1 READ VALUE OF DATA LIST (MASTER CYLINDER PRESSURE SENSOR)

BC

(a) Connect the intelligent tester to the DLC3.
(b) Start the engine.
(c) Turn the intelligent tester ON.
(d) Select the DATA LIST mode on the intelligent tester.

Item	Measurement Item / Range (Display)	Normal Condition	Diagnostic Note
MAS CYL PRS 1	Master cylinder pressure sensor 1 reading / min.: 0 V, max.: 5 V	•When brake pedal released: 0.3 to 0.9 V •When stop lamps turned on: 0.3 to 0.9 V	Reading increases when brake pedal depressed

(e) Check that the master pressure value of the master cylinder pressure sensor displayed on the intelligent tester changes when the brake pedal is depressed.

Result	Proceed to
Master cylinder pressure sensor value becomes normal	A
Master cylinder pressure sensor value changes but not normal	B
Master cylinder pressure sensor value does not change	C

B → **Go to step 3**

C → **REPLACE MASTER CYLINDER SOLENOID**

A

2 RECONFIRM DTC

(a) Clear the DTCs (See page BC-118).
(b) Check if the same DTCs are detected.

Result	Proceed to
DTC output	A
DTC not output	B

B → **END**

A

REPLACE MASTER CYLINDER SOLENOID

3 CHECK BRAKE PEDAL HEIGHT

(a) Check the brake pedal height.
(b) Check the stop lamp switch installation.
OK:
The brake pedal and stop lamp switch are normal.

NG → **ADJUST BRAKE PEDAL HEIGHT**

OK

4 INSPECT SKID CONTROL ECU TERMINAL VOLTAGE (STP TERMINAL)

Skid Control ECU (harness side connector):

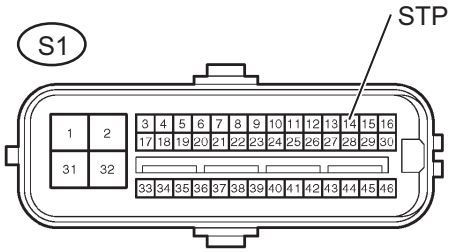

C121700E07

(a) Disconnect the skid control ECU connector.
(b) Measure the voltage.
Standard Voltage

Tester Connection	Condition	Specified Condition
S1-7 (STP) - Body ground	Brake pedal depressed	8 to 16 V
S1-7 (STP) - Body ground	Brake pedal released	Below 1.5 V

(c) Reconnect the skid control ECU connector.

NG → **REPAIR OR REPLACE HARNESS OR CONNECTOR**

OK

5 RECONFIRM DTC

(a) Clear the DTCs (See page BC-118).

(b) Check if the same DTCs are detected.

Result	Proceed to
DTC output	A
DTC not output	B

B → **END**

A

REPLACE MASTER CYLINDER SOLENOID

DTC	C1248/48	Open Circuit in Rear Differential Lock

DESCRIPTION

The 4WD control ECU stimulates the actuator to lock the rear differential in accordance with the rear diff. lock switch. The skid control ECU monitors the transfer indicator switch (rear diff. lock) and if the rear differential is locked, at which time the rear diff. lock indicator light is illuminated, prohibits ABS, TRAC and VSC controls. At the same time, the skid control ECU illuminates the ABS warning light and VSC TRAC warning light.

DTC No.	DTC Detecting Condition	Trouble Areas
C1248/48	At vehicle speed of 31 mph (50 km/h) or more, 3 seconds or more elapse after rear differential changes from free to lock.	• Transfer indicator switch (rear diff. lock) • Rear differential lock circuit • Master cylinder solenoid (skid control ECU)

WIRING DIAGRAM

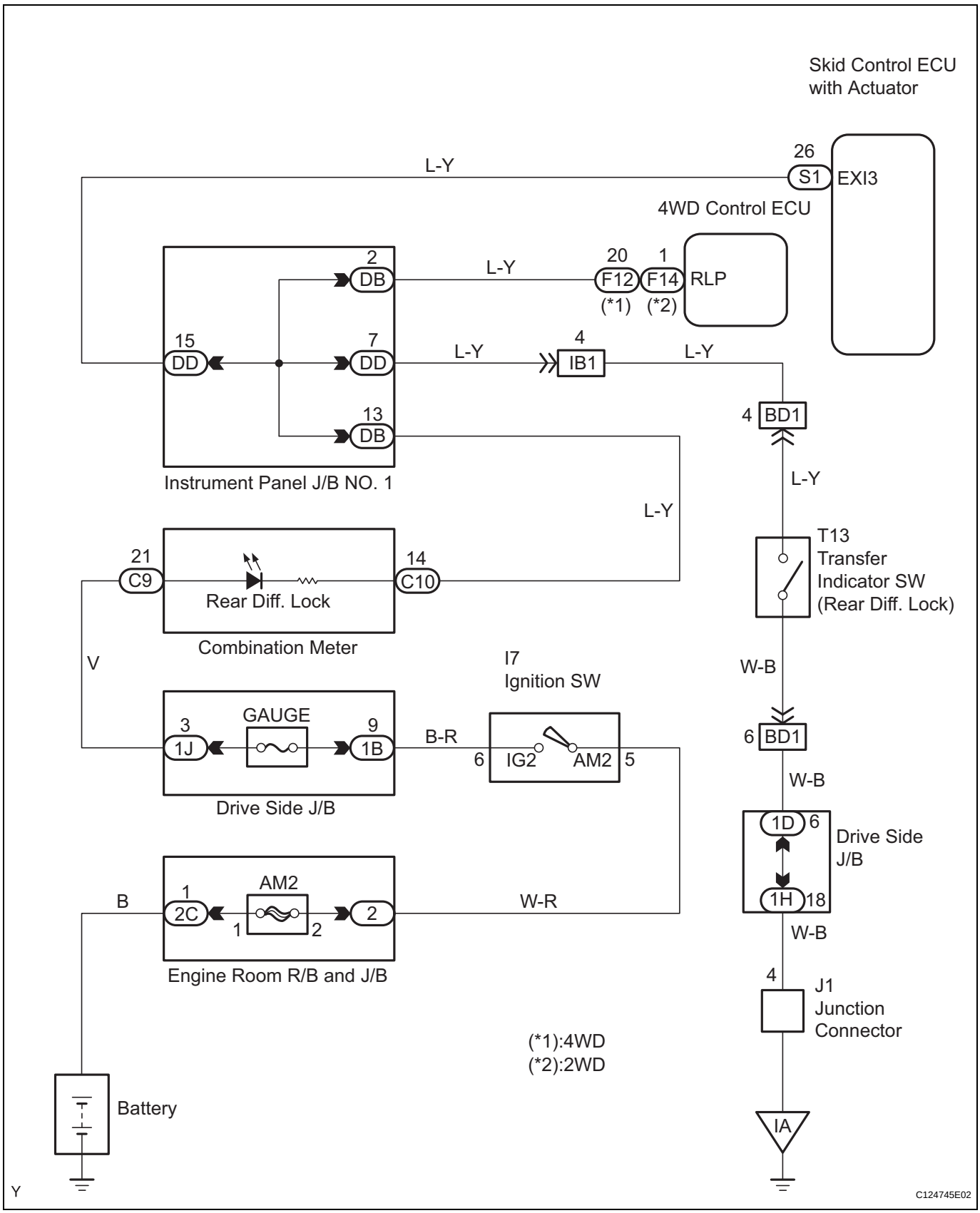

BC

1 INSPECT SKID CONTROL ECU (EXI3 TERMINAL VOLTAGE)

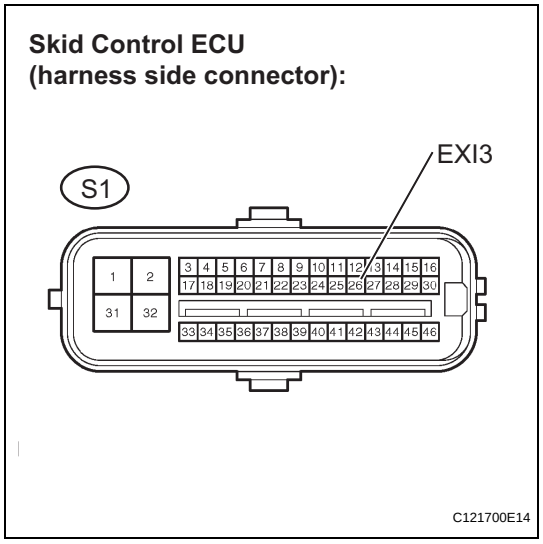

(a) Disconnect the skid control ECU connector.
(b) Turn the ignition switch to the ON position.
(c) Measure the voltage.

Standard Voltage

Tester Connection	Vehicle Condition	Specified Condition	Rear Diff. Lock Indicator Light
S1-26 (EXI3) - Body ground	Rear Differential free	8 to 14 V	OFF
S1-26 (EXI3) - Body ground	Rear Differential locked	1.5 V	ON

(d) Turn the ignition switch to OFF.
(e) Reconnect the skid control ECU connector.

NG → Go to step 3

OK

2 RECONFIRM DTC

(a) Clear the DTC (See page BC-118).
(b) Drive the vehicle at 31 mph (50 km/h) or more for 3 seconds or more with the rear differential free.
(c) Check if the same DTCs are detected.

Result	Proceed to
DTC output	A
DTC not output	B

B → END

A

REPLACE MASTER CYLINDER SOLENOID

BC

3 INSPECT TRANSFER INDICATOR SWITCH (REAR DIFF. LOCK)

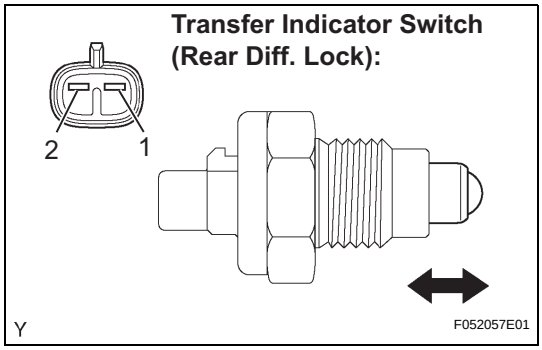

(a) Disconnect the transfer indicator switch connector.
(b) Remove the transfer indicator switch.
(c) Measure the resistance.

Standard Resistance

Tester Connection	Condition	Specified Condition
1 - 2	Pushed	Below 1 Ω
1 - 2	Free	10 kΩ or higher

(d) Reinstall the transfer indicator switch.
(e) Reconnect the transfer indicator switch connector.

NG → **REPLACE TRANSFER INDICATOR SWITCH (REAR DIFF. LOCK)**

OK

4 CHECK HARNESS AND CONNECTOR

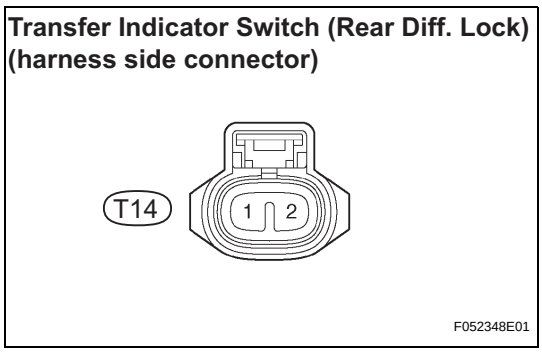

(a) Disconnect the skid control ECU connector.
(b) Disconnect the 4WD control ECU connector.
(c) Disconnect the transfer indicator switch connector.
(d) Turn the ignition switch to the ON position.
(e) Measure the voltage.

Standard Voltage

Tester Connection	Specified Condition
T14-2 - Body ground	8 to 14 V

(f) Turn the ignition switch to OFF.
(g) Reconnect the transfer indicator switch connector.
(h) Reconnect the 4WD control ECU connector.
(i) Reconnect the skid control ECU connector.

OK → **REPLACE 4WD CONTROL ECU**

NG

5 CHECK HARNESS AND CONNECTOR

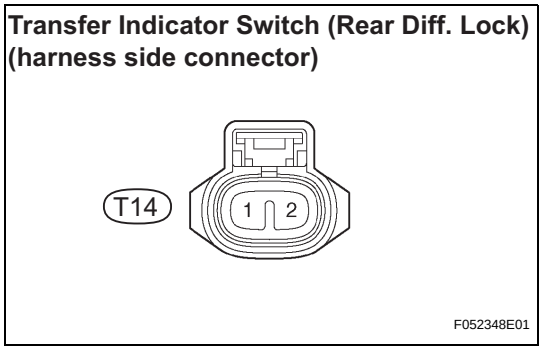

(a) Disconnect the skid control ECU connector.
(b) Disconnect the 4WD control ECU connector.
(c) Disconnect the transfer indicator switch connector.
(d) Disconnect the combination meter connector.
(e) Measure the resistance.

Standard Resistance

Tester Connection	Specified Condition
T14-2 - Body ground	10 kΩ or higher

(f) Reconnect the combination meter connector.
(g) Reconnect the transfer indicator switch connector.
(h) Reconnect the 4WD control ECU connector.
(i) Reconnect the skid control ECU connector.

BC

NG → **REPAIR OR REPLACE HARNESS OR CONNECTOR**

OK

REPLACE COMBINATION METER ASSEMBLY

DTC	C1249/49	Open in Stop Light Switch Circuit

DESCRIPTION

The skid control ECU inputs the stop light switch signal and detects the status of the brake operation.

DTC No.	DTC Detecting Condition	Trouble Areas
C1249/49	ECU terminal IG1 voltage 9.5 V to 17.0 V and ABS non-operational, open in stop light switch circuit continues for 0.3 seconds or more.	• Stop light assembly • Stop light switch circuit • Master cylinder solenoid (skid control ECU)

WIRING DIAGRAM

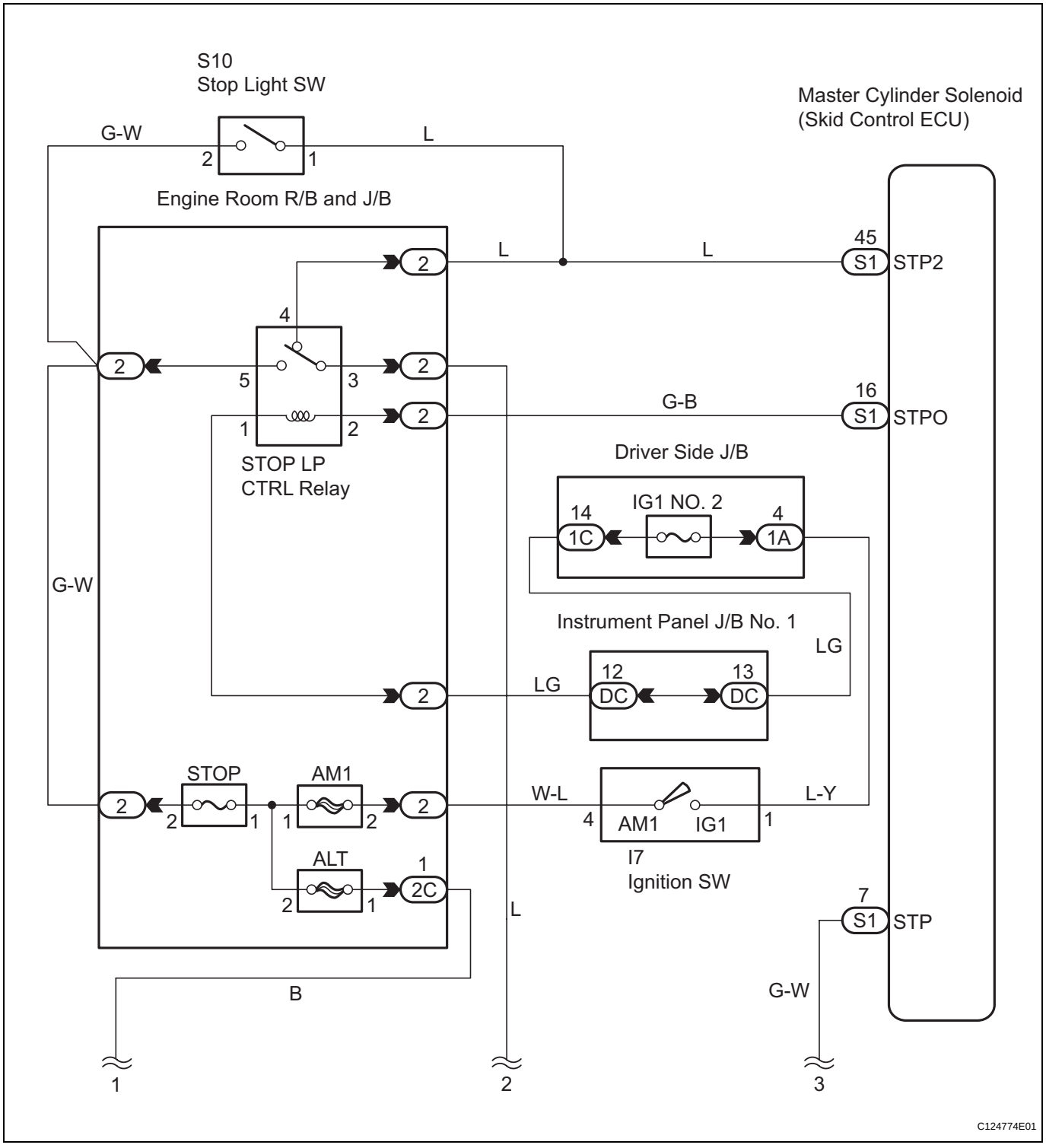

BC

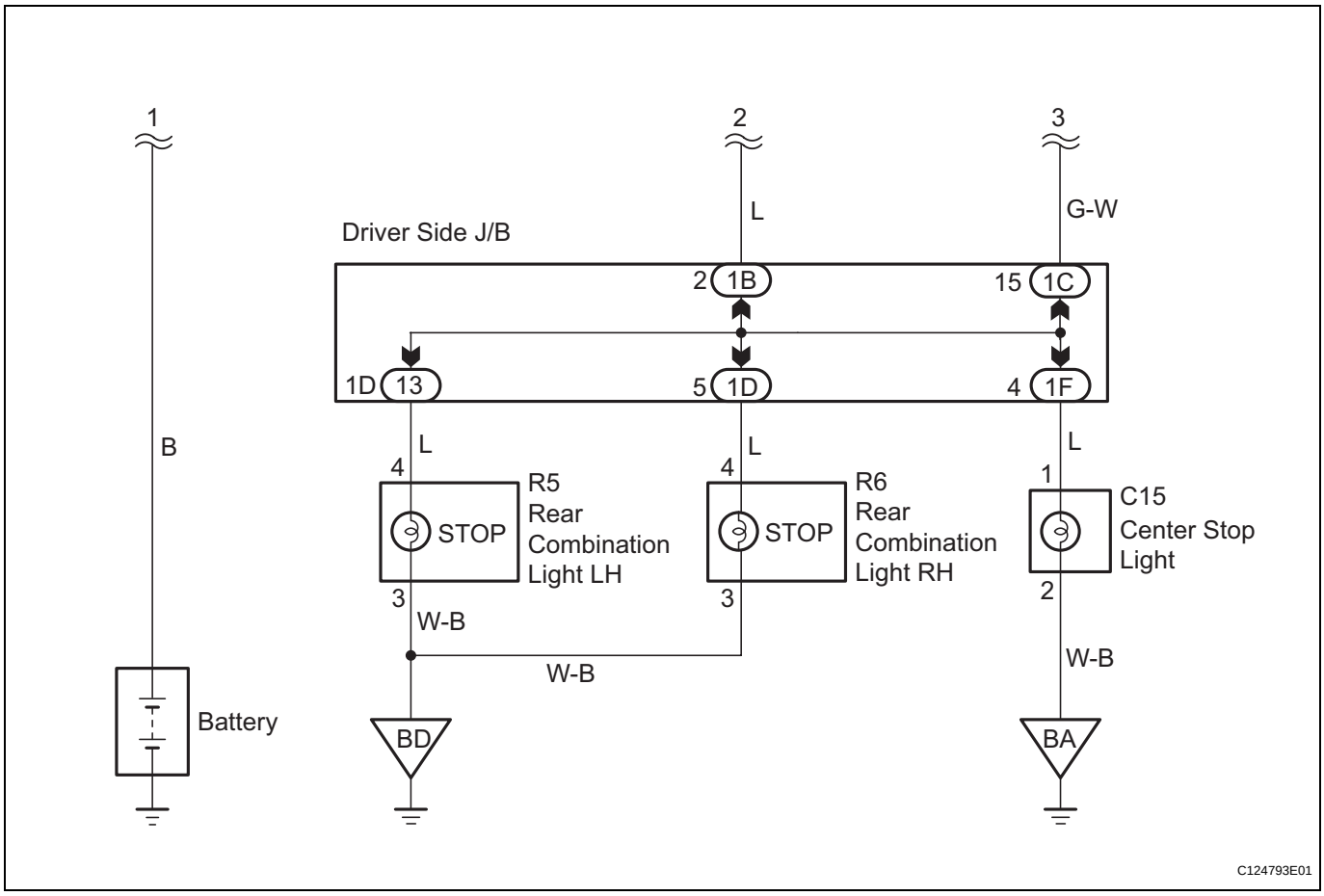

BC

1	CHECK STOP LIGHT SWITCH OPERATION

(a) Check that the stop lights come on when the brake pedal is depressed and go off when the brake pedal is released.

OK

Pedal condition	Illumination Condition
Brake pedal depressed	ON
Brake pedal released	OFF

HINT:
Check the stop light bulbs as they may have burnt out.

NG → **Go to step 4**

OK

2 INSPECT SKID CONTROL ECU (STP TERMINAL VOLTAGE)

Skid Control ECU (harness side connector):

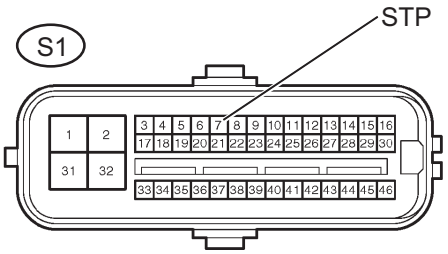

C121700E15

(a) Disconnect the skid control ECU connector.
(b) Measure the voltage.

Standard Voltage

Tester Connection	Condition	Specified Condition
S1-7 (STP) - Body ground	Stop light switch ON (Brake pedal depressed)	8 to 14 V
S1-7 (STP) - Body ground	Stop light switch OFF (Brake pedal released)	Below 1.5 V

(c) Reconnect the skid control ECU connector.

Result	Proceed to
OK (When troubleshooting in accordance with DTC CHART)	A
OK (When troubleshooting in accordance with PROBLEM SYMPTOMS TABLE)	B
NG	C

B → **PROCEED TO NEXT CIRCUIT INSPECTION SHOWN IN PROBLEM SYMPTOMS TABLE**

C → **REPAIR OR REPLACE HARNESS OR CONNECTOR**

A

3 RECONFIRM DTC

(a) Clear the DTCs (See page BC-118).
(b) Check if the same DTCs are detected.

Result	Proceed to
DTC output	A
DTC not output	B

B → **END**

A

REPLACE MASTER CYLINDER SOLENOID

BC

4	INSPECT STOP LIGHT SWITCH ASSEMBLY

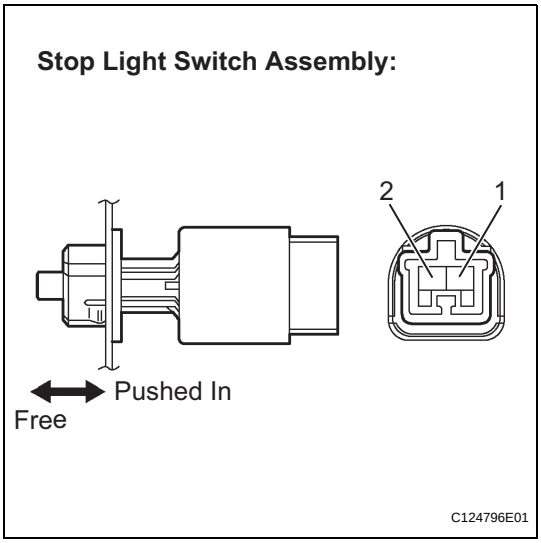

(a) Disconnect the stop light switch connector.
(b) Measure the resistance.
Standard Resistance

Switch Connection	Tester Condition	Specified Condition
Switch pin free	1 - 2	Below 1 Ω
Switch pin pushed in	1 - 2	10 kΩ or higher

(c) Reconnect the stop light switch connector.

NG → REPLACE STOP LIGHT SWITCH ASSEMBLY

OK

5	INSPECT STOP LIGHT CONTROL RELAY

(a) Remove the STOP LP CTRL relay from the engine room R/B and J/B.
(b) Measure the resistance.
Standard Resistance

Tester Connection	Specified Condition
3 - 4	Below 1 Ω
3 - 5	10 kΩ or higher

(c) Apply the battery voltage between terminals 1 (+) and 2 (-).
(d) Measure the resistance.
Standard Resistance

Tester Connection	Specified Condition
3 - 4	10 kΩ or higher
3 - 5	Below 1 Ω

(e) Reinstall the STOP LP CTRL relay.

NG → REPLACE STOP LIGHT CONTROL RELAY

OK

BC

6 CHECK HARNESS AND CONNECTOR (SKID CONTROL ECU - STOP LIGHT SWITCH)

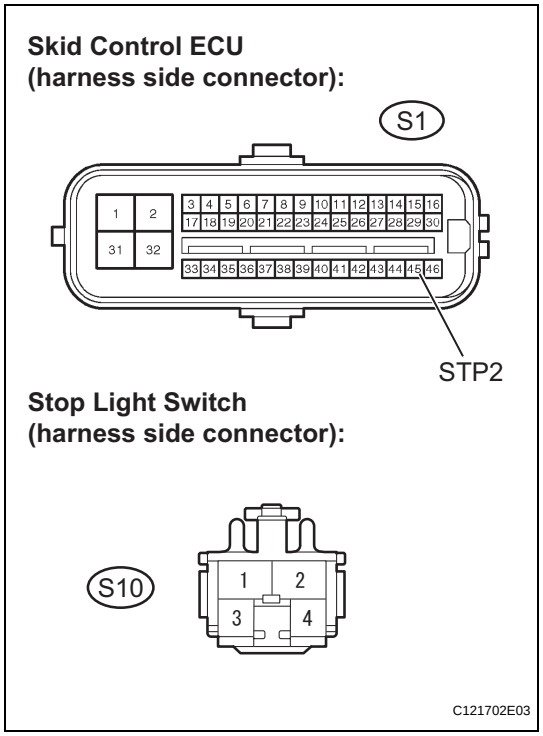

(a) Disconnect the skid control ECU connector.
(b) Disconnect the stop light switch connector.
(c) Measure the resistance.

Standard Resistance

Tester Connection	Specified Condition
S1-45 (STP2) - S10-1 (STP)	Below 1 Ω

(d) Reconnect the stop light switch connector.
(e) Reconnect the skid control ECU connector.

NG → **REPAIR OR REPLACE HARNESS OR CONNECTOR**

OK

7 RECONFIRM DTC

(a) Clear the DTCs (See page BC-118).
(b) Check if the same DTCs are detected.

Result	Proceed to
DTC output	A
DTC not output	B

B → **END**

A

REPLACE MASTER CYLINDER SOLENOID

DTC	C1251/51	Open in Pump Motor Circuit

DESCRIPTION

The motor relay (semiconductor relay) is built into the master cylinder solenoid and drives the pump motor based on a signal from the skid control ECU.

DTC No.	DTC Detecting Condition	Trouble Areas
C1251/51	Open in motor system circuit (motor input circuit)	Hydraulic brake booster pump motor circuit

WIRING DIAGRAM

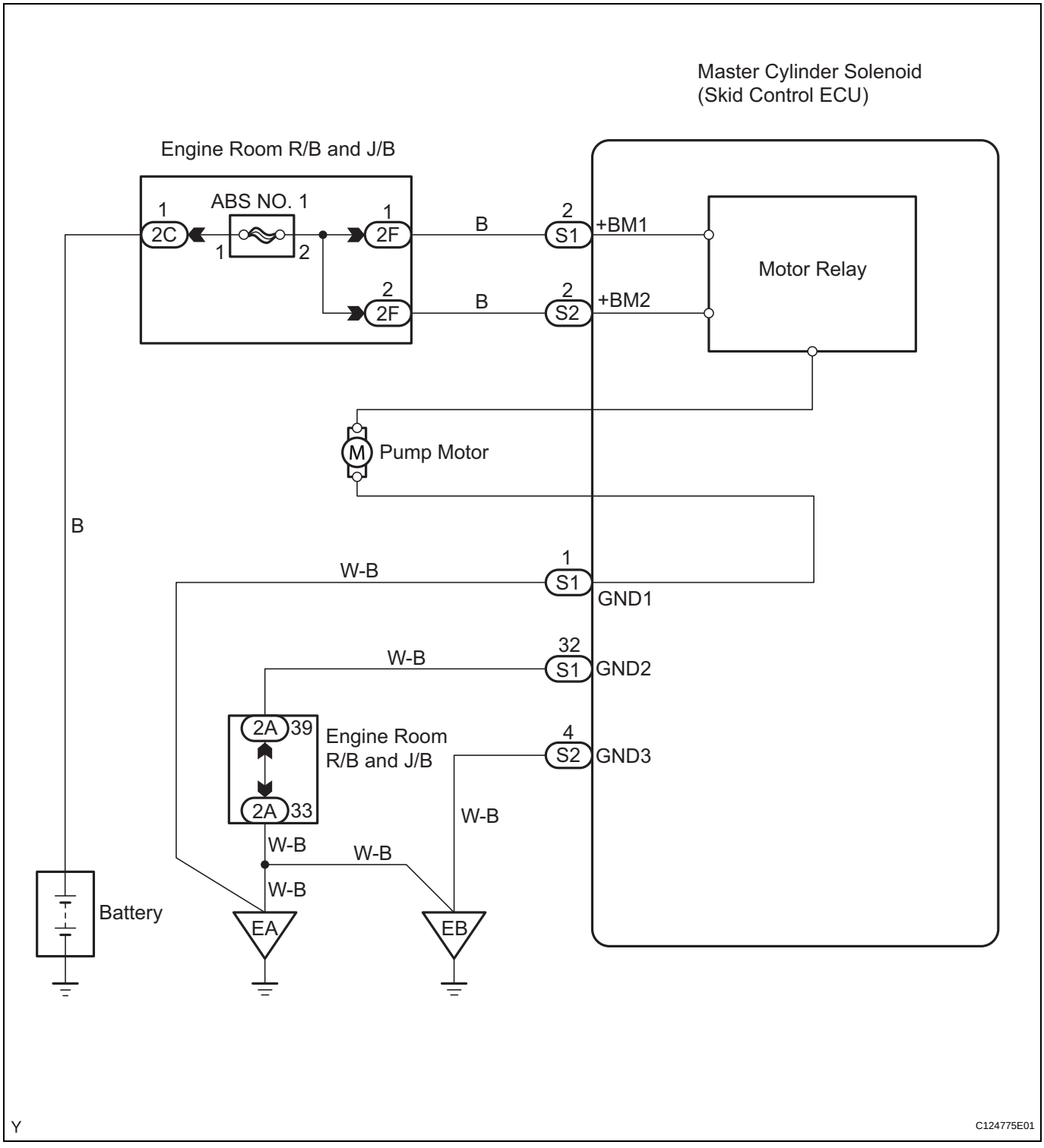

HINT:
Remove the hydraulic brake booster before the inspection (See page BR-42).

1	CHECK BRAKE PUMP MOTOR WIRE HARNESS CONNECTION (MT+ / MT-)

(a) Using a screwdriver, remove the 2 plugs from the hydraulic brake booster (See page BR-45).
(b) Check the tightening torque of 2 screws which fasten the wire harness connecting hydraulic brake booster and brake booster pump (See page BR-49).

Torque: 2.9 N*m (30 kgf*cm, 26 in.*lbf)

NG → **RETIGHTEN SCREWS**

OK

2	CHECK RESISTANCE OF PUMP MOTOR WIRE HARNESS (MT+/MT-)

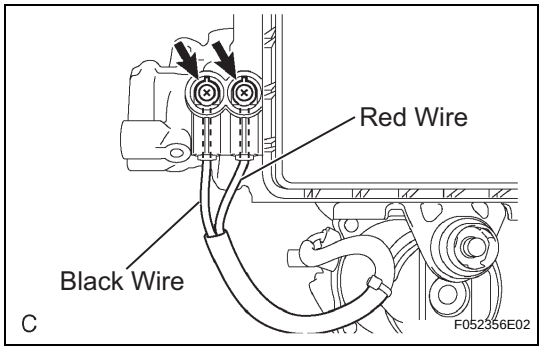

(a) Using a screwdriver, remove the 2 screws and pull the wire harness from the hydraulic brake booster.
(b) Measure the resistance between the red wire (MT+) and black wire (MT-).

Resistance:
2 Ω

NG → **REPLACE HYDRAULIC BRAKE BOOSTER**

OK

3	RECONFIRM DTC

(a) Reassemble the hydraulic brake booster, then reinstall the hydraulic brake booster.
(b) Clear the DTCs (See page BC-118).
(c) Check if the same DTCs are detected.

Result	Proceed to
DTC output	A
DTC not output	B

B → **END**

A

REPLACE MASTER CYLINDER SOLENOID

BC

DTC	C1252/52	Brake Booster Pump Motor on Time Abnormally Long

DESCRIPTION

The motor relay (semiconductor relay) is built into the master cylinder solenoid and drives the pump motor based on a signal from the skid control ECU.

DTC No.	DTC Detecting Condition	Trouble Areas
C1252/52	Motor operates for 5 minutes or more.	• Hydraulic brake booster pump motor • Hydraulic brake booster pump motor circuit • Accumulator pressure

WIRING DIAGRAM

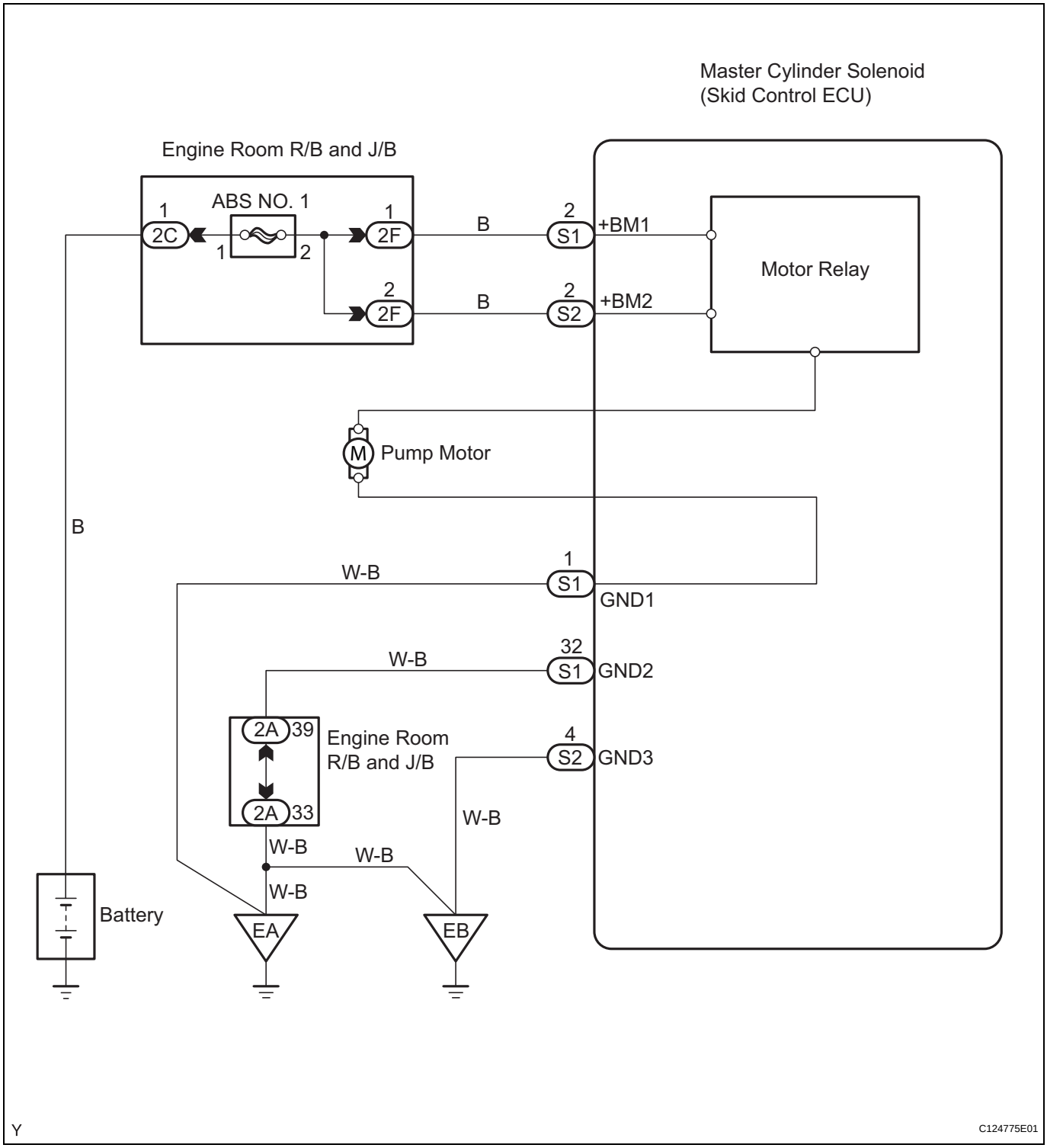

HINT:
When C1253/53, C1254/54 or C1256/56 is output together with C1252/52, inspect and repair the trouble areas indicated by C1253/53, C1254/54 or C1256/56 first.

1	CHECK HYDRAULIC BRAKE BOOSTER PUMP MOTOR OPERATION

(a) Turn the ignition switch to OFF.
(b) Depress the brake pedal more than 20 times.

BC

(c) Turn the ignition switch to the ON position.
(d) Check how the hydraulic brake booster pump motor operates.

Result	Proceed to
Pump motor does not operate	A
Pump motor operates continuously (Does not stop)	B
Pump motor operates intermittently	C
Pump motor operates, then stops	D

B → **REPLACE HYDRAULIC BRAKE BOOSTER**

C → **Go to step 4**

D → **Go to step 5**

A

2 CHECK BRAKE PUMP MOTOR WIRE HARNESS CONNECTION (MT+ / MT-)

(a) Using a screwdriver, remove the 2 plugs from the hydraulic brake booster (See page BR-45).
(b) Check the tightening torque of 2 screws which fasten the wire harness connecting hydraulic brake booster and brake booster pump (See page BR-49).

Torque: 2.9 N*m (30 kgf*cm, 26 in.*lbf)

NG → **RETIGHTEN SCREWS**

BC

OK

3 CHECK RESISTANCE OF PUMP MOTOR WIRE HARNESS (MT+/MT-)

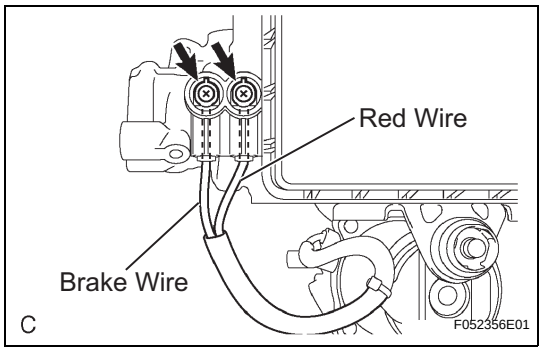

(a) Using a screwdriver, remove the 2 screws and pull the wire harness from the hydraulic brake booster assembly.
(b) Measure the resistance between the red wire (MT+) and black wire (MT-).

Resistance:
2 Ω

NG → **REPLACE HYDRAULIC BRAKE BOOSTER**

OK

4 READ VALUE OF DATA LIST (ACCUMULATOR PRESSURE SENSOR)

(a) Connect the intelligent tester to the DLC3.
(b) Turn the ignition switch to the ON position.
(c) Turn the intelligent tester ON.

(d) Select the DATA LIST mode on the intelligent tester.

Item	Measurement Item / Range (Display)	Normal Condition	Diagnostic Note
ACC PRESS SENS	Accumulator pressure sensor reading / min.: 0 V, max.: 5 V	3.58 to 5 V	If value constant regardless of pump operation, accumulator pressure sensor malfunction suspected.

(e) Check that the accumulator pressure sensor output is normal.

Result	Proceed to
Output value varies within "Normal Condition" range	A
Output value does not reach "Normal Condition" range	B
Output value constant regardless of pump motor operation	C

B → **REPLACE MASTER CYLINDER SOLENOID**

C → **REPLACE HYDRAULIC BRAKE BOOSTER**

A

5 RECONFIRM DTC

(a) Clear the DTCs (See page BC-118).
(b) Turn the ignition switch to OFF.
(c) Turn the ignition switch to the ON position.
(d) Wait for more than 5 minutes.
(e) Check if the same DTCs are recorded.

Result	Proceed to
DTC output	A
DTC not output	B

B → **REPLACE HYDRAULIC BRAKE BOOSTER**

A

REPLACE MASTER CYLINDER SOLENOID

DTC	C1253/53	Hydro Booster Pump Motor Relay Malfunction

DESCRIPTION

The motor relay (semiconductor relay) is built into the master cylinder solenoid and drives the pump motor based on a signal from the skid control ECU.

DTC No.	DTC Detecting Condition	Trouble Areas
C1253/53	Open in motor system circuit (motor input circuit)	• Hydraulic brake booster pump motor • Hydraulic brake booster pump motor circuit

WIRING DIAGRAM

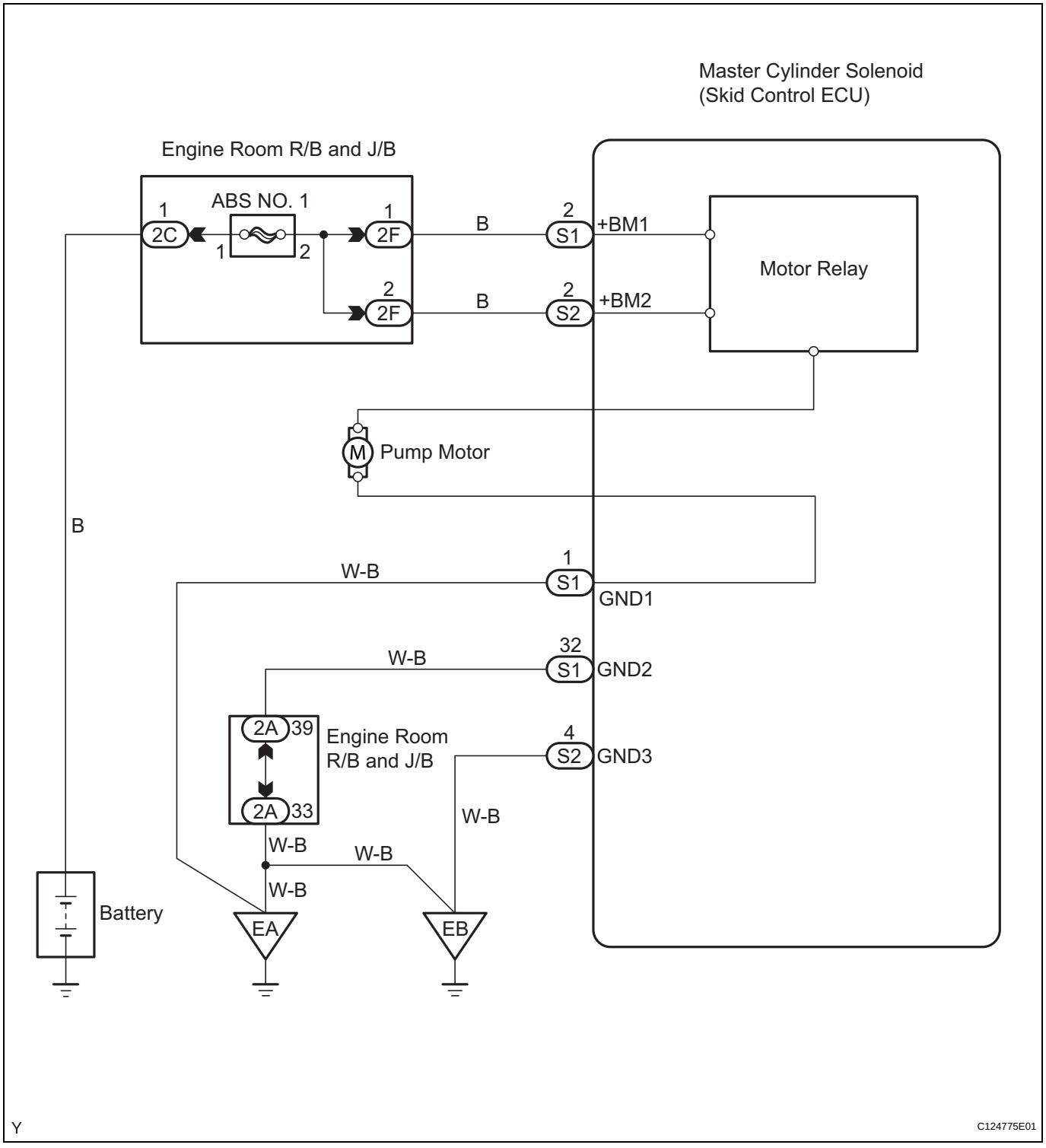

HINT:
Start the inspection from step 1 when using a intelligent tester and start from step 3 when not using a intelligent tester.

1	PERFORM ACTIVE TEST BY INTELLIGENT TESTER (H/B MOTOR RELAY)

(a) Connect a intelligent tester to the DLC3.
(b) Turn the ignition switch to the ON position.

(c) Turn the intelligent tester ON.
(d) Select the ACTIVE TEST mode on the intelligent tester.

Item	Vehicle Condition / Test Details	Diagnostic Note
H/B MOT RELAY	Turns H/B motor relay ON / OFF	Operation of motor can be heard

(e) Check for operation sound of the H/B motor when it is operated with the intelligent tester.
OK:
The operation sound of the H/B motor can be heard.

NG → **Go to step 3**

OK

2 RECONFIRM DTC

(a) Clear the DTCs (See page BC-118).
(b) Turn the ignition switch to OFF.
(c) Depress the brake pedal more than 20 times.
(d) Turn the ignition switch to the ON position.
(e) Wait until the pump motor stops.
(f) Depress the brake pedal several times until the pump motor is turned on.
(g) Wait until the pump stops.
(h) Repeat (f) and (g) three times.
(i) Check if the same DTCs are recorded.

Result	Proceed to
DTC output	A
DTC not output	B

BC

B → **END**

A

REPLACE HYDRAULIC BRAKE BOOSTER

3 INSPECT FUSE (ABS NO. 1)

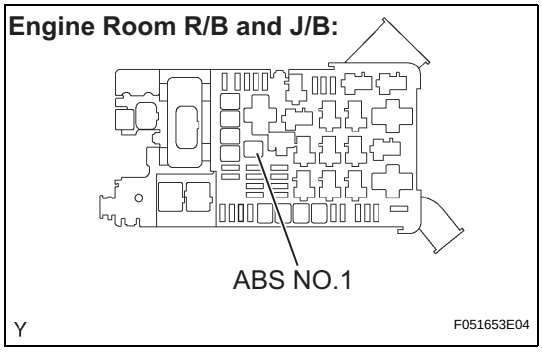

(a) Remove the ABS NO. 1 fuse from the engine room R/B and J/B.
(b) Measure the resistance of the ABS NO. 1 fuse.
Standard:
Below 1 Ω
(c) Reinstall the ABS NO. 1.

NG → **CHECK FOR SHORTS IN ALL HARNESSES AND CONNECTORS CONNECTED TO FUSE AND REPLACE FUSE**

OK

4 INSPECT SKID CONTROL ECU TERMINAL VOLTAGE (+BM, +BM2 TERMINAL)

Skid Control ECU (harness side connector):

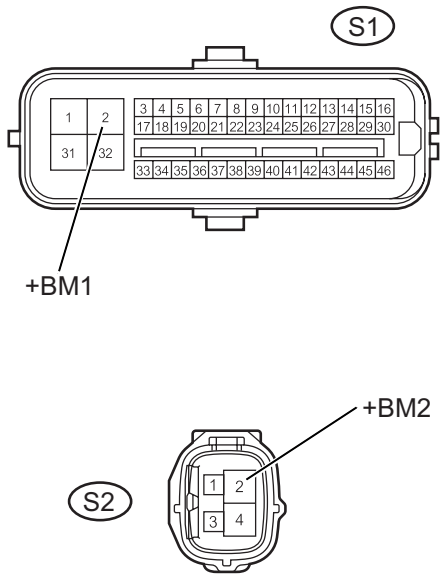

(a) Disconnect the skid control ECU connectors.
(b) Measure the voltage.
Standard Voltage

Tester Connection	Specified Condition
S1-2 (+BM1) - Body ground	10 to 14 V
S2-2 (+BM2) - Body ground	10 to 14 V

(c) Reconnect the skid control ECU connectors.

NG → **REPAIR OR REPLACE HARNESS OR CONNECTOR (+BM1 AND +BM2 CIRCUIT)**

OK

5 CHECK HARNESS AND CONNECTOR (SKID CONTROL ECU - BODY GROUND)

BC

Skid Control ECU (harness side connector):

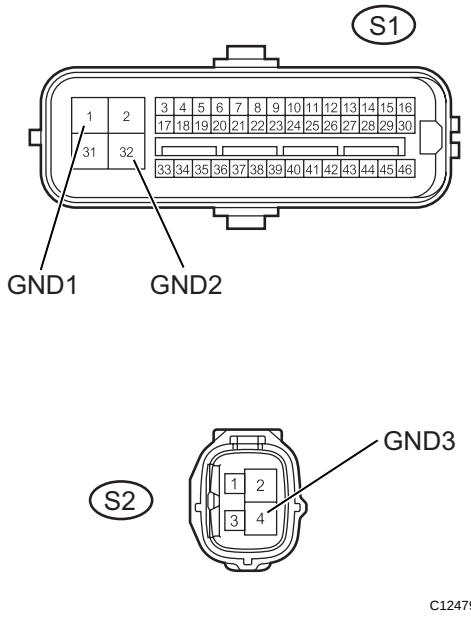

(a) Disconnect the skid control ECU connectors.
(b) Measure the resistance.
Standard Resistance

Tester Connection	Specified Condition
S1-1 (GND1) - Body ground	Below 1 Ω
S1-32 (GND2) - Body ground	Below 1 Ω
S2-4 (GND3) - Body ground	Below 1 Ω

(c) Reconnect the skid control ECU connectors.

NG → **REPAIR OR REPLACE HARNESS OR CONNECTOR (GND CIRCUIT)**

OK

6	RECONFIRM DTC

(a) Clear the DTCs (See page BC-118).
(b) Turn the ignition switch to OFF.
(c) Depress the brake pedal more than 20 times.
(d) Turn the ignition switch to the ON position.
(e) Wait until the pump motor stops.
(f) Depress the brake pedal several times until the pump motor is turned on.
(g) Wait until the pump stops.
(h) Repeat (f) and (g) three times.
(i) Check if the same DTCs are recorded.

Result	Proceed to
DTC output	A
DTC not output	B

B → END

A → REPLACE HYDRAULIC BRAKE BOOSTER

DTC	C1254/54	Pressure Switch Circuit

DESCRIPTION

The accumulator pressure sensor is connected to the skid control ECU in the master cylinder solenoid.

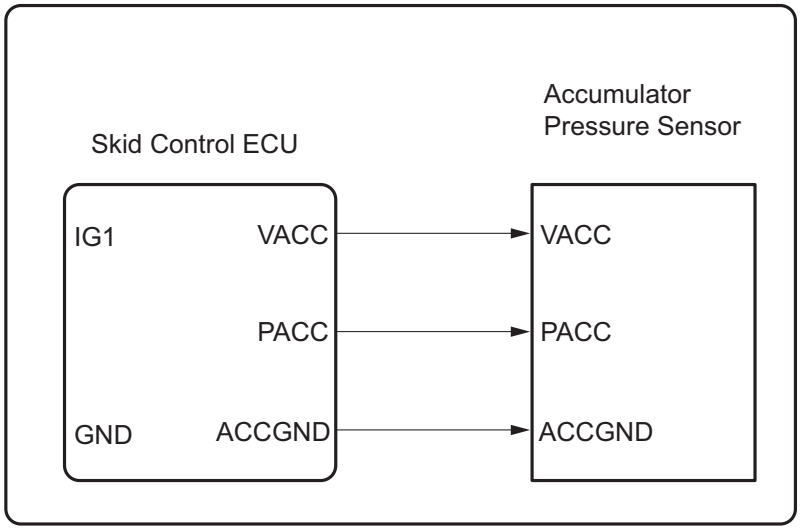

VACC: Accumulator Pressure Sensor Power Supply Output

PACC: Accumulator Pressure Sensor Signal Input

ACCGND: Accumulator Pressure Sensor Ground

Y C124776E01

DTC No.	DTC Detecting Condition	Trouble Areas
C1254/54	Accumulator pressure sensor fault (Fluid pressure does not change when it should e.g. pump operates, brake pedal depressed/released).	• Hydraulic brake booster • Accumulator pressure sensor • Master cylinder pressure sensor

1	READ VALUE OF DATA LIST (ACCUMULATOR)

(a) Connect the intelligent tester to the DLC3.
(b) Turn the ignition switch to OFF.

BC

(c) Depress the brake pedal more than 20 times.
(d) Turn the ignition switch to the ON position.
(e) Select the DATA LIST mode on the intelligent tester.

Item	Measurement Item / Range (Display)	Normal Condition	Diagnostic Note
ACC PRESS SENS	Accumulator pressure sensor reading / min.: 0 V, max.: 5 V	3.58 to 5 V	-

(f) Confirm whether the accumulator output voltage is normal.

Result	Proceed to
Output value normal	A
Output value not normal	B

B → **REPLACE MASTER CYLINDER SOLENOID**

A

2 READ VALUE OF DATA LIST (MASTER CYLINDER PRESSURE SENSOR)

(a) Turn the ignition switch to OFF.
(b) Depress the brake pedal more than 20 times.
(c) Install a brake pedal effort gauge (SST), and bleed air.
(d) Connect the intelligent tester to the DLC3.
(e) Turn the ignition switch to the ON position.
(f) Select the DATA LIST mode on the intelligent tester.

Item	Measurement Item / Range (Display)	Normal Condition	Diagnostic Note
MAS CYL PRS 1	Master cylinder pressure sensor 1 reading / min.: 0 V, max.: 5 V	0.3 to 1.9 V With pedal pressure of 49 N (5 kgf, 11 lbf)	Front brake pressure: 770 to 1280 kpa (7.9 to 13.1 kgf/cm2, 112 to 186 psi)

BC

(g) Check that the master cylinder output value is in the Normal Condition range.
OK:
Master cylinder pressure sensor value is in the Normal Condition.

NG → **REPLACE MASTER CYLINDER SOLENOID**

OK

3 RECONFIRM DTC

(a) Clear the DTCs (See page BC-118).
(b) Turn the ignition switch to OFF.
(c) Depress the brake pedal more than 20 times.
(d) Turn the ignition switch to the ON position.
(e) Wait until the pump motor stops.
(f) Depress the brake pedal and release it.
(g) Wait for 25 minutes.
(h) Check if the same DTCs are recorded.

Result	Proceed to
DTC output	A

Result	Proceed to
DTC not output	B

B → **END**

A

REPLACE MASTER CYLINDER SOLENOID

DTC	C1256/56	Accumulator Low Pressure

DESCRIPTION

The accumulator pressure sensor is connected to the skid control ECU in the master cylinder solenoid.

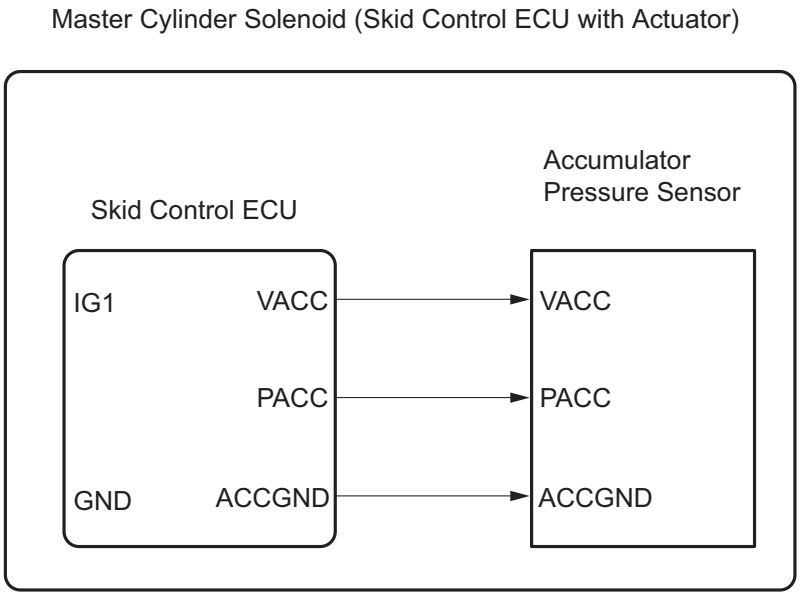

VACC: Accumulator Pressure Sensor Power Supply Output

PACC: Accumulator Pressure Sensor Signal Input

ACCGND: Accumulator Pressure Sensor Ground

Y C124776E01

DTC No.	DTC Detecting Condition	Trouble Areas
C1256/56	Fluid pressure inside the accumulator drops below the specification value.	• Hydraulic brake booster • Hydraulic brake booster pump motor • Hydraulic brake booster pump motor circuit • Accumulator pressure sensor

1	RECONFIRM DTC

(a) Clear the DTCs (See page BC-118).

(b) Turn the ignition switch to OFF.
(c) Depress the brake pedal more than 20 times.
(d) Turn the ignition switch to the ON position.
(e) Wait for 99 seconds.
(f) Check if the same DTCs are recorded.

Result	Proceed to
DTC output	A
DTC not output	B

B → **END**

A

2 CHECK HYDRAULIC CIRCUIT

(a) Perform hydraulic brake booster on-vehicle inspection (See page BR-32).
OK:
Hydraulic circuit is normal (No leakage).

NG → **CHECK AND REPLACE HYDRAULIC CIRCUIT**

OK

3 READ VALUE OF DATA LIST (MASTER CYLINDER PRESSURE SENSOR)

(a) Connect the intelligent tester to the DLC3.
(b) Turn the ignition switch to the ON position.
(c) Turn the intelligent tester ON.
(d) Select the "DATA LIST" mode on the intelligent tester.

Item	Measurement Item / Range (Display)	Normal Condition	Diagnostic Note
ACC PRESS SENS	Accumulator pressure sensor reading / min.: 0 V, max.: 5 V	3.58 to 5 V	If value constant regardless of pump operation, accumulator pressure sensor malfunction suspected.

(e) Check that the accumulator's output value is in the Normal Condition range.
OK:
Accumulator pressure sensor value is in the Normal Condition.

NG → **REPLACE MASTER CYLINDER SOLENOID**

OK

4 RECONFIRM DTC

(a) Clear the DTCs (See page BC-118).
(b) Check if the same DTCs are recorded.

Result	Proceed to
DTC output	A

BC

Result	Proceed to
DTC not output	B

B → END

A

REPLACE MASTER CYLINDER SOLENOID

DTC	C1257/57	IG Power Source

DESCRIPTION

The motor relay (semiconductor relay) is built into the hydraulic brake booster and drives the pump motor based on a signal from the skid control ECU.

DTC No.	DTC Detecting Condition	Trouble Areas
C1257/57	Open in pump motor input circuit	Hydraulic brake booster pump motor circuit

1 CHECK HYDRAULIC BRAKE BOOSTER PUMP MOTOR OPERATION

(a) Turn the ignition switch to OFF.
(b) Disconnect the actuator connector (S1).
(c) Depress the brake pedal more than 20 times.
(d) Check the hydraulic brake booster pump motor operation.
OK:
Hydraulic brake booster pump operates.

NG → **REPLACE MASTER CYLINDER SOLENOID**

OK ↓

2 RECONFIRM DTC

(a) Turn the ignition switch to OFF.
(b) Reconnect the actuator connector (S1).
(c) Turn the ignition switch to the ON position.
(d) Clear the DTCs (See page BC-118).
(e) Check if the same DTCs are recorded.

Result	Proceed to
DTC output	A
DTC not output	B

B → **END**

A ↓

REPLACE MASTER CYLINDER SOLENOID

DTC	C1258/58	Transfer 4WD Position Switch Circuit

DESCRIPTION

This circuit monitors whether the transfer is in 2WD or 4WD mode and inputs the signal to the skid control ECU. In 2WD mode, TRAC is activated.
In 4WD mode, A-TRAC is activated.

DTC No.	DTC Detecting Conditions	Trouble Areas
C1258/58	• 4WD: Open in 4WD detecting circuit • 2WD: Terminal NEO ground short, or abnormal signals transmitted to terminal EXI	• Transfer indicator switch (4WD position) • Transfer indicator switch (4WD position) circuit • Master cylinder solenoid (skid control ECU)

WIRING DIAGRAM

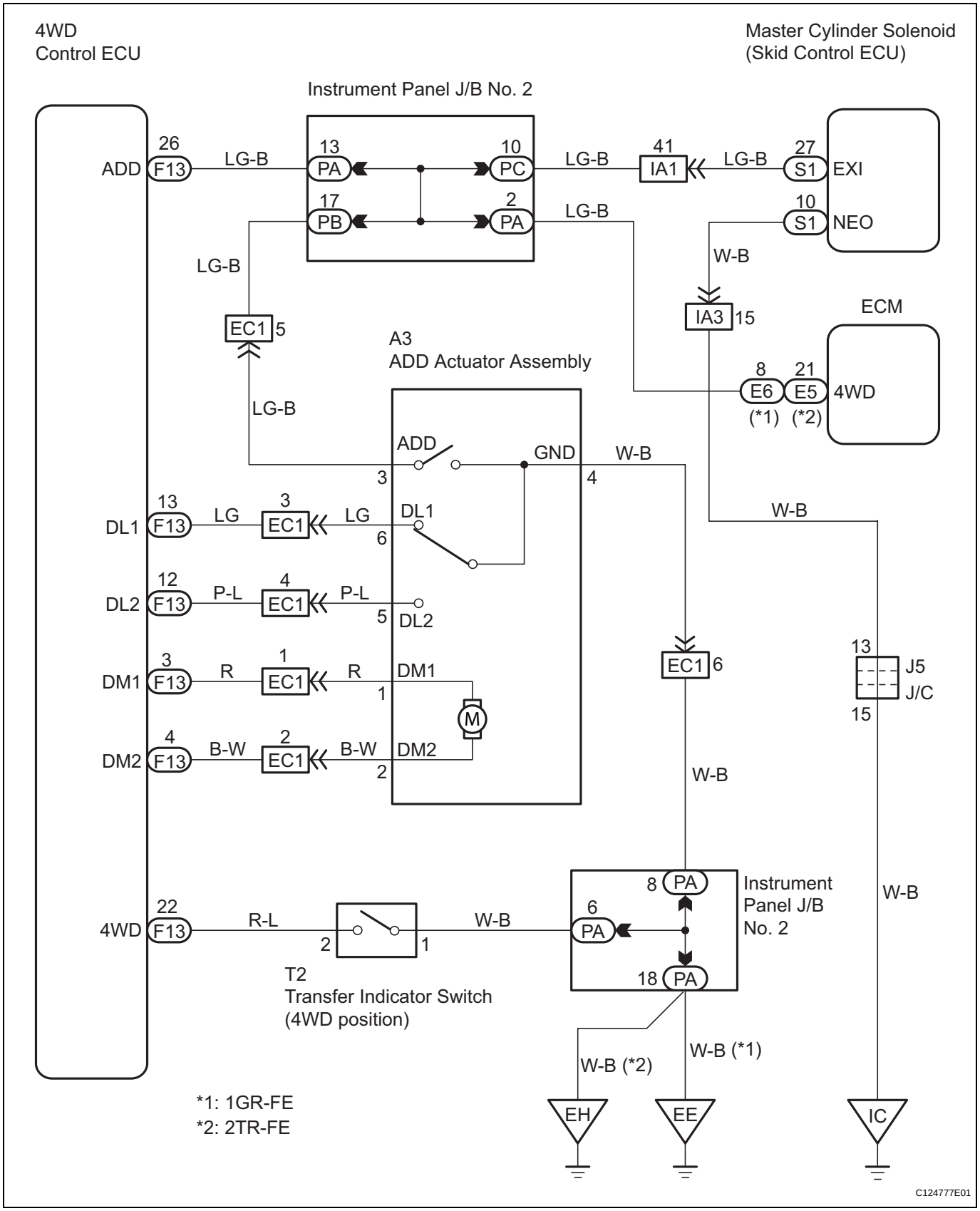

NOTICE:
When replacing the master cylinder solenoid, perform zero point calibration (See page BC-99).

1	CONFIRM VEHICLE TYPE

(a) Confirm the vehicle drive train.

Drive Train	Proceed to
4WD	A
2WD, Pre-Runner	B

B → Go to step 7

A

2	INSPECT SKID CONTROL ECU (EXI TERMINAL VOLTAGE)

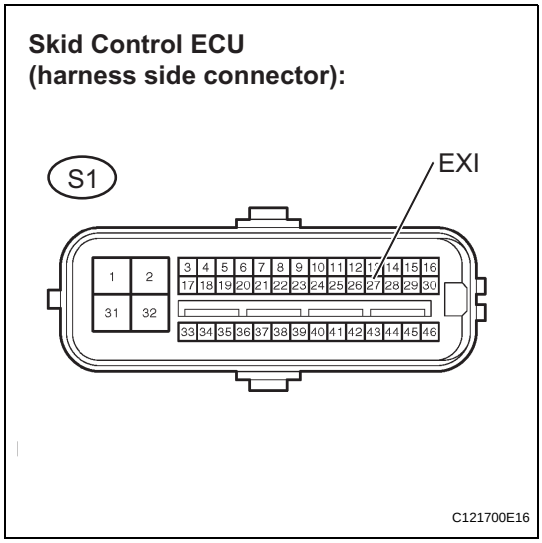

(a) Disconnect the skid control ECU connector.
(b) Turn the ignition switch to the ON position.
(c) Measure the voltage.

Standard

Tester Connection	Transfer Condition	Specified Condition
S1-27 (EXI) - Body ground	2WD	8 to 16 V
S1-27 (EXI) - Body ground	4WD	Below 1.5 V

(d) Turn the ignition switch to OFF.
(e) Reconnect the skid control ECU connector.

NG → Go to step 4

BC

OK

3	RECONFIRM DTC

(a) Clear the DTCs (See page BC-118).
(b) Check if the same DTCs are recorded.

Result	Proceed to
DTC output	A
DTC not output	B

NG → END

A

REPLACE MASTER CYLINDER SOLENOID

4	INSPECT TRANSFER INDICATOR SWITCH (4WD POSITION)

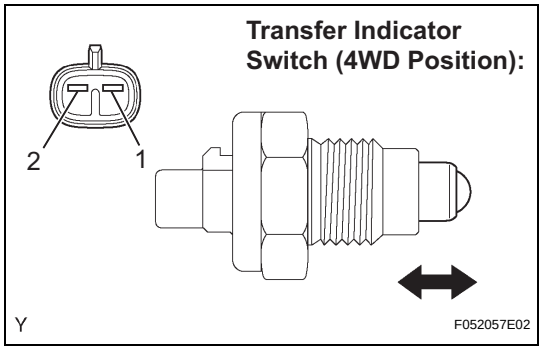

(a) Disconnect the transfer indicator switch (4WD position) connector.
(b) Remove the transfer indicator switch (4WD position).
(c) Measure the voltage.

Standard

Tester Connection	Switch Position	Specified Condition
1 - 2	Pushed	Below 1 Ω
1 - 2	Free	10 kΩ or higher

(d) Reinstall the transfer indicator switch (4WD position).
(e) Reconnect the transfer indicator switch (4WD position) connector.

NG → **REPLACE TRANSFER INDICATOR SWITCH (4WD POSITION)**

OK

BC

5	CHECK HARNESS AND CONNECTOR (SKID CONTROL ECU - ECM)

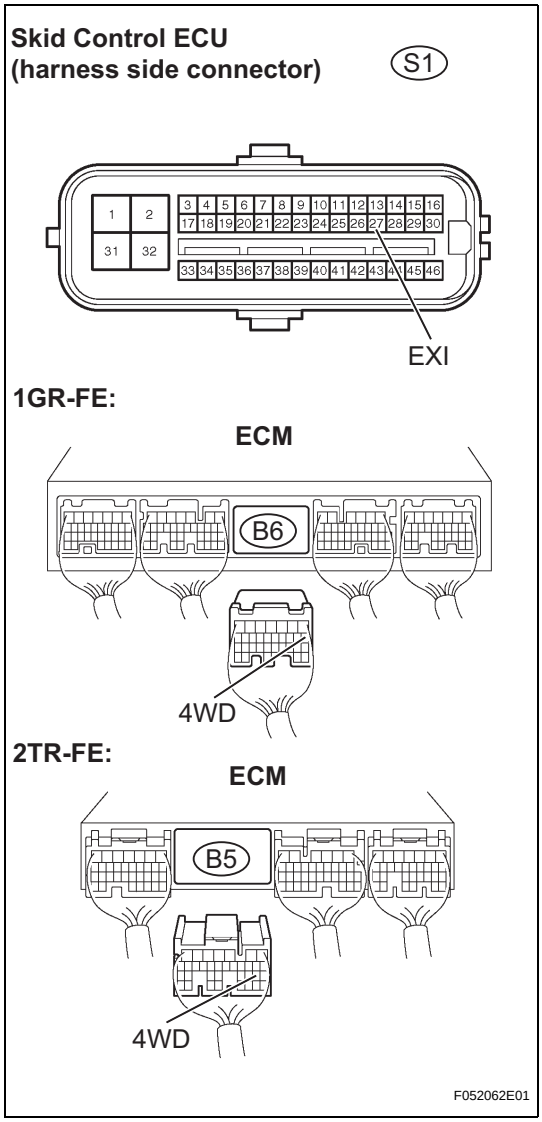

(a) Disconnect the skid control ECU connector.
(b) Disconnect the ECM connector.
(c) Measure the resistance.

Standard (1GR-FE)

Tester Connection	Specified Condition
S1-27 (EXI) - B6-8 (4WD)	Below 1 Ω

Standard (2TR-FE)

Tester Connection	Specified Condition
S1-27 (EXI) - B5-21 (4WD)	Below 1 Ω

(d) Reconnect the ECM connector.
(e) Reconnect the skid control ECU connector.

NG → **REPAIR OR REPLACE HARNESS OR CONNECTOR**

OK

BC

6 CHECK HARNESS AND CONNECTOR (SKID CONTROL ECU - 4WD CONTROL ECU)

Skid Control ECU
(harness side connector)

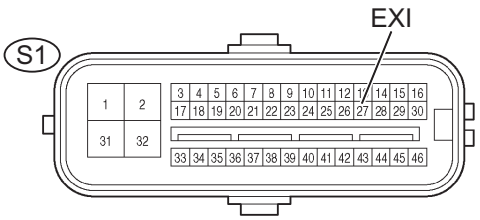

4WD Control ECU
(herness side connector)

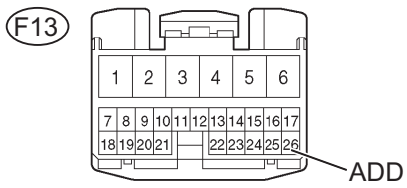

F052382E01

(a) Disconnect the skid control ECU connector.
(b) Disconnect the 4WD control ECU connector.
(c) Measure the resistance.

Standard

Tester Connection	Specified Condition
S1-27 (EXI) - F13-26 (ADD)	Below 1 Ω

(d) Reconnect the 4WD control ECU connector.
(e) Reconnect the skid control ECU connector.

NG → **REPAIR OR REPLACE HARNESS OR CONNECTOR**

OK

END

BC

7 CHECK HARNESS AND CONNECTOR (NEO TERMINAL - BODY GROUND)

Skid Control ECU
(harness side connector):

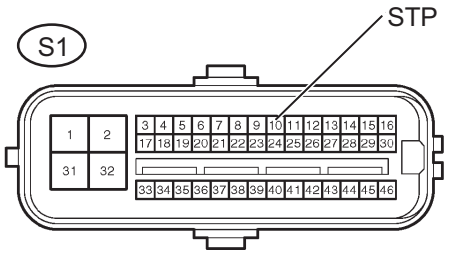

C121700E17

(a) Disconnect the skid control ECU connector.
(b) Measure the resistance.

Standard

Tester Connection	Vehicle Drive Train	Specified Condition
S1-10 (NEO) - Body ground	2WD, Pre-runner	10 kΩ or higher
S1-10 (NEO) - Body ground	4WD	Below 1 Ω

(c) Reconnect the skid control ECU connector.

NG → **REPAIR OR REPLACE HARNESS OR CONNECTOR**

OK

8	RECONFIRM DTC

(a) Clear the DTCs (See page BC-118).
(b) Check if the same DTCs are recorded.

Result	Proceed to
DTC output	A
DTC not output	B

B → END

A

REPLACE MASTER CYLINDER SOLENOID

DTC	C1268/68	Transfer "L4" Position Switch Circuit

DESCRIPTION

A-TRAC is activated if wheel skid is detected while the transfer is in the L4 position.

DTC No.	DTC Detecting Condition	Trouble Areas
C1268/68	L4 switch signal input to skid control ECU does not match L4 switch signal output from ECM.	• Transfer indicator switch (L4 position) • Transfer indicator switch (L4 position) circuit • Master cylinder solenoid (skid control ECU)

WIRING DIAGRAM

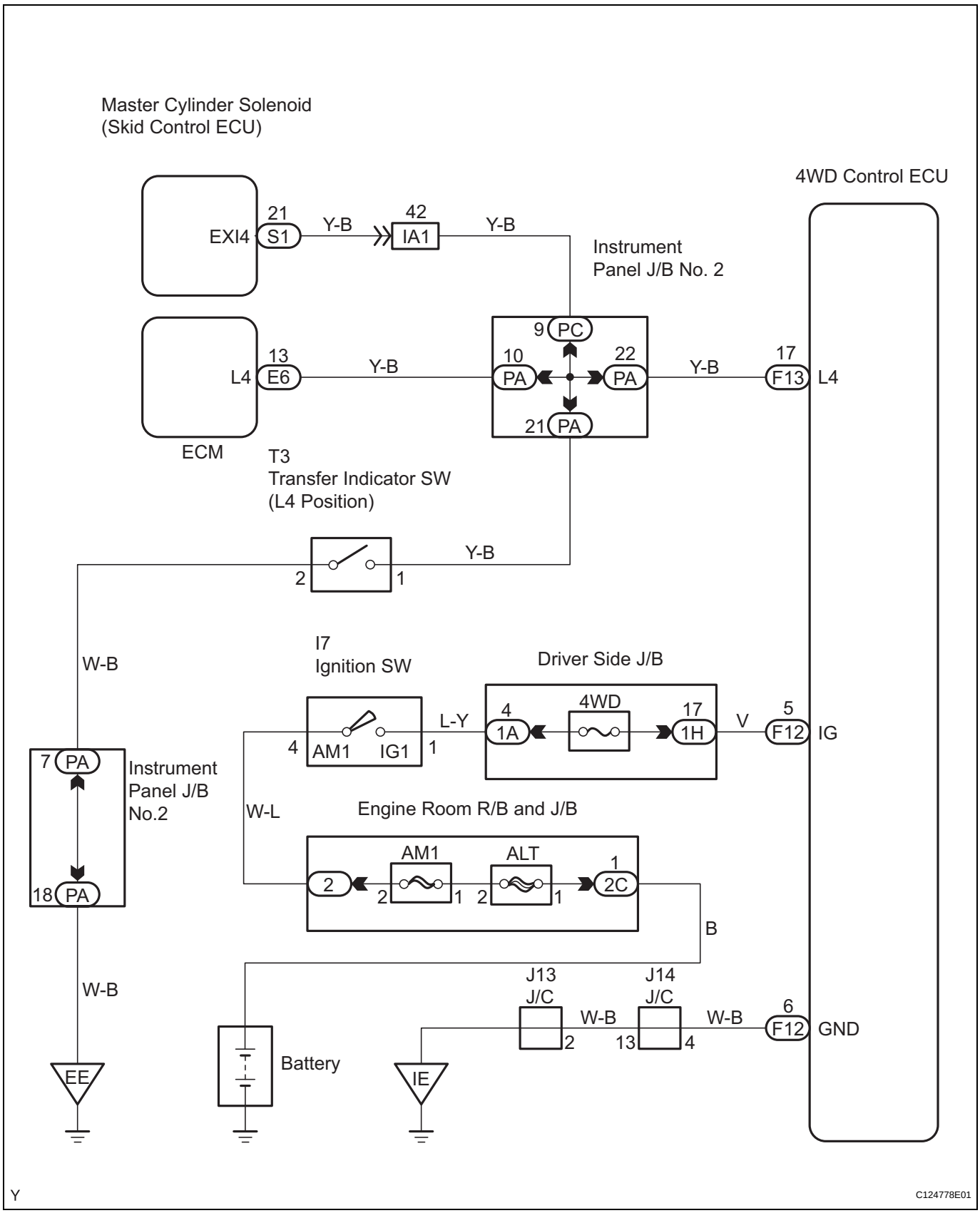

NOTICE:
When replacing the master cylinder solenoid, perform zero point calibration (See page BC-99).

1 INSPECT SKID CONTROL ECU (EXI4 TERMINAL VOLTAGE)

Skid Control ECU (harness side connector):

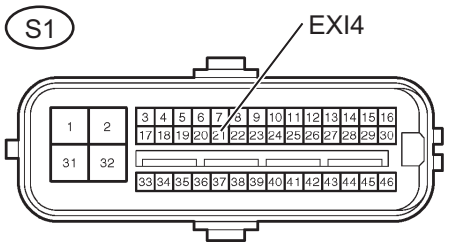

C121700E18

(a) Disconnect the skid control ECU connector.
(b) Turn the ignition switch to the ON position.
(c) Measure the voltage.

Standard

Tester Connection	Transfer Condition	Specified Condition
S1-21 (EXI4) - Body ground	L4	Below 1.5 V
S1-21 (EXI4) - Body ground	Other than above	8 to 14 V

(d) Turn the ignition switch to OFF.
(e) Reconnect the skid control ECU connector.

NG → **Go to step 4**

OK

2 PERFORM TEST MODE INSPECTION (SIGNAL CHECK)

(a) Check if the test mode DTC (C1283/83) is detected.

Result	Proceed to
Test mode DTC (C1283/83) not output	A
Test mode DTC (C1283/83) output	B

B → **REPAIR TRANSFER INDICATOR SWITCH CIRCUIT (L4 POSITION)**

A

3 RECONFIRM DTC

(a) Clear the DTCs (See page BC-118).
(b) Check if the same DTCs are recorded.

Result	Proceed to
DTC output	A
DTC not output	B

B → **END**

A

REPLACE MASTER CYLINDER SOLENOID

BC

4	INSPECT TRANSFER INDICATOR SWITCH (L4 POSITION)

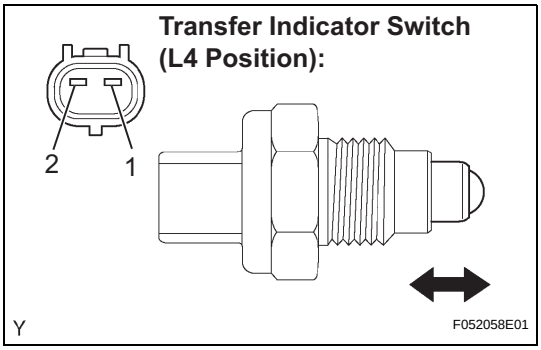

(a) Disconnect the transfer indicator switch (L4 position) connector.
(b) Remove the transfer indicator switch (L4 position).
(c) Measure the voltage.

Standard

Tester Connection	Switch Position	Specified Condition
1 - 2	Pushed	Below 1 Ω
1 - 2	Free	10 kΩ or higher

(d) Reinstall the transfer indicator switch (L4 position).
(e) Reconnect the transfer indicator switch (L4 position) connector.

NG → **REPLACE TRANSFER INDICATOR SWITCH**

OK

5	CHECK HARNESS AND CONNECTOR (SKID CONTROL ECU - TRANSFER INDICATOR SWITCH (L4 POSITION))

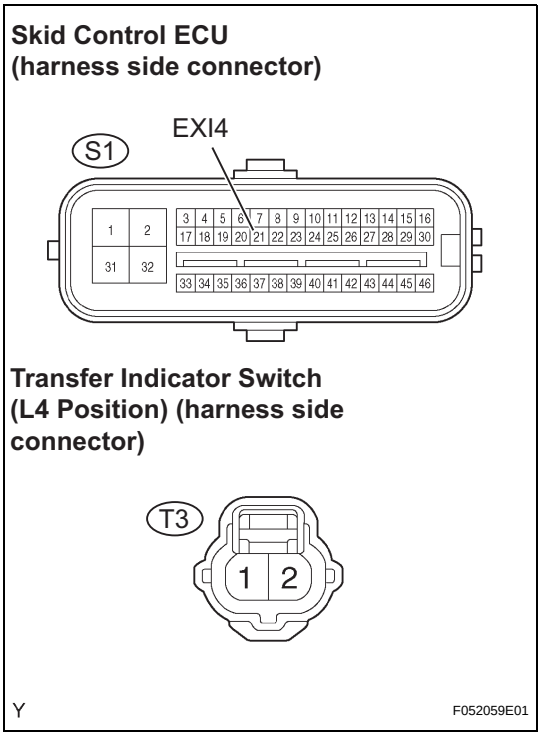

(a) Disconnect the skid control ECU connector.
(b) Disconnect the transfer indicator switch (L4 position) connector.
(c) Measure the resistance.

Standard

Tester Connection	Specified Condition
S1-21 (EXI4) - T3-1	Below 1 Ω
S1-21 (EXI4) - Body ground	10 kΩ or higher

(d) Reconnect the transfer indicator switch (L4 position) connector.
(e) Reconnect the skid control ECU connector.

NG → **REPAIR OR REPLACE HARNESS OR CONNECTOR**

OK

BC

6	CHECK HARNESS AND CONNECTOR (SKID CONTROL ECU - ECM)

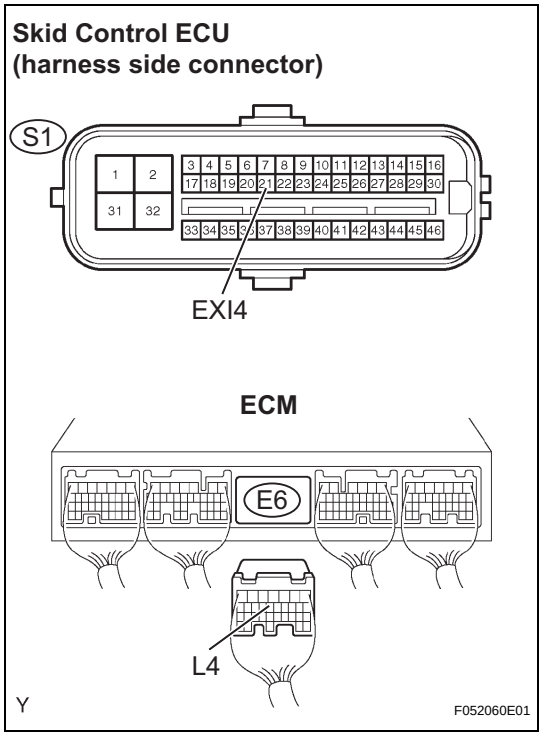

(a) Disconnect the skid control ECU connector.
(b) Disconnect the ECM connector.
(c) Measure the resistance.
Standard

Tester Connection	Specified Condition
S1-21 (EXI4) - E6-13 (L4)	Below 1 Ω

(d) Measure the resistance.
Standard

Tester Connection	Specified Condition
S1-21 (EXI4) - Body ground	10 kΩ or higher
E6-13 (L4) - Body ground	10 kΩ or higher

(e) Reconnect the ECM connector.
(f) Reconnect the skid control ECU connector.

NG → **REPAIR OR REPLACE HARNESS OR CONNECTOR**

OK

REPLACE MASTER CYLINDER SOLENOID

BC

DTC	C1337/37	Different Diameter Tire Malfunction

DESCRIPTION

The skid control ECU measures the speed of each wheel by receiving signals from the speed sensors. These signals are used for recognizing whether all 4 wheels are operating properly. Therefore, all wheel signals must be equal.

DTC No.	DTC Detecting Condition	Trouble Areas
C1337/37	When either one of following condition detected: • Diameters different of 2 front wheels and 2 rear wheels. • Wheel speed sensor fault	• Speed sensor • Speed sensor rotor • Speed sensor circuit • Tire sizes

NOTICE:
Check the speed sensor signal after replacement (See page BC-103).

1	CHECK TIRE SIZE

(a) Check tire size and condition of all 4 wheels.
OK:
All 4 wheels are the same size and in the same condition.

NG → **REPLACE TIRES SO THAT ALL 4 TIRES ARE SAME IN SIZE**

OK ↓

BC

2	CHECK SPEED SENSOR ROTOR

BC-130

(a) Remove the drive shaft, and check around the speed sensor rotor.
OK:
No scratches or foreign matter on the sensor tip.

NG → **REPLACE SPEED SENSOR ROTOR**

OK ↓

3	CHECK SPEED SENSOR

(a) Check the speed sensor circuit (See page BC-130).

NG → **REPLACE SPEED SENSOR**

OK ↓

4	CHECK HARNESS AND CONNECTOR (SKID CONTROL ECU - EACH SPEED SENSOR)

(a) Check the speed sensor circuit (See page BC-130).

NG → **REPAIR OR REPLACE HARNESS OR CONNECTOR**

OK

5	**RECONFIRM DTC**

(a) Clear the DTCs (See page BC-118).
(b) Drive the vehicle at more than 13 mph (20 km/h) for more than 60 seconds.
(c) Check if the same DTCs are detected.

Result	Proceed to
DTC output	A
DTC not output	B

B → **END**

A

REPLACE MASTER CYLINDER SOLENOID

DTC	C1380/64	Stop Light Control Relay Malfunction

DESCRIPTION

The skid control ECU inputs the stop light switch signal and detects the status of the brake operation.

DTC No.	DTC Detecting Conditions	Trouble Areas
C1380/64	Either of following conditions met when IG1 terminal voltage between 10 V and 14 V: • Despite STPO (stop light driving output) being on, no signal input to STP terminal for 5 seconds or more • Despite STPO being off, input signals of STP and STP2 do not match	• Stop light switch • Stop light switch circuit • STOP LP CTRL relay • Master cylinder solenoid (skid control ECU)

WIRING DIAGRAM

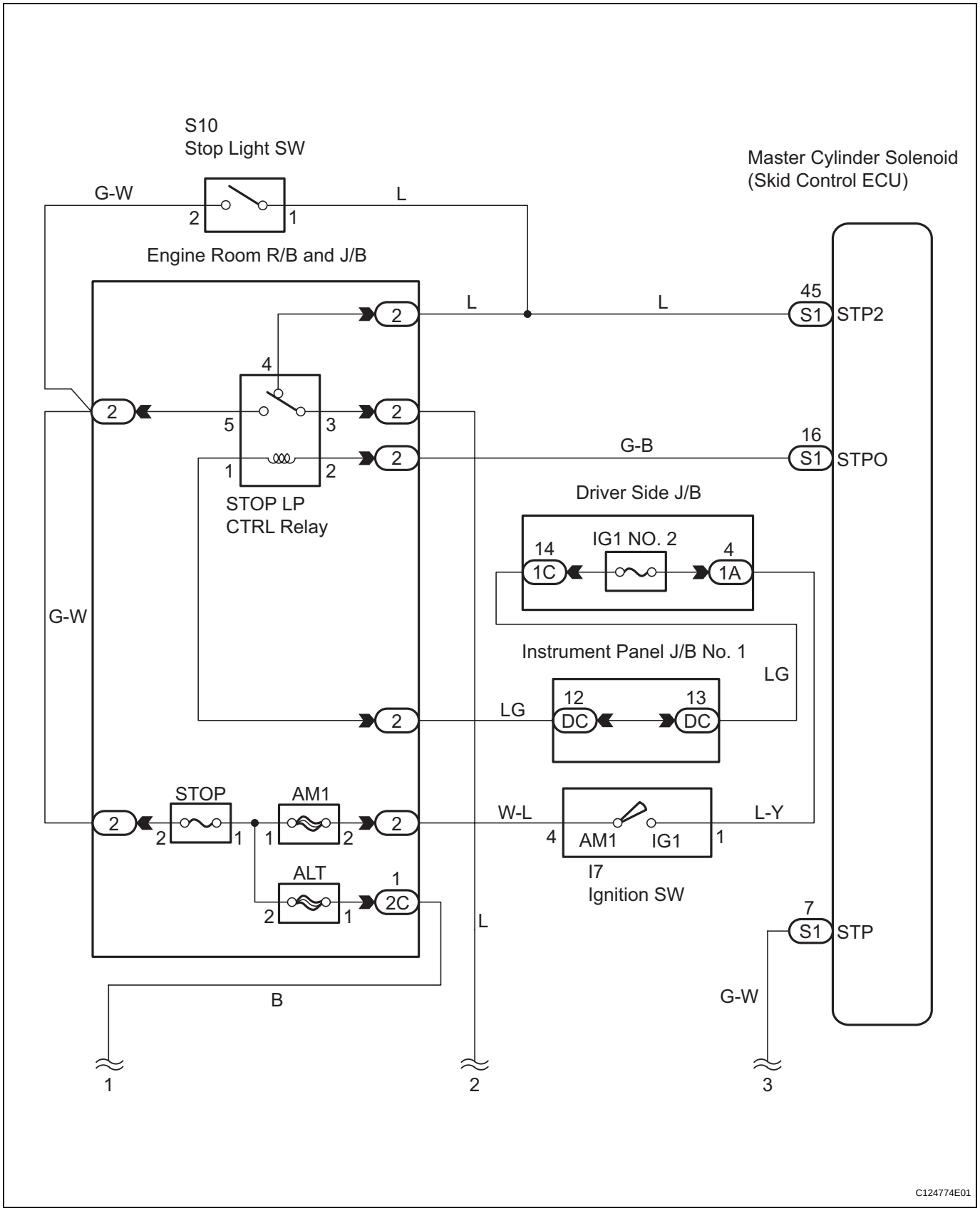

BC

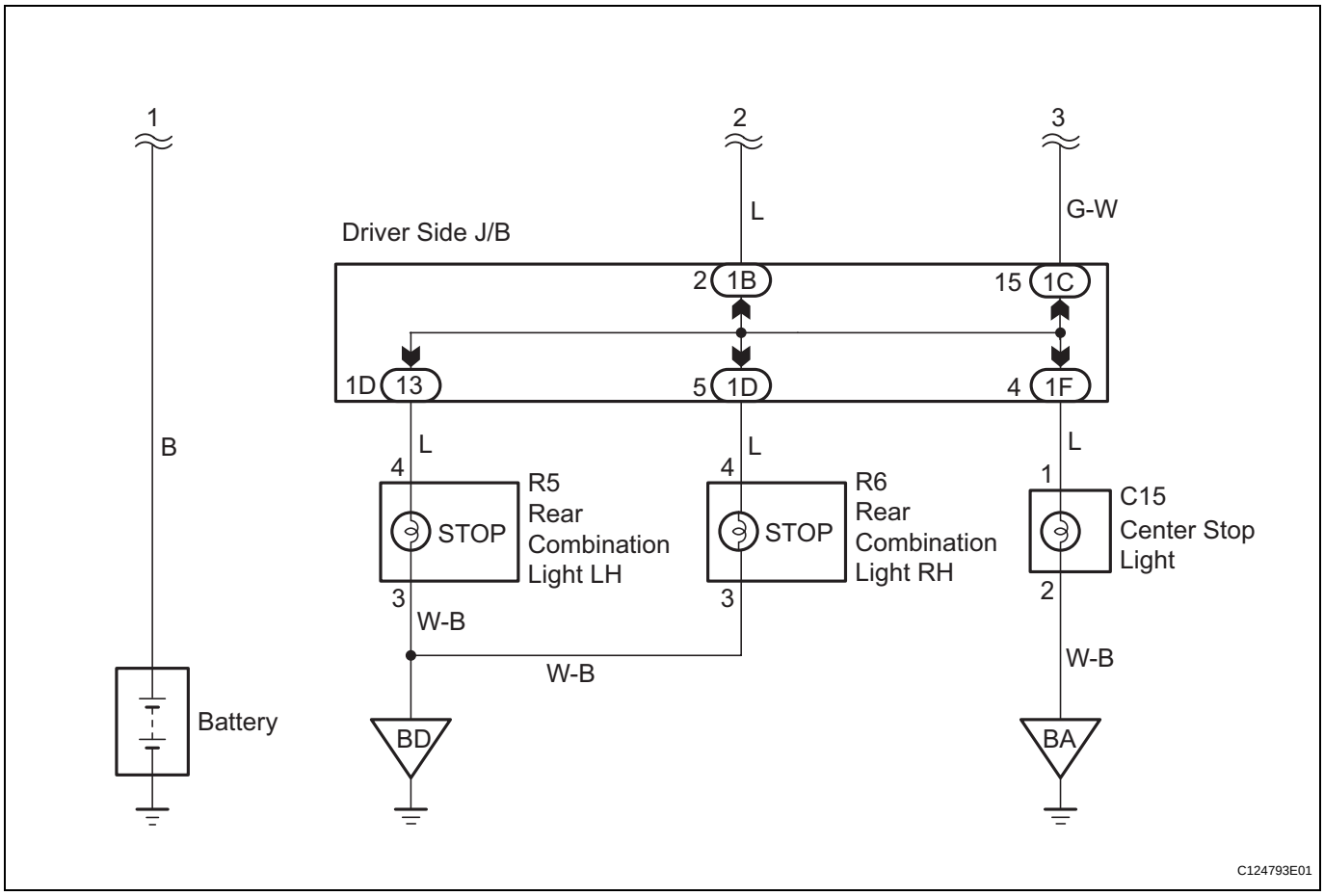

BC

NOTICE:
When replacing the master cylinder solenoid, perform zero point calibration (See page BC-99).

1	CHECK STOP LIGHT SWITCH OPERATION

(a) Check that the stop lights come on when the brake pedal is depressed and go off when the brake pedal is released.

OK

Pedal Condition	Illumination Condition
Brake pedal depressed	ON
Brake pedal released	OFF

HINT:
Check the stop light bulbs as they may have burnt out.

NG → **Go to step 10**

OK

2 INSPECT SKID CONTROL ECU (STP TERMINAL VOLTAGE)

Skid Control ECU (harness side connector):

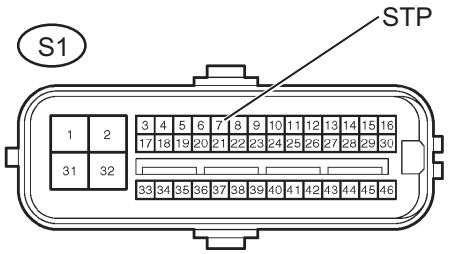

C121700E15

(a) Disconnect the skid control ECU connector.
(b) Measure the voltage.
Standard Voltage

Tester Connection	Switch condition	Specified Condition
S1-7 (STP) - Body ground	Brake pedal depressed	8 to 16 V
S1-7 (STP) - Body ground	Brake pedal released	Below 1.5 V

(c) Reconnect the skid control ECU connector.

NG → **REPAIR OR REPLACE HARNESS OR CONNECTOR (STP CIRCUIT)**

OK

3 INSPECT SKID CONTROL ECU (STP2 TERMINAL VOLTAGE)

Skid Control ECU (harness side connector):

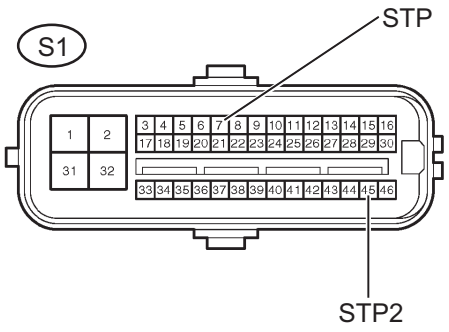

C121700E19

(a) Disconnect the skid control ECU connector.
(b) Measure the resistance.
Standard Resistance

Tester Connection	Specified Condition
S1-7 (STP) - S1-45 (STP2)	Below 1 Ω

(c) Reconnect the skid control ECU connector.

NG → **REPAIR OR REPLACE HARNESS OR CONNECTOR (STP2 CIRCUIT)**

OK

BC

4 PERFORM ACTIVE TEST BY INTELLIGENT TESTER (STOP LIGHT RELAY)

(a) Connect the intelligent tester to the DLC3.
(b) Turn the ignition switch to the ON position.
(c) Turn the intelligent tester ON.
(d) Select the ACTIVE TEST mode on the intelligent tester.

Item	Vehicle Condition / Test Details	Diagnostic Note
STP LIGHT RELAY	Turns stop light relay ON / OFF	Observe stop lights

(e) Check that the stop lights turn on and off on the rear combination light when using the intelligent tester.

OK:

The stop lights turn on and off according to the intelligent tester operations.

NG → **Go to step 6**

OK

5 RECONFIRM DTC

(a) Clear the DTCs (See page BC-118).
(b) Check if the same DTCs are recorded.

Result	Proceed to
DTC output	A
DTC not output	B

B → **END**

A

REPLACE MASTER CYLINDER SOLENOID

6 CHECK STOP LIGHT CONTROL RELAY

BC

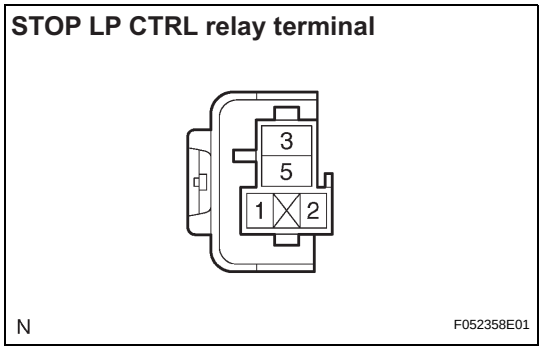

(a) Disconnect the STOP LP CTRL relay.
(b) Turn the ignition switch to the ON position.
(c) Measure the voltage.

Standard Voltage

Tester Connection	Condition	Specified Condition
Terminal 5 - Body ground	Always	8 to 16 V
Terminal 1 - Body ground	Always	8 to 16 V

(d) Turn the ignition switch to OFF.
(e) Reconnect the STOP LP CTRL relay.

NG → **REPAIR OR REPLACE HARNESS OR CONNECTOR (STOP LP CTRL RELAY)**

OK

7 INSPECT STOP LIGHT CONTROL RELAY

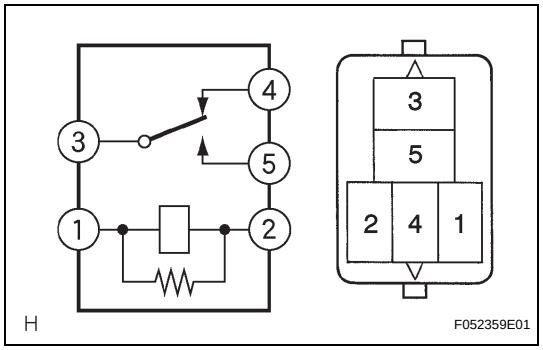

(a) Remove the STOP LP CTRL relay from the engine room R/B and J/B.
(b) Measure the resistance.
Standard Resistance

Tester Connection	Specified Condition
3 - 4	Below 1 Ω
3 - 5	10 kΩ or higher

(c) Apply the battery voltage between terminals 1 (+) and 2 (-).
(d) Measure the resistance.
Standard Resistance

Tester Connection	Specified Condition
3 - 4	10 kΩ or higher
3 - 5	Below 1 Ω

(e) Reinstall the STOP LP CTRL relay.

NG → **REPLACE STOP LIGHT CONTROL RELAY**

OK

8 INSPECT MASTER CYLINDER SOLENOID (STPO TERMINAL VOLTAGE)

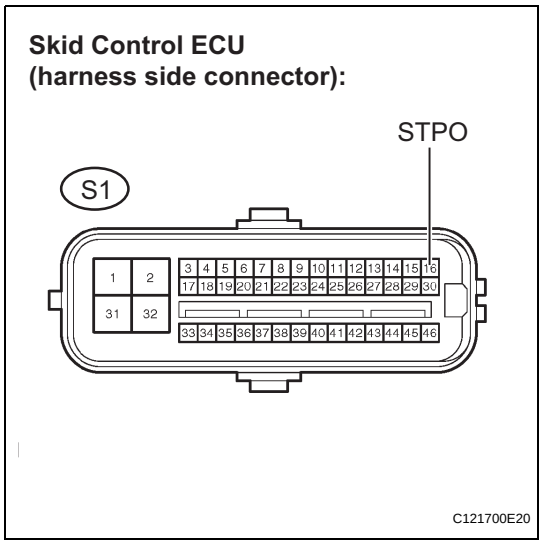

(a) Disconnect the skid control ECU connector.
(b) Turn the ignition switch to the ON position.
(c) Measure the voltage.
Standard Voltage

Tester Connection	Condition	Specified Condition
S1-16 (STPO) - Body ground	Brake pedal depressed	10 to 14 V

(d) Turn the ignition switch to OFF.
(e) Reconnect the skid control ECU connector.

NG → **REPAIR OR REPLACE HARNESS OR CONNECTOR (STOP CIRCUIT)**

OK

9 RECONFIRM DTC

(a) Clear the DTCs (See page BC-118).
(b) Check if the same DTCs are recorded.

Result	Proceed to
DTC output	A
DTC not output	B

BC

B → END

A

REPLACE MASTER CYLINDER SOLENOID

10 CHECK STOP LIGHT SWITCH ASSEMBLY (STOP LIGHT SWITCH POWER SOURCE TERMINAL VOLTAGE)

Stop Light Switch (harness side connector):

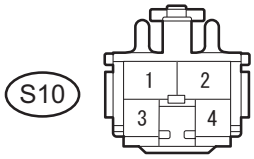

C124801E01

(a) Disconnect the stop light switch connector.
(b) Turn the ignition switch to the ON position.
(c) Measure the voltage.

Standard Voltage

Tester Connection	Specified Condition
S10-2 Body ground	10 to 14 V

(d) Turn the ignition switch to OFF.
(e) Reconnect the stop light switch connector.

NG → **REPAIR OR REPLACE HARNESS OR CONNECTOR (STOP LIGHT POWER SOURCE CIRCUIT)**

OK

11 INSPECT STOP LIGHT SWITCH ASSEMBLY

BC

Stop Light Switch Assembly:

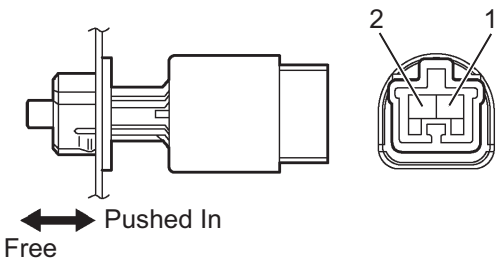

C124796E01

(a) Disconnect the stop light switch connector.
(b) Measure the resistance.

Standard Resistance

Switch condition	Tester connection	Specified condition
Switch pin free	1 - 2	Below 1 Ω
Switch pin pushed in	1 - 2	10 kΩ or higher

(c) Reconnect the stop light switch connector.

NG → **REPLACE STOP LIGHT SWITCH ASSEMBLY**

OK

12 CHECK HARNESS AND CONNECTOR (STOP LIGHT SWITCH - STOP LP CTRL RELAY)

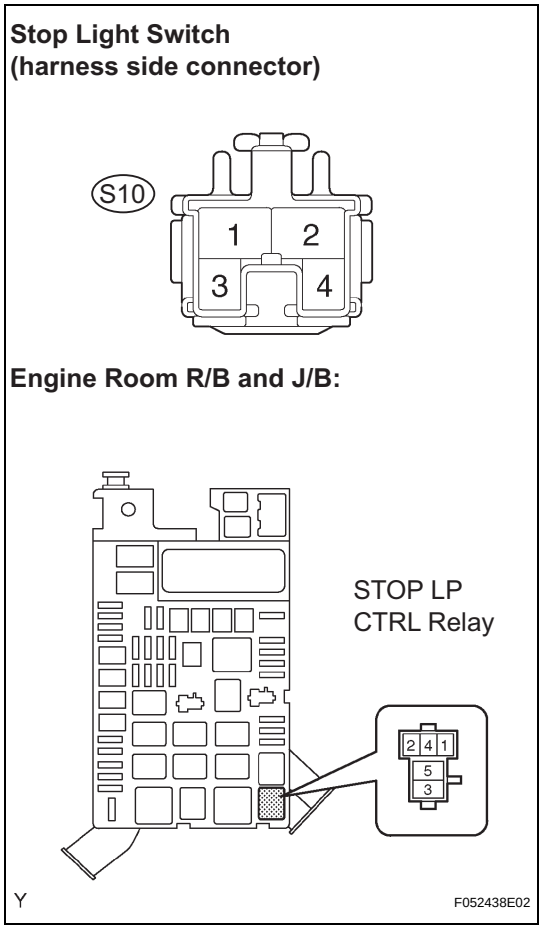

(a) Remove the STOP LP CTRL relay.
(b) Measure the resistance.
Standard Resistance

Tester Connection	Specified Condition
S10-2 - STOP LP CTRL relay (5)	Below 1 Ω
S10-2 - Body ground	10 kΩ or higher

(c) Reinstall the STOP LP CTRL relay.

NG → **REPAIR OR REPLACE HARNESS OR CONNECTOR**

OK

13 INSPECT STOP LIGHT CONTROL RELAY

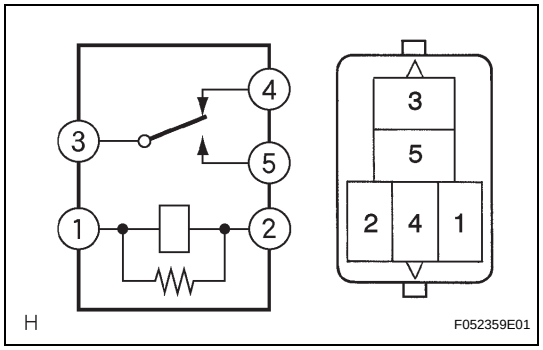

(a) Remove the STOP LP CTRL relay from the engine room R/B and J/B.
(b) Measure the resistance.
Standard Resistance

Tester Connection	Specified Condition
3 - 4	Below 1 Ω
3 - 5	10 kΩ or higher

(c) Apply the battery voltage between terminals 1 (+) and 2 (-).
(d) Measure the resistance.
Standard Resistance

Tester Connection	Specified Condition
3 - 4	10 kΩ or higher
3 - 5	Below 1 Ω

(e) Reinstall the STOP LP CTRL relay.

BC

NG → REPLACE STOP LIGHT CONTROL RELAY

OK

14 CHECK HARNESS AND CONNECTOR (REAR COMBINATION LIGHT - STOP LP CTRL RELAY)

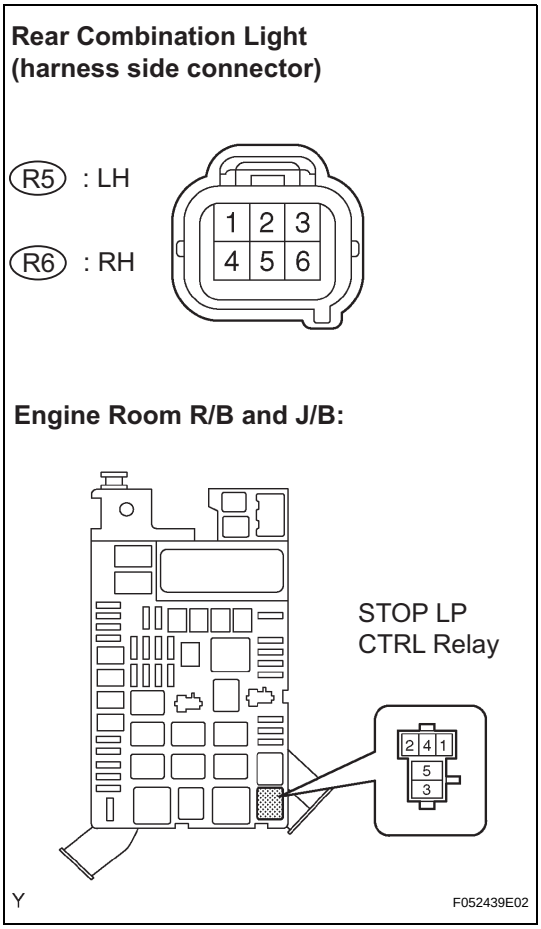

(a) Disconnect the rear combination light connector.
(b) Remove the STOP LP CTRL relay.
(c) Measure the resistance.

Standard Resistance (LH)

Tester Connection	Specified Condition
R5-1 - STOP LP CTRL (4)	Below 1 Ω
R5-1 - Body ground	10 kΩ or higher
R5-6 - Body ground	Below 1 Ω

Standard Resistance (RH)

Tester Connection	Specified Condition
R6-1 - STOP LP CTRL (4)	Below 1 Ω
R6-1 - Body ground	10 kΩ or higher
R6-6 - Body ground	Below 1 Ω

(d) Reinstall the STOP LP CTRL relay.
(e) Reconnect the rear combination light connector.

NG → REPAIR OR REPLACE HARNESS OR CONNECTOR

OK

CHECK FOR SHORTS IN ALL HARNESSES AND CONNECTORS CONNECTED TO FUSE AND REPLACE FUSE

BC

ABS Warning Light Remains ON

DESCRIPTION

If any of the following is detected, the ABS warning light remains ON.

1. The skid control ECU connectors are disconnected from the skid control ECU.
2. There is a malfunction in the skid control ECU internal circuit.
3. There is an open in the harness between the combination meter and skid control ECU.

HINT:

Use of the intelligent tester may not be possible when there is a malfunction in the skid control ECU.

WIRING DIAGRAM

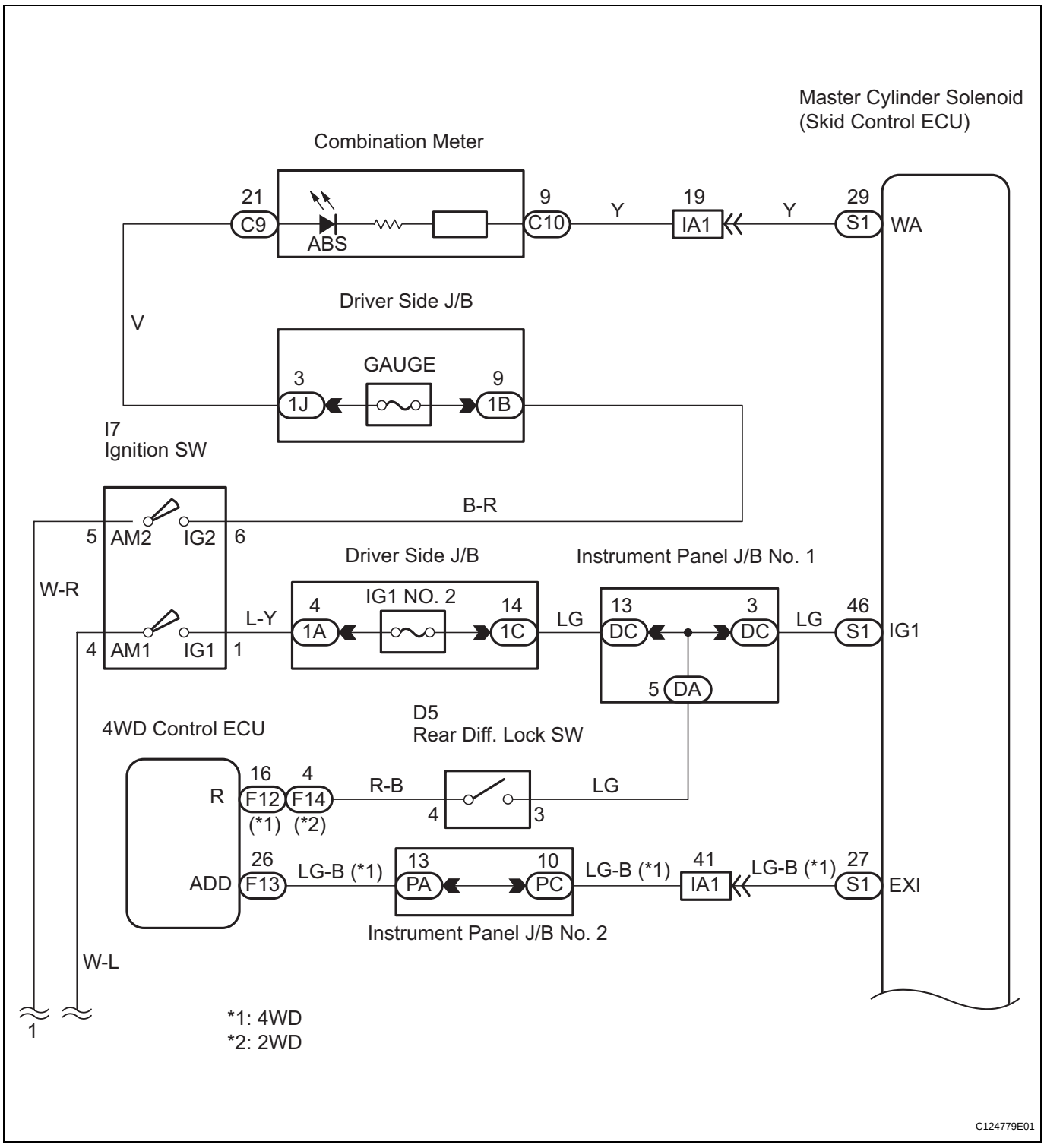

BC

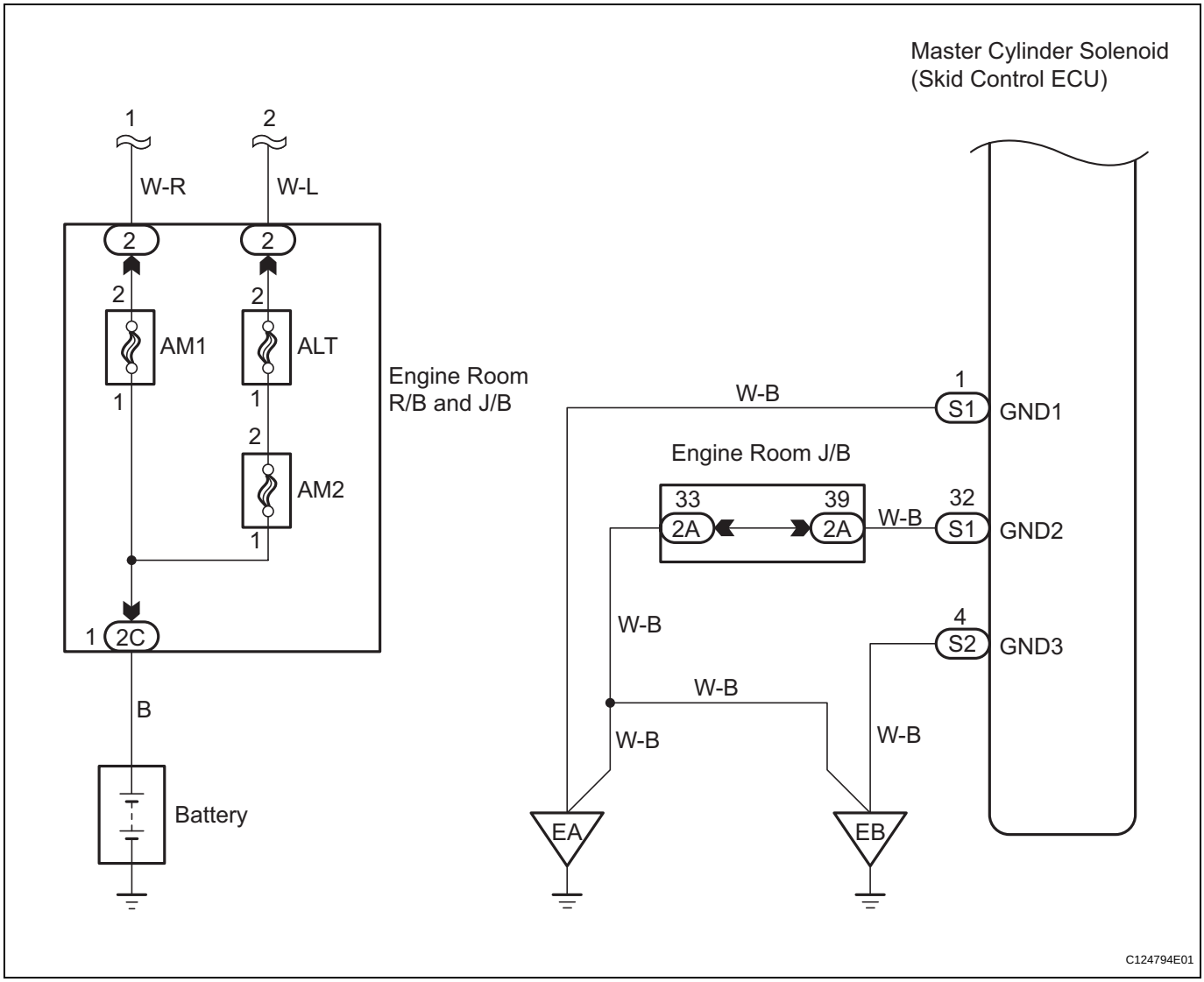

BC

NOTICE:
When replacing the master cylinder solenoid, perform zero point calibration (See page BC-99).

1	CHECK DTC

(a) Check if DTCs for ABS are recorded.

Result	Proceed to
DTC not output	A
DTC output	B

B → **REPAIR CIRCUITS INDICATED BY OUTPUT DTCS**

A

2	INSPECT SKID CONTROL ECU CONNECTOR

(a) Check that the ECU connector is securely connected.

OK:
The connector is securely connected.

NG → **CONNECT CONNECTOR CORRECTLY**

OK

3 INSPECT SKID CONTROL ECU (IG1 TERMINAL VOLTAGE)

(a) Connect the intelligent tester to the DLC3.
(b) Start the engine.
(c) Turn the intelligent tester ON.
(d) Select the DATA LIST mode on the intelligent tester.
(e) Measure the voltage output from the ECU displayed on the intelligent tester.

Item	Measurement Item / Range (Display)	Normal Condition	Diagnostic Note
IG VOLTAGE	ECU power supply voltage / TOO LOW / NORMAL / TOO HIGH	TOO HIGH: 14 V or more NORMAL: 9.5 to 14V TOO LOW: Below 9.5 V	-

B → **Go to step 6**

C → **REPAIR OR REPLACE HARNESS OR CONNECTOR**

A

BC

4 INSPECT REAR DIFFERENTIAL LOCK SWITCH

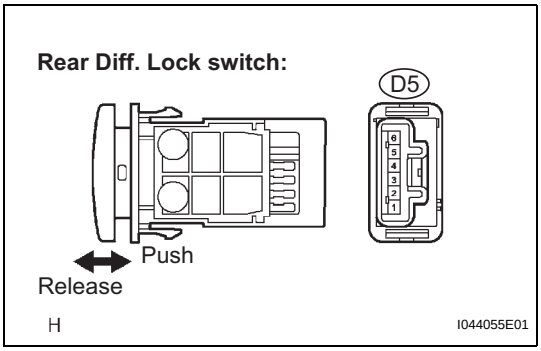

(a) Remove the rear diff. lock switch.
(b) Disconnect the rear diff. lock switch connector.
(c) Measure the resistance.
Standard

Tester Connection	Switch Condition	Specified Condition
D5-3 - D5-4	Released	10 kΩ or higher
D5-3 - D5-4	Pushed in	Below 1 Ω

(d) Reinstall the rear diff. lock switch.
(e) Reconnect the rear diff. lock switch connector.

NG → **REPLACE REAR DIFFERENTIAL LOCK SWITCH**

OK

5	CHECK HARNESS AND CONNECTOR (4WD CONTROL ECU - REAR DIFFERENTIAL LOCK SWITCH)

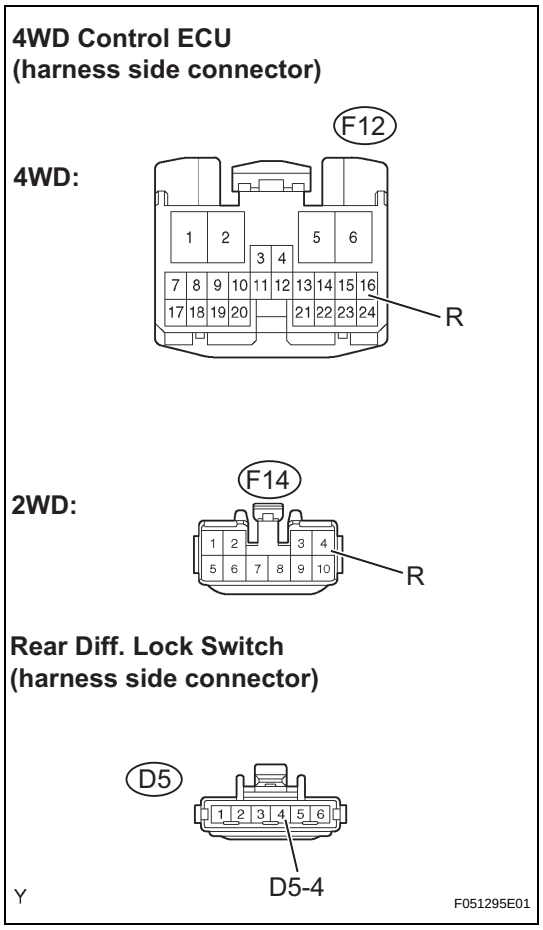

(a) Disconnect the 4WD control ECU connector.
(b) Disconnect the rear diff. lock connector.
(c) Measure the resistance.

Standard (4WD)

Tester Connection	Specified Condition
F12-16 (R) - D5-4	Below 1 Ω
F12-16 (R) - Body ground	10 kΩ or higher

Standard (2WD)

Tester Connection	Specified Condition
F14-4 (R) - D5-4	Below 1 Ω
F14-4 (R) - Body ground	10 kΩ or higher

(d) Reconnect the rear diff. lock connector.
(e) Reconnect the 4WD control ECU connector.

NG → **REPAIR OR REPLACE HARNESS OR CONNECTOR**

OK

BC

6 CHECK HARNESS AND CONNECTOR (SKID CONTROL ECU - COMBINATION METER)

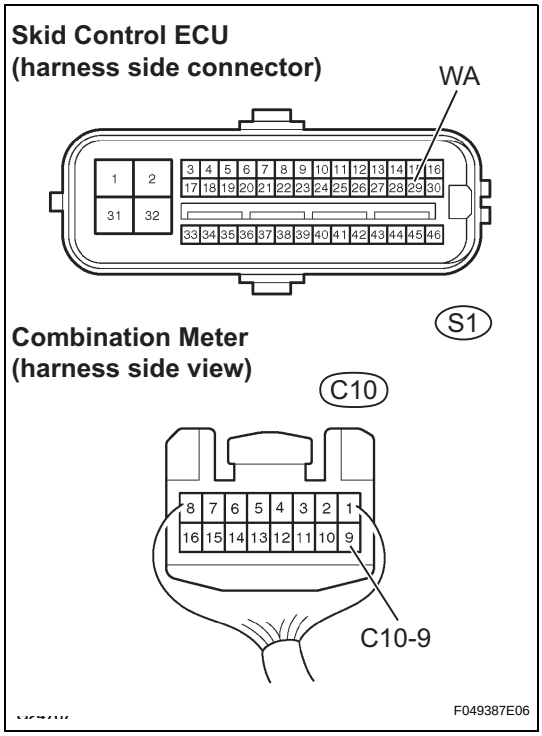

(a) Disconnect the skid control ECU connector.
(b) Disconnect the combination meter connector.
(c) Measure the resistance.
Standard

Tester Connection	Specified Condition
S1-29 (WA) - C10-9	Below 1 Ω

(d) Measure the resistance.
Standard

Tester Connection	Specified Condition
S1-29 (WA) - Body ground	10 kΩ or higher

(e) Reconnect the combination meter connector.
(f) Reconnect the skid control ECU connector.

NG → **REPAIR OR REPLACE HARNESS OR CONNECTOR**

OK

BC

7 INSPECT COMBINATION METER ASSEMBLY

(a) Check the combination meter system (See page ME-8).

OK:
Combination meter is normal.

NG → **REPLACE COMBINATION METER ASSEMBLY**

OK

REPLACE MASTER CYLINDER SOLENOID

ABS Warning Light does not Come ON

DESCRIPTION

If the ECU detects trouble, it illuminates the ABS warning light while at the same time prohibiting ABS control.
At this time, the ECU records a DTC in its memory.
Connecting terminals TC and CG of the DLC3 causes the ECU to display 2-digit DTCs by blinking the ABS warning light.

WIRING DIAGRAM

See page BC-234.

NOTICE:
When replacing the master cylinder solenoid, perform zero point calibration (See page BC-99).

1	CHECK ABS WARNING LIGHT

(a) Disconnect the skid control ECU connector.
(b) Turn the ignition switch to the ON position.
(c) Check that the ABS warning light comes on.
OK:
ABS warning light comes on.
(d) Turn the ignition switch to OFF.
(e) Reconnect the skid control ECU connector.

OK → **REPLACE MASTER CYLINDER SOLENOID**

NG

BC

2	CHECK HARNESS AND CONNECTOR (SKID CONTROL ECU - COMBINATION METER)

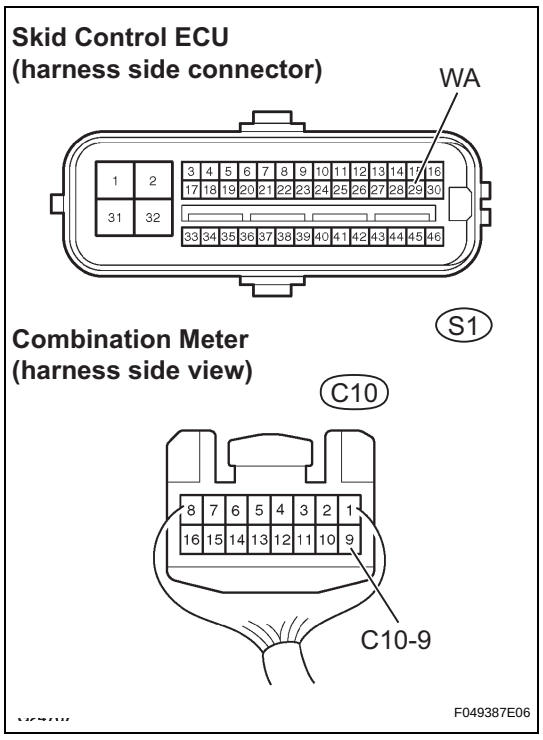

(a) Disconnect the skid control ECU connector.
(b) Disconnect the combination meter connector.
(c) Measure the resistance.
Standard

Tester Connection	Specified Condition
S1-29 (WA) - C10-9	Below 1 Ω
S1-29 (WA) - Body ground	10 kΩ or higher

(d) Reconnect the combination meter connector.
(e) Reconnect the skid control ECU connector.

NG → **REPAIR OR REPLACE HARNESS AND CONNECTOR**

OK

3	INSPECT COMBINATION METER ASSEMBLY

(a) Check the combination meter system (See page ME-8).
OK:
Combination meter is normal.

NG → **REPLACE COMBINATION METER ASSEMBLY**

OK

CHECK FOR INTERMITTENT PROBLEMS

VSC TRAC Warning Light Remains ON

DESCRIPTION

When the skid control ECU stores DTCs, the VSC and TRAC functions are deactivated, the VSC TRAC warning light comes on in the combination meter.

WIRING DIAGRAM

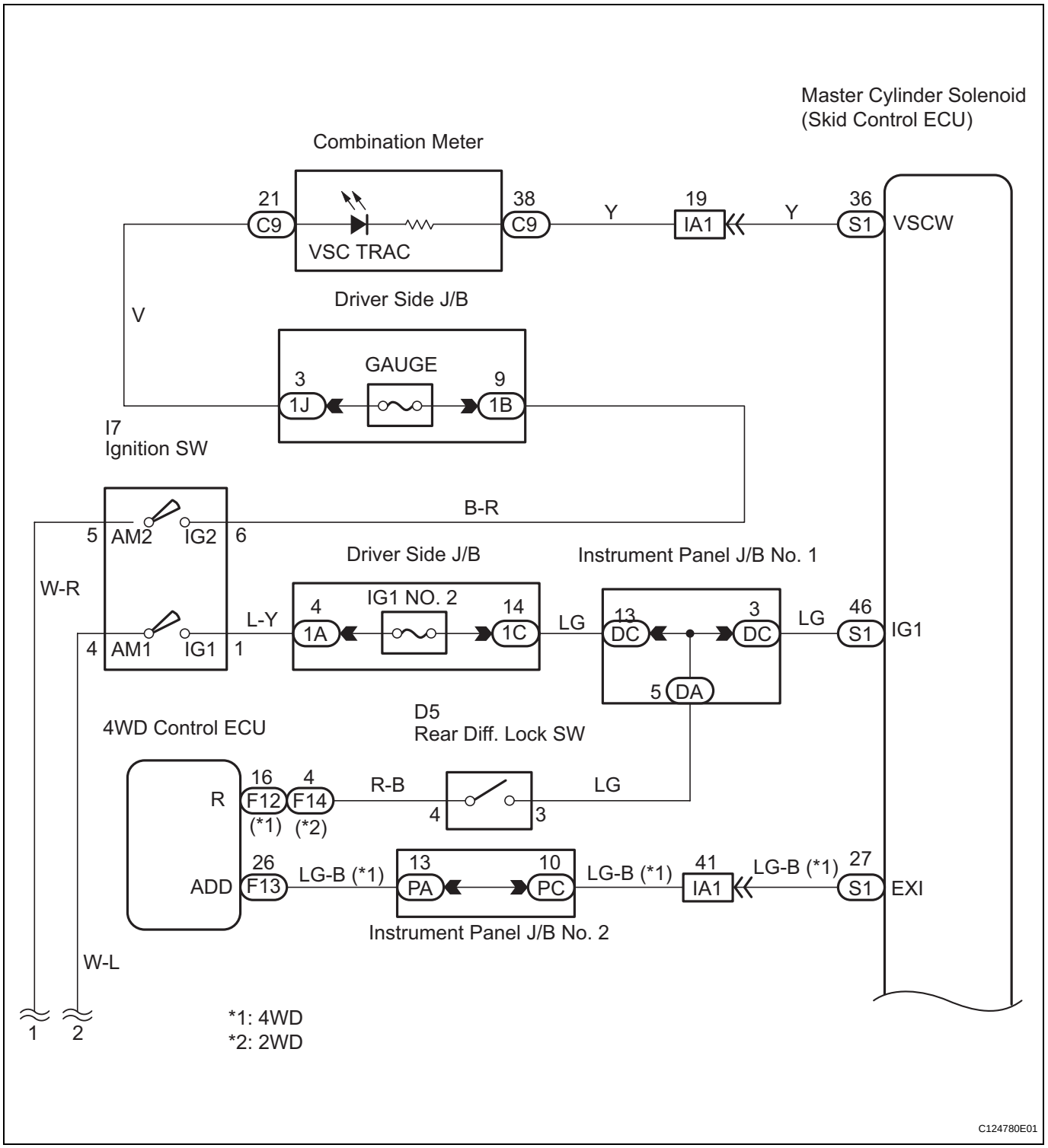

BC

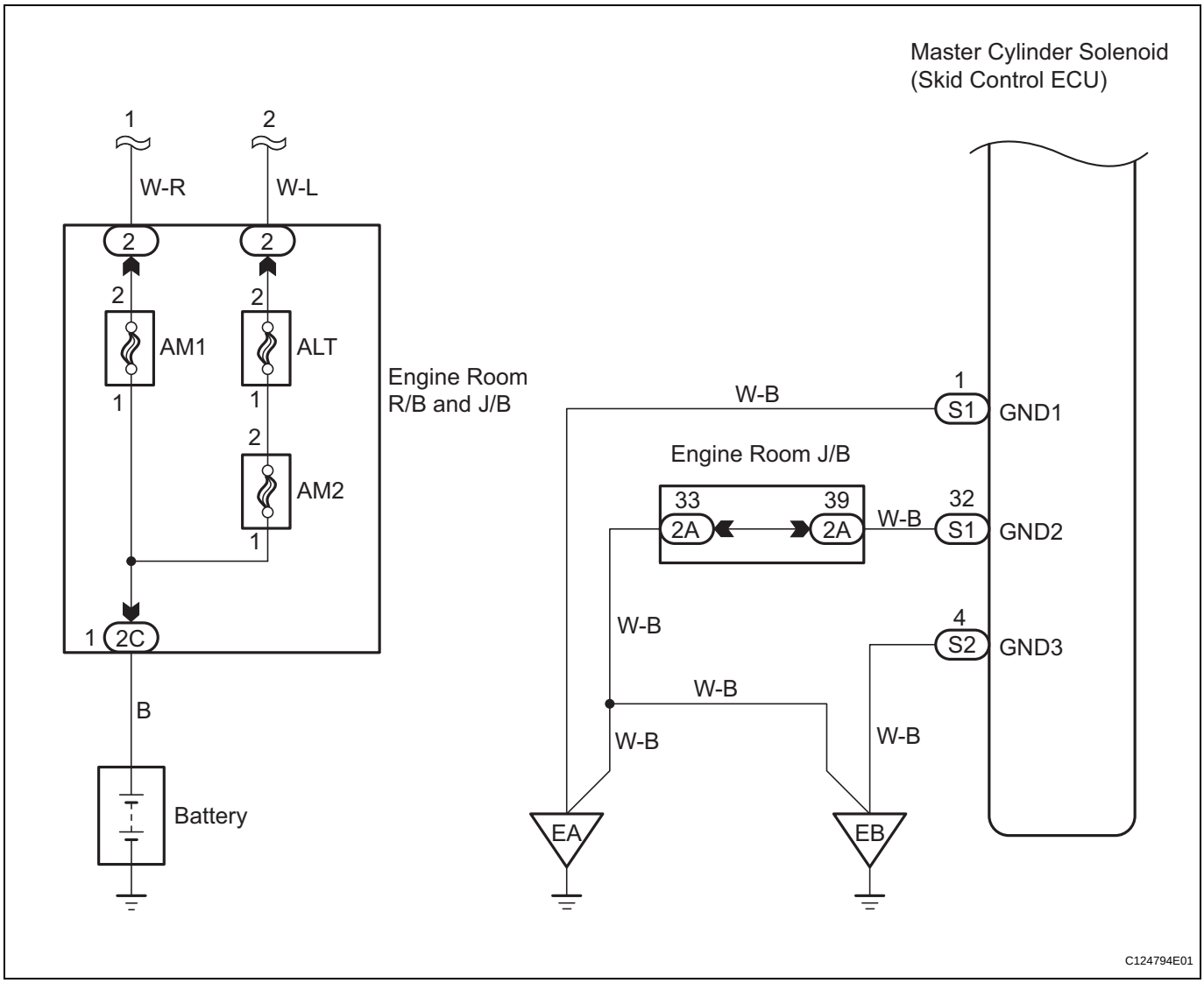

NOTICE:
When replacing the master cylinder solenoid, perform zero point calibration (See page BC-99).

1	CHECK DTC

(a) Check if DTCs for VSC are recorded.

Result	Proceed to
DTC not output	A
DTC output	B

B → **REPAIR CIRCUITS INDICATED BY OUTPUT DTCS**

A

2	INSPECT SKID CONTROL ECU CONNECTOR

(a) Check that the ECU connector is securely connected.

BC

OK:
The connector is securely connected.

NG → **CONNECT CONNECTOR CORRECTLY**

OK

3 INSPECT SKID CONTROL ECU TERMINAL VOLTAGE (IG1 TERMINAL)

(a) When using intelligent tester:
(1) Connect the intelligent tester to the DLC3.
(2) Start the engine.
(3) Select the DATA LIST mode on the intelligent tester.
(4) Measure the voltage output from the ECU displayed on the intelligent tester.

Item	Measurement Item / Range (Display)	Normal Condition	Diagnostic Note
IG VOLTAGE	ECU power supply voltage: TOO LOW / NORMAL / TOO HIGH	TOO HIGH: 14 V or more NORMAL: 9.5 to 14V TOO LOW: Below 9.5 V	-

OK:
"Normal" is displayed.

(b) When not using intelligent tester:
(1) Disconnect the skid control ECU connector.
(2) Turn the ignition switch to the ON position.
(3) Measure the voltage.

Standard

Tester Connection	Specified Condition
S1-46 (IG1) - Body ground	10 to 14 V

(4) Turn the ignition switch to OFF.
(5) Reconnect the skid control ECU connector.

Skid Control ECU (harness side connector):

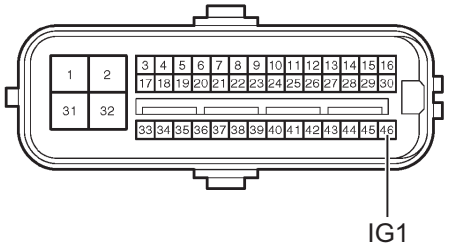

C121700E02

Result	Proceed to
OK (models with rear diff. lock)	A
OK (models without rear diff. lock)	B
NG	C

B → **Go to step 6**

C → **REPAIR OR REPLACE HARNESS OR CONNECTOR**

A

BC

4 INSPECT REAR DIFFERENTIAL LOCK SWITCH

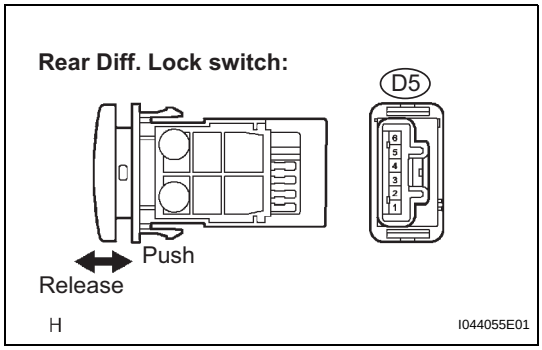

(a) Remove the rear diff. lock switch.
(b) Disconnect the rear diff. lock switch connector.
(c) Measure the resistance.

Standard

Tester Connection	Switch Condition	Specified Condition
D5-3 - D5-4	Released	10 kΩ or higher
D5-3 - D5-4	Pushed in	Below 1 Ω

(d) Reconnect the rear diff. lock switch connector.
(e) Reinstall the rear diff. lock switch.

NG → **REPLACE REAR DIFFERENTIAL LOCK SWITCH**

OK

5 CHECK HARNESS AND CONNECTOR (4WD CONTROL ECU - REAR DIFFERENTIAL LOCK SWITCH)

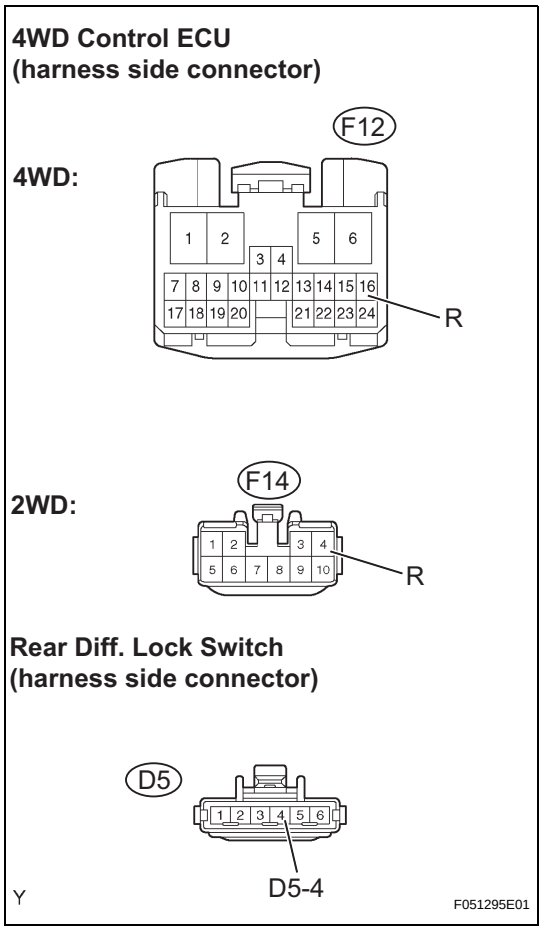

(a) Disconnect the 4WD control ECU connector.
(b) Disconnect the rear diff. lock connector
(c) Measure the resistance.

Standard (4WD)

Tester Connection	Specified Condition
F12-16 (R) - D5-4	Below 1 Ω
F12-16 (R) - Body ground	10 kΩ or higher

Standard (2WD)

Tester Connection	Specified Condition
F14-4 (R) - D5-4	Below 1 Ω
F14-4 (R) - Body ground	10 kΩ or higher

(d) Reconnect the rear diff. lock connector.
(e) Reconnect the 4WD control ECU connector.

NG → **REPAIR OR REPLACE HARNESS OR CONNECTOR**

OK

BC

6	CHECK HARNESS AND CONNECTOR (SKID CONTROL ECU - COMBINATION METER)

Combination Meter (harness side view)

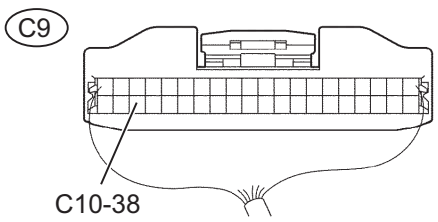

Skid Control ECU (harness side connector)

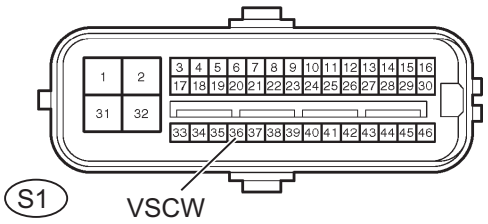

F049577E03

(a) Disconnect the skid control ECU connector.
(b) Disconnect the combination meter connector.
(c) Measure the resistance.
Standard

Tester Connection	Specified Condition
C9-38 - S1-36 (VSCW)	Below 1 Ω

(d) Measure the resistance.
Standard

Tester Connection	Specified Condition
S1-36 (VSCW) - Body ground	10 kΩ or higher

(e) Reconnect the combination meter connector.
(f) Reconnect the skid control ECU connector.

NG → **REPAIR OR REPLACE HARNESS OR CONNECTOR**

OK

7	INSPECT COMBINATION METER ASSEMBLY

(a) Check the combination meter system (See page ME-8).
OK:
Combination meter is normal.

NG → **REPLACE COMBINATION METER ASSEMBLY**

OK

REPLACE MASTER CYLINDER SOLENOID

BC

VSC TRAC Warning Light does not Come ON

DESCRIPTION

When the ECU stores DTC, the VSC warning light illuminates on the combination meter.

WIRING DIAGRAM

See page BC-241.

NOTICE:
When replacing the master cylinder solenoid, perform zero point calibration (See page BC-99).

1 CHECK VSC TRAC WARNING LIGHT

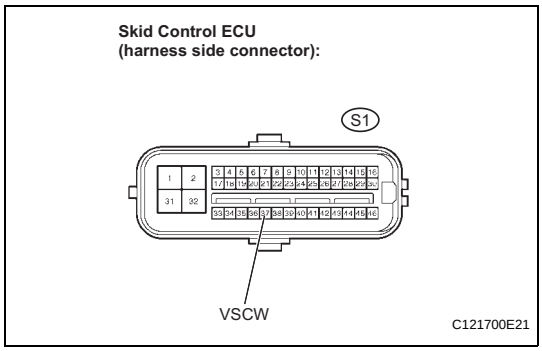

(a) Disconnect the skid control ECU connector.
(b) Turn the ignition switch to the ON position.
(c) Ground terminal VSCW of the skid control ECU.
(d) Check VSC TRAC warning light.
OK

VSCW -GND Condition	Illumination Condition
Connecting	OFF
Disconnecting	ON

(e) Turn the ignition switch to OFF.
(f) Reconnect the skid control ECU connector.

OK → **REPLACE MASTER CYLINDER SOLENOID**

NG

2 CHECK HARNESS AND CONNECTOR (SKID CONTROL ECU - COMBINATION METER)

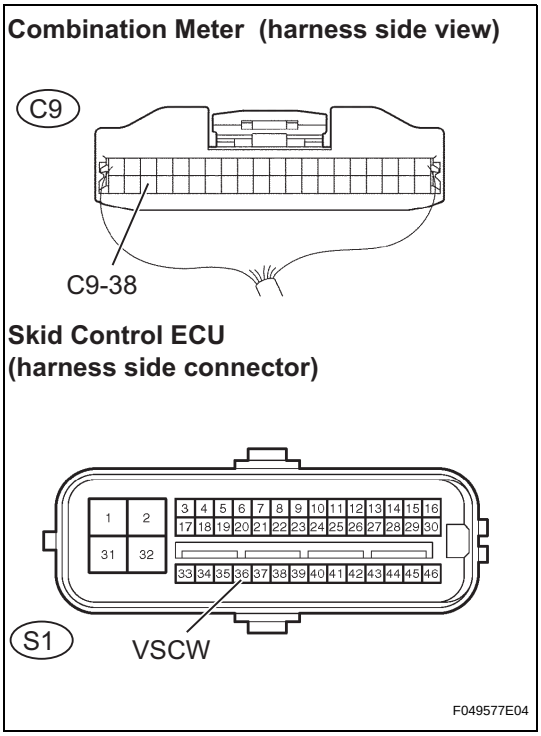

(a) Disconnect the skid control ECU connector.
(b) Disconnect the combination meter connector.
(c) Measure the resistance.
Standard

Tester Connection	Specified Condition
C9-38 - S1-36 (VSCW)	Below 1 Ω

(d) Measure the resistance.
Standard

Tester Connection	Specified Condition
S1-36 (VSCW) - Body ground	10 kΩ or higher

(e) Reconnect the combination meter connector.
(f) Reconnect the skid control ECU connector.

NG → **REPAIR OR REPLACE HARNESS OR CONNECTOR**

OK

3	INSPECT COMBINATION METER ASSEMBLY

(a) Check the combination meter system (See page ME-8).
OK:
Combination meter is normal.

NG → **REPLACE COMBINATION METER ASSEMBLY**

OK

CHECK FOR INTERMITTENT PROBLEMS

Brake Warning Light Remains ON

DESCRIPTION

The BRAKE warning light lights up when the brake fluid is insufficient, the parking brake is applied or the EBD is defective.

WIRING DIAGRAM

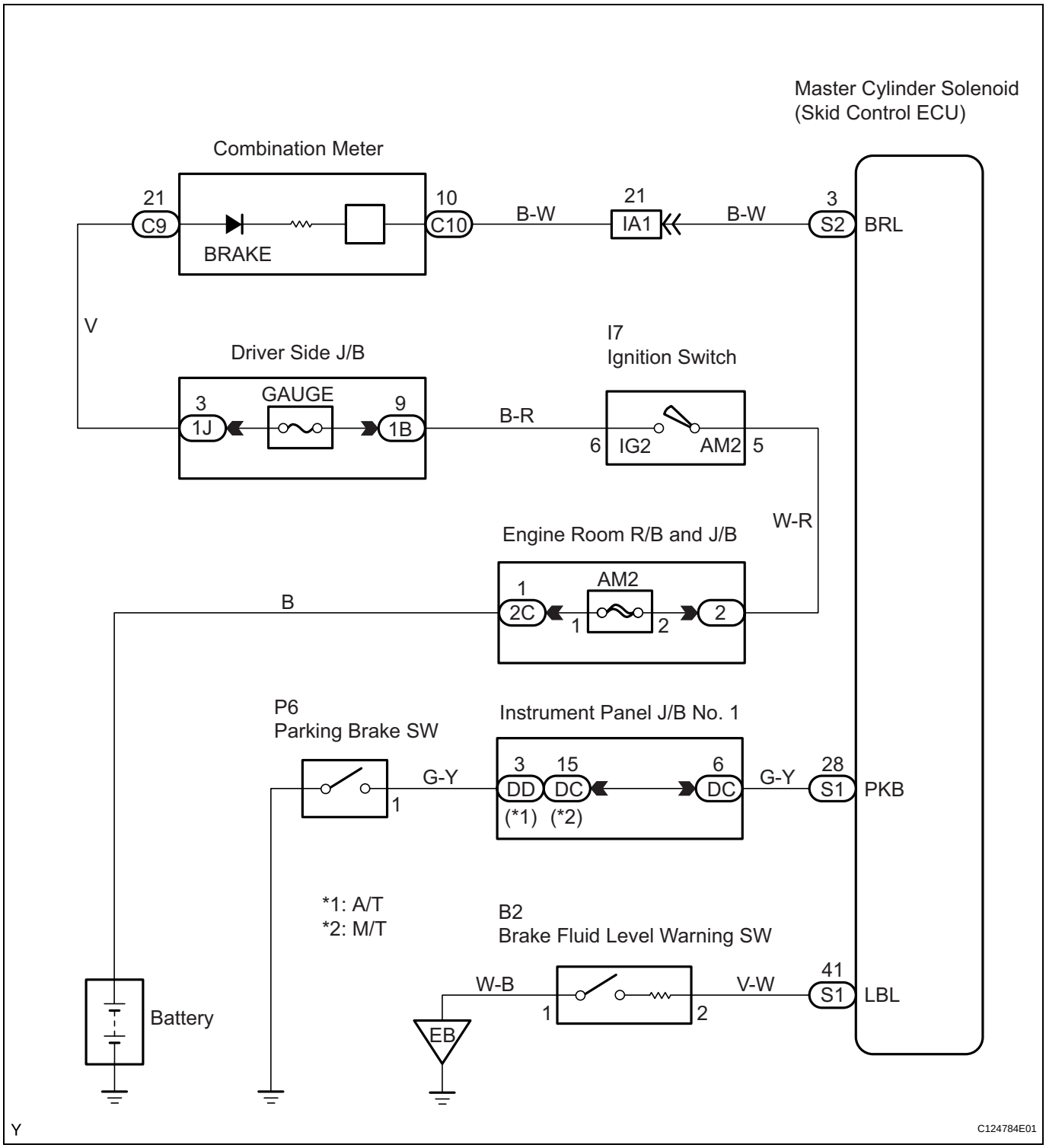

NOTICE:
When replacing the master cylinder solenoid, perform zero point calibration (See page BC-99).

1 CHECK DTC

(a) Check the DTCs (See page BC-118).

Result	Proceed to
DTC not output	A
DTC output	B

B → **REPAIR CIRCUITS INDICATED BY OUTPUT DTCS**

A

2 CHECK BRAKE FLUID LEVEL

(a) Check the amount of brake fluid in the brake reservoir.
OK:
Brake fluid level is correct.

NG → **ADD BRAKE FLUID**

OK

3 CHECK SKID CONTROL ECU CONNECTOR

(a) Check whether skid control ECU connector is connected securely.
OK:
The skid control ECU connector is connected securely.

NG → **CONNECT CONNECTOR CORRECTLY**

OK

4 INSPECT BATTERY

(a) Check the battery voltage.
Standard:
11 to 14 V

NG → **INSPECT CHARGING SYSTEM**

OK

5 INSPECT SKID CONTROL ECU (IG1 TERMINAL VOLTAGE)

Skid Control ECU (harness side connector):

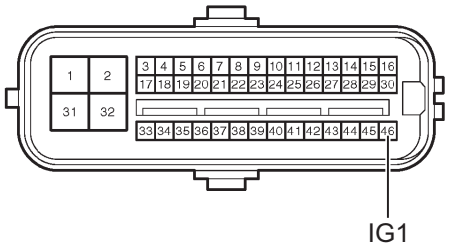

C121700E02

(a) Disconnect the skid control ECU connector.
(b) Turn the ignition switch to the ON position.
(c) Measure the voltage.

Standard

Tester Connection	Specified Condition
S1-46 (IG1) - Body ground	10 to 14 V

(d) Turn the ignition switch to OFF.
(e) Reconnect the skid control ECU connector.

NG → **REPAIR OR REPLACE HARNESS OR CONNECTOR (IG1 CIRCUIT)**

OK

6 CHECK HARNESS AND CONNECTOR (GND TERMINAL CONTINUITY)

Skid Control ECU (harness side connector):

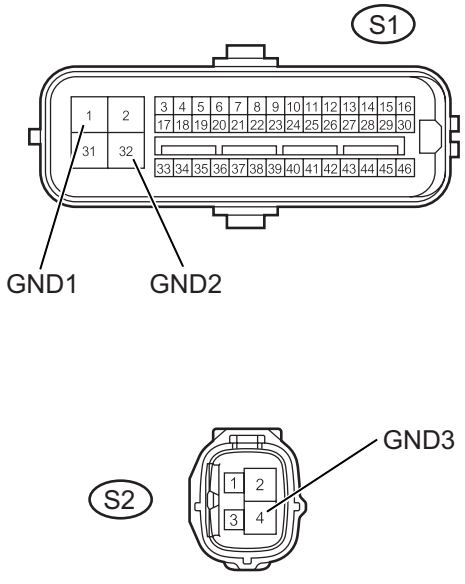

C124799E01

(a) Disconnect the skid control ECU connectors.
(b) Measure the resistance.

Standard

Tester Connection	Specified Condition
S1-1 (GND1) - Body ground	Below 1 Ω
S1-32 (GND2) - Body ground	Below 1 Ω
S2-4 (GND3) - Body ground	Below 1 Ω

(c) Reconnect the skid control ECU connectors.

NG → **REPAIR OR REPLACE HARNESS OR CONNECTOR (GND CIRCUIT)**

OK

BC

7 INSPECT BRAKE FLUID LEVEL WARNING SWITCH

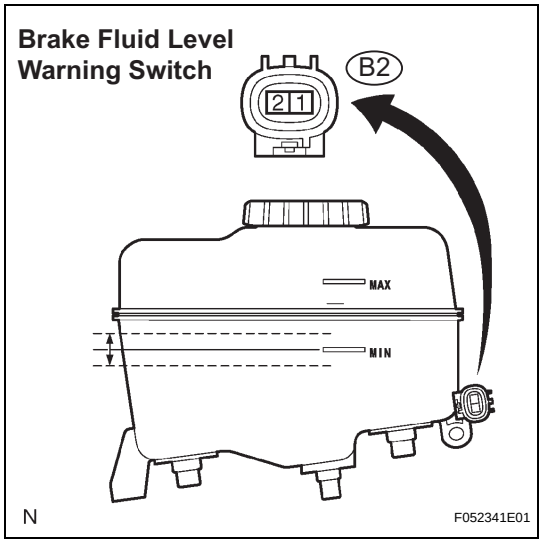

(a) Disconnect the brake fluid level warning switch connector.
(b) Measure the resistance.
Standard

Tester Connection	Condition	Specified Condition
B2-1 - B2-2	Float UP	10 kΩ or higher
B2-1 - B2-2	Float DOWN	Below 1 Ω

(c) Reconnect the brake fluid level warning switch connector.

HINT:
If there is no problem after finishing the above check, adjust the brake fluid level to the maximum level.

NG → **REPLACE BRAKE MASTER CYLINDER RESERVOIR SUB-ASSEMBLY**

OK

8 CHECK HARNESS AND CONNECTOR (SKID CONTROL ECU - BRAKE FLUID LEVEL WARNING SWITCH)

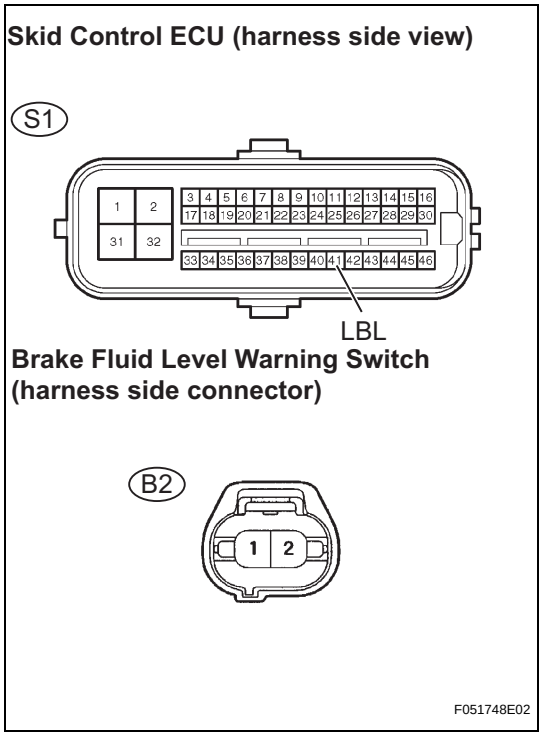

(a) Disconnect the skid control ECU connector.
(b) Disconnect the brake fluid level warning switch connector.
(c) Measure the resistance.
Standard

Tester Connection	Specified Condition
S1-41 (LBL) - B2-2	Below 1 Ω

(d) Measure the resistance.
Standard

Tester Connection	Specified Condition
S1-41 - Body ground	10 kΩ or higher

(e) Reconnect the brake fluid level warning switch connector.
(f) Reconnect the skid control ECU connector.

NG → **REPAIR OR REPLACE HARNESS OR CONNECTOR**

OK

BC

9 INSPECT PARKING BRAKE SWITCH ASSEMBLY

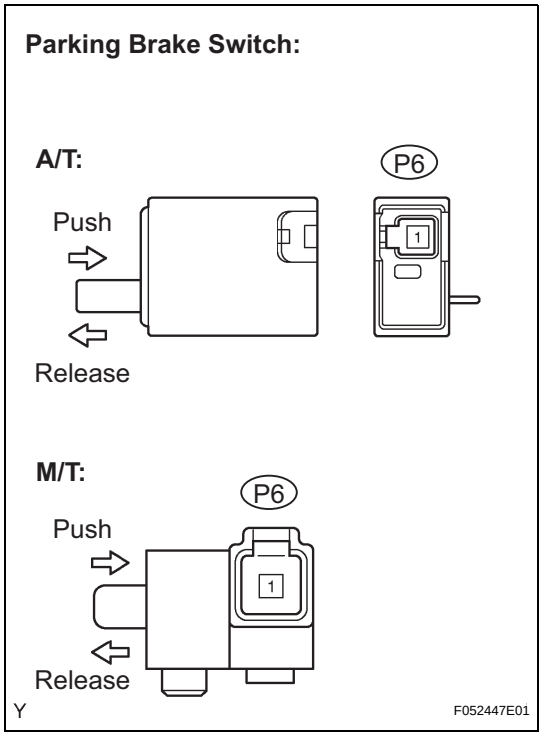

(a) Disconnect the parking brake switch connector.
(b) Measure the resistance.
Standard

Tester Connection	Switch Condition	Specified Condition
P6-1 - Body ground	Released	Below 1 Ω
P6-1 - Body ground	Pushed in	10 kΩ or higher

(c) Reconnect the parking brake switch connector.

NG → **REPLACE PARKING BRAKE SWITCH ASSEMBLY**

OK

10 CHECK HARNESS AND CONNECTOR (SKID CONTROL ECU - PARKING BRAKE SWITCH)

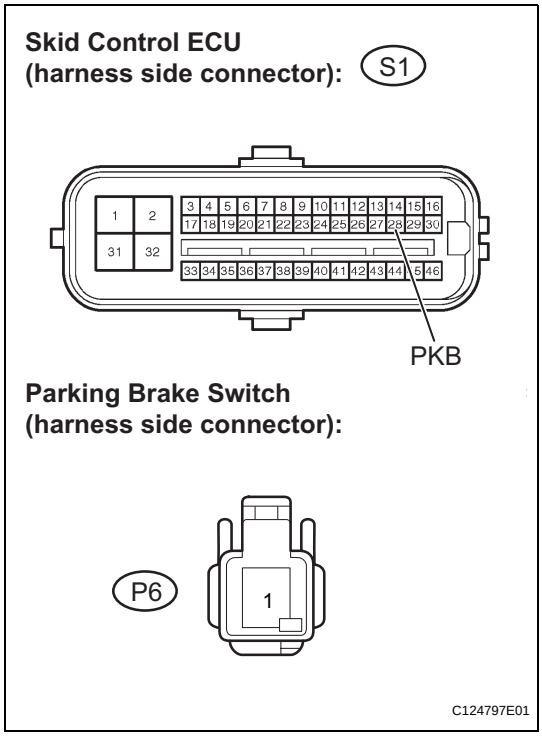

(a) Disconnect the skid control ECU.
(b) Disconnect the parking brake switch connector.
(c) Measure the resistance.
Standard

Tester Connection	Specified Condition
S1-28 (PKB) - P6-1	Below 1 Ω
S1-28 (PKB) - Body ground	10 kΩ or higher

(d) Reconnect the parking brake switch connector.
(e) Reconnect the skid control ECU.

NG → **REPAIR OR REPLACE HARNESS OR CONNECTOR**

OK

11	CHECK HARNESS AND CONNECTOR (SKID CONTROL ECU - COMBINATION METER)

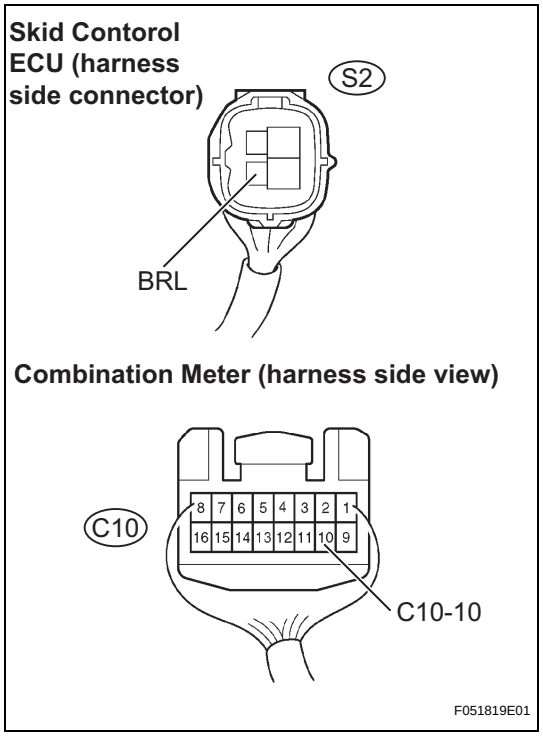

(a) Disconnect the skid control ECU connector.
(b) Disconnect the combination meter connector.
(c) Measure the resistance.
Standard

Tester Connection	Specified Condition
S2-3 (BRL) - C10-10	Below 1 Ω

(d) Measure the resistance.
Standard

Tester Connection	Specified Condition
S2-3 (BRL) - Body ground	10 kΩ or higher

(e) Reconnect the combination meter connector.
(f) Reconnect the skid control ECU connector.

NG → **REPAIR OR REPLACE HARNESS OR CONNECTOR**

OK

12	INSPECT COMBINATION METER ASSEMBLY

(a) Check the combination meter system (See page ME-8).
OK:
Combination meter is normal.

NG → **REPLACE COMBINATION METER ASSEMBLY**

OK

REPLACE MASTER CYLINDER SOLENOID

BC

Brake Warning Light does not Come ON

WIRING DIAGRAM

See page BC-248.

NOTICE:
When replacing the master cylinder solenoid, perform zero point calibration (See page BC-99).

1	CHECK BRAKE WARNING LIGHT

(a) Disconnect the skid control ECU connector.
(b) Turn the ignition switch to the ON position.
(c) Check that the BRAKE warning light comes on.
OK:
BRAKE warning light comes on.
(d) Turn the ignition switch to OFF.
(e) Reconnect the skid control ECU connector.

OK → **REPLACE MASTER CYLINDER SOLENOID**

NG

2	INSPECT BATTERY

(a) Check the battery voltage.
Standard:
11 to 14 V

NG → **INSPECT CHARGING SYSTEM**

OK

3	INSPECT FUSE (GAUGE)

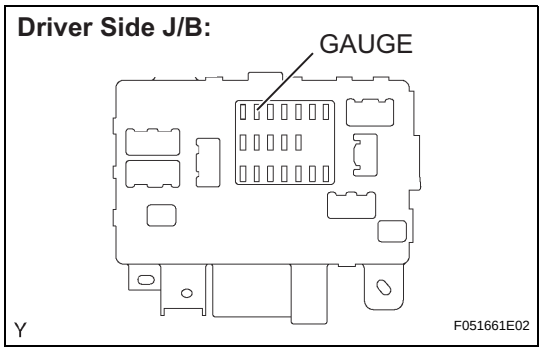

(a) Remove the GAUGE fuse from the driver side J/B.
(b) Measure the resistance of the GAUGE fuse.
Standard:
Below 1 Ω
(c) Reinstall the GAUGE fuse.

NG → **CHECK FOR SHORTS IN ALL HARNESSES AND CONNECTORS CONNECTED TO FUSE AND REPLACE FUSE**

OK

4	CHECK HARNESS AND CONNECTOR (SKID CONTROL ECU - COMBINATION METER)

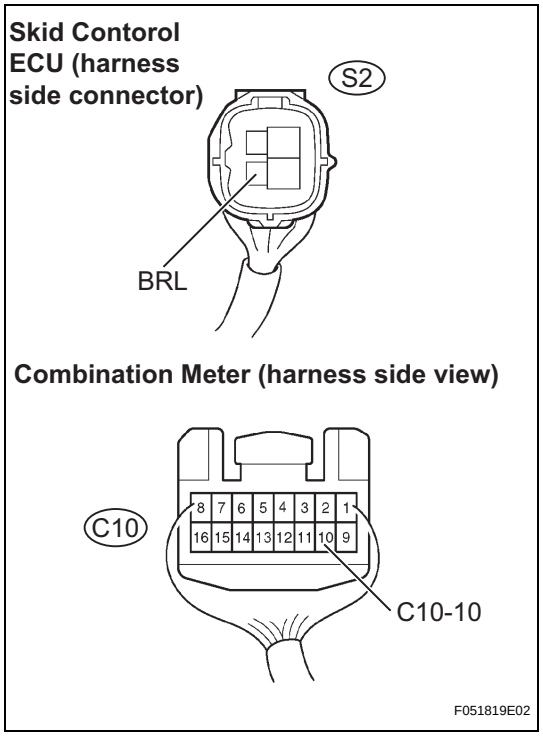

(a) Disconnect the skid control ECU connector.
(b) Disconnect the combination meter connector.
(c) Measure the resistance.
Standard

Tester Connection	Specified Condition
S2-3 (BRL) - C10-10	Below 1 Ω

(d) Measure the resistance.
Standard

Tester Connection	Specified Condition
S2-3 (BRL) - Body ground	10 kΩ or higher

(e) Reconnect the combination meter connector.
(f) Reconnect the skid control ECU connector.

NG → **REPAIR OR REPLACE HARNESS OR CONNECTOR**

OK

5	INSPECT COMBINATION METER ASSEMBLY

(a) Check the combination meter system (See page ME-8).
OK:
Combination meter is normal.

NG → **REPLACE COMBINATION METER ASSEMBLY**

OK

CHECK FOR INTERMITTENT PROBLEMS

BC

VSC OFF Indicator Light Remains ON

DESCRIPTION

When the rear differential is locked or during the 4WD mode, VSC control turns off and the VSC OFF indicator illuminates. Also, the VSC OFF indicator light is ON when the VSC system is in fail-safe control.

WIRING DIAGRAM

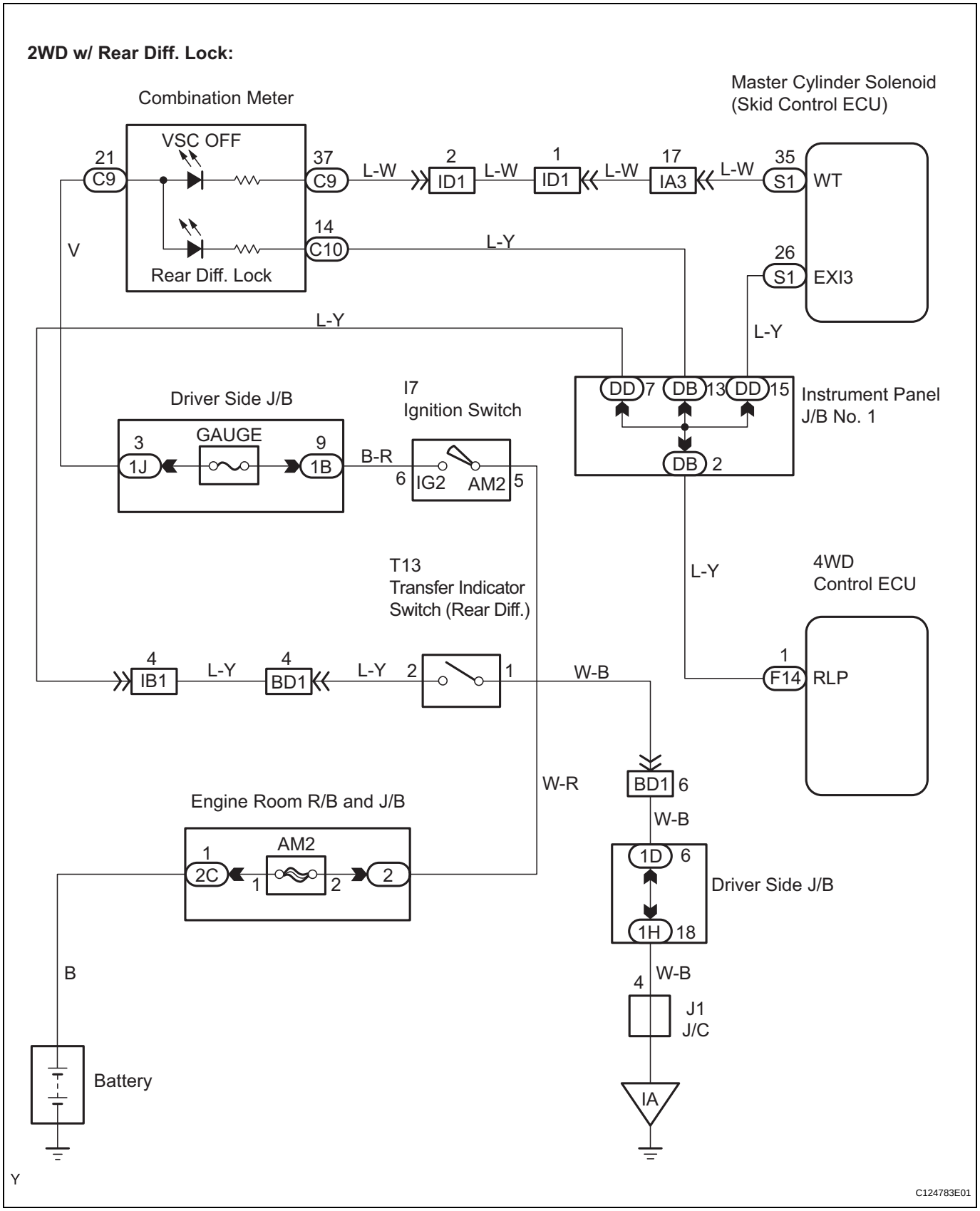

BC

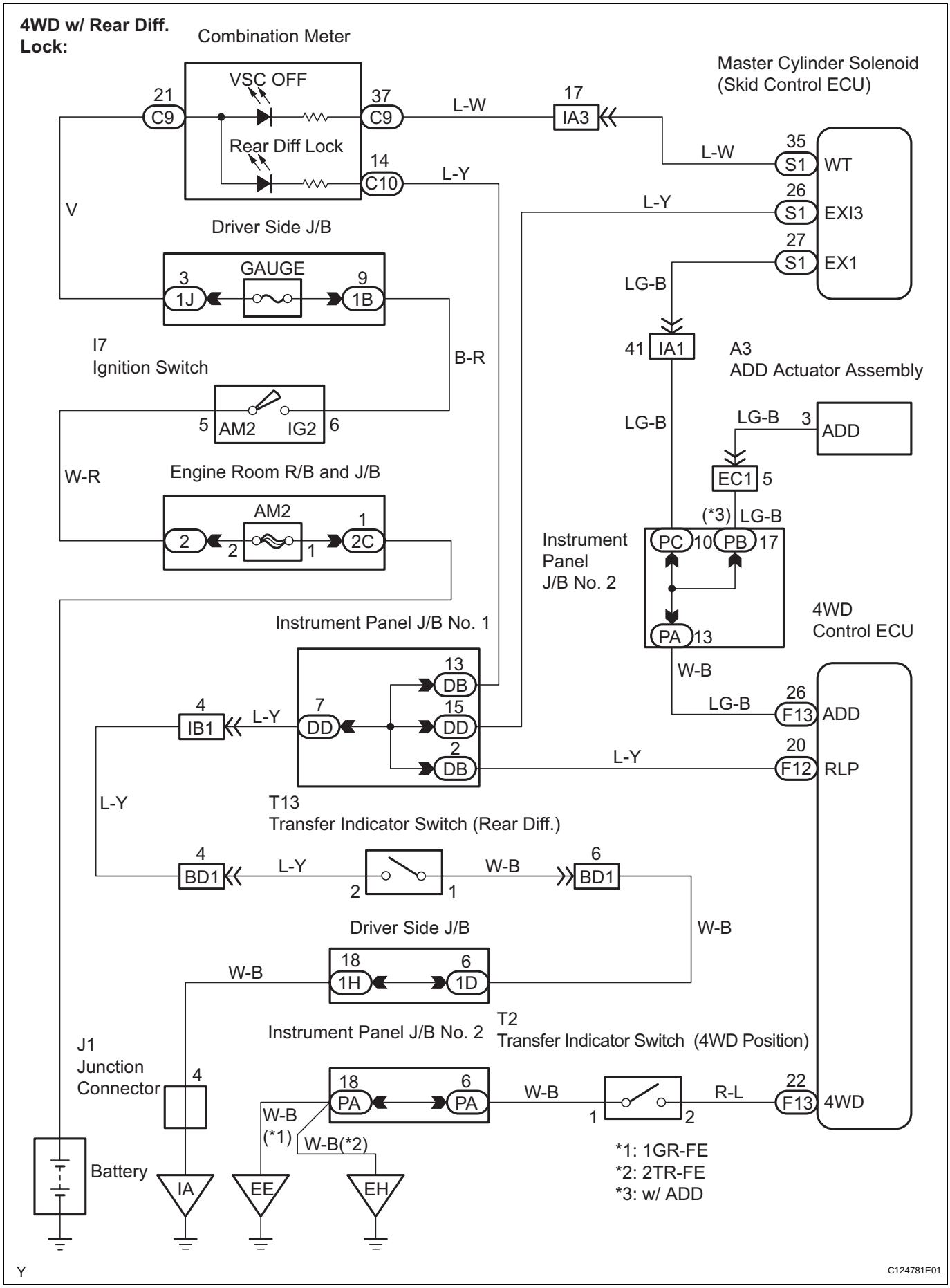

BC

Y

C124781E01

4WD w/o Rear Diff. Lock:

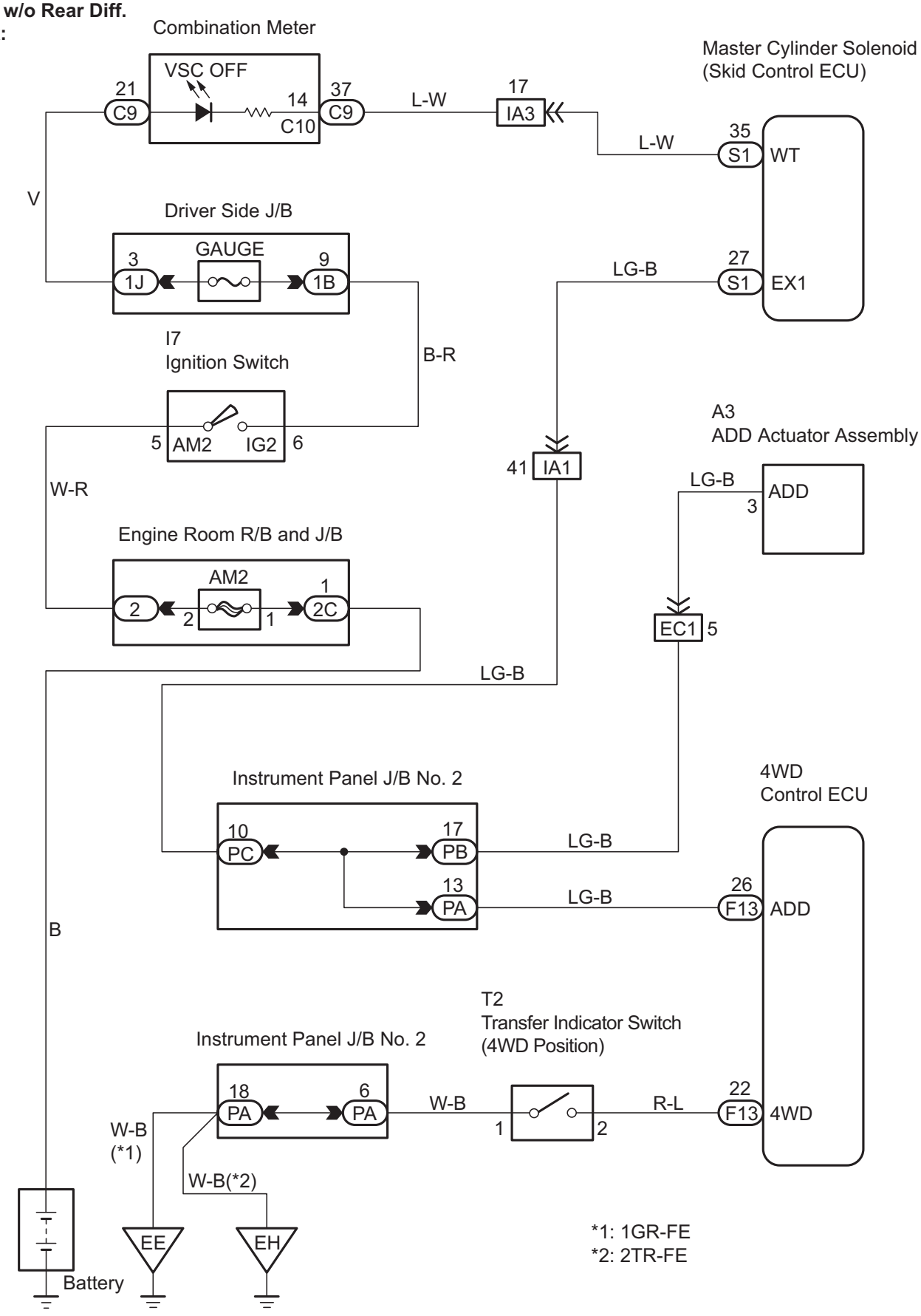

Y

C124782E01

BC

NOTICE:
When replacing the master cylinder solenoid, perform zero point calibration (See page BC-99).

1 CHECK DTC

(a) Check if DTCs for VSC are recorded.

Result	Proceed to
DTC not output	A
DTC output	B

B → **REPAIR CIRCUITS INDICATED BY OUTPUT DTCS**

A

2 CHECK SKID CONTROL ECU CONNECTOR

(a) Check the ECU connector's connecting condition.
OK:
The connector is securely connected.

NG → **CONNECT CONNECTOR CORRECTLY**

OK

3 INSPECT SKID CONTROL ECU (IG1 TERMINAL VOLTAGE)

(a) When using intelligent tester:
(1) Connect the intelligent tester to the DLC3.
(2) Start the engine.
(3) Turn the intelligent tester ON.
(4) Select the DATA LIST mode on the intelligent tester.
(5) Measure the voltage output from the ECU displayed on the intelligent tester.

Item	Measurement Item / Range (Display)	Normal Condition	Diagnostic Note
IG VOLTAGE	ECU power supply voltage: TOO LOW / NORMAL / TOO HIGH	TOO HIGH: 14 V or more NORMAL: 9.5 to 14 V TOO LOW: Below 9.5 V	-

OK:
"Normal" is displayed.

Skid Control ECU (harness side connector):

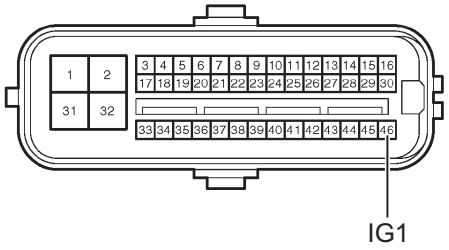

C121700E02

(b) When not using intelligent tester:
(1) Disconnect the skid control ECU connector.
(2) Turn the ignition switch to the ON position.
(3) Measure the voltage.

Tester Connection	Specified Condition
S1-46 (IG1) - Body ground	10 to 14 V

(4) Turn the ignition switch to OFF.
(5) Reconnect the skid control ECU connector.

Result	Proceed to
OK (models with rear diff. lock)	A
OK (models without rear diff. lock)	B
NG	C

B → **Go to step 6**

C → **REPAIR OR REPLACE HARNESS OR CONNECTOR**

A

4 INSPECT REAR DIFFERENTIAL LOCK SWITCH

Rear Diff. Lock switch:

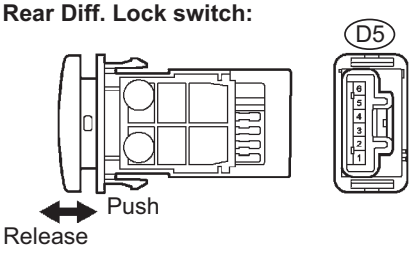

I044055E01

(a) Remove the rear diff. lock switch.
(b) Disconnect the rear diff. lock switch connector.
(c) Measure the resistance.

Standard

Tester Connection	Switch Condition	Specified Condition
D5-3 - D5-4	Released	10 kΩ or higher
D5-3 - D5-4	Pushed in	Below 1 Ω

(d) Reinstall the rear diff. lock switch.
(e) Reconnect the rear diff. lock switch connector.

NG → **REPLACE REAR DIFFERENTIAL LOCK SWITCH**

OK

BC

5	CHECK HARNESS AND CONNECTOR (4WD CONTROL ECU - REAR DIFFERENTIAL LOCK SWITCH)

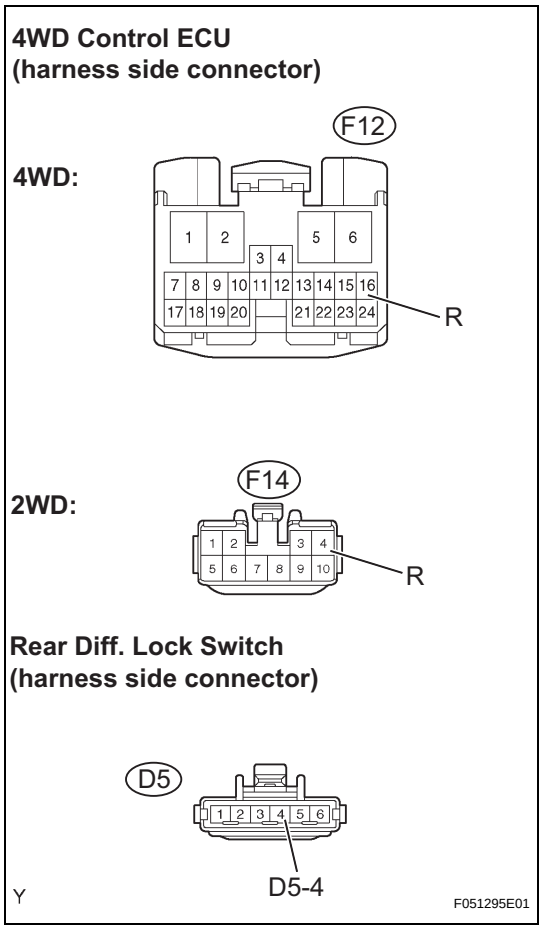

(a) Disconnect the 4WD control ECU connector.
(b) Disconnect the rear diff. lock connector.
(c) Measure the resistance.

Standard (4WD)

Tester Connection	Specified Condition
F12-16 (R) - D5-4	Below 1 Ω
F12-16 (R) - Body ground	10 kΩ or higher

Standard (2WD)

Tester Connection	Specified Condition
F14-4 (R) - D5-4	Below 1 Ω
F14-4 (R) - Body ground	10 kΩ or higher

(d) Reconnect the rear diff. lock connector.
(e) Reconnect the 4WD control ECU connector.

NG → **REPAIR OR REPLACE HARNESS OR CONNECTOR**

OK

BC

6	CHECK HARNESS AND CONNECTOR (SKID CONTROL ECU - COMBINATION METER)

Combination Meter (harness side view)

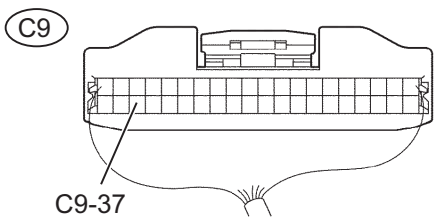

Skid Control ECU (harness side connector)

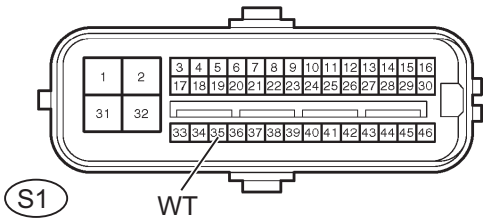

F049577E05

(a) Disconnect the skid control ECU connector.
(b) Disconnect the combination meter connector.
(c) Measure the resistance.
Standard

Tester Connection	Specified Condition
S1-35 (WT) - C9-37	Below 1 Ω

(d) Measure the resistance.
Standard

Tester Connection	Specified Condition
S1-35 (WT) - Body ground	10 kΩ or higher

(e) Reconnect the combination meter connector.
(f) Reconnect the skid control ECU connector.

NG → **REPAIR OR REPLACE HARNESS OR CONNECTOR**

OK

7	INSPECT COMBINATION METER ASSEMBLY

(a) Check the combination meter system (See page ME-8).
OK:
Combination meter is normal.

NG → **REPLACE COMBINATION METER ASSEMBLY**

OK

REPLACE MASTER CYLINDER SOLENOID

BC

VSC OFF Indicator Light does not Come ON

DESCRIPTION

See page BC-256.

WIRING DIAGRAM

See page BC-257.

NOTICE:
When replacing the master cylinder solenoid, perform zero point calibration (See page BC-99).

1	PERFORM ACTIVE TEST BY INTELLIGENT TESTER

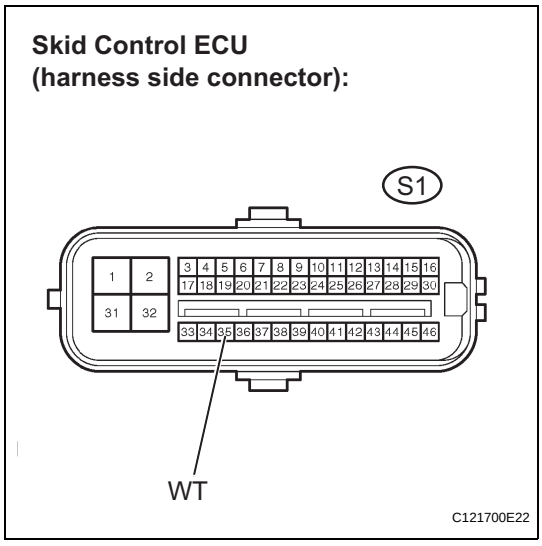

(a) Disconnect the skid control ECU connector.
(b) Turn the ignition switch to the ON position.
(c) Ground terminal WT of the skid control ECU.
(d) Check the VSC OFF indicator light.
OK

IND - GND Condition	Illumination Condition
Connecting	ON
Disconnecting	OFF

(e) Turn the ignition switch to OFF.
(f) Reconnect the skid control ECU connector.

OK → **REPLACE MASTER CYLINDER SOLENOID**

NG

BC

2 **CHECK HARNESS AND CONNECTOR (SKID CONTROL ECU - COMBINATION METER)**

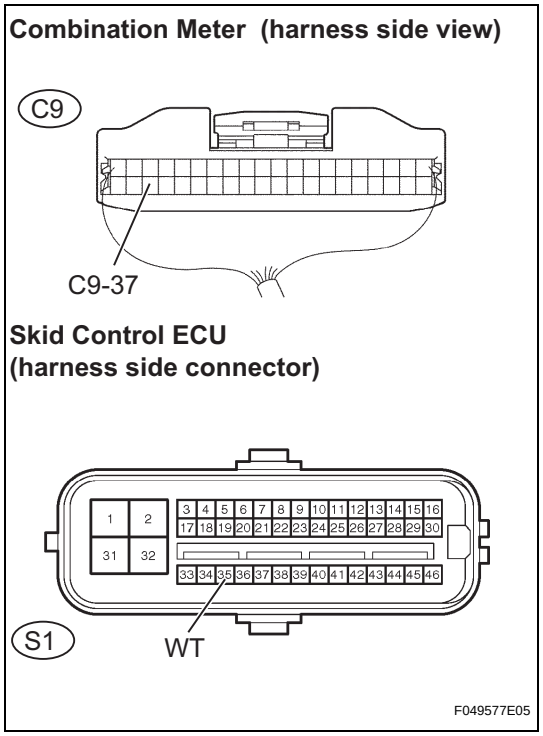

(a) Disconnect the skid control ECU connector.
(b) Disconnect the combination meter connector.
(c) Measure the resistance.
Standard

Tester Connection	Specified Condition
S1-35 (WT) - C9-37	Below 1 Ω
S1-35 (WT) - Body ground	10 kΩ or higher

(d) Reconnect the combination meter connector.
(e) Reconnect the skid control ECU connector.

NG → **REPAIR OR REPLACE HARNESS OR CONNECTOR**

OK

3 **INSPECT COMBINATION METER ASSEMBLY**

(a) Check the combination meter system (See page ME-8).
OK:
Combination meter is normal.

NG → **REPLACE COMBINATION METER ASSEMBLY**

OK

CHECK FOR INTERMITTENT PROBLEMS

BC

Slip Indicator Light Remains ON

DESCRIPTION

- The SLIP indicator blinks when any of the TRAC, VSV and AUTO LSD operate.
- When the system fails, the SLIP indicator light illuminates to warn the driver.

WIRING DIAGRAM

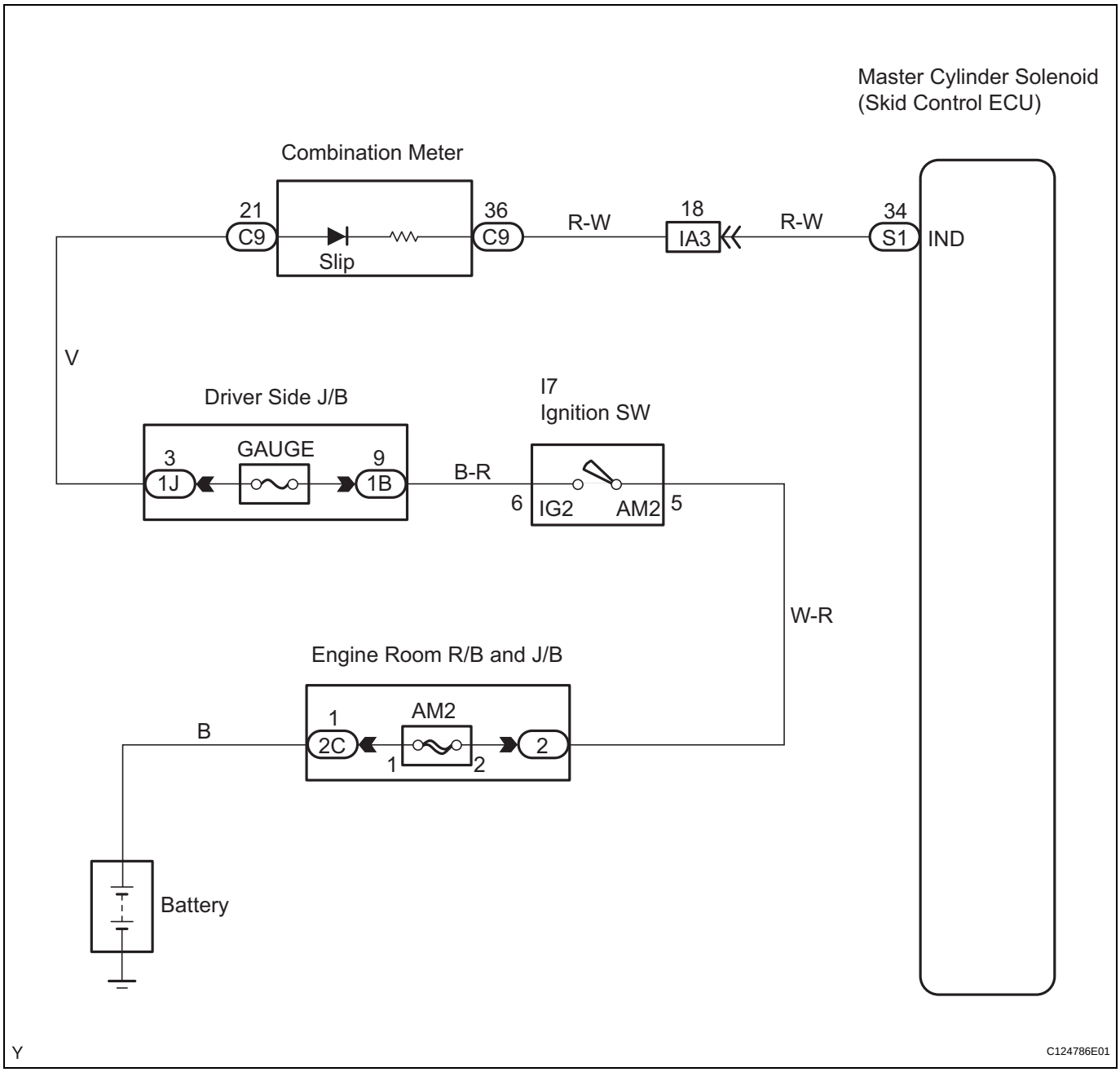

HINT:
Start the inspection from step 1 when using a intelligent tester and start from step 2 when not using a intelligent tester.

1 CHECK DTC

(a) Check the DTCs.

Result	Proceed to
DTC not output	A
DTC output	B

B → **REPAIR CIRCUITS INDICATED BY OUTPUT DTCS**

A

2 CHECK HARNESS AND CONNECTOR (SKID CONTROL ECU - COMBINATION METER)

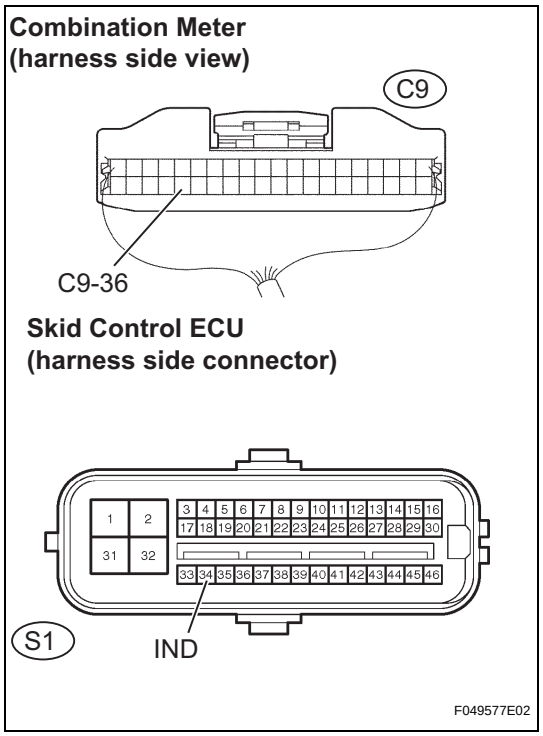

(a) Disconnect the skid control ECU connector.
(b) Disconnect the combination meter connector.
(c) Measure the resistance.
Standard

Tester Connection	Specified Condition
S1-34 (IND) - C9-36	Below 1 Ω

(d) Measure the resistance.
Standard

Tester Connection	Specified Condition
S1-34 (IND) - Body ground	10 kΩ or higher

(e) Reconnect the combination meter connector.
(f) Reconnect the skid control ECU connector.

NG → **REPAIR OR REPLACE HARNESS OR CONNECTOR**

OK

3 INSPECT COMBINATION METER ASSEMBLY

(a) Check the combination meter system (See page ME-8).
OK:
Combination meter is normal.

NG → **REPLACE COMBINATION METER ASSEMBLY**

OK

REPLACE MASTER CYLINDER SOLENOID

BC

Slip Indicator Light does not Come ON

WIRING DIAGRAM

See page BC-118

1 CHECK SLIP INDICATOR LIGHT

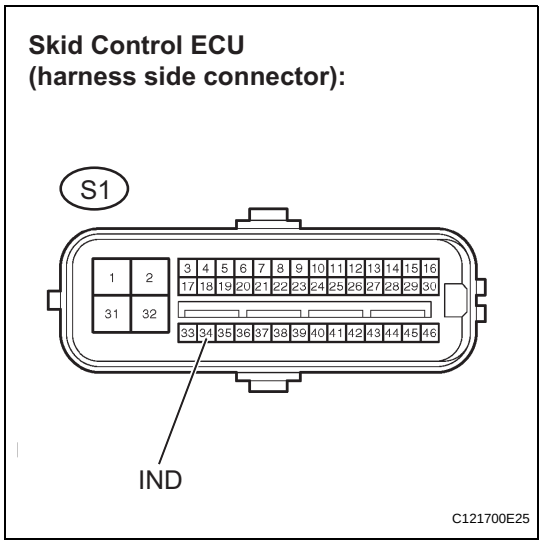

(a) Disconnect the skid control ECU connector.
(b) Turn the ignition switch to the ON position.
(c) Ground terminal IND of the skid control ECU.
(d) Check the SLIP indicator light.

OK

IND - GND Condition	Illumination Condition
Connecting	ON
Disconnecting	OFF

(e) Turn the ignition switch to OFF.
(f) Reconnect the skid control ECU connector.

OK → **REPLACE MASTER CYLINDER SOLENOID**

NG

BC

2 CHECK HARNESS AND CONNECTOR (SKID CONTROL ECU - COMBINATION METER)

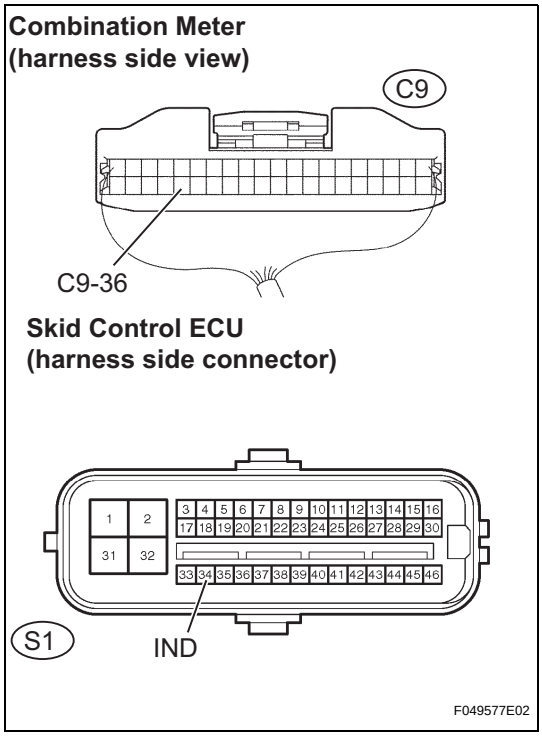

(a) Disconnect the skid control ECU connector.
(b) Disconnect the combination meter connector.
(c) Measure the resistance.

Standard

Tester Connection	Specified Condition
S1-34 (IND) - C9-36	Below 1 Ω
S1-34 (IND) - Body ground	10 kΩ or higher

(d) Reconnect the combination meter connector.
(e) Reconnect the skid control ECU connector.

NG → **REPAIR OR REPLACE HARNESS OR CONNECTOR**

OK

3	INSPECT COMBINATION METER ASSEMBLY

(a) Check the combination meter system (See page ME-8).
OK:
Combination meter is normal.

NG → **REPLACE COMBINATION METER ASSEMBLY**

OK

CHECK FOR INTERMITTENT PROBLEMS

DAC Indicator Light Remains ON

DESCRIPTION

When the Downhill Assist Control (DAC) switch is pushed on, the DAC function is available and the DAC indicator light illuminates.

HINT:

Even if the DAC switch is pressed, the DAC indicator light blinks and DAC does not activate under the following conditions:

- Transfer is in 2WD or H4 mode.
- ABS system is malfunctioning.
- Temperature of the hydraulic brake booster increases and DAC is temporarily canceled.

WIRING DIAGRAM

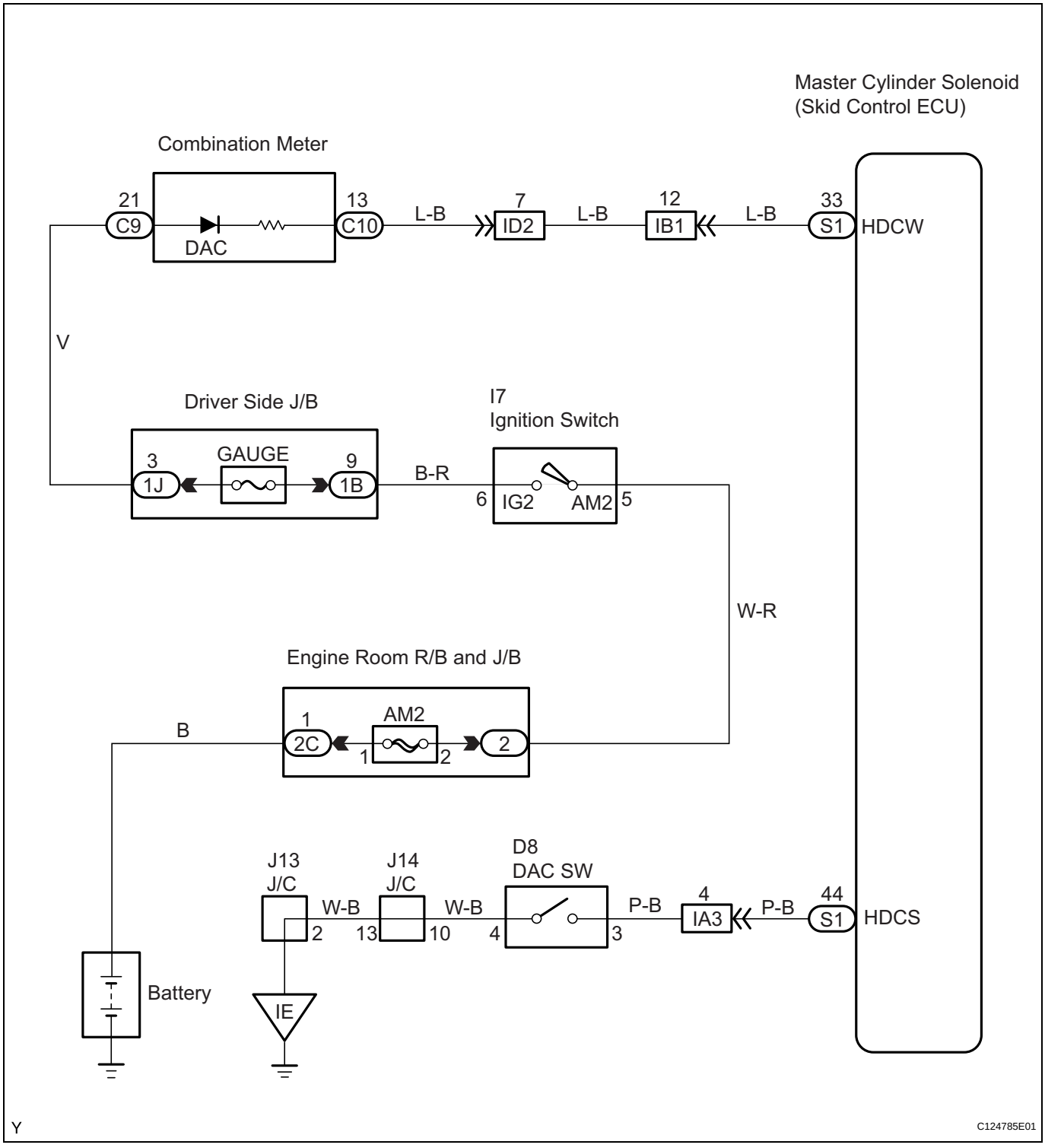

1	CHECK SKID CONTROL ECU CONNECTOR

(a) Check the ECU connecting condition.
OK:
The connector is securely connected.

NG	CONNECT CONNECTOR CORRECTLY

BC

OK

2	INSPECT BATTERY

(a) Check the battery voltage.
Standard:
11 to 14 V

NG → **INSPECT CHARGING SYSTEM**

OK

3	CHECK HARNESS AND CONNECTOR (SKID CONTROL ECU - COMBINATION METER)

Skid Control ECU
(harness side connector)

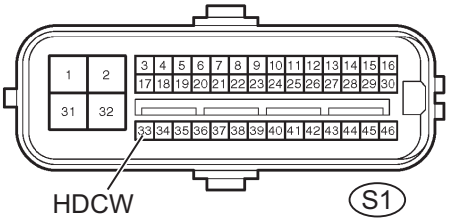

Combination Meter
(harness side view)

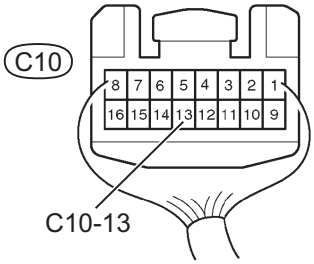

F049387E07

(a) Disconnect the skid control ECU connector.
(b) Disconnect the combination meter connector.
(c) Measure the resistance.
Standard

Tester Connection	Specified Condition
S1-33 (HDCW) - C10-13	Below 1 Ω
S1-33 (HDCW) - Body ground	10 kΩ or higher

(d) Reconnect the combination meter connector.
(e) Reconnect the skid control ECU connector.

NG → **REPAIR OR REPLACE HARNESS OR CONNECTOR**

OK

4	INSPECT COMBINATION METER ASSEMBLY

(a) Check the combination meter system (See page ME-8).
OK:
Combination meter is normal.

NG → **REPLACE COMBINATION METER ASSEMBLY**

OK

BC

5 INSPECT SKID CONTROL ECU (HDCS TERMINAL)

Skid Control ECU (harness side connector):

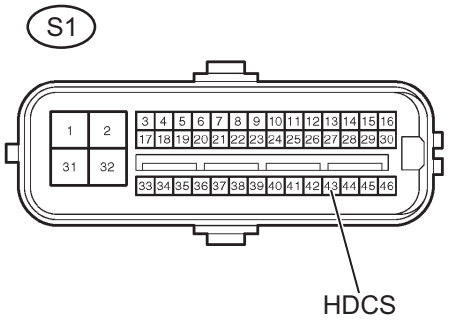

C121700E23

(a) Disconnect the skid control ECU connector.
(b) Ground terminal HDCS of the skid control ECU.
Standard

Tester Connection	Condition	Specified Condition
S1-44 (HDCS) - Body ground	DAC switch not pushed in	10 kΩ or higher

(c) Reconnect the skid control ECU connector.

OK → **REPLACE MASTER CYLINDER SOLENOID**

NG

6 INSPECT DAC SWITCH

DAC Switch:

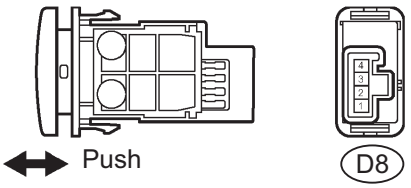

H

I044044E02

(a) Remove the DAC switch.
(b) Disconnect the DAC switch connector.
(c) Measure the resistance.
Standard

Tester Connection	Switch Condition	Specified Condition
D8-3 - D8-4	Released	10 kΩ or higher
D8-3 - D8-4	Pushed in	Below 1 Ω

(d) Reconnect the DAC switch connector.
(e) Reinstall the DAC switch connector.

NG → **REPLACE DAC SWITCH**

OK

BC

7	CHECK HARNESS AND CONNECTOR (SKID CONTROL ECU - DAC SWITCH)

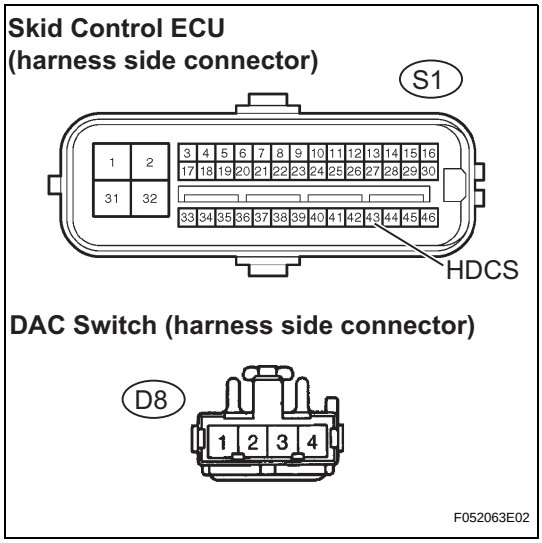

(a) Disconnect the skid control ECU connector.
(b) Disconnect the DAC Switch connector.
(c) Measure the resistance.

Standard

Tester Connection	Specified Condition
S1-44 (HDCS) - D8-3	Below 1 Ω
S1-44 (HDCS) - Body ground	10 kΩ or higher
D8-4 - Body ground	Below 1 Ω

(d) Reconnect the DAC switch connector.
(e) Reconnect the skid control ECU connector.

NG → **REPAIR OR REPLACE HARNESS OR CONNECTOR**

OK

REPLACE MASTER CYLINDER SOLENOID

DAC Indicator Light does not Come ON

WIRING DIAGRAM

See page BC-271.

1 CHECK DAC INDICATOR LIGHT

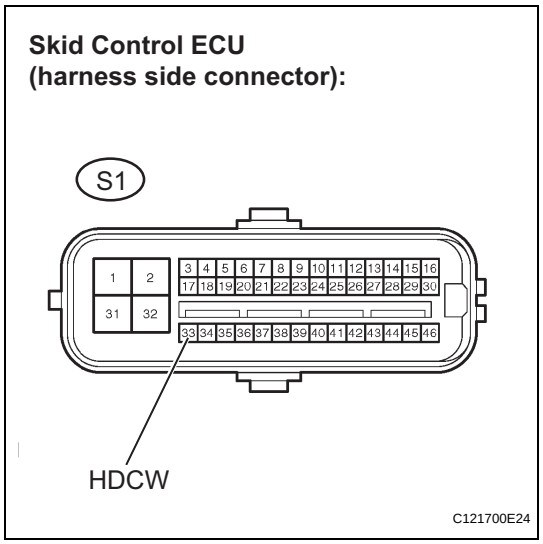

(a) Disconnect the skid control ECU connector.
(b) Turn the ignition switch to the ON position.
(c) Ground terminal HDCW of the skid control ECU.
(d) Check DAC indicator light.

OK

HDCW - GND Condition	Illumination Condition
Connecting	OFF
Disconnecting	ON

(e) Turn the ignition switch to OFF.
(f) Reconnect the skid control ECU connector.

NG → **Go to step 3**

OK

2 INSPECT DAC SWITCH

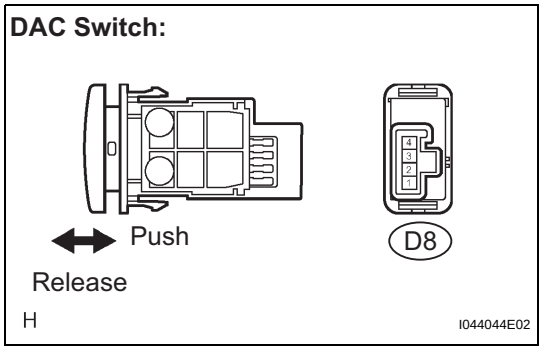

(a) Remove the DAC switch.
(b) Disconnect the DAC switch connector.
(c) Measure the resistance.

Standard

Tester Connection	Switch Condition	Specified Condition
D8-3 - D8-4	Released	10 kΩ or higher
D8-3 - D8-4	Pushed in	Below 1 Ω

(d) Reconnect the DAC switch connector.
(e) Reinstall the DAC switch connector.

NG → **REPLACE DAC SWITCH**

OK

BC

3	CHECK HARNESS AND CONNECTOR (SKID CONTROL ECU - DAC SWITCH)

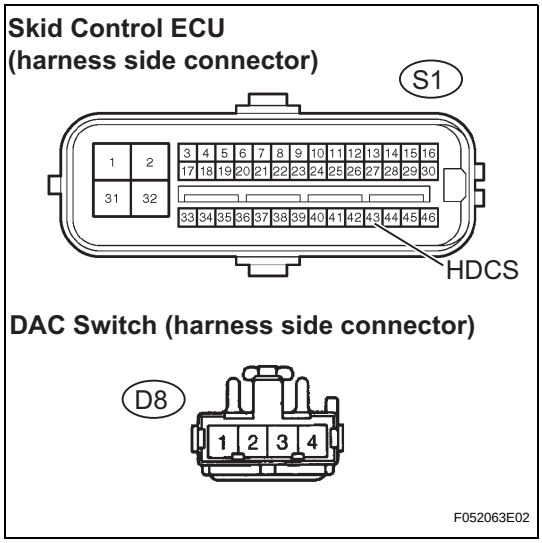

(a) Disconnect the skid control ECU connector.
(b) Disconnect the DAC switch connector.
(c) Measure the resistance.

Standard

Tester Connection	Specified Condition
S1-44 (HDCS) - D8-3	Below 1 Ω
S1-44 (HDCS) - Body ground	10 kΩ or higher
D8-4 - Body ground	Below 1 Ω

(d) Reconnect the DAC switch connector.
(e) Reconnect the skid control ECU connector.

NG → **REPAIR OR REPLACE HARNESS OR CONNECTOR**

OK

REPLACE MASTER CYLINDER SOLENOID

4	CHECK HARNESS AND CONNECTOR (SKID CONTROL ECU - COMBINATION METER)

BC

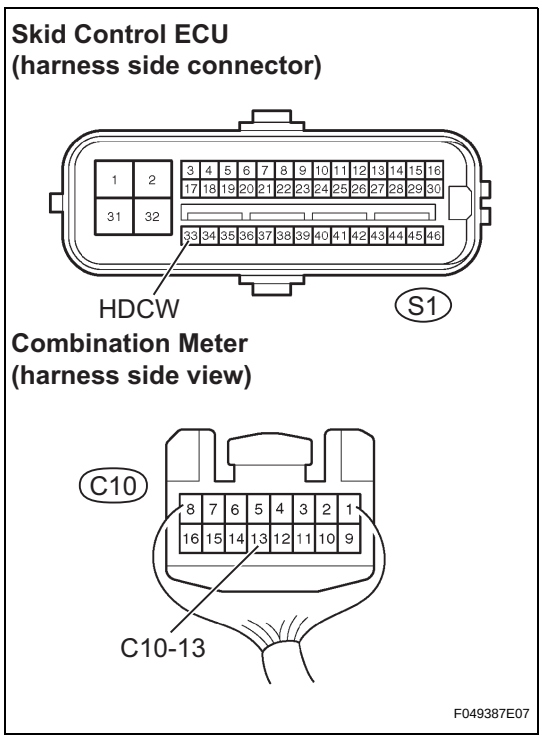

(a) Disconnect the skid control ECU connector.
(b) Disconnect the combination meter connector.
(c) Measure the resistance.

Standard

Tester Connection	Specified Condition
S1-33 (HDCW) - C10-13	Below 1 Ω
S1-33 (HDCW) - Body ground	10 kΩ or higher

(d) Reconnect the combination meter connector.
(e) Reconnect the skid control ECU connector.

NG → **REPAIR OR REPLACE HARNESS OR CONNECTOR**

OK

5	INSPECT COMBINATION METER ASSEMBLY

(a) Check the combination meter system (See page ME-8).
OK:
Combination meter is normal.

NG → **REPLACE COMBINATION METER ASSEMBLY**

OK ↓

CHECK FOR INTERMITTENT PROBLEMS

AUTO LSD Indicator Light Remains ON

DESCRIPTION

This is the AUTO LSD main switch. When the AUTO LSD switch is pushed on, the AUTO LSD function is available and the AUTO LSD indicator light illuminates.

HINT:

The AUTO LSD does not operate even if the AUTO LSD switch is pressed under the following conditions:

- TRAC or VSV system is faulty.
- Temperature inside the hydraulic brake booster increases and the AUTO LSD operation is suspended.

WIRING DIAGRAM

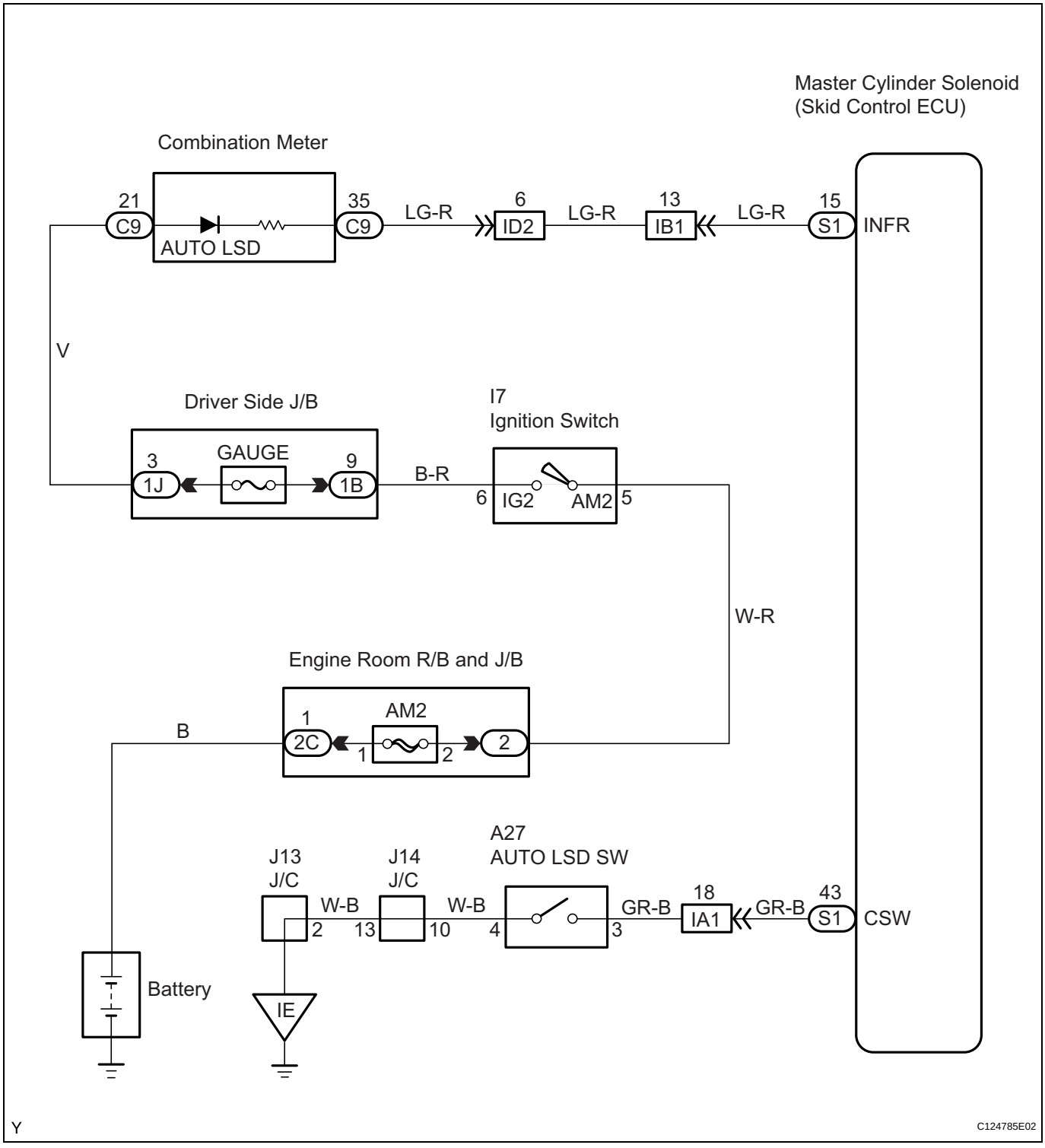

1	CHECK SKID CONTROL ECU CONNECTOR

(a) Check the ECU Connector's connecting condition.
OK:
The connector is securely connected.

NG	CONNECT CONNECTOR CORRECTLY

BC

OK

2	INSPECT BATTERY

(a) Check the battery voltage.
Standard:
11 to 14 V

NG → **INSPECT CHARGING SYSTEM**

OK

3	CHECK HARNESS AND CONNECTOR (SKID CONTROL ECU - COMBINATION METER)

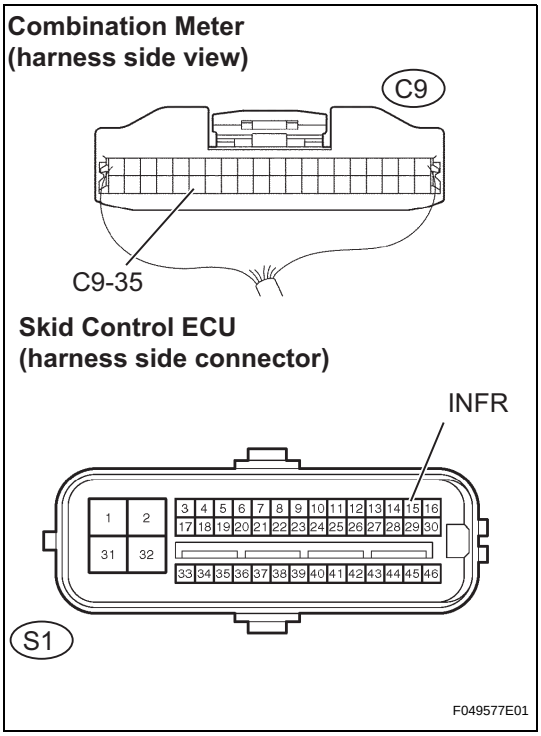

(a) Disconnect the skid control ECU connector.
(b) Disconnect the combination meter connector.
(c) Measure the resistance.
Standard

Tester Connection	Specified Condition
S1-15 (INFR) - C9-35	Below 1 Ω
S1-15 (INFR) - Body ground	10 kΩ or higher

(d) Reconnect the combination meter connector.
(e) Reconnect the skid control ECU connector.

NG → **REPAIR OR REPLACE HARNESS OR CONNECTOR**

OK

4	INSPECT COMBINATION METER ASSEMBLY

(a) Check the combination meter system (See page ME-8).
OK:
Combination meter is normal.

NG → **REPLACE COMBINATION METER ASSEMBLY**

OK

BC

5 INSPECT SKID CONTROL ECU (CSW TERMINAL)

Skid Control ECU (harness side connector):

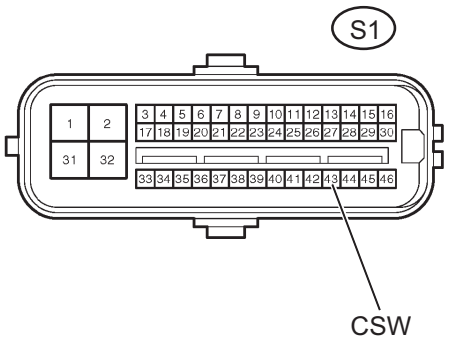

C121700E26

(a) Disconnect the skid control ECU connector.
(b) Ground terminal CSW of the skid control ECU.
Standard

Tester Connection	Condition	Specified Condition
S1-43 (CSW) - Body ground	AUTO LSD switch not pushed in	10 kΩ or higher

(c) Reconnect the skid control ECU connector.

OK → **REPLACE MASTER CYLINDER SOLENOID**

NG

6 INSPECT AUTO LSD SWITCH

AUTO LSD Switch:

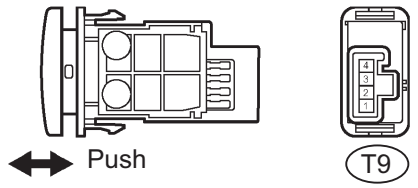

H

I044044E01

(a) Remove the AUTO LSD switch.
(b) Disconnect the AUTO LSD switch connector.
(c) Measure the resistance.
Standard

Tester Connection	Switch Condition	Specified Condition
T9-3 - T9-4	Released	10 kΩ or higher
T9-3 - T9-4	Released	Below 1 Ω

(d) Reconnect the AUTO LSD switch connector.
(e) Reinstall the AUTO LSD switch.

NG → **REPLACE AUTO LSD SWITCH**

OK

BC

7	CHECK HARNESS AND CONNECTOR (AUTO LSD SWITCH CIRCUIT)

Skid Control ECU (harness side connector):

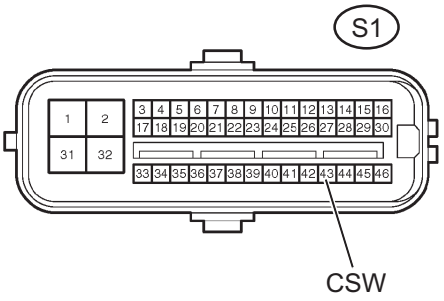

AUTO LSD switch (harness side connector):

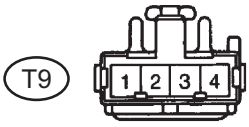

C124802E01

(a) Disconnect the skid control ECU connector.
(b) Disconnect the AUTO LSD connector.
(c) Measure the resistance.

Standard

Tester Connection	Specified Condition
S1-43 (CSW) - T9-3	Below 1 Ω
S1-43 (CSW) - Body ground	10 kΩ or higher
T9-3 - Body ground	Below 1 Ω

(d) Reconnect the AUTO LSD connector.
(e) Reconnect the skid control ECU connector.

NG → **REPAIR OR REPLACE HARNESS OR CONNECTOR**

OK

BC

REPLACE MASTER CYLINDER SOLENOID

AUTO LSD Indicator Light does not Come ON

DESCRIPTION

See page BC-278.

WIRING DIAGRAM

See page BC-279.

1	CHECK AUTO LSD INDICATOR LIGHT

Skid Control ECU (harness side connector):

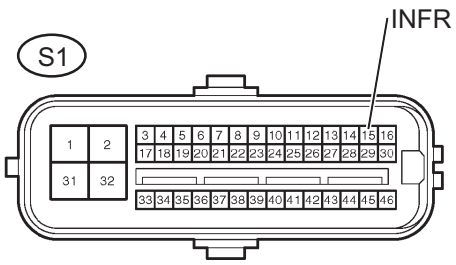

C121700E27

(a) Disconnect the skid control ECU connector.
(b) Turn the ignition switch to the ON position.
(c) Ground terminal INFR of the skid control ECU.
(d) Check the AUTO LSD indicator light.

OK

INFR - GND Condition	Illumination Condition
Connecting	OFF
Disconnecting	ON

(e) Turn the ignition switch to OFF.
(f) Reconnect the skid control ECU connector.

OK → **REPLACE MASTER CYLINDER SOLENOID**

NG

BC

2	CHECK HARNESS AND CONNECTOR (SKID CONTROL ECU - COMBINATION METER)

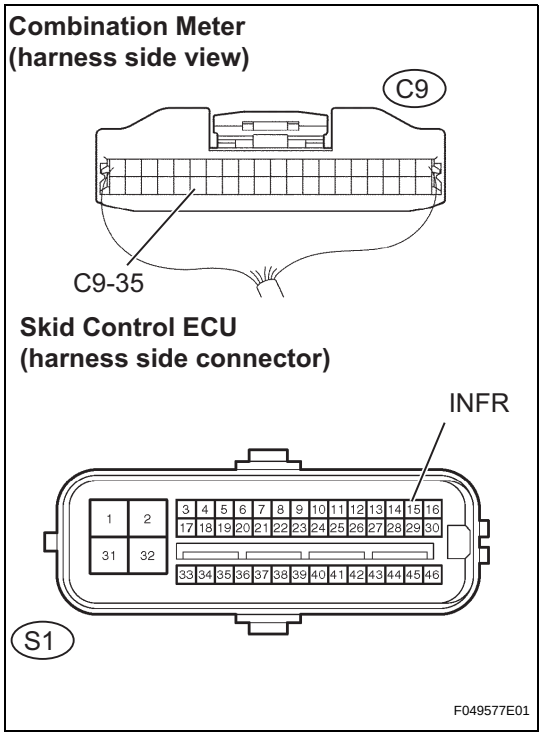

(a) Disconnect the skid control ECU connector.
(b) Disconnect the combination meter connector.
(c) Measure the resistance.
Standard

Tester Connection	Specified Condition
S1-15 (INFR) - C9?35	Below 1 Ω
S1-15 (INFR) - Body ground	10 kΩ or higher

(d) Reconnect the combination meter connector.
(e) Reconnect the skid control ECU connector.

NG → **REPAIR OR REPLACE HARNESS OR CONNECTOR**

OK

BC

3	INSPECT COMBINATION METER ASSEMBLY

(a) Check the combination meter system (see page 05-1917).
OK:
Combination meter is normal.

NG → **REPLACE COMBINATION METER ASSEMBLY**

OK

4 INSPECT SKID CONTROL ECU (CSW TERMINAL)

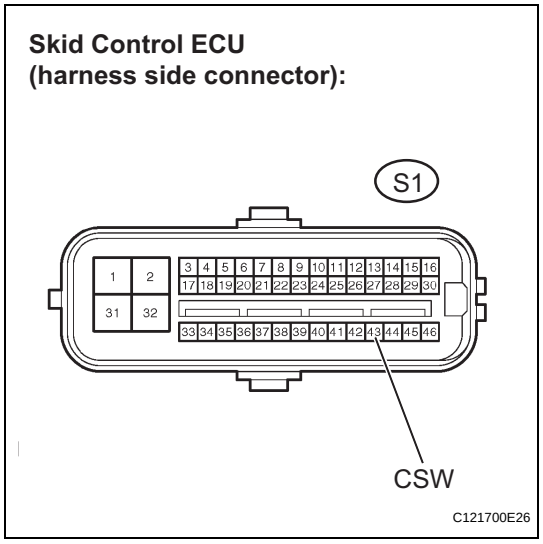

(a) Disconnect the skid control ECU connector.
(b) Ground terminal CSW of the skid control ECU.
Standard

Tester connection	Condition	Specified Condition
S1-43 (CSW) - Body ground	Auto LSd switch not pushed in	10 kΩ or higher

(c) Reconnect the skid control ECU connector.

OK → **REPLACE MASTER CYLINDER SOLENOID**

NG

5 INSPECT AUTO LSD SWITCH

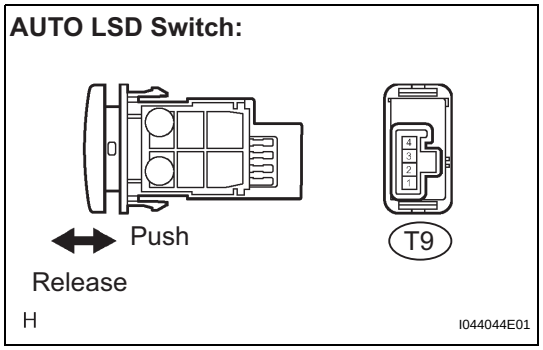

(a) Remove the AUTO LSD switch.
(b) Disconnect the AUTO LSD switch connector.
(c) Measure resistance.
Standard

Tester Connection	Switch Condition	Specified Condition
T9-3 - T9-4	Released	10 kΩ or higher
T9-3 - T9-4	Pushed in	Below 1 Ω

(d) Reconnect the AUTO LSD switch connector.
(e) Reinstall the AUTO LSD switch.

NG → **REPLACE AUTO LSD SWITCH**

OK

BC

6	CHECK HARNESS AND CONNECTOR (AUTO LSD SWITCH CIRCUIT)

Skid Control ECU (harness side connector):

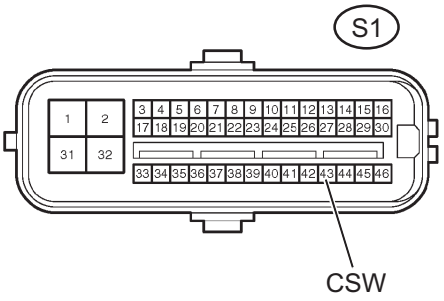

AUTO LSD switch (harness side connector):

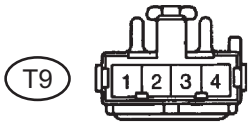

C124802E01

(a) Disconnect the skid control ECU connector and the AUTO LSD switch connector.

(b) Measure the resistance.

Standard

Tester Connection	Specified Condition
S1-43 (CSW) - T9-3	Below 1 Ω
S1-43 (CSW) - Body ground	10 kΩ or higher
T9-4 - Body ground	Below 1 Ω

(c) Reconnect the skid control ECU connector and the AUTO LSD switch connector.

NG → **REPAIR OR REPLACE HARNESS OR CONNECTOR**

OK

BC

REPLACE MASTER CYLINDER SOLENOID

7	CHECK HARNESS AND CONNECTOR (SKID CONTROL ECU - COMBINATION METER)

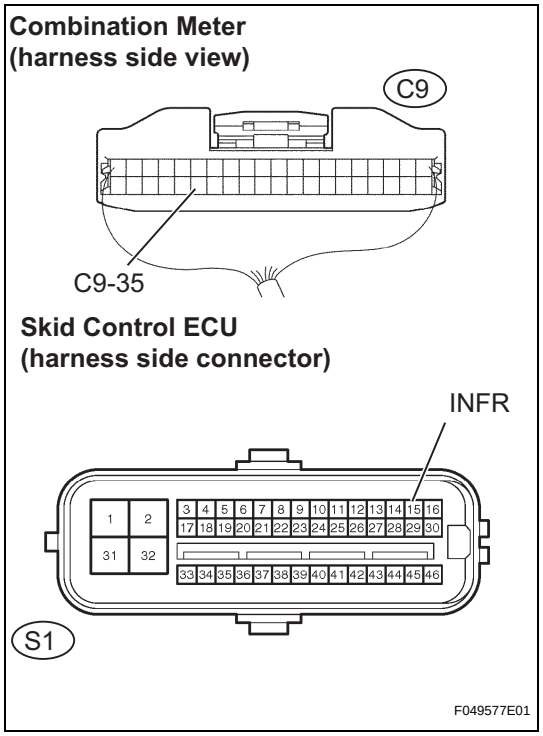

(a) Disconnect the skid control ECU connector.
(b) Disconnect the combination meter connector.
(c) Measure the resistance.

Standard

Tester Connection	Specified Condition
S1-15 (INFR) - C9-35	Below 1 Ω
S1-15 (INFR) - Body ground	10 kΩ or higher

(d) Reconnect the combination meter connector.
(e) Reconnect the skid control ECU connector.

NG → **REPAIR OR REPLACE HARNESS OR CONNECTOR**

OK

8	INSPECT COMBINATION METER ASSEMBLY

(a) Check the combination meter system (See page ME-8).

OK:

Combination meter is normal.

NG → **REPLACE COMBINATION METER ASSEMBLY**

OK

CHECK FOR INTERMITTENT PROBLEMS

BC

Skid Control Buzzer Circuit

DESCRIPTION

The skid control buzzer sounds when the VSV or Hill-start Assist Control (HAC) operates.

WIRING DIAGRAM

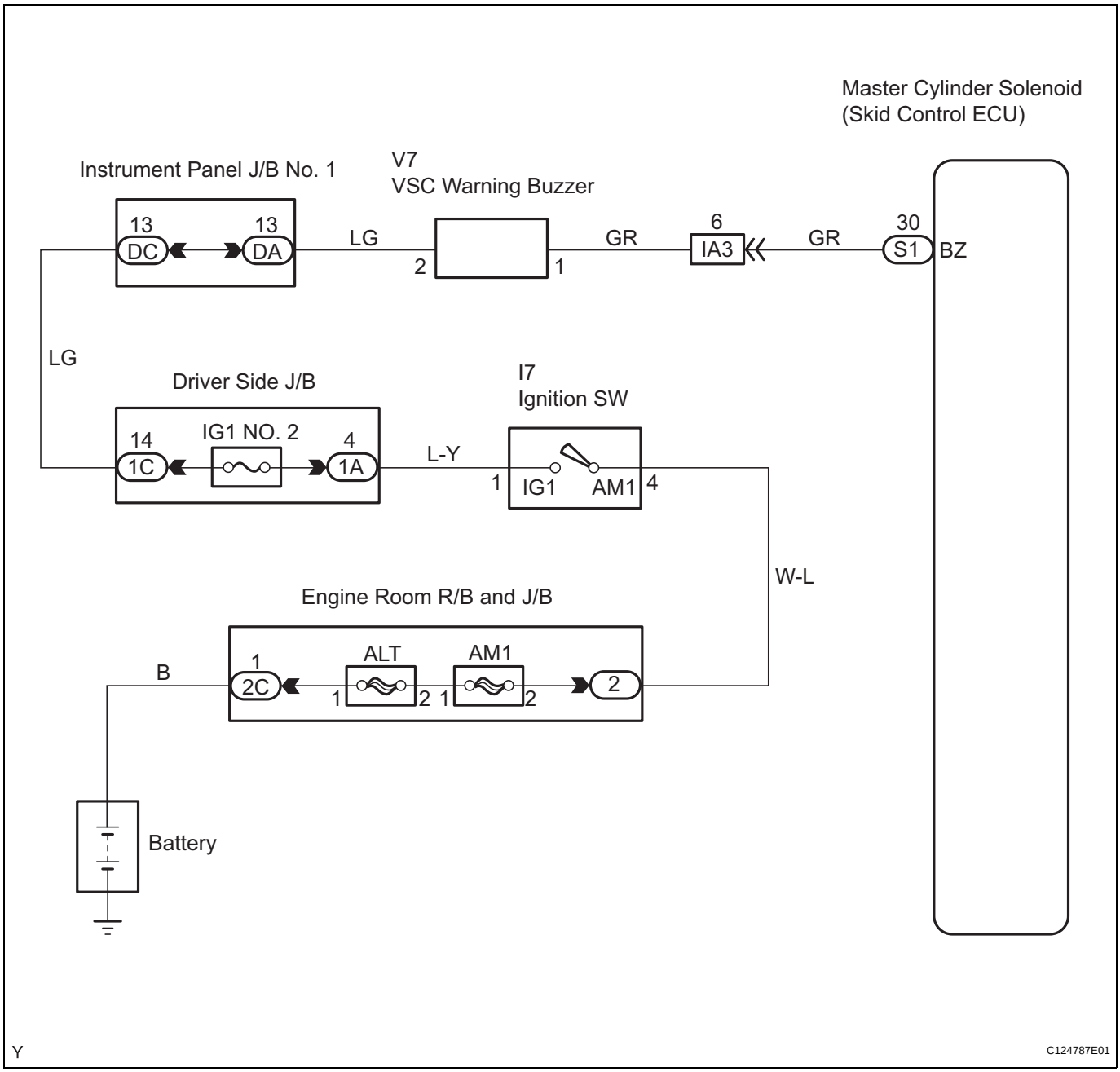

HINT:
Start the inspection from step 1 when using a intelligent tester and start from step2 when not using a intelligent tester.

1	PERFORM ACTIVE TEST BY INTELLIGENT TESTER (SKID CONTROL BUZZER)

(a) Connect the intelligent tester to the DLC3.

(b) Start the engine.
(c) Select the item "VSC/BR WARN BUZ" in the ACTIVE TEST and operate the skid control buzzer on the intelligent tester.

Item	Vehicle Condition / Test Details	Diagnostic note
VSV / BR WARN BUZ	Turns VSV / BRAKE warning buzzer ON /OFF	Buzzer can be heard

(d) Check that the buzzer sounds/stops when the skid control buzzer is turned on/off by using the intelligent tester.

Result	Proceed to
Buzzer sounds/stops	A
Buzzer does not sound or sounds constantly	B

A → **CHECK FOR INTERMITTENT PROBLEMS**

B

2 INSPECT SKID CONTROL BUZZER (POWER SOURCE CIRCUIT)

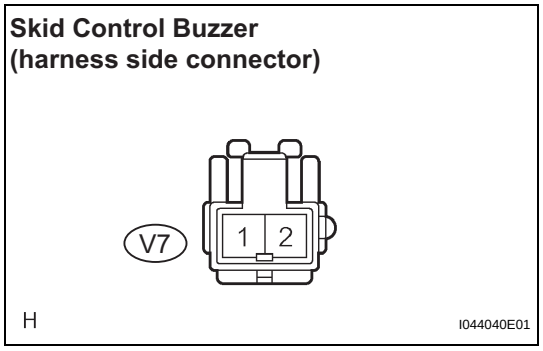

(a) Disconnect the skid control buzzer connector.
(b) Turn the ignition switch to the ON position.
(c) Measure the voltage.
Standard

Tester Connection	Specified Condition
V7-2 - Body ground	10 to 14 V

(d) Turn the ignition switch to OFF.
(e) Reconnect the skid control buzzer connector.

NG → **REPAIR OR REPLACE HARNESS OR CONNECTOR (POWER SOURCE CIRCUIT)**

OK

3 INSPECT SKID CONTROL BUZZER ASSEMBLY

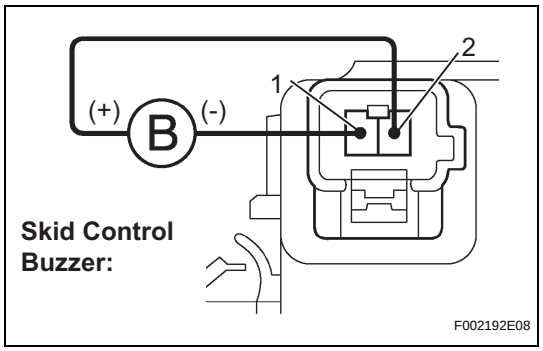

(a) Disconnect the skid control buzzer connector.
(b) Apply battery voltage to terminals 1 and 2 of the skid control buzzer connector, and check that the buzzer sounds.
OK:
The skid control buzzer sound should be heard.
(c) Reconnect the skid control buzzer connector.

NG → **REPLACE SKID CONTROL BUZZER ASSEMBLY**

OK

BC

4	CHECK HARNESS AND CONNECTOR (SKID CONTROL BUZZER - SKID CONTROL ECU)

Skid Control ECU (harness side connector):

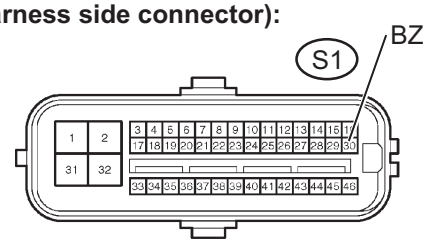

Skid Control Buzzer (harness side connector):

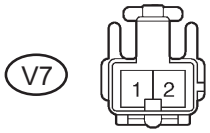

C124803E01

(a) Disconnect the skid control ECU connector.
(b) Disconnect the skid control buzzer connector.
(c) Measure the resistance.

Standard

Tester Connection	Specified Condition
S1-30 (BZ) - V7-1	Below 1 Ω
S1-30 (BZ) - Body ground	10 kΩ or higher

(d) Reconnect the skid control buzzer connector.
(e) Reconnect the skid control ECU connector.

NG → **REPAIR OR REPLACE HARNESS OR CONNECTOR**

OK

BC → **REPLACE MASTER CYLINDER SOLENOID**

TC and CG Terminal Circuit

DESCRIPTION

Connecting terminals TC and CG of the DLC3 causes the ECU to display 2-digit DTCs by blinking the ABS and VSC TRAC warning lights.

WIRING DIAGRAM

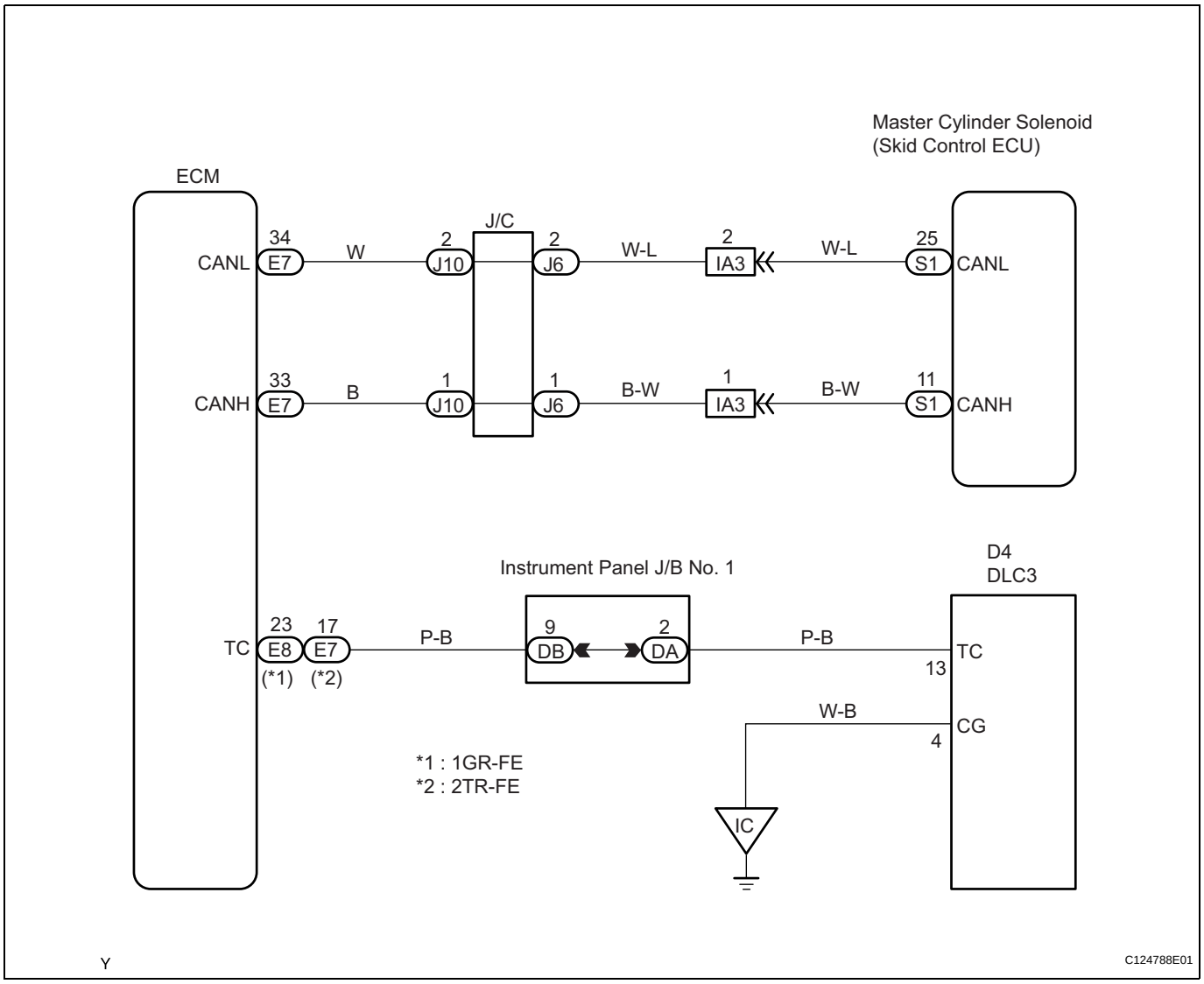

BC

1	INSPECT DLC3 (TC TERMINAL VOLTAGE)

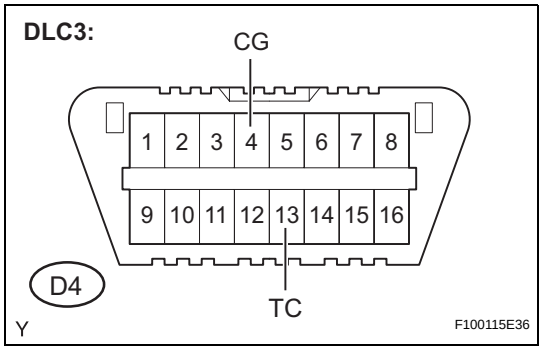

(a) Turn the ignition switch to the ON position.
(b) Measure the voltage.
Standard

Tester Connection	Specified Condition
D4-13 (TC) - D4-4 (CG)	10 to 14 V

(c) Turn the ignition switch to OFF.

NG → **Go to step 3**

OK

2	CHECK CAN COMMUNICATION SYSTEM

(a) Check whether CAN system DTCs are recorded (See page CA-14).

Result	Proceed to
DTC not output	A
DTC output	B

B → **REPAIR CIRCUITS INDICATED BY OUTPUT DTCS**

BC

A

REPLACE MASTER CYLINDER SOLENOID

3	CHECK HARNESS AND CONNECTOR (DLC3 - BODY GROUND)

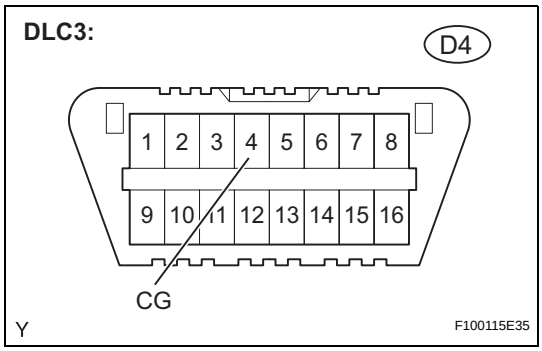

(a) Measure the resistance.
Standard

Tester Connection	Specified Condition
D4-4 (CG) - Body ground	Below 1 Ω

NG → **REPAIR OR REPLACE HARNESS OR CONNECTOR**

OK

4	CHECK HARNESS AND CONNECTOR (ECM - DLC3)

DLC3:

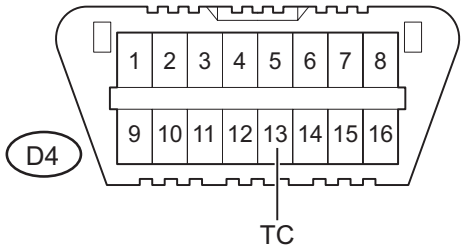

ECM (1GR-FE):

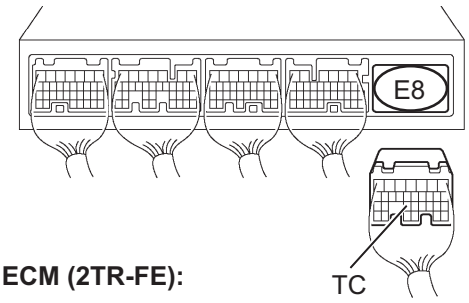

ECM (2TR-FE):

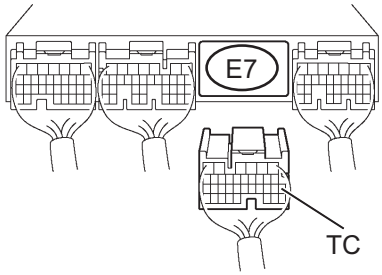

C124791E01

OK

(a) Disconnect the ECM connector.

(b) Measure the resistance.

Standard (1GR-FE)

Tester Connection	Specified Condition
D4-13 (TC) - E8-23 (TC)	Below 1 Ω

Standard (2TR-FE)

Tester Connection	Specified Condition
D4-13 (TC) - E7-17 (TC)	Below 1 Ω

(c) Measure the resistance.

Standard

Tester Connection	Specified Condition
D4-13 (TC) - Body ground	10 kΩ or higher

(d) Reconnect the ECM connector.

NG → **REPAIR OR REPLACE HARNESS OR CONNECTOR**

BC

5 CHECK HARNESS AND CONNECTOR (ECM - SKID CONTROL ECU)

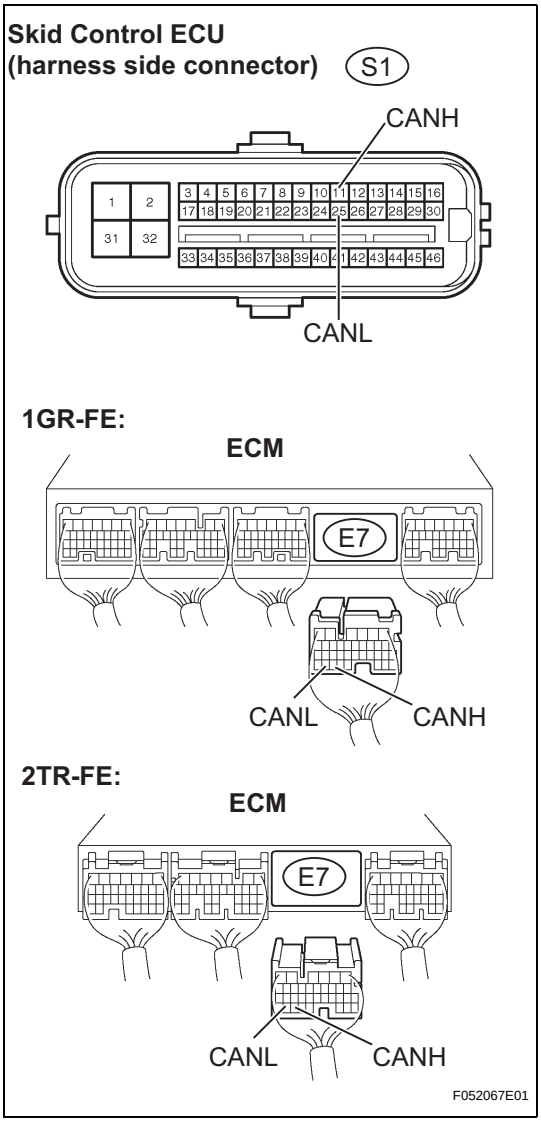

(a) Disconnect the skid control ECU connector.
(b) Disconnect the ECM connector.
(c) Measure the resistance.

Standard

Tester Connection	Specified Condition
S1-25 (CANL) - E7-33 (CANL)	Below 1 Ω
S1-11 (CANH) - E7-34 (CANH)	Below 1 Ω

(d) Reconnect the ECM connector.
(e) Reconnect the skid control ECU connector.

NG → **REPAIR OR REPLACE HARNESS OR CONNECTOR**

OK

6 CHECK ECM (DLC3 (TC) INPUT)

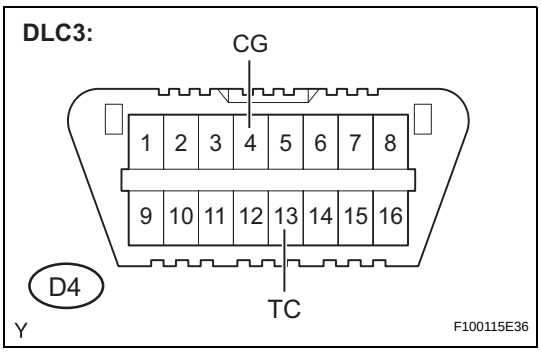

(a) Connect terminals TC and CG of DLC3.
(b) Turn the ignition switch to the ON position.
(c) Check if the ECM warning light is blinking.

OK:

ECM warning light is blinking.

(d) Turn the ignition switch to OFF.
(e) Disconnect the TC and CG terminals of DLC3.

NG → **REPLACE ECM**

BC

OK

REPLACE MASTER CYLINDER SOLENOID

TS and CG Terminal Circuit

DESCRIPTION

In sensor check mode, malfunctions of the speed sensor that cannot be detected when the vehicle is stopped are detected while driving.
Transition to the sensor check mode can be performed by connecting terminals TS and CG of the DLC3 and turning the ignition switch from OFF to the ON position.

WIRING DIAGRAM

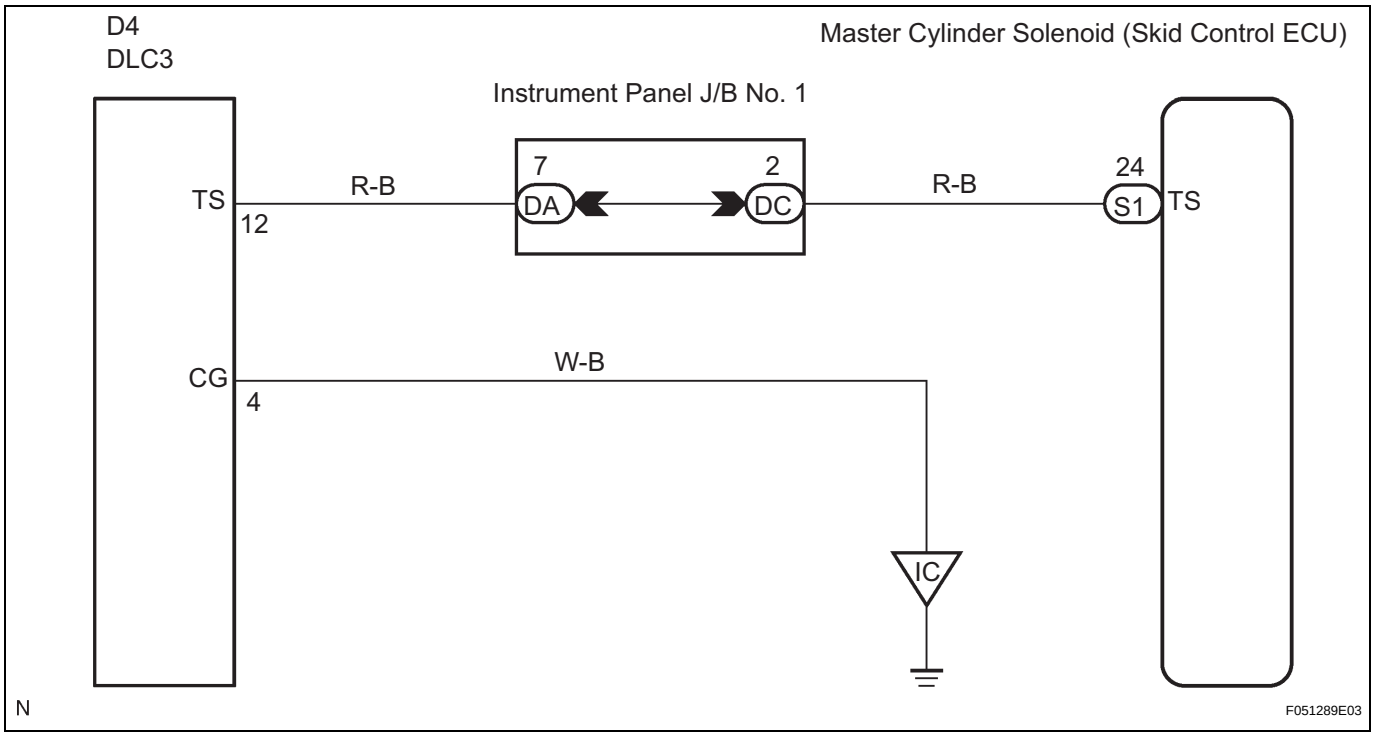

BC

1	INSPECT DLC3 (TS TERMINAL VOLTAGE)

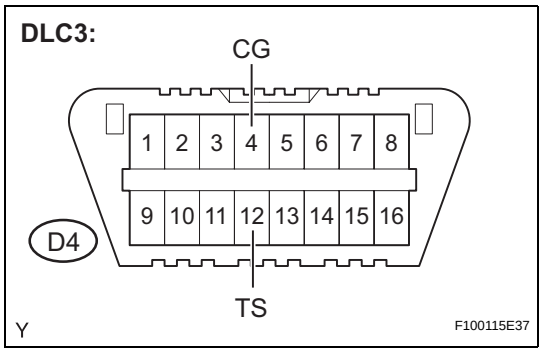

(a) Turn the ignition switch to the ON position.
(b) Measure the voltage.
Standard

Tester Connection	Specified Condition
D4-12 (TS) - D4-4 (CG)	10 to 14 V

(c) Turn the ignition switch to OFF.

NG → **Go to step 3**

OK

2 CHECK HARNESS AND CONNECTOR (SKID CONTROL ECU - DLC3)

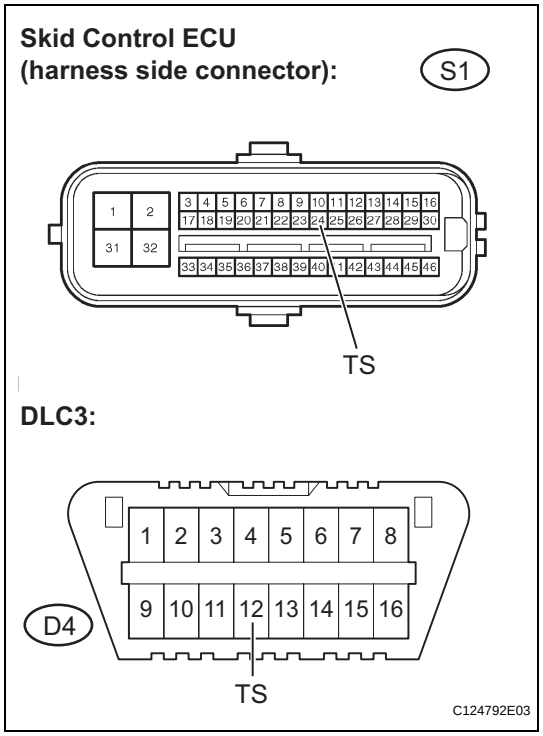

(a) Disconnect the skid control ECU connector.
(b) Measure the resistance.
Standard

Tester Connection	Specified condition
S1-24 (TS) - D4-12 (TS)	Below 1 Ω

(c) Measure the resistance.
Standard

Tester Connection	Specified Condition
S1-24 (TS) - Body ground	10 kΩ or higher

(d) Reconnect the skid control ECU connector.

NG → **REPAIR OR REPLACE HARNESS OR CONNECTOR**

OK

REPLACE MASTER CYLINDER SOLENOID

BC

3 CHECK HARNESS AND CONNECTOR (BODY GROUND - DLC3)

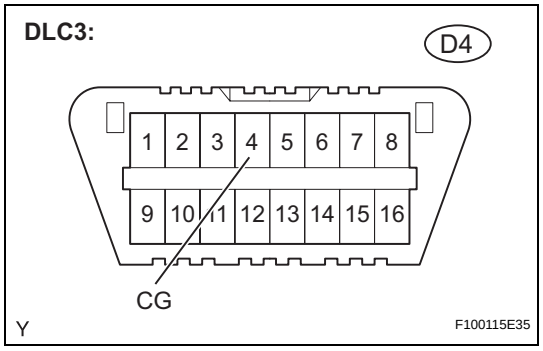

(a) Measure the resistance.
Standard

Tester Connection	Specified condition
D4 (CG) - Body ground	Below 1 Ω

NG → **REPAIR OR REPLACE HARNESS OR CONNECTOR**

OK

4	CHECK HARNESS AND CONNECTOR (SKID CONTROL ECU - DLC3)

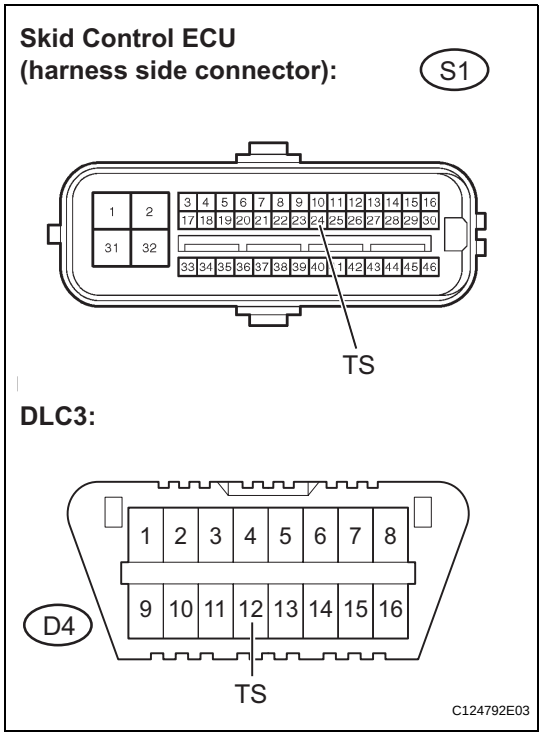

(a) Disconnect the skid control ECU connector.
(b) Measure the resistance.
Standard

Tester Connection	Specified condition
S1-24 (TS) - D4-12 (TS)	Below 1 Ω

(c) Measure the resistance.
Standard

Tester Connection	Specified Condition
S1-24 (TS) - Body ground	10 kΩ or higher

(d) Reconnect the skid control ECU connector.

NG → **REPAIR OR REPLACE HARNESS OR CONNECTOR**

OK

BC

REPLACE MASTER CYLINDER SOLENOID

REMOVAL

1. DISCONNECT CABLE FROM NEGATIVE BATTERY TERMINAL

2. DRAIN BRAKE FLUID
NOTICE:
Immediately wash off any brake fluid that comes into contact with any painted surfaces.

3. REMOVE AIR INJECTION CONTROL DRIVER (for 2TR-FE)

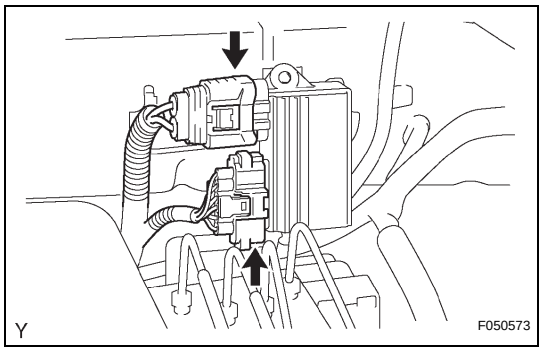

(a) Disconnect the 2 connectors.

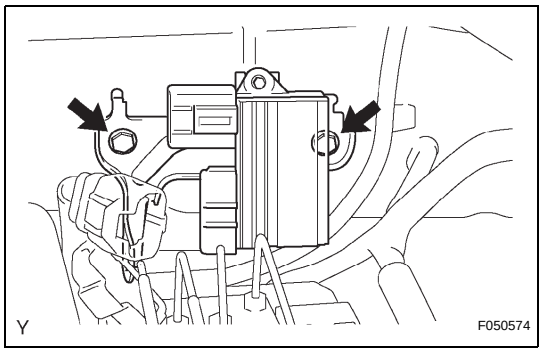

(b) Remove the 2 bolts and air injection control driver.

4. REMOVE BRAKE ACTUATOR

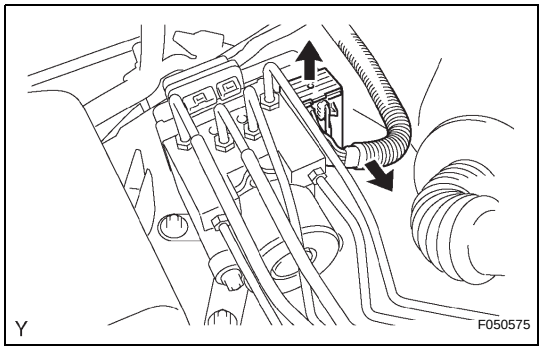

(a) Release the connector lock lever.
(b) Disconnect the brake actuator connector.

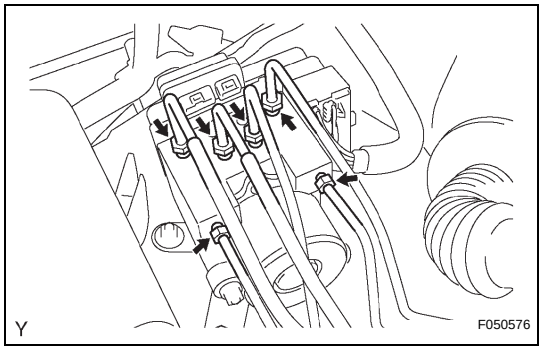

(c) Using SST, disconnect the brake tubes from the brake actuator.
SST 09023-00101

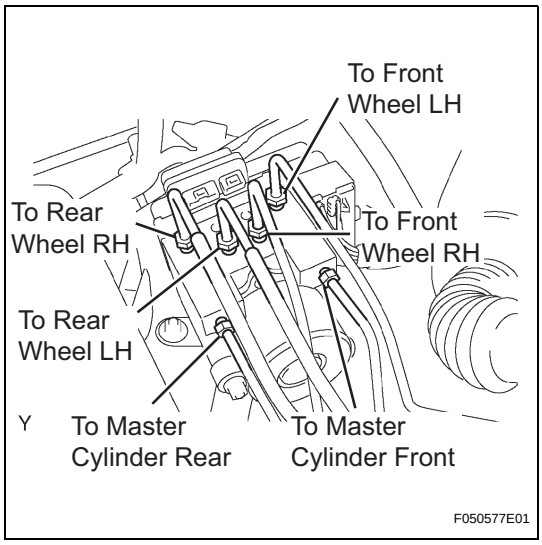

(d) Use tags or labels to identify the place to reconnect each line.

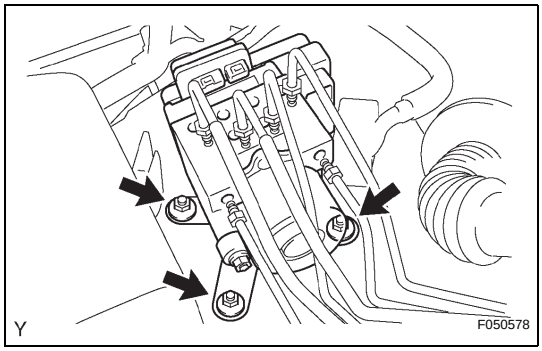

(e) Remove the 3 nuts and brake actuator with bracket.

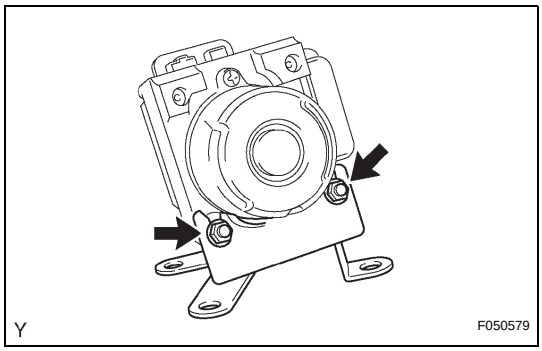

5. REMOVE BRAKE ACTUATOR BRACKET ASSEMBLY

(a) Remove the 2 nuts and bracket.

BC

INSTALLATION

1. INSTALL BRAKE ACTUATOR BRACKET ASSEMBLY

(a) Install the bracket with the 2 nuts.
Torque: 5.4 N*m (55 kgf*cm, 48 in.*lbf)

2. INSTALL BRAKE ACTUATOR

(a) Install the actuator with bracket with the 3 nuts.
Torque: 19 N*m (194 kgf*cm, 14 ft.*lbf)
NOTICE:
- **Be careful not to damage the brake tubes and wire harness.**
- **Tighten the bolts in order, from 1 to 3 as shown.**

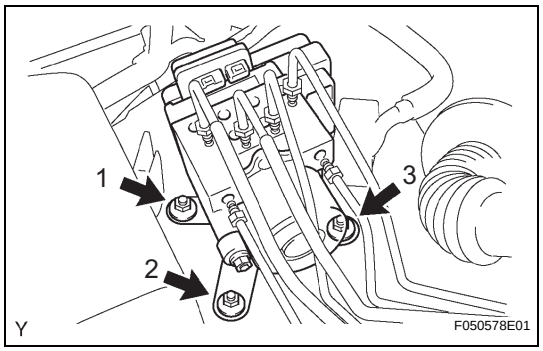

(b) Using SST, connect each brake line to the correct position of the brake actuator, as shown in the illustration.
SST 09023-00101
Torque: 15.2 N*m (155 kgf*cm, 11 ft.*lbf)

(c) Connect the brake actuator connector.

(d) Lock the connector lock lever.
NOTICE:
Make sure that the lever is locked securely.

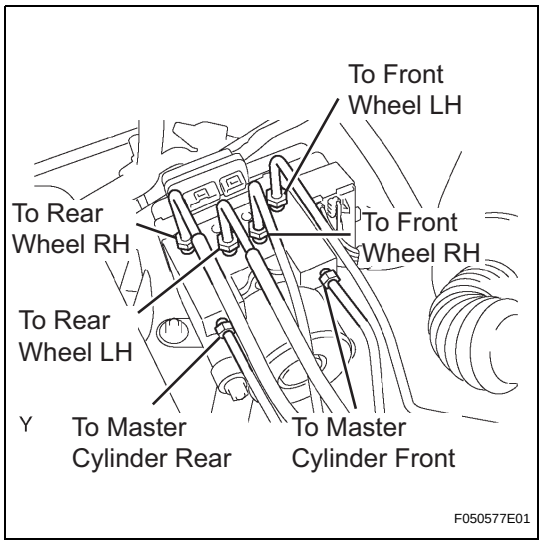

3. INSTALL AIR INJECTION CONTROL DRIVER (for 2TR-FE)

(a) Install the air injection control driver with the 2 bolts.
Torque: 10 N*m (102 kgf*cm, 7 ft.*lbf)

(b) Connect the 2 connectors.

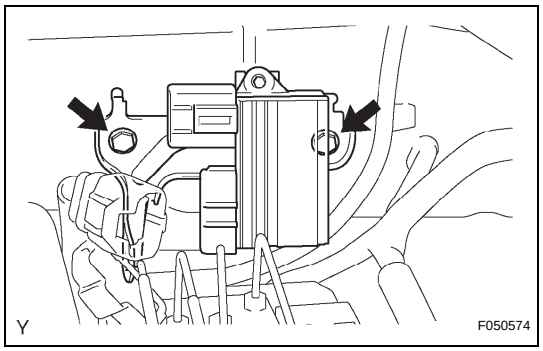

4. FILL RESERVOIR WITH BRAKE FLUID (See page BR-7)

5. BLEED MASTER CYLINDER (See page BR-7)

6. BLEED BRAKE LINE (See page BR-7)

7. CHECK FLUID LEVEL IN RESERVOIR (See page BR-8)

8. CHECK FOR BRAKE FLUID LEAKAGE

9. CONNECT CABLE TO NEGATIVE BATTERY TERMINAL
Torque: 3.9 N*m (40 kgf*cm, 35 in.*lbf)
(See page IN-5)

10. CHECK BRAKE ACTUATOR WITH INTELLIGENT TESTER
(See page BC-299)

BC

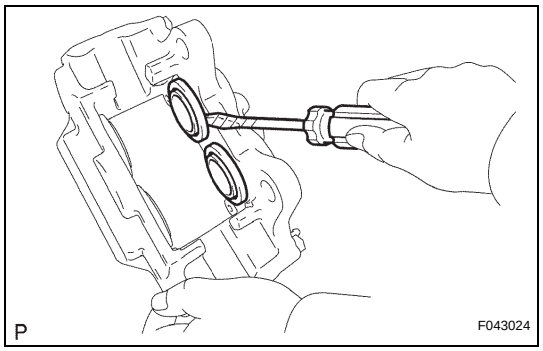

DISASSEMBLY

1. REMOVE CYLINDER BOOT

(a) Using a screwdriver, remove the 4 cylinder boots from the caliper.

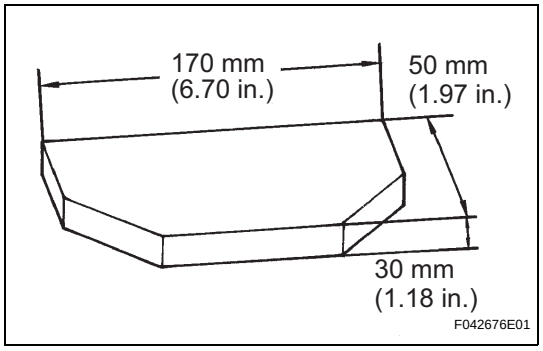

2. REMOVE FRONT DISC BRAKE PISTON

(a) Prepare a wooden plate to hold the pistons.

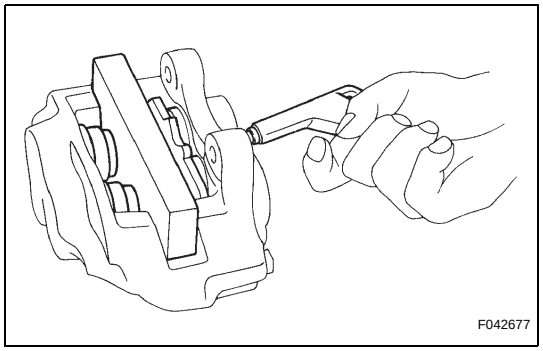

(b) Place the plate between the pistons and insert a pad into one side.

(c) Use compressed air and remove the pistons one side at a time from the cylinder.

CAUTION:
Do not place your fingers in front of the pistons when using compressed air.

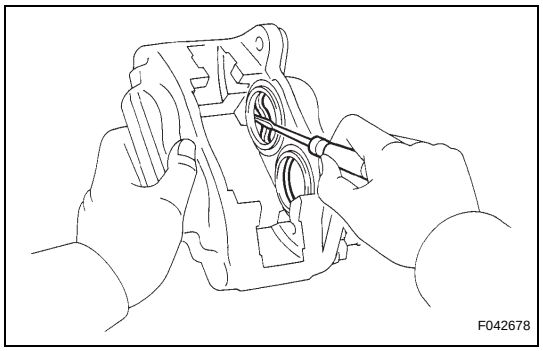

3. REMOVE PISTON SEAL

(a) Using a screwdriver, remove the 4 piston seals from the cylinder.

4. REMOVE FRONT DISC BRAKE BLEEDER PLUG

(a) Remove the bleeder plug cap and bleeder plug from the disc brake cylinder.

INSPECTION

1. INSPECT BRAKE CYLINDER AND PISTON

(a) Check the cylinder bore and piston for rust and scoring.

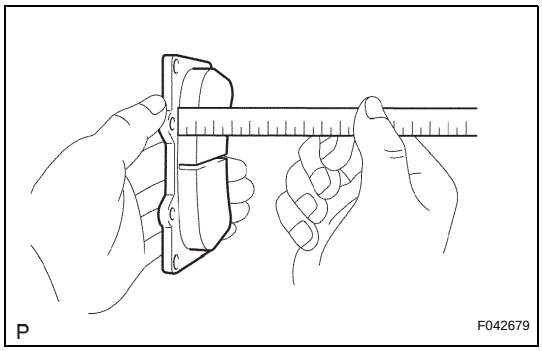

2. INSPECT PAD LINING THICKNESS

(a) Using a ruler, measure the pad lining thickness.

Standard thickness:
11.5 mm (0.453 in.)
Minimum thickness:
1.0 mm (0.039 in.)

REASSEMBLY

1. TEMPORARILY TIGHTEN FRONT DISC BRAKE BLEEDER PLUG

(a) Provisionally tighten the bleeder plug to the disc brake cylinder.

(b) Install the bleeder plug cap onto the bleeder plug.

2. INSTALL PISTON SEAL

(a) Apply lithium soap base glycol grease to 4 new piston seals.

(b) Install the 4 piston seals onto the disc brake cylinder.

3. INSTALL FRONT DISC BRAKE PISTON

(a) Apply lithium soap base glycol grease to the 4 disc brake pistons.

(b) Install the 4 disc brake pistons onto the disc brake cylinder.

NOTICE:

Do not install the disc brake piston into the disc brake cylinder forcibly.

4. INSTALL CYLINDER BOOT

(a) Apply lithium soap grease glycol grease to 4 new cylinder boots.

(b) Install the 4 cylinder boots onto the disc brake cylinder.

HINT:

Install the cylinder boot securely onto the grooves of the disc brake cylinder and piston.

INSTALLATION

1. INSTALL FRONT DISC

(a) Aligning the matchmarks, install the front disc.
HINT:
When replacing the disc with a new one, select the installation position where the disc has the minimum runout.

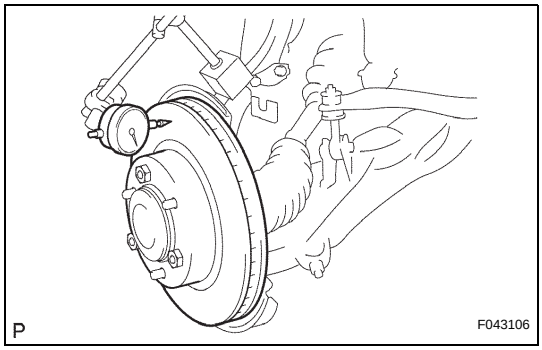

2. INSPECT DISC RUNOUT

(a) Provisionally fasten the disc with the hub nuts.
Torque: 113 N*m (1,152 kgf*cm, 83 ft.*lbf)

(b) Using a dial indicator, measure the disc runout 10 mm (0.39 in.) away from the outer edge of the disc.
Maximum disc runout:
0.05 mm (0.0020 in.)

(c) If the disc runout is the maximum value or greater, check the bearing play in the axial direction and check the axle hub runout (see page AH-1). If the bearing play and axle hub runout are normal, adjust the disc runout or grind it on an on-car brake lathe.

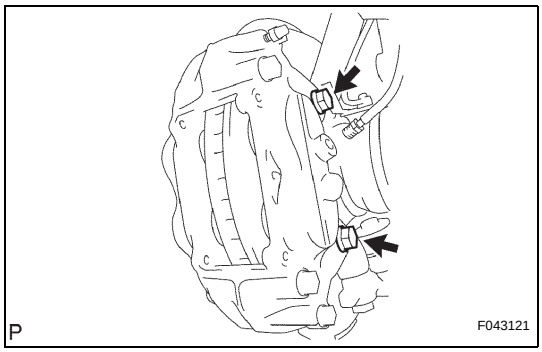

3. INSTALL DISC BRAKE CYLINDER ASSEMBLY

(a) Install the disc brake cylinder assembly with the 2 bolts.
Torque: 123 N*m (1,254 kgf*cm, 91 ft.*lbf)

(b) Using SST, connect the brake tube to the disc brake cylinder.
SST 09023-00101
Torque: 15.2 N*m (155 kgf*cm, 11 ft.*lbf)

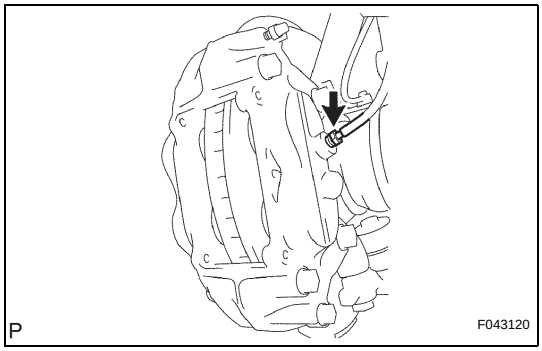

4. INSTALL ANTI SQUEAL SHIM KIT FRONT
NOTICE:
If necessary, replace the anti-squeal shim kit when replacing the brake pad.

(a) Install the anti-squeal shims on to each brake pad.

5. INSTALL DISC BRAKE PAD KIT FRONT (PAD ONLY)

(a) Install the 2 disc brake pads with anti-squeal shim onto the disc brake cylinder.
NOTICE:
There should be no oil or grease on the friction surfaces of the brake pads and the front disc.

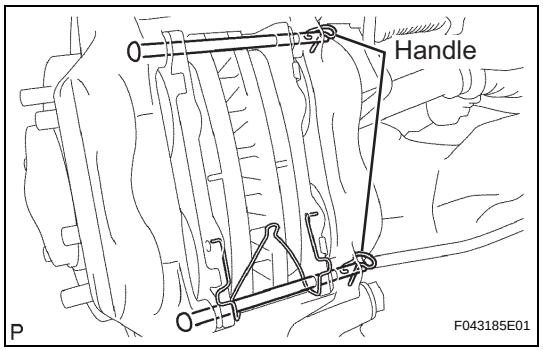

6. **INSTALL FRONT DISC BRAKE ANTI RATTLE WITH HOLE PIN**
   (a) Install the 2 anti rattle w/ hole pins and anti-rattle spring onto the disc brake cylinder.
   HINT:
   The anti-rattle spring is installed onto the lower anti-rattle w/ hole pin.
   (b) Install the 2 new pin hold clips with the anti-rattle w/ hole pin.
   NOTICE:
   Be sure to install the pin hold clip with the handle facing to the vehicle center.
7. **FILL RESERVOIR WITH BRAKE FLUID (w/ VSC) (See page BR-4)**
8. **FILL RESERVOIR WITH BRAKE FLUID (w/o VSC) (See page BR-7)**
9. **BLEED MASTER CYLINDER (w/o VSC) (See page BR-7)**
10. **BLEED BRAKE LINE (w/ VSC) (See page BR-4)**
11. **BLEED BRAKE LINE (w/o VSC) (See page BR-7)**
12. **CHECK FLUID LEVEL IN RESERVOIR (w/ VSC) (See page BR-6)**
13. **CHECK FLUID LEVEL IN RESERVOIR (w/o VSC) (See page BR-8)**
14. **CHECK FOR BRAKE FLUID LEAKAGE**
15. **INSTALL FRONT WHEEL**
    Torque: 113 N*m (1,152 kgf*cm, 83 ft.*lbf)

DTC	B1651/33	Manual Cut off Switch Trouble

DESCRIPTION

The airbag cut-off switch circuit consists of the center airbag sensor assembly and the airbag cut off switch.

DTC B1651/33 is set when a malfunction is detected in the airbag cut off switch circuit.

DTC No.	DTC Detecting Conditions	Trouble Areas
B1651/31	• The center airbag sensor assembly receives a line short circuit signal, an open circuit signal, a short circuit to ground signal or a short circuit to B+ signal in the airbag cut off switch circuit for 2 seconds • Airbag cut off switch malfunction • Center airbag sensor assembly malfunction	• Instrument panel wire • Airbag cut-off switch • Center airbag sensor assembly

WIRING DIAGRAM

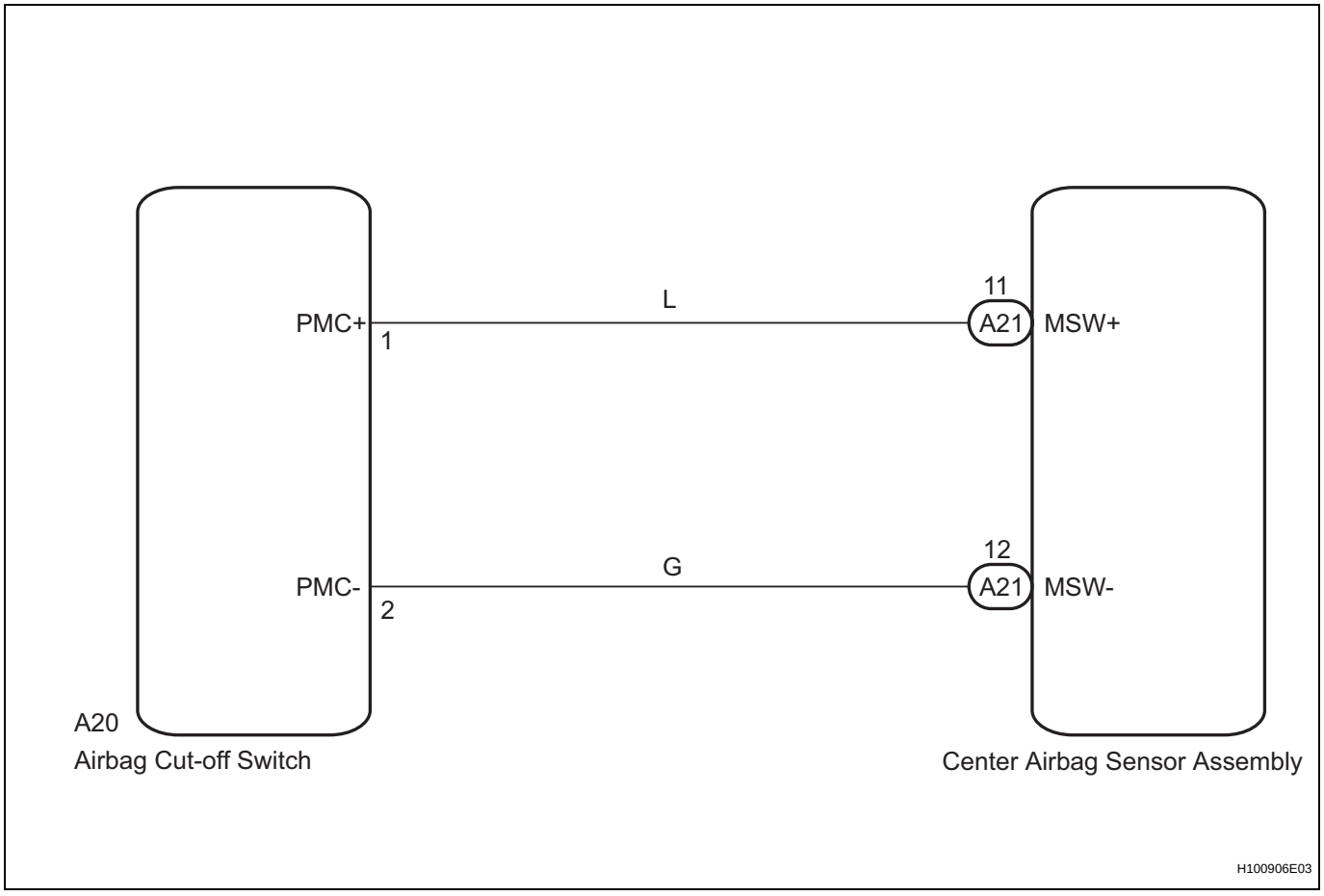

RS

CAUTION:

In order to prevent unexpected airbag deployment, disconnect the following connectors before inspecting parts such as wire harnesses, if the application of tester probes to the center airbag sensor assembly connector is necessary.

(a) Turn the ignition switch to the LOCK position.

(b) Disconnect the negative (-) terminal cable from the battery, and wait for at least 90 seconds.

(c) Disconnect the connectors from the center airbag sensor assembly.

(d) Disconnect the connectors from the steering pad.

(e) Disconnect the connector from the front passenger airbag assembly.
(j) Disconnect the connector from the front seat outer belt assembly LH.
(k) Disconnect the connector from the front seat outer belt assembly RH.
HINT:
Skip the following steps if side and curtain shield airbags are not fitted.
(f) Disconnect the connector from the front seat airbag assembly LH.
(g) Disconnect the connector from the front seat airbag assembly RH.
(h) Disconnect the connector from the curtain shield airbag assembly LH.
(i) Disconnect the connector from the curtain shield airbag assembly RH.

1	CHECK DTC

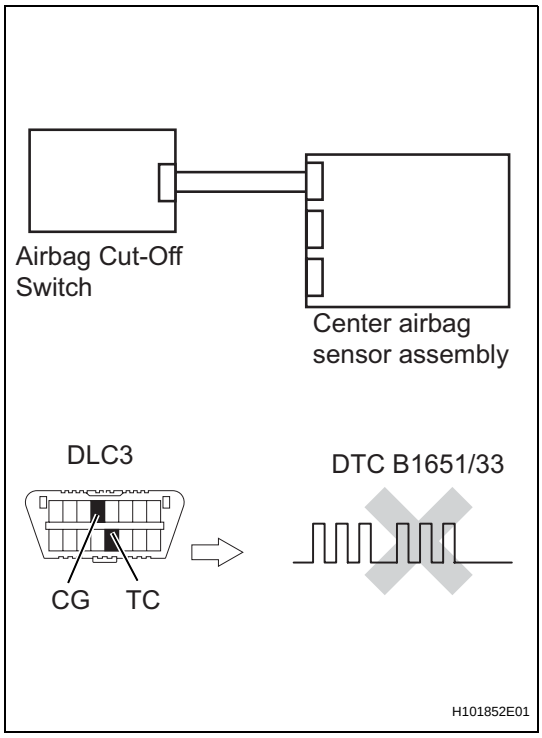

(a) Turn the ignition switch to the ON position.
(b) Clear any DTCs stored in the memory (See page RS-34).
(c) Turn the ignition switch to the LOCK position.
(d) Turn the ignition switch to the ON position and wait for at least 60 seconds.
(e) Check for DTCs (See page RS-34).
OK:
DTC B1651/33 is not output.
HINT:
DTCs other than B1651/33 may be output at this time, but they are not related to this check.

OK → **USE SIMULATION METHOD TO CHECK**

NG

2	CHECK CONNECTION OF CONNECTORS

(a) Turn the ignition switch to the LOCK position.
(b) Disconnect the negative (-) terminal cable from the battery, and wait for at least 90 seconds.
(c) Check that the connectors are properly connected to the center airbag sensor assembly and the airbag cut off switch.
OK:
The connectors are properly connected.

NG → **CONNECTION OF CONNECTORS**

OK

RS

3	CHECK CONNECTORS

(a) Check that the connectors (on the center airbag sensor assembly side and airbag cut-off switch side) are not damaged (See page IN-34).

NG → REPAIR OR REPLACE WIRE HARNESS

OK

4	INSPECT AIRBAG CUT-OFF SWITCH

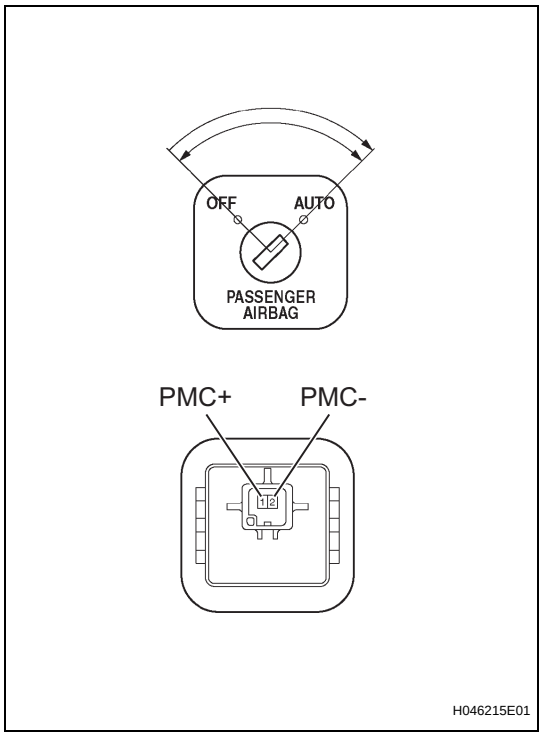

(a) Disconnect the A20 airbag cut-off switch connector.
(b) Measure the resistance.

Standard resistance

Switch Condition	Tester Condition	Specified Condition
OFF	1(PMC+) - 2(PMC-)	80 to 120 Ω
AUTO	1(PMC+) - 2(PMC-)	320 to 480 Ω

NG → REPLACE AIRBAG CUT-OFF SWITCH

OK

RS

5 CHECK INSTRUMENT PANEL WIRE (FOR OPEN)

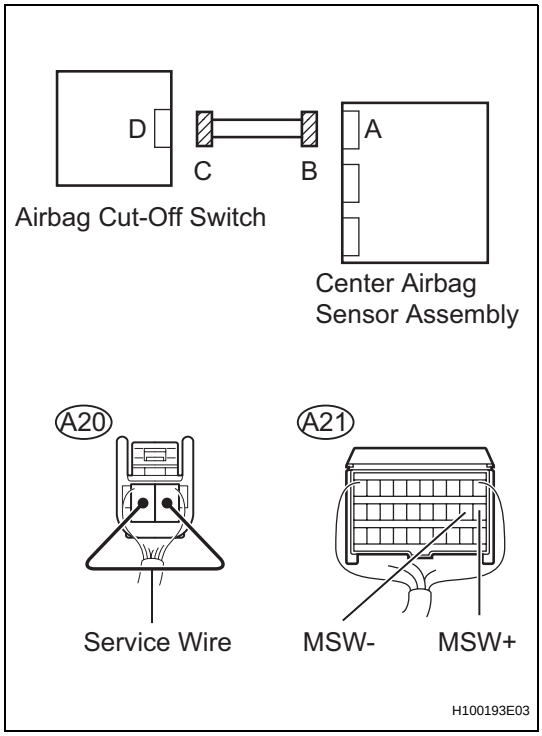

(a) Disconnect the instrument panel wire connector from the airbag cut off switch.
(b) Using a service wire, connect A20-1 (PMC+) and A20-2 (PMC-) of connector C.

NOTICE:
Do not forcibly insert the service wire into the terminals of the connector when connecting.

(c) Measure the resistance.
Standard resistance

Tester Connection	Condition	Specified Condition
A21-11 (MSW+) - A21-12 (MSW-)	Always	Below 1Ω

NG → **REPAIR OR REPLACE INSTRUMENT PANEL WIRE**

OK

6 CHECK INSTRUMENT PANEL WIRE (FOR SHORT)

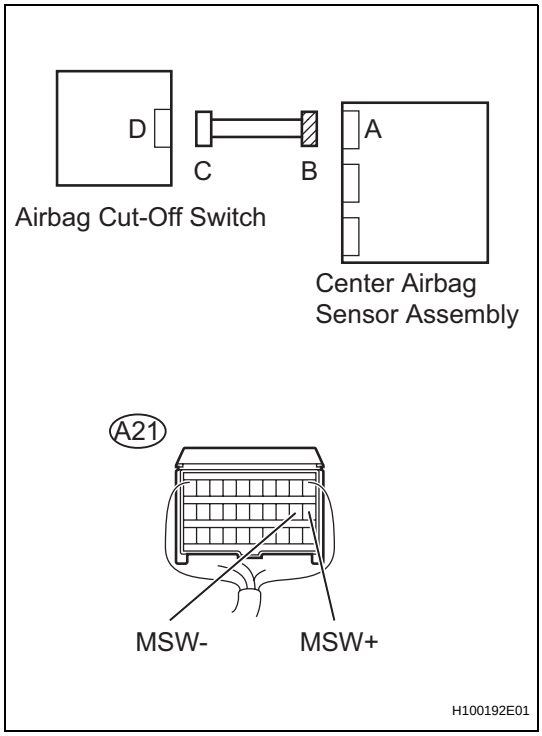

(a) Disconnect the service wire from connector C.
(b) Measure the resistance.
Standard resistance

Tester Connection	Condition	Specified Condition
A21-11 (MSW+) - A21-12 (MSW-)	Always	1 MΩ or Higher

NG → **REPAIR OR REPLACE INSTRUMENT PANEL WIRE**

OK

RS

7 CHECK INSTRUMENT PANEL WIRE (TO B+)

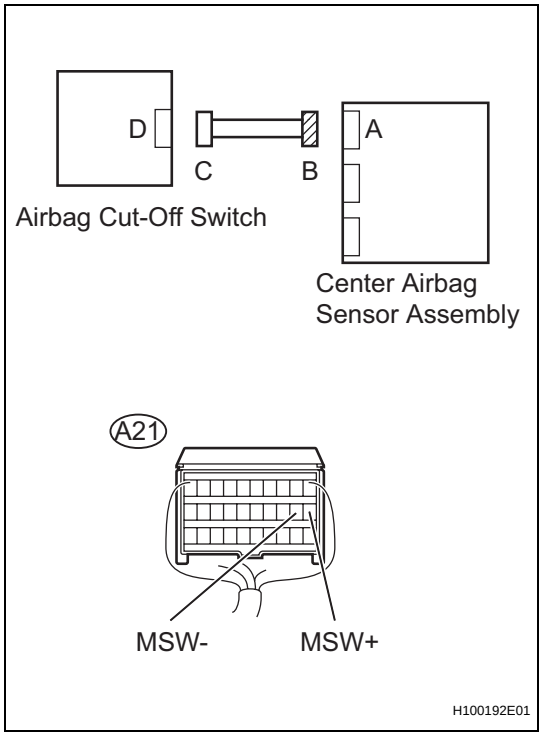

(a) Connect the negative (-) terminal cable to the battery, and wait for at least 2 seconds.
(b) Turn the ignition switch to the ON position.
(c) Measure the voltage.

Standard voltage

Tester Connection	Condition	Specified Condition
A21-11 (MSW+) - Body ground	Ignition switch ON	Below 1 V
A21-12 (MSW-) - Body ground	Ignition switch ON	Below 1 V

NG → **REPAIR OR REPLACE INSTRUMENT PANEL WIRE**

OK

8 CHECK INSTRUMENT PANEL WIRE (TO GROUND)

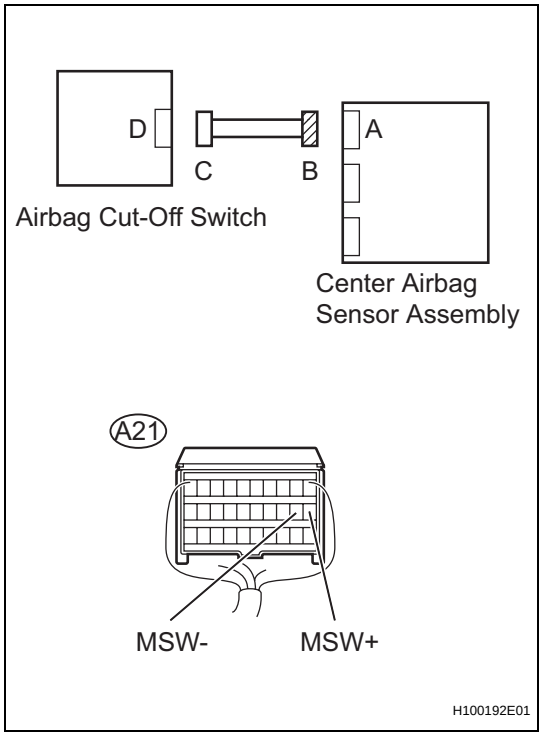

(a) Turn the ignition switch to the LOCK position.
(b) Disconnect the negative (-) terminal cable from the battery, and wait for at least 90 seconds.
(c) Measure the resistance.

Standard resistance

Tester Connection	Condition	Specified Condition
A21-11 (MSW+) - Body ground	Always	1 MΩ or Higher
A21-12 (MSW-) - Body ground	Always	1 MΩ or Higher

NG → **REPAIR OR REPLACE INSTRUMENT PANEL WIRE**

OK

RS

9	CHECK CENTER AIRBAG SENSOR ASSEMBLY

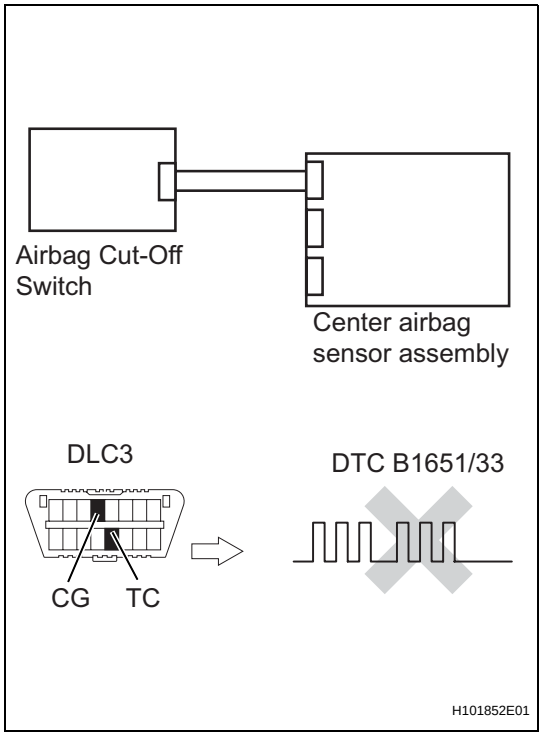

(a) Connect the connectors to the center airbag sensor assembly and airbag cut off switch.
(b) Connect the negative (-) terminal cable to the battery, and wait for at least 2 seconds.
(c) Turn the ignition switch to the ON position, and wait for at least 60 seconds.
(d) Clear any DTCs stored in the memory (See page RS-34).
(e) Turn the ignition switch to the LOCK position.
(f) Turn the ignition switch to the ON position, and wait for at least 60 seconds.
(g) Check for DTCs (See page RS-34).

OK:

DTC B1651/33 is not output.

HINT:

DTCs other than B1651/33 may be output at this time, but they are not related to this check.

NG → **REPLACE CENTER AIRBAG SENSOR ASSEMBLY**

OK

USE SIMULATION METHOD TO CHECK

DTC	B1653/35	Seat Position Airbag Sensor Circuit Malfunction

DESCRIPTION

The seat position sensor circuit consists of the center airbag sensor assembly and the seat position sensor.

DTC B1653/35 is set when a malfunction is detected in the seat position sensor assembly circuit.

DTC No.	DTC Detecting Condition	Trouble Area
B1653/35	• The center airbag sensor assembly receives a line short circuit signal, an open circuit signal, a short circuit to ground signal or a short circuit to B+ signal in the seat position sensor assembly circuit for 2 seconds. • Seat position sensor malfunction • Center airbag sensor assembly malfunction	• No. 2 floor wire • No. 1 seat wire (*1) • No. 2 seat wire (*1) • Front seat belt inner assembly LH (*2) • Seat position sensor • Center airbag sensor assembly

*1: Bench seat

*2: Separate seat

WIRING DIAGRAM

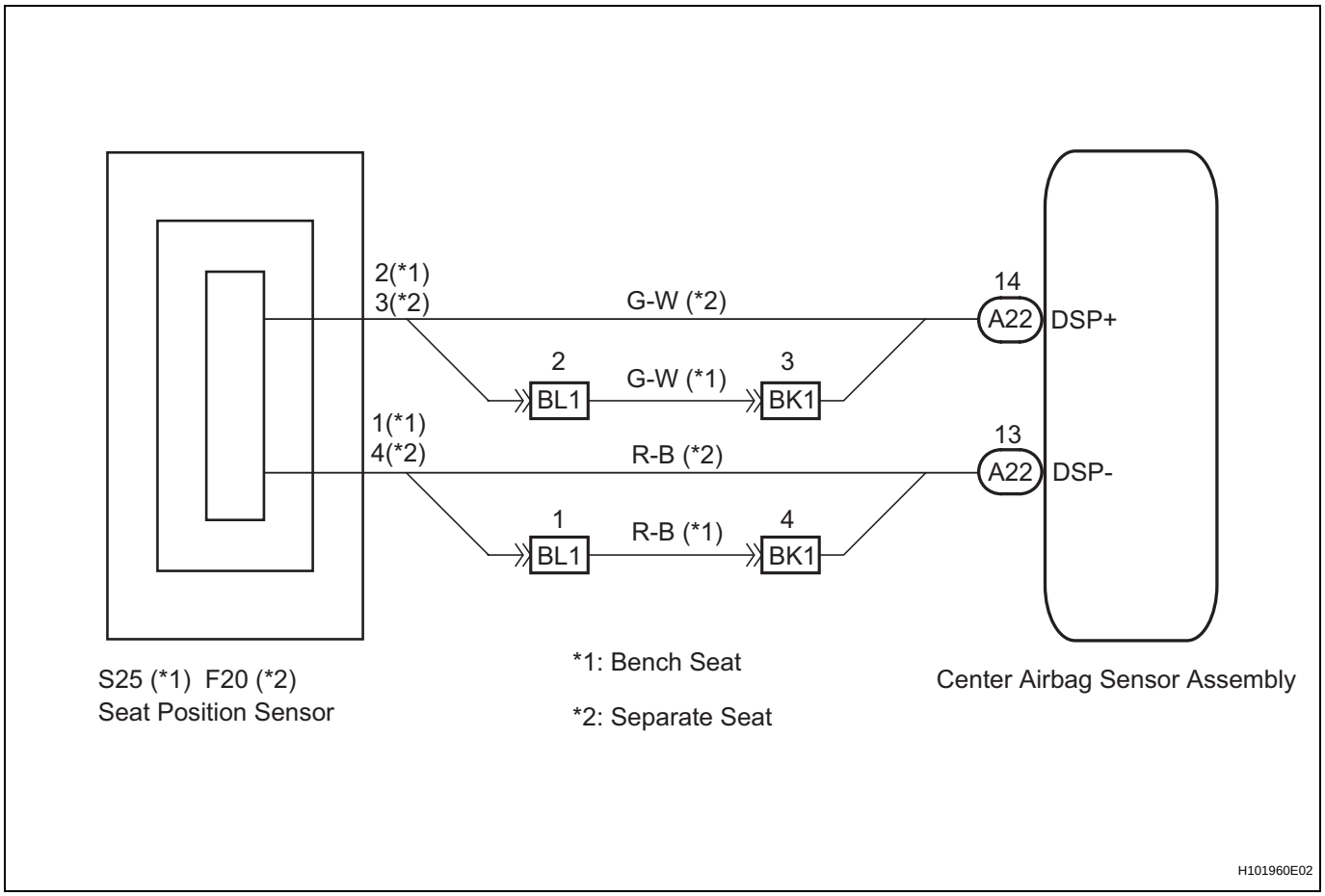

RS

CAUTION:

In order to prevent unexpected airbag deployment, disconnect the following connectors before inspecting parts such as wire harnesses, if the application of tester probes to the center airbag sensor assembly connector is necessary.

(a) Turn the ignition switch to the LOCK position.

(b) Disconnect the negative (-) terminal cable from the battery, and wait for at least 90 seconds.

(c) Disconnect the connectors from the center airbag sensor assembly.
(d) Disconnect the connectors from the steering pad.
(e) Disconnect the connector from the front passenger airbag assembly.
(f) Disconnect the connector from the front seat outer belt assembly LH.
(g) Disconnect the connector from the front seat outer belt assembly RH.
HINT:
Skip the following steps if side and curtain shield airbags are not fitted.
(h) Disconnect the connector from the front seat airbag assembly LH.
(i) Disconnect the connector from the front seat airbag assembly RH.
(j) Disconnect the connector from the curtain shield airbag assembly LH.
(k) Disconnect the connector from the curtain shield airbag assembly RH.

1	CHECK DTC

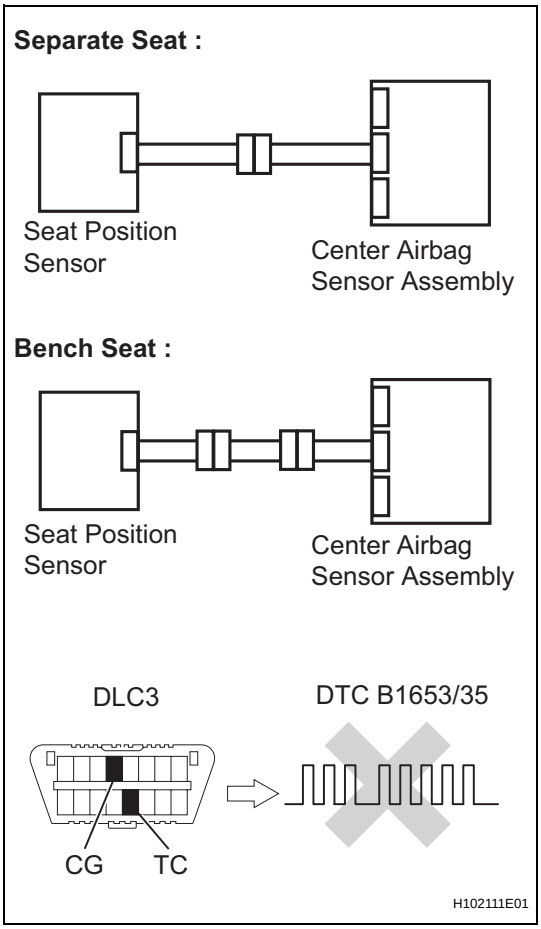

(a) Turn the ignition switch to the ON position.
(b) Clear any DTCs stored in the memory (See page RS-34).
(c) Turn the ignition switch to the LOCK position.
(d) Turn the ignition switch to the ON position and wait for at least 60 seconds.
(e) Check for DTCs (See page RS-34).
OK:
DTC B1653/35 is not output.
HINT:
DTCs other than B1653/35 may be output at this time, but they are not related to this check.

OK → **USE SIMULATION METHOD TO CHECK**

NG

2	CHECK CONNECTION OF CONNECTORS

(a) Turn the ignition switch to the LOCK position.
(b) Disconnect the negative (-) terminal cable from the battery, and wait for at least 90 seconds.
(c) Check that the connectors are properly connected to the center airbag sensor assembly and the seat position sensor.

RS

OK:
The connectors are properly connected.

NG → **CONNECT CONNECTORS**

OK

3 CHECK CONNECTORS

(a) Check that the connectors (on the center airbag sensor assembly side and seat position sensor side) are not damaged (See page IN-34).
OK:
The connectors are not deformed or damaged.

Condition	Proceed to
Normal (separate seat)	A
Normal (bench seat)	B
Abnormal	C

B → **Go to step 13**

C → **REPAIR OR REPLACE WIRE HARNESS**

A

4 CHECK SEAT POSITION SENSOR CIRCUIT (FOR OPEN)

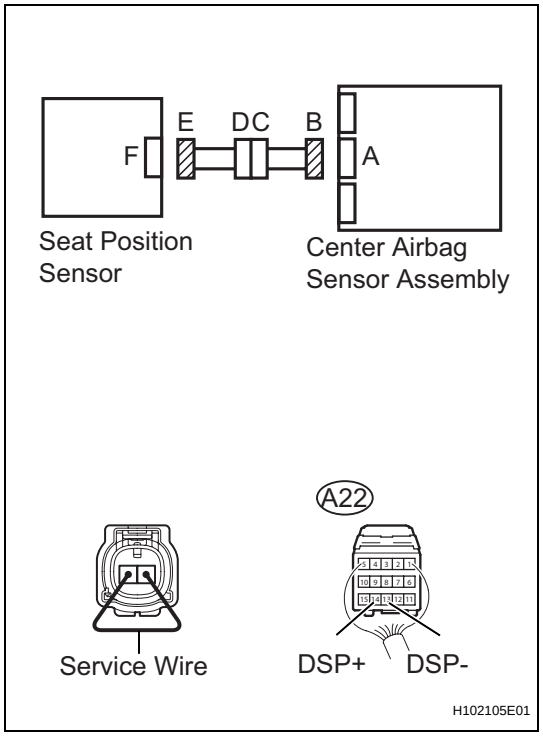

(a) Disconnect the connectors from the center airbag sensor assembly and the seat position sensor.
(b) Using a service wire, connect 1 and 2 of connector E.
NOTICE:
Do not forcibly insert the service wire into the terminals of the connector when connecting.
HINT:
The connector is not allocated an ID number due to being part of the front seat inner belt assembly LH wire harness.
(c) Measure the resistance.
Standard resistance

Tester Connection	Condition	Specified Condition
A22-14 (DSP+) - A22-13 (DSP-)	Always	Below 1 Ω

NG → **Go to step 9**

OK

RS

5 CHECK SEAT POSITION SENSOR CIRCUIT (FOR SHORT)

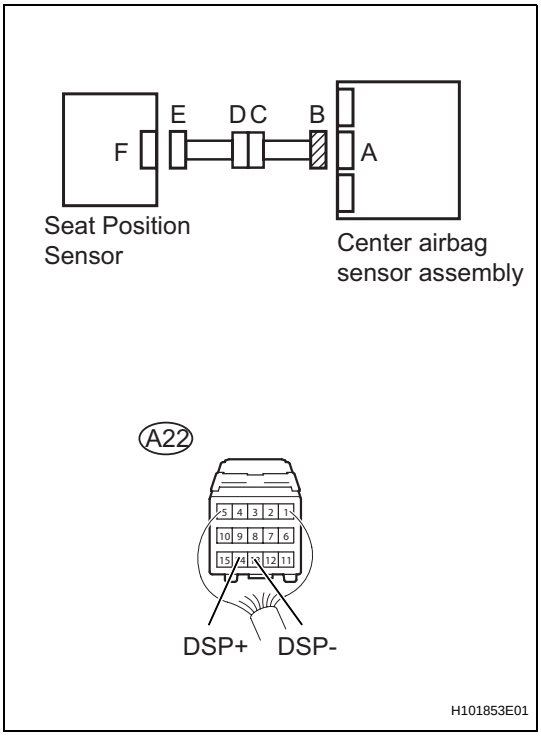

(a) Disconnect the service wire from connector E.
(b) Measure the resistance.
Standard resistance

Tester Connection	Condition	Specified Condition
A22-14 (DSP+) - A22-13 (DSP-)	Always	1 MΩ or Higher

NG → **Go to step 10**

OK

6 CHECK SEAT POSITION SENSOR CIRCUIT (TO B+)

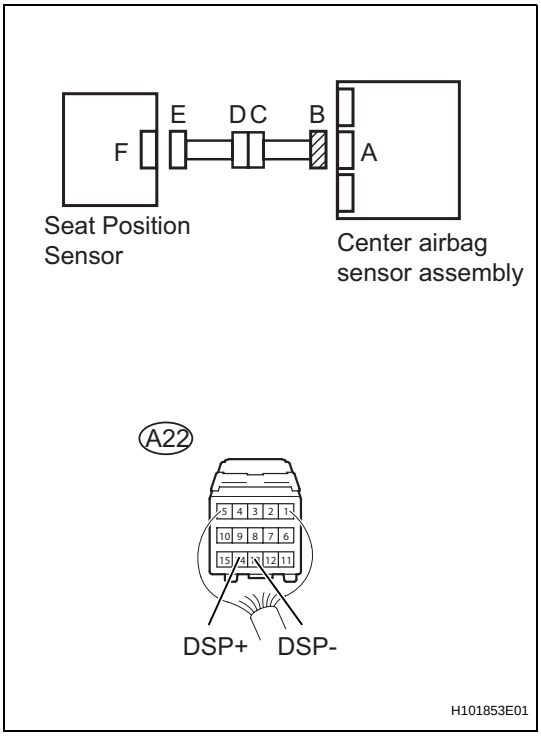

(a) Connect the negative (-) terminal cable to the battery, and wait for at least 2 seconds.
(b) Turn the ignition switch to the ON position.
(c) Measure the voltage.
Standard voltage

Tester Connection	Condition	Specified Condition
A22-14 (DSP+) - Body ground	Ignition switch ON	Below 1 V
A22-13 (DSP-) - Body ground	Ignition switch ON	Below 1 V

NG → **Go to step 11**

OK

RS

7 CHECK SEAT POSITION SENSOR CIRCUIT (TO GROUND)

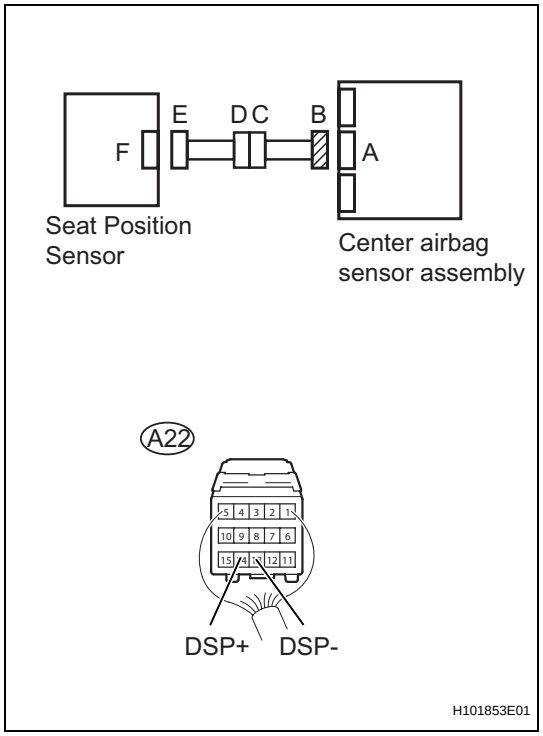

(a) Turn the ignition switch to the LOCK position.
(b) Disconnect the negative (-) terminal cable from the battery, and wait for at least 90 seconds.
(c) Measure the resistance.

Standard resistance

Tester Connection	Condition	Specified Condition
A22-14 (DSP+) - Body ground	Always	1 MΩ or Higher
A22-13 (DSP-) - Body ground	Always	1 MΩ or Higher

NG → **Go to step 12**

OK

8 CHECK SEAT POSITION SENSOR

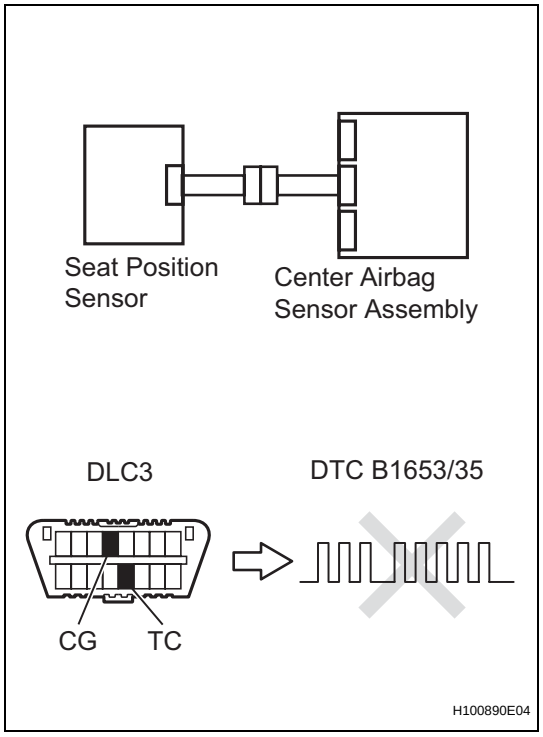

(a) Connect the connectors to the center airbag sensor assembly.
(b) Connect the connector to the seat position sensor.
(c) Connect the negative (-) terminal cable to the battery, and wait for at least 2 seconds.
(d) Turn the ignition switch to the ON position, and wait for at least 60 seconds.
(e) Clear any DTCs stored in the memory (See page RS-34).
(f) Turn the ignition switch to the LOCK position.
(g) Turn the ignition switch to the ON position, and wait for at least 60 seconds.
(h) Check for DTCs (See page RS-34).

OK:

DTC B1653/35 is not output.

HINT:
DTCs other than B1653/35 may be output at this time, but they are not related to this check.

NG → **Go to step 26**

RS

OK

USE SIMULATION METHOD TO CHECK

9	CHECK SEAT POSITION SENSOR CIRCUIT (FOR OPEN)

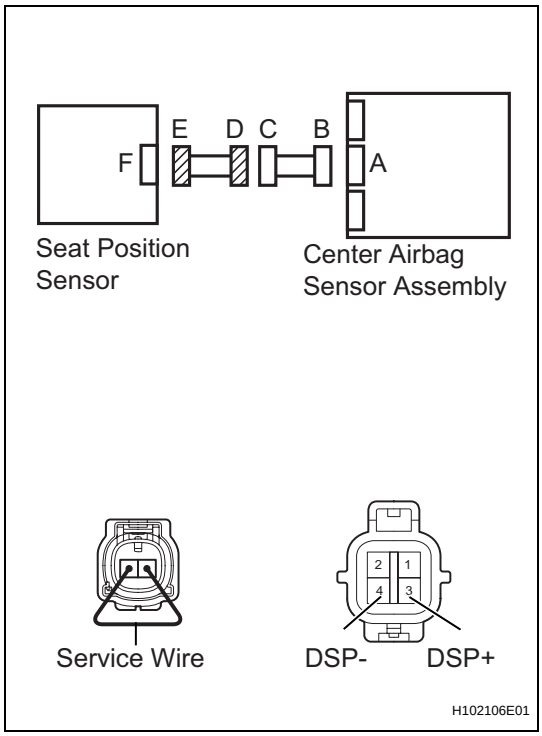

(a) Disconnect the front seat inner belt assembly connector from the instrument panel wire.

HINT:

- The service wire has already been inserted into connector E.
- The connector is not allocated an ID number due to being part of the front seat inner belt assembly LH wire harness.

(b) Measure the resistance.

Standard resistance

Tester Connection	Condition	Specified Condition
3 (DSP+) - 4 (DSP-)	Always	Below 1 Ω

NG → **REPAIR OR REPLACE FRONT SEAT INNER BELT ASSEMBLY LH**

OK

REPAIR OR REPLACE NO. 2 FLOOR WIRE

10 CHECK SEAT POSITION SENSOR CIRCUIT (FOR SHORT)

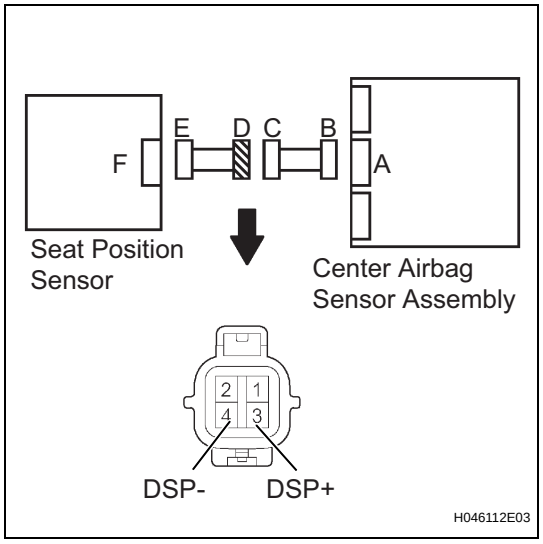

(a) Disconnect the front seat inner belt assembly connector from the instrument panel wire.

HINT:
The connector is not allocated an ID number due to being part of the front seat inner belt assembly LH wire harness.

(b) Disconnect the service wire from connector E.
(c) Measure the resistance.

Standard resistance

Tester Connection	Condition	Specified Condition
3 (DSP+) - 4 (DSP-)	Always	1 MΩ or Higher

NG → **REPAIR OR REPLACE FRONT SEAT INNER BELT ASSEMBLY LH**

OK

REPAIR OR REPLACE NO. 2 FLOOR WIRE

11 CHECK SEAT POSITION SENSOR CIRCUIT (TO B+)

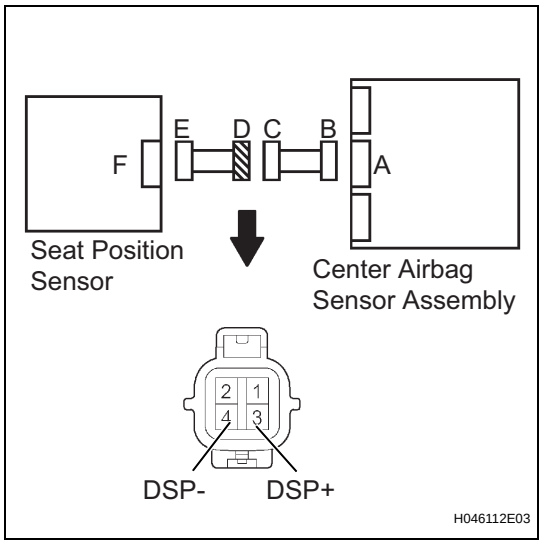

(a) Turn the ignition switch to the LOCK position.
(b) Disconnect the negative (-) terminal cable from the battery, and wait for at least 90 seconds.
(c) Disconnect the seat inner belt assembly LH connector from the instrument panel wire.

HINT:
The connector is not allocated an ID number due to being part of the front seat inner belt assembly LH wire harness.

(d) Connect the negative (-) terminal cable to the battery, and wait for at least 2 seconds.
(e) Turn the ignition switch to the ON position.
(f) Measure the voltage.

Standard Voltage

Tester Connection	Condition	Specified Condition
3 (DSP+) - Body ground	Ignition switch ON	Below 1 V
4 (DSP-) - Body ground	Ignition switch ON	Below 1 V

NG → **REPAIR OR REPLACE FRONT SEAT INNER BELT ASSEMBLY LH**

OK

REPAIR OR REPLACE NO. 2 FLOOR WIRE

RS

12 CHECK SEAT POSITION SENSOR CIRCUIT (TO GROUND)

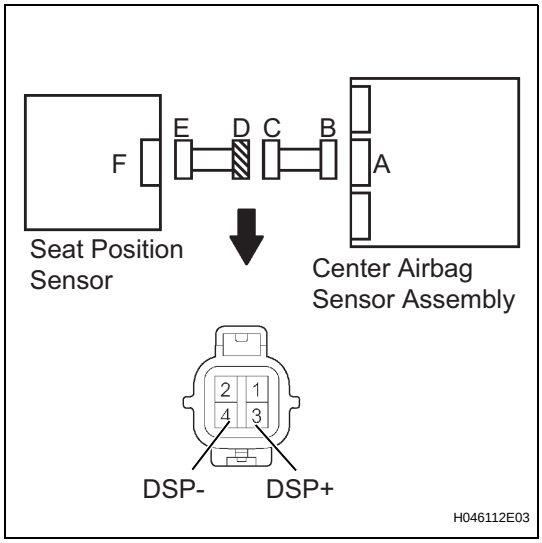

(a) Disconnect the front seat inner belt assembly connector from the instrument panel wire.

HINT:
The connector is not allocated an ID number due to being part of the front seat inner belt assembly LH wire harness.

(b) Measure the resistance.

Standard resistance

Tester Connection	Condition	Specified Condition
3 (DSP+) - Body ground	Always	1 MΩ or Higher
4 (DSP-) - Body ground	Always	1 MΩ or Higher

NG → **REPAIR OR REPLACE FRONT SEAT INNER BELT ASSEMBLY LH**

OK

REPAIR OR REPLACE NO. 2 FLOOR WIRE

13 CHECK SEAT POSITION SENSOR CIRCUIT (FOR OPEN)

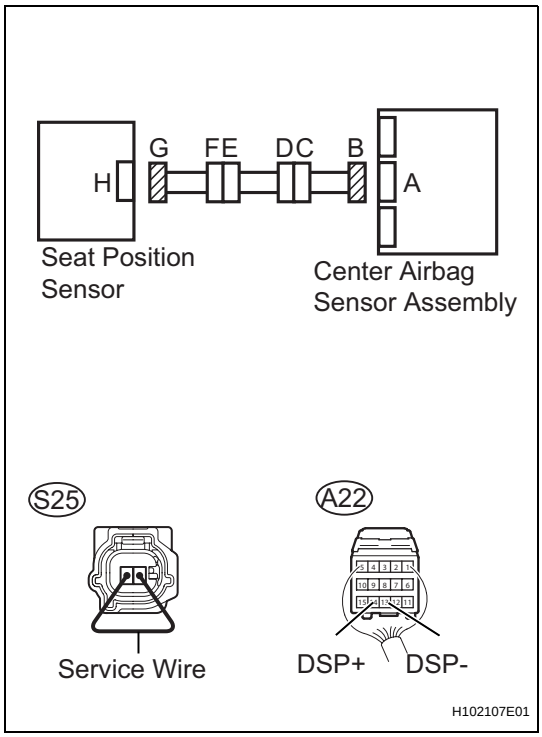

(a) Disconnect the connectors from the center airbag sensor assembly and the seat position sensor.

(b) Using a service wire, connect S25-1 and S25-2 of connector G.

NOTICE:
Do not forcibly insert the service wire into the terminals of the connector when connecting.

(c) Measure the resistance.

Standard resistance

Tester Connection	Condition	Specified Condition
A22-14 (DSP+) - A22-13 (DSP-)	Always	Below 1 Ω

NG → **Go to step 18**

OK

RS

14 CHECK SEAT POSITION SENSOR CIRCUIT (FOR SHORT)

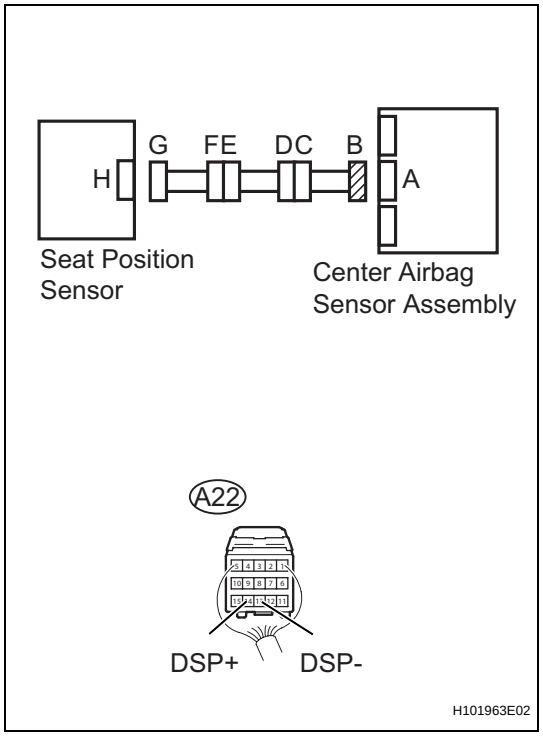

(a) Disconnect the service wire from connector G.
(b) Measure the resistance.
Standard resistance

Tester Connection	Condition	Specified Condition
A22-14 (DSP+) - A22-13 (DSP-)	Always	1 MΩ or Higher

NG → **Go to step 19**

OK

15 CHECK SEAT POSITION SENSOR CIRCUIT (TO B+)

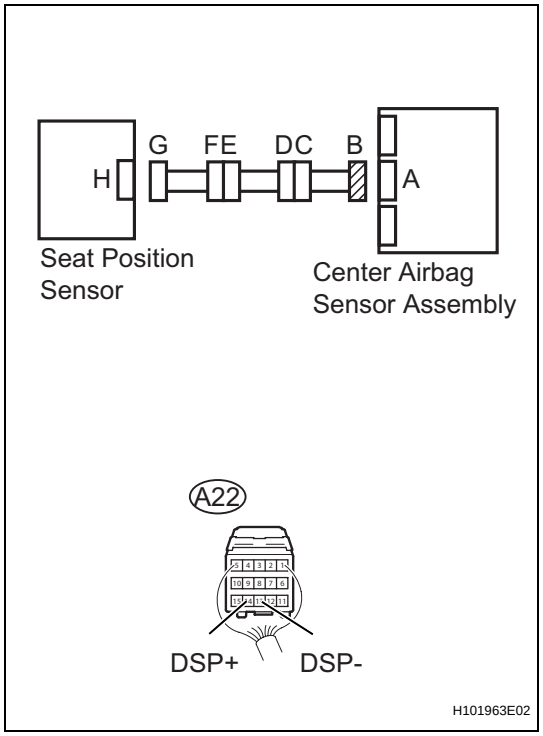

(a) Connect the negative (-) terminal cable to the battery, and wait for at least 2 seconds.
(b) Turn the ignition switch to the ON position.
(c) Measure the voltage.
Standard voltage

Tester Connection	Condition	Specified Condition
A22-14 (DSP+) - Body ground	Ignition switch ON	Below 1 V
A22-13 (DSP-) - Body ground	Ignition switch ON	Below 1 V

NG → **Go to step 20**

OK

RS

16 CHECK SEAT POSITION SENSOR CIRCUIT (TO GROUND)

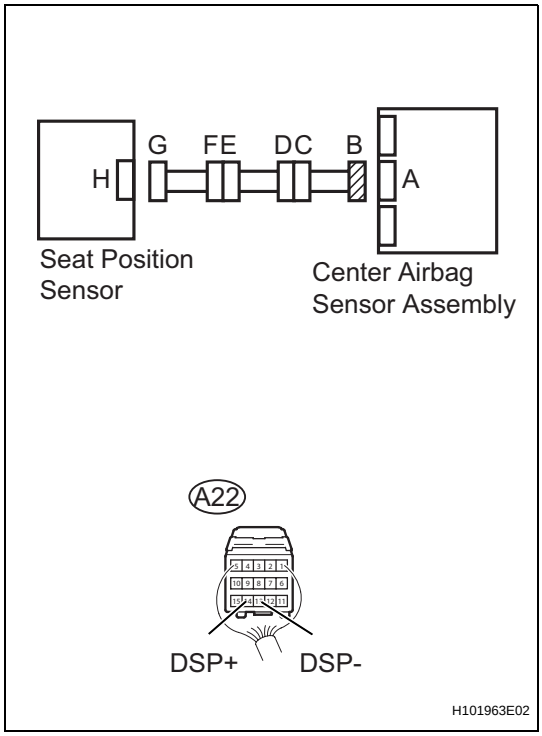

(a) Turn the ignition switch to the LOCK position.
(b) Disconnect the negative (-) terminal cable from the battery, and wait for at least 90 seconds.
(c) Measure the resistance.

Standard resistance

Tester Connection	Condition	Specified Condition
A22-14 (DSP+) - Body ground	Always	1 MΩ or Higher
A22-13 (DSP-) - Body ground	Always	1 MΩ or Higher

NG → **Go to step 21**

OK

17 CHECK SEAT POSITION SENSOR

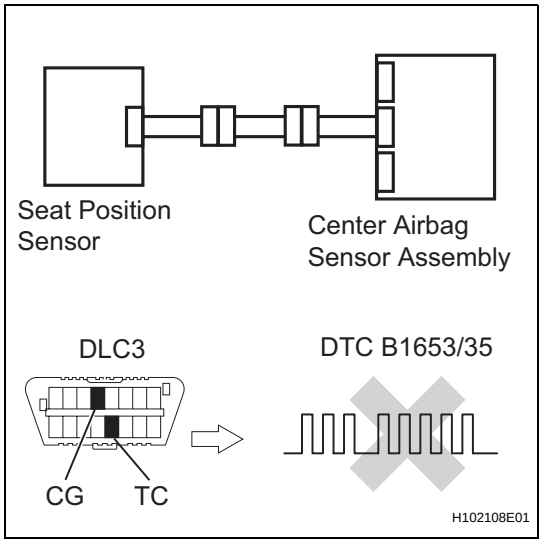

(a) Connect the connectors to the center airbag sensor assembly.
(b) Connect the connector to the seat position sensor.
(c) Connect the negative (-) terminal cable to the battery, and wait for at least 2 seconds.
(d) Turn the ignition switch to the ON position, and wait for at least 60 seconds.
(e) Clear any DTCs stored in the memory (See page RS-34).
(f) Turn the ignition switch to the LOCK position.
(g) Turn the ignition switch to the ON position, and wait for at least 60 seconds.
(h) Check for DTCs (See page RS-34).

OK:

DTC B1653/35 is not output.

HINT:
DTCs other than B1653/35 may be output at this time, but they are not related to this check.

NG → **Go to step 26**

RS

OK

USE SIMULATION METHOD TO CHECK

18 CHECK SEAT POSITION SENSOR CIRCUIT (FOR OPEN)

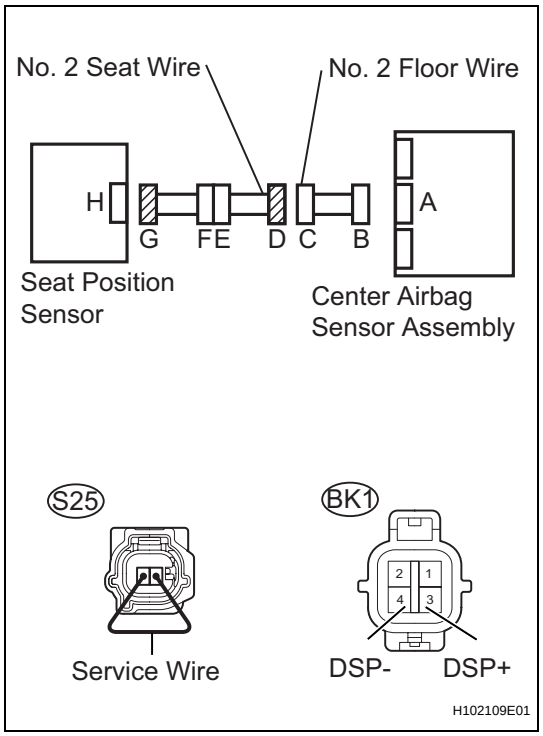

(a) Disconnect the No. 2 seat wire connector from the No. 2 floor wire.

HINT:

The service wire has already been inserted into connector G.

(b) Measure the resistance.

Standard resistance

Tester Connection	Condition	Specified Condition
BK1-3 (DSP+) - BK1-4 (DSP-)	Always	Below 1 Ω

NG → **Go to step 22**

OK

REPAIR OR REPLACE NO. 2 FLOOR WIRE

RS

19 CHECK SEAT POSITION SENSOR CIRCUIT (FOR SHORT)

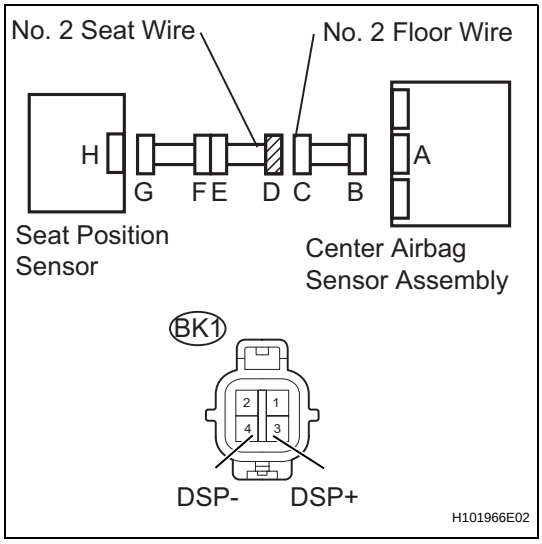

(a) Disconnect the No. 2 seat wire connector from the No. 2 floor wire.
(b) Measure the resistance.
Standard resistance

Tester Connection	Condition	Specified Condition
BK1-3 (DSP+) - BK1-4 (DSP-)	Always	1 MΩ or Higher

NG → **Go to step 23**

OK

REPAIR OR REPLACE NO. 2 FLOOR WIRE

20 CHECK SEAT POSITION SENSOR CIRCUIT (TO B+)

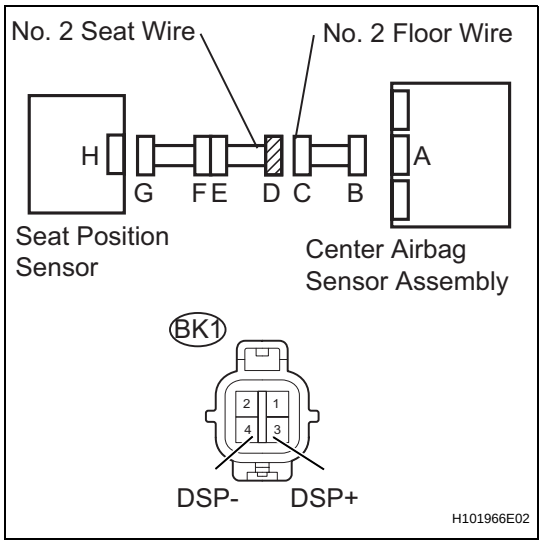

(a) Turn the ignition switch to the LOCK position.
(b) Disconnect the negative (-) terminal cable from the battery, and wait for at least 90 seconds.
(c) Disconnect the No. 2 seat wire connector from the No. 2 floor wire.
(d) Connect the negative (-) terminal cable to the battery, and wait for at least 2 seconds.
(e) Turn the ignition switch to the ON position.
(f) Measure the voltage.
Standard Voltage

Tester Connection	Condition	Specified Condition
BK1-3 (DSP+) - Body ground	Ignition switch ON	Below 1 V
BK1-4 (DSP-) - Body ground	Ignition switch ON	Below 1 V

NG → **Go to step 24**

OK

REPAIR OR REPLACE NO. 2 FLOOR WIRE

RS

21 CHECK SEAT POSITION SENSOR CIRCUIT (TO GROUND)

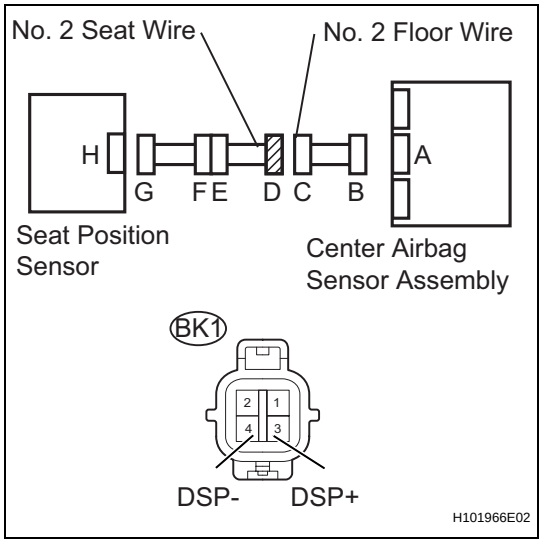

(a) Disconnect the No. 2 seat wire connector from the No. 2 floor wire.
(b) Measure the resistance.
Standard resistance

Tester Connection	Condition	Specified Condition
BK1-3 (DSP+) - Body ground	Always	1 MΩ or Higher
BK1-4 (DSP-) - Body ground	Always	1 MΩ or Higher

NG → **Go to step 25**

OK

REPAIR OR REPLACE NO. 2 FLOOR WIRE

22 CHECK NO.1 SEAT WIRE (FOR OPEN)

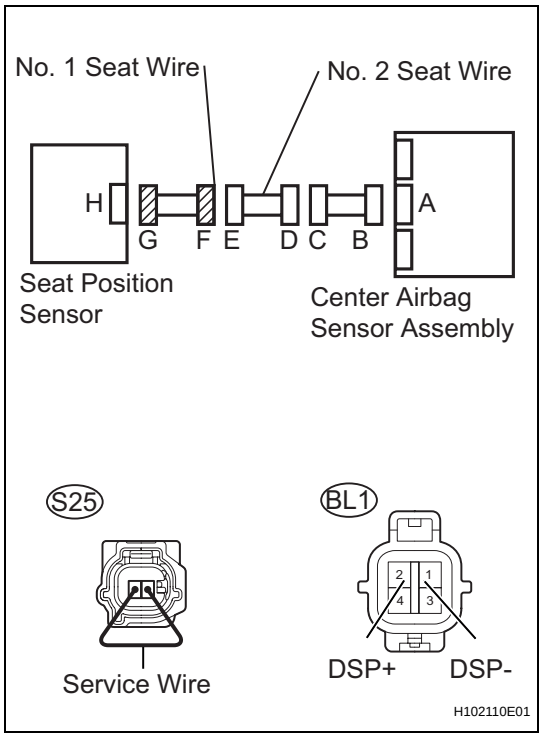

(a) Disconnect the No. 1 seat wire connector from the No. 2 seat wire.
HINT:
The service wire has already been inserted into connector G.
(b) Measure the resistance.
Standard resistance

Tester Connection	Condition	Specified Condition
BL1-2 (DSP+) - BL1-1 (DSP-)	Always	Below 1 Ω

NG → **REPAIR OR REPLACE NO. 1 SEAT WIRE**

OK

REPAIR OR REPLACE NO. 2 SEAT WIRE

RS

23 CHECK NO.1 SEAT WIRE (FOR SHORT)

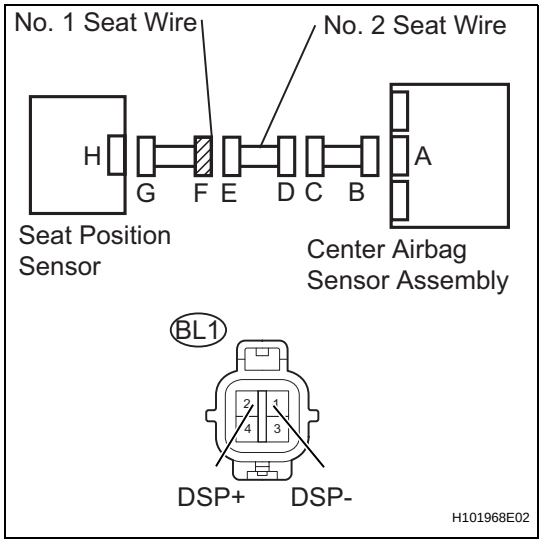

(a) Disconnect the No. 1 seat wire connector from the No. 2 seat wire.
(b) Measure the resistance.
Standard resistance

Tester Connection	Condition	Specified Condition
BL1-2 (DSP+) - BL1-1 (DSP-)	Always	1 MΩ or Higher

NG → **REPAIR OR REPLACE NO. 1 SEAT WIRE**

OK

REPAIR OR REPLACE NO. 2 SEAT WIRE

24 CHECK NO.1 SEAT WIRE (TO B+)

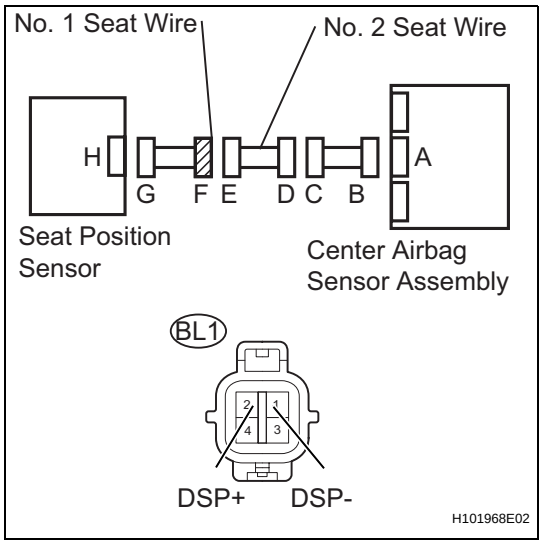

(a) Turn the ignition switch to the LOCK position.
(b) Disconnect the negative (-) terminal cable from the battery, and wait for at least 90 seconds.
(c) Disconnect the No. 1 seat wire connector from the No. 2 seat wire.
(d) Connect the negative (-) terminal cable to the battery, and wait for at least 2 seconds.
(e) Turn the ignition switch to the ON position.
(f) Measure the voltage.
Standard Voltage

Tester Connection	Condition	Specified Condition
BL1-2 (DSP+) - Body ground	Ignition switch ON	Below 1 V
BL1-1 (DSP-) - Body ground	Ignition switch ON	Below 1 V

NG → **REPAIR OR REPLACE NO. 1 SEAT WIRE**

OK

REPAIR OR REPLACE NO. 2 SEAT WIRE

RS

25 CHECK NO.1 SEAT WIRE (TO GROUND)

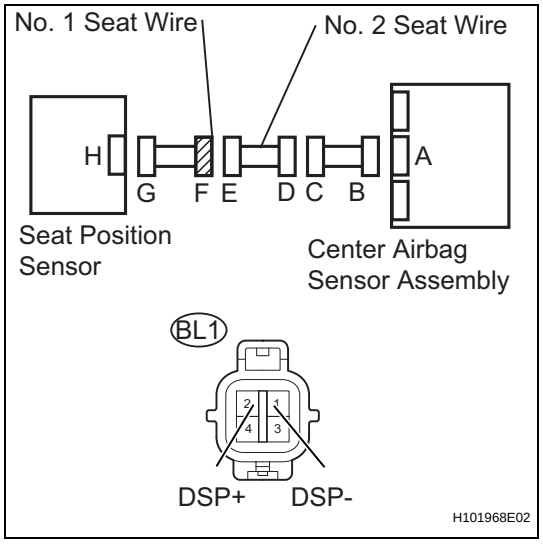

(a) Disconnect the No. 1 seat wire connector from the No. 2 seat wire.
(b) Measure the resistance.
Standard resistance

Tester Connection	Condition	Specified Condition
BL1-2 (DSP+) - Body ground	Always	1 MΩ or Higher
BL1-1 (DSP-) - Body ground	Always	1 MΩ or Higher

NG → **REPAIR OR REPLACE NO. 1 SEAT WIRE**

OK

REPAIR OR REPLACE NO. 2 SEAT WIRE

26 REPLACE SEAT POSITION SENSOR

(a) Turn the ignition switch to the LOCK position.
(b) Disconnect the negative (-) terminal cable from the battery, and wait for at least 90 seconds.
(c) Replace the seat position sensor (See page RS-620 or RS-617).

HINT:
Perform the inspection using parts from a normal vehicle when possible.

NEXT

27	CHECK CENTER AIRBAG SENSOR ASSEMBLY

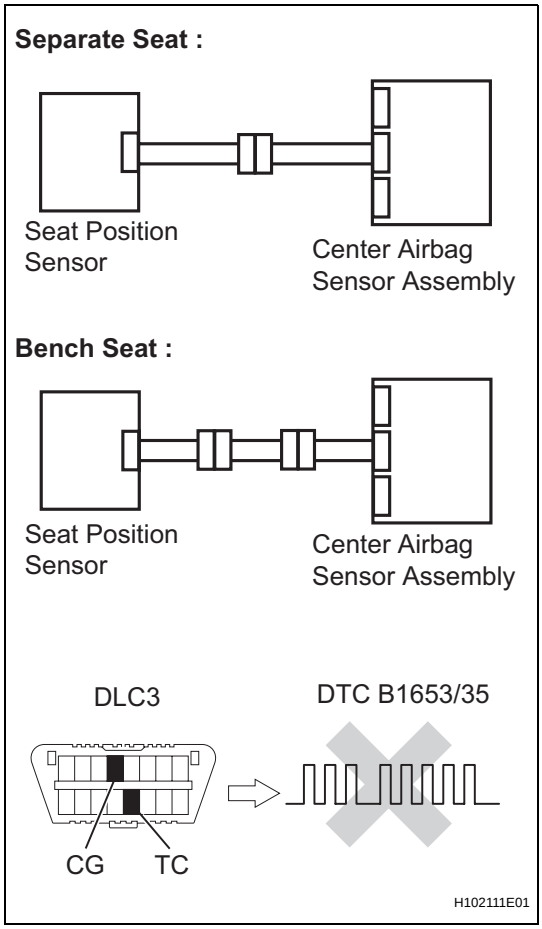

(a) Connect the negative (-) terminal cable to the battery, and wait for at least 2 seconds.
(b) Turn the ignition switch to the ON position, and wait for at least 60 seconds.
(c) Clear any DTCs stored in the memory (See page RS-34).
(d) Turn the ignition switch to the LOCK position.
(e) Turn the ignition switch to the ON position, and wait for at least 60 seconds.
(f) Check for DTCs (See page RS-34).

OK:

DTC B1653/35 is not output.

HINT:
DTCs other than B1653/35 may be output at this time, but they are not related to this check.

NG → **REPLACE CENTER AIRBAG SENSOR ASSEMBLY**

OK

END

DTC	B1655/37	Driver Side Seat Belt Buckle Switch Circuit Malfunction

DESCRIPTION

The seat belt buckle switch LH circuit consists of the center airbag sensor assembly and the front seat inner belt assembly LH (seat belt buckle switch LH).
DTC B1655/37 is set when a malfunction is detected in the seat belt buckle switch (driver seat side) circuit.

DTC No.	DTC Detections Conditions	Trouble Areas
B1655/37	• The center airbag sensor assembly receives a line short circuit signal, an open circuit signal, a short circuit to ground signal or a short circuit to B+ signal in the seat belt buckle switch (Driver seat side) circuit for 2 seconds • Front seat inner belt assembly LH malfunction • Center airbag sensor assembly malfunction	• No. 2 floor wire • No. 1 seat wire (*1) • No. 2 seat wire (*1) • Front seat inner belt assembly LH (Seat belt buckle switch LH) • Center airbag sensor assembly

*1: Bench seat

WIRING DIAGRAM

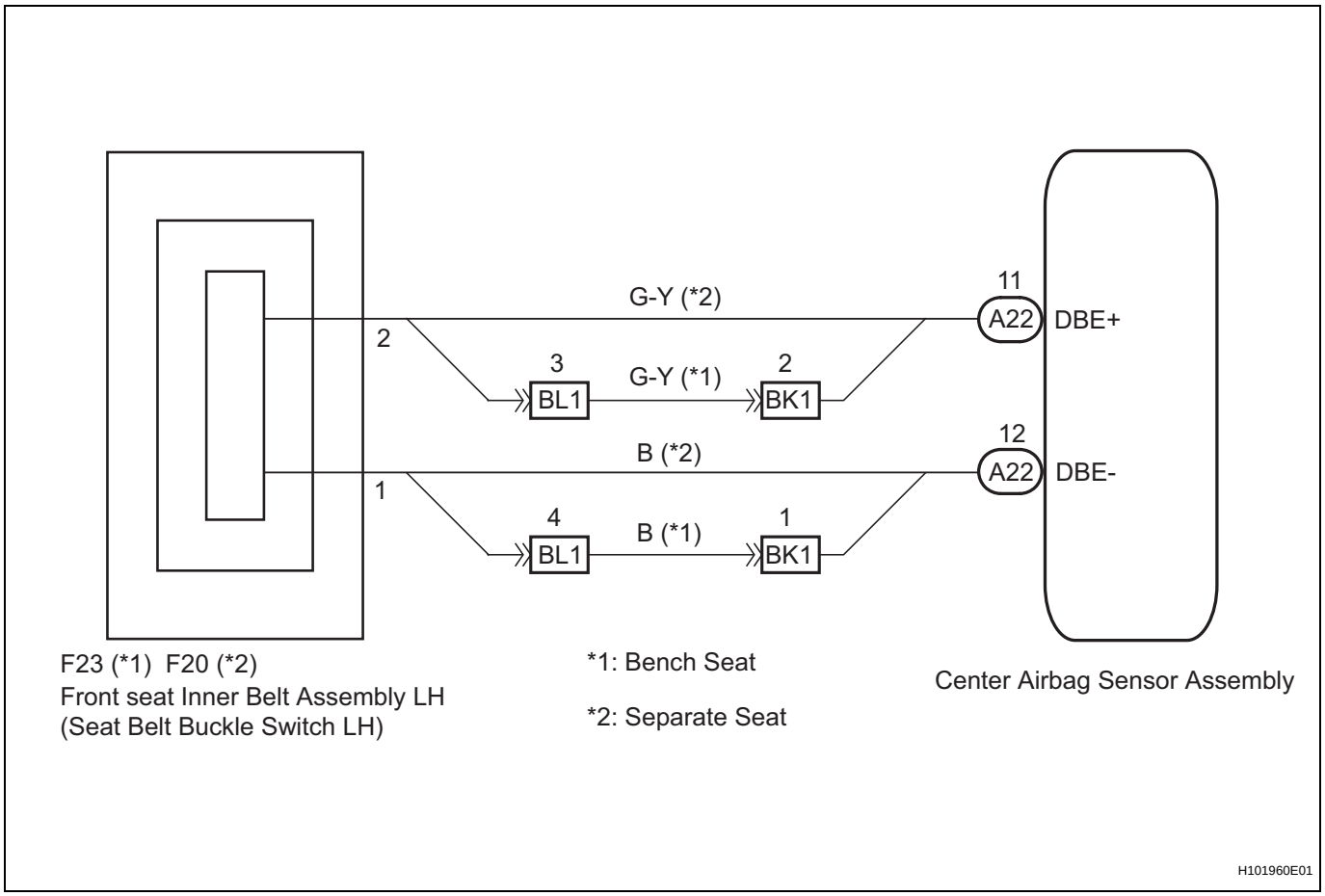

RS

CAUTION:
In order to prevent unexpected airbag deployment, disconnect the following connectors before inspecting parts such as wire harnesses, if the application of tester probes to the center airbag sensor assembly connector is necessary.
(a) Turn the ignition switch to the LOCK position.
(b) Disconnect the negative (-) terminal cable from the battery, and wait for at least 90 seconds.

(c) Disconnect the connectors from the center airbag sensor assembly.
(d) Disconnect the connectors from the steering pad.
(e) Disconnect the connector from the front passenger airbag assembly.
(f) Disconnect the connector from the front seat airbag assembly LH.
(g) Disconnect the connector from the front seat airbag assembly RH.
HINT:
Skip the following steps if side and curtain shield airbags are not fitted.
(h) Disconnect the connector from the curtain shield airbag assembly LH.
(i) Disconnect the connector from the curtain shield airbag assembly RH.
(j) Disconnect the connector from the front seat outer belt assembly LH.
(k) Disconnect the connector from the front seat outer belt assembly RH.

1	CHECK DTC

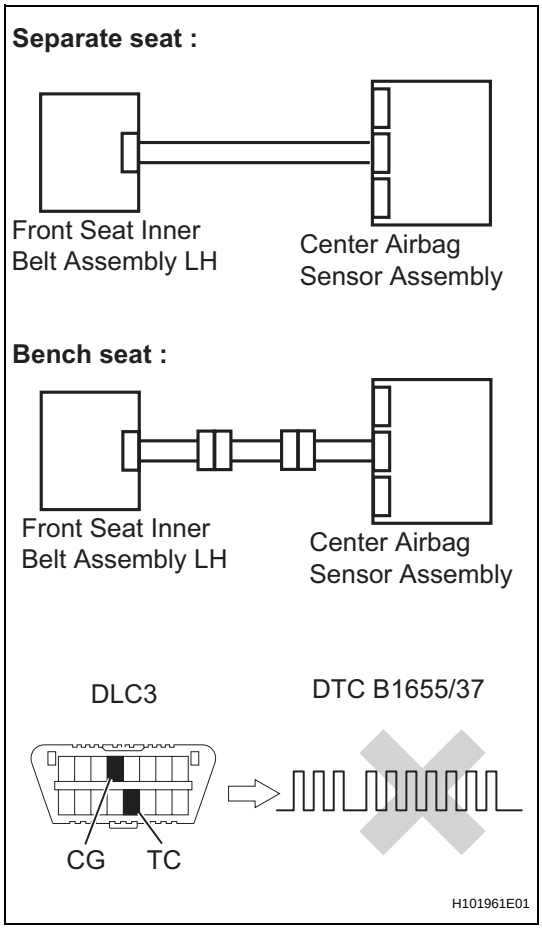

(a) Turn the ignition switch to the ON position.
(b) Clear any DTCs stored in the memory (See page RS-34).
(c) Turn the ignition switch to the LOCK position.
(d) Turn the ignition switch to the ON position and wait for at least 60 seconds.
(e) Check for DTCs (See page RS-34).
OK:
DTC B1655/37 is not output.
HINT:
DTCs other than B1655/37 may be output at this time, but they are not related to this check.

OK → **USE SIMULATION METHOD TO CHECK**

NG

2	CHECK CONNECTION OF CONNECTORS

(a) Turn the ignition switch to the LOCK position.
(b) Disconnect the negative (-) terminal cable from the battery, and wait for at least 90 seconds.
(c) Check that the connectors are properly connected to the center airbag sensor assembly and the front seat inner belt assembly LH.

RS

NG → CONNECT CONNECTORS

OK

3 CHECK CONNECTORS

(a) Check that the connectors (on the center airbag sensor assembly side and front seat inner belt assembly LH side) are not damaged (See page IN-34).
OK:
The connectors are not deformed or damaged.

Condition	Proceed to
Normal (separate seat)	A
Normal (bench seat)	B
Abnormal	C

B → Go to step 9

C → REPAIR OR REPLACE WIRE HARNESS

A

4 CHECK DRIVER SIDE SEAT BELT BUCKLE SWITCH CIRCUIT (FOR OPEN)

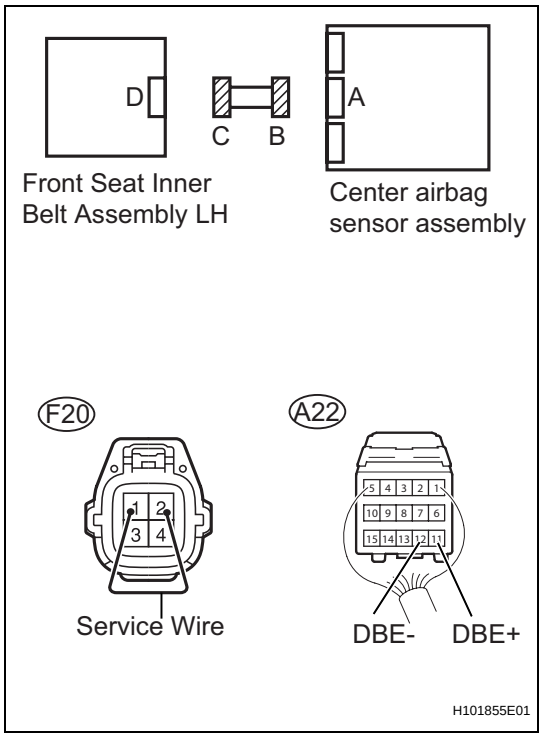

(a) Disconnect the connectors from the center airbag sensor assembly and the front seat inner belt assembly LH.
(b) Using a service wire, connect F20-2 and F20-1 of connector C.

NOTICE:
Do not forcibly insert the service wire into the terminals of the connector when connecting.

(c) Measure the resistance.
Standard resistance

Tester Connection	Condition	Specified Condition
A22-11 (DBE+) - A22-12 (DBE-)	Always	Below 1 Ω

NG → REPAIR OR REPLACE NO. 2 FLOOR WIRE

OK

RS

5 CHECK DRIVER SIDE SEAT BELT BUCKLE SWITCH CIRCUIT (FOR SHORT)

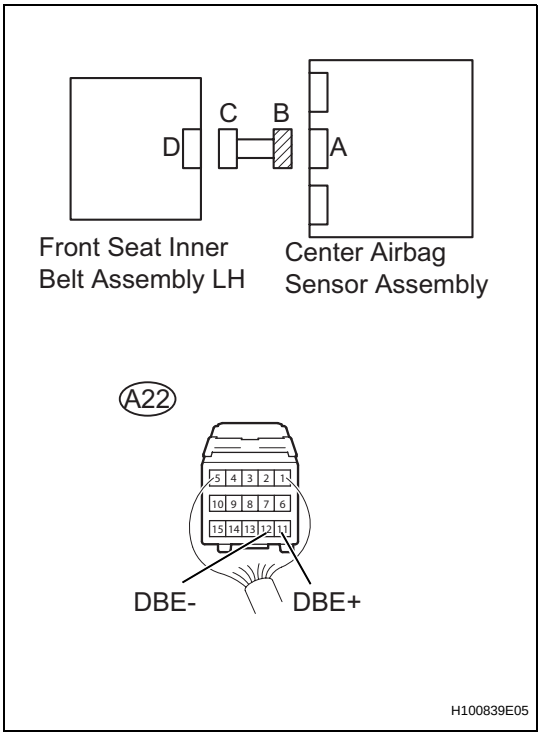

(a) Disconnect the service wire from connector C.
(b) Measure the resistance.
Standard resistance

Tester Connection	Condition	Specified Condition
A22-11 (DBE+) - A22-12 (DBE-)	Always	1 MΩ or Higher

NG → **REPAIR OR REPLACE NO. 2 FLOOR WIRE**

OK

6 CHECK DRIVER SIDE SEAT BELT BUCKLE SWITCH CIRCUIT (TO B+)

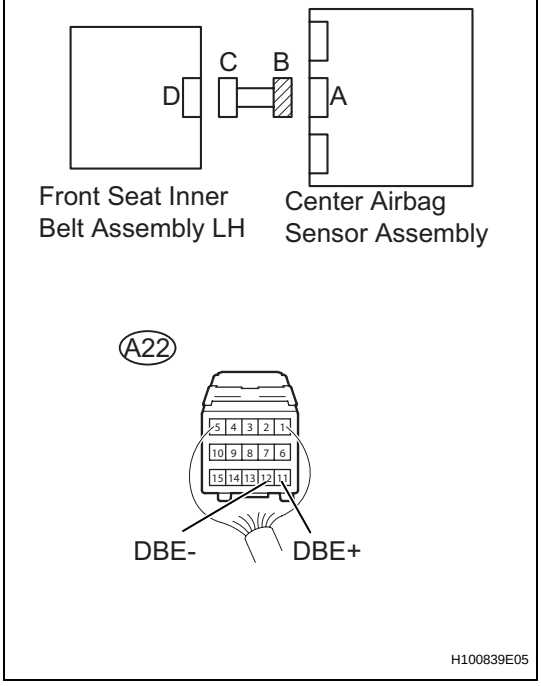

(a) Connect the negative (-) terminal cable to the battery, and wait for at least 2 seconds.
(b) Turn the ignition switch to the ON position.
(c) Measure the voltage.
Standard voltage

Tester Connection	Condition	Specified Condition
A22-11 (DBE+) - Body ground	Ignition switch ON	Below 1 V
A22-12 (DBE-) - Body ground	Ignition switch ON	Below 1 V

NG → **REPAIR OR REPLACE NO. 2 FLOOR WIRE**

OK

RS

7 CHECK DRIVER SIDE SEAT BELT BUCKLE SWITCH CIRCUIT (TO GROUND)

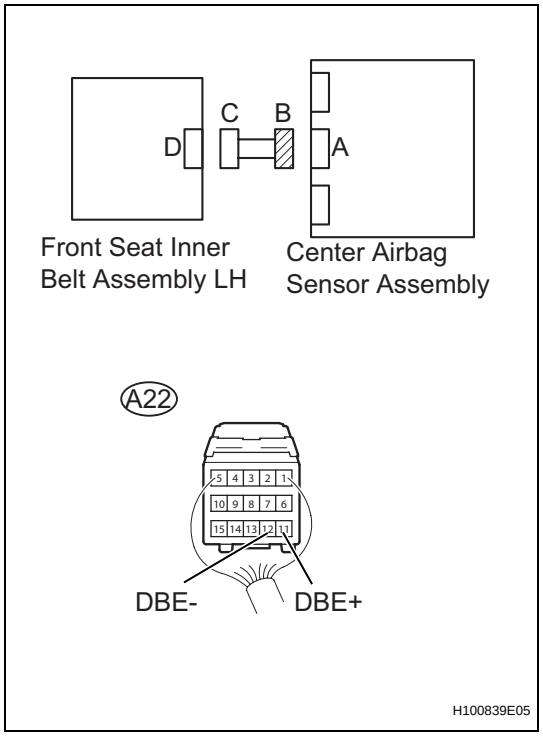

(a) Turn the ignition switch to the LOCK position.
(b) Disconnect the negative (-) terminal cable from the battery, and wait for at least 90 seconds.
(c) Measure the resistance.

Standard resistance

Tester Connection	Condition	Specified Condition
A22-11 (DBE+) - Body ground	Always	1 MΩ or Higher
A22-12 (DBE-) - Body ground	Always	1 MΩ or Higher

NG → **REPAIR OR REPLACE NO. 2 FLOOR WIRE**

OK

8 CHECK FRONT SEAT INNER BELT ASSEMBLY LH

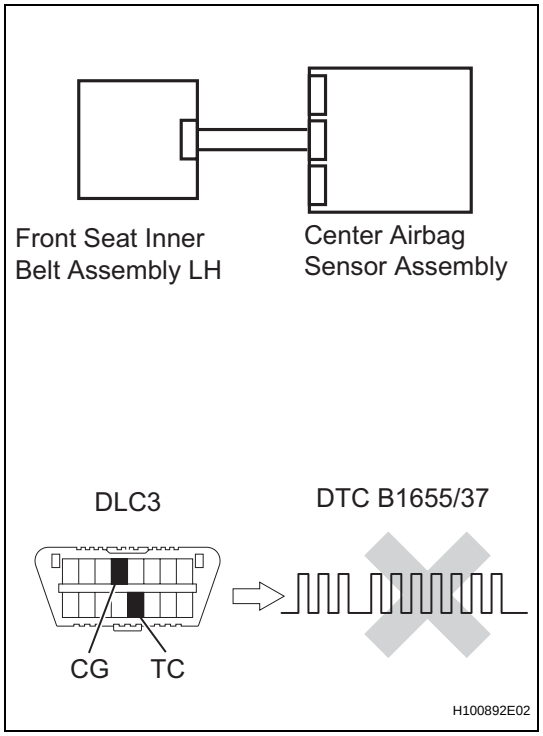

(a) Connect the connectors to the center airbag sensor assembly.
(b) Connect the connector to the front seat inner belt assembly LH.
(c) Connect the negative (-) terminal cable to the battery, and wait for at least 2 seconds.
(d) Turn the ignition switch to the ON position, and wait for at least 60 seconds.
(e) Clear any DTCs stored in the memory (See page RS-34).
(f) Turn the ignition switch to the LOCK position.
(g) Turn the ignition switch to the ON position, and wait for at least 60 seconds.
(h) Check for DTCs (See page RS-34).

OK:

DTC B1655/37 is not output.

HINT:
DTCs other than B1655/37 may be output at this time, but they are not related to this check.

NG → **Go to step 22**

RS

OK

USE SIMULATION METHOD TO CHECK

9	CHECK DRIVER SIDE SEAT BELT BUCKLE SWITCH CIRCUIT (FOR OPEN)

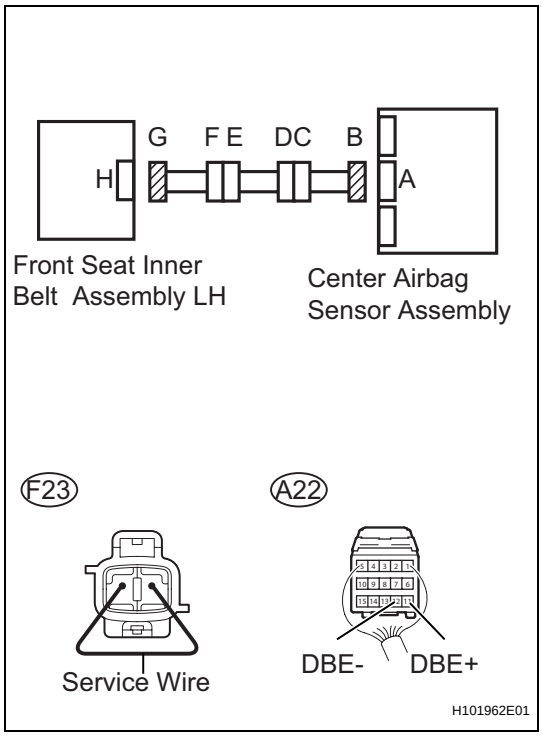

(a) Disconnect the connectors from the center airbag sensor assembly and the seat inner belt assembly LH.
(b) Using a service wire, connect F23-1 and F23-2 of connector G.

NOTICE:
Do not forcibly insert the service wire into the terminals of the connector when connecting.

(c) Measure the resistance.
Standard resistance

Tester Connection	Condition	Specified Condition
A22-11 (DBE+) - A22-12 (DBE-)	Always	Below 1 Ω

NG → **Go to step 14**

OK

RS

10 CHECK DRIVER SIDE SEAT BELT BUCKLE SWITCH CIRCUIT (FOR SHORT)

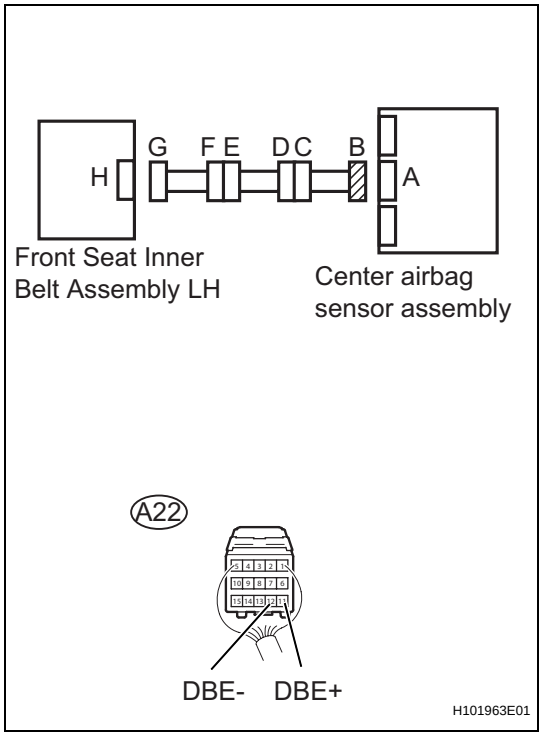

(a) Disconnect the service wire from connector G.
(b) Measure the resistance.
Standard resistance

Tester Connection	Condition	Specified Condition
A22-11 (DBE+) - A22-12 (DBE-)	Always	1 MΩ or Higher

NG → **Go to step 15**

OK

11 CHECK DRIVER SIDE SEAT BELT BUCKLE SWITCH CIRCUIT (TO B+)

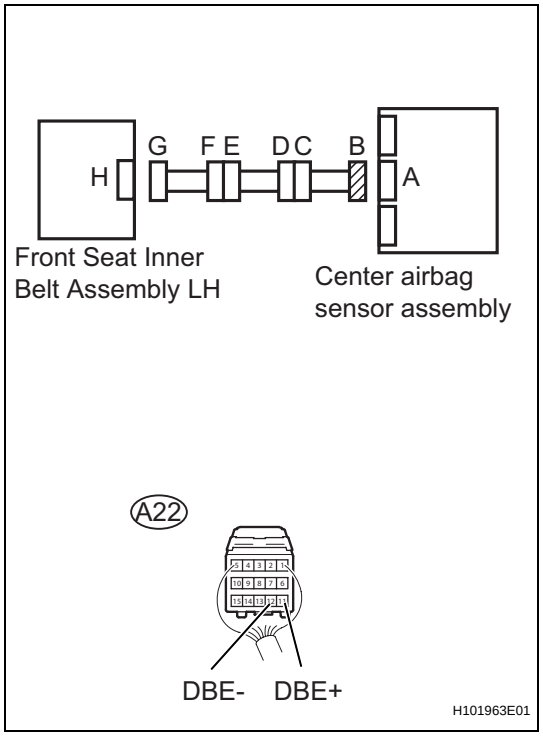

(a) Connect the negative (-) terminal cable to the battery, and wait for at least 2 seconds.
(b) Turn the ignition switch to the ON position.
(c) Measure the voltage.
Standard voltage

Tester Connection	Condition	Specified Condition
A22-11 (DBE+) - Body ground	Ignition switch ON	Below 1 V
A22-12 (DBE-) - Body ground	Ignition switch ON	Below 1 V

NG → **Go to step 16**

OK

RS

12 CHECK DRIVER SIDE SEAT BELT BUCKLE SWITCH CIRCUIT (TO GROUND)

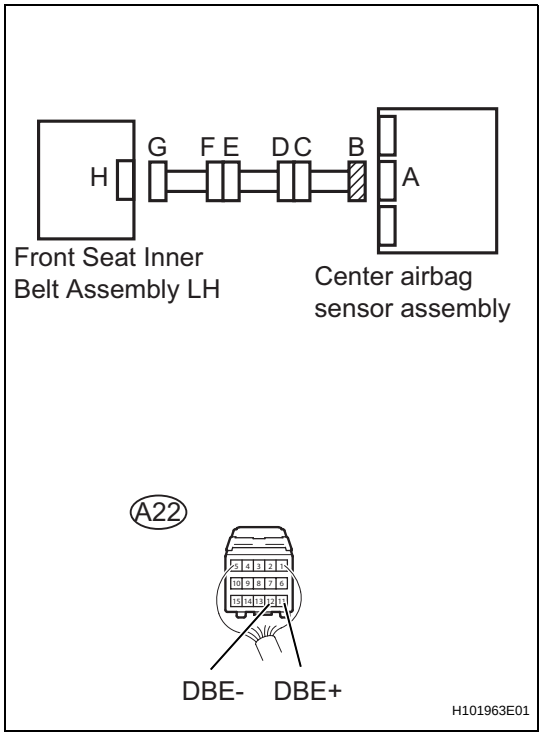

(a) Turn the ignition switch to the LOCK position.
(b) Disconnect the negative (-) terminal cable from the battery, and wait for at least 90 seconds.
(c) Measure the resistance.

Standard resistance

Tester Connection	Condition	Specified Condition
A22-11 (DBE+) - Body ground	Always	1 MΩ or Higher
A22-12 (DBE-) - Body ground	Always	1 MΩ or Higher

NG → **Go to step 17**

OK

13 CHECK FRONT SEAT INNER BELT ASSEMBLY LH

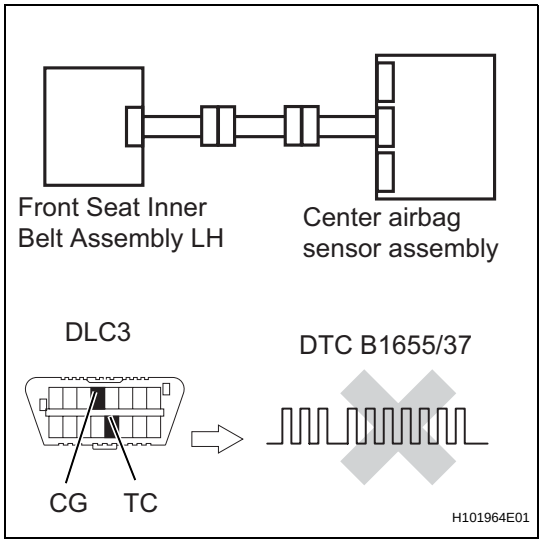

(a) Connect the connectors to the center airbag sensor assembly.
(b) Connect the connectors to the front seat inner belt assembly LH.
(c) Connect the negative (-) terminal cable to the battery, and wait for at least 2 seconds.
(d) Turn the ignition switch to the ON position, and wait for at least 60 seconds.
(e) Clear any DTCs stored in the memory (See page RS-34).
(f) Turn the ignition switch to the LOCK position.
(g) Turn the ignition switch to the ON position and wait for at least 60 seconds.
(h) Check for DTCs (See page RS-34).

OK:

DTC B1655/37 is not output.

HINT:
DTCs other than B1653/35 may be output at this time, but they are not related to this check.

NG → **Go to step 22**

RS

OK

USE SIMULATION METHOD TO CHECK

14 CHECK DRIVER SIDE SEAT BELT BUCKLE SWITCH CIRCUIT (FOR OPEN)

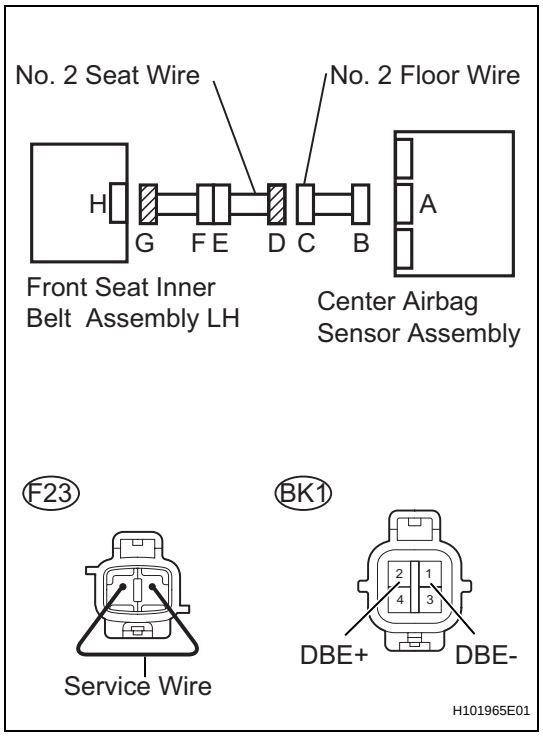

(a) Disconnect the No. 2 seat wire connector from the No. 2 floor wire.

HINT:

The service wire has already been inserted into connector G.

(b) Measure the resistance.

Standard resistance

Tester Connection	Condition	Specified Condition
BK1-2 (DBE+) - BK1-1 (DBE-)	Always	Below 1 Ω

NG → **Go to step 18**

OK

REPAIR OR REPLACE NO. 2 FLOOR WIRE

RS

15 CHECK DRIVER SIDE SEAT BELT BUCKLE SWITCH CIRCUIT (FOR SHORT)

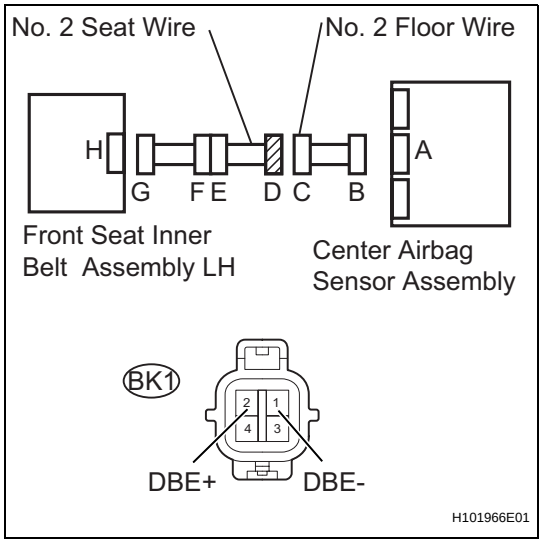

(a) Disconnect the No. 2 seat wire connector from the No. 2 floor wire.
(b) Measure the resistance.
Standard resistance

Tester Connection	Condition	Specified Condition
BK1-2 (DBE+) - BK1-1 (DBE-)	Always	1 MΩ or Higher

NG → **Go to step 19**

OK

REPAIR OR REPLACE NO. 2 FLOOR WIRE

16 CHECK DRIVER SIDE SEAT BELT BUCKLE SWITCH CIRCUIT (TO B+)

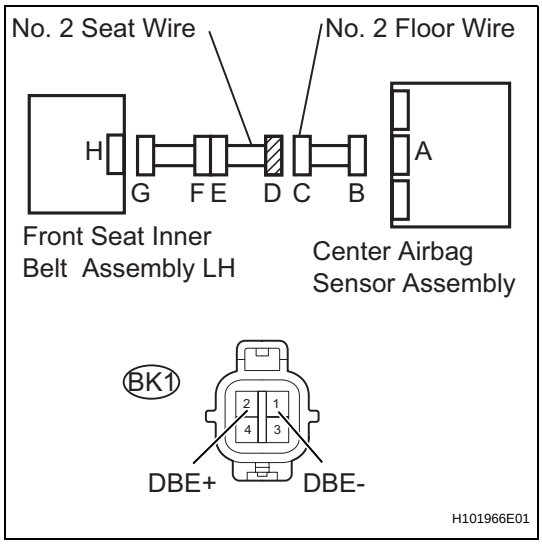

(a) Turn the ignition switch to the LOCK position.
(b) Disconnect the negative (-) terminal cable from the battery, and wait for at least 90 seconds.
(c) Disconnect the No. 2 seat wire connector from the No. 2 floor wire.
(d) Connect the negative (-) terminal cable to the battery, and wait for at least 2 seconds.
(e) Turn the ignition switch to the ON position.
(f) Measure the voltage.
Standard voltage

Tester Connection	Condition	Specified Condition
BK1-2 (DBE+) - Body ground	Ignition switch ON	Below 1 V
BK1-1 (DBE-) - Body ground	Ignition switch ON	Below 1 V

NG → **Go to step 20**

OK

REPAIR OR REPLACE NO. 2 FLOOR WIRE

RS

17 CHECK DRIVER SIDE SEAT BELT BUCKLE SWITCH CIRCUIT (TO GROUND)

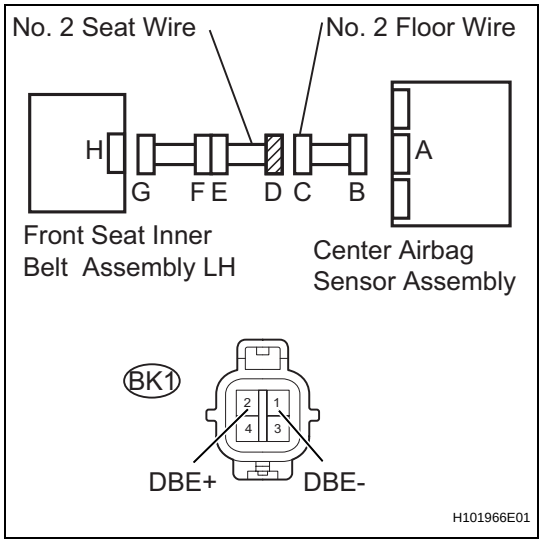

(a) Disconnect the No. 2 seat wire connector from the No. 2 floor wire.
(b) Measure the resistance.
Standard resistance

Tester Connection	Condition	Specified Condition
BK1-2 (DBE+) - Body ground	Always	1 MΩ or Higher
BK1-1 (DBE-) - Body ground	Always	1 MΩ or Higher

NG → **Go to step 21**

OK

REPAIR OR REPLACE NO. 2 FLOOR WIRE

18 CHECK NO. 1 SEAT WIRE (FRO OPEN)

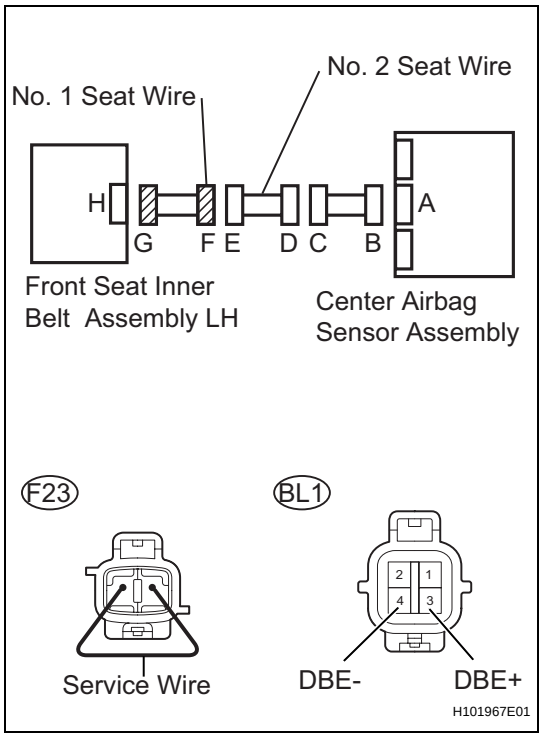

(a) Disconnect the No. 2 seat wire connector from the No. 2 seat wire.

HINT:
The service wire has already been inserted into connector G.

(b) Measure the resistance.
Standard resistance

Tester Connection	Condition	Specified Condition
BL1-3 (DBE+) - BL1-4 (DBE-)	Always	Below 1 Ω

NG → **REPAIR OR REPLACE NO. 1 SEAT WIRE**

OK

REPAIR OR REPLACE NO. 2 SEAT WIRE

RS

19 CHECK NO. 1 SEAT WIRE (FOR SHORT)

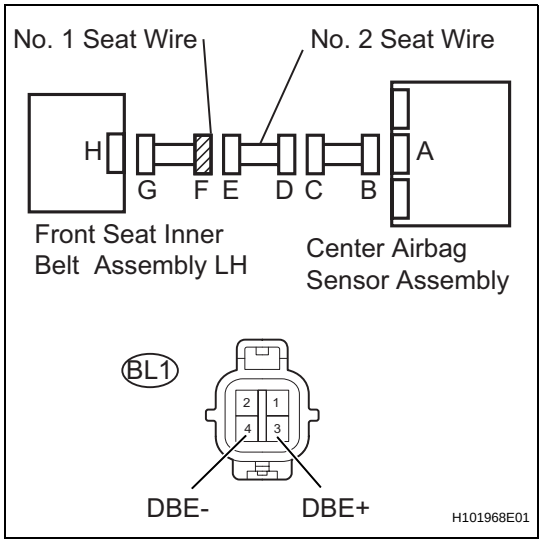

(a) Disconnect the No. 1 seat wire connector from the No. 2 seat wire.
(b) Measure the resistance.
Standard resistance

Tester Connection	Condition	Specified Condition
BL1-3 (DBE+) - BL1-4 (DBE-)	Always	1 MΩ or Higher

NG → **REPAIR OR REPLACE NO. 1 SEAT WIRE**

OK

REPAIR OR REPLACE NO. 2 SEAT WIRE

20 CHECK NO. 1 SEAT WIRE (TO B+)

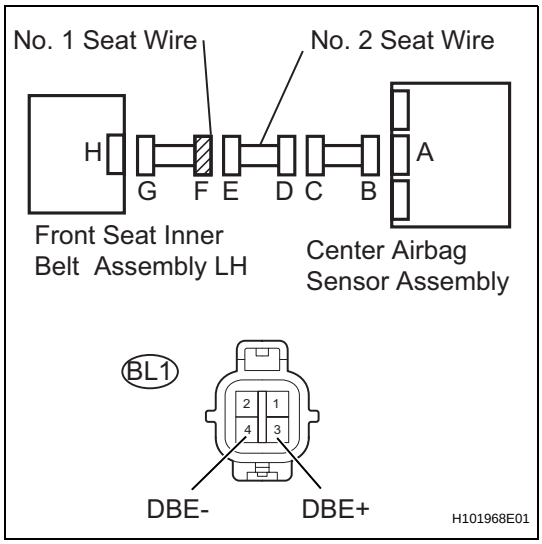

(a) Turn the ignition switch to the LOCK position.
(b) Disconnect the negative (-) terminal cable from the battery, and wait for at least 90 seconds.
(c) Disconnect the No. 1 seat wire connector from the No. 2 seat wire.
(d) Connect the negative (-) terminal cable to the battery, and wait for at least 2 seconds.
(e) Turn the ignition switch to the ON position.
(f) Measure the voltage.
Standard voltage

Tester Connection	Condition	Specified Condition
BL1-3 (DBE+) - Body ground	Ignition switch ON	Below 1 V
BL1-4 (DBE-) - Body ground	Ignition switch ON	Below 1 V

NG → **REPAIR OR REPLACE NO. 1 SEAT WIRE**

OK

REPAIR OR REPLACE NO. 2 SEAT WIRE

RS

21 CHECK NO. 1 SEAT WIRE (TO GROUND)

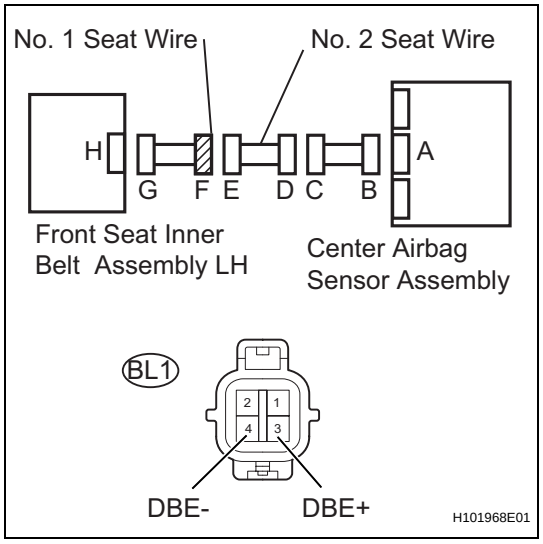

(a) Disconnect the No. 1 seat wire connector from the No. 2 seat wire.
(b) Measure the resistance.
Standard resistance

Tester Connection	Condition	Specified Condition
BL1-3 (DBE+) - Body ground	Always	1 MΩ or Higher
BL1-4 (DBE-) - Body ground	Always	1 MΩ or Higher

NG → **REPAIR OR REPLACE NO. 1 SEAT WIRE**

OK

REPAIR OR REPLACE NO. 2 SEAT WIRE

22 REPLACE FRONT SEAT INNER BELT ASSEMBLY LH

(a) Turn the ignition switch to the LOCK position.
(b) Disconnect the negative (-) terminal cable from the battery, and wait for at least 90 seconds.
(c) Replace the front seat inner belt assembly LH (See page SB-12 or SB-8).

HINT:
Perform the inspection using parts from a normal vehicle when possible.

NEXT

RS

23	CHECK CENTER AIRBAG SENSOR ASSEMBLY

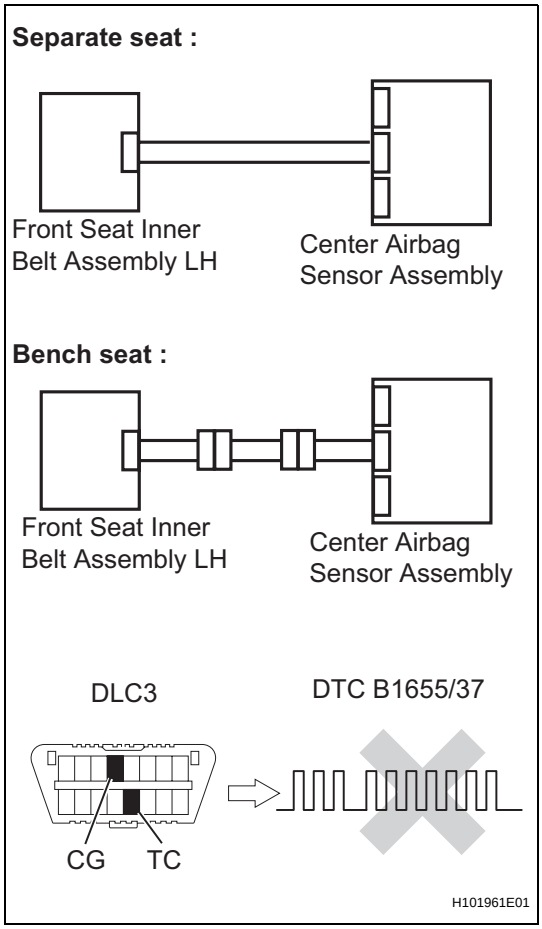

(a) Connect the negative (-) terminal cable to the battery, and wait for at least 2 seconds.
(b) Turn the ignition switch to the ON position, and wait for at least 60 seconds.
(c) Clear any DTCs stored in the memory (See page RS-34).
(d) Turn the ignition switch to the LOCK position.
(e) Turn the ignition switch to the ON position, and wait for at least 60 seconds.
(f) Check for DTCs (See page RS-34).

OK:

DTC B1655/37 is not output.

HINT:
DTCs other than B1655/37 may be output at this time, but they are not related to this check.

NG → **REPLACE CENTER AIRBAG SENSOR ASSEMBLY**

OK

END

DTC	B1660/43	Passenger Airbag ON / OFF Indicator Circuit Malfunction

DESCRIPTION

The passenger airbag ON/OFF indicator light circuit consists of the center airbag sensor assembly and the passenger seat belt warning light assembly.
This circuit indicates the operation condition of the front passenger airbag assembly, the front seat airbag assembly RH and passenger side seat belt pretensioner.
DTC B1660/43 is set when a malfunction is detected in the passenger airbag ON/OFF indicator circuit.

DTC No.	DTC Detections Conditions	Trouble Areas
B1660/43	• The center airbag sensor assembly receives a line short circuit signal, an open circuit signal, a short circuit to ground signal or a short circuit to B+ signal in the passenger airbag ON/OFF indicator circuit for 2 seconds • Passenger seat belt warning lamp assembly malfunction • Center airbag sensor assembly malfunction	• Instrument panel wire • Hazard warning signal switch assembly (Passenger airbag ON/OFF indicator) • Center airbag sensor assembly

WIRING DIAGRAM

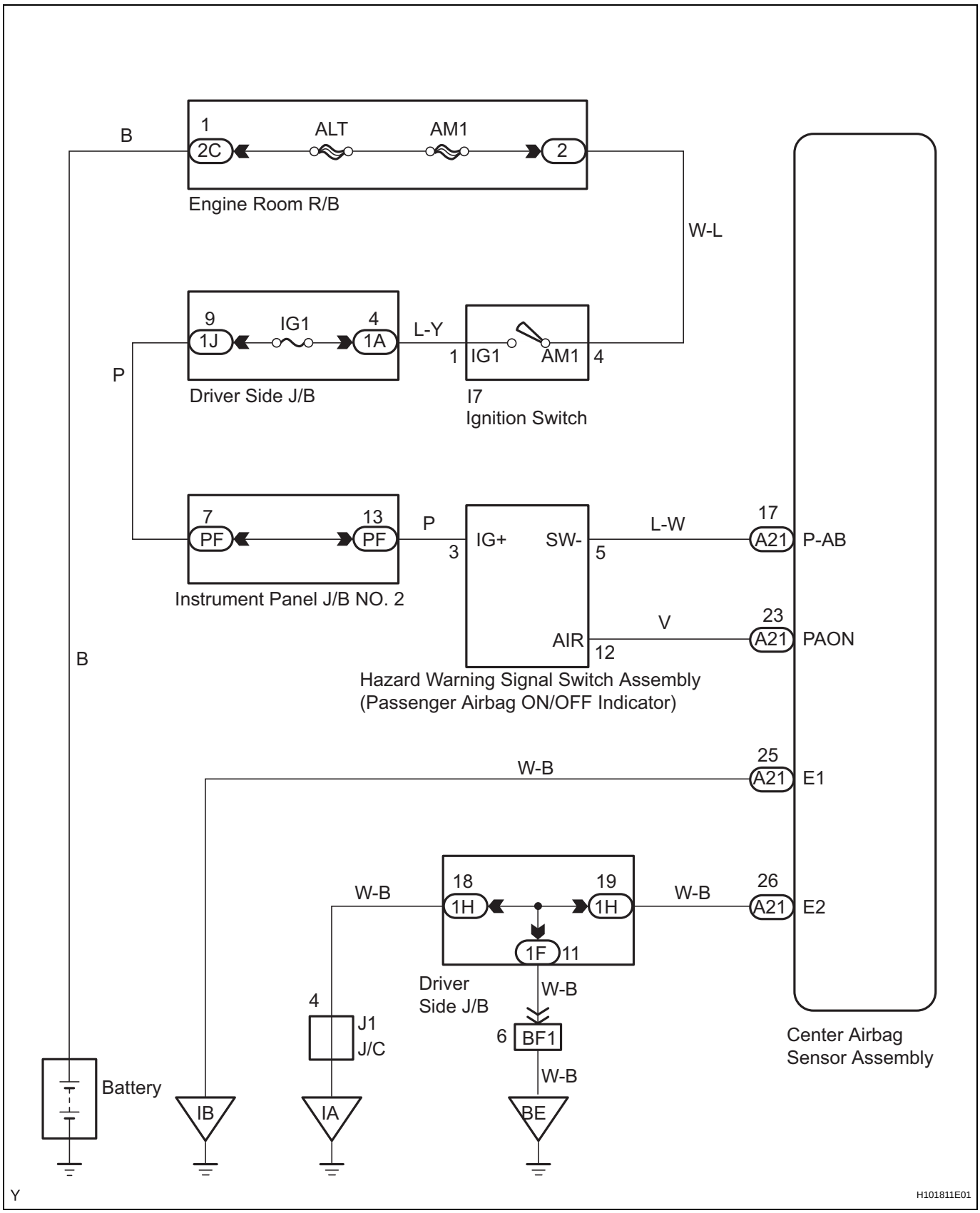

RS

CAUTION:
In order to prevent unexpected airbag deployment, disconnect the following connectors before inspecting parts such as wire harnesses, if the application of tester probes to the center airbag sensor assembly connector is necessary.
(a) Turn the ignition switch to the LOCK position.
(b) Disconnect the negative (-) terminal cable from the battery, and wait for at least 90 seconds.
(c) Disconnect the connectors from the center airbag sensor assembly.
(d) Disconnect the connectors from the steering pad.
(e) Disconnect the connector from the front passenger airbag assembly.
(f) Disconnect the connector from the front seat airbag assembly LH.
(g) Disconnect the connector from the front seat airbag assembly RH.
HINT:
Skip the following steps if side and curtain shield airbags are not fitted.
(h) Disconnect the connector from the curtain shield airbag assembly LH.
(i) Disconnect the connector from the curtain shield airbag assembly RH.
(j) Disconnect the connector from the front seat outer belt assembly LH.
(k) Disconnect the connector from the front seat outer belt assembly RH.

1	CHECK PASSENGER AIRBAG ON/OFF INDICATOR OPERATION

(a) Turn the ignition switch to the ON position.
(b) Check the passenger airbag ON/OFF indicator operation.
HINT:
Refer to the normal condition of the passenger airbag ON/OFF indicator (See page RS-484 or RS-362).

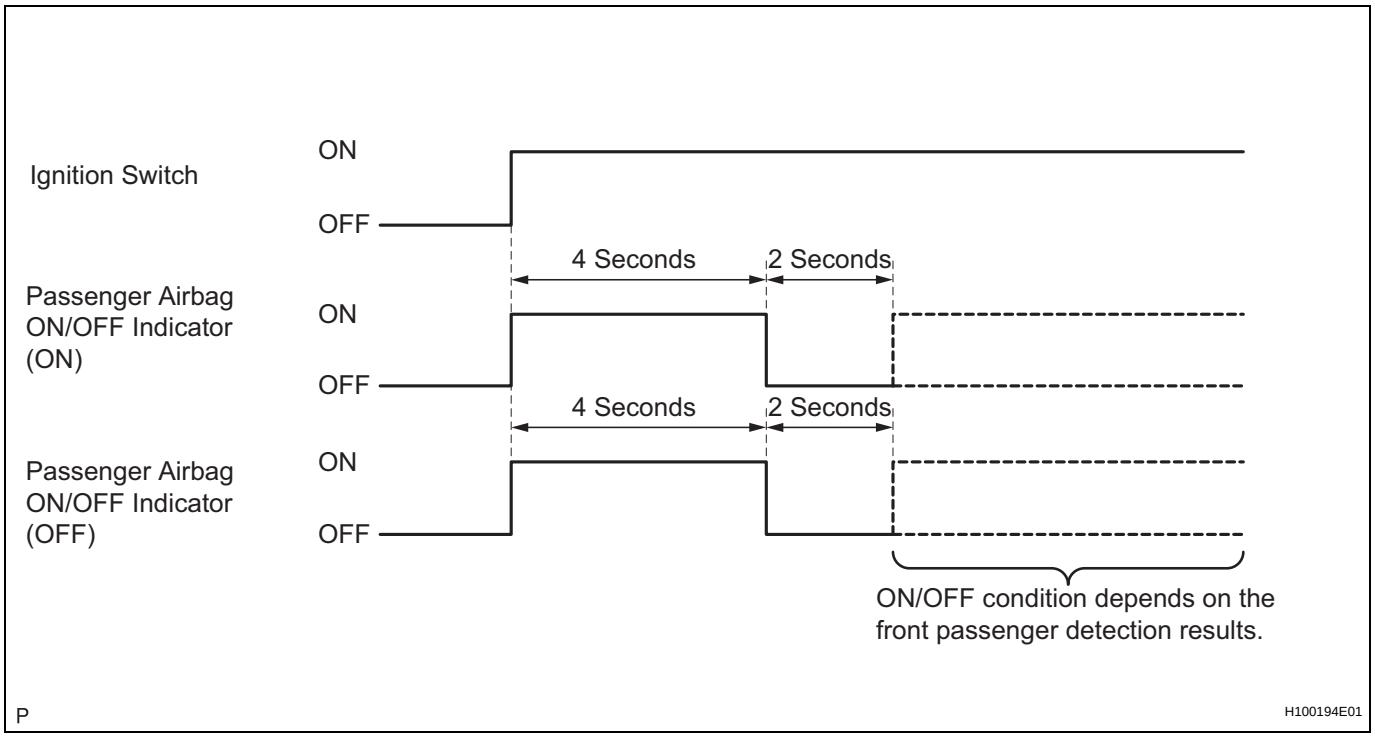

Result

ON/OFF Indicator Illumination	Proceed to
Always ON	A
OFF	B

RS

B → Go to step 9

A

2 CHECK CONNECTION OF CONNECTORS

(a) Turn the ignition switch to the LOCK position.
(b) Disconnect the negative (-) terminal cable from the battery, and wait for at least 90 seconds.
(c) Check that the connectors are properly connected to the center airbag sensor assembly and the hazard warning signal switch assembly.

OK:

The connectors are properly connected.

NG → **CONNECT CONNECTORS**

OK

3 CHECK CONNECTORS

(a) Check that the connectors (on the center airbag sensor assembly side and passenger seat belt warning light assembly side) are not damaged (See page IN-34).

OK:

The connectors are not deformed or damaged.

NG → **REPAIR OR REPLACE WIRE HARNESS**

OK

4 CHECK HAZARD WARNING SIGNAL SWITCH ASSEMBLY (PASSENGER AIRBAG ON/OFF INDICATOR)

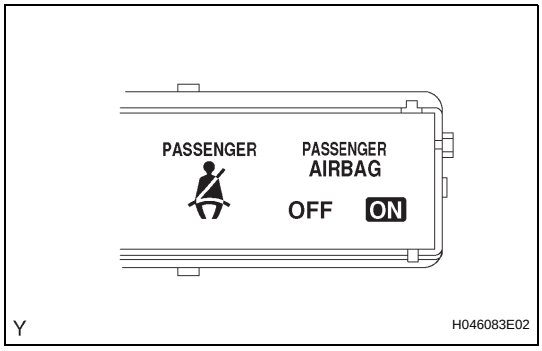

(a) Turn the ignition switch to the LOCK position.
(b) Disconnect the negative (-) terminal cable from the battery, and wait for at least 90 seconds.
(c) Disconnect the connector from the center airbag sensor assembly.
(d) Connect the negative (-) terminal cable to the battery, and wait for at least 2 seconds.
(e) Turn the ignition switch to the ON position.
(f) Check the passenger airbag ON/OFF indicator operation.

OK:

Neither ON nor OFF passenger airbag ON/OFF indicator comes on.

OK → **Go to step 17**

NG

RS

5 CHECK INSTRUMENT PANEL WIRE (TO GROUND)

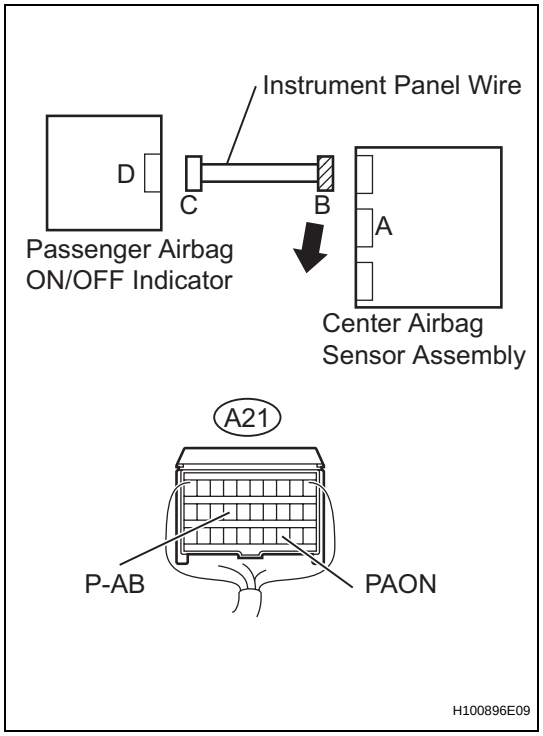

(a) Turn the ignition switch to the LOCK position.
(b) Disconnect the negative (-) terminal cable from the battery, and wait for at least 90 seconds.
(c) Disconnect the connector from the passenger seat belt warning light assembly.
(d) Measure the resistance.

Standard resistance

Tester Connection	Condition	Specified Condition
A21-17 (P-AB) - Body ground	Always	1 MΩ or Higher
A21-23 (PAON) - Body ground	Always	1 MΩ or Higher

NG → **REPAIR OR REPLACE INSTRUMENT PANEL WIRE**

OK

6 CHECK INSTRUMENT PANEL WIRE (FOR SHORT)

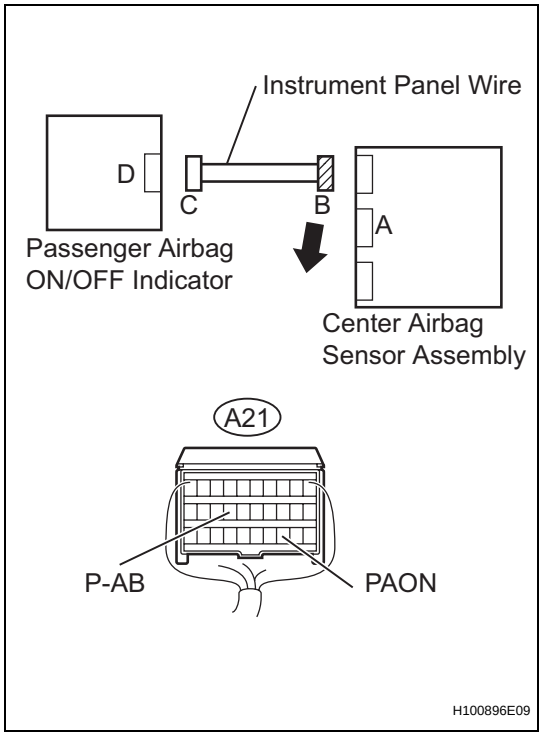

(a) Measure the resistance.

Standard resistance

Tester Connection	Condition	Specified Condition
A21-17 (P-AB) - A21-23 (PAON)	Always	1 MΩ or Higher

NG → **REPAIR OR REPLACE INSTRUMENT PANEL WIRE**

OK

RS

7 CHECK INSTRUMENT PANEL WIRE (FOR OPEN)

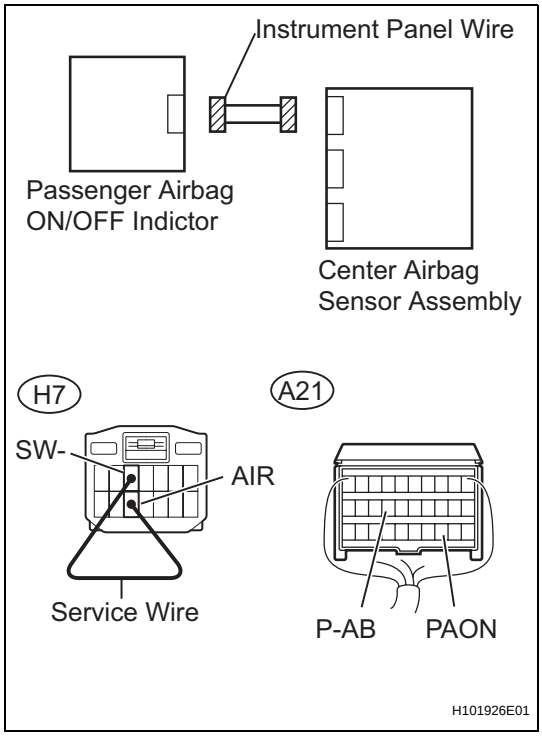

(a) Using a service wire, connect H7-5 (SW-) and H7-12 (AIR) of connector C.

NOTICE:

Do not forcibly insert the service wire into the terminals of the connector when connecting.

(b) Measure the resistance.

Standard resistance

Tester Connection	Condition	Specified Condition
A21-23 (PAON) - A21-17 (P-AB)	Always	Below 1 Ω

NG → **REPAIR OR REPLACE INSTRUMENT PANEL WIRE**

OK

8 CHECK INSTRUMENT PANEL WIRE (TO B+)

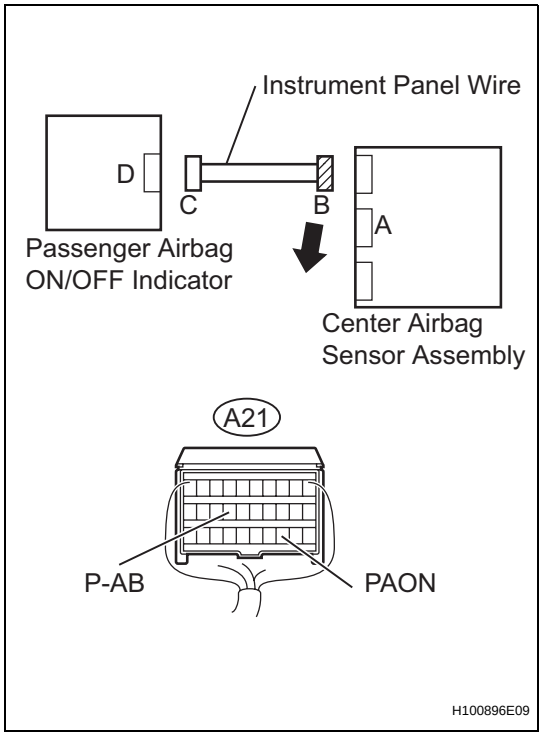

(a) Disconnect the service wire from connector C.

(b) Connect the negative (-) terminal cable to the battery, and wait for at least 2 seconds.

(c) Turn the ignition switch to the ON position.

(d) Measure the voltage.

Standard voltage

Tester Connection	Condition	Specified Condition
A21-23 (PAON) - Body ground	Ignition switch ON	Below 1 V
A21-17 (P-AB) - Body ground	Ignition switch ON	Below 1 V

NG → **REPAIR OR REPLACE INSTRUMENT PANEL WIRE**

RS

OK

INSPECT HAZARD WARNING SIGNAL SWITCH ASSEMBLY

9	CHECK CONNECTION OF CONNECTORS

(a) Turn the ignition switch to the LOCK position.
(b) Disconnect the negative (-) terminal cable from the battery, and wait for at least 90 seconds.
(c) Check that the connectors are properly connected to the center airbag sensor assembly and the hazard warning signal switch assembly.
OK:
The connectors are properly connected.

NG → **CONNECT CONNECTORS**

OK

10	CHECK CONNECTORS

(a) Check that the connectors (on the center airbag sensor assembly side and passenger seat belt warning light assembly side) are not damaged (See page IN-34).
OK:
The connectors are not deformed or damaged.

NG → **REPAIR OR REPLACE WIRE HARNESS**

OK

RS

11 CHECK INSTRUMENT PANEL WIRE (TO GROUND)

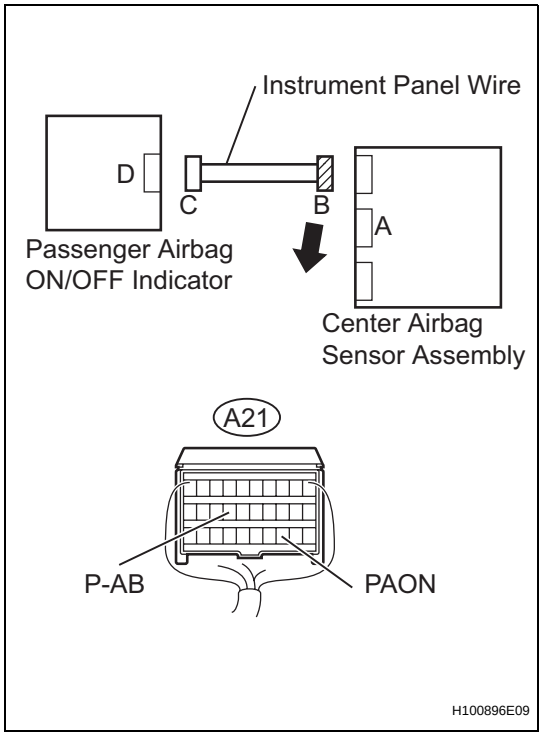

(a) Disconnect the connector from the passenger seat belt warning light assembly.
(b) Measure the resistance.
Standard resistance

Tester Connection	Condition	Specified Condition
A21-17 (P-AB) - Body ground	Always	1 MΩ or Higher
A21-23 (PAON) - Body ground	Always	1 MΩ or Higher

NG → **REPAIR OR REPLACE INSTRUMENT PANEL WIRE**

OK

12 CHECK INSTRUMENT PANEL WIRE (FOR SHORT)

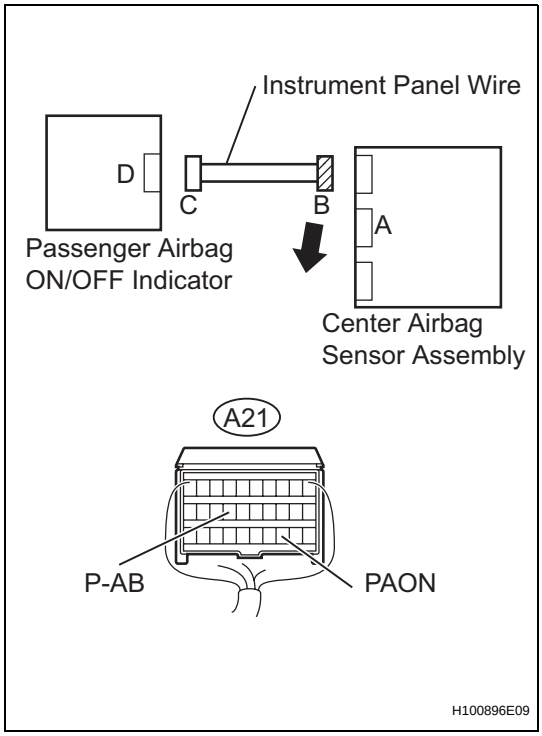

(a) Measure the resistance.
Standard resistance

Tester Connection	Condition	Specified Condition
A21-17 (P-AB) - A21-23 (PAON)	Always	1 MΩ or Higher

NG → **REPAIR OR REPLACE INSTRUMENT PANEL WIRE**

OK

RS

13 CHECK INSTRUMENT PANEL WIRE (FOR OPEN)

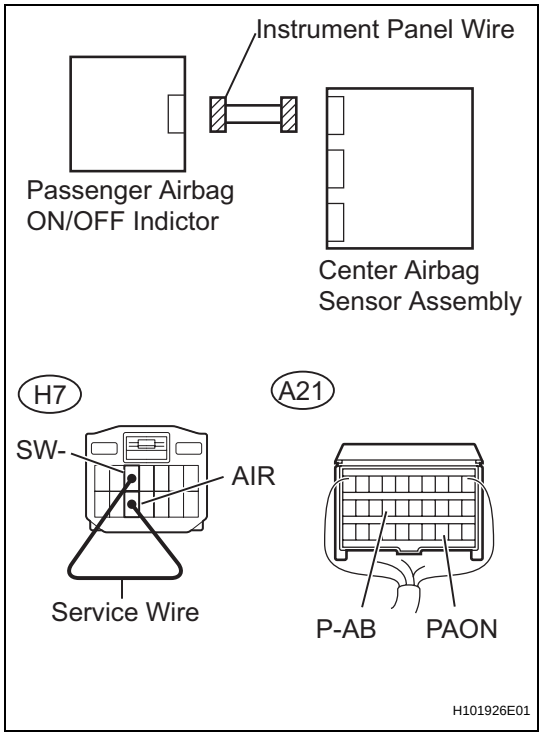

(a) Using a service wire, connect H7-5 (SW-) and H7-12 (AIR) of connector C.

NOTICE:

Do not forcibly insert the service wire into the terminals of the connector when connecting.

(b) Measure the resistance.

Standard resistance

Tester Connection	Condition	Specified Condition
A21-23 (PAON) - A21-17 (P-AB)	Always	Below 1 Ω

NG → **REPAIR OR REPLACE INSTRUMENT PANEL WIRE**

OK

14 CHECK INSTRUMENT PANEL WIRE (TO B+)

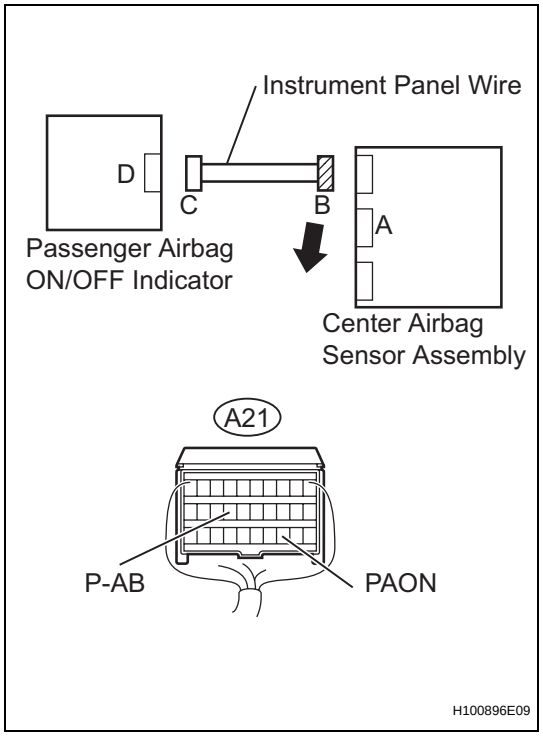

(a) Disconnect the service wire from connector C.

(b) Connect the negative (-) terminal cable to the battery, and wait for at least 2 seconds.

(c) Turn the ignition switch to the ON position.

(d) Measure the voltage.

Standard voltage

Tester Connection	Condition	Specified Condition
A21-23 (PAON) - Body ground	Ignition switch ON	Below 1 V
A21-17 (P-AB) - Body ground	Ignition switch ON	Below 1 V

NG → **REPAIR OR REPLACE INSTRUMENT PANEL WIRE**

OK

RS

15 CHECK WIRE HARNESS (POWER SOURCE)

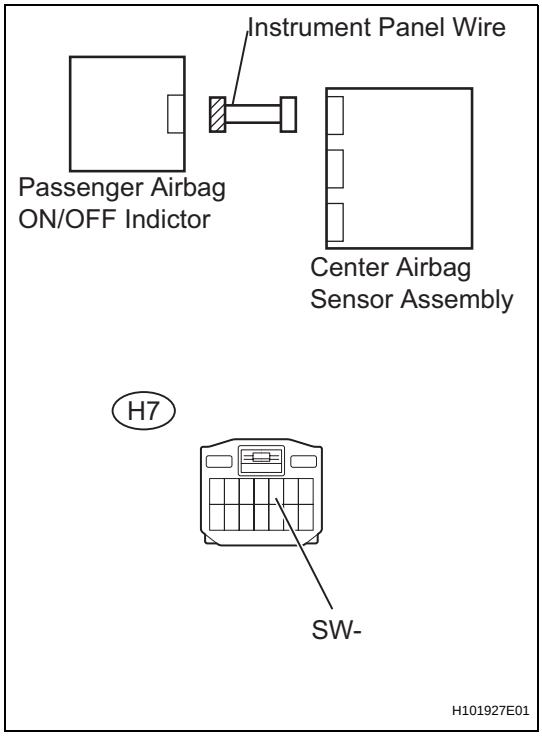

(a) Connect the negative (-) terminal cable to the battery, and wait for at least 2 seconds.
(b) Turn the ignition switch to the ON position.
(c) Measure the voltage.

Standard voltage

Tester Connection	Condition	Specified Condition
H7-3 (IG+) - Body ground	Ignition switch ON	10 to 14 V

NG → **REPAIR OR REPLACE POWER SOURCE CIRCUIT**

OK

16 CHECK HAZARD WARNING SIGNAL SWITCH ASSEMBLY

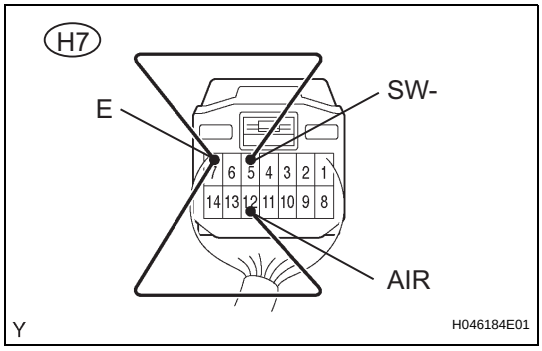

(a) Turn the ignition switch to the LOCK position.
(b) Disconnect the negative (-) terminal cable from the battery, and wait for at least 90 seconds.
(c) Connect the connector to the hazard warning signal switch.
(d) Connect the negative (-) terminal cable to the battery, and wait for at least 2 seconds.
(e) Using a service wire, connect H7-5 (SW-) and H7-7 (E) of hazard warning signal switch assembly connector.
(f) Using a service wire, connect H7-12 (AIR) and H7-7 (E) of hazard warning signal switch assembly connector.
(g) Turn the ignition switch to the ON position.
(h) Check the passenger airbag ON/OFF indicator operation.

OK:

Passenger airbag ON/OFF indicator comes on

NG → **INSPECT HAZARD WARNING SIGNAL SWITCH ASSEMBLY**

OK

RS

17	CHECK CENTER AIRBAG SENSOR ASSEMBLY

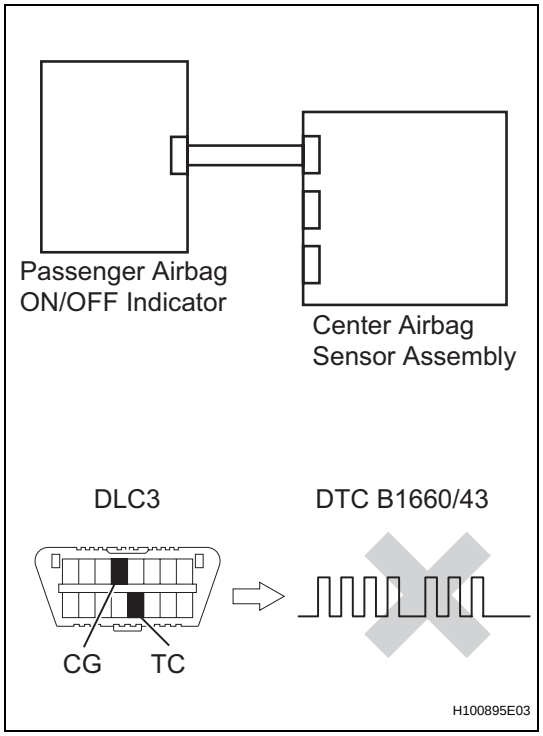

(a) Turn the ignition switch to the LOCK position.
(b) Disconnect the negative (-) terminal cable from the battery, and wait for at least 90 seconds.
(c) Connect the connectors to the center airbag sensor assembly.
(d) Connect the connector to the passenger seat belt warning light assembly.
(e) Connect the negative (-) terminal cable to the battery, and wait for at least 2 seconds.
(f) Turn the ignition switch to the ON position, and wait for at least 60 seconds.
(g) Clear any DTCs stored in the memory (See page RS-34).
(h) Turn the ignition switch to the LOCK position.
(i) Turn the ignition switch to the ON position, and wait for at least 60 seconds.
(j) Check for DTCs (See page RS-34).

OK:

DTC B1660/43 is not output.

HINT:
DTCs other than B1660/43 may be output at this time, but they are not related to this check.

NG → **REPLACE CENTER AIRBAG SENSOR ASSEMBLY**

OK

USE SIMULATION METHOD TO CHECK

RS

DTC	B1662/45	Indicator Light Circuit Malfunction

DESCRIPTION

The indicator lamp circuit consists of the center airbag sensor assembly and the combination meter.
DTC B1662/45 is set when a malfunction is detected in the indicator light circuit.

DTC No.	DTC Detecting Conditions	Trouble Areas
B1622/45	• The center airbag sensor assembly receives a line short circuit signal, an open circuit signal, a short circuit to ground signal or a short circuit to B+ signal in the indicator light circuit for 2 seconds • Indicator light circuit malfunction • Center airbag sensor assembly malfunction	• Combination meter • Center airbag sensor assembly • Instrument panel wire

WIRING DIAGRAM

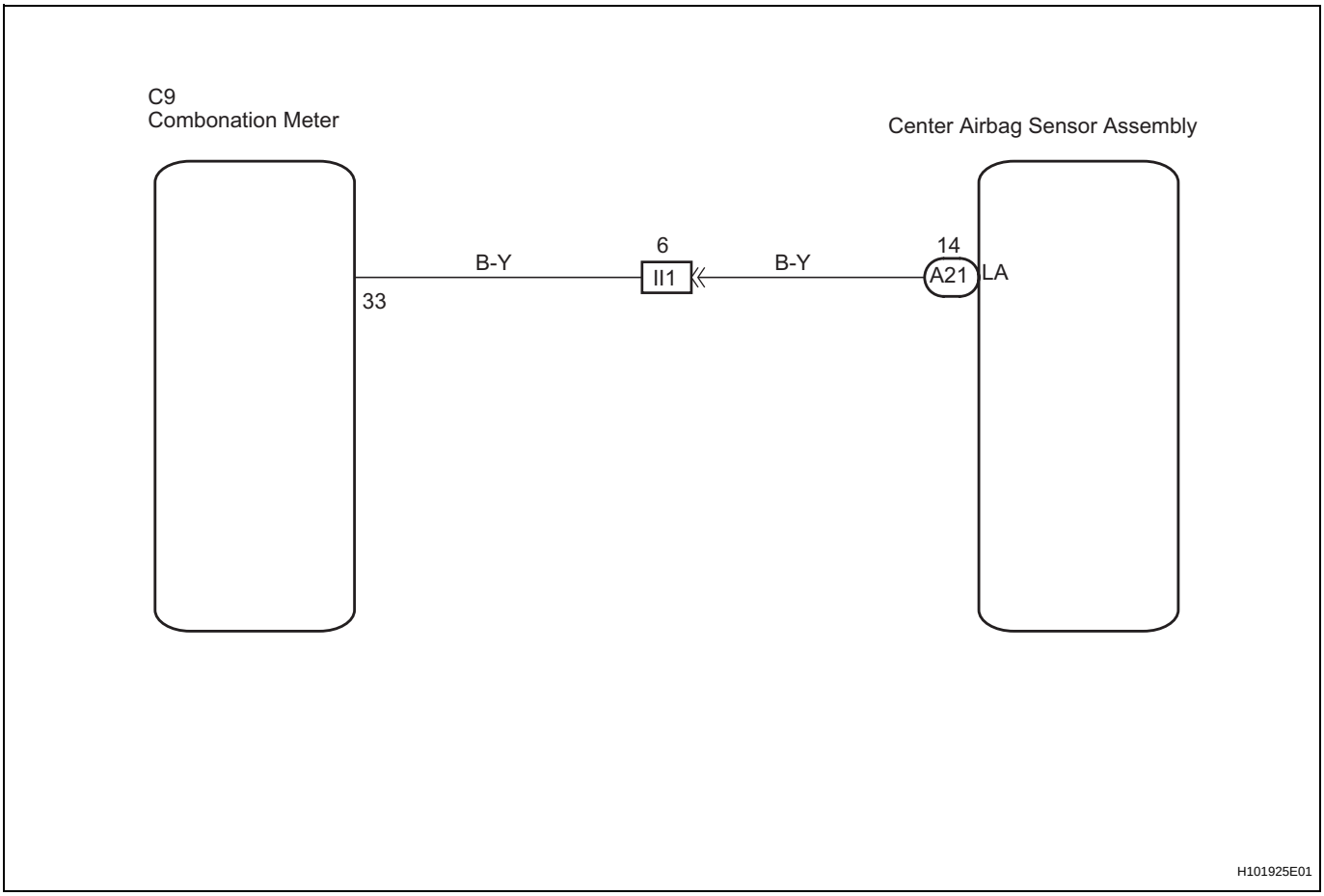

RS

CAUTION:
In order to prevent unexpected airbag deployment, disconnect the following connectors before inspecting parts such as wire harnesses, if the application of tester probes to the center airbag sensor assembly connector is necessary.
(a) Turn the ignition switch to the LOCK position.
(b) Disconnect the negative (-) terminal cable from the battery, and wait for at least 90 seconds.
(c) Disconnect the connectors from the center airbag sensor assembly.
(d) Disconnect the connectors from the steering pad.
(e) Disconnect the connector from the front passenger airbag assembly.
(f) Disconnect the connector from the front seat outer belt assembly LH.

(g) Disconnect the connector from the front seat outer belt assembly RH.
HINT:
Skip steps (f) to (i) if side and curtain shield airbags are not fitted.
(h) Disconnect the connector from the front seat airbag assembly LH.
(i) Disconnect the connector from the front seat airbag assembly RH.
(j) Disconnect the connector from the curtain shield airbag assembly LH.
(k) Disconnect the connector from the curtain shield airbag assembly RH.

1	CHECK DTC

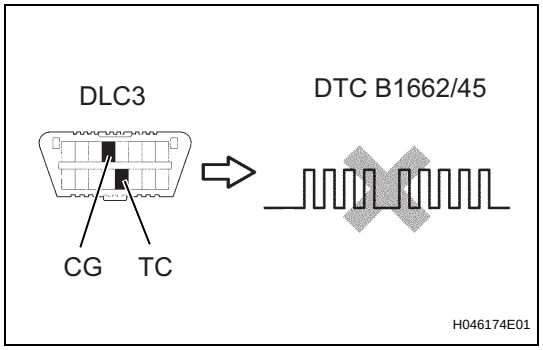

(a) Turn the ignition switch to the ON position.
(b) Clear any DTCs stored in the memory (See page RS-34).
(c) Turn the ignition switch to the LOCK position.
(d) Turn the ignition switch to the ON position and wait for at least 60 seconds.
(e) Check the DTCs (See page RS-34).
OK:
DTC B1662/45 is not output.
HINT:
DTCs other than B1662/45 may be output at this time, but they are not related to this check.

OK → **OTHERS USE SIMULATION METHOD TO CHECK**

NG

2	CHECK CONNECTORS

(a) Turn the ignition switch to the LOCK position.
(b) Disconnect the negative (-) terminal cable from the battery, and wait for at least 90 seconds.
(c) Check that the connectors are properly connected to the center airbag sensor assembly and the combination meter assembly.
OK:
The connectors are properly connected.

NG → **CONNECT CONNECTOR**

OK

3	CHECK CONNECTORS

(a) Check that the connectors (on the center airbag sensor assembly side and combination meter side) are not damaged (See page IN-34).
OK:
The connectors are not deformed or damaged.

NG → **REPAIR OR REPLACE WIRE HARNESS**

RS

OK

4 CHECK INSTRUMENT PANEL WIRE (FOR OPEN)

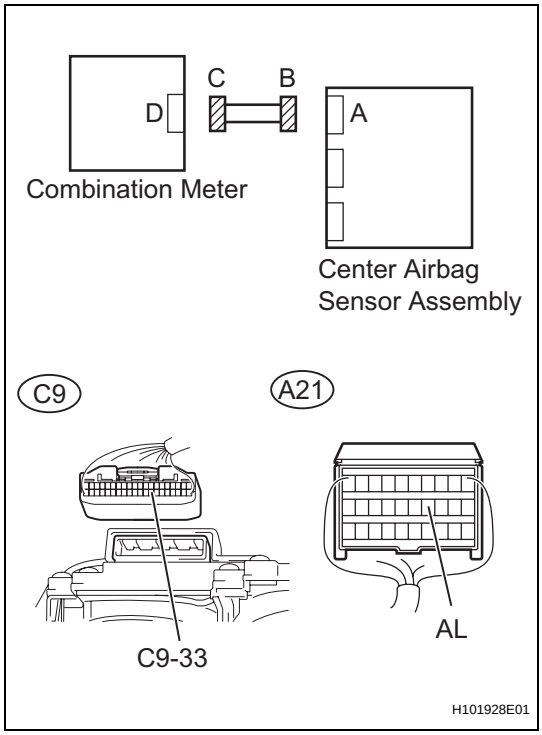

(a) Disconnect the connectors from the center airbag sensor assembly and the combination meter.
(b) Measure the resistance.
Standard resistance

Tester Connection	Condition	Specified Condition
A21-14 (LA) - C9-33	Always	Below 1 Ω

NG → **REPAIR OR REPLACE INSTRUMENT PANEL WIRE**

OK

5 CHECK INSTRUMENT PANEL WIRE (TO GROUND)

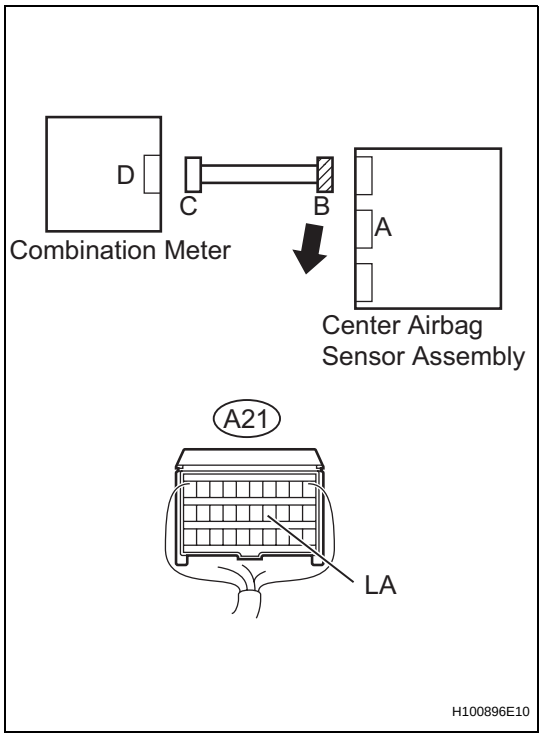

(a) Measure the resistance.
Standard resistance

Tester Connection	Condition	Specified Condition
A21-14 (LA) - Body ground	Always	1 MΩ or Higher

NG → **REPAIR OR REPLACE INSTRUMENT PANEL WIRE**

RS

OK

6 CHECK INSTRUMENT PANEL WIRE (TO B+)

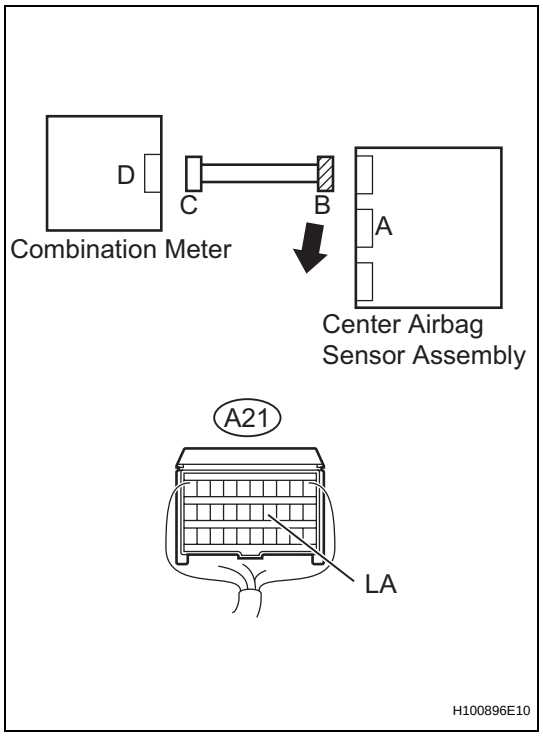

(a) Connect the negative (-) terminal cable to the battery, and wait for at least 2 seconds.
(b) Turn the ignition switch to the ON position.
(c) Measure the voltage.

Standard voltage

Tester Connection	Condition	Specified Condition
A21-14 (LA) - Body ground	Ignition switch ON	Below 1 V

NG → **REPAIR OR REPLACE INSTRUMENT PANEL WIRE**

OK

7 CHECK CENTER AIRBAG SENSOR ASSEMBLY

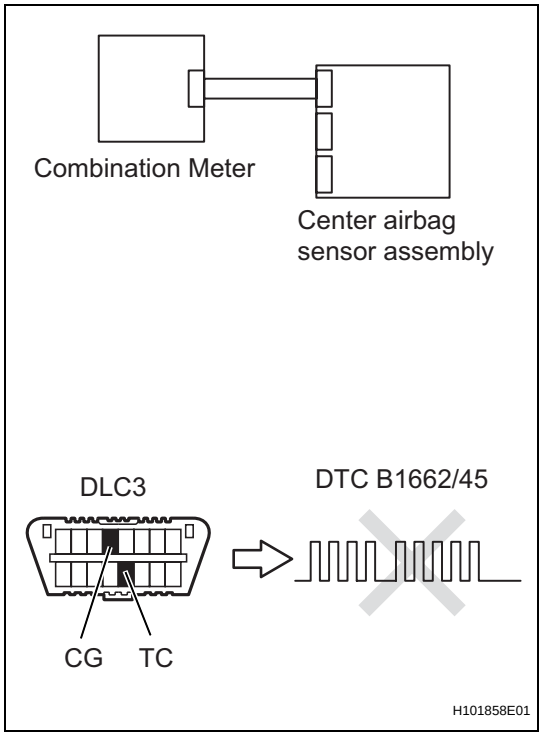

(a) Turn the ignition switch to the LOCK position.
(b) Disconnect the negative (-) terminal cable from the battery, and wait for at least 90 seconds.
(c) Replace the center airbag sensor assembly (See page RS-602).

HINT:
Perform the inspection using parts from a normal vehicle when possible.

(d) Connect the connectors to the center airbag sensor assembly and the combination meter assembly.
(e) Connect the negative (-) terminal cable to the battery, and wait for at least 2 seconds.
(f) Turn the ignition switch to the ON position, and wait for at least 60 seconds.
(g) Clear any DTCs stored in the memory (See page RS-34).
(h) Turn the ignition switch to the LOCK position.
(i) Turn the ignition switch to the ON position, and wait for at least 60 seconds.
(j) Check for DTCs (See page RS-34).

OK:
DTC B1662/45 is not output.

RS

HINT:
DTCs other than B1662/45 may be output at this time, but they are not related to this check.

NG → **INSPECT COMBINATION METER ASSEMBLY**

OK

END

DTC	B1800/51	Short in Driver Side Squib Circuit

DTC	B1801/51	Open in Driver Side Squib Circuit

DTC	B1802/51	Short to GND in Driver Side Squib Circuit

DTC	B1803/51	Short to B+ in Driver Side Squib Circuit

DESCRIPTION

The driver side squib circuit consists of the center airbag sensor assembly, the spiral cable and the steering pad.
The circuit signals the SRS to deploy when deployment conditions are met.
These DTCs are set when a malfunction is detected in the driver side squib circuit.

DTC No.	DTC Detecting Condition	Trouble Area
B1800/51	• The center airbag sensor assembly receives a line short circuit signal in the driver side squib circuit for 2 seconds. • Driver side squib malfunction • Spiral cable malfunction • Center airbag sensor assembly malfunction	• Instrument panel wire • Spiral cable • Steering pad (Driver side squib) • Center airbag sensor assembly
B1801/51	• The center airbag sensor assembly receives a line short circuit signal in the driver side squib circuit for 2 seconds. • Driver side squib malfunction • Spiral cable malfunction • Center airbag sensor assembly malfunction	• Instrument panel wire • Spiral cable • Steering pad (Driver side squib) • Center airbag sensor assembly
B1802/51	• The center airbag sensor assembly receives a line short circuit to ground signal in the driver side squib circuit for 0.5 seconds. • Driver side squib malfunction • Spiral cable malfunction • Center airbag sensor assembly malfunction	• Instrument panel wire • Spiral cable • Steering pad (Driver side squib) • Center airbag sensor assembly
B1803/51	• The center airbag sensor assembly receives a line short circuit to B+ signal in the driver side squib circuit for 0.5 seconds. • Driver side squib malfunction • Spiral cable malfunction • Center airbag sensor assembly malfunction	• Instrument panel wire • Spiral cable • Steering pad (Driver side squib) • Center airbag sensor assembly

WIRING DIAGRAM

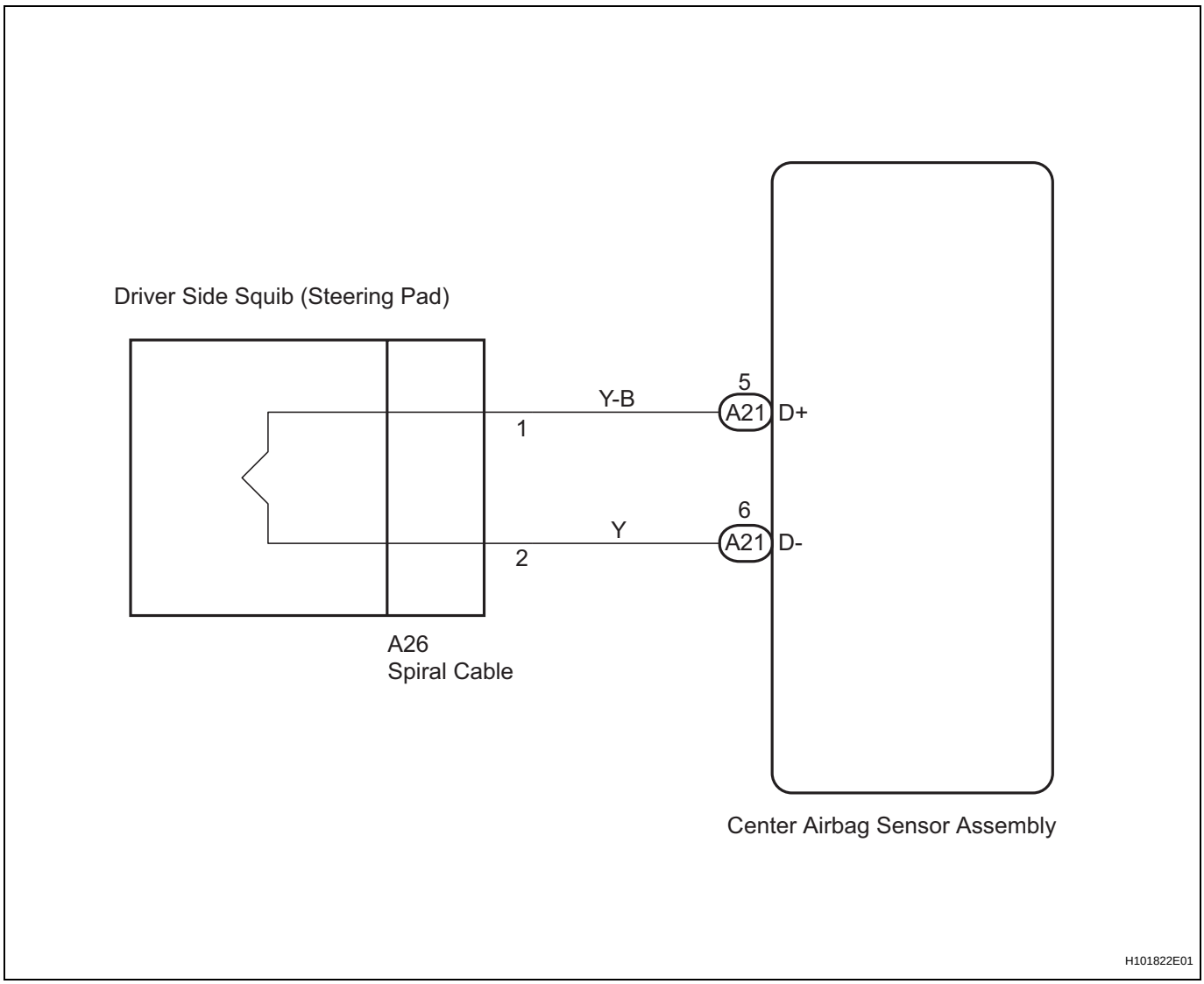

CAUTION:
In order to prevent unexpected airbag deployment, disconnect the following connectors before inspecting parts such as wire harnesses, if the application of tester probes to the center airbag sensor assembly connector is necessary.

RS

(a) Turn the ignition switch to the LOCK position.
(b) Disconnect the negative (-) terminal cable from the battery and wait for at least 90 seconds.
(c) Disconnect the connectors from the center airbag sensor assembly.
(d) Disconnect the connectors from the steering pad.
(e) Disconnect the connector from the front passenger airbag assembly.
(f) Disconnect the connector from the front seat airbag assembly LH.
(g) Disconnect the connector from the front seat airbag assembly RH.
HINT:
Skip the following steps if side and curtain shield airbags are not fitted.
(h) Disconnect the connector from the curtain shield airbag assembly LH.
(i) Disconnect the connector from the curtain shield airbag assembly RH.
(j) Disconnect the connector from the front seat outer belt assembly LH.
(k) Disconnect the connector from the front seat outer belt assembly RH.

1	CHECK DTC

(a) Proceed to the appropriate step according to DTC readings.
(1) If using the intelligent tester (read the 5-digit DTCs): Using the intelligent tester, check for DTCs (See page RS-34).

Result

Result	Proceed to
DTC B1800 is output.	A
DTC B1801 is output.	B
DTC B1802 is output.	C
DTC B1803 is output.	D

(2) If not using the intelligent tester (read the 2-digit DTCs):
Check for DTCs (See page RS-34).

Result

Result	Proceed to
DTC 51 is output.	E

B → Go to step 7

C → Go to step 11

D → Go to step 15

E → Go to step 21

A

2	CHECK CONNECTOR

(a) Turn the ignition switch to the LOCK position.
(b) Disconnect the negative (-) terminal cable from the battery, and wait for at least 90 seconds.
(c) Check that the spiral cable connectors (on the steering pad side) are not damaged.
OK:
The lock button is not disengaged, and the claw of the lock is not deformed or damaged.

NG → REPLACE SPIRAL CABLE

OK

3	CHECK CONNECTION OF CONNECTORS

(a) Check that the connectors are properly connected to the center airbag sensor assembly and the spiral cable.
OK:
The connectors are properly connected.

RS

NG → CONNECT CONNECTORS

OK

4 CHECK SPIRAL CABLE (FOR SHORT)

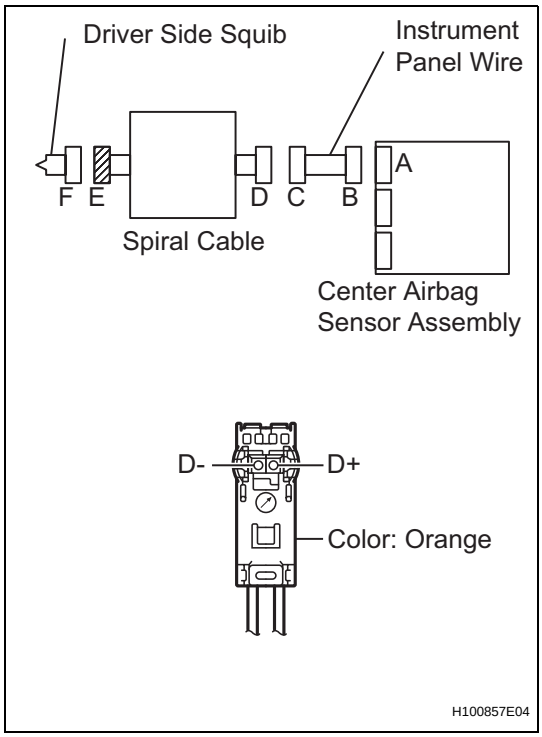

(a) Disconnect the spiral cable connectors from the instrument panel wire and steering pad.
(b) Release the activation prevention mechanism built into connector D (See page RS-28).
(c) Measure the resistance.

Standard resistance

Tester Connection	Condition	Specified Condition
D+ - D-	Always	1 MΩ or Higher

NG → REPLACE SPIRAL CABLE

OK

5 CHECK INSTRUMENT PANEL WIRE (FOR SHORT)

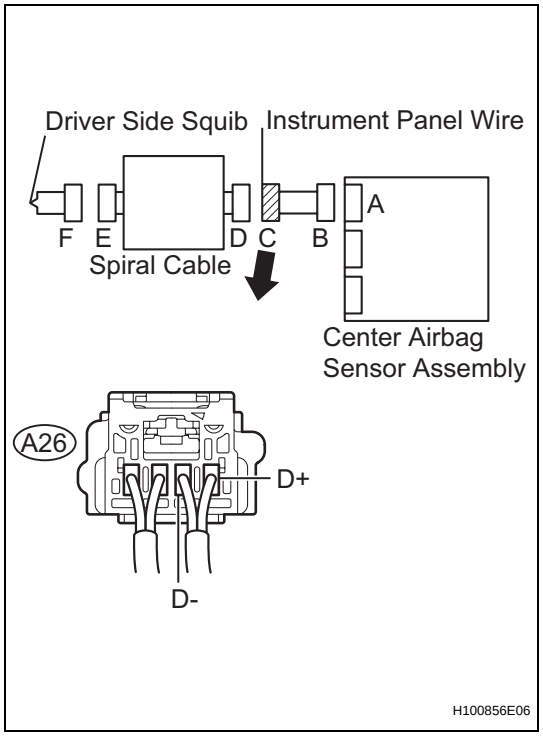

(a) Disconnect the instrument panel wire connector from the center airbag sensor assembly.
(b) Release the activation prevention mechanism built into connector B (See page RS-28).
(c) Measure the resistance.
Standard resistance

Tester Connection	Condition	Specified Condition
A26-1 (D+) - A26-2 (D-)	Always	1 MΩ or Higher

NG → **REPAIR OR REPLACE INSTRUMENT PANEL WIRE**

OK

6 CHECK CENTER AIRBAG SENSOR ASSEMBLY

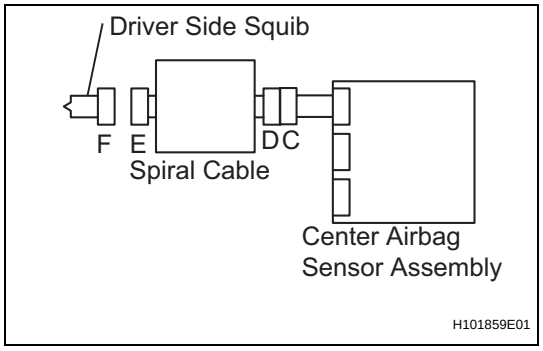

(a) Connect the instrument panel wire connectors to the center airbag sensor assembly and spiral cable.
(b) Connect the negative (-) terminal cable to the battery, and wait for at least 2 seconds.
(c) Turn the ignition switch to the ON position, and wait for at least 60 seconds.
(d) Clear any DTCs stored in the memory (See page RS-34).
(e) Turn the ignition switch to the LOCK position.
(f) Turn the ignition switch to the ON position, and wait for at least 60 seconds.
(g) Check for DTCs (See page RS-34).
OK:
DTC B1800 is not output.

HINT:
DTCs other than B1800 may be output at this time, but they are not related to this check.

OK → **Go to step 20**

NG

REPLACE CENTER AIRBAG SENSOR ASSEMBLY

RS

7	CHECK CONNECTOR

(a) Turn the ignition switch to the LOCK position.
(b) Disconnect the negative (-) terminal cable from the battery, and wait for at least 90 seconds.
(c) Check that the spiral cable connectors (on the steering pad side) are not damaged.
OK:
The lock button is not disengaged, and the claw of the lock is not deformed or damaged.

NG → **REPLACE SPIRAL CABLE**

OK

8	CHECK CONNECTION OF CONNECTORS

(a) Check that the spiral cable connectors (on the steering pad side) are properly connected.
OK:
The connectors are properly connected.

NG → **CONNECT CONNECTORS**

OK

9	CHECK SPIRAL CABLE (FOR OPEN)

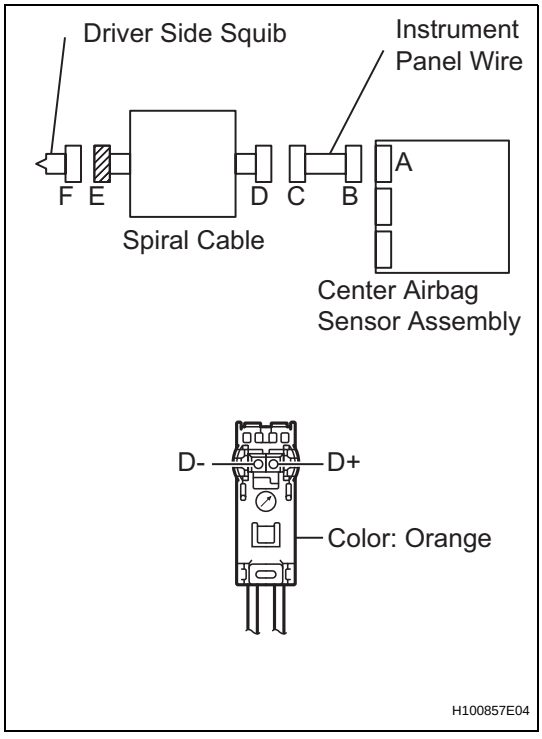

(a) Disconnect the spiral cable connectors from the instrument panel wire and steering pad.
(b) Measure the resistance.
Standard resistance

Tester Connection	Condition	Specified Condition
D+ - D-	Always	Below 1 Ω

NG → **REPLACE SPIRAL CABLE**

OK

RS

10 **CHECK INSTRUMENT PANEL WIRE (FOR OPEN)**

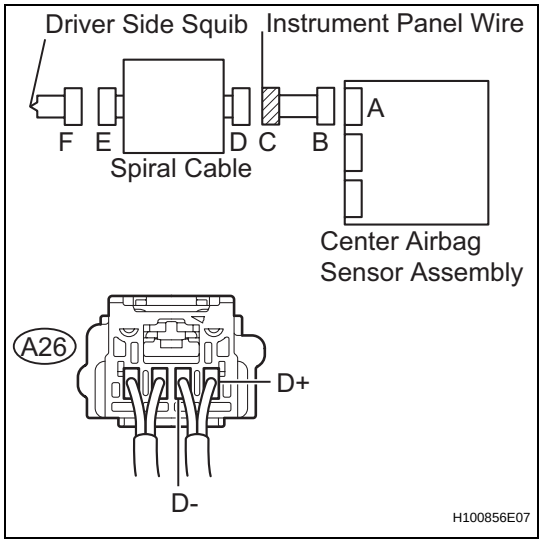

(a) Disconnect the instrument panel wire connector from the center airbag sensor assembly.
(b) Measure the resistance.
Standard resistance

Tester Connection	Condition	Specified Condition
A26-1 (D+) - A26-2 (D-)	Always	Below 1 Ω

OK → **Go to step 19**

NG

REPAIR OR REPLACE INSTRUMENT PANEL WIRE

11 **CHECK CONNECTOR**

(a) Turn the ignition switch to the LOCK position.
(b) Disconnect the negative (-) terminal cable from the battery, and wait for at least 90 seconds.
(c) Check that the spiral cable connectors (on the steering pad side) are not damaged.
OK:
The lock button is not disengaged, and the claw of the lock is not deformed or damaged.

NG → **REPLACE SPIRAL CABLE**

OK

12 **CHECK CONNECTION OF CONNECTORS**

(a) Check that the spiral cable connectors (on the steering pad side) are properly connected.
OK:
The connectors are properly connected.

NG → **CONNECT CONNECTORS**

OK

RS

13 CHECK SPIRAL CABLE (TO GROUND)

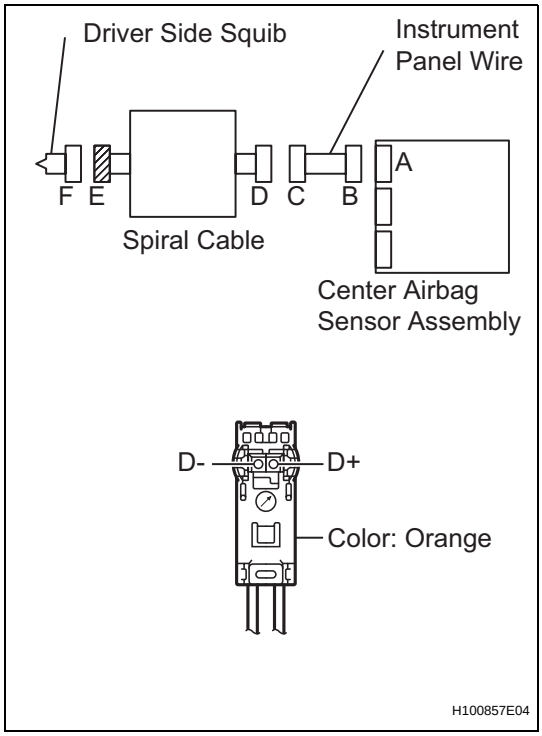

(a) Disconnect the spiral cable connectors from the instrument panel wire and steering pad.
(b) Measure the resistance.
Standard resistance

Tester Connection	Condition	Specified Condition
D+ - Body ground	Always	1 MΩ or Higher
D- - Body ground	Always	1 MΩ or Higher

NG → **REPLACE SPIRAL CABLE**

OK

14 CHECK INSTRUMENT PANEL WIRE (TO GROUND)

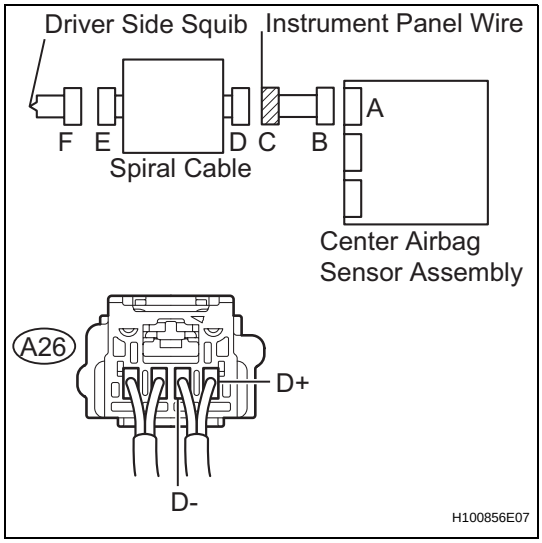

(a) Disconnect the instrument panel wire connector from the center airbag sensor assembly.
(b) Measure the resistance.
Standard resistance

Tester Connection	Condition	Specified Condition
A26-1 (D+) - Body ground	Always	1 MΩ or Higher
A26-2 (D-) - Body ground	Always	1 MΩ or Higher

OK → **Go to step 19**

NG

REPAIR OR REPLACE INSTRUMENT PANEL WIRE

RS

15 CHECK CONNECTOR

(a) Turn the ignition switch to the LOCK position.
(b) Disconnect the negative (-) terminal cable from the battery, and wait for at least 90 seconds.
(c) Check that the spiral cable connectors (on the steering pad side) are not damaged.
OK:
The lock button is not disengaged, and the claw of the lock is not deformed or damaged.

NG → **REPLACE SPIRAL CABLE**

OK

16 CHECK CONNECTION OF CONNECTORS

(a) Check that the spiral cable connectors (on the steering pad side) are properly connected.
OK:
The connectors are properly connected.

NG → **CONNECT CONNECTORS**

OK

17 CHECK SPIRAL CABLE (TO B+)

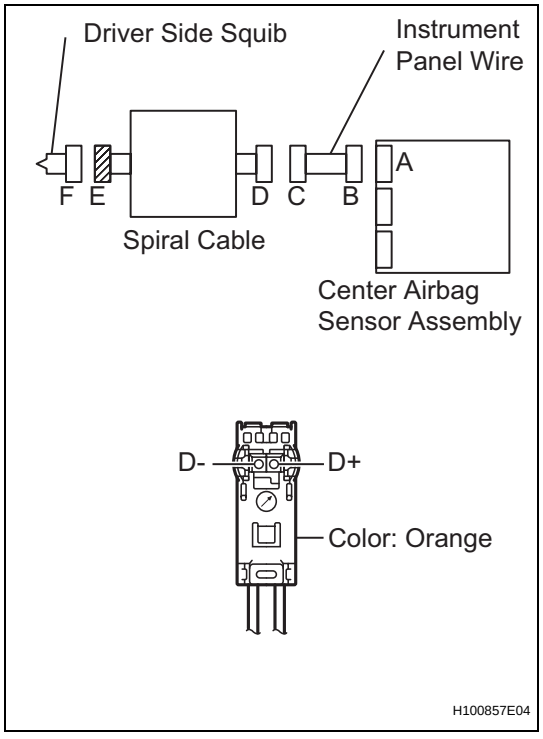

(a) Disconnect the spiral cable connectors from the instrument panel wire and steering pad.
(b) Connect the negative (-) terminal cable to the battery, and wait for at least 2 seconds.
(c) Turn the ignition switch to the ON position.
(d) Measure the voltage
Standard voltage

Tester Connection	Condition	Specified Condition
D+ - Body ground	Ignition switch ON	Below 1 V
D- - Body ground	Ignition switch ON	Below 1 V

NG → **REPLACE SPIRAL CABLE**

OK

RS

18 CHECK INSTRUMENT PANEL WIRE (TO B+)

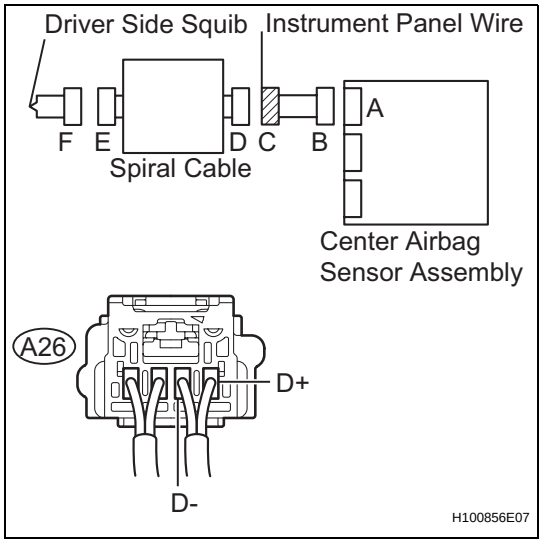

(a) Turn the ignition switch to the LOCK position.
(b) Disconnect the negative (-) terminal cable from the battery, and wait for at least 90 seconds.
(c) Disconnect the instrument panel wire connector from the center airbag sensor assembly.
(d) Connect the negative (-) terminal cable to the battery, and wait for at least 2 seconds.
(e) Turn the ignition switch to the ON position.
(f) Measure the voltage.

Standard voltage

Tester Connection	Condition	Specified Condition
A26-1 (D+) - Body ground	Ignition switch ON	Below 1 V
A26-2 (D-) - Body ground	Ignition switch ON	Below 1 V

NG → **REPAIR OR REPLACE INSTRUMENT PANEL WIRE**

OK

19 CHECK CENTER AIRBAG SENSOR ASSEMBLY

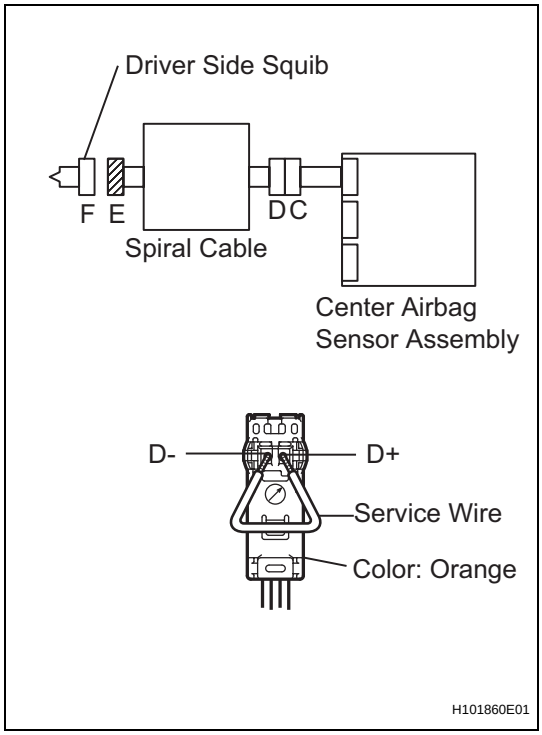

HINT:
If continuing from step 18, begin from (a). If continuing from any other step, begin from (c).

(a) Turn the ignition switch to the LOCK position.
(b) Disconnect the negative (-) terminal cable from the battery, and wait for at least 90 seconds.
(c) Connect the instrument panel wire connectors to the center airbag sensor assembly.
(d) Using a service wire, connect D+ and D- of connector E.

NOTICE:

- **Twist the end of the service wire in order to insert it into the connector.**
- **Do not forcibly insert the twisted service wire into the terminals of the connector when connecting.**

(e) Connect the negative (-) terminal cable to the battery, and wait for at least 2 seconds.
(f) Turn the ignition switch to the ON position, and wait for at least 60 seconds.
(g) Clear any DTCs stored in the memory (See page RS-34).
(h) Turn the ignition switch to the LOCK position.
(i) Turn the ignition switch to the ON position, and wait for at least 60 seconds.
(j) Check for DTCs (See page RS-34).

OK:

DTCs B1801, B1802 and B1803 are not output.

RS

HINT:
DTCs other than B1801, B1802 or B1803 may be output at this time, but they are not related to this check.

NG → **REPLACE CENTER AIRBAG SENSOR ASSEMBLY**

OK

20	REPLACE STEERING PAD (DRIVE SIDE SQUIB)

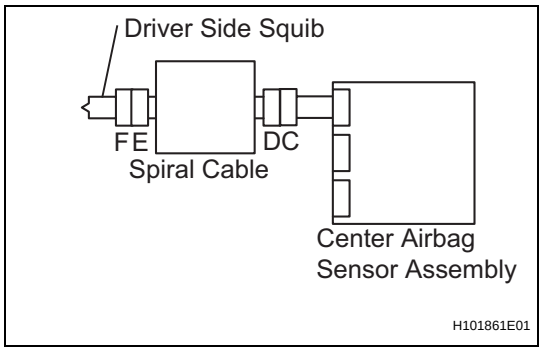

HINT:
If continuing from step 19, begin from (c). If continuing from any other step, being from (a).

(a) Turn the ignition switch to the LOCK position.
(b) Disconnect the negative (-) terminal cable from the battery, and wait for at least 90 seconds.
(c) Disconnect the service wire from connector E.
(d) Connect the connectors to the steering pad.
(e) Connect the negative (-) terminal cable to the battery, and wait for at least 2 seconds.
(f) Turn the ignition switch to the ON position, and wait for at least 60 seconds.
(g) Clear any DTCs stored in the memory (See page RS-34).
(h) Turn the ignition switch to the LOCK position.
(i) Turn the ignition switch to the ON position, and wait for at least 60 seconds.
(j) Check for DTCs (See page RS-34).

OK:
DTCs B1800, B1801, B1802 and B1803 are not output.

HINT:
DTCs other than B1800, B1801, B1802 or B1803 may be output at this time, but they are not related to this check.

NG → **REPLACE STEERING PAD**

OK

OTHERS USE SIMULATION METHOD TO CHECK

21	CHECK CONNECTOR

(a) Turn the ignition switch to the LOCK position.
(b) Disconnect the negative (-) terminal cable from the battery, and wait for at least 90 seconds.
(c) Check that the spiral cable connectors (on the steering pad side) are not damaged.

OK:
The lock button is not disengaged, or the claw of the lock is not deformed or damaged.

RS

NG → REPLACE SPIRAL CABLE

OK

22 CHECK CONNECTORS

(a) Check that the spiral cable connectors (on the steering pad side) are properly connected.
OK:
The connectors are properly connected.

NG → CONNECT CONNECTORS

OK

23 CHECK SPIRAL CABLE

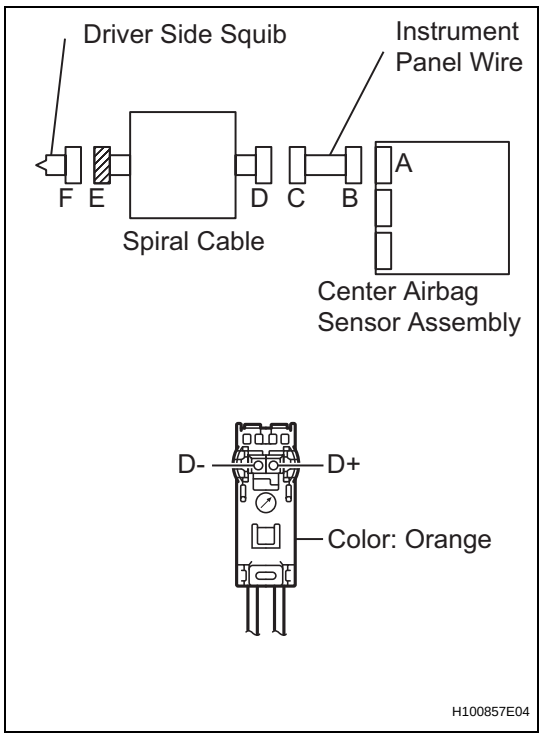

(a) Disconnect the spiral cable connectors from the instrument panel wire and steering pad.
(b) Connect the negative (-) terminal cable to the battery, and wait for at least 2 seconds.
(c) Turn the ignition switch to the ON position.
(d) Measure the voltage.
Standard voltage

Tester Connection	Condition	Specified Condition
D+ - Body ground	Ignition switch ON	Below 1 V
D- - Body ground	Ignition switch ON	Below 1 V

(e) Turn the ignition switch to the LOCK position.
(f) Disconnect the negative (-) terminal cable from the battery, and wait for at least 90 seconds.
(g) Measure the resistance.
Standard resistance

Tester Connection	Condition	Specified Condition
D+ - D-	Always	Below 1 Ω
D+ - Body ground	Always	1 MΩ or Higher
D- - Body ground	Always	1 MΩ or Higher

(h) Release the activation prevention mechanism built into connector D (See page RS-28).
(i) Measure the resistance.
Standard resistance

Tester Connection	Condition	Specified Condition
D+ - D-	Always	1 MΩ or Higher

NG → REPLACE SPIRAL CABLE

OK

RS

24 CHECK INSTRUMENT PANEL WIRE

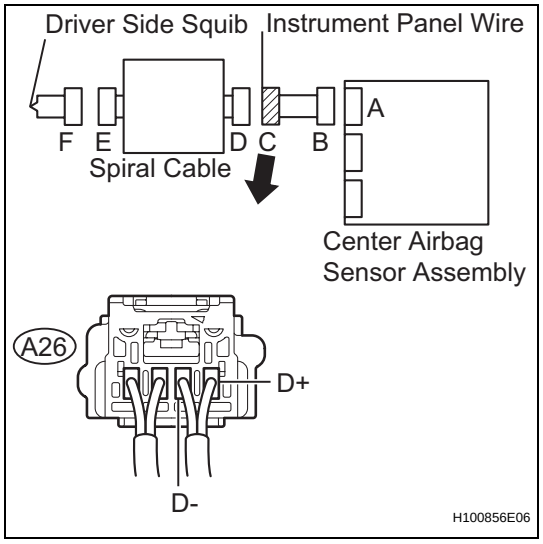

(a) Restore the released activation prevention mechanism of connector B to the original condition.
(b) Disconnect the instrument panel wire connector from the center airbag sensor assembly.
(c) Connect the negative (-) terminal cable to the battery, and wait for at least 2 seconds.
(d) Turn the ignition switch to the ON position.
(e) Measure the voltage.

Standard voltage

Tester Connection	Condition	Specified Condition
A26-1 (D+) - Body ground	Ignition switch ON	Below 1 V
A26-2 (D-) - Body ground	Ignition switch ON	Below 1 V

(f) Turn the ignition switch to the LOCK position.
(g) Disconnect the negative (-) terminal cable from the battery, and wait for at least 90 seconds.
(h) Measure the resistance.

Standard resistance

Tester Connection	Condition	Specified Condition
A26-1 (D+) - A26-2 (D-)	Always	Below 1 Ω
A26-1 (D+) - Body ground	Always	1 MΩ or Higher
A26-2 (D-) - Body ground	Always	1 MΩ or Higher

(i) Release the activation prevention mechanism built into connector B (See page RS-28).
(j) Measure the resistance.

Standard resistance

Tester Connection	Condition	Specified Condition
A26-1 (D+) - A26-2 (D-)	Always	1 MΩ or Higher

NG → **REPAIR OR REPLACE INSTRUMENT PANEL WIRE**

OK

RS

25	CHECK CENTER AIRBAG SENSOR ASSEMBLY

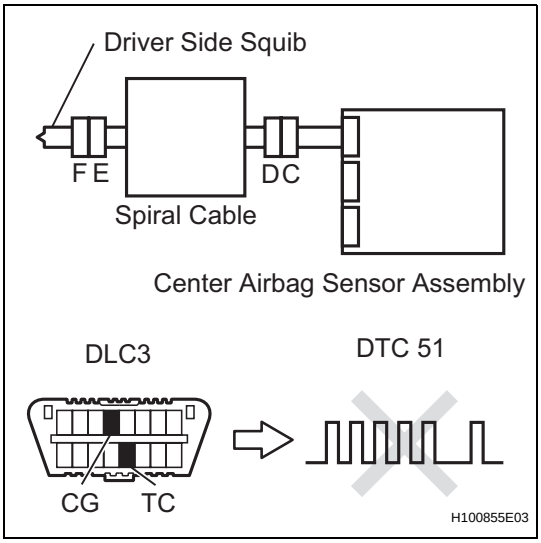

(a) Replace the steering pad (See page RS-557).

HINT:

Perform the inspection using parts from a normal vehicle when possible.

(b) Connect the instrument panel wire to the airbag sensor assembly center and spiral cable.

(c) Connect the connectors to the center airbag sensor assembly.

(d) Connect the negative (-) terminal cable to the battery, and wait for at least 2 seconds.

(e) Turn the ignition switch to the ON position, and wait for at least 60 seconds.

(f) Clear any DTCs stored in the memory (See page RS-34).

(g) Turn the ignition switch to the LOCK position.

(h) Turn the ignition switch to the ON position, and wait for at least 60 seconds.

(i) Check for DTCs (See page RS-34).

OK:

DTC 51 is not output.

HINT:

DTCs other than 51 may be output at this time, but they are not related to this check.

NG → **REPLACE CENTER AIRBAG SENSOR ASSEMBLY**

OK

END

DTC	B1805/52	Short in Front Passenger Side Squib Circuit

DTC	B1806/52	Open in Front Passenger Side Squib Circuit

DTC	B1807/52	Short to GND in Front Passenger Side Squib Circuit

DTC	B1808/52	Short to B+ in Front Passenger Side Squib Circuit

DESCRIPTION

The front passenger side squib circuit consists of the center airbag sensor assembly and the front passenger airbag assembly.
The circuit instructs the SRS to deploy when deployment conditions are met.
These DTCs are recorded when a malfunction is detected in the front passenger side squib circuit.

DTC No.	DTC Detection Condition	Trouble Area
B1805/52	• The center airbag sensor assembly receives a line short circuit in the front passenger side squib circuit for 2 seconds. • Front passenger side squib malfunction • Center airbag sensor assembly malfunction	• Instrument panel wire • Instrument panel wire assembly • Front passenger airbag assembly (Front passenger side squib) • Center airbag sensor assembly
B1806/52	• The center airbag sensor assembly receives an open circuit signal in the front passenger side squib circuit for 2 seconds. • Front passenger side squib malfunction • Center airbag sensor assembly malfunction	• Instrument panel wire • Instrument panel wire assembly • Front passenger airbag assembly (Front passenger side squib) • Center airbag sensor assembly
B1807/52	• The center airbag sensor assembly receives a short circuit to ground signal in the front passenger side squib circuit for 0.5 seconds. • Front passenger side squib malfunction • Center airbag sensor assembly malfunction	• Instrument panel wire • Instrument panel wire assembly • Front passenger airbag assembly (Front passenger side squib) • Center airbag sensor assembly
B1808/52	• The center airbag sensor assembly receives a short circuit to B+ signal in the front passenger side squib circuit for 0.5 seconds. • Front passenger side squib malfunction • Center airbag sensor assembly malfunction	• Instrument panel wire • Instrument panel wire assembly • Front passenger airbag assembly (Front passenger side squib) • Center airbag sensor assembly

WIRING DIAGRAM

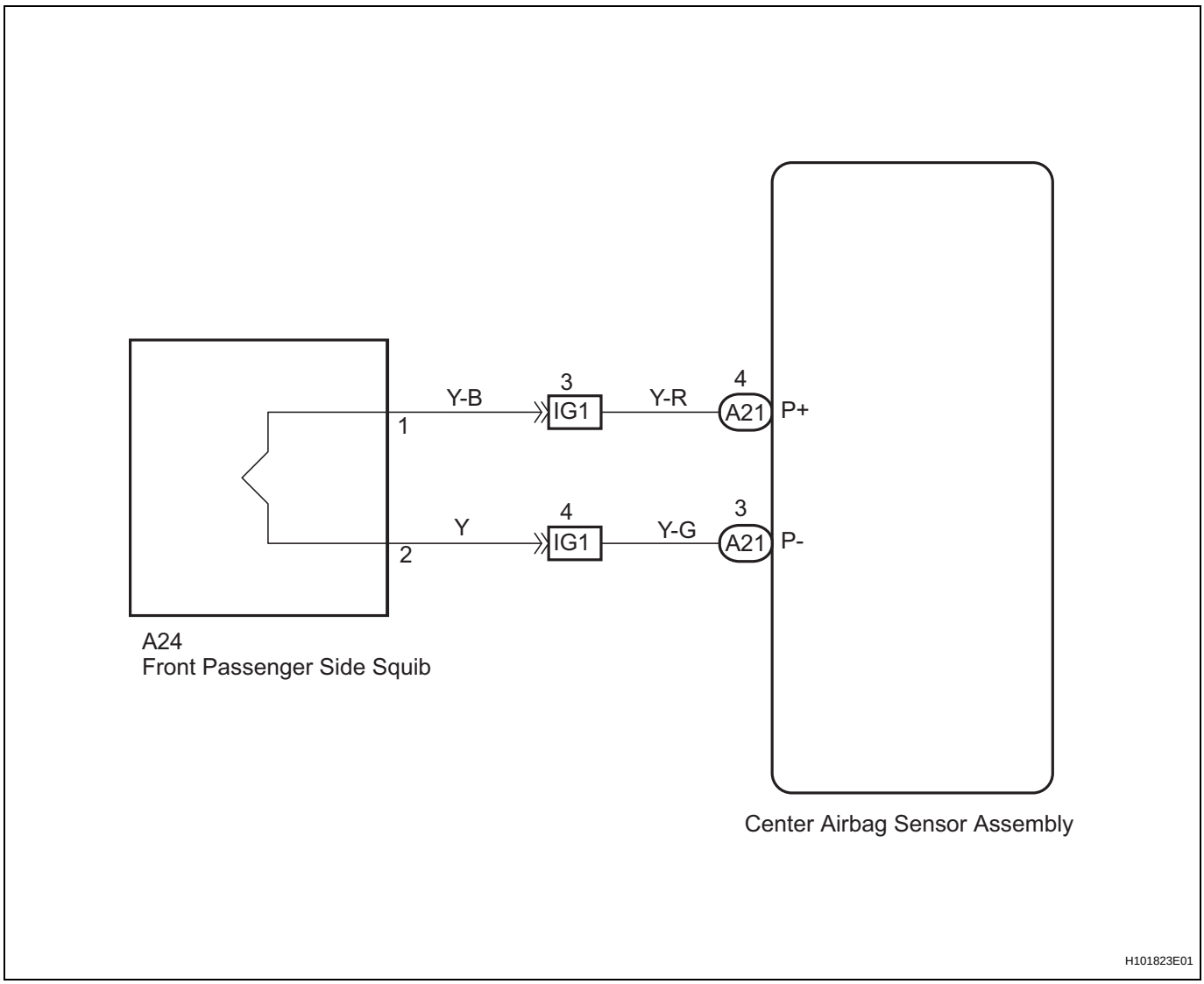

CAUTION:
In order to prevent unexpected airbag deployment, disconnect the following connectors before inspecting parts such as wire harnesses, if the application of tester probes to the center airbag sensor assembly connector is necessary.

RS

(a) Turn the ignition switch to the LOCK position.
(b) Disconnect the negative (-) terminal cable from the battery and wait for at least 90 seconds.
(c) Disconnect the connectors from the center airbag sensor assembly.
(d) Disconnect the connectors from the steering pad.
(e) Disconnect the connector from the front passenger airbag assembly.
(f) Disconnect the connector from the front seat airbag assembly LH.
(g) Disconnect the connector from the front seat airbag assembly RH.
HINT:
Skip the following steps if side and curtain shield airbags are not fitted.
(h) Disconnect the connector from the curtain shield airbag assembly LH.
(i) Disconnect the connector from the curtain shield airbag assembly RH.
(j) Disconnect the connector from the front seat outer belt assembly LH.
(k) Disconnect the connector from the front seat outer belt assembly RH.

1	CHECK DTC

(a) Proceed to the appropriate step according to DTC readings.
(1) If using the intelligent tester (read the 5-digit DTCs): Using the intelligent tester, check for DTCs (See page RS-34).
Result

Result	Proceed to
DTC B1805 is output.	A
DTC B1806 is output.	B
DTC B1807 is output.	C
DTC B1808 is output.	D

(2) If not using the intelligent tester (read the 2-digit DTCs): Check for DTCs (See page RS-34).
Result

Result	Proceed to
DTC 52 is output.	E

B → Go to step 7
C → Go to step 11
D → Go to step 15
E → Go to step 21

A

2	CHECK CONNECTOR

(a) Turn the ignition switch to the LOCK position.
(b) Disconnect the negative (-) terminal cable from the battery, and wait for at least 90 seconds.
(c) Check that the instrument panel wire assembly connectors (on the front passenger airbag assembly side) are not damaged.
OK:
The lock button is not disengaged, and the claw of the lock is not deformed or damaged.

NG → REPLACE INSTRUMENT PANEL WIRE ASSEMBLY

OK

RS

3	CHECK CONNECTION OF CONNECTORS

(a) Check that the connectors are properly connected to the center airbag sensor assembly and the instrument panel wire assembly.
OK:
The connectors are properly connected.

NG → **CONNECT CONNECTORS**

OK

4	CHECK INSTRUMENT PANEL WIRE ASSEMBLY (FOR SHORT)

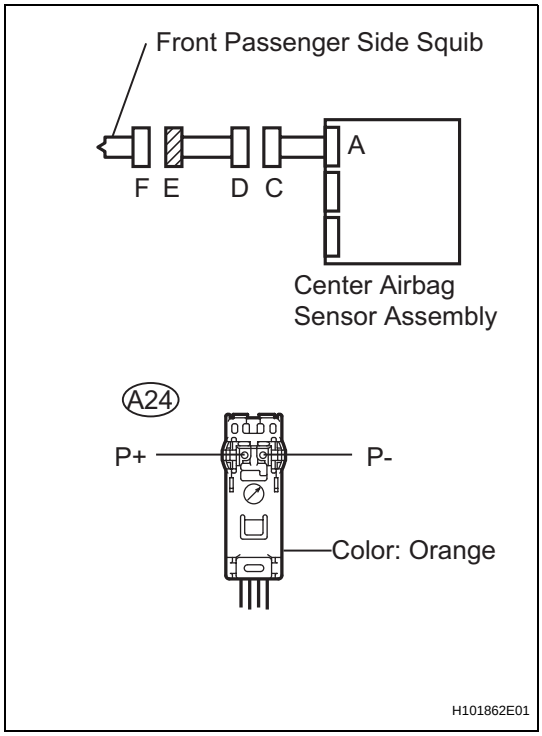

(a) Disconnect the instrument panel wire assembly connectors from the instrument panel wire and front passenger airbag assembly.
(b) Release the activation prevention mechanism built into connector D (See page RS-28).
(c) Measure the resistance.
Standard resistance

Tester Connection	Condition	Specified Condition
A24-1 (P+) - A24-2 (P-)	Always	1 MΩ or Higher

NG → **REPLACE INSTRUMENT PANEL WIRE ASSEMBLY**

OK

RS

5 CHECK INSTRUMENT PANEL WIRE (FOR SHORT)

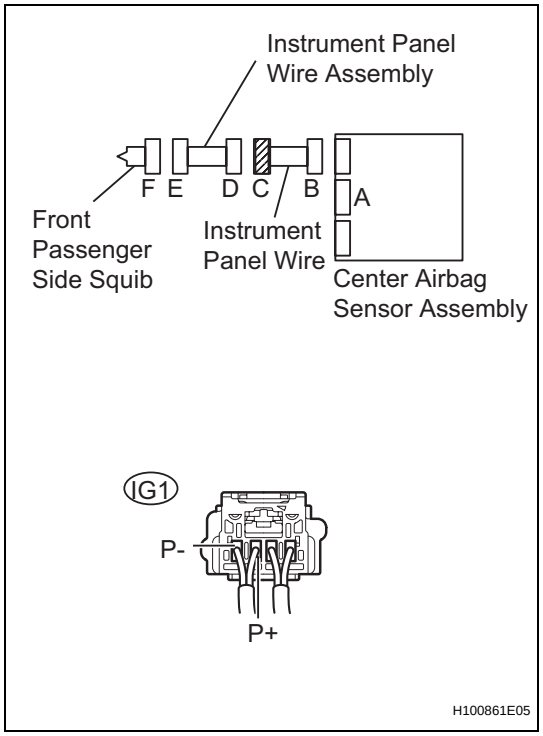

(a) Disconnect the instrument panel wire connector from the center airbag sensor assembly.
(b) Release the activation prevention mechanism built into connector B (See page RS-28).
(c) Measure the resistance.
Standard resistance

Tester Connection	Condition	Specified Condition
IG1-3 (P+) - IG1-4 (P-)	Always	1 MΩ or Higher

NG → **REPAIR OR REPLACE INSTRUMENT PANEL WIRE**

OK

6 CHECK CENTER AIRBAG SENSOR ASSEMBLY

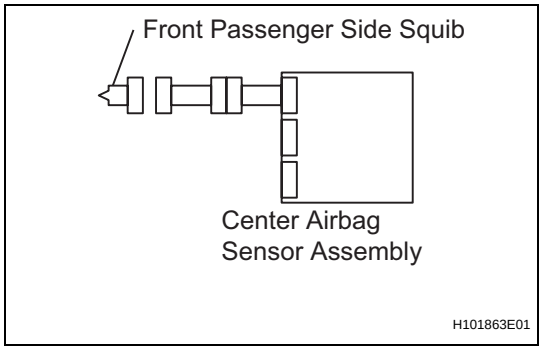

(a) Connect the instrument panel wire connectors to the center airbag sensor assembly and instrument panel wire assembly.
(b) Connect the negative (-) terminal cable to the battery, and wait for at least 2 seconds.
(c) Turn the ignition switch to the ON position, and wait for at least 60 seconds.
(d) Clear any DTCs stored in the memory (See page RS-34).
(e) Turn the ignition switch to the LOCK position.
(f) Turn the ignition switch to the ON position, and wait for at least 60 seconds.
(g) Check for DTCs (See page RS-34).
OK:
DTC B1805 is not output.

HINT:
DTCs other than B1805 may be output at this time, but they are not related to this check.

OK → **Go to step 20**

RS

NG

REPLACE CENTER AIRBAG SENSOR ASSEMBLY

7	CHECK CONNECTOR

(a) Turn the ignition switch to the LOCK position.
(b) Disconnect the negative (-) terminal cable from the battery, and wait for at least 90 seconds.
(c) Check that the instrument panel wire assembly connectors (on the front passenger airbag assembly side) are not damaged.

OK:

The lock button is not disengaged, or the claw of the lock is not deformed or damaged.

NG → **REPLACE INSTRUMENT PANEL WIRE ASSEMBLY**

OK

8	CHECK CONNECTORS

(a) Check that the connectors are properly connected to the center airbag sensor assembly and the instrument panel wire assembly.

OK:

The connectors are properly connected.

NG → **CONNECT CONNECTORS**

OK

9 CHECK INSTRUMENT PANEL WIRE ASSEMBLY (FOR OPEN)

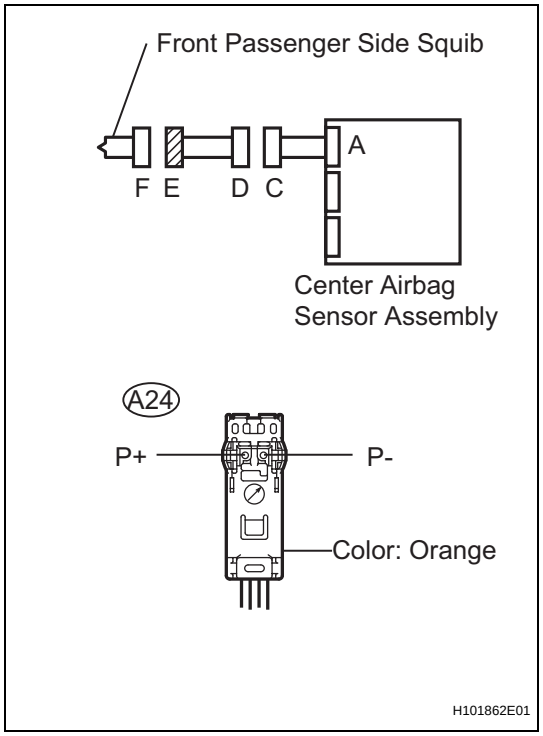

(a) Disconnect the spiral cable connectors from the instrument panel wire and steering pad.
(b) Measure the resistance.
Standard resistance

Tester Connection	Condition	Specified Condition
A24-1 (P+) - A24-2(P-)	Always	Below 1 Ω

MG → **REPLACE INSTRUMENT PANEL WIRE ASSEMBLY**

OK

10 CHECK INSTRUMENT PANEL WIRE (FOR OPEN)

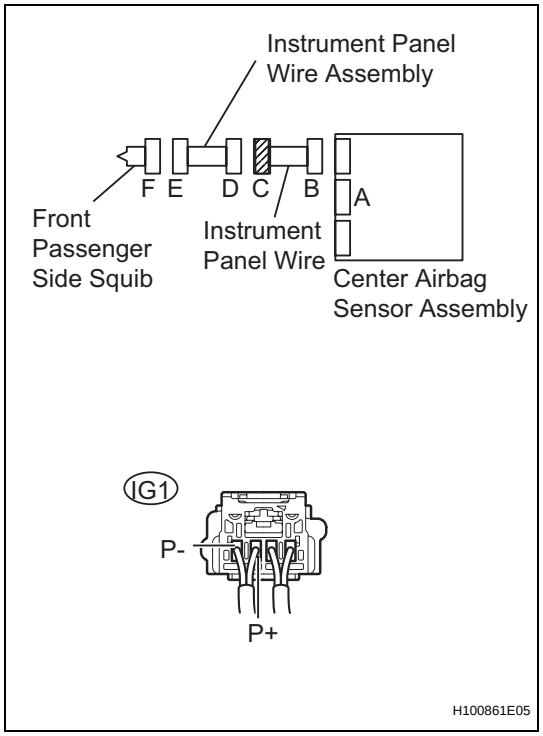

(a) Disconnect the instrument panel wire connector from the center airbag sensor assembly.
(b) Measure the resistance.
Standard resistance

Tester Connection	Condition	Specified Condition
IG3 (P+) - IG3-2 (P-)	Always	Below 1 Ω

OK → **Go to step 19**

RS

NG

REPAIR OR REPLACE INSTRUMENT PANEL WIRE

11	CHECK CONNECTOR

(a) Turn the ignition switch to the LOCK position.
(b) Disconnect the negative (-) terminal cable from the battery, and wait for at least 90 seconds.
(c) Check that the instrument panel wire assembly connectors (on the front passenger airbag assembly side) are not damaged.

OK:

The lock button is not disengaged, and the claw of the lock is not deformed or damaged.

NG → **REPLACE INSTRUMENT PANEL WIRE ASSEMBLY**

OK

12	CHECK CONNECTION OF CONNECTORS

(a) Check that the connectors are properly connected to the center airbag sensor assembly and the instrument panel wire assembly.

OK:

The connectors are properly connected.

NG → **CONNECT CONNECTORS**

OK

13 CHECK INSTRUMENT PANEL WIRE ASSEMBLY (TO GROUND)

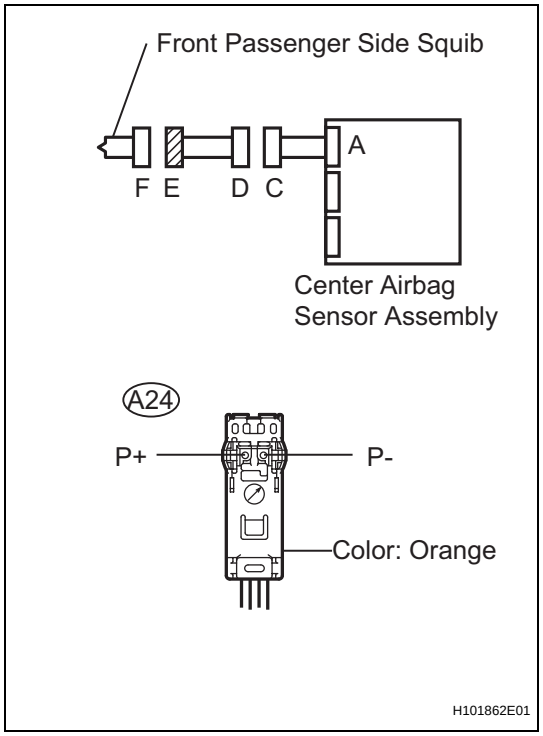

(a) Disconnect the spiral cable connectors from the instrument panel wire and steering pad.
(b) Measure the resistance.
Standard resistance

Tester Connection	Condition	Specified Condition
A24-1 (P+) - Body ground	Always	1 MΩ or Higher
A24-2(P-) - Body ground	Always	1 MΩ or Higher

NG → **REPLACE INSTRUMENT PANEL WIRE ASSEMBLY**

OK

14 CHECK INSTRUMENT PANEL WIRE (TO GROUND)

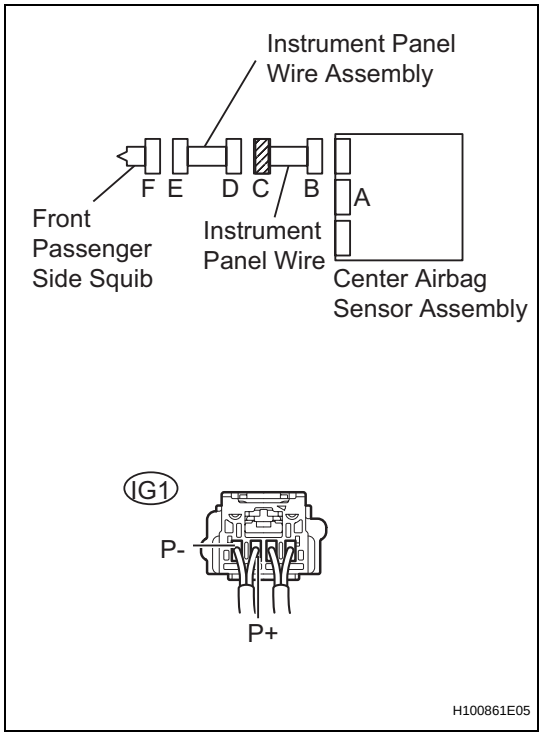

(a) Disconnect the instrument panel wire connector from the center airbag sensor assembly.
(b) Measure the resistance.
Standard resistance

Tester Connection	Condition	Specified Condition
IG1-3 (P+) - Body ground	Always	1 MΩ or Higher
IG1-4 (P-) - Body ground	Always	1 MΩ or Higher

OK → **Go to step 19**

RS

NG

REPAIR OR REPLACE INSTRUMENT PANEL WIRE

15 **CHECK CONNECTOR**

(a) Turn the ignition switch to the LOCK position.
(b) Disconnect the negative (-) terminal cable from the battery, and wait for at least 90 seconds.
(c) Check that the instrument panel wire assembly connectors (on the front passenger airbag assembly side) are not damaged.
OK:
The lock button is not disengaged, and the claw of the lock is not deformed or damaged.

NG → **REPLACE INSTRUMENT PANEL WIRE ASSEMBLY**

OK

16 **CHECK CONNECTION OF CONNECTORS**

(a) Check that the connectors are properly connected to the center airbag sensor assembly and the instrument panel wire assembly.
OK:
The connectors are properly connected.

NG → **CONNECT CONNECTORS**

OK

17 CHECK INSTRUMENT PANEL WIRE ASSEMBLY (TO B+)

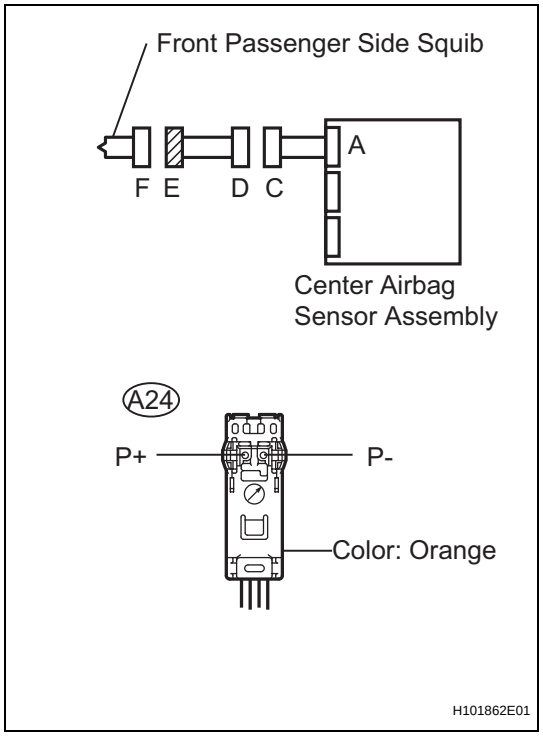

(a) Disconnect the spiral cable connectors from the instrument panel wire and steering pad.
(b) Connect the negative (-) terminal cable to the battery, and wait for at least 2 seconds.
(c) Turn the ignition switch to the ON position.
(d) Measure the voltage.

Standard voltage

Tester Connection	Condition	Specified Condition
A24-1 (P+) - Body ground	Ignition switch ON	Below 1 V
A24-2(P-) - Body ground	Ignition switch ON	Below 1 V

NG → **REPLACE INSTRUMENT PANEL WIRE ASSEMBLY**

OK

18 CHECK INSTRUMENT PANEL WIRE (TO B+)

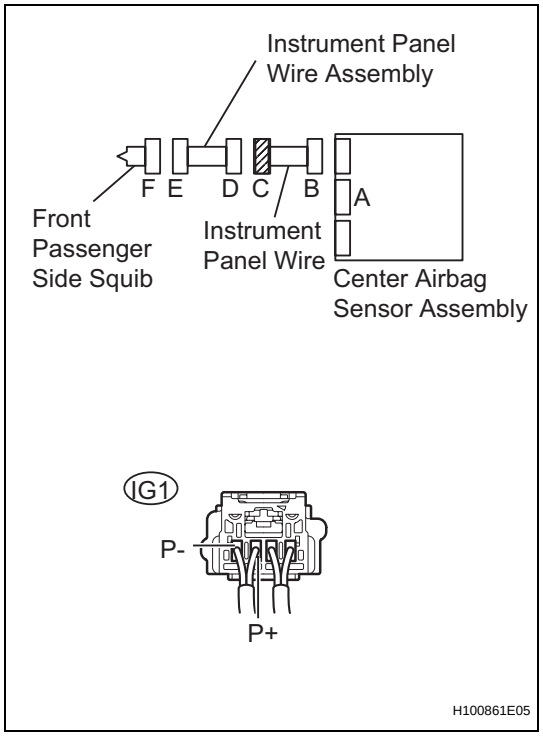

(a) Turn the ignition switch to the LOCK position.
(b) Disconnect the negative (-) terminal cable from the battery, and wait for at least 90 seconds.
(c) Disconnect the instrument panel wire connector from the center airbag sensor assembly.
(d) Connect the negative (-) terminal cable to the battery, and wait for at least 2 seconds.
(e) Turn the ignition switch to the ON position.
(f) Measure the voltage.

Standard voltage

Tester Connection	Condition	Specified Condition
IG1-3 (P+) - Body ground	Ignition switch ON	Below 1 V
IG1-4 (P-) - Body ground	Ignition switch ON	Below 1 V

NG → **REPAIR OR REPLACE INSTRUMENT PANEL WIRE**

OK

RS

19 CHECK CENTER AIRBAG SENSOR ASSEMBLY

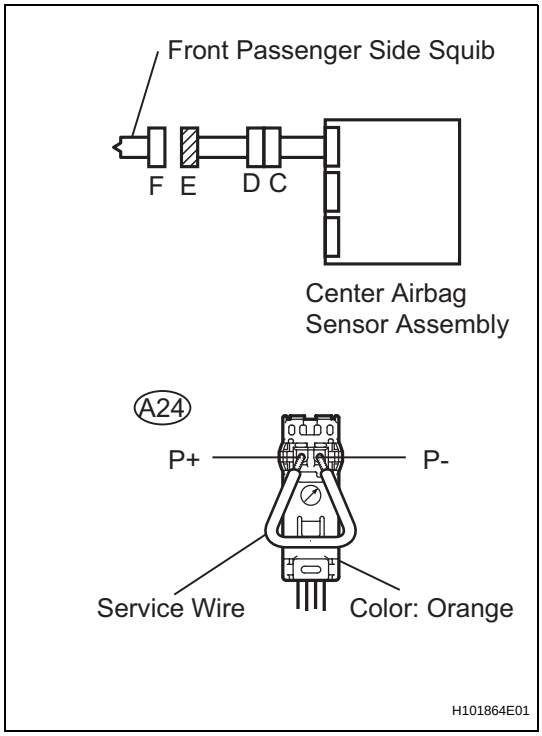

HINT:
If continuing from step 18, begin from (a). If continuing from any other step, begin from (c).
(a) Turn the ignition switch to the LOCK position.
(b) Disconnect the negative (-) terminal cable from the battery, and wait for at least 90 seconds.
(c) Connect the connectors to the center airbag sensor assembly.
(d) Using a service wire, connect A24-1 (P+) and A24-2 (P-) of connector E.

NOTICE:
- **Twist the end of the service wire in order to insert it into the connector.**
- **Do not forcibly insert the twisted service wire into the terminals of the connector when connecting.**

(e) Connect the negative (-) terminal cable to the battery, and wait for at least 2 seconds.
(f) Turn the ignition switch to the ON position, and wait for at least 60 seconds.
(g) Clear any DTCs stored in the memory (See page RS-34).
(h) Turn the ignition switch to the LOCK position.
(i) Turn the ignition switch to the ON position, and wait for at least 60 seconds.
(j) Check for DTCs (See page RS-34).
OK:
DTC B1806, B1807 and B1808 are not output.

HINT:
DTCs other than B1806, B1807 or B1808 may be output at this time, but they are not related to this check.

NG → **REPLACE CENTER AIRBAG SENSOR ASSEMBLY**

OK

RS

20 CHECK FRONT PASSENGER AIRBAG ASSEMBLY (FRONT PASSENGER SIDE SQUIB)

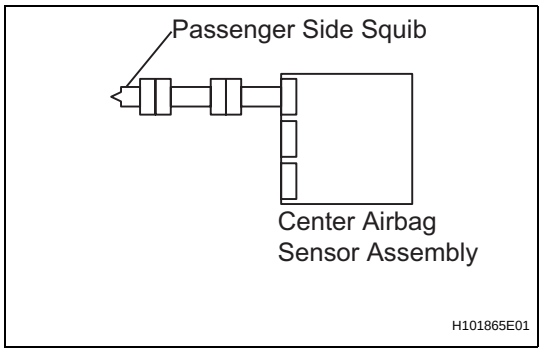

HINT:
If continuing from step 19, begin from (c). If continuing from any other step, being from (a).
(a) Turn the ignition switch to the LOCK position.
(b) Disconnect the negative (-) terminal cable from the battery, and wait for at least 90 seconds
(c) Disconnect the SST from connector C.
(d) Connect the connectors to the front passenger airbag assembly.
(e) Connect the negative (-) terminal cable to the battery, and wait for at least 2 seconds.
(f) Turn the ignition switch to the ON position, and wait for at least 60 seconds.

(g) Clear any DTCs stored in the memory (See page RS-34).
(h) Turn the ignition switch to the LOCK position.
(i) Turn the ignition switch to the ON position, and wait for at least 60 seconds.
(j) Check for DTCs (See page RS-34).
OK:
DTCs B1805, B1806, B1807 and B1808 are not output.

HINT:
DTCs other than B1805, B1806, B1807 or B1808 may be output at this time, but they are not related to this check.

NG → **REPLACE FRONT PASSENGER AIRBAG ASSEMBLY**

OK

USE SIMULATION METHOD TO CHECK

21	CHECK CONNECTOR

(a) Turn the ignition switch to the LOCK position.
(b) Disconnect the negative (-) terminal cable from the battery, and wait for at least 90 seconds.
(c) Check that the instrument panel wire assembly connectors (on the front passenger airbag assembly side) are not damaged.
OK:
The lock button is not disengaged, and the claw of the lock is not deformed or damaged.

NG → **REPLACE INSTRUMENT PANEL WIRE ASSEMBLY**

OK

22	CHECK CONNECTORS

RS

(a) Check that the connectors are properly connected to the center airbag sensor assembly and the instrument panel wire assembly.
OK:
The connectors are properly connected.

NG → **CONNECT CONNECTORS**

OK

23 CHECK INSTRUMENT PANEL WIRE ASSEMBLY

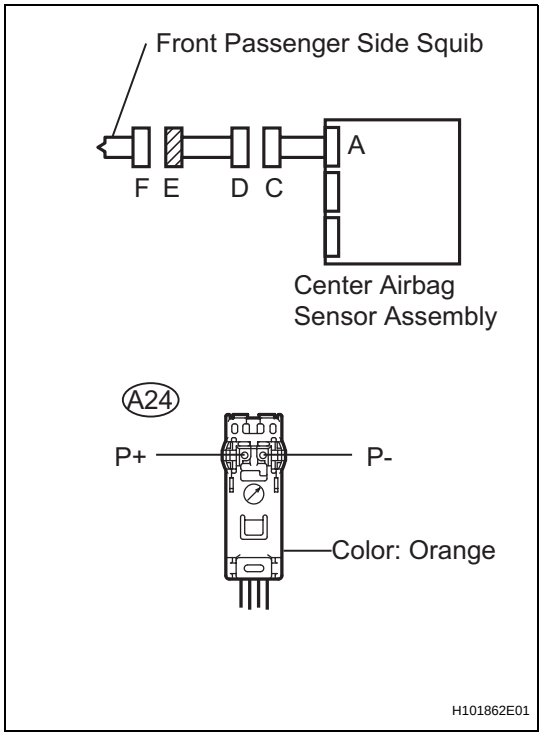

(a) Disconnect the instrument panel wire assembly connectors from the instrument panel wire and front passenger airbag assembly.
(b) Connect the negative (-) terminal cable to the battery, and wait for at least 2 seconds.
(c) Turn the ignition switch to the ON position.
(d) Measure the voltage.
Standard voltage

Tester Connection	Condition	Specified Condition
A24-1 (P+) - Body ground	Ignition switch ON	Below 1 V
A24-2(P-) - Body ground	Ignition switch ON	Below 1 V

(e) Turn the ignition switch to the LOCK position.
(f) Disconnect the negative (-) terminal cable from the battery, and wait for at least 90 seconds.
(g) Measure the resistance.
Standard resistance

Tester Connection	Condition	Specified Condition
A24-1 (P+) - A24-2 (P-)	Always	Below 1 Ω
A24-1 (P+) - Body ground	Always	1 MΩ or Higher
A24-2(P-) - Body ground	Always	1 MΩ or Higher

(h) Release the activation prevention mechanism built into connector D (See page RS-28).
(i) Measure the resistance
Standard resistance

Tester Connection	Condition	Specified Condition
A24-1 (P+) - A24-2 (P-)	Always	1 MΩ or Higher

NG → **REPLACE INSTRUMENT PANEL WIRE ASSEMBLY**

OK

RS

24 CHECK INSTRUMENT PANEL WIRE (FRONT PASSENGER SIDE SQUIB)

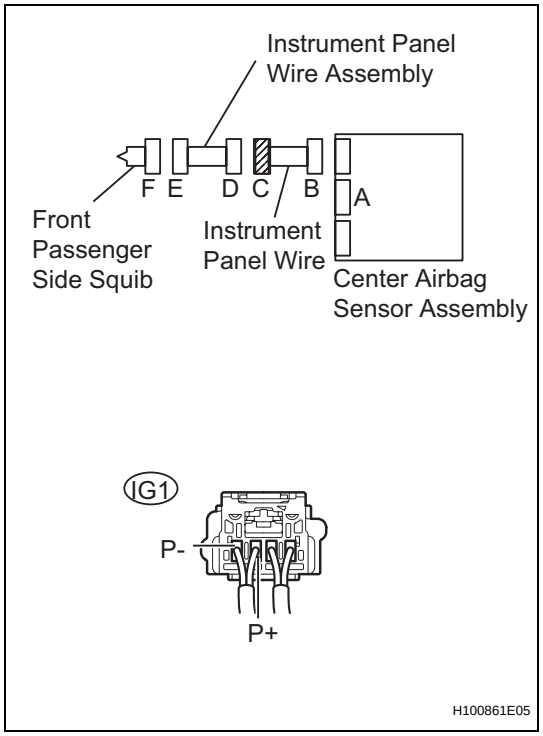

(a) Restore the released activation prevention mechanism of connector B to the original condition.
(b) Disconnect the instrument panel wire connector from the center airbag sensor assembly.
(c) Connect the negative (-) terminal cable to the battery, and wait for at least 2 seconds.
(d) Turn the ignition switch to the ON position.
(e) Measure the voltage.

Standard voltage

Tester Connection	Condition	Specified Condition
IG1-3 (P+) - Body ground	Ignition switch ON	Below 1 V
IG1-4 (P-) - Body ground	Ignition switch ON	Below 1 V

(f) Turn the ignition switch to the LOCK position.
(g) Disconnect the negative (-) terminal cable from the battery, and wait for at least 90 seconds.
(h) Measure the resistance.

Standard resistance

Tester Connection	Condition	Specified Condition
IG1-3 (P+) - IG1-4 (P-)	Always	Below 1 Ω
IG1-3 (P+) - Body ground	Always	1 MΩ or Higher
IG1-4 (P-) - Body ground	Always	1 MΩ or Higher

(i) Release the activation prevention mechanism built into connector B (See page RS-28).
(j) Measure the resistance.

Standard resistance

Tester Connection	Condition	Specified Condition
IG1-3 (P+) - IG1-4 (P-)	Always	1 MΩ or Higher

NG → **REPAIR OR REPLACE INSTRUMENT PANEL WIRE**

OK

RS

25	CHECK CENTER AIRBAG SENSOR ASSEMBLY

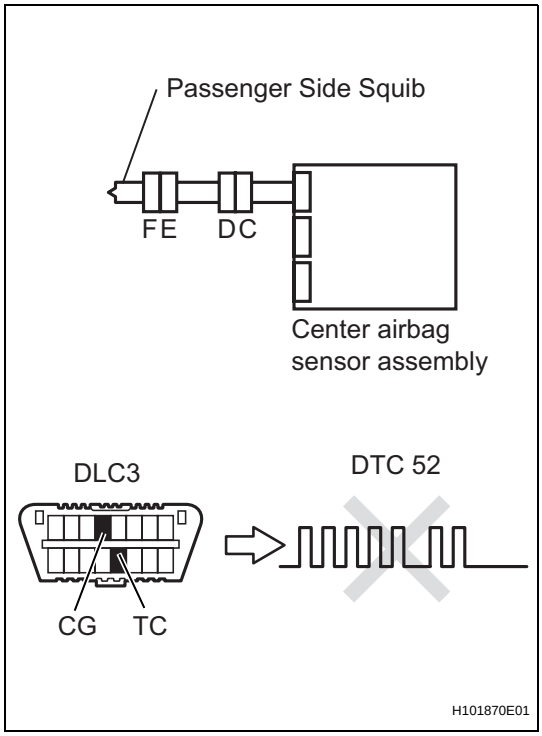

(a) Replace the front passenger airbag assembly (See page RS-574).

HINT:
Perform the inspection using parts from a normal vehicle when possible.

(b) Connect the instrument panel wire to the center airbag sensor assembly and spiral cable.
(c) Connect the connectors to the center airbag sensor assembly.
(d) Connect the negative (-) terminal cable to the battery, and wait for at least 2 seconds.
(e) Turn the ignition switch to the ON position, and wait for at least 60 seconds.
(f) Clear any DTCs stored in the memory (See page RS-34).
(g) Turn the ignition switch to the LOCK position.
(h) Turn the ignition switch to the ON position, and wait for at least 60 seconds.
(i) Check for DTCs (See page RS-34).

OK:

DTC 52 is not output.

HINT:
DTCs other than 52 may be output at this time, but they are not related to this check.

NG → **REPLACE CENTER AIRBAG SENSOR ASSEMBLY**

OK

END

RS

DTC	B1810/53	Short in Driver Side Squib 2nd Step Circuit

DTC	B1811/53	Open in Driver Side Squib 2nd Step Circuit

DTC	B1812/53	Short to GND in Driver Side Squib 2nd Step Circuit

DTC	B1813/53	Short to B+ in Driver Side Squib 2nd Step Circuit

DESCRIPTION

The driver side squib (Dual stage -2nd step) circuit consists of the center airbag sensor assembly, the spiral cable and the steering pad assembly.
The circuit signals the SRS to deploy when airbag deployment conditions are met.
These DTCs are set when a malfunction is detected in the driver side squib (Dual stage - 2nd step) circuit.

DTC No.	DTC Detecting Conditions	Trouble Areas
B1810/53	• The center airbag sensor assembly receives a line short circuit signal in the driver side squib (Dual stage - 2nd step) circuit for 2 seconds • Driver side squib (Dual stage - 2nd step) malfunction • Spiral cable malfunction • Center airbag sensor assembly malfunction	• Instrument panel wire • Spiral cable • Steering pad (Driver side squib, Dual stage - 2nd step) • Center airbag sensor assembly
B1811/53	• The center airbag sensor assembly receives an open circuit signal in the driver side squib (Dual stage - 2nd step) circuit for 2 seconds malfunction • Driver side squib (Dual stage - 2nd step) • Spiral cable malfunction • Center airbag sensor assembly malfunction	• Instrument panel wire • Spiral cable • Steering pad (Driver side squib, Dual stage - 2nd step) • Center airbag sensor assembly
B1812/53	• The center airbag sensor assembly receives a short circuit to ground signal in the driver side squib (Dual stage - 2nd step) circuit for 0.5 seconds • Driver side squib (Dual stage - 2nd step) malfunction • Spiral cable malfunction • Center airbag sensor assembly malfunction	• Instrument panel wire • Spiral cable • Steering pad (Driver side squib, Dual stage - 2nd step) • Center airbag sensor assembly
B1813/53	• The center airbag sensor assembly receives a short circuit to B+ signal in the driver side squib (Dual stage - 2nd step) circuit for 0.5 seconds • Driver side squib (Dual stage - 2nd step) malfunction • Spiral cable malfunction • Center airbag sensor assembly malfunction	• Instrument panel wire • Spiral cable • Steering pad (Driver side squib, Dual stage - 2nd step) • Center airbag sensor assembly

WIRING DIAGRAM

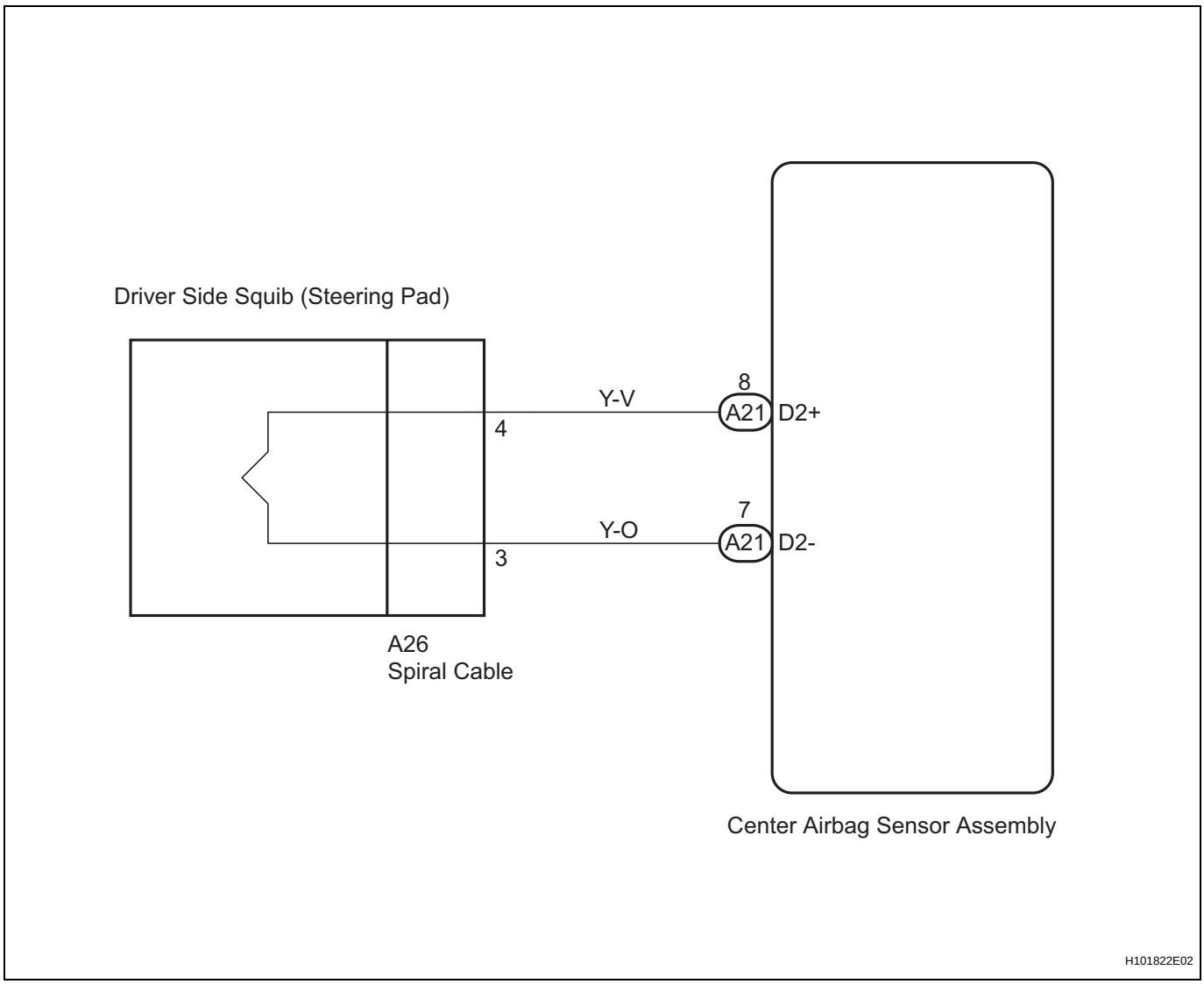

CAUTION:
In order to prevent unexpected airbag deployment, disconnect the following connectors before inspecting parts such as wire harnesses, if the application of tester probes to the center airbag sensor assembly connector is necessary.

RS

(a) Turn the ignition switch to the LOCK position.
(b) Disconnect the negative (-) terminal cable from the battery and wait for at least 90 seconds.
(c) Disconnect the connectors from the center airbag sensor assembly.
(d) Disconnect the connectors from the steering pad.
(e) Disconnect the connector from the front passenger airbag assembly.
(f) Disconnect the connector from the front seat airbag assembly LH.
(g) Disconnect the connector from the front seat airbag assembly RH.
HINT:
Skip the following steps if side and curtain shield airbags are not fitted.
(h) Disconnect the connector from the curtain shield airbag assembly LH.
(i) Disconnect the connector from the curtain shield airbag assembly RH.
(j) Disconnect the connector from the front seat outer belt assembly LH.
(k) Disconnect the connector from the front seat outer belt assembly RH.

1	CHECK DTC

(a) Proceed to the appropriate step according to DTC readings.
(1) If using the intelligent tester (read the 5-digit DTCs): Using the intelligent tester, check for DTCs (See page RS-34).
Result

Result	Proceed to
DTC B1810 is output.	A
DTC B1811 is output.	B
DTC B1812 is output.	C
DTC B1813 is output.	D

(2) If not using the intelligent tester (read the 2-digit DTCs): Check for DTCs (See page RS-34).
Result

Result	Proceed to
DTC 53 is output.	E

B → Go to step 7
C → Go to step 11
D → Go to step 15
E → Go to step 21

A

2	CHECK CONNECTOR

(a) Turn the ignition switch to the LOCK position.
(b) Disconnect the negative (-) terminal cable from the battery, and wait for at least 90 seconds.
(c) Check that the spiral cable connectors (on the horn button assembly side) are not damaged.
OK:
The lock button is not disengaged, and the claw of the lock is not deformed or damaged.

NG → REPLACE SPIRAL CABLE

OK

3	CHECK CONNECTION OF CONNECTORS

(a) Check that the connectors are properly connected to the center airbag sensor assembly and the spiral cable.
OK:
The connectors are properly connected.

RS

NG → CONNECT CONNECTORS

OK

4 CHECK SPIRAL CABLE (FOR SHORT)

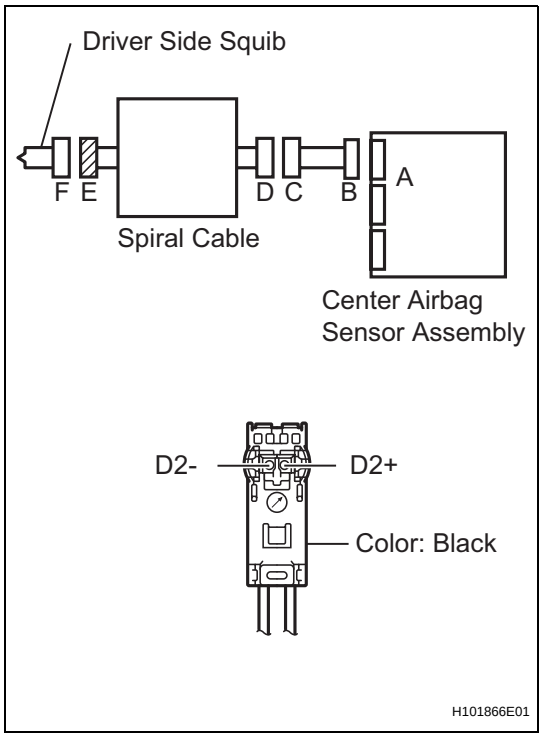

(a) Disconnect the spiral cable connectors from the instrument panel wire and steering pad.
(b) Release the activation prevention mechanism built into connector D (See page RS-28).
(c) Measure the resistance.
Standard resistance

Tester Connection	Condition	Specified Condition
D2+ - D2-	Always	1 MΩ or Higher

NG → REPLACE SPIRAL CABLE

OK

5 CHECK INSTRUMENT PANEL WIRE (FOR SHORT)

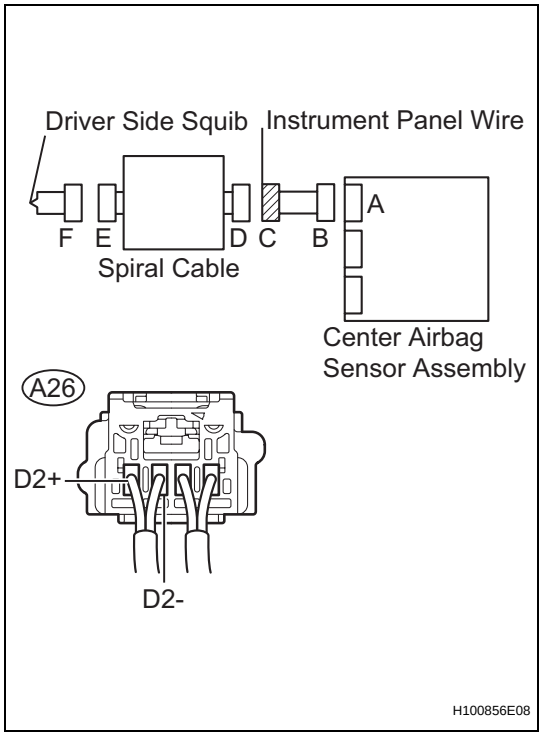

(a) Disconnect the instrument panel wire connector from the center airbag sensor assembly.
(b) Release the activation prevention mechanism built into connector B (See page RS-28).
(c) Measure the resistance.
Standard resistance

Tester Connection	Condition	Specified Condition
A26-4 (D2+) - A26-3 (D2-)	Always	1 MΩ or Higher

NG → **REPAIR OR REPLACE INSTRUMENT PANEL WIRE**

OK

6 CHECK CENTER AIRBAG SENSOR ASSEMBLY

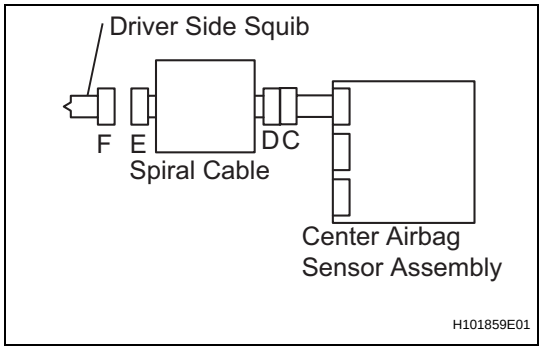

(a) Connect the instrument panel wire connectors to the center airbag sensor assembly and spiral cable.
(b) Connect the negative (-) terminal cable to the battery, and wait for at least 2 seconds.
(c) Turn the ignition switch to the ON position, and wait for at least 60 seconds
(d) Clear any DTCs stored in the memory (See page RS-34).
(e) Turn the ignition switch to the LOCK position.
(f) Turn the ignition switch to the ON position, and wait for at least 60 seconds.
(g) Check for DTCs (See page RS-34).
OK:
DTC B1810 is not output.

HINT:
DTCs other than B1810 may be output at this time, but they are not related to this check.

OK → **Go to step 20**

NG

REPLACE CENTER AIRBAG ASSEMBLY

RS

7	CHECK CONNECTOR

(a) Turn the ignition switch to the LOCK position.
(b) Disconnect the negative (-) terminal cable from the battery, and wait for at least 90 seconds.
(c) Check that the spiral cable connectors (on the steering pad side) are not damaged.
OK:
The lock button is not disengaged, and the claw of the lock is not deformed or damaged.

NG → **REPLACE SPIRAL CABLE**

OK

8	CHECK CONNECTION OF CONNECTORS

(a) Check that the spiral cable connectors (on the steering pad side) are properly connected.
OK:
The connectors are properly connected.

NG → **CONNECT CONNECTORS**

OK

9	CHECK SPIRAL CABLE (FOR OPEN)

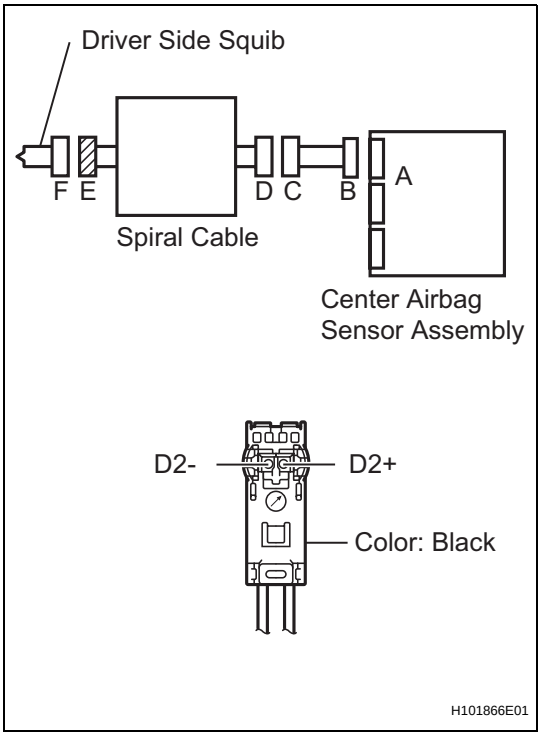

(a) Disconnect the spiral cable connectors from the instrument panel wire and steering pad.
(b) Measure the resistance.
Standard resistance

Tester Connection	Condition	Specified Condition
D2+ - D2-	Always	Below 1 Ω

NG → **REPLACE SPIRAL CABLE**

OK

RS

10 CHECK INSTRUMENT PANEL WIRE (FOR OPEN)

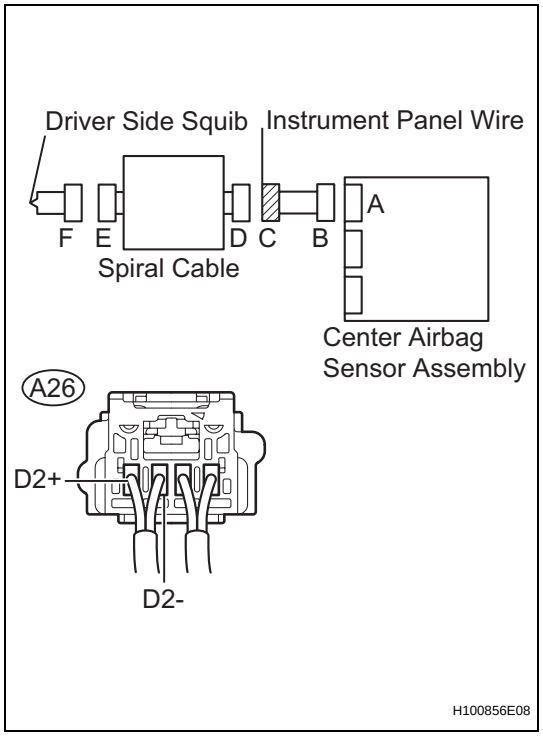

(a) Disconnect the instrument panel wire connector from the center airbag sensor assembly.
(b) Measure the resistance.
Standard resistance

Tester Connection	Condition	Specified Condition
A26-4 (D2+) - A26-3 (D2-)	Always	Below 1 Ω

OK → **Go to step 19**

NG

REPAIR OR REPLACE INSTRUMENT PANEL WIRE

11 CHECK CONNECTOR

(a) Turn the ignition switch to the LOCK position.
(b) Disconnect the negative (-) terminal cable from the battery, and wait for at least 90 seconds.
(c) Check that the spiral cable connectors (on the steering pad side) are not damaged.
OK:
The lock button is not disengaged, or the claw of the lock is not deformed or damaged.

NG → **REPLACE SPIRAL CABLE**

OK

12 CHECK CONNECTION OF CONNECTORS

(a) Check that the spiral cable connectors (on the steering pad side) are properly connected.
OK:
The connectors are properly connected.

RS

NG → CONNECT CONNECTORS

OK

13 CHECK SPIRAL CABLE (TO GROUND)

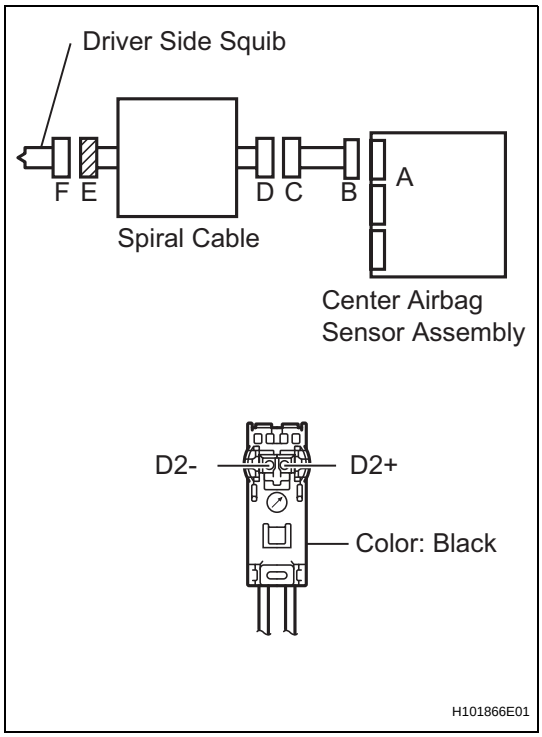

(a) Disconnect the spiral cable connector from the instrument panel wire and steering pad.
(b) Measure the resistance.
Standard resistance

Tester Connection	Condition	Specified Condition
D2+ - Body ground	Always	1 MΩ or Higher
D2- - Body ground	Always	1 MΩ or Higher

NG → REPLACE SPIRAL CABLE

OK

14 CHECK INSTRUMENT PANEL WIRE (TO GROUND)

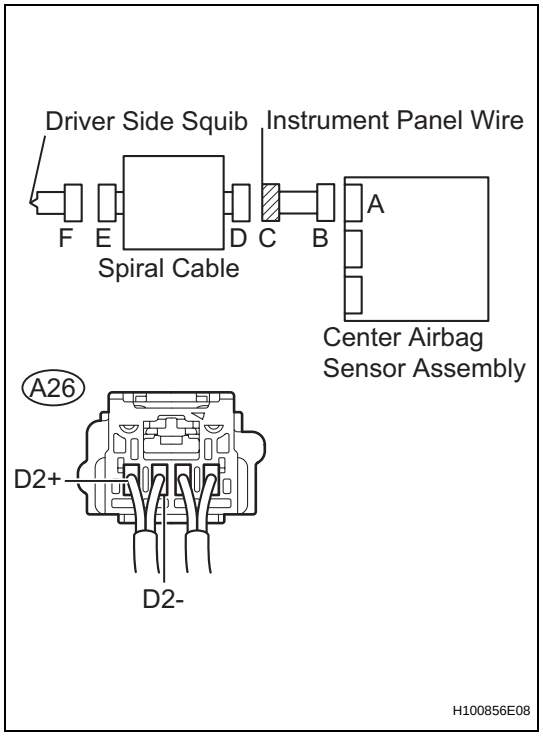

(a) Disconnect the instrument panel wire connector from the center airbag sensor assembly.
(b) Measure the resistance.
Standard resistance

Tester Connection	Condition	Specified Condition
A26-4 (D2+) - Body ground	Always	1 MΩ or Higher
A26-3 (D2-) - Body ground	Always	1 MΩ or Higher

OK → **Go to step 19**

NG

REPAIR OR REPLACE INSTRUMENT PANEL WIRE

15 CHECK CONNECTOR

(a) Turn the ignition switch to the LOCK position.
(b) Disconnect the negative (-) terminal cable from the battery, and wait for at least 90 seconds.
(c) Check that the spiral cable connectors (on the steering pad side) are not damaged.
OK:
The lock button is not disengaged, and the claw of the lock is not deformed or damaged.

NG → **REPLACE SPIRAL CABLE**

OK

16 CHECK CONNECTION OF CONNECTORS

(a) Check that the spiral cable connectors (on the steering pad side) are properly connected.
OK:
The connectors are properly connected.

RS

NG → CONNECT CONNECTORS

OK

17 CHECK SPIRAL CABLE (TO B+)

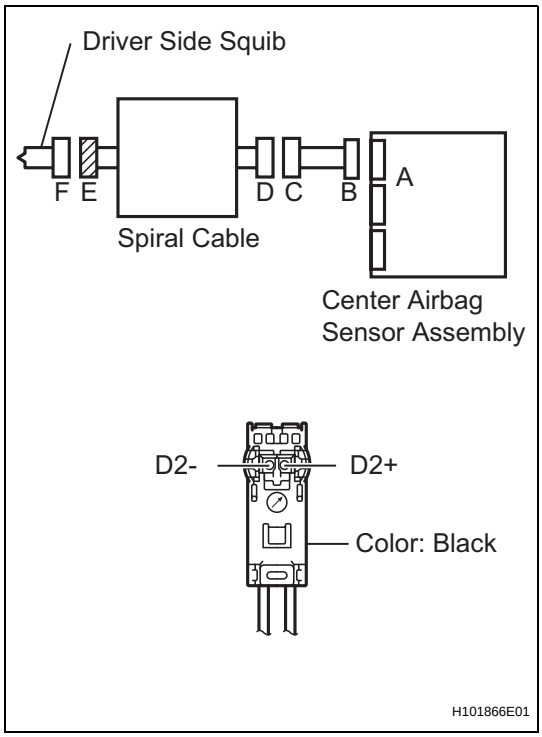

(a) Disconnect the spiral cable connectors from the instrument panel wire and steering pad.
(b) Connect the negative (-) terminal cable to the battery, and wait for at least 2 seconds.
(c) Turn the ignition switch to the ON position.
(d) Measure the voltage.

Standard voltage

Tester Connection	Condition	Specified Condition
D2+ - Body ground	Ignition switch ON	Below 1 V
D2- - Body ground	Ignition switch ON	Below 1 V

NG → REPLACE SPIRAL CABLE

OK

18 CHECK INSTRUMENT PANEL WIRE (TO B+)

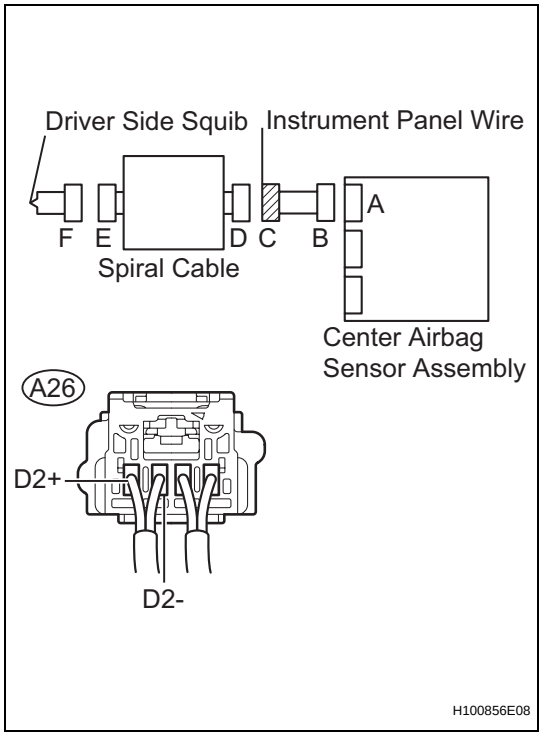

(a) Turn the ignition switch to the LOCK position.
(b) Disconnect the negative (-) terminal cable from the battery, and wait for at least 90 seconds.
(c) Disconnect the instrument panel wire connector from the center airbag sensor assembly.
(d) Connect the negative (-) terminal cable to the battery, and wait for at least 2 seconds.
(e) Turn the ignition switch to the ON position.
(f) Measure the voltage.

Standard voltage

Tester Connection	Condition	Specified Condition
A26-4 (D2+) - Body ground	Ignition switch ON	Below 1 V
A26-3 (D2-) - Body ground	Ignition switch ON	Below 1 V

NG → **REPAIR OR REPLACE INSTRUMENT PANEL WIRE**

OK

19 REPLACE CENTER AIRBAG SENSOR ASSEMBLY

HINT:
If continuing from step 18, begin from (a). If continuing from any other step, begin from (c).

RS

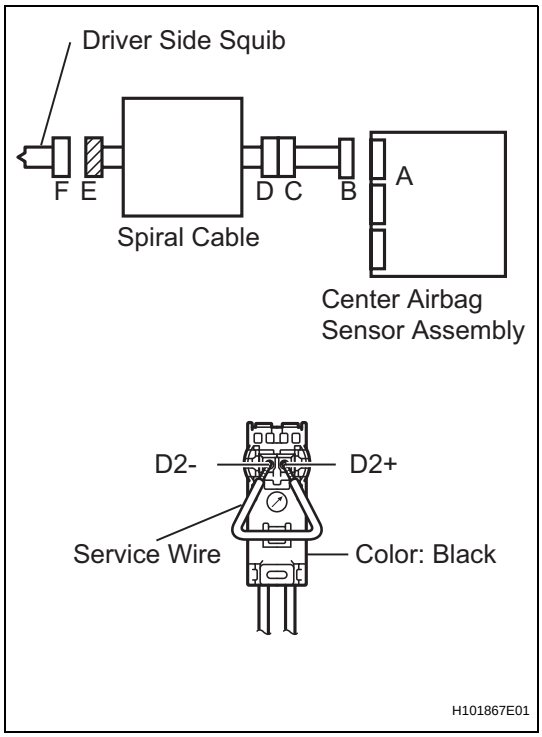

(a) Turn the ignition switch to the LOCK position.
(b) Disconnect the negative (-) terminal cable from the battery, and wait for at least 90 seconds.
(c) Connect the connectors to the center airbag sensor assembly.
(d) Using a service wire, connect D2+ and D2- of connector E.

NOTICE:

- **Twist the end of the service wire in order to insert it into the connector.**
- **Do not forcibly insert the twisted service wire into the terminals of the connector when connecting.**

(e) Connect the negative (-) terminal cable to the battery, and wait for at least 2 seconds.
(f) Turn the ignition switch to the ON position, and wait for at least 60 seconds.
(g) Clear any DTCs stored in the memory (See page RS-34).
(h) Turn the ignition switch to the LOCK position.
(i) Turn the ignition switch to the ON position, and wait for at least 60 seconds.
(j) Check for DTCs (See page RS-34).

OK:

DTCs B1811, B1812 and B1813 are not output.

HINT:
DTCs other than B1811, B1812 or B1813 may be output at this time, but they are not related to this check.

NG → **REPLACE CENTER AIRBAG ASSEMBLY**

OK

20	CHECK STEERING PAD (DRIVER SIDE SQUIB)

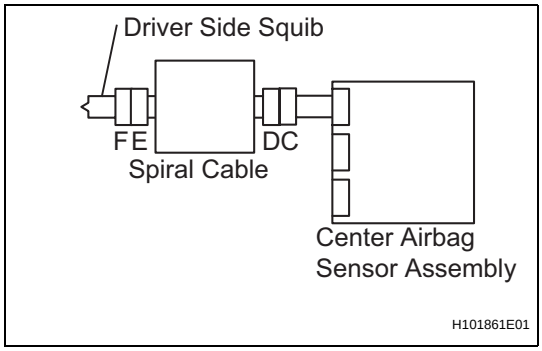

HINT:
If continuing from step 19, begin from (c). If continuing from any other step, being from (a).

(a) Turn the ignition switch to the LOCK position.
(b) Disconnect the negative (-) terminal cable from the battery, and wait for at least 90 seconds.
(c) Disconnect the service wire from connector E.
(d) Connect the connectors to the steering pad.
(e) Connect the negative (-) terminal cable to the battery, and wait for at least 2 seconds.
(f) Turn the ignition switch to the ON position, and wait for at least 60 seconds.
(g) Clear any DTCs stored in the memory (See page RS-34).
(h) Turn the ignition switch to the LOCK position.
(i) Turn the ignition switch to the ON position, and wait for at least 60 seconds.
(j) Check for DTCs (See page RS-34).

RS

OK:

DTCs B1810, B1811, B1812 and B1813 are not output.

HINT:

DTCs other than B1810, B1811, B1812 or B1813 may be output at this time, but they are not related to this check.

NG → **REPLACE STEERING PAD**

OK ↓

USE SIMULATION METHOD TO CHECK

21	CHECK CONNECTOR

(a) Turn the ignition switch to the LOCK position.
(b) Disconnect the negative (-) terminal cable from the battery, and wait for at least 90 seconds.
(c) Check that the spiral cable connectors (on the steering pad side) are not damaged.

OK:

The lock button is not disengaged, and the claw of the lock is not deformed or damaged.

NG → **REPLACE SPIRAL CABLE**

OK ↓

22	CHECK CONNECTION OF CONNECTORS

(a) Check that the spiral cable connectors (on the steering pad side) are properly connected.

OK:

The connectors are properly connected.

NG → **CONNECT CONNECTORS**

OK ↓

23 CHECK SPIRAL CABLE

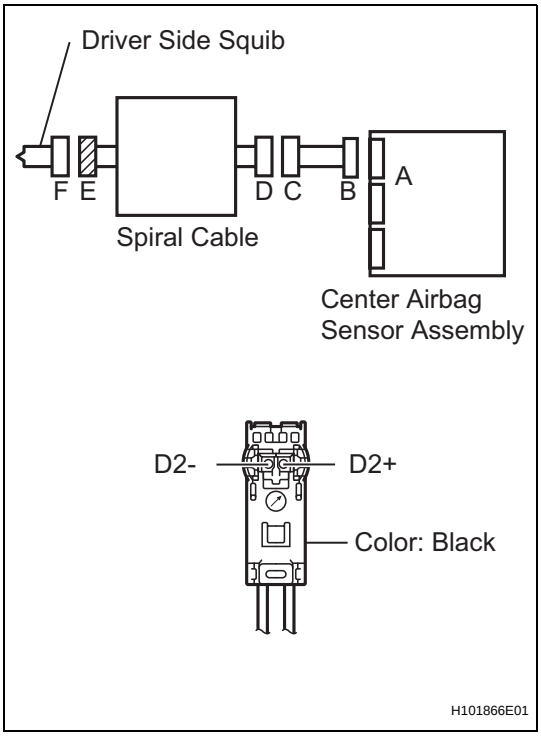

(a) Disconnect the spiral cable connectors from the instrument panel wire and steering pad.
(b) Connect the negative (-) terminal cable from the battery, and wait for at least 2 seconds.
(c) Turn the ignition switch to the ON position.
(d) Measure the voltage.

Standard voltage

Tester Connection	Condition	Specified Condition
D2+ - Body ground	Ignition switch ON	Below 1 V
D2- - Body ground	Ignition switch ON	Below 1 V

(e) Turn the ignition switch to the LOCK position.
(f) Disconnect the negative (-) terminal cable from the battery, and wait for at least 90 seconds.
(g) Measure the resistance.

Standard resistance

Tester Connection	Condition	Specified Condition
D2+ - D2-	Always	Below 1 Ω
D2+ - Body ground	Always	1 MΩ or Higher
D2- - Body ground	Always	1 MΩ or Higher

(h) Release the activation prevention mechanism built into connector D (See page RS-28).
(i) Measure the resistance.

Standard resistance

Tester Connection	Condition	Specified Condition
D2+ - D2-	Always	1 MΩ or Higher

NG → **REPLACE SPIRAL CABLE**

OK

24 CHECK INSTRUMENT PANEL WIRE

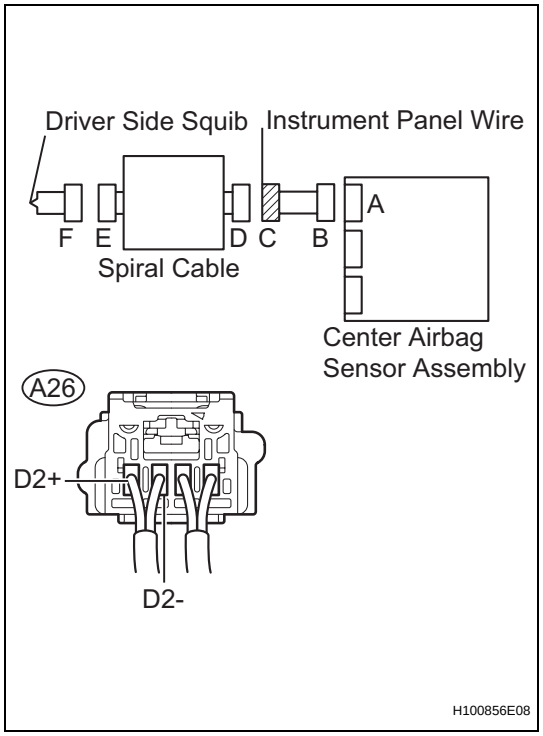

(a) Restore the released activation prevention mechanism of connector B to the original condition.
(b) Disconnect the instrument panel wire connector from the center airbag sensor assembly.
(c) Connect the negative (-) terminal cable to the battery, and wait for at least 2 seconds.
(d) Turn the ignition switch to the ON position.
(e) Measure the voltage.

Standard voltage

Tester Connection	Condition	Specified Condition
A26-4 (D2+) - Body ground	Ignition switch ON	Below 1 V
A26-3 (D2-) - Body ground	Ignition switch ON	Below 1 V

(f) Turn the ignition switch to the LOCK position.
(g) Disconnect the negative (-) terminal cable from the battery, and wait for at least 90 seconds.
(h) Measure the resistance.

Standard resistance

Tester Connection	Condition	Specified Condition
A26-4 (D2+) - A26-3 (D2-)	Always	Below 1 Ω
A26-4 (D2+) - Body ground	Always	1 MΩ or Higher
A26-3 (D2-) - Body ground	Always	1 MΩ or Higher

(i) Release the activation prevention mechanism built into connector B (See page RS-28).
(j) Measure the resistance.

Standard resistance

Tester Connection	Condition	Specified Condition
A26-4 (D2+) - A26-3 (D2-)	Always	1 MΩ or Higher

NG → **REPAIR OR REPLACE INSTRUMENT PANEL WIRE**

OK

RS

25	CHECK CENTER AIRBAG ASSEMBLY

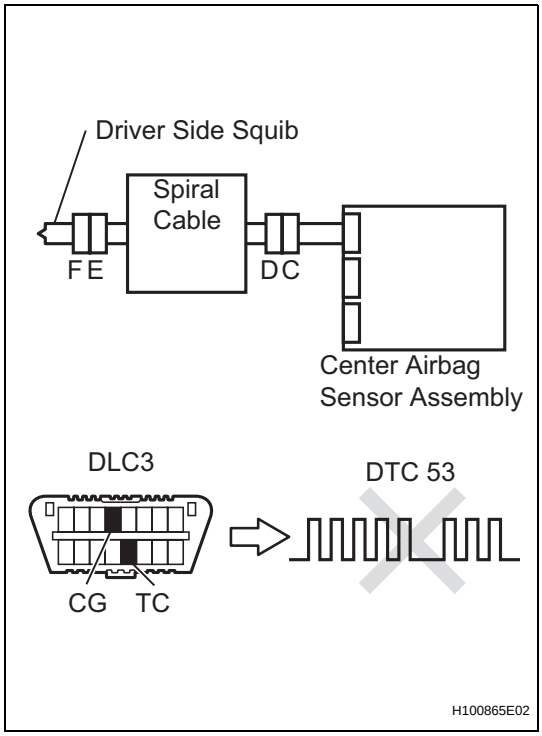

(a) Replace the steering pad (See page RS-557).

HINT:

Perform the inspection using parts from a normal vehicle when possible.

(b) Connect the instrument panel wire to the center airbag sensor assembly and spiral cable.

(c) Connect the connectors to the center airbag sensor assembly.

(d) Connect the negative (-) terminal cable to the battery, and wait for at least 2 seconds.

(e) Turn the ignition switch to the ON position, and wait for at least 60 seconds.

(f) Clear any DTCs stored in the memory (See page RS-34).

(g) Turn the ignition switch to the LOCK position.

(h) Turn the ignition switch to the ON position, and wait for at least 60 seconds.

(i) Check for DTCs (See page RS-34).

OK:

DTC 53 is not output.

HINT:

DTCs other than 53 may be output at this time, but they are not related to this check.

NG → **REPLACE CENTER AIRBAG ASSEMBLY**

OK

USE SIMULATION METHOD TO CHECK

RS

DTC	B1815/54	Short in Front Passenger Side Squib 2nd Step Circuit

DTC	B1816/54	Open in Front Passenger Side Squib 2nd Step Circuit

DTC	B1817/54	Short to GND in Front Passenger Side Squib 2nd Step Circuit

DTC	B1818/54	Short to B+ in Front Passenger Side Squib 2nd Step Circuit

DESCRIPTION

The front passenger side squib (Dual stage -2nd step) circuit consists of the center airbag sensor assembly and the front passenger airbag assembly.
The circuit signals the SRS to deploy when airbag deployment conditions are met.
These DTCs are set when a malfunction is detected in the front passenger side squib (Dual stage - 2nd step) circuit.

DTC No.	DTC Detecting Conditions	Trouble Areas
B1815/54	• The center airbag sensor assembly receives a line short circuit signal in the front passenger side squib (Dual stage - 2nd step) circuit for 2 seconds • Front passenger side squib (Dual stage - 2nd step) malfunction • Center airbag sensor assembly center malfunction	• Instrument panel wire • Instrument panel wire assembly • Front passenger airbag assembly (Front passenger side squib, Dual stage - 2nd step) • Center airbag sensor assembly
B1816/54	• The center airbag sensor assembly receives an open circuit signal in the front passenger side squib (Dual stage - 2nd step) circuit for 2 seconds • Front passenger side squib (Dual stage - 2nd step) malfunction • Center airbag sensor assembly malfunction	• Instrument panel wire • Instrument panel wire assembly • Front passenger airbag assembly (Front passenger side squib, Dual stage - 2nd step) • Center airbag sensor assembly
B1817/54	• The center airbag sensor assembly receives a short circuit to ground signal in the front passenger side squib (Dual stage - 2nd step) circuit for 0.5 seconds • Front passenger side squib (Dual stage - 2nd step) malfunction • Center airbag sensor assembly malfunction	• Instrument panel wire • Instrument panel wire assembly • Front passenger airbag assembly (Front passenger side squib, Dual stage - 2nd step) • Center airbag sensor assembly
B1818/54	• The center airbag sensor assembly receives a short circuit to B+ signal in the front passenger side squib (Dual stage - 2nd step) circuit for 0.5 seconds • Front passenger side squib (Dual stage - 2nd step) malfunction • Center airbag sensor assembly malfunction	• Instrument panel wire • Instrument panel wire assembly • Front passenger airbag assembly (Front passenger side squib, Dual stage - 2nd step) • Center airbag sensor assembly

WIRING DIAGRAM

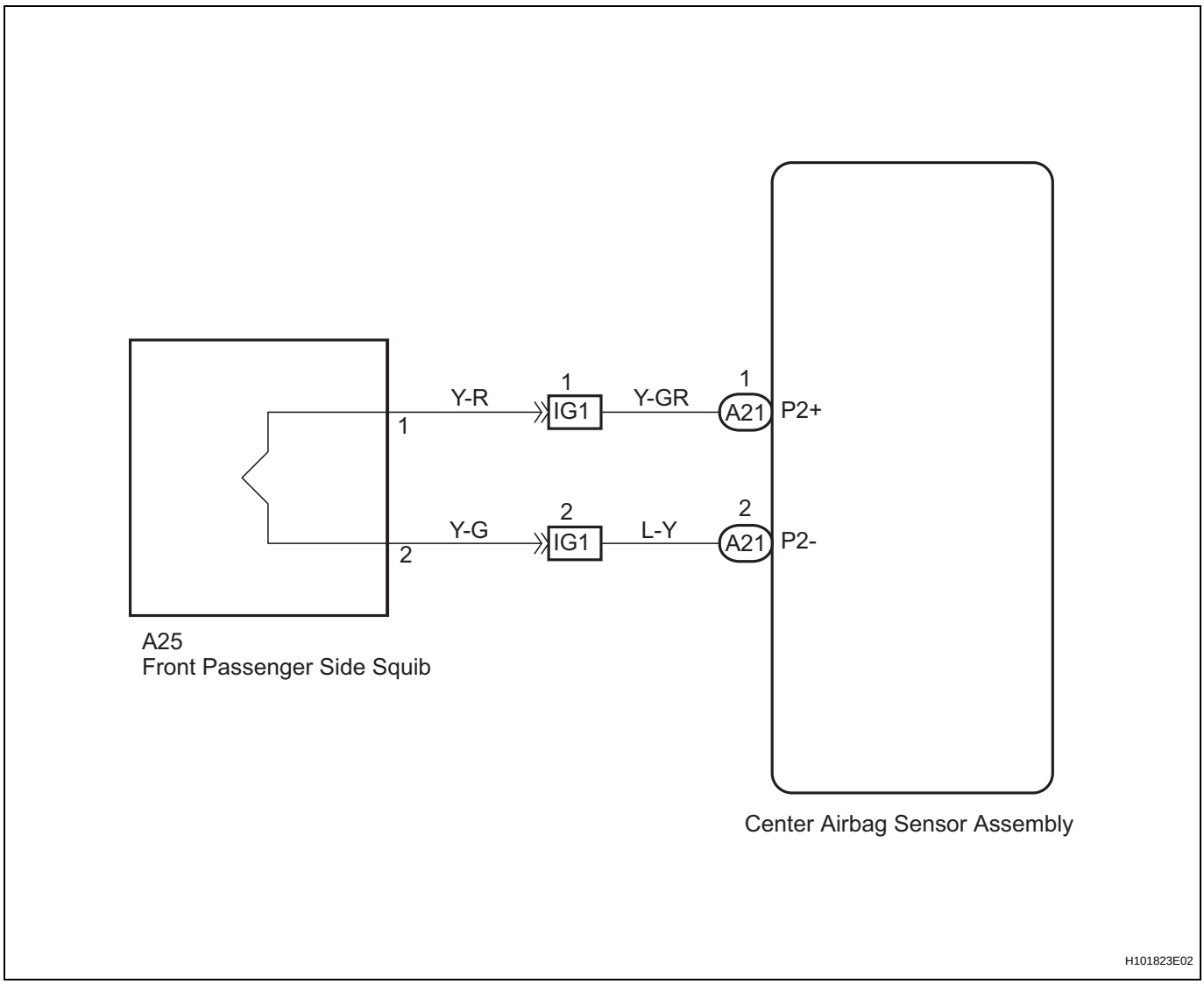

CAUTION:
In order to prevent unexpected airbag deployment, disconnect the following connectors before inspecting parts such as wire harnesses, if the application of tester probes to the center airbag sensor assembly connector is necessary.

RS

(a) Turn the ignition switch to the LOCK position.
(b) Disconnect the negative (-) terminal cable from the battery, and wait for at least 90 seconds.
(c) Disconnect the connectors from the center airbag sensor assembly.
(d) Disconnect the connectors from the steering pad.
(e) Disconnect the connector from the front passenger airbag assembly.
(f) Disconnect the connector from the front seat airbag assembly LH.
(g) Disconnect the connector from the front seat airbag assembly RH.
HINT:
Skip the following steps if side and curtain shield airbags are not fitted.
(h) Disconnect the connector from the curtain shield airbag assembly LH.
(i) Disconnect the connector from the curtain shield airbag assembly RH.
(j) Disconnect the connector from the front seat outer belt assembly LH.
(k) Disconnect the connector from the front seat outer belt assembly RH.

1	CHECK DTC OUTPUT

(a) Proceed to the appropriate step according to the DTC readings.
(1) If using the intelligent tester (read the 5-digit DTCs): Using the intelligent tester, check for DTCs (See page RS-34).
Result

Result	Proceed to
DTC B1815 is output.	A
DTC B1816 is output.	B
DTC B1817 is output.	C
DTC B1818 is output.	D

(2) If not using the intelligent tester (read the 2-digit DTCs): Check for DTCs (See page RS-34).
Result

Result	Proceed to
DTC 54 is output.	E

B → Go to step 7

C → Go to step 11

D → Go to step 15

E → Go to step 21

A

2	CHECK CONNECTOR

(a) Turn the ignition switch to the LOCK position.
(b) Disconnect the negative (-) terminal cable from the battery, and wait for at least 90 seconds.
(c) Check that the instrument panel wire assembly connectors (on the front passenger airbag assembly side) are not damaged.
OK:
The lock button is not disengaged, and the claw of the lock is not deformed or damaged.

NG → REPLACE INSTRUMENT PANEL WIRE ASSEMBLY

OK

RS

3	CHECK CONNECTION OF CONNECTORS

(a) Check that the connectors are properly connected to the center airbag sensor assembly and the instrument panel wire assembly.
OK:
The connectors are properly connected.

NG → **CONNECT CONNECTORS**

OK

4	CHECK INSTRUMENT PANEL WIRE ASSEMBLY (FOR SHORT)

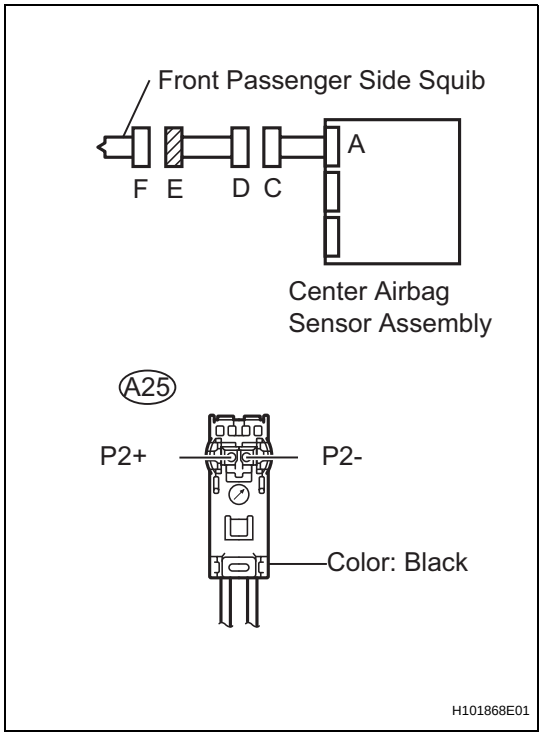

(a) Disconnect the instrument panel wire assembly connectors from the instrument panel wire and front passenger airbag assembly.
(b) Release the activation prevention mechanism built into connector D (See page RS-28).
(c) Measure the resistance.
Standard resistance

Tester Connection	Condition	Specified Condition
A25-1 (P2+) - A25-2 (P2-)	Always	1 MΩ or Higher

NG → **REPLACE INSTRUMENT PANEL WIRE ASSEMBLY**

OK

RS

5 CHECK INSTRUMENT PANEL WIRE (FOR SHORT)

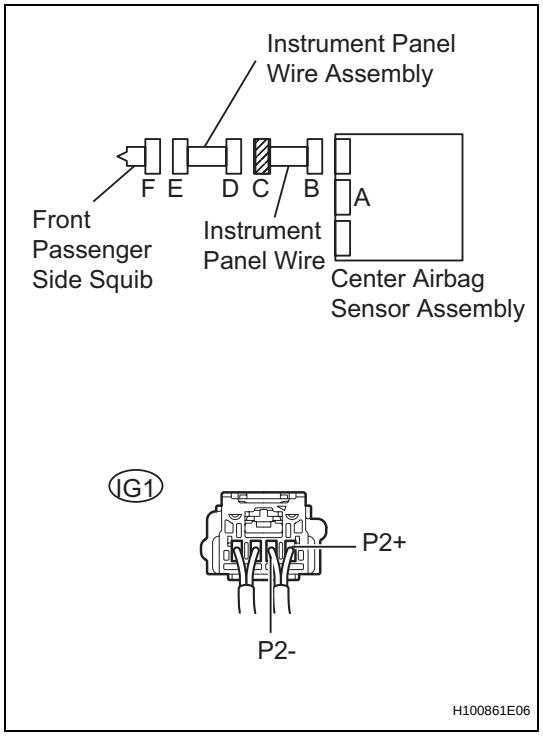

(a) Disconnect the instrument panel wire connector from the center airbag sensor assembly.
(b) Release the activation prevention mechanism built into connector B (See page RS-28).
(c) Measure the resistance.
Standard resistance

Tester Connection	Condition	Specified Condition
IG1-1 (P2+) - IG1-2 (P2-)	Always	1 MΩ or Higher

NG → **REPAIR OR REPLACE INSTRUMENT PANEL WIRE**

OK

6 CHECK CENTER AIRBAG SENSOR ASSEMBLY

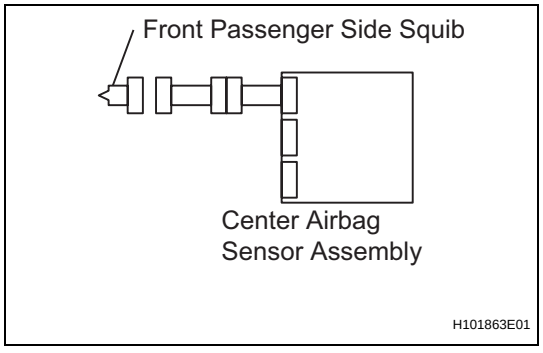

(a) Connect the instrument panel wire connectors to the center airbag sensor assembly and instrument panel wire assembly.
(b) Connect the negative (-) terminal cable to the battery, and wait for at least 2 seconds.
(c) Turn the ignition switch to the ON position, and wait for at least 60 seconds.
(d) Clear any DTCs stored in the memory (See page RS-34).
(e) Turn the ignition switch to the LOCK position.
(f) Turn the ignition switch to the ON position, and wait for at least 60 seconds.
(g) Check for DTCs (See page RS-34).
OK:
DTC B1815 is not output.

HINT:
DTCs other than B1815 may be output at this time, but they are not related to this check.

OK → **Go to step 20**

RS

NG

REPLACE CENTER AIRBAG SENSOR ASSEMBLY

7	CHECK CONNECTOR

(a) Turn the ignition switch to the LOCK position.
(b) Disconnect the negative (-) terminal cable from the battery, and wait for at least 90 seconds.
(c) Check that the instrument panel wire assembly connectors (on the front passenger airbag assembly side) are not damaged.

OK:

The lock button is not disengaged, and the claw of the lock is not deformed or damaged.

NG → **REPLACE INSTRUMENT PANEL WIRE ASSEMBLY**

OK

8	CHECK CONNECTION OF CONNECTORS

(a) Check that the connectors are properly connected to the center airbag sensor assembly and the instrument panel wire assembly.

OK:

The connectors are properly connected.

NG → **CONNECT CONNECTORS**

OK

9 CHECK INSTRUMENT PANEL WIRE ASSEMBLY (FOR OPEN)

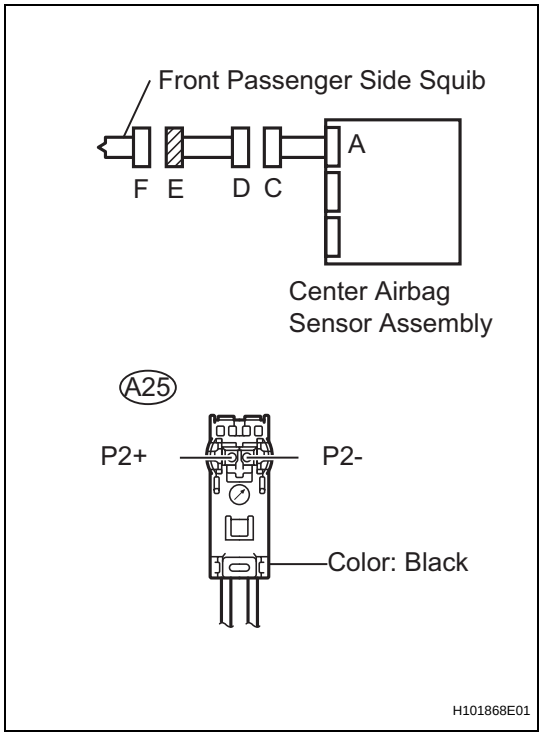

(a) Disconnect the instrument panel wire assembly connectors from the instrument panel wire and steering pad.
(b) Measure the resistance.
Standard resistance

Tester Connection	Condition	Specified Condition
A25-1 (P2+) - A25-2 (P2-)	Always	Below 1 Ω

NG → **REPLACE INSTRUMENT PANEL WIRE ASSEMBLY**

OK

10 CHECK INSTRUMENT PANEL WIRE (FOR OPEN)

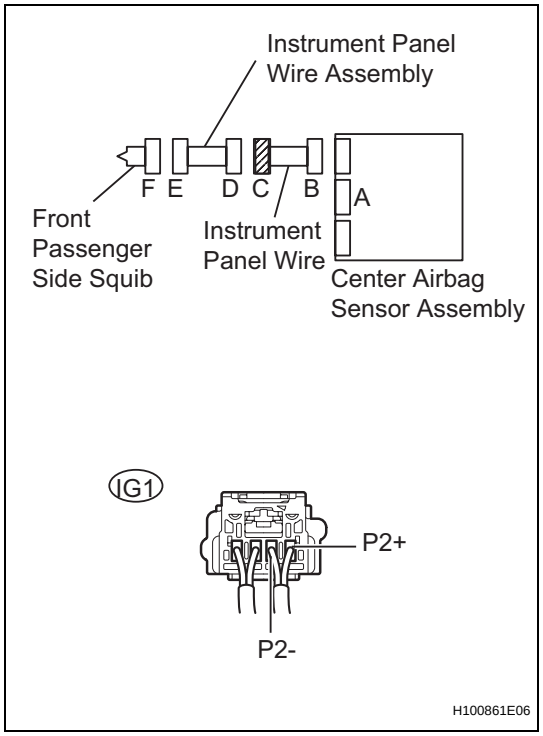

(a) Disconnect the instrument panel wire connector assembly from the center airbag sensor assembly.
(b) Measure the resistance.
Standard resistance

Tester Connection	Condition	Specified Condition
IG1-1 (P2+) - IG1-2 (P2-)	Always	Below 1 Ω

OK → **Go to step 19**

RS

NG

REPAIR OR REPLACE INSTRUMENT PANEL WIRE

11	CHECK CONNECTOR

(a) Turn the ignition switch to the LOCK position.
(b) Disconnect the negative (-) terminal cable from the battery, and wait for at least 90 seconds.
(c) Check that the instrument panel wire assembly connectors (on the front passenger airbag assembly side) are not damaged.

OK:

The lock button is not disengaged, and the claw of the lock is not deformed or damaged.

NG → **REPLACE INSTRUMENT PANEL WIRE ASSEMBLY**

OK

12	CHECK CONNECTION OF CONNECTORS

(a) Check that the connectors are properly connected to the center airbag sensor assembly and the instrument panel wire assembly.

OK:

The connectors are properly connected.

NG → **CONNECT CONNECTORS**

OK

13 CHECK INSTRUMENT PANEL WIRE ASSEMBLY (TO GROUND)

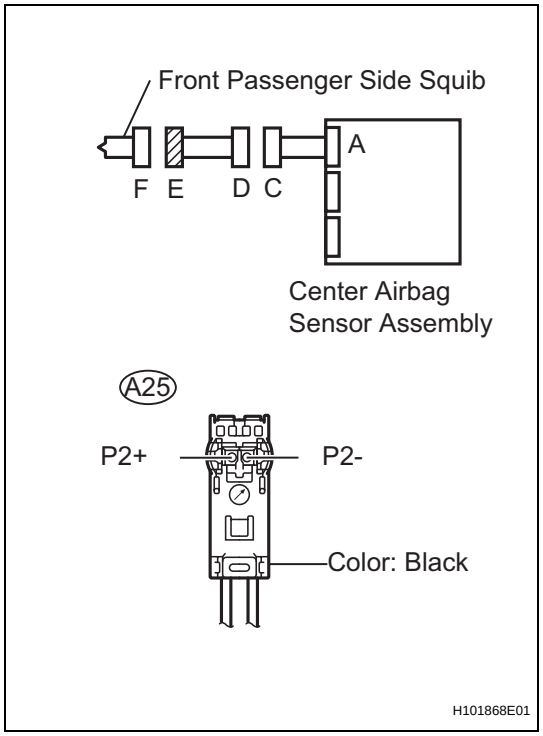

(a) Disconnect the spiral cable connectors from the instrument panel wire and steering pad.
(b) Measure the resistance.
Standard resistance

Tester Connection	Condition	Specified Condition
A25-1 (P2+) - Body ground	Always	1 MΩ or Higher
A25-2 (P2-) - Body ground	Always	1 MΩ or Higher

NG → **REPLACE INSTRUMENT PANEL WIRE ASSEMBLY**

OK

14 CHECK INSTRUMENT PANEL WIRE (TO GROUND)

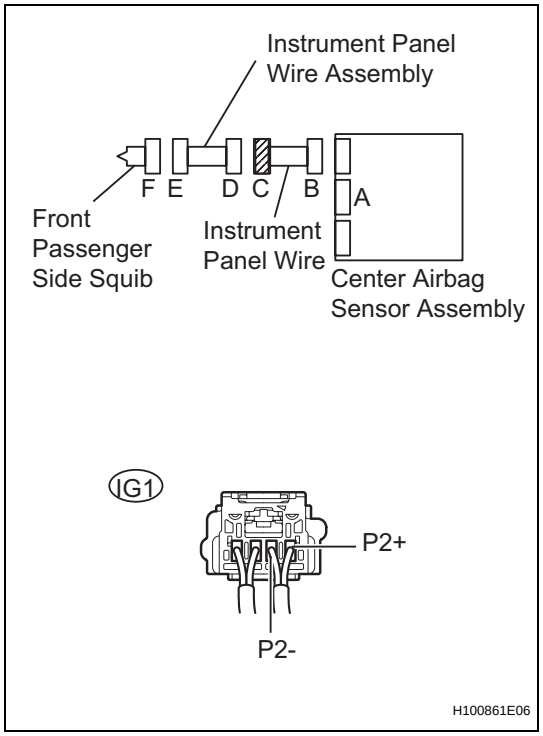

(a) Disconnect the instrument panel wire connector from the airbag sensor assembly center.
(b) Measure the resistance.
Standard resistance

Tester Connection	Condition	Specified Condition
IG1-1 (P2+) - Body ground	Always	1 MΩ or Higher
IG1-2 (P2-) - Body ground	Always	1 MΩ or Higher

OK → **Go to step 19**

RS

NG

REPAIR OR REPLACE INSTRUMENT PANEL WIRE

15 CHECK CONNECTOR

(a) Turn the ignition switch to the LOCK position.
(b) Disconnect the negative (-) terminal cable from the battery, and wait for at least 90 seconds.
(c) Check that the instrument panel wire assembly connectors (on the front passenger airbag assembly side) are not damaged.
OK:
The lock button is not disengaged, and the claw of the lock is not deformed or damaged.

NG → **REPLACE INSTRUMENT PANEL WIRE ASSEMBLY**

OK

16 CHECK CONNECTION OF CONNECTORS

(a) Check that the connectors are properly connected to the center airbag sensor assembly and the instrument panel wire assembly.
OK:
The connectors are properly connected.

NG → **CONNECT CONNECTORS**

OK

17 CHECK INSTRUMENT PANEL WIRE ASSEMBLY (TO B+)

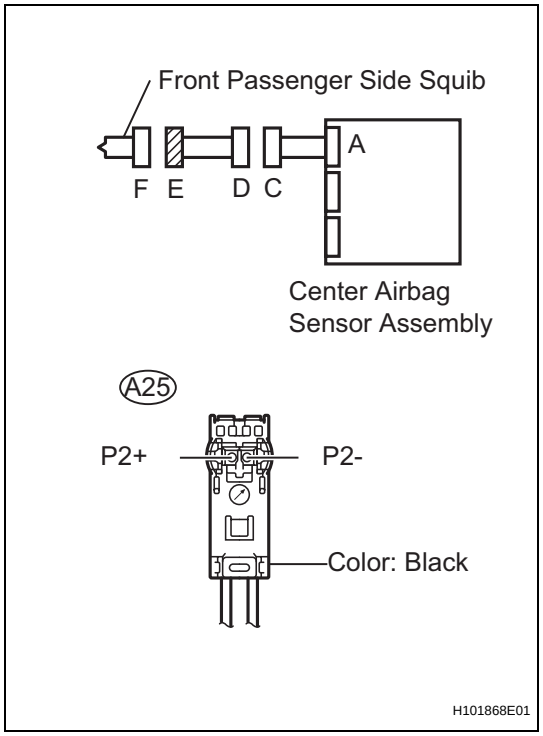

(a) Disconnect the spiral cable connectors from the instrument panel wire and steering pad.
(b) Connect the negative (-) terminal cable to the battery, and wait for at least 2 seconds.
(c) Turn the ignition switch to the ON position.
(d) Measure the voltage.

Standard voltage

Tester Connection	Condition	Specified Condition
A25-1 (P2+) - Body ground	Ignition switch ON	Below 1 V
A25-2 (P2-) - Body ground	Ignition switch ON	Below 1 V

NG → **REPLACE INSTRUMENT PANEL WIRE ASSEMBLY**

OK

18 CHECK INSTRUMENT PANEL WIRE (TO B+)

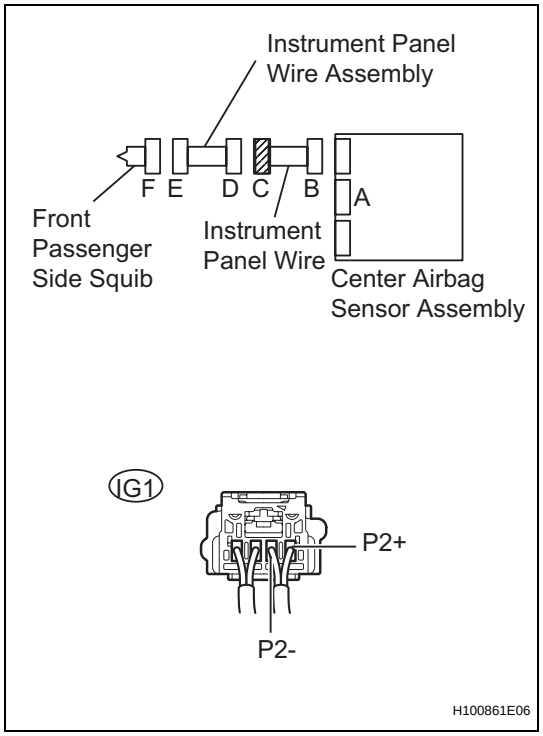

(a) Turn the ignition switch to the LOCK position.
(b) Disconnect the negative (-) terminal cable from the battery, and wait for at least 90 seconds.
(c) Disconnect the instrument panel wire connector from the center airbag sensor assembly.
(d) Connect the negative (-) terminal cable to the battery, and wait for at least 2 seconds.
(e) Turn the ignition switch to the ON position.
(f) Measure the resistance.

Standard voltage

Tester Connection	Condition	Specified Condition
IG1-1 (P2+) - Body ground	Always	Below 1 V
IG1-2 (P2-) - Body ground	Always	Below 1 V

NG → **REPAIR OR REPLACE INSTRUMENT PANEL WIRE**

OK

RS

19 CHECK CENTER AIRBAG SENSOR ASSEMBLY

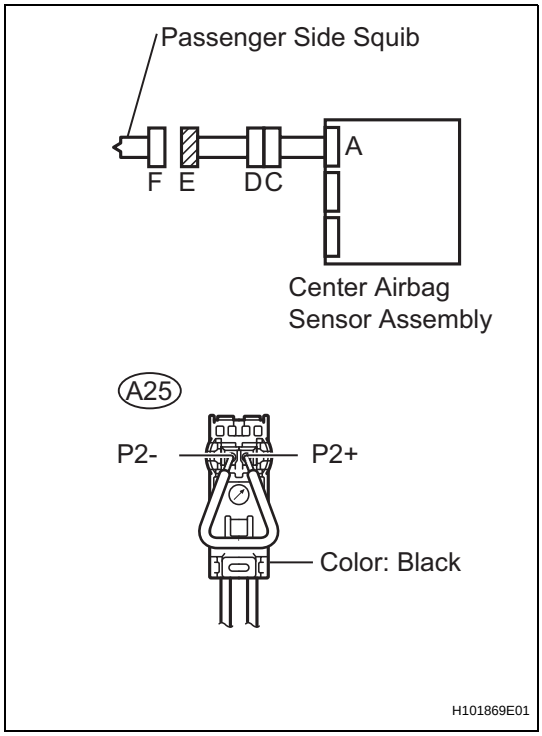

HINT:
If continuing from step 14, begin from (a). If continuing from any other step, begin from (c).

(a) Turn the ignition switch to the LOCK position.
(b) Disconnect the negative (-) terminal cable from the battery, and wait for at least 90 seconds.
(c) Connect the connectors to the center airbag sensor assembly.
(d) Using a service wire, connect A25-1 (P2+) and A25-2 (P2-) of connector E.

NOTICE:
- **Twist the end of the service wire in order to insert it into the connector.**
- **Do not forcibly insert the twisted service wire into the terminals of the connector when connecting.**

(e) Connect the negative (-) terminal cable to the battery, and wait for at least 2 seconds.
(f) Turn the ignition switch to the ON position, and wait for at least 60 seconds.
(g) Clear any DTCs stored in the memory (See page RS-34).
(h) Turn the ignition switch to the LOCK position.
(i) Turn the ignition switch to the ON position, and wait for at least 60 seconds.
(j) Check for DTCs (See page RS-34).

OK:
DTCs B1816, B1817 and B1818 are not output.

HINT:
DTCs other than B1816, B1817 or B1818 may be output at this time, but they are not related to this check.

NG → **REPLACE CENTER AIRBAG SENSOR ASSEMBLY**

OK

20 CHECK FRONT PASSENGER AIRBAG ASSEMBLY (PASSENGER SIDE SQUIB)

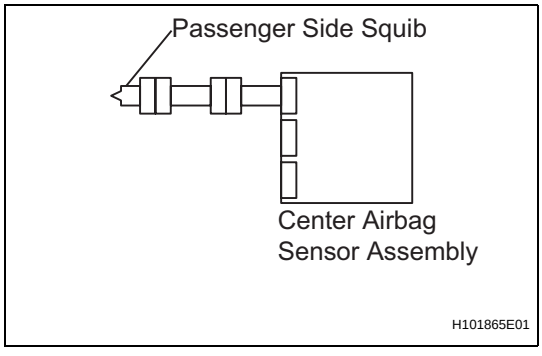

HINT:
If continuing from step 19, begin from (c) .If continuing from any other step, being from (a).

(a) Turn the ignition switch to the LOCK position.
(b) Disconnect the negative (-) terminal cable from the battery, and wait for at least 90 seconds.
(c) Disconnect the SST from connector C.
(d) Connect the connectors to the front passenger airbag assembly.
(e) Connect the negative (-) terminal cable to the battery, and wait for at least 2 seconds.
(f) Turn the ignition switch to the ON position, and wait for at least 60 seconds.

RS

(g) Clear any DTCs stored in the memory (See page RS-34).
(h) Turn the ignition switch to the LOCK position.
(i) Turn the ignition switch to the ON position, and wait for at least 60 seconds.
(j) Check for DTCs (See page RS-34).
OK:
DTC B1815, B1816, B1817 and B1818 are not output.

HINT:
DTCs other than B1815, B1816, B1817 or B1818 may be output at this time, but they are not related to this check.

NG → **REPLACE INSTR PNL PASS L/DOOR AIRBAG ASSEMBLY**

OK

OTHERS USE SIMULATION METHOD TO CHECK

21 CHECK CONNECTOR

(a) Turn the ignition switch to the LOCK position..
(b) Disconnect the negative (-) terminal cable from the battery, and wait for at least 90 seconds
(c) Check that the instrument panel wire assembly connectors (on the front passenger airbag assembly side) are not damaged.
OK:
The lock button is not disengaged, and the claw of the lock is not deformed or damaged.

NG → **REPLACE INSTRUMENT PANEL WIRE ASSEMBLY**

OK

22 CHECK CONNECTION OF CONNECTORS

RS

(a) Check that the connectors are properly connected to the center airbag sensor assembly and the instrument panel wire assembly.
OK:
The connectors are properly connected.

NG → **CONNECT CONNECTORS**

OK

23 CHECK INSTRUMENT PANEL WIRE ASSEMBLY

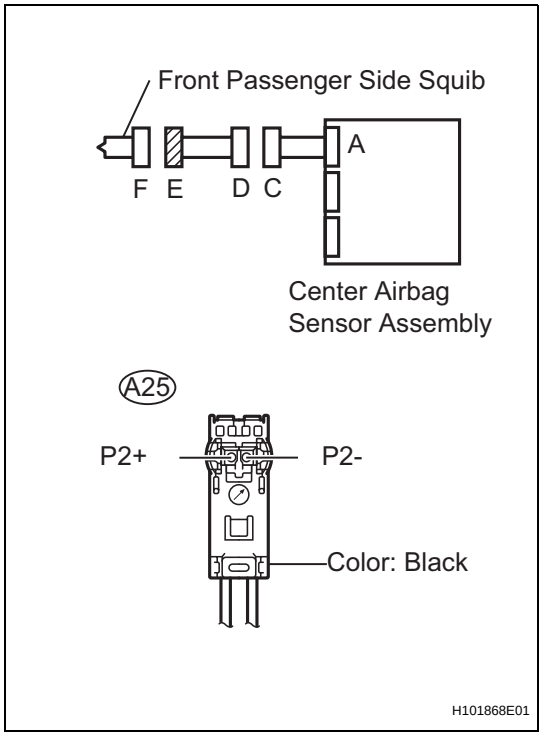

(a) Disconnect the instrument panel wire assembly connector from the instrument panel wire and front passenger airbag assembly.
(b) Connect the negative (-) terminal cable to the battery, and wait for at least 2 seconds.
(c) Turn the ignition switch to the ON position.
(d) Measure the voltage.

Standard voltage

Tester Connection	Condition	Specified Condition
A25-1 (P2+) - Body ground	Ignition switch ON	Below 1 V
A25-2 (P2-) - Body ground	Ignition switch ON	Below 1 V

(e) Turn the ignition switch to the LOCK position.
(f) Disconnect the negative (-) terminal cable from the battery, and wait for at least 90 seconds.
(g) Measure the resistance.

Standard resistance

Tester Connection	Condition	Specified Condition
A25-1 (P2+) - A25-2 (P2-)	Always	Below 1 Ω
A25-1 (P2+) - Body ground	Always	1 MΩ or Higher
A25-2 (P2-) - Body ground	Always	1 MΩ or Higher

(h) Release the activation prevention mechanism built into connector D (See page RS-28).
(i) Measure the resistance.

Standard resistance

Tester Connection	Condition	Specified Condition
A25-1 (P2+) - A25-2 (P2-)	Always	1 MΩ or Higher

NG → **REPLACE INSTRUMENT PANEL WIRE ASSEMBLY**

OK

RS

24 CHECK INSTRUMENT PANEL WIRE

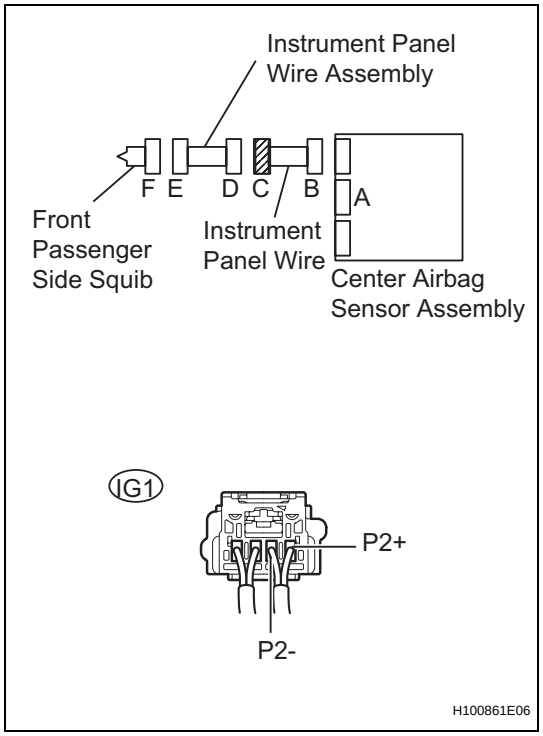

(a) Restore the released activation prevention mechanism of connector B to the original condition.
(b) Disconnect the instrument panel wire connector from the center airbag sensor assembly.
(c) Connect the negative (-) terminal cable to the battery, and wait for at least 2 seconds.
(d) Turn the ignition switch to the ON position.
(e) Measure the voltage.

Standard voltage

Tester Connection	Condition	Specified Condition
IG1-1 (P2+) - Body ground	Ignition switch ON	Below 1 V
IG1-2 (P2-) - Body ground	Ignition switch ON	Below 1 V

(f) Turn the ignition switch to the LOCK position.
(g) Disconnect the negative (-) terminal cable from the battery, and wait for at least 90 seconds.
(h) Measure the resistance.

Standard resistance

Tester Connection	Condition	Specified Condition
IG1-1 (P2+) - IG1-2 (P2-)	Always	Below 1 Ω
IG1-1 (P2+) - Body ground	Always	1 MΩ or Higher
IG1-2 (P2-) - Body ground	Always	1 MΩ or Higher

(i) Release the activation prevention mechanism built into connector B (See page RS-28).
(j) Measure the resistance.

Standard resistance

Tester Connection	Condition	Specified Condition
IG1-1 (P2+) - IG1-2 (P2-)	Always	1 MΩ or Higher

NG → **REPAIR OR REPLACE INSTRUMENT PANEL WIRE**

OK

RS

25	CHECK CENTER AIRBAG SENSOR ASSEMBLY

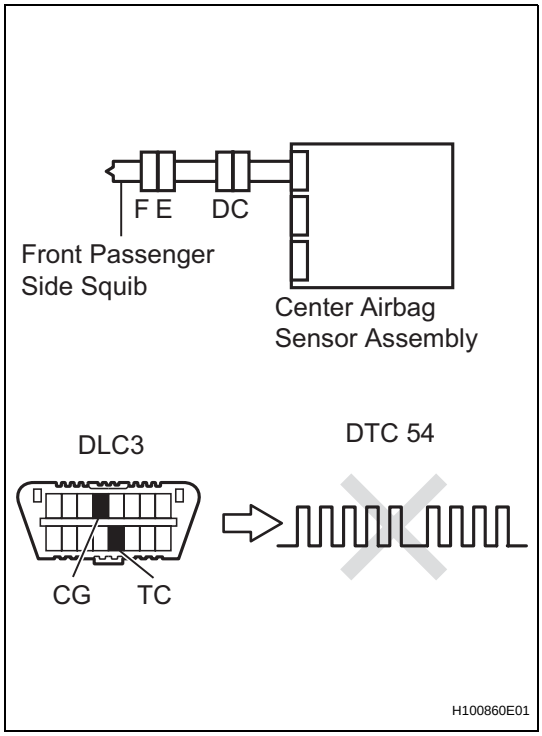

(a) Replace the front passenger airbag (See page RS-574).

HINT:

Perform the inspection using parts from a normal vehicle when possible.

(b) Connect the instrument panel wire to the center airbag sensor assembly and spiral cable.

(c) Connect the connectors to the center airbag sensor assembly.

(d) Connect the negative (-) terminal cable to the battery, and wait for at least 2 seconds.

(e) Turn the ignition switch to the ON position, and wait for at least 60 seconds.

(f) Clear any DTCs stored in the memory (See page RS-34).

(g) Turn the ignition switch to the LOCK position.

(h) Turn the ignition switch to the ON position, and wait for at least 60 seconds.

(i) Check for DTCs (See page RS-34).

OK:

DTC 54 is not output.

HINT:

DTCs other than 54 may be output at this time, but they are not related to this check.

NG → **REPLACE CENTER AIRBAG SENSOR ASSEMBLY**

OK

END

DTC	B1820/55	Short in Driver Side - Side Squib Circuit

DTC	B1821/55	Open in Driver Side - Side Squib Circuit

DTC	B1822/55	Short to GND in Driver Side - Side Squib Circuit

DTC	B1823/55	Short to B+ in Driver Side - Side Squib Circuit

DESCRIPTION

The side squib (driver seat side) circuit consists of the center airbag sensor assembly and the front seat with adjuster frame assembly LH.
This circuit signals the SRS to deploy when airbag deployment conditions are met.
These DTCs are set when a malfunction is detected in the side squib (driver seat side) circuit.

DTC No.	DTC Detecting Conditions	Trouble Areas
B1820/55	• The center airbag sensor assembly receives a line short circuit signal in the side squib (Driver seat side) circuit for 2 seconds • Side squib (Driver seat side) malfunction • Center airbag sensor assembly malfunction	• No. 2 floor wire • Front seat with adjuster frame assembly LH (Side squib (Driver seat side)) • Center airbag sensor assembly
B1821/55	• The center airbag sensor assembly receives an open circuit signal in the side squib (Driver seat side) circuit for 2 seconds • Side squib (Driver seat side) malfunction • Center airbag sensor assembly malfunction	• No. 2 floor wire • Front seat with adjuster frame assembly LH (Side squib (Driver seat side)) • Center airbag sensor assembly
B1822/55	• The center airbag sensor assembly receives a short circuit to ground signal in the side squib (Driver seat side) circuit for 0.5 seconds • Side squib (Driver seat side) malfunction • Center airbag sensor assembly malfunction	• No. 2 floor wire • Front seat with adjuster frame assembly LH (Side squib (Driver seat side)) • Center airbag sensor assembly
B1823/55	• The center airbag sensor assembly receives a short circuit to B+ signal in the side squib (Driver seat side) circuit for 0.5 seconds • Side squib (Driver seat side) malfunction • Center airbag sensor assembly malfunction	• No. 2 floor wire • Front seat with adjuster frame assembly LH (Side squib (Driver seat side)) • Center airbag sensor assembly

WIRING DIAGRAM

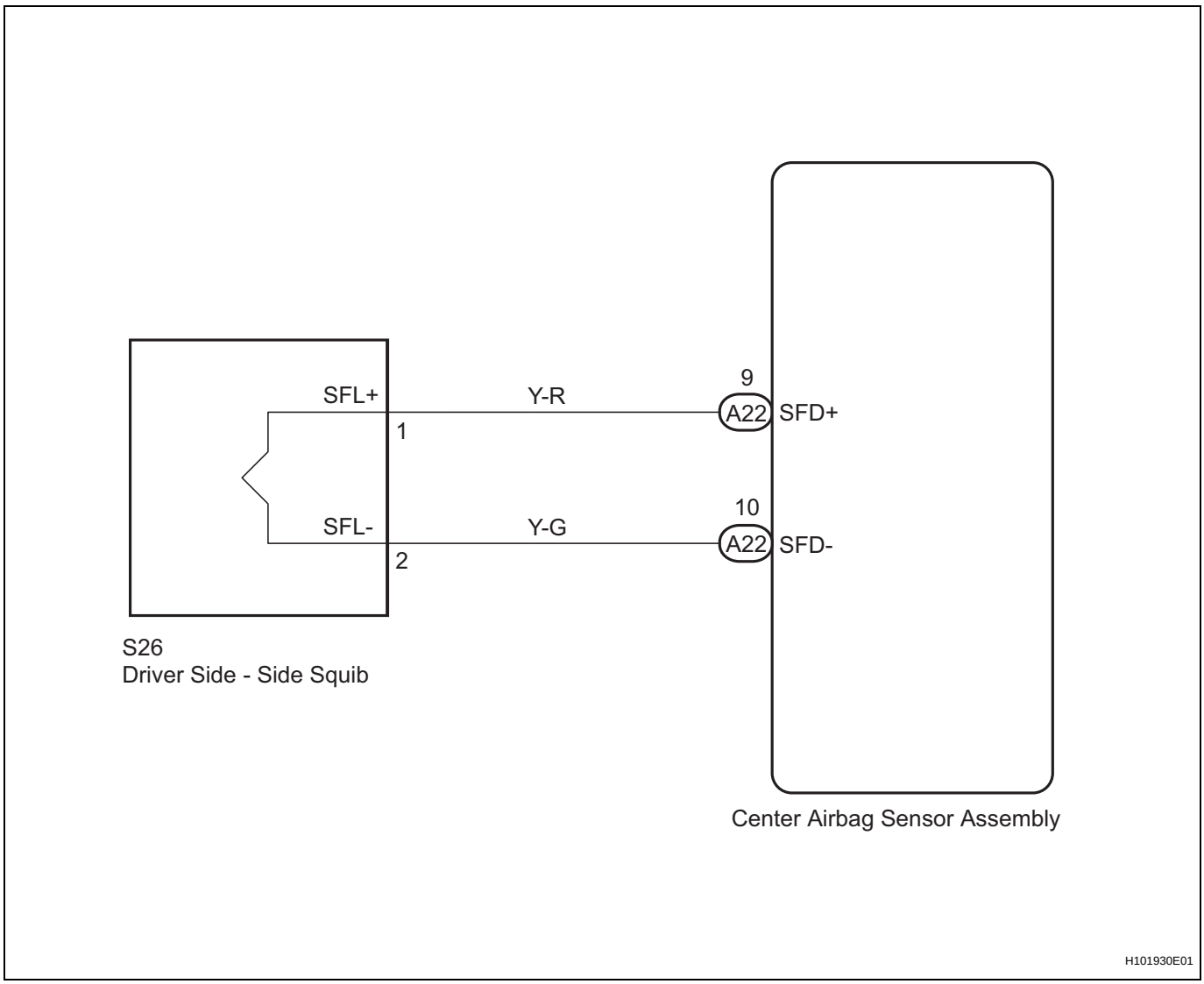

CAUTION:
In order to prevent unexpected airbag deployment, disconnect the following connectors before inspecting parts such as wire harnesses, if the application of tester probes to the center airbag sensor assembly connector is necessary.

RS

(a) Turn the ignition switch to the LOCK position.
(b) Disconnect the negative (-) terminal cable from the battery, and wait for at least 90 seconds.
(c) Disconnect the connectors from the center airbag sensor assembly.
(d) Disconnect the connectors from the steering pad.
(e) Disconnect the connector from the front passenger airbag assembly.
(f) Disconnect the connector from the front seat airbag assembly LH.
(g) Disconnect the connector from the front seat airbag assembly RH.
HINT:
Skip the following steps if side and curtain shield airbags are not fitted.
(h) Disconnect the connector from the curtain shield airbag assembly LH.
(i) Disconnect the connector from the curtain shield airbag assembly RH.
(j) Disconnect the connector from the front seat outer belt assembly LH.
(k) Disconnect the connector from the front seat outer belt assembly RH.

1	CHECK DTC

(a) Proceed to the appropriate step according to DTC readings.

(1) If using the intelligent tester (read the 5-digit DTCs): Using the intelligent tester, check for DTCs (See page RS-34).

Result

Result	Proceed to
DTC B1820 is output.	A
DTC B1821 is output.	B
DTC B1822 is output.	C
DTC B1823 is output.	D

(2) If not using the intelligent tester (read the 2-digit DTCs): Check for DTCs (See page RS-34).

Result

Result	Proceed to
DTC 55 is output.	E

B → Go to step 3

C → Go to step 4

D → Go to step 5

E → Go to step 6

A

2	CHECK NO. 2 FLOOR WIRE (FOR SHORT)

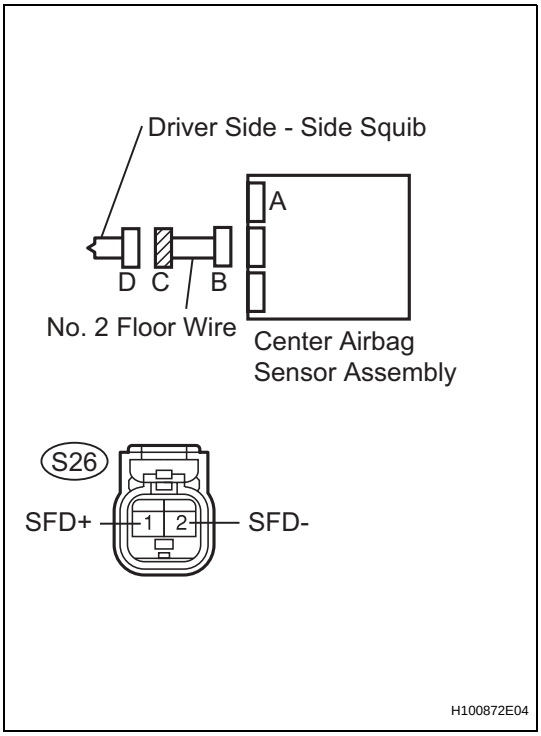

(a) Release the activation prevention mechanism built into connector B (See page RS-28).
(b) Measure the resistance.
Standard resistance

Tester Connection	Condition	Specified Condition
S26-1 (SFD+) - S26-2 (SFD-)	Always	1 MΩ or Higher

OK → **Go to step 8**

NG

REPAIR OR REPLACE NO. 2 FLOOR WIRE

3	CHECK NO. 2 FLOOR WIRE (FOR OPEN)

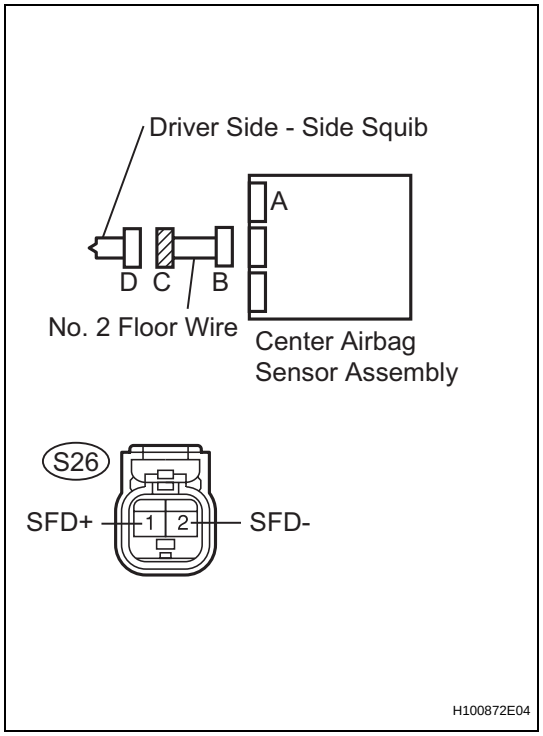

(a) Measure the resistance.
Standard resistance

Tester Connection	Condition	Specified Condition
S26-1 (SFD+) - S26-2 (SFD-)	Always	Below 1 Ω

OK → **Go to step 9**

NG

REPAIR OR REPLACE NO. 2 FLOOR WIRE

RS

4	CHECK NO. 2 FLOOR WIRE (TO GROUND)

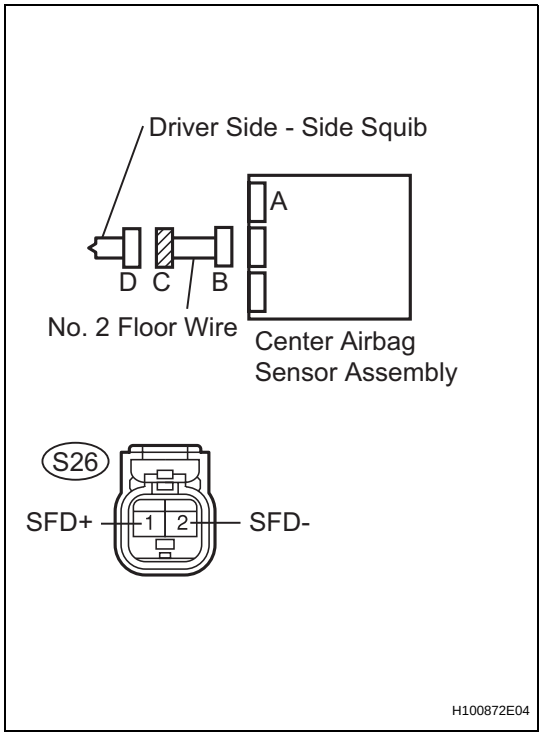

(a) Measure the resistance.
Standard resistance

Tester Connection	Condition	Specified Condition
S26-1 (SFD+) - Body ground	Always	1 MΩ or Higher
S26-2 (SFD-) - Body ground	Always	1 MΩ or Higher

OK → **Go to step 9**

NG

REPAIR OR REPLACE NO. 2 FLOOR WIRE

5	CHECK NO. 2 FLOOR WIRE (TO B+)

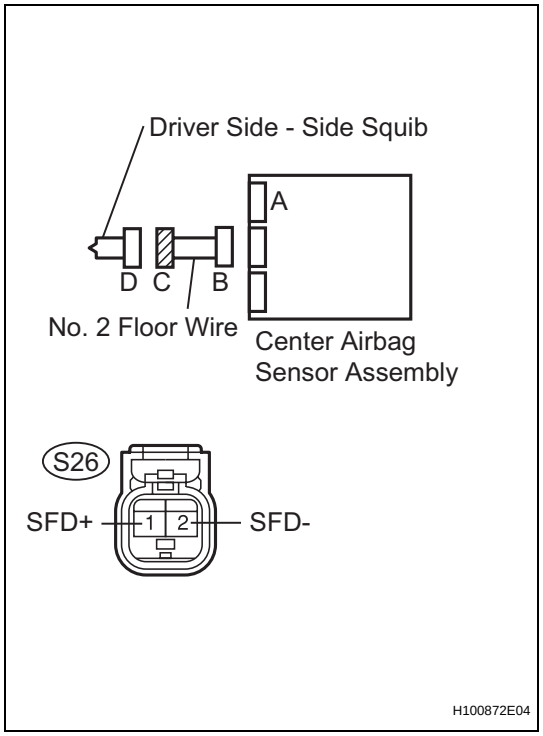

(a) Connect the negative (-) terminal cable to the battery, and wait for at least 2 seconds.
(b) Turn the ignition switch to the ON position.
(c) Measure the voltage.

Standard voltage

Tester Connection	Condition	Specified Condition
S26-1 (SFD+) - Body ground	Ignition switch ON	Below 1 V
S26-2 (SFD-) - Body ground	Ignition switch ON	Below 1 V

OK → **Go to step 9**

NG

REPAIR OR REPLACE NO. 2 FLOOR WIRE

RS

6	CHECK NO. 2 FLOOR WIRE (SIDE SQUIB (DRIVER SEAT SIDE) CIRCUIT)

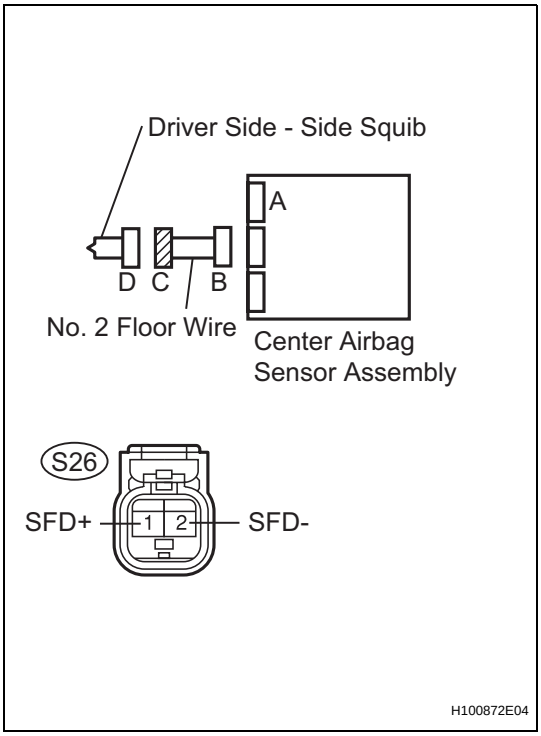

(a) Connect the negative (-) terminal cable to the battery, and wait for at least 2 seconds.
(b) Turn the ignition switch to the ON position.
(c) Measure the voltage.

Standard voltage

Tester Connection	Condition	Specified Condition
S26-1 (SFD+) - Body ground	Ignition switch ON	Below 1 V
S26-2 (SFD-) - Body ground	Ignition switch ON	Below 1 V

(d) Turn the ignition switch to the LOCK position.
(e) Disconnect the negative (-) terminal cable from the battery, and wait for at least 90 seconds.
(f) Measure the resistance.

Standard resistance

Tester Connection	Condition	Specified Condition
S26-1 (SFD+) - S26-2 (SFD-)	Always	Below 1 Ω
S26-1 (SFD+) - Body ground	Always	1 MΩ or Higher
S26-2 (SFD-) - Body ground	Always	1 MΩ or Higher

(g) Release the activation prevention mechanism built into connector B (See page RS-28).
(h) Measure the resistance.

Standard resistance

Tester Connection	Condition	Specified Condition
S26-1 (SFD+) - S26-2 (SFD-)	Always	1 MΩ or Higher

NG → **REPAIR OR REPLACE NO. 2 FLOOR WIRE**

OK

RS

7	REPLACE FRONT SEAT WITH ADJUSTER FRAME ASSEMBLY LH (SIDE SQUIB (DRIVER SEAT SIDE))

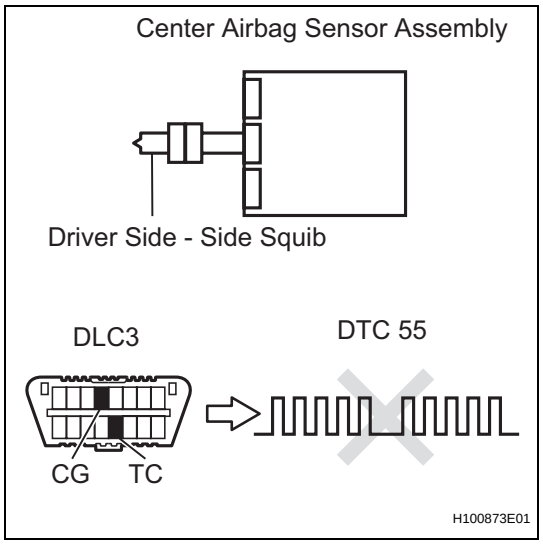

(a) Replace the front seat with adjuster frame assembly LH (See page SE-23).

HINT:
Perform the inspection using parts from a normal vehicle when possible.

(b) Connect the connectors to the center airbag sensor assembly.
(c) Connect the negative (-) terminal cable to the battery, and wait for at least 2 seconds.
(d) Turn the ignition switch to the ON position, and wait for at least 60 seconds.
(e) Clear any DTCs stored in the memory (See page RS-34).
(f) Turn the ignition switch to the LOCK position.
(g) Turn the ignition switch to the ON position, and wait for at least 60 seconds.
(h) Check for DTCs (See page RS-34).

OK:

DTC 55 is not output.

HINT:
DTCs other than 55 may be output at this time, but they are not related to this check.

NG → **REPLACE CENTER AIRBAG SENSOR ASSEMBLY**

OK

END

8	CHECK CENTER AIRBAG SENSOR ASSEMBLY

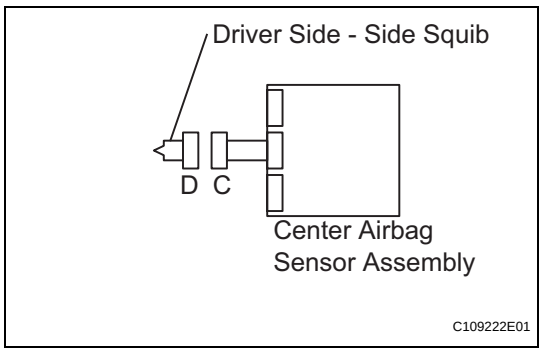

(a) Connect the connectors to the center airbag sensor assembly.
(b) Connect the negative (-) terminal cable to the battery, and wait for at least 2 seconds.
(c) Turn the ignition switch to the ON position, and wait for at least 60 seconds.
(d) Clear any DTCs stored in the memory (See page RS-34).
(e) Turn the ignition switch to the LOCK position.
(f) Turn the ignition switch to the ON position, and wait for at least 60 seconds.
(g) Check for DTCs (See page RS-34).

OK:

DTC B1820 is not output.

RS

HINT:
DTCs other than B1820 may be output at this time, but they are not related to this check.

OK → Go to step 10

NG

REPLACE CENTER AIRBAG SENSOR ASSEMBLY

9 CHECK CENTER AIRBAG SENSOR ASSEMBLY

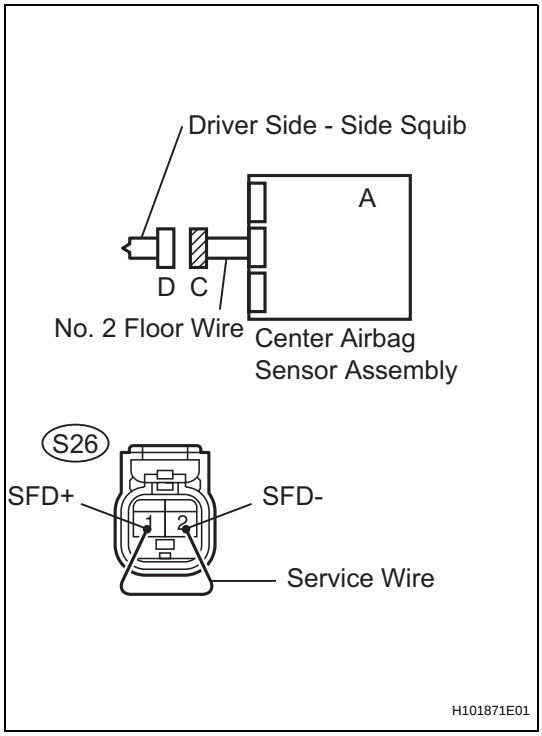

HINT:
If continuing from step 5, begin from (a). If continuing from any other step, begin from (c).

(a) Turn the ignition switch to the LOCK position.
(b) Disconnect the negative (-) terminal cable from the battery, and wait for at least 90 seconds.
(c) Connect the connectors to the center airbag sensor assembly.
(d) Using a service wire, connect S26-1 (SFD+) and S26-2 (SFD-) of connector C.

NOTICE:
Do not forcibly insert the service wire into the terminals of the connector when connecting.

(e) Connect the negative (-) terminal cable to the battery, and wait for at least 2 seconds.
(f) Turn the ignition switch to the ON position, and wait for at least 60 seconds.
(g) Clear any DTCs stored in the memory (See page RS-34).
(h) Turn the ignition switch to the LOCK position.
(i) Turn the ignition switch to the ON position, and wait for at least 60 seconds.
(j) Check for DTCs (See page RS-34).

OK:
DTC B1821, B1822 and B1823 are not output.

HINT:
DTCs other than B1821, B1822 or B1823 may be output at this time, but they are not related to this check.

NG → **REPLACE CENTER AIRBAG SENSOR ASSEMBLY**

OK

RS

10	CHECK FRONT SEAT WITH ADJUSTER FRAME ASSEMBLY LH

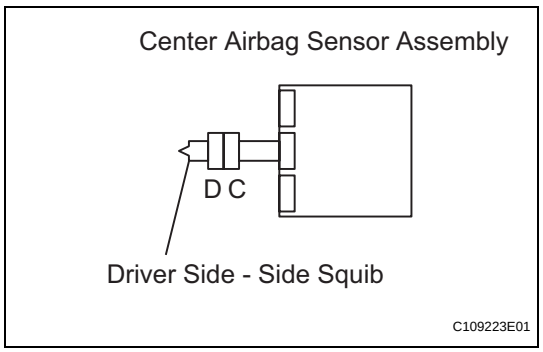

HINT:
If continuing from step 9, begin from (c). If continuing from any other step, being from (a).

(a) Turn the ignition switch to the LOCK position.
(b) Disconnect the negative (-) terminal cable from the battery, and wait for at least 90 seconds.
(c) Disconnect the service wire from connector C.
(d) Connect the connector to the front seat with adjuster frame assembly LH.
(e) Connect the negative (-) terminal cable to the battery, and wait for at least 2 seconds.
(f) Turn the ignition switch to the ON position, and wait for at least 60 seconds.
(g) Clear any DTCs stored in the memory (See page RS-34).
(h) Turn the ignition switch to the LOCK position.
(i) Turn the ignition switch to the ON position, and wait for at least 60 seconds.
(j) Check for DTCs (See page RS-34).

OK:

DTC B1820, B1821, B1822 and B1823 are not output.

HINT:
DTCs other than B1820, B1821, B1822 or B1823 may be output at this time, but they are not related to this check.

NG → **REPLACE FRONT SEAT WITH ADJUSTER FRAME ASSEMBLY LH**

OK

USE SIMULATION METHOD TO CHECK

RS

DTC	B1825/56	Short in Front Passenger Side - Side Squib Circuit

DTC	B1826/56	Open in Front Passenger Side - Side Squib Circuit

DTC	B1827/56	Short to GND in Front Passenger Side - Side Squib Circuit

DTC	B1828/56	Short to B+ in Front Passenger Side - Side Squib Circuit

DESCRIPTION

The side squib (front passenger seat side) circuit consists of the center airbag sensor assembly and the front seat with adjuster frame assembly RH.
The circuit signals the SRS to deploy when airbag deployment conditions are met.
These DTCs are set when a malfunction is detected in the side squib (front passenger seat side) circuit.

DTC No.	DTC Detecting Conditions	Trouble Areas
B1825/56	• The center airbag sensor assembly receives a line short circuit signal in the side squib (Front passenger seat side) circuit for 2 seconds • Side squib (Front passenger seat side) malfunction • Center airbag sensor assembly malfunction	• Floor wire • Front seat with adjuster frame assembly RH (Side squib [Front passenger seat side]) • Center airbag sensor assembly
B11826/56	• The center airbag sensor assembly receives an open circuit signal in the side squib (Front passenger seat side) circuit for 2 seconds • Side squib (Front passenger seat side) malfunction • Center airbag sensor assembly malfunction	• Floor wire • Front seat with adjuster frame assembly RH (Side squib [Front passenger seat side]) • Center airbag sensor assembly
B1827/56	• The center airbag sensor assembly receives a short circuit to ground signal in the side squib (Front passenger seat side) circuit for 0.5 seconds • Side squib (Front passenger seat side) malfunction • Center airbag sensor assembly malfunction	• Floor wire • Front seat with adjuster frame assembly RH (Side squib [Front passenger seat side]) • Center airbag sensor assembly
B1828/56	• The center airbag sensor assembly receives a short circuit to B+ signal in the side squib (Front passenger seat side) circuit for 0.5 seconds • Side squib (Front passenger seat side) malfunction • Center airbag sensor assembly malfunction	• Floor wire • Front seat with adjuster frame assembly RH (Side squib [Front passenger seat side]) • Center airbag sensor assembly

WIRING DIAGRAM

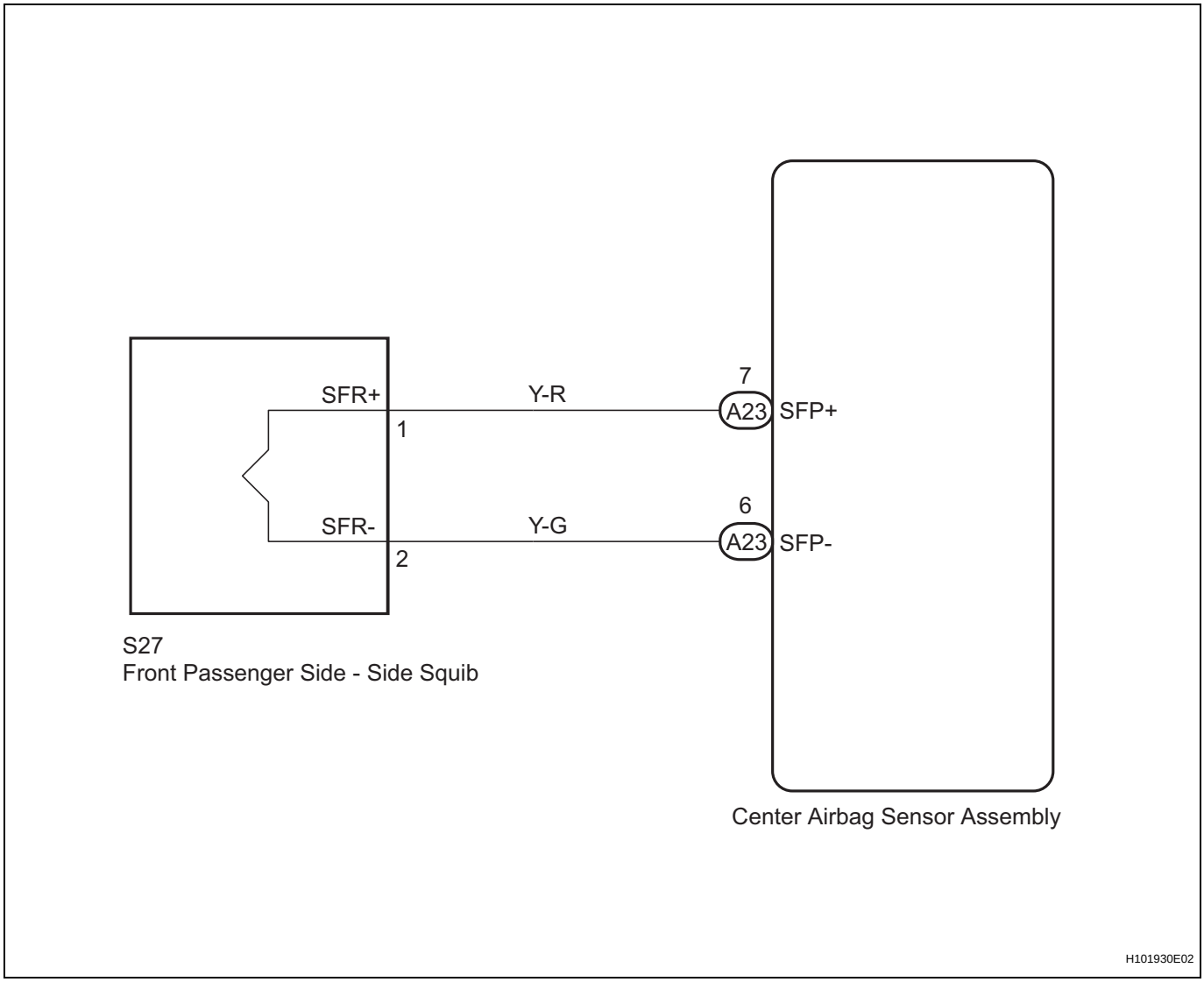

CAUTION:
In order to prevent unexpected airbag deployment, disconnect the following connectors before inspecting parts such as wire harnesses, if the application of tester probes to the center airbag sensor assembly connector is necessary.

(a) Turn the ignition switch to the LOCK position.
(b) Disconnect the negative (-) terminal cable from the battery, and wait for at least 90 seconds.
(c) Disconnect the connectors from the center airbag sensor assembly.
(d) Disconnect the connectors from the steering pad.
(e) Disconnect the connector from the front passenger airbag assembly.
(f) Disconnect the connector from the front seat airbag assembly LH.
(g) Disconnect the connector from the front seat airbag assembly RH.
HINT:
Skip the following steps if side and curtain shield airbags are not fitted.
(h) Disconnect the connector from the curtain shield airbag assembly LH.
(i) Disconnect the connector from the curtain shield airbag assembly RH.
(j) Disconnect the connector from the front seat outer belt assembly LH.
(k) Disconnect the connector from the front seat outer belt assembly RH.

1	CHECK DTC

(a) Proceed to the appropriate step according to DTC readings.

(1) If using the intelligent tester (read the 5-digit DTCs):
Using the intelligent tester, check for DTCs (See page RS-34).
Result

Result	Proceed to
DTC B1825 is output.	A
DTC B1826 is output.	B
DTC B1827 is output.	C
DTC B1828 is output.	D

(2) If not using the intelligent tester (read the 2-digit DTCs):
Check for DTCs (See page RS-34).
Result

Result	Proceed to
DTC 56 is output.	E

B → Go to step 3

C → Go to step 4

D → Go to step 5

E → Go to step 6

A

2	CHECK FLOOR WIRE (FOR SHORT)

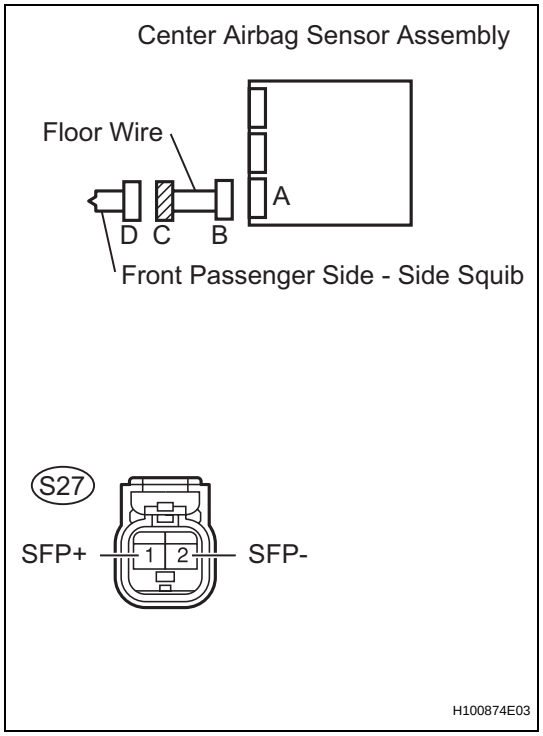

(a) Release the activation prevention mechanism built into connector B (See page RS-28).
(b) Measure the resistance.
Standard resistance

Tester Connection	Condition	Specified Condition
S27-1 (SFP+) - S27-2 (SFP-)	Always	1 MΩ or Higher

OK → **Go to step 8**

NG

REPAIR OR REPLACE FLOOR WIRE

RS

3	CHECK FLOOR WIRE (FOR OPEN)

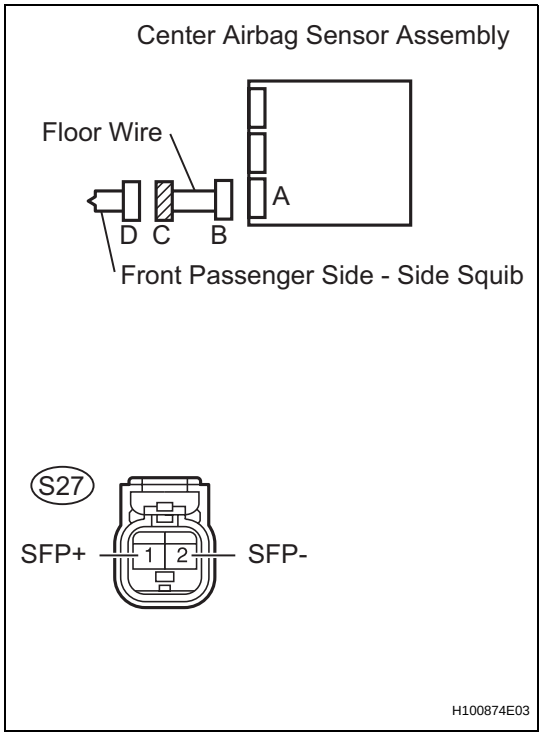

(a) Measure the resistance.
Standard resistance

Tester Connection	Condition	Specified Condition
S27-1 (SFP+) - S27-2 (SFP-)	Always	Below 1 Ω

OK → **Go to step 9**

NG

REPAIR OR REPLACE FLOOR WIRE

RS

4	CHECK FLOOR WIRE (TO GROUND)

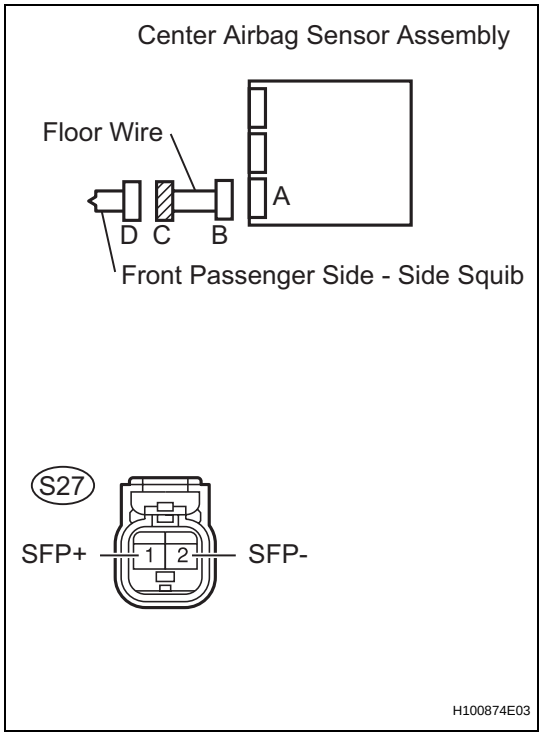

(a) Measure the resistance.
Standard resistance

Tester Connection	Condition	Specified Condition
S27-1 (SFP+) - Body ground	Always	1 MΩ or Higher
S27-2 (SFP-) - Body ground	Always	1 MΩ or Higher

OK → **Go to step 9**

NG

REPAIR OR REPLACE FLOOR WIRE

RS

5	CHECK FLOOR WIRE (TO B+)

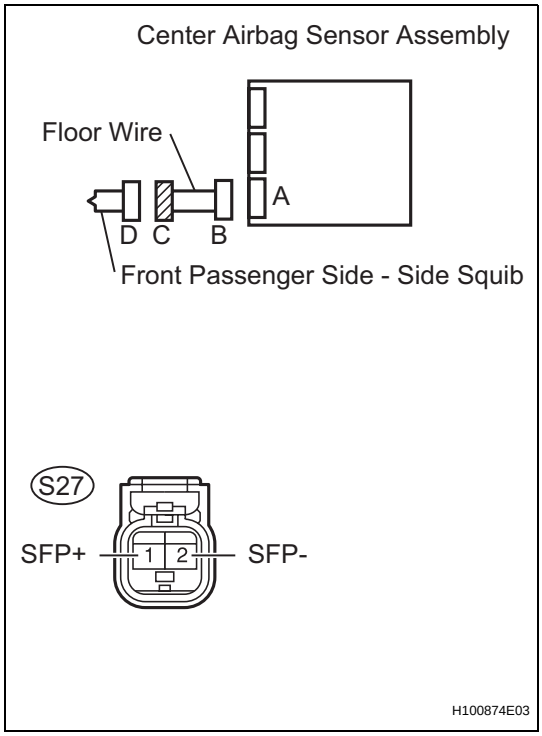

(a) Connect the negative (-) terminal cable to the battery, and wait for at least 2 seconds.
(b) Turn the ignition switch to the ON position.
(c) Measure the voltage.

Standard voltage

Tester Connection	Condition	Specified Condition
S27-1 (SFP+) - Body ground	Ignition switch ON	Below 1 V
S27-2 (SFP-) - Body ground	Ignition switch ON	Below 1 V

OK → **Go to step 9**

NG

REPAIR OR REPLACE FLOOR WIRE

6 CHECK FLOOR WIRE (SIDE SQUIB (FRONT PASSENGER SEAT SIDE) CIRCUIT)

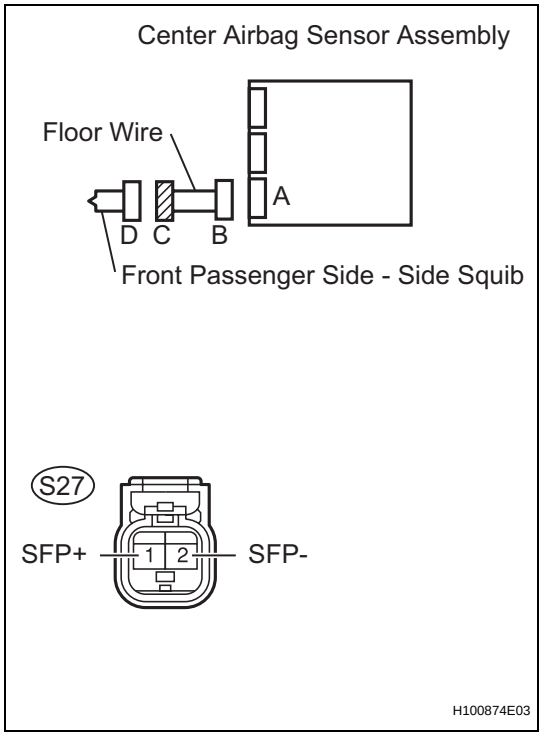

(a) Connect the negative (-) terminal cable to the battery, and wait for at least 2 seconds.
(b) Turn the ignition switch to the ON position.
(c) Measure the voltage.

Standard voltage

Tester Connection	Condition	Specified Condition
S27-1 (SFP+) - Body ground	Ignition switch ON	Below 1 V
S27-2 (SFP-) - Body ground	Ignition switch ON	Below 1 V

(d) Turn the ignition switch to the LOCK position.
(e) Disconnect the negative (-) terminal cable from the battery, and wait for at least 90 seconds.
(f) Measure the resistance.

Standard resistance

Tester Connection	Condition	Specified Condition
S27-1 (SFP+) - S27-2 (SFP-)	Always	Below 1 Ω
S27-1 (SFP+) - Body ground	Always	1 MΩ or Higher
S27-2 (SFP-) - Body ground	Always	1 MΩ or Higher

(g) Release the activation prevention mechanism built into connector B (See page RS-28).
(h) Measure the resistance.

Standard resistance

Tester Connection	Condition	Specified Condition
S27-1 (SFP+) - S27-2 (SFP-)	Always	1 MΩ or Higher

NG → **REPAIR OR REPLACE FLOOR WIRE**

OK

RS

7	REPLACE FRONT SEAT WITH ADJUSTER FRAME ASSEMBLY RH (SIDE SQUIB (FRONT PASSENGER SEAT SIDE))

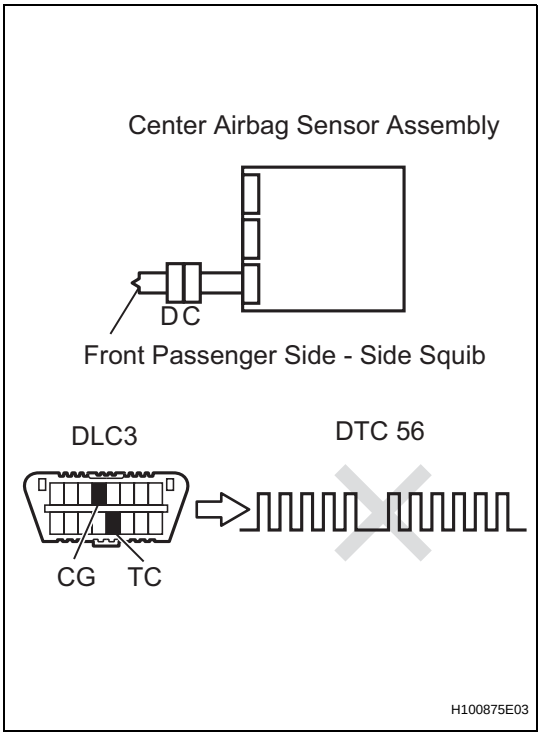

(a) Replace the front seat with adjuster frame assembly RH (See page SE-38).

HINT:
Perform the inspection using parts from a normal vehicle when possible.

(b) Connect the connectors to the center airbag sensor assembly.
(c) Connect the negative (-) terminal cable to the battery, and wait for at least 2 seconds.
(d) Turn the ignition switch to the ON position, and wait for at least 60 seconds.
(e) Clear any DTCs stored in the memory (See page RS-34).
(f) Turn the ignition switch to the LOCK position.
(g) Turn the ignition switch to the ON position, and wait for at least 60 seconds.
(h) Check for DTCs (See page RS-34).

OK:

DTC 56 is not output.

HINT:
DTCs other than 56 may be output at this time, but they are not related to this check.

NG → **REPLACE CENTER AIRBAG SENSOR ASSEMBLY**

OK

END

8	CHECK CENTER AIRBAG SENSOR ASSEMBLY

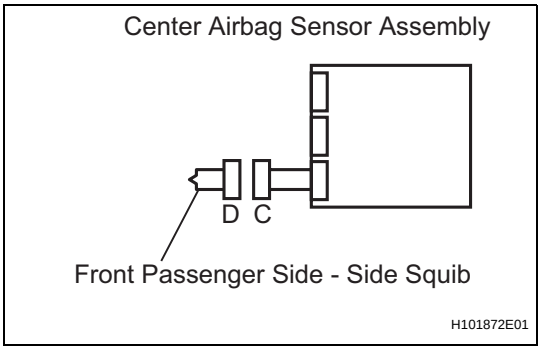

(a) Connect the connectors to the center airbag sensor assembly.
(b) Connect the negative (-) terminal cable to the battery, and wait for at least 2 seconds.
(c) Turn the ignition switch to the ON position, and wait for at least 60 seconds.
(d) Clear any DTCs stored in the memory (See page RS-34).
(e) Turn the ignition switch to the LOCK position.
(f) Turn the ignition switch to the ON position, and wait for at least 60 seconds.
(g) Check for DTCs (See page RS-34).

OK:

DTC B1825 is not output.

RS

HINT:
DTCs other than B1825 may be output at this time, but they are not related to this check.

OK → Go to step 10

NG

REPLACE CENTER AIRBAG SENSOR ASSEMBLY

9 CHECK CENTER AIRBAG SENSOR ASSEMBLY

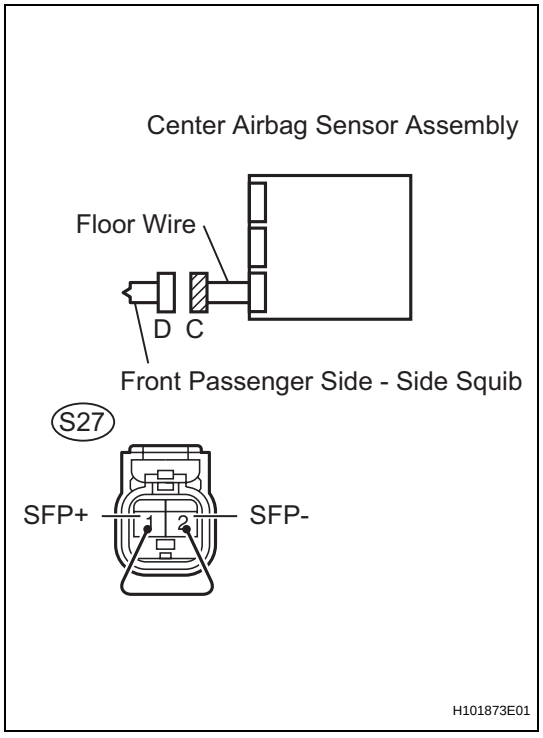

HINT:
If continuing from step 5, begin from (a). If continuing from any other step, begin from (c).

(a) Turn ignition switch to the LOCK position.
(b) Disconnect the negative (-) terminal cable from the battery, and wait for at least 90 seconds.
(c) Connect the connectors to the center airbag sensor assembly.
(d) Using a service wire, connect S27-1 (SFP+) and S27-2 (SFP-) of connector C.

NOTICE:
Do not forcibly insert the service wire into the terminals of the connector when connecting.

(e) Connect the negative (-) terminal cable to the battery, and wait for at least 2 seconds.
(f) Turn the ignition switch to the ON position, and wait for at least 60 seconds.
(g) Clear the DTCs stored in the memory (See page RS-34).
(h) Turn the ignition switch to the LOCK position.
(i) Turn the ignition switch to the ON position, and wait for at least 60 seconds.
(j) Check for DTCs (See page RS-34).

OK:
DTC B1826, B1827 and B1828 are not output.

HINT:
DTCs other than B1826, B1827 or B1828 may be output at this time, but they are not related to this check.

NG → **REPLACE CENTER AIRBAG SENSOR ASSEMBLY**

OK

RS

10	CHECK FRONT SEAT WITH ADJUSTER FRAME ASSEMBLY LH

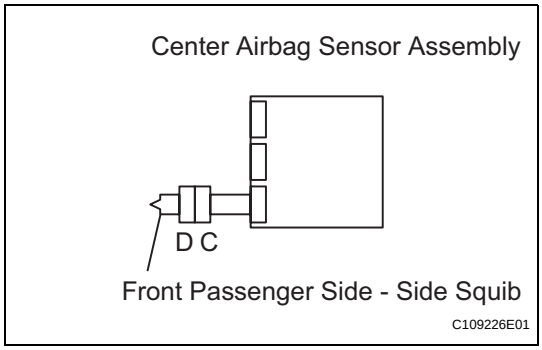

HINT:
If continuing from step 9, begin from (c). If continuing from any other step, being from (a).

(a) Turn the ignition switch to the LOCK position.
(b) Disconnect the negative (-) terminal cable from the battery, and wait for at least 90 seconds.
(c) Disconnect the service wire from connector C.
(d) Connect the connector to the front seat with adjuster frame assembly RH.
(e) Connect the negative (-) terminal cable to the battery, and wait for at least 2 seconds.
(f) Turn the ignition switch to the ON position, and wait for at least 60 seconds.
(g) Clear any DTCs stored in the memory (See page RS-34).
(h) Turn the ignition switch to the LOCK position.
(i) Turn the ignition switch to the ON position, and wait for at least 60 seconds.
(j) Check for DTCs (See page RS-34).

OK:

DTC B1825, B1826, B1827 and B1828 are not output.

HINT:
DTCs other than B1825, B1826, B1827 or B1828 may be output at this time, but they are not related to this check.

NG → **REPLACE FRONT SEAT WITH ADJUSTER FRAME ASSEMBLY LH**

OK

OTHERS USE SIMULATION METHOD TO CHECK

DTC	B1830/57	Short in Driver Side Curtain Shield Squib Circuit

DTC	B1831/57	Open in Driver Side Curtain Shield Squib Circuit

DTC	B1832/57	Short to GND in Driver Side Curtain Shield Squib Circuit

DTC	B1833/57	Short to B+ in Driver Side Curtain Shield Squib Circuit

DESCRIPTION

The curtain shield airbag (driver seat side) squib circuit consists of the center airbag sensor assembly and the curtain shield airbag assembly LH.

The circuit signals the SRS to deploy when airbag deployment conditions are met.

These DTCs are set when a malfunction is detected in the curtain shield airbag (driver seat side) squib circuit.

DTC No.	DTC Detecting Conditions	Trouble Areas
B1830/57	• The center airbag sensor assembly receives a line short circuit signal in the curtain shield airbag (Driver seat side) squib circuit for 2 seconds • Curtain shield airbag (Driver seat side) squib malfunction • Center airbag sensor assembly malfunction	• No. 2 floor wire • Curtain shield airbag assembly LH (Curtain shield airbag [Driver seat side] squib) • Center airbag sensor assembly
B1831/57	• The center airbag sensor assembly receives an open circuit signal in the curtain shield airbag (Driver seat side) squib circuit for 2 seconds • Curtain shield airbag (Driver seat side) squib malfunction • Center airbag sensor assembly malfunction	• No. 2 floor wire • Curtain shield airbag assembly LH (Curtain shield airbag [Driver seat side] squib) • Center airbag sensor assembly
B1832/57	• The center airbag sensor assembly receives a short circuit to ground signal in the curtain shield airbag (Driver seat side) squib circuit for 0.5 seconds • Curtain shield airbag (Driver seat side) squib malfunction • Center airbag sensor assembly malfunction	• No. 2 floor wire • Curtain shield airbag assembly LH (Curtain shield airbag [Driver seat side] squib) • Center airbag sensor assembly
B1833/57	• The center airbag sensor assembly receives a short circuit to B+ signal in the curtain shield airbag (Driver seat side) squib circuit for 0.5 seconds • Curtain shield airbag (Driver seat side) squib malfunction • Center airbag sensor assembly center malfunction	• No. 2 floor wire • Curtain shield airbag assembly LH (Curtain shield airbag [Driver seat side] squib) • Center airbag sensor assembly

WIRING DIAGRAM

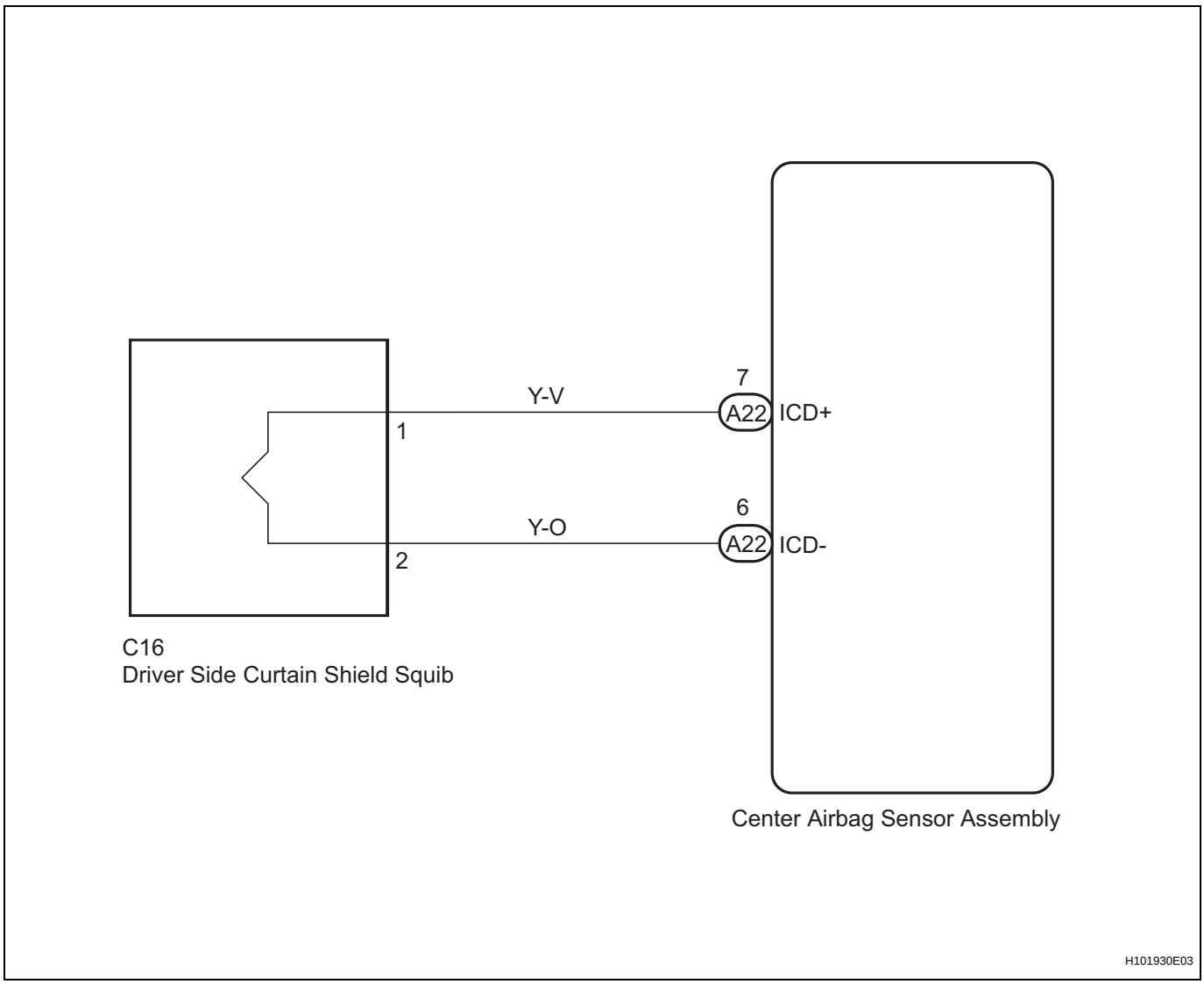

CAUTION:
In order to prevent unexpected airbag deployment, disconnect the following connectors before inspecting parts such as wire harnesses, if the application of tester probes to the center airbag sensor assembly connector is necessary.

RS

(a) Turn the ignition switch to the LOCK position.
(b) Disconnect the negative (-) terminal cable from the battery, and wait for at least 90 seconds.
(c) Disconnect the connectors from the center airbag sensor assembly.
(d) Disconnect the connectors from the steering pad.
(e) Disconnect the connector from the front passenger airbag assembly.
(f) Disconnect the connector from the front seat airbag assembly LH.
(g) Disconnect the connector from the front seat airbag assembly RH.
HINT:
Skip the following steps if side and curtain shield airbags are not fitted.
(h) Disconnect the connector from the curtain shield airbag assembly LH.
(i) Disconnect the connector from the curtain shield airbag assembly RH.
(j) Disconnect the connector from the front seat outer belt assembly LH.
(k) Disconnect the connector from the front seat outer belt assembly RH.

1	CHECK DTC

(a) Proceed to next step according to DTC readings.
(1) If using the intelligent tester (read the 5-digit DTCs):
Using the intelligent tester, check for DTCs (See page RS-34).
Result

Result	Proceed to
DTC B1830 is output.	A
DTC B1831 is output.	B
DTC B1832 is output.	C
DTC B1833 is output.	D

(2) If not using the intelligent tester (read the 2-digit DTCs):
Check for DTCs (See page RS-34).
Result

Result	Proceed to
DTC 57 is output.	E

B → **Go to step 4**

C → **Go to step 5**

D → **Go to step 6**

E → **Go to step 7**

A

2	CHECK CONNECTOR

(a) Check that the floor wire connector (on the curtain shield airbag assembly LH side) is not damaged.
OK:
The lock button is not disengaged, and the claw of the lock is not deformed or damaged.

NG → **REPAIR OR REPLACE NO. 2 FLOOR WIRE**

OK

RS

3	CHECK NO. 2 FLOOR WIRE (FOR SHORT)

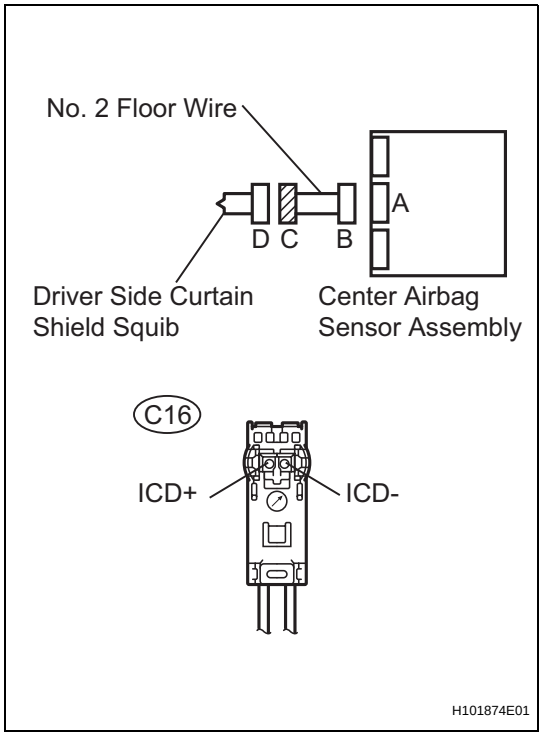

(a) Release the activation prevention mechanism built into connector B (See page RS-28).
(b) Measure the resistance.

Standard resistance

Tester Connection	Condition	Specified Condition
C16-1 (ICD+) - C16-2 (ICD-)	Always	1 MΩ or Higher

OK → **Go to step 10**

NG

REPAIR OR REPLACE NO. 2 FLOOR WIRE

4	CHECK NO. 2 FLOOR WIRE (FOR OPEN)

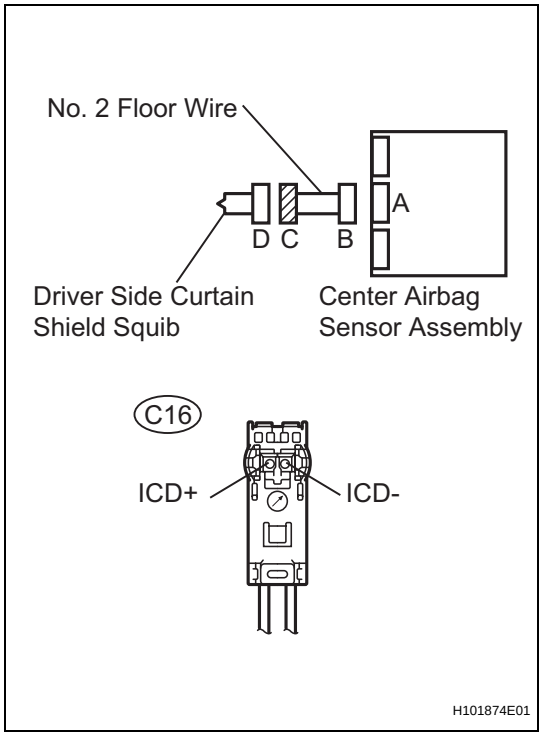

(a) Measure the resistance.
Standard resistance

Tester Connection	Condition	Specified Condition
C16-1 (ICD+) - C16-2 (ICD-)	Always	Below 1 Ω

OK → **Go to step 11**

NG

REPAIR OR REPLACE NO. 2 FLOOR WIRE

RS

5	CHECK NO. 2 FLOOR WIRE (TO GROUND)

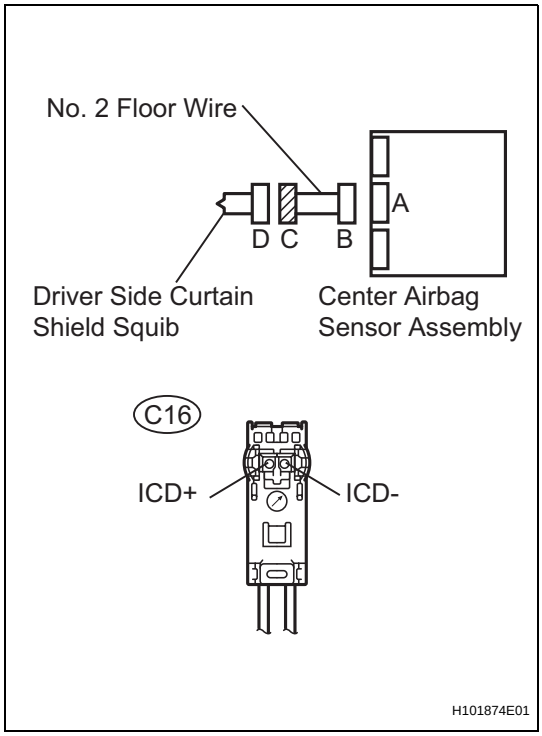

(a) Measure the resistance.
Standard resistance

Tester Connection	Condition	Specified Condition
C16-1 (ICD+) - Body ground	Always	1 MΩ or Higher
C16-2 (ICD-) - Body ground	Always	1 MΩ or Higher

OK → **Go to step 11**

NG

REPAIR OR REPLACE NO. 2 FLOOR WIRE

6	CHECK NO. 2 FLOOR WIRE (TO B+)

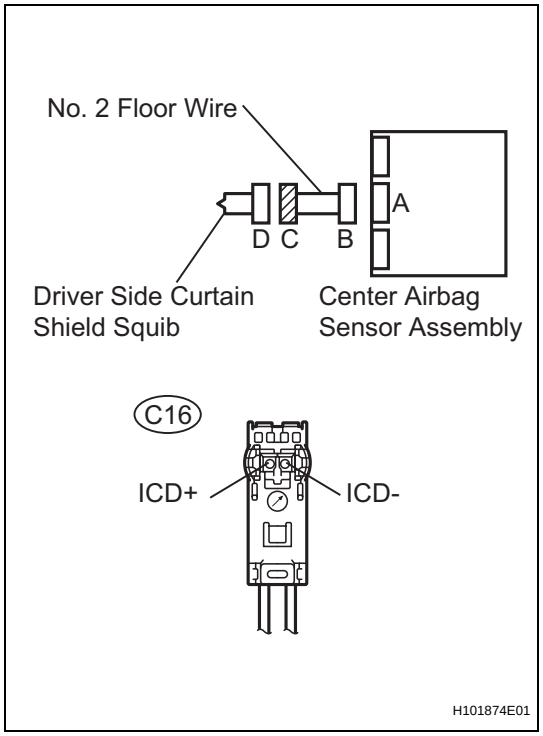

(a) Connect the negative (-) terminal cable to the battery, and wait for at least 2 seconds.
(b) Turn the ignition switch to the ON position.
(c) Measure the voltage.

Standard voltage

Tester Connection	Condition	Specified Condition
C16-1 (ICD+) - Body ground	Ignition switch ON	Below 1 V
C16-2 (ICD-) - Body ground	Ignition switch ON	Below 1 V

OK → **Go to step 11**

NG

REPAIR OR REPLACE NO. 2 FLOOR WIRE

7	CHECK CONNECTOR

(a) Check that the No. 2 floor wire connector (on the curtain shield airbag assembly LH side) is not damaged.

OK:

The lock button is not disengaged, and the claw of the lock is not deformed or damaged.

NG → **REPAIR OR REPLACE NO. 2 FLOOR WIRE**

OK

RS

8 CHECK NO. 2 FLOOR WIRE (CURTAIN SHIELD AIRBAG (D SEAT SIDE) SQUIB)

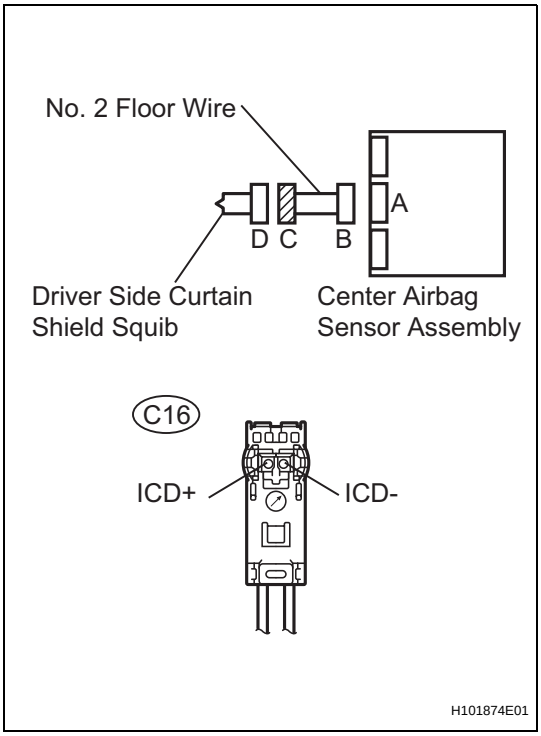

(a) Connect the negative (-) terminal cable to the battery, and wait for at least 2 seconds.
(b) Turn the ignition switch to the ON position.
(c) Measure the voltage.

Standard voltage

Tester Connection	Condition	Specified Condition
C16-1 (ICD+) - Body ground	Ignition switch ON	Below 1 V
C16-2 (ICD-) - Body ground	Ignition switch ON	Below 1 V

(d) Turn the ignition switch to the LOCK position.
(e) Disconnect the negative (-) terminal cable from the battery, and wait for at least 90 seconds.
(f) Measure the resistance.

Standard resistance

Tester Connection	Condition	Specified Condition
C16-1 (ICD+) - C16-2 (ICD-)	Always	Below 1 Ω
C16-1 (ICD+) - Body ground	Always	1 MΩ or Higher
C16-2 (ICD-) - Body ground	Always	1 MΩ or Higher

(g) Release the activation prevention mechanism built into connector B (See page RS-28).
(h) Measure the resistance.

Standard resistance

Tester Connection	Condition	Specified Condition
C16-1 (ICD+) - C16-2 (ICD-)	Always	1 MΩ or Higher

NG → **REPAIR OR REPLACE NO. 2 FLOOR WIRE**

OK

RS

9	REPLACE CURTAIN SHIELD AIRBAG ASSEMBLY LH (CURTAIN SHIELD AIRBAG (D SEAT SIDE) SQUIB)

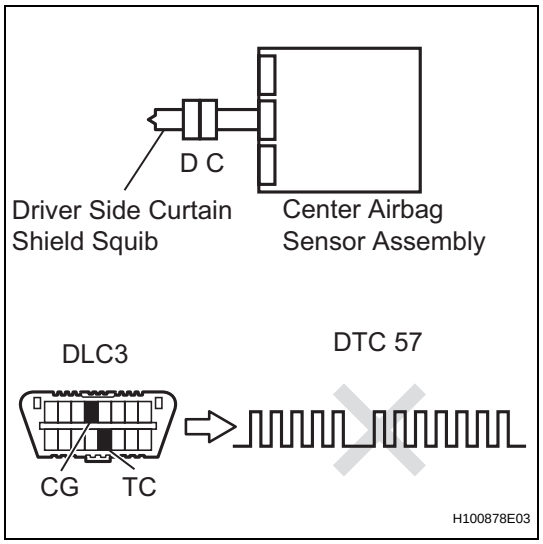

(a) Replace the curtain shield airbag assembly LH (See page RS-587).

HINT:
Perform the inspection using parts from a normal vehicle when possible.

(b) Connect the connectors to the center airbag sensor assembly.
(c) Connect the negative (-) terminal cable to the battery, and wait for at least 2 seconds.
(d) Turn the ignition switch to the ON position, and wait for at least 60 seconds.
(e) Clear any DTCs stored in the memory (See page RS-34).
(f) Turn the ignition switch to the LOCK position.
(g) Turn the ignition switch to the ON position, and wait for at least 60 seconds.
(h) Check for DTCs (See page RS-34).

OK:

DTC 57 is not output.

HINT:
DTCs other than 57 may be output at this time, but they are not related to this check.

NG → **REPLACE CENTER AIRBAG SENSOR ASSEMBLY**

OK

END

10	CHECK CENTER AIRBAG SENSOR ASSEMBLY

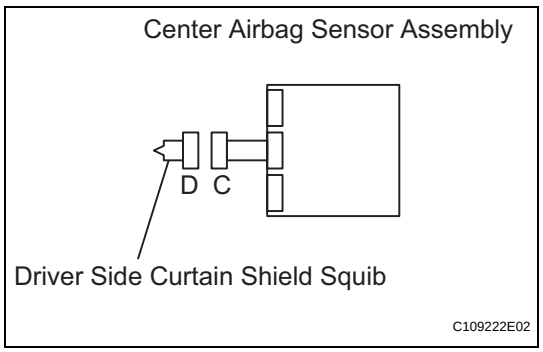

(a) Connect the connectors to the center airbag sensor assembly.
(b) Connect the negative (-) terminal cable to the battery, and wait for at least 2 seconds.
(c) Turn the ignition switch to the ON position, and wait for at least 60 seconds.
(d) Clear any DTCs stored in the memory (See page RS-34).
(e) Turn the ignition switch to the LOCK position.
(f) Turn the ignition switch to the ON position, and wait for at least 60 seconds.
(g) Check for DTCs (See page RS-34).

OK:

DTC B1830 is not output.

RS

HINT:
DTCs other than B1830 may be output at this time, but they are not related to this check.

OK → Go to step 12

NG

REPLACE CENTER AIRBAG SENSOR ASSEMBLY

11 CHECK CENTER AIRBAG SENSOR ASSEMBLY

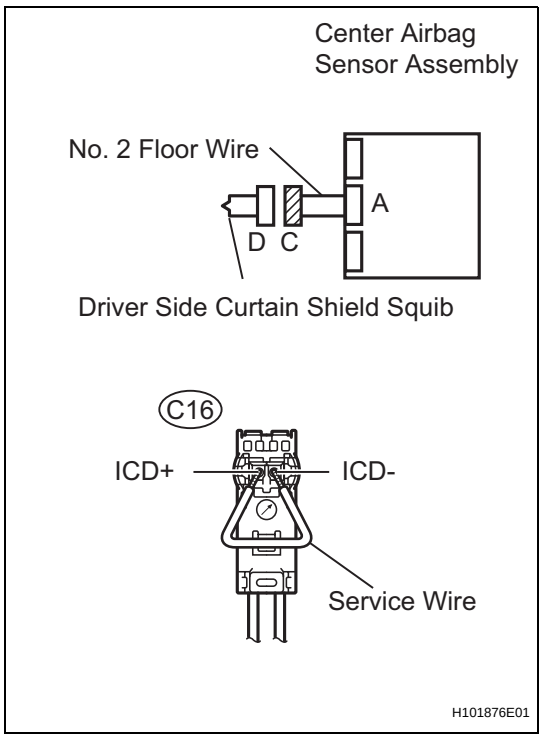

HINT:
If continuing from step 6, begin from (a). If continuing from any other step, begin from (c).

(a) Turn the ignition switch to the LOCK position.
(b) Disconnect the negative (-) terminal cable from the battery, and wait for at least 90 seconds.
(c) Connect the connector to the center airbag sensor assembly.
(d) Using a service wire, connect C16-1 (ICD+) and C16-2 (ICD-) of connector C.

NOTICE:
- **Twist the end of the service wire in order to insert it into the connector.**
- **Do not forcibly insert the twisted service wire into the terminals of the connector when connecting.**

(e) Connect the negative (-) terminal cable to the battery, and wait for at least 2 seconds.
(f) Turn the ignition switch to the ON position, and wait for at least 60 seconds.
(g) Clear any DTCs stored in the memory (See page RS-34).
(h) Turn the ignition switch to the LOCK position.
(i) Turn the ignition switch to the ON position, and wait for at least 60 seconds.
(j) Check for DTCs (See page RS-34).

OK:
DTC B1831, B1832 and B1833 are not output.

HINT:
DTCs other than B1831, B1832 or B1833 may be output at this time, but they are not related to this check.

NG → **REPLACE CENTER AIRBAG SENSOR ASSEMBLY**

OK

RS

12	CHECK CURTAIN SHIELD AIRBAG ASSEMBLY LH (CURTAIN SHIELD AIRBAG (DRIVER SEAT SIDE) SQUIB)

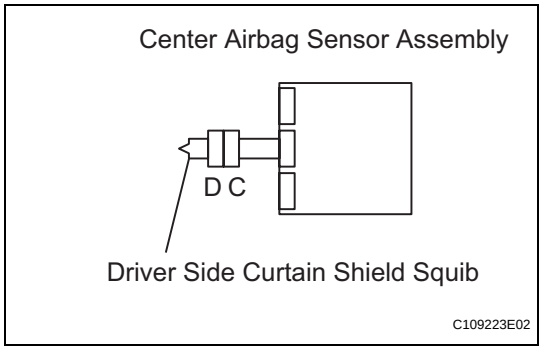

HINT:
If continuing from step 11, begin from (c) .If continuing from any other step, being from (a).

(a) Turn the ignition switch to the LOCK position.
(b) Disconnect the negative (-) terminal cable from the battery, and wait for at least 90 seconds.
(c) Disconnect the service wire from connector C.
(d) Connect the connector to the curtain shield airbag assembly LH.
(e) Connect the negative (-) terminal cable to the battery, and wait for at least 2 seconds.
(f) Turn the ignition switch to the ON position, and wait for at least 60 seconds.
(g) Clear any DTCs stored in the memory (See page RS-34).
(h) Turn the ignition switch to the LOCK position.
(i) Turn the ignition switch to the ON position, and wait for at least 60 seconds.
(j) Check for DTCs (See page RS-34).

OK:

DTC B1830, B1831, B1832 and B1833 are not output.

HINT:
DTCs other than B1830, B1831, B1832 or B1833 may be output at this time, but they are not related to this check.

NG → **REPLACE CURTAIN SHIELD AIRBAG ASSEMBLY LH**

OK

OTHERS USE SIMULATION METHOD TO CHECK

DTC	B1835/58	Short in Front Passenger Side Curtain Shield Squib Circuit

DTC	B1836/58	Open in Front Passenger Side Curtain Shield Squib Circuit

DTC	B1837/58	Short to GND in Front Passenger Side Curtain Shield Squib Circuit

DTC	B1838/58	Short to B+ in Front Passenger Side Curtain Shield Squib Circuit

DESCRIPTION

The curtain shield airbag (front passenger seat side) squib circuit consists of the center airbag sensor assembly and the curtain shield airbag assembly RH.
The circuit signals the SRS to deploy when airbag deployment conditions are met.
These DTCs are set when a malfunction is detected in the curtain shield airbag (front passenger seat side) squib circuit.

DTC No.	DTC Detections Conditions	Trouble Areas
B1835/58	• The center airbag sensor assembly receives a line short circuit signal in the curtain shield airbag (Front passenger seat side) squib circuit for 2 seconds • Curtain shield airbag (Front passenger seat side) squib malfunction • Center airbag sensor assembly malfunction	• Floor wire • Curtain shield airbag assembly RH (Curtain shield airbag [Front passenger seat side] squib) • Center airbag sensor assembly
B1836/58	• The center airbag sensor assembly receives an open circuit signal in the curtain shield airbag (Front passenger seat side) squib circuit for 2 seconds • Curtain shield airbag (Front passenger seat side) squib malfunction • Center airbag sensor assembly malfunction	• Floor wire • Curtain shield airbag assembly RH (Curtain shield airbag [Front passenger seat side] squib) • Center airbag sensor assembly
B1837/58	• The center airbag sensor assembly receives a short circuit to ground signal in the curtain shield airbag (Front passenger seat side) squib circuit for 0.5 seconds • Curtain shield airbag (Front passenger seat side) squib malfunction • Center airbag sensor assembly malfunction	• Floor wire • Curtain shield airbag assembly RH (Curtain shield airbag [Front passenger seat side] squib) • Center airbag sensor assembly
B1838/58	• The center airbag sensor assembly receives a short circuit to B+ signal in the curtain shield airbag (Front passenger seat side) squib circuit for 0.5 seconds • Curtain shield airbag (Front passenger seat side) squib malfunction • Center airbag sensor assembly malfunction	• Floor wire • Curtain shield airbag assembly RH (Curtain shield airbag [Front passenger seat side] squib) • Center airbag sensor assembly

WIRING DIAGRAM

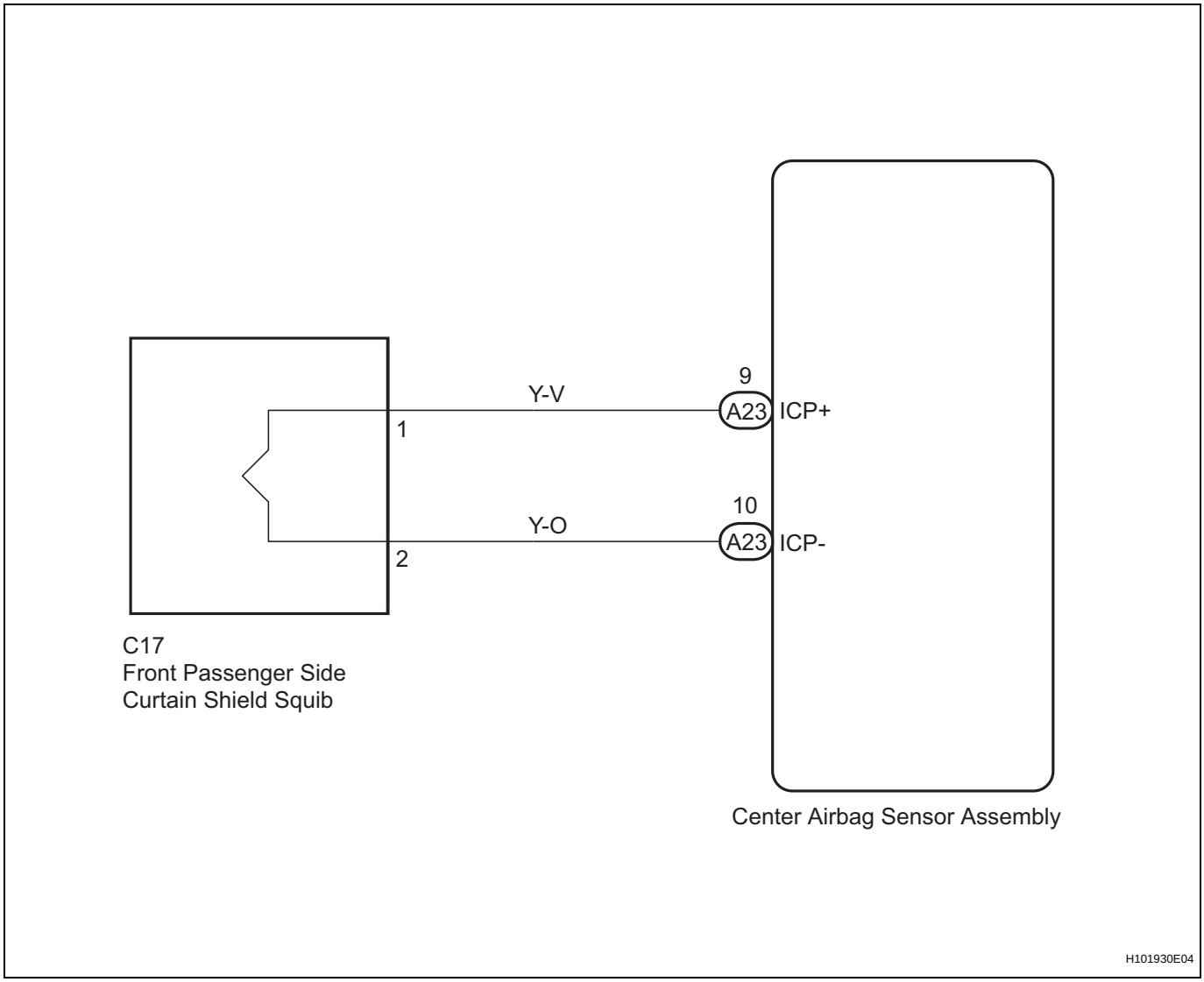

CAUTION:
In order to prevent unexpected airbag deployment, disconnect the following connectors before inspecting parts such as wire harnesses, if the application of tester probes to the center airbag sensor assembly connector is necessary.

(a) Turn the ignition switch to the LOCK position.
(b) Disconnect the negative (-) terminal cable from the battery, and wait for at least 90 seconds.
(c) Disconnect the connectors from the center airbag sensor assembly.
(d) Disconnect the connectors from the steering pad.
(e) Disconnect the connector from the front passenger airbag assembly.
(f) Disconnect the connector from the front seat airbag assembly LH.
(g) Disconnect the connector from the front seat airbag assembly RH.
HINT:
Skip the following steps if side and curtain shield airbags are not fitted.
(h) Disconnect the connector from the curtain shield airbag assembly LH.
(i) Disconnect the connector from the curtain shield airbag assembly RH.
(j) Disconnect the connector from the front seat outer belt assembly LH.
(k) Disconnect the connector from the front seat outer belt assembly RH.

1	CHECK DTC

(a) Proceed to the appropriate step according to DTC readings.

(1) If using the intelligent tester (read the 5-digit DTCs): Using the intelligent tester, check for DTCs (See page RS-34).

Result

Result	Proceed to
B1835 is output.	A
B1836 is output.	B
B1837 is output.	C
B1838 is output.	D

(2) If not using the intelligent tester (read the 2-digit DTCs): Check for DTCs (See page RS-34).

Result

Result	Proceed to
DTC 58 is output.	E

B → Go to step 4

C → Go to step 5

D → Go to step 6

E → Go to step 7

A

2	CHECK CONNECTOR

(a) Check that the floor wire connector (on the curtain shield airbag assembly RH side) is not damaged.

OK:

The lock button is not disengaged, and the claw of the lock is not deformed or damaged.

NG → REPAIR OR REPLACE FLOOR WIRE

OK

RS

3	CHECK FLOOR WIRE (FOR SHORT)

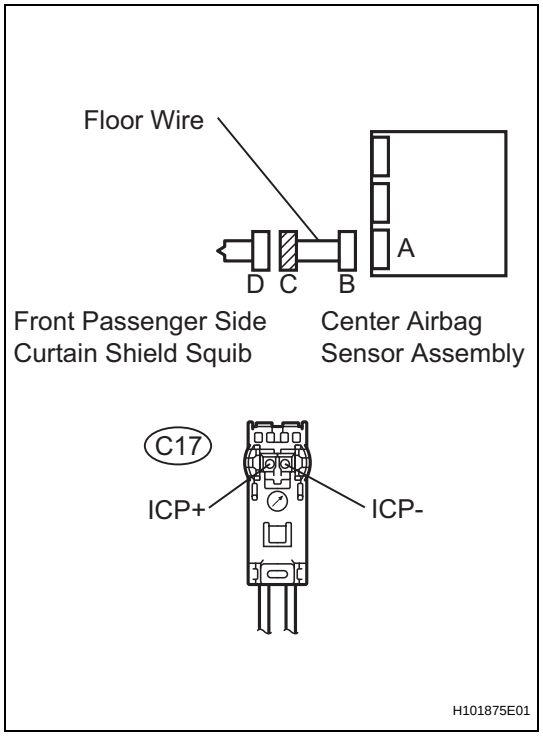

(a) Release the activation prevention mechanism built into connector B (See page RS-28).

(b) Measure the resistance.

Standard resistance

Tester Connection	Condition	Specified Condition
C17-1 (ICP+) - C17-2 (ICP-)	Always	1 MΩ or higher

OK → **Go to step 10**

NG

REPAIR OR REPLACE FLOOR WIRE

RS

4	CHECK FLOOR WIRE (FOR OPEN)

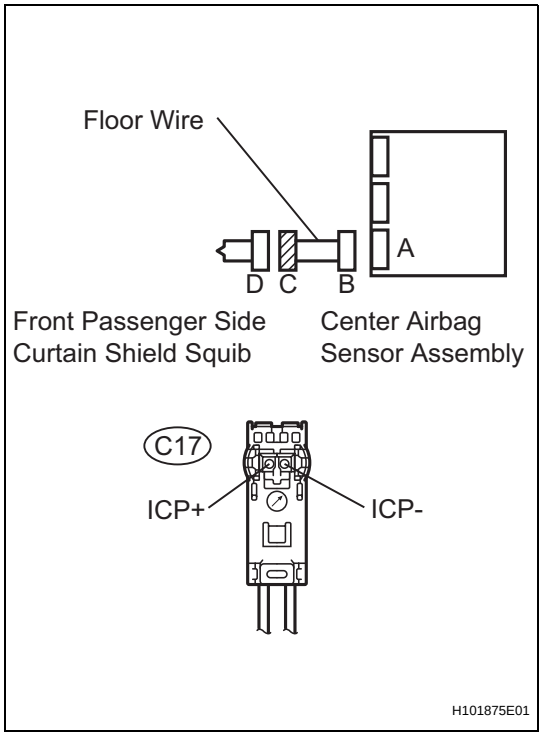

(a) Measure the resistance.
Standard resistance

Tester Connection	Condition	Specified Condition
C17-1 (ICP+) - C17-2 (ICP-)	Always	Below 1 Ω

OK → **Go to step 11**

NG

REPAIR OR REPLACE FLOOR WIRE

5	CHECK FLOOR WIRE (TO GROUND)

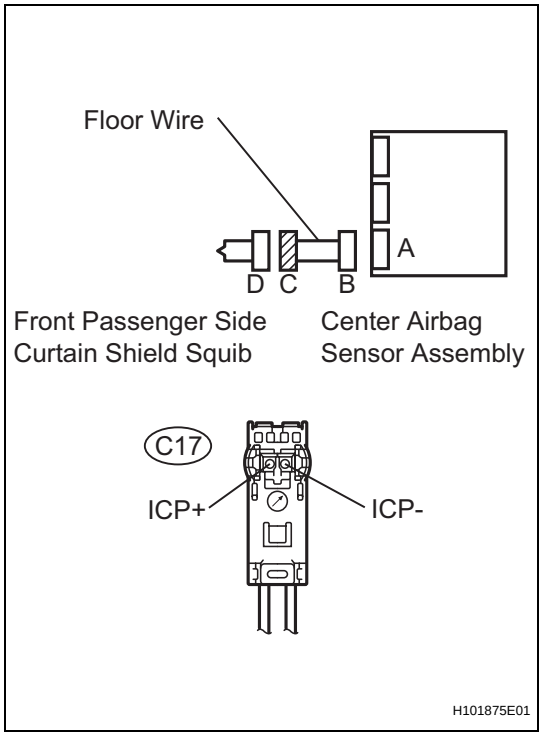

(a) Measure the resistance.
Standard resistance

Tester Connection	Condition	Specified Condition
C17-1 (ICP+) - Body ground	Always	1 MΩ or higher
C17-2 (ICP-) - Body ground	Always	1 MΩ or higher

OK → **Go to step 11**

NG

REPAIR OR REPLACE FLOOR WIRE

RS

6	CHECK FLOOR WIRE (TO B+)

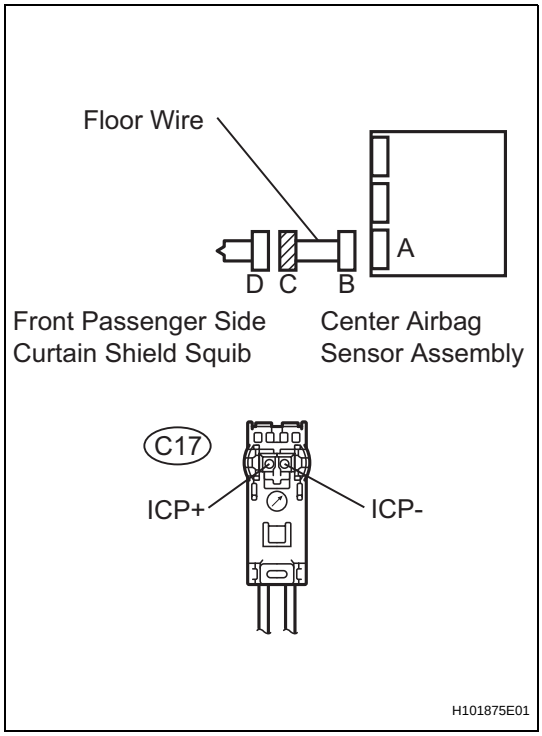

(a) Connect the negative (-) terminal cable to the battery, and wait for at least 2 seconds.
(b) Turn the ignition switch to the ON position.
(c) Measure the voltage.
Standard voltage

Tester Connection	Condition	Specified Condition
C17-1 (ICP+) - Body ground	Ignition switch ON	Below 1 V
C17-2 (ICP-) - Body ground	Ignition switch ON	Below 1 V

OK → **Go to step 11**

NG

REPAIR OR REPLACE FLOOR WIRE

7	CHECK CONNECTOR

(a) Check that the floor wire connector (on the curtain shield airbag assembly RH side) is not damaged.
OK:
The lock button is not disengaged, and the claw of the lock is not deformed or damaged.

NG → **REPAIR OR REPLACE FLOOR WIRE**

OK

RS

8 CHECK FLOOR WIRE

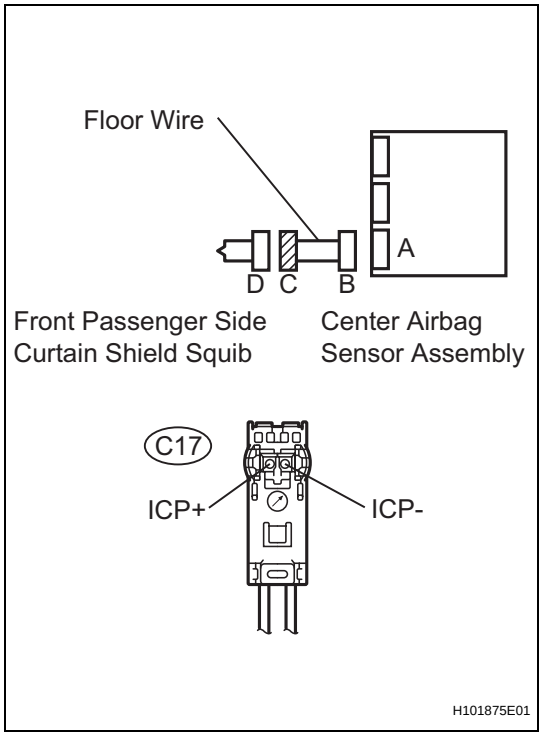

(a) Connect the negative (-) terminal cable to the battery, and wait for at least 2 seconds.
(b) Turn the ignition switch to the ON position.
(c) Measure the voltage.

Standard voltage

Tester Connection	Condition	Specified Condition
C17-1 (ICP+) - Body ground	Ignition switch ON	Below 1 V
C17-2 (ICP-) - Body ground	Ignition switch ON	Below 1 V

(d) Turn the ignition switch to the LOCK position.
(e) Disconnect the negative (-) terminal cable from the battery, and wait for at least 90 seconds.
(f) Measure the resistance.

Standard resistance

Tester Connection	Condition	Specified Condition
C17-1 (ICP+) - C17-2 (ICP-)	Always	Below 1 Ω
C17-1 (ICP+) - Body ground	Always	1 MΩ or higher
C17-2 (ICP-) - Body ground	Always	1 MΩ or higher

(g) Release the activation prevention mechanism built into connector B (See page RS-28).
(h) Measure the resistance.

Standard resistance

Tester Connection	Condition	Specified Condition
C17-1 (ICP+) - C17-2 (ICP-)	Always	1 MΩ or higher

NG → **REPAIR OR REPLACE FLOOR WIRE**

OK

9	REPLACE CURTAIN SHIELD AIRBAG ASSEMBLY RH (CURTAIN SHIELD AIRBAG (FRONT PASSENGER SEAT SIDE) SQUIB)

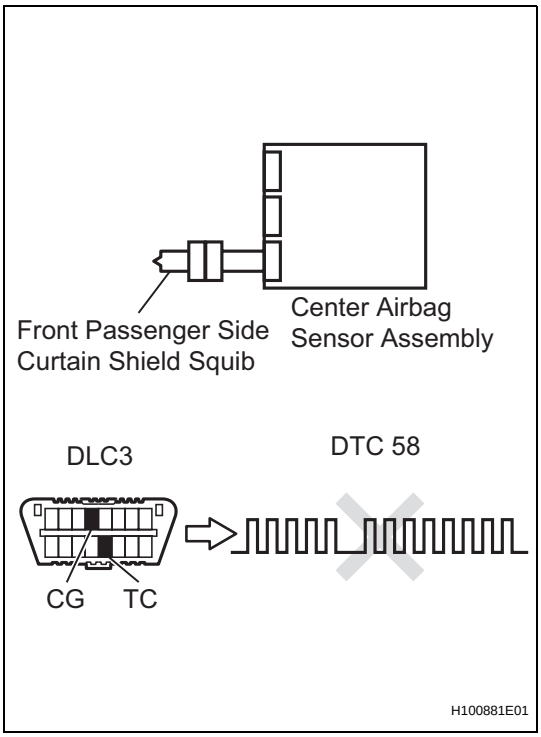

(a) Replace the curtain shield airbag assembly RH (See page RS-587).

HINT:
Perform the inspection using parts from a normal vehicle when possible.

(b) Connect the connectors to the center airbag sensor assembly.
(c) Connect the negative (-) terminal cable to the battery, and wait for at least 2 seconds.
(d) Turn the ignition switch to the ON position, and wait for at least 60 seconds.
(e) Clear any DTCs stored in the memory (See page RS-34).
(f) Turn the ignition switch to the LOCK position.
(g) Turn the ignition switch to the ON position, and wait for at least 60 seconds.
(h) Check for DTCs (See page RS-34).

OK:

DTC 58 is not output.

HINT:
DTCs other than 58 may be output at this time, but they are not related to this check.

NG → **REPLACE CENTER AIRBAG SENSOR ASSEMBLY**

OK

END

10	CHECK CENTER AIRBAG SENSOR ASSEMBLY

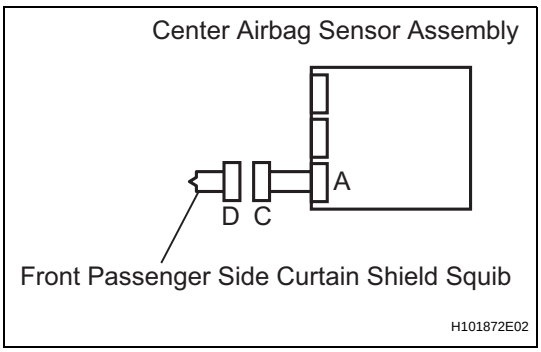

(a) Connect the connectors to the center airbag sensor assembly.
(b) Connect the negative (-) terminal cable to the battery, and wait for at least 2 seconds.
(c) Turn the ignition switch to the ON position, and wait for at least 60 seconds.
(d) Clear any DTCs stored in the memory (See page RS-34).
(e) Turn the ignition switch to the LOCK position.
(f) Turn the ignition switch to the ON position, and wait for at least 60 seconds.
(g) Check for DTCs (See page RS-34).

OK:

DTC B1835 is not output.

RS

HINT:
DTCs other than B1835 may be output at this time, but they are not related to this check.

OK → Go to step 12

NG

REPLACE CENTER AIRBAG SENSOR ASSEMBLY

11 CHECK CENTER AIRBAG SENSOR ASSEMBLY

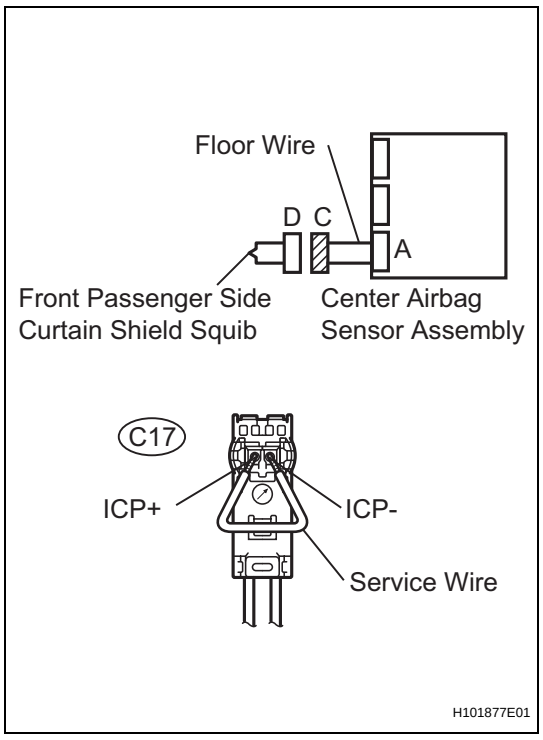

HINT:
If continuing from step 6, begin from (a). If continuing from any other step, begin from (c).

(a) Turn the ignition switch to the LOCK position.
(b) Disconnect the negative (-) terminal cable from the battery, and wait for at least 90 seconds.
(c) Connect the connectors to the center airbag sensor assembly.
(d) Using a service wire, connect C17-1 (ICP+) and C17-2 (ICP-) of connector C.

NOTICE:
- **Twist the end of the service wire in order to insert it into the connector.**
- **Do not forcibly insert the twisted service wire into the terminals of the connector when connecting.**

(e) Connect the negative (-) terminal cable to the battery, and wait for at least 2 seconds.
(f) Turn the ignition switch to the ON position, and wait for at least 60 seconds.
(g) Clear any DTCs stored in the memory (See page RS-34).
(h) Turn the ignition switch to the LOCK position.
(i) Turn the ignition switch to the ON position, and wait for at least 60 seconds.
(j) Check for DTCs (See page RS-34).

OK:
DTC B1836, B1837 and B1838 are not output.

HINT:
DTCs other than B1836, B1837 or B1838 may be output at this time, but they are not related to this check.

NG → **REPLACE CENTER AIRBAG SENSOR ASSEMBLY**

OK

12 CHECK CURTAIN SHIELD AIRBAG ASSEMBLY RH

HINT:
If continuing from step 11, begin from (c). If continuing from any other step, being from (a).

RS

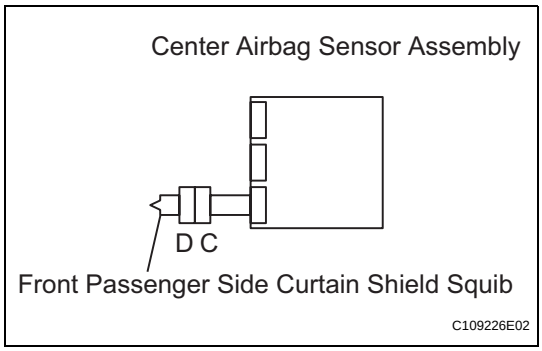

(a) Turn the ignition switch to the LOCK position.
(b) Disconnect the negative (-) terminal cable from the battery, and wait for at least 90 seconds.
(c) Disconnect the service wire from connector C.
(d) Connect the connector to the curtain shield airbag assembly RH.
(e) Connect the negative (-) terminal cable to the battery, and wait for at least 2 seconds.
(f) Turn the ignition switch to the ON position, and wait for at least 60 seconds.
(g) Clear any DTCs stored in the memory (See page RS-34).
(h) Turn the ignition switch to the LOCK position.
(i) Turn the ignition switch to the ON position, and wait for at least 60 seconds.
(j) Check for DTCs (See page RS-34).

OK:

DTC B1835, B1836, B1837 and B1838 are not output.

HINT:
DTCs other than B1835, B1836, B1837 or B1838 may be output at this time, but they are not related to this check.

NG → **REPLACE CURTAIN SHIELD AIRBAG ASSEMBLY RH**

OK

USE SIMULATION METHOD TO CHECK

DTC	B1900/73	Short in Driver Side Front Pretensioner Squib Circuit

DTC	B1901/73	Open in Driver Side Front Pretensioner Squib Circuit

DTC	B1902/73	Short to GND in Driver Side Front Pretensioner Squib Circuit

DTC	B1903/73	Short to B+ in Driver Side Front Pretensioner Squib Circuit

DESCRIPTION

The pretensioner squib (driver seat side) circuit consists of the center airbag sensor assembly and the front seat outer belt assembly LH.
This circuit signals the SRS to deploy when airbag deployment conditions are met.
These DTCs are set when a malfunction is detected in the pretensioner squib (driver seat side) circuit.

DTC No.	DTC Detections Conditions	Trouble Areas
B1900/73	• The center airbag sensor assembly receives a line short circuit signal in the pretensioner squib (driver seat side) circuit for 2 seconds • Pretensioner squib (driver seat side) malfunction • Center airbag sensor assembly malfunction	• No. 2 floor wire • No. 2 rear door wire (*1) • Front seat outer belt assembly LH (Pretensioner squib [driver seat side]) • Center airbag sensor assembly
B1901/73	• The center airbag sensor assembly receives an open circuit signal in the pretensioner squib (driver seat side) circuit for 2 seconds • Pretensioner squib (driver seat side) malfunction • Center airbag sensor assembly center malfunction	• No. 2 floor wire • No. 2 rear door wire (*1) • Front seat outer belt assembly LH (Pretensioner squib [driver seat side]) • Center airbag sensor assembly
B1902/73	• The center airbag sensor assembly receives a short circuit to ground signal in the pretensioner squib (driver seat side) circuit for 0.5 seconds • Pretensioner squib (driver seat side) malfunction • Center airbag sensor assembly malfunction	• No. 2 floor wire • No. 2 rear door wire (*1) • Front seat outer belt assembly LH (Pretensioner squib [driver seat side]) • Center airbag sensor assembly
B1903/73	• The center airbag sensor assembly receives a short circuit to B+ signal in the pretensioner squib (driver seat side) circuit for 0.5 seconds • Pretensioner squib (driver seat side) malfunction • Center airbag sensor assembly malfunction	• No. 2 floor wire • No. 2 rear door wire (*1) • Front seat outer belt assembly LH (Pretensioner squib [driver seat side]) • Center airbag sensor assembly

WIRING DIAGRAM

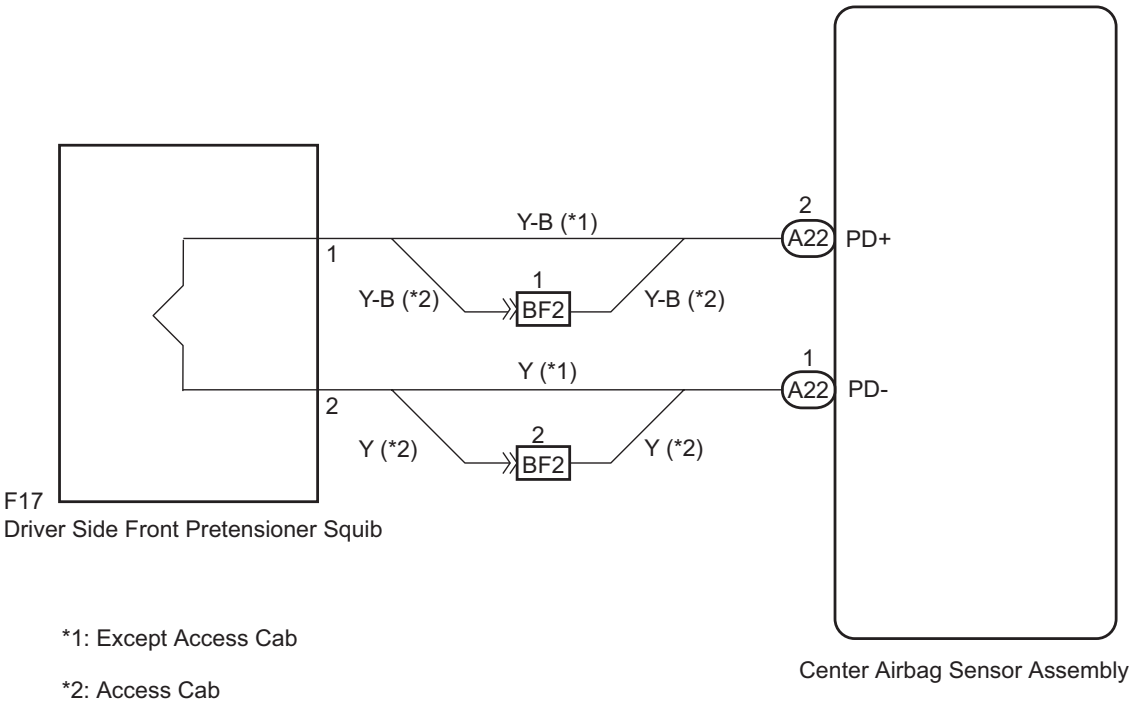

CAUTION:
In order to prevent unexpected airbag deployment, disconnect the following connectors before inspecting parts such as wire harnesses, if the application of tester probes to the center airbag sensor assembly connector is necessary.

RS

(a) Turn the ignition switch to the LOCK position.
(b) Disconnect the negative (-) terminal cable from the battery, and wait for at least 90 seconds.
(c) Disconnect the connectors from the center airbag sensor assembly.
(d) Disconnect the connectors from the steering pad.
(e) Disconnect the connector from the front passenger airbag assembly.
(f) Disconnect the connector from the front seat airbag assembly LH.
(g) Disconnect the connector from the front seat airbag assembly RH.
HINT:
Skip the following steps if side and curtain shield airbags are not fitted.
(h) Disconnect the connector from the curtain shield airbag assembly LH.
(i) Disconnect the connector from the curtain shield airbag assembly RH.
(j) Disconnect the connector from the front seat outer belt assembly LH.
(k) Disconnect the connector from the front seat outer belt assembly RH.

1	CHECK DTC

(a) Proceed to the appropriate step according to DTC readings.
(1) If using the intelligent tester (read the 5-digit DTCs): Using the intelligent tester, check for DTCs (See page RS-34).
Result

Result	Proceed to
DTC B1900 is output.	A
DTC B1901 is output.	B
DTC B1902 is output.	C
DTC B1903 is output.	D

(2) If not using the intelligent tester (read the 2-digit DTCs): Check for DTCs (See page RS-34).
Result

Result	Proceed to
DTC 73 is output.	E

B → Go to step 9
C → Go to step 14
D → Go to step 19
E → Go to step 28

A

2	CHECK CONNECTOR

(a) Turn the ignition switch to the LOCK position.
(b) Disconnect the negative (-) terminal cable from the battery, and wait for at least 90 seconds.
(c) Check that the connector (on the front seat outer belt assembly LH side) is not damaged.
OK:
The lock button is not disengaged, and the claw of the lock is not deformed or damaged.

NG → REPAIR OR REPLACE NO. 2 FLOOR WIRE (EXCEPT ACCESS CAB)
NG → REPAIR OR REPLACE NO. 2 REAR DOOR WIRE (ACCESS CAB)

OK

RS

3 CHECK CONNECTION OF CONNECTORS

(a) Check that the connectors are properly connected to the center airbag sensor assembly and the front airbag sensor LH.

Result

Condition	Proceed to
Normal (Expect access cab)	A
Normal (Access cab)	B
Abnormal	C

B → **Go to step 6**

C → **CONNECT CONNECTORS**

A

4 CHECK DRIVER SIDE FRONT PRETENSIONER SQUIB CIRCUIT (FOR SHORT)

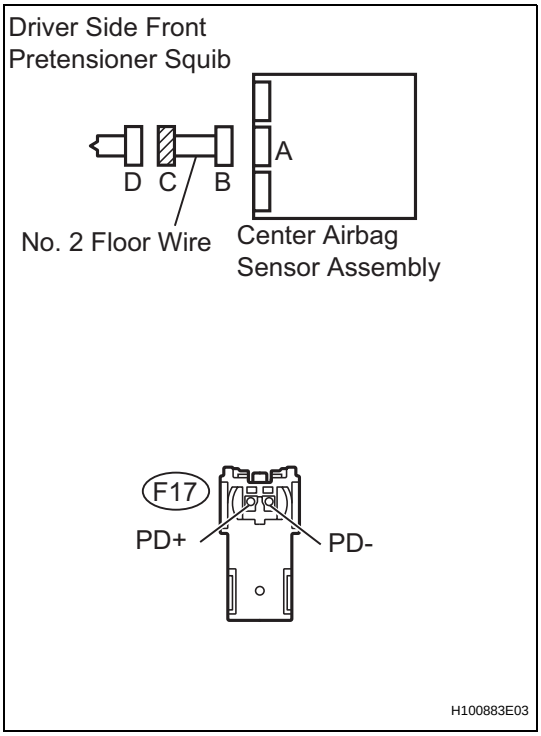

(a) Disconnect the floor wire connectors from the center airbag sensor assembly and front seat outer belt assembly LH.

(b) Release the activation prevention mechanism built into connector B (See page RS-28).

(c) Measure the resistance.

Standard resistance

Tester Connection	Condition	Specified Condition
F17-1 (PD+) - F17-2 (PD-)	Always	1 MΩ or higher

NG → **REPAIR OR REPLACE NO. 2 FLOOR WIRE**

OK

RS

5 CHECK CENTER AIRBAG SENSOR ASSEMBLY

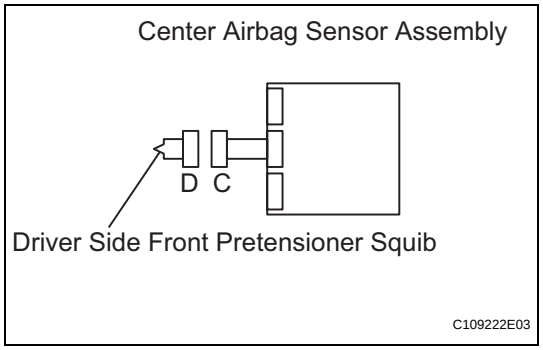

(a) Connect the connectors to the center airbag sensor assembly.
(b) Connect the negative (-) terminal cable to the battery, and wait for at least 2 seconds.
(c) Turn the ignition switch to the ON position, and wait for at least 60 seconds.
(d) Clear any DTCs stored in the memory (See page RS-34).
(e) Turn the ignition switch to the LOCK position.
(f) Turn the ignition switch to the ON position, and wait for at least 60 seconds.
(g) Check for DTCs (See page RS-34).

OK:

DTC B1900 is not output.

HINT:
DTCs other than B1900 may be output at this time, but they are not related to this check.

OK	Go to step 25

NG

REPLACE CENTER AIRBAG SENSOR ASSEMBLY

6 CHECK DRIVER SIDE FRONT PRETENSIONER SQUIB CIRCUIT (FOR SHORT)

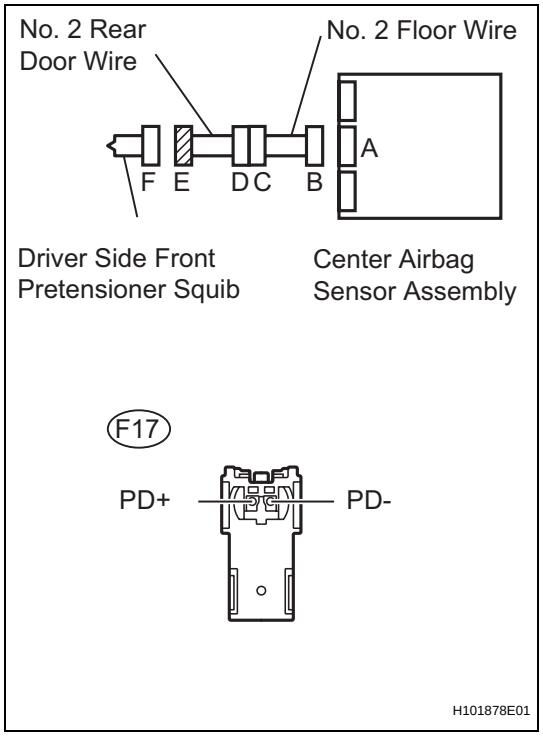

(a) Disconnect the No. 2 floor wire connector from the center airbag sensor assembly.
(b) Disconnect the No. 2 rear door wire connector from the front seat outer belt assembly LH.
(c) Release the activation prevention mechanism built into connector B (See page RS-28)
(d) Measure the resistance.

Standard resistance

Tester Connection	Condition	Specified Condition
F17-1 (PD+) - F17-2 (PD-)	Always	1 MΩ or higher

OK	Go to step 8

RS

NG

7 CHECK NO. 2 REAR DOOR WIRE (FOR SHORT)

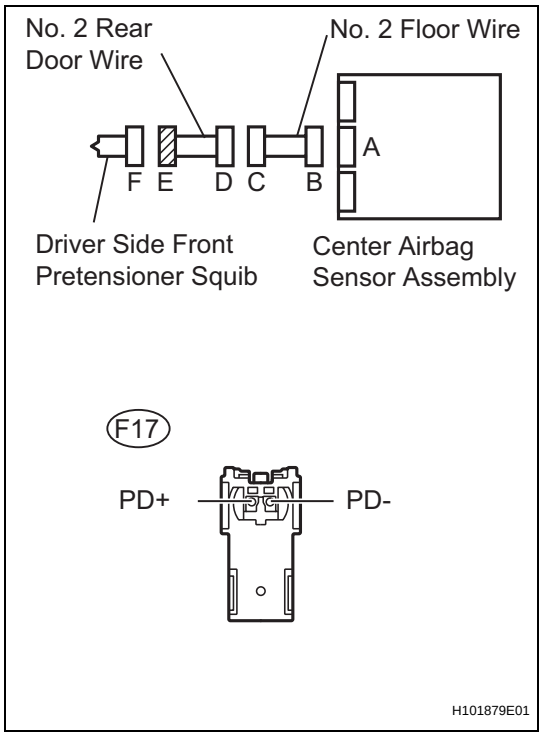

(a) Disconnect the No. 2 floor wire connector from the No. 2 rear door wire.
(b) Release the activation prevention mechanism built into connector D (See page RS-28).
(c) Measure the resistance.
Standard resistance

Tester Connection	Condition	Specified Condition
F17-1 (PD+) - F17-2 (PD-)	Always	1 MΩ or higher

NG → **REPAIR OR REPLACE NO. 2 REAR DOOR WIRE**

OK

REPAIR OR REPLACE NO. 2 FLOOR WIRE

8 CHECK CENTER AIRBAG SENSOR ASSEMBLY

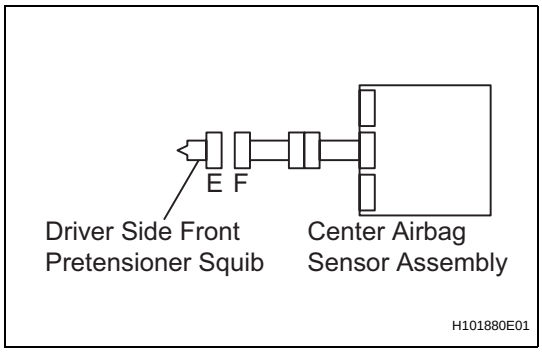

(a) Connect the No. 2 floor wire connectors to the center airbag sensor assembly and No. 2 rear door wire.
(b) Connect the negative (-) terminal cable to the battery, and wait for at least 2 seconds.
(c) Turn the ignition switch to the ON position, and wait for at least 60 seconds.
(d) Clear any DTCs stored in the memory (See page RS-34).
(e) Turn the ignition switch to the LOCK position.
(f) Turn the ignition switch to the ON position, and wait for at least 60 seconds.
(g) Check for DTCs (See page RS-34).
OK:
DTC B1900 is not output.

HINT:
DTCs other than B1900 may be output at this time, but they are not related to this check.

OK → **Go to step 27**

RS

NG

REPLACE CENTER AIRBAG SENSOR ASSEMBLY

9 **CHECK CONNECTOR**

(a) Turn the ignition switch to the LOCK position.
(b) Disconnect the negative (-) terminal cable from the battery, and wait for at least 90 seconds.
(c) Check that the connector (on the front seat outer belt assembly LH side) is not damaged.
OK:
The lock button is not disengaged, and the claw of the lock is not deformed or damaged.

NG → **REPAIR OR REPLACE NO. 2 FLOOR WIRE (EXCEPT ACCESS CAB)**

NG → **REPAIR OR REPLACE NO. 2 REAR DOOR WIRE (ACCESS CAB)**

OK

10 **CHECK CONNECTION OF CONNECTORS**

(a) Check that the connectors are properly connected to the center airbag sensor assembly and the front airbag sensor LH.
Result

Condition	Proceed to
Normal (Expect access cab)	A
Normal (Access cab)	B
Abnormal	C

B → **Go to step 12**

C → **CONNECT CONNECTORS**

A

11	CHECK DRIVER SIDE FRONT PRETENSIONER SQUIB CIRCUIT (FOR OPEN)

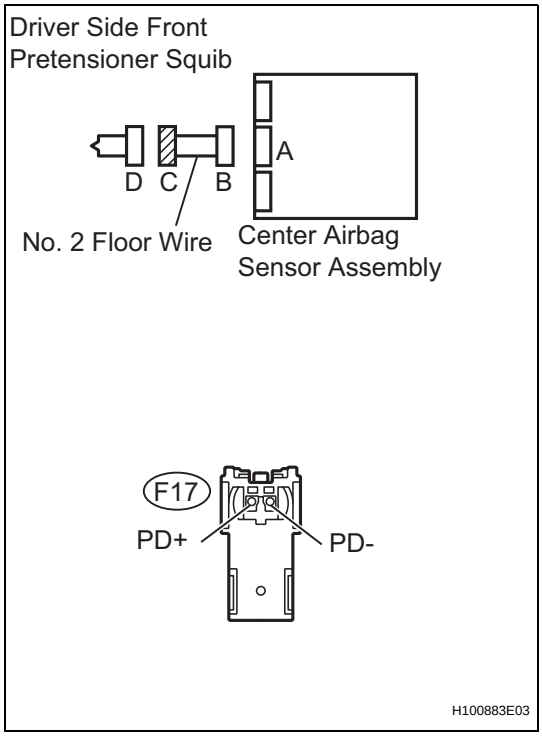

(a) Disconnect the floor wire connectors from the center airbag sensor assembly and front seat outer belt assembly LH.

(b) Measure the resistance.

Standard resistance

Tester Connection	Condition	Specified Condition
F17-1 (PD+) - F17-2 (PD-)	Always	Below 1 Ω

OK → **Go to step 24**

NG

REPAIR OR REPLACE NO. 2 FLOOR WIRE

RS

12 CHECK DRIVER SIDE FRONT PRETENSIONER SQUIB CIRCUIT (FOR OPEN)

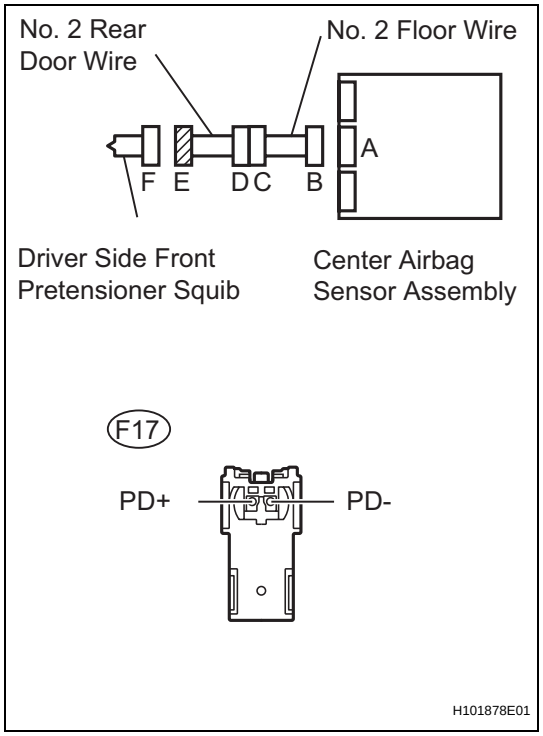

(a) Disconnect the No. 2 floor wire connector from the center airbag sensor assembly.
(b) Disconnect the No. 2 rear door wire connector from the front seat outer belt assembly LH.
(c) Measure the resistance.
Standard resistance

Tester Connection	Condition	Specified Condition
F17-1 (PD+) - F17-2 (PD-)	Always	Below 1 Ω

OK → **Go to step 26**

NG

13 CHECK NO. 2 REAR DOOR WIRE (FOR OPEN)

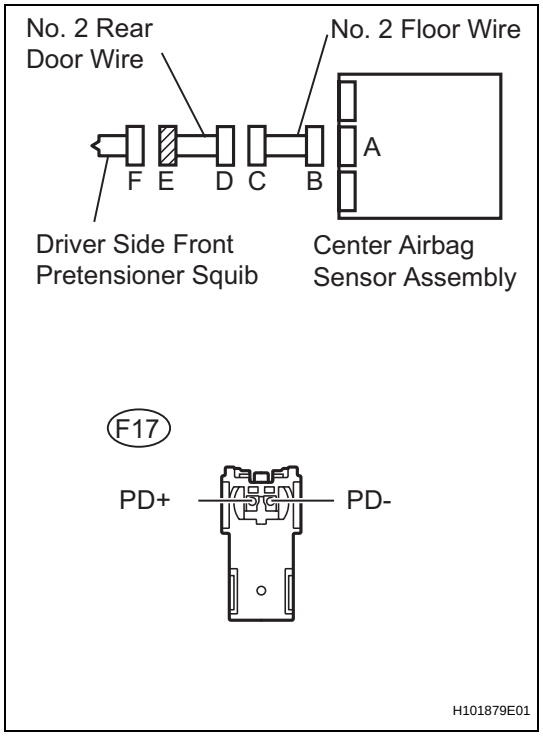

(a) Disconnect the No. 2 floor wire connector from the No. 2 rear door wire.
(b) Measure the resistance.
Standard resistance

Tester Connection	Condition	Specified Condition
F17-1 (PD+) - F17-2 (PD-)	Always	1 MΩ or higher

NG → **REPAIR OR REPLACE NO. 2 REAR DOOR WIRE**

RS

OK

REPAIR OR REPLACE NO. 2 FLOOR WIRE

14 CHECK CONNECTOR

(a) Turn the ignition switch to the LOCK position.
(b) Disconnect the negative (-) terminal cable from the battery, and wait for at least 90 seconds.
(c) Check that the connector (on the front seat outer belt assembly LH side) is not damaged.
OK:
The lock button is not disengaged, and the claw of the lock is not deformed or damaged.

NG → **REPAIR OR REPLACE NO. 2 FLOOR WIRE (EXCEPT ACCESS CAB)**

NG → **REPAIR OR REPLACE NO. 2 REAR DOOR WIRE (ACCESS CAB)**

OK

15 CHECK CONNECTION OF CONNECTORS

(a) Check that the connectors are properly connected to the center airbag sensor assembly and the front airbag sensor LH.
Result

Condition	Proceed to
Normal (Expect access cab)	A
Normal (Access cab)	B
Abnormal	C

B → **Go to step 17**

C → **CONNECT CONNECTORS**

A

RS

16	CHECK DRIVER SIDE FRONT PRETENSIONER SQUIB CIRCUIT (TO GROUND)

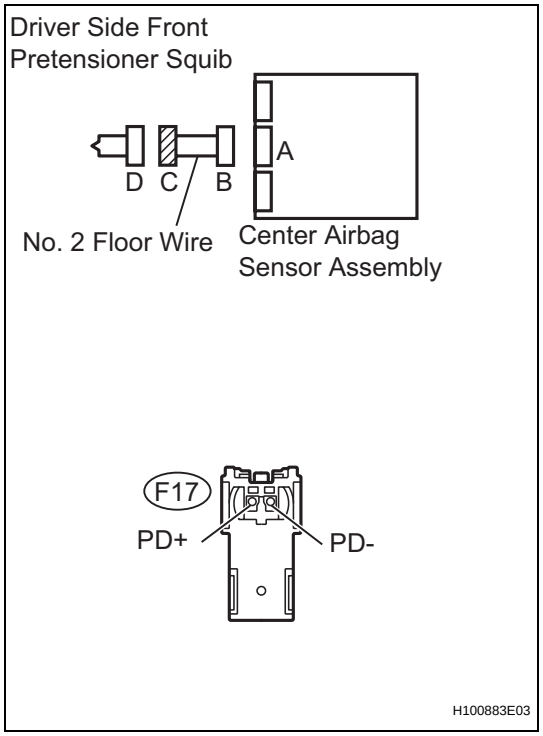

(a) Disconnect the floor wire connectors from the center airbag sensor assembly and front seat outer belt assembly LH.

(b) Measure the resistance.

Standard resistance

Tester Connection	Condition	Specified Condition
F17-1 (PD+) - Body ground	Always	1 MΩ or higher
F17-2 (PD-) - Body ground	Always	1 MΩ or higher

OK → **Go to step 24**

NG

REPAIR OR REPLACE NO. 2 FLOOR WIRE

RS

17 CHECK DRIVER SIDE FRONT PRETENSIONER SQUIB CIRCUIT (TO GROUND)

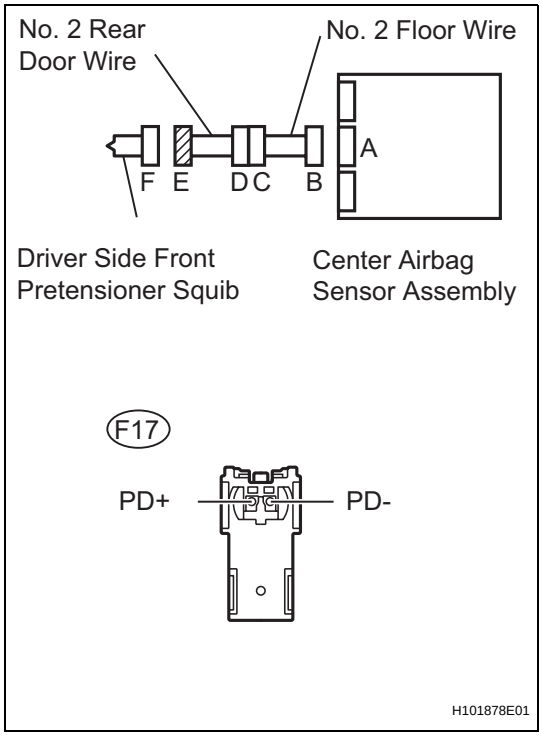

(a) Disconnect the No. 2 floor wire connector from the center airbag sensor assembly.
(b) Disconnect the No. 2 rear door wire connector from the front seat outer belt assembly LH.
(c) Measure the resistance.
Standard resistance

Tester Connection	Condition	Specified Condition
F17-1 (PD+) - Body ground	Always	1 MΩ or higher
F17-2 (PD-) - Body ground	Always	1 MΩ or higher

OK → **Go to step 26**

NG

18 CHECK NO. 2 REAR DOOR WIRE (TO GROUND)

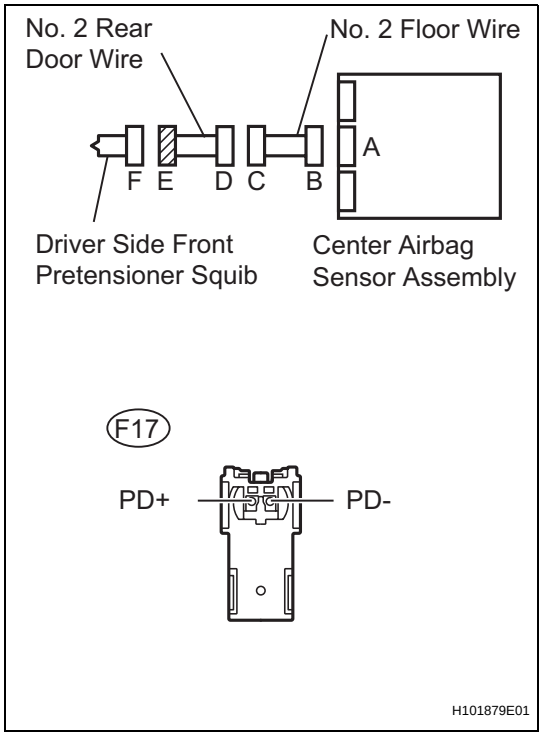

(a) Disconnect the No. 2 floor wire connector from the No. 2 rear door wire.
(b) Measure the resistance.
Standard resistance

Tester Connection	Condition	Specified Condition
F17-1 (PD+) - Body ground	Always	1 MΩ or higher
F17-2 (PD-) - Body ground	Always	1 MΩ or higher

NG → **REPAIR OR REPLACE NO. 2 REAR DOOR WIRE**

RS

OK

REPAIR OR REPLACE NO. 2 FLOOR WIRE

19 CHECK CONNECTOR

(a) Turn the ignition switch to the LOCK position.
(b) Disconnect the negative (-) terminal cable from the battery, and wait for at least 90 seconds.
(c) Check that the connector (on the front seat outer belt assembly LH side) is not damaged.
OK:
The lock button is not disengaged, and the claw of the lock is not deformed or damaged.

NG → **REPAIR OR REPLACE NO. 2 FLOOR WIRE (EXCEPT ACCESS CAB)**

NG → **REPAIR OR REPLACE NO. 2 REAR DOOR WIRE (ACCESS CAB)**

OK

20 CHECK CONNECTION OF CONNECTORS

(a) Check that the connectors are properly connected to the center airbag sensor assembly and the front airbag sensor LH.
Result

Condition	Proceed to
Normal (Expect access cab)	A
Normal (Access cab)	B
Abnormal	C

B → **Go to step 22**

C → **CONNECT CONNECTORS**

A

21	CHECK DRIVER SIDE FRONT PRETENSIONER SQUIB CIRCUIT (TO B+)

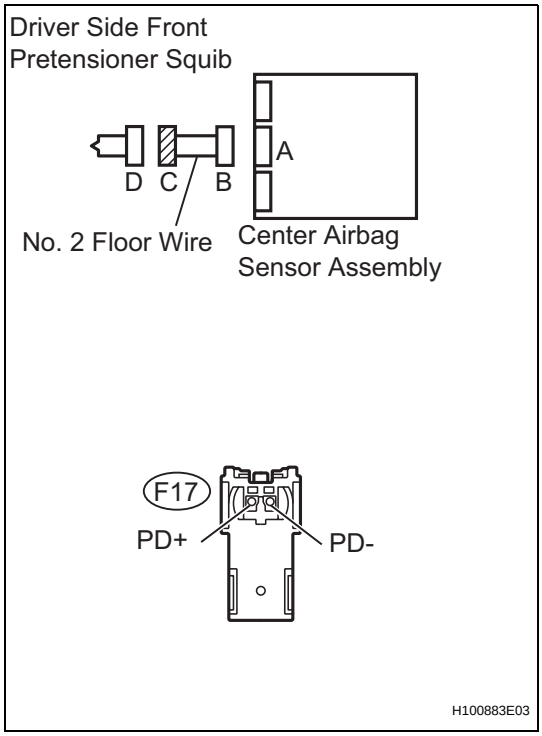

(a) Disconnect the floor wire connectors from the center airbag sensor assembly and front seat outer belt assembly LH.
(b) Connect the negative (-) terminal cable to the battery, and wait for at least 2 seconds.
(c) Turn the ignition switch to the ON position.
(d) Measure the voltage.

Standard voltage

Tester Connection	Condition	Specified Condition
F17-1 (PD+) - Body ground	Ignition switch ON	Below 1 V
F17-2 (PD-) - Body ground	Ignition switch ON	Below 1 V

OK → **Go to step 24**

NG

REPAIR OR REPLACE NO. 2 FLOOR WIRE

22 CHECK DRIVER SIDE FRONT PRETENSIONER SQUIB CIRCUIT (TO B+)

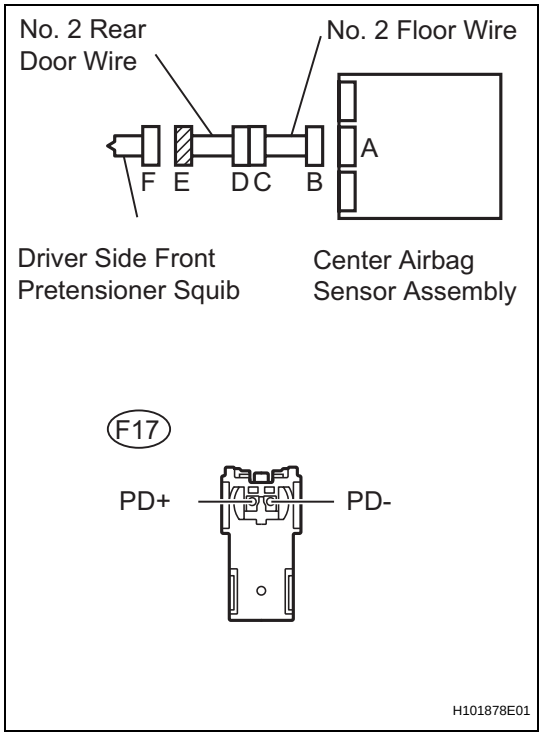

(a) Disconnect the No. 2 floor wire connector from the center airbag sensor assembly.
(b) Disconnect the No. 2 rear door wire connector from the front seat outer belt assembly LH.
(c) Connect the negative (-) terminal cable to the battery, and wait for at least 2 seconds.
(d) Turn the ignition switch to the ON position.
(e) Measure the resistance.

Standard voltage

Tester Connection	Condition	Specified Condition
F17-1 (PD+) - Body ground	Ignition switch ON	Below 1 V
F17-2 (PD-) - Body ground	Ignition switch ON	Below 1 V

OK → **Go to step 26**

NG

23 CHECK NO. 2 REAR DOOR WIRE (TO B+)

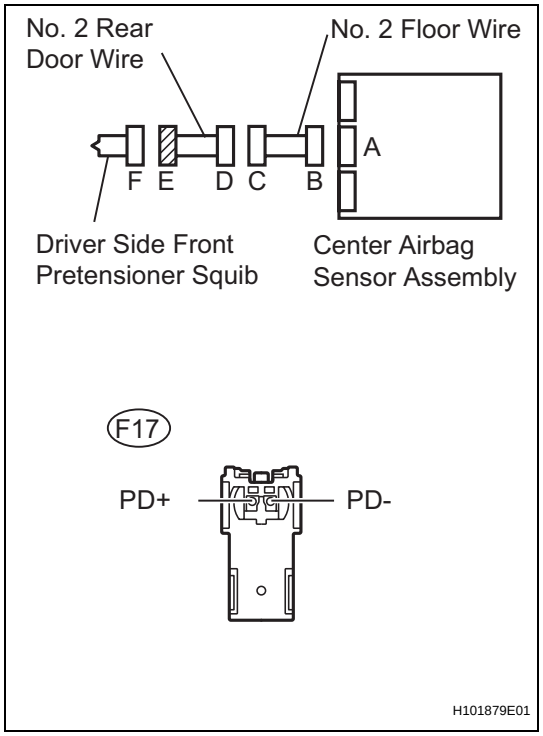

(a) Turn the ignition switch to the LOCK position.
(b) Disconnect the negative (-) terminal cable from the battery, and wait for at least 90 seconds.
(c) Disconnect the No. 2 floor wire connector from the No. 2 rear door wire.
(d) Connect the negative (-) terminal cable to the battery, and wait for at least 2 seconds.
(e) Turn the ignition switch to the ON position.
(f) Measure the resistance.

Standard voltage

Tester Connection	Condition	Specified Condition
F17-1 (PD+) - Body ground	Ignition switch ON	Below 1 V
F17-2 (PD-) - Body ground	Ignition switch ON	Below 1 V

NG → **REPAIR OR REPLACE NO. 2 REAR DOOR WIRE**

RS

OK

REPAIR OR REPLACE NO. 2 FLOOR WIRE

24	CHECK CENTER AIRBAG SENSOR ASSEMBLY

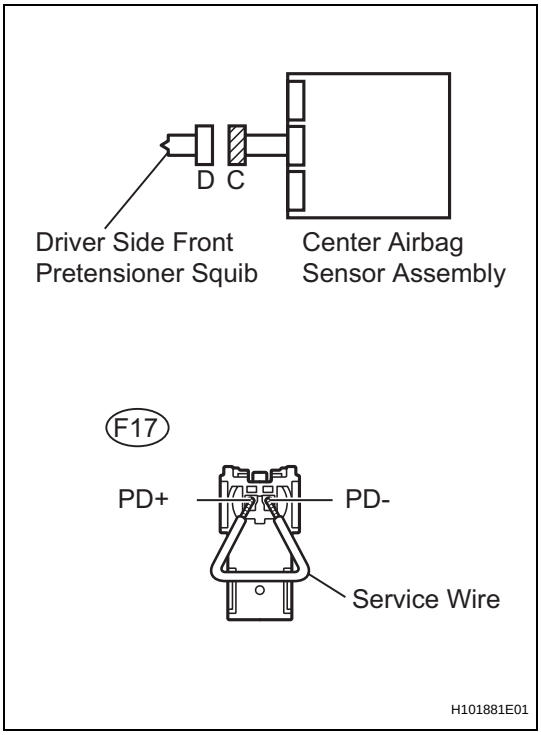

HINT:
If continuing from step 21, begin from (a). If continuing from any other step, begin from (c).

(a) Turn the ignition switch to the LOCK position.
(b) Disconnect the negative (-) terminal cable from the battery, and wait for at least 90 seconds.
(c) Connect the connectors to the center airbag sensor assembly.
(d) Using a service wire, connect F17-1 (PD+) and F17-2 (PD-) of connector C.

NOTICE:

- **Twist the end of the service wire in order to insert it into the connector.**
- **Do not forcibly insert the twisted service wire into the terminals of the connector when connecting.**

(e) Connect the negative (-) terminal cable to the battery, and wait for at least 2 seconds.
(f) Turn the ignition switch to the ON position, and wait for at least 60 seconds.
(g) Clear any DTCs stored in the memory (See page RS-34).
(h) Turn the ignition switch to the LOCK position.
(i) Turn the ignition switch to the ON position, and wait for at least 60 seconds.
(j) Check for DTCs (See page RS-34).

OK:

DTC B1901, B1902 and B1903 are not output.

HINT:
DTCs other than B1901, B1902 or B1903 may be output at this time, but they are not related to this check.

NG → **REPLACE CENTER AIRBAG SENSOR ASSEMBLY**

RS

OK

25	CHECK FRONT SEAT OUTER BELT ASSEMBLY LH

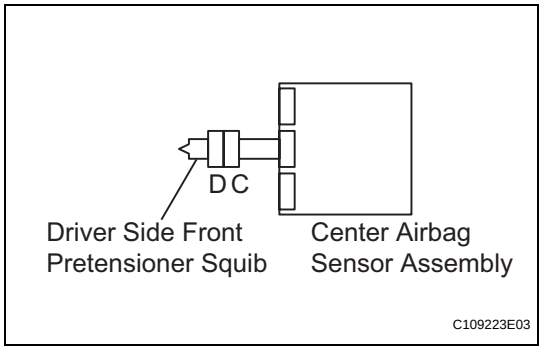

HINT:
If continuing from step 24, begin from (c). If continuing from any other step, being from (a).

(a) Turn the ignition switch to the LOCK position.
(b) Disconnect the negative (-) terminal cable from the battery, and wait for at least 90 seconds.
(c) Disconnect the service wire from connector C.
(d) Connect the connector to the front seat outer belt assembly LH.
(e) Connect the negative (-) terminal cable to the battery, and wait for at least 2 seconds.
(f) Turn the ignition switch to the ON position, and wait for at least 60 seconds.
(g) Clear any DTCs stored in the memory (See page RS-34).
(h) Turn the ignition switch to the LOCK position.
(i) Turn the ignition switch to the ON position, and wait for at least 60 seconds.
(j) Check for DTCs (See page RS-34).

OK:

DTC B1900, B1901, B1902 and B1903 are not output.

HINT:
DTCs other than B1900, B1901, B1902 or B1903 may be output at this time, but they are not related to this check.

NG → **REPLACE FRONT SEAT OUTER BELT ASSEMBLY LH**

OK

USE SIMULATION METHOD TO CHECK

26	REPLACE CENTER AIRBAG SENSOR ASSEMBLY

RS

HINT:
If continuing from step 22, begin from (a). If continuing from any other step, begin from (c).

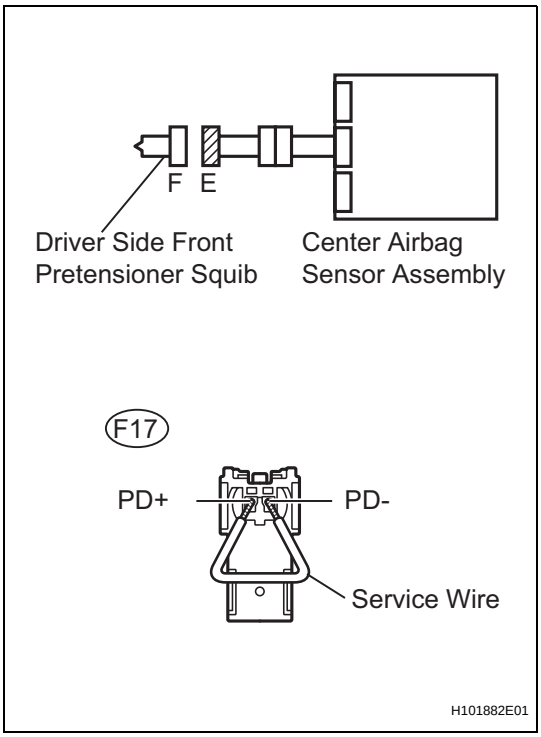

(a) Turn the ignition switch to the LOCK position.
(b) Disconnect the negative (-) terminal cable from the battery, and wait for at least 90 seconds.
(c) Connect the connectors to the center airbag sensor assembly.
(d) Using a service wire, connect F17-1 (PD+) and F17-2 (PD-) of connector C.

NOTICE:

- **Twist the end of the service wire in order to insert it into the connector.**
- **Do not forcibly insert the twisted service wire into the terminals of the connector when connecting.**

(e) Connect the negative (-) terminal cable to the battery, and wait for at least 2 seconds.
(f) Turn the ignition switch to the ON position, and wait for at least 60 seconds.
(g) Clear any DTCs stored in the memory (See page RS-34).
(h) Turn the ignition switch to the LOCK position.
(i) Turn the ignition switch to the ON position, and wait for at least 60 seconds.
(j) Check for DTCs (See page RS-34).

OK:

DTC B1901, B1902 and B1903 are not output.

HINT:
DTCs other than B1901, B1902 or B1903 may be output at this time, but they are not related to this check.

NG → **REPLACE CENTER AIRBAG SENSOR ASSEMBLY**

OK

27	CHECK FRONT SEAT OUTER BELT ASSEMBLY LH

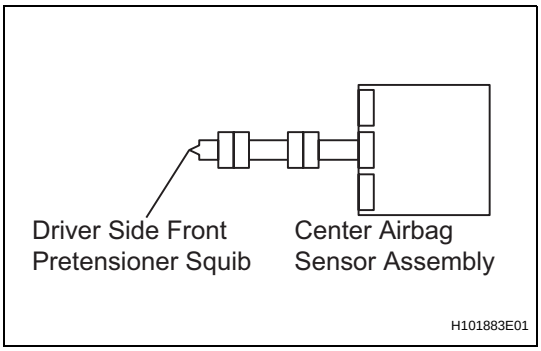

HINT:
If continuing from step 26, begin from (c). If continuing from any other step, being from (a).
(a) Turn the ignition switch to the LOCK position.
(b) Disconnect the negative (-) terminal cable from the battery, and wait for at least 90 seconds.
(c) Disconnect the service wire from connector C.
(d) Connect the connector to the front seat outer belt assembly LH.
(e) Connect the negative (-) terminal cable to the battery, and wait for at least 2 seconds.
(f) Turn the ignition switch to the ON position, and wait for at least 60 seconds.
(g) Clear any DTCs stored in the memory (See page RS-34).
(h) Turn the ignition switch to the LOCK position.
(i) Turn the ignition switch to the ON position, and wait for at least 60 seconds.
(j) Check for DTCs (See page RS-34).

RS

OK:

DTC B1900, B1901, B1902 and B1903 are not output.

HINT:

DTCs other than B1900, B1901, B1902 or B1903 may be output at this time, but they are not related to this check.

NG → **REPLACE FRONT SEAT OUTER BELT ASSEMBLY LH**

OK →

USE SIMULATION METHOD TO CHECK

28 CHECK CONNECTOR

(a) Turn the ignition switch to the LOCK position.
(b) Disconnect the negative (-) terminal cable from the battery, and wait for at least 90 seconds.
(c) Check that the connector (on the front seat outer belt assembly LH side) is not damaged.

OK:

The lock button is not disengaged, and the claw of the lock is not deformed or damaged.

NG → **REPAIR OR REPLACE NO. 2 FLOOR WIRE (EXCEPT ACCESS CAB)**

NG → **REPAIR OR REPLACE NO. 2 REAR DOOR WIRE (ACCESS CAB)**

OK →

29 CHECK CONNECTION OF CONNECTORS

(a) Check that the connectors are properly connected to the center airbag sensor assembly and the front airbag sensor LH.

Result

Condition	Proceed to
Normal (Expect access cab)	A
Normal (Access cab)	B
Abnormal	C

B → **Go to step 32**

C → **CONNECT CONNECTORS**

A →

RS

30 CHECK DRIVER SIDE FRONT PRETENSIONER SQUIB CIRCUIT

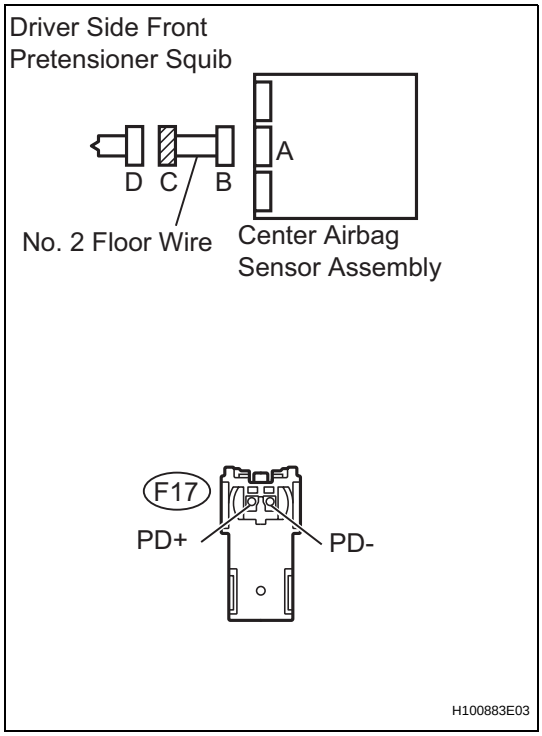

(a) Disconnect the floor wire connectors from the center airbag sensor assembly and front seat outer belt assembly LH.
(b) Connect the negative (-) terminal cable to the battery, and wait for at least 2 seconds.
(c) Turn the ignition switch to the ON position.
(d) Measure the voltage.

Standard voltage

Tester Connection	Condition	Specified Condition
F17-1 (PD+) - Body ground	Ignition switch ON	Below 1 V
F17-2 (PD-) - Body ground	Ignition switch ON	Below 1 V

(e) Turn the ignition switch to the LOCK position.
(f) Disconnect the negative (-) terminal cable from the battery, and wait for at least 90 seconds.
(g) Measure the resistance.

Standard resistance

Tester Connection	Condition	Specified Condition
F17-1 (PD+) - F17-2 (PD-)	Always	Below 1 Ω
F17-1 (PD+) - Body ground	Always	1 MΩ or higher
F17-2 (PD-) - Body ground	Always	1 MΩ or higher

(h) Release the activation prevention mechanism built into connector B (See page RS-28).
(i) Measure the resistance.

Standard resistance

Tester Connection	Condition	Specified Condition
F17-1 (PD+) - F17-2 (PD-)	Always	1 MΩ or higher

NG → **REPAIR OR REPLACE NO. 2 FLOOR WIRE**

OK

RS

31	CHECK FRONT SEAT OUTER BELT ASSEMBLY LH (PRETENSIONER SQUIB (DRIVER SEAT SIDE))

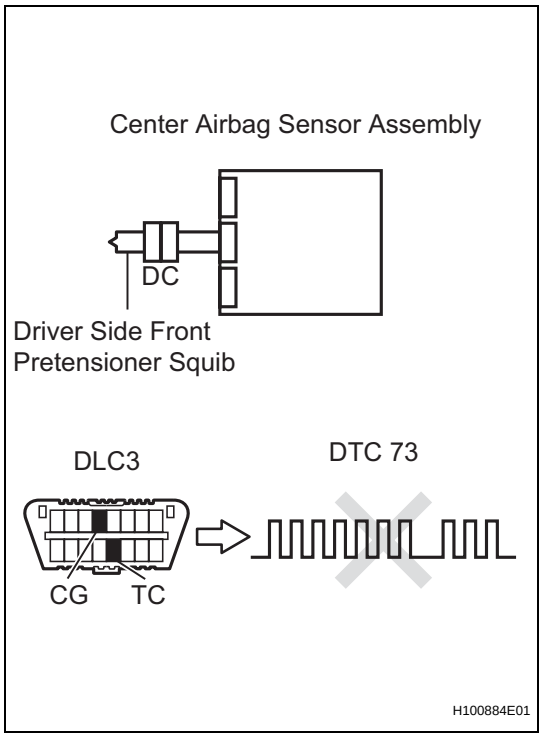

(a) Replace the front seat outer belt assembly LH (See page SB-16, SB-36 or SB-27).

HINT:
Perform the inspection using parts from a normal vehicle when possible.

(b) Connect the connectors to the center airbag sensor assembly.
(c) Connect the negative (-) terminal cable to the battery, and wait for at least 2 seconds.
(d) Turn the ignition switch to the ON position, and wait for at least 60 seconds.
(e) Clear any DTCs stored in the memory (See page RS-34).
(f) Turn the ignition switch to the LOCK position.
(g) Turn the ignition switch to the ON position, and wait for at least 60 seconds.
(h) Check for DTCs (See page RS-34).

OK:

DTC 73 is not output.

HINT:
DTCs other than 73 may be output at this time, but they are not related to this check.

NG → **REPLACE CENTER AIRBAG SENSOR ASSEMBLY**

OK

END

RS

32 CHECK DRIVER SIDE FRONT PRETENSIONER SQUIB CIRCUIT

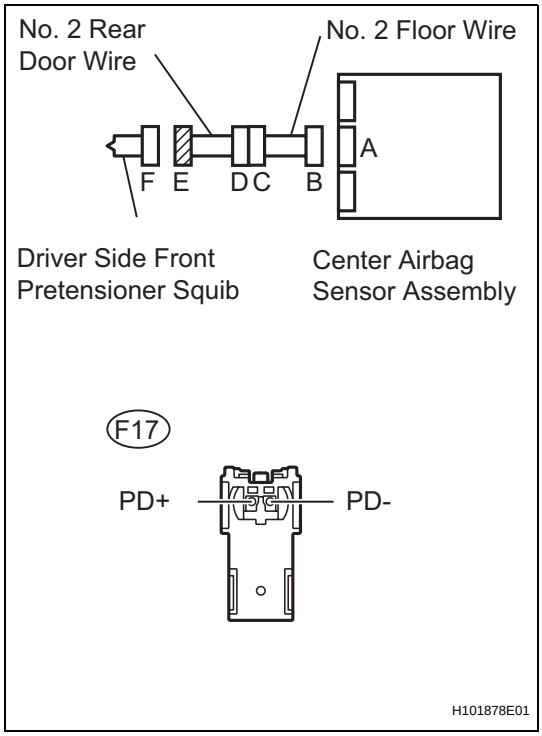

(a) Disconnect the No. 2 floor wire connector from the center airbag sensor assembly.
(b) Disconnect the No. 2 rear door wire connector from the front sear outer belt assembly LH.
(c) Connect the negative (-) terminal cable from the battery, and wait for at least 2 seconds.
(d) Turn the ignition switch to the ON position.
(e) Measure the voltage.

Standard voltage

Tester Connection	Condition	Specified Condition
F17-1 (PD+) - Body ground	Ignition switch ON	Below 1 V
F17-2 (PD-) - Body ground	Ignition switch ON	Below 1 V

(f) Turn the ignition switch to the LOCK position.
(g) Disconnect the negative (-) terminal cable from the battery, and wait for at least 90 seconds.
(h) Measure the resistance.

Standard resistance

Tester Connection	Condition	Specified Condition
F17-1 (PD+) - F17-2 (PD-)	Always	Below 1 Ω
F17-1 (PD+) - Body ground	Always	1 MΩ or higher
F17-2 (PD-) - Body ground	Always	1 MΩ or higher

(i) Release the activation prevention mechanism built into connector B (See page RS-28).
(j) Measure the resistance.

Standard resistance

Tester Connection	Condition	Specified Condition
F17-1 (PD+) - F17-2 (PD-)	Always	1 MΩ or higher

RS

OK → **Go to step 34**

NG

33 REPAIR OR REPLACE NO. 2 REAR DOOR WIRE

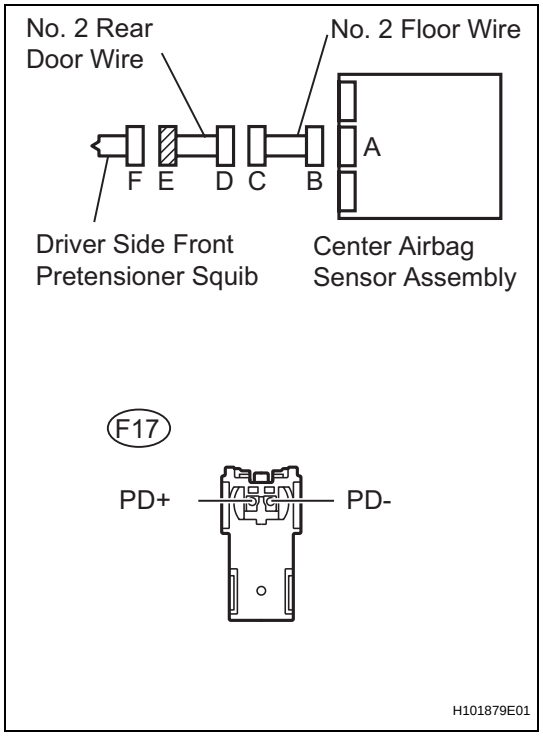

(a) Disconnect the No. 2 floor wire connector from the No. 2 rear door wire.
(b) Connect the negative (-) terminal cable from the battery, and wait for at least 2 seconds.
(c) Turn the ignition switch to the ON position.
(d) Measure the voltage.

Standard voltage

Tester Connection	Condition	Specified Condition
F17-1 (PD+) - Body ground	Ignition switch ON	Below 1 V
F17-2 (PD-) - Body ground	Ignition switch ON	Below 1 V

(e) Turn the ignition switch to the LOCK position.
(f) Disconnect the negative (-) terminal cable from the battery, and wait for at least 90 seconds.
(g) Measure the resistance.

Standard resistance

Tester Connection	Condition	Specified Condition
F17-1 (PD+) - F17-2 (PD-)	Always	Below 1 Ω
F17-1 (PD+) - Body ground	Always	1 MΩ or higher
F17-2 (PD-) - Body ground	Always	1 MΩ or higher

(h) Release the activation prevention mechanism built into connector B (See page RS-28).
(i) Measure the resistance.

Standard resistance

Tester Connection	Condition	Specified Condition
F17-1 (PD+) - F17-2 (PD-)	Always	1 MΩ or higher

NG → **REPAIR OR REPLACE NO. 2 REAR DOOR WIRE**

OK

RS

34	REPLACE FRONT SEAT OUTER BELT ASSEMBLY LH

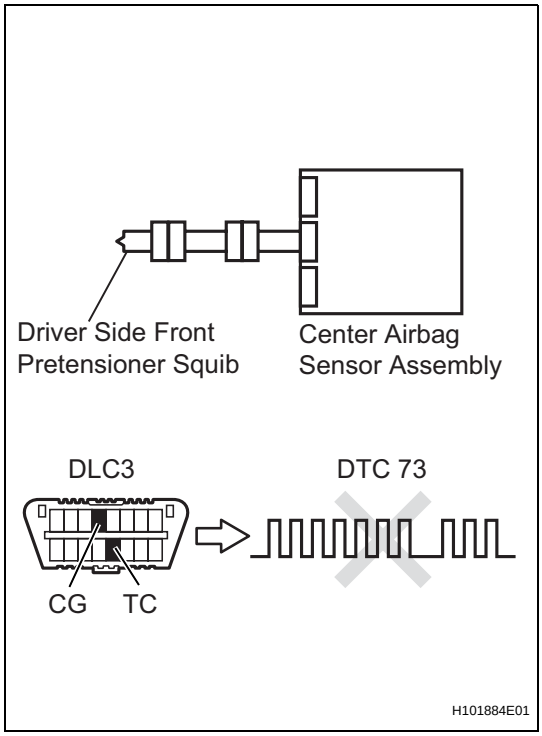

(a) Replace the front seat outer belt assembly LH (See page SB-16, SB-36 or SB-27).

HINT:
Perform the inspection using parts from a normal vehicle when possible.

(b) Connect the connectors to the center. Airbag sensor assembly.
(c) Connect the negative (-) terminal cable to the battery, and wait for at least 2 seconds.
(d) Turn the ignition switch to the ON position, and wait for at least 60 seconds.
(e) Clear any DTCs stored in the memory (See page RS-34).
(f) Turn the ignition switch to the LOCK position.
(g) Turn the ignition switch to the ON position, and wait for at least 60 seconds.
(h) Check for DTCs (See page RS-34).

OK:

DTC 73 is not output.

HINT:
DTCs other than 73 may be output at this time, but they are not related to this check.

NG → **REPLACE CENTER AIRBAG SENSOR ASSEMBLY**

OK

END

RS

DTC	B1905/74	Short in Front Passenger Side Front Pretensioner Squib Circuit

DTC	B1906/74	Open in Front Passenger Side Front Pretensioner Squib Circuit

DTC	B1907/74	Short to GND in Front Passenger Side Front Pretensioner Squib Circuit

DTC	B1908/74	Short to B+ in Front Passenger Side Front Pretensioner Squib Circuit

DESCRIPTION

The pretensioner squib (front passenger seat side) circuit consists of the center airbag sensor assembly and the front seat outer belt assembly RH.
This circuit signals the SRS to deploy when airbag deployment conditions are met.
These DTCs are set when a malfunction is detected in the pretensioner squib (front passenger seat side) circuit.

DTC No.	DTC Detections Conditions	Trouble Areas
B1905/74	• The center airbag sensor assembly receives a line short circuit signal in the pretensioner squib (front passenger seat side) circuit for 2 seconds • Pretensioner squib (front passenger seat side) malfunction • Center airbag sensor assembly malfunction	• Floor wire • No. 1 rear door wire (*1) • Front seat outer belt assembly RH (Pretensioner squib [front passenger seat side]) • Center airbag sensor assembly
B1906/74	• The center airbag sensor assembly receives an open circuit signal in the pretensioner squib (front passenger seat side) circuit for 2 seconds • Pretensioner squib (front passenger seat side) malfunction • Center airbag sensor assembly malfunction	• Floor wire • No. 1 rear door wire (*1) • Front seat outer belt assembly RH (Pretensioner squib [front passenger seat side]) • Center airbag sensor assembly
B1907/74	• The center airbag sensor assembly receives a short circuit to ground signal in the pretensioner squib (front passenger seat side) circuit for 0.5 seconds • Pretensioner squib (front passenger seat side) malfunction • Center airbag sensor assembly malfunction	• Floor wire • No. 1 rear door wire (*1) • Front seat outer belt assembly RH (Pretensioner squib [front passenger seat side]) • Center airbag sensor assembly
B1908/74	• The center airbag sensor assembly receives a short circuit to B+ signal in the pretensioner squib (front passenger seat side) circuit for 0.5 seconds • Pretensioner squib (front passenger seat side) malfunction • Center airbag sensor assembly malfunction	• Floor wire • No. 1 rear door wire (*1) • Front seat outer belt assembly RH (Pretensioner squib [front passenger seat side]) • Center airbag sensor assembly

WIRING DIAGRAM

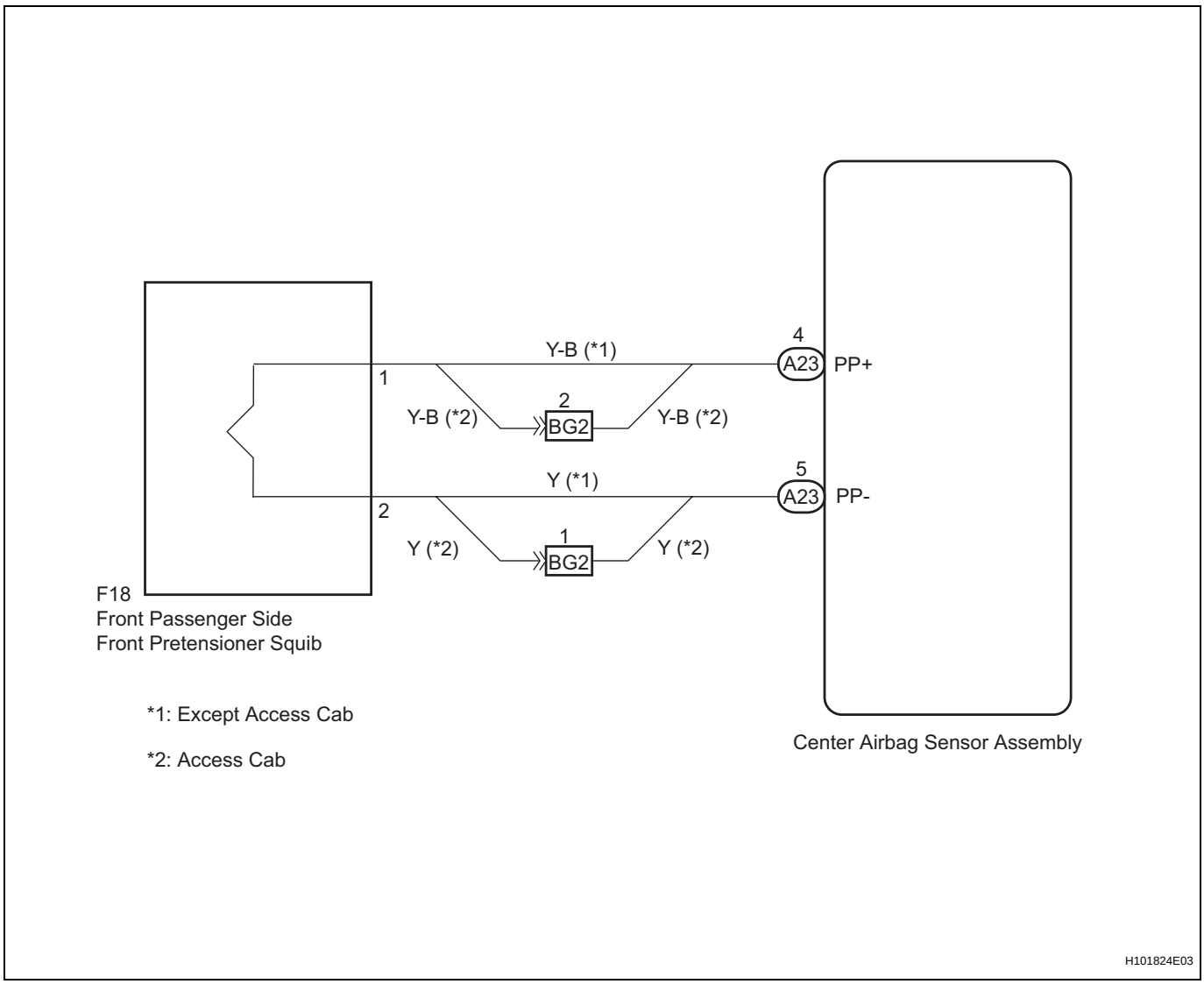

CAUTION:
In order to prevent unexpected airbag deployment, disconnect the following connectors before inspecting parts such as wire harnesses, if the application of tester probes to the center airbag sensor assembly connector is necessary.

RS

(a) Turn the ignition switch to the LOCK position.
(b) Disconnect the negative (-) terminal cable from the battery, and wait for at least 90 seconds.
(c) Disconnect the connectors from the center airbag sensor assembly.
(d) Disconnect the connectors from the steering pad.
(e) Disconnect the connector from the front passenger airbag assembly.
(f) Disconnect the connector from the front seat airbag assembly LH.
(g) Disconnect the connector from the front seat airbag assembly RH.
HINT:
Skip the following steps if side and curtain shield airbags are not fitted.
(h) Disconnect the connector from the curtain shield airbag assembly LH.
(i) Disconnect the connector from the curtain shield airbag assembly RH.
(j) Disconnect the connector from the front seat outer belt assembly LH.
(k) Disconnect the connector from the front seat outer belt assembly RH.

1	CHECK DTC

(a) Proceed to the appropriate step according to DTC readings.
(1) If using the intelligent tester (read the 5-digit DTCs): Using the intelligent tester, check for DTCs (See page RS-34).
Result

Result	Proceed to
DTC B1905 is output.	A
DTC B1906 is output.	B
DTC B1907 is output.	C
DTC B1908 is output.	D

(2) If not using the intelligent tester (read the 2-digit DTCs): Check for DTCs (See page RS-34).
Result

Result	Proceed to
DTC 74 is output.	E

B → Go to step 9

C → Go to step 14

D → Go to step 19

E → Go to step 28

A

2	CHECK CONNECTOR

(a) Turn the ignition switch to the LOCK position.
(b) Disconnect the negative (-) terminal cable from the battery, and wait for at least 90 seconds.
(c) Check that the connector (on the front seat outer belt assembly RH side) is not damaged.
OK:
The lock button is not disengaged, and the claw of the lock is not deformed or damaged.

NG → REPAIR OR REPLACE FLOOR WIRE (EXCEPT ACCESS CAB)

NG → REPAIR OR REPLACE NO. 1 REAR DOOR WIRE (ACCESS CAB)

OK

RS

3	CHECK CONNECTION OF CONNECTORS

(a) Check that the connectors are properly connected to the center airbag sensor assembly and the front airbag sensor RH.

Result

Condition	Proceed to
Normal (Except access cab)	A
Normal (Access cab)	B
Abnormal	C

B → Go to step 6

C → CONNECT CONNECTORS

A

4	CHECK FRONT PASSENGER SIDE FRONT PRETENSIONER SQUIB CIRCUIT (FOR SHORT)

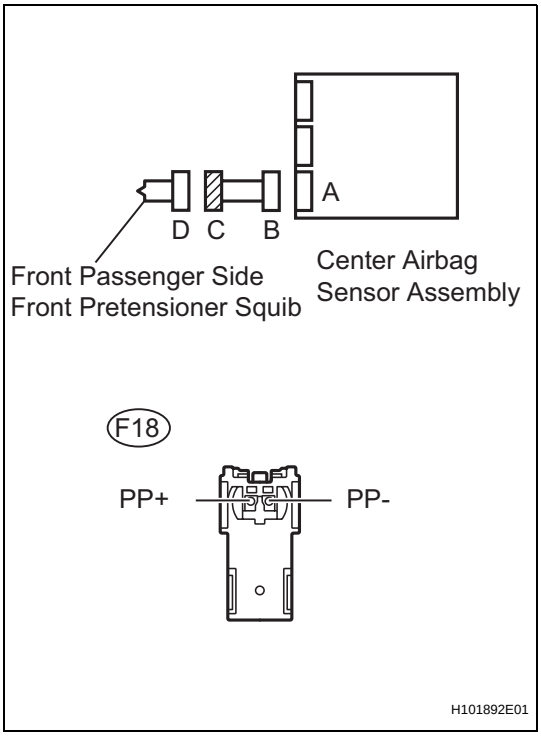

(a) Disconnect the floor wire connectors from the center airbag sensor assembly and front seat outer belt assembly RH.

(b) Release the activation prevention mechanism built into connector B (See page RS-28).

(c) Measure the resistance.

Standard resistance

Tester Connection	Condition	Specified Condition
F18-1 (PP+) - F18-2 (PP-)	Always	1 MΩ or higher

NG → REPAIR OR REPLACE FLOOR WIRE

OK

RS

5	CHECK CENTER AIRBAG SENSOR ASSEMBLY

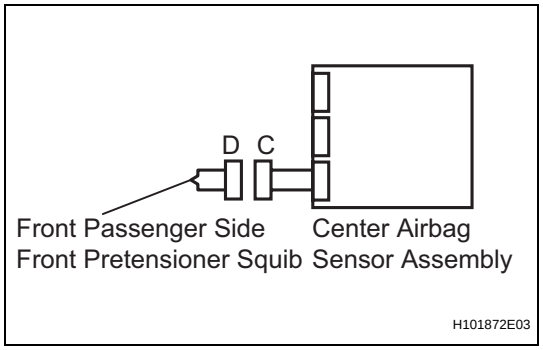

(a) Connect the connectors to the center airbag sensor assembly.
(b) Connect the negative (-) terminal cable to the battery, and wait for at least 2 seconds.
(c) Turn the ignition switch to the ON position, and wait for at least 60 seconds.
(d) Clear any DTCs stored in the memory (See page RS-34).
(e) Turn the ignition switch to the LOCK position.
(f) Turn the ignition switch to the ON position, and wait for at least 60 seconds.
(g) Check for DTCs (See page RS-34).
OK:
DTC B1905 is not output.

HINT:
DTCs other than B1905 may be output at this time, but they are not related to this check.

OK → **Go to step 25**

NG

REPLACE CENTER AIRBAG SENSOR ASSEMBLY

6	CHECK FRONT PASSENGER SIDE FRONT PRETENSIONER SQUIB CIRCUIT (FOR SHORT)

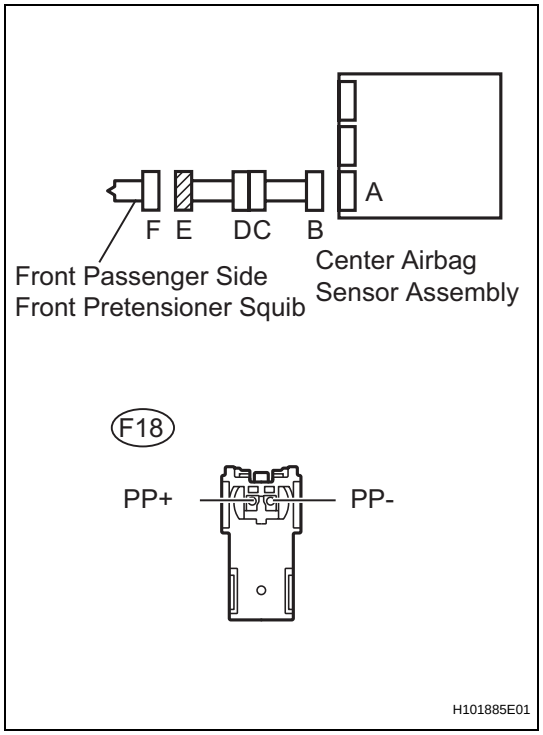

(a) Disconnect the floor wire connector from the center airbag sensor assembly.
(b) Disconnect the No. 1 rear door wire connector from the front seat outer belt assembly RH.
(c) Release the activation prevention mechanism built into connector B (See page RS-28).
(d) Measure the resistance.
Standard resistance

Tester Connection	Condition	Specified Condition
F18-1 (PP+) - F18-2 (PP-)	Always	1 MΩ or higher

OK → **Go to step 8**

RS

NG

7 CHECK NO. 1 REAR DOOR WIRE (FOR SHORT)

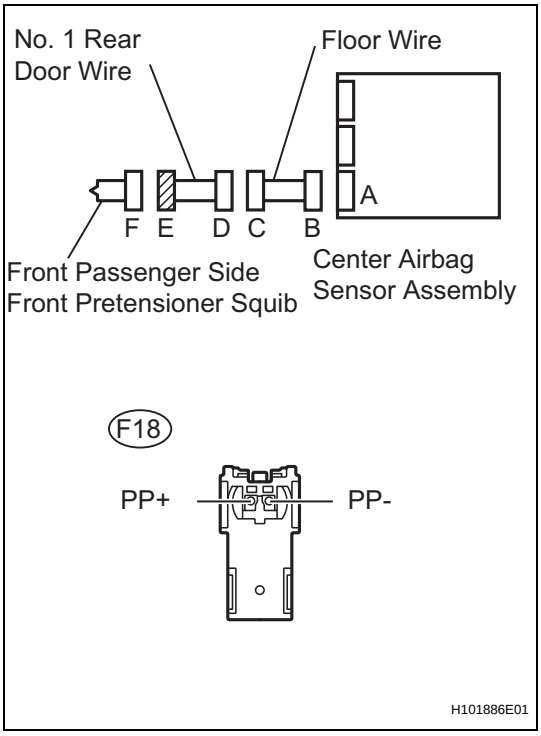

(a) Disconnect the floor wire connector from the No. 1 rear door wire.
(b) Release the activation prevention mechanism built into connector D (See page RS-28).
(c) Measure the resistance.

Standard resistance

Tester Connection	Condition	Specified Condition
F18-1 (PP+) - F18-2 (PP-)	Always	1 MΩ or higher

NG → **REPAIR OR REPLACE NO. 1 REAR DOOR WIRE**

OK

REPAIR OR REPLACE FLOOR WIRE

8 CHECK CENTER AIRBAG SENSOR ASSEMBLY

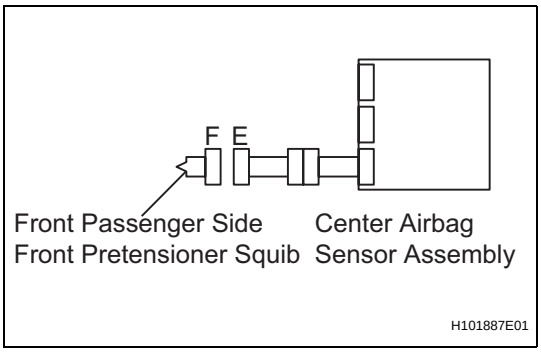

(a) Connect the floor wire connectors to the center airbag sensor assembly and No. 1 rear door wire.
(b) Connect the negative (-) terminal cable to the battery, and wait for at least 2 seconds.
(c) Turn the ignition switch to the ON position, and wait for at least 60 seconds.
(d) Clear any DTCs stored in the memory (See page RS-34).
(e) Turn the ignition switch to the LOCK position.
(f) Turn the ignition switch to the ON position, and wait for at least 60 seconds.
(g) Check for DTCs (See page RS-34).

OK:

DTC B1905 is not output.

HINT:
DTCs other than B1905 may be output at this time, but they are not related to this check.

OK → **Go to step 27**

RS

NG

REPLACE CENTER AIRBAG SENSOR ASSEMBLY

9	CHECK CONNECTOR

(a) Turn the ignition switch to the LOCK position.
(b) Disconnect the negative (-) terminal cable from the battery, and wait for at least 90 seconds.
(c) Check that the connector (on the front seat outer belt assembly RH side) is not damaged.
OK:
The lock button is not disengaged, and the claw of the lock is not deformed or damaged.

NG	**REPAIR OR REPLACE FLOOR WIRE (EXCEPT ACCESS CAB)**
NG	**REPAIR OR REPLACE NO. 1 REAR DOOR WIRE (ACCESS CAB)**

OK

10	CHECK CONNECTION OF CONNECTORS

(a) Check that the connectors are properly connected to the center airbag sensor assembly and the front airbag sensor RH.

B	**Go to step 12**
C	**CONNECT CONNECTORS**

A

RS

11	CHECK FRONT PASSENGER SIDE FRONT PRETENSIONER SQUIB CIRCUIT (FOR OPEN)

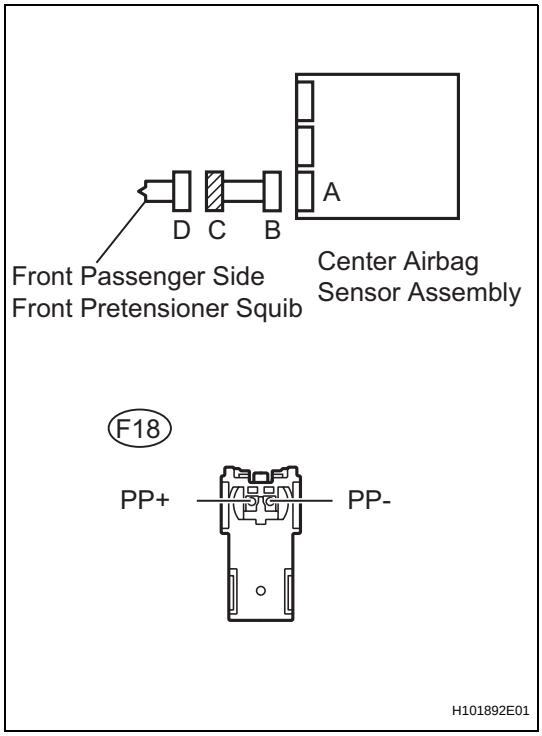

(a) Disconnect the floor wire connectors from the center airbag sensor assembly and front seat outer belt assembly RH.
(b) Measure the resistance.

Standard resistance

Tester Connection	Condition	Specified Condition
F18-1 (PP+) - F18-2 (PP-)	Always	Below 1 Ω

OK → **Go to step 24**

NG

REPAIR OR REPLACE FLOOR WIRE

12 CHECK FRONT PASSENGER SIDE FRONT PRETENSIONER SQUIB CIRCUIT (FOR OPEN)

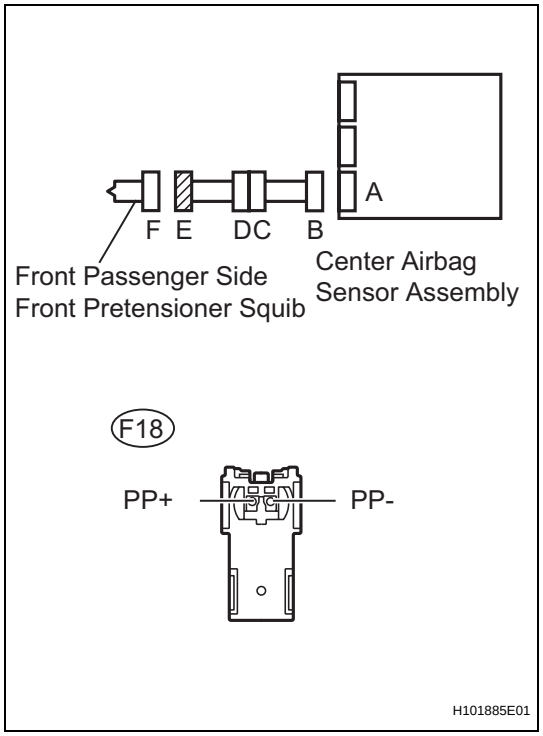

(a) Disconnect the floor wire connector from the center airbag sensor assembly.
(b) Disconnect the No. 1 rear door wire connector from the front seat outer belt assembly RH.
(c) Measure the resistance.
Standard resistance

Tester Connection	Condition	Specified Condition
F18-1 (PP+) - F18-2 (PP-)	Always	Below 1 Ω

OK → **Go to step 26**

NG

13 CHECK NO. 1 REAR DOOR WIRE (FOR OPEN)

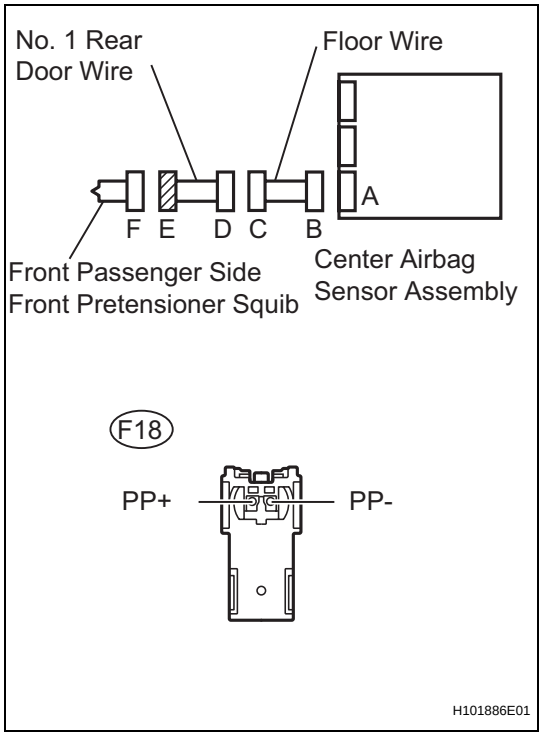

(a) Disconnect the floor wire connector from the No. 1 rear door wire.
(b) Measure the resistance.
Standard resistance

Tester Connection	Condition	Specified Condition
F18-1 (PP+) - F18-2 (PP-)	Always	1 MΩ or higher

NG → **REPAIR OR REPLACE NO. 1 REAR DOOR WIRE**

RS

OK

REPAIR OR REPLACE FLOOR WIRE

14 CHECK CONNECTOR

(a) Turn the ignition switch to the LOCK position.
(b) Disconnect the negative (-) terminal cable from the battery, and wait for at least 90 seconds.
(c) Check that the connector (on the front seat outer belt assembly RH side) is not damaged.
OK:
The lock button is not disengaged, and the claw of the lock is not deformed or damaged.

NG → **REPAIR OR REPLACE FLOOR WIRE (EXCEPT ACCESS CAB)**

NG → **REPAIR OR REPLACE NO. 1 REAR DOOR WIRE (ACCESS CAB)**

OK

15 CHECK CONNECTION OF CONNECTORS

(a) Check that the connectors are properly connected to the enter airbag sensor assembly and the front airbag sensor RH.
Result

Condition	Proceed to
Normal (Except access cab)	A
Normal (Access cab)	B
Abnormal	C

B → **Go to step 17**

C → **CONNECT CONNECTORS**

A

RS

16	CHECK FRONT PASSENGER SIDE FRONT PRETENSIONER SQUIB CIRCUIT (TO GROUND)

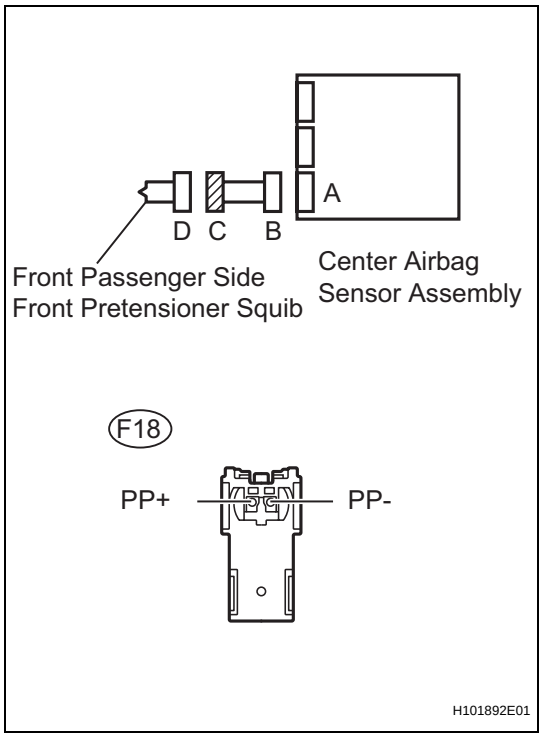

(a) Disconnect the floor wire connectors from the center airbag sensor assembly and front seat outer belt assembly RH.

(b) Measure the resistance.

Standard resistance

Tester Connection	Condition	Specified Condition
F18-1 (PP+) - Body ground	Always	1 MΩ or higher
F18-2 (PP-) - Body ground	Always	1 MΩ or higher

OK → **Go to step 24**

NG

REPAIR OR REPLACE FLOOR WIRE

RS

17 CHECK FRONT PASSENGER SIDE FRONT PRETENSIONER SQUIB CIRCUIT (TO GROUND)

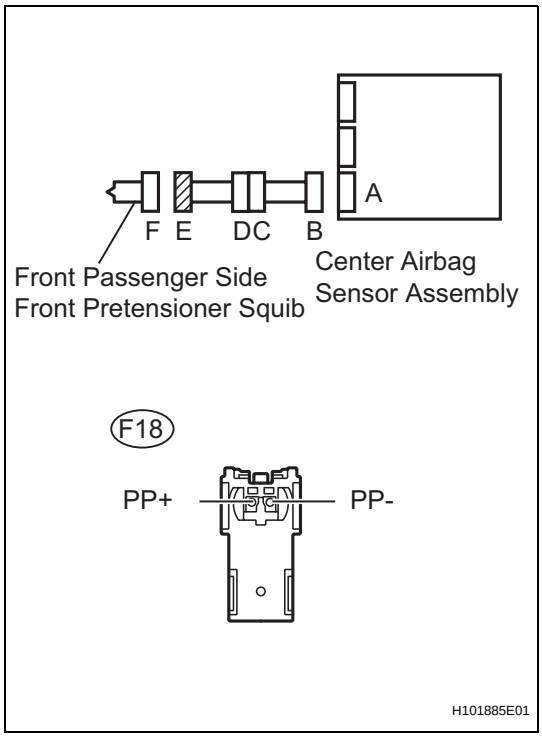

(a) Disconnect the floor wire connector from the center airbag sensor assembly.
(b) Disconnect the No. 1 rear door wire connector from the front seat outer belt assembly RH.
(c) Measure the resistance.
Standard resistance

Tester Connection	Condition	Specified Condition
F18-1 (PP+) - Body ground	Always	1 MΩ or higher
F18-2 (PP-) - Body ground	Always	1 MΩ or higher

OK → **Go to step 26**

NG

18 CHECK NO. 1 REAR DOOR WIRE (TO GROUND)

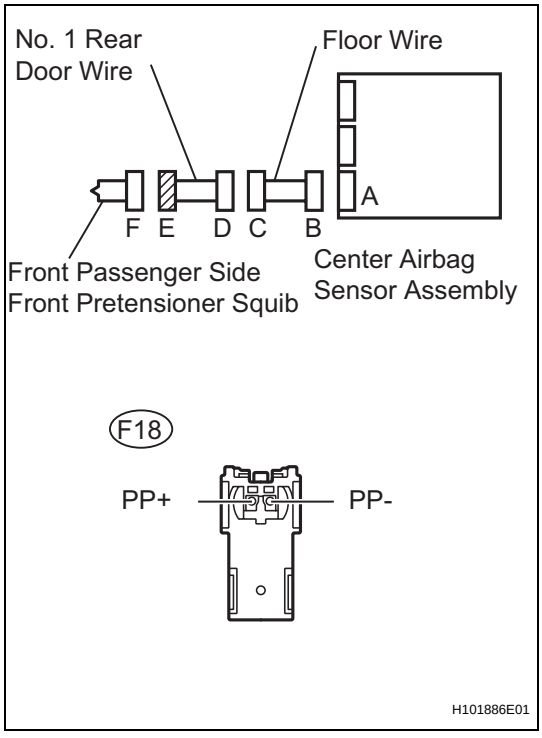

(a) Disconnect the floor wire connector from the No. 1 rear door wire.
(b) Measure the resistance.
Standard resistance

Tester Connection	Condition	Specified Condition
F18-1 (PP+) - Body ground	Always	1 MΩ or higher
F18-2 (PP-) - Body ground	Always	1 MΩ or higher

NG → **REPAIR OR REPLACE NO. 1 REAR DOOR WIRE**

RS

OK

REPAIR OR REPLACE FLOOR WIRE

19 CHECK CONNECTOR

(a) Turn the ignition switch to the LOCK position.
(b) Disconnect the negative (-) terminal cable from the battery, and wait for at least 90 seconds.
(c) Check that the connector (on the front seat outer belt assembly RH side) is not damaged.
OK:
The lock button is not disengaged, and the claw of the lock is not deformed or damaged.

NG → **REPAIR OR REPLACE FLOOR WIRE (EXCEPT ACCESS CAB)**

NG → **REPAIR OR REPLACE NO. 1 REAR DOOR WIRE (ACCESS CAB)**

OK

20 CHECK CONNECTION OF CONNECTORS

(a) Check that the connectors are properly connected to the center airbag sensor assembly and the front airbag sensor RH.
Result

Condition	Proceed to
Normal (Except access cab)	A
Normal (Access cab)	B
Abnormal	C

B → **Go to step 22**

C → **CONNECT CONNECTORS**

A

RS

21	CHECK FRONT PASSENGER SIDE FRONT PRETENSIONER SQUIB CIRCUIT (TO B+)

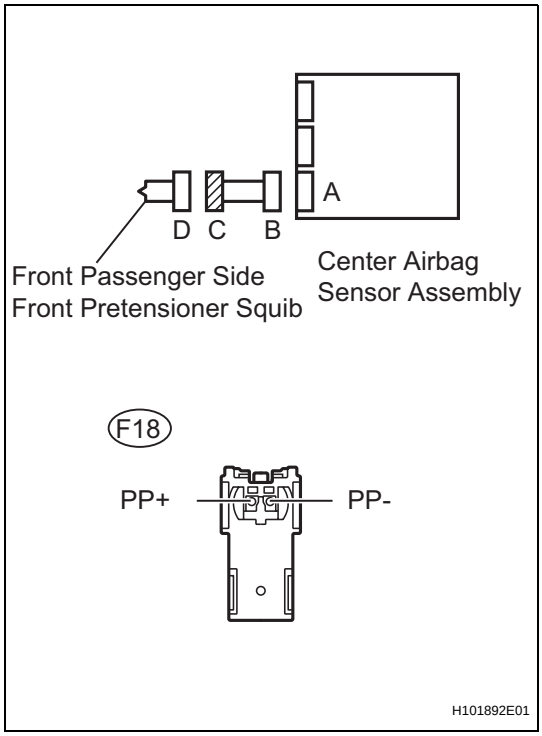

(a) Disconnect the floor wire connectors from the center airbag sensor assembly and front seat outer belt assembly RH.
(b) Connect the negative (-) terminal cable to the battery, and wait for at least 2 seconds.
(c) Turn the ignition switch to the ON position.
(d) Measure the voltage.

Standard voltage

Tester Connection	Condition	Specified Condition
F18-1 (PP+) - Body ground	Ignition switch ON	Below 1 V
F18-2 (PP-) - Body ground	Ignition switch ON	Below 1 V

OK → **Go to step 24**

NG

REPAIR OR REPLACE FLOOR WIRE

22 CHECK FRONT PASSENGER SIDE FRONT PRETENSIONER SQUIB CIRCUIT (TO B+)

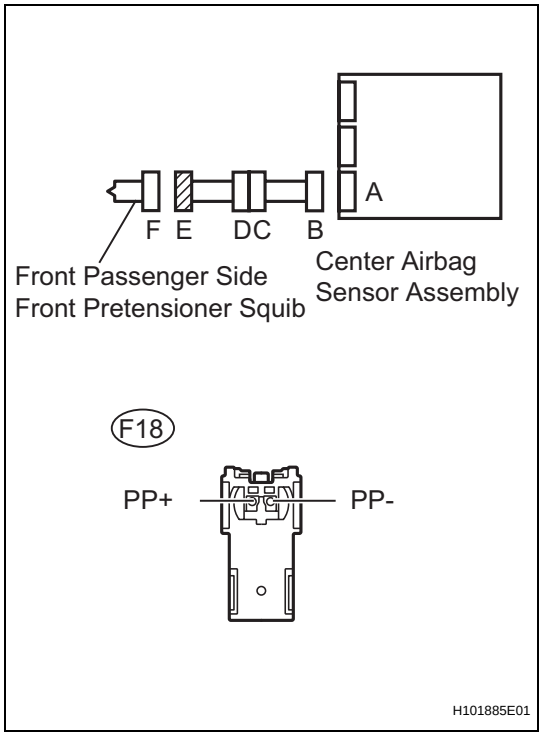

(a) Disconnect the floor wire connector from the center airbag sensor assembly.
(b) Disconnect the No. 1 rear door wire connector from the front seat outer belt assembly RH.
(c) Connect the negative (-) terminal cable to the battery, and wait for at least 2 seconds.
(d) Turn the ignition switch to the ON position.
(e) Measure the voltage.

Standard voltage

Tester Connection	Condition	Specified Condition
F18-1 (PP+) - Body ground	Ignition switch ON	Below 1 V
F18-2 (PP-) - Body ground	Ignition switch ON	Below 1 V

OK → **Go to step 26**

NG

23 CHECK NO. 1 REAR DOOR WIRE (TO B+)

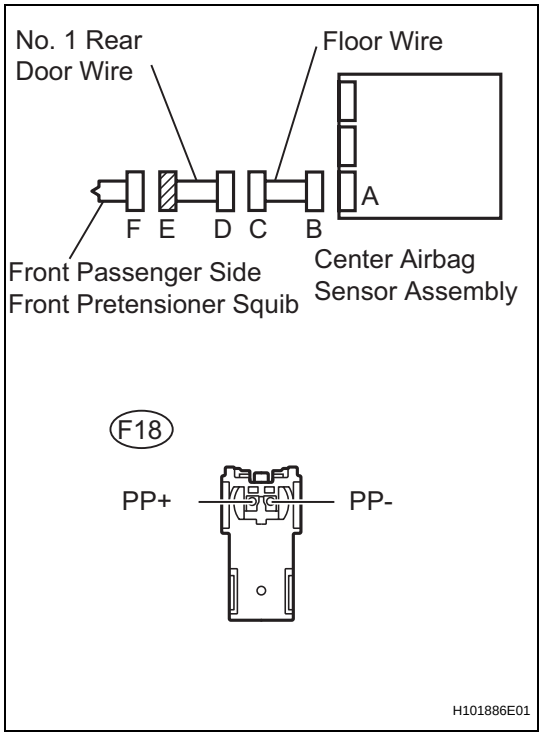

(a) Turn the ignition switch to the LOCK position.
(b) Disconnect the negative (-) terminal cable from the battery, and wait for at least 90 seconds.
(c) Disconnect the floor wire connector from the No. 1 rear door wire.
(d) Connect the negative (-) terminal cable to the battery, and wait for at least 2 seconds.
(e) Turn the ignition switch to the ON position.
(f) Measure the resistance.

Standard voltage

Tester Connection	Condition	Specified Condition
F18-1 (PP+) - Body ground	Ignition switch ON	Below 1 V
F18-2 (PP-) - Body ground	Ignition switch ON	Below 1 V

NG → **REPAIR OR REPLACE NO. 1 REAR DOOR WIRE**

RS

OK

REPAIR OR REPLACE FLOOR WIRE

24 CHECK CENTER AIRBAG SENSOR ASSEMBLY

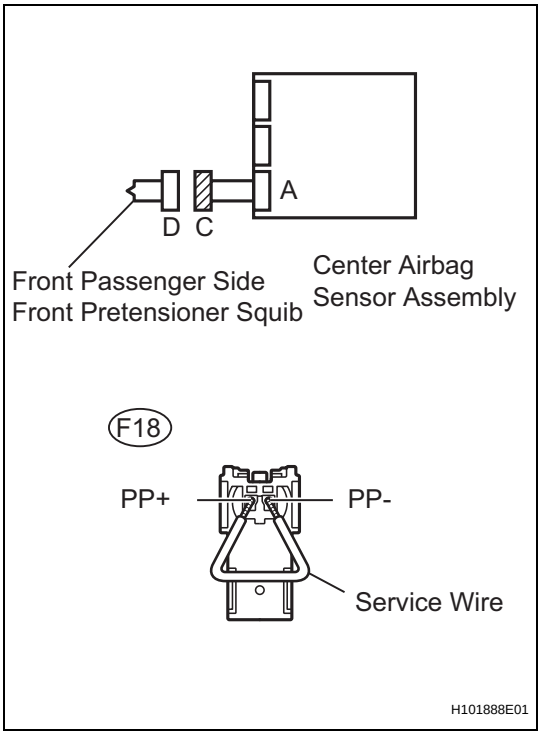

HINT:
If continuing from step 21, begin from (a). If continuing from any other step, begin from (c).

(a) Turn the ignition switch to the LOCK position.
(b) Disconnect the negative (-) terminal cable from the battery, and wait for at least 90 seconds.
(c) Connect the connectors to the center airbag sensor assembly.
(d) Using a service wire, connect F18-1 (PP+) and F18-2 (PP-) of connector C.

NOTICE:
- **Twist the end of the service wire in order to insert it into the connector.**
- **Do not forcibly insert the twisted service wire into the terminals of the connector when connecting.**

(e) Connect the negative (-) terminal cable to the battery, and wait for at least 2 seconds.
(f) Turn the ignition switch to the ON position, and wait for at least 60 seconds.
(g) Clear any DTCs stored in the memory (See page RS-34).
(h) Turn the ignition switch to the LOCK position.
(i) Turn the ignition switch to the ON position, and wait for at least 60 seconds.
(j) Check for DTCs (See page RS-34).

OK:
DTC B1906, B1907 and B1908 are not output.

HINT:
DTCs other than B1906, B1907 or B1908 may be output at this time, but they are not related to this check.

NG → **REPLACE CENTER AIRBAG SENSOR ASSEMBLY**

RS

OK

25 CHECK FRONT SEAT OUTER BELT ASSEMBLY RH

HINT:
If continuing from step 24, begin from (c). If continuing from any other step, being from (a).

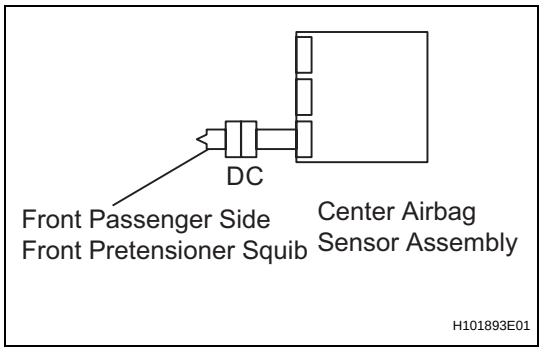

(a) Turn the ignition switch to the LOCK position.
(b) Disconnect the negative (-) terminal cable from the battery, and wait for at least 90 seconds.
(c) Disconnect the service wire from connector C.
(d) Connect the connector to the front seat outer belt assembly RH.
(e) Connect the negative (-) terminal cable to the battery, and wait for at least 2 seconds.
(f) Turn the ignition switch to the ON position, and wait for at least 60 seconds.
(g) Clear any DTCs stored in the memory (See page RS-34).
(h) Turn the ignition switch to the LOCK position.
(i) Turn the ignition switch to the ON position, and wait for at least 60 seconds.
(j) Check for DTCs (See page RS-34).

OK:

DTC B1905, B1906, B1907 and B1908 are not output.

HINT:
DTCs other than B1905, B1906, B1907 or B1908 may be output at this time, but they are not related to this check.

NG → **REPLACE FRONT SEAT OUTER BELT ASSEMBLY RH**

OK

OTHERS USE SIMULATION METHOD TO CHECK

26	CHECK CENTER AIRBAG SENSOR ASSEMBLY

HINT:
If continuing from step 22, begin from (a). If continuing from any other step, begin from (c).

RS

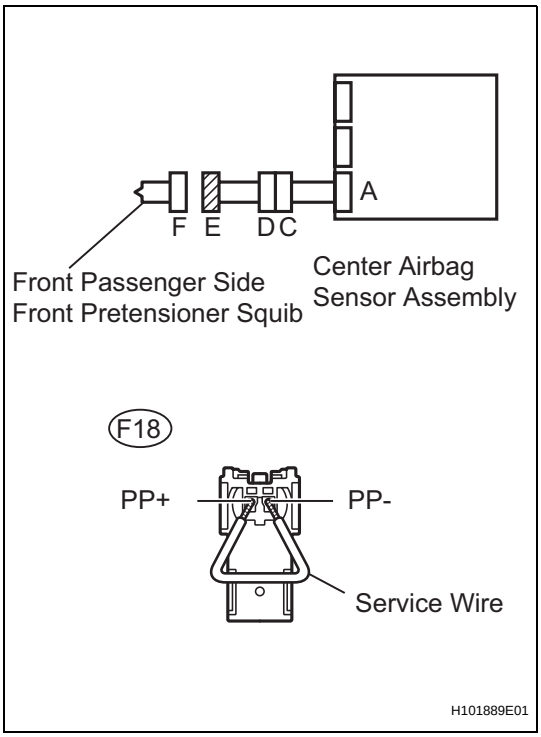

(a) Turn the ignition switch to the LOCK position.
(b) Disconnect the negative (-) terminal cable from the battery, and wait for at least 90 seconds.
(c) Connect the connectors to the center airbag sensor assembly.
(d) Using a service wire, connect F18-1 (PP+) and F18-2 (PP-) of connector E.

NOTICE:

- **Twist the end of the service wire in order to insert it into the connector.**
- **Do not forcibly insert the twisted service wire into the terminals of the connector when connecting.**

(e) Connect the negative (-) terminal cable to the battery, and wait for at least 2 seconds.
(f) Turn the ignition switch to the ON position, and wait for at least 60 seconds.
(g) Clear any DTCs stored in the memory (See page RS-34).
(h) Turn the ignition switch to the LOCK position.
(i) Turn the ignition switch to the ON position, and wait for at least 60 seconds.
(j) Check for DTCs (See page RS-34).

OK:

DTC B1906, B1907 and B1908 are not output.

HINT:
DTCs other than B1906, B1907 or B1908 may be output at this time, but they are not related to this check.

NG → **REPLACE CENTER AIRBAG SENSOR ASSEMBLY**

OK

27	CHECK FRONT SEAT OUTER BELT ASSEMBLY RH

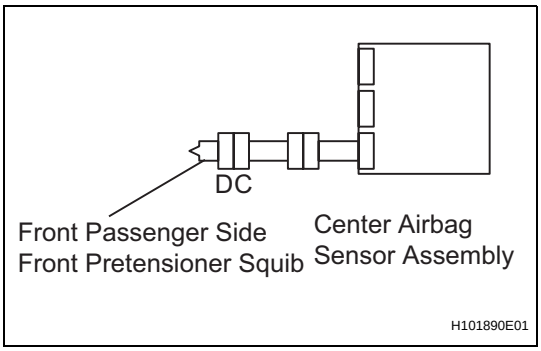

HINT:
If continuing from step 26, begin from (c). If continuing from any other step, being from (a).

(a) Turn the ignition switch to the LOCK position.
(b) Disconnect the negative (-) terminal cable from the battery, and wait for at least 90 seconds.
(c) Disconnect the service wire from connector C.
(d) Connect the connector to the front seat outer belt assembly RH.
(e) Connect the negative (-) terminal cable to the battery, and wait for at least 2 seconds.
(f) Turn the ignition switch to the ON position, and wait for at least 60 seconds.
(g) Clear any DTCs stored in the memory (See page RS-34).
(h) Turn the ignition switch to the LOCK position.
(i) Turn the ignition switch to the ON position, and wait for at least 60 seconds.
(j) Check for DTCs (See page RS-34).

RS

OK:

DTC B1900, B1901, B1902 and B1903 are not output.

HINT:

DTCs other than B1900, B1901, B1902 or B1903 may be output at this time, but they are not related to this check.

NG → **REPLACE FRONT SEAT OUTER BELT ASSEMBLY RH**

OK

OTHERS USE SIMULATION METHOD TO CHECK

28 CHECK CONNECTOR

(a) Turn the ignition switch to the LOCK position.
(b) Disconnect the negative (-) terminal cable from the battery, and wait for at least 90 seconds.
(c) Check that the connector (on the front seat outer belt assembly RH side) is not damaged.

OK:

The lock button is not disengaged, and the claw of the lock is not deformed or damaged.

NG → **REPAIR OR REPLACE FLOOR WIRE (EXCEPT ACCESS CAB)**

NG → **REPAIR OR REPLACE NO. 1 REAR DOOR WIRE (ACCESS CAB)**

OK

29 CHECK CONNECTION OF CONNECTORS

(a) Check that the connectors are properly connected to the center airbag sensor assembly and the front airbag sensor RH.

Result

Condition	Proceed to
Normal (Except access cab)	A
Normal (Access cab)	B
Abnormal	C

B → **Go to step 32**

C → **CONNECT CONNECTORS**

A

RS

30 CHECK FRONT PASSENGER SIDE FRONT PRETENSIONER SQUIB CIRCUIT

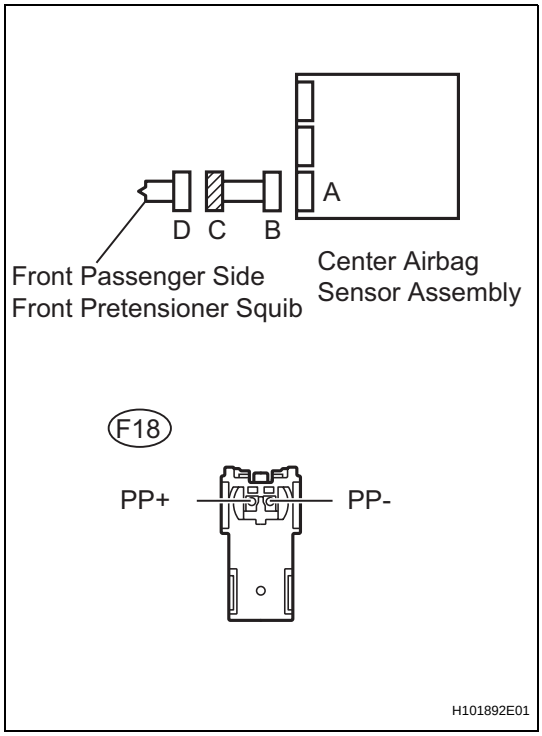

(a) Disconnect the floor wire connectors from the center airbag sensor assembly and front seat outer belt assembly RH.
(b) Connect the negative (-) terminal cable to the battery, and wait for at least 2 seconds.
(c) Turn the ignition switch to the ON position.
(d) Measure the voltage.

Standard voltage

Tester Connection	Condition	Specified Condition
F18-1 (PP+) - Body ground	Ignition switch ON	Below 1 V
F18-2 (PP-) - Body ground	Ignition switch ON	Below 1 V

(e) Turn the ignition switch to the LOCK position.
(f) Disconnect the negative (-) terminal cable from the battery, and wait for at least 90 seconds.
(g) Measure the resistance.

Standard resistance

Tester Connection	Condition	Specified Condition
F18-1 (PP+) - F18-2 (PP-)	Always	Below 1 Ω
F18-1 (PP+) - Body ground	Always	1 MΩ or higher
F18-2 (PP-) - Body ground	Always	1 MΩ or higher

(h) Release the activation prevention mechanism built into connector B (See page RS-28).
(i) Measure the resistance.

Standard resistance

Tester Connection	Condition	Specified Condition
F18-1 (PP+) - F18-2 (PP-)	Always	1 MΩ or higher

NG → **REPAIR OR REPLACE FLOOR WIRE**

OK

RS

31	REPLACE FRONT SEAT OUTER BELT ASSEMBLY RH (FRONT PASSENGER SEAT SIDE PRETENSIONER SQUIB)

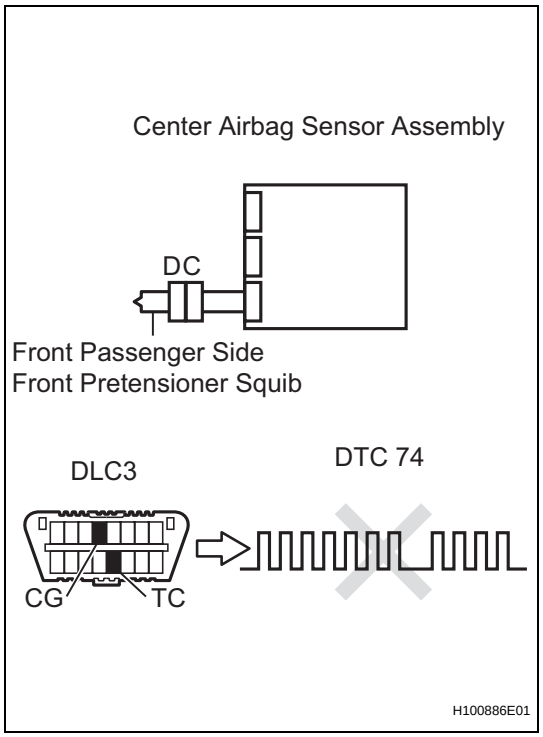

(a) Replace the front seat outer belt assembly RH (See page SB-16, SB-36 or SB-27).

HINT:

Perform the inspection using parts from a normal vehicle when possible.

(b) Connect the connectors to the center airbag sensor assembly.

(c) Connect the negative (-) terminal cable to the battery, and wait for at least 2 seconds.

(d) Turn the ignition switch to the ON position, and wait for at least 60 seconds.

(e) Clear any DTCs stored in the memory (See page RS-34).

(f) Turn the ignition switch to the LOCK position.

(g) Turn the ignition switch to the ON position, and wait for at least 60 seconds.

(h) Check for DTCs (See page RS-34).

OK:

DTC 74 is not output.

HINT:

DTCs other than 74 may be output at this time, but they are not related to this check.

NG → **REPLACE CENTER AIRBAG SENSOR ASSEMBLY**

OK

END

RS

32 CHECK FRONT PASSENGER SIDE FRONT PRETENSIONER SQUIB CIRCUIT

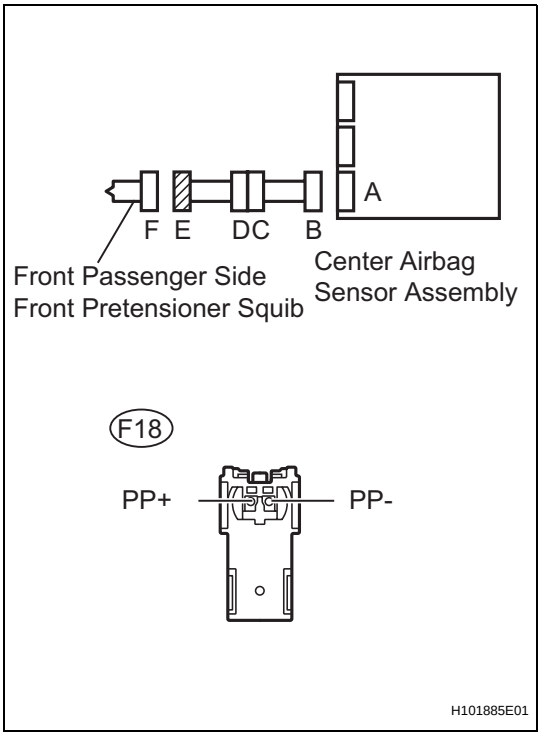

(a) Disconnect the floor wire connector from the center airbag sensor assembly.
(b) Disconnect the No. 1 rear door wire connector from the front seat outer belt assembly RH.
(c) Connect the negative (-) terminal cable from the battery, and wait for at least 2 seconds.
(d) Turn the ignition switch to the ON position.
(e) Measure the voltage.

Standard voltage

Tester Connection	Condition	Specified Condition
F18-1 (PP+) - Body ground	Ignition switch ON	Below 1 V
F18-2 (PP-) - Body ground	Ignition switch ON	Below 1 V

(f) Turn the ignition switch to the LOCK position.
(g) Disconnect the negative (-) terminal cable from the battery, and wait for at least 90 seconds.
(h) Measure the resistance.

Standard resistance

Tester Connection	Condition	Specified Condition
F18-1 (PP+) - F18-2 (PP-)	Always	Below 1 Ω
F18-1 (PP+) - Body ground	Always	1 MΩ or higher
F18-2 (PP-) - Body ground	Always	1 MΩ or higher

(i) Release the activation prevention mechanism built into connector B (See page RS-28).
(j) Measure the resistance.

Standard resistance

Tester Connection	Condition	Specified Condition
F18-1 (PP+) - F18-2 (PP-)	Always	1 MΩ or higher

RS

OK → **Go to step 34**

NG

33 CHECK NO. 1 REAR DOOR WIRE

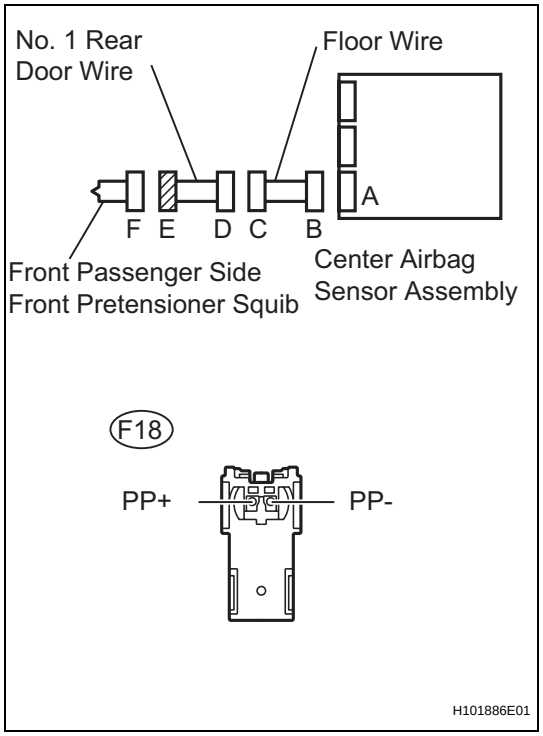

(a) Disconnect the floor wire connector from the No. 1 rear door wire.
(b) Connect the negative (-) terminal cable from the battery, and wait for at least 2 seconds.
(c) Turn the ignition switch to the ON position.
(d) Measure the voltage.

Standard voltage

Tester Connection	Condition	Specified Condition
F18-1 (PP+) - Body ground	Ignition switch ON	Below 1 V
F18-2 (PP-) - Body ground	Ignition switch ON	Below 1 V

(e) Turn the ignition switch to the LOCK position.
(f) Disconnect the negative (-) terminal cable from the battery, and wait for at least 90 seconds.
(g) Measure the resistance.

Standard resistance

Tester Connection	Condition	Specified Condition
F18-1 (PP+) - F18-2 (PP-)	Always	Below 1 Ω
F18-1 (PP+) - Body ground	Always	1 MΩ or higher
F18-2 (PP-) - Body ground	Always	1 MΩ or higher

(h) Release the activation prevention mechanism built into connector D (See page RS-28).
(i) Measure the resistance.

Standard resistance

Tester Connection	Condition	Specified Condition
F18-1 (PP+) - F18-2 (PP-)	Always	1 MΩ or higher

NG → **REPAIR OR REPLACE NO. 1 REAR DOOR WIRE**

OK

34	REPLACE FRONT SEAT OUTER BELT ASSEMBLY RH

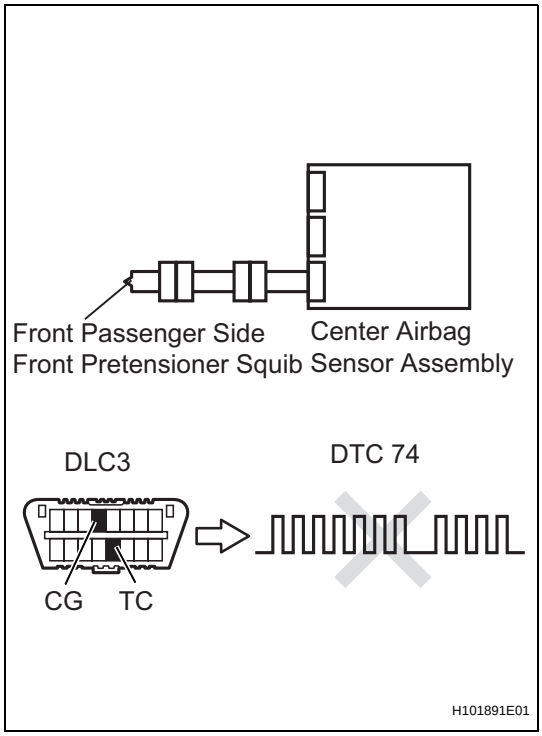

(a) Replace the front seat outer belt assembly RH (See page SB-16, SB-36 or SB-27).

HINT:
Perform the inspection using parts from a normal vehicle when possible.

(b) Connect the connectors to the center airbag sensor assembly.
(c) Connect the negative (-) terminal cable to the battery, and wait for at least 2 seconds.
(d) Turn the ignition switch to the ON position, and wait for at least 60 seconds.
(e) Clear any DTCs stored in the memory (See page RS-34).
(f) Turn the ignition switch to the LOCK position.
(g) Turn the ignition switch to the ON position, and wait for at least 60 seconds.
(h) Check for DTCs (See page RS-34).

OK:

DTC 74 is not output.

HINT:
DTCs other than 74 may be output at this time, but they are not related to this check.

NG → **REPLACE CENTER AIRBAG SENSOR ASSEMBLY**

OK

END

RS

SRS Warning Light Remains ON

DESCRIPTION

The SRS warning light is located on the combination meter assembly.
When the SRS (supplemental restraint system) is functioning normally, the SRS warning light comes on for approximately 6 seconds after the ignition switch is turned from the LOCK position to the ON position, and then turns off automatically. If there is a malfunction in the SRS, the SRS warning light illumination continues to inform the driver.
If the continuous illumination is caused by problems such as malfunctions in the SRS warning light circuit or a decreased source voltage in the center airbag sensor assembly, no DTCs are set.

WIRING DIAGRAM

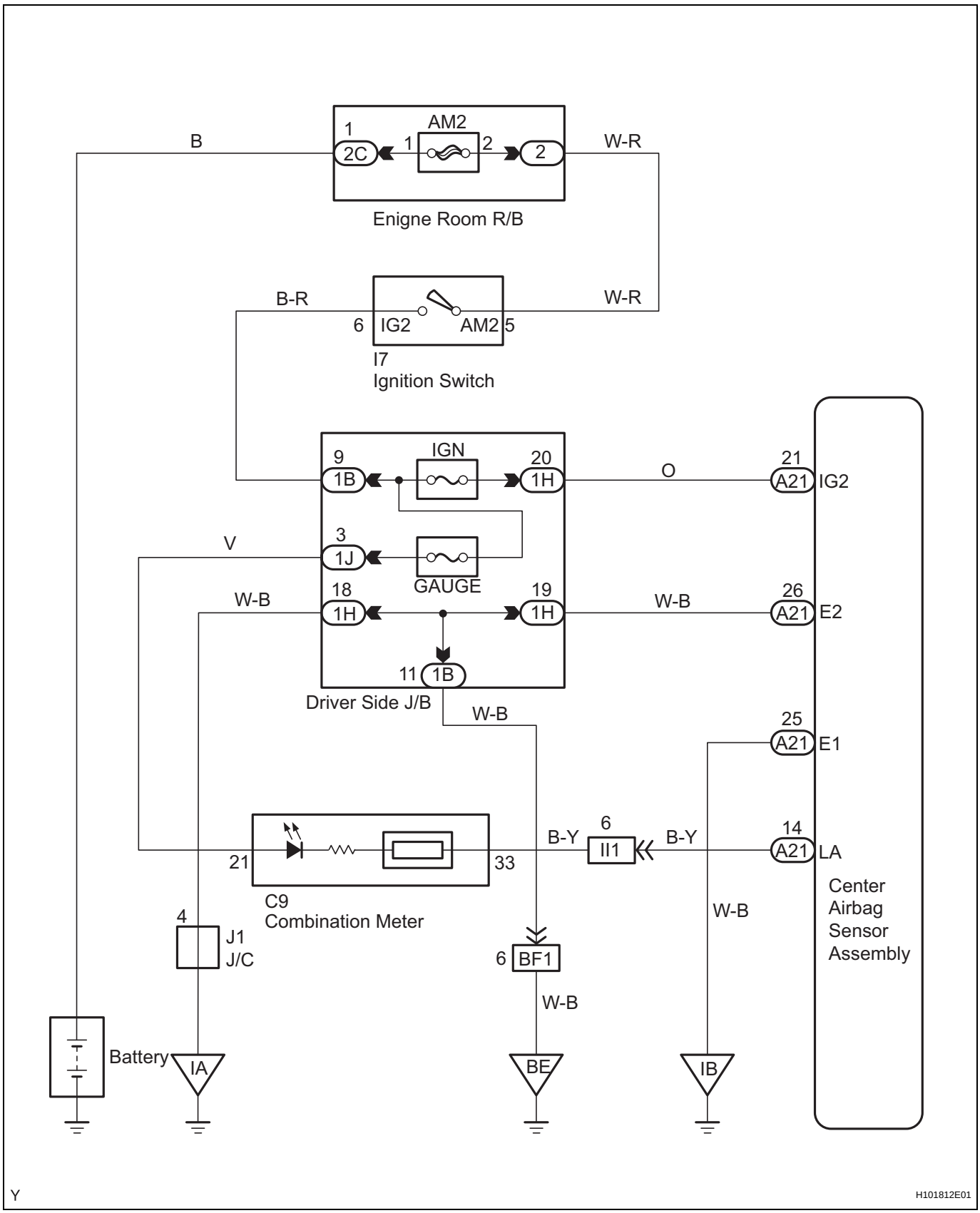

RS

CAUTION:
In order to prevent unexpected airbag deployment, disconnect the following connectors before inspecting parts such as wire harnesses, if the application of tester probes to the center airbag sensor assembly connector is necessary.
(a) Turn the ignition switch to the LOCK position.
(b) Disconnect the negative (-) terminal cable from the battery, and wait for at least 90 seconds.
(c) Disconnect the connectors from the center airbag sensor assembly.
(d) Disconnect the connectors from the steering pad.
(e) Disconnect the connector from the front passenger airbag assembly.
(f) Disconnect the connector from the front seat airbag assembly LH.
(g) Disconnect the connector from the front seat airbag assembly RH.
HINT:
Skip the following steps if side and curtain shield airbags are not fitted.
(h) Disconnect the connector from the curtain shield airbag assembly LH.
(i) Disconnect the connector from the curtain shield airbag assembly RH.
(j) Disconnect the connector from the front seat outer belt assembly LH.
(k) Disconnect the connector from the front seat outer belt assembly RH.

1	CHECK BATTERY

(a) Measure the voltage of the battery.
Voltage:
11 to 14 V

NG → **REPAIR OR REPLACE BATTERY**

OK

2	CHECK CONNECTION OF CONNECTORS

(a) Disconnect the negative (-) terminal cable from the battery, and wait for at least 90 seconds.
(b) Check that the connectors are properly connected to the center airbag sensor assembly and combination meter assembly.
OK:
The connectors are properly connected.

NG → **CONNECT CONNECTORS**

OK

3	CHECK CONNECTORS

(a) Check that the connectors (on the center airbag sensor assembly side and combination meter assembly side) are not damaged (See page IN-34).
OK:
The connectors are not deformed or damaged.

NG → **REPAIR OR REPLACE WIRE HARNESS**

OK

4 CHECK WIRE HARNESS (POWER SOURCE)

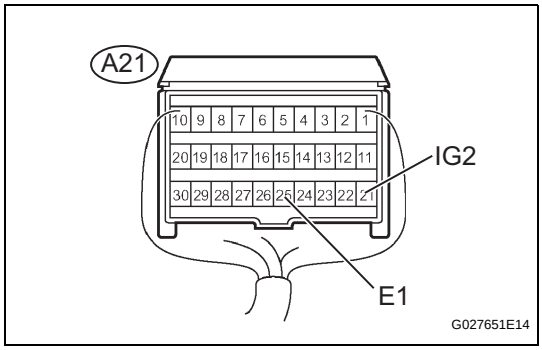

(a) Connect the negative (-) terminal cable to the battery, and wait for at least 2 seconds.
(b) Turn the ignition switch to the ON position.
(c) Measure the voltage.
Standard voltage

Tester Connection	Condition	Specified Condition
A21-21 (IG2) - A21-25 (E1)	Ignition switch ON	10 to 14 V

NG → **REPAIR OR REPLACE WIRE HARNESS (BATTERY - CENTER AIRBAG SENSOR ASSEMBLY)**

OK

5 CHECK POWER SOURCE AND ELECTRICAL SYSTEM COMPONENTS

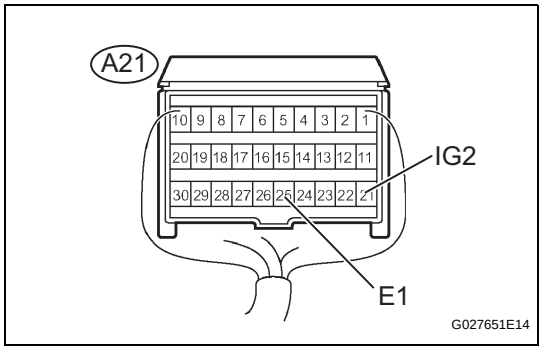

(a) Turn the ignition switch to the ON position.
(b) Turn on all electrical system components such as the defogger, wipers, head lamps and heater blower.
(c) Measure the voltage.
Standard voltage

Tester Connection	Condition	Specified Condition
A21-21 (IG2) - A21-25 (E1)	Ignition switch ON	10 to 14 V

NG → **REPAIR OR REPLACE POWER SOURCE AND ELECTRICAL SYSTEM COMPONENTS**

OK

6	CHECK WIRE HARNESS (CENTER AIRBAG SENSOR ASSEMBLY - COMBINATION METER ASSEMBLY)

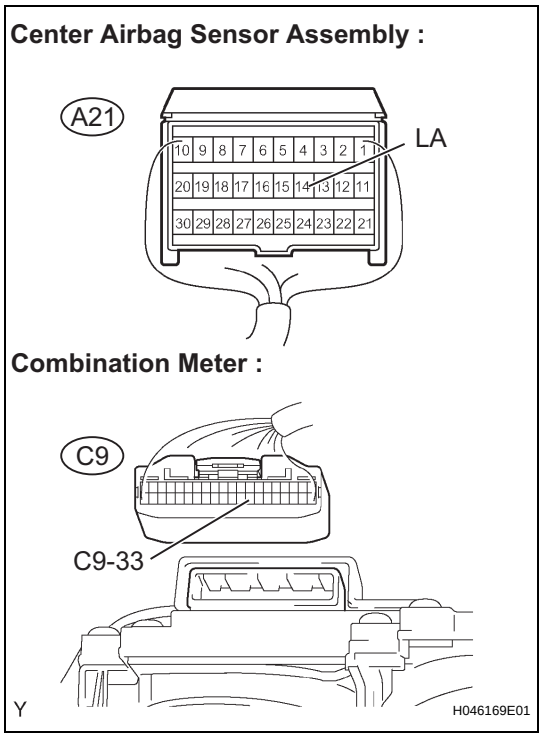

(a) Disconnect the connector from the combination meter assembly.
(b) Measure the voltage and resistance.

Standard voltage

Tester Connection	Condition	Specified Condition
A21-14 (LA) - Body ground	Ignition switch ON	Below 1 V

Standard resistance

Tester Connection	Condition	Specified Condition
A21-14 (LA) - C9-33	Always	Below 1 Ω
A21-14 (LA) - Body ground	Always	1 MΩ or higher

NG → REPAIR OR REPLACE WIRE HARNESS

OK

7	CHECK CENTER AIRBAG SENSOR ASSEMBLY

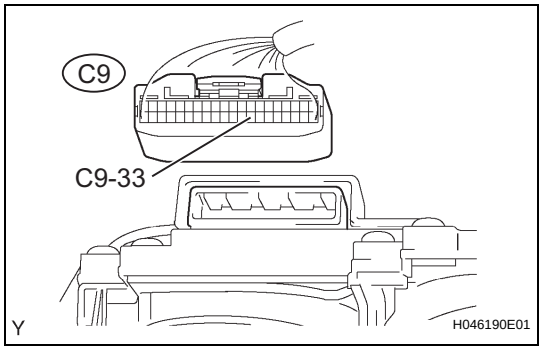

(a) Turn the ignition switch to the LOCK position.
(b) Disconnect the negative (-) terminal cable from the battery, and wait for at least 90 seconds.
(c) Connect the connector to the center airbag sensor assembly .
(d) Connect the negative (-) terminal cable to the battery, and wait for at least 2 seconds.
(e) Turn the ignition switch to the ON position and wait for at least 6 seconds.
(f) Measure the voltage.

Standard voltage

Tester Connection	Condition	Specified Condition
C9-33 - Body ground	Ignition switch ON	10 to 14 V

NG → REPLACE CENTER AIRBAG SENSOR ASSEMBLY

OK

REPLACE COMBINATION METER ASSEMBLY

RS

SRS Warning Light does not Come ON

DESCRIPTION

The SRS warning light is located on the combination meter assembly.
When the SRS (supplemental restraint system) is normal, the SRS warning light comes on for approximately 6 seconds after the ignition switch is turned from the LOCK position to the ON position, and then turns off automatically.
If there is a malfunction in the SRS, the SRS warning light comes on to inform the driver.
When terminals TC and CG of the DLC3 are connected, the SRS warning light blinks to indicate the DTCs stored in the center airbag sensor assembly.

WIRING DIAGRAM

See page RS-341.

CAUTION:
In order to prevent unexpected airbag deployment, disconnect the following connectors before inspecting parts such as wire harnesses, if the application of tester probes to the center airbag sensor assembly connector is necessary.
(a) Turn the ignition switch to the LOCK position.
(b) Disconnect the negative (-) terminal cable from the battery, and wait for at least 90 seconds.
(c) Disconnect the connectors from the center airbag sensor assembly.
(d) Disconnect the connectors from the steering pad.
(e) Disconnect the connector from the front passenger airbag assembly.
(f) Disconnect the connector from the front seat airbag assembly LH.
(g) Disconnect the connector from the front seat airbag assembly RH.
HINT:
Skip the following steps if side and curtain shield airbags are not fitted.
(h) Disconnect the connector from the curtain shield airbag assembly LH.
(i) Disconnect the connector from the curtain shield airbag assembly RH.
(j) Disconnect the connector from the front seat outer belt assembly LH.
(k) Disconnect the connector from the front seat outer belt assembly RH.

1	CHECK BATTERY

(a) Measure the voltage battery.
Standard Voltage:
11 to 14 V

RS

NG → **REPAIR OR REPLACE BATTERY**

OK

2	CHECK CONNECTORS

(a) Disconnect the negative (-) terminal cable from the battery, and wait for at least 90 seconds.
(b) Check that the connectors are properly connected to the center airbag sensor assembly and combination meter assembly.
OK:
The connectors are properly connected.

NG → CONNECT CONNECTORS

OK

3	CHECK CONNECTORS

(a) Check that the connectors (on the center airbag sensor assembly side and combination meter assembly side) are not damaged (See page RS-28).
OK:
The connectors are not deformed or damaged.

NG → REPAIR OR REPLACE WIRE HARNESS

OK

4	CHECK WIRE HARNESS (COMBINATION METER ASSEMBLY - BATTERY)

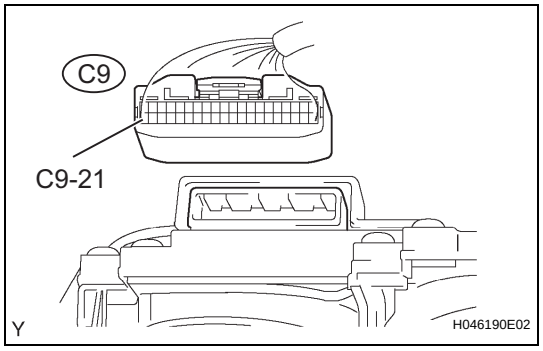

(a) Disconnect the connector from the combination meter assembly.
(b) Connect the negative (-) terminal cable to the battery, and wait for at least 2 seconds.
(c) Turn the ignition switch to the ON position and wait for at least 6 seconds.
(d) Measure the voltage.
Standard voltage

Tester Connection	Condition	Specified Condition
C9-21 - Body ground	Ignition switch ON	10 to 14 V

NG → REPAIR OR REPLACE WIRE HARNESS

OK

5 **CHECK WIRE HARNESS (CENTER AIRBAG SENSOR ASSEMBLY - COMBINATION METER ASSEMBLY)**

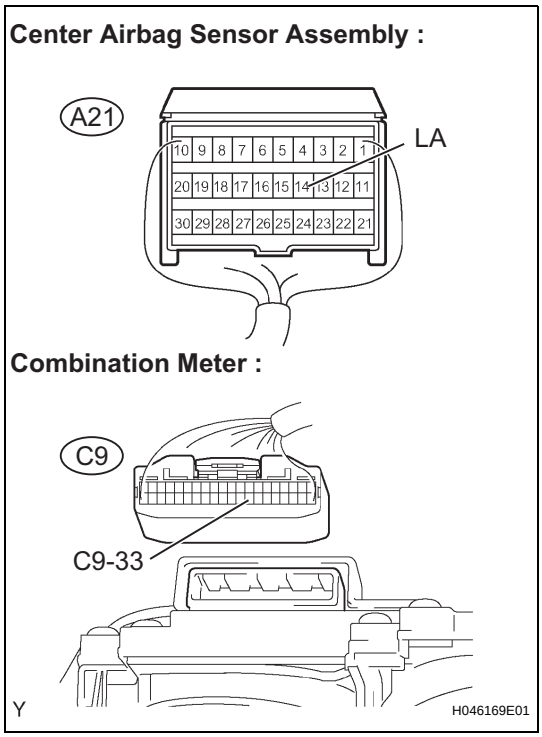

(a) Turn the ignition switch to the LOCK position.
(b) Disconnect the negative (-) terminal cable from the battery, and wait for at least 90 seconds.
(c) Disconnect the connectors from the center airbag sensor assembly .
(d) Measure the resistance.
Standard resistance

Tester Connection	Condition	Specified Condition
A21-14 (LA) - C9-33	Always	Below 1 Ω
A21-14 (LA) - Body ground	Always	1 MΩ or higher

(e) Connect the negative (-) terminal cable to the battery, and wait for at least 2 seconds.
(f) Measure the voltage.
Standard voltage

Tester Connection	Condition	Specified Condition
C9-33 - Body ground	Ignition switch ON	Below 1 V

NG → **REPAIR OR REPLACE WIRE HARNESS**

OK

6 **CHECK COMBINATION METER**

(a) Turn the ignition switch to the LOCK position.
(b) Disconnect the negative (-) terminal cable from the battery, and wait for at least 90 seconds.
(c) Connect the connector to the combination meter assembly.
(d) Connect the negative (-) terminal cable to the battery, and wait for at least 2 seconds.
(e) Turn the ignition switch to the ON position.
(f) Check the SRS warning light operation.
OK:
The SRS warning light comes on.

NG → **REPLACE COMBINATION METER**

OK

REPLACE CENTER AIRBAG SENSOR ASSEMBLY

RS

TC and CG Terminal Circuit

DESCRIPTION

DTC output mode is set by connecting terminals TC and CG of the DLC3.
The DTCs stored in the center airbag sensor assembly are displayed by blinking patterns of the SRS warning light.

WIRING DIAGRAM

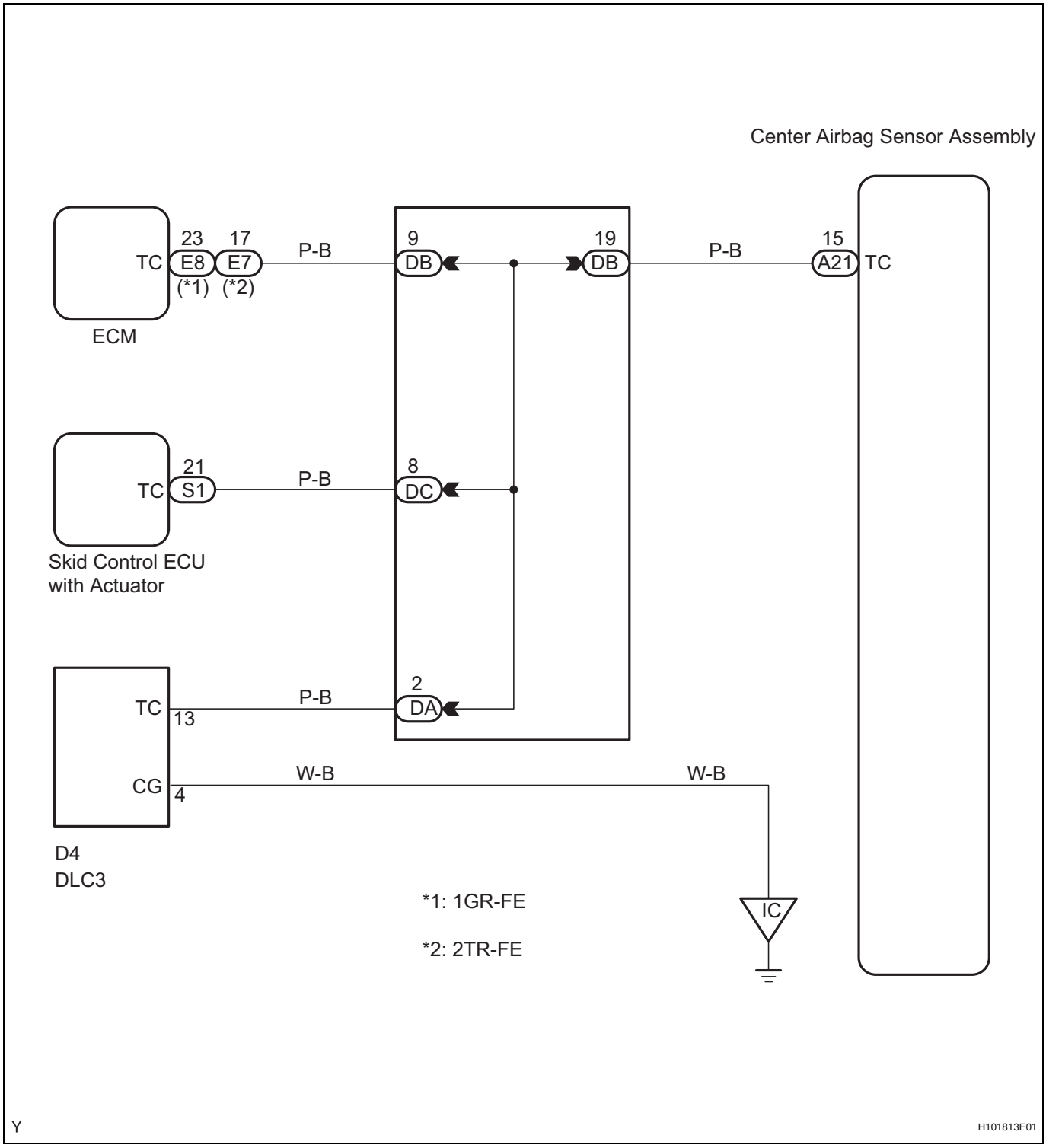

RS

HINT:
When all of the warning lights blink continuously, a ground short in the wiring of terminal TC of the DLC3 or an internal ground short in each ECU is suspected.

CAUTION:
In order to prevent unexpected airbag deployment, disconnect the following connectors before inspecting parts such as wire harnesses, if the application of tester probes to the center airbag sensor assembly connector is necessary.
(a) Turn the ignition switch to the LOCK position.
(b) Disconnect the negative (-) terminal cable from the battery, and wait for at least 90 seconds.
(c) Disconnect the connectors from the center airbag sensor assembly.
(d) Disconnect the connectors from the steering pad.
(e) Disconnect the connector from the front passenger airbag assembly.
(f) Disconnect the connector from the front seat airbag assembly LH.
(g) Disconnect the connector from the front seat airbag assembly RH.
HINT:
Skip the following steps if side and curtain shield airbags are not fitted.
(h) Disconnect the connector from the curtain shield airbag assembly LH.
(i) Disconnect the connector from the curtain shield airbag assembly RH.
(j) Disconnect the connector from the front seat outer belt assembly LH.
(k) Disconnect the connector from the front seat outer belt assembly RH.

1	CHECK WIRE HARNESS (DLC3 - CENTER AIRBAG SENSOR ASSEMBLY)

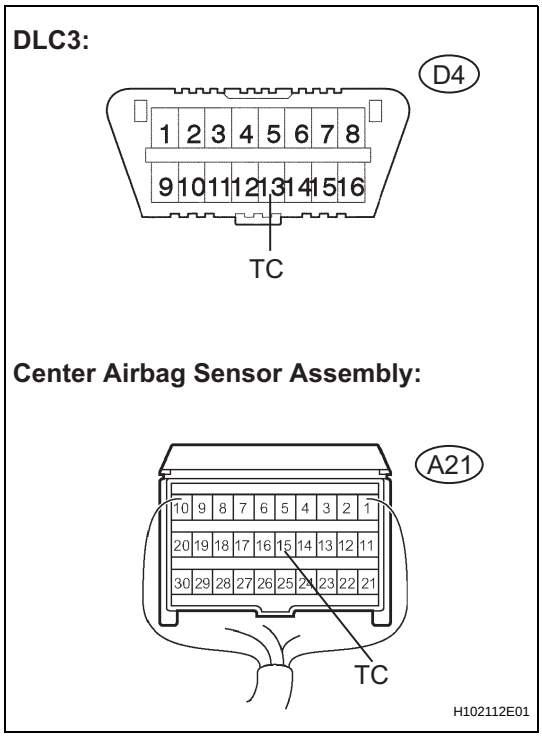

(a) Measure the resistance.
Standard resistance

Tester Connection	Condition	Specified Condition
D4-13 (TC) - A21-15 (TC)	Always	Below 1 Ω

NG → **REPAIR OR REPLACE WIRE HARNESS (TC OF DLC3 - TC OF CENTER AIRBAG SENSOR ASSEMBLY)**

OK

RS

2	CHECK WIRE HARNESS (CG OF DLC3 - BODY GROUND)

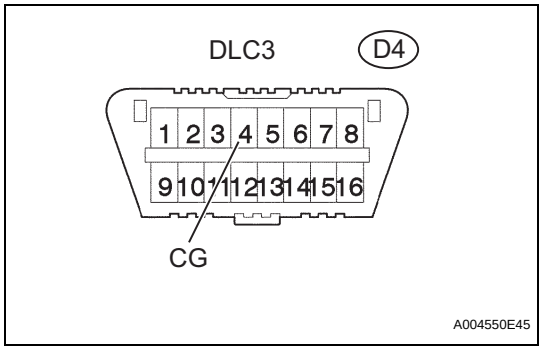

(a) Measure the resistance.
Standard resistance

Tester Connection	Condition	Specified Condition
D4-4 (CG) - Body ground	Always	Below 1 Ω

NG → **REPAIR OR REPLACE WIRE HARNESS (CG OF DLC3 - BODY GROUND)**

OK

3	CHECK WIRE HARNESS (TC OF CENTER AIRBAG SENSOR ASSEMBLY - BODY GROUND)

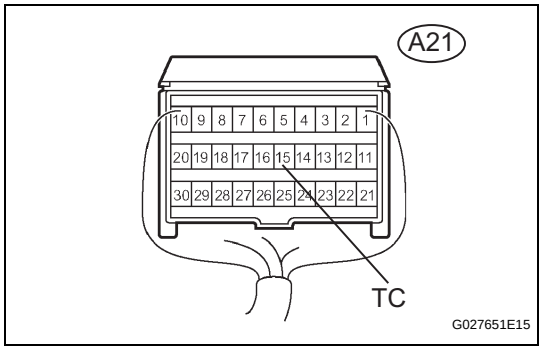

(a) Measure the resistance.
Standard resistance

Tester Connection	Condition	Specified Condition
A21-15 (TC) - Body ground	Always	1 MΩ or higher

NG → **REPAIR OR REPLACE WIRE HARNESS AND EACH ECU**

OK

REPLACE CENTER AIRBAG SENSOR ASSEMBLY

RS

SYSTEM DIAGRAM

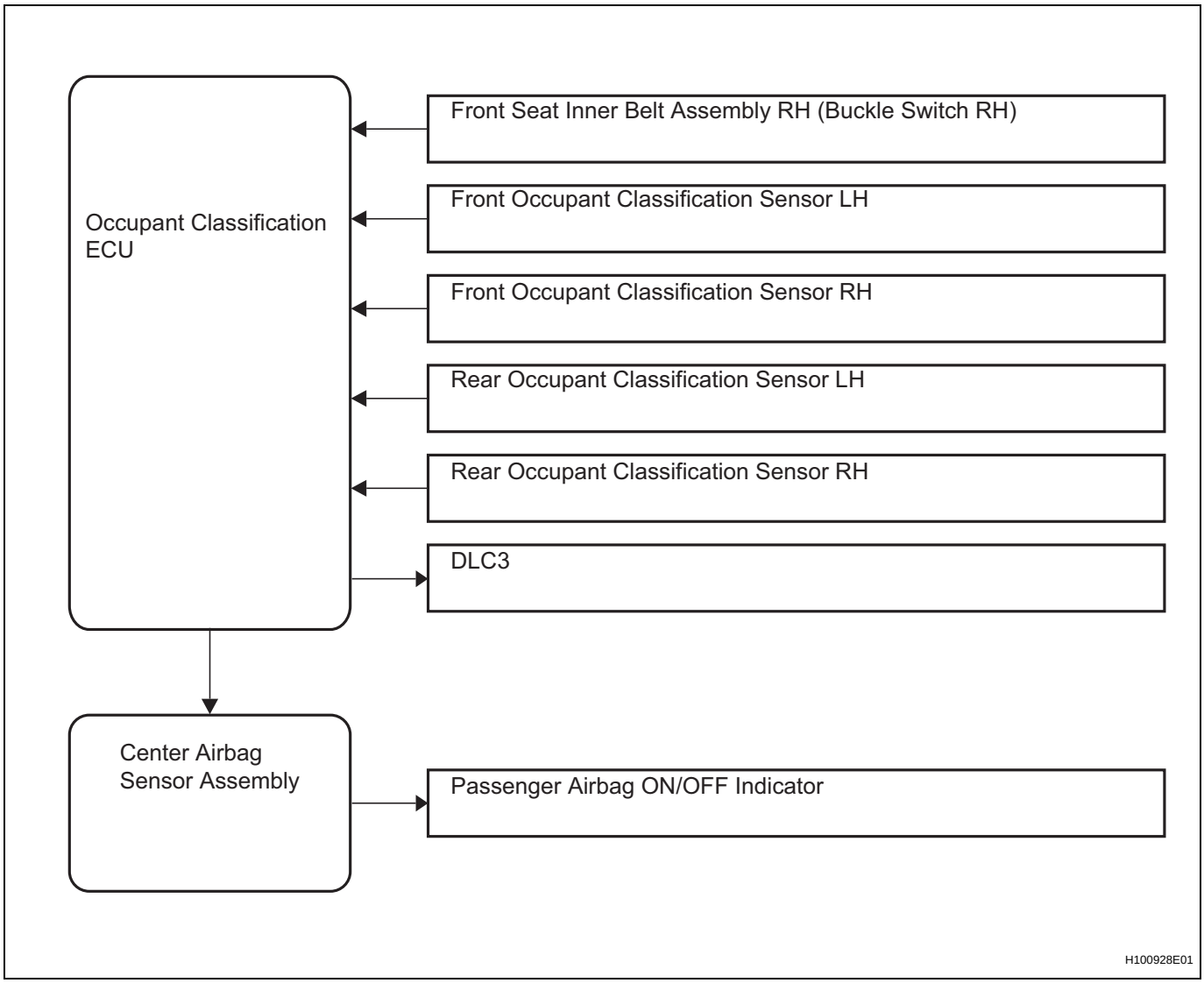

SYSTEM DESCRIPTION

1. FRONT PASSENGER OCCUPANT CLASSIFICATION SYSTEM

(a) General Description

(1) The front passenger occupant classification system determines whether the front passenger seat is occupied by an adult or child (with child seat) or is unoccupied, based on the load that is applied to the front passenger seat and whether the seat belt is buckled. The system restricts the deployment of the front passenger airbag, front passenger side airbag, and the front passenger seat belt pretensioner in accordance with this judgement. The result is informed to the driver through the airbag ON/OFF indicator illumination.

(b) System Configuration

(1) This system consists of the occupant classification ECU, occupant classification sensors, airbag ON/OFF indicator, seat belt buckle switches, and center airbag sensor assembly.

(c) Occupant Classification ECU and Sensor

(1) The occupant classification sensors are installed on four brackets connecting the seat rail and the seat frame. The resistance values of these sensors, which vary in accordance with the load that acts on the brackets, are transmitted to the occupant classification ECU as signals. Upon receipt of the signals, the ECU determines the front passenger seat occupant conditions.

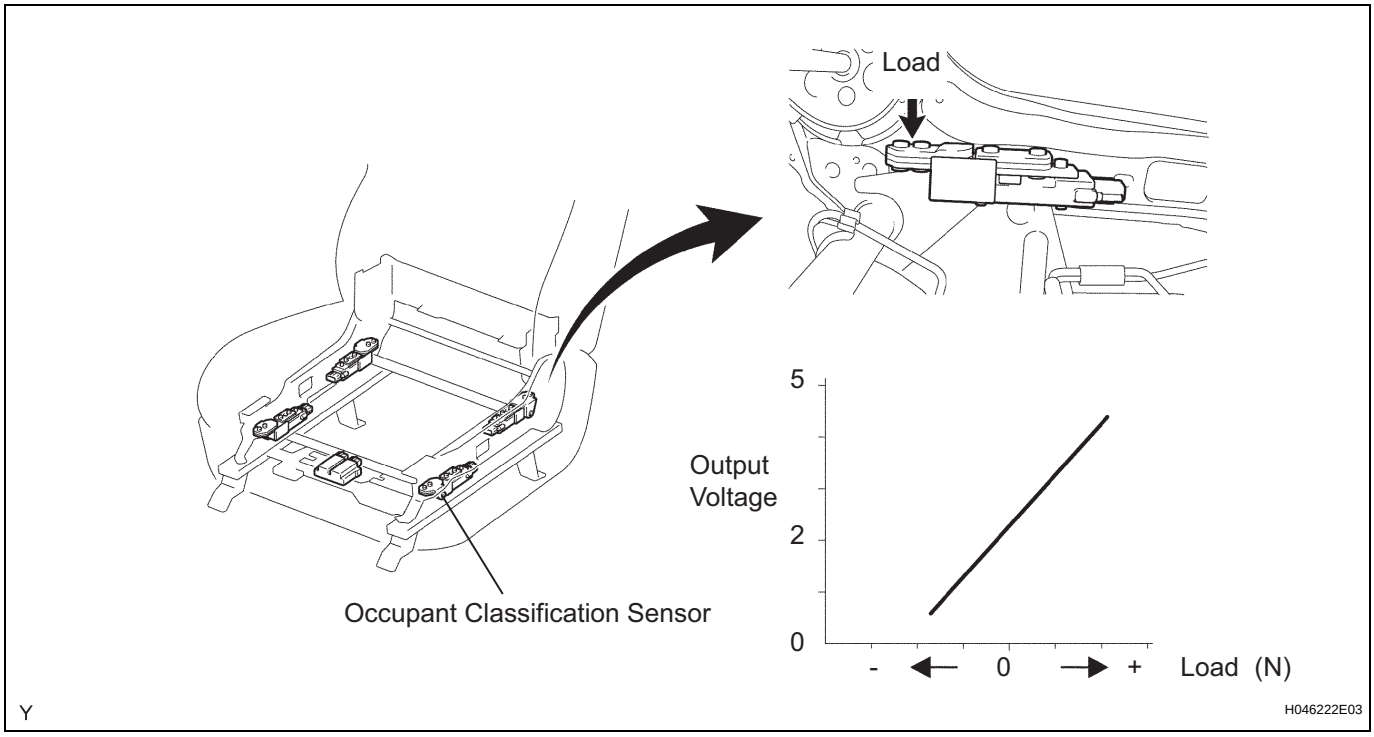

RS

HOW TO PROCEED WITH TROUBLESHOOTING

1	VEHICLE BROUGHT TO WORKSHOP

NEXT

2	CUSTOMER PROBLEM ANALYSIS (See page IN-26)

NEXT

3	PASSENGER AIRBAG ON/OFF INDICATOR CHECK (See page RS-362)

NEXT

4	DTCs CHECK (Present and Past DTCs) (See page RS-365)

(a) Check for DTCs.

Result

Result	Proceed to
DTC is output.	A
DTC is not output.	B

B → GO TO PROBLEM SYMPTOMS TABLE

A

5	DTCs CHART (See page RS-368)

NEXT

6	CIRCUIT INSPECTION

NEXT

7	REPAIR OR REPLACEMENT

NEXT

8	DTC CLEARANCE (Present and Past DTCs) (See page RS-365)

(a) Clear the DTCs.

NEXT

9	DTC CHECK (Present and Past DTCs) (See page RS-365)

(a) Check for DTCs.

Result

Result	Proceed to
DTC is not output.	A
DTC is output.	B

B → Go to step 5

A

10	SYMPTOM SIMULATION (See page RS-361)

(a) Check the passenger airbag ON/OFF indicator condition.

Result

Result	Proceed to
Passenger airbag ON/OFF indicator is operating normally.	A
Passenger airbag ON/OFF indicator (OFF) and SRS warning light come on.	B

B → Go to step 5

A

11	CONFIRMATION TEST

NEXT

END

INITIALIZATION

1. ZERO POINT CALIBRATION

NOTICE:

Make sure that the front passenger seat is not occupied before performing the operation.

HINT:

Perform the zero point calibration and sensitivity check if any of the following conditions apply.

- The occupant classification ECU is replaced.
- Accessories (seatback tray and seat cover, etc.) are installed.
- The front passenger seat is removed from the vehicle.
- The passenger airbag ON/OFF indicator (OFF) comes on when the front passenger seat is not occupied.
- The vehicle is brought to the workshop for repair due to an accident or a collision.

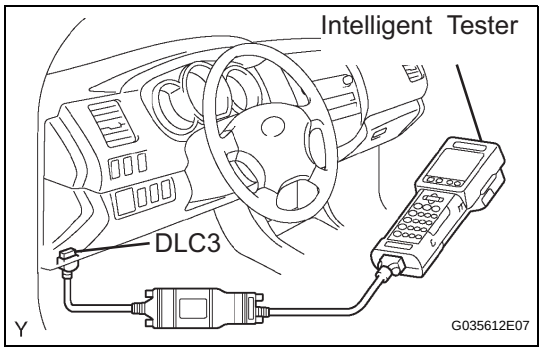

(a) Zero point calibration and sensitivity check procedures

HINT:

Make sure that the zero point calibration has finished normally, and then perform the sensitivity check.

(1) Adjust the seat position in accordance with the table below.

Adjustment Item	Position
Slide Direction	Rearmost position
Reclining Angle	Upright position
Headrest Height	Lowest position
Lifter Height	Lowest position

(2) Connect the intelligent tester to the DLC3.

(3) Turn the ignition switch to the ON position.

(4) Perform the zero point calibration by following the prompts on the tester screen.

ZERO POINT CALIBRATION PROCEDURE

1: DIAGNOSIS - 1: OBD/MOBD - MODEL YEAR - MODEL SELECTION - 9: OCCUPANT DETECT
Refer to the following screen flow.

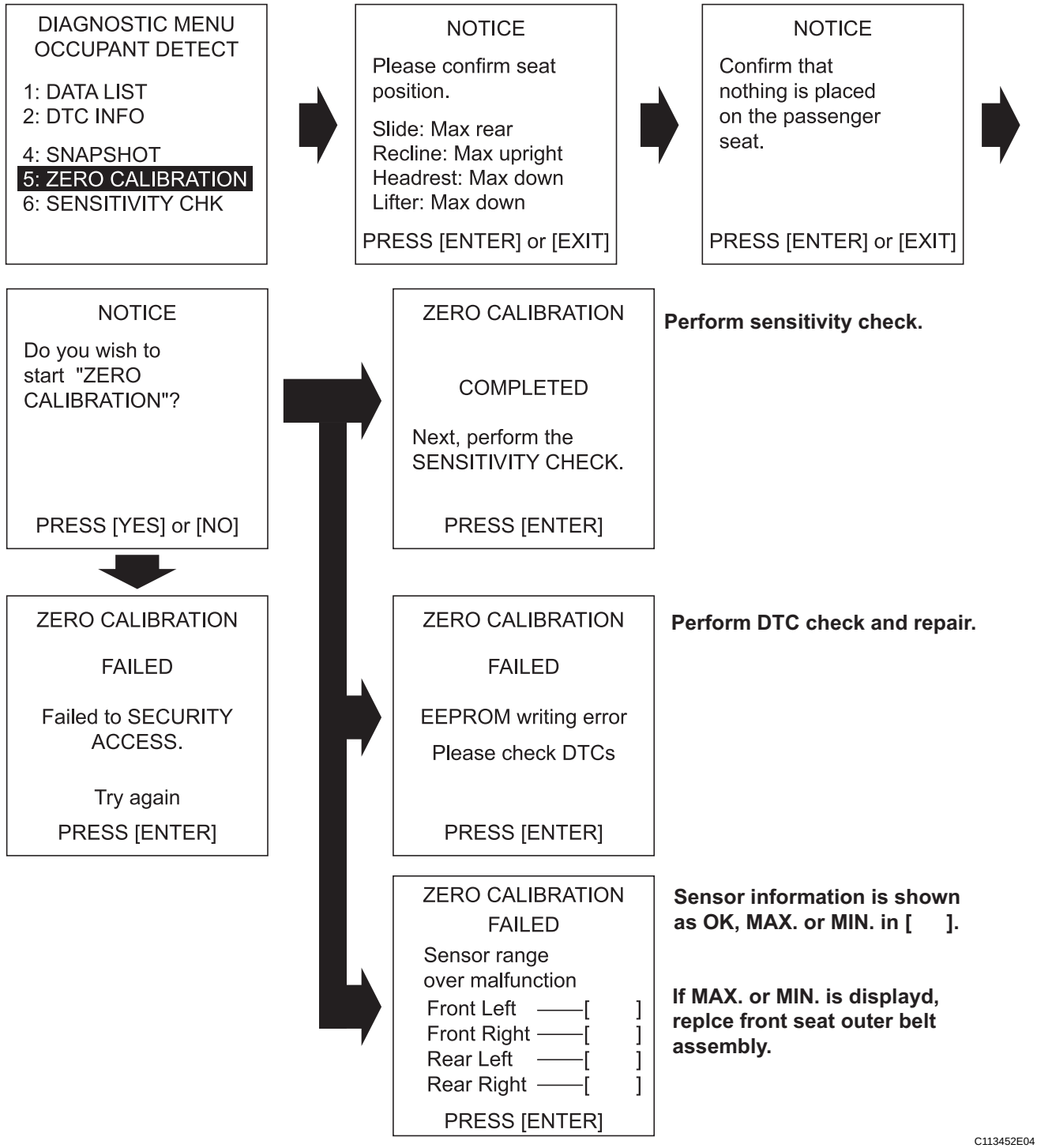

HINT:
Refer to the intelligent tester operator's manual for further details.

RS

OK:
COMPLETE is displayed.

(5) Perform the sensitivity check by following the prompts on the tester screen.
(6) Confirm that the beginning sensor reading is within the standard range.
Standard range:
-3.2 to 3.2 kg (-7 to 7 lb)
(7) Place a 30 kg (66.14 lb) weight (e.g. a lead mass) onto the front passenger seat.
(8) Confirm that the sensitivity is within the standard range.

SENSITIVITY CHECK PROCEDURE

1: DIAGNOSIS → 1: OBD/MOBD → MODEL YEAR → MODEL SELECTION → 9: OCCUPANT DETECT

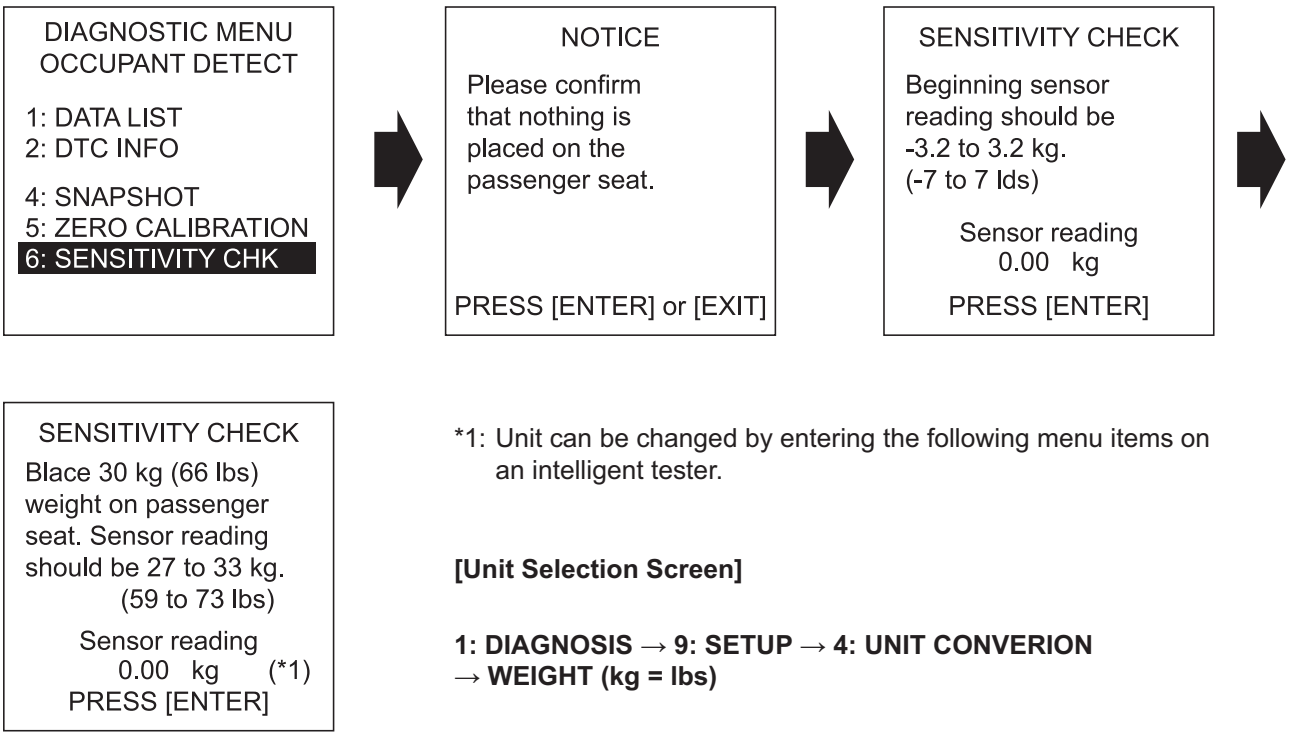

*1: Unit can be changed by entering the following menu items on an intelligent tester.

[Unit Selection Screen]

1: DIAGNOSIS → 9: SETUP → 4: UNIT CONVERION → WEIGHT (kg = lbs)

C C113453E04

Standard range:
27 to 33 kg (59.52 to 72.75 lb)

HINT:

- When performing the sensitivity check, use a solid metal weight (the check result may not be accurate if a liquid weight is used).

RS

- If the sensitivity deviates from the standard range, retighten the bolts of the front passenger seat taking care not to deform the seat rail. After performing this procedure, if the sensitivity is not within the standard range, replace the front seat assembly RH.
- If the zero point calibration has not finished normally, replace the front seat assembly RH.

PROBLEM SYMPTOMS TABLE

HINT:
Proceed to the troubleshooting for each circuit in the table below.

Symptom	Suspected area	See page
Selected airbag cut-off switch position (AUTO or OFF) and displayed passenger airbag ON/OFF indicator of passenger seat occupant conditions do not correspond (for except Double Cab)	Trouble in Passenger Airbag ON/OFF Indicator	RS-450
Passenger seat occupant conditions and displayed passenger airbag ON/OFF indicator do not correspond (for Double Cab)	Trouble in Passenger Airbag ON/OFF Indicator	RS-450

TERMINALS OF ECU

1. OCCUPANT CLASSIFICATION ECU

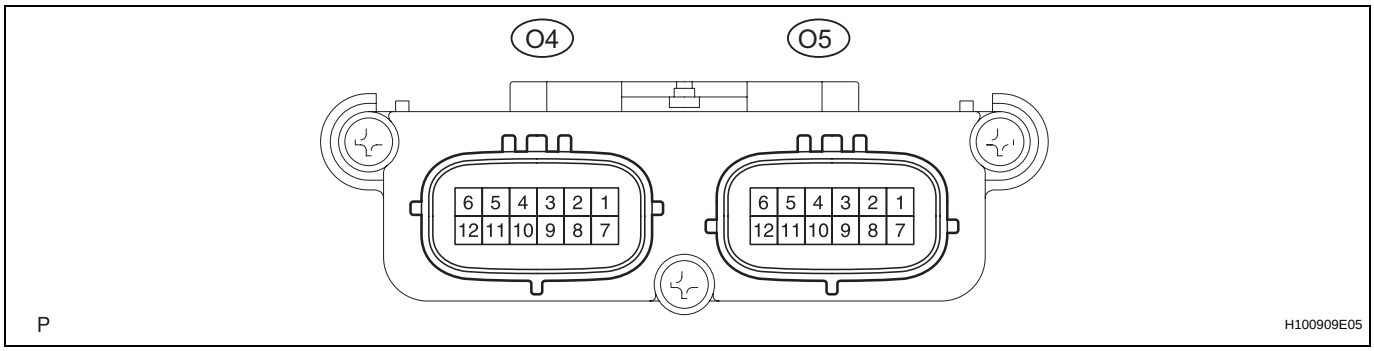

Symbols (Terminal No.)	Wiring Color	Terminal Description	Condition	Specification
+B (O5-1) - GND (O5-3)	R - W-B	Battery	Ignition switch on	10 to 14 V
DIA (O5-2) - GND (O5-3)	W - W-B	Diagnosis (DLC3)	Ignition switch on	Pulse generation
GND (O5-3) - Body ground	W-B - Body ground	Ground	Always	Below 1 Ω
FSR- (O5-4) - GND (O5-3)	G-B - W-B	Center airbag sensor assembly communication line (-)	Always	Below 1 Ω
BGND (O5-5) - GND (O5-3)	P-G - W-B	Passenger side buckle switch ground line	Always	Below 1 Ω
IG (O5-7) - GND (O5-3)	O - W-B	Power source (IGN Fuse)	Ignition switch on	10 to 14 V
FSR+ (O5-8) - FSR- (O5-4)	G-R - G-B	Center airbag sensor assembly communication line	Ignition switch on	Pulse generation
BSW (O5-9) - BGND (O5-5)	B - P-G	Passenger side buckle switch line	Buckle switch ON Buckle switch OFF	Pulse generation
SGD1 (O4-1) - GND (O5-3)	L - W-B	Occupant classification sensor front LH ground line	Always	Below 1 Ω
SGD2 (O4-2) - GND (O5-3)	O - W-B	Occupant classification sensor front RH ground line	Always	Below 1 Ω
SGD3 (O4-3) - GND (O5-3)	P-G - W-B	Occupant classification sensor rear LH ground line	Always	Below 1 Ω
SGD4 (O4-4) - GND (O5-3)	B-R - W-B	Occupant classification sensor rear RH ground line	Always	Below 1 Ω
SVC1 (O4-11) - SGD1 (O4-1)	B-L - L	Occupant classification sensor front LH power supply line	Ignition switch on, a load is applied to occupant classification sensor front LH	4.5 to 5.1 V
SVC2 (O4-12) - SGD2 (O4-2)	LG-B - O	Occupant classification sensor front RH power supply line	Ignition switch on, a load is applied to occupant classification sensor front RH	4.5 to 5.1 V
SVC3 (O4-5) - SGD3 (O4-3)	B-O -P-G	Occupant classification sensor rear LH power supply line	Ignition switch on, a load is applied to occupant classification sensor rear LH	4.5 to 5.1 V
SVC4 (O4-6) - SGD4 (O4-4)	GR-L - B-R	Occupant classification sensor rear RH power supply line	Ignition switch on, a load is applied to occupant classification sensor rear RH	4.5 to 5.1 V
SIG1 (O4-7) - SGD1 (O4-1)	G - L	Occupant classification sensor front LH signal line	Ignition switch on, a load is applied to occupant classification sensor front LH	Pulse generation

Symbols (Terminal No.)	Wiring Color	Terminal Description	Condition	Specification
SIG2 (O4-8) - SGD2 (O4-2)	R-L - O	Occupant classification sensor front RH signal line	Ignition switch on, a load is applied to occupant classification sensor front RH	Pulse generation
SIG3 (O4-9) - SGD3 (O4-3)	R-B - P-G	Occupant classification sensor rear LH signal line	Ignition switch on, a load is applied to occupant classification sensor rear LH	Pulse generation
SIG4 (O4-10) - SGD4 (O4-4)	L-R - B-R	Occupant classification sensor rear RH signal line	Ignition switch on, a load is applied to occupant classification sensor rear RH	Pulse generation

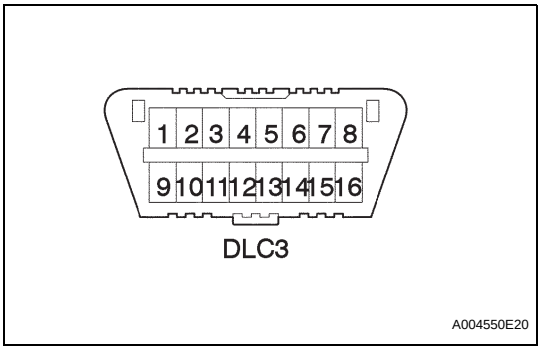

DIAGNOSIS SYSTEM

1. CHECK DLC3

(a) The vehicle's ECU uses the ISO 9141-2 for communication protocol. The terminal arrangement of the DLC3 complies with SAE J1962 and matches the ISO 15765-4 format.

Symbols (Terminal No.)	Terminal Description	Condition	Specified Condition
SIL (7) - SG (5)	Bus + line	During transmission	Pulse generation
CG (4) - Body ground	Chassis ground	Always	Below 1 Ω
BAT (16) - Body ground	Battery positive	Always	11 to 14 V

HINT:

If the display shows a communication error message when the intelligent tester is connected to the DLC3, the ignition switch is turned to the ON position and the intelligent tester is operated, there is a problem on the vehicle side or tool side.

- If communication is normal when the tool is connected to another vehicle, inspect the DLC3 on the original vehicle.
- If communication is still not possible when the tool is connected to another vehicle, the problem is probably in the tool itself. Consult the Service Department listed in the tool's instruction manual.

2. SYMPTOM SIMULATION

HINT:

The most difficult case in troubleshooting is when no symptoms occur. In such cases, a thorough customer problem analysis must be carried out. Then the same or similar conditions and environment in which the problem occurred in the customer's vehicle should be simulated. Regardless of the technician's experience or skill, if troubleshooting proceeds without confirmation of the problem symptoms, something important is likely to be overlooked and incorrect guesses may be made at some points in the repair operation.

This leads to a standstill in troubleshooting.

Symbols (Terminal No.)	Wiring Color	Terminal Description	Condition	Specification
SIG2 (O4-8) - SGD2 (O4-2)	R-L - O	Occupant classification sensor front RH signal line	Ignition switch on, a load is applied to occupant classification sensor front RH	Pulse generation
SIG3 (O4-9) - SGD3 (O4-3)	R-B - P-G	Occupant classification sensor rear LH signal line	Ignition switch on, a load is applied to occupant classification sensor rear LH	Pulse generation
SIG4 (O4-10) - SGD4 (O4-4)	L-R - B-R	Occupant classification sensor rear RH signal line	Ignition switch on, a load is applied to occupant classification sensor rear RH	Pulse generation

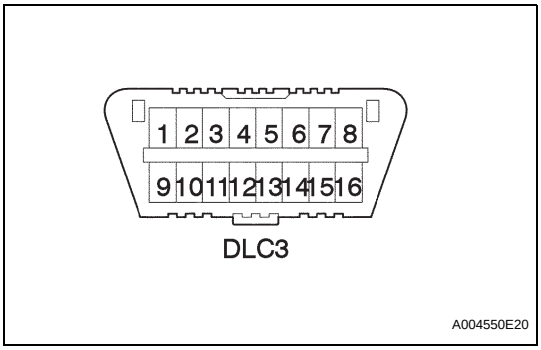

DIAGNOSIS SYSTEM

1. CHECK DLC3

(a) The vehicle's ECU uses the ISO 9141-2 for communication protocol. The terminal arrangement of the DLC3 complies with SAE J1962 and matches the ISO 15765-4 format.

Symbols (Terminal No.)	Terminal Description	Condition	Specified Condition
SIL (7) - SG (5)	Bus + line	During transmission	Pulse generation
CG (4) - Body ground	Chassis ground	Always	Below 1 Ω
BAT (16) - Body ground	Battery positive	Always	11 to 14 V

HINT:

If the display shows a communication error message when the intelligent tester is connected to the DLC3, the ignition switch is turned to the ON position and the intelligent tester is operated, there is a problem on the vehicle side or tool side.

- If communication is normal when the tool is connected to another vehicle, inspect the DLC3 on the original vehicle.
- If communication is still not possible when the tool is connected to another vehicle, the problem is probably in the tool itself. Consult the Service Department listed in the tool's instruction manual.

2. SYMPTOM SIMULATION

HINT:

The most difficult case in troubleshooting is when no symptoms occur. In such cases, a thorough customer problem analysis must be carried out. Then the same or similar conditions and environment in which the problem occurred in the customer's vehicle should be simulated. Regardless of the technician's experience or skill, if troubleshooting proceeds without confirmation of the problem symptoms, something important is likely to be overlooked and incorrect guesses may be made at some points in the repair operation.

This leads to a standstill in troubleshooting.

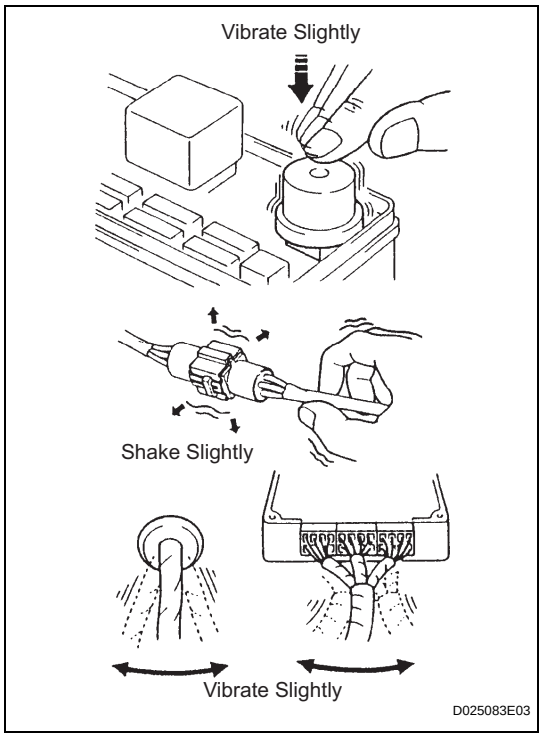

(a) Vibration method: When vibration seems to be the major cause.
HINT:
Perform the simulation method only during the primary check period (for approximately 6 seconds after the ignition switch is turned to the on position).
(1) Slightly vibrate the part of the sensor considered to be the cause of the problem with your fingers and check whether the malfunction occurs.
HINT:
Shaking the relays too strongly may result in open relays.
(2) Slightly shake the connector vertically and horizontally.
(3) Slightly shake the wire harness vertically and horizontally.
The connector joint and fulcrum of the vibration are the major areas to be checked thoroughly.

(b) Simulation method for DTC B1795: Turn the ignition switch from the lock to the on position, hold for 10 seconds, and then back to the lock position again 50 times in a row.
HINT:
DTC B1795 is output if the occupant classification ECU receives the ignition switch lock-on-lock signal 50 times in a row when a malfunction occurs in the power circuit for the occupant classification system.

3. FUNCTION OF PASSENGER AIRBAG ON/OFF INDICATOR

(a) Initial check
(1) Turn the ignition switch to the on position.
(2) The passenger airbag ON/OFF indicator (ON and OFF) comes on for approximately 4 seconds, then goes off for approximately 2 seconds.
(3) Approximately 6 seconds after the ignition switch is turned to the on position, the passenger airbag ON/OFF indicator will be ON/OFF depending on the conditions listed below.

RS

Double cab

Front Seat Passenger	ON Indicator	OFF Indicator	SRS Warning Light
Adult seated	ON	OFF	OFF
Child seated / Child restrain system set	OFF	ON	OFF
Vacant	OFF	OFF	OFF
Passenger occupant classification system failure	OFF	ON	ON

Except double cab

Front Seat Passenger	Passenger Airbag Manual ON/OFF Switch Position	ON Indicator	OFF Indicator	SRS Warning Light
Adult seated	AUTO	ON	OFF	OFF
Adult seated	OFF	OFF	ON	OFF

Front Seat Passenger	Passenger Airbag Manual ON/OFF Switch Position	ON Indicator	OFF Indicator	SRS Warning Light
Adult seated	Airbag cut off switch system failure	OFF	ON	ON
Child seated / Child restrain system set	AUTO	OFF	ON	OFF
Child seated / Child restrain system set	OFF	OFF	ON	OFF
Child seated / Child restrain system set	Airbag cut off switch system failure	OFF	ON	ON
Vacant	AUTO	OFF	OFF	OFF
Vacant	OFF	OFF	ON	OFF
Vacant	Airbag cut off switch system failure	OFF	ON	ON
Passenger occupant classification system failure	AUTO	OFF	ON	ON
Passenger occupant classification system failure	OFF	OFF	ON	ON
Passenger occupant classification system failure	Airbag cut off switch system failure	OFF	ON	ON

HINT:

- The passenger airbag ON/OFF indicator operates based on the timing chart below in order to check the indicator light circuit.

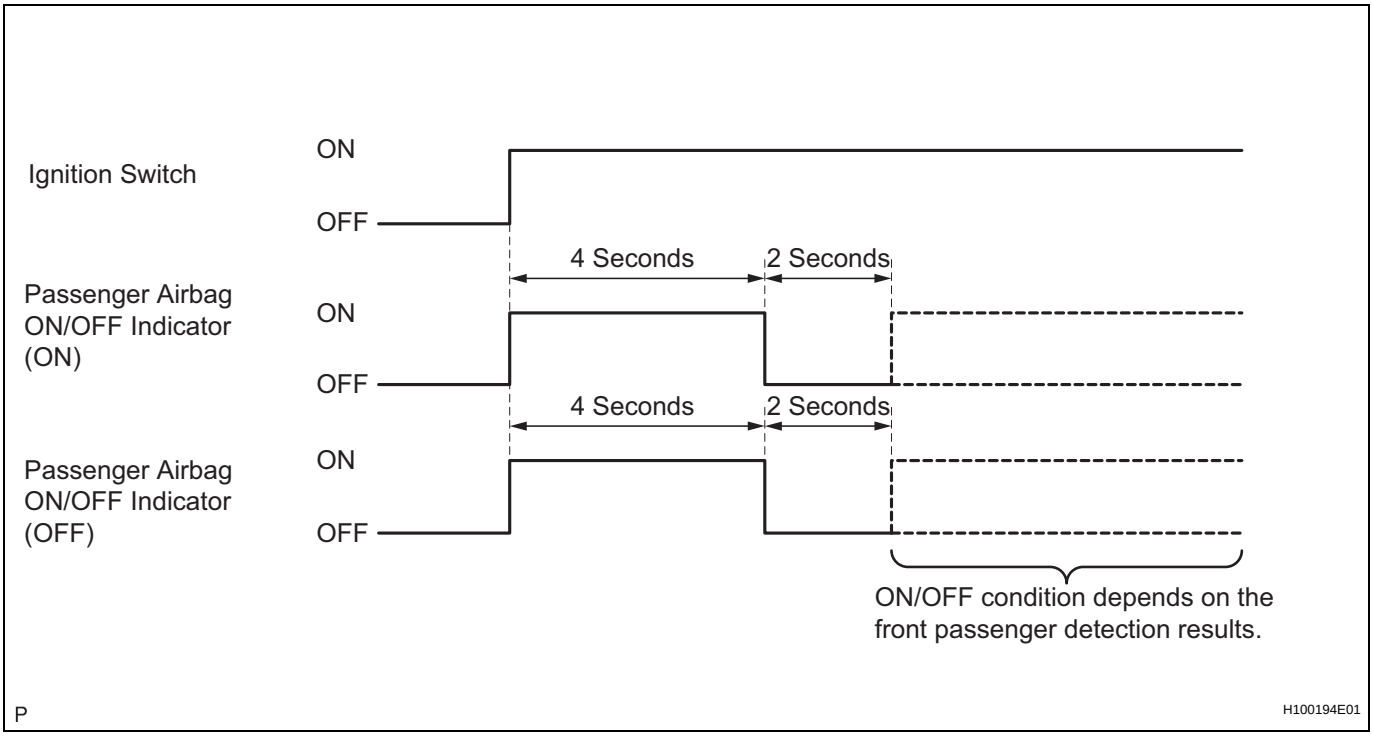

- When the occupant classification system has trouble, both the SRS warning light and the passenger airbag ON/OFF indicator (OFF) come on. In this case, check the DTCs in the airbag system first.

RS

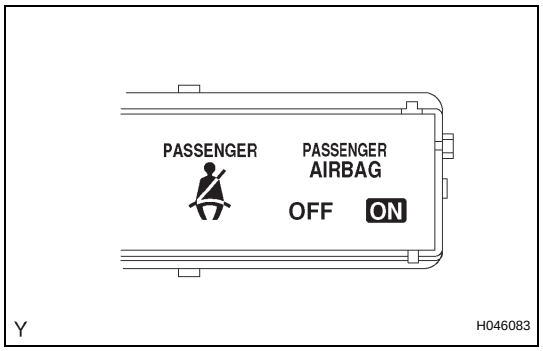

4. PASSENGER AIRBAG ON/OFF INDICATOR CHECK

(a) Turn the ignition switch to the on position.

(b) Check that the passenger airbag ON/OFF indicator (ON and OFF) comes on for approximately 4 seconds, then goes off for approximately 2 seconds.
HINT:
Refer to the table in the previous step regarding the passenger airbag ON/OFF indicator when approximately 6 seconds have elapsed after the ignition switch is turned to the on position.

RS

DTC CHECK / CLEAR

1. DTC CHECK

HINT:

- When DTC B1650/23 is detected as a result of troubleshooting for the airbag system, troubleshoot the occupant classification system.
- Use the intelligent tester to read and clear DTCs, otherwise the DTCs cannot be read and cleared.

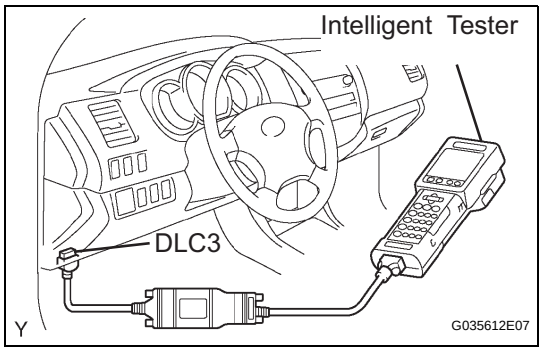

(a) Check for DTCs.

(1) Connect the intelligent tester to the DLC3.

(2) Turn the ignition switch to the on position.

(3) Check for DTCs by following the prompts on the tester screen.

HINT:

Refer to the intelligent tester operator's manual for further details.

(b) Clear the DTCs.

(1) Connect the intelligent tester to the DLC3.

(2) Turn the ignition switch to the on position.

(3) Clear the DTCs by following the prompts on the tester screen.

HINT:

Refer to the intelligent tester operator's manual for further details.

DATA LIST / ACTIVE TEST

HINT:
By accessing the DATA LIST displayed by the intelligent tester, you can check values of switches and sensors without removing any parts. Reading the DATA LIST as the first step of troubleshooting is one method to shorten diagnostic time.

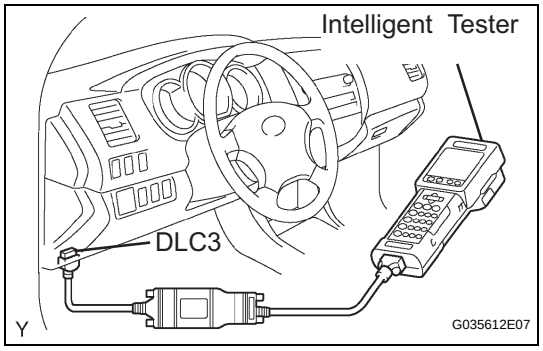

1. DATA LIST FOR OCCUPANT CLASSIFICATION ECU

(a) Connect the intelligent tester to the DLC3.
(b) Turn the ignition switch to the on position.
(c) Following the display on the tester screen, read the DATA LIST.

Item	Measurement Item/ Range (Display)	Normal Condition	Diagnostic Note
IG SW	Ignition switch condition/ ON: Ignition switch ON OFF: Ignition switch OFF	ON/OFF	-
P BUCKLE SW	Buckle switch (passenger side)/ UNSET: Passenger side seat belt is unfastened SET: Passenger side seat belt is fastened NG: Passenger side seat belt is malfunctioning	UNSET/SET	-
PASSENGER CLASS	Passenger classification/ AF05: Adult (36 to 54 kg (79.37 to 119.05 lb)) is seated AM50: Adult (more than 54 kg (119.05 lb)) is seated CHILD: Child (less than 36 kg (79.37 lb)) is seated CRS: Child restraint system and passenger side buckle switch ON, then 7 to 36 kg (15.43 to 79.37 lb) is set OFF: Vacant	AF05/AM50/CHILD/CRS/OFF	-
SENS RANGE INF	Sensor range information/ OK: The sensor value is within the range NG: The sensor value is outside the range	OK	-
FL SENS RANGE	Front left sensor range information/ OK: Sensor range is -17 to 27 kg (-37.48 to 59.52 lb) Min.: Less than -17 kg (-37.48 lb) Max.: More than 27 kg (59.52 lb)	OK	-
FR SENS RANGE	Front right sensor range information/ OK: Sensor range is -17 to 27 kg (-37.48 to 59.52 lb) Min.: Less than -17 kg (-37.48 lb) Max.: More than 27 kg (59.52 lb)	OK	-

Item	Measurement Item/ Range (Display)	Normal Condition	Diagnostic Note
RL SENS RANGE	Rear left sensor range information/ OK: Sensor range is -17 to 37 kg (-37.48 to 81.57 lb) Min.: Less than -17 kg (-37.48 lb) Max.: More than 37 kg (81.57 lb)	OK	-
RR SENS RANGE	Rear right sensor range information/ OK: Sensor range is -17 to 37 kg (-37.48 to 81.57 lb) Min.: Less than -17 kg (-37.48 lb) Max.: More than 37 kg (81.57 lb)	OK	-
FL SENS VOL	Front left sensor voltage/ Min.: 0 V Max.: 5 V	0 to 5 V	-
FR SENS VOL	Front right sensor voltage/ Min.: 0 V Max.: 5 V	0 to 5 V	-
RL SENS VOL	Rear left sensor voltage/ Min.: 0 V Max.: 5 V	0 to 5 V	-
RR SENS VOL	Rear right sensor voltage/ Min.: 0 V Max.: 5 V	0 to 5 V	-
FL SENS WEIGHT	Front left sensor weight information/ Min.: -17 kg (-37.48 lb) Max.: 27 kg (59.52 lb)	-17 to 27 kg (-37.48 to 59.52 lb)	-
FR SENS WEIGHT	Front right sensor weight information/ Min.: -17 kg (-37.48 lb) Max.: 27 kg (59.52 lb)	-17 to 27 kg (-37.48 to 59.52 lb)	-
RL SENS WEIGHT	Rear left sensor weight information/ Min.: -17 kg (-37.48 lb) Max.: 37 kg (81.57 lb)	-17 to 37 kg (-37.48 to 81.57 lb)	-
RR SENS WEIGHT	Rear right sensor weight information/ Min.: -17 kg (-37.48 lb) Max.: 37 kg (81.57 lb)	-17 to 37 kg (-37.48 to 81.57 lb)	-
TOTAL WEIGHT	Total weight information/ Min.: -68 kg (-149.91 lb) Max.: 128 kg (282.19 lb)	-68 to 128 kg (-149.91 to 282.19 lb)	-
#PRESENT CODES	Number of present DTCs Min.: 0, Max.: 255	0	-
#PAST CODES	Number of past DTCs Min.: 0, Max.: 255	0	-

DIAGNOSTIC TROUBLE CODE CHART

If a trouble code is displayed during the DTC check, check the circuit listed for the code in the table below (proceed to the page listed for that circuit).

1. Occupant Classification ECU

HINT:

When DTC B1650/32 is detected as a result of troubleshooting the Supplemental Restraint System, perform troubleshooting for the occupant classification system as shown in the chart below.

DTC No.	Detection Item	Trouble Area	Passenger Airbag ON/OFF Indicator (OFF Indicator)	See page
B1771	Passenger Side Buckle Switch Circuit Malfunction	1. Front seat inner belt assembly (Buckle switch RH) 2. No. 1 seat wire 3. Floor wire 4. Occupant classification ECU	ON	RS-370
B1780	Front Occupant Classification Sensor LH Circuit Malfunction	1. Front seat with adjuster frame assembly RH (Occupant classification sensor front LH) 2. No. 1 seat wire 3. Occupant classification ECU	ON	RS-377
B1781	Front Occupant Classification Sensor RH Circuit Malfunction	1. Front seat with adjuster frame assembly RH (Occupant classification sensor front RH) 2. No. 1 seat wire 3. Occupant classification ECU	ON	RS-385
B1782	Rear Occupant Classification Sensor LH Circuit Malfunction	1. Front seat with adjuster frame assembly RH (Occupant classification sensor rear LH) 2. No. 1 seat wire 3. Occupant classification ECU	ON	RS-393
B1783	Rear Occupant Classification Sensor RH Circuit Malfunction	1. Front seat with adjuster frame assembly RH (Occupant classification sensor rear RH) 2. No. 1 seat wire 3. Occupant classification ECU	ON	RS-401
B1785	Front Occupant Classification Sensor LH Collision Detection	1. Front seat with adjuster frame assembly RH (Occupant classification sensor front LH) 2. Occupant classification ECU	ON	RS-409
B1786	Front Occupant Classification Sensor RH Collision Detection	1. Front seat with adjuster frame assembly RH (Occupant classification sensor front RH) 2. Occupant classification ECU	ON	RS-413
B1787	Rear Occupant Classification Sensor LH Collision Detection	1. Front seat with adjuster frame assembly RH (Occupant classification sensor rear LH) 2. Occupant classification ECU	ON	RS-417
B1788	Rear Occupant Classification Sensor RH Collision Detection	1. Front seat with adjuster frame assembly RH (Occupant classification sensor rear RH) 2. Occupant classification ECU	ON	RS-421
B1790	Center Airbag Sensor Assembly Communication Circuit Malfunction	1. Floor wire 2. No. 1 seat wire 3. Occupant classification ECU 4. Center airbag sensor assembly	ON	RS-425
B1793	Occupant Classification Sensor Power Supply Circuit Malfunction	1. Front seat with adjuster frame assembly RH (Occupant classification sensors) 2. No. 1 seat wire 3. Occupant classification ECU	ON	RS-434
B1794	Open in Occupant Classification ECU Battery Positive Line	1. Wire harness 2. Occupant classification ECU	ON	RS-441
B1795	Occupant Classification ECU Malfunction	1. Occupant classification ECU	ON	RS-446

DTC No.	Detection Item	Trouble Area	Passenger Airbag ON/ OFF Indicator (OFF Indicator)	See page
B1796	Sleep Operation Failure of Occupant Classification ECU	1. Occupant classification ECU	ON	RS-448

DTC	B1771	Passenger Side Buckle Switch Circuit Malfunction

DESCRIPTION

The passenger side buckle switch circuit consists of the occupant classification ECU and the front seat inner belt assembly RH.

DTC B1771 is recorded when a malfunction is detected in the passenger side buckle switch circuit.

Troubleshoot DTC B1771 first when DTCs B1771 and B1795 are output simultaneously.

DTC No.	DTC Detecting Condition	Trouble Area
B1771	• Occupant classification ECU detects line short circuit signal, open circuit signal, short circuit to ground signal or short circuit to B+ signal in the passenger side buckle switch circuit for 2 seconds • Passenger side buckle switch malfunction • Occupant classification ECU malfunction	• No .1 seat wire • Floor wire • Front seat inner belt assembly RH (Buckle switch RH) • Occupant classification ECU

HINT:

- When DTC B1650/32 is detected as a result of troubleshooting the supplemental restraint system, perform troubleshooting for DTC B1771 of the occupant classification system.
- Use the intelligent tester to check for DTCs of the occupant classification ECU, otherwise the DTC cannot be read.

WIRING DIAGRAM

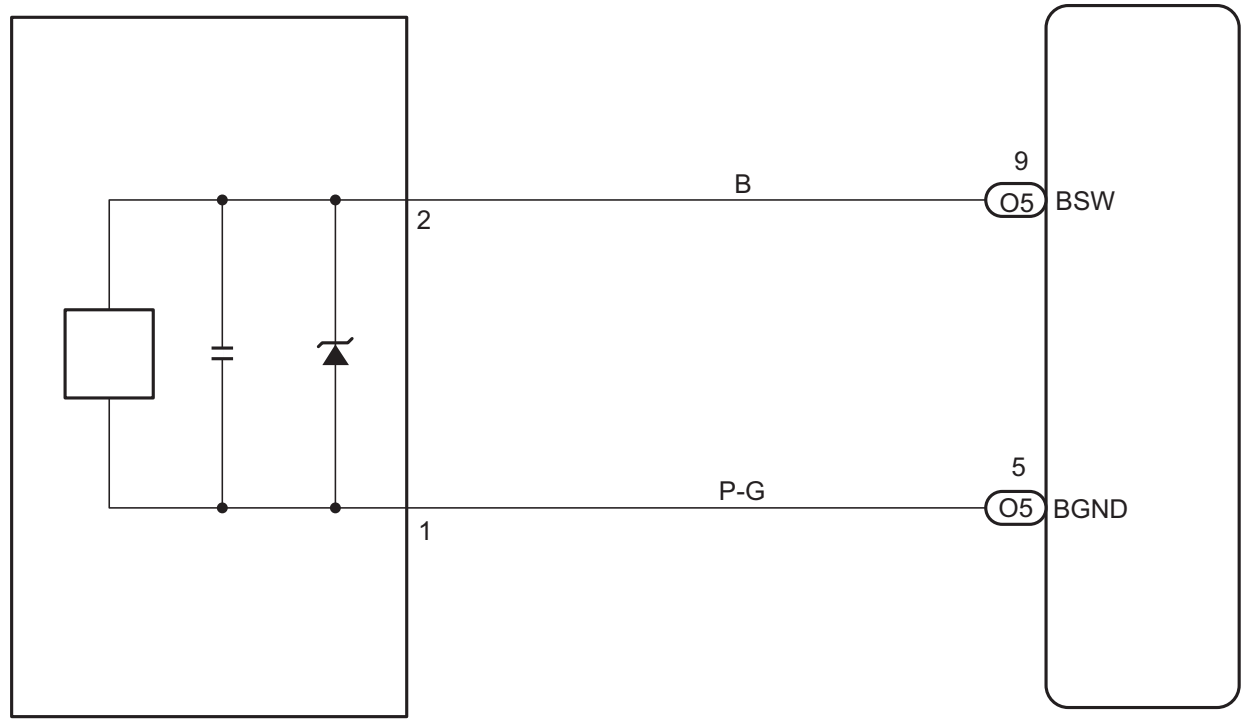

HINT:

- If troubleshooting (wire harness inspection) is difficult to perform, remove the front passenger seat installation bolts to see the under surface of the seat cushion.
- In the above case, hold the seat so that it does not tip over. Holding the seat for a long period of time may cause a problem, such as seat rail deformation. Hold the seat up only for as long as necessary.

RS

1	CHECK DTC

(a) Turn the ignition switch to the on position.
(b) Clear the DTCs stored in the memory (See page RS-365).
HINT:
First clear DTCs stored in the occupant classification ECU and then in the center airbag sensor assembly.
(c) Turn the ignition switch to the lock position.
(d) Turn the ignition switch to the on position.
(e) Check the DTCs (See page RS-365).
OK:
DTC B1771 is not output.

HINT:
Codes other than DTC B1771 may be output at this time, but they are not related to this check.

OK → **USE SIMULATION METHOD TO CHECK**

NG

2	CHECK CONNECTION OF CONNECTORS

(a) Turn the ignition switch to the lock position.
(b) Disconnect the negative (-) terminal cable from the battery, and wait for at least 90 seconds.
(c) Check that the connectors are properly connected to the occupant classification ECU and the front seat inner belt assembly RH.
OK:
The connectors are properly connected.

NG → **CONNECT CONNECTORS**

OK

3	CHECK CONNECTORS

(a) Check that the connectors (on the occupant classification ECU side and buckle switch RH side) are not damaged (See page IN-34).
OK:
The connectors are not deformed or damaged.

NG → **REPAIR OR REPLACE WIRE HARNESS**

OK

4 CHECK NO. 1 SEAT WIRE (TO B+)

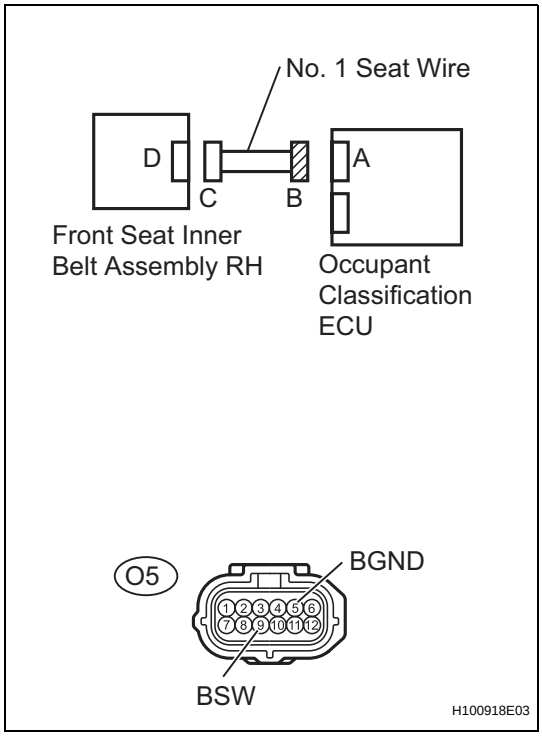

(a) Disconnect the connectors from the occupant classification ECU and the front seat inner belt assembly RH.
(b) Connect the negative (-) terminal cable to the battery.
(c) Turn the ignition switch to the on position.
(d) Measure the voltage.

Standard voltage

Tester connection	Condition	Specified condition
O5-9 (BSW) - Body ground	Ignition switch on	Below 1 V
O5-5 (BGND) - Body ground	Ignition switch on	Below 1 V

NG → **REPAIR OR REPLACE NO. 1 SEAT WIRE**

OK

5 CHECK NO. 1 SEAT WIRE (FOR OPEN)

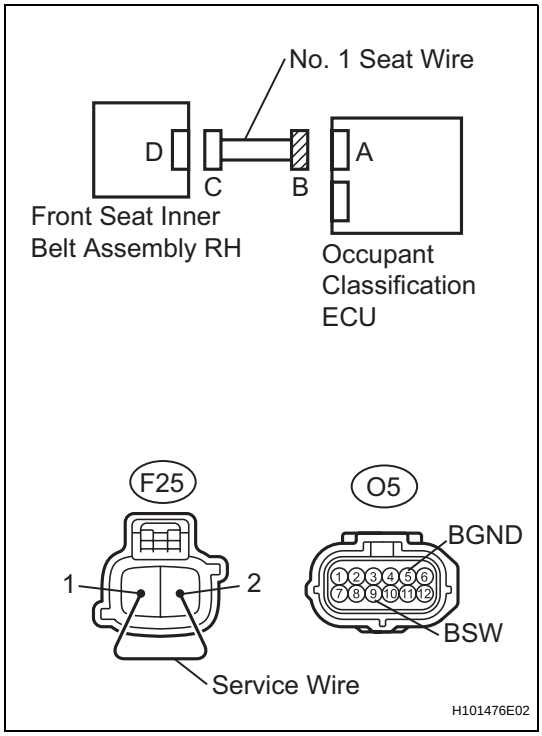

(a) Turn the ignition switch to the lock position.
(b) Disconnect the negative (-) terminal cable from the battery, and wait for at least 90 seconds.
(c) Using a service wire, connect J11-2 and J11-1 of connector C.

NOTICE:
Do not forcibly insert a service wire into the terminals of the connector when connecting.

(d) Measure the resistance.

Standard resistance

Tester connection	Condition	Specified condition
O5-9 (BSW) - O5-5 (BGND)	Always	Below 1 Ω

NG → **REPAIR OR REPLACE NO. 1 SEAT WIRE**

OK

RS

6 CHECK NO. 1 SEAT WIRE (FOR SHORT)

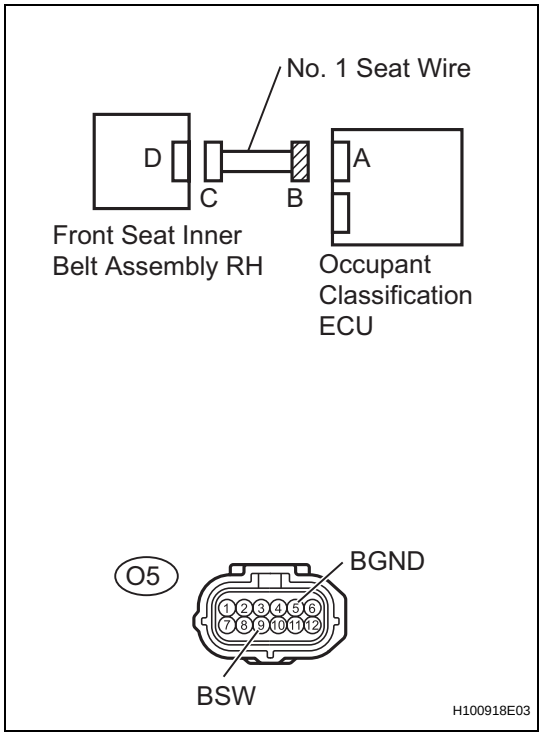

(a) Disconnect the service wire from connector C.
(b) Measure the resistance.
Standard resistance

Tester connection	Condition	Specified condition
O5-9 (BSW) - O5-5 (BGND)	Always	1 MΩ or higher

NG → **REPAIR OR REPLACE NO. 1 SEAT WIRE**

OK

7 CHECK NO. 1 SEAT WIRE (TO GROUND)

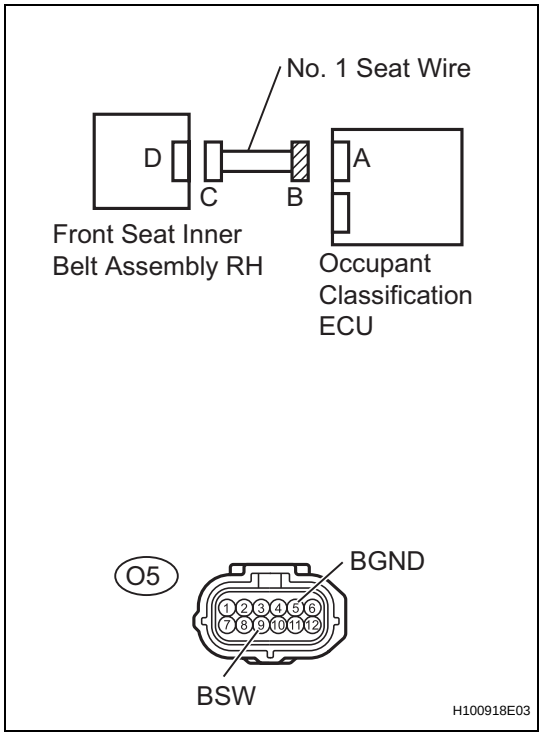

(a) Measure the resistance.
Standard resistance

Tester connection	Condition	Specified condition
O5-9 (BSW) - Body ground	Always	1 MΩ or higher
O5-5 (BGND) - Body ground	Always	1 MΩ or higher

NG → **REPAIR OR REPLACE NO. 1 SEAT WIRE**

OK

8	CHECK DTC

(a) Connect the connectors to the occupant classification ECU and the front seat inner belt assembly RH.
(b) Connect the negative (-) terminal cable to the battery.
(c) Turn the ignition switch to the on position.
(d) Clear the DTCs stored in the memory (See page RS-365).
HINT:
First clear DTCs stored in the occupant classification ECU and then in the center airbag sensor assembly.
(e) Turn the ignition switch to the lock position.
(f) Turn the ignition switch to the on position.
(g) Check the DTCs (See page RS-365).
OK:
DTC B1771 is not output.
HINT:
Codes other than DTC B1771 may be output at this time, but they are not related to this check.

OK	USE SIMULATION METHOD TO CHECK

NG

9	REPLACE FRONT SEAT INNER BELT ASSEMBLY RH

(a) Turn the ignition switch to the lock position.
(b) Disconnect the negative (-) terminal cable from the battery, and wait for at least 90 seconds.
(c) Replace the front seat inner belt assembly RH (See page SB-8).
HINT:
Perform the inspection using parts from a normal vehicle if possible.
(d) Connect the negative (-) terminal cable to the battery.
(e) Turn the ignition switch to the on position.
(f) Clear the DTCs stored in the memory (See page RS-365).
HINT:
First clear DTCs stored in the occupant classification ECU and then in the center airbag sensor assembly.
(g) Turn the ignition switch to the lock position.
(h) Turn the ignition switch to the on position.
(i) Check the DTCs (See page RS-365).
OK:
DTC B1771 is not output.
HINT:
Codes other than DTC B1771 may be output at this time, but they are not related to this check.

OK	END

RS

NG

10	REPLACE OCCUPANT CLASSIFICATION ECU

(a) Turn the ignition switch to the lock position.
(b) Disconnect the negative (-) terminal cable from the battery, and wait for at least 90 seconds.
(c) Replace the occupant classification ECU (See page RS-631).

NEXT

11	PERFORM ZERO POINT CALIBRATION

(a) Connect the negative (-) terminal cable to the battery.
(b) Connect the intelligent tester to the DLC3.
(c) Turn the ignition switch to the on position.
(d) Using the intelligent tester, perform the zero point calibration (See page RS-357).
OK:
COMPLETED is displayed on the tester.

NEXT

12	PERFORM SENSITIVITY CHECK

(a) Using the intelligent tester, perform the sensitivity check (See page RS-357).
Standard values:
27 to 33 kg (59.52 to 72.75 lb)

NEXT

END

DTC	B1780	Front Occupant Classification Sensor LH Circuit Malfunction

DESCRIPTION

The occupant classification sensor front LH circuit consists of the occupant classification ECU and the occupant classification sensor front LH.
DTC B1780 is set when a malfunction is detected in the occupant classification sensor front LH circuit.

DTC No.	DTC Detecting Conditions	Trouble Areas
B1780	• The occupant classification ECU receives a line short circuit signal, an open circuit signal, a short circuit to ground signal or a short circuit to B+ signal in the occupant classification sensor front LH circuit for 2 seconds • Occupant classification sensor front LH malfunction • Occupant classification ECU malfunction	• Front seat with adjuster frame assembly RH (Occupant classification sensor front LH) • No. 1 seat wire • Occupant classification ECU

HINT:

- When DTC B1650/32 is detected as a result of troubleshooting the supplemental restraint system, perform troubleshooting for DTC B1780 of the occupant classification system.
- Use the intelligent tester to check for DTCs of the occupant classification ECU, otherwise the DTC cannot be read.

WIRING DIAGRAM

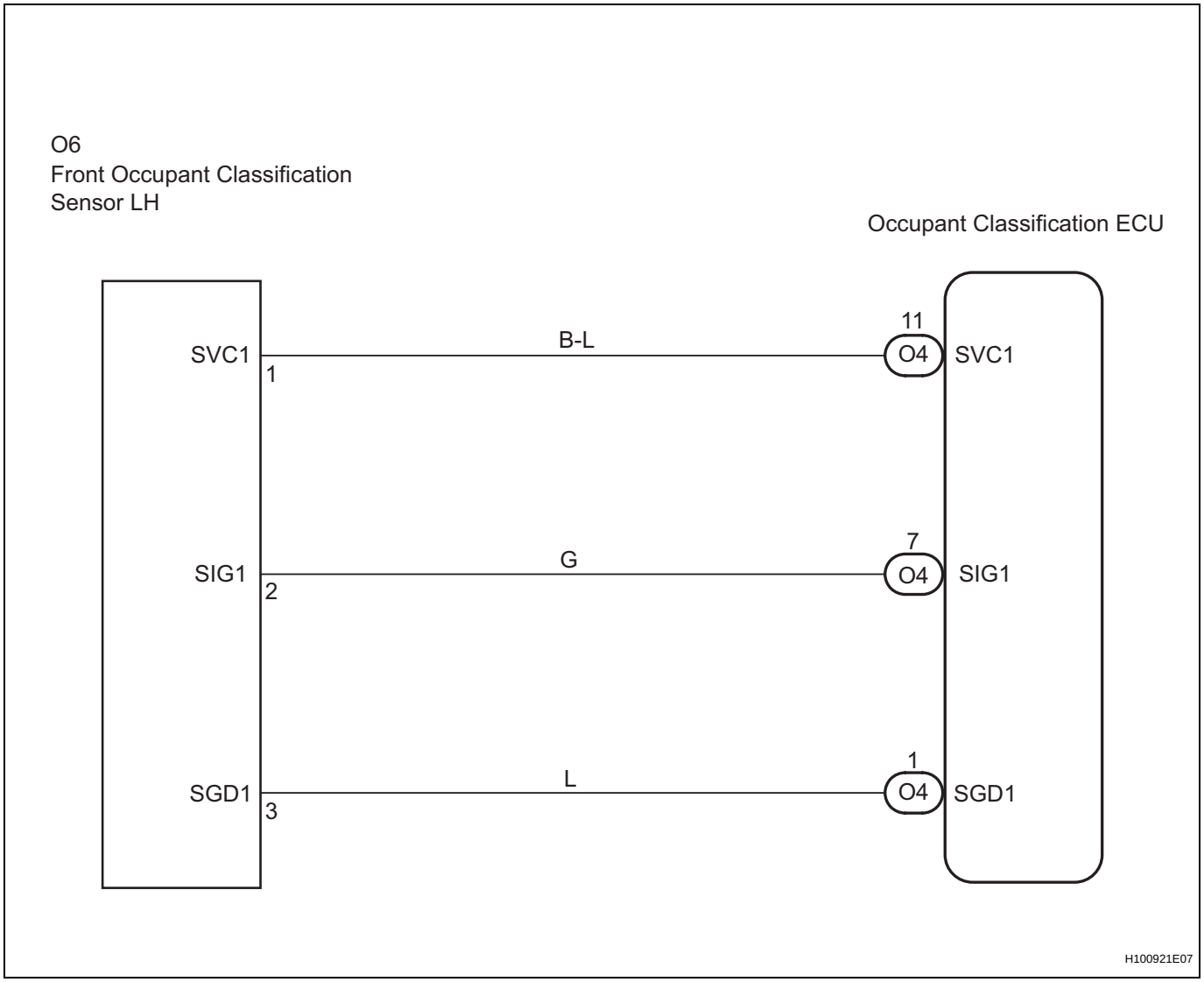

HINT:

- If troubleshooting (wire harness inspection) is difficult to perform, remove the front RH seat assembly installation bolts to see the under surface of the seat cushion.
- In the above case, hold the seat so that it does not fall down. Holding the seat for a long period of time may cause problems, such as seat rail deformation. Hold the seat up only for as long as necessary.

RS

1	CHECK DTC

(a) Turn the ignition switch to the ON position.
(b) Clear any DTCs stored in the memory (See page RS-365).

HINT:

- First clear DTCs stored in the occupant classification ECU and then in the center airbag sensor assembly.
- Use the intelligent tester to clear the DTCs of the occupant classification ECU, otherwise the DTCs cannot be cleared.

(c) Turn the ignition switch to the LOCK position.
(d) Turn the ignition switch to the ON position.

(e) Using the intelligent tester, check for DTCs of the occupant classification ECU (See page RS-365).
OK:
DTC B1780 is not output.

HINT:
DTCs other than B1780 may be output at this time, but they are not related to this check.

OK → **PERFORM SENSITIVITY CHECK**

NG

2	CHECK CONNECTION OF CONNECTORS

(a) Turn the ignition switch to the LOCK position.
(b) Disconnect the negative (-) terminal cable from the battery, and wait for at least 90 seconds.
(c) Check that the connectors are properly connected to the occupant classification ECU and the occupant classification sensor front LH.
OK:
The connectors are properly connected.

NG → **CONNECT CONNECTORS**

OK

3	CHECK CONNECTORS

(a) Check that the connectors (on the occupant classification ECU side and occupant classification sensor front LH side) are not damaged (See page IN-34).
OK:
The connectors are not deformed or damaged.

NG → **REPAIR OR REPLACE WIRE HARNESS**

OK

4 CHECK NO. 1 SEAT WIRE (TO B+)

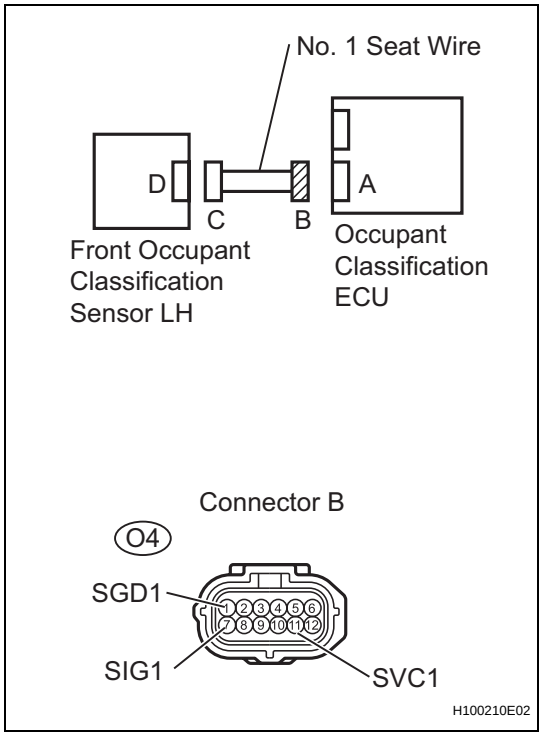

(a) Disconnect the connectors from the occupant classification ECU and the occupant classification sensor front LH.
(b) Connect the negative (-) terminal cable to the battery.
(c) Turn the ignition switch to the ON position.
(d) Measure the voltage.

Standard voltage

Tester Connection	Condition	Specified Condition
O4-1 (SGD1) - Body ground	Ignition switch ON	Below 1 V
O4-7 (SIG1) - Body ground	Ignition switch ON	Below 1 V
O4-11 (SVC1) - Body ground	Ignition switch ON	Below 1 V

NG → **REPAIR OR REPLACE NO. 1 SEAT WIRE**

OK

5 CHECK NO. 1 SEAT WIRE (FOR OPEN)

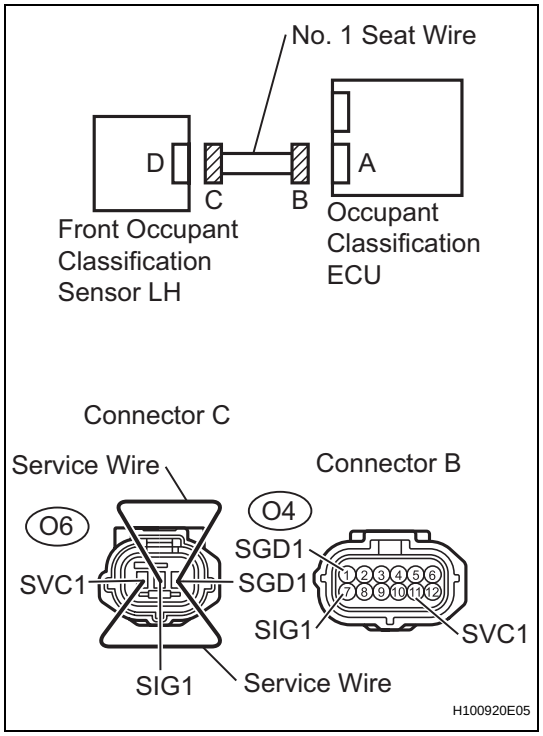

(a) Turn the ignition switch to the LOCK position.
(b) Disconnect the negative (-) terminal cable from the battery, and wait for at least 90 seconds.
(c) Using service wires, connect O6-1 (SVC1) and O6-3 (SGD1), and connect O6-2 (SIG1) and O6-3 (SGD1) of connector C.

NOTICE:
Do not forcibly insert the service wires into the terminals of the connector when connecting.

(d) Measure the resistance.

Standard resistance

Tester Connection	Condition	Specified Condition
O4-7 (SIG1) - O4-1 (SGD1)	Always	Below 1 Ω
O4-11 (SVC1) - O4-1 (SGD1)	Always	Below 1 Ω

NG → **REPAIR OR REPLACE NO. 1 SEAT WIRE**

OK

RS

6 CHECK NO. 1 SEAT WIRE (FOR SHORT)

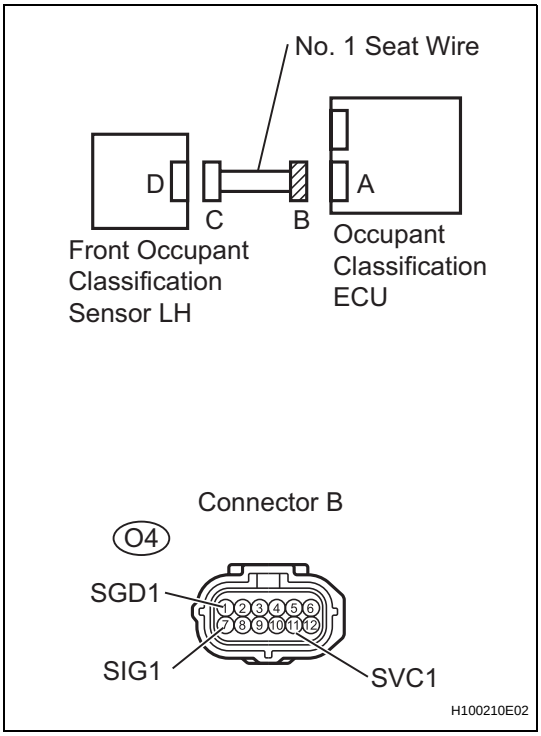

(a) Disconnect the service wires from connector C.
(b) Measure the resistance.
Standard resistance

Tester Connection	Condition	Specified Condition
O4-7 (SIG1) - O4-1 (SGD1)	Always	1 MΩ or higher
O4-11 (SVC1) - O4-1 (SGD1)	Always	1 MΩ or higher
O4-7 (SIG1) - O4-11 (SVC1)	Always	1 MΩ or higher

NG → REPAIR OR REPLACE NO. 1 SEAT WIRE

OK

7 CHECK NO. 1 SEAT WIRE (TO GROUND)

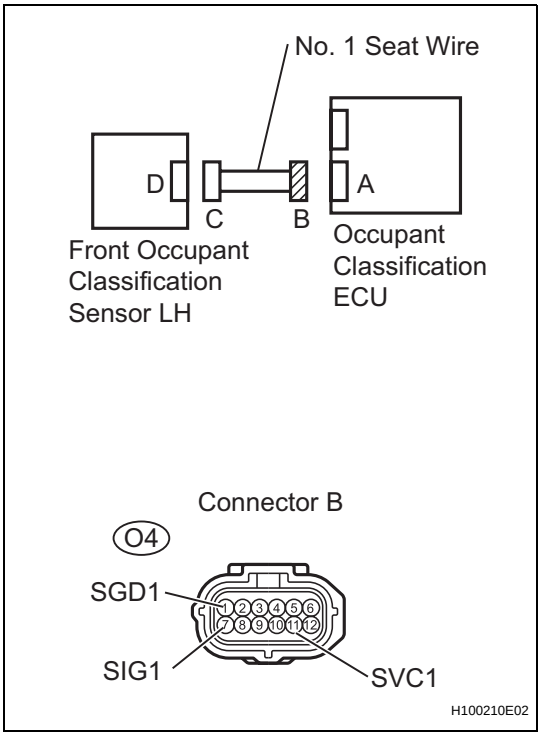

(a) Measure the resistance.
Standard resistance

Tester Connection	Condition	Specified Condition
O4-1 (SGD1) - Body ground	Always	1 MΩ or higher
O4-7 (SIG1) - Body ground	Always	1 MΩ or higher
O4-11 (SVC1) - Body ground	Always	1 MΩ or higher

NG → REPAIR OR REPLACE NO. 1 SEAT WIRE

OK

RS

8	CHECK DTC

(a) Connect the connectors to the occupant classification ECU and the occupant classification sensor front LH.
(b) Connect the negative (-) terminal cable to the battery.
(c) Turn the ignition switch to the ON position.
(d) Clear any DTCs stored in the memory (See page RS-365).

HINT:
- First clear DTCs stored in the occupant classification ECU and then in the center airbag sensor assembly.
- Use the intelligent tester to clear the DTCs of the occupant classification ECU, otherwise the DTCs cannot be cleared.

(e) Turn the ignition switch to the LOCK position.
(f) Turn the ignition switch to the ON position.
(g) Using the intelligent tester, check for DTCs of the occupant classification ECU (See page RS-365).
OK:
DTC B1780 is not output.

HINT:
DTCs other than B1780 may be output at this time, but they are not related to this check.

OK	USE SIMULATION METHOD TO CHECK

NG

9	REPLACE OCCUPANT CLASSIFICATION ECU

(a) Turn the ignition switch to the LOCK position.
(b) Disconnect the negative (-) terminal cable from the battery, and wait for at least 90 seconds.
(c) Replace the occupant classification ECU (See page RS-631).

HINT:
Perform the inspection using parts from a normal vehicle when possible.

NEXT

10	PERFORM ZERO POINT CALIBRATION

(a) Connect the negative (-) terminal cable to the battery.
(b) Connect the intelligent tester to the DLC3.
(c) Turn the ignition switch to the ON position.
(d) Using the intelligent tester, perform the zero point calibration (See page RS-357).
OK:
COMPLETED is displayed on the tester.

NG	Go to step 13

OK

11	PERFORM SENSITIVITY CHECK

(a) Using the intelligent tester, perform the sensitivity check (See page RS-357).
Standard value:
27 to 33 kg (59.52 to 72.75 lb)

NG → **Go to step 13**

OK

12	CHECK DTC

(a) Connect the negative (-) terminal cable to the battery.
(b) Turn the ignition switch to the ON position.
(c) Clear any DTCs stored in the memory (See page RS-365).

HINT:
- First clear DTCs stored in the occupant classification ECU and then in the center airbag sensor assembly.
- Use the intelligent tester to clear the DTCs of the occupant classification ECU, otherwise the DTCs cannot be cleared.

(d) Turn the ignition switch to the LOCK position.
(e) Turn the ignition switch to the ON position.
(f) Using the intelligent tester, check for DTCs of the occupant classification ECU (See page RS-365).
OK:
DTC B1780 is not output.

HINT:
DTCs other than B1780 may be output at this time, but they are not related to this check.

OK → **USE SIMULATION METHOD TO CHECK**

NG

RS

13	REPLACE FRONT SEAT WITH ADJUSTER FRAME ASSEMBLY RH

(a) Turn the ignition switch to the LOCK position.
(b) Disconnect the negative (-) terminal cable from the battery, and wait for at least 90 seconds.
(c) Replace the front seat with adjuster frame assembly RH (See page SE-38).

NEXT

14	PERFORM ZERO POINT CALIBRATION

(a) Connect the negative (-) terminal cable to the battery.
(b) Connect the intelligent tester to the DLC3.
(c) Turn the ignition switch to the ON position.

(d) Using the intelligent tester, perform the zero point calibration (See page RS-357).
OK:
COMPLETED is displayed on the tester.

NEXT

15	PERFORM SENSITIVITY CHECK

(a) Using the intelligent tester, perform the sensitivity check (See page RS-357).
Standard value:
27 to 33 kg (59.52 to 72.75 lb)

NEXT

USE SIMULATION METHOD TO CHECK

DTC	B1781	Front Occupant Classification Sensor RH Circuit Malfunction

DESCRIPTION

The front occupant classification sensor RH circuit consists of the occupant classification ECU and the front occupant classification sensor RH.
DTC B1781 is set when a malfunction is detected in the front occupant classification sensor RH circuit.

DTC No.	DTC Detecting Conditions	Trouble Areas
B1781	• The occupant classification ECU receives a line short circuit signal, an open circuit signal, a short circuit to ground signal or a short circuit to B+ signal in the front occupant classification sensor RH circuit for 2 seconds • Occupant classification sensor front RH malfunction • Occupant classification ECU malfunction	• Front seat with adjuster frame assembly RH (Front occupant classification sensor RH) • No. 1 seat wire • Occupant classification ECU

HINT:

- When DTC B1650/32 is detected as a result of troubleshooting the supplemental restraint system, perform troubleshooting for DTC B1781 of the occupant classification system.
- Use the intelligent tester to check for DTCs of the occupant classification ECU, otherwise the DTC cannot be read.

WIRING DIAGRAM

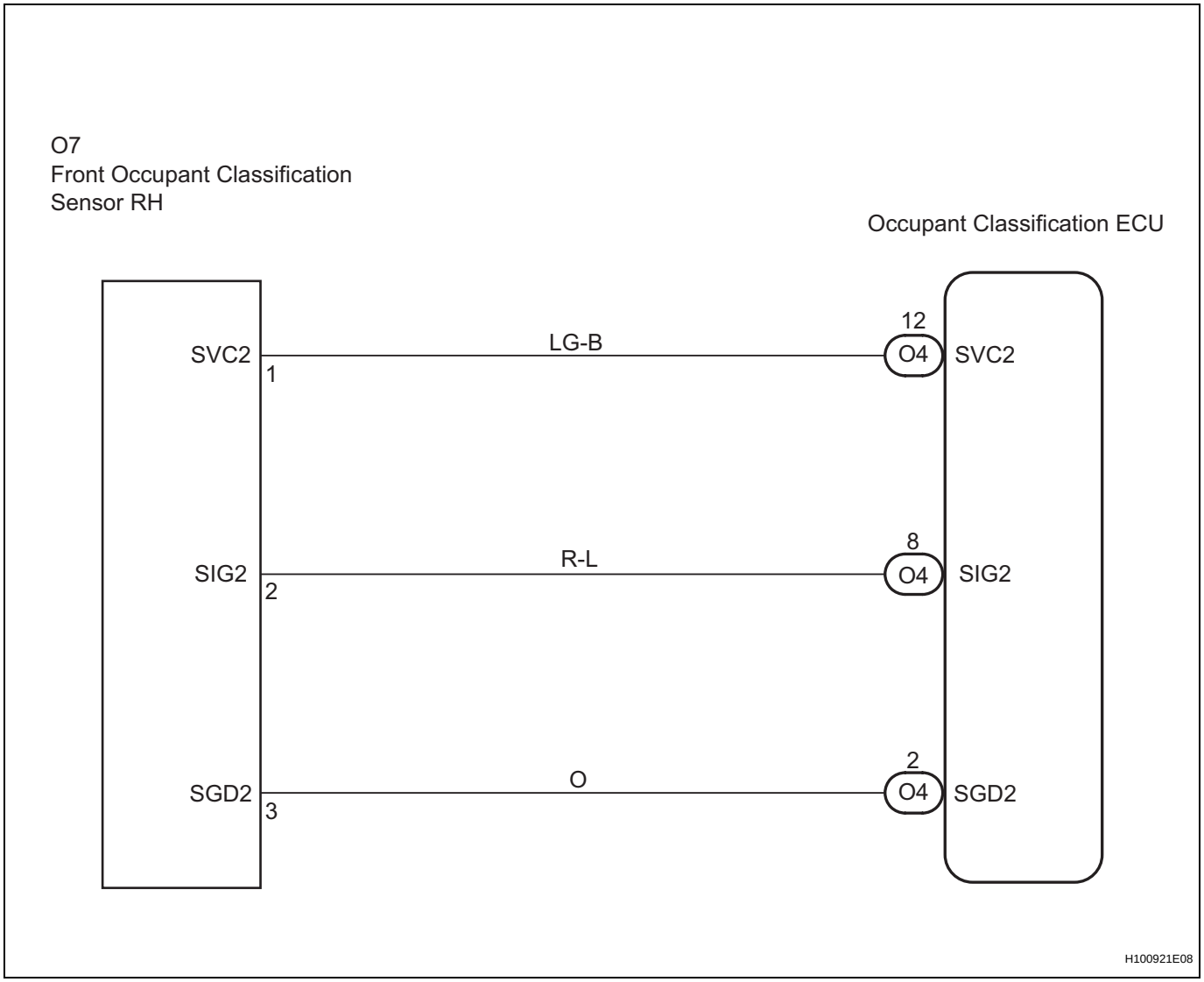

HINT:

- If troubleshooting (wire harness inspection) is difficult to perform, remove the front RH seat assembly installation bolts to see the under surface of the seat cushion.
- In the above case, hold the seat so that it does not fall down. Holding the seat for a long period of time may cause problems, such as seat rail deformation. Hold the seat up only for as long as necessary.

RS

1	CHECK DTC

(a) Turn the ignition switch to the ON position.
(b) Clear any DTCs stored in the memory (See page RS-365).

HINT:

- First clear DTCs stored in the occupant classification ECU and then in the center airbag sensor assembly.
- Use the intelligent tester to clear the DTCs of the occupant classification ECU, otherwise the DTCs cannot be cleared.

(c) Turn the ignition switch to the LOCK position.
(d) Turn the ignition switch to the ON position.

(e) Using the intelligent tester, check for DTCs of the occupant classification ECU (See page RS-365).
OK:
DTC B1781 is not output.

HINT:
DTCs other than B1781 may be output at this time, but they are not related to this check.

OK	**USE SIMULATION METHOD TO CHECK**

NG

2	**CHECK CONNECTION OF CONNECTORS**

(a) Turn the ignition switch to the LOCK position.
(b) Disconnect the negative (-) terminal cable from the battery, and wait for at least 90 seconds.
(c) Check that the connectors are properly connected to the occupant classification ECU and the front occupant classification sensor RH.
OK:
The connectors are properly connected.

NG	**OTHERS CONNECTORS**

OK

3	**CHECK CONNECTORS**

(a) Check that the connectors (on the occupant classification ECU side and front occupant classification sensor RH side) are not damaged (See page IN-34).
OK:
The connectors are not deformed or damaged.

NG	**REPAIR OR REPLACE WIRE HARNESS**

OK

4 CHECK NO. 1 SEAT WIRE (TO B+)

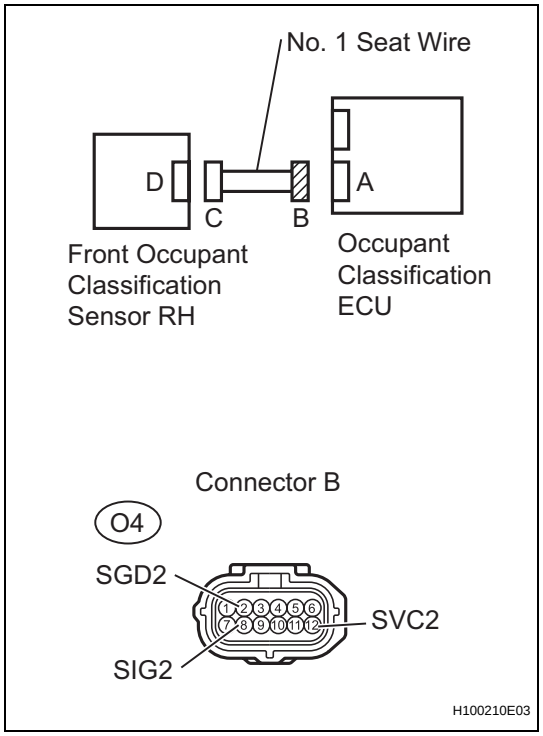

(a) Disconnect the connectors from the occupant classification ECU and the front occupant classification sensor RH.
(b) Connect the negative (-) terminal cable to the battery.
(c) Turn the ignition switch to the ON position.
(d) Measure the voltage.

Standard voltage

Tester Connection	Condition	Specified Condition
O4-2 (SGD2) - Body ground	Ignition switch ON	Below 1 V
O4-8 (SIG2) - Body ground	Ignition switch ON	Below 1 V
O4-12 (SVC2) - Body ground	Ignition switch ON	Below 1 V

NG → **REPAIR OR REPLACE NO. 1 SEAT WIRE**

OK

5 CHECK NO. 1 SEAT WIRE (FOR OPEN)

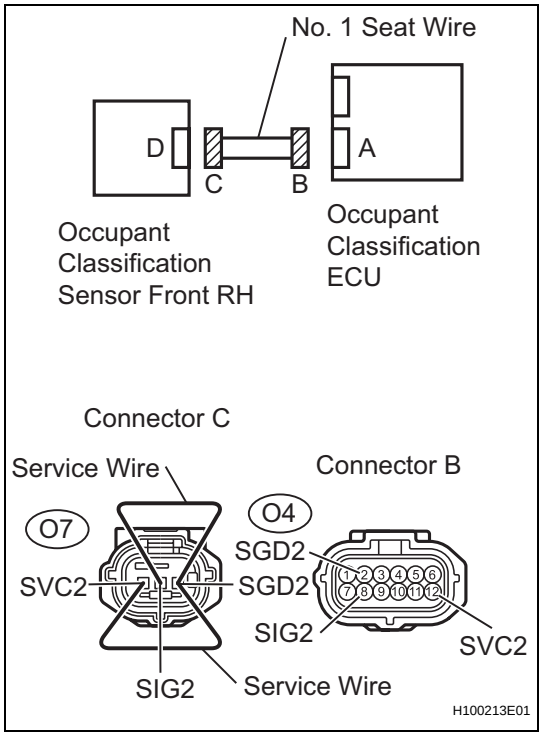

(a) Turn the ignition switch to the LOCK position.
(b) Disconnect the negative (-) terminal cable from the battery, and wait for at least 90 seconds.
(c) Using service wires, connect O7-1 (SVC2) and O7-3 (SGD2), and connect O7-2 (SIG2) and O7-3 (SGD2) of connector C.

NOTICE:
Do not forcibly insert the service wires into the terminals of the connector when connecting.

(d) Measure the resistance.

Standard resistance

Tester Connection	Condition	Specified Condition
O4-8 (SIG2) - O4-2 (SGD2)	Always	Below 1 Ω
O4-12 (SVC2) - O4-2 (SGD2)	Always	Below 1 Ω

NG → **REPAIR OR REPLACE NO. 1 SEAT WIRE**

OK

RS

6 CHECK NO. 1 SEAT WIRE (FOR SHORT)

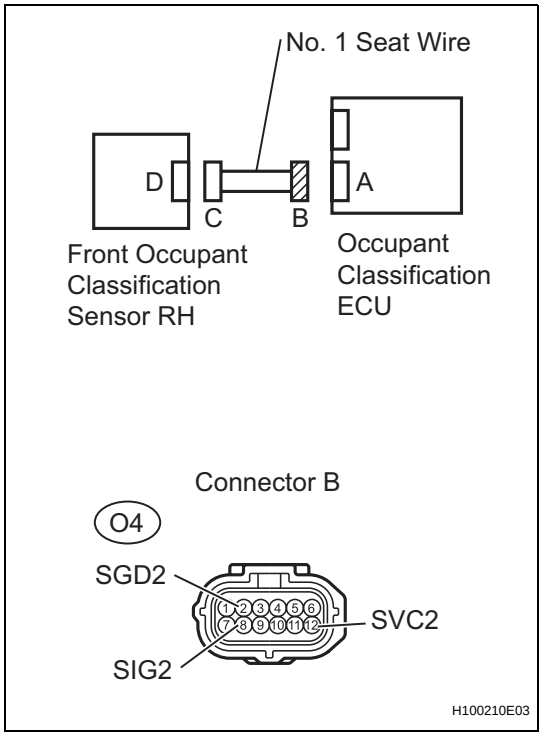

(a) Disconnect the service wires from connector C.
(b) Measure the resistance.
Standard resistance

Tester Connection	Condition	Specified Condition
O4-8 (SIG2) - O4-2 (SGD2)	Always	1 MΩ or higher
O4-12 (SVC2) - O4-2 (SGD2)	Always	1 MΩ or higher
O4-8 (SIG2) - O4-12 (SVC2)	Always	1 MΩ or higher

NG → REPAIR OR REPLACE NO. 1 SEAT WIRE

OK

7 CHECK NO. 1 SEAT WIRE (TO GROUND)

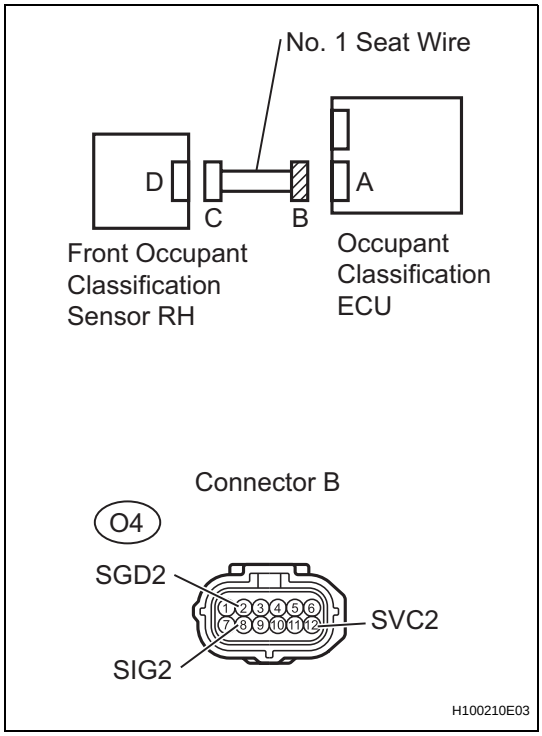

(a) Measure the resistance.
Standard resistance

Tester Connection	Condition	Specified Condition
O4-2 (SGD2) - Body ground	Always	1 MΩ or higher
O4-8 (SIG2) - Body ground	Always	1 MΩ or higher
O4-12 (SVC2) - Body ground	Always	1 MΩ or higher

NG → REPAIR OR REPLACE NO. 1 SEAT WIRE

OK

RS

8	CHECK DTC

(a) Connect the connectors to the occupant classification ECU and the front occupant classification sensor RH.
(b) Connect the negative (-) terminal cable to the battery.
(c) Turn the ignition switch to the ON position.
(d) Clear any DTCs stored in the memory (See page RS-365).

HINT:
- First clear DTCs stored in the occupant classification ECU and then in the center airbag sensor assembly.
- Use the intelligent tester to clear the DTCs of the occupant classification ECU, otherwise the DTCs cannot be cleared.

(e) Turn the ignition switch to the LOCK position.
(f) Turn the ignition switch to the ON position.
(g) Using the intelligent tester, check for DTCs of the occupant classification ECU (See page RS-365).
OK:
DTC B1781 is not output.

HINT:
DTCs other than B1781 may be output at this time, but they are not related to this check.

OK	USE SIMULATION METHOD TO CHECK

NG

9	REPLACE OCCUPANT CLASSIFICATION ECU

(a) Turn the ignition switch to the LOCK position.
(b) Disconnect the negative (-) terminal cable from the battery, and wait for at least 90 seconds.
(c) Replace the occupant classification ECU (See page RS-631).

HINT:
Perform the inspection using parts from a normal vehicle when possible.

NEXT

10	PERFORM ZERO POINT CALIBRATION

(a) Connect the negative (-) terminal cable to the battery.
(b) Connect the intelligent tester to the DLC3.
(c) Turn the ignition switch to the ON position.
(d) Using the intelligent tester, perform the zero point calibration (See page RS-357).
OK:
COMPLETED is displayed on the tester.

NG	Go to step 13

OK

11	PERFORM SENSITIVITY CHECK

(a) Using the intelligent tester, perform the sensitivity check (See page RS-357).
Standard value:
27 to 33 kg (59.52 to 72.75 lb)

NG → **Go to step 13**

OK

12	CHECK DTC

(a) Connect the negative (-) terminal cable to the battery.
(b) Turn the ignition switch to the ON position.
(c) Clear any DTCs stored in the memory (See page RS-365).

HINT:
- First clear DTCs stored in the occupant classification ECU and then in the center airbag sensor assembly.
- Use the intelligent tester to clear the DTCs of the occupant classification ECU, otherwise the DTCs cannot be cleared.

(d) Turn the ignition switch to the LOCK position.
(e) Turn the ignition switch to the ON position.
(f) Using the intelligent tester, check for DTCs of the occupant classification ECU (See page RS-365).
OK:
DTC B1781 is not output.

HINT:
DTCs other than B1781 may be output at this time, but they are not related to this check.

OK → **USE SIMULATION METHOD TO CHECK**

NG

RS

13	REPLACE FRONT SEAT WITH ADJUSTER FRAME ASSEMBLY RH

(a) Turn the ignition switch to the LOCK position.
(b) Disconnect the negative (-) terminal cable from the battery, and wait for at least 90 seconds.
(c) Replace the front seat with adjuster frame assembly RH (See page SE-38).

NEXT

14	PERFORM ZERO POINT CALIBRATION

(a) Connect the negative (-) terminal cable to the battery.
(b) Connect the intelligent tester to the DLC3.
(c) Turn the ignition switch to the ON position.

(d) Using the intelligent tester, perform the zero point calibration (See page RS-357).
OK:
COMPLETED is displayed on the tester.

NEXT

15	PERFORM SENSITIVITY CHECK

(a) Using the intelligent tester, perform the sensitivity check (See page RS-357).
Standard value:
27 to 33 kg (59.52 to 72.75 lb)

NEXT

USE SIMULATION METHOD TO CHECK

DTC	B1782	Rear Occupant Classification Sensor LH Circuit Malfunction

DESCRIPTION

The rear occupant classification sensor LH circuit consists of the occupant classification ECU and the rear occupant classification sensor LH.

DTC B1782 is set when a malfunction is detected in the rear occupant classification sensor LH circuit.

DTC No.	DTC Detecting Conditions	Trouble Areas
B1782	• The occupant classification ECU receives a line short circuit signal, an open circuit signal, a short circuit to ground signal or a short circuit to B+ signal in the rear occupant classification sensor LH circuit for 2 seconds • Rear occupant classification sensor LH malfunction • Occupant classification ECU malfunction	• Front seat with adjuster frame assembly RH (Rear occupant classification sensor LH) • No. 1 seat wire • Occupant classification ECU

HINT:

- When DTC B1650/32 is detected as a result of troubleshooting the supplemental restraint system, perform troubleshooting for DTC B1782 of the occupant classification system.
- Use the intelligent tester to check for DTCs of the occupant classification ECU, otherwise the DTCs cannot be read.

WIRING DIAGRAM

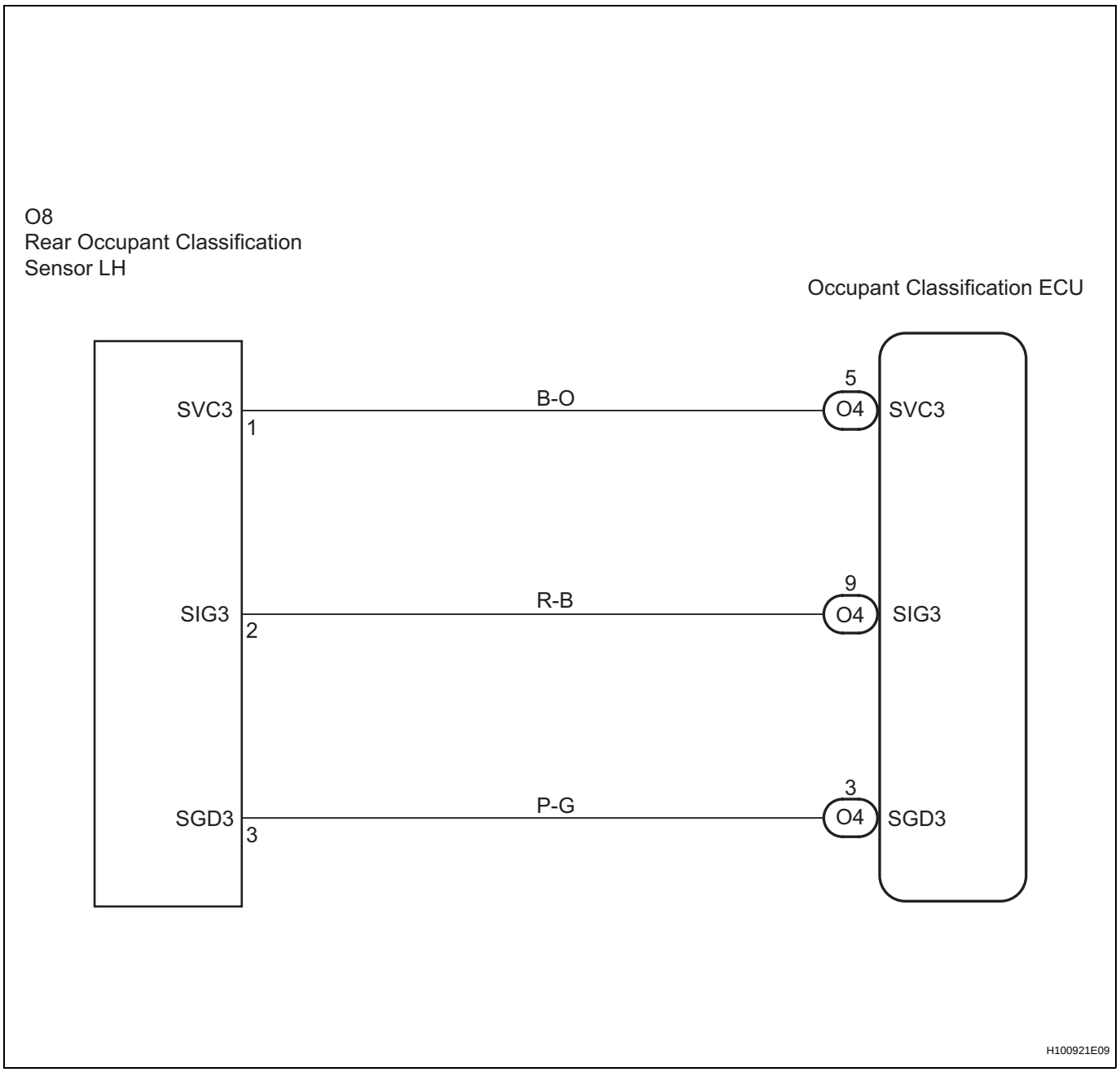

RS

HINT:

- If troubleshooting (wire harness inspection) is difficult to perform, remove the front RH seat assembly installation bolts to see the under surface of the seat cushion.
- In the above case, hold the seat so that it does not fall down. Holding the seat for a long period of time may cause problems, such as seat rail deformation. Hold the seat up only for as long as necessary.

1	**CHECK DTC**

(a) Turn the ignition switch to the ON position.
(b) Clear any DTCs stored in the memory (See page RS-365).

HINT:

- First clear DTCs stored in the occupant classification ECU and then in the center airbag sensor assembly.
- Use the intelligent tester to clear the DTCs of the occupant classification ECU, otherwise the DTCs cannot be cleared.

(c) Turn the ignition switch to the LOCK position.
(d) Turn the ignition switch to the ON position.
(e) Using the intelligent tester, check for DTCs of the occupant classification ECU (See page RS-365).
OK:
DTC B1782 is not output.

HINT:
DTCs other than B1782 may be output at this time, but they are not related to this check.

OK → **USE SIMULATION METHOD TO CHECK**

NG

2 CHECK CONNECTION OF CONNECTORS

(a) Turn the ignition switch to the LOCK position.
(b) Disconnect the negative (-) terminal cable from the battery, and wait for at least 90 seconds.
(c) Check that the connectors are properly connected to the occupant classification ECU and the rear occupant classification sensor LH.
OK:
The connectors are properly connected.

NG → **CONNECT CONNECTORS**

OK

3 REPAIR CONNECTORS

(a) Check that the connectors (on the occupant classification ECU side and rear occupant classification sensor LH side) are not damaged (See page IN-34).
OK:
The connectors are not deformed or damaged.

NG → **REPAIR OR REPLACE WIRE HARNESS**

OK

RS

4 CHECK NO. 1 SEAT WIRE (TO B+)

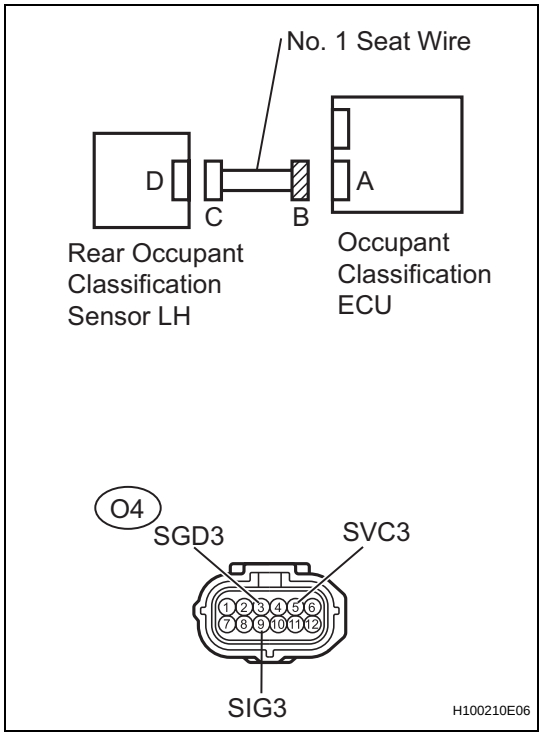

(a) Disconnect the connectors from the occupant classification ECU and the rear occupant classification sensor LH.
(b) Connect the negative (-) terminal cable to the battery.
(c) Turn the ignition switch to the ON position.
(d) Measure the voltage.

Standard voltage

Tester Connection	Condition	Specified Condition
O4-3 (SGD3) - Body ground	Ignition switch ON	Below 1 V
O4-5 (SVC3) - Body ground	Ignition switch ON	Below 1 V
O4-9 (SIG3) - Body ground	Ignition switch ON	Below 1 V

NG → **REPAIR OR REPLACE NO. 1 SEAT WIRE**

OK

5 CHECK NO. 1 SEAT WIRE (FOR OPEN)

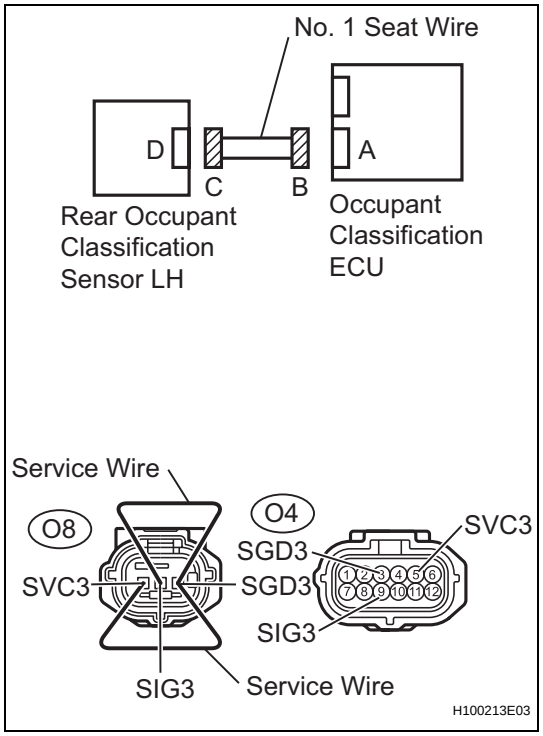

(a) Turn the ignition switch to the LOCK position.
(b) Disconnect the negative (-) terminal cable from the battery, and wait for at least 90 seconds.
(c) Using service wires, connect O8-1 (SVC3) and O8-3 (SGD3), and connect O8-2 (SIG3) and O8-3 (SGD3) of connector C.

HINT:
Do not forcibly insert the service wires into the terminals of the connector when connecting.

(d) Measure the resistance.

Standard resistance

Tester Connection	Condition	Specified Condition
O4-5 (SVC3) - O4-3 (SGD3)	Always	Below 1 Ω
O4-9 (SIG3) - O4-3 (SGD3)	Always	Below 1 Ω

NG → **REPAIR OR REPLACE NO. 1 SEAT WIRE**

OK

RS

6 CHECK NO. 1 SEAT WIRE (FOR SHORT)

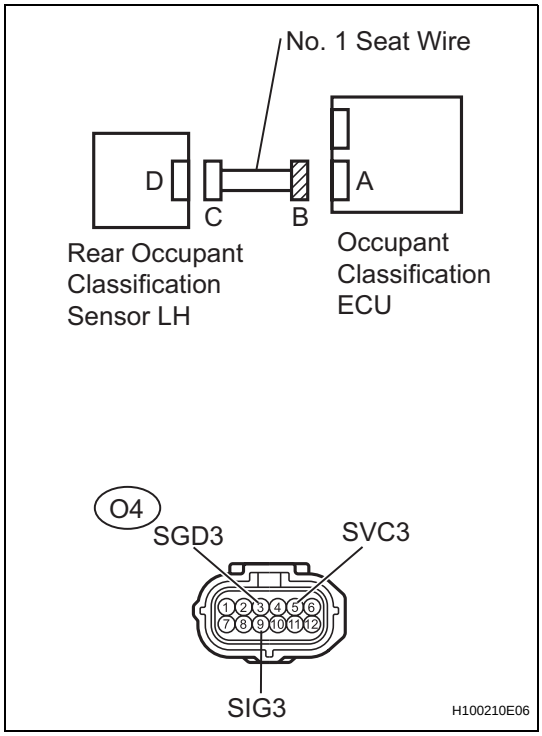

(a) Disconnect the service wires from connector C.
(b) Measure the resistance.
Standard resistance

Tester Connection	Condition	Specified Condition
O4-5 (SVC3) - O4-3 (SGD3)	Always	1 MΩ or higher
O4-9 (SIG3) - O4-3 (SGD3)	Always	1 MΩ or higher
O4-5 (SVC3) - O4-9 (SIG3)	Always	1 MΩ or higher

NG → REPAIR OR REPLACE NO. 1 SEAT WIRE

OK

7 CHECK NO. 1 SEAT WIRE (TO GROUND)

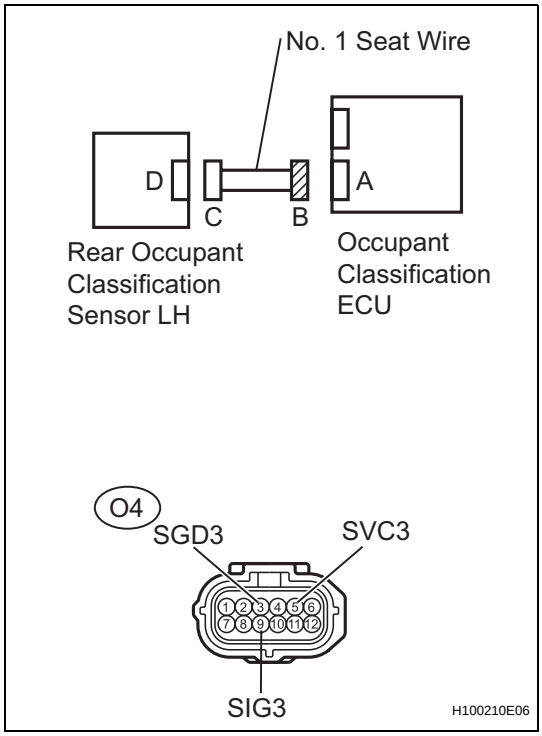

(a) Measure the resistance.
Standard resistance

Tester Connection	Condition	Specified Condition
O4-3 (SGD3) - Body ground	Always	1 MΩ or higher
O4-5 (SVC3) - Body ground	Always	1 MΩ or higher
O4-9 (SIG3) - Body ground	Always	1 MΩ or higher

NG → REPAIR OR REPLACE NO. 1 SEAT WIRE

OK

RS

8	CHECK DTC

(a) Connect the connectors to the occupant classification ECU and the rear occupant classification sensor LH.
(b) Connect the negative (-) terminal cable to the battery.
(c) Turn the ignition switch to the ON position.
(d) Clear any DTCs stored in the memory (See page RS-365).

HINT:
- First clear DTCs stored in the occupant classification ECU and then in the center airbag sensor assembly.
- Use the intelligent tester to clear the DTCs of the occupant classification ECU, otherwise the DTCs cannot be cleared.

(e) Turn the ignition switch to the LOCK position.
(f) Turn the ignition switch to the ON position.
(g) Using the intelligent tester, check for DTCs of the occupant classification ECU (See page RS-365).
OK:
DTC B1782 is not output.

HINT:
DTCs other than B1782 may be output at this time, but they are not related to this check.

OK	USE SIMULATION METHOD TO CHECK

NG

9	REPLACE OCCUPANT CLASSIFICATION ECU

(a) Turn the ignition switch to the LOCK position.
(b) Disconnect the negative (-) terminal cable from the battery, and wait for at least 90 seconds.
(c) Replace the occupant classification ECU (See page RS-631).

HINT:
Perform the inspection using parts from a normal vehicle when possible.

NEXT

RS

10	PERFORM ZERO POINT CALIBRATION

(a) Connect the negative (-) terminal cable to the battery.
(b) Connect the intelligent tester to the DLC3.
(c) Turn the ignition switch to the ON position.
(d) Using the intelligent tester, perform the zero point calibration (See page RS-357).
OK:
COMPLETED is displayed on the tester.

NG	Go to step 13

OK

11	PERFORM SENSITIVITY CHECK

(a) Using the intelligent tester, perform the sensitivity check (See page RS-357).
Standard value:
27 to 33 kg (59.52 to 72.72 lb)

NG → **Go to step 13**

OK

12	CHECK DTC

(a) Connect the negative (-) terminal cable to the battery.
(b) Turn the ignition switch to the ON position.
(c) Clear the DTCs stored in the memory (See page RS-365).

HINT:
- First clear DTCs stored in the occupant classification ECU and then in the center airbag sensor assembly.
- Use the intelligent tester to clear the DTCs of the occupant classification ECU, otherwise the DTCs cannot be cleared.

(d) Turn the ignition switch to the LOCK position.
(e) Turn the ignition switch to the ON position.
(f) Using the intelligent tester, check for DTCs of the occupant classification ECU (See page RS-365).

HINT:
DTCs other than B1782 may be output at this time, but they are not related to this check.

OK → **USE SIMULATION METHOD TO CHECK**

NG

13	REPLACE FRONT SEAT WITH ADJUSTER FRAME ASSEMBLY RH

(a) Turn the ignition switch to the LOCK position.
(b) Disconnect the negative (-) terminal cable from the battery, and wait for at least 90 seconds.
(c) Replace the front seat with adjuster frame assembly RH (See page SE-38).

NEXT

14	PERFORM ZERO POINT CALIBRATION

(a) Connect the negative (-) terminal cable to the battery.
(b) Connect the intelligent tester to the DLC3.
(c) Turn the ignition switch to the ON position.
(d) Using the intelligent tester, perform the zero point calibration (See page RS-357).

RS

OK:
COMPLETED is displayed on the tester.

NEXT

15	PERFORM SENSITIVITY CHECK

(a) Using the intelligent tester, perform the sensitivity check (See page RS-357).

NEXT

USE SIMULATION METHOD TO CHECK

DTC	B1783	Rear Occupant Classification Sensor RH Circuit Malfunction

DESCRIPTION

The rear occupant classification sensor RH circuit consists of the occupant classification ECU and the rear occupant classification sensor RH.
DTC B1783 is set when a malfunction is detected in the rear occupant classification sensor RH circuit.

DTC No.	DTC Detecting Conditions	Trouble Areas
B1783	• The occupant classification ECU receives a line short circuit signal, an open circuit signal, a short circuit to ground signal or a short circuit to B+ signal in the occupant classification sensor rear RH circuit for 2 seconds • Rear occupant classification sensor RH malfunction • Occupant classification ECU malfunction	• Front seat with adjuster frame assembly RH (Rear occupant classification sensor RH) • No. 1 seat wire • Occupant classification ECU

HINT:

- When DTC B1650/32 is detected as a result of troubleshooting the supplemental restraint system, perform troubleshooting for DTC B1783 of the occupant classification system.
- Use the intelligent tester to check for DTCs of the occupant classification ECU, otherwise the DTCs cannot be read.

WIRING DIAGRAM

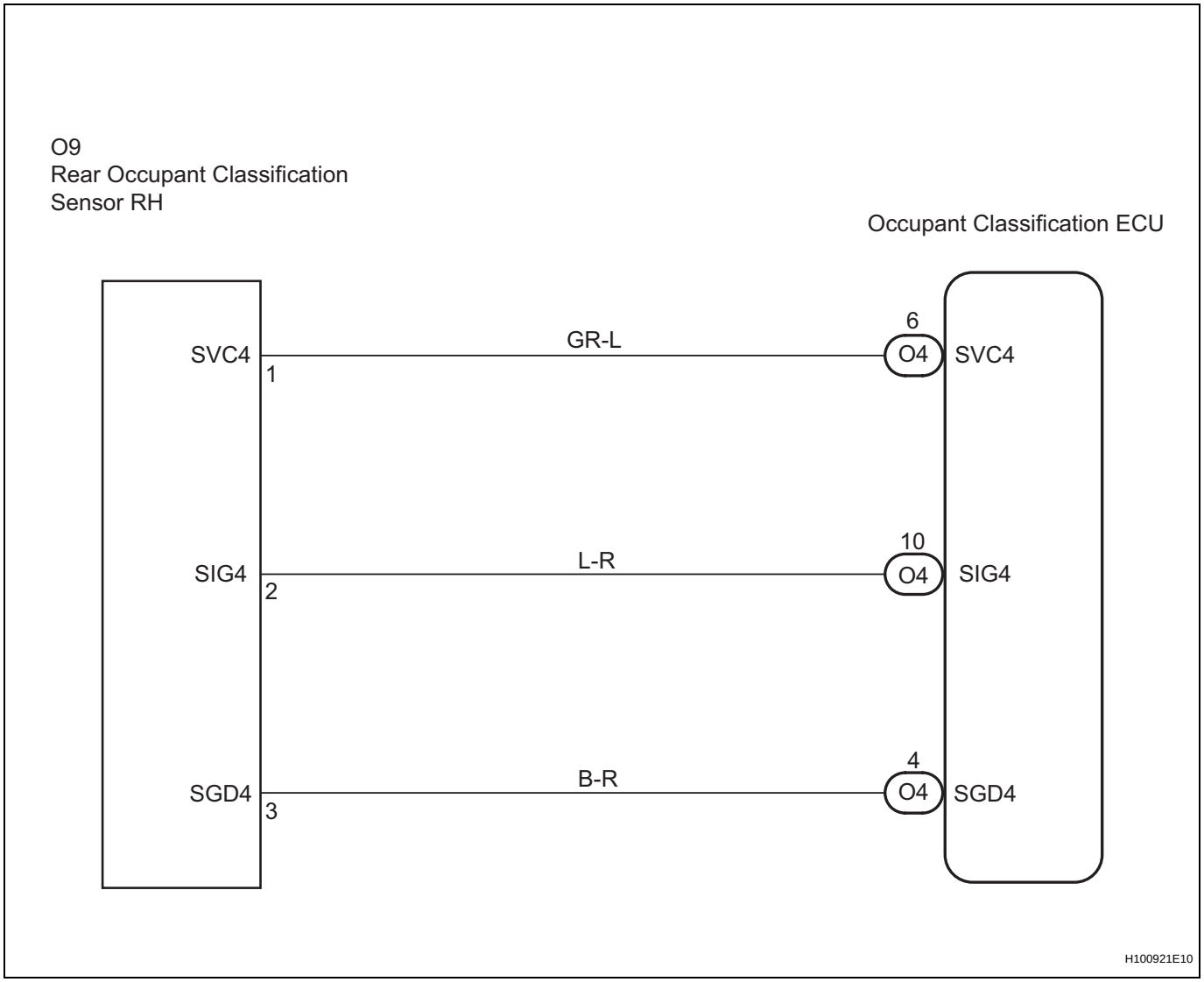

HINT:

- If troubleshooting (wire harness inspection) is difficult to perform, remove the front RH seat assembly installation bolts to see the under surface of the seat cushion.
- In the above case, hold the seat so that it does not fall down. Holding the seat for a long period of time may cause problems, such as seat rail deformation. Hold the seat up only for as long as necessary.

RS

1	CHECK DTC

(a) Turn the ignition switch to the ON position.
(b) Clear any DTCs stored in the memory (See page RS-365).

HINT:

- First clear DTCs stored in the occupant classification ECU and then in the center airbag sensor assembly.
- Use the intelligent tester to clear the DTCs of the occupant classification ECU, otherwise the DTCs cannot be cleared.

(c) Turn the ignition switch to the LOCK position.
(d) Turn the ignition switch to the ON position.

(e) Using the intelligent tester, check for DTCs of the occupant classification ECU (See page RS-365).
OK:
DTC B1783 is not output.

HINT:
DTCs other than B1783 may be output at this time, but they are not related to this check.

OK	**USE SIMULATION METHOD TO CHECK**

NG

2	**CHECK CONNECTION OF CONNECTORS**

(a) Turn the ignition switch to the LOCK position.
(b) Disconnect the negative (-) terminal cable from the battery, and wait for at least 90 seconds.
(c) Check that the connectors are properly connected to the occupant classification ECU and the rear occupant classification sensor RH.
OK:
The connectors are properly connected.

NG	**CONNECT CONNECTORS**

OK

3	**CHECK CONNECTORS**

(a) Check that the connectors (on the occupant classification ECU side and rear occupant classification sensor RH side) are not damaged (See page SE-38).
OK:
The connectors are not deformed or damaged.

NG	**REPAIR OR REPLACE WIRE HARNESS**

OK

RS

4 CHECK NO. 1 SEAT WIRE (TO B+)

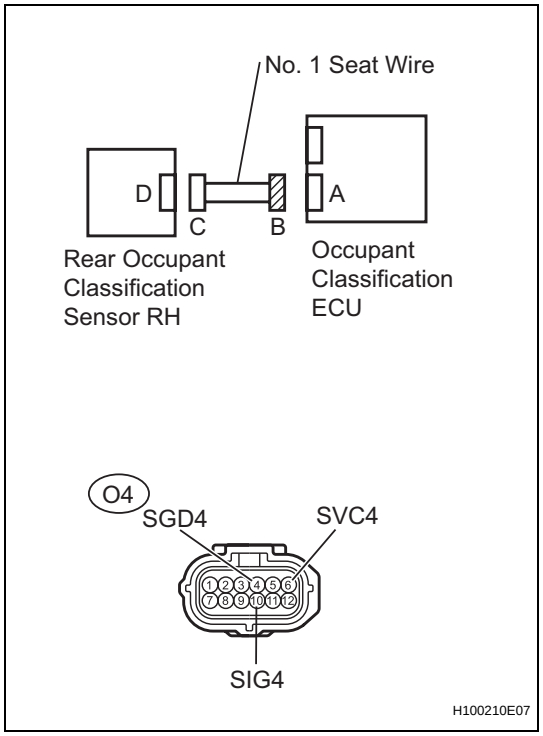

(a) Disconnect the connectors from the occupant classification ECU and the rear occupant classification sensor RH.
(b) Connect the negative (-) terminal cable to the battery.
(c) Turn the ignition switch to the ON position.
(d) Measure the voltage.

Standard voltage

Tester Connection	Condition	Specified Condition
O4-4 (SGD4) - Body ground	Ignition switch ON	Below 1 V
O4-6 (SVC4) - Body ground	Ignition switch ON	Below 1 V
O4-10 (SIG4) - Body ground	Ignition switch ON	Below 1 V

NG → **REPAIR OR REPLACE NO. 1 SEAT WIRE**

OK

5 CHECK NO. 1 SEAT WIRE (FOR OPEN)

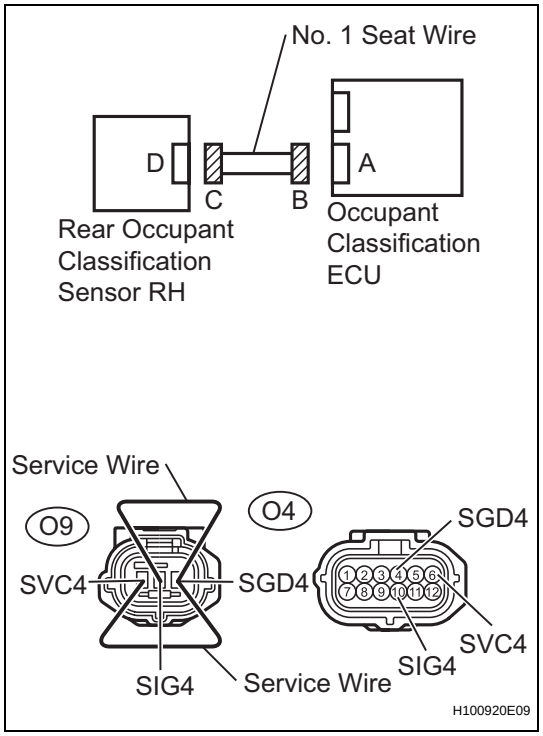

(a) Turn the ignition switch to the LOCK position.
(b) Disconnect the negative (-) terminal cable from the battery, and wait for at least 90 seconds.
(c) Using service wires, connect O9-1 (SVC4) and O9-3 (SGD4), and connect O9-2 (SIG4) and O9-3 (SGD4) of connector C.

NOTICE:
Do not forcibly insert the service wires into the terminals of the connector when connecting.

(d) Measure the resistance.

Standard resistance

Tester Connection	Condition	Specified Condition
O4-6 (SVC4) - O4-4 (SGD4)	Always	Below 1 Ω
O4-10 (SIG4) - O4-4 (SGD4)	Always	Below 1 Ω

NG → **REPAIR OR REPLACE NO. 1 SEAT WIRE**

OK

RS

6 CHECK NO. 1 SEAT WIRE (FOR SHORT)

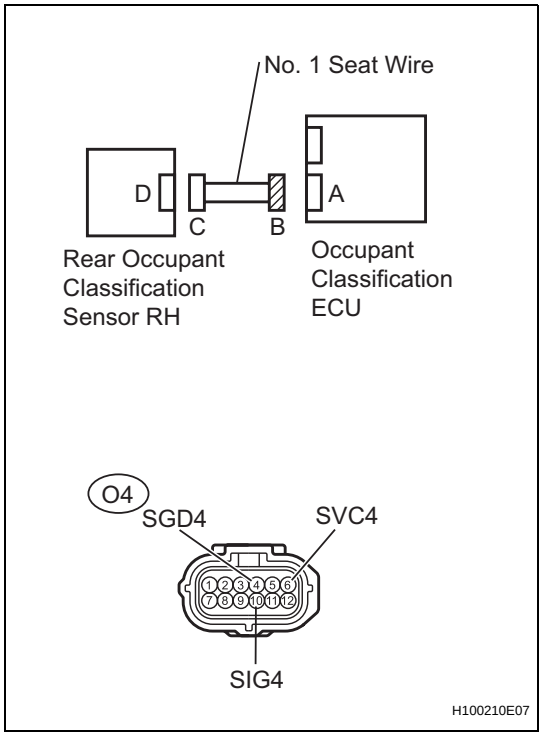

(a) Disconnect the service wires from connector C.
(b) Measure the resistance.
Standard resistance

Tester Connection	Condition	Specified Condition
O4-6 (SVC4) - O4-4 (SGD4)	Always	1 MΩ or higher
O4-10 (SIG4) - O4-4 (SGD4)	Always	1 MΩ or higher
O4-6 (SVC4) - O4-10 (SIG4)	Always	1 MΩ or higher

NG → REPAIR OR REPLACE NO. 1 SEAT WIRE

OK

7 CHECK NO. 1 SEAT WIRE (TO GROUND)

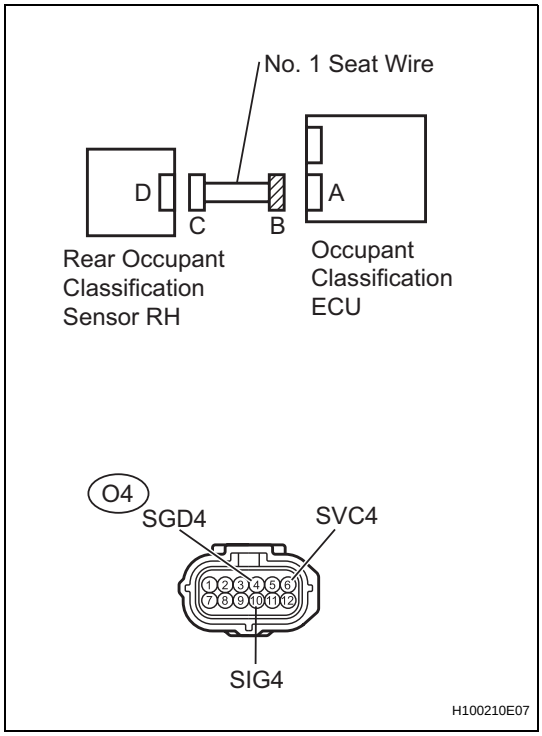

(a) Measure the resistance.
Standard voltage

Tester Connection	Condition	Specified Condition
O4-4 (SGD4) - Body ground	Always	1 MΩ or higher
O4-6 (SVC4) - Body ground	Always	1 MΩ or higher
O4-10 (SIG4) - Body ground	Always	1 MΩ or higher

NG → REPAIR OR REPLACE NO. 1 SEAT WIRE

OK

RS

8	CHECK DTC

(a) Connect the connectors to the occupant classification ECU and the rear occupant classification sensor RH.
(b) Connect the negative (-) terminal cable to the battery.
(c) Turn the ignition switch to the ON position.
(d) Clear any DTCs stored in the memory (See page RS-365).

HINT:
- First clear DTCs stored in the occupant classification ECU and then in the center airbag sensor assembly.
- Use the intelligent tester to clear the DTCs of the occupant classification ECU, otherwise the DTCs cannot be cleared.

(e) Turn the ignition switch to the LOCK position.
(f) Turn the ignition switch to the ON position.
(g) Using the intelligent tester, check for DTCs of the occupant classification ECU (See page RS-365).
OK:
DTC B1783 is not output.

HINT:
DTCs other than B1783 may be output at this time, but they are not related to this check.

OK	USE SIMULATION METHOD TO CHECK

NG

9	REPLACE OCCUPANT CLASSIFICATION ECU

(a) Turn the ignition switch to the LOCK position.
(b) Disconnect the negative (-) terminal cable from the battery, and wait for at least 90 seconds.
(c) Replace the occupant classification ECU (See page RS-631).

HINT:
Perform the inspection using parts from a normal vehicle when possible.

NEXT

RS

10	PERFORM ZERO POINT CALIBRATION

(a) Connect the negative (-) terminal cable to the battery.
(b) Connect the intelligent tester to the DLC3.
(c) Turn the ignition switch to the ON position.
(d) Using the intelligent tester, perform the zero point calibration (See page RS-357).
OK:
COMPLETED is displayed on the tester.

NG	Go to step 13

OK

11	PERFORM SENSITIVITY CHECK

(a) Using the intelligent tester, perform the sensitivity check (See page RS-357).
Standard value:
27 to 33 kg (59.52 to 72.75 lb)

NG → **Go to step 13**

OK

12	CHECK DTC

(a) Connect the negative (-) terminal cable to the battery.
(b) Turn the ignition switch to the ON position.
(c) Clear any DTCs stored in the memory (See page RS-365).

HINT:
- First clear DTCs stored in the occupant classification ECU and then in the center airbag sensor assembly.
- Use the intelligent tester to clear the DTCs of the occupant classification ECU, otherwise the DTCs cannot be cleared.

(d) Turn the ignition switch to the LOCK position.
(e) Turn the ignition switch to the ON position.
(f) Using the intelligent tester, check for DTCs of the occupant classification ECU (See page RS-365).
OK:
DTC B1783 is not output.

HINT:
DTCs other than B1783 may be output at this time, but they are not related to this check.

OK → **USE SIMULATION METHOD TO CHECK**

NG

RS

13	REPLACE FRONT SEAT WITH ADJUSTER FRAME ASSEMBLY RH

(a) Turn the ignition switch to the LOCK position.
(b) Disconnect the negative (-) terminal cable from the battery, and wait for at least 90 seconds.
(c) Replace the front seat with adjuster frame assembly RH (See page SE-38).

NEXT

14	PERFORM ZERO POINT CALIBRATION

(a) Connect the negative (-) terminal cable to the battery.
(b) Connect the intelligent tester to the DLC3.
(c) Turn the ignition switch to the ON position.

(d) Using the intelligent tester, perform the zero point calibration (See page RS-357).
OK:
COMPLETED is displayed on the tester.

NEXT

15	PERFORM SENSITIVITY CHECK

(a) Using the intelligent tester, perform the sensitivity check (See page RS-357).
Standard value:
27 to 33 kg (59.52 to 72.75 lb)

NEXT

USE SIMULATION METHOD TO CHECK

DTC	B1785	Front Occupant Classification Sensor LH Collision Detection

DESCRIPTION

DTC B1785 is set when the occupant classification ECU receives a collision detection signal, which is sent by the occupant classification sensor front LH when an accident occurs.
DTC B1785 is also set when the front seat with adjuster frame assembly RH is subjected to a strong impact, even if an actual accident has not occurred.
However, when the occupant classification ECU outputs a collision detection signal, even if the vehicle is not in a collision, DTC B1785 can be cleared by conducting the zero point calibration and sensitivity check.
Therefore, if DTC B1785 is set, first perform the zero point calibration and sensitivity check.

DTC No.	DTC Detecting Conditions	Trouble Areas
B1785	• Front seat wioth adjuster frame assembly RH malfunction • Occupant classification ECU malfunction • Front occupant classification sensor LH senses a large load	• Front seat with adjuster frame assembly RH (Front occupant classification sensor LH) • Occupant classification ECU

HINT:
- When DTC B1650/32 is set as a result of troubleshooting the supplemental restraint system, perform troubleshooting for DTC B1785 of the occupant classification system.
- Use the intelligent tester to check for DTCs of the occupant classification ECU, otherwise the DTCs cannot be read.

WIRING DIAGRAM

(See page RS-377)

1	CHECK DTC

(a) Turn the ignition switch to the ON position.
(b) Clear any DTCs stored in the center airbag sensor assembly (See page RS-365).
(c) Turn the ignition switch to the LOCK position.
(d) Turn the ignition switch to the ON position.
(e) Using the intelligent tester, check for DTCs of the occupant classification ECU (See page RS-365).
OK:
DTC B1785 is not output.

HINT:
DTCs other than B1785 may be output at this time, but they are not related to this check.

OK → **USE SIMULATION METHOD TO CHECK**

NG

2	PERFORM ZERO POINT CALIBRATION

(a) Connect the intelligent tester to the DLC3.
(b) Turn the ignition switch to the ON position.

(c) Using the intelligent tester, perform the zero point calibration (See page RS-357).
OK:
COMPLETED is displayed on the tester.

NG → **Go to step 5**

OK

3 PERFORM SENSITIVITY CHECK

(a) Using the intelligent tester, perform the sensitivity check (See page RS-357).
Standard value:
27 to 33 kg (59.52 to 72.75 lb)

NG → **Go to step 5**

OK

4 CHECK DTC

(a) Turn the ignition switch to the ON position.
(b) Clear any DTCs stored in the center airbag sensor assembly (See page RS-365).
(c) Turn the ignition switch to the LOCK position.
(d) Turn the ignition switch to the ON position.
(e) Using the intelligent tester, check for DTCs of the occupant classification ECU (See page RS-365).
OK:
DTC B1785 is not output.

HINT:
DTCs other than B1785 may be output at this time, but they are not related to this check.

OK → **USE SIMULATION METHOD TO CHECK**

NG

5 REPLACE FRONT SEAT WITH ADJUSTER FRAME ASSEMBLY RH

(a) Turn the ignition switch to the LOCK position.
(b) Disconnect the negative (-) terminal cable from the battery, and wait for at least 90 seconds.
(c) Replace the front seat with adjuster frame assembly RH (See page SE-38).

HINT:
Perform the inspection using parts from a normal vehicle when possible.

NEXT

RS

6	PERFORM ZERO POINT CALIBRATION

(a) Connect the negative (-) terminal cable to the battery.
(b) Connect the intelligent tester to the DLC3.
(c) Turn the ignition switch to the ON position.
(d) Using the intelligent tester, perform the zero point calibration (See page RS-357).
OK:
COMPLETED is displayed on the tester.

NG → **Go to step 9**

OK

7	PERFORM SENSITIVITY CHECK

(a) Using the intelligent tester, perform the sensitivity check (See page RS-357).
Standard :
27 to 33 kg (59.52 to 72.75 lb)

NG → **Go to step 9**

OK

8	CHECK DTC

(a) Connect the connectors to the occupant classification ECU and the front occupant classification sensor LH.
(b) Connect the negative (-) terminal cable to the battery.
(c) Turn the ignition switch to the ON position.
(d) Clear any DTCs stored in the memory (See page RS-365).

HINT:
- First clear DTCs stored in the occupant classification ECU and then in the center airbag sensor assembly.
- Use the intelligent tester to clear the DTCs of the occupant classification ECU, otherwise the DTCs cannot be cleared.

(e) Turn the ignition switch to the LOCK position.
(f) Turn the ignition switch to the ON position.
(g) Using the intelligent tester, check for DTCs of the occupant classification ECU (See page RS-365).
OK:
DTC B1785 is not output.

HINT:
DTCs other than B1785 may be output at this time, but they are not related to this check.

OK → **USE SIMULATION METHOD TO CHECK**

NG

RS

9	REPLACE OCCUPANT CLASSIFICATION ECU

(a) Turn the ignition switch to the LOCK position.
(b) Disconnect the negative (-) terminal cable from the battery, and wait for at least 90 seconds.
(c) Replace the occupant classification ECU (See page RS-631).

NEXT

10	PERFORM ZERO POINT CALIBRATION

(a) Connect the negative (-) terminal cable to the battery.
(b) Connect the intelligent tester to the DLC3.
(c) Turn the ignition switch to the ON position.
(d) Using the intelligent tester, perform the zero point calibration (See page RS-357).
OK:
COMPLETED is displayed on the tester.

NEXT

11	PERFORM SENSITIVITY CHECK

(a) Using the intelligent tester, perform the sensitivity check (See page RS-357).
Standard:
27 to 33 kg (59.52 to 72.75 lb)

NEXT

USE SIMULATION METHOD TO CHECK

RS

DTC	B1786	Front Occupant Classification Sensor RH Collision Detection

DESCRIPTION

DTC B1786 is set when the occupant classification ECU receives a collision detection signal, which is sent by the front occupant classification sensor RH when an accident occurs.
DTC B1786 is also set when the front seat with adjuster frame assembly RH is subjected to a strong impact, even if an actual accident has not occurred.
However, when the occupant classification ECU outputs a collision detection signal, even if the vehicle is not in a collision, DTC B1786 can be cleared by conducting the zero point calibration and sensitivity check.
Therefore, if DTC B1786 is set, first perform the zero point calibration and sensitivity check.

DTC No.	DTC Detecting Conditions	Trouble Areas
B1786	• Front seat with adjuster frame assembly RH malfunction • Occupant classification ECU malfunction • Front occupant classification sensor RH senses a large load	• Front seat with adjuster frame assembly RH (Front occupant classification sensor RH) • Occupant classification ECU

HINT:
- When DTC B1650/32 is set as a result of troubleshooting the supplemental restraint system, perform troubleshooting for DTC B1786 of the occupant classification system.
- Use the intelligent tester to check for DTCs of the occupant classification ECU, otherwise the DTCs cannot be read.

WIRING DIAGRAM

(See page RS-385)

1	CHECK DTC

(a) Turn the ignition switch to the ON position.
(b) Clear any DTCs stored in the center airbag sensor assembly (See page RS-365).
(c) Turn the ignition switch to the LOCK position.
(d) Turn the ignition switch to the ON position.
(e) Using the intelligent tester, check for DTCs of the occupant classification ECU (See page RS-365).
OK:
DTC B1786 is not output.

HINT:
DTCs other than B1786 may be output at this time, but they are not related to this check.

OK → **USE SIMULATION METHOD TO CHECK**

NG

2	PERFORM ZERO POINT CALIBRATION

(a) Connect the intelligent tester to the DLC3.
(b) Turn the ignition switch to the ON position.

(c) Using the intelligent tester, perform the zero point calibration (See page RS-357).
OK:
COMPLETED is displayed on the tester.

NG → **Go to step 5**

OK

3 PERFORM SENSITIVITY CHECK

(a) Using the intelligent tester, perform the sensitivity check (See page RS-357).
Standard:
27 to 33 kg (59.52 to 72.75 lb)

NG → **Go to step 5**

OK

4 CHECK DTC

(a) Turn the ignition switch to the ON position.
(b) Clear any DTCs stored in the center airbag sensor assembly (See page RS-365).
(c) Turn the ignition switch to the LOCK position.
(d) Turn the ignition switch to the ON position.
(e) Using the intelligent tester, check for DTCs of the occupant classification ECU (See page RS-365).
OK:
DTC B1786 is not output.

HINT:
DTCs other than B1786 may be output at this time, but they are not related to this check.

NG → **USE SIMULATION METHOD TO CHECK**

NG

5 REPLACE FRONT SEAT WITH ADJUSTER FRAME ASSEMBLY RH

(a) Turn the ignition switch to the LOCK position.
(b) Disconnect the negative (-) terminal cable from the battery, and wait for at least 90 seconds.
(c) Replace the front seat with adjuster frame assembly RH (See page SE-38).

HINT:
Perform the inspection using parts from a normal vehicle when possible.

NEXT

RS

6	PERFORM ZERO POINT CALIBRATION

(a) Connect the negative (-) terminal cable to the battery.
(b) Connect the intelligent tester to the DLC3.
(c) Turn the ignition switch to the ON position.
(d) Using the intelligent tester, perform the zero point calibration (See page RS-357).
OK:
COMPLETED is displayed on the tester.

NG → **Go to step 9**

OK

7	PERFORM SENSITIVITY CHECK

(a) Using the intelligent tester, perform the sensitivity check (See page RS-357).
Standard:
27 to 33 kg (59.52 to 72.75 lb)

NG → **Go to step 9**

OK

8	CHECK DTC

(a) Connect the connectors to the occupant classification ECU and the front occupant classification sensor RH.
(b) Connect the negative (-) terminal cable to the battery.
(c) Turn the ignition switch to the ON position.
(d) Clear any DTCs stored in the memory (See page RS-365).

HINT:
- First clear DTCs stored in the occupant classification ECU and then in the center airbag sensor assembly.
- Use the intelligent tester to clear the DTCs of the occupant classification ECU, otherwise the DTCs cannot be cleared.

(e) Turn the ignition switch to the LOCK position.
(f) Turn the ignition switch to the ON position.
(g) Using the intelligent tester, check for DTCs of the occupant classification ECU (See page RS-365).
OK:
DTC B1786 is not output.

HINT:
DTCs other than B1786 may be output at this time, but they are not related to this check.

OK → **USE SIMULATION METHOD TO CHECK**

NG

RS

9	REPLACE OCCUPANT CLASSIFICATION ECU

(a) Turn the ignition switch to the LOCK position.
(b) Disconnect the negative (-) terminal cable from the battery, and wait for at least 90 seconds.
(c) Replace the occupant classification ECU (See page RS-631).

NEXT

10	PERFORM ZERO POINT CALIBRATION

(a) Connect the negative (-) terminal cable to the battery.
(b) Connect the intelligent tester to the DLC3.
(c) Turn the ignition switch to the ON position.
(d) Using the intelligent tester, perform the zero point calibration (See page RS-357).
OK:
COMPLETED is displayed on the tester.

NEXT

11	PERFORM SENSITIVITY CHECK

(a) Using the intelligent tester, perform the sensitivity check (See page RS-357).
Standard :
27 to 33 kg (59.52 to 72.75 lb)

NEXT

USE SIMULATION METHOD TO CHECK

DTC	B1787	Rear Occupant Classification Sensor LH Collision Detection

DESCRIPTION

DTC B1787 is set when the occupant classification ECU receives a collision detection signal, which is sent by the occupant classification sensor rear LH when an accident occurs.
DTC B1787 is also set when the front seat with adjuster frame assembly RH is subjected to a strong impact, even if an actual accident has not occurred.
However, when the occupant classification ECU outputs a collision detection signal, even if the vehicle is not in a collision, DTC B1787 can be cleared by conducting the zero point calibration and sensitivity check.
Therefore, if DTC B1787 is output, first perform the zero point calibration and sensitivity check.

DTC No.	DTC Detecting Conditions	Trouble Areas
B1787	• Front seat with adjuster frame assembly RH malfunction • Occupant classification ECU malfunction • Rear occupant classification sensor LH senses a large load	• Front seat with adjuster frame assembly RH (Rear occupant classification sensor LH) • Occupant classification ECU

HINT:
- When DTC B1650/32 is set as a result of troubleshooting the supplemental restraint system, perform troubleshooting for DTC B1787 of the occupant classification system.
- Use the intelligent tester to check for DTCs of the occupant classification ECU, otherwise the DTCs cannot be read.

WIRING DIAGRAM

(See page RS-393)

1	CHECK DTC

(a) Turn the ignition switch to the ON position.
(b) Clear any DTCs stored in the center airbag sensor assembly (See page RS-365).
(c) Turn the ignition switch to the LOCK position.
(d) Turn the ignition switch to the ON position.
(e) Using the intelligent tester, check for DTCs of the occupant classification ECU (See page RS-365).

OK:

DTC B1787 is not output.

HINT:
DTCs other than B1787 may be output at this time, but they are not related to this check.

OK → **USE SIMULATION METHOD TO CHECK**

NG

2	PERFORM ZERO POINT CALIBRATION

(a) Connect the intelligent tester to the DLC3.
(b) Turn the ignition switch to the ON position.

(c) Using the intelligent tester, perform the zero point calibration (See page RS-357).
OK:
COMPLETED is displayed on the tester.

NG → **Go to step 5**

OK

3 PERFORM SENSITIVITY CHECK

(a) Using the intelligent tester, perform the sensitivity check (See page RS-357).
Standard :
27 to 33 kg (59.52 to 72.75 lb)

NG → **Go to step 5**

OK

4 CHECK DTC

(a) Turn the ignition switch to the ON position.
(b) Clear any DTCs stored in the center airbag sensor assembly (See page RS-365).
(c) Turn the ignition switch to the LOCK position.
(d) Turn the ignition switch to the ON position.
(e) Using the intelligent tester, check for DTCs of the occupant classification ECU (See page RS-365).
OK:
DTC B1787 is not output.

HINT:
DTCs other than B1787 may be output at this time, but they are not related to this check.

OK → **USE SIMULATION METHOD TO CHECK**

NG

5 REPLACE FRONT SEAT WITH ADJUSTER FRAME ASSEMBLY RH

(a) Turn the ignition switch to the LOCK position.
(b) Disconnect the negative (-) terminal cable from the battery, and wait for at least 90 seconds.
(c) Replace the front seat with adjuster frame assembly RH (See page SE-38).

HINT:
Perform the inspection using parts from a normal vehicle when possible.

NEXT

RS

6	PERFORM ZERO POINT CALIBRATION

(a) Connect the negative (-) terminal cable to the battery.
(b) Connect the intelligent tester to the DLC3.
(c) Turn the ignition switch to the ON position.
(d) Using the intelligent tester, perform the zero point calibration (See page RS-357).
OK:
COMPLETED is displayed on the tester.

NG → **Go to step 9**

OK

7	PERFORM SENSITIVITY CHECK

(a) Using the intelligent tester, perform the sensitivity check (See page RS-357).
Standard:
27 to 33 kg (59.52 to 72.75 lb)

NG → **Go to step 9**

OK

8	CHECK DTC

(a) Connect the connectors to the occupant classification ECU and the rear occupant classification sensor LH.
(b) Connect the negative (-) terminal cable to the battery.
(c) Turn the ignition switch to the ON position.
(d) Clear any DTCs stored in the memory (See page RS-365).

HINT:
- First clear DTCs stored in the occupant classification ECU and then in the center airbag sensor assembly.
- Use the intelligent tester to clear the DTCs of the occupant classification ECU, otherwise the DTCs cannot be cleared.

(e) Turn the ignition switch to the LOCK position.
(f) Turn the ignition switch to the ON position.
(g) Using the intelligent tester, check for DTCs of the occupant classification ECU (See page RS-365).
OK:
DTC B1787 is not output.

HINT:
DTCs other than B1787 may be output at this time, but they are not related to this check.

OK → **USE SIMULATION METHOD TO CHECK**

NG

RS

9	REPLACE OCCUPANT CLASSIFICATION ECU

(a) Turn the ignition switch to the LOCK position.
(b) Disconnect the negative (-) terminal cable from the battery, and wait for at least 90 seconds.
(c) Replace the occupant classification ECU (See page RS-631).

NEXT

10	PERFORM ZERO POINT CALIBRATION

(a) Connect the negative (-) terminal cable to the battery.
(b) Connect the intelligent tester to the DLC3.
(c) Turn the ignition switch to the ON position.
(d) Using the intelligent tester, perform the zero point calibration (See page RS-3571).
OK:
COMPLETED is displayed on the tester.

NEXT

11	PERFORM SENSITIVITY CHECK

(a) Using the intelligent tester, perform the sensitivity check (See page RS-357).
Standard:
27 to 33 kg (59.52 to 72.75 lb)

NEXT

USE SIMULATION METHOD TO CHECK

RS

DTC	B1788	Rear Occupant Classification Sensor RH Collision Detection

DESCRIPTION

DTC B1788 is set when the occupant classification ECU receives a collision detection signal, which is sent by the occupant classification sensor rear RH when an accident occurs.
DTC B1788 is also set when the front seat with adjuster frame assembly RH is subjected to a strong impact, even if an actual accident has not occurred.
However, when the occupant classification ECU outputs a collision detection signal, even if the vehicle is not in a collision, DTC B1788 can be cleared by conducting the zero point calibration and sensitivity check.
Therefore, if DTC B1788 is output, first perform the zero point calibration and sensitivity check.

DTC No.	DTC Detecting Conditions	Trouble Areas
B1788	• Front seat with adjuster frame assembly RH malfunction • Occupant classification ECU malfunction • Rear occupant classification sensor RH senses a large load	• Front seat with adjuster frame assembly RH (Rear occupant classification sensor RH) • Occupant classification ECU

HINT:
- When DTC B1650/32 is set as a result of troubleshooting the supplemental restraint system, perform troubleshooting for DTC B1788 of the occupant classification system.
- Use the intelligent tester to check for DTCs of the occupant classification ECU, otherwise the DTCs cannot be read.

WIRING DIAGRAM

(See page RS-401)

1	CHECK DTC

(a) Turn the ignition switch to the ON position.
(b) Clear any DTCs stored in the center airbag sensor assembly (See page RS-365).
(c) Turn the ignition switch to the LOCK position.
(d) Turn the ignition switch to the ON position.
(e) Using the intelligent tester, check for DTCs of the occupant classification ECU (See page RS-365).
OK:
DTC B1788 is not output.

HINT:
DTCs other than B1788 may be output at this time, but they are not related to this check.

OK → **OTHERS USE SIMULATION METHOD TO CHECK**

NG

2	PERFORM ZERO POINT CALIBRATION

(a) Connect the intelligent tester to the DLC3.
(b) Turn the ignition switch to the ON position.

RS

(c) Using the intelligent tester, perform the zero point calibration (See page RS-357).
OK:
COMPLETED is displayed on the tester.

NG → **Go to step 5**

OK

3	PERFORM SENSITIVITY CHECK

(a) Using the intelligent tester, perform the sensitivity check (See page RS-357).
Standard:
27 to 33 kg (59.52 to 72.75 lb)

NG → **Go to step 5**

OK

4	CHECK DTC

(a) Turn the ignition switch to the ON position.
(b) Clear the DTCs stored in the center airbag sensor assembly (See page RS-365).
(c) Turn the ignition switch to the LOCK position.
(d) Turn the ignition switch to the ON position.
(e) Using the intelligent tester, check for DTCs of the occupant classification ECU (See page RS-365).
OK:
DTC B1788 is not output.

HINT:
DTCs other than B1788 may be output at this time, but they are not related to this check.

OK → **OTHERS USE SIMULATION METHOD TO CHECK**

NG

5	REPLACE FRONT SEAT WITH ADJUSTER FRAME ASSEMBLY RH

(a) Turn the ignition switch to the LOCK position.
(b) Disconnect the negative (-) terminal cable from the battery, and wait for at least 90 seconds.
(c) Replace the front seat with adjuster frame assembly RH (See page SE-38).

HINT:
Perform the inspection using parts from a normal vehicle when possible.

NEXT

RS

6	PERFORM ZERO POINT CALIBRATION

(a) Connect the negative (-) terminal cable to the battery.
(b) Connect the intelligent tester to the DLC3.
(c) Turn the ignition switch to the ON position.
(d) Using the intelligent tester, perform the zero point calibration (See page RS-357).
OK:
COMPLETED is displayed on the tester.

NG → **Go to step 9**

OK

7	PERFORM SENSITIVITY CHECK

(a) Using the intelligent tester, perform the sensitivity check (See page RS-357).
Standard:
27 to 33 kg (59.52 to 72.75 lb)

NG → **Go to step 9**

OK

8	CHECK DTC

(a) Connect the connectors to the occupant classification ECU and the rear occupant classification sensor RH.
(b) Connect the negative (-) terminal cable to the battery.
(c) Turn the ignition switch to the ON position.
(d) Clear any DTCs stored in the memory (See page RS-365).

HINT:
- First clear DTCs stored in the occupant classification ECU and then in the center airbag sensor assembly.
- Use the intelligent tester to clear the DTCs of the occupant classification ECU, otherwise the DTCs cannot be cleared.

(e) Turn the ignition switch to the LOCK position.
(f) Turn the ignition switch to the ON position.
(g) Using the intelligent tester, check for DTCs of the occupant classification ECU (See page RS-365).
OK:
DTC B1788 is not output.

HINT:
DTCs other than B1788 may be output at this time, but they are not related to this check.

OK → **OTHERS USE SIMULATION METHOD TO CHECK**

NG

RS

9	REPLACE OCCUPANT CLASSIFICATION ECU

(a) Turn the ignition switch to the LOCK position.
(b) Disconnect the negative (-) terminal cable from the battery, and wait for at least 90 seconds.
(c) Replace the occupant classification ECU (See page RS-631).

NEXT

10	PERFORM ZERO POINT CALIBRATION

(a) Connect the negative (-) terminal cable to the battery.
(b) Connect the intelligent tester to the DLC3.
(c) Turn the ignition switch to the ON position.
(d) Using the intelligent tester, perform the zero point calibration (See page RS-357).
OK:
COMPLETED is displayed on the tester.

NEXT

11	PERFORM SENSITIVITY CHECK

(a) Using the intelligent tester, perform the sensitivity check (See page RS-357).
Standard:
27 to 33 kg (59.52 to 72.75 lb)

NEXT

OTHERS USE SIMULATION METHOD TO CHECK

RS

DTC	B1790	Center Airbag Sensor Assembly Communication Circuit Malfunction

DESCRIPTION

The center airbag sensor assembly communication circuit consists of the occupant classification ECU and the center airbag sensor assembly.
DTC B1790 is set when a malfunction is detected in the center airbag sensor assembly communication circuit.

DTC No.	DTC Detections Conditions	Trouble Areas
B1790	• The occupant classification ECU receives a line short circuit signal, an open circuit signal, a short circuit to ground signal or a short circuit to B+ signal in the center airbag sensor assembly communication circuit for 2 seconds • Center airbag sensor assembly malfunction • Occupant classification ECU malfunction	• Floor wire • No. 1 seat wire • Occupant classification ECU • Center airbag sensor assembly

HINT:

- When DTC B1630/32 is detected as a result of troubleshooting the supplemental restraint system, perform troubleshooting for DTC B1790 of the occupant classification system.
- Use the intelligent tester to check for DTCs of the occupant classification ECU, otherwise the DTCs cannot be read.

WIRING DIAGRAM

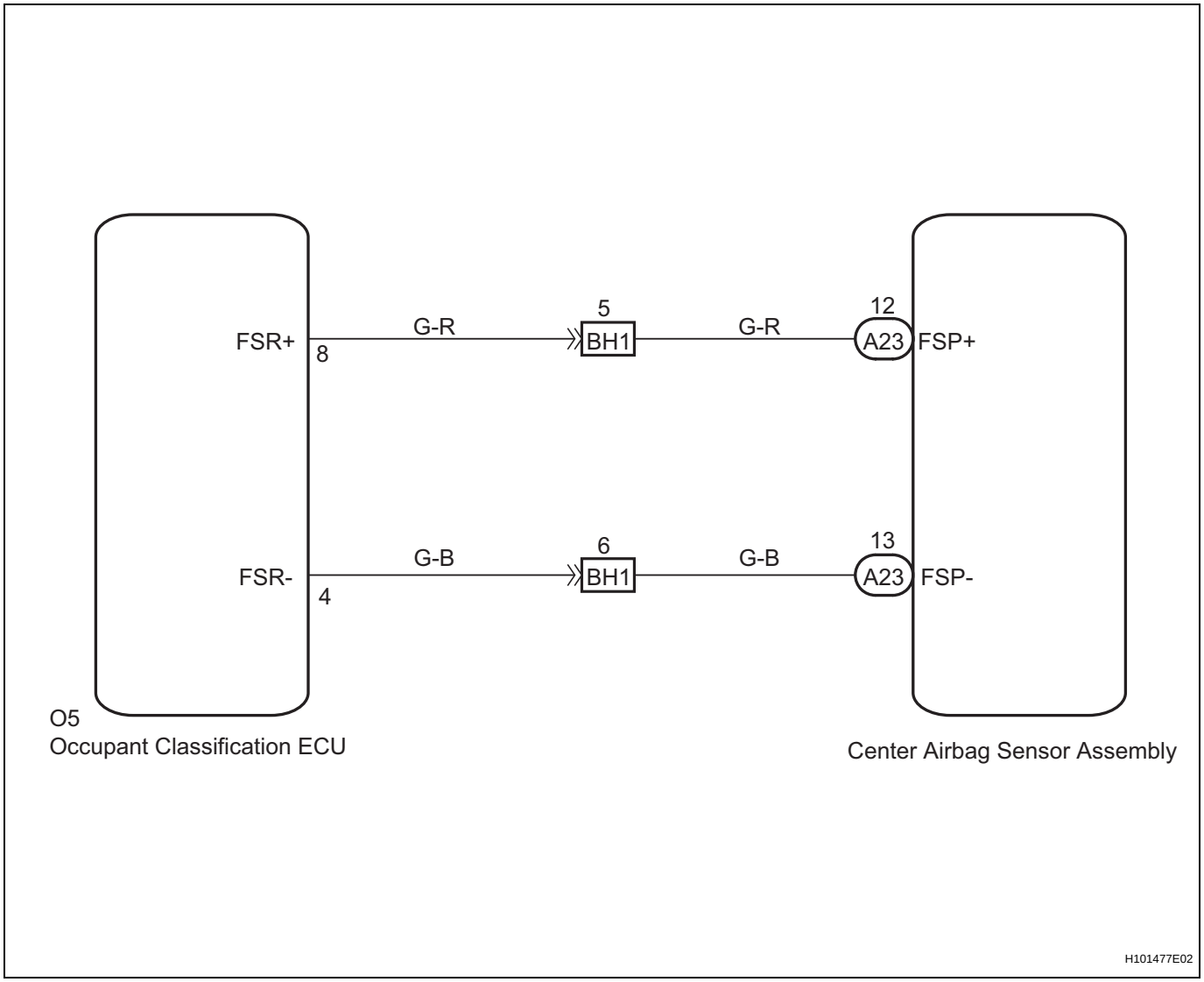

CAUTION:
In order to prevent unexpected airbag deployment, disconnect the following connectors before inspecting parts such as wire harnesses, if the application of tester probes to the center airbag sensor assembly connector is necessary.

(a) Turn the ignition switch to the LOCK position.
(b) Disconnect the negative (-) terminal cable from the battery, and wait for at least 90 seconds.
(c) Disconnect the connectors from the center airbag sensor assembly.
(d) Disconnect the connectors from the steering pad assembly.
(e) Disconnect the connector from the front passenger airbag assembly.
HINT:
Skip the following steps if side and curtain shield airbags are not fitted.
(f) Disconnect the connector from the front seat airbag assembly LH.
(g) Disconnect the connector from the front seat airbag assembly RH.
(h) Disconnect the connector from the curtain shield airbag assembly LH.
(i) Disconnect the connector from the curtain shield airbag assembly RH.
(j) Disconnect the connector from the front seat outer belt assembly LH.
(k) Disconnect the connector from the front seat outer belt assembly RH.

HINT:
- If troubleshooting (wire harness inspection) is difficult to perform, remove the front RH seat assembly installation bolts to see the under surface of the seat cushion.
- In the above case, hold the seat so that it does not fall down. Holding the seat for a long period of time may cause problems, such as seat rail deformation. Hold the seat up only for as long as necessary.

1	CHECK DTC

(a) Turn the ignition switch to the ON position.
(b) Clear any DTCs stored in the memory (See page RS-365).

HINT:
- First clear DTCs stored in the occupant classification ECU and then in the center airbag sensor assembly.
- Use the intelligent tester to clear the DTCs of the occupant classification ECU, otherwise the DTCs cannot be cleared.

(c) Turn the ignition switch to the LOCK position.
(d) Turn the ignition switch to the ON position.
(e) Using the intelligent tester, check for DTCs of the occupant classification ECU (See page RS-365).

OK:

DTC B1790 is not output.

HINT:
DTCs other than B1790 may be output at this time, but they are not related to this check.

OK → **USE SIMULATION METHOD TO CHECK**

NG

2	CHECK CONNECT CONNECTORS

(a) Turn the ignition switch to the LOCK position.
(b) Disconnect the negative (-) terminal cable from the battery, and wait for at least 90 seconds.
(c) Check that the connectors are properly connected to the occupant classification ECU and the center airbag sensor assembly.

OK:

The connectors are properly connected.

NG → **CONNECT CONNECTORS**

OK

3	CHECK CONNECTORS

(a) Check that the connectors (on the center airbag sensor assembly side and occupant classification ECU side) are not damaged (See page IN-34).

OK:

The connectors are not deformed or damaged.

NG → **REPAIR OR REPLACE WIRE HARNESS**

RS

OK

4 CHECK AIRBAG SENSOR ASSEMBLY CENTER COMMUNICATION CIRCUIT (FOR OPEN)

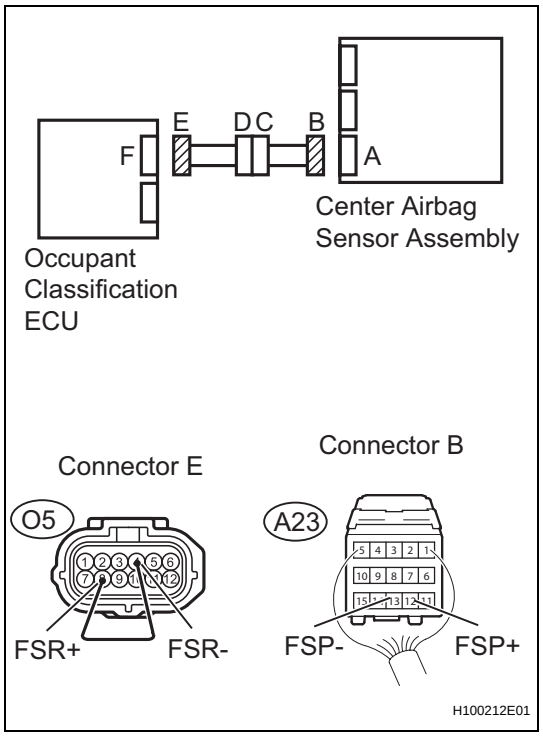

(a) Turn the ignition switch to the LOCK position.
(b) Disconnect the negative (-) terminal cable from the battery, and wait for at least 90 seconds.
(c) Using a service wire, connect O5-8 (FSR+) and O5-4 (FSR-) of connector E.

NOTICE:
Do not forcibly insert the service wire into the terminals of the connector when connecting.

(d) Measure the resistance.
Standard resistance

Tester Connection	Condition	Specified Condition
A23-12 (FSP+) - A23-13 (FSP-)	Always	Below 1 Ω

NG → **Go to step 13**

OK

5 CHECK AIRBAG SENSOR ASSEMBLY CENTER COMMUNICATION CIRCUIT (FOR SHORT)

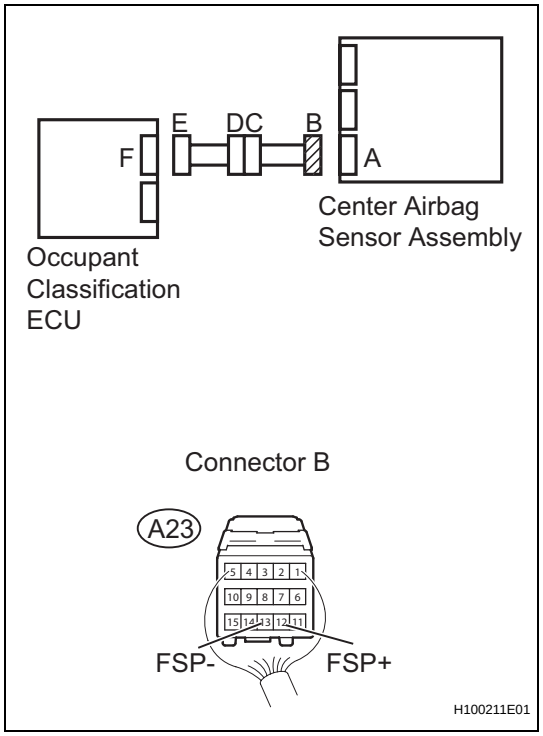

(a) Disconnect the service wire from connector E.
(b) Measure the resistance.
Standard resistance

Tester Connection	Condition	Specified Condition
A23-12 (FSP+) - A23-13 (FSP-)	Always	1 MΩ or higher

NG → **Go to step 14**

RS

OK

6	CHECK AIRBAG SENSOR ASSEMBLY CENTER COMMUNICATION CIRCUIT (TO B+)

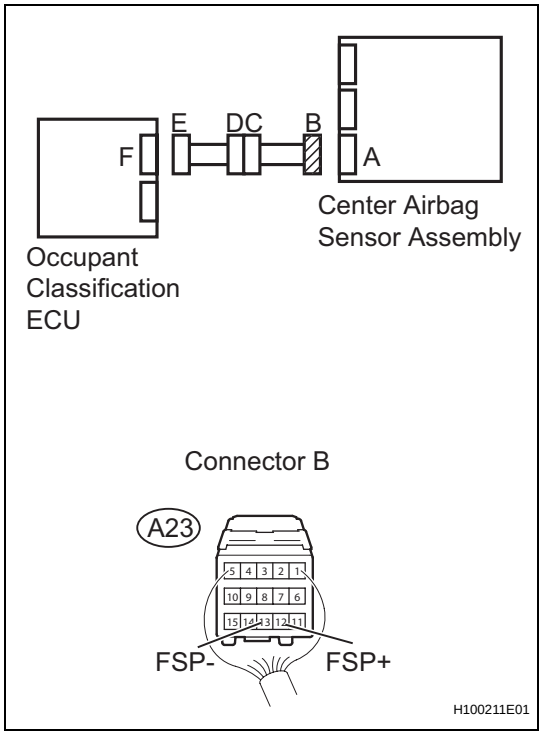

(a) Connect the negative (-) terminal cable to the battery.
(b) Turn the ignition switch to the ON position.
(c) Measure the voltage.

Standard voltage

Tester Connection	Condition	Specified Condition
A23-12 (FSP+) - Body ground	Ignition switch ON	Below 1 V
A23-13 (FSP-) - Body ground	Ignition switch ON	Below 1 V

NG → **Go to step 15**

OK

7	CHECK AIRBAG SENSOR ASSEMBLY CENTER COMMUNICATION CIRCUIT (TO GROUND)

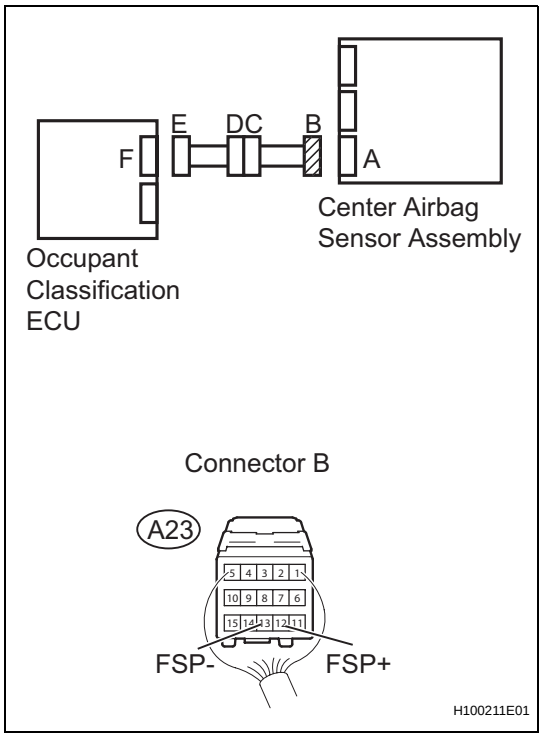

(a) Turn the ignition switch to the LOCK position.
(b) Disconnect the negative (-) terminal cable from the battery, and wait for at least 90 seconds.
(c) Measure the resistance.

Standard resistance

Tester Connection	Condition	Specified Condition
A23-12 (FSP+) - Body ground	Always	1 MΩ or higher
A23-13 (FSP-) - Body ground	Always	1 MΩ or higher

NG → **Go to step 16**

RS

OK

8	CHECK DTC

(a) Connect the connectors to the occupant classification ECU and the center airbag sensor assembly.
(b) Connect the negative (-) terminal cable to the battery.
(c) Turn the ignition switch to the ON position.
(d) Clear any DTCs stored in the memory (See page RS-365).

HINT:

- First clear any DTCs stored in the occupant classification ECU and then in the center airbag sensor assembly.
- Use the intelligent tester to clear the DTCs of the occupant classification ECU, otherwise the DTCs cannot be cleared.

(e) Turn the ignition switch to the LOCK position.
(f) Turn the ignition switch to the ON position.
(g) Using the intelligent tester, check for DTCs of the occupant classification ECU (See page RS-365).

OK:

DTC B1790 is not output.

HINT:

DTCs other than B1790 may be output at this time, but they are not related to this check.

NG → **USE SIMULATION METHOD TO CHECK**

NG

9	REPLACE OCCUPANT CLASSIFICATION ECU

(a) Turn the ignition switch to the LOCK position.
(b) Disconnect the negative (-) terminal cable from the battery, and wait for at least 90 seconds.
(c) Replace the occupant classification ECU (See page RS-631).

HINT:

Perform the inspection using parts from a normal vehicle when possible.

NEXT

10	PERFORM ZERO POINT CALIBRATION

(a) Connect the negative (-) terminal cable to the battery.
(b) Connect the intelligent tester to the DLC3.
(c) Turn the ignition switch to the ON position.
(d) Using the intelligent tester, perform the zero point calibration (See page RS-357).

OK:

COMPLETED is displayed on the tester.

NEXT

11	PERFORM SENSITIVITY CHECK

(a) Using the intelligent tester, perform the sensitivity check (See page RS-357).
Standard value:
27 to 33 kg (59.52 to 72.75 lb)

NEXT

12	CHECK DTC

(a) Connect the connector to the occupant classification ECU.
(b) Connect the negative (-) terminal cable to the battery.
(c) Turn the ignition switch to the ON position.
(d) Clear any DTCs stored in the memory (See page RS-365).

HINT:
- First clear DTCs stored in the occupant classification ECU and then in the center airbag sensor assembly.
- Use the intelligent tester to clear the DTCs of the occupant classification ECU, otherwise the DTCs cannot be cleared.

(e) Turn the ignition switch to the LOCK position.
(f) Turn the ignition switch to the ON position.
(g) Using the intelligent tester, check for DTCs of the occupant classification ECU (See page RS-365).
OK:
DTC B1790 is not output.

HINT:
DTCs other than B1790 may be output at this time, but they are not related to this check.

NG → **REPLACE AIRBAG SENSOR ASSEMBLY CENTER**

OK

RS

END

13 CHECK NO. 1 SEAT WIRE (FOR OPEN)

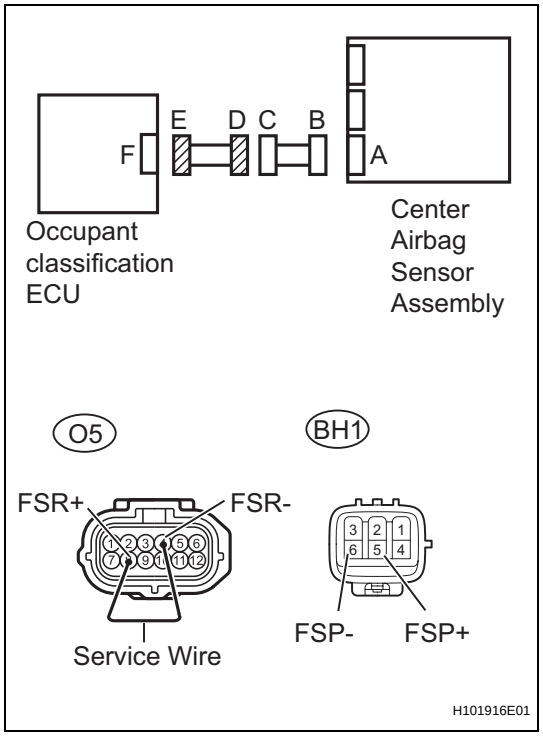

(a) Disconnect the No.1 seat wire connector from the occupant classification ECU.

HINT:

The service wire has already been inserted into connector E.

(b) Measure the resistance.

Standard resistance

Tester Connection	Condition	Specified Condition
BH1-5 (FSP+) - BH1-6 (FSP-)	Always	Below 1 Ω

NG → **REPAIR OR REPLACE NO. 1 SEAT WIRE**

OK

REPAIR OR REPLACE FLOOR WIRE

14 CHECK NO. 1 SEAT WIRE (FOR SHORT)

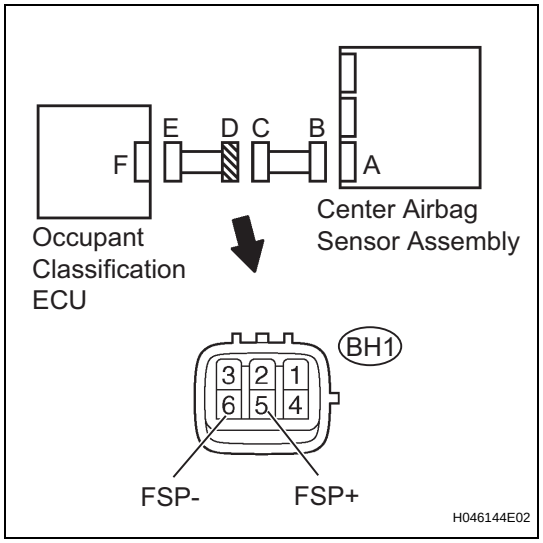

(a) Disconnect the No.1 seat wire connector from the occupant classification ECU.

(b) Measure the resistance.

Standard resistance

Tester Connection	Condition	Specified Condition
BH1-5 (FSP+) - BH1-6 (FSP-)	Always	1 MΩ or higher

NG → **REPAIR OR REPLACE NO. 1 SEAT WIRE**

OK

REPAIR OR REPLACE FLOOR WIRE

RS

15 CHECK NO. 1 SEAT WIRE (TO B+)

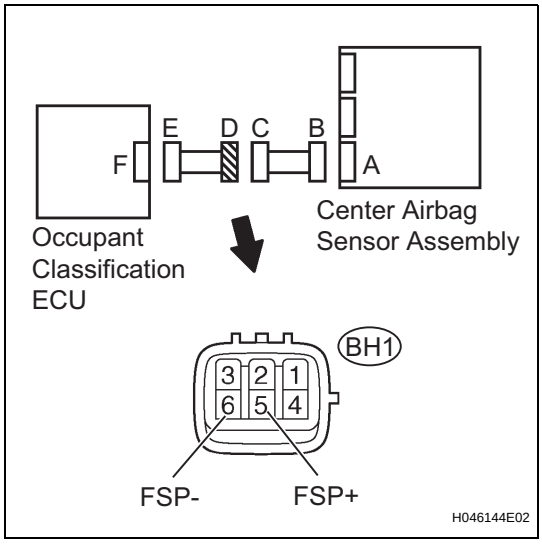

(a) Turn the ignition switch to the LOCK position.
(b) Disconnect the negative (-) terminal cable from the battery, and wait for at least 90 seconds.
(c) Disconnect the No. 1 seat wire connector from the occupant classification ECU.
(d) Disconnect the connector from the occupant classification ECU.
(e) Connect the negative (-) terminal cable to the battery.
(f) Turn the ignition switch to the ON position.
(g) Measure the voltage.

Standard voltage

Tester Connection	Condition	Specified Condition
BH1-5 (FSP+) - Body ground	Ignition switch ON	Below 1 V
BH1-6 (FSP-) - Body ground	Ignition switch ON	Below 1 V

NG → **REPAIR OR REPLACE NO. 1 SEAT WIRE**

OK

REPAIR OR REPLACE FLOOR WIRE

16 CHECK NO. 1 SEAT WIRE (TO GROUND)

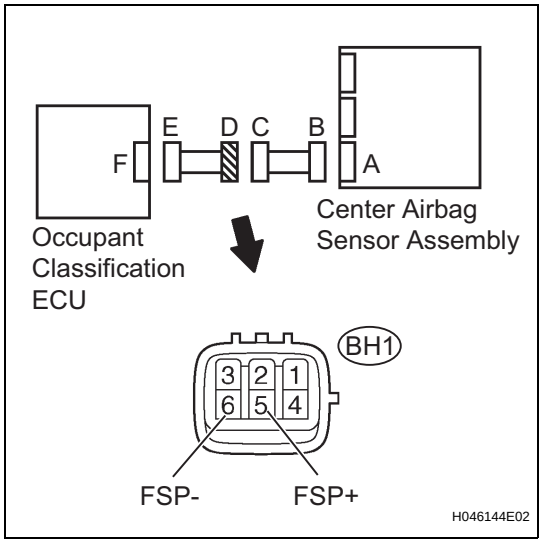

(a) Disconnect the No. 1 seat wire connector from the occupant classification ECU.
(b) Measure the resistance.

Standard resistance

Tester Connection	Condition	Specified Condition
BH1-5 (FSP+) - Body ground	Always	1 MΩ or higher
BH1-6 (FSP-) - Body ground	Always	1 MΩ or higher

NG → **REPAIR OR REPLACE NO. 1 SEAT WIRE**

OK

REPAIR OR REPLACE FLOOR WIRE

RS

DTC	B1793	Occupant Classification Sensor Power Supply Circuit Malfunction

DESCRIPTION

The occupant classification sensor power supply circuit consists of the occupant classification ECU and the occupant classification sensors.

DTC B1793 is set when a malfunction is detected in the occupant classification sensor power supply circuit.

DTC No.	DTC Detecting Conditions	Trouble Areas
B1793	• The occupant classification ECU receives a line short circuit signal, an open circuit signal, a short circuit to ground signal or a short circuit to B+ signal in the occupant clarification sensor power supply circuit for 2 seconds • Open circuit in occupant classification sensor wire harness • Occupant classification ECU malfunction	• Front seat with adjuster frame assembly RH (Occupant classification sensors) • No. 1 seat wire • Occupant classification ECU

HINT:

- When DTC B1650/32 is detected as a result of troubleshooting the supplemental restraint system, perform troubleshooting for DTC B1793 of the occupant classification system.
- Use the intelligent tester to check for DTCs of the occupant classification ECU, otherwise the DTCs cannot be read.

WIRING DIAGRAM

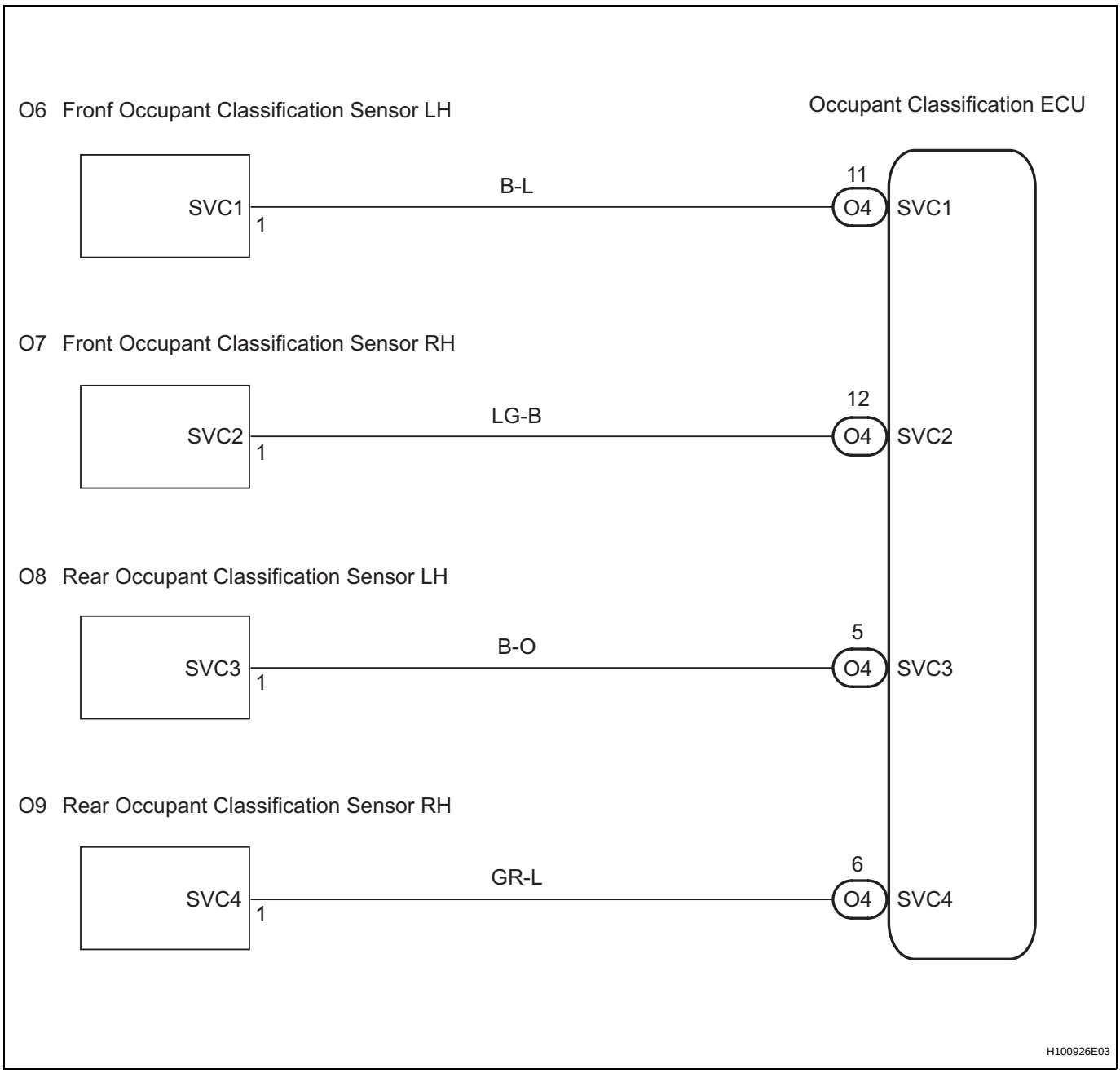

RS

HINT:

- If troubleshooting (wire harness inspection) is difficult to perform, remove the front RH seat assembly installation bolts to see the under surface of the seat cushion.
- In the above case, hold the seat so that it does not fall down. Holding the seat for a long period of time may cause problems, such as seat rail deformation. Hold the seat up only for as long as necessary.

1	**CHECK DTC**

(a) Turn the ignition switch to the ON position.
(b) Clear any DTCs stored in the memory (See page RS-365).

HINT:

- First clear DTCs stored in the occupant classification ECU and then in the center airbag sensor assembly.
- Use the intelligent tester to clear the DTCs of the occupant classification ECU, otherwise the DTCs cannot be cleared.

(c) Turn the ignition switch to the LOCK position.
(d) Turn the ignition switch to the ON position.
(e) Using the intelligent tester, check for DTCs of the occupant classification ECU (See page RS-365).
OK:
DTC B1793 is not output.

HINT:
DTCs other than B1793 may be output at this time, but they are not related to this check.

OK → **USE SIMULATION METHOD TO CHECK**

NG

2	CHECK CONNECT CONNECTORS

(a) Turn the ignition switch to the LOCK position.
(b) Disconnect the negative (-) terminal cable from the battery, and wait for at least 90 seconds.
(c) Check that the connectors are properly connected to the occupant classification ECU and the occupant classification sensors.
OK:
The connectors are properly connected.

NG → **CONNECT CONNECTORS**

OK

3	CHECK CONNECTORS

(a) Check that the connectors (on the occupant classification ECU side and the occupant classification sensors side) are not damaged (See page IN-34).
OK:
The connectors are not deformed or damaged.

NG → **REPAIR OR REPLACE WIRE HARNESS**

OK

RS

4	CHECK NO. 1 SEAT WIRE (TO B+)

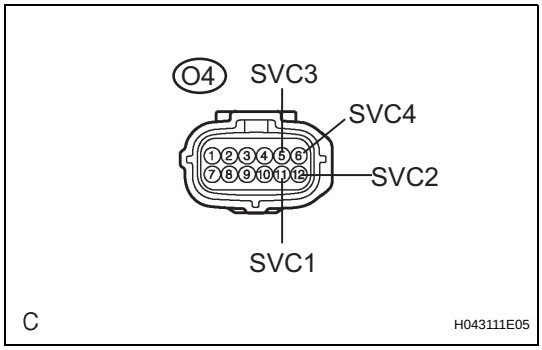

(a) Disconnect the connectors from the occupant classification ECU and the 4 occupant classification sensors.
(b) Connect the negative (-) terminal cable to the battery.
(c) Turn the ignition switch to the ON position.
(d) Measure the voltage.

Standard voltage

Tester Connection	Condition	Specified Condition
O4-11 (SVC1) - Body ground	Ignition switch ON	Below 1 Ω
O4-12 (SVC2) - Body ground	Ignition switch ON	Below 1 Ω
O4-5 (SVC3) - Body ground	Ignition switch ON	Below 1 Ω
O4-6 (SVC4) - Body ground	Ignition switch ON	Below 1 Ω

NG → REPAIR OR REPLACE NO. 1 SEAT WIRE

OK

5	CHECK NO. 1 SEAT WIRE (TO GROUND)

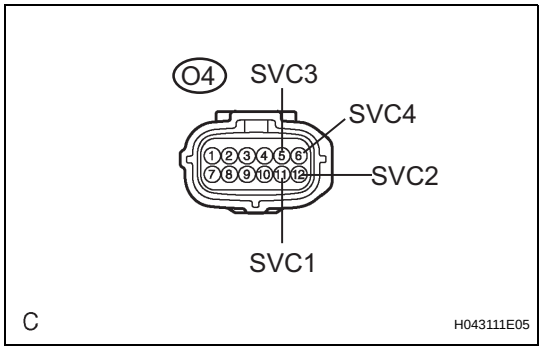

(a) Turn the ignition switch to the LOCK position.
(b) Disconnect the negative (-) terminal cable from the battery, and wait for at least 90 seconds.
(c) Measure the resistance.

Standard resistance

Tester Connection	Condition	Specified Condition
O4-11 (SVC1) - Body ground	Always	1 MΩ or higher
O4-12 (SVC2) - Body ground	Always	1 MΩ or higher
O4-5 (SVC3) - Body ground	Always	1 MΩ or higher
O4-6 (SVC4) - Body ground	Always	1 MΩ or higher

NG → REPAIR OR REPLACE NO. 1 SEAT WIRE

OK

RS

6 CHECK NO. 1 SEAT WIRE (FOR OPEN)

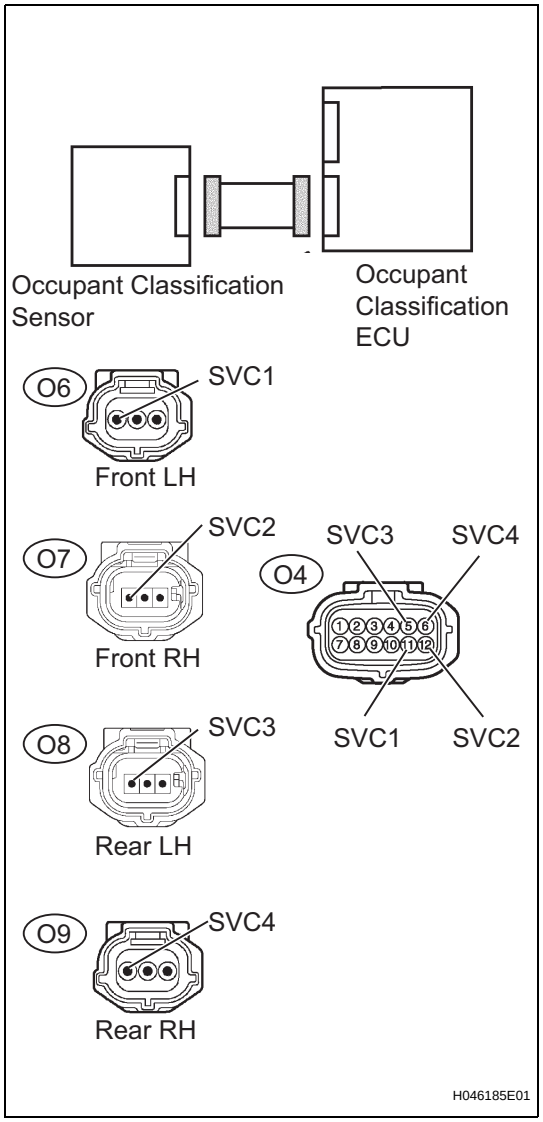

(a) Measure the resistance.
Standard resistance

Tester Connection	Condition	Specified Condition
O4-11 (SVC1) - O6-1 (SVC1)	Always	Below 1 Ω
O4-12 (SVC2) - O7-1 (SVC2)	Always	Below 1 Ω
O4-5 (SVC3) - O8-1 (SVC3)	Always	Below 1 Ω
O4-6 (SVC4) - O9-1 (SVC4)	Always	Below 1 Ω

NG → **REPAIR OR REPLACE NO. 1 SEAT WIRE**

OK

7 CHECK NO. 1 SEAT WIRE (FOR SHORT)

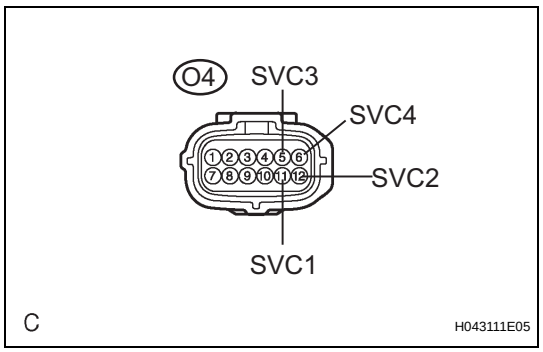

(a) Measure the resistance.
Standard resistance

Tester Connection	Condition	Specified Condition
O4-5 (SVC3) - O4-6 (SVC4)	Always	1 MΩ or higher
O4-6 (SVC4) - O6-11 (SVC1)	Always	1 MΩ or higher
O4-11 (SVC1) - O4-12 (SVC2)	Always	1 MΩ or higher
O4-12 (SVC2) - O4-5 (SVC3)	Always	1 MΩ or higher
O4-12 (SVC2) - O4-6 (SVC4)	Always	1 MΩ or higher

RS

Tester Connection	Condition	Specified Condition
O4-11 (SVC1) - O4-5 (SVC3)	Always	1 MΩ or higher

NG → REPAIR OR REPLACE NO. 1 SEAT WIRE

OK

8 CHECK DTC

(a) Connect the connectors to the occupant classification ECU and the 4 occupant classification sensors.
(b) Connect the negative (-) terminal cable to the battery.
(c) Turn the ignition switch to the ON position.
(d) Clear any DTCs stored in the memory (See page RS-365).

HINT:
- First clear DTCs stored in the occupant classification ECU and then in the center airbag sensor assembly.
- Use the intelligent tester to clear the DTCs of the occupant classification ECU, otherwise the DTCs cannot be cleared.

(e) Turn the ignition switch to the LOCK position.
(f) Turn the ignition switch to the ON position.
(g) Using the intelligent tester, check for DTCs of the occupant classification ECU (See page RS-365).
OK:
DTC B1793 is not output.

HINT:
DTCs other than B1793 may be output at this time, but they are not related to this check.

OK → USE SIMULATION METHOD TO CHECK

NG

9 REPLACE OCCUPANT CLASSIFICATION ECU

(a) Turn the ignition switch to the LOCK position.
(b) Disconnect the negative (-) terminal cable from the battery, and wait for at least 90 seconds.
(c) Replace the occupant classification ECU (See page RS-631).

HINT:
Perform the inspection using parts from a normal vehicle when possible.

NEXT

10 PERFORM ZERO POINT CALIBRATION

(a) Connect the negative (-) terminal cable to the battery.
(b) Connect the intelligent tester to the DLC3.
(c) Turn the ignition switch to the ON position.

RS

(d) Using the intelligent tester, perform the zero point calibration (See page RS-357).
OK:
COMPLETED is displayed on the tester.

NEXT

11	PERFORM SENSITIVITY CHECK

(a) Using the intelligent tester, perform the sensitivity check (See page RS-357).
Standard:
27 to 33 kg (59.52 to 72.75 lb)

NEXT

USE SIMULATION METHOD TO CHECK

DTC	B1794	Open in Occupant Classification ECU Battery Positive Line

DESCRIPTION

DTC B1794 is set when a malfunction is detected in the occupant classification ECU.

DTC No.	DTC Detections Conditions	Trouble Areas
B1794	• Occupant classification ECU circuit malfunction • Occupant classification ECU malfunction • The occupant classification ECU receives a short circuit to ground signal in the passenger side buckle switch circuit for 2 seconds	• Wire harness • Occupant classification ECU

HINT:

- When DTC B1650/32 is detected as a result of troubleshooting the supplemental restraint system, perform troubleshooting for DTC B1794 of the occupant classification system.
- Use the intelligent tester to check for DTCs of the occupant classification ECU, otherwise the DTCs cannot be read.

WIRING DIAGRAM

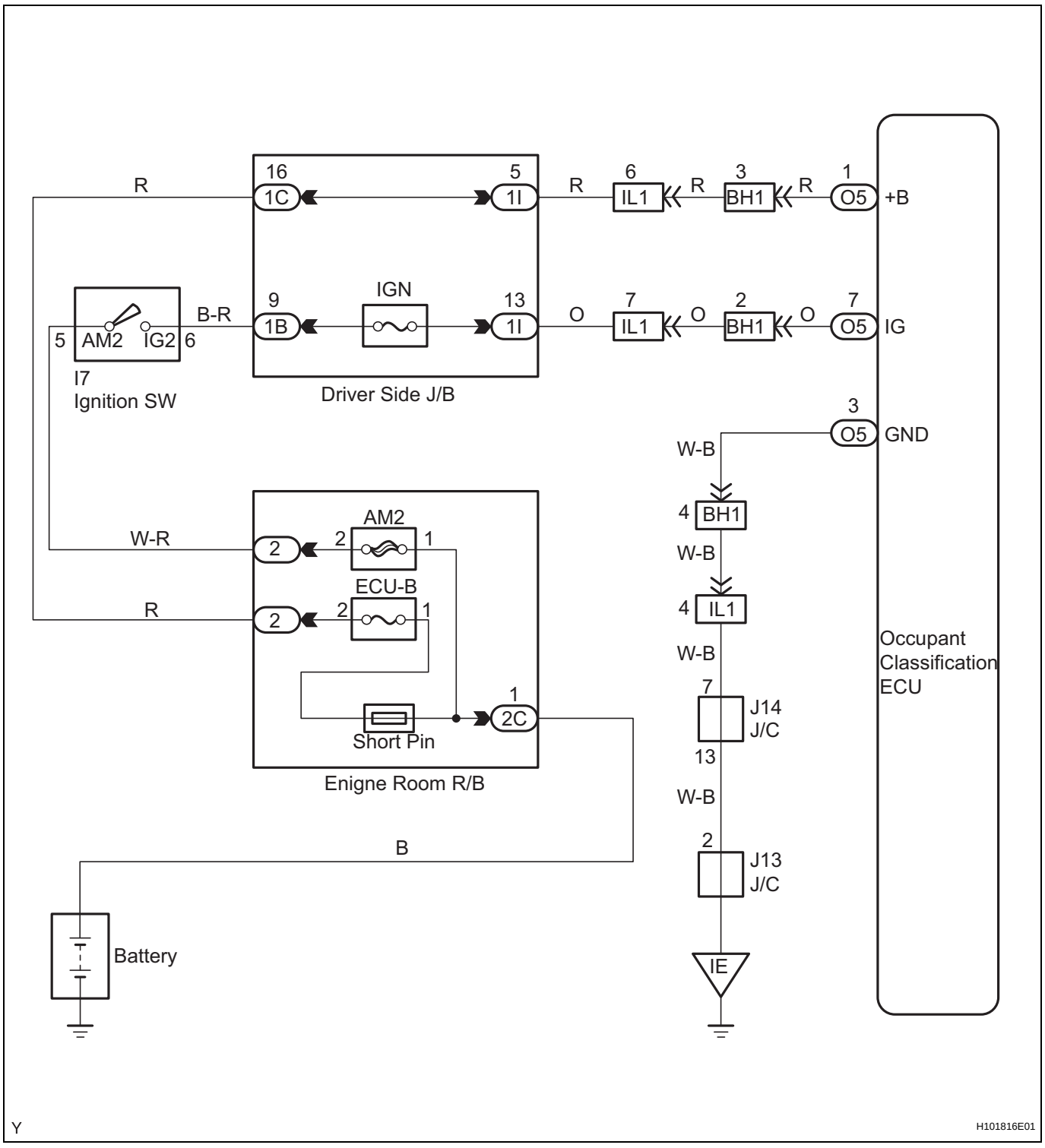

1	CHECK DTC

(a) Turn the ignition switch to the ON position.
(b) Clear any DTCs stored in the memory (See page RS-365).

RS

HINT:

- First clear DTCs stored in the occupant classification ECU and then in the center airbag sensor assembly.
- Use the intelligent tester to clear the DTCs of the occupant classification ECU, otherwise the DTCs cannot be cleared.

(c) Turn the ignition switch to the LOCK position, and wait for at least 10 seconds.
(d) Turn the ignition switch to the ON position.
(e) Using the intelligent tester, check for DTCs of the occupant classification ECU (See page RS-365).
OK:
DTC B1794 is not output.

HINT:
DTCs other than B1794 may be output at this time, but they are not related to this check.

OK → **USE SIMULATION METHOD TO CHECK**

NG

2	CHECK CONNECTION OF CONNECTORS

(a) Turn the ignition switch to the LOCK position.
(b) Disconnect the negative (-) terminal cable from the battery, and wait for at least 90 seconds.
(c) Check that the connectors are properly connected to the center airbag sensor assembly and the occupant classification ECU.
OK:
The connectors are properly connected.

NG → **CONNECT CONNECTORS**

OK

3	CHECK CONNECTORS

(a) Check that the connectors (on the occupant classification ECU side) are not damaged (See page IN-34).
OK:
The connectors are not deformed or damaged.

NG → **REPAIR OR REPLACE WIRE HARNESS**

OK

RS

4 CHECK WIRE HARNESS (SOURCE VOLTAGE)

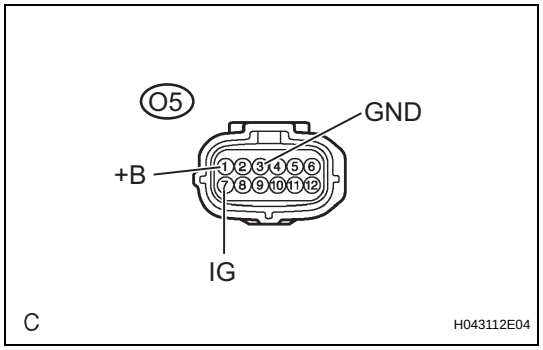

(a) Turn the ignition switch to the LOCK position.
(b) Disconnect the negative (-) terminal cable from the battery, and wait for at least 90 seconds.
(c) Disconnect the O5 connector from the occupant classification ECU.
(d) Connect the negative (-) terminal cable to the battery.
(e) Turn the ignition switch to the ON position.
(f) Measure the voltage and resistance.

Standard resistance

Tester Connection	Condition	Specified Condition
O5-3 (GND) - Body ground	Always	Below 1 Ω

Standard voltage

Tester Connection	Condition	Specified Condition
O5-1 (+B) - Body ground	Ignition switch ON	10 to 14 V
O5-7 (IG) - Body ground	Ignition switch ON	10 to 14 V

NG → **REPAIR OR REPLACE WIRE HARNESS OR BATTERY**

OK

5 CHECK DTC

(a) Turn the ignition switch to the LOCK position.
(b) Disconnect the negative (-) terminal cable from the battery, and wait for at least 90 seconds.
(c) Connect the connectors to the occupant classification ECU.
(d) Connect the negative (-) terminal cable to the battery, and wait for at least 2 seconds.
(e) Turn the ignition switch to the ON position.
(f) Clear any DTCs stored in the memory (See page RS-365).

HINT:
- First clear DTCs stored in the occupant classification ECU and then in the center airbag sensor assembly.
- Use the intelligent tester to clear the DTCs of the occupant classification ECU, otherwise the DTCs cannot be cleared.

(g) Turn the ignition switch to the LOCK position, and wait for at least 10 seconds.
(h) Turn the ignition switch to the ON position.
(i) Using the intelligent tester, check for DTCs of the occupant classification ECU (See page RS-365).

OK:
DTC B1794 is not output.

RS

HINT:
DTCs other than B1794 may be output at this time, but they are not related to this check.

OK → **USE SIMULATION METHOD TO CHECK**

NG

6	REPLACE OCCUPANT CLASSIFICATION ECU

(a) Turn the ignition switch to the LOCK position.
(b) Disconnect the negative (-) terminal cable from the battery, and wait for at least 90 seconds.
(c) Replace the occupant classification ECU (See page RS-631).

HINT:
Perform the inspection using parts from a normal vehicle when possible.

NEXT

7	PERFORM ZERO POINT CALIBRATION

(a) Connect the negative (-) terminal cable to the battery.
(b) Connect the intelligent tester to the DLC3.
(c) Turn the ignition switch to the ON position.
(d) Using the intelligent tester, perform the zero point calibration (See page RS-357).
OK:
COMPLETED is displayed on the tester.

NEXT

8	PERFORM SENSITIVITY CHECK

(a) Using the intelligent tester, perform the sensitivity check (See page RS-357).
Standard :
27 to 33 kg (59.52 to 72.75 lb)

RS

NEXT

END

DTC	B1795	Occupant Classification ECU Malfunction

DESCRIPTION

DTC B1795 is set when a malfunction is detected in the occupant classification ECU.
Troubleshoot DTC B1771 first when both DTCs B1771 and B1795 are present.

DTC No.	DTC Detections Conditions	Trouble Areas
B1795	Occupant classification ECU malfunction	Occupant classification ECU

HINT:

- When DTC B1650/32 is detected as a result of troubleshooting the supplemental restraint system, perform troubleshooting for DTC B1795 of the occupant classification system.
- Use the intelligent tester to check for DTCs of the occupant classification ECU, otherwise the DTCs cannot be read.

1 CHECK DTC

(a) Turn the ignition switch to the ON position.
(b) Clear any DTCs stored in the memory (See page RS-365).

HINT:

- First clear DTCs stored in the occupant classification ECU and then in the center airbag sensor assembly .
- Use the intelligent tester to clear the DTCs of the occupant classification ECU, otherwise the DTCs cannot be cleared.

(c) Turn the ignition switch to the LOCK position, and wait for at least 10 seconds.
(d) Turn the ignition switch to the ON position.
(e) Using the intelligent tester, check for DTCs of the occupant classification ECU (See page RS-365).

OK:

DTC B1795 is not output.

HINT:

DTCs other than B1795 may be output at this time, but they are not related to this check.

OK → **USE SIMULATION METHOD TO CHECK**

NG

2 REPLACE OCCUPANT CLASSIFICATION ECU

(a) Turn the ignition switch to the LOCK position.
(b) Disconnect the negative (-) terminal cable from the battery, and wait for at least 90 seconds.
(c) Replace the occupant classification ECU (See page RS-631).

HINT:

Perform the inspection using parts from a normal vehicle when possible.

NEXT

RS

3	PERFORM ZERO POINT CALIBRATION

(a) Connect the negative (-) terminal cable to the battery.
(b) Connect the intelligent tester to the DLC3.
(c) Turn the ignition switch to the ON position.
(d) Using the intelligent tester, perform the zero point calibration (See page RS-357).
OK:
COMPLETED is displayed on the tester.

NEXT

4	PERFORM SENSITIVITY CHECK

(a) Using the intelligent tester, perform the sensitivity check (See page RS-357).
Standard :
Standard value: 27 to 33 kg (59.52 to 72.75 lb)

NEXT

END

DTC	B1796	Sleep Operation Failure of Occupant Classification ECU

DESCRIPTION

During sleep mode, the occupant classification ECU monitors the condition of each sensor while the ignition switch is off. In this mode, if the occupant classification ECU detects an internal malfunction, DTC B1796 is set.

DTC No.	DTC Detections Conditions	Trouble Areas
B1796	Occupant classification ECU malfunction	Occupant classification ECU

HINT:

- When DTC B1650/32 is detected as a result of troubleshooting the supplemental restraint system, perform troubleshooting for DTC B1796 of the occupant classification system.
- Use the intelligent tester to check for DTCs of the occupant classification ECU, otherwise the DTCs cannot be read.

1	CHECK DTC

(a) Turn the ignition switch to the ON position.
(b) Clear any DTCs stored in the memory (See page RS-365).

HINT:

- First clear DTCs stored in the occupant classification ECU and then in the center airbag sensor assembly.
- Use the intelligent tester to clear the DTCs of the occupant classification ECU, otherwise the DTCs cannot be cleared.

(c) Turn the ignition switch to the LOCK position, and wait for at least 10 seconds.
(d) Turn the ignition switch to the ON position.
(e) Using the intelligent tester, check for DTCs of the occupant classification ECU (See page RS-365).
OK:
DTC B1796 is not output.

HINT:
DTCs other than B1796 may be output at this time, but they are not related to this check.

OK → **USE SIMULATION METHOD TO CHECK**

NG

2	REPLACE OCCUPANT CLASSIFICATION ECU

(a) Turn the ignition switch to the LOCK position.
(b) Disconnect the negative (-) terminal cable from the battery, and wait for at least 90 seconds.
(c) Replace the occupant classification ECU (See page RS-631).

HINT:
Perform the inspection using parts from a normal vehicle when possible.

RS

NEXT

3	PERFORM ZERO POINT CALIBRATION

(a) Connect the negative (-) terminal cable to the battery.
(b) Connect the intelligent tester to the DLC3.
(c) Turn the ignition switch to the ON position.
(d) Using the intelligent tester, perform the zero point calibration (See page RS-357).
OK:
COMPLETED is displayed on the tester.

NEXT

4	PERFORM SENSITIVITY CHECK

(a) Using the intelligent tester, perform the sensitivity check (See page RS-357).
Standard :
Standard value: 27 to 33 kg (59.52 to 72.75 lb)

NEXT

END

Trouble in Passenger Airbag ON / OFF Indicator

DESCRIPTION

The passenger airbag ON/OFF indicator consists of the center airbag sensor assembly, occupant classification ECU, hazard warning switch assembly, and 4 occupant classification sensors. This system controls the passenger airbag deployment according to the occupancy condition of the front passenger seat, and also displays those detected conditions.

WIRING DIAGRAM

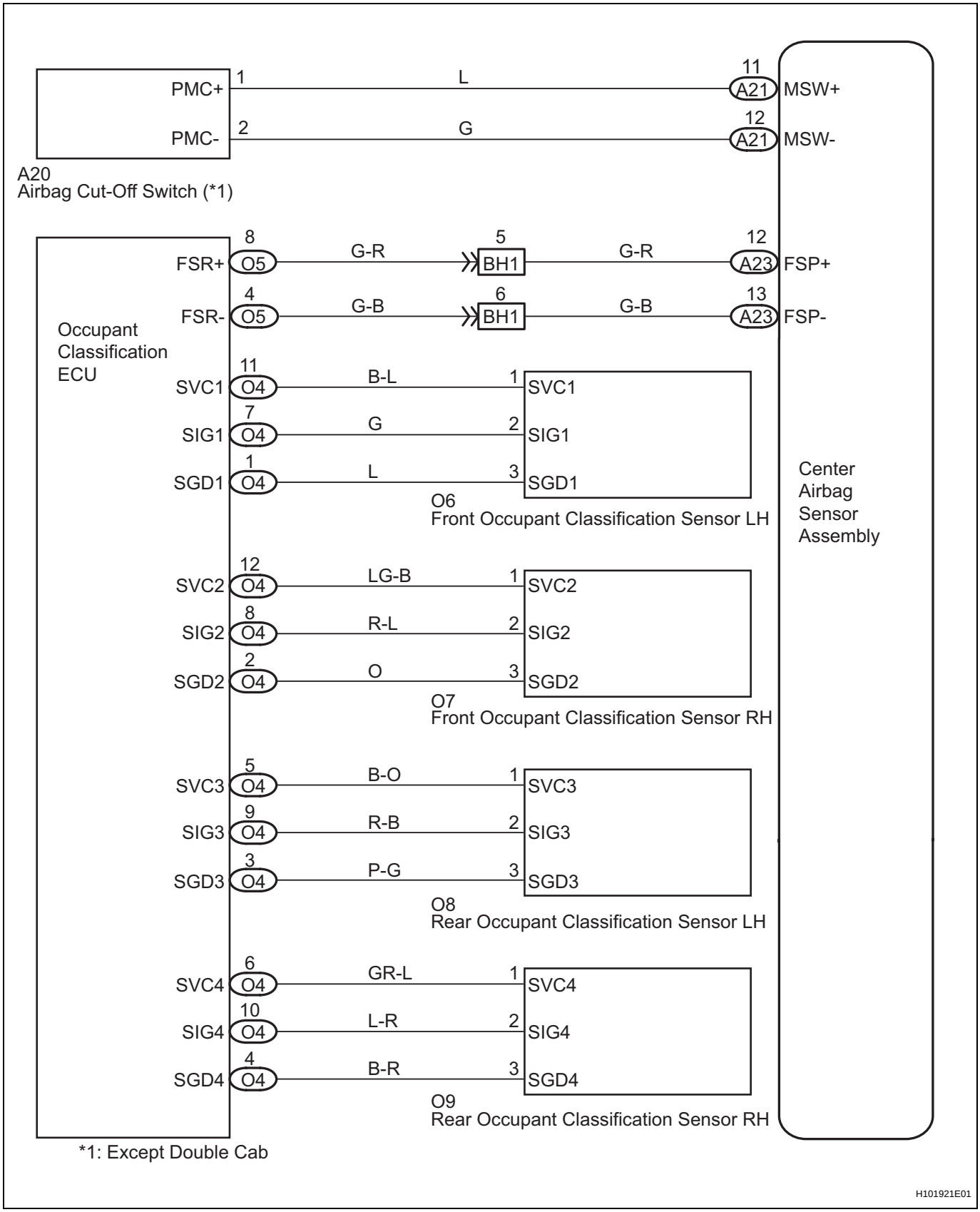

RS

CAUTION:
In order to prevent unexpected airbag deployment, disconnect the following connectors before inspecting parts such as wire harnesses, if the application of tester probes to the center airbag sensor assembly connector is necessary.
(a) Turn the ignition switch to the LOCK position.
(b) Disconnect the negative (-) terminal cable from the battery, and wait for at least 90 seconds.
(c) Disconnect the connectors from the center airbag sensor assembly.
(d) Disconnect the connectors from the steering pad assembly.
(e) Disconnect the connector from the front passenger airbag assembly.
(f) Disconnect the connector from the front seat outer belt assembly LH.
(g) Disconnect the connector from the front seat outer belt assembly RH.
HINT:
Skip the following steps if side and curtain shield airbags are not fitted.
(h) Disconnect the connector from the front seat airbag assembly LH.
(i) Disconnect the connector from the front seat airbag assembly RH.
(j) Disconnect the connector from the curtain shield airbag assembly LH.
(k) Disconnect the connector from the curtain shield airbag assembly RH.

1	CHECK PASSENGER AIRBAG ON/OFF INDICATOR OPERATION

(a) Turn the ignition switch to the ON position.
(b) The passenger airbag ON/OFF indicator (ON and OFF) comes on for approximately 4 seconds, then turns off for approximately 2 seconds.
(c) Approximately 6 seconds after the ignition switch is turned to the ON position, the passenger airbag ON/OFF indicator indicates ON/OFF according to the condition listed below.
Result:
Double cab

Front Seat Passenger	ON Indicator	OFF Indicator	SRS Warning Light
Adult seated	ON	OFF	OFF
Child seated / Child restrain system set	OFF	ON	OFF
Vacant	OFF	OFF	OFF

Except double cab

Front Seat Passenger	Airbag Cut-Off Switch Position	ON Indicator	OFF Indicator	SRS Warning Light
Adult seated	AUTO	ON	OFF	OFF
Adult seated	OFF	OFF	ON	OFF
Child seated / Child restrain system set	AUTO	OFF	ON	OFF
Child seated / Child restrain system set	OFF	OFF	ON	OFF
Vacant	AUTO	OFF	OFF	OFF
Vacant	OFF	OFF	ON	OFF
Passenger occupant classification system failure	AUTO	OFF	ON	ON
Passenger occupant classification system failure	OFF	OFF	ON	ON

OK → USE SIMULATION METHOD TO CHECK

NG

2	CHECK DTC

(a) Turn the ignition switch to the ON position, and wait for at least 60 seconds.
(b) Check for DTCs (See page RS-365).
OK:
DTC is not output.

NG → GO TO DTC CHART

OK

3	CHECK VEHICLE TYPE

(a) Proceed to the appropriate step according to the seat type.

Result

Vehicle Type	Proceed to
Double cab	A
Except Double Cab	B

B → Go to step 14

A

4	CHECK PASSENGER AIRBAG ON/OFF INDICATOR OPERATION

(a) Turn the ignition switch to the ON position.
(b) The passenger airbag ON/OFF indicator (ON and OFF) comes on for approximately 4 seconds, then turns off for approximately 2 seconds.
(c) Approximately 6 seconds after the ignition switch is turned to the ON position, the passenger airbag ON/OFF indicator indicates ON/OFF according to the condition listed below.

RS

Result

Front Seat Passenger	ON Indicator	OFF Indicator	SRS Warning Light
Adult seated	ON	OFF	OFF
Child seated / Child restrain system set	OFF	ON	OFF
Vacant	OFF	OFF	OFF

OK → USE SIMULATION METHOD TO CHECK

NG

5	CHECK CONNECTION OF CONNECTORS

(a) Turn the ignition switch to the LOCK position.
(b) Disconnect the negative (-) terminal cable from the battery, and wait for at least 90 seconds.
(c) Check that the connectors are properly connected to the center airbag sensor assembly, occupant classification ECU, and 4 occupant classification sensors.
OK:
The connectors are connected.

NG → **CONNECT CONNECTORS**

OK

6	CHECK CONNECTORS

(a) Check that the connectors (on the center airbag sensor assembly side, occupant classification ECU side and 4 occupant classification sensors side) are not damaged (See page IN-34).
OK:
The connectors are not deformed or damaged.

NG → **REPAIR OR REPLACE WIRE HARNESS**

OK

7	PERFORM ZERO POINT CALIBRATION

(a) Connect the negative (-) terminal cable to the battery.
(b) Connect the intelligent tester to the DLC3.
(c) Turn the ignition switch to the ON position.
(d) Using the intelligent tester, perform the zero point calibration (See page RS-357).
OK:
COMPLETED is displayed on the tester.

NG → **Go to step 10**

OK

8	PERFORM SENSITIVITY CHECK

(a) Using the intelligent tester, perform the sensitivity check (See page RS-357).
Standard value:
27 to 33 kg (59.52 to 72.75 lb)

NG → **Go to step 10**

OK

RS

9	CHECK PASSENGER AIRBAG ON/OFF INDICATOR OPERATION

(a) Turn the ignition switch to the ON position.
(b) The passenger airbag ON/OFF indicator (ON and OFF) comes on for approximately 4 seconds, then turns off for approximately 2 seconds.
(c) Approximately 6 seconds after the ignition switch is turned to the ON position, the passenger airbag ON/OFF indicator indicates ON/OFF according to the condition listed below.

Result

Front Seat Passenger	ON Indicator	OFF Indicator	SRS Warning Light
Adult seated	ON	OFF	OFF
Child seated / Child restrain system set	OFF	ON	OFF
Vacant	OFF	OFF	OFF

OK → END

NG

10	REPAIR FRONT SEAT ASSEMBLY (PASSENGER SEAT)

(a) Loosen the 4 installation bolts fixing the front passenger seat, and then re-tighten them to the specified torque.
Torque:
37 N*m (375 kgf*cm, 27 ft.*lbf)

NEXT

11	PERFORM ZERO POINT CALIBRATION

(a) Connect the negative (-) terminal cable to the battery.
(b) Connect the intelligent tester to the DLC3.
(c) Turn the ignition switch to the ON position.
(d) Using the intelligent tester, perform the zero point calibration (See page RS-357).
OK:
COMPLETED is displayed on the tester.

NG → **Go to step 31**

OK

12	PERFORM SENSITIVITY CHECK

(a) Using the intelligent tester, perform the sensitivity check (See page RS-357).
Standard value:
27 to 33 kg (59.52 to 72.75 lb)

RS

NG → Go to step 31

OK

13 PASSENGER AIRBAG ON/OFF INDICATOR OPERATION

(a) Turn the ignition switch to the ON position.
(b) The passenger airbag ON/OFF indicator (ON and OFF) comes on for approximately 4 seconds, then turns off for approximately 2 seconds.
(c) Approximately 6 seconds after the ignition switch is turned to the ON position, the passenger airbag ON/OFF indicator indicates ON/OFF according to the condition listed below.

Result

Front Seat Passenger	ON Indicator	OFF Indicator	SRS Warning Light
Adult seated	ON	OFF	OFF
Child seated / Child restrain system set	OFF	ON	OFF
Vacant	OFF	OFF	OFF

NG → Go to step 31

OK

END

14 CHECK PASSENGER AIRBAG ON/OFF INDICATOR OPERATION

(a) Turn the ignition switch to the ON position.
(b) The passenger airbag ON/OFF indicator (ON and OFF) comes on for approximately 4 seconds, then turns off for approximately 2 seconds.
(c) Approximately 6 seconds after the ignition switch is turned to the ON position, the passenger airbag ON/OFF indicator indicates ON/OFF according to the condition listed below.

RS

Result

Front Seat Passenger	Passenger Airbag Manual ON/OFF Switch Position	ON Indicator	OFF Indicator	SRS Warning Light
Adult seated	AUTO	ON	OFF	OFF
Adult seated	OFF	OFF	ON	OFF
Child seated / Child restrain system set	AUTO	OFF	ON	OFF
Child seated / Child restrain system set	OFF	OFF	ON	OFF
Vacant	AUTO	OFF	OFF	OFF
Vacant	OFF	OFF	ON	OFF

OK → Go to step 22

NG

15	PERFORM ZERO POINT CALIBRATION

(a) Connect the negative (-) terminal cable to the battery.
(b) Connect the intelligent tester to the DLC3.
(c) Turn the ignition switch to the ON position.
(d) Using the intelligent tester, perform the zero point calibration (See page RS-357).
OK:
COMPLETED is displayed on the tester.

NEXT

16	PERFORM SENSITIVITY CHECK

(a) Using the intelligent tester, perform the sensitivity check (See page RS-357).
Standard value:
27 to 33 kg (59.52 to 72.75 lb)

NEXT

17	CHECK PASSENGER AIRBAG ON/OFF INDICATOR OPERATION

(a) Turn the ignition switch to the ON position.
(b) The passenger airbag ON/OFF indicator (ON and OFF) comes on for approximately 4 seconds, then turns off for approximately 2 seconds.
(c) Approximately 6 seconds after the ignition switch is turned to the ON position, the passenger airbag ON/OFF indicator indicates ON/OFF according to the condition listed below.

Result

Front Seat Passenger	Passenger Airbag Manual ON/OFF Switch Position	ON Indicator	OFF Indicator	SRS Warning Light
Adult seated	AUTO	ON	OFF	OFF
Adult seated	OFF	OFF	ON	OFF
Child seated / Child restrain system set	AUTO	OFF	ON	OFF
Child seated / Child restrain system set	OFF	OFF	ON	OFF
Vacant	AUTO	OFF	OFF	OFF
Vacant	OFF	OFF	ON	OFF

OK → END

NG

RS

18	REPAIR FRONT SEAT ASSEMBLY (PASSENGER SEAT)

(a) Loosen the 4 installation bolts fixing the front passenger seat, and then re-tighten them to the specified torque.
Torque:
37 N*m (375 kgf*cm, 27 ft.*lbf)

NEXT

19	PERFORM ZERO POINT CALIBRATION

(a) Connect the negative (-) terminal cable to the battery.
(b) Connect the intelligent tester to the DLC3.
(c) Turn the ignition switch to the ON position.
(d) Using the intelligent tester, perform the zero point calibration (See page RS-357).
OK:
COMPLETED is displayed on the tester.

NG → **Go to step 22**

OK

20	PERFORM SENSITIVITY CHECK

(a) Using the intelligent tester, perform the sensitivity check (See page RS-357).

NG → **Go to step 22**

OK

21	PASSENGER AIRBAG ON/OFF INDICATOR

(a) Turn the ignition switch to the ON position.
(b) The passenger airbag ON/OFF indicator (ON and OFF) comes on for approximately 4 seconds, then turns off for approximately 2 seconds.
(c) Approximately 6 seconds after the ignition switch is turned to the ON position, the passenger airbag ON/OFF indicator indicates ON/OFF according to the condition listed below.

RS

Result

Front Seat Passenger	Passenger Airbag Manual ON/OFF Switch Position	ON Indicator	OFF Indicator	SRS Warning Light
Adult seated	AUTO	ON	OFF	OFF
Adult seated	OFF	OFF	ON	OFF
Child seated / Child restrain system set	AUTO	OFF	ON	OFF
Child seated / Child restrain system set	OFF	OFF	ON	OFF

Front Seat Passenger	Passenger Airbag Manual ON/OFF Switch Position	ON Indicator	OFF Indicator	SRS Warning Light
Vacant	AUTO	OFF	OFF	OFF
Vacant	OFF	OFF	ON	OFF

OK → END

NG

22 CHECK CONNECTION OF CONNECTORS

(a) Turn the ignition switch to the LOCK position.
(b) Disconnect the negative (-) terminal cable from the battery, and wait for at least 90 seconds.
(c) Check that the connectors are properly connected to the center airbag sensor assembly and airbag cut-off switch.
OK:
The connectors are connected.

NG → CONNECT CONNECTORS

OK

23 CHECK CONNECTORS

(a) Check that the connectors (on the center airbag sensor assembly side and airbag cut-off switch side) are not damaged (See page IN-34).
OK:
The connectors are not deformed or damaged.

NG → REPAIR OR REPLACE WIRE HARNESS

OK

24 INSPECT AIRBAG CUT-OFF SWITCH

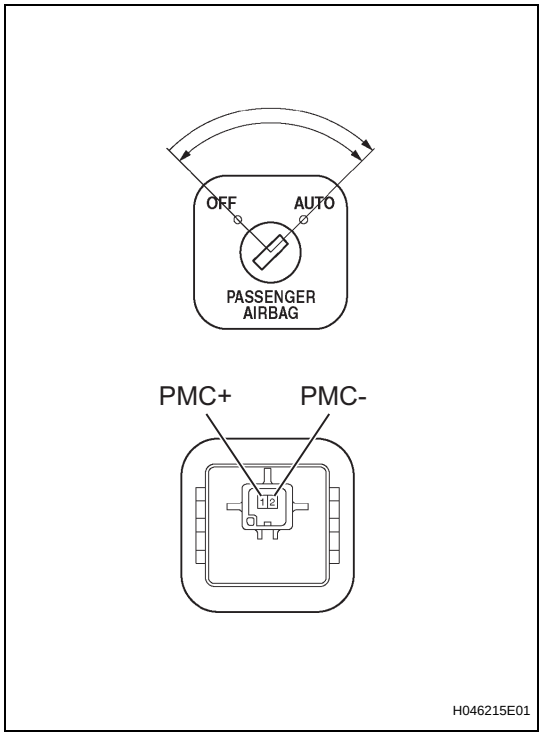

(a) Disconnect the A20 airbag cut-off switch connector.
(b) Check the resistance.
Standard resistance

Switch Connection	Tester Condition	Specified Condition
OFF	1 (PMC+) - 2 (PMC-)	80 to 120Ω
ON	1 (PMC+) - 2 (PMC-)	320 to 480Ω

NG → **REPLACE AIRBAG CUT-OFF SWITCH**

OK

25 CHECK INSTRUMENT PANEL WIRE (FOR OPEN)

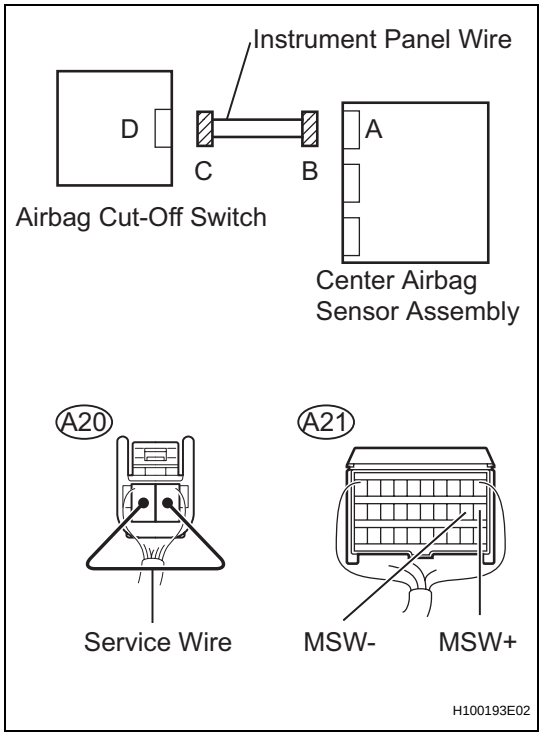

(a) Disconnect the instrument panel wire connector from the airbag cut-off switch.
(b) Using a service wire, connect A20-1 (PMC+) and A20-2 (PMC-) of connector C.
NOTICE:
Do not forcibly insert the service wire into the terminals of the connector when connecting.
(c) Measure the resistance.
Standard resistance

Tester Connection	Condition	Specified Condition
A21-11 (MSW+) - A21-12 (MSW-)	Always	Below 1Ω

NG → **REPAIR OR REPLACE INSTRUMENT PANEL WIRE**

OK

RS

26 CHECK INSTRUMENT PANEL WIRE (FOR SHORT)

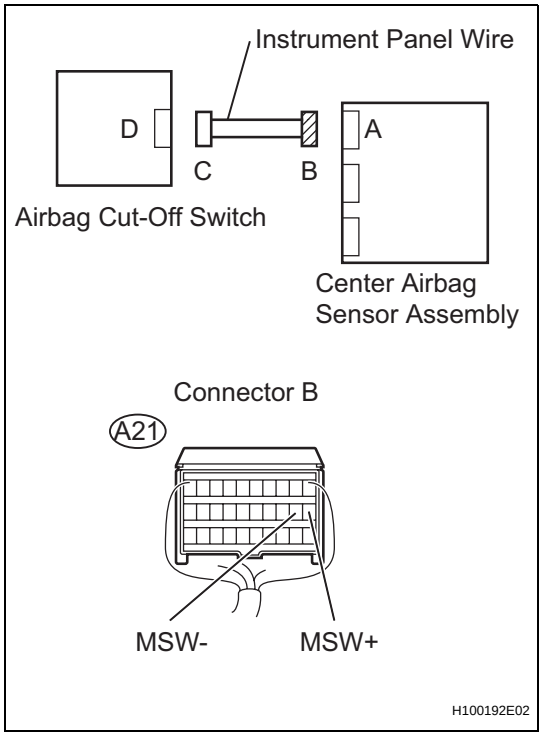

(a) Disconnect the service wire from connector E.
(b) Measure the resistance.
Standard resistance

Tester Connection	Condition	Specified Condition
A21-11 (MSW+) - A21-12 (MSW-)	Always	1 MΩ Higher

NG → **REPAIR OR REPLACE INSTRUMENT PANEL WIRE**

OK

27 CHECK INSTRUMENT PANEL WIRE (TO GROUND)

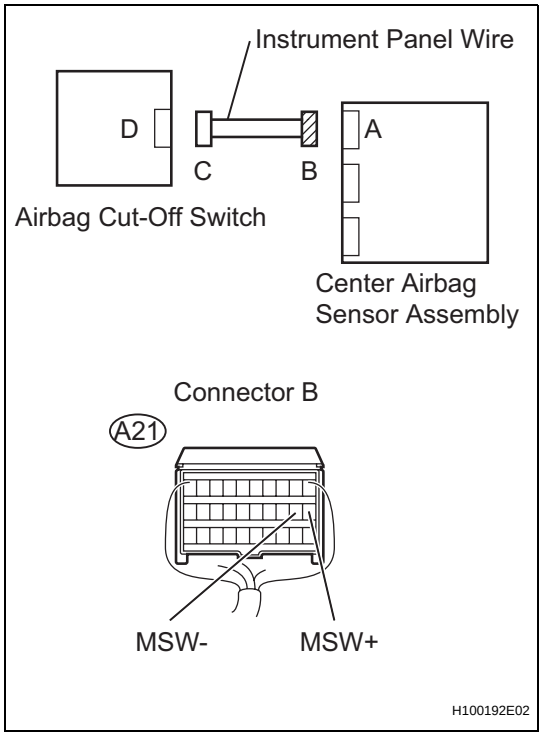

(a) Turn the ignition switch to the LOCK position.
(b) Disconnect the negative (-) terminal cable from the battery, and wait for at least 90 seconds.
(c) Measure the resistance.
Standard resistance

Tester Connection	Condition	Specified Condition
A21-11 (MSW+) - Body ground	Always	1 MΩ Higher
A21-12 (MSW-) - Body ground	Always	1 MΩ Higher

NG → **REPAIR OR REPLACE INSTRUMENT PANEL WIRE**

OK

RS

28 CHECK INSTRUMENT PANEL WIRE (TO B+)

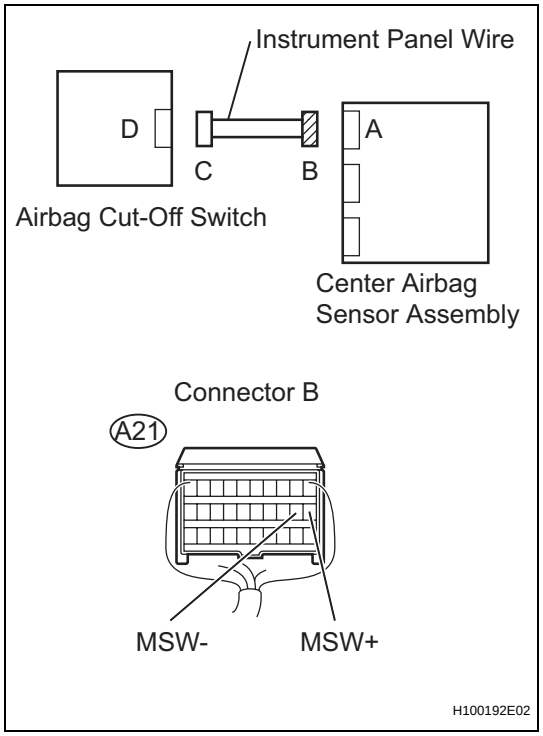

(a) Connect the negative (-) terminal cable to the battery, and wait for at least 2 seconds.
(b) Turn the ignition switch to the ON position.
(c) Measure the voltage.
Standard voltage

Tester Connection	Condition	Specified Condition
A21-11 (MSW+) - Body ground	Ignition switch ON	Below 1 V
A21-12 (MSW-) - Body ground	Ignition switch ON	Below 1 V

NG → **REPAIR OR REPLACE INSTRUMENT PANEL WIRE**

OK

29 CHECK CONNECTION OF CONNECTORS

(a) Turn the ignition switch to the LOCK position.
(b) Disconnect the negative (-) terminal cable from the battery, and wait for at least 90 seconds.
(c) Check that the connectors are properly connected to the occupant classification ECU and 4 occupant classification sensors.
OK:
The connectors are connected.

NG → **CONNECT CONNECTORS**

OK

30 CHECK CONNECTORS

(a) Check that the connectors (on the occupant classification ECU side and 4 occupant classification sensors side) are not damaged (See page IN-34).
OK:
The connectors are not deformed or damaged.

NG → **REPAIR OR REPLACE WIRE HARNESS**

RS

OK

31	CHECK NO. 1 SEAT WIRE (OCCUPANT CLASSIFICATION SENSOR FRONT LH CIRCUIT)

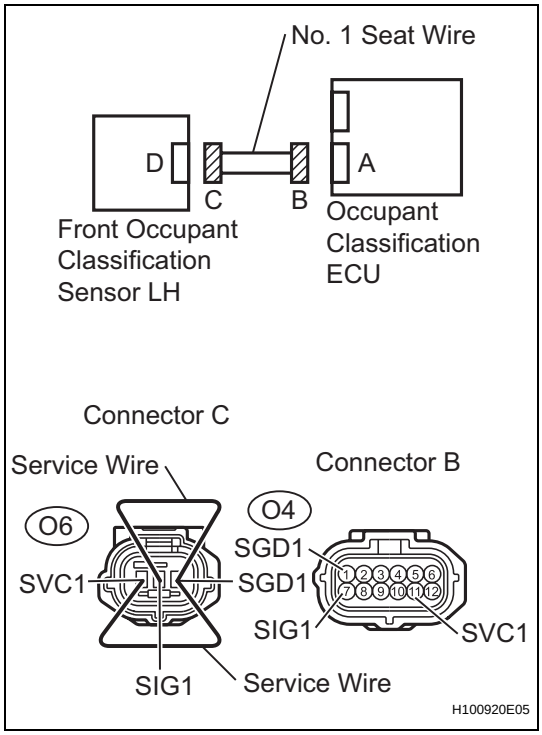

(a) Disconnect the connectors from the occupant classification ECU and the occupant classification sensor front LH.
(b) Using service wires, connect O6-1 (SVC1) and O6-3 (SGD1), and connect O6-2 (SIG1) and O6-3 (SGD1) of connector C.
NOTICE:
Do not forcibly insert the service wires into the terminals of the connector when connecting.
(c) Measure the resistance.
Standard resistance

Tester Connection	Condition	Specified Condition
O4-7 (SIG1) - O4-1 (SGD1)	Always	Below 1 Ω
O4-11 (SVC1) - O4-1 (SGD1)	Always	Below 1 Ω

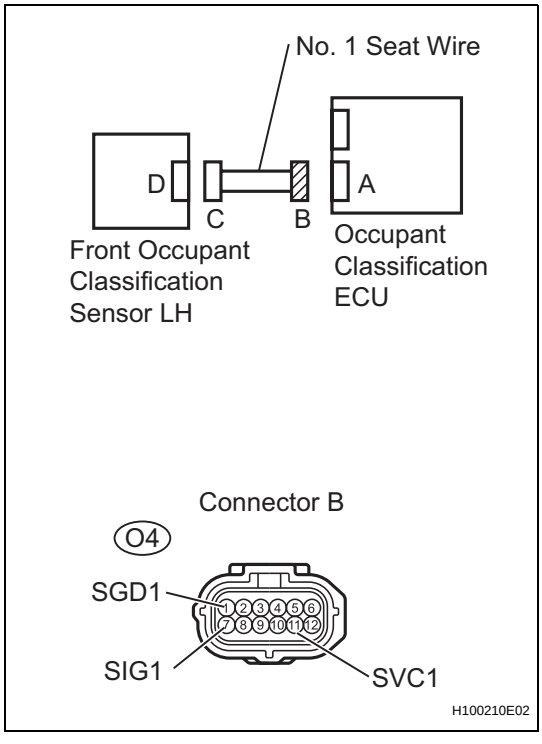

(d) Disconnect the service wires from connector C.
(e) Measure the resistance.
Standard resistance

Tester Connection	Condition	Specified Condition
O4-7 (SIG1) - O4-1 (SGD1))	Always	1MΩ or Higher
O4-11 (SVC1) - O4-1 (SGD1)	Always	1MΩ or Higher
O4-7 (SIG1) - O4-11 (SVC1)	Always	1MΩ or Higher
O4-1 (SGD1) - Body ground	Always	1MΩ or Higher
O4-7 (SIG1) - Body ground)	Always	1MΩ or Higher
O4-11 (SVC1) - Body ground	Always	1MΩ or Higher

(f) Connect the negative (-) terminal cable to the battery.
(g) Turn the ignition switch to the ON position.
(h) Measure the voltage.
Standard voltage

Tester Connection	Condition	Specified Condition
O4-1 (SGD1) - Body ground	Ignition switch ON	Below 1 V
O4-7 (SIG1) - Body ground	Ignition switch ON	Below 1 V
O4-11 (SVC1) - Body ground	Ignition switch ON	Below 1 V

RS

NG → **REPAIR OR REPLACE NO. 1 SEAT WIRE**

OK

32 CHECK NO. 1 SEAT WIRE (OCCUPANT CLASSIFICATION SENSOR FRONT RH CIRCUIT)

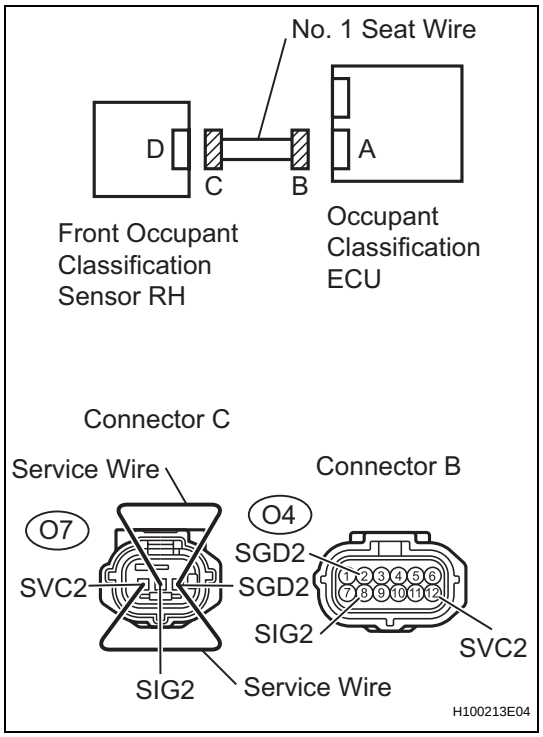

(a) Turn the ignition switch to the LOCK position.
(b) Disconnect the negative (-) terminal cable from the battery, and wait for at least 90 seconds.
(c) Disconnect the connectors from the occupant classification ECU and the occupant classification sensor front RH.
(d) Using service wires, connect O7-1 (SVC2) and O7-3 (SGD2), and connect O7-2 (SIG2) and O7-3 (SGD2) of connector C.
NOTICE:
Do not forcibly insert the service wires into the terminals of the connector when connecting.
(e) Measure the resistance.
Standard resistance

Tester Connection	Condition	Specified Condition
O4-8 (SIG2) - O4-2 (SGD2)	Always	Below 1 Ω
O4-12 (SVC2) - O4-2 (SGD2)	Always	Below 1 Ω

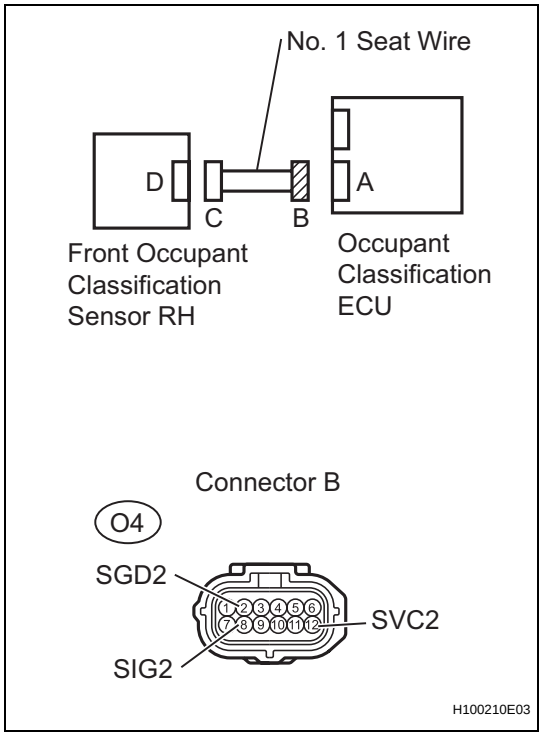

(f) Disconnect the service wires from connector C.
(g) Measure the resistance.
Standard resistance

Tester Connection	Condition	Specified Condition
O4-8 (SIG2) - O4-2 (SGD2)	Always	1MΩ or Higher
O4-12 (SVC2) - O4-2 (SGD2)	Always	1MΩ or Higher
O4-8 (SIG2) - O4-12 (SVC2)	Always	1MΩ or Higher
O4-2 (SGD2) - Body ground	Always	1MΩ or Higher
O4-8 (SIG2) - Body ground	Always	1MΩ or Higher
O4-12 (SVC2) - Body ground	Always	1MΩ or Higher

(h) Connect the negative (-) terminal cable to the battery.
(i) Turn the ignition switch to the ON position.
(j) Measure the voltage.
Standard voltage

Tester Connection	Condition	Specified Condition
O4-2 (SGD2) - Body ground	Ignition switch ON	Below 1 V
O4-8 (SIG2) - Body ground	Ignition switch ON	Below 1 V

RS

Tester Connection	Condition	Specified Condition
O4-12 (SVC2) - Body ground	Ignition switch ON	Below 1 V

NG → REPAIR OR REPLACE NO. 1 SEAT WIRE

OK

33 CHECK NO. 1 SEAT WIRE (OCCUPANT CLASSIFICATION SENSOR REAR LH CIRCUIT)

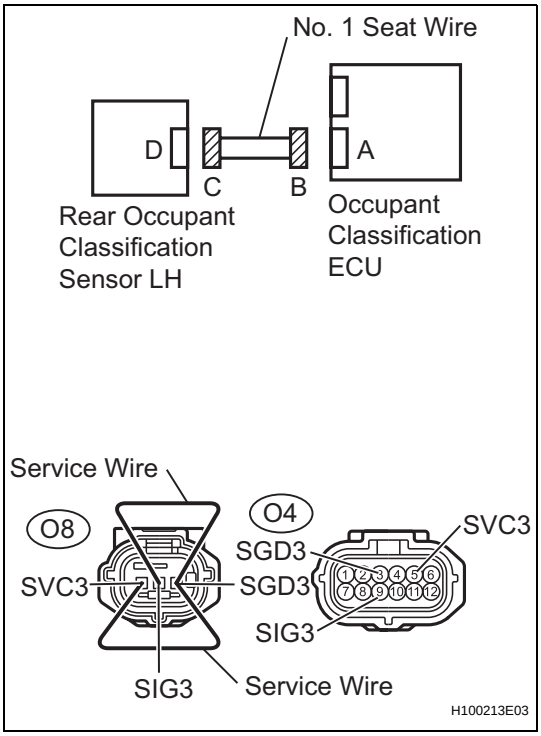

(a) Turn the ignition switch to the LOCK position.
(b) Disconnect the negative (-) terminal cable from the battery, and wait for at least 90 seconds.
(c) Disconnect the connectors from the occupant classification ECU and the occupant classification sensor rear LH.
(d) Using service wires, connect O8-1 (SVC3) and O8-3 (SGD3), and connect O8-2 (SIG3) and O8-3 (SGD3) of connector C.

NOTICE:

Do not forcibly insert the service wires into the terminals of the connector when connecting.

(e) Measure the resistance.

Standard resistance

Tester Connection	Condition	Specified Condition
O4-5 (SVC3) - O4-3 (SGD3)	Always	Below 1 Ω
O4-9 (SIG3) - O4-3 (SGD3)	Always	Below 1 Ω

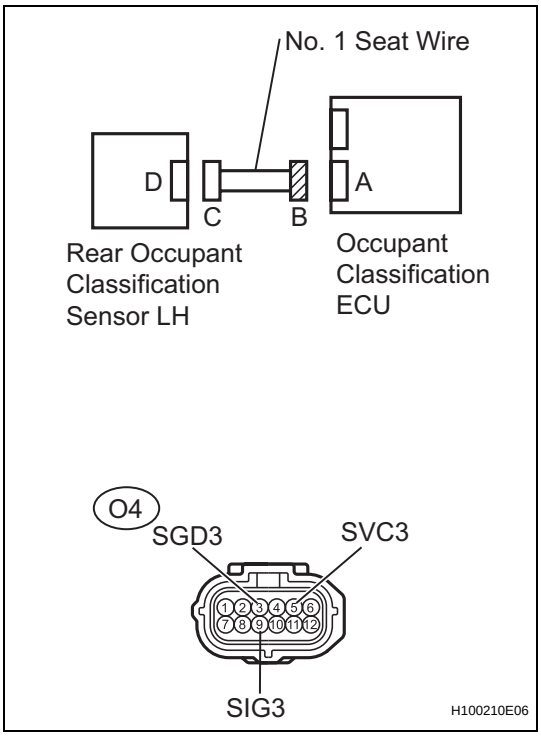

(f) Disconnect the service wires from connector C.
(g) Measure the resistance.

Standard resistance

Tester Connection	Condition	Specified Condition
O4-5 (SVC3) - O4-3 (SGD3)	Always	1MΩ or Higher
O4-9 (SIG3) - O4-3 (SGD3)	Always	1MΩ or Higher
O4-5 (SVC3) - O4-9 (SIG3)	Always	1MΩ or Higher
O4-3 (SGD3) - Body ground	Always	1MΩ or Higher
O4-5 (SVC3) - Body ground	Always	1MΩ or Higher
O4-9 (SIG3) - Body ground	Always	1MΩ or Higher

(h) Connect the negative (-) terminal cable to the battery.
(i) Turn the ignition switch to the ON position.
(j) Measure the voltage.

RS

Standard voltage

Tester Connection	Condition	Specified Condition
O4-3 (SGD3) - Body ground	Ignition switch ON	Below 1 V
O4-5 (SVC3) - Body ground	Ignition switch ON	Below 1 V
O4-9 (SIG3) - Body ground	Ignition switch ON	Below 1 V

NG → **REPAIR OR REPLACE NO. 1 SEAT WIRE**

OK

34 CHECK NO. 1 SEAT WIRE (OCCUPANT CLASSIFICATION SENSOR REAR RH CIRCUIT)

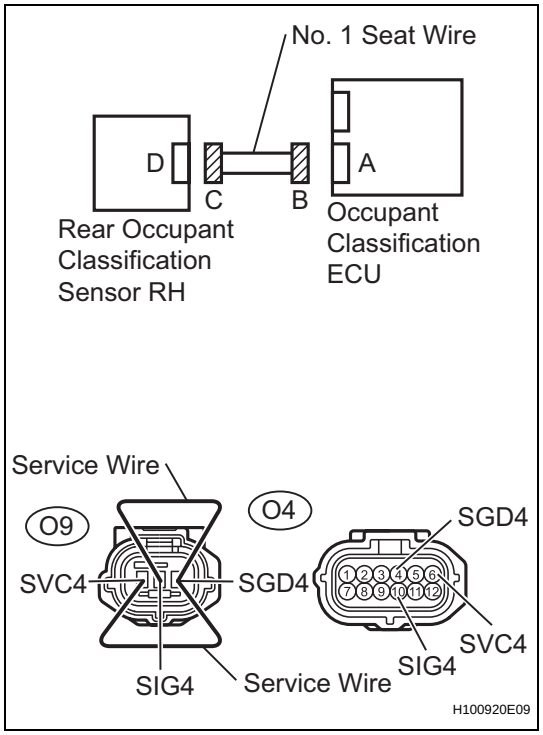

(a) Turn the ignition switch to the LOCK position.
(b) Disconnect the negative (-) terminal cable from the battery, and wait for at least 90 seconds.
(c) Disconnect the connectors from the occupant classification ECU and the occupant classification sensor rear LH.
(d) Using service wires, connect O9-1 (SVC4) and O9-3 (SGD4), and connect O9-2 (SIG4) and O9-3 (SGD4) of connector C.
NOTICE:
Do not forcibly insert the service wires into the terminals of the connector when connecting.
(e) Measure the resistance.
Standard resistance

Tester Connection	Condition	Specified Condition
O4-6 (SVC4) - O4-4 (SGD4)	Always	Below 1 Ω
O4-10 (SIG4) - O4-4 (SGD4)	Always	Below 1 Ω

RS

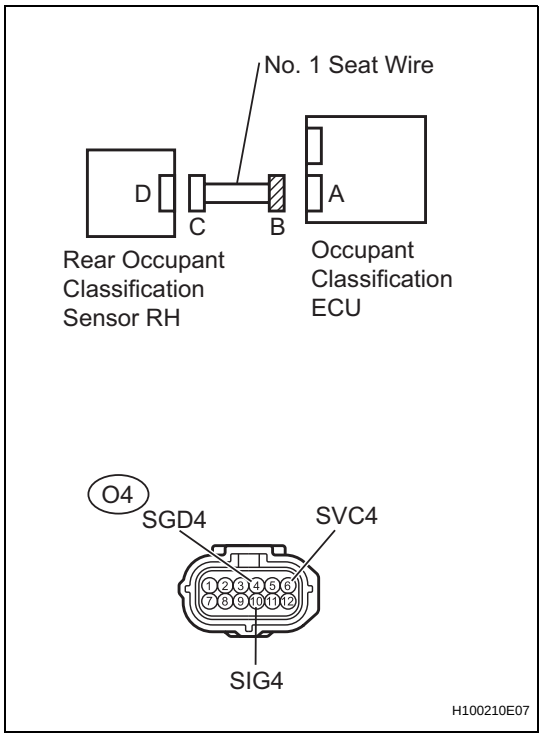

(f) Disconnect the service wires from connector C.
(g) Measure the resistance.
Standard resistance

Tester Connection	Condition	Specified Condition
O4-6 (SVC4) - O4-4 (SGD4)	Always	1MΩ or Higher
O4-10 (SIG4) - O4-4 (SGD4)	Always	1MΩ or Higher
O4-6 (SVC4) - O4-10 (SIG4)	Always	1MΩ or Higher
O4-4 (SGD4) - Body ground	Always	1MΩ or Higher
O4-6 (SVC4) - Body ground	Always	1MΩ or Higher
O4-10 (SIG4) - Body ground	Always	1MΩ or Higher

(h) Connect the negative (-) terminal cable to the battery.
(i) Turn the ignition switch to the ON position.
(j) Measure the voltage.
Standard voltage

Tester Connection	Condition	Specified Condition
O4-4 (SGD4) - Body ground	Ignition switch ON	Below 1 V
O4-6 (SVC4) - Body ground	Ignition switch ON	Below 1 V
O4-10 (SIG4) - Body ground	Ignition switch ON	Below 1 V

NG → **REPAIR OR REPLACE NO. 1 SEAT WIRE**

OK

35 PERFORM ZERO POINT CALIBRATION

(a) Connect the negative (-) terminal cable to the battery.
(b) Connect the intelligent tester to the DLC3.
(c) Turn the ignition switch to the ON position.
(d) Using the intelligent tester, perform the zero point calibration (See page RS-357).
OK:
COMPLETED is displayed on the tester.

NEXT

36 PERFORM SENSITIVITY CHECK

(a) Using the intelligent tester, perform the sensitivity check (See page RS-357).
Standard value:
27 to 33 kg (59.52 to 72.75 lb)

NEXT

RS

37 CHECK CENTER AIRBAG SENSOR ASSEMBLY

(a) Turn the ignition switch to the LOCK position.
(b) Disconnect the negative (-) terminal cable from the battery, and wait for at least 90 seconds.
(c) Replace the center airbag sensor assembly (See page RS-602).
HINT:
Perform the inspection using parts from a normal vehicle when possible.
(d) Connect the connectors to the center airbag sensor assembly.
(e) Connect the negative (-) terminal cable to the battery, and wait for at least 2 seconds.
(f) Turn the ignition switch to the ON position.
(g) The passenger airbag ON/OFF indicator (ON and OFF) comes on for approximately 4 seconds, then turns off for approximately 2 seconds.
(h) Approximately 6 seconds after the ignition switch is turned to the ON position, the passenger airbag ON/OFF indicator indicates ON/OFF according to the condition listed below.
Result:
Double cab

Front Seat Passenger	ON Indicator	OFF Indicator	SRS Warning Light
Adult seated	ON	OFF	OFF
Child seated / Child restrain system set	OFF	ON	OFF
Vacant	OFF	OFF	OFF

Except double cab

Front Seat Passenger	Airbag Cut-Off Switch	ON Indicator	OFF Indicator	SRS Warning Light
Adult seated	AUTO	ON	OFF	OFF
Adult seated	OFF	OFF	ON	OFF
Child seated / Child restrain system set	AUTO	OFF	ON	OFF
Child seated / Child restrain system set	OFF	OFF	ON	OFF
Vacant	AUTO	OFF	OFF	OFF
Vacant	OFF	OFF	ON	OFF

RS

OK → END

NG

38 REPLACE OCCUPANT DETECTION ECU

(a) Turn the ignition switch to the LOCK position.
(b) Disconnect the negative (-) terminal cable from the battery, and wait for at least 90 seconds.
(c) Replace the occupant classification ECU (See page RS-631).

NEXT

39	PERFORM ZERO POINT CALIBRATION

(a) Connect the negative (-) terminal cable to the battery.
(b) Connect the intelligent tester to the DLC3.
(c) Turn the ignition switch to the ON position.
(d) Using the intelligent tester, perform the zero point calibration (See page RS-357).
OK:
COMPLETED is displayed on the tester.

NG → **Go to step 41**

OK

40	PERFORM SENSITIVITY CHECK

(a) Using the intelligent tester, perform the sensitivity check (See page RS-357).
Standard value:
27 to 33 kg (59.52 to 72.75 lb)

OK → **END**

NG

41	REPLACE FRONT SEAT WITH ADJUSTER FRAME ASSEMBLY RH

(a) Turn the ignition switch to the LOCK position.
(b) Disconnect the negative (-) terminal cable from the battery, and wait for at least 90 seconds.
(c) Replace the front seat with adjuster frame assembly RH (See page SE-38).

NEXT

RS

42	PERFORM ZERO POINT CALIBRATION

(a) Connect the negative (-) terminal cable to the battery.
(b) Connect the intelligent tester to the DLC3.
(c) Turn the ignition switch to the ON position.
(d) Using the intelligent tester, perform the zero point calibration (See page RS-357).
OK:
COMPLETED is displayed on the tester.

NEXT

43	**PERFORM SENSITIVITY CHECK**

(a) Using the intelligent tester, perform the sensitivity check (See page RS-357).
Standard value:
27 to 33 kg (59.52 to 72.75 lb)

NEXT

END

SYSTEM DIAGRAM

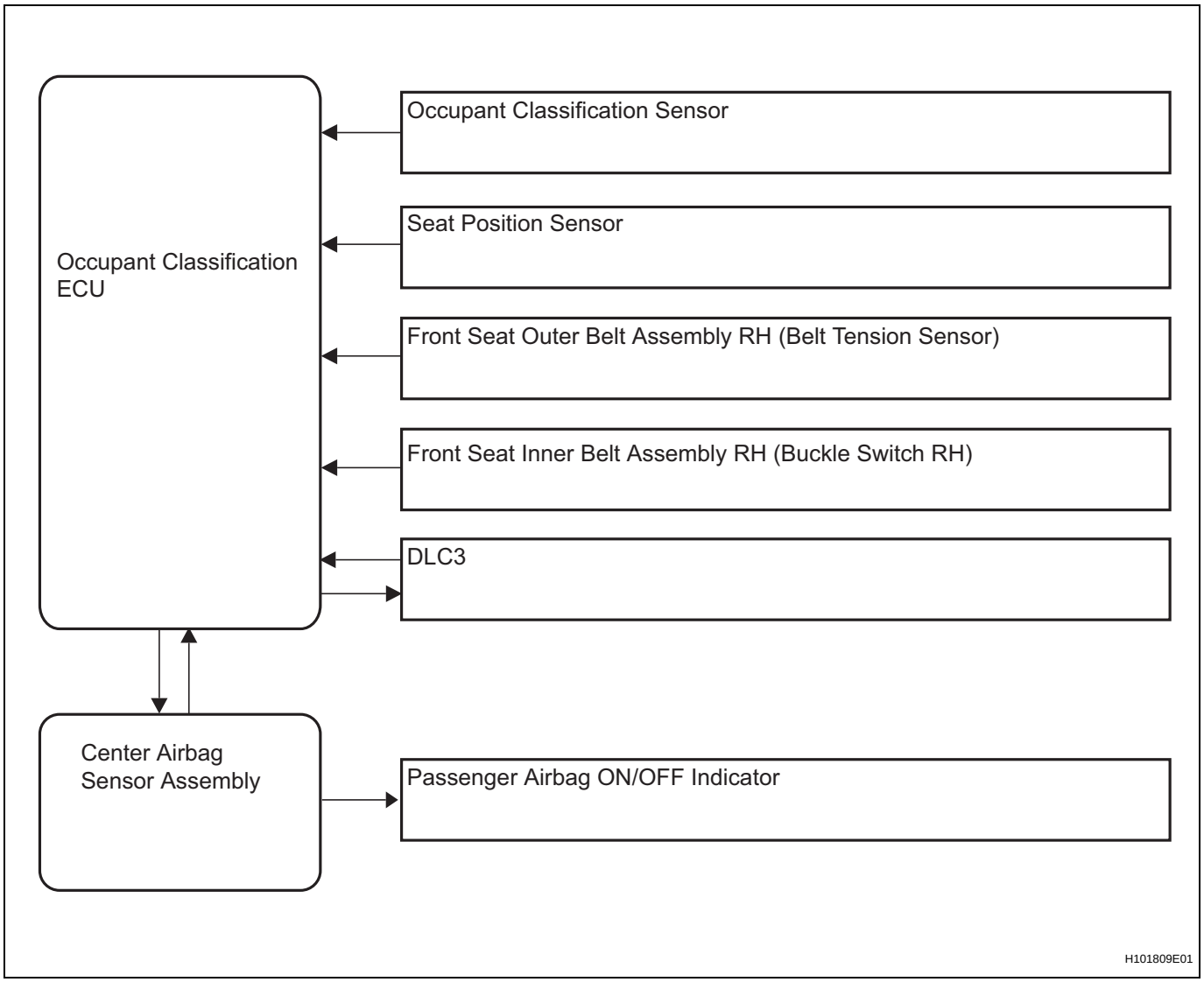

SYSTEM DESCRIPTION

1. GENERAL DESCRIPTION

(a) In the occupant classification system, the occupant classification ECU calculates the weight of the front passenger based on a signal from the occupant classification sensor. This system judges the occupant to be a child when it detects a weight of less than 25kg (55.1 lb), and disables the front passenger side airbag and front passenger side - side airbag (*1).
HINT:
*1: For vehicles equipped with the side and curtain shield airbags.

(b) This system is mainly comprised of the occupant classification sensor that detects the load on the front passenger seat. The occupant classification ECU controls the system, and the passenger airbag ON/OFF indicator indicates the ON/OFF condition of the front passenger airbag assembly and front passenger side - side airbag assembly (*1).
HINT:
*1: For vehicles equipped with the side and curtain shield airbags.

2. OCCUPANT CLASSIFICATION SENSOR

(a) The occupant classification sensor is installed between the seat cushion frame and seat cushion pad. The pressure sensor is installed on the seat frame.

(b) The pressure sensor detects the pressure applied to the front passenger seat by the seated passenger. The occupant classification ECU determines whether the front passenger side airbag and front passenger side - side airbag (*1) are deployed or not based on signals from the pressure sensor.
HINT:
*1: For vehicles equipped with the side and curtain shield airbags.

3. SEAT BELT TENSION SENSOR

(a) The seat belt tension sensor is installed on the front seat outer belt to detect a CRS (Child Restraint System).

4. SEAT POSITION SENSOR (FOR FRONT PASSENGER SIDE)

(a) The seat position sensor (for front passenger side) is installed on the driver seat side - side slider rail to detect the position of the front passenger side seat.

HOW TO PROCEED WITH TROUBLESHOOTING

1	VEHICLE BROUGHT TO WORKSHOP

NEXT

2	CUSTOMER PROBLEM ANALYSIS (See page IN-26)

NEXT

3	PASSENGER AIRBAG ON/OFF INDICATOR CHECK (See page RS-484)

NEXT

4	DTCs CHECK (Present and Past DTCs) (See page RS-487)

(a) Check for DTCs.
Result

Result	Proceed to
DTC is output.	A
DTC is not output.	B

B → GO TO PROBLEM SYMPTOMS TABLE

A

5	DTCs CHART (See page RS-489)

NEXT

6	CIRCUIT INSPECTION

NEXT

7	REPAIR OR REPLACEMENT

NEXT

8	DTC CLEARANCE (Present and Past DTCs) (See page RS-487)

(a) Clear the DTCs.

RS

NEXT

9	DTC CHECK (Present and Past DTCs) (See page RS-487)

(a) Check for DTCs.
Result

Result	Proceed to
DTC is not output.	A
DTC is output.	B

B → Go to step 5

A

10	SYMPTOM SIMULATION

(a) Check the passenger airbag ON/OFF indicator condition (See page RS-484).

Result

Result	Proceed to
Passenger airbag ON/OFF indicator is operating normally.	A
Passenger airbag ON/OFF indicator (OFF) and SRS warning light come on.	B

B → Go to step 5

A

11	CONFIRMATION TEST

NEXT

END

REGISTRATION

1. REGISTRATION

NOTICE:

- **If any DTCs related to the occupant classification ECU are output, troubleshoot those DTCs by referring to the DIAGNOSTIC TROUBLE CODE CHART.**
- **When ECU data saving or loading operations cannot be performed, replace the front seat cushion assembly (with occupant classification ECU and occupant classification sensor).**

HINT:

- When the occupant classification ECU for a bench seat type is replaced, the previous ECU data must be saved in the intelligent tester and loaded into the new ECU by following the flowchart below.
- Until the data from the previous ECU are loaded into the new occupant classification ECU, these data are not erased even when the tester is turned off.
- ECU EXCHANGE PROCEDURE (Before Exchange) describes the procedure to save the data in the intelligent tester from the occupant classification ECU which has been installed on the vehicle. ECU EXCHANGE PROCEDURE (After Exchange) describes the procedure to load the data from the previous ECU, stored in the intelligent tester, into the new ECU.

(a) Connect the intelligent tester to the DLC3.

(b) Turn the ignition switch to the ON position.

(c) Store the occupant classification ECU data into the intelligent tester by following the prompts on the tester screen.

HINT:

If the ECU data cannot be stored in the intelligent tester, replace the front seat cushion assembly (with occupant classification ECU and occupant classification sensor).

(d) Turn the ignition switch to the LOCK position.

(e) Disconnect the negative (-) terminal cable from the battery, and wait for at least 90 seconds.

(f) Replace the occupant classification ECU (See page RS-634).

(g) Connect the negative (-) terminal cable to the battery.

(h) Turn the ignition switch to the ON position.

(i) Load the data from the previous ECU stored in the tester, into the newly installed ECU by following the prompts on the tester screen.

(j) Turn the ignition switch to the LOCK position.

(k) Turn the ignition switch to the ON position.

(l) Clear the DTCs stored in the memory (See page RS-487).
HINT:
If DTC is not cleared at this time, past DTC will remain.

ECU EXCHANGE PROCEDURE (Before Exchange):

1: DIAGNOSIS - 1: OBD/MOBD - MODEL YEAR - MODEL SELECTION - 9: OCCUPANT DETECT
Refer to the following screen flow.

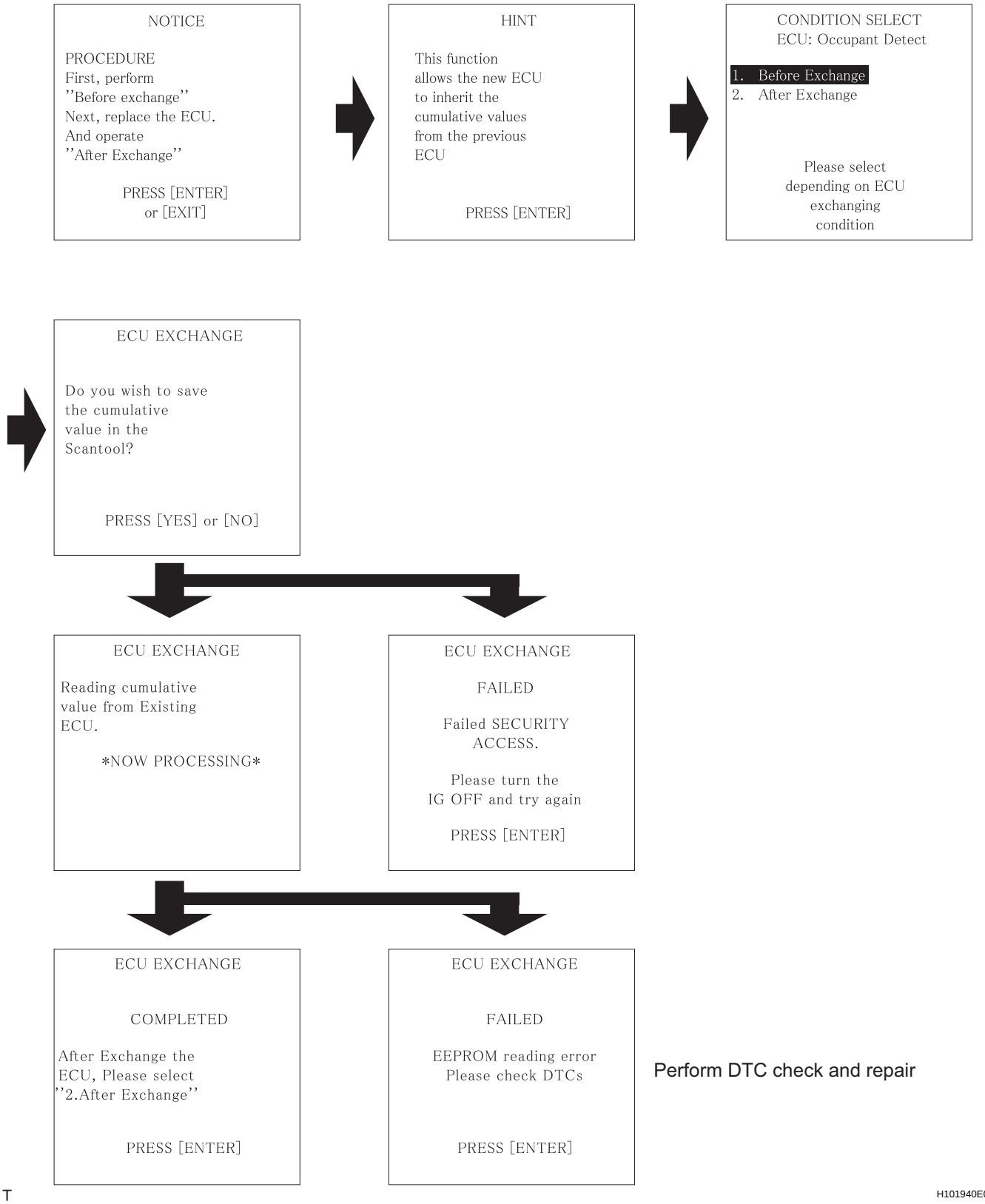

Perform DTC check and repair

RS

T

H101940E01

ECU EXCHANGE PROCEDURE (After Exchange):

1: DIAGNOSIS - 1: OBD/MOBD - MODEL YEAR - MODEL SELECTION - 9: OCCUPANT DETECT
Refer to the following screen flow.

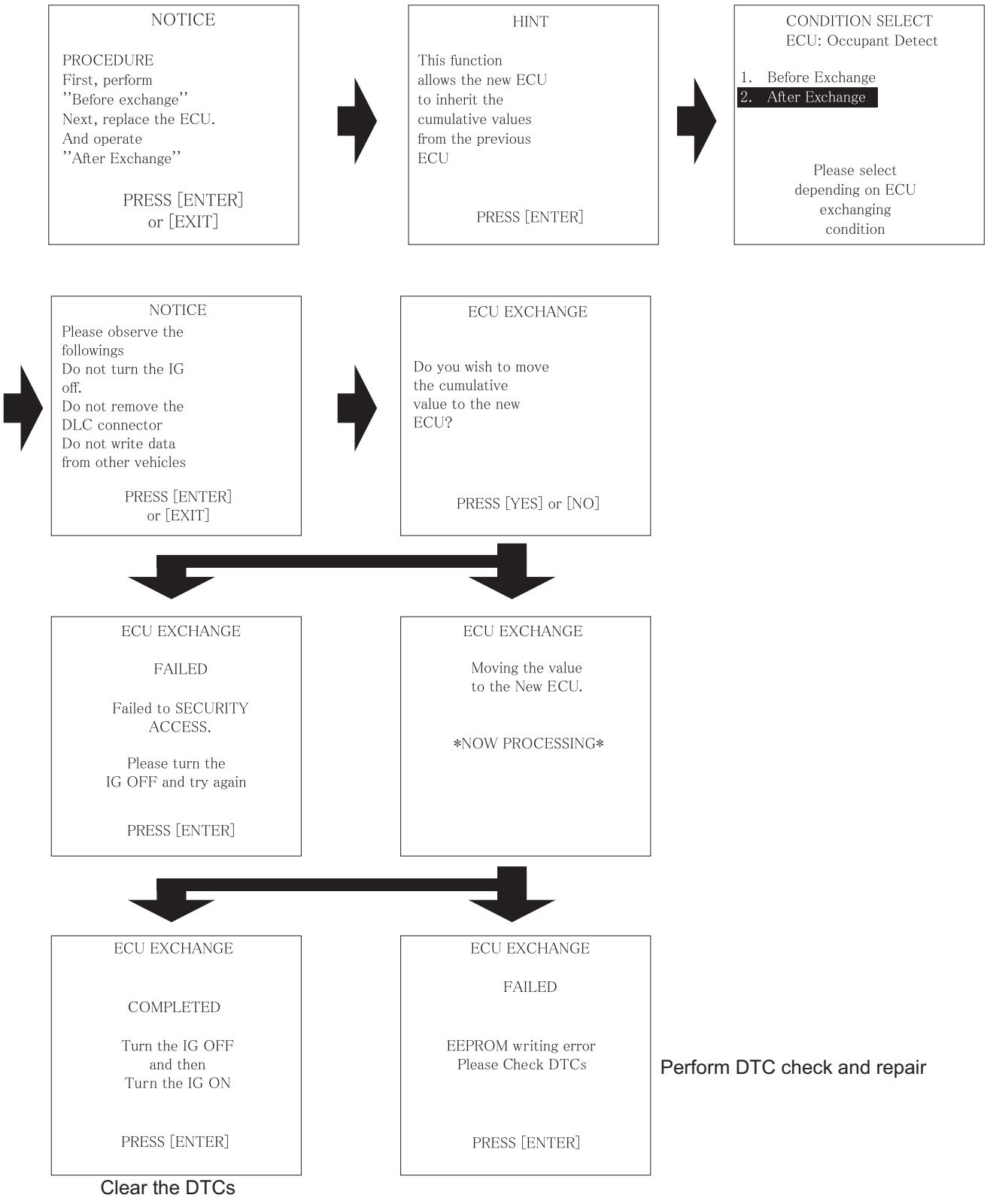

T

H101939E01

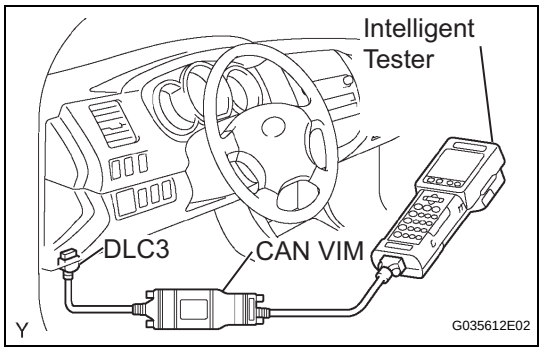

INITIALIZATION

NOTICE:

Make sure that the front passenger seat is not occupied before performing the operation.

HINT:

Perform the zero point calibration if any of the following conditions apply.

- The occupant classification ECU is replaced.
- Accessories (seatback tray and seat cover, etc.) are installed.
- The front passenger seat is removed from the vehicle.
- The passenger airbag ON/OFF indicator indicates OFF when the front passenger seat is not occupied.
- The vehicle is brought to the workshop for repair due to an accident or a collision.

1. ZERO POINT CALIBRATION

(a) Zero point calibration procedures

(1) Check that all of the following conditions are met:

- The vehicle is parked on a flat surface.
- No objects are placed on the front passenger seat.
- The front passenger seat belt buckle switch is OFF.

(2) Adjust the seat position according to the table below.

Adjustment Item	Position
Slide Direction	Rearmost position
Reclining Angle	Upright position
Headrest Height	Lowest position
Lifter Height	Lowest position

(3) Connect the intelligent tester to the DLC3.

(4) Turn the ignition switch to the ON position.

(5) Perform the zero point calibration by following the prompts on the tester screen.

HINT:

- Refer to the intelligent tester operator's manual for further details.
- If the zero point calibration is performed when the calibration conditions are not satisfied, DTC B1797 is output.
- If the zero point calibration has failed, DTC B1797 is output.

ZERO POINT CALIBRATION PROCEDURE:

1: DIAGNOSIS - 1: OBD/MOBD - MODEL YEAR - MODEL SELECTION - 9: OCCUPANT DETECT
Refer to the following screen flow.

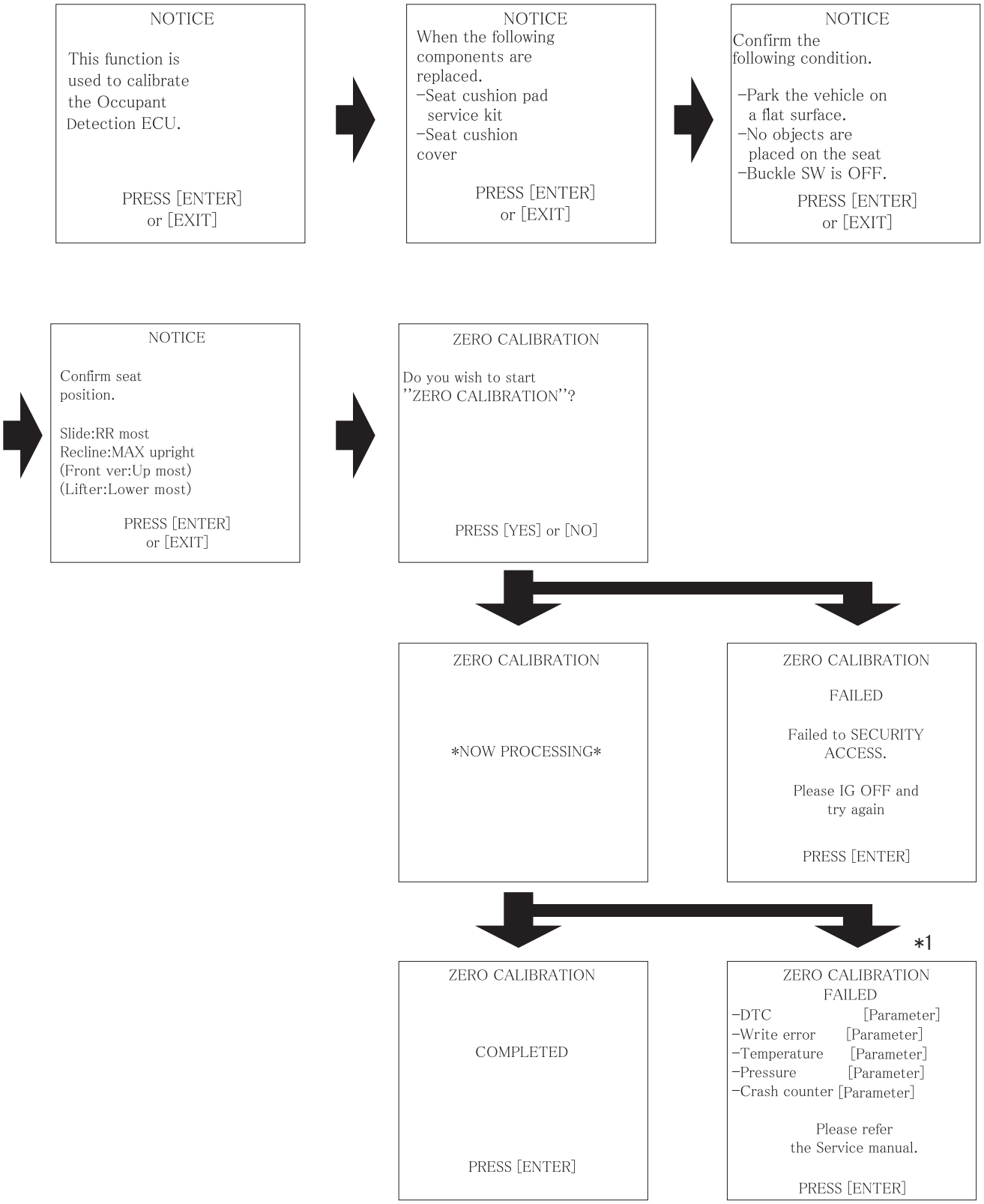

H101942E01

RS

T

HINT:
*1: If After Exchange is selected before the previous ECU data are stored in the intelligent tester, the display screen returns to CONDITION SELECT ECU: Occupant Detect.

Item	Procedure
DTC	Perform DTC check and repair
Write error	Replace front seat cushion assembly (with occupant classification ECU and occupant classification sensor)
Temperature	Check value of THERMISTOR TEMP in ECU DATA LIST
Pressure	Check value of FILTERED PRESS in ECU DATA LIST
Crash counter	-

2. SENSITIVITY CHECK

(a) Sensitivity check procedures

(1) Turn the ignition switch to the LOCK position.

(2) Turn the airbag cut-off switch to the AUTO position.

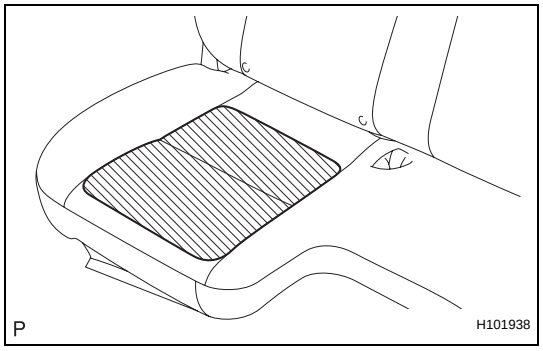

(3) Place a weight of 20 kg (44.0 lb) on the front passenger seat.
NOTICE:
- **Do not let the weight come into contact with the seat back when placing it on the seat cushion.**
- **Place the weight in the area shown in the illustration.**

(4) Turn the ignition switch to the ON position, and wait for at least 6 seconds.

(5) Check that the passenger airbag ON/OFF indicator indicates OFF.
OK:
The passenger airbag ON/OFF indicator indicates OFF.

(6) Add a weight of 30kg (66.1 lb) to the front passenger seat (total 50 kg (110.2 lb)).
NOTICE:
- **Do not let the weight come into contact with the seat back when placing it on the seat cushion.**
- **Place the weight in the area shown in the illustration.**

(7) Check that the passenger airbag ON/OFF indicator indicates ON.
OK:
The passenger airbag ON/OFF indicator indicates ON.

RS

PROBLEM SYMPTOMS TABLE

HINT:
Proceed to the troubleshooting for each circuit in the table below.

Symptom	Suspected area	See page
Passenger airbag ON/OFF indicator display does not correspond to airbag cut-off switch position	Trouble in Passenger Airbag ON/OFF Indicator	RS-545

TERMINALS OF ECU

1. OCCUPANT CLASSIFICATION ECU

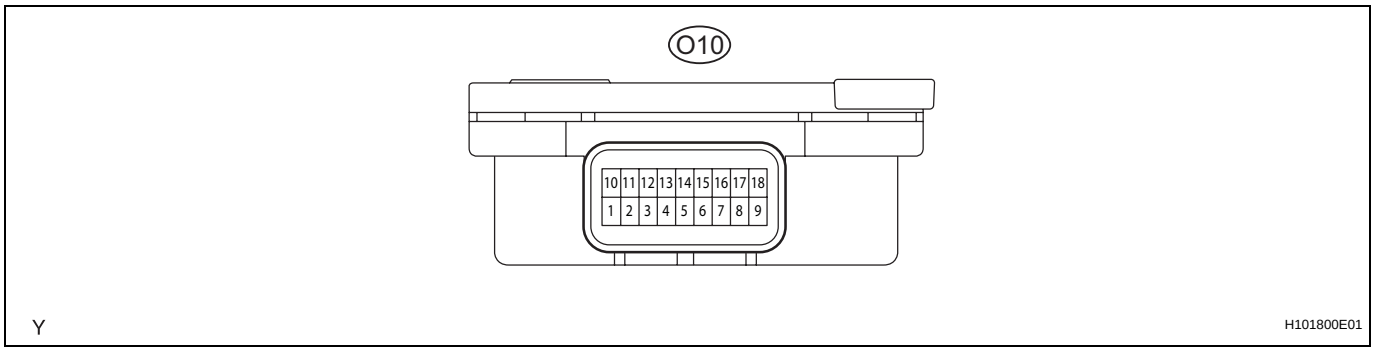

Standard:

Terminal No. (Symbols)	Wiring Color	Terminal Description	Condition	Specified Condition
O10-1 (GSW4) - O10-5 (GND)	P - W-B	Collision detection signal	Ignition switch ON	Pulse generation
O10-3 (GSP) - O10-5 (GND)	L - W-B	Seat position sensor (for front passenger side) ground line	Always	Below 1 V
O10-4 (SP) - O10-3 (GSP)	GR - L	Seat position sensor (for front passenger side) signal line	Ignition switch ON	Low: 4.7 to 7.3 mA Hi: 11.4 to 17.9 mA
O10-5 (GND) - Body ground	W-B - Body ground	Occupant classification ECU ground line	Always	Below 1 V
O10-6 (PS) - O10-15 (GPS)	R-B - LG-B	Pressure sensor signal line	Ignition switch ON	0.6 to 4.9 V
O10-7 (VPS) - O10-5 (GND)	L-W - W-B	Pressure sensor +B line	Ignition switch ON	4.75 to 5.25 V
O10-8 (GBT) - O10-5 (GND)	G - W-B	Belt tension sensor ground line	Always	Below 1 V
O10-9 (IG) - O10-5 (GND)	O - W-B	Occupant classification ECU +B line	Ignition switch ON	10 to 14 V
O10-10 (DIA) - O10-5 (GND)	W - W-B	Diagnosis (DLC3)	Ignition switch ON	Pulse generation
O10-11 (FSR+) - O10-12 (FSR-)	G-R - G-B	Center airbag sensor assembly communication line	Ignition switch ON	Pulse generation
O10-12 (FSR-) - O10-5 (GND)	G-B - W-B	Center airbag sensor assembly communication line (-)	Always	Below 1 V
O10-13 (BSW) - O10-14 (BGND)	B - P-G	Passenger side buckle switch line	Ignition switch ON	Low: 4 to 7 mA Hi: 12 to 18 mA
O10-14 (BGND) - O10-5 (GND)	P-G - W-B	Passenger side buckle switch ground line	Always	Below 1 V
O10-15 (GPS) - O10-5 (GND)	LG-B - W-B	Pressure sensor ground line	Always	Below 1 V
O10-16 (BT) - O10-5 (GND)	LG - W-B	Belt tension sensor signal line	Ignition switch ON	0.75 to 4.25 V
O10-17 (VBT) - O10-5 (GND)	V - W-B	Belt tension sensor +B line	Ignition switch ON	10 to 14 V

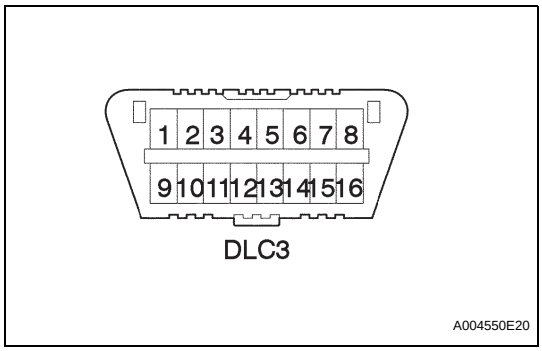

DIAGNOSIS SYSTEM

1. CHECK DLC3

(a) The vehicle's ECU uses the ISO 9141-2 for communication protocol. The terminal arrangement of the DLC3 complies with SAE J1962 and matches the ISO 15765-4 format.

Symbols (Terminal No.)	Terminal Description	Condition	Specified Condition
SIL (7) - SG (5)	Bus + line	During transmission	Pulse generation
CG (4) - Body ground	Chassis ground	Always	Below 1 Ω
BAT (16) - Body ground	Battery positive	Always	11 to 14 V

HINT:

If the display shows a communication error message when the intelligent tester is connected to the DLC3, the ignition switch is turned to the ON position and the intelligent tester is operated, there is a problem on the vehicle side or tool side.

- If communication is normal when the tool is connected to another vehicle, inspect the DLC3 on the original vehicle.
- If communication is still not possible when the tool is connected to another vehicle, the problem is probably in the tool itself. Consult the Service Department listed in the tool's instruction manual.

2. SYMPTOM SIMULATION

HINT:

The most difficult case in troubleshooting is when no symptoms occur. In such cases, a thorough customer problem analysis must be carried out. Then the same or similar conditions and environment in which the problem occurred in the customer's vehicle should be simulated. Regardless of the technician's experience or skill, if troubleshooting proceeds without confirmation of the problem symptoms, something important is likely to be overlooked and incorrect assumptions may be made at some points in the repair operation.

This leads to a standstill in troubleshooting.

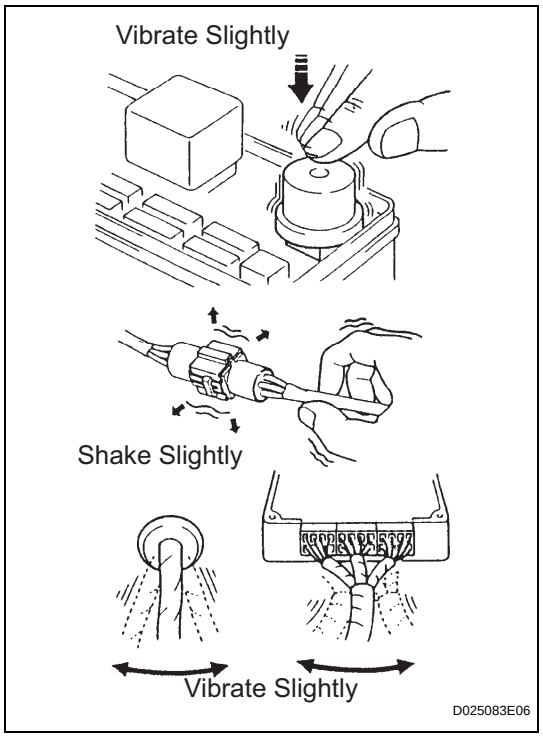

(a) Vibration method (When vibration seems to be the major cause)
HINT:
Perform the simulation method only during the primary check period (for approximately 6 seconds after the ignition switch is turned to the ON position).
(1) Slightly vibrate the part of the sensor considered to be the cause of the problem with your fingers and check whether the malfunction occurs.
HINT:
Shaking the relays too strongly may result in open relays.
(2) Slightly shake the connector vertically and horizontally.
(3) Slightly shake the wire harness vertically and horizontally.
The connector joint and fulcrum of the vibration are the main areas that should be checked thoroughly.

3. FUNCTION OF PASSENGER AIRBAG ON/OFF INDICATOR

(a) Initial check
(1) Turn the ignition switch to the ON position.
(2) The passenger airbag ON/OFF indicator illuminates ON and OFF for approximately 4 seconds, and then turns them off for approximately 2 seconds.
(3) Approximately 6 seconds after the ignition switch is turned to the ON position, the passenger airbag ON/OFF indicator indicates ON or OFF depending on the conditions listed below.

Front Seat Passenger	Airbag Cut-off Switch Position	ON Indicator	OFF Indicator	SRS Warning Light
Adult seated	AUTO	ON	OFF	OFF
Adult seated	OFF	OFF	ON	OFF
Adult seated	Airbag cut off switch system failure	OFF	ON	ON
Child seated / Child restrain system set	AUTO	OFF	ON	OFF
Child seated / Child restrain system set	OFF	OFF	ON	OFF
Child seated / Child restrain system set	Airbag cut off switch system failure	OFF	ON	ON
Vacant	AUTO	OFF	OFF	OFF
Vacant	OFF	OFF	ON	OFF
Vacant	Airbag cut off switch system failure	OFF	ON	ON
Passenger occupant classification system failure	AUTO	OFF	ON	ON
Passenger occupant classification system failure	OFF	OFF	ON	ON

Front Seat Passenger	Airbag Cut-off Switch Position	ON Indicator	OFF Indicator	SRS Warning Light
Passenger occupant classification system failure	Airbag cut off switch system failure	OFF	ON	ON

HINT:

- The passenger airbag ON/OFF indicator operates based on the timing chart below in order to check the indicator light circuit.

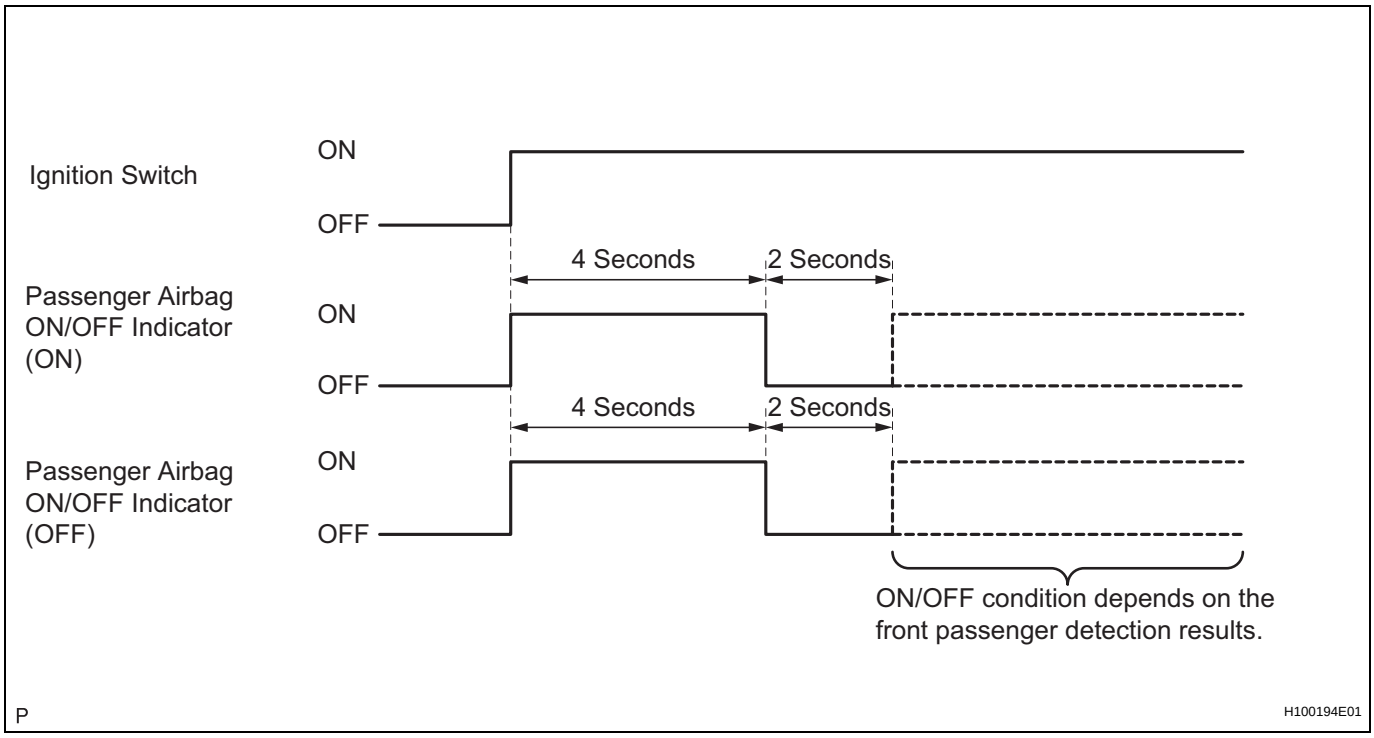

- When the occupant classification system malfunctions, the SRS warning light comes on and the passenger airbag ON/OFF indicator indicates OFF. In this case, check the DTCs in the airbag system first.

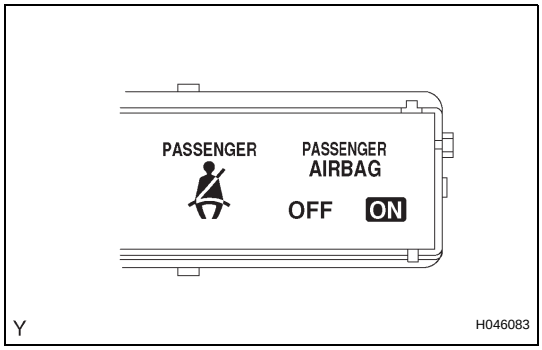

4. PASSENGER AIRBAG ON/OFF INDICATOR CHECK

(a) Turn the ignition switch to the ON position.

(b) Check that the passenger airbag ON/OFF indicator illuminates ON and OFF for approximately 4 seconds, and then turns them off for approximately 2 seconds.

HINT:

Refer to the table in the previous step regarding the passenger airbag ON/OFF indicator when approximately 6 seconds have elapsed after the ignition switch is turned to the ON position.

RS

DTC CHECK / CLEAR

1. DTC CHECK

HINT:

- When DTC B1650/23 is detected as a result of troubleshooting the airbag system, troubleshoot the occupant classification system.
- Use the intelligent tester to read and clear DTCs, otherwise the DTCs cannot be read and cleared.

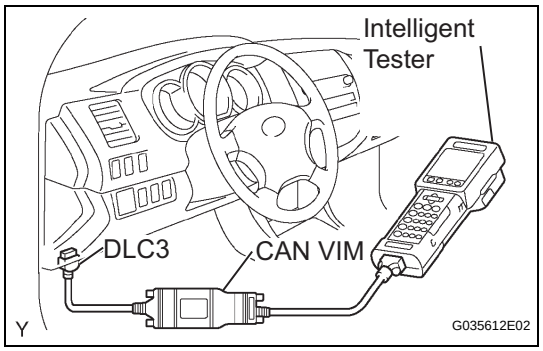

(a) Check for DTCs.

(1) Connect the intelligent tester to the DLC3.

(2) Turn the ignition switch to the ON position.

(3) Check for DTCs by following the prompts on the tester screen.

HINT:

When checking the DTCs of the occupant classification ECU, select the OCCUPANT DETECT on the tester screen.

(b) Clear the DTCs.

(1) Connect the intelligent tester to the DLC3.

(2) Turn the ignition switch to the ON position.

(3) Clear the DTCs by following the prompts on the tester screen.

HINT:

When clearing the DTCs of the occupant classification ECU, select the OCCUPANT DETECT on the tester screen.

DATA LIST / ACTIVE TEST

HINT:
By accessing the DATA LIST displayed by the intelligent tester, values of switches and sensors can be checked without removing any parts. Reading the DATA LIST as the first step of troubleshooting is one method to shorten diagnostic time.

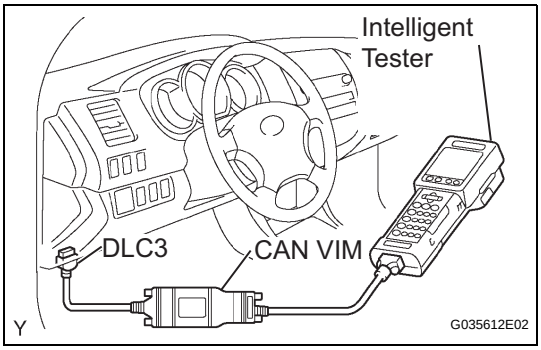

1. DATA LIST FOR OCCUPANT CLASSIFICATION ECU

(a) Connect the intelligent tester to the DLC3.
(b) Turn the ignition switch to the ON position.
(c) Following the display on the tester screen, read the DATA LIST.
HINT:
The Specified Condition for Zero Point Calibration in the table below must be satisfied when the zero point calibration is performed.

DATA LIST

Item	Measurement Item/ Range (Display)	Normal Condition	Specified Condition for Zero Point Calibration	Diagnostic Note
PASSENGER CLASS	Passenger classification/ NG: Data is not determined AM50: Adult is seated and seat is in rear position AF05: Adult is seated and seat is in front position CHILD: Child is seated OFF: Vacant	AF05/AM50/CHILD/OFF	OFF	-
P BUCKLE SW	Buckle switch (Passenger side)/ SET: Passenger side seat belt is fastened UNSET: Passenger side seat belt is unfastened NG: Data is not determined	UNSET/SET	UNSET	-
SEAT POSITION	Seat position/ ON: Seat is in front position OFF: Seat is in rear position NG: Data is not determined	ON/OFF	ON/OFF	-
RELATIVE PRESS	Pressure sensor output/ Min.: 0 Max.: 255	0 to 210	0 to 2	-
FILTERED PRESS	Filtered pressure sensor output/ Min.: 0 Max.: 255	38 to 240	38 to 75	If value outside range of Specified Condition for Zero Point Calibration, check whether any objects placed on seat cushion and that seat cushion fitted correctly.
THERMISTOR TEMP	Thermistor temperature output/ Min.: -40°C (-40°F) Max.: 90°C (194°F)	-40° to 85°C (-40° to185°F)	3° to 40°C (36° to 104°F)	If value outside range of Specified Condition for Zero Point Calibration, adjust temperature to proper range by using air conditioner, etc.

Item	Measurement Item/ Range (Display)	Normal Condition	Specified Condition for Zero Point Calibration	Diagnostic Note
WEIGHT THRESH	Weight threshold/ Min.: 0 Max.: 255	36 to 67 (reference value)	36 to 67 (reference value)	-
FILTERED TENSION	Filtered belt tension output/ Min.: 0 Max.: 255	39 to 229	39 to 64 (no load)	-
EMPTY THRESH	Empty threshold value from seat factory/ Min.: 0 Max.: 255	38 to 75	38 to 75	-
ALLOW THRESH	Threshold value for adult passenger or not from seat factory/ Min.: 0 Max.: 255	43 to 64 (reference value)	43 to 64 (reference value)	-
#PRESENT CODES	Number of present trouble codes/ Min.: 0 Max.: 255	0	0	-
#PAST CODES	Number of past trouble codes/ Min.: 0 Max.: 255	0	0	-

DIAGNOSTIC TROUBLE CODE CHART

HINT:
When DTC B1650/32 is detected as a result of troubleshooting the Supplemental Restraint System, perform troubleshooting for the occupant classification system by referring to the table below.

DTC No.	Detection Item	Trouble Area	Passenger Airbag ON/OFF Indicator (OFF Indicator)	See page
B1771	Passenger Side Buckle Switch Circuit Malfunction	1. No. 1 seat wire 2. Front seat inner belt assembly RH (Buckle switch RH) 3. Occupant classification ECU	ON	RS-490
B1772	Seat Position Sensor Circuit Malfunction	1. No. 1 seat wire 2. Seat position sensor 3. Occupant classification ECU	ON	RS-497
B1773	Belt Tension Sensor Circuit Malfunction	1. No. 1 seat wire 2. Front seat outer belt RH (Belt tension sensor) 3. Occupant classification ECU	ON	RS-504
B1774	Pressure Sensor Circuit Malfunction	1. No. 1 seat wire 2. Occupant classification sensor (Front seat cushion assembly) 3. Occupant classification ECU	ON	RS-510
B1775	Pressure Sensor Power Source Circuit Malfunction	1. No. 1 seat wire 2. Occupant classification sensor (Front seat cushion assembly) 3. Occupant classification ECU	ON	RS-510
B1776	Seat Belt Tension Sensor Power Source Circuit Malfunction	1. No. 1 seat wire 2. Front seat outer belt RH (Belt tension sensor) 3. Occupant classification ECU	ON	RS-504
B1790	Center Airbag Sensor Assembly Communication Circuit Malfunction	1. No. 1 seat wire 2. Floor wire 3. Occupant classification ECU 4. Center airbag sensor assembly	ON	RS-517
B1791	Collision Detection Signal Line Malfunction	1. No. 1 seat wire 2. Floor wire 3. Instrument panel wire 4. Occupant classification ECU 5. Center airbag sensor assembly	ON	RS-527
B1795	Occupant Classification ECU Malfunction	1. Occupant classification ECU	ON	RS-539
B1797	Calibration Malfunction	1. There is no malfunction if this DTC does not recur after occupant classification system zero point calibration is performed. 2. Occupant classification sensor (Front seat cushion assembly)	ON	RS-541

DTC	B1771	Passenger Side Buckle Switch Circuit Malfunction

DESCRIPTION

The passenger side buckle switch circuit consists of the occupant classification ECU and the front seat inner belt assembly RH.

DTC B1771 is recorded when a malfunction is detected in the passenger side buckle switch circuit.

DTC No.	DTC Detecting Condition	Trouble Area
B1771	• Occupant classification ECU detects line short circuit signal, open circuit signal, short circuit to ground signal or short circuit to B+ signal in passenger side buckle switch circuit for 2 seconds • Passenger side buckle switch malfunction • Occupant classification ECU malfunction	• No. 1 seat wire • Front seat inner belt assembly RH (Buckle switch RH) • Occupant classification ECU

HINT:

- When DTC B1650/32 is detected as a result of troubleshooting the supplemental restraint system, check the DTCs stored in the occupant classification ECU, and perform troubleshooting for those DTCs first.
- Use the intelligent tester to check for DTCs of the occupant classification ECU, otherwise the DTC cannot be read.

WIRING DIAGRAM

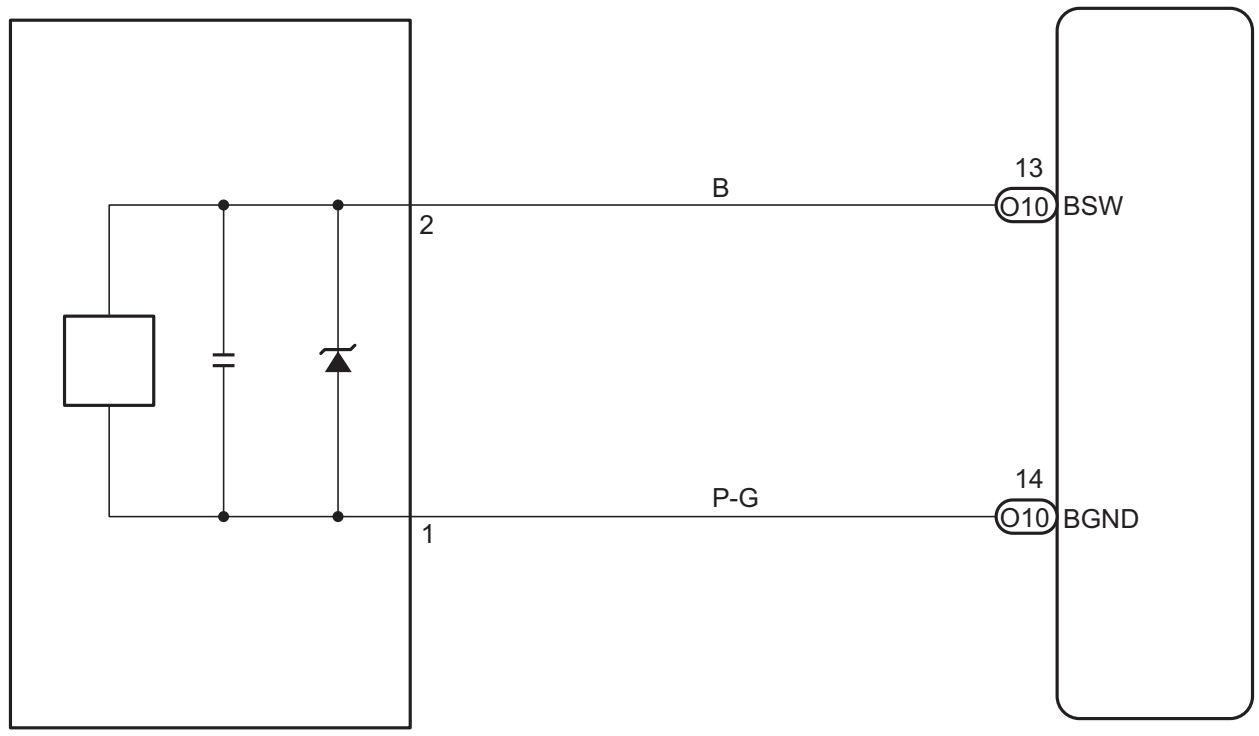

HINT:

- If troubleshooting (wire harness inspection) is difficult to perform, remove the front passenger seat installation bolts to see the under surface of the seat cushion.
- In the above case, hold the seat so that it does not tip over. Holding the seat up for a long period of time may cause problems, such as seat rail deformation. Hold the seat up only for as long as necessary.

RS

1	**CHECK DTC**

(a) Turn the ignition switch to the ON position.
(b) Clear the DTCs stored in the memory (See page RS-487).
HINT:
First clear DTCs stored in the occupant classification ECU and then in the center airbag sensor assembly.
(c) Turn the ignition switch to the LOCK position.
(d) Turn the ignition switch to the ON position.
(e) Check the DTCs (See page RS-487).

OK:

DTC B1771 is not output.

HINT:

DTCs other than B1771 may be output at this time, but they are not related to this check.

OK → **USE SIMULATION METHOD TO CHECK**

NG

2	CHECK CONNECTORS

(a) Turn the ignition switch to the LOCK position.

(b) Disconnect the negative (-) terminal cable from the battery, and wait for at least 90 seconds.

(c) Check that the connectors are properly connected to the occupant classification ECU and the front seat inner belt assembly RH.

OK:

The connectors are properly connected.

(d) Disconnect the connectors from the occupant classification ECU and front seat inner belt assembly RH.

(e) Check that the terminals of connectors are not damaged.

OK:

The terminals are not deformed or damaged.

HINT:

If the connectors are not connected securely, reconnect the connectors and proceed to the next inspection.

NG → **REPAIR OR REPLACE WIRE HARNESS OR CONNECTORS**

OK

3	CHECK NO. 1 SEAT WIRE (TO B+)

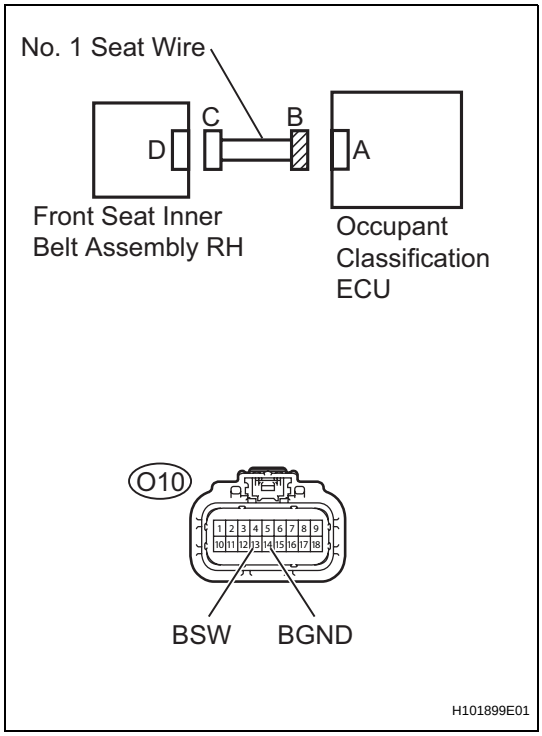

(a) Disconnect the connectors from the occupant classification ECU and the front seat inner belt assembly RH.
(b) Connect the negative (-) terminal cable to the battery.
(c) Turn the ignition switch to the ON position.
(d) Measure the voltage.

Standard voltage

Tester connection	Condition	Specified condition
O10-13 (BSW) - Body ground	Ignition switch ON	Below 1 V
O10-14 (BGND) - Body ground	Ignition switch ON	Below 1 V

NG → **REPAIR OR REPLACE NO. 1 SEAT WIRE**

OK

4	CHECK NO. 1 SEAT WIRE (FOR OPEN)

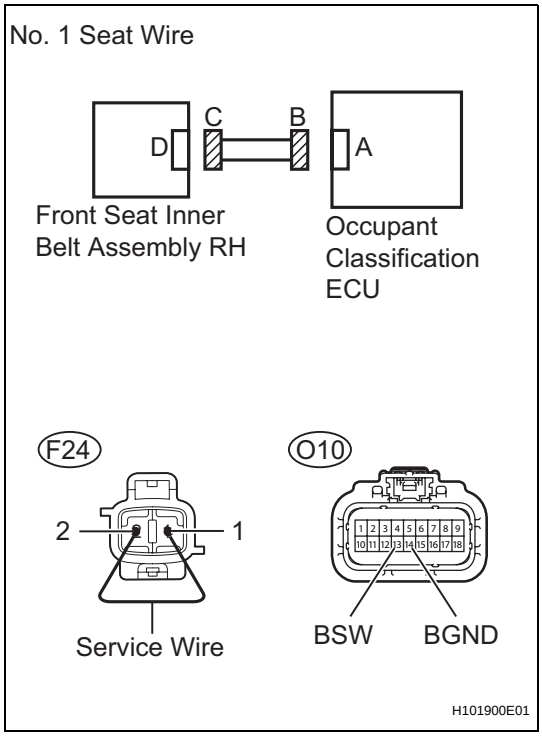

(a) Turn the ignition switch to the LOCK position.
(b) Disconnect the negative (-) terminal cable from the battery, and wait for at least 90 seconds.
(c) Using a service wire, connect F24-1 and F24-2 of connector C.

NOTICE:
Do not forcibly insert the service wire into the terminals of the connector when connecting.

(d) Measure the resistance.

Standard resistance

Tester connection	Condition	Specified condition
O10-13 (BSW) - O10-14 (BGND)	Always	Below 1 Ω

NG → **REPAIR OR REPLACE NO. 1 SEAT WIRE**

OK

RS

5 CHECK NO. 1 SEAT WIRE (TO GROUND)

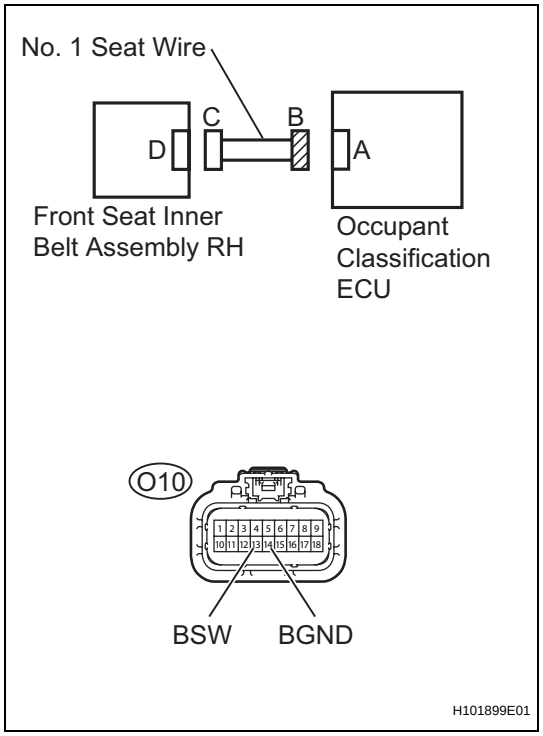

(a) Disconnect the service wire from connector C.
(b) Measure the resistance.
Standard resistance

Tester connection	Condition	Specified condition
O10-13 (BSW) - Body ground	Always	1 MΩ or higher
O10-14 (BGND) - Body ground	Always	1 MΩ or higher

NG → **REPAIR OR REPLACE NO. 1 SEAT WIRE**

OK

6 CHECK NO. 1 SEAT WIRE (FOR SHORT)

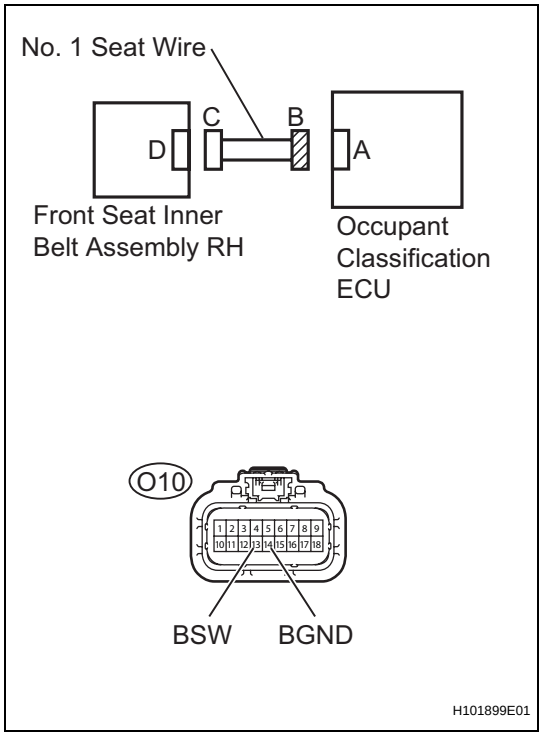

(a) Measure the resistance.
Standard resistance

Tester connection	Condition	Specified condition
O10-13 (BSW) - O10-14 (BGND)	Always	1 MΩ or higher

NG → **REPAIR OR REPLACE NO. 1 SEAT WIRE**

OK

RS

7	CHECK DTC

(a) Connect the connectors to the occupant classification ECU and the front seat inner belt assembly RH.
(b) Connect the negative (-) terminal cable to the battery.
(c) Turn the ignition switch to the ON position.
(d) Clear the DTCs stored in the memory (See page RS-487).
HINT:
First clear DTCs stored in the occupant classification ECU and then in the center airbag sensor assembly.
(e) Turn the ignition switch to the LOCK position.
(f) Turn the ignition switch to the ON position.
(g) Check the DTCs (See page RS-487).
OK:
DTC B1771 is not output.
HINT:
DTCs other than B1771 may be output at this time, but they are not related to this check.

OK	USE SIMULATION METHOD TO CHECK

NG

8	REPLACE BUCKLE SWITCH RH (WITH FRONT SEAT INNER BELT ASSEMBLY RH)

(a) Turn the ignition switch to the LOCK position.
(b) Disconnect the negative (-) terminal cable from the battery, and wait for at least 90 seconds.
(c) Replace the front seat inner belt assembly RH (See page SB-12).
HINT:
Perform the inspection using parts from a normal vehicle if possible.
(d) Connect the negative (-) terminal cable to the battery.
(e) Turn the ignition switch to the ON position.
(f) Clear the DTCs stored in the memory (See page RS-487).
HINT:
First clear DTCs stored in the occupant classification ECU and then in the center airbag sensor assembly.
(g) Turn the ignition switch to the LOCK position.
(h) Turn the ignition switch to the ON position.
(i) Check the DTCs (See page RS-487).
OK:
DTC B1771 is not output.
HINT:
DTCs other than B1771 may be output at this time, but they are not related to this check.

OK	END

NG

9	REPLACE OCCUPANT CLASSIFICATION ECU

(a) Connect the intelligent tester to the DLC3.
(b) Turn the ignition switch to the ON position.
(c) Store the occupant classification ECU data into the intelligent tester (See page RS-476).
HINT:
If the ECU data cannot be stored in the intelligent tester, replace the front seat cushion assembly (with occupant classification ECU and occupant classification sensor).
(d) Turn the ignition switch to the LOCK position.
(e) Disconnect the negative (-) terminal cable from the battery, and wait for at least 90 seconds.
(f) Replace the occupant classification ECU (See page RS-634).
(g) Connect the negative (-) terminal cable to the battery.
(h) Turn the ignition switch to the ON position.
(i) Load the data from the previous ECU stored in the tester, into the newly installed ECU (See page RS-476).
(j) Turn the ignition switch to the LOCK position.
(k) Turn the ignition switch to the ON position.
(l) Clear the DTCs stored in the memory (See page RS-487).
HINT:
If DTC is not cleared at this time, past DTC will remain.

NEXT

10	PERFORM SENSITIVITY CHECK

(a) Perform the sensitivity check (See page RS-480).

NEXT

END

DTC	B1772	Seat Position Sensor Circuit Malfunction

DESCRIPTION

The seat position sensor circuit consists of the occupant classification ECU and the seat position sensor. The seat position sensor sends the seat position signal to the occupant classification ECU to control the dual stage deployment of the front passenger airbag assembly.
DTC B1772 is recorded when a malfunction is detected in the seat position sensor circuit.

DTC No.	DTC Detecting Condition	Trouble Area
B1772	• Occupant classification ECU receives line short circuit signal, open circuit signal, short circuit to ground signal or short circuit to B+ signal in seat position sensor circuit for 2 seconds. • Seat position sensor malfunction • Occupant classification ECU malfunction	• No. 1 seat wire • Seat position sensor • Occupant classification ECU

HINT:

- When DTC B1650/32 is detected as a result of troubleshooting the supplemental restraint system, check the DTCs stored in the occupant classification ECU, and perform troubleshooting for those DTCs first.
- Use the intelligent tester to check for DTCs of the occupant classification ECU, otherwise the DTC cannot be read.

WIRING DIAGRAM

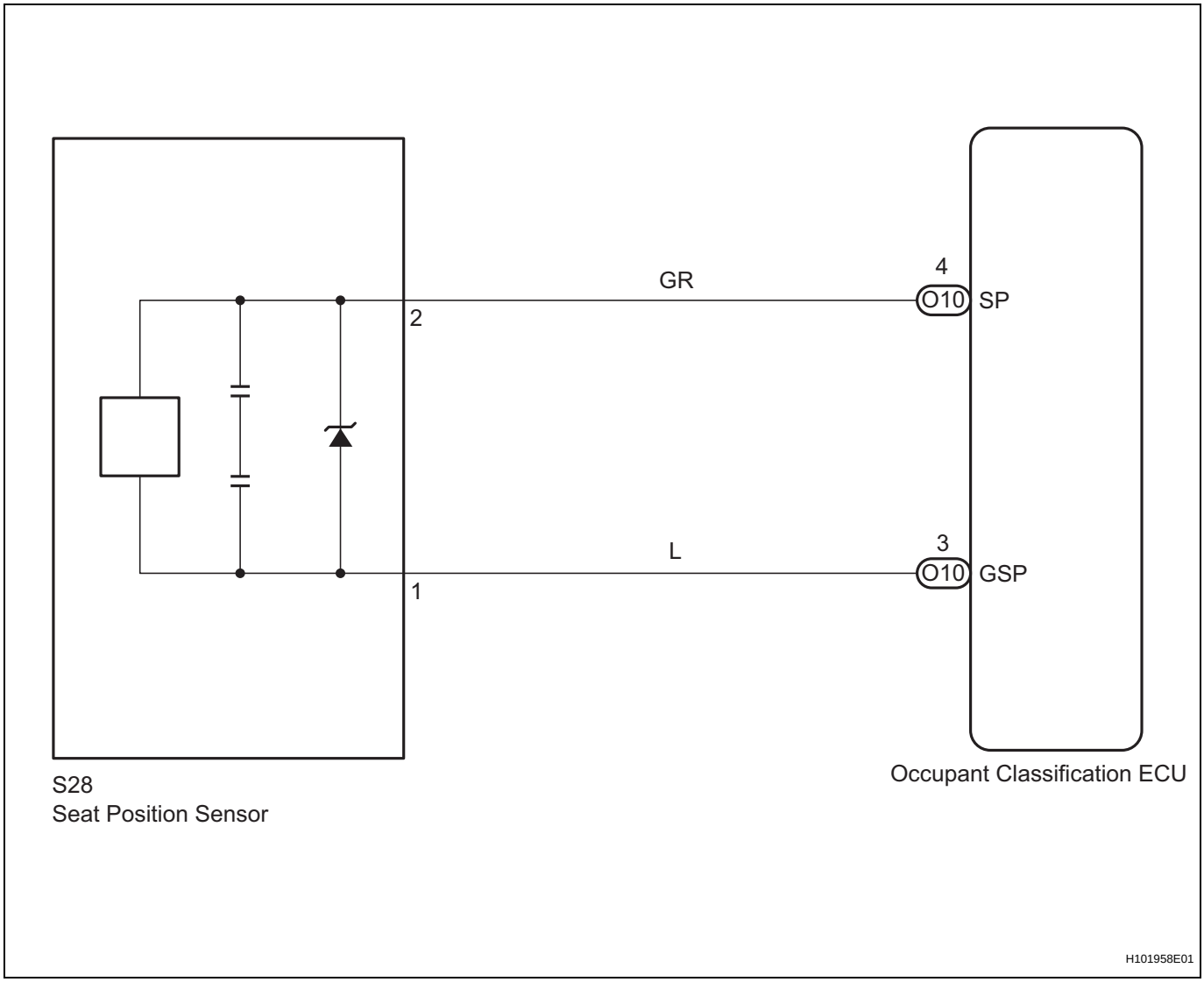

HINT:

- If troubleshooting (wire harness inspection) is difficult to perform, remove the passenger seat installation bolts to see the under surface of the seat cushion.
- In the above case, hold the seat so that it does not tip over. Holding the seat up for a long period of time may cause problems, such as seat rail deformation. Hold the seat up only for as long as necessary.

RS

1	**CHECK DTC**

(a) Turn the ignition switch to the ON position.
(b) Clear the DTCs stored in the memory (See page RS-487).
HINT:
First clear DTCs stored in the occupant classification ECU and then in the center airbag sensor assembly.
(c) Turn the ignition switch to the LOCK position.
(d) Turn the ignition switch to the ON position.
(e) Check the DTCs (See page RS-487).

OK:

DTC B1772 is not output.

HINT:

DTCs other than B1772 may be output at this time, but they are not related to this check.

OK → **USE SIMULATION METHOD TO CHECK**

NG

2	CHECK CONNECTORS

(a) Turn the ignition switch to the LOCK position.

(b) Disconnect the negative (-) terminal cable from the battery, and wait for at least 90 seconds.

(c) Check that the connectors are properly connected to the occupant classification ECU and the seat position sensor.

OK:

The connectors are properly connected.

(d) Disconnect the connectors from the occupant classification ECU and the seat position sensor.

(e) Check that the terminals of the connectors are not damaged.

OK:

The terminals are not deformed or damaged.

HINT:

If the connectors are not connected securely, reconnect the connectors and proceed to the next inspection.

NG → **REPAIR OR REPLACE WIRE HARNESS OR CONNECTOR**

OK

3 CHECK NO. 1 SEAT WIRE (TO B+)

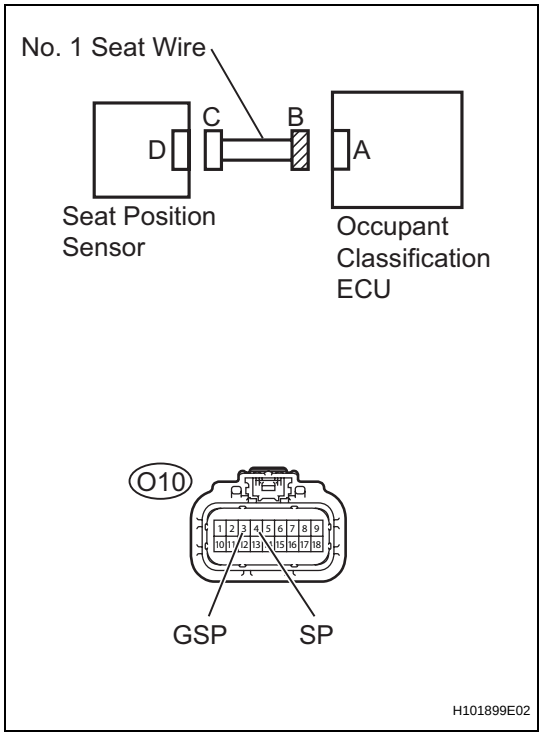

(a) Disconnect the connectors from the occupant classification ECU and the seat position sensor.
(b) Connect the negative (-) terminal cable to the battery.
(c) Turn the ignition switch to the ON position.
(d) Measure the voltage.
Standard voltage

Tester Connection	Condition	Specified Condition
O10-4 (SP) - Body ground	Ignition switch ON	Below 1 V
O10-3 (GSP) - Body ground	Ignition switch ON	Below 1 V

NG → **REPAIR OR REPLACE NO. 1 SEAT WIRE**

OK

4 CHECK NO. 1 SEAT WIRE (FOR OPEN)

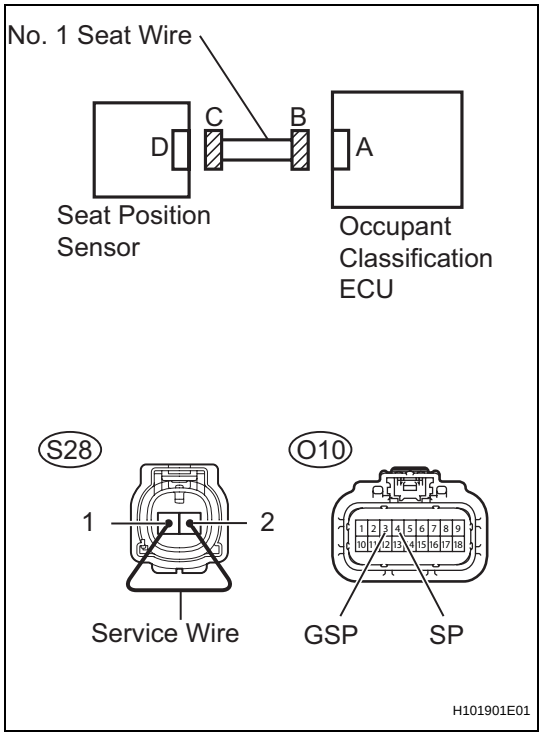

(a) Turn the ignition switch to the LOCK position.
(b) Disconnect the negative (-) terminal cable from the battery, and wait for at least 90 seconds.
(c) Using a service wire, connect S28-2 (SP) and S28-1 (GSP) of connector C.
NOTICE:
Do not forcibly insert the service wire into the terminals of the connector when connecting.
(d) Measure the resistance.
Standard resistance

Tester Connection	Condition	Specified Condition
O10-4 (SP) - O10-3 (GSP)	Always	Below 1 Ω

NG → **REPAIR OR REPLACE NO. 1 SEAT WIRE**

OK

RS

5 CHECK NO. 1 SEAT WIRE (TO GROUND)

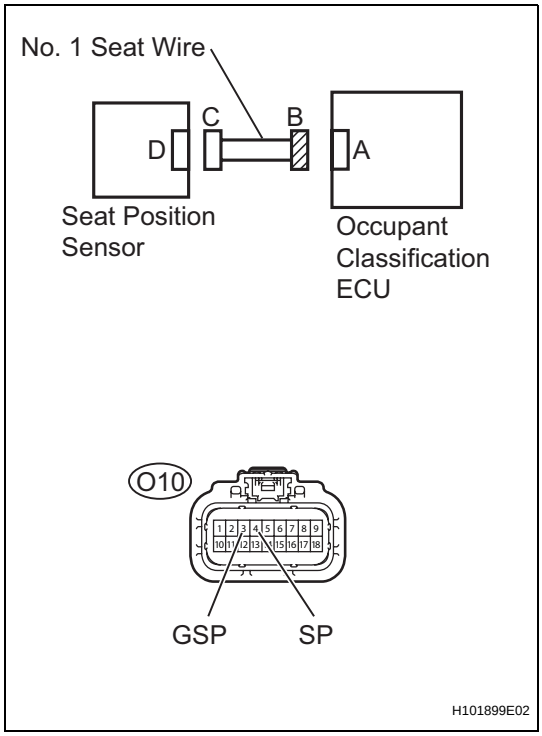

(a) Disconnect the service wire from connector C.
(b) Measure the resistance.
Standard resistance

Tester Connection	Condition	Specified Condition
O10-4 (SP) - Body ground	Always	1 MΩ or higher
O10-3 (GSP) - Body ground	Always	1 MΩ or higher

NG → **REPAIR OR REPLACE NO. 1 SEAT WIRE**

OK

6 CHECK NO. 1 SEAT WIRE (FOR SHORT)

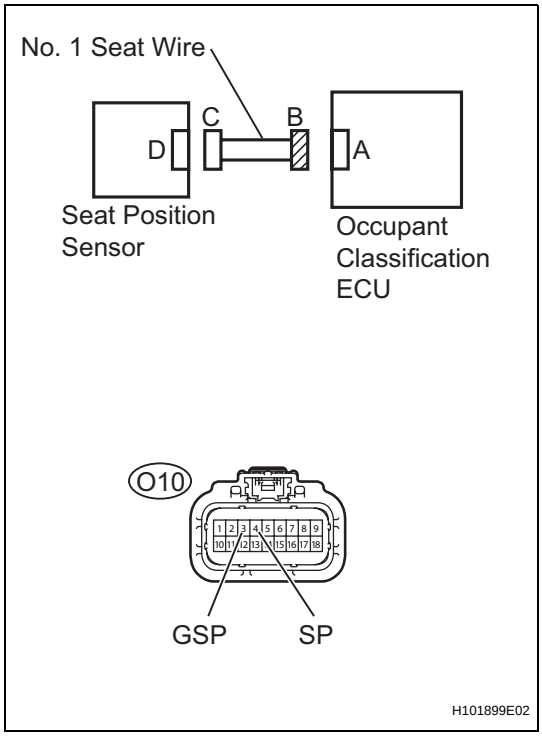

(a) Measure the resistance.
Standard resistance

Tester Connection	Condition	Specified Condition
O10-4 (SP) - O10-3 (GSP)	Always	1 MΩ or higher

NG → **REPAIR OR REPLACE NO. 1 SEAT WIRE**

OK

RS

7	CHECK DTC

(a) Connect the connectors to the occupant classification ECU and the seat position sensor.
(b) Connect the negative (-) terminal cable to the battery.
(c) Turn the ignition switch to the ON position.
(d) Clear the DTCs stored in the memory (See page RS-487).
HINT:
First clear DTCs stored in the occupant classification ECU and then in the center airbag sensor assembly.
(e) Turn the ignition switch to the LOCK position.
(f) Turn the ignition switch to the ON position.
(g) Check the DTCs (See page RS-487).
OK:
DTC B1772 is not output.
HINT:
DTCs other than B1772 may be output at this time, but they are not related to this check.

OK	USE SIMULATION METHOD TO CHECK

NG

8	REPLACE SEAT POSITION SENSOR

(a) Turn the ignition switch to the LOCK position.
(b) Disconnect the negative (-) terminal cable from the battery, and wait for at least 90 seconds.
(c) Replace the seat position sensor (See page RS-480).
HINT:
- Perform the inspection using parts from a normal vehicle if possible.
- The seat position sensor is installed on the driver side.

(d) Connect the negative (-) terminal cable to the battery.
(e) Turn the ignition switch to the ON position.
(f) Clear the DTCs stored in the memory (See page RS-487).
HINT:
First clear DTCs stored in the occupant classification ECU and then in the center airbag sensor assembly.
(g) Turn the ignition switch to the LOCK position.
(h) Turn the ignition switch to the ON position.
(i) Check the DTCs (See page RS-487).
OK:
DTC B1772 is not output.
HINT:
DTCs other than B1772 may be output at this time, but they are not related to this check.

OK	END

NG

9	REPLACE OCCUPANT CLASSIFICATION ECU

(a) Connect the intelligent tester to the DLC3.
(b) Turn the ignition switch to the ON position.
(c) Store the occupant classification ECU data into the intelligent tester (See page RS-476).
HINT:
If the ECU data cannot be stored in the intelligent tester, replace the front seat cushion assembly (with occupant classification ECU and occupant classification sensor).
(d) Turn the ignition switch to the LOCK position.
(e) Disconnect the negative (-) terminal cable from the battery, and wait for at least 90 seconds.
(f) Replace the occupant classification ECU (See page RS-634).
(g) Connect the negative (-) terminal cable to the battery.
(h) Turn the ignition switch to the ON position.
(i) Load the data from the previous ECU stored in the tester, into the newly installed ECU (See page RS-476).
(j) Turn the ignition switch to the LOCK position.
(k) Turn the ignition switch to the ON position.
(l) Clear the DTCs stored in the memory (See page RS-487).
HINT:
If DTC is not cleared at this time, past DTC will remain.

NEXT

10	PERFORM SENSITIVITY CHECK

(a) Perform the sensitivity check (See page RS-480).

NEXT

END

DTC	B1773	Belt Tension Sensor Circuit Malfunction

DTC	B1776	Seat Belt Tension Sensor Power Source Circuit Malfunction

DESCRIPTION

The belt tension sensor circuit consists of the occupant classification ECU and the belt tension sensor. The belt tension sensor sends the belt tension signal to the occupant classification ECU to control the occupant classification system.

DTCs B1773 and B1776 are recorded when a malfunction is detected in the belt tension sensor circuit.

DTC No.	DTC Detecting Condition	Trouble Area
B1773 B1776	• Occupant classification ECU receives line short circuit signal, open circuit signal, short circuit to ground signal or short circuit to B+ signal in belt tension sensor circuit for 2 seconds. • Belt tension sensor malfunction • Occupant classification ECU malfunction	• No. 1 seat wire • Front seat outer belt RH (Belt tension sensor) • Occupant classification ECU

HINT:

- When DTC B1650/32 is detected as a result of troubleshooting the supplemental restraint system, check the DTCs stored in the occupant classification ECU, and perform troubleshooting for those DTCs first.
- Use the intelligent tester to check for DTCs of the occupant classification ECU, otherwise the DTC cannot be read.

WIRING DIAGRAM

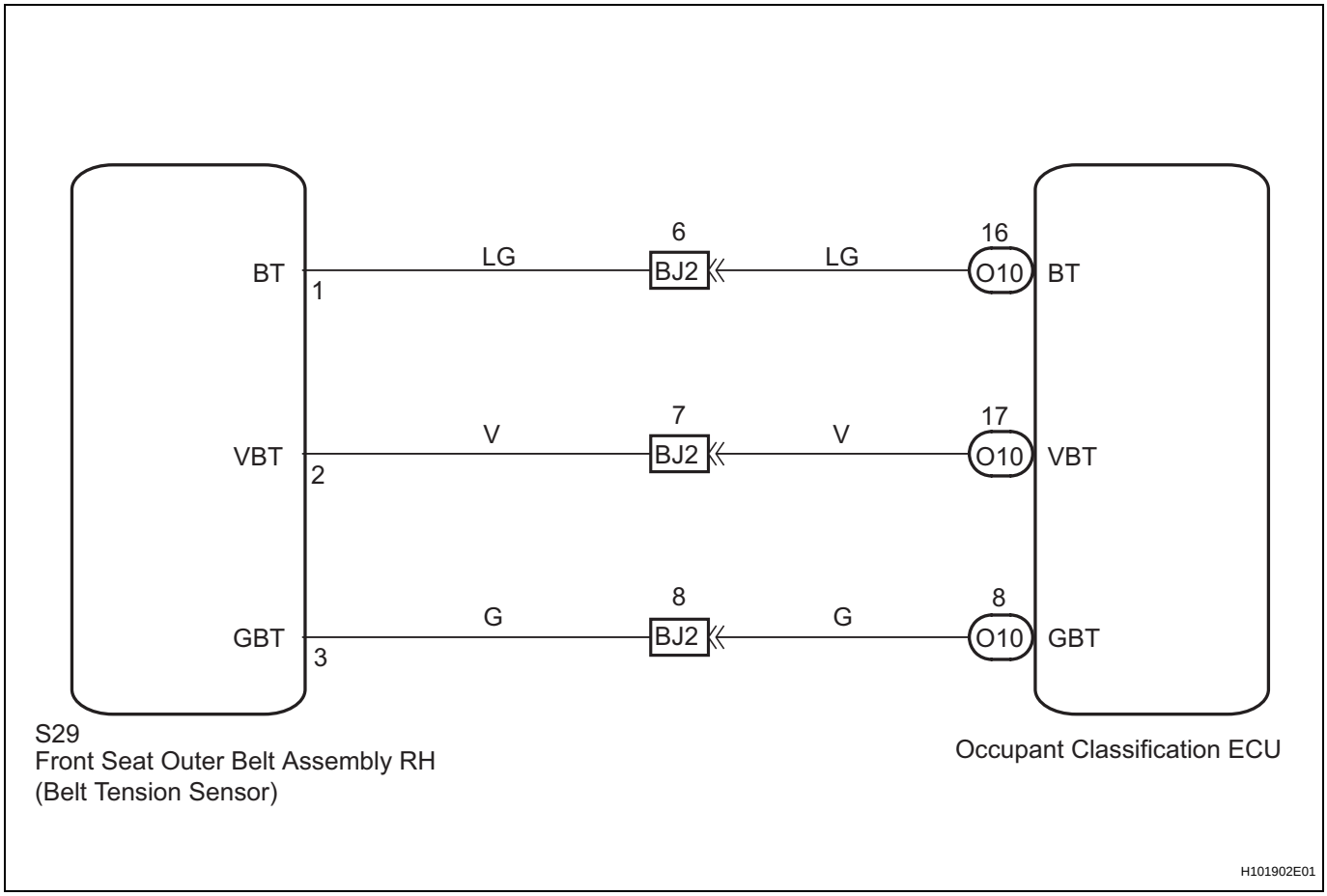

RS

HINT:

- If troubleshooting (wire harness inspection) is difficult to perform, remove the passenger seat installation bolts to see the under surface of the seat cushion.
- In the above case, hold the seat so that it does not tip over. Holding the seat up for a long period of time may cause problems, such as seat rail deformation. Hold the seat up only for as long as necessary.

1	CHECK DTC

(a) Turn the ignition switch to the ON position.
(b) Clear the DTCs stored in the memory (See page RS-487).
HINT:
First clear DTCs stored in the occupant classification ECU and then in the center airbag sensor assembly.
(c) Turn the ignition switch to the LOCK position.
(d) Turn the ignition switch to the ON position.
(e) Check the DTCs (See page RS-487).
OK:
DTC B1773 and B1776 are not output.
HINT:
DTCs other than B1773 and B1776 may be output at this time, but they are not related to this check.

OK → **USE SIMULATION METHOD TO CHECK**

NG

2	CHECK CONNECTORS

(a) Turn the ignition switch to the LOCK position.
(b) Disconnect the negative (-) terminal cable from the battery, and wait for at least 90 seconds.
(c) Check that the connectors are properly connected to the occupant classification ECU and the belt tension sensor.
OK:
The connectors are properly connected.
(d) Disconnect the connectors from the occupant classification ECU and the belt tension sensor.
(e) Check that the terminals of the connectors are not damaged.
OK:
The terminals are not deformed or damaged.
HINT:
If the connectors are not connected securely, reconnect the connectors and proceed to the next inspection.

NG → **REPAIR OR REPLACE HARNESS OR CONNECTOR**

OK

RS

3 CHECK NO. 1 SEAT WIRE (TO B+)

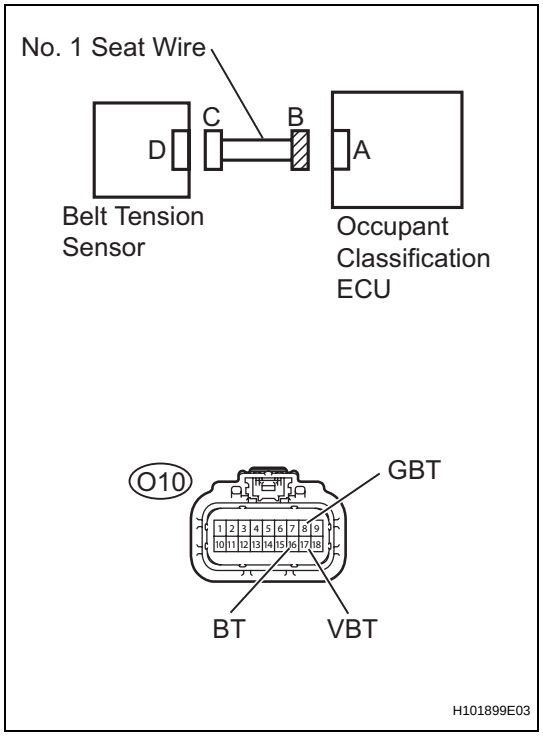

(a) Disconnect the connectors from the occupant classification ECU and belt tension sensor.
(b) Connect the negative (-) terminal cable to the battery.
(c) Turn the ignition switch to the ON position.
(d) Measure the voltage.
Standard voltage

Tester Connection	Condition	Specified Condition
O10-8 (GBT) - Body ground	Ignition switch ON	Below 1 V
O10-16 (BT) - Body ground	Ignition switch ON	Below 1 V
O10-17 (VBT) - Body ground	Ignition switch ON	Below 1 V

NG → **REPAIR OR REPLACE NO. 1 SEAT WIRE**

OK

4 CHECK NO. 1 SEAT WIRE (FOR OPEN)

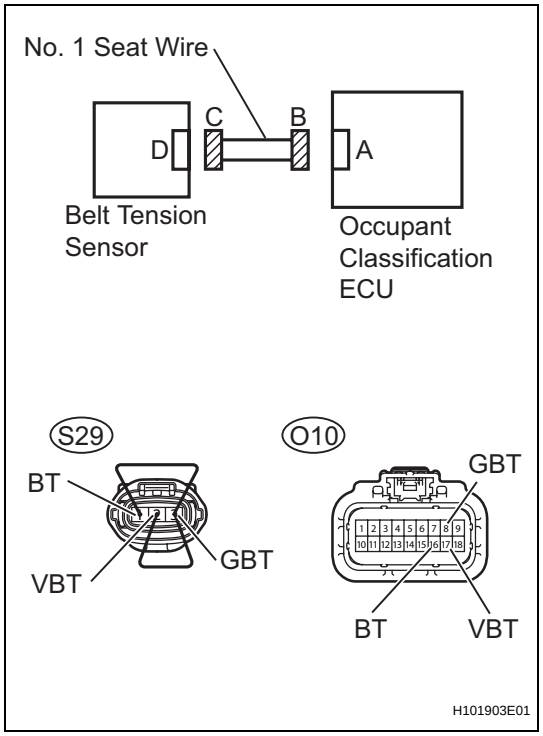

(a) Turn the ignition switch to the LOCK position.
(b) Disconnect the negative (-) terminal cable from the battery, and wait for at least 90 seconds.
(c) Using a service wire, connect S29-1 (BT) and S29-3 (GBT), and connect S29-2 (VBT) and S29-3 (GBT) of connector C.
NOTICE:
Do not forcibly insert the service wire into the terminals of the connector when connecting.
(d) Measure the resistance.
Standard resistance

Tester Connection	Condition	Specified Condition
O10-16 (BT) - O10-8 (GBT)	Always	Below 1 Ω
O10-17 (VBT) - O10-8 (GBT)	Always	Below 1 Ω

NG → **REPAIR OR REPLACE NO. 1 SEAT WIRE**

OK

RS

5 CHECK NO. 1 SEAT WIRE (TO GROUND)

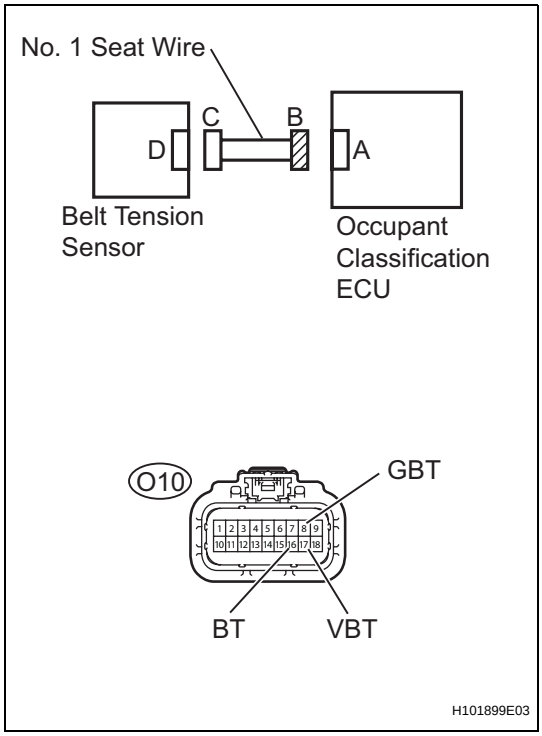

(a) Disconnect the service wire from connector C.
(b) Measure the resistance.
Standard resistance

Tester Connection	Condition	Specified Condition
O10-8 (GBT) - Body ground	Always	1 MΩ or higher
O10-16 (BT) - Body ground	Always	1 MΩ or higher
O10-17 (VBT) - Body ground	Always	1 MΩ or higher

NG → REPAIR OR REPLACE NO. 1 SEAT WIRE

OK

6 CHECK NO. 1 SEAT WIRE (FOR SHORT)

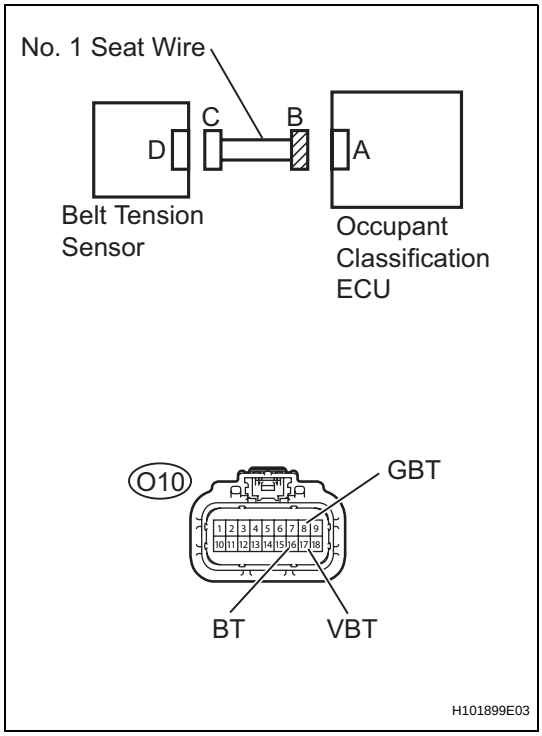

(a) Measure the resistance.
Standard resistance

Tester Connection	Condition	Specified Condition
O10-16 (BT) - O10-8 (GBT)	Always	1 MΩ or higher
O10-17 (VBT) - O10-8 (GBT)	Always	1 MΩ or higher

NG → REPAIR OR REPLACE NO. 1 SEAT WIRE

OK

RS

7	CHECK DTC

(a) Connect the connectors to the occupant classification ECU and the belt tension sensor.
(b) Connect the negative (-) terminal cable to the battery.
(c) Turn the ignition switch to the ON position.
(d) Clear the DTCs stored in the memory (See page RS-487).
HINT:
First clear DTCs stored in the occupant classification ECU and then in the center airbag sensor assembly.
(e) Turn the ignition switch to the LOCK position.
(f) Turn the ignition switch to the ON position.
(g) Check the DTCs (See page RS-487).
OK:
DTCs B1773 and B1776 are not output.
HINT:
DTCs other than B1773 and B1776 may be output at this time, but they are not related to this check.

OK	USE SIMULATION METHOD TO CHECK

NG

8	REPLACE BELT TENSION SENSOR (FRONT SEAT OUTER BELT ASSEMBLY RH)

(a) Turn the ignition switch to the LOCK position.
(b) Disconnect the negative (-) terminal cable from the battery, and wait for at least 90 seconds.
(c) Replace the belt tension sensor (See page SB-27).
HINT:
Perform the inspection using parts from a normal vehicle if possible.
(d) Connect the negative (-) terminal cable to the battery.
(e) Turn the ignition switch to the ON position.
(f) Clear the DTCs stored in the memory (See page RS-487).
HINT:
First clear DTCs stored in the occupant classification ECU and then in the center airbag sensor assembly.
(g) Turn the ignition switch to the LOCK position.
(h) Turn the ignition switch to the ON position.
(i) Check the DTCs (See page RS-487).
OK:
DTCs B1773 and B1776 are not output.
HINT:
DTCs other than B1773 and B1776 may be output at this time, but they are not related to this check.

OK	END

NG

9	REPLACE OCCUPANT CLASSIFICATION ECU

(a) Connect the intelligent tester to the DLC3.
(b) Turn the ignition switch to the ON position.
(c) Store the occupant classification ECU data into the intelligent tester (See page RS-476).
HINT:
If the ECU data cannot be stored in the intelligent tester, replace the front seat cushion assembly (with occupant classification ECU and occupant classification sensor).
(d) Turn the ignition switch to the LOCK position.
(e) Disconnect the negative (-) terminal cable from the battery, and wait for at least 90 seconds.
(f) Replace the occupant classification ECU (See page RS-634).
(g) Connect the negative (-) terminal cable to the battery.
(h) Turn the ignition switch to the ON position.
(i) Load the data from the previous ECU stored in the tester, into the newly installed ECU (See page RS-476).
(j) Turn the ignition switch to the LOCK position.
(k) Turn the ignition switch to the ON position.
(l) Clear the DTCs stored in the memory (See page RS-487).
HINT:
If DTC is not cleared at this time, past DTC will remain.

NEXT

10	PERFORM SENSITIVITY CHECK

(a) Perform the sensitivity check (See page RS-480).

NEXT

END

RS

DTC	B1774	Pressure Sensor Circuit Malfunction

DTC	B1775	Pressure Sensor Power Source Circuit Malfunction

DESCRIPTION

The pressure sensor circuit consists of the occupant classification ECU and the occupant classification sensor.

The occupant classification sensor sends the pressure signal to the occupant classification ECU to control the occupant classification system.

DTCs B1774 and B1775 are recorded when a malfunction is detected in the pressure sensor circuit.

DTC No.	DTC Detecting Condition	Trouble Area
B1774 B1775	• Occupant classification ECU receives line short circuit signal, open circuit signal, short circuit to ground signal or short circuit to B+ signal in pressure sensor circuit for 2 seconds. • Occupant classification sensor malfunction • Occupant classification ECU malfunction	• No. 1 seat wire • Occupant classification sensor • Occupant classification ECU

HINT:

- When DTC B1650/32 is detected as a result of troubleshooting the supplemental restraint system, check the DTCs stored in the occupant classification ECU, and perform troubleshooting for those DTCs first.
- Use the intelligent tester to check for DTCs of the occupant classification ECU, otherwise the DTC cannot be read.

WIRING DIAGRAM

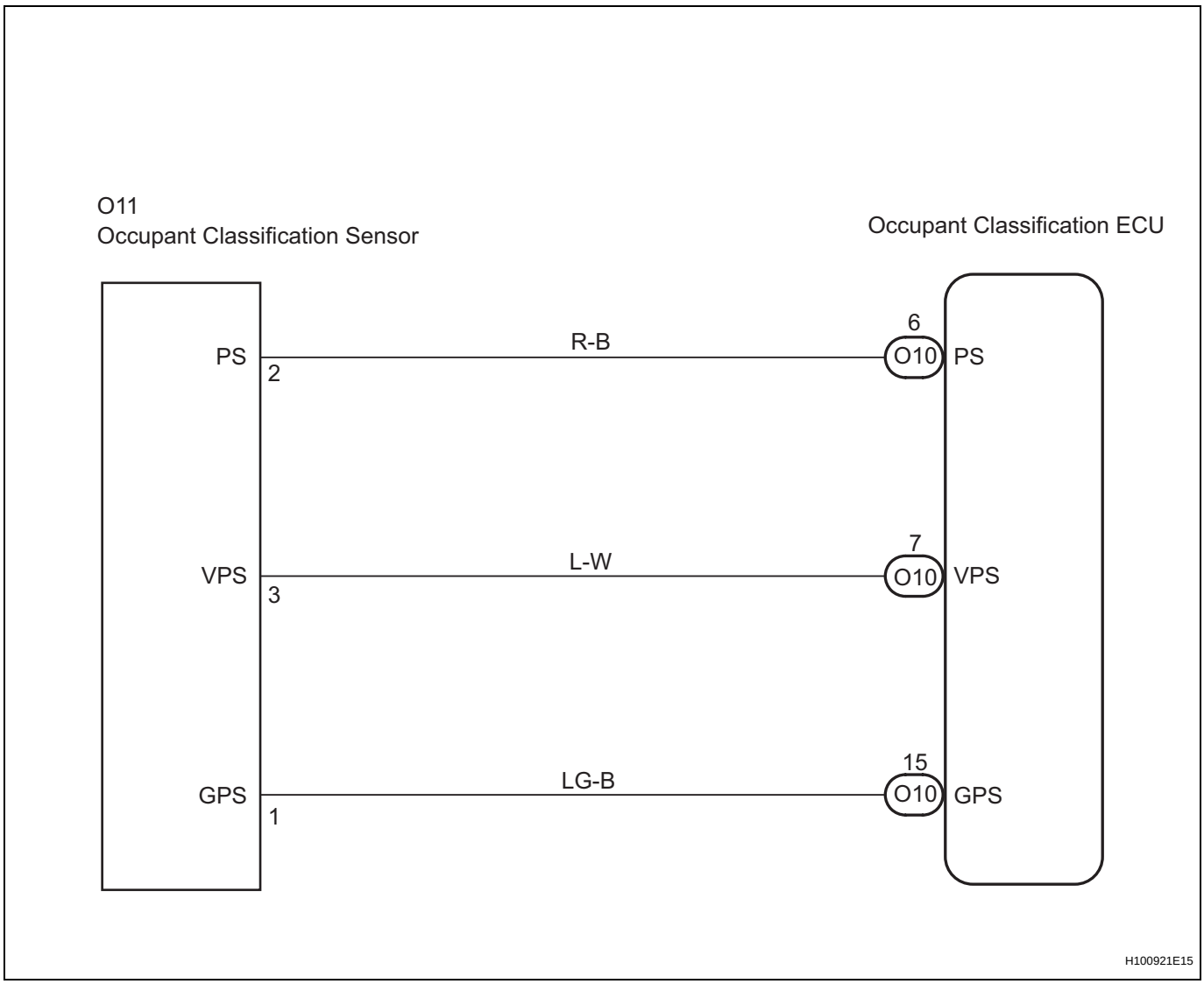

HINT:

- If troubleshooting (wire harness inspection) is difficult to perform, remove the passenger seat installation bolts to see the under surface of the seat cushion.
- In the above case, hold the seat so that it does not tip over. Holding the seat up for a long period of time may cause problems, such as seat rail deformation. Hold the seat up only for as long as necessary.
- After performing the zero point calibration, check for DTCs to confirm that the calibration is completed normally. (If it fails, DTC B1797 will be output.)

RS

1	**CHECK DTC**

(a) Turn the ignition switch to the ON position.
(b) Clear the DTCs stored in the memory (See page RS-487).
HINT:
First clear DTCs stored in the occupant classification ECU and then in the center airbag sensor assembly.
(c) Turn the ignition switch to the LOCK position.
(d) Turn the ignition switch to the ON position.

(e) Check the DTCs (See page RS-487).
OK:
DTCs B1774 and B1775 are not output.
HINT:
DTCs other than B1774 and B1775 may be output at this time, but they are not related to this check.

OK	**USE SIMULATION METHOD TO CHECK**

NG

2	**CHECK CONNECTORS**

(a) Turn the ignition switch to the LOCK position.
(b) Disconnect the negative (-) terminal cable from the battery, and wait for at least 90 seconds.
(c) Check that the connectors are properly connected to the occupant classification ECU and the occupant classification sensor.
OK:
The connectors are properly connected.
(d) Disconnect the connectors from the occupant classification ECU and the occupant classification sensor.
(e) Check that the terminals of the connectors are not damaged.
OK:
The terminals are not deformed or damaged.
HINT:
If the connectors are not connected securely, reconnect the connectors and proceed to the next inspection.

NG	**REPAIR OR REPLACE HARNESS OR CONNECTOR**

OK

RS

3 CHECK NO. 1 SEAT WIRE (TO B+)

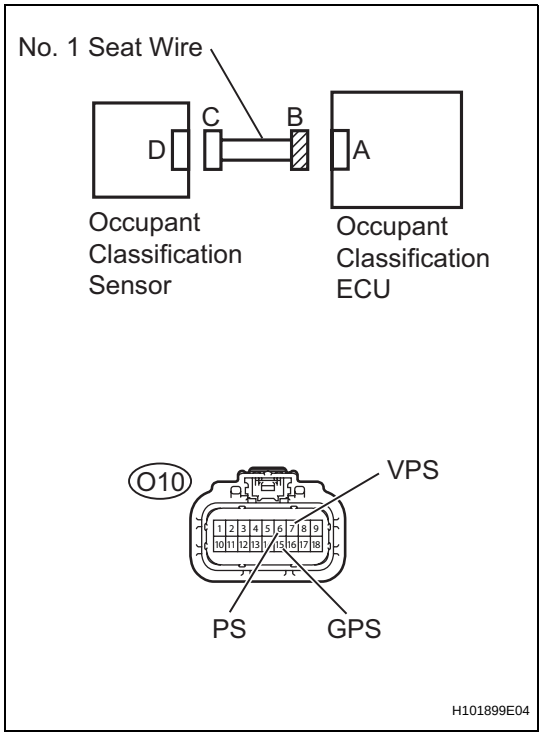

(a) Disconnect the connector from the occupant classification ECU and occupant classification sensor.
(b) Connect the negative (-) terminal cable to the battery.
(c) Turn the ignition switch to the ON position.
(d) Measure the voltage.
Standard voltage

Tester Connection	Condition	Specified Condition
O10-6 (PS) - Body ground	Ignition switch ON	Below 1 V
O10-7 (VPS) - Body ground	Ignition switch ON	Below 1 V
O10-15 (GPS) - Body ground	Ignition switch ON	Below 1 V

NG → **REPAIR OR REPLACE NO. 1 SEAT WIRE**

OK

4 CHECK NO. 1 SEAT WIRE (FOR OPEN)

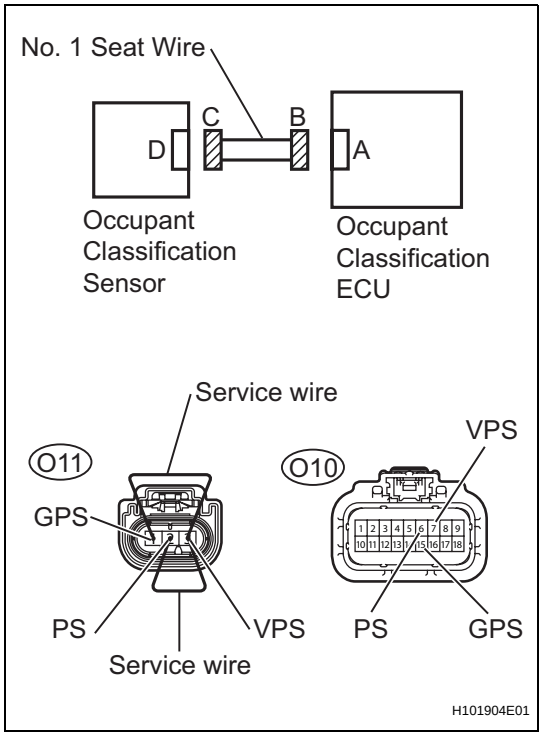

(a) Turn the ignition switch to the LOCK position.
(b) Disconnect the negative (-) terminal cable from the battery, and wait for at least 90 seconds.
(c) Using a service wire, connect O11-2 (PS) and O11-3 (VPS), and connect O11-3 (VPS) and O11-1 (GPS) of connector C.
NOTICE:
Do not forcibly insert the service wire into the terminals of the connector when connecting.
(d) Measure the resistance.
Standard resistance

Tester Connection	Condition	Specified Condition
O10-6 (PS) - O10-7 (VPS)	Always	Below 1 Ω
O10-7 (VPS) - O10-15 (GPS)	Always	Below 1 Ω

NG → **REPAIR OR REPLACE NO. 1 SEAT WIRE**

OK

RS

5 CHECK NO. 1 SEAT WIRE (TO GROUND)

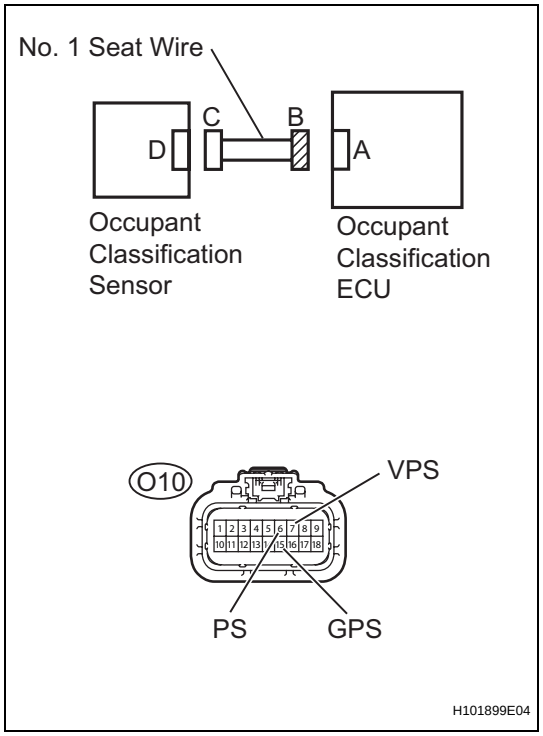

(a) Disconnect the service wire from connector C.
(b) Measure the resistance.
Standard resistance

Tester Connection	Condition	Specified Condition
O10-6 (PS) - Body ground	Always	1 MΩ or higher
O10-7 (VPS) - Body ground	Always	1 MΩ or higher
O10-15 (GPS) - Body ground	Always	1 MΩ or higher

NG → **REPAIR OR REPLACE NO. 1 SEAT WIRE**

OK

6 CHECK NO. 1 SEAT WIRE (FOR SHORT)

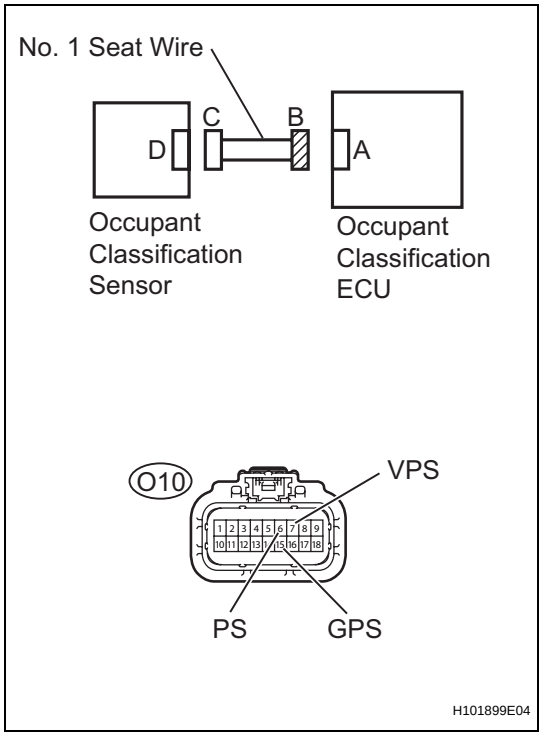

(a) Measure the resistance.
Standard resistance

Tester Connection	Condition	Specified Condition
O10-6 (PS) - O10-15 (GPS)	Always	1 MΩ or higher
O10-7 (VPS) - O10-15 (GPS)	Always	1 MΩ or higher

NG → **REPAIR OR REPLACE NO. 1 SEAT WIRE**

RS

OK

7	CHECK DTC

(a) Connect the connectors to the occupant classification ECU and the occupant classification sensor.
(b) Connect the negative (-) terminal cable to the battery.
(c) Turn the ignition switch to the ON position.
(d) Clear the DTCs stored in the memory (See page RS-487).
HINT:
First clear DTCs stored in the occupant classification ECU and then in the center airbag sensor assembly.
(e) Turn the ignition switch to the LOCK position.
(f) Turn the ignition switch to the ON position.
(g) Check the DTCs (See page RS-487).
OK:
DTCs B1774 and B1775 are not output.
HINT:
DTCs other than B1774 and B1775 may be output at this time, but they are not related to this check.

OK → **USE SIMULATION METHOD TO CHECK**

NG

8	REPLACE OCCUPANT CLASSIFICATION SENSOR (FRONT SEAT CUSHION ASSEMBLY)

(a) Turn the ignition switch to the LOCK position.
(b) Disconnect the negative (-) terminal cable from the battery, and wait for at least 90 seconds.
(c) Replace the front seat cushion assembly (with occupant classification ECU and occupant classification sensor) (See page RS-626).
HINT:
Perform the inspection using parts from a normal vehicle if possible.
(d) Connect the negative (-) terminal cable to the battery.
(e) Turn the ignition switch to the ON position.
(f) Clear the DTCs stored in the memory (See page RS-487).
HINT:
First clear DTCs stored in the occupant classification ECU and then in the center airbag sensor assembly.
(g) Turn the ignition switch to the LOCK position.
(h) Turn the ignition switch to the ON position.
(i) Check the DTCs (See page RS-487).
OK:
DTCs B1774 and B1775 are not output.
HINT:
DTCs other than B1774 and B1775 may be output at this time, but they are not related to this check.

NEXT

9	PERFORM ZERO POINT CALIBRATION

(a) Connect the intelligent tester to the DLC3.
(b) Turn the ignition switch to the ON position.
(c) Using the intelligent tester, perform the zero point calibration (See page RS-480).
(d) Turn the ignition switch to the LOCK position.
(e) Turn the ignition switch to the ON position.
(f) Clear the DTCs stored in the memory (See page RS-487).
HINT:
If DTC is not cleared at this time, past DTC will remain.

NEXT

10	CHECK DTC

HINT:
Check that the zero point calibration is completed normally. If either of the following conditions is met, DTC B1797 will be output (Refer to INITIALIZATION: See page RS-480):
- Zero point calibration is performed when the conditions for the calibration are not satisfied.
- Zero point calibration has failed.

(a) Turn the ignition switch to the ON position.
(b) Clear the DTCs stored in the memory (See page RS-487).
HINT:
First clear DTCs stored in the occupant classification ECU and then in the center airbag sensor assembly.
(c) Turn the ignition switch to the LOCK position.
(d) Turn the ignition switch to the ON position.
(e) Check the DTCs (See page RS-487).
OK:
DTC B1797 is not output.

NG → **GO TO DTC CHART**

OK

11	PERFORM SENSITIVITY CHECK

(a) Perform the sensitivity check (See page RS-480).

NEXT

END

DTC	B1790	Center Airbag Sensor Assembly Communication Circuit Malfunction

DESCRIPTION

The center airbag sensor assembly communication circuit consists of the occupant classification ECU and the center airbag sensor assembly.
DTC B1790 is set when a malfunction is detected in the center airbag sensor assembly communication circuit.

DTC No.	DTC Detecting Conditions	Trouble Areas
B1790	• Occupant classification ECU receives line short circuit signal, open circuit signal, short circuit to ground signal or short circuit to B+ signal in center airbag sensor assembly communication circuit for 2 seconds • Center airbag sensor assembly malfunction • Occupant classification ECU malfunction	• No. 1 seat wire • Floor wire • Occupant classification ECU • Center airbag sensor assembly

HINT:

- When DTC B1650/32 is detected as a result of troubleshooting the supplemental restraint system, check the DTCs stored in the occupant classification ECU, and perform troubleshooting for those DTCs first.
- Use the intelligent tester to check for DTCs of the occupant classification ECU, otherwise the DTCs cannot be read.

WIRING DIAGRAM

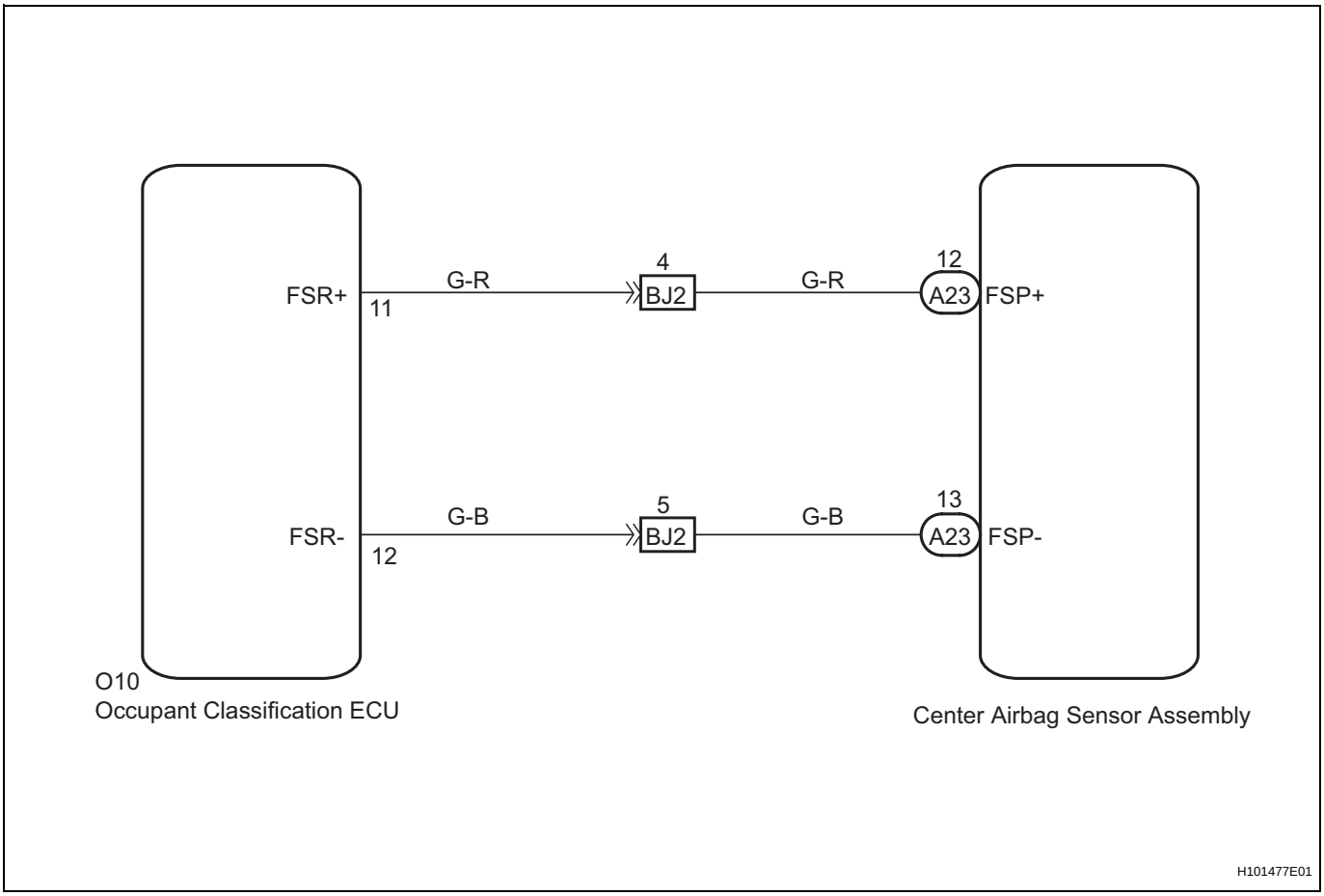

RS

CAUTION:
In order to prevent unexpected airbag deployment, disconnect the following connectors before inspecting parts such as wire harnesses, if the application of tester probes to the center airbag sensor assembly connector is necessary.
(a) Turn the ignition switch to the LOCK position.
(b) Disconnect the negative (-) terminal cable from the battery, and wait for at least 90 seconds.
(c) Disconnect the connectors from the center airbag sensor assembly.
(d) Disconnect the connectors from the steering pad assembly.
(e) Disconnect the connector from the front passenger airbag assembly.
(f) Disconnect the connector from the front seat outer belt assembly LH.
(g) Disconnect the connector from the front seat outer belt assembly RH.
HINT:
Skip the following steps if side and curtain shield airbags are not fitted.
(h) Disconnect the connector from the front seat side airbag assembly LH.
(i) Disconnect the connector from the front seat side airbag assembly RH.
(j) Disconnect the connector from the curtain shield airbag assembly LH.
(k) Disconnect the connector from the curtain shield airbag assembly RH.
HINT:
- If troubleshooting (wire harness inspection) is difficult to perform, remove the front RH seat assembly installation bolts to see the under surface of the seat cushion.
- In the above case, hold the seat so that it does not tip over. Holding the seat up for a long period of time may cause problems, such as seat rail deformation. Hold the seat up only for as long as necessary.

1	CHECK DTC

(a) Turn the ignition switch to the ON position.
(b) Clear any DTCs stored in the memory (See page RS-487).
HINT:
First clear DTCs stored in the occupant classification ECU and then in the center airbag sensor assembly.
(c) Turn the ignition switch to the LOCK position.
(d) Turn the ignition switch to the ON position.
(e) Check the DTCs (See page RS-487).
OK:
DTC B1790 is not output.
HINT:
DTCs other than B1790 may be output at this time, but they are not related to this check.

RS

OK → **USE SIMULATION METHOD TO CHECK**

NG

2	CHECK CONNECTORS

(a) Turn the ignition switch to the LOCK position.
(b) Disconnect the negative (-) terminal cable from the battery, and wait for at least 90 seconds.
(c) Check that the connectors are properly connected to the occupant classification ECU and the center airbag sensor assembly.

OK:

The connectors are properly connected.

(d) Disconnect the connectors from the center airbag sensor assembly and occupant classification ECU.

(e) Check that the terminals of the connectors are not damaged.

OK:

The terminals are not deformed or damaged.

HINT:

If the connectors are not connected securely, reconnect the connectors and proceed to the next inspection.

NG → **REPAIR OR REPLACE HARNESS OR CONNECTOR**

OK

3 CHECK CENTER AIRBAG SENSOR ASSEMBLY COMMUNICATION CIRCUIT (TO B+)

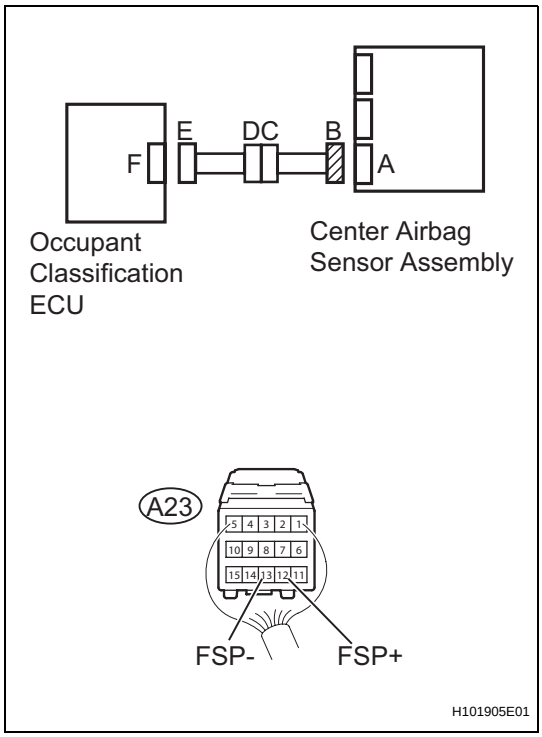

(a) Disconnect the connectors from the occupant classification ECU and center airbag sensor assembly.

(b) Connect the negative (-) terminal cable to the battery.

(c) Turn the ignition switch to the ON position.

(d) Measure the voltage.

Standard voltage

Tester Connection	Condition	Specified Condition
A23-12 (FSP+) - Body ground	Ignition switch ON	Below 1 V
A23-13 (FSP-) - Body ground	Ignition switch ON	Below 1 V

NG → **Go to step 12**

OK

RS

4 CHECK CENTER AIRBAG SENSOR ASSEMBLY COMMUNICATION CIRCUIT (FOR OPEN)

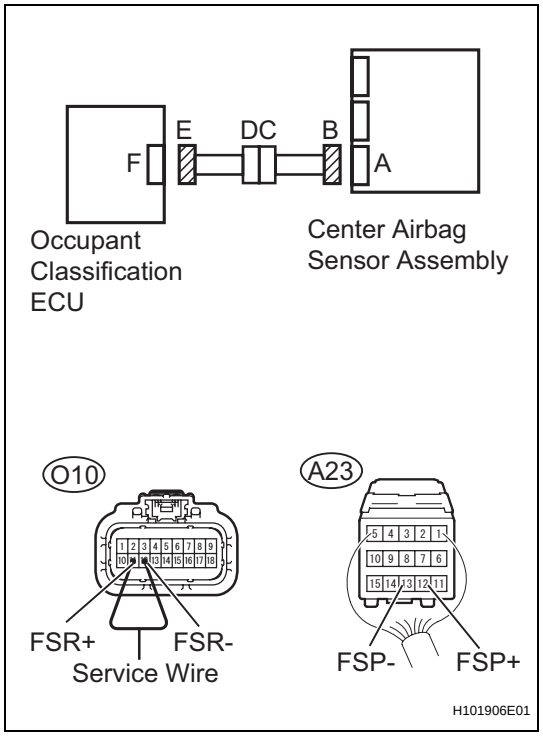

(a) Turn the ignition switch to the LOCK position.
(b) Disconnect the negative (-) terminal cable from the battery, and wait for at least 90 seconds.
(c) Using a service wire, connect O10-11 (FSR+) and O10-12 (FSR-) of connector E.

NOTICE:
Do not forcibly insert the service wire into the terminals of the connector when connecting.

(d) Measure the resistance.
Standard resistance

Tester Connection	Condition	Specified Condition
A23-12 (FSP+) - A23-13 (FSP-)	Always	Below 1 Ω

NG → **Go to step 13**

OK

5 CHECK CENTER AIRBAG SENSOR ASSEMBLY COMMUNICATION CIRCUIT (TO GROUND)

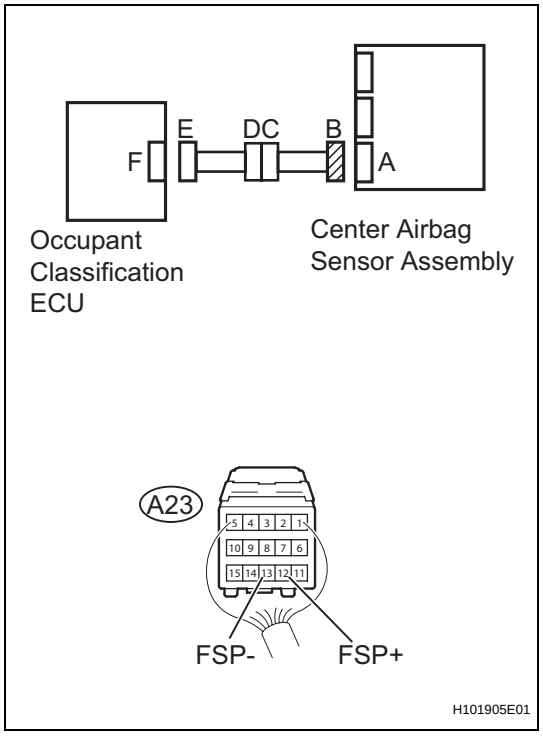

(a) Disconnect the service wire from connector E.
(b) Measure the resistance.
Standard resistance

Tester Connection	Condition	Specified Condition
A23-12 (FSP+) - Body ground	Always	1 MΩ or higher
A23-13 (FSP-) - Body ground	Always	1 MΩ or higher

NG → **Go to step 14**

RS

OK

6	CHECK CENTER AIRBAG SENSOR ASSEMBLY COMMUNICATION CIRCUIT (FOR SHORT)

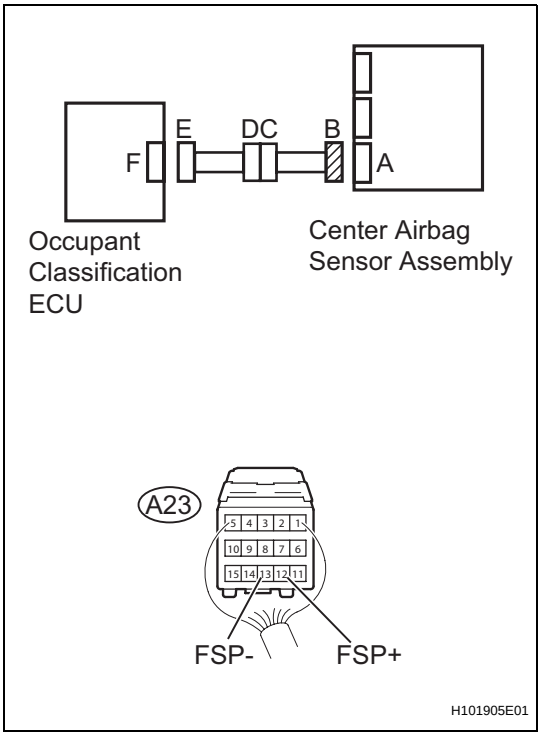

(a) Measure the resistance.
Standard resistance

Tester Connection	Condition	Specified Condition
A23-12 (FSP+) - A23-13 (FSP-)	Always	1 MΩ or higher

NG → **Go to step 15**

OK

7	RECHECK DTC

(a) Connect the connectors to the occupant classification ECU and the center airbag sensor assembly.
(b) Connect the negative (-) terminal cable to the battery.
(c) Turn the ignition switch to the ON position.
(d) Clear any DTCs stored in the memory (See page RS-487).

HINT:
First clear DTCs stored in the occupant classification ECU and then in the center airbag sensor assembly.

(e) Turn the ignition switch to the LOCK position.
(f) Turn the ignition switch to the ON position.
(g) Check the DTCs (See page RS-487).
OK:
DTC B1790 is not output.

HINT:
DTCs other than B1790 may be output at this time, but they are not related to this check.

NG → **USE SIMULATION METHOD TO CHECK**

NG

RS

8	REPLACE OCCUPANT CLASSIFICATION ECU

(a) Connect the intelligent tester to the DLC3.
(b) Turn the ignition switch to the ON position.
(c) Store the occupant classification ECU data into the intelligent tester (See page RS-476).
HINT:
If the ECU data cannot be stored in the intelligent tester, replace the front seat cushion assembly (with occupant classification ECU and occupant classification sensor).
(d) Turn the ignition switch to the LOCK position.
(e) Disconnect the negative (-) terminal cable from the battery, and wait for at least 90 seconds.
(f) Replace the occupant classification ECU (See page RS-634).
(g) Connect the negative (-) terminal cable to the battery.
(h) Turn the ignition switch to the ON position.
(i) Load the data from the previous ECU stored in the tester, into the newly installed ECU (See page RS-476).
(j) Turn the ignition switch to the LOCK position.
(k) Turn the ignition switch to the ON position.
(l) Clear the DTCs stored in the memory (See page RS-487).
HINT:
If DTC is not cleared at this time, past DTC will remain.

NEXT

9	CHECK DTC

(a) Turn the ignition switch to the ON position.
(b) Clear the DTCs stored in the memory (See page RS-487).
HINT:
First clear DTCs stored in the occupant classification ECU and then in the center airbag sensor assembly.
(c) Turn the ignition switch to the LOCK position.
(d) Turn the ignition switch to the ON position.
(e) Check the DTCs (See page RS-487).
OK:
DTC B1790 is not output.
HINT:
DTCs other than B1771 may be output at this time, but they are not related to this check.

OK	Go to step 11

NG

10	REPLACE CENTER AIRBAG SENSOR ASSEMBLY

(a) Turn the ignition switch to the LOCK position.

RS

(b) Disconnect the negative (-) terminal cable from the battery, and wait for at least 90 seconds.
(c) Replace the center airbag sensor assembly (See page RS-602).

NEXT

11	PERFORM SENSITIVITY CHECK

(a) Perform the sensitivity check (See page RS-480).

NEXT

END

12	CHECK NO. 1 SEAT WIRE (TO B+)

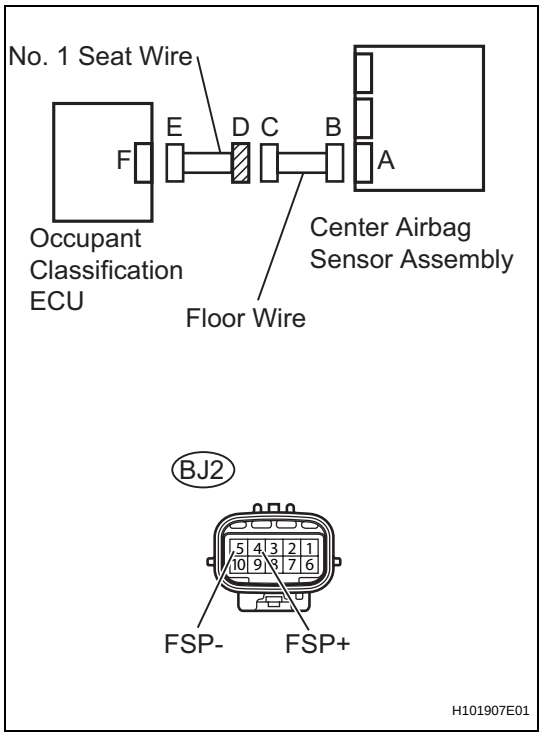

(a) Turn the ignition switch to the LOCK position.
(b) Disconnect the negative (-) terminal cable from the battery, and wait for at least 90 seconds.
(c) Disconnect the No. 1 seat wire connector from the floor wire.
(d) Connect the negative (-) terminal cable to the battery and wait for at least 2 seconds.
(e) Turn the ignition switch to the ON position.
(f) Measure the voltage.

Standard voltage

Tester Connection	Condition	Specified Condition
BJ2-4 (FSP+) - Body ground	Ignition switch ON	Below 1 V
BJ2-5 (FSP-) - Body ground	Ignition switch ON	Below 1 V

NG → REPAIR OR REPLACE NO. 1 SEAT WIRE

OK

REPAIR OR REPLACE FLOOR WIRE

RS

13	CHECK NO. 1 SEAT WIRE (FOR OPEN)

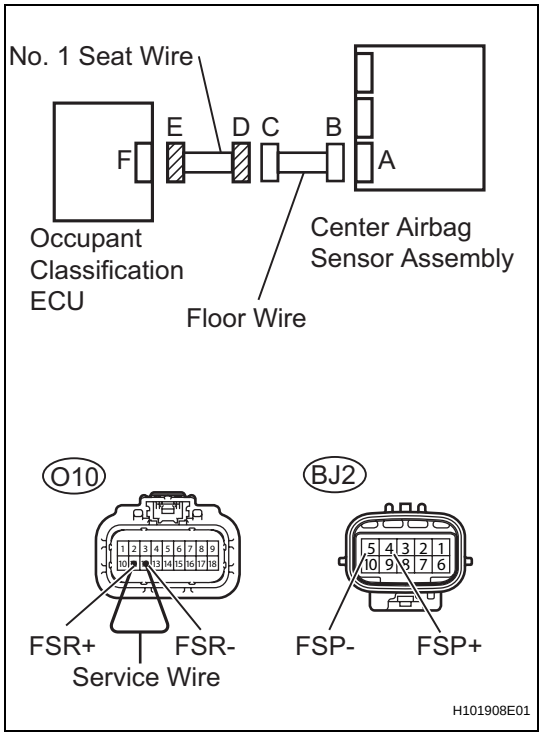

(a) Disconnect the No. 1 seat wire connector from the floor wire.

HINT:

The service wire has already been inserted into connector E.

(b) Measure the resistance.

Standard resistance

Tester Connection	Condition	Specified Condition
BJ2-4 (FSP+) - BJ2-5 (FSP-)	Always	Below 1 Ω

NG → **REPAIR OR REPLACE NO. 1 SEAT WIRE**

OK

REPAIR OR REPLACE FLOOR WIRE

RS

14	CHECK NO. 1 SEAT WIRE (TO GROUND)

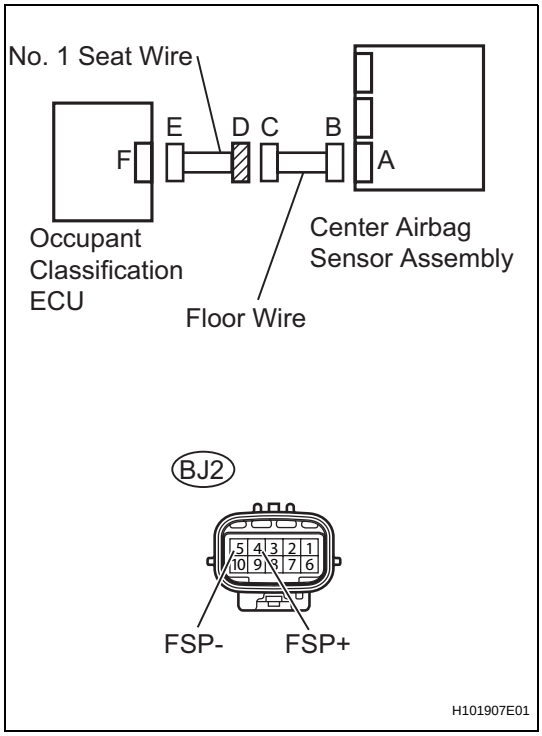

(a) Disconnect the No. 1 seat wire connector from the floor wire.

(b) Measure the resistance.

Standard resistance

Tester Connection	Condition	Specified Condition
BJ2-4 (FSP+) - Body ground	Always	1 MΩ or higher
BJ2-5 (FSP-) - Body ground	Always	1 MΩ or higher

NG → **REPAIR OR REPLACE NO. 1 SEAT WIRE**

OK

REPAIR OR REPLACE FLOOR WIRE

15	CHECK NO. 1 SEAT WIRE (FOR SHORT)

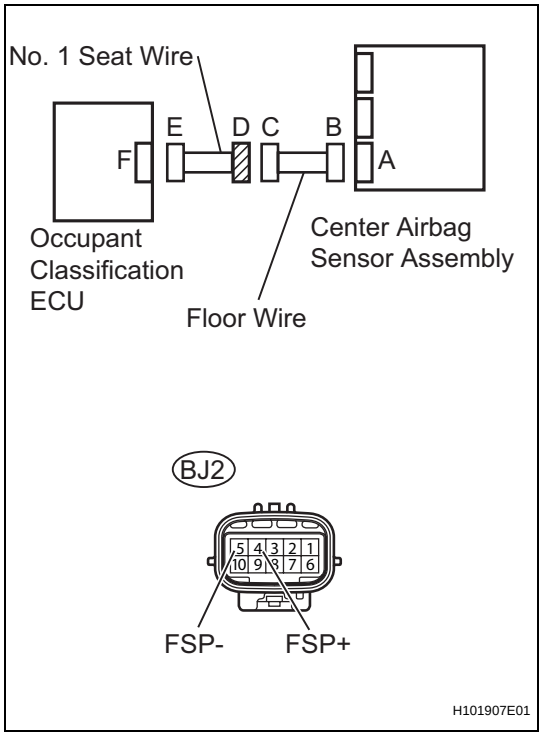

(a) Disconnect the No. 1 seat wire connector from the floor wire.
(b) Measure the resistance.
Standard resistance

Tester Connection	Condition	Specified Condition
BJ2-4 (FSP+) - BJ2-5 (FSP-)	Always	1 MΩ or higher

NG → **REPAIR OR REPLACE NO. 1 SEAT WIRE**

OK

REPAIR OR REPLACE FLOOR WIRE

RS

DTC	B1791	Collision Detection Signal Line Malfunction

DESCRIPTION

The center airbag sensor assembly communication circuit consists of the occupant classification ECU and the center airbag sensor assembly.
DTC B1791 is set when a malfunction is detected in the center airbag sensor assembly communication circuit.

DTC No.	DTC Detections Conditions	Trouble Areas
B1791	• Occupant classification ECU receives line short circuit signal, open circuit signal, short circuit to ground signal or short circuit to B+ signal in center airbag sensor assembly communication circuit for 2 seconds • Center airbag sensor assembly malfunction • Occupant classification ECU malfunction	• No. 1 seat wire • Floor wire • Instrument panel wire • Occupant classification ECU • Center airbag sensor assembly

HINT:
- When DTC B1650/32 is detected as a result of troubleshooting for the supplemental restraint system, check the DTCs stored in the occupant classification ECU, and perform troubleshooting for those DTCs first.
- Use the intelligent tester to check for DTCs of the occupant classification ECU, otherwise the DTC cannot be read.

WIRING DIAGRAM

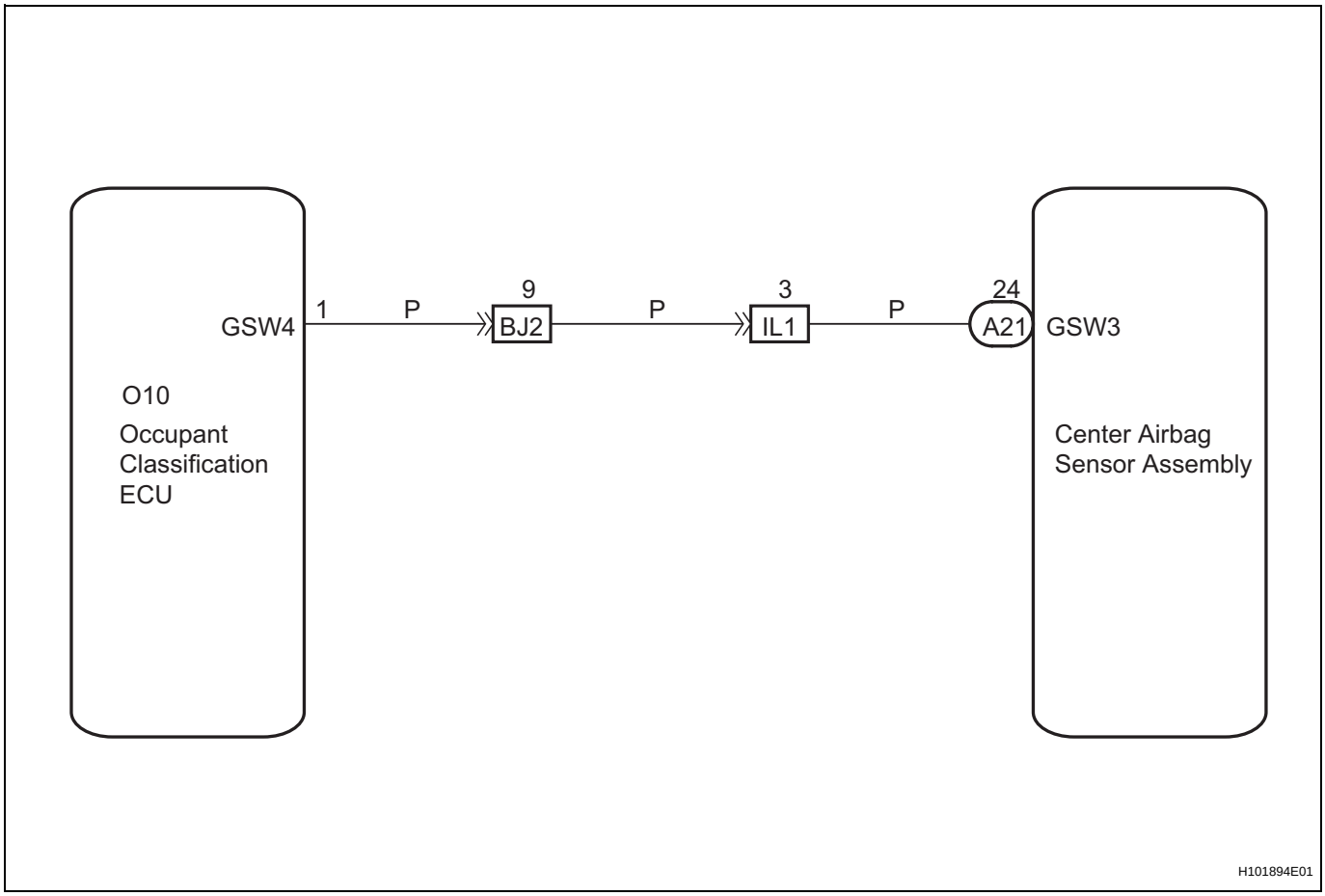

RS

CAUTION:
In order to prevent unexpected airbag deployment, disconnect the following connectors before inspecting parts such as wire harnesses, if the application of tester probes to the center airbag sensor assembly connector is necessary.
(a) Turn the ignition switch to the LOCK position.
(b) Disconnect the negative (-) terminal cable from the battery, and wait for at least 90 seconds.
(c) Disconnect the connectors from the center airbag sensor assembly.
(d) Disconnect the connectors from the steering pad assembly.
(e) Disconnect the connector from the front passenger airbag assembly.
(f) Disconnect the connector from the front seat outer belt assembly LH.
(g) Disconnect the connector from the front seat outer belt assembly RH.
HINT:
Skip the following steps if side and curtain shield airbags are not fitted.
(h) Disconnect the connector from the front seat side airbag assembly LH.
(i) Disconnect the connector from the front seat side airbag assembly RH.
(j) Disconnect the connector from the curtain shield airbag assembly LH.
(k) Disconnect the connector from the curtain shield airbag assembly RH.
HINT:
- If troubleshooting (wire harness inspection) is difficult to perform, remove the front RH seat assembly installation bolts to see the under surface of the seat cushion.
- In the above case, hold the seat so that it does not tip over. Holding the seat up for a long period of time may cause problems, such as seat rail deformation. Hold the seat up only for as long as necessary.

1	CHECK DTC

(a) Turn the ignition switch to the ON position.
(b) Clear any DTCs stored in the memory (See page RS-487).
HINT:
First clear DTCs stored in the occupant classification ECU and then in the center airbag sensor assembly.
(c) Turn the ignition switch to the LOCK position.
(d) Turn the ignition switch to the ON position.
(e) Check the DTCs (See page RS-487).
OK:
DTC B1791 is not output.
HINT:
DTCs other than B1791 may be output at this time, but they are not related to this check.

RS

OK → **USE SIMULATION METHOD TO CHECK**

NG

2	CHECK CONNECTORS

(a) Turn the ignition switch to the LOCK position.
(b) Disconnect the negative (-) terminal cable from the battery, and wait for at least 90 seconds.
(c) Check that the connectors are properly connected to the occupant classification ECU and the center airbag sensor assembly.

OK:

The connectors are properly connected.

(d) Disconnect the connectors from the occupant classification ECU and center airbag sensor assembly.

(e) Check that the terminals of the connectors are not damaged.

OK:

The terminals are not deformed or damaged.

HINT:

If the connectors are not connected securely, reconnect the connectors and proceed to the next inspection.

NG → **REPAIR OR REPLACE WIRE HARNESS OR CONNECTORS**

OK

3	CHECK CENTER AIRBAG SENSOR ASSEMBLY COMMUNICATION CIRCUIT (TO B+)

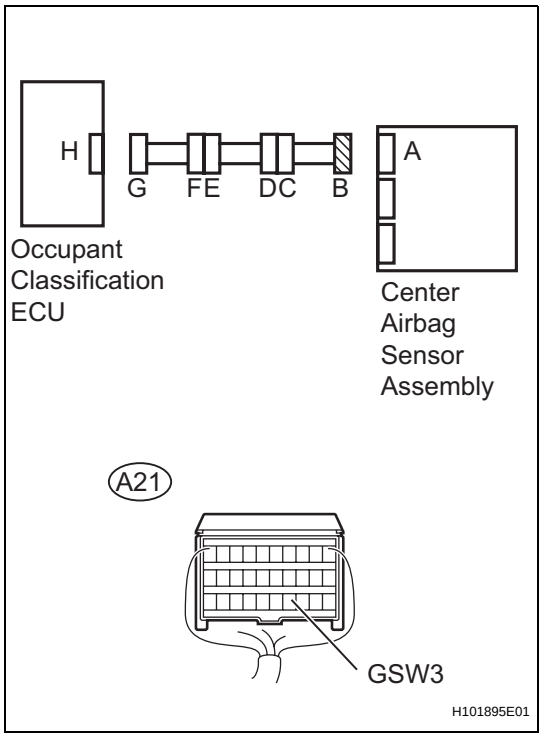

(a) Disconnect the connectors from the occupant classification ECU and center airbag sensor assembly.

(b) Connect the negative (-) terminal cable to the battery.

(c) Turn the ignition switch to the ON position.

(d) Measure the voltage.

Standard voltage

Tester Connection	Condition	Specified Condition
A21-24 (GSW3) - Body ground	Ignition switch ON	Below 1 V

NG → **Go to step 11**

OK

RS

4	CHECK CENTER AIRBAG SENSOR ASSEMBLY COMMUNICATION CIRCUIT (FOR OPEN)

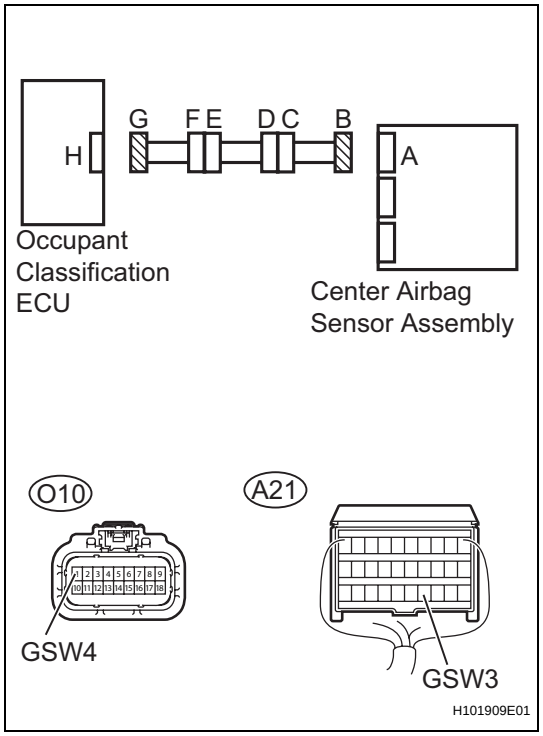

(a) Turn the ignition switch to the LOCK position.
(b) Disconnect the negative (-) terminal cable from the battery, and wait for at least 90 seconds.
(c) Measure the resistance.
Standard resistance

Tester Connection	Condition	Specified Condition
A21-24 (GSW3) - O10-1 (GSW4)	Always	Below 1 Ω

NG → **Go to step 12**

OK

5	CHECK CENTER AIRBAG SENSOR ASSEMBLY COMMUNICATION CIRCUIT (TO GROUND)

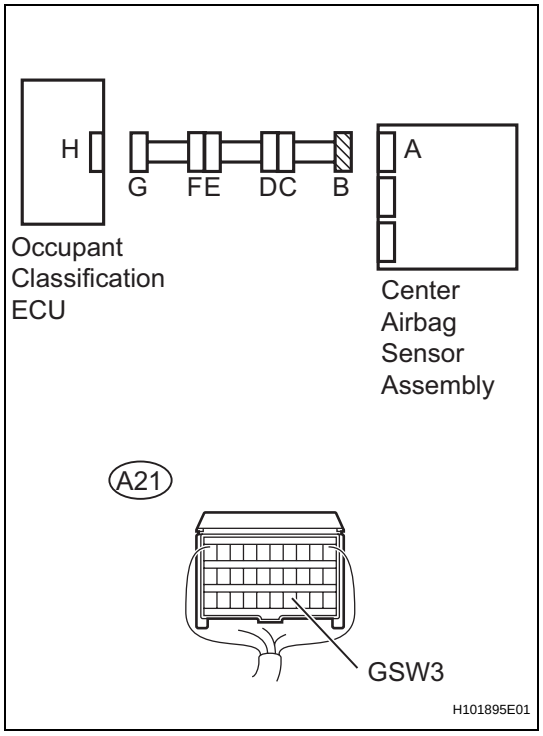

(a) Measure the resistance.
Standard resistance

Tester Connection	Condition	Specified Condition
A21-24 (GSW3) - Body ground	Always	1 MΩor higher

NG → **Go to step 13**

RS

OK

6	CHECK DTC

(a) Connect the connectors to the occupant classification ECU and the center airbag sensor assembly.
(b) Connect the negative (-) terminal cable to the battery.
(c) Turn the ignition switch to the ON position.
(d) Clear any DTCs stored in the memory (See page RS-487).
HINT:
First clear DTCs stored in the occupant classification ECU and then in the center airbag sensor assembly.
(e) Turn the ignition switch to the LOCK position.
(f) Turn the ignition switch to the ON position.
(g) Check the DTCs (See page RS-487).
OK:
DTC B1791 is not output.
HINT:
DTCs other than B1791 may be output at this time, but they are not related to this check.

OK → **USE SIMULATION METHOD TO CHECK**

NG

7	REPLACE OCCUPANT CLASSIFICATION ECU

(a) Connect the intelligent tester to the DLC3.
(b) Turn the ignition switch to the ON position.
(c) Store the occupant classification ECU data into the intelligent tester (See page RS-476).
HINT:
If the ECU data cannot be stored in the intelligent tester, replace the front seat cushion assembly (with occupant classification ECU and occupant classification sensor).
(d) Turn the ignition switch to the LOCK position.
(e) Disconnect the negative (-) terminal cable from the battery, and wait for at least 90 seconds.
(f) Replace the occupant classification ECU (See page RS-634).
(g) Connect the negative (-) terminal cable to the battery.
(h) Turn the ignition switch to the ON position.
(i) Load the data from the previous ECU stored in the tester, into the newly installed ECU (See page RS-476).
(j) Turn the ignition switch to the LOCK position.
(k) Turn the ignition switch to the ON position.
(l) Clear the DTCs stored in the memory (See page RS-487).
HINT:
If DTC is not cleared at this time, past DTC will remain.

NEXT

8	CHECK DTC

(a) Turn the ignition switch to the ON position.
(b) Clear the DTCs stored in the memory (See page RS-487).
HINT:
First clear DTCs stored in the occupant classification ECU and then in the center airbag sensor assembly.
(c) Turn the ignition switch to the LOCK position.
(d) Turn the ignition switch to the ON position.
(e) Check the DTCs (See page RS-487).
OK:
DTC B1791 is not output.
HINT:
DTCs other than B1791 may be output at this time, but they are not related to this check.

OK	Go to step 10

NG

9	REPLACE CENTER AIRBAG SENSOR ASSEMBLY

(a) Turn the ignition switch to the LOCK position.
(b) Disconnect the negative (-) terminal cable from the battery, and wait for at least 90 seconds.
(c) Replace the center airbag sensor assembly (See page RS-602).

NEXT

10	PERFORM SENSITIVITY CHECK

(a) Perform the sensitivity check (See page RS-480).

NEXT

RS

END

11	CHECK CENTER AIRBAG SENSOR ASSEMBLY COMMUNICATION CIRCUIT (TO B+)

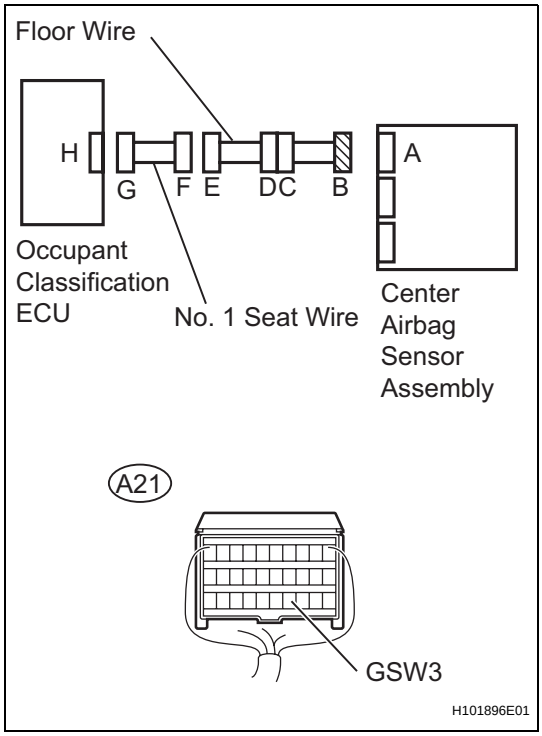

(a) Turn the ignition switch to the LOCK position.
(b) Disconnect the negative (-) terminal cable from the battery, and wait for at least 90 seconds.
(c) Disconnect the No. 1 seat wire connector from the floor wire.
(d) Connect the negative (-) terminal cable to the battery and wait for at least 2 seconds.
(e) Turn the ignition switch to the ON position.
(f) Measure the voltage.

Standard voltage

Tester Connection	Condition	Specified Condition
A21-24 (GSW3) - Body ground	Ignition switch ON	Below 1 V

NG → **Go to step 14**

OK

REPLACE NO. 1 SEAT WIRE

12	CHECK CENTER AIRBAG SENSOR ASSEMBLY COMMUNICATION CIRCUIT (FOR OPEN)

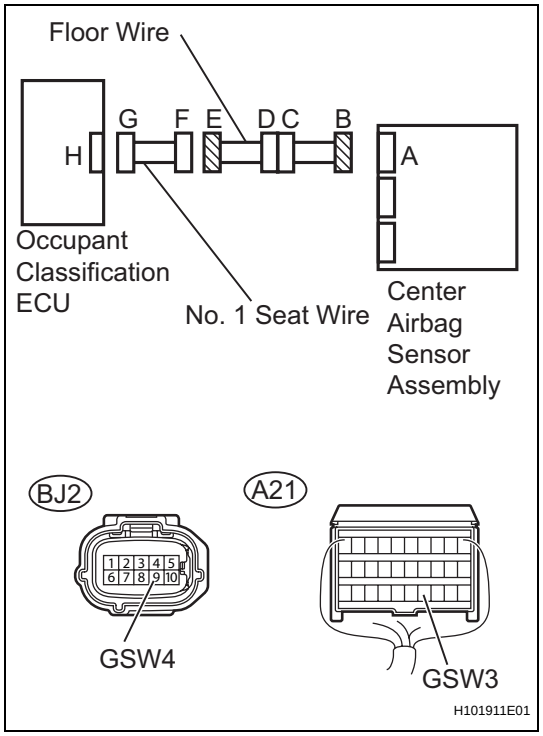

(a) Disconnect the No. 1 seat wire connector from the floor wire.

(b) Measure the resistance.

Standard resistance

Tester Connection	Condition	Specified Condition
A21-24 (GSW3) - BJ2-9 (GSW4)	Always	Below 1 Ω

NG → **Go to step 15**

OK

REPLACE NO. 1 SEAT WIRE

RS

13	CHECK CENTER AIRBAG SENSOR ASSEMBLY COMMUNICATION CIRCUIT (TO GROUND)

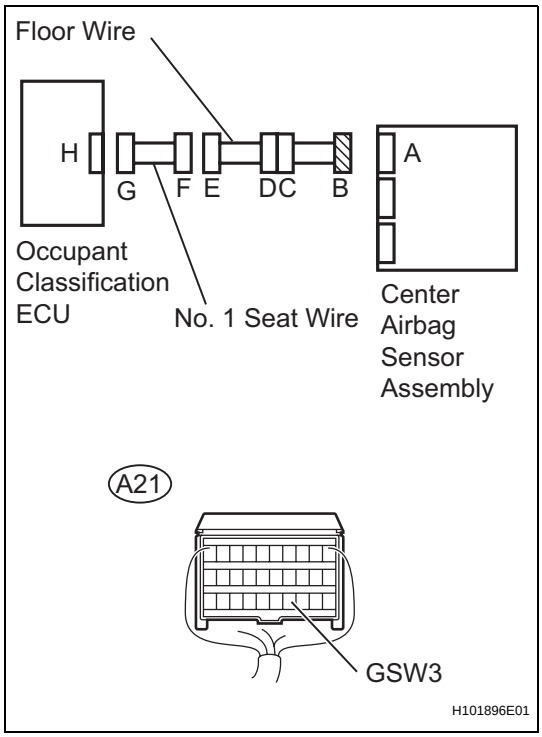

(a) Disconnect the No. 1 seat wire connector from the floor wire.
(b) Measure the resistance.
Standard resistance

Tester Connection	Condition	Specified Condition
A21-24 (GSW3) - Body ground	Always	1 MΩor higher

NG → **Go to step 16**

OK

REPLACE NO. 1 SEAT WIRE

14	CHECK INSTRUMENT PANEL WIRE (TO B+)

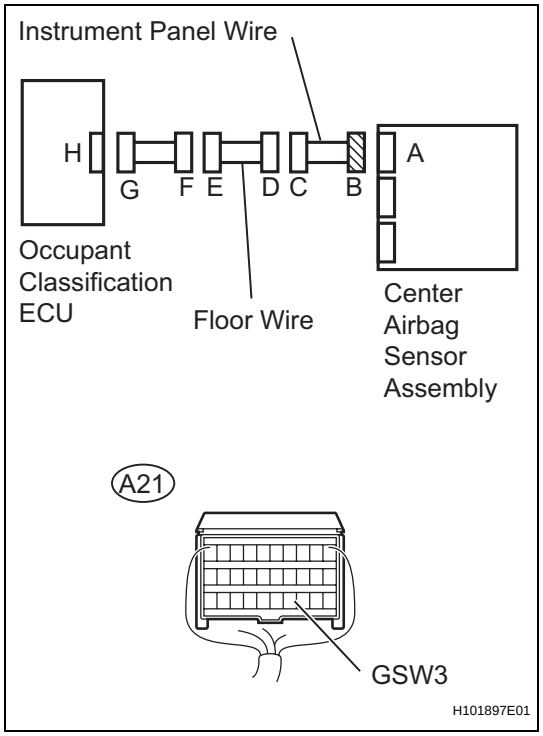

(a) Turn the ignition switch to the LOCK position.
(b) Disconnect the negative (-) terminal cable from the battery, and wait for at least 90 seconds.
(c) Disconnect the floor wire connector from the instrument panel wire.
(d) Connect the negative (-) terminal cable to the battery and wait for at least 2 seconds.
(e) Turn the ignition switch to the ON position.
(f) Measure the voltage.

Standard voltage

Tester Connection	Condition	Specified Condition
A21-24 (GSW3) - Body ground	Ignition switch ON	Below 1 V

NG → **REPAIR OR REPLACE INSTRUMENT PANEL WIRE**

OK

REPAIR OR REPLACE FLOOR WIRE

RS

15	CHECK INSTRUMENT PANEL WIRE (FOR OPEN)

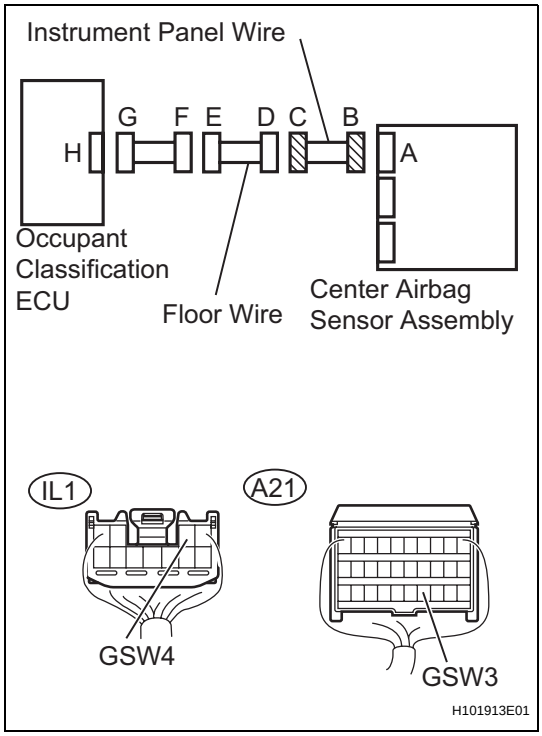

(a) Disconnect the floor wire connector from the instrument panel wire.
(b) Measure the resistance.
Standard resistance

Tester Connection	Condition	Specified Condition
A21-24 (GSW3) - IL1-3 (GSW4)	Always	Below 1 Ω

NG → **REPAIR OR REPLACE INSTRUMENT PANEL WIRE**

OK

REPAIR OR REPLACE FLOOR WIRE

16	CHECK INSTRUMENT PANEL WIRE (TO GROUND)

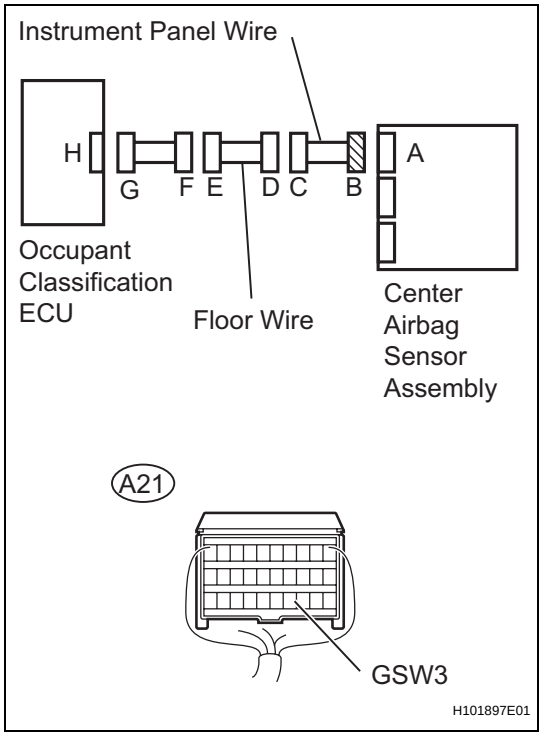

(a) Disconnect the floor wire connector from the instrument panel wire.
(b) Measure the resistance.
Standard resistance

Tester Connection	Condition	Specified Condition
A21-24 (GSW3) - Body ground	Always	1 MΩor higher

NG → **REPAIR OR REPLACE INSTRUMENT PANEL WIRE**

OK

REPAIR OR REPLACE FLOOR WIRE

DTC	B1795	Occupant Classification ECU Malfunction

DESCRIPTION

DTC B1795 is set when a malfunction is detected in the occupant classification ECU.

DTC No.	DTC Detecting Conditions	Trouble Areas
B1795	Occupant classification ECU malfunction	Occupant classification ECU

HINT:

- When DTC B1650/32 is detected as a result of troubleshooting the supplemental restraint system, check the DTCs stored in the occupant classification ECU, and perform troubleshooting for those DTCs first.
- Use the intelligent tester to check for DTCs of the occupant classification ECU, otherwise the DTCs cannot be read.

HINT:

- If troubleshooting (wire harness inspection) is difficult to perform, remove the front passenger seat installation bolts to see the under surface of the seat cushion.
- In the above case, hold the seat so that it does not tip over. Holding the seat up for a long period of time may cause problems, such as seat rail deformation. Hold the seat up only for as long as necessary.

1	CHECK DTC

(a) Turn the ignition switch to the ON position.
(b) Clear any DTCs stored in the memory (See page RS-487).

HINT:

First clear DTCs stored in the occupant classification ECU and then in the center airbag sensor assembly .

(c) Turn the ignition switch to the LOCK position.
(d) Turn the ignition switch to the ON position, and wait for at least 10 seconds.
(e) Check the DTCs (See page RS-487).

OK:

DTC B1795 is not output.

HINT:

DTCs other than B1795 may be output at this time, but they are not related to this check.

OK → **USE SIMULATION METHOD TO CHECK**

NG

2	REPLACE OCCUPANT CLASSIFICATION ECU

(a) Connect the intelligent tester to the DLC3.
(b) Turn the ignition switch to the ON position.
(c) Store the occupant classification ECU data into the intelligent tester (See page RS-476).

HINT:

If the ECU data cannot be stored in the intelligent tester, replace the front seat cushion assembly (with occupant classification ECU and occupant classification sensor).

RS

(d) Turn the ignition switch to the LOCK position.
(e) Disconnect the negative (-) terminal cable from the battery, and wait for at least 90 seconds.
(f) Replace the occupant classification ECU (See pageRS-634).
(g) Connect the negative (-) terminal cable to the battery.
(h) Turn the ignition switch to the ON position.
(i) Load the data from the previous ECU stored in the tester, into the newly installed ECU (See page RS-476).
(j) Turn the ignition switch to the LOCK position.
(k) Turn the ignition switch to the ON position.
(l) Clear the DTCs stored in the memory (See page RS-487).
HINT:
If DTC is not cleared at this time, past DTC will remain.

NEXT

3	PERFORM SENSITIVITY CHECK

(a) Perform the sensitivity check (See page RS-480).

NEXT

END

DTC	B1797	Calibration Malfunction

DESCRIPTION

DTC B1797 is output when the following condition is met:

– Zero point calibration is performed when the conditions for the calibration are not satisfied.
– Zero point calibration has failed.

Condition for the zero point calibration:

Item	Condition
DTC	Not recorded.
Front passenger seat occupant.	Vacant
Front passenger side buckle switch.	OFF (The seat belt is not fastened)
ECU temperature	0 to 46°C (32 to 114.8°F)
Filtered pressure	38 to 75 count

DTC No.	DTC Detecting Condition	Trouble Area
B1797	• Zero point calibration is performed when the conditions for the calibration are not satisfied. • Zero point calibration has failed.	• There is no malfunction if this DTC is not output again after performing occupant classification system zero point calibration. • Occupant classification sensor (front seat cushion assembly)

HINT:

- When DTC B1650/32 is detected as a result of troubleshooting for the supplemental restraint system, check the DTCs stored in the occupant classification ECU. When DTC B1797 is output, perform troubleshooting for the DTC.
- Use the intelligent tester to check for DTCs of the occupant classification ECU, otherwise the DTC cannot be read.

1	CHECK DTC

(a) Turn the ignition switch to the ON position.
(b) Clear the DTCs stored in the memory (See page RS-487).
HINT:
First clear DTCs stored in the occupant classification ECU and then in the center airbag sensor assembly.
(c) Turn the ignition switch to the LOCK position.
(d) Turn the ignition switch to the ON position, and wait for at least 10 seconds.
(e) Check the DTCs (See page RS-487).
OK:
DTC B1797 is output.
HINT:
DTCs other than B1797 may be output at this time, but they are not related to this check.

NO → END

YES

2	READ VALUE OF DATA LIST (SPECIFIED CONDITION FOR ZERO POINT CALIBRATION)

(a) Connect the intelligent tester to the DLC3.

RS

(b) Turn the ignition switch ON position.
(c) Using the intelligent tester, read the DATA LIST (See page RS-487).

Item	Measurement Item/ Range (Display)	Normal Condition	Specified Condition for Zero Point Calibration
RELATIVE PRESS	Pressure sensor output/ Min.: 0 Max.: 255	0 to 210 (reference value)	0 to 2
THERMISTOR TEMP	Thermistor temperature output/ Min.: -40°C (-40°F) Max.: 90°C (194°F)	-40 to 85°C (-40 to185°F)	3 to 40°C (36 to 104°F)
#PRESENT CODES	Number of present trouble codes/ Min.: 0 Max.: 255	0	0
#PAST CODES	Number of past trouble codes/ Min.: 0 Max.: 255	0	0

RESULT

Result	Proceed to
All items correspond to the range of specified condition for zero point calibration.	**A**
THERMISTOR TEMP does not correspond to the range of specified condition for zero point calibration.	**B**

B → **Go to step 6**

A

3 CHECK DTC

HINT:
Check that the zero point calibration is completed normally. If either of the following condition is met, DTC B1797 will be output (Refer to INITIALIZATION: See page RS-480).
- Zero point calibration is performed when the the calibration conditions are not satisfied.
- Zero point calibration has failed.

(a) Turn the ignition switch to the ON position.
(b) Clear the DTCs stored in the memory (See page RS-487).
HINT:
First clear DTCs stored in the occupant classification ECU and then in the center airbag sensor assembly.
(c) Turn the ignition switch to the LOCK position.
(d) Turn the ignition switch to the ON position.
(e) Check the DTCs (See page RS-487).
OK:
DTC B1797 is not output.

NEXT

4 PERFORM ZERO POINT CALIBRATION

(a) Connect the intelligent tester to the DLC3.
(b) Turn the ignition switch to the ON position.

RS

(c) Using the intelligent tester, perform the zero point calibration (See page RS-480).
(d) Turn the ignition switch to the OFF position.
(e) Turn the ignition switch to the ON position.
(f) Clear the DTCs stored in the memory (See page RS-487).
HINT:
If DTC is not cleared at this time, past DTC will remain.

NEXT

5	CHECK DTC

(a) Turn the ignition switch to the ON position.
(b) Clear the DTCs stored in the memory (See page RS-487).
HINT:
First clear DTCs stored in the occupant classification ECU and then in the center airbag sensor assembly.
(c) Turn the ignition switch to the LOCK position.
(d) Turn the ignition switch to the ON position.
(e) Check the DTCs (See page RS-487).
OK:
DTC B1797 is not output.
HINT:
DTCs other than B1797 may be output at this time, but they are not related to this check.

NEXT

END

6	REPLACE FRONT SEAT CUSHION ASSEMBLY (WITH OCCUPANT CLASSIFICATION SENSOR AND SENSOR)

(a) Turn the ignition switch to the LOCK position.
(b) Disconnect the negative (-) terminal cable from the battery, and wait for at least 90 seconds.
(c) Replace the front seat cushion assembly (with occupant classification sensor and ECU) (See page RS-626).
(d) Connect the negative (-) terminal cable to the battery.
(e) Turn the ignition switch to the ON position.
(f) Clear the DTCs stored in the memory (See page RS-487).
HINT:
First clear DTCs stored in the occupant classification ECU and then in the center airbag sensor assembly.
(g) Turn the ignition switch to the LOCK position.
(h) Turn the ignition switch to the ON position.
(i) Using the intelligent tester, check the DTCs of the occupant classification ECU (See page RS-487).
OK:
DTC is not output.

NEXT

END

Trouble in Passenger Airbag ON / OFF Indicator

DESCRIPTION

This circuit detects the airbag cut-off switch status and the passenger seat occupant classification status (detected by the occupant classification system). The passenger airbag ON/OFF indicator illuminates ON or OFF comes on to inform the passengers of the front passenger airbag assembly status (activated or deactivated).

HINT:

The table below shows the normal indication condition of the passenger airbag ON/OFF indicator and the front passenger seat condition.

Front passenger seat condition	ON Indicator	OFF Indicator
Adult is seated	ON	OFF
Child is seated	OFF	ON
Vacant	OFF	OFF
Occupant classification system failure	OFF	ON

WIRING DIAGRAM

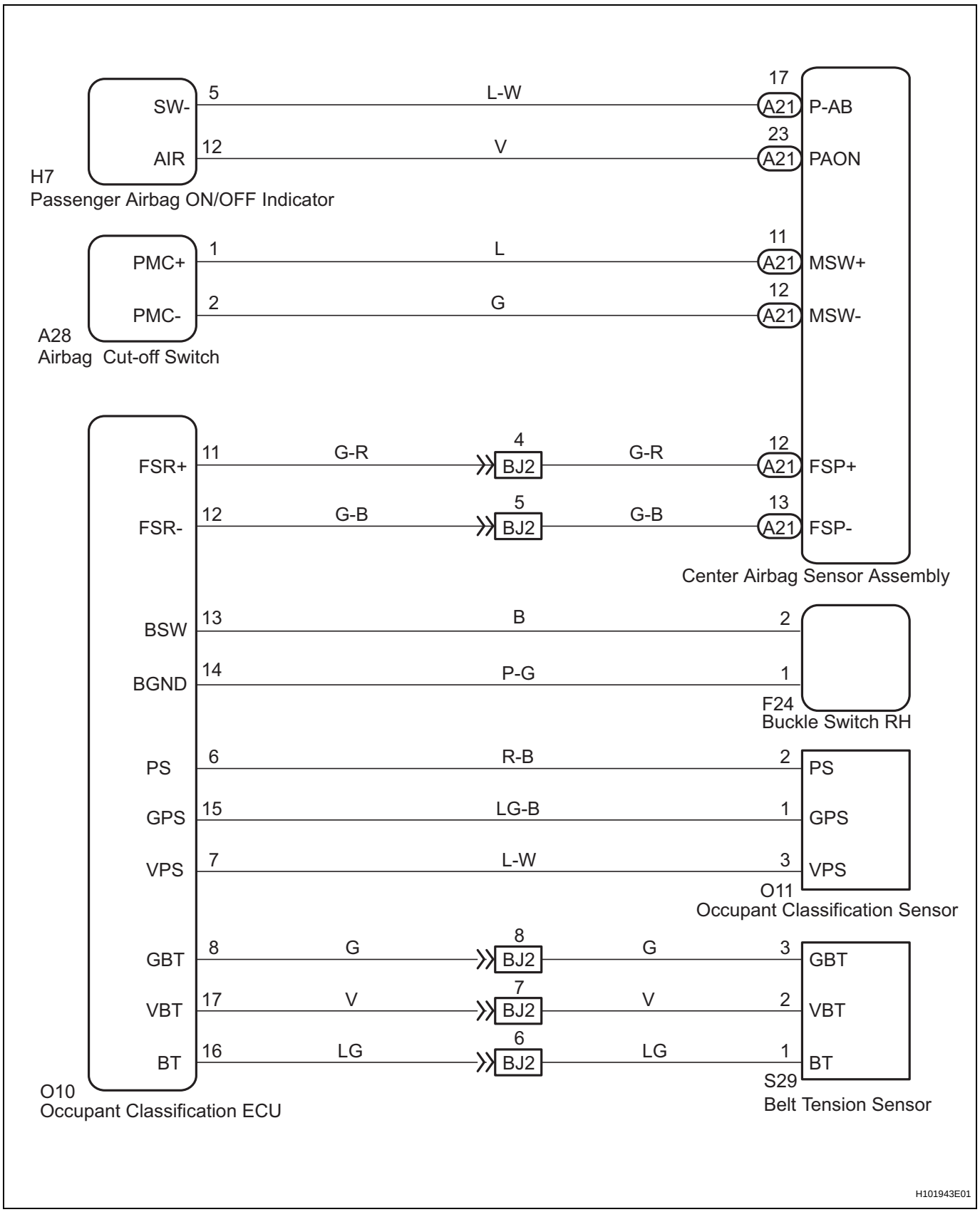

RS

1	CHECK PASSENGER AIRBAG ON/OFF INDICATOR (PERFORM SENSITIVITY CHECK)

(a) Perform the sensitivity check (See page RS-480).

OK → Go to step 7

NG

2	PERFORM ZERO POINT CALIBRATION

(a) Connect the intelligent tester to the DLC3.
(b) Turn the ignition switch to the ON position.
(c) Using the intelligent tester, perform the zero point calibration (See page RS-480).

NEXT

3	CHECK PASSENGER AIRBAG ON/OFF INDICATOR (PERFORM SENSITIVITY CHECK)

(a) Perform the sensitivity check (See page RS-480).

OK → END

NG

4	READ VALUE OF DATA LIST (PASSENGER SIDE BUCKLE SWITCH)

(a) Turn the ignition switch to the ON position.
(b) Using the intelligent tester, read the the DATA LIST.
  (1) Read the the display when the passenger side buckle switch is operated.

Item	Measurement Item / Range (Display)	Normal Condition	Diagnostic Note
P BUCKLE SW	Buckle switch (Passenger side)/ UNSET: The seat belt is not fastened SET: The seat belt is fastened NG: Data is not determined	UNSET/SET	-

OK:
The tester display changes correctly in accordance with the operation of the buckle switch.

NG → REPLACE FRONT SEAT INNER BELT ASSEMBLY RH

OK

5	READ VALUE OF DATA LIST (SEAT BELT TENSION SENSOR)

(a) Fasten the passenger side seat belt.
(b) Turn the ignition switch to the ON position.

RS

(c) Using the intelligent tester, read the value of the DATA LIST.

Item	Measurement Item / Range (Display)	Normal Condition	Diagnostic Note
FILTERED TENSION	Filtered belt tension output/ Min.: 0 N Max.: 255 N	39 to 64 (no load)	-

OK:

When there is no tension on the belt, 39 to 64 is displayed on the tester.

NG → **REPLACE FRONT SEAT OUTER BELT ASSEMBLY RH**

OK

6 CHECK PASSENGER AIRBAG ON/OFF INDICATOR (PERFORM SENSITIVITY CHECK)

(a) Perform the sensitivity check (See page RS-480).

OK → **END**

NG

7 CHECK CONNECTORS

(a) Turn the ignition switch to the LOCK position.
(b) Disconnect the negative (-) terminal cable from the battery, and wait for at least 90 seconds.
(c) Check that the following connectors are connected properly.
- Center airbag sensor assembly connector.
- Occupant classification ECU connector.
- Occupant classification sensor connector.
- Airbag cut-off switch connector.
- Belt tension sensor (front seat outer belt assembly RH) connector.
- Front seat inner belt assembly RH connector.
- Seat position sensor connector.

OK:

The connectors are properly connected.

(d) Disconnect the following connectors.
- Center airbag sensor assembly connector.
- Occupant classification ECU connector.
- Occupant classification sensor connector.
- Airbag cut-off switch connector.
- Belt tension sensor (front seat outer belt assembly RH) connector.
- Front seat inner belt assembly RH connector.
- Seat position sensor connector.

(e) Check that the terminals of the connectors are not damaged.

OK:

The terminals are not deformed or damaged.

RS

NOTICE:
Perform the zero point calibration if wire harnesses or connectors are repaired or replaced (See page RS-480).
HINT:
If the connectors are not connected securely, reconnect the connectors and proceed to the next inspection.

NG → **REPAIR OR REPLACE HARNESS AND CONNECTOR**

OK

8 INSPECT AIRBAG CUT-OFF SWITCH

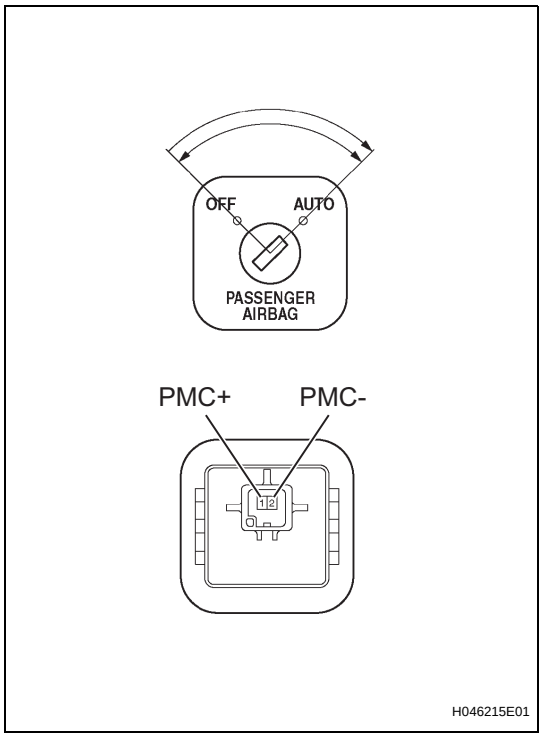

(a) Disconnect the A20 airbag cut-off switch connector.
(b) Measure the resistance.
Standard resistance

Switch Condition	Tester Condition	Specified Condition
OFF	1(PMC+) - 2(PMC-)	80 to 120 Ω
AUTO	1(PMC+) - 2(PMC-)	320 to 480 Ω

NG → **REPLACE AIRBAG CUT-OFF SWITCH**

OK

RS

9 CHECK INSTRUMENT PANEL WIRE (FOR OPEN)

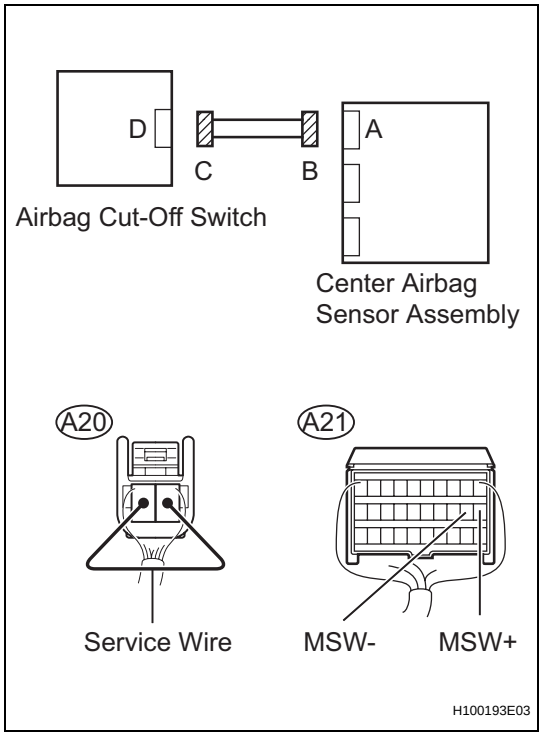

(a) Using a service wire, connect A20-1 (PMC+) and A20-2 (PMC-) of connector C.
NOTICE:
Do not forcibly insert the service wire into the terminals of the connector when connecting.
(b) Measure the resistance.
Standard resistance

Tester Connection	Condition	Specified Condition
A21-11 (MSW+) - A21-12 (MSW-)	Always	Below 1Ω

NG → **REPAIR OR REPLACE INSTRUMENT PANEL WIRE**

OK

10 CHECK INSTRUMENT PANEL WIRE (FOR SHORT)

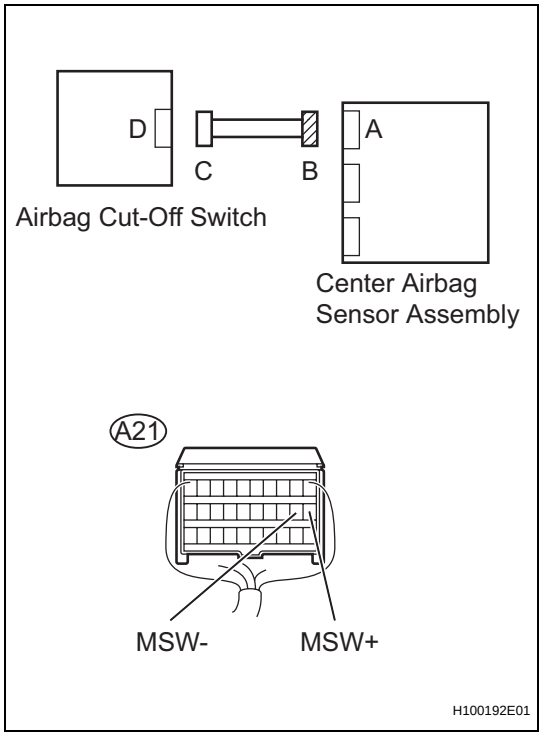

(a) Disconnect the service wire from connector C.
(b) Measure the resistance.
Standard resistance

Tester Connection	Condition	Specified Condition
A21-11 (MSW+) - A21-12 (MSW-)	Always	1 MΩor Higher

NG → **REPAIR OR REPLACE INSTRUMENT PANEL WIRE**

OK

RS

11 CHECK INSTRUMENT PANEL WIRE (TO B+)

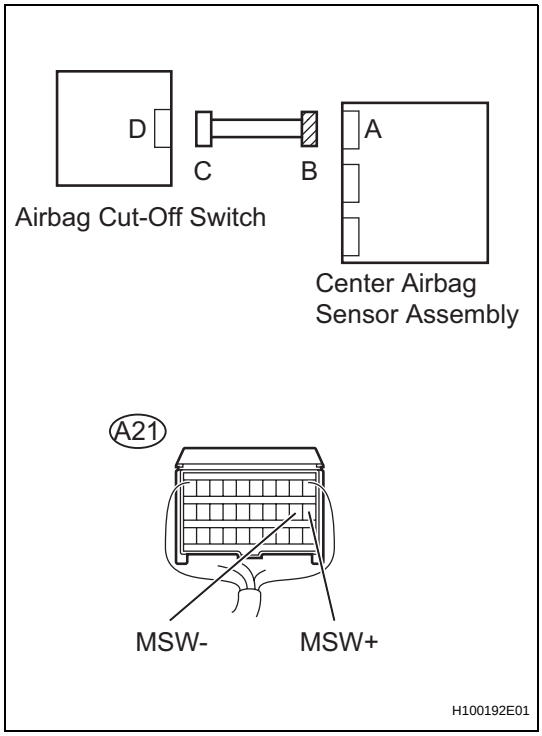

(a) Connect the negative (-) terminal cable to the battery, and wait for at least 2 seconds.
(b) Turn the ignition switch to the ON position.
(c) Measure the voltage.

Standard voltage

Tester Connection	Condition	Specified Condition
A21-11 (MSW+) - Body ground	Ignition switch ON	Below 1 V
A21-12 (MSW-) - Body ground	Ignition switch ON	Below 1 V

NG → **REPAIR OR REPLACE INSTRUMENT PANEL WIRE**

OK

12 CHECK INSTRUMENT PANEL WIRE (TO GROUND)

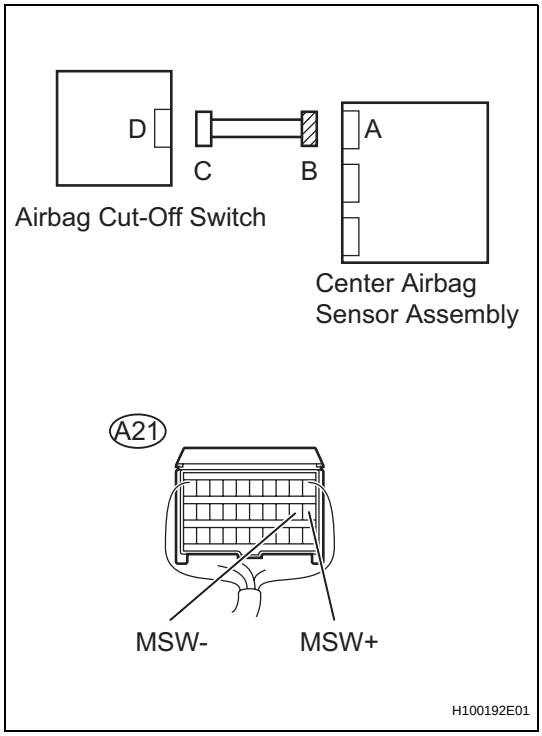

(a) Turn the ignition switch to the LOCK position.
(b) Disconnect the negative (-) terminal cable from the battery, and wait for at least 90 seconds.
(c) Measure the resistance.

Standard resistance

Tester Connection	Condition	Specified Condition
A21-11 (MSW+) - Body ground	Always	1 MΩor Higher
A21-12 (MSW-) - Body ground	Always	1 MΩor Higher

NG → **REPAIR OR REPLACE INSTRUMENT PANEL WIRE**

OK

RS

13 READ VALUE OF DATA LIST (PASSENGER CLASS)

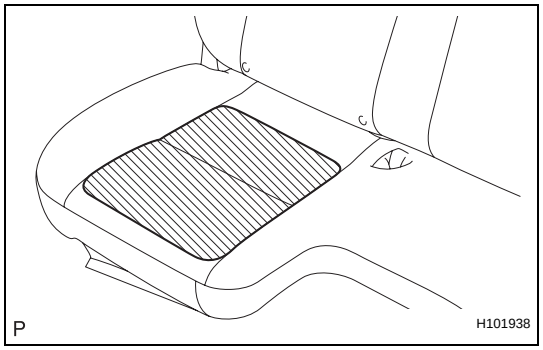

(a) Connect the intelligent tester to the DLC3.
(b) Turn the ignition switch to the LOCK position.
(c) Place a weight of 20 kg (44.0 lb) on the front passenger seat.
NOTICE:
- **Do not let the weight come into contact with the seat back when placing it on the seat cushion.**
- **Place the weight in the area shown in the illustration.**

(d) Turn the ignition switch to the ON position.
(e) Using the intelligent tester, read the value of the DATA LIST (See page RS-487).

Item	Measurement Item / Range (Display)	Normal Condition	Diagnostic Note
PASSENGER CLASS	Passenger classification/ NG: Data is not determined AM50: Adult is seated and seat is rear position AF05: Adult is seated and seat is front position CHILD: Child is seated OFF: Vacant	AF05/AM50/CHILD/OFF	-

OK:
The tester displays CHILD.

(f) Turn the ignition switch to the LOCK position.
(g) Add 30 kg (66.1 lb) weight on the front passenger seat.
NOTICE:
- **Do not let the weight come into contact with the seat back when placing it on the seat cushion.**
- **Place the weight in the area shown in the illustration.**

(h) Turn the ignition switch to the ON position.
(i) Using the intelligent tester, read the value of the DATA LIST (See page RS-487).
HINT:
AF05 appears on the tester screen display when the seat is in the front position, and AM50 appears when the seat is in the rear position.

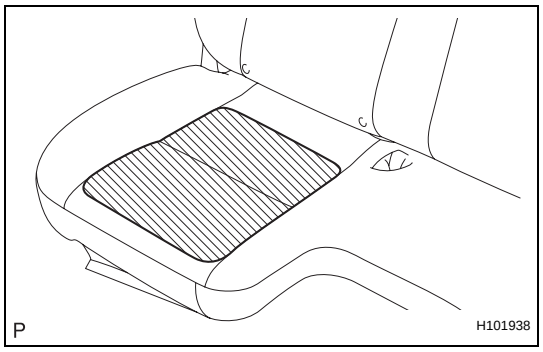

Item	Measurement Item / Range (Display)	Normal Condition	Diagnostic Note
PASSENGER CLASS	Passenger classification/ NG: Data is not determined AM50: Adult is seated and seat is rear position AF05: Adult is seated and seat is front position CHILD: Child is seated OFF: Vacant	AF05/AM50/CHILD/OFF	-

OK:
The tester displays AM50 or AF50 according to the seat position.

NG	**Go to step 17**
OK	

RS

14	REPLACE CENTER AIRBAG SENSOR ASSEMBLY

(a) Turn the ignition switch to the LOCK position.
(b) Disconnect the negative (-) terminal cable from the battery, and wait for at least 90 seconds.
(c) Replace the center airbag sensor assembly (See page RS-602).

NEXT

15	CHECK PASSENGER AIRBAG ON/OFF INDICATOR (PERFORM SENSITIVITY CHECK)

(a) Perform the sensitivity check (See page RS-480).

OK → END

NG

16	REPLACE OCCUPANT CLASSIFICATION ECU

(a) Connect the intelligent tester to the DLC3.
(b) Turn the ignition switch to the ON position.
(c) Store the occupant classification ECU data into the intelligent tester (See page RS-476).
HINT:
If the ECU data cannot be stored in the intelligent tester, replace the front seat cushion assembly (with occupant classification ECU and occupant classification sensor).
(d) Turn the ignition switch to the LOCK position.
(e) Disconnect the negative (-) terminal cable from the battery, and wait for at least 90 seconds.
(f) Replace the occupant classification ECU (See page RS-634).
(g) Connect the negative (-) terminal cable to the battery.
(h) Turn the ignition switch to the ON position.
(i) Load the data from the previous ECU stored in the tester, into the newly installed ECU (See page RS-476).

RS

NEXT

END

17	REPLACE OCCUPANT CLASSIFICATION ECU

(a) Connect the intelligent tester to the DLC3.
(b) Turn the ignition switch to the ON position.
(c) Store the occupant classification ECU data into the intelligent tester (See page RS-476).

HINT:
If the ECU data cannot be stored in the intelligent tester, replace the front seat cushion assembly (with occupant classification ECU and occupant classification sensor).

(d) Turn the ignition switch to the LOCK position.
(e) Disconnect the negative (-) terminal cable from the battery, and wait for at least 90 seconds.
(f) Replace the occupant classification ECU (See page RS-634).
(g) Connect the negative (-) terminal cable to the battery.
(h) Turn the ignition switch to the ON position.
(i) Load the data from the previous ECU stored in the tester, into the newly installed ECU (See page RS-476).

NEXT

18	CHECK PASSENGER AIRBAG ON/OFF INDICATOR (PERFORM SENSITIVITY CHECK)

(a) Perform the sensitivity check (See page RS-480).

OK → END

NG

19	REPLACE FRONT SEAT CUSHION ASSEMBLY (WITH OCCUPANT CLASSIFICATION ECU AND SENSOR)

(a) Turn the ignition switch to the LOCK position.
(b) Disconnect the negative (-) terminal cable from the battery, and wait for at least 90 seconds.
(c) Replace the front seat cushion assembly (with occupant classification ECU and occupant classification sensor) (See page RS-626).
(d) Connect the negative (-) terminal cable to the battery.
(e) Turn the ignition switch to the ON position.
(f) Clear the DTCs stored in the memory (See page RS-487).
HINT:
First clear DTCs stored in the occupant classification ECU and then in the center airbag sensor assembly.
(g) Turn the ignition switch to the LOCK position.
(h) Turn the ignition switch to the ON position.
(i) Check the DTCs (See page RS-487).
OK:
DTC B1774 and B1775 are not output.
HINT:
DTCs other than B1774 and B1775 may be output at this time, but they are not related to this check.

RS

NEXT

20	PERFORM ZERO POINT CALIBRATION

(a) Connect the intelligent tester to the DLC3.

(b) Turn the ignition switch to the ON position.
(c) Using the intelligent tester, perform the zero point calibration (See page RS-480).

NEXT

END

REMOVAL

1. **PRECAUTION**
(See page RS-1)

2. **DISCONNECT CABLE FROM NEGATIVE BATTERY TERMINAL**
Wait for at least 90 seconds after disconnecting the cable to prevent the air bag from working.

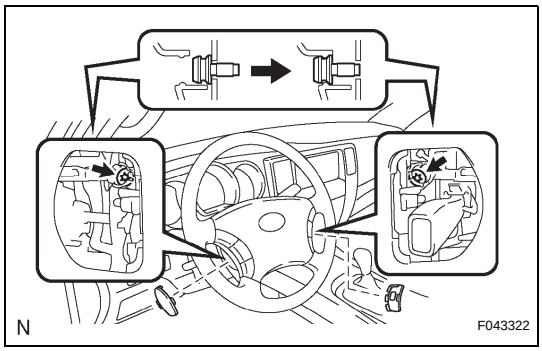

3. **REMOVE NO.2 LOWER STEERING WHEEL COVER**
(a) Using a screwdriver with its tip wrapped in protective tape, disengage the 2 claws and remove the No. 2 lower steering wheel cover.

4. **REMOVE NO.3 LOWER STEERING WHEEL COVER**
(a) Using a screwdriver with its tip wrapped in protective tape, disengage the 2 claws and remove the No. 3 lower steering wheel cover.

5. **REMOVE STEERING PAD**
(a) Using a "torx" socket wrench (T30), loosen the 2 "torx" screws until the groove along the screw circumference fits in the screw case.

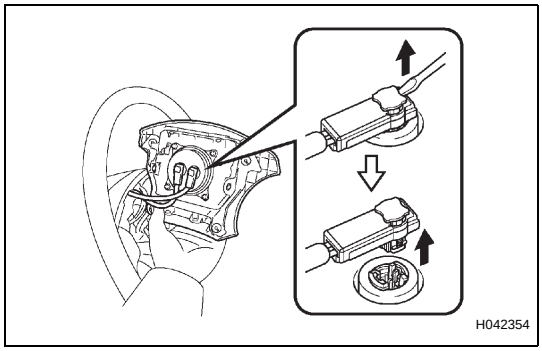

(b) Pull the steering pad out of the steering wheel assembly and support the steering pad with one hand, as shown in the illustration.
NOTICE:
When removing the steering pad, take care not to pull the airbag wire harness.
(c) Disconnect the horn ground harness from the steering pad.
(d) Using a screwdriver, disconnect the airbag connectors.

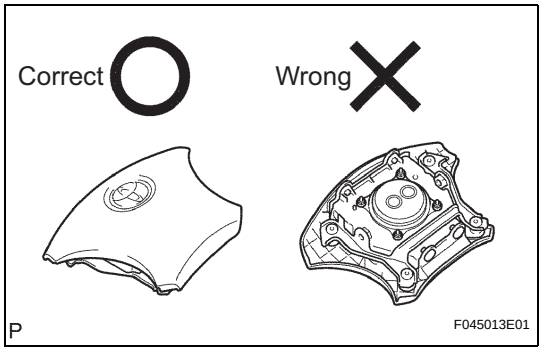

(e) Remove the steering pad.
CAUTION:
- **When placing the steering pad assembly, keep the upper surface of the steering pad facing upward.**
- **Never disassemble the steering pad.**

INSTALLATION

1. **INSTALL STEERING PAD**
NOTICE:
- **Never use airbag parts from a different vehicle. When replacing parts, replace them with new ones.**
- **Make sure the wheel pad is installed to the specified torque.**
- **If the wheel pad has been dropped, or there are cracks, dents or other defects in the case or connector, replace the wheel pad with a new one.**

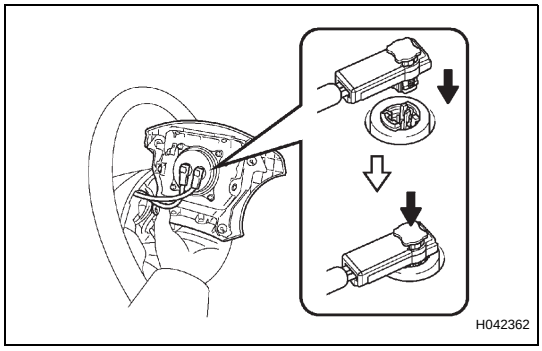

RS

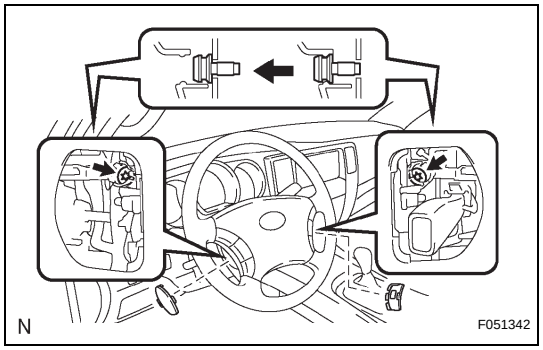

- **When installing the wheel pad, take care that the wiring does not interfere with other parts and is not pinched between other parts.**

(a) Support the steering pad with one hand, as shown in the illustration.
(b) Connect the 2 airbag connectors.
(c) Connect the horn ground harness to the steering pad.
(d) Confirm that the circumference groove of the "torx" screws fits in the screw case, and install the steering pad.
(e) Using a "torx" socket wrench (T30), install the 2 screws.
Torque: 8.8 N*m (90 kgf*cm, 78 in.*lbf)

2. INSTALL NO.3 LOWER STEERING WHEEL COVER
(a) Engage the 2 claws, install the No. 3 lower steering wheel cover to the steering wheel assembly.

3. INSTALL NO.2 LOWER STEERING WHEEL COVER
(a) Engage the 2 claws, install the No. 2 lower steering wheel cover to the steering wheel assembly.

4. CONNECT CABLE TO NEGATIVE BATTERY TERMINAL
Torque: 3.9 N*m (40 kgf*cm, 35 in.*lbf)

5. INSPECT STEERING PAD ASSEMBLY

6. INSPECT SRS WARNING LIGHT
(See page RS-28)

DISPOSAL

HINT:
When scrapping a vehicle equipped with an SRS or disposing of a steering pad, always first deploy the airbag in accordance with the procedure described below. If any abnormality occurs with the airbag deployment, contact the SERVICE DEPT. of TOYOTA MOTOR SALES, U.S.A., INC.

CAUTION:

- **Never dispose of a steering pad which has an undeployed airbag.**
- **The airbag produces a loud exploding sound when it deploys, so perform the operation outdoors and where it will not create a nuisance to nearby residents.**
- **When deploying the airbag, always use the specified SST (SRS Airbag Deployment Tool). Perform the operation in a place away from electrical noise.**
- **When deploying an airbag, perform the operation at least 10 m (33 ft) away from the steering pad.**
- **The steering pad is very hot when the airbag is deployed, so do not touch it for at least 30 minutes after deployment.**
- **Use gloves and safety glasses when handling a steering pad with a deployed airbag.**
- **Do not apply water, etc. to a steering pad with the deployed airbag.**
- **Always wash your hands with water after completing the operation.**

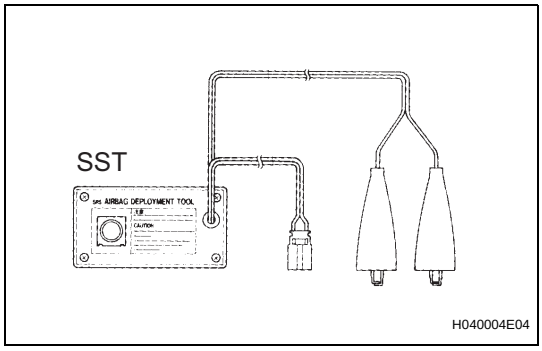

1. DISPOSE OF STEERING PAD ASSEMBLY (WHEN SCRAPPING VEHICLE DEPLOYMENT METHOD)

HINT:
Have a battery ready as the power source to deploy the airbag.

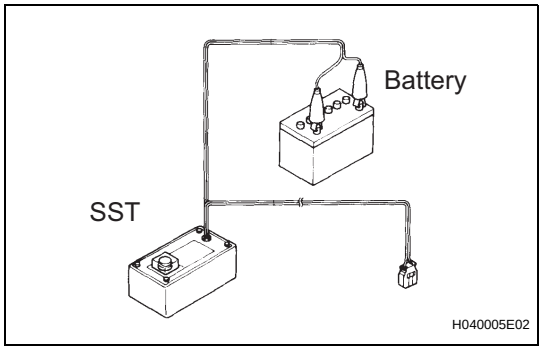

RS

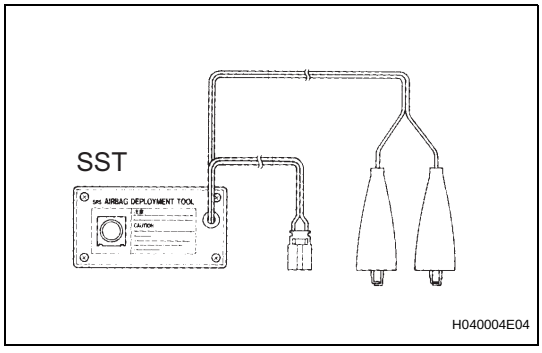

(a) Check the function of the SST.
CAUTION:
When deploying the airbag, always use the specified SST: SRS Airbag Deployment Tool.
SST 09082-00700

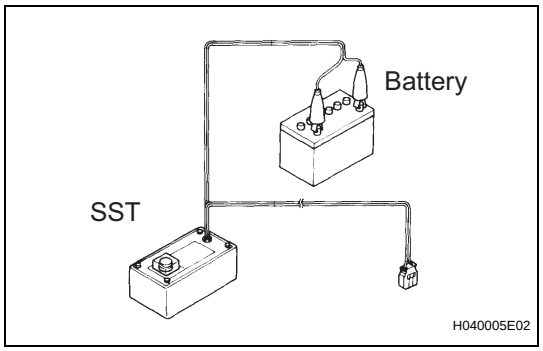

(1) Connect the SST to the battery.
Connect the red clip of the SST to the battery positive (+) terminal and the black clip of the SST to the battery negative (-) terminal.
HINT:
Do not connect the yellow connector of the SST which will be connected with the supplemental restraint system.

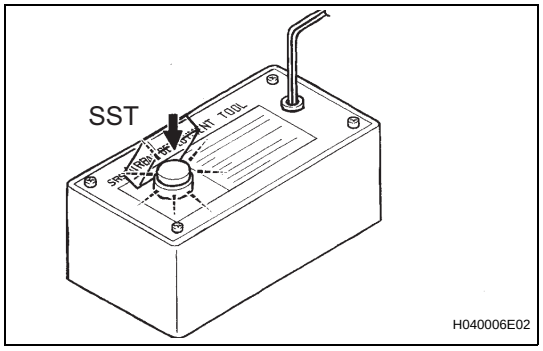

(2) Check the SST function.
Press the SST activation switch, and check that the LED of the SST activation switch comes on.
CAUTION:
If the LED lights up when the activation switch is not being pressed, SST malfunction is likely, so be sure not to use the SST.

(3) Disconnect the SST from the battery.

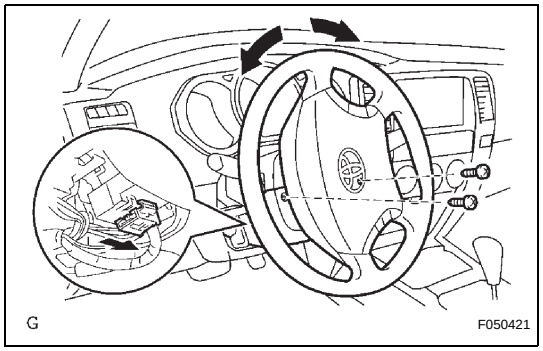

(b) Install the SST.
CAUTION:
Check that there is no slack in the steering wheel and steering pad.

(1) While turning the steering wheel right / left, remove the 2 screws and column lower cover.

(2) Disconnect the airbag connector of the spiral cable.

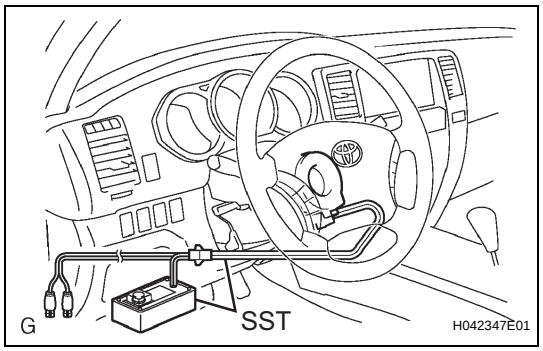

(3) Connect the connectors of the 2 SSTs to the airbag connector of the spiral cable.
SST 09082-00700, 09082-00780

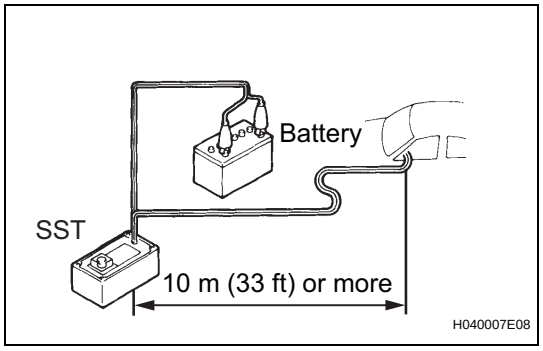

(4) Move the SST at least 10 m (33 ft) away from the front of the vehicle.

(5) Close all the doors and windows of the vehicle.
NOTICE:
Take care not to damage the SST wire harness.

(6) Connect the red clip of the SST to the battery positive (+) terminal and the black clip of the SST to the negative (-) terminal.

RS

(c) Deploy the airbag.
(1) Confirm that no one is inside the vehicle or within 10 m (33 ft) area around the vehicle.
(2) Press the activation switch of the SST and deploy the airbag.
HINT:
The airbag deploys as the LED of the SST activation switch comes on.

(d) Dispose of the steering pad.
CAUTION:
- **The steering pad is very hot when the airbag is deployed, so do not touch it for at least 30 minutes after deployment.**
- **When moving a vehicle for scrapping which has a steering pad with deployed airbag, use gloves and safety glasses.**
- **Use gloves and safety glasses when handling a steering pad assembly with the deployed airbag.**
- **Always wash your hands with water after completing the operation.**
- **Do not apply water, etc. to a steering pad with a deployed airbag.**

HINT:
When scrapping a vehicle, deploy the airbag and scrap the vehicle with the steering pad still installed.

2. DISPOSE OF STEERING PAD (WHEN DISPOSING OF AIRBAG ASSEMBLY DEPLOYMENT METHOD)
NOTICE:
- **When disposing of the steering pad only, never use the customers vehicle to deploy the airbag.**
- **Be sure to follow the procedure given below when deploying the airbag.**

HINT:
Have a battery ready as the power source to deploy the airbag.

(a) Remove the steering pad (See page RS-557).
CAUTION:
When storing the steering pad, keep the upper surface of the pad facing upward.

(b) Using a service-purpose wire harness for the vehicle, tie the steering pad assembly to the disc wheel.
Wire harness:
Stripped wire harness section 1.25 mm^2 or more (0.0019 in^2. or more)
CAUTION:
If a wire harness which is too thin or anything else is used to tie down the steering pad, it may be snapped by the shock when the airbag is deployed. This is highly dangerous. Always use a wire harness for vehicle use which is at least 1.25 mm^2 (0.0019 in^2).

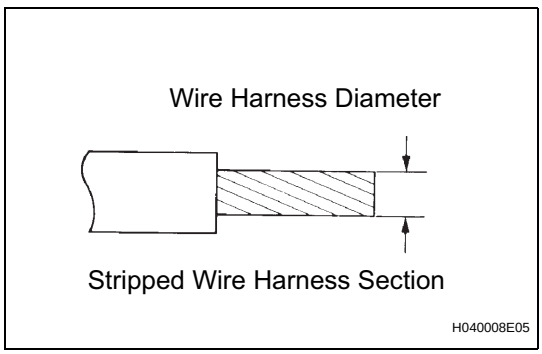

RS

HINT:
To calculate the square of the stripped wire harness section:
Square:

3.14 x (Diameter)^2 divided by 4

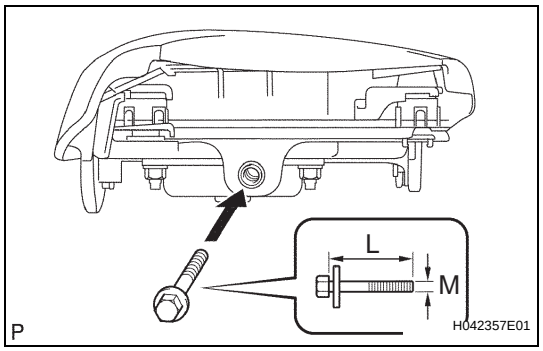

(1) Install the 2 bolts with washers in the 2 bolt holes in the steering pad.
Bolt:
L: 35.0 mm (1.387 in.)
M: 6.0 mm (0.236 in.)
Pitch: 1.0 mm (0.039 in.)
NOTICE:
- **Tighten the bolts by hand until the bolts become difficult to turn.**
- **Do not tighten the bolts excessively.**

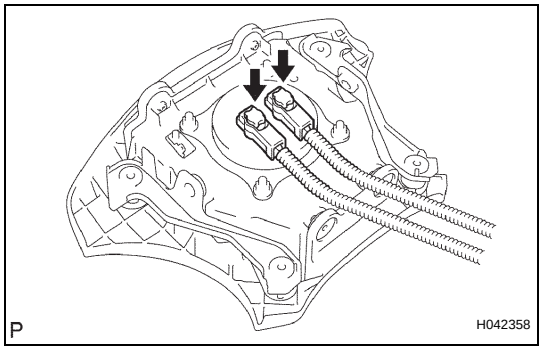

(2) After connecting the following to SST, connect them to the steering pad.
SST 09082-00802 (09082-10801, 09082-30801)

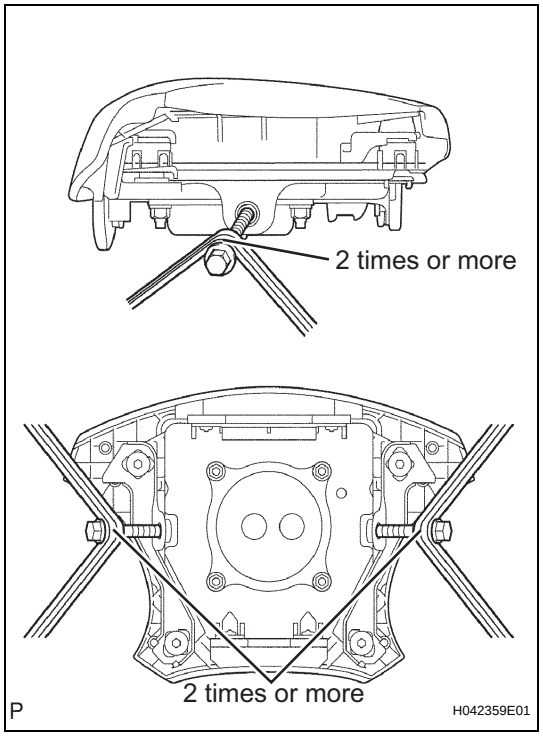

(3) Using 3 wire harnesses, wind each one at least 2 times around the bolts installed on the left and right sides of the steering pad.
CAUTION:
- **Tightly wind the wire harnesses around the bolts so that there is no slack.**
- **If there is slack in the wire harnesses, the steering pad may come loose due to the shock when the airbag is deployed. This is highly dangerous.**

RS

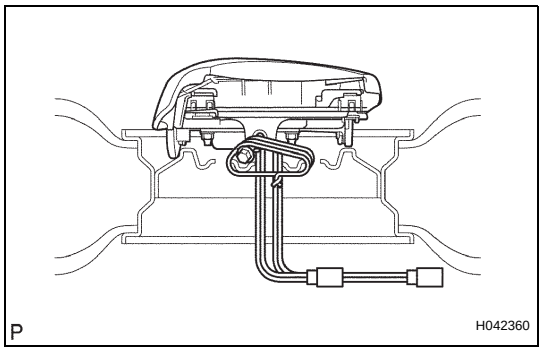

(4) Face the upper surface of the steering pad upward. Separately tie the left and right sides of the steering pad to the disc wheel through the hub nut holes. Position the steering pad connector so that it hangs downward through a hub hole in the disc wheel.

CAUTION:

- **Make sure that the wire harness is tight. It is very dangerous when slack in the wire harness results in the steering pad coming free through the shock from the airbag deploying.**
- **Always tie down the steering pad with the pad side facing upward. It is very dangerous if the steering pad is tied down with the metal surface facing upward as the wire harness will be cut by the shock caused by the airbag deployment and the steering pad will be thrown into the air.**

NOTICE:

The disc wheel will be marked by airbag deployment, so when disposing of the airbag use a redundant disc wheel.

(c) Check the function of the SST (See step 1-(a)).

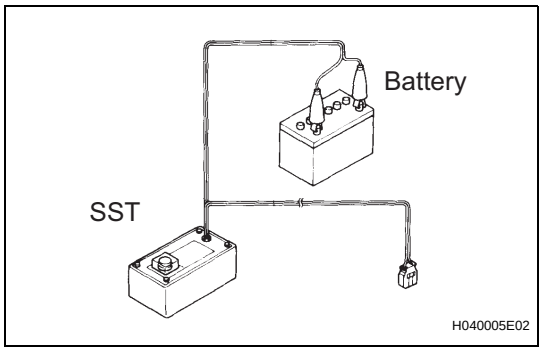

(d) Install the SST.

CAUTION:

Place the disc wheel on level ground.

(1) Connect the connector of the SST.

SST 09082-00700

NOTICE:

To avoid damaging the SST connector and wire harness, do not lock the secondary lock of the twin lock. Also, secure some slack for the SST wire harness inside the disc wheel.

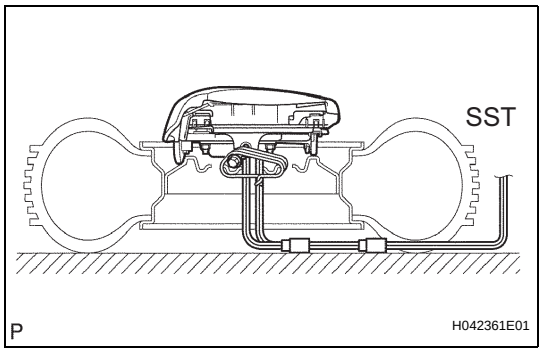

RS

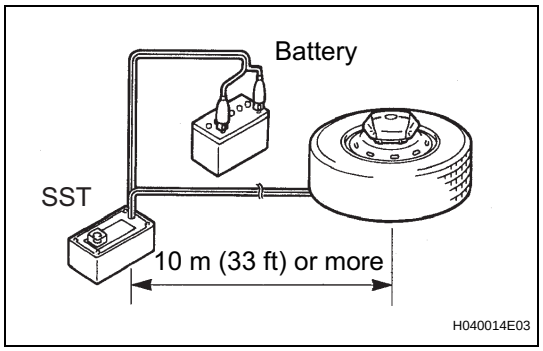

(2) Move the SST to at least 10 m (33 ft) away from the steering pad tied down on the disc wheel.

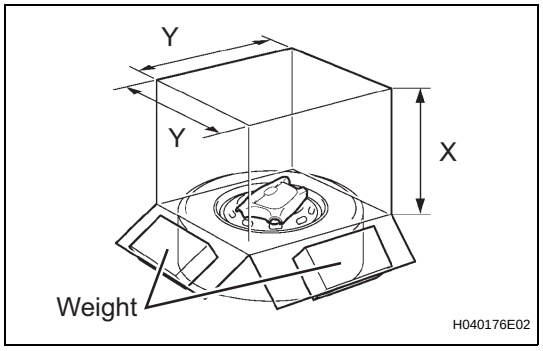

(e) Cover the steering pad with a cardboard box or tires.

Covering method using a cardboard box:

Cover the steering pad with the cardboard box and weigh the cardboard box down in 4 places with at least 190 N (20 kg, 44 lb).

Size of cardboard box:

Must exceed the following dimensions:

X = 460 mm (18.11 in.)

Y = 650 mm (25.59 in.)

NOTICE:

- **When dimension Y of the cardboard box exceeds the diameter of the disc wheel and tire to which the steering pad is tied, X should be the following size.**

  X = 460 mm (18.11 in.) + width of tire
- **If a cardboard box smaller than the specified size is used, the cardboard box will be broken by the shock of the airbag deployment.**

Covering method using tires:

Place at least 3 tires with no disc wheels on top of the tire and disc wheel to which the steering pad assembly is tied.

Tire size:

Must exceed the following dimensions

Width: 185 mm (7.28 in.)

Inner diameter: 360 mm (14.17 in.)

CAUTION:

Do not use tires with disc wheels.

NOTICE:

The tires may be marked by the airbag deployment, so use redundant tires.

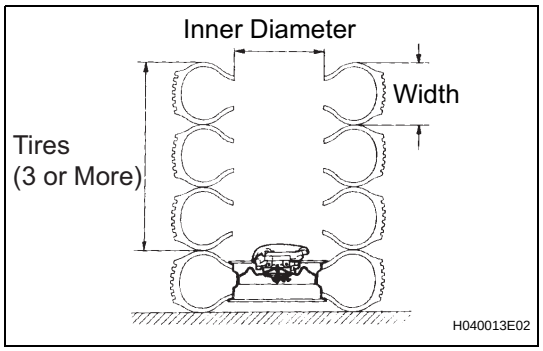

(f) Deploy the airbag.

(1) Connect the red clip of the SST to the battery positive (+) terminal and the black clip of the SST to the battery negative (-) terminal.

(2) Check that no one is within 10 m (33 ft) area around the disc wheel which the steering pad is tied to.

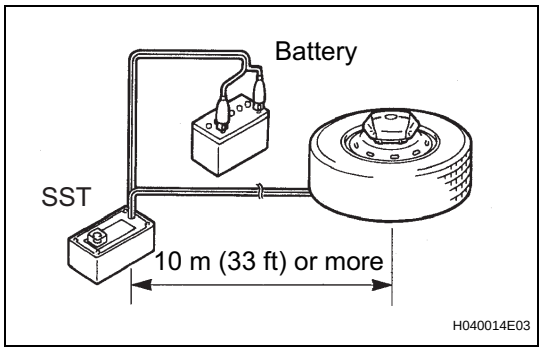

RS

(3) Press the activation switch of the SST and deploy the airbag.
HINT:
The airbag deploys as the LED of the SST activation switch comes on.

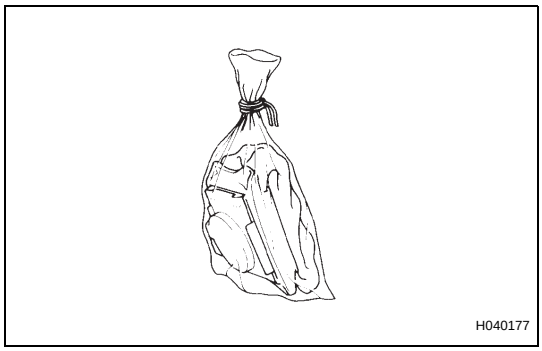

(g) Dispose of the steering pad.
CAUTION:
- **The steering pad is very hot when the airbag is deployed, so do not touch it for at least 30 minutes after deployment.**
- **Use gloves and safety glasses when handling a steering pad with a deployed airbag.**
- **Do not apply water, etc. to a steering pad with the deployed airbag.**
- **Always wash your hands with water after completing the operation.**

(1) Remove the steering pad from the disc wheel.
(2) Place the steering pad in a plastic bag, tie the end tightly and dispose of it in the same way as other general parts disposal.

INSTALLATION

1. PLACE FRONT WHEELS FACING STRAIGHT AHEAD

(a) Check that the front wheels are facing straight ahead.

2. INSTALL SPIRAL CABLE SUB-ASSEMBLY

(a) Set the turn signal switch in neutral position.
NOTICE:
Make sure of the neutral position since the pin of the turn signal switch may be snapped.

(b) Install the spiral cable sub-assembly with the 4 screws.
NOTICE:
When replacing the spiral cable sub-assembly with a new one, remove the lock pin before installing the handle.

(c) Connect the airbag connector and connector.

(d) Install the steering column cover with the 3 screws.

3. CENTER SPIRAL CABLE

(a) Check that the ignition switch is OFF.

(b) Check that the cable is disconnected from the negative battery terminal.
NOTICE:
Do not start the operation for 90 seconds after disconnecting the cable from the negative battery terminal.

(c) Turn the cable counterclockwise by hand until it becomes harder to turn.

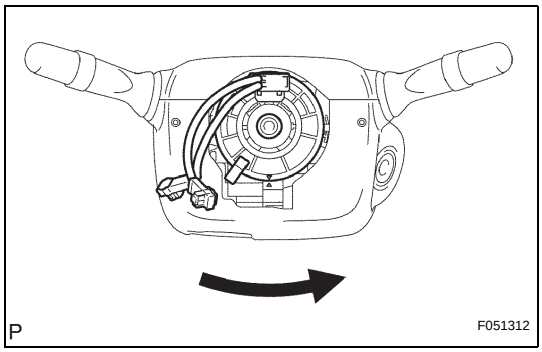

RS

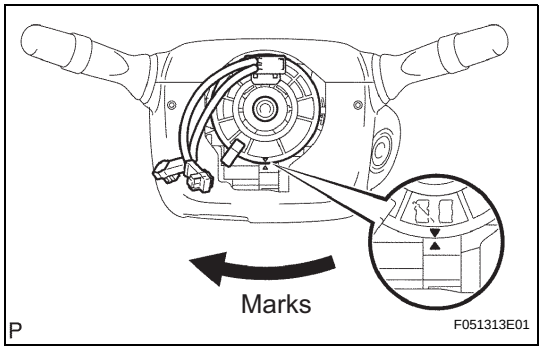

(d) Turn the cable clockwise about 2.5 turns to align the marks.
HINT:
The cable will rotate about 2.5 turns both left and right from the center.

4. INSTALL UPPER STEERING COLUMN COVER

(a) Engage the claw, then install the upper steering column cover.

5. INSTALL LOWER STEERING COLUMN COVER

(a) Engage the 2 claws.

(b) Install the lower steering column cover with the 2 screws.

6. INSTALL STEERING WHEEL ASSEMBLY (See page SR-18)

7. **INSTALL STEERING PAD (See page RS-558)**
8. **INSTALL NO.3 LOWER STEERING WHEEL COVER (See page SR-18)**
9. **INSTALL NO.2 LOWER STEERING WHEEL COVER (See page SR-18)**
10. **CONNECT CABLE TO NEGATIVE BATTERY TERMINAL**
    Torque: 3.9 N*m (40 kgf*cm, 35 in.*lbf)
11. **INSPECT HORN BUTTON ASSEMBLY**
12. **INSPECT SRS WARNING LIGHT**
    (See page RS-28)

ON-VEHICLE INSPECTION

1. **INSPECT FRONT PASSENGER AIRBAG ASSEMBLY (for Vehicle not Involved in Collision)**
   (a) Perform a diagnostic system check (See page RS-37)
   (b) With the front passenger airbag assembly installed on the vehicle, perform a visual check including the following: Cuts, minute cracks or marked discoloration on the instrument panel around the front passenger airbag assembly.

2. **INSPECT FRONT PASSENGER AIRBAG ASSEMBLY (for Vehicle Involved in Collision and Airbag not Deployed)**
   (a) Perform a diagnostic system check (See page RS-37)
   (b) With the front passenger airbag assembly removed from the vehicle, perform a visual check including the following:
   - Cuts, minute cracks or marked discoloration on the front passenger airbag assembly.
   - Cracks or other damage to the wire harness or connector.
   - Deformation or cracks on the instrument panel or instrument panel reinforcement.

   CAUTION:
   For removal and installation procedures of the front passenger airbag assembly, see Replacement on see page RS-574, and be sure to follow the correct procedure.
   HINT:
   If the instrument panel or instrument panel reinforcement is deformed or cracked, never repair it. Always replace it with a new one.

REMOVAL

1. **PRECAUTION**
2. **DISCONNECT CABLE FROM NEGATIVE BATTERY TERMINAL**
   Wait for at least 90 seconds after disconnecting the cable to prevent the airbag from working.
3. **REMOVE FRONT FLOOR FOOTREST (See page IR-1)**
4. **REMOVE FRONT DOOR SCUFF PLATE LH (for Regular Cab) (See page IR-40)**
5. **REMOVE FRONT DOOR SCUFF PLATE LH (for Access Cab) (See page IR-61)**
6. **REMOVE FRONT DOOR SCUFF PLATE LH (for Double Cab) (See page IR-12)**
7. **REMOVE FRONT DOOR SCUFF PLATE RH (for Regular Cab) (See page IR-41)**
8. **REMOVE FRONT DOOR SCUFF PLATE RH (for Access Cab) (See page IR-61)**
9. **REMOVE FRONT DOOR SCUFF PLATE RH (for Double Cab) (See page IR-12)**
10. **REMOVE COWL SIDE TRIM BOARD LH (for Regular Cab) (See page IR-40)**
11. **REMOVE COWL SIDE TRIM BOARD LH (for Access Cab) (See page IR-61)**
12. **REMOVE COWL SIDE TRIM BOARD LH (for Double Cab) (See page IR-12)**
13. **REMOVE COWL SIDE TRIM BOARD RH (for Regular Cab) (See page IR-40)**
14. **REMOVE COWL SIDE TRIM BOARD RH (for Access Cab) (See page IR-61)**
15. **REMOVE COWL SIDE TRIM BOARD RH (for Double Cab) (See page IR-12)**
16. **SEPARATE FRONT DOOR OPENING TRIM WEATHERSTRIP LH (See page IP-8)**
17. **SEPARATE FRONT DOOR OPENING TRIM WEATHERSTRIP RH (See page IP-8)**
18. **REMOVE FRONT PILLAR GARNISH LH (for Regular Cab) (See page IR-41)**
19. **REMOVE FRONT PILLAR GARNISH LH (for Access Cab) (See page IR-62)**
20. **REMOVE FRONT PILLAR GARNISH LH (for Double Cab) (See page IR-13)**
21. **REMOVE FRONT PILLAR GARNISH RH (for Regular Cab) (See page IR-41)**

22. REMOVE FRONT PILLAR GARNISH RH (for Access Cab) (See page IR-63)
23. REMOVE FRONT PILLAR GARNISH RH (for Double Cab) (See page IR-14)
24. REMOVE INSTRUMENT PANEL UNDER TRAY (for Pedal Type Parking Brake) (See page IP-9)
25. REMOVE INSTRUMENT PANEL HOLE COVER (for Lever Type Parking Brake) (See page IP-9)
26. REMOVE CONSOLE UPPER REAR PANEL SUB-ASSEMBLY (for Automatic Transmission on Separate Seat Type) (See page IP-9)
27. REMOVE CONSOLE UPPER REAR PANEL SUB-ASSEMBLY (for Manual Transmission on Separate Seat Type) (See page IP-9)
28. REMOVE CONSOLE BOX ASSEMBLY REAR (for Separate Seat Type) (See page IP-10)
29. REMOVE INSTRUMENT PANEL CUP HOLDER TRAY (for Automatic Transmission on Separate Seat Type) (See page IP-10)
30. REMOVE FRONT CONSOLE BOX (for Automatic Transmission on Separate Seat Type) (See page IP-10)
31. REMOVE FRONT CONSOLE BOX (for Manual Transmission on Separate Seat Type) (See page IP-11)
32. REMOVE FRONT CONSOLE BOX (for Automatic Transmission on Bench Seat Type) (See page IP-11)
33. REMOVE FRONT CONSOLE BOX (for Manual Transmission on Bench Seat Type) (See page IP-11)
34. REMOVE AIR CONDITIONING CONTROL ASSEMBLY (See page IP-12)
35. REMOVE RADIO RECEIVER ASSEMBLY WITH BRACKET (See page AV-69)
36. SEPARATE HOOD LOCK CONTROL LEVER SUB-ASSEMBLY (See page ED-3)
37. REMOVE NO. 1 LOWER INSTRUMENT PANEL FINISH PANEL (See page IP-12)
38. REMOVE INSTRUMENT CLUSTER FINISH PANEL SUB-ASSEMBLY (See page IP-12)
39. REMOVE COMBINATION METER ASSEMBLY (See page IP-13)
40. REMOVE CENTER INSTRUMENT CLUSTER FINISH PANEL SUB-ASSEMBLY (See page IP-13)
41. REMOVE GLOVE COMPARTMENT DOOR ASSEMBLY (See page IP-13)

42. **REMOVE LOWER INSTRUMENT PANEL FINISH PANEL SUB-ASSEMBLY RH (See page IP-14)**

43. **REMOVE LOWER INSTRUMENT PANEL LH (See page IP-14)**

44. **REMOVE LOWER INSTRUMENT PANEL COVER SUB-ASSEMBLY (See page IP-14)**

45. **REMOVE INSTRUMENT SIDE PANEL RH (See page IP-14)**

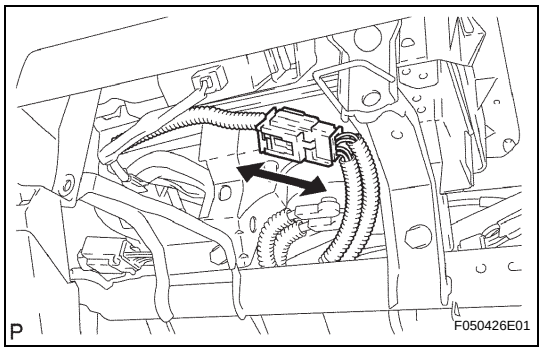

46. **DISCONNECT PASSENGER AIRBAG CONNECTOR**
    (a) Disconnect the airbag connector.

47. **REMOVE INSTRUMENT PANEL SUB-ASSEMBLY WITH PASSENGER AIRBAG ASSEMBLY (See page IP-14)**

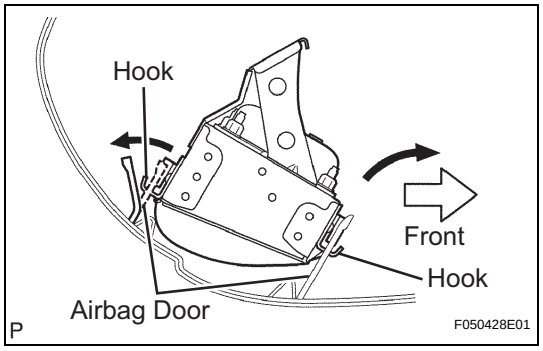

48. **REMOVE FRONT PASSENGER AIRBAG ASSEMBLY**
    (a) Disengage the 10 hooks and remove the front passenger airbag.
    (b) Release the front side wall of the airbag door from the other hook and remove the front passenger airbag assembly.

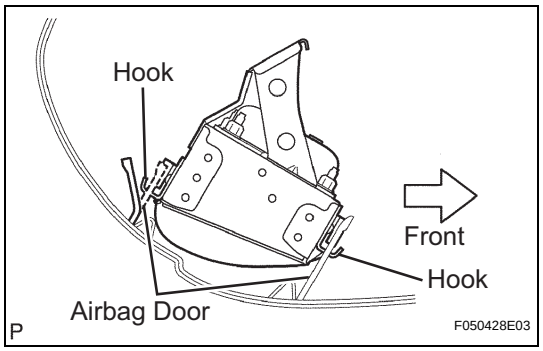

INSTALLATION

1. **INSTALL FRONT PASSENGER AIRBAG ASSEMBLY**
    (a) Engage the 10 hooks so that the connector side faces the outside of the vehicle, and install the front passenger airbag assembly.

2. **INSTALL INSTRUMENT PANEL SUB-ASSEMBLY WITH PASSENGER AIRBAG ASSEMBLY (See page IP-18)**

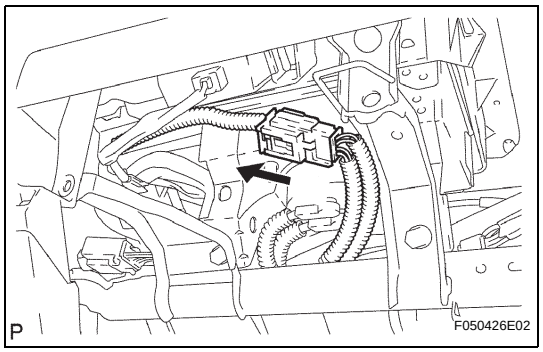

3. **CONNECT PASSENGER AIRBAG CONNECTOR**
    (a) Connect the passenger airbag connector and clamp.

4. **INSTALL INSTRUMENT SIDE PANEL RH (See page IP-20)**

5. **INSTALL LOWER INSTRUMENT COVER SUB-ASSEMBLY (See page IP-20)**

6. **INSTALL LOWER INSTRUMENT PANEL LH (See page IP-20)**

RS

7. INSTALL LOWER INSTRUMENT PANEL FINISH PANEL SUB-ASSEMBLY RH (See page IP-20)
8. INSTALL GLOVE COMPARTMENT DOOR ASSEMBLY (See page IP-20)
9. INSTALL CENTER INSTRUMENT CLUSTER FINISH PANEL SUB-ASSEMBLY (See page IP-21)
10. INSTALL COMBINATION METER ASSEMBLY (See page IP-21)
11. INSTALL INSTRUMENT CLUSTER FINISH PANEL SUB-ASSEMBLY (See page IP-21)
12. INSTALL NO. 1 LOWER INSTRUMENT PANEL FINISH PANEL (See page IP-22)
13. CONNECT HOOD LOCK CONTROL LEVER SUB-ASSEMBLY (See page ED-8)
14. INSTALL RADIO RECEIVER ASSEMBLY WITH BRACKET (See page AV-70)
15. INSTALL AIR CONDITIONING CONTROL ASSEMBLY (See page IP-22)
16. INSTALL FRONT CONSOLE BOX (for Manual Transmission on Bench Seat Type) (See page IP-22)
17. INSTALL FRONT CONSOLE BOX (for Automatic Transmission on Bench Seat Type) (See page IP-23)
18. INSTALL FRONT CONSOLE BOX (for Manual Transmission on Separate Seat Type) (See page IP-23)
19. INSTALL FRONT CONSOLE BOX (for Automatic Transmission on Separate Seat Type) (See page IP-24)
20. INSTALL INSTRUMENT PANEL CUP HOLDER TRAY (for Automatic Transmission on Separate Seat Type) (See page IP-24)
21. INSTALL REAR CONSOLE BOX ASSEMBLY (for Separate Seat Type) (See page IP-24)
22. INSTALL CONSOLE UPPER REAR PANEL SUB-ASSEMBLY (for Manual Transmission on Separate Seat Type) (See page IP-25)
23. INSTALL CONSOLE UPPER REAR PANEL SUB-ASSEMBLY (for Automatic Transmission on Separate Seat Type) (See page IP-25)
24. INSTALL INSTRUMENT PANEL HOLE COVER (for Lever Type Parking Brake) (See page IP-25)
25. INSTALL INSTRUMENT PANEL UNDER TRAY (for Pedal Type Parking Brake) (See page IP-25)
26. INSTALL FRONT PILLAR GARNISH LH (for Regular Cab) (See page IR-51)

27. **INSTALL FRONT PILLAR GARNISH LH (for Access Cab) (See page IR-74)**
28. **INSTALL FRONT PILLAR GARNISH LH (for Double Cab) (See page IR-28)**
29. **INSTALL FRONT PILLAR GARNISH RH (for Regular Cab) (See page IR-52)**
30. **INSTALL FRONT PILLAR GARNISH RH (for Access Cab) (See page IR-74)**
31. **INSTALL FRONT PILLAR GARNISH RH (for Double Cab) (See page IR-28)**
32. **INSTALL FRONT DOOR OPENING TRIM WEATHERSTRIP LH (for Regular Cab) (See page IR-52)**
33. **INSTALL FRONT DOOR OPENING TRIM WEATHERSTRIP LH (for Access Cab) (See page IR-74)**
34. **INSTALL FRONT DOOR OPENING TRIM WEATHERSTRIP LH (for Double Cab) (See page IR-29)**
35. **INSTALL FRONT DOOR OPENING TRIM WEATHERSTRIP RH (for Regular Cab) (See page IR-52)**
36. **INSTALL FRONT DOOR OPENING TRIM WEATHERSTRIP RH (for Access Cab) (See page IR-74)**
37. **INSTALL FRONT DOOR OPENING TRIM WEATHERSTRIP RH (for Double Cab) (See page IR-29)**
38. **INSTALL COWL SIDE TRIM BOARD LH (for Regular Cab) (See page IR-52)**
39. **INSTALL COWL SIDE TRIM BOARD LH (for Access Cab) (See page IR-75)**
40. **INSTALL COWL SIDE TRIM BOARD LH (for Double Cab) (See page IR-29)**
41. **INSTALL COWL SIDE TRIM BOARD RH (for Regular Cab) (See page IR-52)**
42. **INSTALL COWL SIDE TRIM BOARD RH (for Access Cab) (See page IR-75)**
43. **INSTALL COWL SIDE TRIM BOARD RH (for Double Cab) (See page IR-29)**
44. **INSTALL FRONT DOOR SCUFF PLATE LH (for Regular Cab) (See page IR-52)**
45. **INSTALL FRONT DOOR SCUFF PLATE LH (for Access Cab) (See page IR-75)**
46. **INSTALL FRONT DOOR SCUFF PLATE LH (for Double Cab) (See page IR-29)**

47. **INSTALL FRONT DOOR SCUFF PLATE RH (for Regular Cab) (See page IR-52)**
48. **INSTALL FRONT DOOR SCUFF PLATE RH (for Access Cab) (See page IR-75)**
49. **INSTALL FRONT DOOR SCUFF PLATE RH (for Double Cab) (See page IR-29)**
50. **INSTALL FRONT FLOOR FOOTREST (See page IR-1)**
51. **CONNECT CABLE TO NEGATIVE BATTERY TERMINAL**
    Torque: 3.9 N*m (40 kgf*cm, 35 in.*lbf)
52. **INSPECT SRS WARNING LIGHT**
    (See page RS-28)

DISPOSAL

HINT:
When scrapping a vehicle equipped with the SRS or disposing of a front passenger airbag assembly, always deploy the airbag first in accordance with the procedures described below. If any abnormality occurs with the airbag deployment, contact the SERVICE DEPT. of TOYOTA MOTOR SALES, U.S.A., INC.

CAUTION:

- **Never dispose of a front passenger airbag assembly which has an undeployed airbag.**
- **The airbag produces a loud exploding sound when it deploys, so perform the operation outdoors, where it will not create a nuisance to nearby residents.**
- **When deploying the airbag, always use the specified SST (SRS Airbag Deployment Tool). Perform the operation in a place away from electrical noise.**
- **When deploying an airbag, perform the operation at least 10 m (33 ft) away from the front passenger airbag assembly.**
- **The front passenger airbag assembly becomes extremely hot when the airbag is deployed, so do not touch it for at least 30 minutes after deployment.**
- **Use gloves and safety glasses when handling a front passenger airbag assembly with a deployed airbag.**
- **Do not apply water, etc. to a front passenger airbag assembly with the deployed airbag.**
- **Always wash your hands with water after completing the operation.**

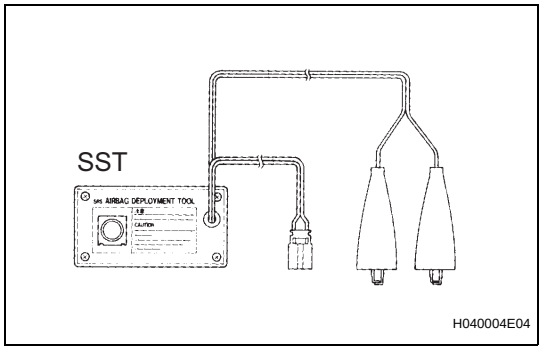

1. DISPOSE OF FRONT PASSENGER AIRBAG ASSEMBLY (WHEN SCRAPPING VEHICLE DEPLOYMENT METHOD)

HINT:
Have a battery as the power source to deploy the airbag.

(a) Check functioning of SST (see step 1-(a) on page RS-559).

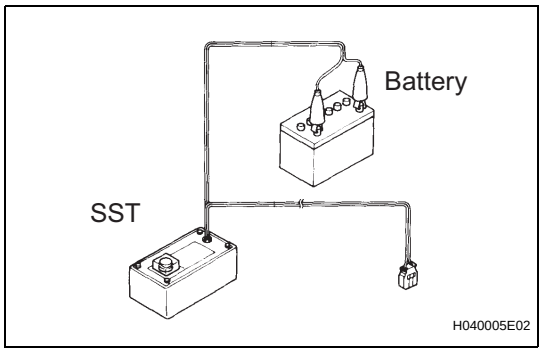

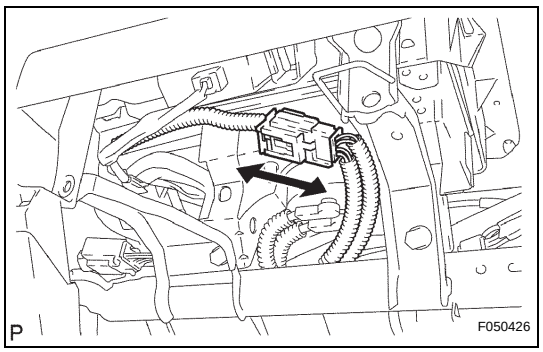

(b) Disconnect the airbag connectors.
  (1) Remove the instrument panel under cover sub-assembly No.2.
  (2) Remove the glove compartment door assembly.
  NOTICE:
  When handling the airbag connector, take care not to damage the airbag wire harness.
  (3) Disconnect the airbag connectors.

RS

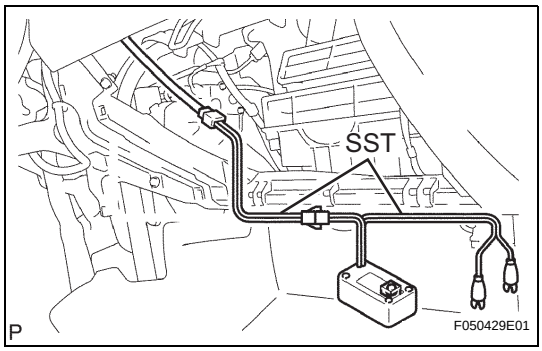

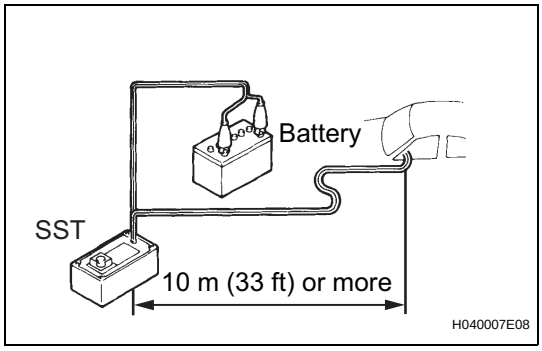

(c) Install the SST.

(1) Connect the connector of SST to the front passenger airbag assembly connector.
SST 09082-00700, 09082-00780
NOTICE:
To avoid damaging the SST connector and wire harness, do not lock the secondary lock of the twin lock.

(2) Move SST to at least 10 m (33 ft) away from the front of the vehicle.

(3) Close all doors and windows of the vehicle.
NOTICE:
Take care not to damage the SST wire harness.

(4) Connect the red clip of SST to the battery positive (+) terminal and the black clip of SST to the negative (-) terminal.

(d) Deploy the airbag.

(1) Check that no one is inside the vehicle, nor within a 10 m (33 ft) radius of the vehicle.

(2) Press the activation switch of SST and deploy the airbag.
HINT:
The airbag deploys as the LED of the SST activation switch comes on.

(e) Dispose of the front passenger airbag assembly.
CAUTION:
- **The front passenger airbag assembly becomes extremely hot when the airbag is deployed, so do not touch it for at least 30 minutes after deployment.**
- **Use gloves and safety glasses when handling a front passenger airbag assembly with a deployed airbag.**
- **When moving a vehicle, which has a front passenger airbag assembly with a deployed airbag for scrapping, use gloves and safety glasses.**
- **Do not apply water, etc. to a front passenger airbag assembly with the deployed airbag.**
- **Always wash your hands with water after completing the operation.**

HINT:
When scrapping a vehicle, deploy the airbag and scrap the vehicle with the front passenger airbag assembly still installed.

2. DISPOSE OF FRONT PASSENGER AIRBAG ASSEMBLY (WHEN DISPOSING OF AIRBAG ASSEMBLY DEPLOYMENT METHOD)

NOTICE:

- **When disposing of the front passenger airbag assembly only, never use the customers vehicle to deploy the airbag.**
- **Be sure to follow the procedures given below when deploying the airbag.**

HINT:

Prepare a battery as the power source to deploy the airbag.

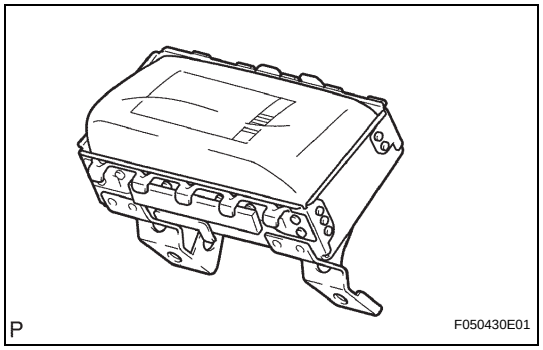

(a) Remove the front passenger airbag assembly (see page RS-574).

CAUTION:

- **When removing the front passenger airbag assembly, work must be started 90 seconds after the ignition switch is turned to the LOCK position and the negative (-) terminal cable is disconnected from the battery.**
- **When placing the front passenger airbag assembly, keep the upper surface of the airbag deployment side facing upward.**

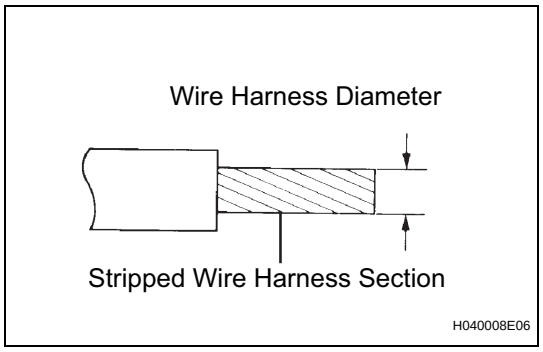

(b) Using a service-purpose wire harness for the vehicle, tie the front passenger airbag assembly to the tire.

Wire harness:

Stripped wire harness section 1.25 mm^2 or more (0.0019 $in.^2$ or more)

CAUTION:

If a wire harness which is too thin or any other object is used to tie down the front passenger airbag assembly, it may be snapped by the shock when the airbag is deployed. This is highly dangerous. Always use a wire harness for vehicle use with the wire size of at least 1.25 mm^2 (0.0019 $in.^2$).

HINT:

To calculate the square of the stripped wire harness section:

Square:

3.14 x (Diameter)^2 divided by 4

Position the front passenger airbag assembly inside the tire with the airbag deployment side facing inside.

Tire size:

Must exceed the following dimensions:
Width: 185 mm (7.28 in.)
Inner diameter: 360 mm (14.17 in.)

RS

CAUTION:

- **Make sure that the wire harness is tight. It is very dangerous if it is loose, as this could cause the front passenger airbag assembly to come free due to the shock when the airbag is deployed.**
- **Always tie down the front passenger airbag assembly with the airbag deployment side facing inside.**

NOTICE:

The tire will be marked by the airbag deployment, so use spare tires.

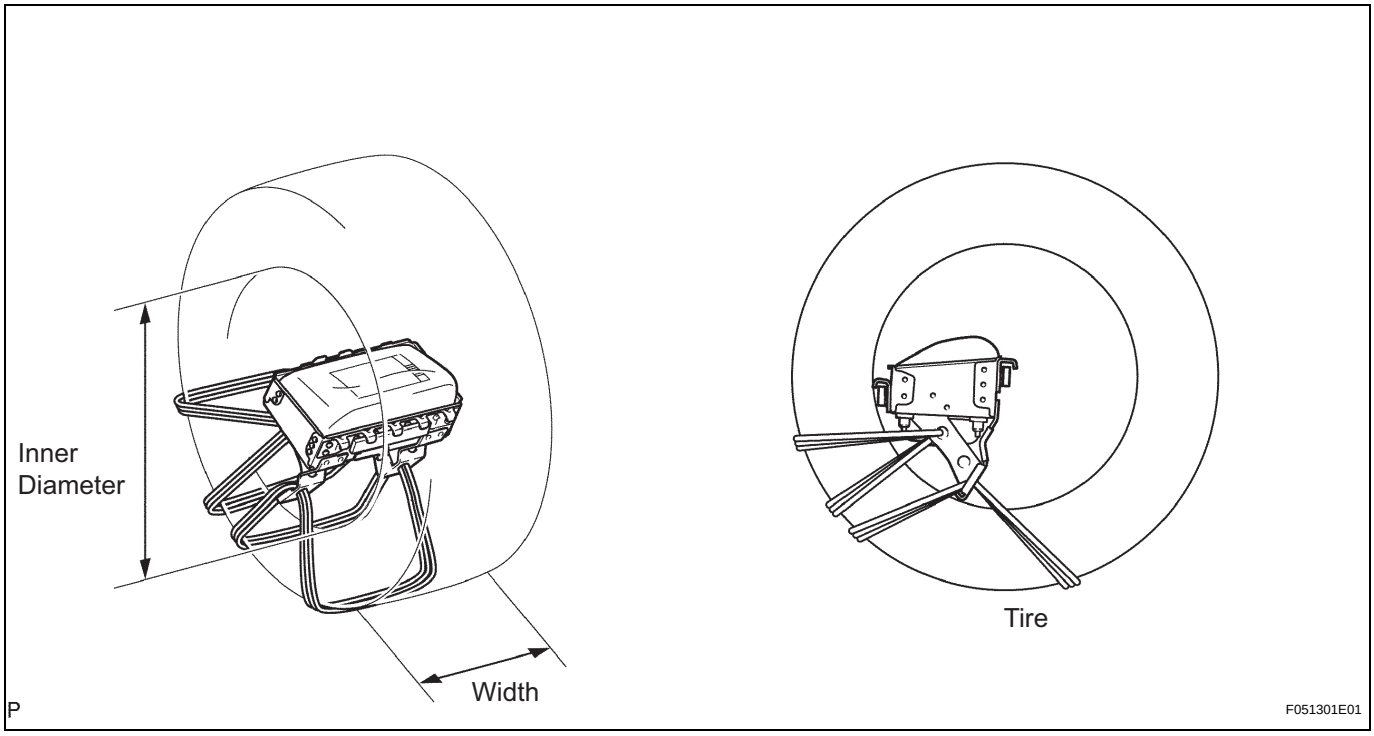

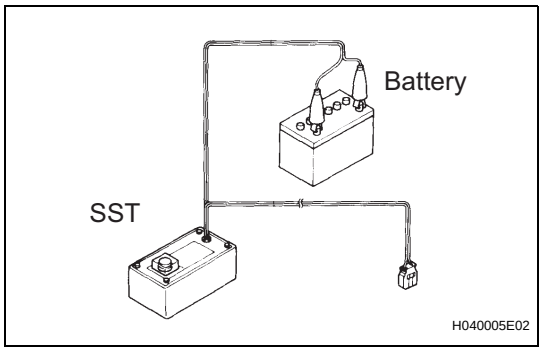

(c) Check the function of SST (see step 1-(a) on page RS-559).

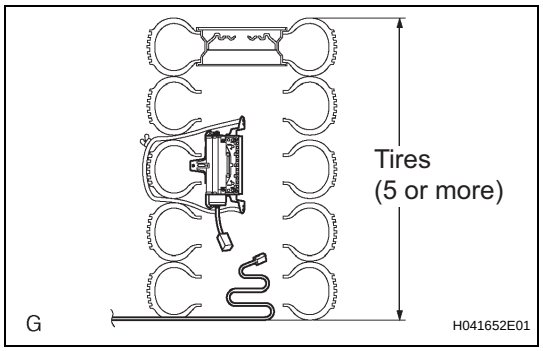

(d) Place tires.
(1) Place at least 2 tires under the tire to which the front passenger airbag assembly is tied.
(2) Place at least 2 tires over the tire to which the front passenger airbag assembly is tied. The top tire should have the wheel installed.

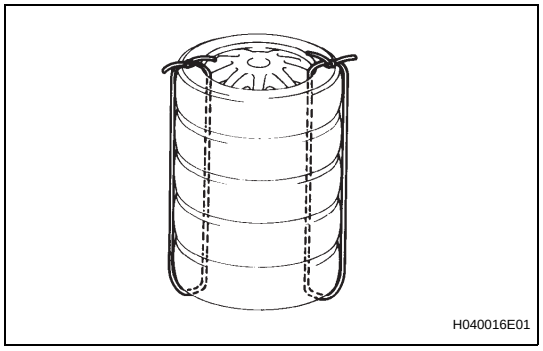

(3) Tie the tires together with 2 wire harnesses.
CAUTION:
Make sure that the wire harness is tight. It is very dangerous if it is loose, as this could cause the tires to come free due to the shock when the airbag is deployed.
HINT:
Place the SST connector and wire harness inside tires. Secure at least 1 m (3 ft) of slack for the wire harness.

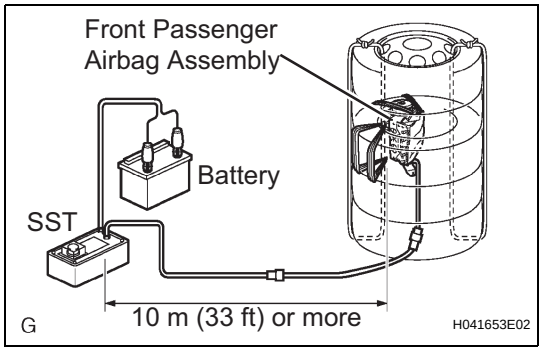

(e) Install SST.
Connect the connectors of the SST to the front passenger airbag assembly connector.
SST 09082-00700, 09082-00780
NOTICE:
To avoid damaging the SST connector and wire harness, do not lock the secondary lock of the twin lock.

(f) Deploy the airbag.
(1) Connect the red clip of SST to the battery positive (+) terminal and the black clip of SST to the battery negative (-) terminal.
(2) Check that no one is within a 10 m (33 ft) radius of the tire to which the front passenger airbag assembly is tied.
(3) Press the activation switch of SST and deploy the airbag.
HINT:
The airbag deploys as the LED of the SST activation switch comes on.

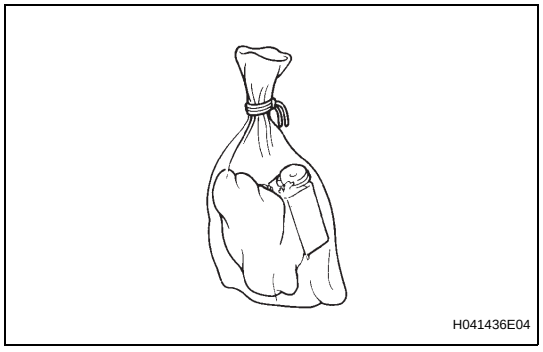

(g) Dispose of the front passenger airbag assembly.
CAUTION:
- **The front passenger airbag assembly becomes hot when the airbag is deployed, so do not touch it for at least 30 minutes after deployment.**
- **Use gloves and safety glasses when handling a front passenger airbag assembly with a deployed airbag.**
- **Do not apply water, etc. to a front passenger airbag assembly with the deployed airbag.**

RS

- **Always wash your hands with water after completing the operation.**

(1) Remove the front passenger airbag assembly from the tire.
(2) Place the front passenger airbag assembly in a plastic bag, tie the end tightly and dispose of it in the same way as other general parts.

REMOVAL

1. **PRECAUTION**

2. **DISCONNECT CABLE FROM NEGATIVE BATTERY TERMINAL**
   Wait for at least 90 seconds after disconnecting the cable to prevent the airbag from working.

3. **REMOVE ROOF HEADLINING ASSEMBLY**
   HINT:
   Double Cab (See page IR-11).

4. **REMOVE CURTAIN SHIELD AIRBAG ASSEMBLY**
   (a) Disconnect the connector from the curtain shield airbag assembly .
   NOTICE:
   When handling the airbag connector, take care not to damage the airbag wire harness.
   (b) Remove the 10 bolts, clip and the curtain shield airbag assembly in the order show in the illustration.

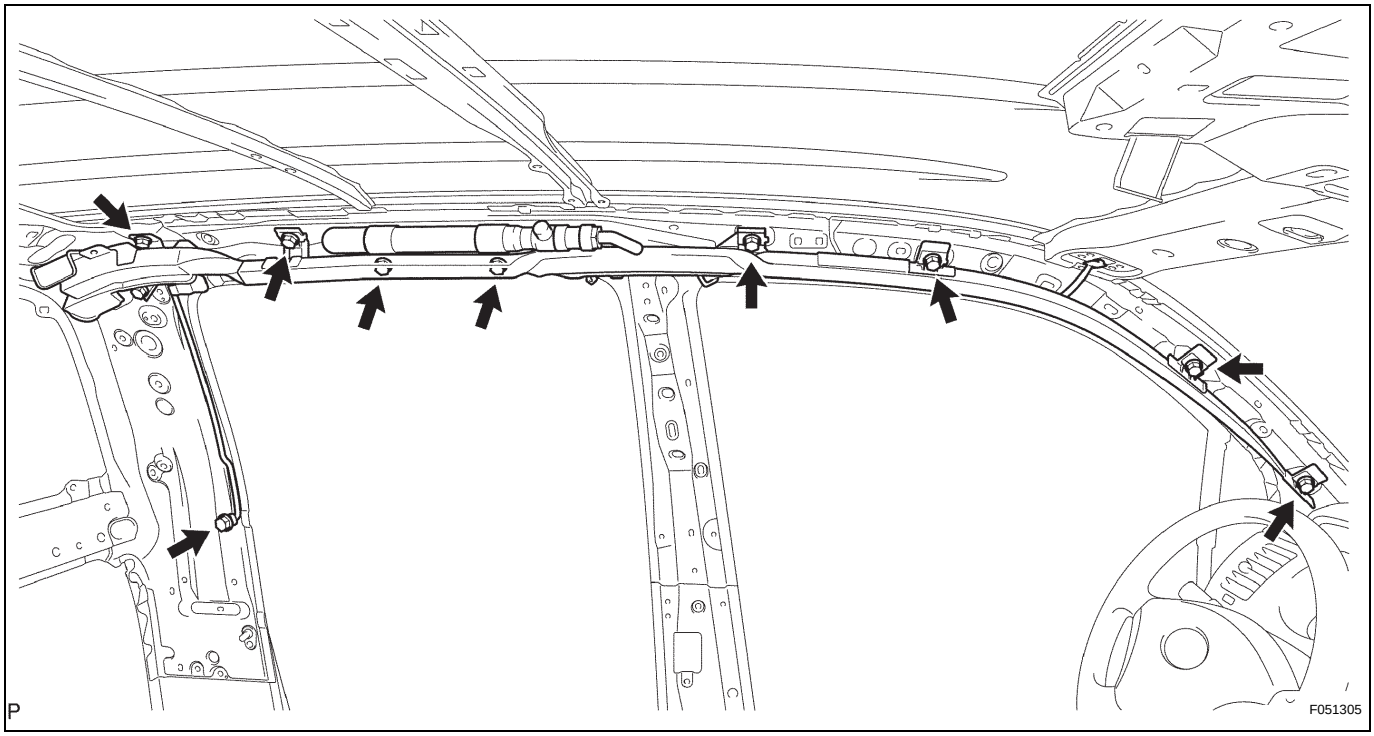

INSTALLATION

1. INSTALL CURTAIN SHIELD AIRBAG ASSEMBLY

(a) Install the curtain shield assembly with the 10 bolts and clip in the order shown in the illustration.

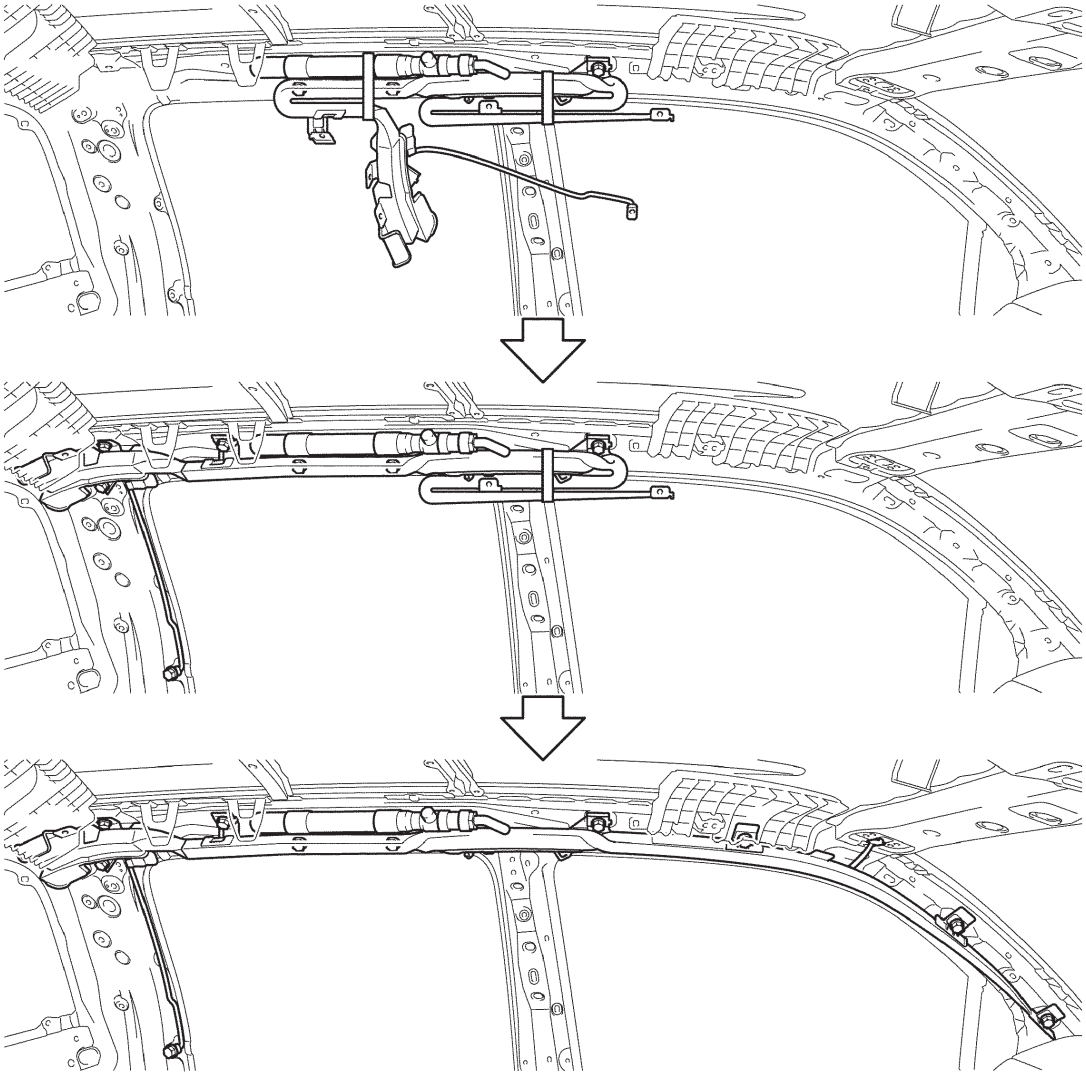

F051334E01

Torque: 9.8 N*m (100 kgf*cm, 7 ft.*lbf)

NOTICE:

Do not twist the curtain shield airbag assembly.

RS

(b) Connect the connector to the curtain shield airbag assembly.
NOTICE:
When handling the airbag connector, take care not to damage the airbag wire harness.

2. **INSTALL ROOF HEADLINING ASSEMBLY**
HINT:
Double Cab (See page IR-21)

3. **CONNECT CABLE TO NEGATIVE BATTERY TERMINAL**
Torque: 3.9 N*m (40 kgf*cm, 35 in.*lbf)

4. **INSPECT SRS WARNING LIGHT**
(See page RS-28)

DISPOSAL

HINT:

- Use the same procedures for the RH and sides.
- When scrapping a vehicle equipped with the SRS or disposing of the front seat airbag assembly, be sure to deploy the airbag first in accordance with the procedure described below. If any abnormality occurs with the airbag deployment, contact the SERVICE DEPT. of TOYOTA MOTOR SALES, U.S.A., INC.

CAUTION:

- **Never dispose of a curtain shield airbag assembly that has an undeployed airbag.**
- **The airbag produces an exploding sound when it is deployed, so perform the operation outdoors, where it will not create a nuisance to nearby residents.**
- **When deploying the airbag, always use the specified SST (SRS Airbag Deployment Tool). Perform the operation in a place away from electrical noise.**
- **When deploying the airbag, perform the operation at least 10 m (33 ft) away from the curtain shield airbag assembly.**
- **The curtain shield airbag assembly becomes extremely hot when the airbag is deployed, so do not touch it for at least 30 minutes after deployment.**
- **Use gloves and safety glasses when handling a curtain shield airbag assembly with a deployed airbag.**
- **Always wash your hands with water after completing the operation.**
- **Do not apply water, etc. to a curtain shield airbag assembly with a deployed airbag.**

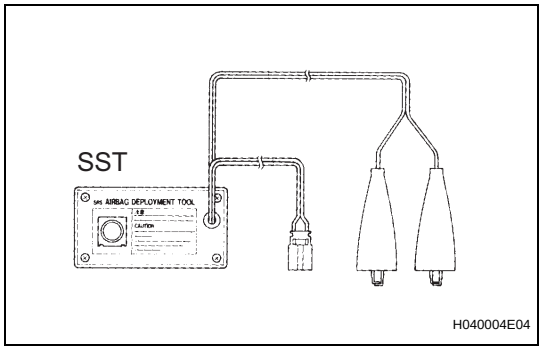

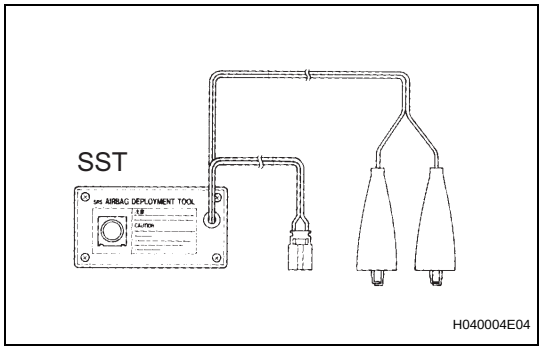

1. DISPOSE OF CURTAIN SHIELD AIRBAG ASSEMBLY (WHEN INSTALLED IN VEHICLE)

HINT:

Have a battery as the power source to deploy the airbag.

(a) Check the function of the SST (see step 1-(a) on page RS-559).

(b) Precaution (see page RS-1).

(c) Disconnect the cable from the battery negative terminal.

CAUTION:

After disconnecting cable from the battery negative terminal, wait for at least 90 seconds before starting the operation.

(d) Remove the roof headlining assembly.

HINT:

Double Cab (See page IR-11).

RS

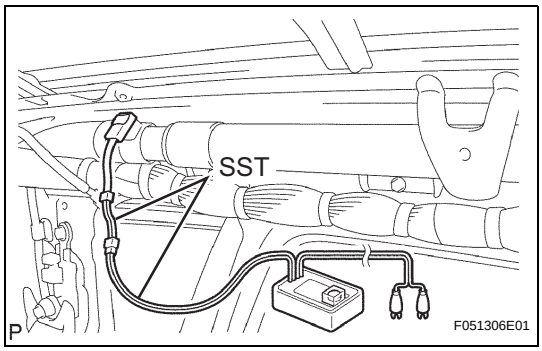

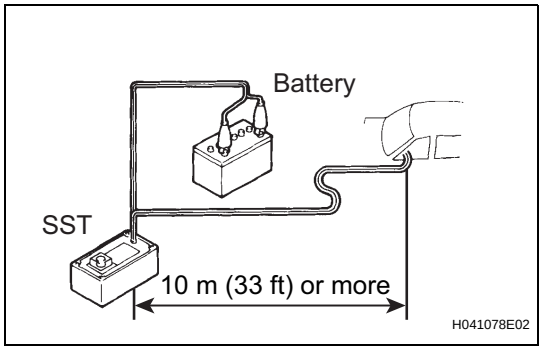

(e) Install SST.

(1) Disconnect the connector from the curtain shield airbag assembly.

NOTICE:

When handling the airbag connector, take care not to damage the airbag wire harness.

(2) After connecting SSTs below to each other, connect them to the curtain shield airbag assembly.

SST 09082-00700, 09082-00802 (09082-10801, 09082-20801)

NOTICE:

To avoid damaging the SST connector and wire harness, do not lock the secondary lock of the twin lock.

(3) Move SST at least 10 m (33 ft) away from the vehicle rear side window.

(4) Maintaining enough clearance for the SST wire harness in the rear side window, close all doors and windows of the vehicle.

NOTICE:

Take care not to damage the SST wire harness.

(5) Connect the red clip of SST to the battery positive (+) terminal and the black clip of SST to negative (-) terminal.

(f) Deploy the airbag.

(1) Check that no one is inside the vehicle or within a 10 m (33 ft) radius of the vehicle.

(2) Press the activation switch of the SST and deploy the airbag.

CAUTION:

- **The curtain shield airbag assembly becomes extremely hot when the airbag is deployed, so do not touch it for at least 30 minutes after deployment.**
- **Use gloves and safety glasses when handling a curtain shield airbag assembly with a deployed airbag.**
- **Do not apply water, etc. to a curtain shield airbag assembly with a deployed airbag.**
- **When deploying the airbag, make sure that no one is near the vehicle.**
- **Always wash your hands with water after completing the operation.**

HINT:

The airbag is deployed as the LED of the SST activation switch comes on.

RS

2. DISPOSE OF CURTAIN SHIELD AIRBAG ASSEMBLY (WHEN NOT INSTALLED IN VEHICLE)

NOTICE:

- **When disposing of the curtain shield airbag assembly, never use the customers vehicle to deploy the airbag.**
- **Be sure to follow the procedures described below when deploying the airbag.**

HINT:

Prepare a battery as the power source to deploy the airbag.

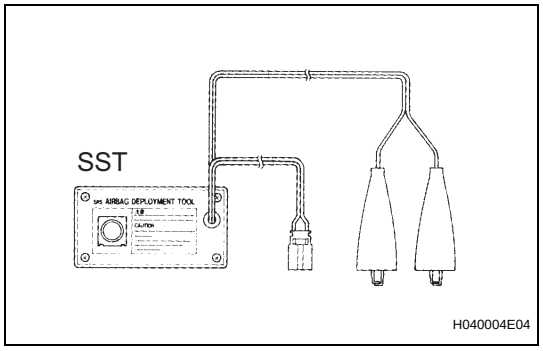

(a) Check the function of the SST (see step 1-(a) on page RS-559).

(b) Remove the curtain shield airbag assembly (see page RS-587).

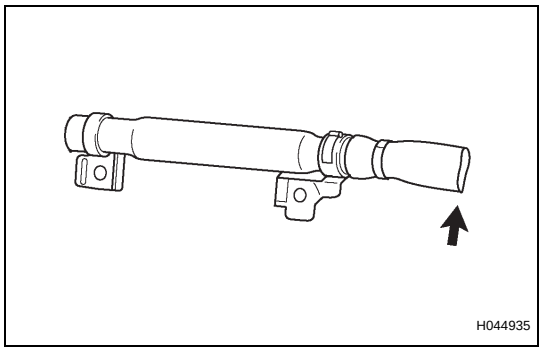

(c) Cut off the deployment section of the curtain shield airbag assembly.

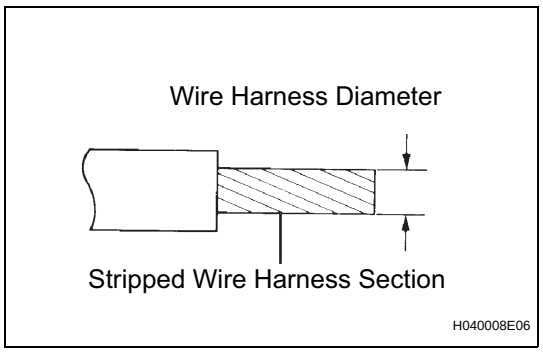

(d) Using a service-purpose wire harness for the vehicle, tie the curtain shield airbag assembly to the tire.

Wire harness:

Stripped wire harness section 1.25 mm^2 or more (0.0019 in^2. or more)

CAUTION:

If the wire harness is too thin or any other object is used to tie down the curtain shield airbag assembly, it may be snapped by the shock when the airbag is deployed. Always use a wire harness for vehicle use with the wire size of at least 1.25 mm^2 (0.0019 $in.^2$).

RS

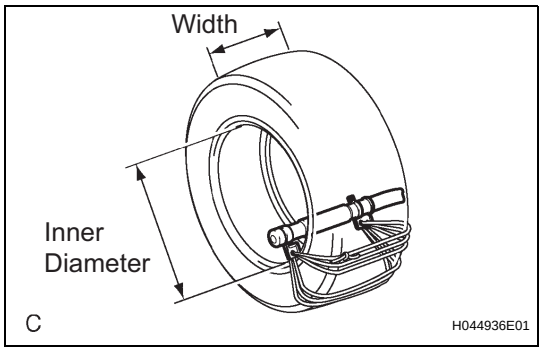

HINT:
To calculate the area of the stripped wire harness section:
Area:

3.14 x (Diameter)^2 divided by 4

(1) Position the curtain shield airbag assembly inside the tire as shown in the illustration.
Tire size:
Must exceed the following dimensions:
Width: 185 mm (7.28 in.)
Inner diameter: 360 mm (14.17 in.)
CAUTION:
Make sure that the wire harness is tight. If the wire harness is loose, the curtain shield airbag assembly may become loose due to the shock when the airbag is deployed.
NOTICE:
The tire will be marked by the airbag deployment, so use spare tires.

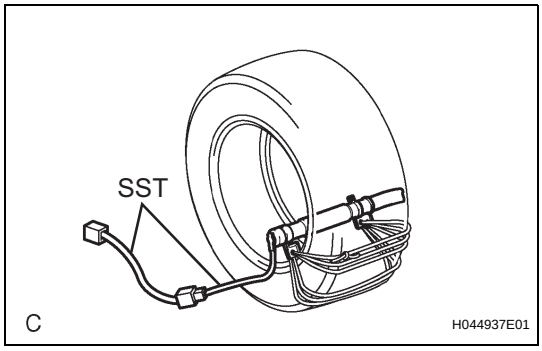

(e) Install SST.
(1) After connecting SST below to each other, connect them to the curtain shield airbag assembly.
SST 09082-00802 (09082-10801, 09082-20801)

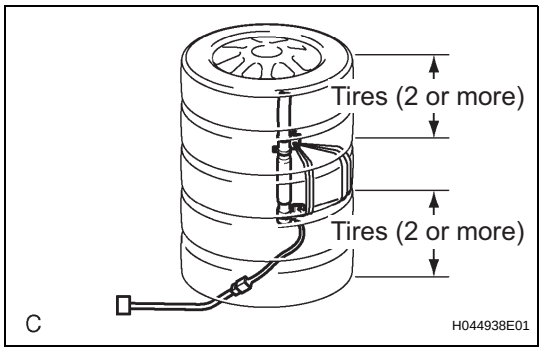

(f) Place the tires.
CAUTION:
Do not place the deployment side of the curtain shield airbag assembly facing toward the ground.
(1) Place at least 2 tires under the tire which the curtain shield airbag assembly is tied to.
(2) Place at least 2 tires over the tire which the curtain shield airbag assembly is tied to. The top tire should have the disc wheel installed.
NOTICE:
Do not place the SST connector under the tire because it could be damaged.

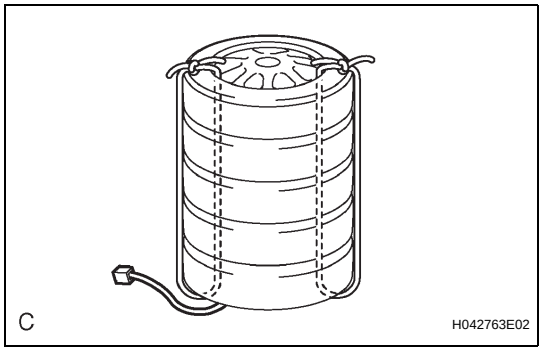

(3) Tie the tires together with 2 wire harnesses.
CAUTION:
Make sure that the wire harness is tight. A loose wire harness may cause the tires to come free due to the shock when the airbag is deployed.

RS

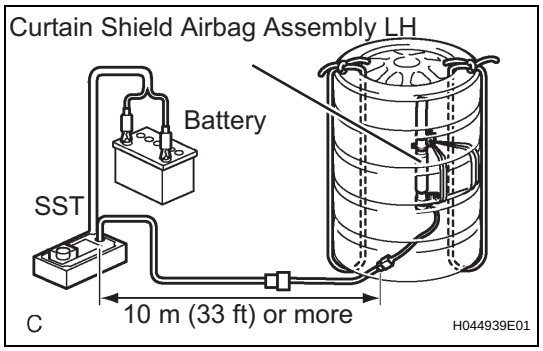

(g) Install the SST.
Connect the connector of SST.
SST 09082-00700
NOTICE:
To avoid damaging the SST connector and wire harness, do not lock the secondary lock of the twin lock. Also, secure some slack for the SST wire harness inside the tire.

(h) Deploy the airbag.
(1) Connect the red clip of SST to the battery positive (+) terminal and the black clip of SST to the battery negative (-) terminal.
(2) Check that no one is within a 10 m (33 ft) radius of the tire to which the curtain shield airbag assembly is tied.
(3) Press the activation switch of SST and deploy the airbag.
CAUTION:
When deploying the airbag, make sure that no one is near the tire.
HINT:
The airbag is deployed as the LED of the SST activation switch comes on.

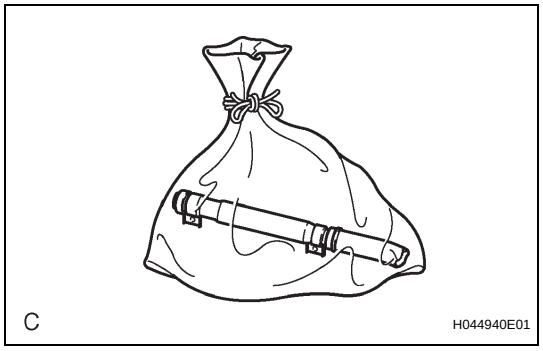

(i) Dispose of the curtain shield airbag assembly.
CAUTION:
- **The curtain shield airbag assembly becomes extremely hot when the airbag is deployed, so do not touch it for at least 30 minutes after deployment.**
- **Use gloves and safety glasses when handling a curtain shield airbag assembly with the deployed airbag.**
- **Do not apply water etc. to a curtain shield airbag assembly with the deployed airbag.**
- **Always wash your hands with water after completing the operation.**

(1) Remove the curtain shield airbag assembly from the tire.
(2) Place the curtain shield airbag assembly in a plastic bag, tie the end tightly and dispose of it in the same way as other general parts.

REMOVAL

1. **PRECAUTION**
2. **DISCONNECT CABLE FROM NEGATIVE BATTERY TERMINAL**
   Wait for at least 90 seconds after disconnecting the cable to prevent the airbag from working.
3. **REMOVE CONSOLE UPPER REAR PANEL SUB-ASSEMBLY (for Automatic Transmission on Separate Seat Type) (See page IP-9)**
4. **REMOVE CONSOLE UPPER REAR PANEL SUB-ASSEMBLY (for Manual Transmission on Separate Seat Type) (See page IP-9)**
5. **REMOVE REAR CONSOLE BOX ASSEMBLY (for Separate Seat Type) (See page IP-10)**
6. **REMOVE INSTRUMENT PANEL CUP HOLDER TRAY (for Automatic Transmission on Separate Seat Type) (See page IP-10)**
7. **REMOVE FRONT CONSOLE BOX (for Automatic Transmission on Separate Seat Type) (See page IP-10)**
8. **REMOVE FRONT CONSOLE BOX (for Manual Transmission on Separate Seat Type) (See page IP-11)**
9. **REMOVE FRONT CONSOLE BOX (for Automatic Transmission on Bench Seat Type) (See page IP-11)**
10. **REMOVE FRONT CONSOLE BOX (for Manual Transmission on Bench Seat Type) (See page IP-11)**
11. **REMOVE CENTER AIRBAG SENSOR ASSEMBLY**
    (a) Disconnect the holder (with connectors) from the center airbag sensor assembly.
    (b) Remove the 3 bolts and the center airbag sensor assembly.

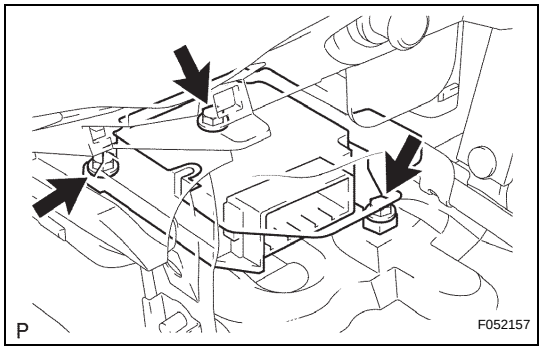

RS

INSTALLATION

1. **INSTALL CENTER AIRBAG SENSOR ASSEMBLY**
   (a) Check that the ignition switch is turned to OFF.
   (b) Check that the cable is disconnected from the battery negative terminal.
   CAUTION:
   After removing the terminal, wait for at least 90 seconds before starting the operation.
   (c) Provisionally install the air bag sensor assembly center with the 3 bolts.
   NOTICE:
   - **If the center airbag sensor assembly has been dropped, or there are any cracks, dents or other defects in the case, bracket or connector, replace it with a new one.**
   - **When installing the center airbag sensor assembly, make sure that the SRS wiring dose not interfere with any other parts and that it is not pinched between other parts.**

   (d) Tighten the 3 bolts to the specified torque.
   Torque: 17.5 N*m (179 kgf*cm, 13 ft.*lbf)
   (e) Check that there is no slack in the installation parts of the center airbag sensor assembly.
   (f) Connect the holder (with connectors) to the center airbag sensor assembly.
   (g) Check that the waterproof sheet is properly set.
2. **INSTALL FRONT CONSOLE BOX (for Manual Transmission on Bench Seat Type) (See page IP-22)**
3. **INSTALL FRONT CONSOLE BOX (for Automatic Transmission on Bench Seat Type) (See page IP-23)**
4. **INSTALL FRONT CONSOLE BOX (for Manual Transmission on Separate Seat Type) (See page IP-23)**
5. **INSTALL FRONT CONSOLE BOX (for Automatic Transmission on Separate Seat Type) (See page IP-24)**
6. **INSTALL INSTRUMENT PANEL CUP HOLDER TRAY (for Automatic Transmission on Separate Seat Type) (See page IP-24)**
7. **INSTALL REAR CONSOLE BOX ASSEMBLY (for Separate Seat Type) (See page IP-24)**
8. **INSTALL CONSOLE UPPER REAR PANEL SUB-ASSEMBLY (for Manual Transmission on Separate Seat Type) (See page IP-25)**
9. **INSTALL CONSOLE UPPER REAR PANEL SUB-ASSEMBLY (for Automatic Transmission on Separate Seat Type) (See page IP-25)**
10. **CONNECT CABLE TO NEGATIVE BATTERY TERMINAL**
    Torque: 3.9 N*m (40 kgf*cm, 35 in.*lbf)

11. INSPECT SRS WARNING LIGHT
(See page RS-28)

ECU Power Source Circuit

DESCRIPTION

This circuit provides power to operate the transponder key ECU assembly.

WIRING DIAGRAM

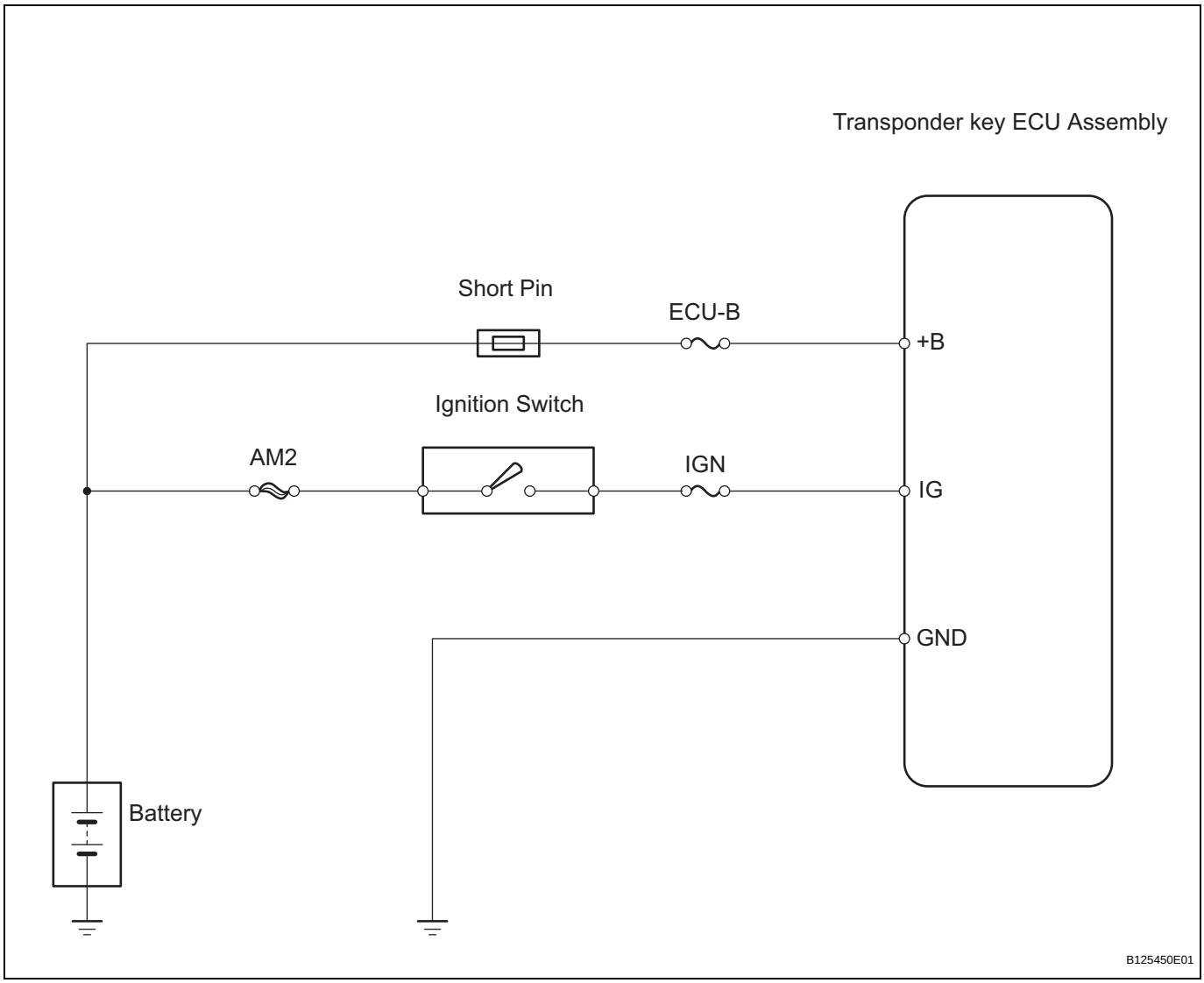

1	INSPECT FUSES (ECU-B AND IGN)

(a) Remove the ECU-B fuse from the engine room R/B and J/B.
(b) Remove the IGN fuse from the driver side J/B.
(c) Measure the resistance of the fuse.
Standard resistance:
Below 1Ω
(d) Reinstall fuses.

NG	REPLACE FUSE

EI

OK

2 INSPECT IGNITION SWITCH ASSEMBLY

Component Side:

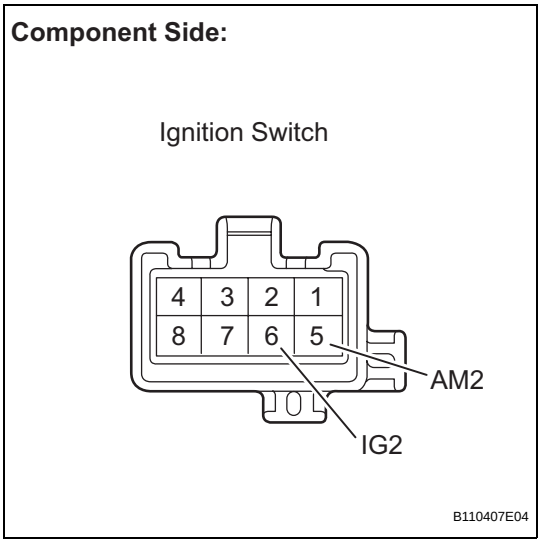

(a) Remove the ignition switch.
(b) Measure the resistance of the switch.

Standard resistance

Tester Connection	Switch Condition	Specified Condition
5 (AM2) - 6 (IG2)	LOCK, ACC	10 kΩ or higher
	ON, START	Below 1 Ω

NG → REPLACE IGNITION SWITCH ASSEMBLY

OK

3 CHECK HARNESS AND CONNECTOR (TRANSPONDER KEY ECU ASSEMBLY - BATTERY AND BODY GROUND)

Wire Harness Side:

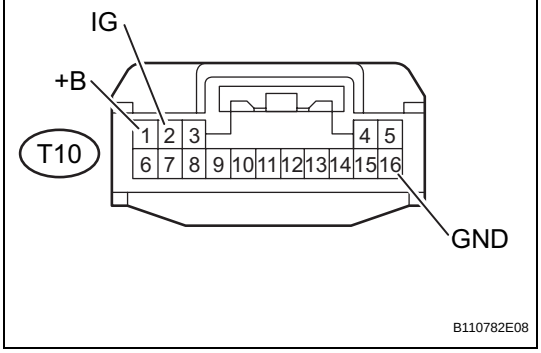

(a) Disconnect the T10 ECU connector.
(b) Measure the resistance and voltage of the wire harness side connector.

Standard resistance

Tester Connection	Condition	Specified Condition
T10-16 (GND) - Body ground	Always	Below 1 Ω

Standard voltage

Tester Connection	Condition	Specified Condition
T10-1 (+B) - Body ground	Always	10 to 14 V
T10-2 (IG) - Body ground	Ignition switch OFF	Below 1 V
	Ignition switch ON	10 to 14 V

(c) Reconnect the ECU connector.

NG → REPAIR OR REPLACE WIRE HARNESS AND CONNECTOR

OK

REPLACE TRANSPONDER KEY ECU ASSEMBLY

EI

SFI SYSTEM

PRECAUTION

1. INITIALIZATION

NOTICE:

- **Perform the RESET MEMORY (AT initialization) when replacing the automatic transmission assembly, engine assembly or ECM (See page AT-17).**
- **Perform the REGISTRATION (VIN registration) when replacing the ECM (See page ES-14).**
- **If the ECM has been replaced or RESET MEMORY (AT initialization) has been performed, set up the function of the ATF (Automatic Transmission Fluid) temperature warning light (See page AT-17).**

HINT:

Initialization can not be completed by only removing the battery.

2. FOR USING INTELLIGENT TESTER

CAUTION:

Observe the following items for safety reasons:

- Read its instruction books before using the tester.
- Prevent the tester cable from being caught on the pedals, shift lever and steering wheel when driving with the tester connected to the vehicle.
- When driving the vehicle for testing purposes using the tester, two persons are required. One is for driving the vehicle, and the other operates the tester.

DEFINITION OF TERMS

Terms	Definitions
Monitor Description	Description of what ECM monitors and how detects malfunctions (monitoring purpose and details)
Related DTCs	A group of diagnostic trouble codes that are output by ECM based on same malfunction detection logic.
Typical Enabling Conditions	Preconditions that allow ECM to detect malfunctions. With all preconditions satisfied, ECM sets DTC when monitored value(s) exceeds malfunction threshold(s)
Sequence of Operation	Order of monitor priority, applied if multiple sensors and components involved in single malfunction detection process. Each sensor and component monitored in turn and not monitored until previous detection operation completed.
Required Sensors/Components	Sensors and components used by ECM to detect each malfunction.
Frequency of Operation	Number of times ECM checks for each malfunction during each driving cycle. "Once per driving cycle" means ECM only performs checks for that malfunction once during single driving cycle. "Continuous" means ECM performs checks for that malfunction whenever enabling conditions met.
Duration	Minimum time for which ECM must detect continuous deviation in monitored value(s) in order to set DTC. Timing begins when Typical Enabling Conditions met.
Malfunction Thresholds	Values, beyond which, ECM determines malfunctions exist and sets DTCs.
MIL Operation	Timing of MIL illumination after defect detected. "Immediate" means ECM illuminates MIL as soon as malfunction detected. "2 driving cycles" means ECM illuminates MIL if same malfunction detected second time during next sequential driving cycle.

MASS AIR FLOW METER

ON-VEHICLE INSPECTION

NOTICE:

- **Perform the MAF meter inspection according to the procedures below.**
- **Only replace the MAF meter when both the LONG FT#1 value and MAF value in the DATA LIST (with the engine stopped) are not within the normal operating range.**

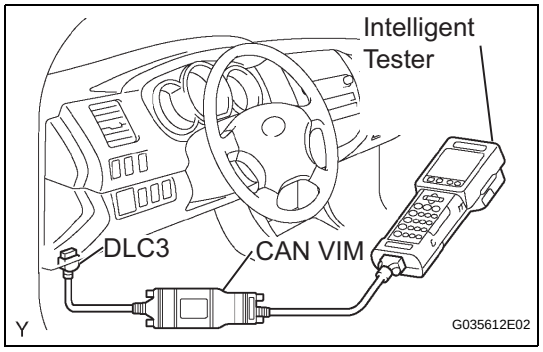

1. INSPECT MASS AIR FLOW METER

(a) Perform confirmation driving pattern.

(1) Connect the intelligent tester to the DLC3.
(2) Turn the ignition switch ON.
(3) Turn the tester ON.
(4) Clear the DTCs (see page ES-38).
(5) Start the engine and warm it up with all accessory switches OFF (until the engine coolant temperature is 75°C (167°F) or more).
(6) Drive the vehicle at 50 km/h (31 mph) or more for 3 or more *1.
(7) Let the engine idle (accelerator pedal fully released) for 2 minutes or more *2.
(8) Perform steps *1 and *2 at least 3 times.

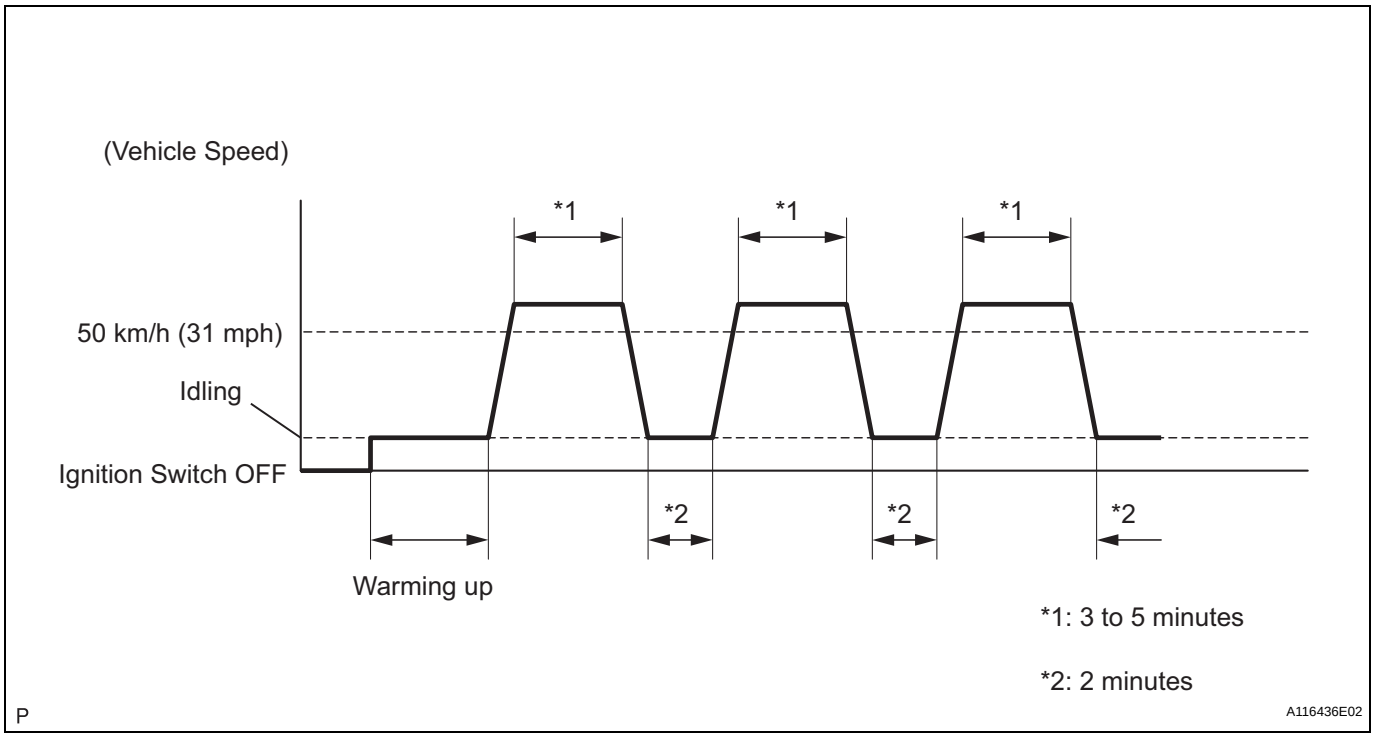

(b) Read value using intelligent tester (LONG FT#1).

(1) Select the following menu items: DIAGNOSIS / ENHANCED OBD II / DATA LIST / PRIMARY / LONG FT#1.
(2) Read the values displayed on the tester.
Standard value:
Within -15 to +15 %

If the result is not within the specified range, perform the inspection below.

(c) Read value using intelligent tester (MAF).

NOTICE:

- **Turn off the engine.**
- **Perform the inspection with the vehicle indoors and on a level surface.**
- **Perform the inspection of the MAF meter while it is installed to the air cleaner case (installed to the vehicle).**
- **During the test, do not use the exhaust air duct to perform suction on the exhaust pipe.**

(1) Turn the ignition switch to ACC.

(2) Turn the ignition switch ON (do not run the engine).

(3) Turn the tester ON.

(4) Select the following menu items: DIAGNOSIS / ENHANCED OBD II / DATA LIST / PRIMARY / MAF.

(5) Wait 30 seconds, and read the values on the intelligent tester.

Standard condition:

Less than 0.72 g/s

- If the result is not as specified, replace the MAF meter.
- If the result is within the specified range, inspect the cause of the extremely rich or lean air fuel ratio (see page ES-146).

ES

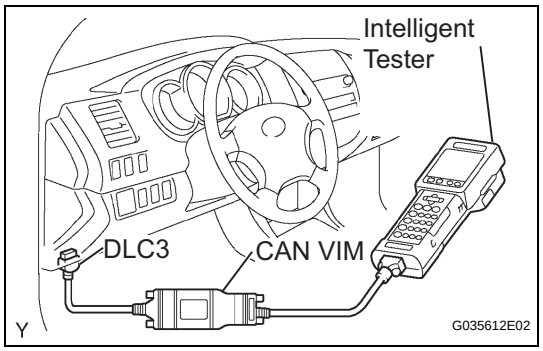

CAMSHAFT TIMING OIL CONTROL VALVE ASSEMBLY

ON-VEHICLE INSPECTION

1. INSPECT CAMSHAFT TIMING OIL CONTROL VALVE ASSEMBLY

(a) Check the operation.

(1) Turn the ignition switch to ON.

(2) Turn the intelligent tester ON.

(3) Start the engine and warm it up.

(4) Select the following menu items: DIAGNOSIS / ENHANCED OBD II / ACTIVE TEST / VVT CTRL B1.

(5) Operate the OCV using the intelligent tester, then check the engine speed.

Standard

Tester Operation	Specified Condition
OCV OFF	Normal engine speed
OCV ON	Rough idling or engine stalls

If the operation is not as specified, check the camshaft timing oil control valve, wire harness and ECM.

ES

ES

REMOVAL

1. **DRAIN ENGINE COOLANT (See page CO-3)**
2. **DISCONNECT CABLE FROM NEGATIVE BATTERY TERMINAL**
3. **REMOVE V-BANK COVER (See page ES-414)**
4. **REMOVE AIR CLEANER ASSEMBLY (See page ES-415)**
5. **REMOVE INTAKE AIR SURGE TANK (See page FU-11)**
6. **REMOVE CAMSHAFT TIMING OIL CONTROL VALVE ASSEMBLY**
   (a) Disconnect the 2 connectors.
   (b) Remove the 2 bolts, then remove the 2 camshaft timing oil control valves.

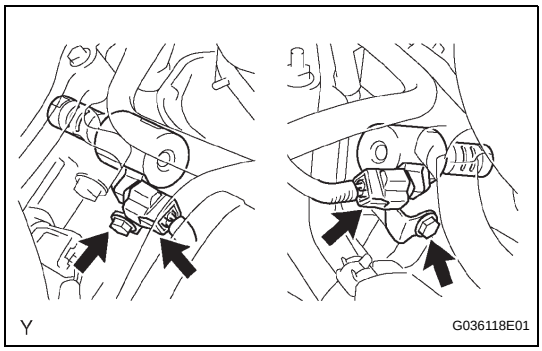

INSPECTION

1. **INSPECT CAMSHAFT TIMING OIL CONTROL VALVE ASSEMBLY**
   (a) Check the resistance.
      (1) Using an ohmmeter, measure the resistance between the terminals.
      Standard

Tester Connection	Specified Condition
1 (+B) - 2 (GND)	6.9 to 7.9 Ω at 20°C (68°F)

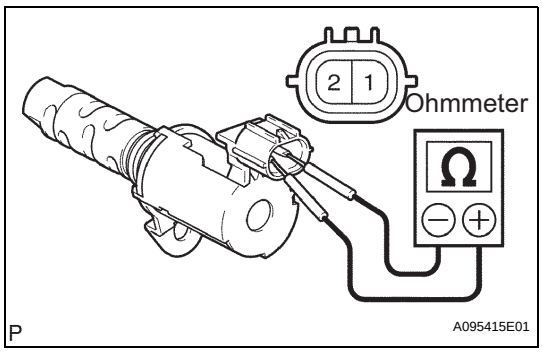

If the result is not as specified, replace the camshaft timing oil control valve.

   (b) Check the operation.
      (1) Connect the positive (+) lead from the battery to terminal 1 and negative (-) lead to terminal 2, and check that the valve operates.
      NOTICE:
      Check that the spool valve is not stuck.
      HINT:
      The spool valve may not return if foreign objects are caught in it. This may cause subtle pressure leakage to the advance side, and a DTC may, be set.

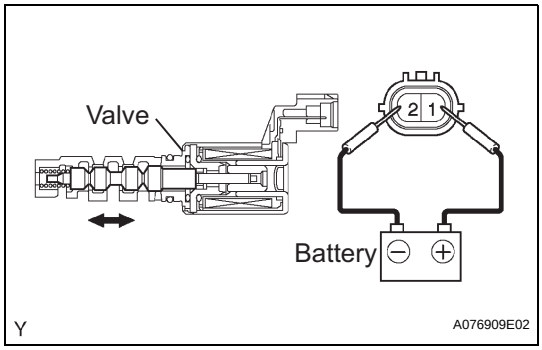

CRANKSHAFT POSITION SENSOR

REMOVAL

1. **DISCONNECT CABLE FROM NEGATIVE BATTERY TERMINAL**
2. **REMOVE V-BANK COVER (See page ES-414)**
3. **REMOVE FAN SHROUD (See page CO-15)**
4. **REMOVE GENERATOR ASSEMBLY (See page CH-7)**
5. **SEPARATE COOLER COMPRESSOR ASSEMBLY**
   (a) Remove the bolt, then separate the suction hose sub-assembly.

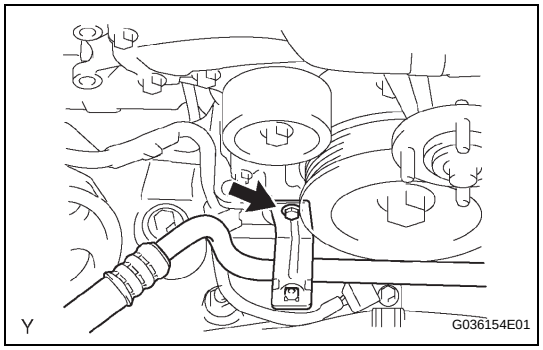

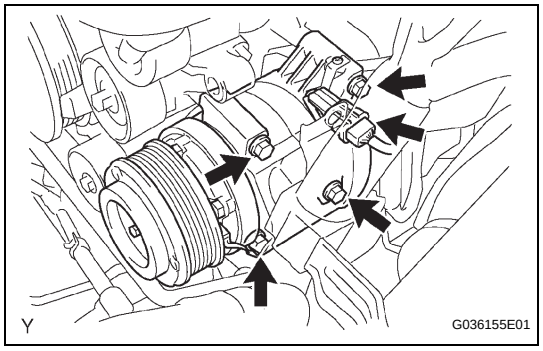

   (b) Disconnect the cooler compressor assembly connector.
   (c) Remove the 4 bolts, then separate the cooler compressor assembly from the V-ribbed belt tensioner assembly.

6. **REMOVE CRANKSHAFT POSITION SENSOR**
   (a) Disconnect the crankshaft position sensor connector.
   (b) Remove the bolt, then remove the crankshaft position sensor.

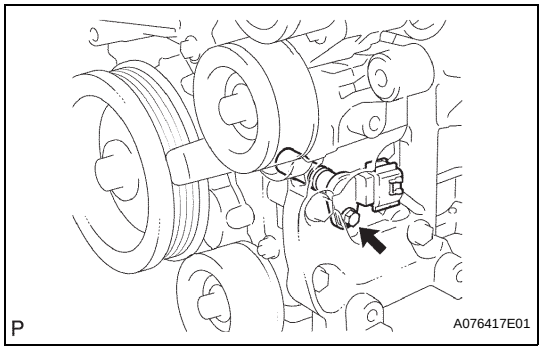

INSPECTION

1. **INSPECT CRANKSHAFT POSITION SENSOR**
   (a) Check the resistance.
      (1) Using an ohmmeter, measure the resistance between the terminals.
      Standard:
      1850 to 2450 Ω at 20°C (68°F)
      If the result is not as specified, replace the crankshaft position sensor.

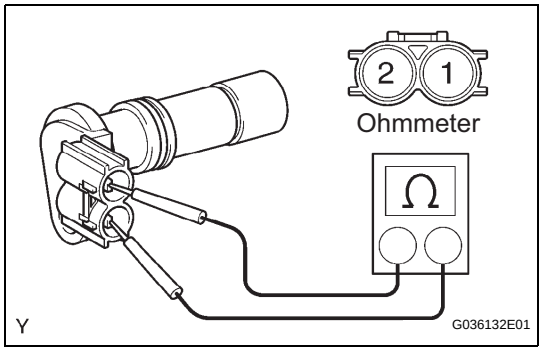

INSTALLATION

1. **INSTALL CRANKSHAFT POSITION SENSOR**
   (a) Apply a light coat of engine oil to the O-ring of the crankshaft position sensor.
   (b) Install the crankshaft position sensor with the bolt.
   Torque: 10 N*m (102 kgf*cm, 7.4 in.*lbf)
   (c) Connect the crankshaft position sensor connector.
2. **INSTALL COOLER COMPRESSOR ASSEMBLY**
   (a) Install the cooler compressor assembly with the 4 bolts.
   Torque: 25 N*m (255 kgf*cm, 18 ft.*lbf)
   (b) Connect the cooler compressor assembly connector.
   (c) Install the suction hose sub-assembly with the bolt.
   Torque: 8.0 N*m (82 kgf*cm, 71 in.*lbf)
3. **INSTALL GENERATOR ASSEMBLY (See page CH-13)**
4. **INSTALL FAN SHROUD (See page CO-20)**
5. **INSTALL V-BANK COVER (See page ES-416)**
6. **CONNECT CABLE TO NEGATIVE BATTERY TERMINAL**
   Torque: 3.9 N*m (40 kgf*cm, 35 in.*lbf)

ES

ENGINE COOLANT TEMPERATURE SENSOR

REMOVAL

1. **DISCHARGE FUEL SYSTEM PRESSURE** (See page FU-1)
2. **DRAIN ENGINE COOLANT (See page CO-3)**
3. **DISCONNECT CABLE FROM NEGATIVE BATTERY TERMINAL**
4. **REMOVE V-BANK COVER (See page ES-414)**
5. **REMOVE AIR CLEANER ASSEMBLY (See page ES-415)**
6. **REMOVE INTAKE AIR SURGE TANK (See page FU-11)**
7. **DISCONNECT FUEL PIPE SUB-ASSEMBLY NO.2 (See page FU-13)**
8. **REMOVE ENGINE COOLANT TEMPERATURE SENSOR**
   (a) Disconnect the connector.
   (b) Using a 19 mm deep socket wrench, remove the water temperature sensor and gasket.

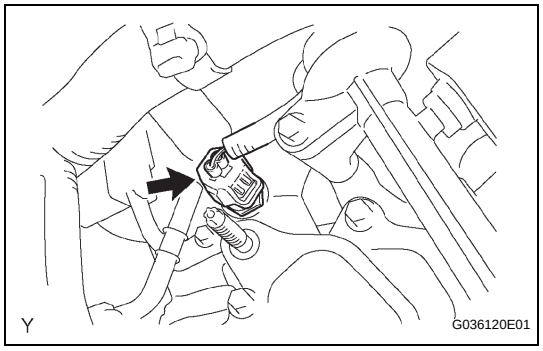

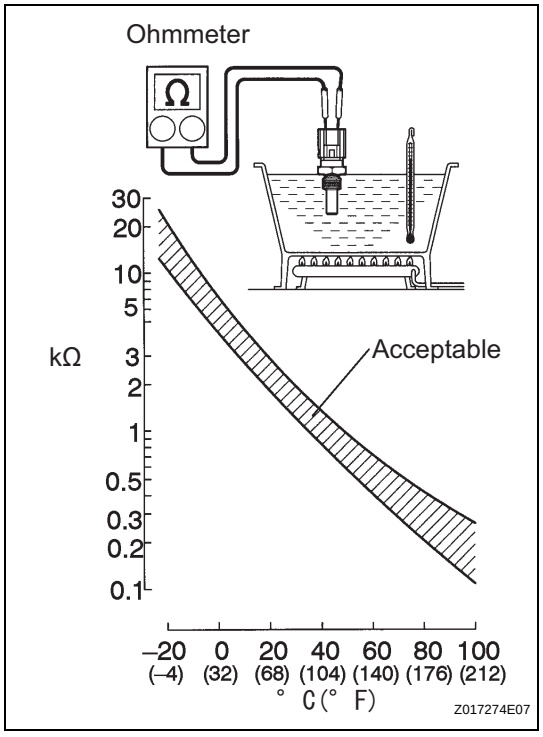

INSPECTION

1. **INSPECT ENGINE COOLANT TEMPERATURE SENSOR**
   (a) Check the resistance.
      (1) Using an ohmmeter, measure the resistance between the terminals.
      Resistance

Tester Connection	Specified Condition
1 (E2) - 2 (THW)	2.32 to 2.59 kΩ at 20°C (68°F)
1 (E2) - 2 (THW)	0.310 to 0.326 kΩ at 80°C (176°F)

NOTICE:
If checking the engine coolant temperature sensor in water, be careful not to allow water to enter the terminals. After checking, wipe the water off the engine coolant temperature sensor.
If the result is not as specified, replace the engine coolant temperature sensor.

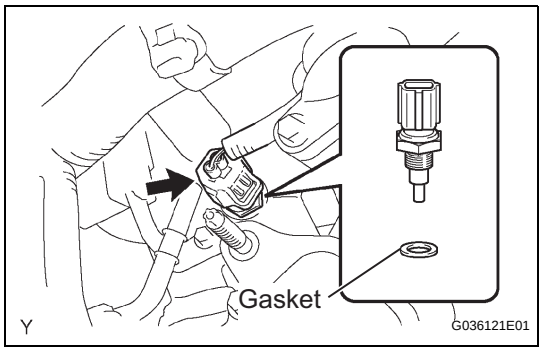

INSTALLATION

1. **INSTALL E.F.I. ENGINE COOLANT TEMPERATURE SENSOR**
   (a) Using a 19 mm deep socket wrench, install the water temperature sensor with a new gasket.
   Torque: 20 N*m (204 kgf*cm, 15 ft.*lbf)
   (b) Connect the connector.
2. **CONNECT FUEL PIPE SUB-ASSEMBLY NO.2 (See page FU-17)**
3. **INSTALL INTAKE AIR SURGE TANK (See page FU-17)**
4. **INSTALL AIR CLEANER ASSEMBLY**
5. **CONNECT CABLE TO NEGATIVE BATTERY TERMINAL**
   Torque: 3.9 N*m (40 kgf*cm, 35 in.*lbf)
6. **ADD ENGINE COOLANT (See page CO-3)**
7. **CHECK FOR FUEL LEAKAGE**
8. **CHECK FOR ENGINE COOLANT LEAKAGE (See page CO-4)**
9. **INSTALL V-BANK COVER (See page ES-416)**

ES

THROTTLE BODY

COMPONENTS

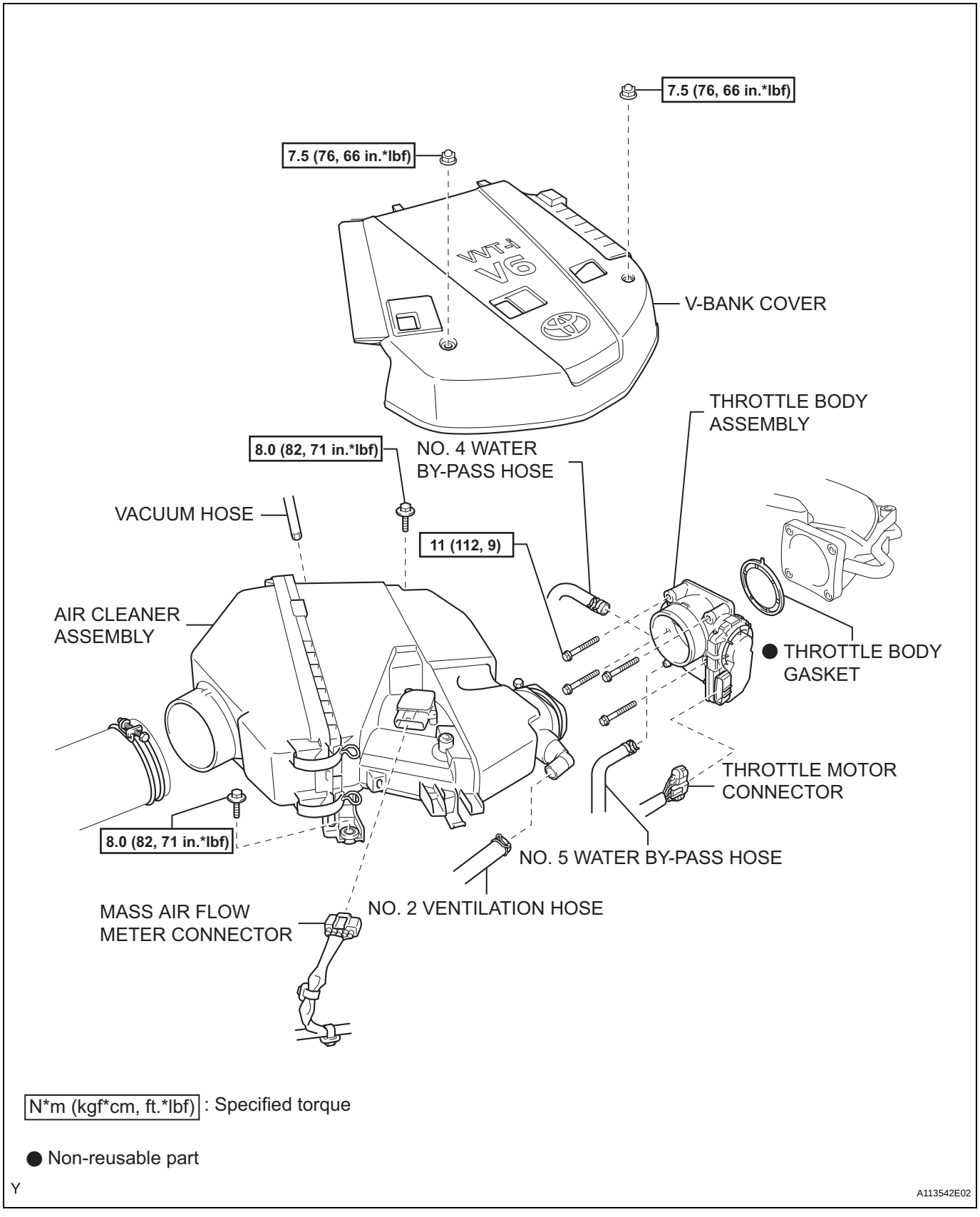

ON-VEHICLE INSPECTION

1. INSPECT THROTTLE BODY ASSEMBLY

(a) Listen to the throttle control motor operating sounds.
  (1) Turn the ignition switch to ON.
  (2) When pressing the accelerator pedal, listen to the running sound of the motor. Make sure no friction noises come from the motor.
  If friction noises exist, check the throttle body, wire harness and ECM.

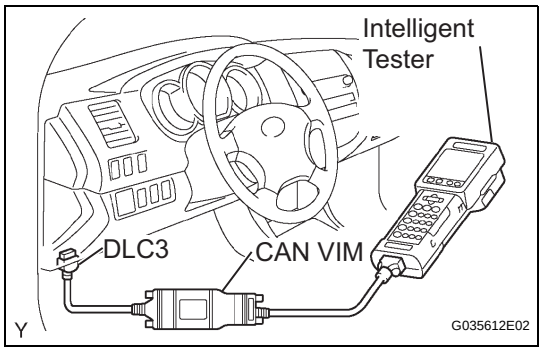

(b) Check the throttle position sensor.
  (1) Turn the ignition switch to ON.
  (2) Turn the intelligent tester ON.
  (3) Start the engine and warm it up.
  (4) Select the following menu items: DIAGNOSIS / ENHANCED OBD II / DATA LIST / ALL / THROTTLE POS .
  (5) Depress the accelerator pedal. When the throttle valve is fully open, check that the THROTTLE POS value is within the specification.
  Standard:
  60% or more
  NOTICE:
  When checking the standard throttle valve opening percentage, the transmission should be in the neutral position.
  If the result is not as specified, check the throttle body, wire harness and ECM.

KNOCK SENSOR (for 2WD)

REMOVAL

1. **DISCHARGE FUEL SYSTEM PRESSURE**
   (See page FU-1)
2. **REMOVE BATTERY**
3. **DRAIN ENGINE COOLANT (See page CO-3)**
4. **DRAIN ENGINE OIL (See page LU-4)**
5. **REMOVE ENGINE ASSEMBLY**
   (See page EM-186)
6. **REMOVE TIMING CHAIN OR BELT COVER SUB-ASSEMBLY**
   (See page LU-17)
7. **REMOVE COOL AIR INLET NO.1**
   (a) Remove the 2 bolts, then remove the cool air inlet.
8. **REMOVE EXHAUST FRONT PIPE ASSEMBLY NO.2 (See page EX-3)**
9. **REMOVE EXHAUST PIPE ASSEMBLY FRONT (See page EX-3)**
10. **REMOVE MANIFOLD STAY**
    (a) Remove the 3 bolts, then remove the exhaust manifold stay.
11. **REMOVE EXHAUST MANIFOLD SUB-ASSEMBLY RH**
    (a) Disconnect the air fuel ratio sensor connector.
    (b) Remove the 6 nuts, then remove the exhaust manifold and gasket.
12. **REMOVE INTAKE MANIFOLD (See page EM-93)**
13. **REMOVE WATER BY-PASS JOINT RR (See page EM-93)**
14. **REMOVE CHAIN VIBRATION DAMPER NO.1**
    (a) Remove the 2 bolts, then remove the chain vibration damper No. 1.
15. **REMOVE CAMSHAFT TIMING GEARS AND NO.2 CHAIN (RH BANK) (See page EM-94)**
16. **REMOVE CHAIN TENSIONER ASSEMBLY NO.2 (See page EM-62)**
17. **REMOVE CAMSHAFTS (See page EM-94)**
18. **REMOVE CAMSHAFT BEARING NO.2**
19. **REMOVE CYLINDER HEAD SUB-ASSEMBLY (See page EM-95)**

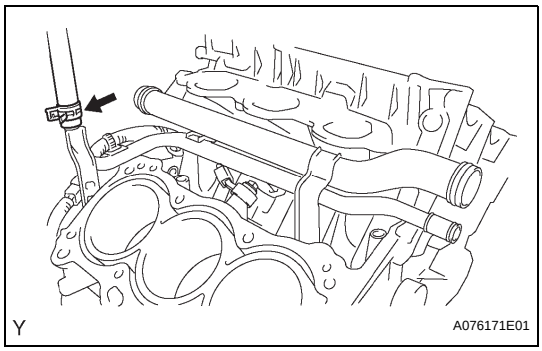

20. DISCONNECT HEATER WATER INLET HOSE

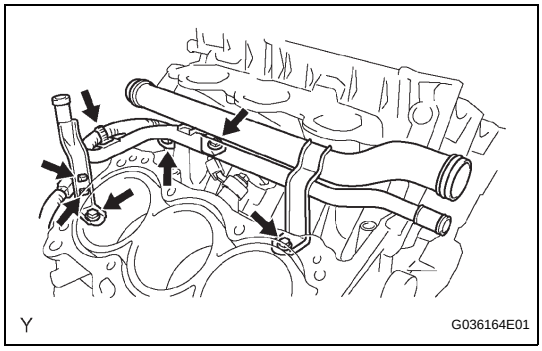

21. REMOVE WATER OUTLET PIPE NO.1

(a) Remove the 4 wire harness clamps.
(b) Remove the 3 bolts and water outlet pipe.

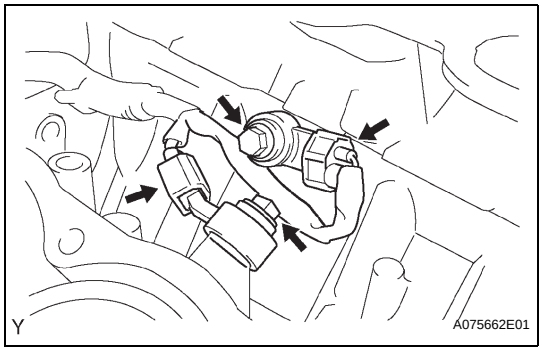

22. REMOVE KNOCK SENSOR

(a) Disconnect the 2 knock sensor connectors.
(b) Remove the 2 bolts and 2 knock sensors.

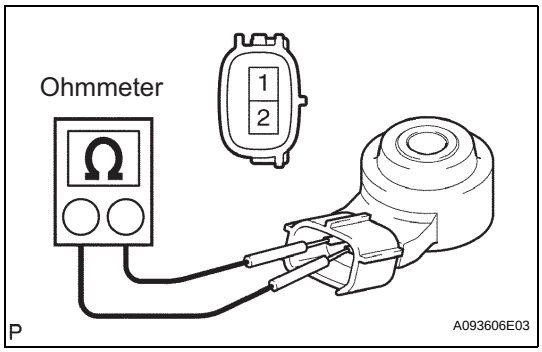

INSPECTION

1. INSPECT KNOCK SENSOR

(a) Check the resistance.
(1) Using an ohmmeter, measure the resistance between the terminals.

Resistance Standard

Tester Connection	Specified Condition
1 (Ground) - 2 (Output)	120 to 180 Ω at 20°C (68°F)

If the result is not as specified, replace the knock sensor.

KNOCK SENSOR (for 4WD and Pre-Runner)

REMOVAL

1. **DISCHARGE FUEL SYSTEM PRESSURE**
   (See page FU-1)
2. **REMOVE BATTERY**
3. **DRAIN ENGINE COOLANT (See page CO-3)**
4. **DRAIN ENGINE OIL (See page LU-4)**
5. **REMOVE POWER STEERING LINK ASSEMBLY**
   (See page PS-53)
6. **REMOVE DIFFERENTIAL CARRIER ASSEMBLY FRONT (4WD DRIVE TYPE)**
   (See page DF-19)
7. **REMOVE TIMING CHAIN OR BELT COVER SUB-ASSEMBLY**
   (See page LU-34)
8. **REMOVE CHAIN SUB-ASSEMBLY**
9. **REMOVE COOL AIR INLET NO.1**
   (a) Remove the 2 bolts, then remove the cool air inlet.
10. **REMOVE EXHAUST FRONT PIPE ASSEMBLY NO.2 (See page EX-3)**
11. **REMOVE EXHAUST PIPE ASSEMBLY FRONT (See page EX-3)**
12. **REMOVE MANIFOLD STAY**
    (a) Remove the 6 bolts, then remove the 2 exhaust manifold stays.
13. **REMOVE EXHAUST MANIFOLD SUB-ASSEMBLY RH (See page EM-115)**
14. **DISCONNECT FUEL PIPE SUB-ASSEMBLY NO.1 (See page FU-13)**
15. **DISCONNECT FUEL PIPE SUB-ASSEMBLY NO.2 (See page FU-13)**
16. **REMOVE INTAKE MANIFOLD (See page EM-115)**
17. **REMOVE WATER BY-PASS JOINT RR (See page EM-115)**
18. **REMOVE CHAIN VIBRATION DAMPER NO.1 (See page EM-158)**
19. **REMOVE CAMSHAFT TIMING GEARS AND NO.2 CHAIN (RH BANK) (See page EM-116)**
20. **REMOVE CHAIN TENSIONER ASSEMBLY NO.2 (See page EM-116)**
21. **REMOVE CAMSHAFTS (See page EM-116)**

ES

22. REMOVE CAMSHAFT BEARING NO.2

23. REMOVE CYLINDER HEAD SUB-ASSEMBLY (See page EM-117)

24. DISCONNECT HEATER WATER INLET HOSE

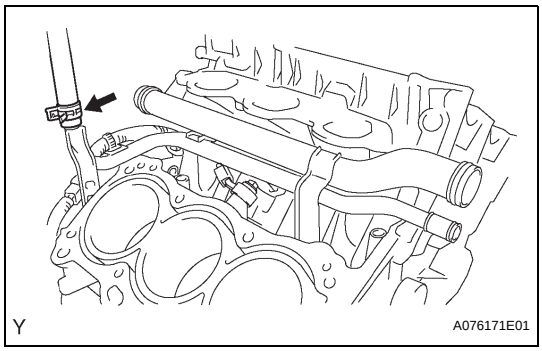

25. REMOVE WATER OUTLET PIPE NO.1

(a) Remove the 4 wire harness clamps.
(b) Remove the 3 bolts and water outlet pipe.

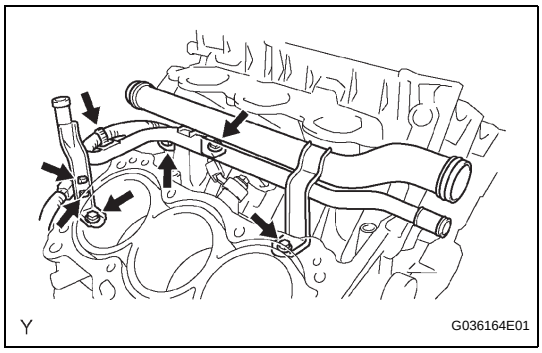

26. REMOVE KNOCK CONTROL SENSOR

(a) Disconnect the 2 knock sensor connectors.
(b) Remove the 2 bolts and 2 knock sensors.

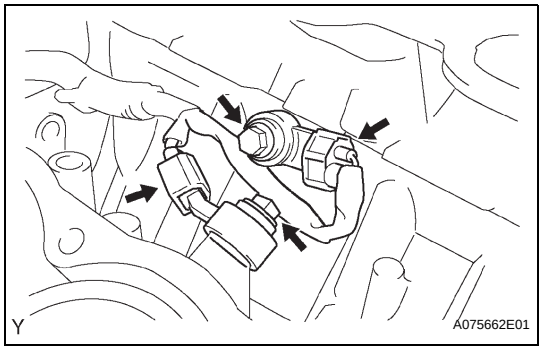

INSPECTION

1. INSPECT KNOCK SENSOR

(a) Check the resistance.
(1) Using an ohmmeter, measure the resistance between the terminals.

Resistance Standard

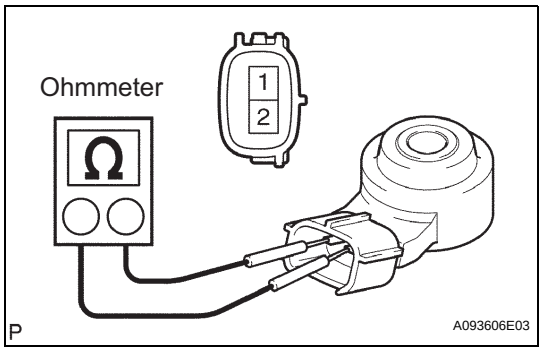

Tester Connection	Specified Condition
1 (Ground) - 2 (Output)	120 to 180 Ω at 20°C (68°F)

If the result is not as specified, replace the knock sensor.

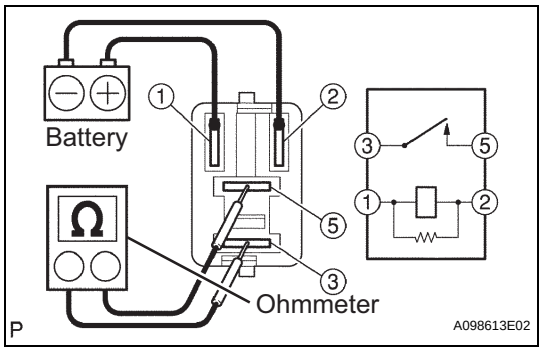

EFI RELAY

INSPECTION

1. INSPECT EFIRELAY

(a) Check the resistance.

(1) Using an ohmmeter, measure the resistance between the terminals.

Standard

Tester Connection	Specified Condition
3 - 5	10 kΩ or higher
3 - 5	Below 1 Ω (Apply battery voltage to terminals 1 and 2)

If the result is not as specified, replace the EFI relay.

ES

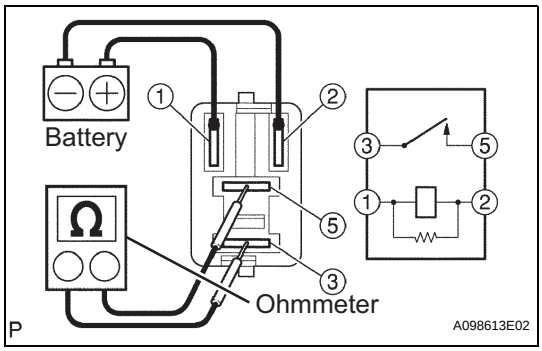

CIRCUIT OPENING RELAY

INSPECTION

1. INSPECT CIRCUIT OPENING RELAY ASSEMBLY

(a) Check the resistance.

(1) Using an ohmmeter, measure the resistance between the terminals.

Standard

Tester Connection	Specified Condition
3 - 5	10 kΩ or higher
3 - 5	Below 1 Ω (Apply battery voltage to terminals 1 and 2)

If the result is not as specified, replace the circuit opening relay.

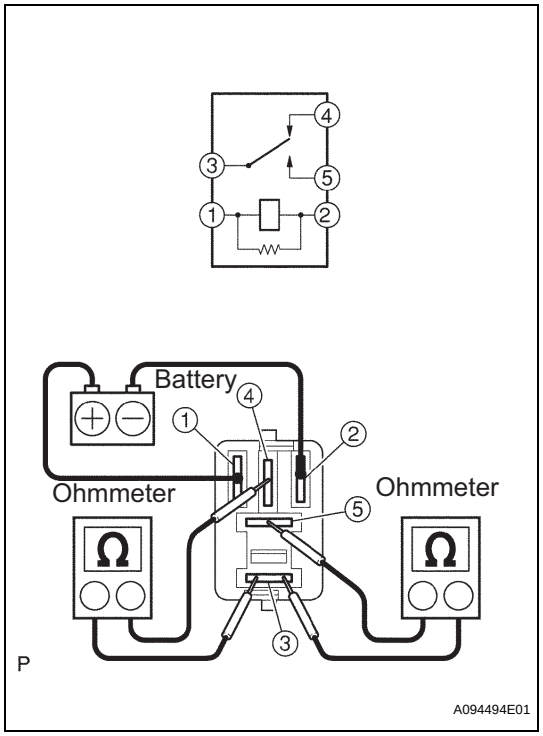

FUEL PUMP RELAY

INSPECTION

1. INSPECT FUEL PUMP RELAY ASSEMBLY

(a) Check the resistance.

(1) Using an ohmmeter, measure the resistance between the terminals.

Standard

Tester Connection	Specified Condition
3 - 4	Below 1 Ω
3 - 5	10 kΩ or higher
3 - 4	10 kΩ or higher (Apply battery voltage to terminals 1 and 2)
3 - 5	Below 1 Ω (Apply battery voltage to terminals 1 and 2)

If the result is not as specified, replace the fuel pump relay.

ES

ECM

REMOVAL

NOTICE:

- **Perform the RESET MEMORY (AT initialization) and when replacing the automatic transmission assembly, engine assembly or ECM (See page AT-17).**
- **Perform the REGISTRATION (VIN registration) when replacing the ECM (See page ES-14).**
- **If the ECM has replaced or RESET MEMORY (AT initialization) has been performed, set up the function of the ATF (Automatic Transmission Fluid) temperature warning lamp (See page AT-17).**

ES

1. DISCONNECT CABLE FROM NEGATIVE BATTERY TERMINAL

2. REMOVE GLOVE COMPARTMENT DOOR ASSEMBLY (See page IP-13)

3. REMOVE INSTRUMENT PANEL FINISH PANEL SUB-ASSEMBLY LOWER RH (See page IP-14)

4. REMOVE ECM

(a) Disconnect the 5 connectors.

(b) Remove the 2 bolts and nut, then remove the ECM.

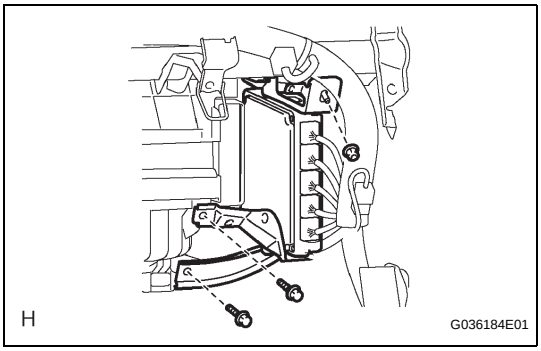

5. REMOVE ECM BRACKET

(a) Remove the 3 screws, then remove the ECM bracket.

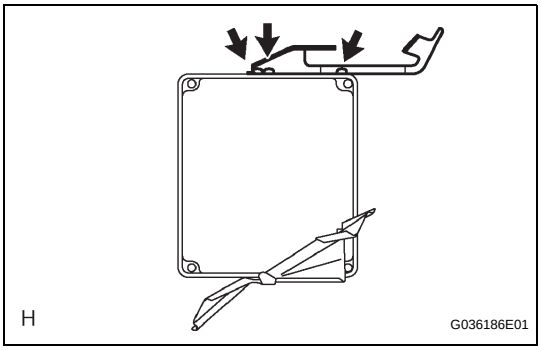

6. REMOVE ECM BRACKET NO.2

(a) Remove the 2 screws, then remove the ECM bracket No. 2.

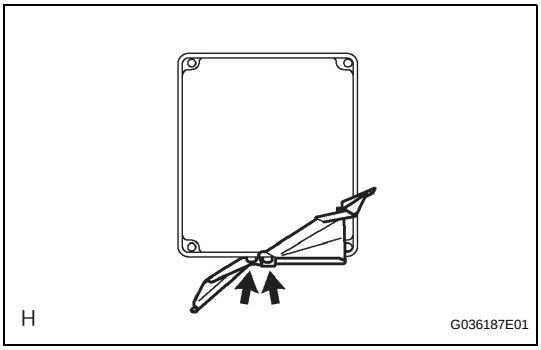

INSTALLATION

1. **INSTALL ECM BRACKET NO.2**
   Torque: 3 N*m (32 kgf*cm, 28 in.*lbf)
2. **INSTALL ECM BRACKET**
   Torque: 3 N*m (32 kgf*cm, 28 in.*lbf)
3. **INSTALL ECM**
   Torque: 5 N*m (51 kgf*cm, 44 in.*lbf)
4. **INSTALL INSTRUMENT PANEL FINISH PANEL SUB-ASSEMBLY LOWER RH (See page IP-20)**
5. **INSTALL GLOVE COMPARTMENT DOOR ASSEMBLY (See page IP-20)**
6. **CONNECT CABLE TO NEGATIVE BATTERY TERMINAL**
   Torque: 3.9 N*m (40 kgf*cm, 35 in.*lbf)

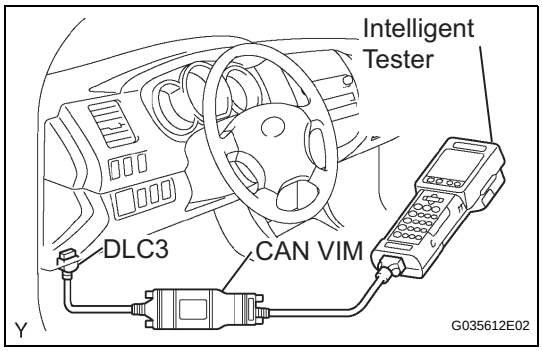

ACCELERATOR PEDAL

ON-VEHICLE INSPECTION

1. INSPECT ACCELERATOR PEDAL ROD

(a) Check the voltage.

(1) Turn the ignition switch to ON.

(2) Turn the intelligent tester ON.

(3) Start the engine and warm it up.

(4) Select the following menu items: DIAGNOSIS / ENHANCED OBD II / DATA LIST / ALL / ACCEL POS #1, ACCEL POS #2.

(5) Operate the accelerator pedal, then check that the ACCEL POS #1 and ACCEL POS #2 values are within the specifications.

Standard:

ACCELE POS #1

Accelerator Pedal Condition	Specified Condition
Released	0.5 to 1.1 V
Depressed	2.5 to 4.5 V

ACCELE POS #2

Accelerator Pedal Condition	Specified Condition
Released	1.2 to 2.0 V
Depressed	3.4 to 5.0 V

If the result is not as specified, check the accelerator pedal rod, wire harness and ECM.

REMOVAL

1. DISCONNECT CABLE FROM NEGATIVE BATTERY TERMINAL

2. REMOVE ACCELERATOR PEDAL ROD ASSEMBLY

(a) Disconnect the accelerator position sensor connector.

(b) Remove the 2 bolts, then remove the accelerator pedal.

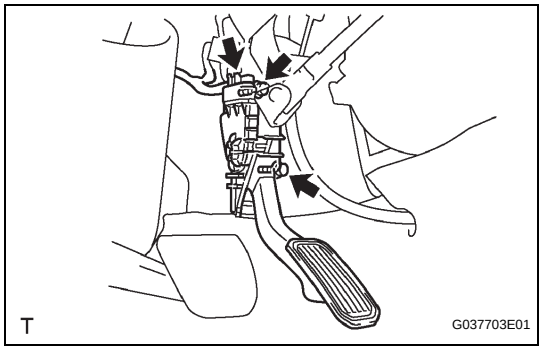

INSTALLATION

1. INSTALL ACCELERATOR PEDAL ROD ASSEMBLY

NOTICE:

- **Avoid any physical impact to the accelerator pedal assembly.**
- **Do not disassemble the accelerator pedal assembly.**

(a) Install the accelerator pedal with the 2 bolts.
Torque: 5 N*m (51 kgf*cm, 44 in.*lbf)

(b) Connect the accelerator position sensor connector.

2. CONNECT CABLE TO NEGATIVE BATTERY TERMINAL
Torque: 3.9 N*m (40 kgf*cm, 35 in.*lbf)

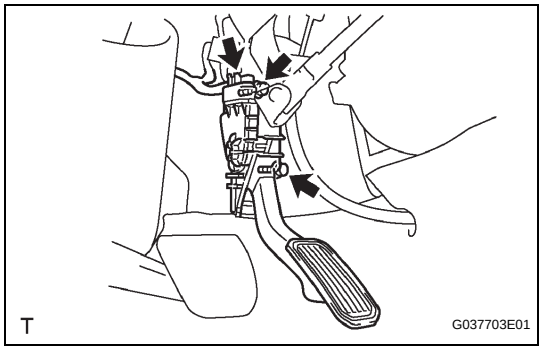

SYSTEM DESCRIPTION

1. KEY REMAINDER WARNING SYSTEM DESCRIPTION

(a) When the driver side door is open with the ignition switch in the ACC or LOCK position, this system sounds a buzzer to warn the driver that the ignition key has not been removed.

HOW TO PROCEED WITH TROUBLESHOOTING

HINT:
Use this procedure to troubleshoot the key reminder warning system.

1 VEHICLE BROUGHT TO WORKSHOP

NEXT

2 CUSTOMER PROBLEM ANALYSIS AND SYMPTOM CHECK

NEXT

3 BATTERY VOLTAGE INSPECTION

(a) Check the battery voltage.
Standard Voltage:
11 to 14 V

If the voltage is below 11 V, recharge the battery before proceeding.

NEXT

4 PROBLEM SYMPTOMS TABLE

(a) If the fault is not listed on the problem symptoms table, proceed to A.
(b) If the fault is listed on the problem symptoms table, proceed to B.

B → **Go to step 6**

A

5 OVERALL ANALYSIS AND TROUBLESHOOTING

(a) On-vehicle inspection (See page DL-61).
(b) Terminals of ECU (See page DL-60).

NEXT

6 ADJUSTMENT, REPAIR OR REPLACEMENT

NEXT

7	**CONFIRMATION TEST**

NEXT

END

PROBLEM SYMPTOMS TABLE

Symptom	Suspected area	See page
Key reminder buzzer does not sound	Unlock warning switch assembly	DL-62
	Front door courtesy light switch assembly (driver side)	
	Instrument panel J/B assembly (multiplex network body ECU)	
	Wire harness	
	Combination meter assembly	

TERMINALS OF ECU

1. CHECK DRIVER SIDE J/B (MULTIPLEX NETWORK BODY ECU)

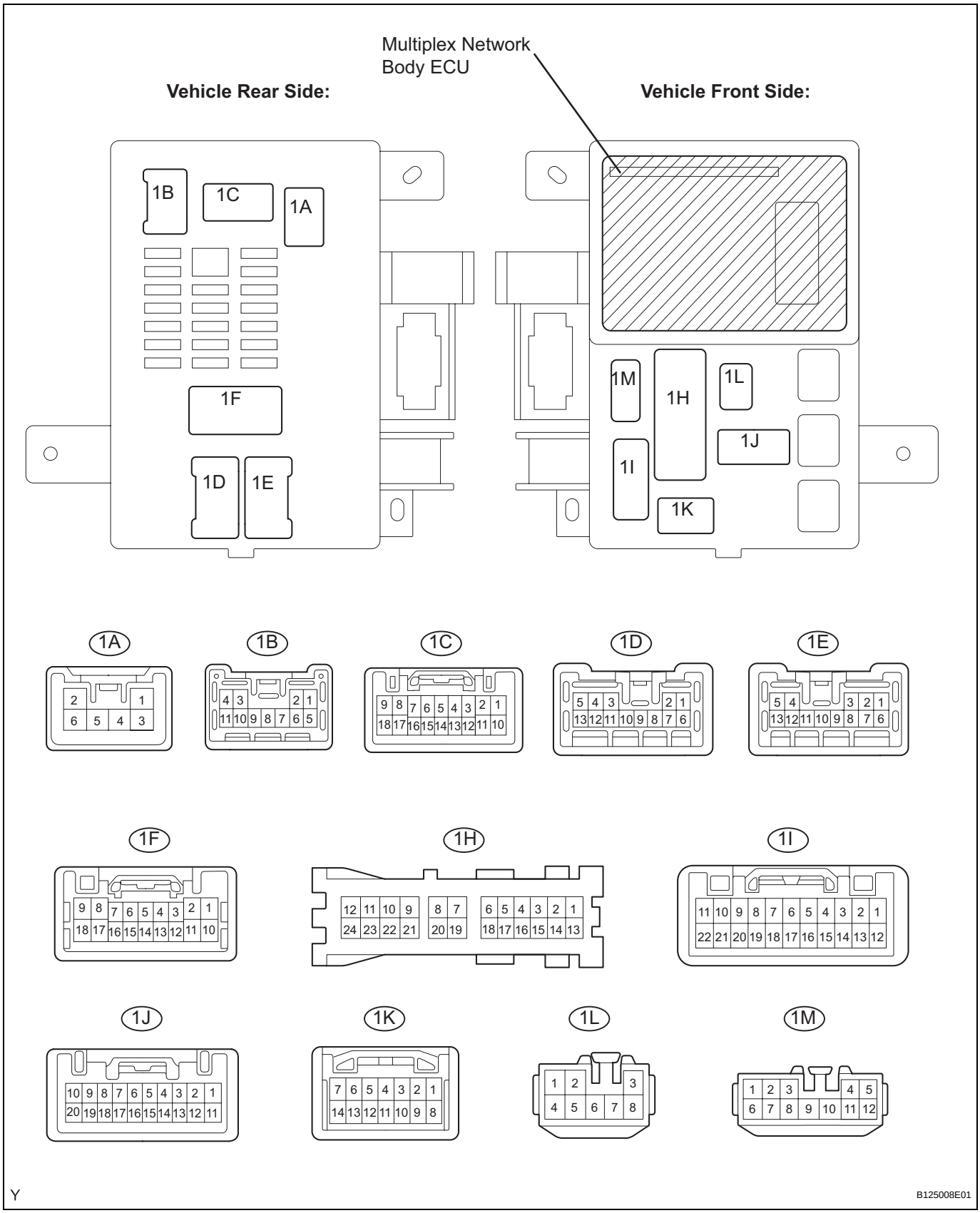

(a) Disconnect the 1A, 1H, 1F and 1K connectors.

(b) Measure the voltage and resistance between each terminal of the wire harness side connectors.

Standard

Symbols (Terminal No.)	Wiring Color	Terminal Description	Condition	Specified Condition
ALTB (1A-6) - Body ground	L-Y - Body ground	+B (power system, generator system) power supply	Always	10 to 14 V
ECUB (1H-16) - Body ground	R - Body ground	+B (ECUB) power supply	Always	10 to 14 V
GND (1H-18) - Body ground	W-B - Body ground	Ground	Always	Below 1 Ω
KSW (1K-10) - Body ground	G-B - Body ground	Key unlock warning switch input	No key in ignition key cylinder	10 kΩ or higher
			Key inserted	Below 1 Ω
DCTY (1F-7) - Body ground	G-Y - Body ground	Driver side courtesy switch input	Driver side door closed	10 kΩ or higher
			Driver side door open	Below 1 Ω

HINT:
If the result is not as specified, there may be a malfunction on the wire harness side.

ON-VEHICLE INSPECTION

1. CHECK KEY REMINDER WARNING SYSTEM

(a) Check that the key reminder buzzer sounds.
  (1) With the driver side door closed, insert the key into the ignition key cylinder and then turn the key to the LOCK or ACC position.
  (2) Check that the buzzer sounds intermittently when the driver side door is open.

(b) Check that the key reminder buzzer stops.
  (1) Check that the buzzer stops sounding when any of the following operations is performed while the buzzer is sounding:
    - Close the driver side door (the front door courtesy light switch is off).
    - Turn the ignition switch ON.
    - Remove the key from the ignition key cylinder.

Key Reminder Buzzer does not Sound

DESCRIPTION

When the ignition switch is in the LOCK or ACC position, the key is in the ignition key cylinder and the driver side door is open, the key reminder buzzer sounds. The key reminder buzzer is activated when the multiplex network body ECU transmits a key switch signal and a driver side courtesy switch signal to the combination meter.

WIRING DIAGRAM

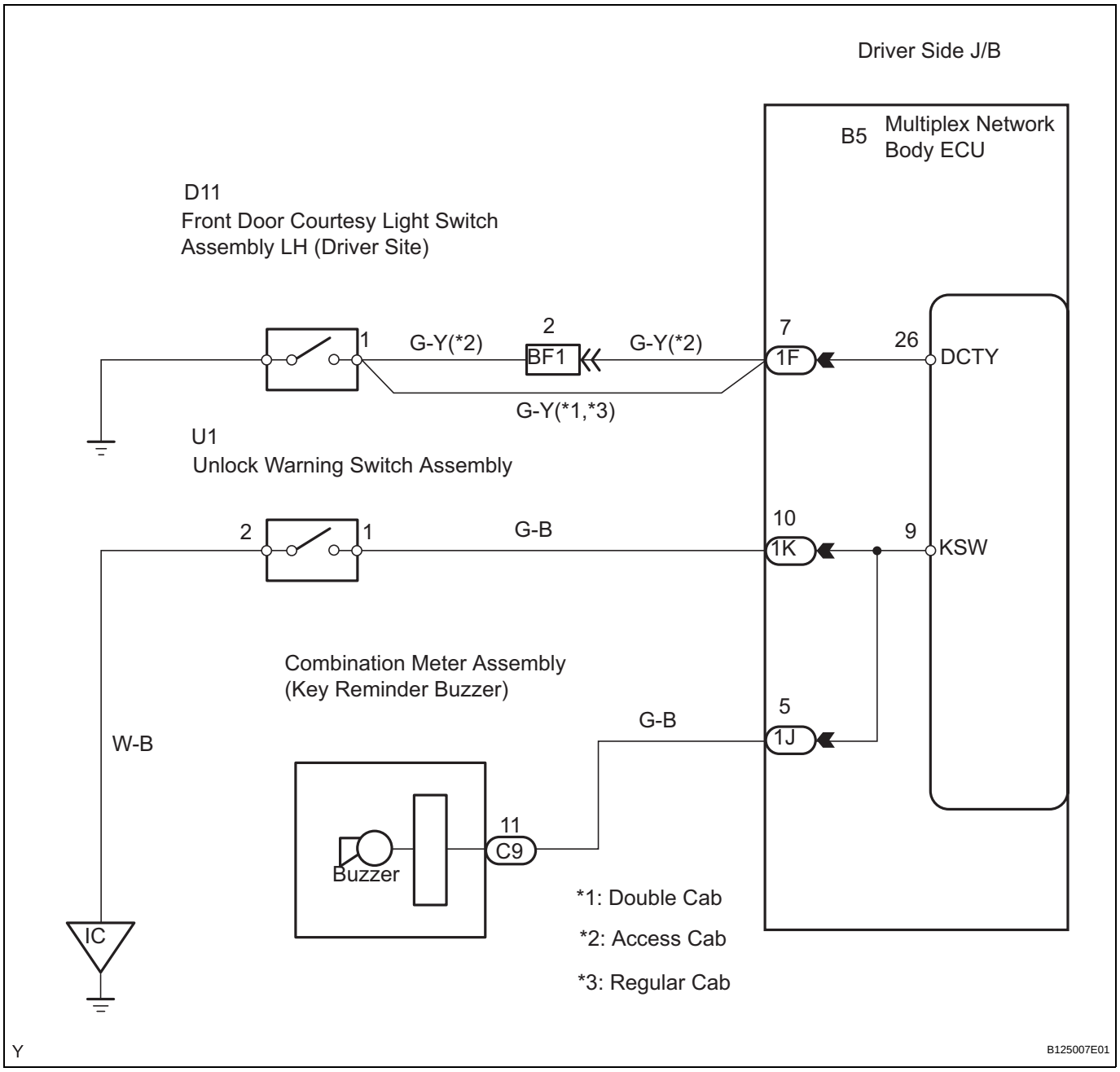

1	CHECK FRONT DOOR COURTESY LIGHT SWITCH ASSEMBLY (DRIVER SIDE)

(a) Move the room light switch to the DOOR position and open the driver side door. Then check that the room light turns ON.
OK:
Room light turns ON.

OK → **Go to step 4**

NG

2	INSPECT FRONT DOOR COURTESY LIGHT SWITCH ASSEMBLY (DRIVER SIDE)

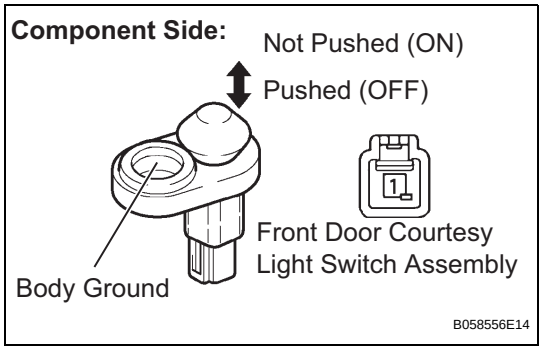

(a) Remove the front door courtesy light switch assembly.
(b) Measure the resistance of the switch.
Standard Resistance

Tester Connection	Switch condition	Specified Condition
1 - Body ground	Not pushed (ON)	Below 1 Ω
1 - Body ground	Pushed (OFF)	10 kΩ or higher

(c) Reinstall the front door courtesy light switch assembly.

NG → **REPLACE FRONT DOOR COURTESY LIGHT SWITCH ASSEMBLY (DRIVER SIDE)**

OK

3	CHECK WIRE HARNESS (FRONT DOOR COURTESY LIGHT SWITCH ASSEMBLY LH - BODY ECU)

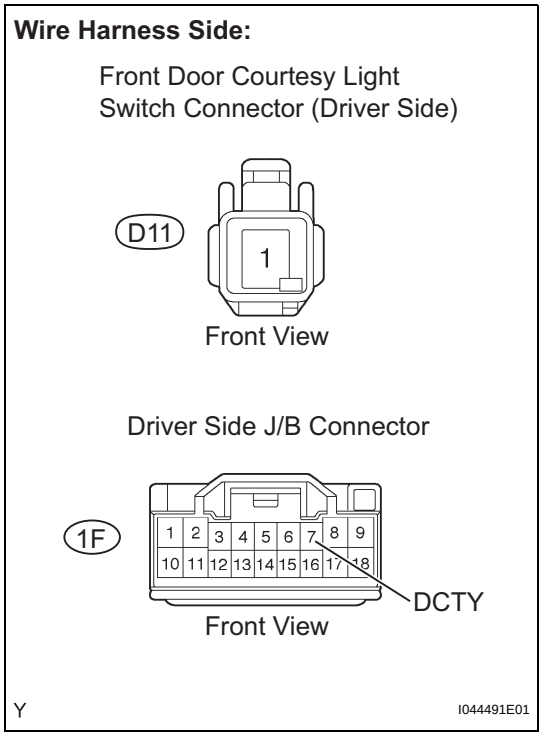

(a) Disconnect the D11 front door courtesy light switch assembly connector.
(b) Disconnect the 1F driver side J/B connector.
(c) Measure the resistance.
Standard Resistance

Tester Connection	Specified Condition
(D11-1) - DTCY (1F-7)	Below 1 Ω

(d) Reconnect the front door courtesy light switch assembly connector.
(e) Reconnect the driver side J/B connector.

NG → **REPAIR OR REPLACE HARNESS AND CONNECTOR**

DL

OK

4	CHECK BUZZER (COMBINATION METER)

(a) Check that the buzzer built into the combination meter sounds (See page ME-21).

NG → REPLACE COMBINATION METER ASSEMBLY

OK

5	INSPECT UNLOCK WARNING SWITCH ASSEMBLY

Component Side:

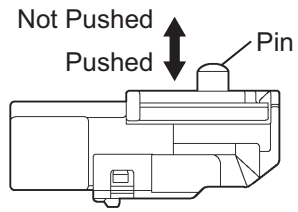

Unlock Warning Switch Assembly (Driver Side)

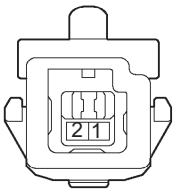

Y I044492E04

(a) Remove the U1 unlock warning switch assembly.
(b) Measure the resistance of the switch.

Standard Resistance

Tester Connection	Switch Condition	Specified Condition
1 - 2	Not pushed	10 Ω or higher
1 - 2	Pushed	Below 1 Ω

(c) Reinstall the unlock of the switch assembly.

NG → REPLACE UNLOCK WARNING SWITCH ASSEMBLY

OK

6	CHECK WIRE HARNESS (SWITCH (DRIVER SIDE) - ECU AND BODY GROUND)

Wire Harness Side:

Unlock Warning Switch Connector (Driver Side)

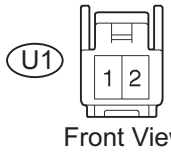

Front View

Driver Side J/B Connector

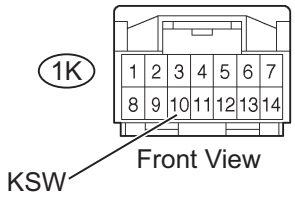

Front View

Y

I044490E01

(a) Disconnect the U1 unlock warning switch assembly connector.
(b) Disconnect the 1K driver side J/B connector.
(c) Measure the resistance of the wire harness side connectors.

Standard Resistance

Tester Connection	Specified Condition
(U1-1) - KSW (1K-10)	Below 1 Ω
(U1-2) - Body ground	Below 1 Ω

(d) Reconnect the unlock warning switch assembly connector.
(e) Reconnect the driver side J/B connector.

NG → **REPAIR OR REPLACE HARNESS AND CONNECTOR**

OK

REPLACE DRIVER SIDE JUNCTION BLOCK (MULTIPLEX NETWORK BODY ECU)

Driver Side Seat Belt Warning Light does not Operate

WIRING DIAGRAM

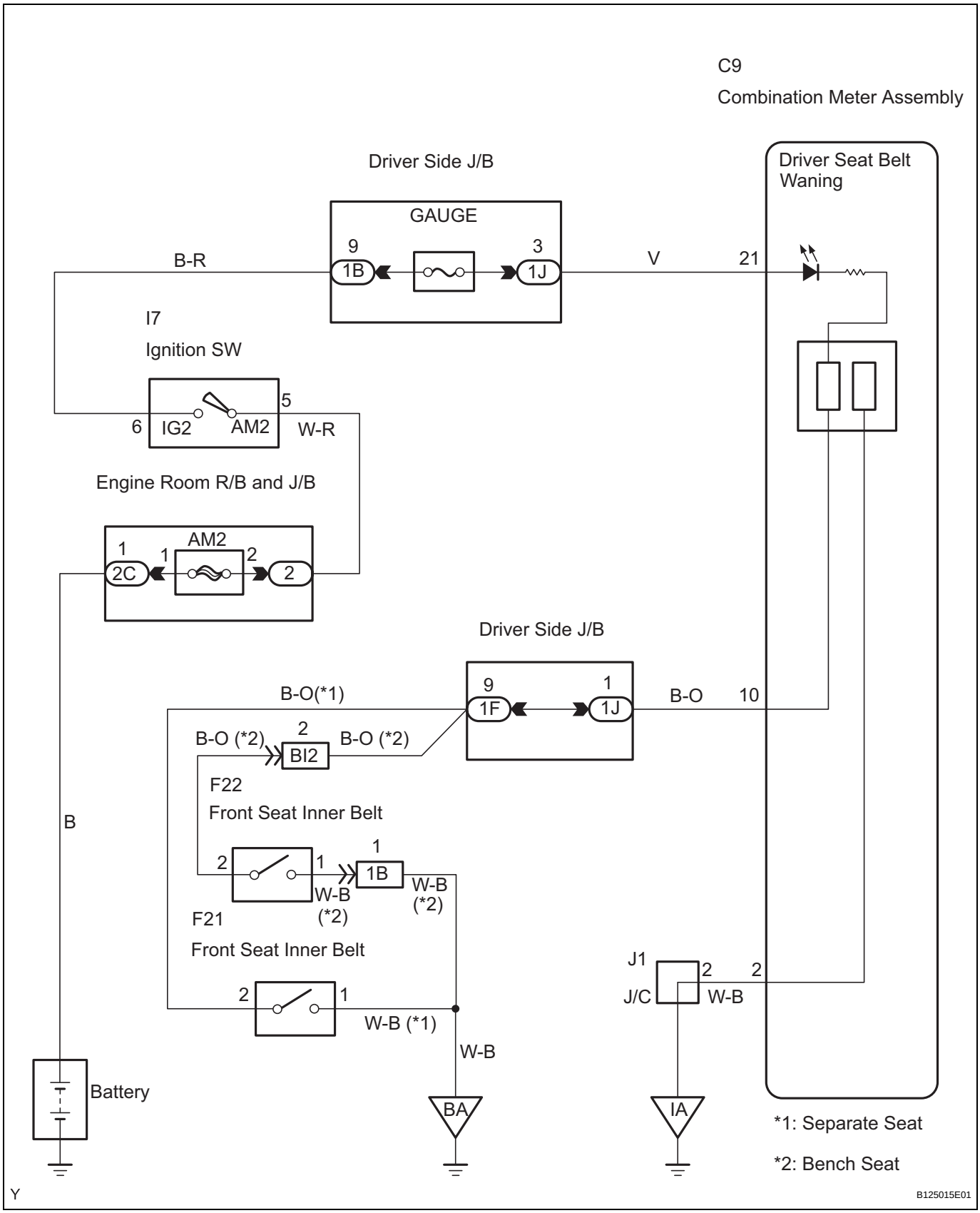

HINT:
Confirm that other components such as indicators and meter gauges function normally before performing the following procedure.

1	CONFIRM SEAT TYPE

(a) Confirm the seat type.

Seat Type	Proceed To
Bench seat	A
Separate seat	B

B → **Go to step 4**

A

2	INSPECT FRONT SEAT INNER BELT ASSEMBLY (DRIVER SIDE)

Component Side:

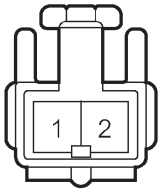

Front Seat Inner Belt Assembly (Driver Side)

I045519E01

(a) Disconnect the F22 front seat inner belt assembly (driver side) connector.
(b) Measure the resistance.
Standard Resistance

Terminal Connection	Condition	Specified Condition
1 - 2	Seat belt fastened	10 kΩ or higher
1 - 2	Seat belt unfastened	Below 1 Ω

(c) Reconnect the front seat inner belt assembly (driver side) connector.

NG → **REPLACE FRONT SEAT INNER BELT ASSEMBLY (DRIVER SIDE)**

OK

3	CHECK HARNESS AND CONNECTOR (FRONT SEAT INNER BELT (DRIVER SIDE) - COMBINATION METER)

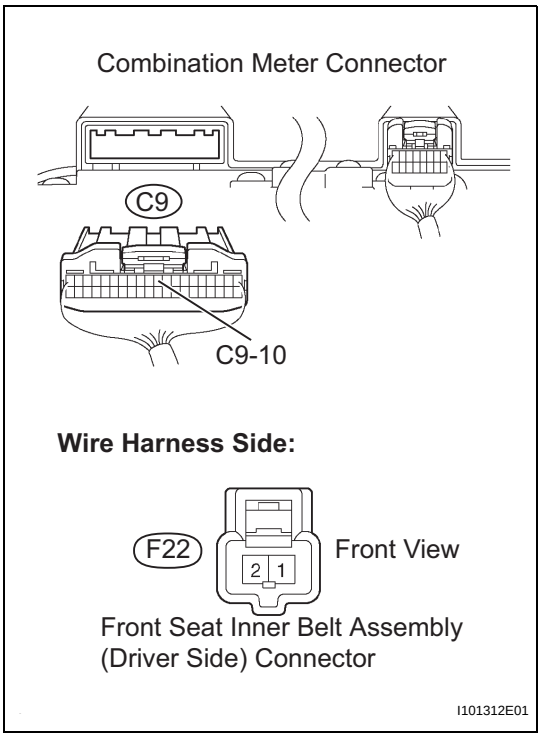

(a) Disconnect the C9 combination meter connector.
(b) Disconnect the F22 front seat inner belt assembly (driver side) connector.
(c) Measure the resistance.
Standard Resistance

Tester Connection	Specified Condition
C9-10 - F22-2	Below 1 Ω
C9-10 or F22-2 - Body ground	10 kΩ or higher

(d) Reconnect the front seat inner belt assembly (driver side) connector.
(e) Reconnect the combination meter connector.

NG → **REPAIR OR REPLACE HARNESS OR CONNECTOR**

OK

REPLACE COMBINATION METER ASSEMBLY

4	INSPECT FRONT SEAT INNER BELT ASSEMBLY (DRIVER SIDE)

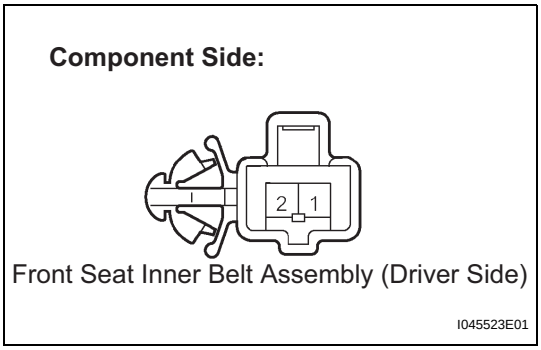

(a) Disconnect the F21 front seat inner belt assembly (driver side) connector.
(b) Measure the resistance.
Standard Resistance

Terminal Connection	Condition	Specified Condition
1 - 2	Seat belt fastened	10 kΩ or higher
1 - 2	Seat belt unfastened	Below 1 Ω

(c) Reconnect the front seat inner belt assembly (driver side) connector.

NG → **REPLACE FRONT SEAT INNER BELT ASSEMBLY (DRIVER SIDE)**

OK

5	CHECK HARNESS AND CONNECTOR (FRONT SEAT INNER BELT (DRIVER SIDE) - COMBINATION METER)

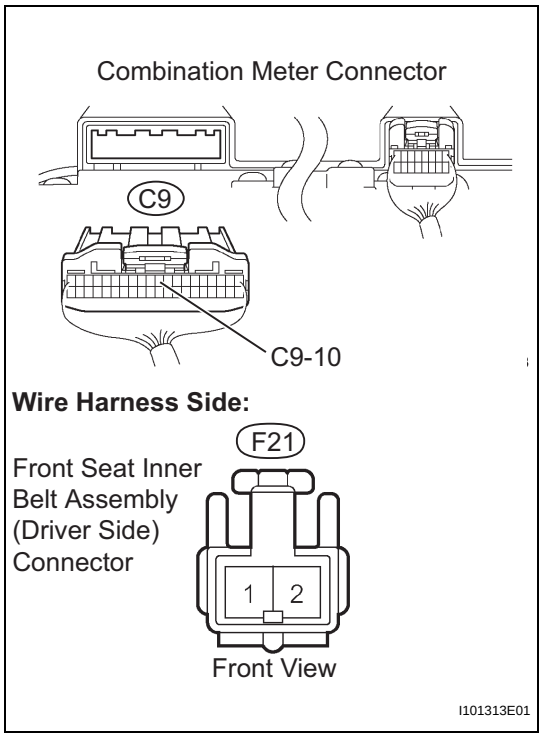

(a) Disconnect the C9 combination meter connector.
(b) Disconnect the F21 front seat inner belt assembly (driver side) connector.
(c) Measure the resistance.

Standard Resistance

Tester Connection	Specified Condition
C9-10 - F21-2	Below 1 Ω
C9-10 or F21-2 - Body ground	10 kΩ or higher

(d) Reconnect the front seat inner belt assembly (driver side) connector.
(e) Reconnect the combination meter connector.

NG → **REPAIR OR REPLACE HARNESS OR CONNECTOR**

OK

REPLACE COMBINATION METER ASSEMBLY

Seat Belt Warning Light for Passenger Seat does not Flash

WIRING DIAGRAM

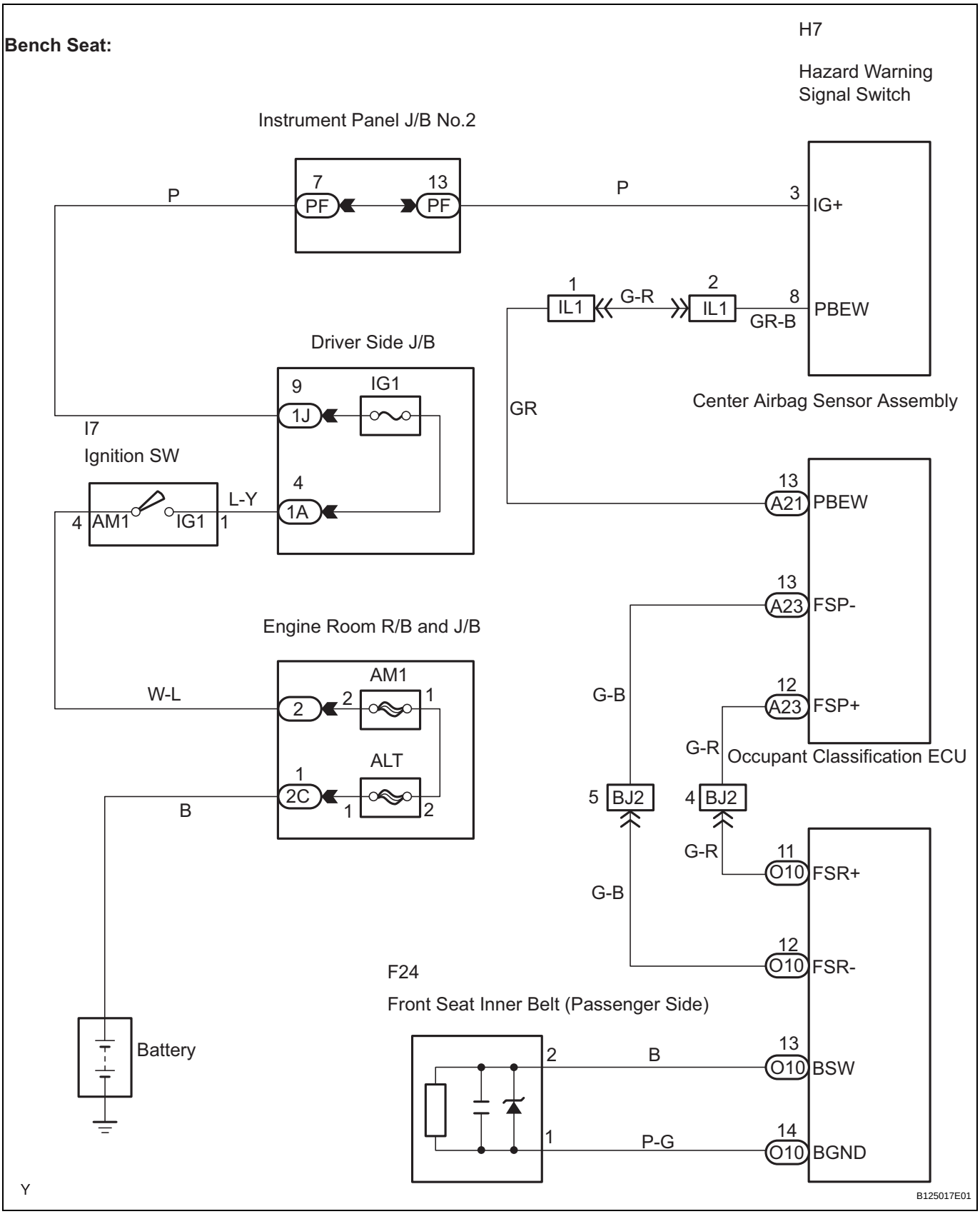

Separate Seat:

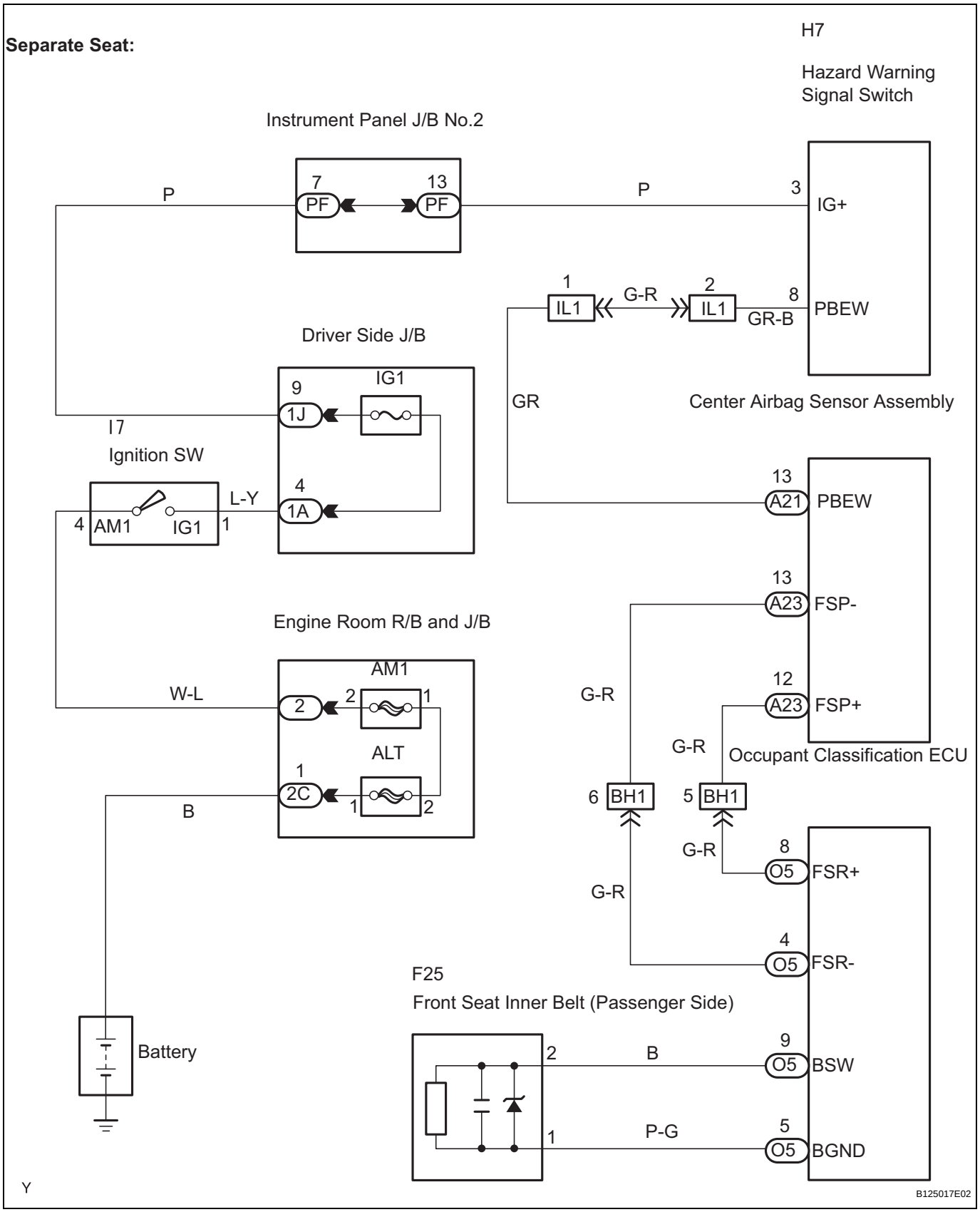

HINT:
If there is an open in the ground circuit (center airbag sensor assembly), the center airbag sensor assembly outputs DTCs. Troubleshoot those DTCs by following the Supplemental Restraint System (See page RS-24).

ME

1	CONFIRM SEAT TYPE

(a) Confirm the seat type.

Seat Type	Proceed To
Bench seat	A
Separate seat	B

B → **Go to step 9**

A

2	CHECK SUPPLEMENTAL RESTRAINT SYSTEM

(a) Connect the intelligent tester to the DLC3.
(b) Turn the ignition switch ON and turn the tester ON.
(c) Enter the following menus: DIAGNOSIS / SRS AIRBAG / DTC INFO

Result

Result	Proceed to
No SRS DTCs are output	A
SRS DTCs are output	B

B → **GO TO SUPPLEMENTAL RESTRAINT SYSTEM**

A

3	CHECK OCCUPANT CLASSIFICATION SYSTEM

(a) Connect the intelligent tester to the DLC3.
(b) Turn the ignition switch ON position and turn the tester ON.
(c) Enter the following menus: DIAGNOSIS / OCCUPANT DETECT / DTC INFO

Result

Result	Proceed to
No occupant classification system DTCs are output	A
Occupant classification system DTCs are output	B

B → **GO TO OCCUPANT CLASSIFICATION SYSTEM**

A

4 INSPECT FRONT SEAT INNER BELT ASSEMBLY (PASSENGER SIDE)

Component Side: Front Seat Inner Belt Assembly (Passenger Side)

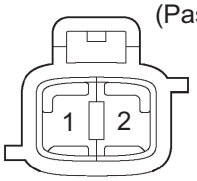

I102255E01

(a) Disconnect the F24 front seat inner belt assembly (passenger side) connector.
(b) Measure the resistance.
Standard Resistance

Terminal Connection	Condition	Specified Condition
1 - 2	Seat belt fastened	10 kΩ or higher
1 - 2	Seat belt unfastened	Below 1 Ω

(c) Reconnect the front seat inner belt assembly (passenger side) connector.

NG → **REPLACE FRONT SEAT INNER BELT ASSEMBLY (PASSENGER SIDE)**

OK

5 CHECK HARNESS AND CONNECTOR (CENTER AIRBAG SENSOR ASSEMBLY - HAZARD WARNING SIGNAL SWITCH)

Wire Harness Side:

Hazard Warning Signal Switch Connector

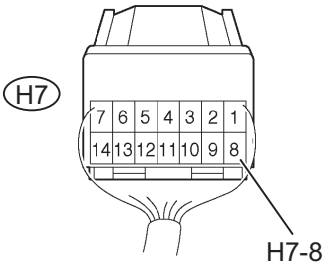

Center Airbag Sensor Assembly Connector

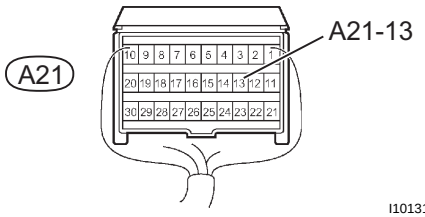

I101316E02

(a) Disconnect the H7 hazard warning signal switch connector.
(b) Disconnect the A21 center airbag sensor assembly connector.
(c) Measure the resistance.
Standard Resistance

Tester Connection	Specified Condition
H7-8 - A21-13	Below 1 Ω
H7-8 or A21-13 - Body ground	10 kΩ or higher

(d) Reconnect the center airbag sensor assembly connector.
(e) Reconnect the hazard warning signal switch connector.

NG → **REPAIR OR REPLACE HARNESS OR CONNECTOR**

OK

6	CHECK HARNESS AND CONNECTOR (CENTER AIRBAG SENSOR ASSEMBLY - OCCUPANT CLASSIFICATION ECU)

Wire Harness Side:

Center Airbag Sensor Assembly Connector

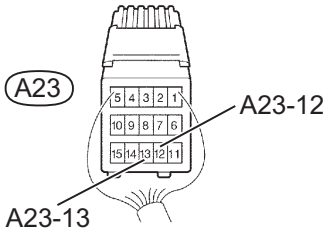

Occupant Classification ECU

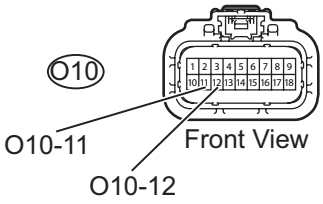

I102251E01

(a) Disconnect the O10 occupant classification ECU connector.
(b) Disconnect the A23 center airbag sensor assembly connector.
(c) Measure the resistance.
Standard Resistance

Tester Connection	Specified Condition
A23-13 - O10-12	Below 1 Ω
A23-12 - O10-11	Below 1 Ω
A23-13 or O10-12 - Body ground	10 kΩ or higher
A23-12 or O10-11 - Body ground	10 kΩ or higher

(d) Reconnect the center airbag sensor assembly connector.
(e) Reconnect the occupant classification ECU connector.

NG → **REPAIR OR REPLACE HARNESS OR CONNECTOR**

OK

7	CHECK HARNESS AND CONNECTOR (OCCUPANT CLASSIFICATION ECU - FRONT SEAT INNER BELT ASSEMBLY)

Wire Harness Side:

Occupant Classification ECU

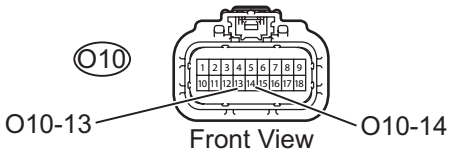

Front Seat Inner Belt Assembly (Passenger Side) Connector

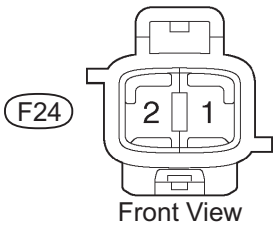

I102252E01

(a) Disconnect the F24 front seat inner belt assembly (passenger side) connector.
(b) Disconnect the O10 occupant classification ECU connector.
(c) Measure the resistance.
Standard Resistance

Tester Connection	Specified Condition
O10-13 - F24-2	Below 1 Ω
O10-14 - F24-1	Below 1 Ω
O10-13 or F24-2 - Body ground	10 kΩ or higher
O10-14 or F24-1 - Body ground	10 kΩ or higher

(d) Reconnect the occupant classification ECU connector.
(e) Reconnect the front seat inner belt assembly (passenger side) connector.

NG → **REPAIR OR REPLACE HARNESS OR CONNECTOR**

ME

OK

8	INSPECT HAZARD WARNING SIGNAL SWITCH

(a) Remove the hazard warning signal switch.
(b) Disconnect the H7 hazard warning signal switch connector.
(c) Measure the voltage.

Standard Voltage

Tester Connection	Condition	Specified Condition
H7-3 - Body ground	Ignition switch ON	10 to 14 V

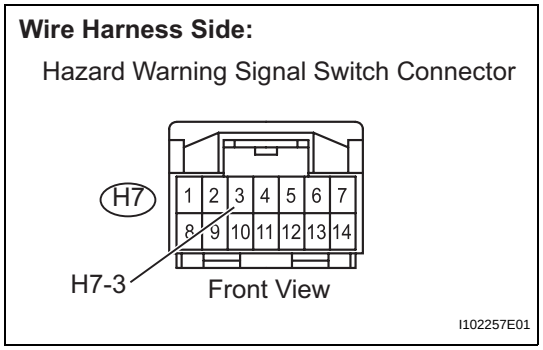

NG → REPAIR OR REPLACE HARNESS OR CONNECTOR

OK

REPLACE HAZARD WARNING SIGNAL SWITCH

9	CHECK SUPPLEMENTAL RESTRAINT SYSTEM

(a) Connect the intelligent tester to the DLC3.
(b) Turn the ignition switch ON and turn the tester ON.
(c) Enter the following menus: DIAGNOSIS / SRS AIRBAG / DTC INFO

Result

Result	Proceed to
No SRS DTCs are output	A
SRS DTCs are output	B

B → GO TO SUPPLEMENTAL RESTRAINT SYSTEM

A

10	CHECK OCCUPANT CLASSIFICATION SYSTEM

(a) Connect the intelligent tester to the DLC3.
(b) Turn the ignition switch ON position and turn the tester ON.
(c) Enter the following menus: DIAGNOSIS / OCCUPANT DETECT / DTC INFO

Result

Result	Proceed to
No occupant classification system DTCs are output	A

ME

Result	Proceed to
Occupant classification system DTCs are output	B

B → **GO TO OCCUPANT CLASSIFICATION SYSTEM**

A

11 INSPECT FRONT SEAT INNER BELT ASSEMBLY (PASSENGER SIDE)

Component Side: Front Seat Inner Belt Assembly (Passenger Side)

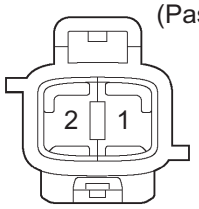

I102254E01

(a) Disconnect the F25 front seat inner belt assembly (passenger side) connector.
(b) Measure the resistance.
Standard Resistance

Tester Connection	Condition	Specified Condition
1 - 2	Seat belt fastened	10 kΩ or higher
1 - 2	Seat belt unfastened	Below 1 Ω

(c) Reconnect the front seat inner belt assembly (passenger side) connector.

NG → **REPLACE FRONT SEAT INNER BELT ASSEMBLY (PASSENGER SIDE)**

OK

12 CHECK HARNESS AND CONNECTOR (CENTER AIRBAG SENSOR ASSEMBLY - HAZARD WARNING SIGNAL SWITCH)

Wire Harness Side:

Hazard Warning Signal Switch Connector

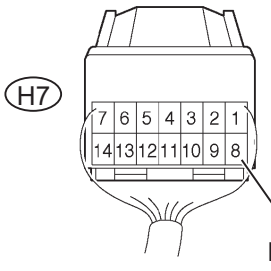

Center Airbag Sensor Assembly Connector

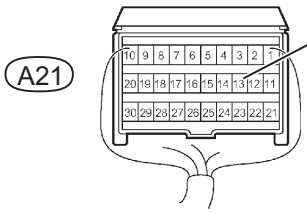

I101316E01

(a) Disconnect the H7 hazard warning signal switch connector.
(b) Disconnect the A21 center airbag sensor assembly connector.
(c) Measure the resistance.
Standard Resistance

Tester Connection	Specified Condition
H7-8 - A21-13	Below 1 Ω
H7-8 or A21-13 - Body ground	10 kΩ or higher

(d) Reconnect the center airbag sensor assembly connector.
(e) Reconnect the hazard warning signal switch connector.

NG → **REPAIR OR REPLACE HARNESS OR CONNECTOR**

OK

13	CHECK HARNESS AND CONNECTOR (CENTER AIRBAG SENSOR ASSEMBLY - OCCUPANT CLASSIFICATION ECU)

Wire Harness Side:

Center Airbag Sensor Assembly Connector

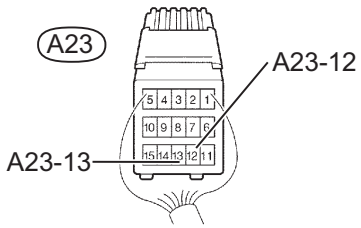

Occupant Classification ECU

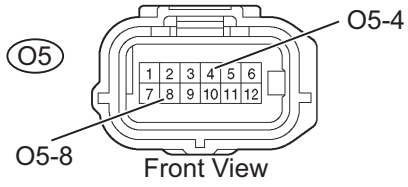

I101317E01

(a) Disconnect the O5 occupant classification ECU connector.
(b) Disconnect the A23 center airbag sensor assembly connector.
(c) Measure the resistance.
Standard Resistance

Tester Connection	Specified Condition
A23-13 - O5-4	Below 1 Ω
A23-12 - O5-8	Below 1 Ω
A23-13 or O5-4 - Body ground	10 kΩ or higher
A23-12 or O5-8 - Body ground	10 kΩ or higher

(d) Reconnect the center airbag sensor assembly connector.
(e) Reconnect the occupant classification ECU connector.

NG → **REPAIR OR REPLACE HARNESS OR CONNECTOR**

OK

14	CHECK HARNESS AND CONNECTOR (OCCUPANT CLASSIFICATION ECU - FRONT SEAT INNER BELT ASSEMBLY)

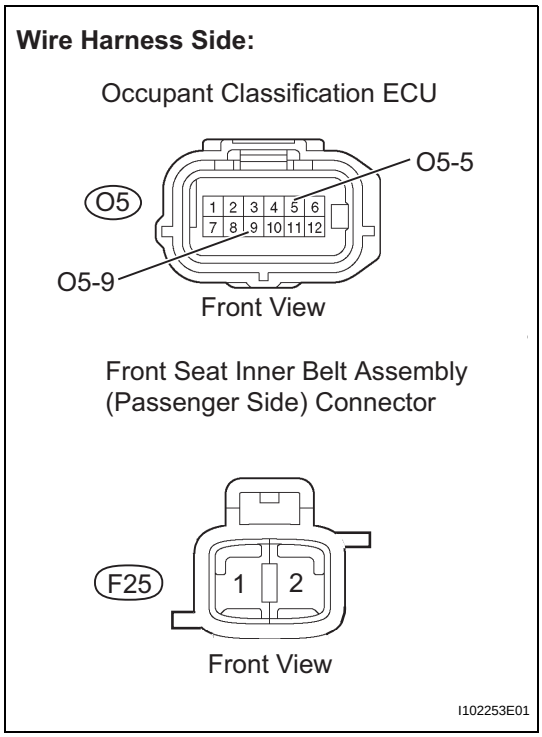

(a) Disconnect the F25 front seat inner belt assembly (passenger side) connector.
(b) Disconnect the O5 occupant classification ECU connector.
(c) Measure the resistance.

Standard Resistance

Tester Connection	Specified Condition
O5-9 - F25-2	Below 1 Ω
O5-5 - F25-1	Below 1 Ω
O5-9 or F25-2 - Body ground	10 kΩ or higher
O5-9 or F25-1 - Body ground	10 kΩ or higher

(d) Reconnect the occupant classification ECU connector.
(e) Reconnect the front seat inner belt assembly (passenger side) connector.

NG → **REPAIR OR REPLACE HARNESS OR CONNECTOR**

OK

15	INSPECT HAZARD WARNING SIGNAL SWITCH

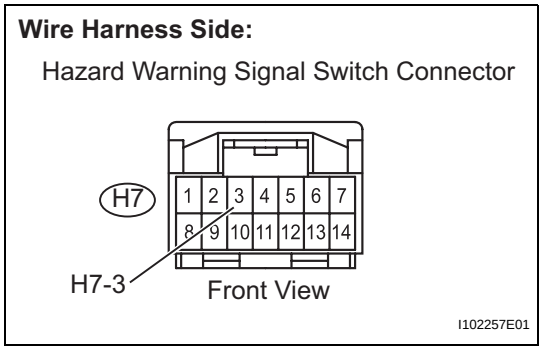

(a) Remove the hazard warning signal switch.
(b) Disconnect the H7 hazard warning signal switch connector.
(c) Measure the voltage.

Standard Voltage

Tester Connection	Condition	Specified Condition
H7-3 - Body ground	Ignition switch ON	10 to 14 V

NG → **REPAIR OR REPLACE HARNESS OR CONNECTOR**

OK

REPLACE HAZARD WARNING SIGNAL SWITCH

Operating Light Control Rheostat does not Change Light Brightness

WIRING DIAGRAM

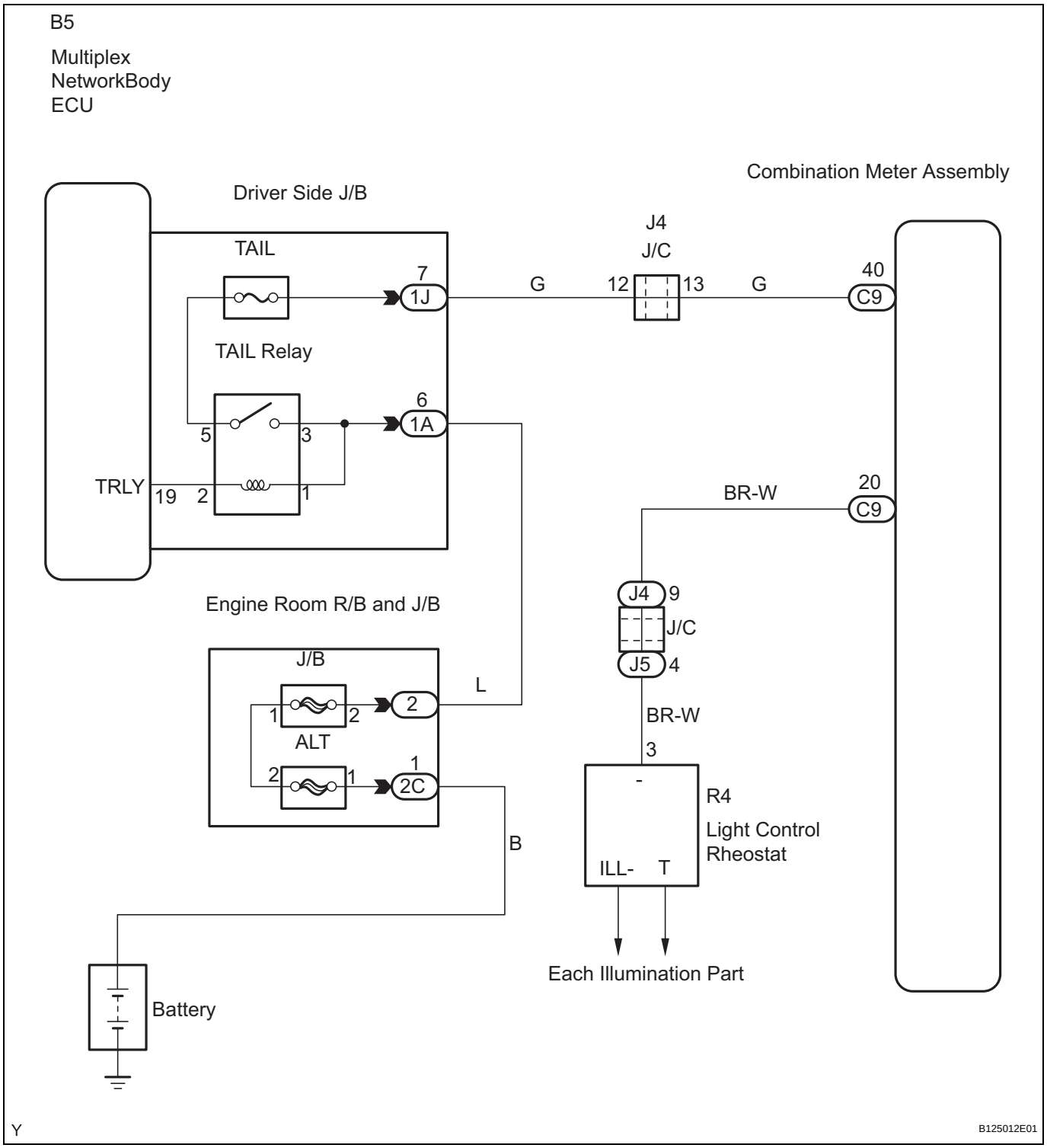

1 INSPECT LIGHT CONTROL RHEOSTAT

Component Side:

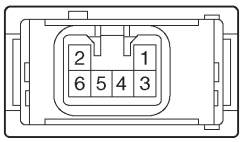

Light Control Rheostat

Y I045521E01

(a) Disconnect the R4 light control rheostat connector.
(b) Check the voltage and resistance.
Standard

Tester Connection	Switch Condition	Specified Condition
4 (T) - Body ground	Ignition switch ON, Taillight switch OFF	Below 1 V
4 (T) - Body ground	Ignition switch ON, Taillight switch ON	10 to 14 V
1 (IG) - Body ground	Ignition switch ON	10 to 14 V
1 (IG) - Body ground	Ignition switch OFF	Below 1 V
3 (-) - Body ground	Always	Below 1 Ω

(c) Reconnect the light control rheostat connector.

NG → **REPLACE LIGHT CONTROL RHEOSTAT**

OK

2 INSPECT COMBINATION METER ASSEMBLY

Combination Meter Connector

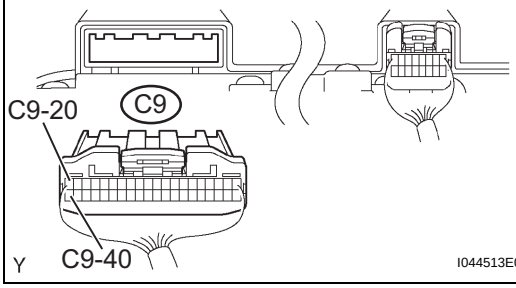

I044513E08

(a) Disconnect the C9 combination meter connector.
(b) Measure the voltage.
Standard voltage

Tester Connection	Condition	Specified Condition
C9-20 - C9-40	Ignition switch ON	10 to 14 V

(c) Reconnect the combination meter connector.

NG → **REPAIR OR REPLACE HARNESS OR CONNECTOR**

OK

REPLACE COMBINATION METER ASSEMBLY

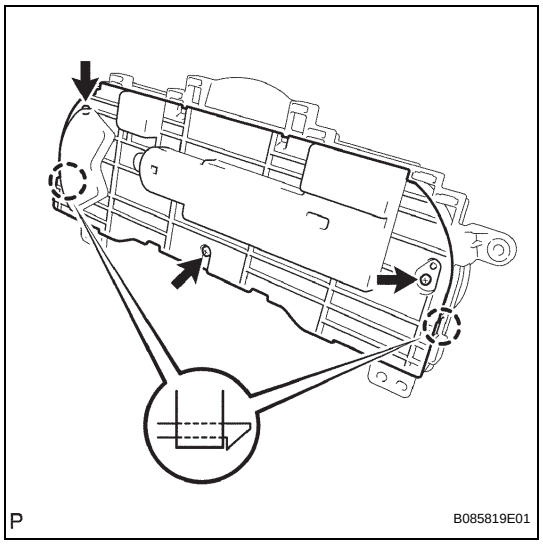

2. **REMOVE BACK COVER**
   (a) Engage the 2 claws and install the back cover.
   (b) Install the 3 screws.

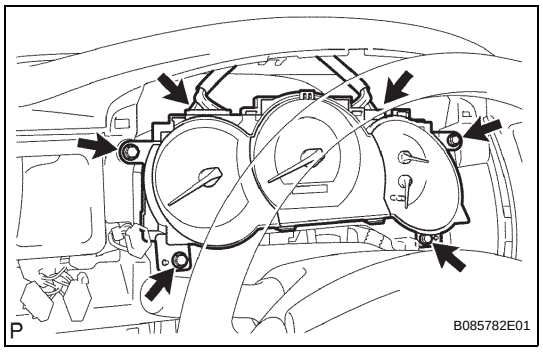

INSTALLATION

1. **INSTALL COMBINATION METER ASSEMBLY**
   (a) Connect the 2 connectors.
   (b) Install the combination meter assembly with the 4 screws.
   Torque: 7.0 N*m (71 kgf*cm, 62 in.*lbf)
2. **INSTALL INSTRUMENT CLUSTER FINISH PANEL SUB-ASSEMBLY (See page IP-21)**
3. **INSTALL LOWER NO. 1 INSTRUMENT PANEL FINISH PANEL (See page IP-22)**
4. **CONNECT HOOD LOCK CONTROL LEVER SUB-ASSEMBLY (See page ED-8)**
5. **INSTALL INSTRUMENT PANEL HOLE COVER (for Lever Type Parking Brake) (See page IP-25)**
6. **INSTALL INSTRUMENT PANEL UNDER TRAY (for Pedal Type Parking Brake) (See page IP-25)**
7. **INSTALL COWL SIDE TRIM BOARD LH (for Regular Cab) (See page IR-52)**
8. **INSTALL COWL SIDE TRIM BOARD LH (for Access Cab) (See page IR-75)**
9. **INSTALL COWL SIDE TRIM BOARD LH (for Double Cab) (See page IR-29)**
10. **INSTALL FRONT DOOR SCUFF PLATE LH (for Regular Cab) (See page IR-52)**
11. **INSTALL FRONT DOOR SCUFF PLATE LH (for Access Cab) (See page IR-75)**
12. **INSTALL FRONT DOOR SCUFF PLATE LH (for Double Cab) (See page IR-29)**
13. **INSTALL FRONT FLOOR FOOTREST (See page IR-1)**
14. **CONNECT CABLE TO NEGATIVE BATTERY TERMINAL**
    Torque: 3.9 N*m (40 kgf*cm, 35 in.*lbf)

Illumination Circuit

DESCRIPTION

Power is supplied to the radio receiver and steering pad switch illumination when the light control switch is in the TAIL or HEAD position.

The intensity of the radio receiver and steering pad switch illumination can be adjusted by the light control rheostat.

WIRING DIAGRAM

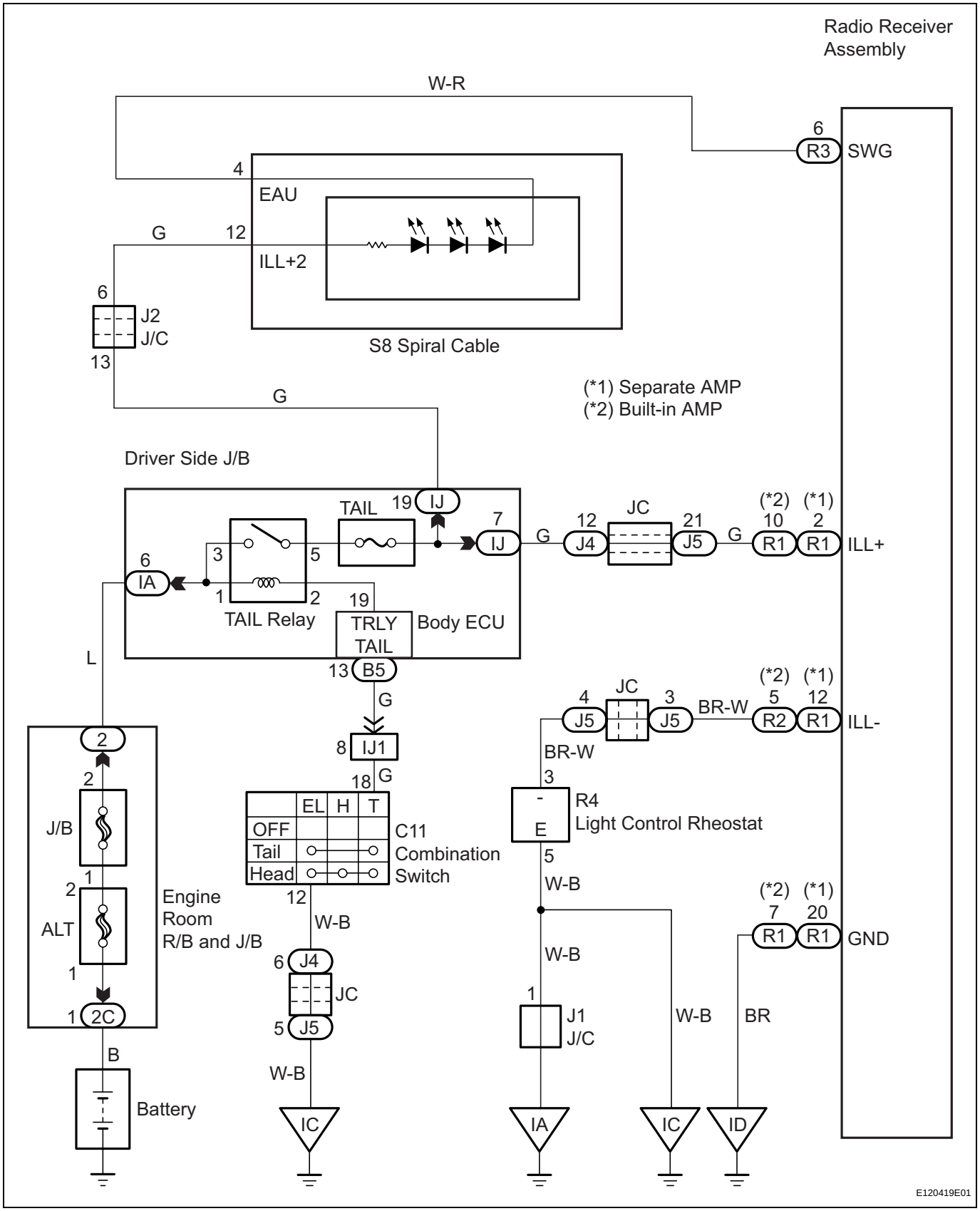

AV

1	SYSTEM CHECK

(a) Turn the light control switch to the TAIL or HEAD position.
Check whether other displays and indicators such as the A/C switch indicator come on.
OK:
Other displays and indicators come on.

NG → **GO TO LIGHTING SYSTEM**

OK

2	CHECK SYMPTOMS

(a) Check the symptom.
(1) Check whether the illumination for the radio receiver assembly or steering pad switch comes on.

Symptom	Proceed To
Illumination for radio receiver assembly does not come on.	A
Illumination for steering pad switch does not come on.	B

B → **Go to step 5**

A

3	CHECK RADIO RECEIVER ASSEMBLY

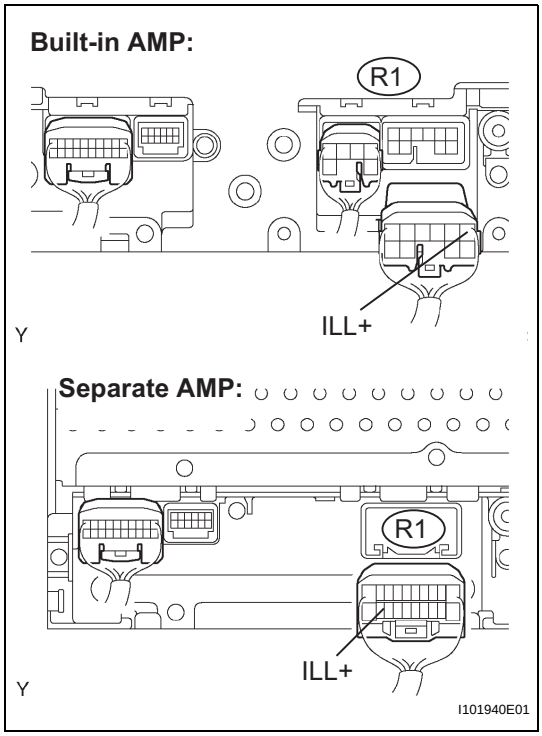

(a) Disconnect the R1 radio receiver assembly connector.
(b) Turn the light control switch to the TAIL or HEAD position.
(c) Measure the voltage.
Standard:
Built-in AMP

Tester Connection	Light control switch TAIL	Specified Condition
ILL+ (R1-10) - Body ground	Light control switch TAIL	10 to 14 V

Standard:
Separate AMP

Tester Connection	Light control switch TAIL	Specified Condition
ILL+ (R1-2) - Body ground	Light control switch TAIL	10 to 14 V

NG → **REPAIR OR REPLACE HARNESS OR CONNECTOR**

OK

4	**CHECK HARNESS AND CONNECTOR (RADIO RECEIVER ASSEMBLY - LIGHT CONTROL RHEOSTAT)**

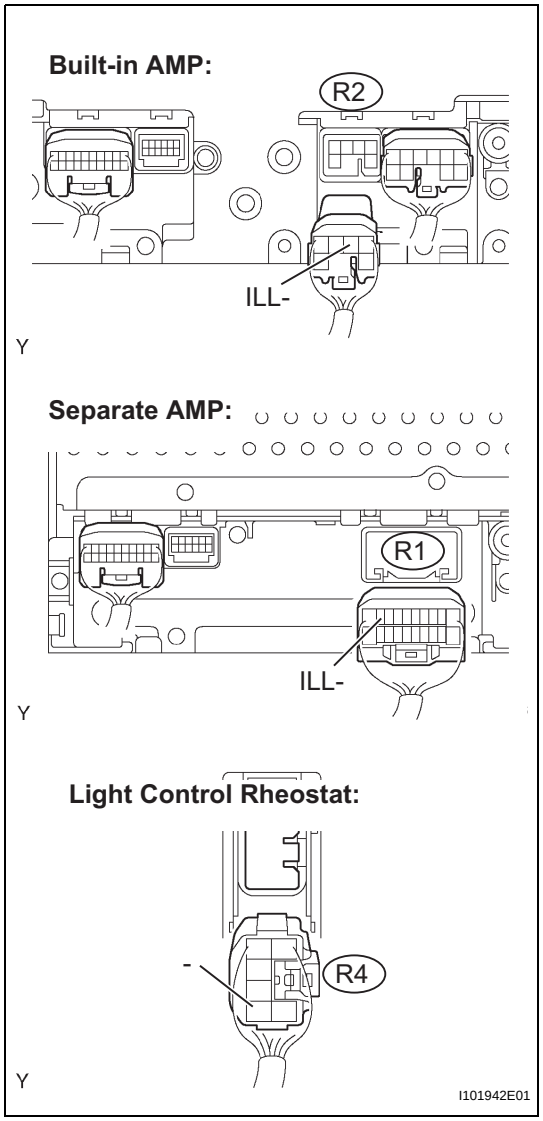

(a) Disconnect the R2 or R1 radio receiver assembly connector and R4 light control rheostat connector.
(b) Measure the resistance.

Standard:
Built-in AMP

Tester Connection	Specified Condition
ILL- (R2-5) - - (R4-3)	Below 1Ω
ILL- (R2-5) - Body ground	10 kΩ or higher

Standard:
Separate AMP

Tester Connection	Specified Condition
ILL- (R1-12) - - (R4-3)	Below 1Ω
ILL- (R1-2) - Body ground	10 kΩ or higher

NG → **REPAIR OR REPLACE HARNESS OR CONNECTOR**

OK

PROCEED TO NEXT CIRCUIT INSPECTION SHOWN IN PROBLEM SYMPTOMS TABLE

5	**INSPECT STEERING PAD SWITCH LH**

AV

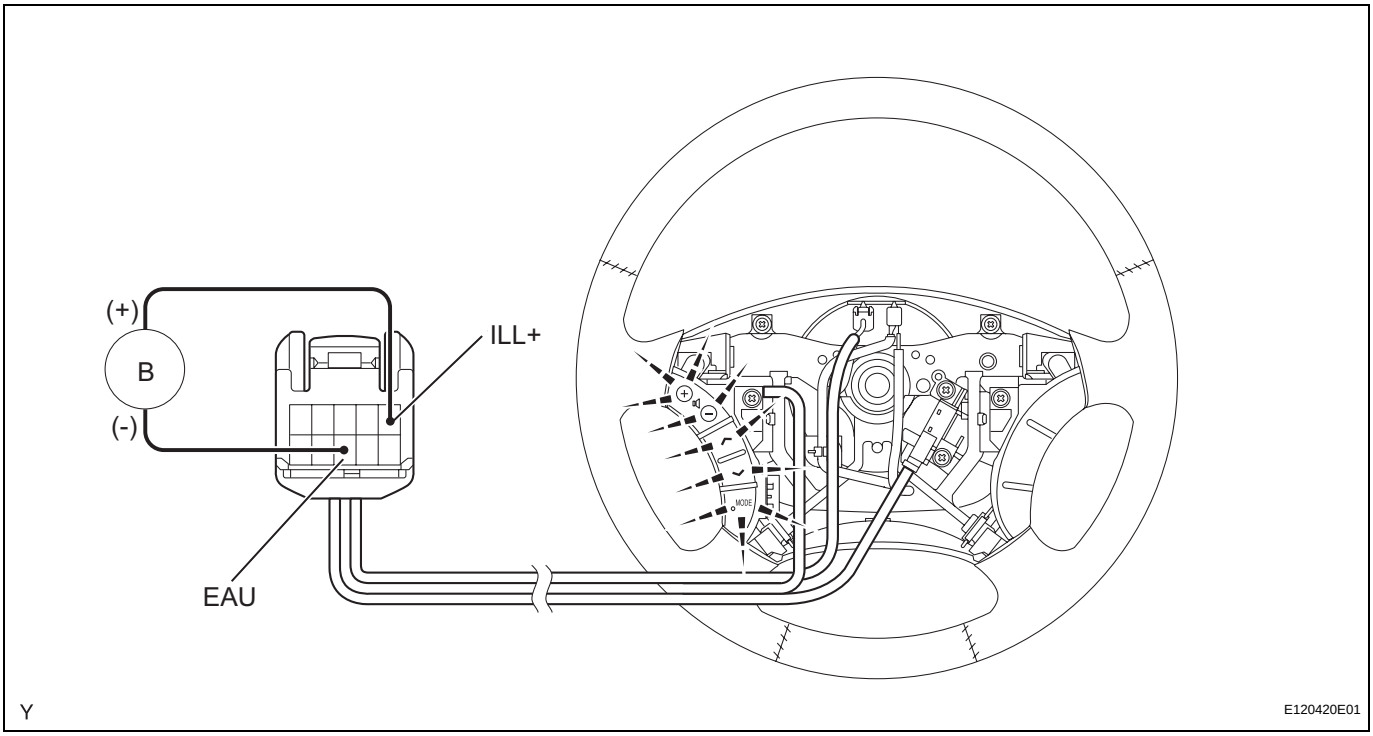

NOTICE:
The vehicle is equipped with the SRS (Supplemental Restraint System) such as airbags. Before servicing (including removal or installation of parts), be sure to read the precautionary notice for the SRS.

(a) Disconnect the steering pad switch assembly connector.
(b) Connect the positive (+) lead to terminal ILL+ and the negative (-) lead to terminal EAU of the steering pad switch assembly connector.
(c) Check the illumination for the steering pad switch assembly.
OK:
Illumination for the steering pad switch assembly comes on.

NG → **REPLACE STEERING PAD SWITCH LH**

OK

6	**CHECK HARNESS AND CONNECTOR (SPIRAL CABLE SUB-ASSEMBLY - RADIO RECEIVER ASSEMBLY)**

Built-in AMP:

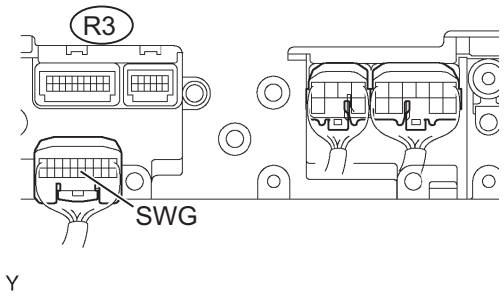

Separate AMP:

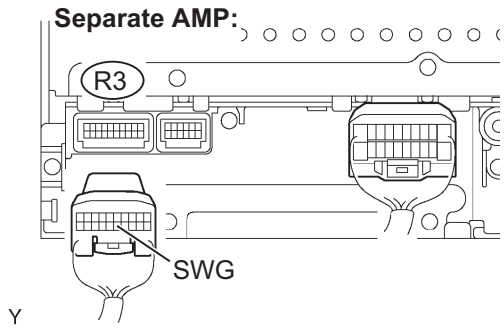

Spiral Cable Side:

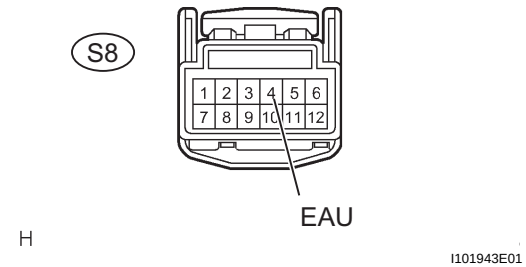

I101943E01

(a) Disconnect the R3 radio receiver assembly connector.
(b) Disconnect the S8 spiral cable sub-assembly connector.
(c) Measure the resistance.

Standard

Tester Connection	Specified Condition
SWG (R3-6) - EAU (S8-4)	Below 1 Ω

NG → **REPAIR OR REPLACE HARNESS OR CONNECTOR**

OK

AV

AV

7	**INSPECT SPIRAL CABLE SUB-ASSEMBLY**

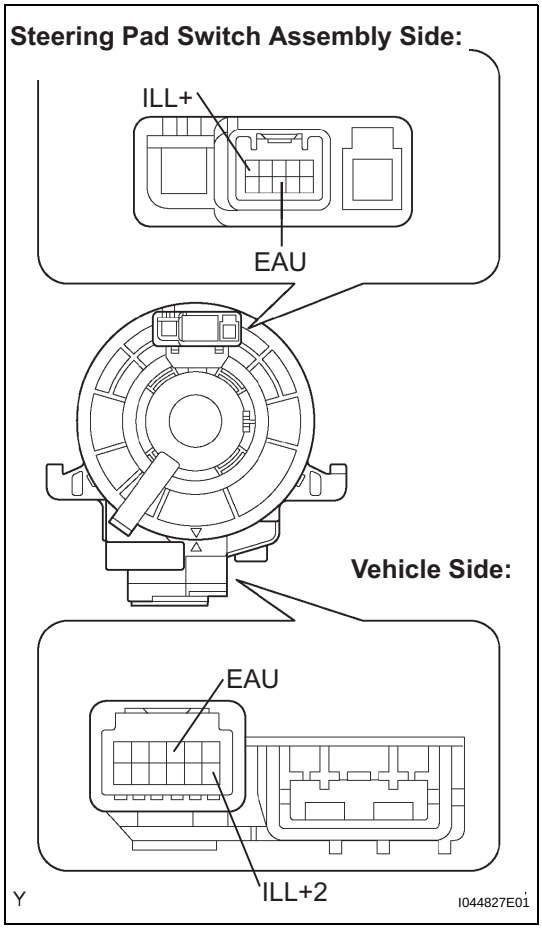

(a) Disconnect the spiral cable sub-assembly connector.
(b) Check the resistance.

Standard

Tester Connection	Specified Condition
EAU - EAU	Below 1 Ω
ILL+ - ILL+2	Below 1 Ω

NG → **REPLACE SPIRAL CABLE SUB-ASSEMBLY**

OK

REPAIR OR REPLACE HARNESS AND CONNECTOR (SPIRAL CABLE SUB-ASSEMBLY - DRIVER SIDE J/B)

Speaker Circuit

DESCRIPTION

Sound signals that have been amplified by the stereo component amplifier or radio receiver assembly (built-in amp) are sent to the speakers from the stereo component amplifier assembly or radio receiver assembly through this circuit.

If there is a short in this circuit, the stereo component amplifier assembly detects it and stops the output to the speakers.

Thus sound cannot be heard from the speakers even if there is no malfunction in the stereo component amplifier assembly or speakers.

AV

WIRING DIAGRAM

Built-in AMP:

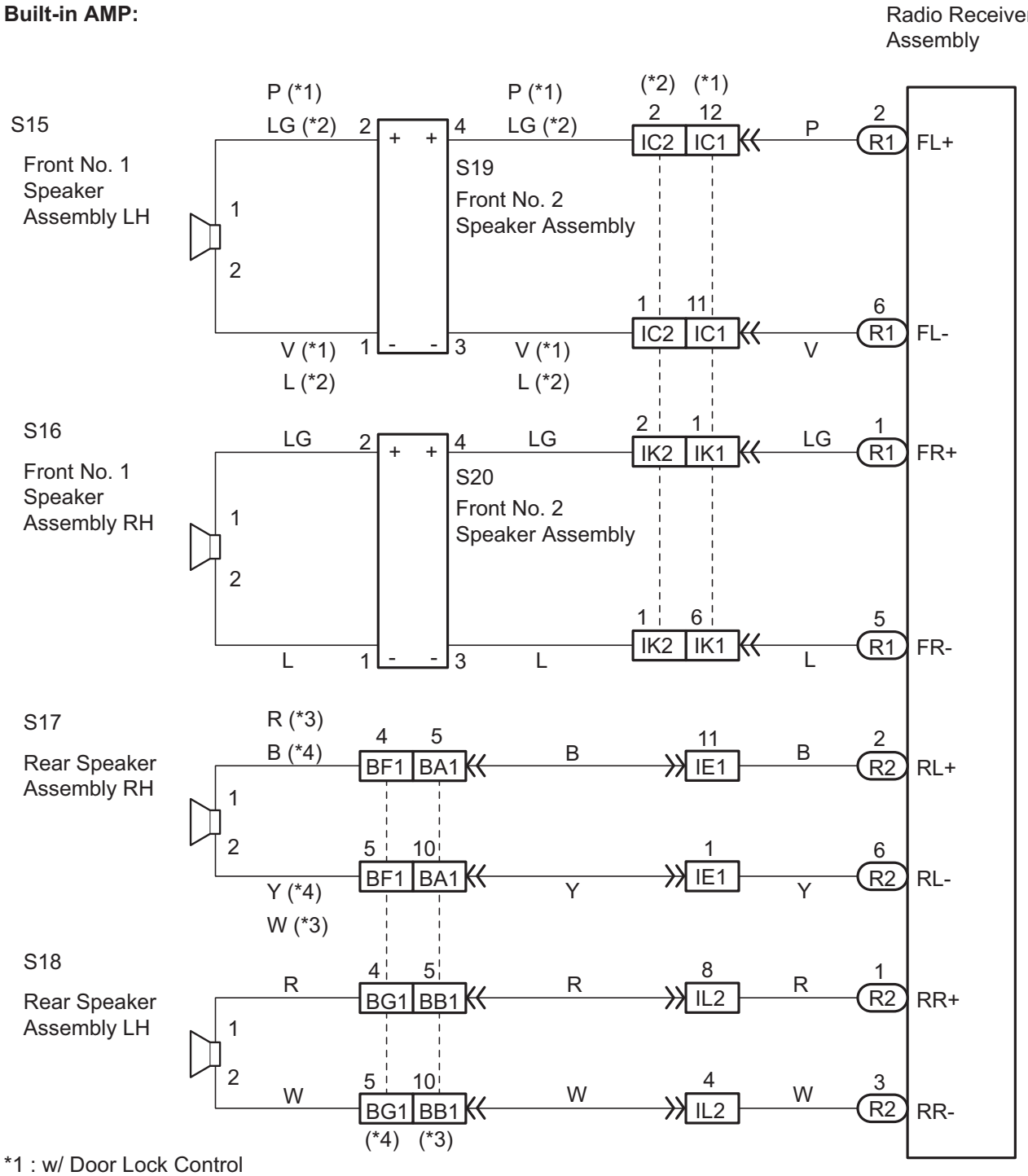

*1 : w/ Door Lock Control
*2 : w/o Door Lock Control
*3 : Double Cab
*4 : Access Cab

Y

E120422E01

AV

Separate AMP:

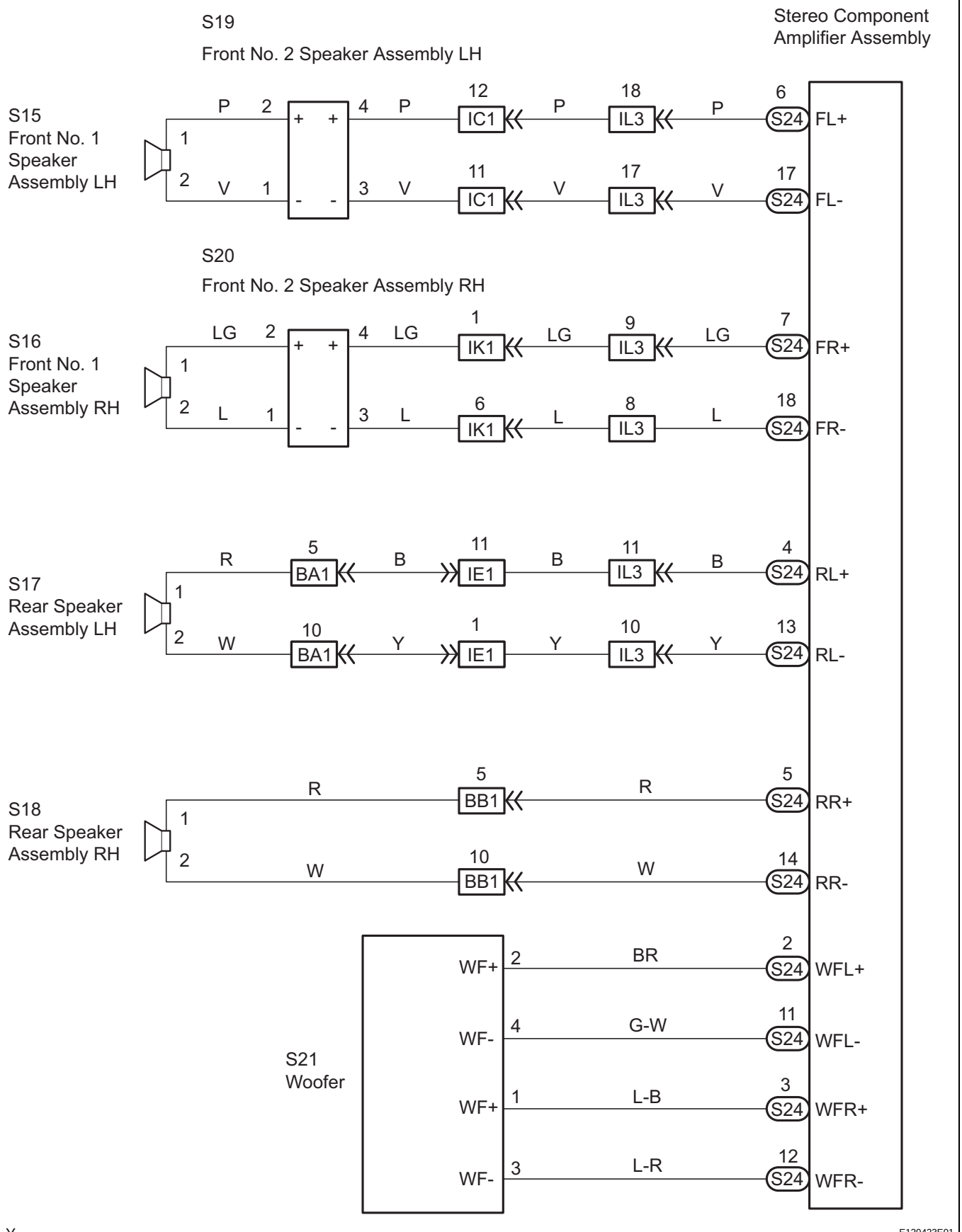

Y

E120423E01

1	SYSTEM CHECK

(a) Check the system.
(1) Check whether the stereo component amplifier assembly is a built-in type or a separate type.

Amplifier Type	Proceed To
Built-in AMP	A
Separate AMP	B

B → **Go to step 6**

A

2	CHECK HARNESS AND CONNECTOR (RADIO RECEIVER ASSEMBLY - SPEAKER ASSEMBLY)

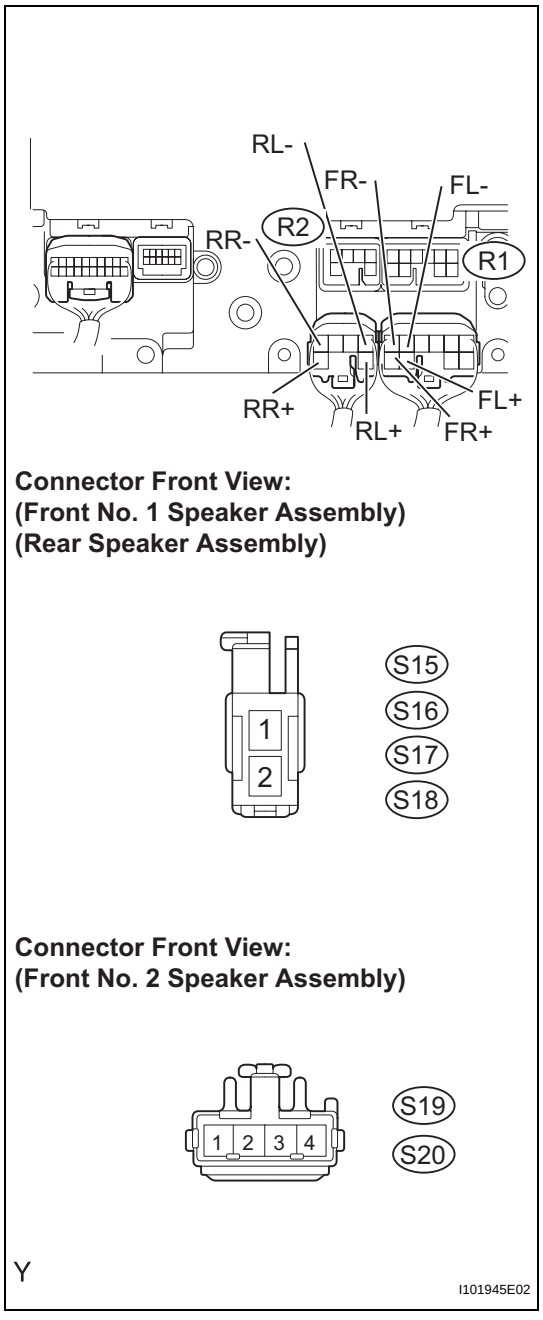

(a) Disconnect the R2 and R1 radio receiver assembly connectors.
(b) Disconnect the speaker connectors.
(c) Check the resistance.

Standard

Tester Connection	Specified Condition
FL+ (R1-2) - S19-4	Below 1Ω
FL- (R1-6) - S19-3	Below 1Ω
FR+ (R1-1) - S20-4	Below 1Ω
FR- (R1-5) - S20-3	Below 1Ω
S19-1 - S15-2	Below 1Ω
S19-2 - S15-1	Below 1Ω
S20-1 - S16-2	Below 1Ω
S20-2 - S16-1	Below 1Ω
RL+ (R2-2) - S17-1	Below 1Ω
RL- (R2-6) - S17-2	Below 1Ω
RR+ (R2-1) - S18-1	Below 1Ω
RR- (R2-3) - S18-2	Below 1Ω
FL+ (R1-2) - Body ground	10 kΩ or higher
FL- (R1-6) - Body ground	10 kΩ or higher
FR+ (R1-1) - Body ground	10 kΩ or higher
FR- (R1-5) - Body ground	10 kΩ or higher
RL+ (R2-2) - Body ground	10 kΩ or higher
RL- (R2-6) - Body ground	10 kΩ or higher
RR+ (R2-1) - Body ground	10 kΩ or higher
RR- (R2-3) - Body ground	10 kΩ or higher

NG → **REPAIR OR REPLACE HARNESS OR CONNECTOR**

OK

3	INSPECT FRONT NO. 1 SPEAKER ASSEMBLY

(a) Measure the resistance between the terminals of the speaker.

NOTICE:
The speaker should not be removed for checking.
Standard:
Approximately 4 Ω

NG → REPLACE FRONT NO. 1 SPEAKER ASSEMBLY

OK

AV

4	INSPECT FRONT NO. 2 SPEAKER ASSEMBLY

(a) Check that the malfunction disappears when another speaker in good condition is installed.
OK:
The malfunction disappears.
HINT:
- Connect all the connectors to the speakers.
- When there is a possibility that either the left or right front speaker is defective, inspect by interchanging the left one and the right one.

NG → REPLACE FRONT NO. 2 SPEAKER ASSEMBLY

OK

5	INSPECT REAR SPEAKER ASSEMBLY

(a) Measure the resistance between the terminals of the speaker.
NOTICE:
The speaker should not be removed for checking.
Standard:
Approximately 4 Ω

NG → REPLACE REAR SPEAKER ASSEMBLY

OK

PROCEED TO NEXT CIRCUIT INSPECTION SHOWN IN PROBLEM SYMPTOMS TABLE

6	**CHECK HARNESS AND CONNECTOR (STEREO COMPONENT AMPLIFIER ASSEMBLY - SPEAKER ASSEMBLY)**

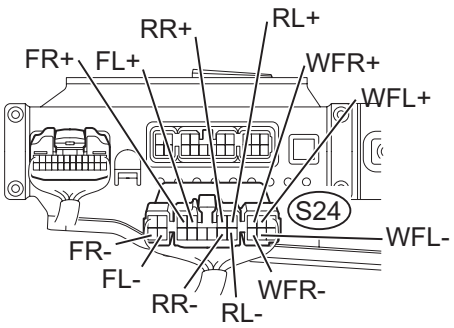

Connector Front View:
(Front No. 1 Speaker Assembly)
(Rear Speaker Assembly)

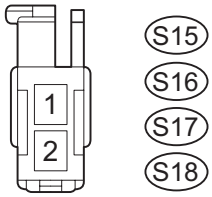

Connector Front View:
(Front No. 2 Speaker Assembly)

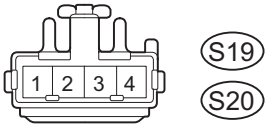

Connector Front View:
(Woofer)

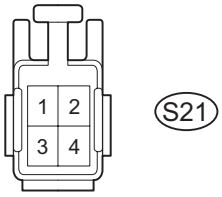

Y

I101946E02

(a) Disconnect the S24 connectors from the stereo component amplifier assembly and speakers.
(b) Measure the resistance.
Standard

Tester Connection	Specified Condition
FL+ (S24-6) - S19-4	Below 1Ω
FL- (S24-17) - S19-3	Below 1Ω
FR+ (S24-7) - S20-4	Below 1Ω
FR- (S24-18) - S20-3	Below 1Ω
S19-1 - S15-2	Below 1Ω
S19-2 - S15-1	Below 1Ω
S20-1 - S16-2	Below 1Ω
S20-2 - S16-1	Below 1Ω
RL+ (S24-4) - S17-1	Below 1Ω
RL- (S24-13) - S17-2	Below 1Ω
RR+ (S24-5) - S18-1	Below 1Ω
RR- (S24-14) - S18-2	Below 1Ω
FL+ (S24-6) - Body ground	10 kΩ or higher
FL- (S24-17) - Body ground	10 kΩ or higher
FR+ (S24-7) - Body ground	10 kΩ or higher
FR- (S24-18) - Body ground	10 kΩ or higher
RL+ (S24-4) - Body ground	10 kΩ or higher
RL- (S24-12) - Body ground	10 kΩ or higher
RR+ (S24-5) - Body ground	10 kΩ or higher
RR- (S24-14) - Body ground	10 kΩ or higher
WFL+ (S24-2) - Body ground	10 kΩ or higher
WFL- (S24-11) - Body ground	10 kΩ or higher
WFR+ (S24-3) - Body ground	10 kΩ or higher
WFR- (S24-12) - Body ground	10 kΩ or higher

NG → **REPAIR OR REPLACE HARNESS AND CONNECTOR**

AV

OK

7	INSPECT FRONT NO. 1 SPEAKER ASSEMBLY

AV

(a) Measure the resistance between the terminals of the speaker.
NOTICE:
The speaker should not be removed for checking.
Standard:
Approximately 4 Ω

NG → **REPLACE FRONT NO. 1 SPEAKER ASSEMBLY**

OK

8	INSPECT FRONT NO. 2 SPEAKER ASSEMBLY

(a) Check that the malfunction disappears when another speaker in good condition is installed.
OK:
The malfunction disappears.
HINT:
- Connect all the connectors to the speakers.
- When there is a possibility that either the left or right front speaker is defective, inspect by interchanging the left one and the right one.

NG → **REPLACE FRONT NO. 2 SPEAKER ASSEMBLY**

OK

9	INSPECT REAR SPEAKER ASSEMBLY

(a) Measure the resistance between the terminals of the speaker.
NOTICE:
The speaker should not be removed for checking.
Standard:
Approximately 4 Ω

NG → **REPLACE REAR SPEAKER ASSEMBLY**

OK

10	**INSPECT NO. 1 SPEAKER ASSEMBLY WITH BOX**

Woofer:

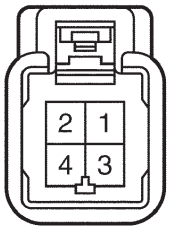

P I040660E01

(a) Measure the resistance.
NOTICE:
The speaker should not be removed for checking.
Standard

Tester Connection	Specified Condition
1 - 3	2 Ω
2 - 4	2 Ω

NG → **REPLACE NO. 1 SPEAKER ASSEMBLY WITH BOX**

OK

PROCEED TO NEXT CIRCUIT INSPECTION SHOWN IN PROBLEM SYMPTOMS TABLE

AV

AMP Mute Signal Circuit (from Radio Receiver Assembly)

DESCRIPTION

This circuit sends a signal to the stereo component amplifier to mute the noise. Because of that, the noise produced while changing the sound source ceases.

AV

If there is an open in the circuit, noise can be heard from the speaker when changing the sound source.
If there is a short in the circuit, even though the stereo component amplifier assembly is normal, no sound or only extremely quiet sound is produced.

WIRING DIAGRAM

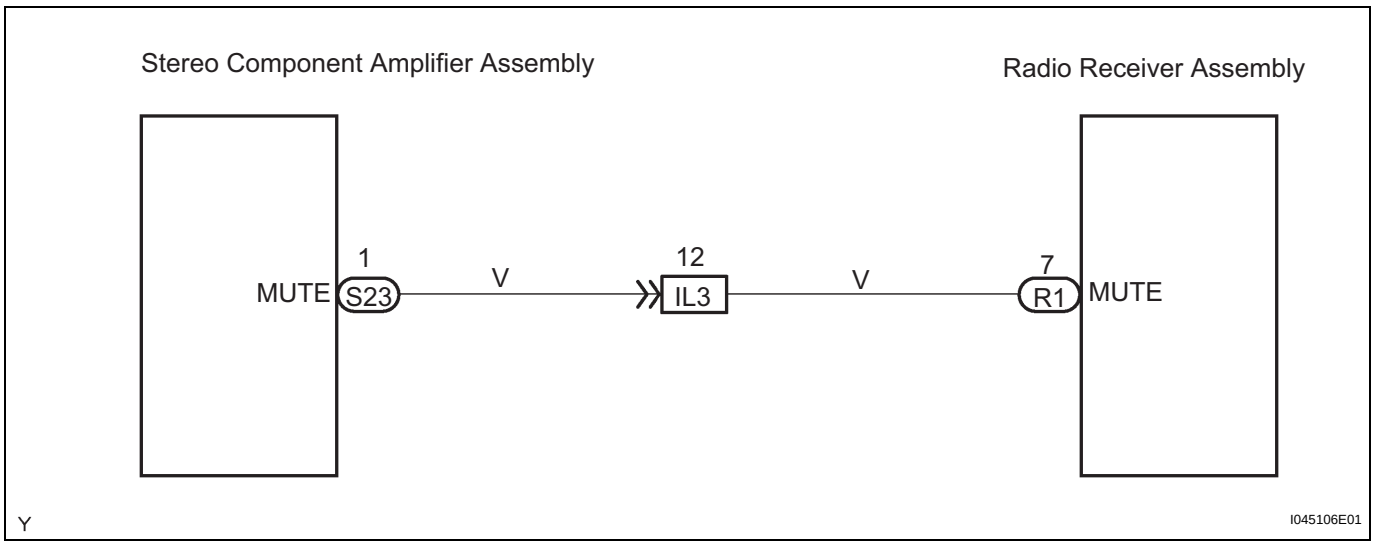

1	INSPECT STEREO COMPONENT AMPLIFIER ASSEMBLY

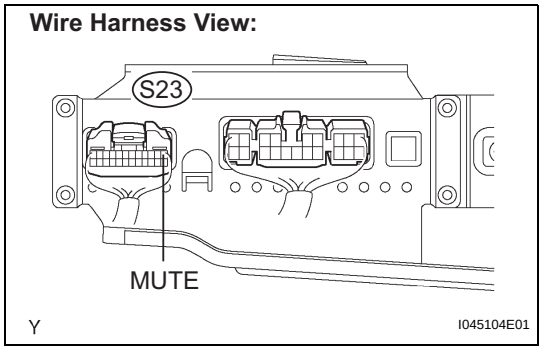

(a) Measure the voltage.
Standard

Tester Connection	Condition	Specified Condition
MUTE (S23-1) - Body ground	Turn ignition switch to ACC, Audio system is playing → Changing	Above 3.5 V → Below 1 V

OK → **PROCEED TO NEXT CIRCUIT INSPECTION SHOWN IN PROBLEM SYMPTOMS TABLE**

NG

2	CHECK HARNESS AND CONNECTOR (RADIO RECEIVER - STEREO COMPONENT AMPLIFIER)

Radio Receiver Assembly Wire Harness View:

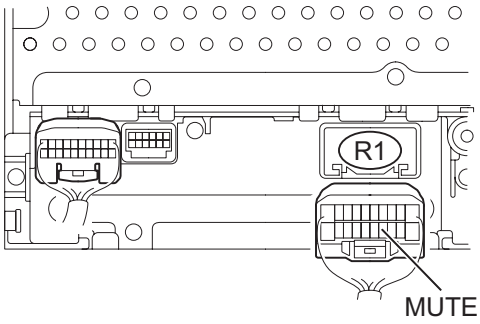

Stereo Component Amplifier Assembly Wire Harness View:

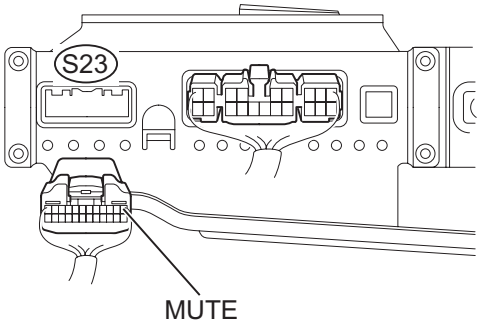

Y

I101944E02

(a) Disconnect the R1 radio receiver assembly connector and S23 stereo component amplifier assembly connector.
(b) Check the resistance.

Standard

Tester Connection	Condition	Specified Condition
MUTE (R1-7) - MUTE (S23-1)	Always	Below 1Ω
MUTE (R1-7) - Body ground	Always	10 kΩ or higher

NG → **REPAIR OR REPLACE HARNESS OR CONNECTOR**

OK

3	INSPECT RADIO RECEIVER ASSEMBLY

Wire Harness View:

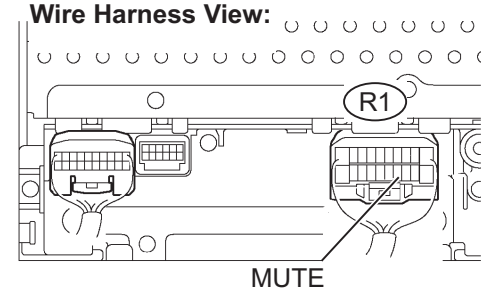

Y

I045113E01

(a) Reconnect the R1 stereo component amplifier assembly connector.
(b) Turn the ignition switch to the ACC position.
(c) Measure the voltage.

Standard

Tester Connection	Condition	Specified Condition
MUTE (R1-7) - Body ground	Turn ignition switch to ACC	3.5 V or higher

NG → **REPAIR OR REPLACE STEREO COMPONENT AMPLIFIER ASSEMBLY**

OK

REPLACE RADIO RECEIVER ASSEMBLY

AMP Sound Signal Circuit

DESCRIPTION

The radio receiver assembly sends sound signals to the stereo component amplifier assembly through this circuit. Sound signals that have been sent are amplified by the stereo component amplifier assembly, and then sent to the speakers.

If there is an open or short in the circuit, sound cannot be heard from the speakers even if there is no malfunction in the stereo component amplifier assembly or speakers.

WIRING DIAGRAM

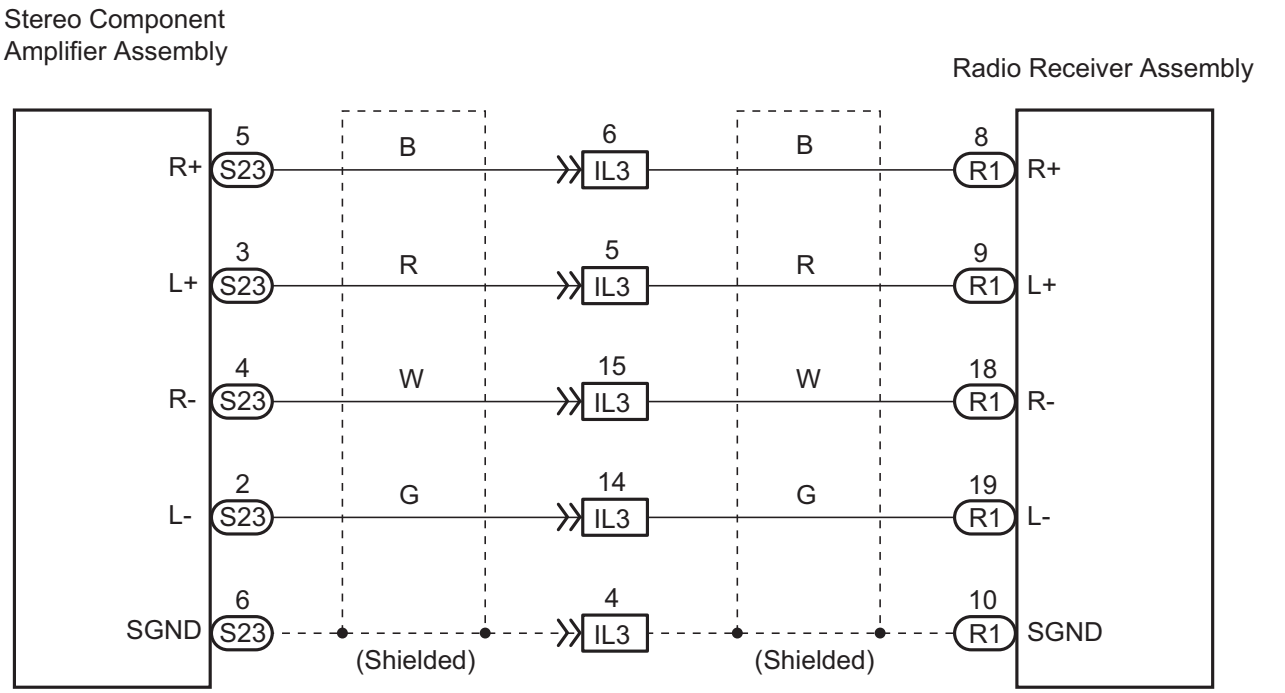

Y

E120424E01

1	CHECK HARNESS AND CONNECTOR (RADIO RECEIVER - STEREO COMPONENT AMPLIFIER)

Radio Receiver Assembly Wire Harness View:

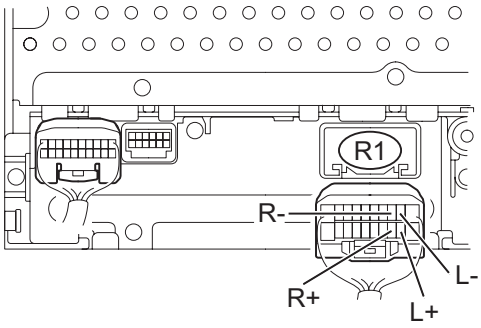

Stereo Component Amplifier Assembly Wire Harness View:

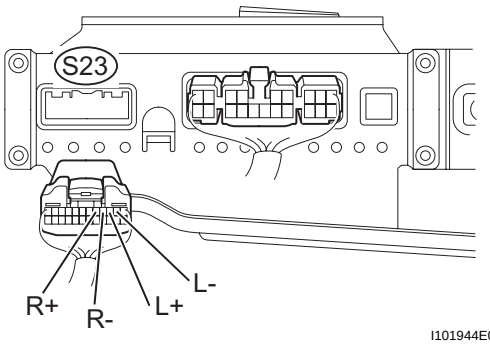

(a) Disconnect the R1 radio receiver assembly connector and S23 stereo component amplifier assembly connector.

(b) Check the resistance.

Standard

Tester Connection	Specified Condition
L+ (S23-3) - L+ (R1-9)	Below 1 Ω
L- (S23-2) - L- (R1-19)	Below 1 Ω
R+ (S23-5) - R+ (R1-8)	Below 1 Ω
R- (S23-4) - R- (R1-18)	Below 1 Ω
L+ (S23-3) - Body ground	10 kΩ or higher
L- (S23-2) - Body ground	10 kΩ or higher
R+ (S23-5) - Body ground	10 kΩ or higher
R- (S23-4) - Body ground	10 kΩ or higher

NG → **REPAIR OR REPLACE HARNESS OR CONNECTOR**

OK

PROCEED TO NEXT CIRCUIT INSPECTION SHOWN IN PROBLEM SYMPTOMS TABLE

Sound Signal Circuit between Radio Receiver and Stereo Component Amplifier

DESCRIPTION

AV

The radio receiver assembly sends sound signals to the stereo component amplifier assembly through this circuit.
Sound signals that have been sent are amplified by the stereo component amplifier assembly, and then sent to the speakers.
If there is an open or short in the circuit, sound cannot be heard from the speakers even if there is no malfunction in the stereo component amplifier assembly or speakers.

WIRING DIAGRAM

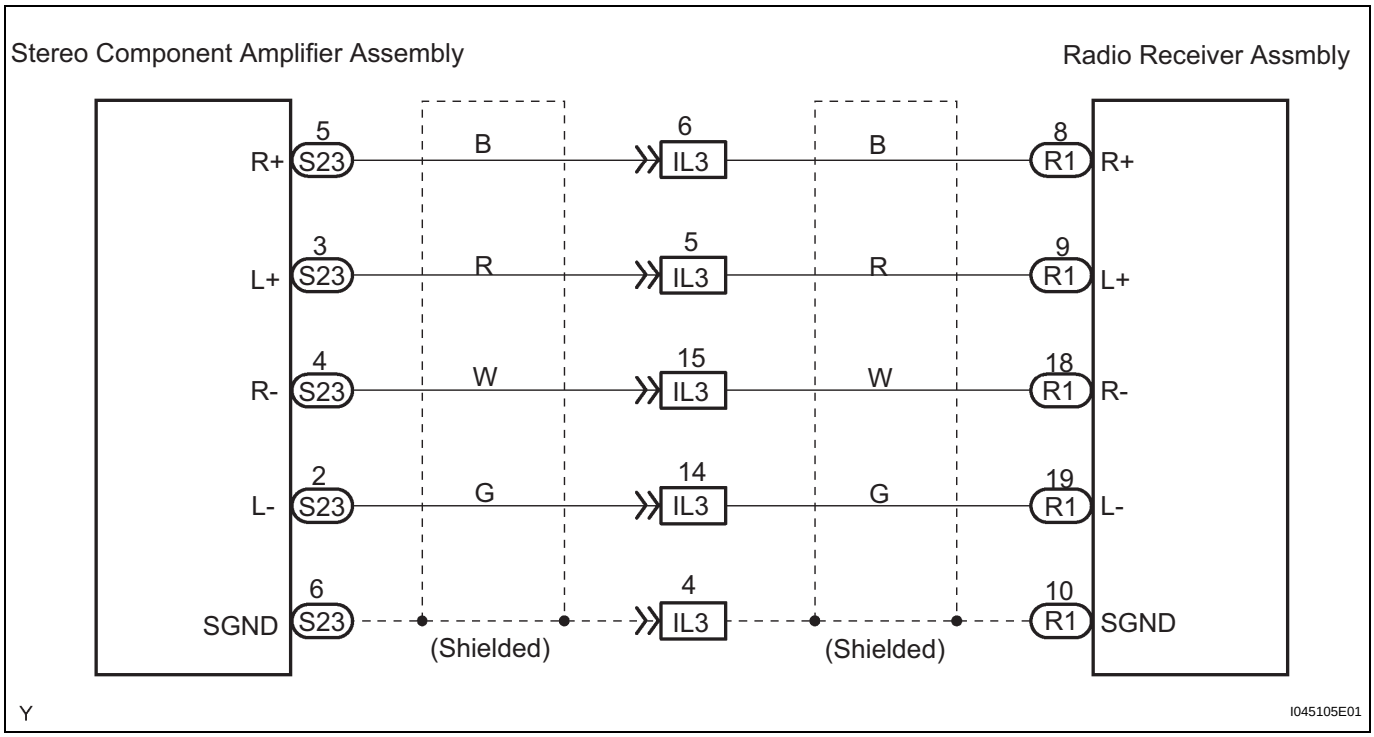

1	CHECK HARNESS AND CONNECTOR

Radio Receiver Assembly Wire Harness View:

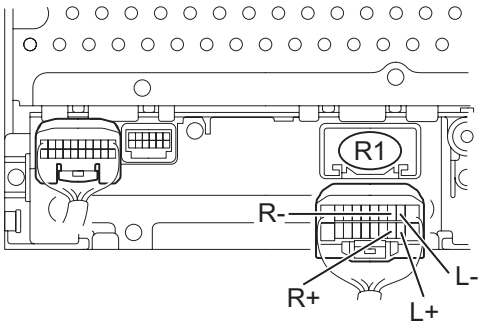

Stereo Component Amplifier Assembly Wire Harness View:

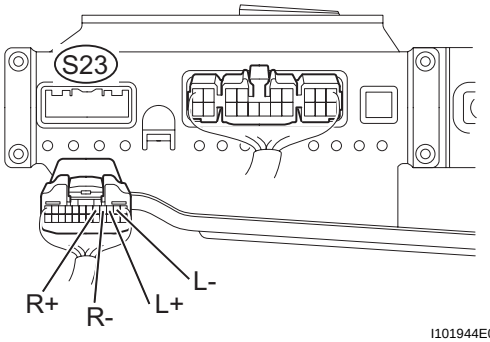

(a) Disconnect the R1 radio receiver assembly connector and S23 stereo component amplifier assembly connector.

(b) Check the resistance.

Standard resistance

Tester Connection	Specified Condition
L+ (S23-3) - L+ (R1-9)	Below 1 Ω
L- (S23-2) - L- (R1-19)	Below 1 Ω
R+ (S23-5) - R+ (R1-8)	Below 1 Ω
R- (S23-4) - R- (R1-18)	Below 1 Ω
L+ (S23-3) - Body ground	10 kΩ or higher
L- (S23-2) - Body ground	10 kΩ or higher
R+ (S23-5) - Body ground	10 kΩ or higher
R- (S23-4) - Body ground	10 kΩ or higher

NG → **REPAIR OR REPLACE HARNESS OR CONNECTOR**

OK

PROCEED TO NEXT CIRCUIT INSPECTION SHOWN IN PROBLEM SYMPTOMS TABLE

AVC-LAN Circuit

DESCRIPTION

All audio system units that are connected to the AVC-LAN (communication bus) use it as the communication line by which they transmit switch signals.

AV

When a +B short or GND short occurs in the AVC- LAN, the audio system fails to function normally, due to the discontinuation of communication.

In the AVC-LAN, the radio receiver assembly is the main communication center and has the correct resistance necessary for transmitting communication signals.

WIRING DIAGRAM

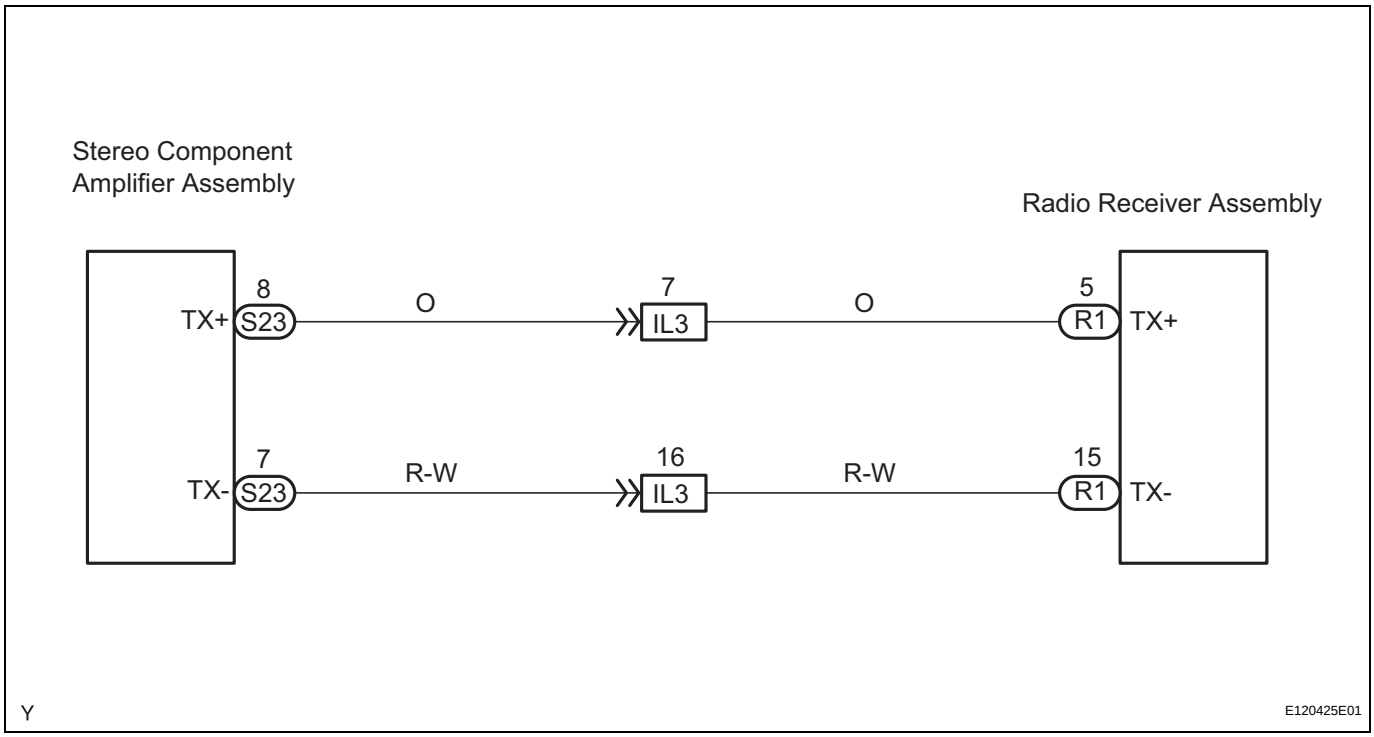

1	INSPECT RADIO RECEIVER ASSEMBLY

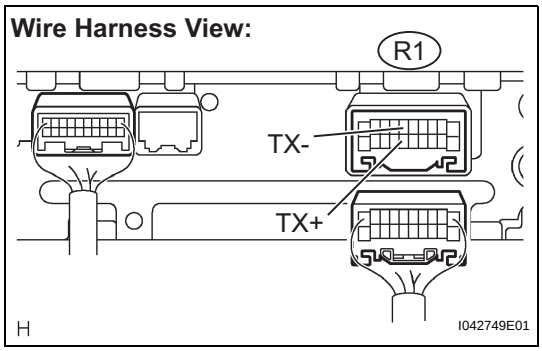

(a) Disconnect the R1 radio receiver assembly connector.

(b) Measure the resistance.

Standard

Tester Connection	Condition	Specified Condition
TX+ (R1-5) - TX (R1-15)	Always	60 to 80 Ω

NG → **REPLACE RADIO RECEIVER ASSEMBLY**

OK

2	CHECK HARNESS AND CONNECTOR (RADIO RECEIVER - STEREO COMPONENT AMPLIFIER)

Radio Receiver Assembly Wire Harness View:

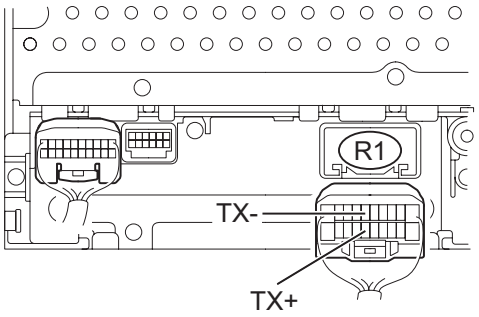

Stereo Component Amplifier Assembly Wire Harness View:

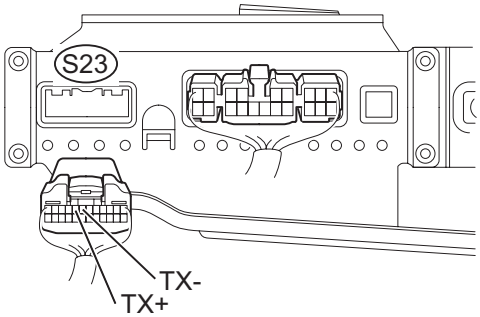

Y I101944E04

(a) Disconnect the R1 radio receiver assembly connector and S23 stereo component amplifier assembly connector.

(b) Check the resistance.

Standard

Tester Connection	Specified Condition
TX+ (S23-8) - TX+ (R1-15)	Below 1 Ω
TX+ (S23-7) - TX- (R1-15)	Below 1 Ω
TX+ (R1-5) - Body ground	10 kΩ or higher
TX+ (R1-5) - Body ground	10 kΩ or higher

NG → **REPAIR OR REPLACE HARNESS OR CONNECTOR**

OK

3	REPLACE STEREO COMPONENT AMPLIFIER ASSEMBLY

NG → **REPLACE RADIO RECEIVER ASSEMBLY**

OK

END

Radio Receiver Power Source Circuit

DESCRIPTION

This circuit provides power to the radio receiver assembly.

AV

WIRING DIAGRAM

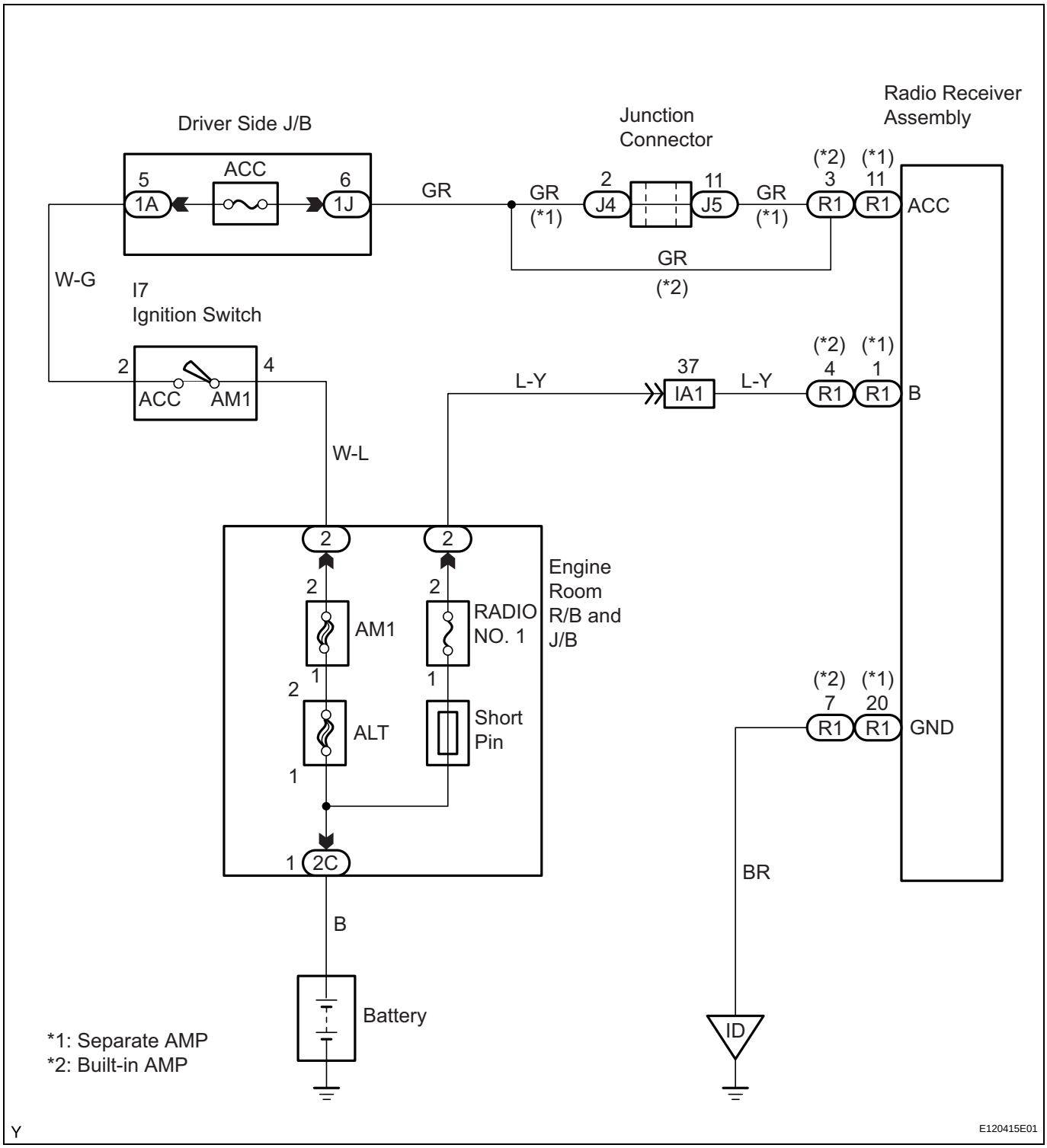

1	INSPECT RADIO RECEIVER ASSEMBLY

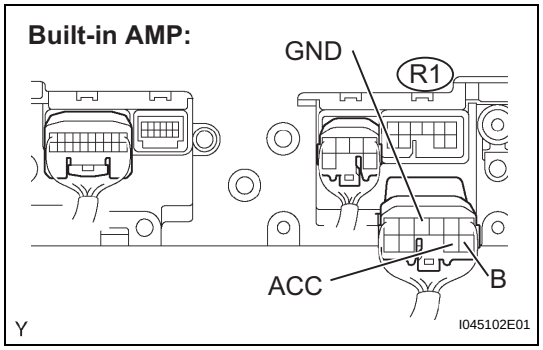

(a) Check the resistance.

Standard:

Built-in AMP

Tester Connection	Condition	Specified Condition
GND (R1-7) - Body ground	Constant	Below 1Ω

Standard:

Separate AMP

Tester Connection	Condition	Specified Condition
GND (R1-20) - Body ground	Constant	Below 1Ω

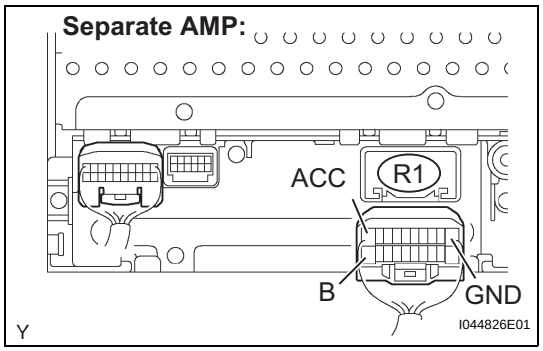

(b) Turn the ignition switch to the ACC position.

(c) Measure the voltage.

Standard:

Built-in AMP

Tester Connection	Condition	Specified Condition
B (R1-4) - GND (R1-7)	Constant	10 to 14 V
ACC (R1-3) - GND (R1-7)	Ignition switch ACC or ON	10 to 14 V

Standard:

Separate AMP

Tester Connection	Condition	Specified Condition
B (R1-1) - GND (R1-20)	Constant	Below 1Ω
ACC (R1-11) - GND (R1-20)	Ignition switch ACC or ON	10 to 14 V

NG → **REPAIR OR REPLACE HARNESS OR CONNECTOR**

OK

PROCEED TO NEXT CIRCUIT INSPECTION SHOWN IN PROBLEM SYMPTOMS TABLE

Stereo Component Amplifier Power Source Circuit

DESCRIPTION

This circuit provides power to the stereo component amplifier assembly.

AV

WIRING DIAGRAM

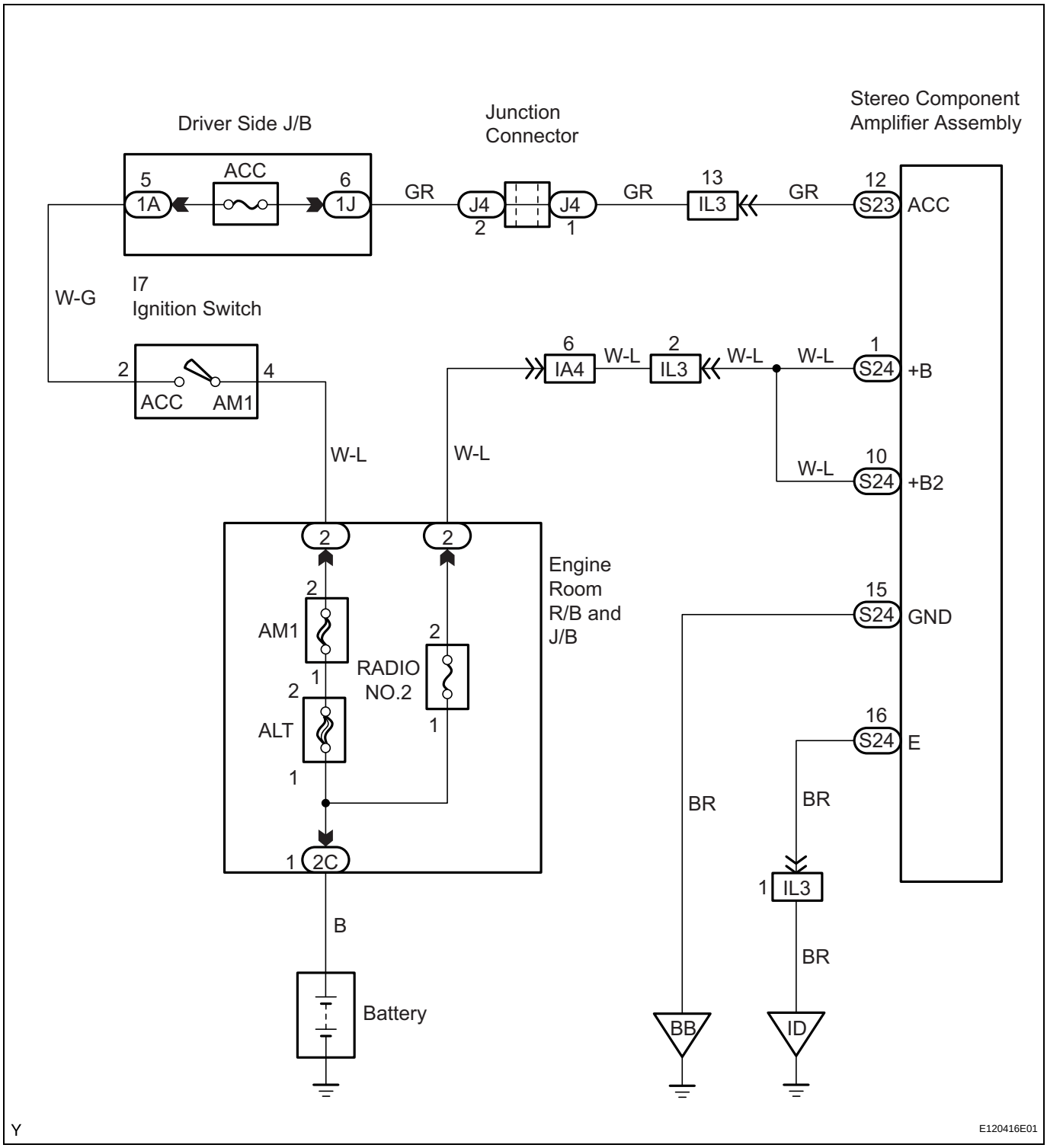

1	INSPECT STEREO COMPONENT AMPLIFIER ASSEMBLY

Wire Harness View:

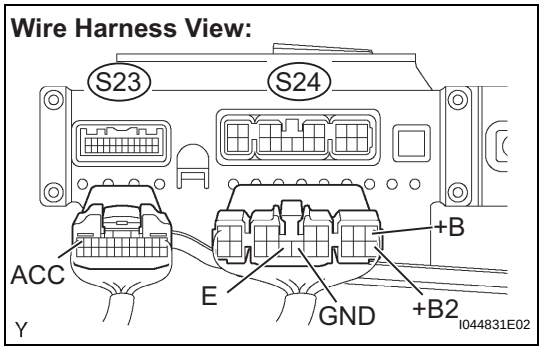

(a) Disconnect the S23 and S24 stereo component amplifier assembly connectors.

(b) Check the resistance.

Standard

Tester Connection	Condition	Specified Condition
E (S24-16) - Body ground	Always	Below 1 Ω
GND (S24-15) - Body ground	Always	Below 1 Ω

(c) Turn the ignition switch to the ACC position.

(d) Measure the voltage.

Standard

Tester Connection	Condition	Specified Condition
B+ (S24-1) - GND (S24-15)	Always	10 to 14 V
+B2 (S24-10) - GND (S24-15)	Always	10 to 14 V
ACC (S23-12) - GND (S24-15)	Ignition switch ACC	10 to 14 V

NG → **REPAIR OR REPLACE HARNESS OR CONNECTOR (STEREO COMPONENT AMPLIFIER ASSEMBLY - BATTERY OR BODY GROUND)**

OK

PROCEED TO NEXT CIRCUIT INSPECTION SHOWN IN PROBLEM SYMPTOMS TABLE

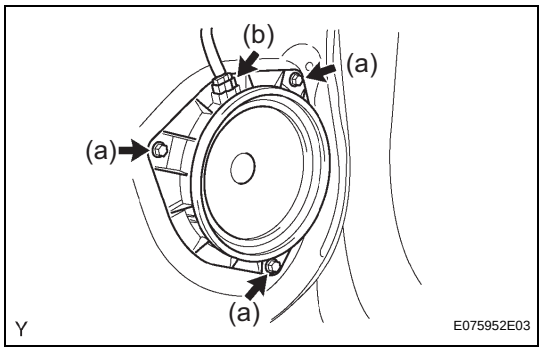

INSTALLATION

HINT:

- Use the same procedures for the RH and LH sides.
- The procedures listed below are for the LH side.

1. **INSTALL FRONT NO. 1 SPEAKER ASSEMBLY**
   (a) Install the front No. 1 speaker assembly with the 3 screws.
   (b) Connect the connector.
2. **INSTALL FRONT DOOR TRIM PANEL ASSEMBLY LH (See page ED-48)**
3. **INSTALL FRONT DOOR LOWER FRAME BRACKET GARNISH LH (See page ED-49)**
4. **INSTALL FRONT DOOR WINDOW REGULATOR HANDLE ASSEMBLY (See page ED-49)**
5. **CONNECT CABLE TO NEGATIVE BATTERY TERMINAL**
   Torque: 3.9 N*m (40 kgf*cm, 35 in.*lbf)

REMOVAL

HINT:

- Use the same procedures for the RH and LH sides.
- The procedures listed below are for the LH side.

1. **DISCONNECT CABLE FROM NEGATIVE BATTERY TERMINAL**
2. **REMOVE FRONT DOOR WINDOW REGULATOR HANDLE ASSEMBLY (w/o Power Door Lock) (See page ED-34)**
3. **REMOVE POWER WINDOW REGULATOR MASTER SWITCH ASSEMBLY (w/ Power Door Lock) (See page ED-13)**
4. **REMOVE FRONT DOOR LOWER FRAME BRACKET GARNISH LH (See page ED-34)**
5. **REMOVE FRONT DOOR TRIM PANEL ASSEMBLY LH (See page ED-35)**
6. **REMOVE FRONT NO. 1 SPEAKER ASSEMBLY**
   (a) Disconnect the connector.
   (b) Remove the 4 screws and the front No. 1 speaker assembly.

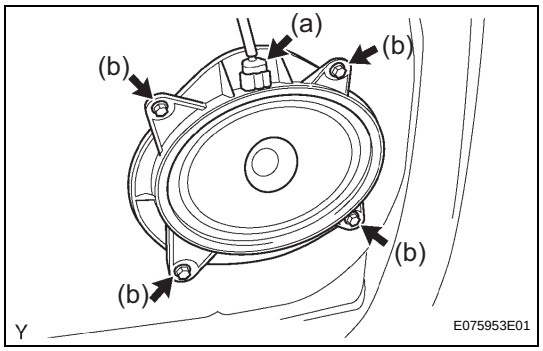

AV

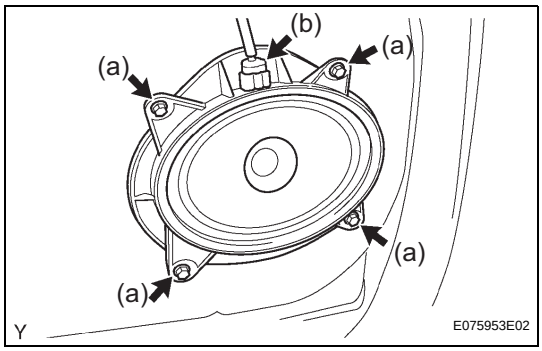

INSTALLATION

HINT:

- Use the same procedures for the RH and LH sides.
- The procedures listed below are for the LH side.

1. **INSTALL FRONT NO. 1 SPEAKER ASSEMBLY**
   (a) Install the front No. 1 speaker assembly with the 4 screws.
   (b) Connect the connector.
2. **INSTALL FRONT DOOR TRIM PANEL ASSEMBLY LH (See page ED-48)**
3. **INSTALL FRONT DOOR LOWER FRAME BRACKET GARNISH LH (See page ED-49)**
4. **INSTALL POWER WINDOW REGULATOR MASTER SWITCH ASSEMBLY (w/ Power Door Lock) (See page ED-30)**
5. **INSTALL FRONT DOOR WINDOW REGULATOR HANDLE ASSEMBLY (w/o Power Door Lock) (See page ED-49)**
6. **CONNECT CABLE TO NEGATIVE BATTERY TERMINAL**
   Torque: 3.9 N*m (40 kgf*cm, 35 in.*lbf)

REMOVAL

HINT:

- Use the same procedures for the RH and LH sides.
- The procedures listed below are for the LH side.

1. **DISCONNECT CABLE FROM NEGATIVE BATTERY TERMINAL**
2. **REMOVE FRONT DOOR WINDOW REGULATOR HANDLE ASSEMBLY (w/o Power Door Lock) (See page ED-34)**
3. **REMOVE POWER WINDOW REGULATOR MASTER SWITCH ASSEMBLY (w/ Power Door Lock) (See page ED-13)**
4. **REMOVE FRONT DOOR LOWER FRAME BRACKET GARNISH LH (See page ED-34)**
5. **REMOVE FRONT DOOR TRIM PANEL ASSEMBLY LH (See page ED-35)**
6. **REMOVE FRONT NO. 2 SPEAKER ASSEMBLY**
   (a) Disconnect the connector.
   (b) Remove the 2 bolts.

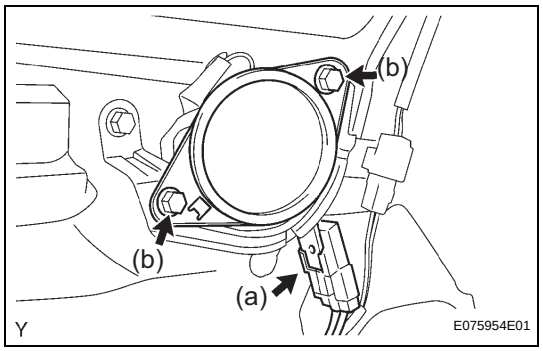

   (c) Disengage the claw and remove the front No. 2 speaker assembly.

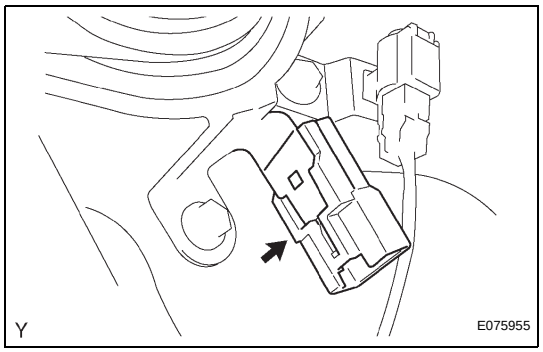

AV

INSTALLATION

HINT:

- Use the same procedures for the RH and LH sides.
- The procedures listed below are for the LH side.

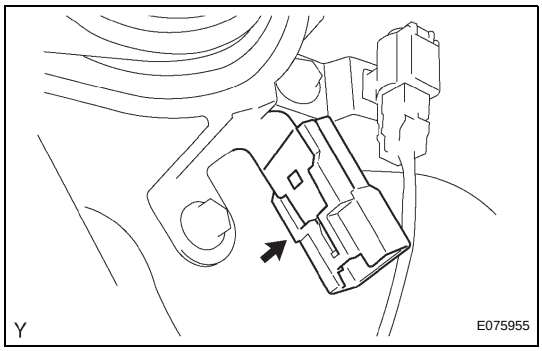

1. INSTALL FRONT NO. 2 SPEAKER ASSEMBLY

(a) Engage the claw.

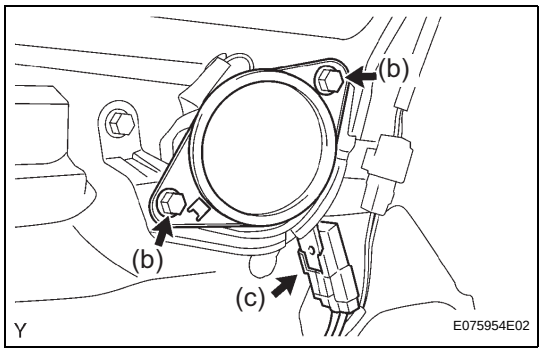

(b) Install the front No. 2 speaker assembly with the 2 bolts.
Torque: 8.4 N*m (85 kgf*cm, 74 in.*lbf)

(c) Connect the connector.

2. INSTALL FRONT DOOR TRIM PANEL ASSEMBLY LH (See page ED-48)

3. INSTALL FRONT DOOR LOWER FRAME BRACKET GARNISH LH (See page ED-49)

4. INSTALL POWER WINDOW REGULATOR MASTER SWITCH ASSEMBLY (w/ Power Door Lock) (See page ED-30)

5. INSTALL FRONT DOOR WINDOW REGULATOR HANDLE ASSEMBLY (w/o Power Door Lock) (See page ED-49)

6. CONNECT CABLE TO NEGATIVE BATTERY TERMINAL
Torque: 3.9 N*m (40 kgf*cm, 35 in.*lbf)

INSTALLATION

HINT:

- Use the same procedures for the RH and LH sides.
- The procedures listed below are for the LH side.

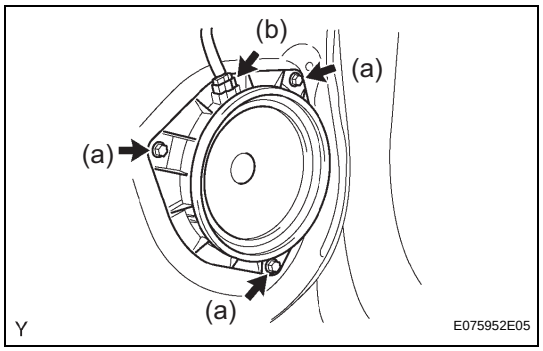

1. **INSTALL REAR SPEAKER ASSEMBLY**
   (a) Install the rear speaker assembly with the 3 screws.
   (b) Connect the connector.
2. **INSTALL REAR DOOR INSIDE HANDLE SUB-ASSEMBLY LH (See page ED-80)**
3. **INSTALL REAR DOOR TRIM PANEL ASSEMBLY LH (See page ED-81)**
4. **INSTALL REAR POWER WINDOW REGULATOR SWITCH ASSEMBLY (See page ED-81)**
5. **CONNECT CABLE TO NEGATIVE BATTERY TERMINAL**
   Torque: 3.9 N*m (40 kgf*cm, 35 in.*lbf)

REMOVAL

1. **REMOVE REAR SEAT BACK HINGE COVER (for Double Cab)**
   (a) for RH Side:
      (1) Remove the rear seat back hinge cover (see page SE-82).
   (b) for LH Side:
      (1) Remove the rear seat back hinge cover (see page SE-71).
2. **REMOVE REAR SEATBACK ASSEMBLY LH (for Double Cab) (See page SE-71)**
3. **REMOVE REAR SEATBACK ASSEMBLY RH (for Double Cab) (See page SE-82)**
4. **REMOVE REAR SEAT BACK HINGE SUB-ASSEMBLY LH (for Double Cab) (See page SE-71)**
5. **REMOVE REAR SEAT BACK HINGE SUB-ASSEMBLY RH (for Double Cab) (See page SE-82)**
6. **REMOVE FRONT DOOR SCUFF PLATE LH (for Regular Cab) (See page IR-40)**
7. **REMOVE FRONT DOOR SCUFF PLATE LH (for Access Cab) (See page IR-61)**
8. **REMOVE FRONT DOOR SCUFF PLATE RH (for Regular Cab)**
   HINT:
   Follow the same procedures as for the front door scuff plate LH.
9. **REMOVE FRONT DOOR SCUFF PLATE RH (for Access Cab)**
   HINT:
   Follow the same procedures as for the front door scuff plate LH.
10. **REMOVE REAR DOOR SCUFF PLATE LH (for Access Cab) (See page IR-61)**
11. **REMOVE REAR DOOR SCUFF PLATE LH (for Double Cab) (See page IR-13)**
12. **REMOVE REAR DOOR SCUFF PLATE RH (for Access Cab)**
    HINT:
    Follow the same procedures as for the rear door scuff plate LH.
13. **REMOVE REAR DOOR SCUFF PLATE RH (for Double Cab)**
    HINT:
    Follow the same procedures as for the rear door scuff plate LH.
14. **REMOVE ROOF SIDE INNER GARNISH CAP LH (for Access Cab) (See page IR-62)**

15. **REMOVE ROOF SIDE INNER GARNISH CAP RH (for Access Cab)**
HINT:
Follow the same procedures as for the roof side inner garnish LH.

16. **REMOVE FRONT DOOR OPENING TRIM WEATHERSTRIP LH (for Regular Cab) (See page IR-40)**

17. **REMOVE FRONT DOOR OPENING TRIM WEATHERSTRIP LH (for Access Cab) (See page IR-62)**

18. **REMOVE FRONT DOOR OPENING TRIM WEATHERSTRIP RH (for Regular Cab)**
HINT:
Follow the same procedures as for the front door opening trim weatherstrip LH.

19. **REMOVE FRONT DOOR OPENING TRIM WEATHERSTRIP RH (for Access Cab)**
HINT:
Follow the same procedures as for the front door opening trim weatherstrip LH.

20. **REMOVE REAR DOOR OPENING TRIM WEATHERSTRIP LH (for Double Cab) (See page IR-13)**

21. **REMOVE REAR DOOR OPENING TRIM WEATHERSTRIP RH (for Double Cab)**
HINT:
Follow the same procedures as for the rear door opening trim weatherstrip LH.

22. **REMOVE BACK PANEL TRIM COVER (for Regular Cab) (See page IR-42)**

23. **REMOVE BACK PANEL TRIM COVER (for Access Cab) (See page IR-64)**

24. **REMOVE BACK PANEL TRIM COVER (for Regular Cab on Bench Seat Type) (See page IR-42)**

25. **REMOVE BACK PANEL UPPER GARNISH (for Regular Cab) (See page IR-43)**

26. **REMOVE JACK ASSEMBLY (for Regular Cab on Separate Seat Type)**

27. **REMOVE BACK PANEL TRIM COVER (for Regular Cab on Separate Seat Type) (See page IR-43)**

28. **REMOVE BACK PANEL TRIM (for Regular Cab on Separate Seat Type) (See page IR-43)**

29. **REMOVE BACK PANEL TRIM (for Access Cab on Separate Seat Type) (See page IR-64)**

30. **REMOVE LUGGAGE COMPARTMENT SIDE TRAY (for Double Cab) (See page IR-16)**

31. **REMOVE REAR SEAT BACK CENTER HINGE SUB-ASSEMBLY (for Double Cab) (See page SE-71)**

32. **REMOVE LUGGAGE COMPARTMENT SIDE TRAY (for Double Cab) (See page IR-16)**

33. **REMOVE QUARTER TRIM LOWER PANEL LH (for Regular Cab) (See page IR-43)**

34. **REMOVE QUARTER TRIM LOWER PANEL LH (for Access Cab) (See page IR-65)**

35. **REMOVE QUARTER TRIM LOWER PANEL LH (for Double Cab) (See page IR-17)**

36. **REMOVE QUARTER TRIM LOWER PANEL RH (for Regular Cab)**
HINT:
Follow the same procedures as for the quarter trim panel lower LH.

37. **REMOVE QUARTER TRIM LOWER PANEL RH (for Access Cab)**
HINT:
Follow the same procedures as for the quarter trim panel lower LH.

38. **REMOVE QUARTER TRIM LOWER PANEL RH (for Double Cab)**
HINT:
Follow the same procedures as for the quarter trim panel lower LH.

39. **REMOVE ROOF SIDE INNER GARNISH LH (for Access Cab) (See page IR-65)**

40. **REMOVE ROOF SIDE INNER GARNISH RH (for Access Cab)**
HINT:
Follow the same procedures as for the roof side garnish inner LH.

41. **REMOVE QUARTER INSIDE TRIM BOARD LH (for Regular Cab) (See page IR-44)**

42. **REMOVE QUARTER INSIDE TRIM BOARD LH (for Access Cab) (See page IR-65)**

43. **REMOVE QUARTER INSIDE TRIM BOARD LH (for Double Cab) (See page IR-17)**

44. **REMOVE QUARTER INSIDE TRIM BOARD RH (for Regular Cab)**
HINT:
Follow the same procedures as for the quarter inside trim board LH.

45. **REMOVE QUARTER INSIDE TRIM BOARD RH (for Access Cab)**
HINT:
Follow the same procedures as for the quarter inside trim board LH.

46. REMOVE QUARTER INSIDE TRIM BOARD RH (for Double Cab)

HINT:
Follow the same procedures as for the quarter inside trim board LH.

47. REMOVE COAT HOOK (for Regular Cab) (See page IR-45)

48. REMOVE COAT HOOK (for Access Cab) (See page IR-67)

49. REMOVE COAT HOOK (for Double Cab) (See page IR-20)

50. REMOVE BACK WINDOW ASSEMBLY

(a) Remove the 2 nuts.

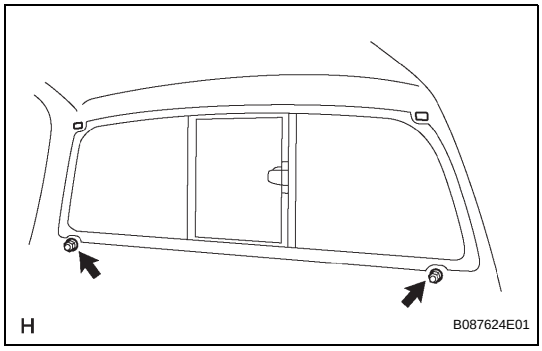

(b) Apply protective tape to the outer circumference of the back window, as shown in the illustration.

(c) From the interior, insert piano wires between the vehicle body and back window, as shown in the illustration.

(d) Tie objects that can serve as handles (for example, wooden blocks) to all wire ends.

NOTICE:
When separating the back window from the vehicle, be careful not to damage the vehicle's paint or exterior/interior ornaments.

(e) Cut through the adhesive by pulling the piano wire around the back window.

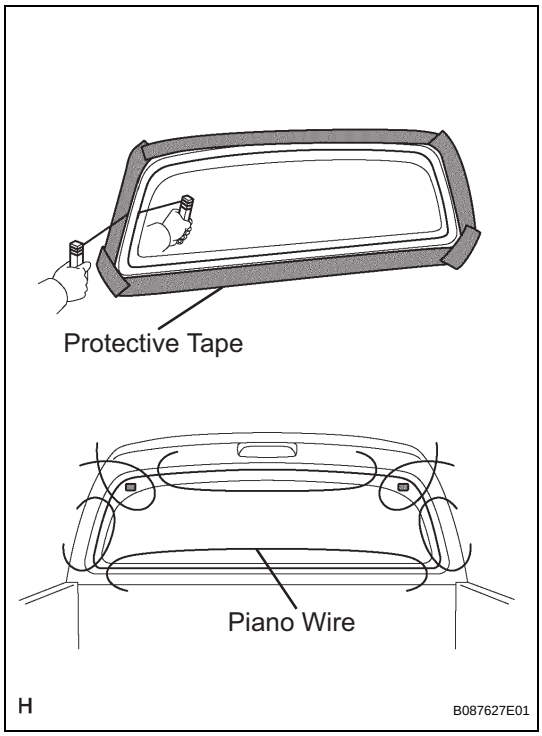

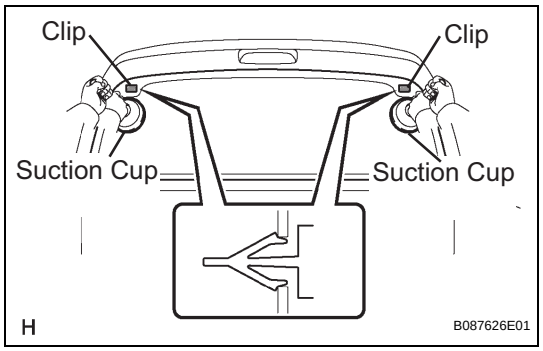

(f) Disengage the 2 clips.
(g) Using suction cups, remove the back window.
NOTICE:
Leave as much adhesive on the vehicle body as possible when removing the back window.

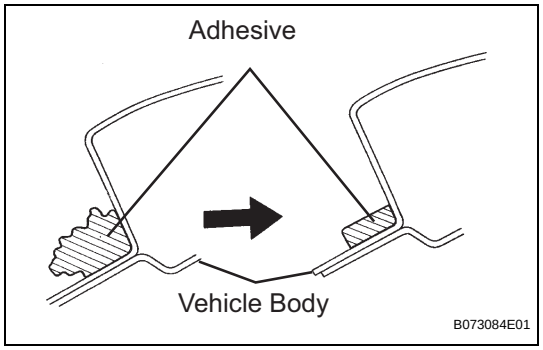

INSTALLATION

1. CLEAN VEHICLE BODY

(a) Clean and shape the contact surface of the vehicle body.
(1) Using a knife, cut away any rough adhesive on the contact surface of the vehicle body to ensure the appropriate surface shape.
NOTICE:
Be careful not to damage the vehicle body.
HINT:
Leave as much adhesive on the vehicle body as possible.
(2) Clean the contact surface of the vehicle body with a shop rag saturated with cleaner.
HINT:
Even if all the adhesive has been removed, clean the vehicle body.

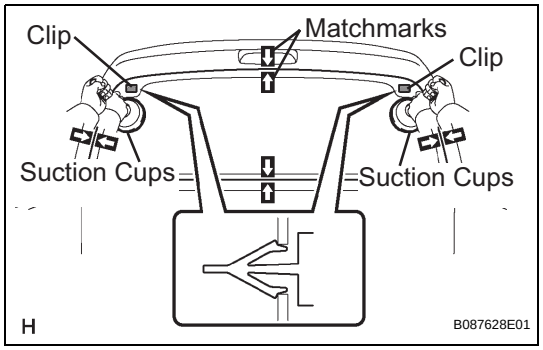

2. INSTALL BACK WINDOW ASSEMBLY

(a) Position the windshield glass.
(1) Using suction cups, place the back window in the correct position.
(2) Check that the whole contact surface of the back window rim is perfectly even.
(3) Place matchmarks over the back window and vehicle body.
NOTICE:
Check that the stoppers are attached to the vehicle body correctly.
HINT:
When reusing the back window, check and correct the matchmark positions.
(4) Using suction cups, remove the back window.

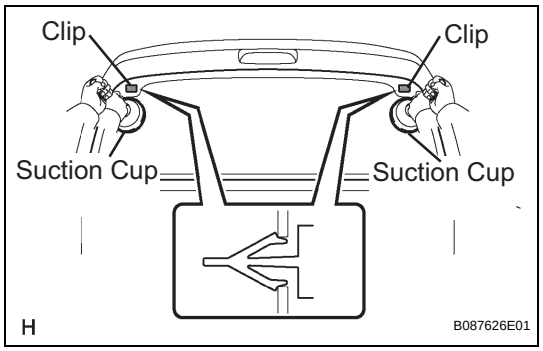

(f) Disengage the 2 clips.
(g) Using suction cups, remove the back window.
NOTICE:
Leave as much adhesive on the vehicle body as possible when removing the back window.

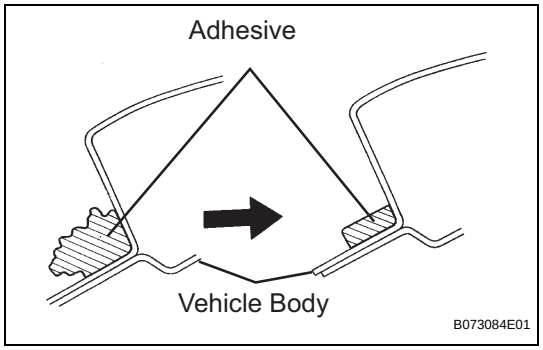

INSTALLATION

1. CLEAN VEHICLE BODY

(a) Clean and shape the contact surface of the vehicle body.
(1) Using a knife, cut away any rough adhesive on the contact surface of the vehicle body to ensure the appropriate surface shape.
NOTICE:
Be careful not to damage the vehicle body.
HINT:
Leave as much adhesive on the vehicle body as possible.
(2) Clean the contact surface of the vehicle body with a shop rag saturated with cleaner.
HINT:
Even if all the adhesive has been removed, clean the vehicle body.

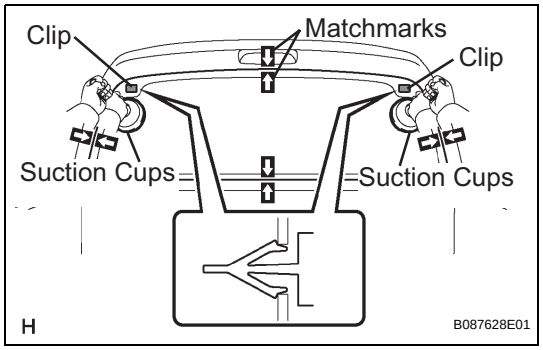

2. INSTALL BACK WINDOW ASSEMBLY

(a) Position the windshield glass.
(1) Using suction cups, place the back window in the correct position.
(2) Check that the whole contact surface of the back window rim is perfectly even.
(3) Place matchmarks over the back window and vehicle body.
NOTICE:
Check that the stoppers are attached to the vehicle body correctly.
HINT:
When reusing the back window, check and correct the matchmark positions.
(4) Using suction cups, remove the back window.

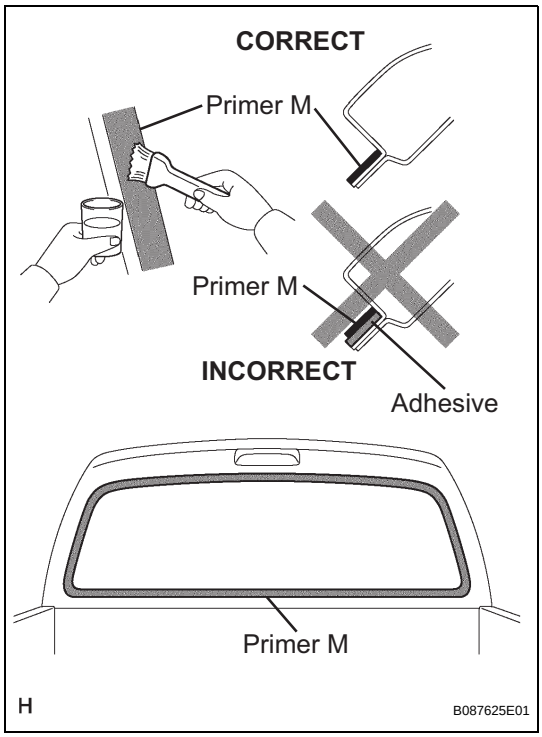

(b) Using a brush, apply Primer M to the exposed part of the vehicle body.

NOTICE:

- **Allow the primer to dry for 3 minutes or more.**
- **Do not apply Primer M to the adhesive.**
- **Throw away any leftover Primer M.**
- **Do not apply too much Primer M.**

Fixed Type:

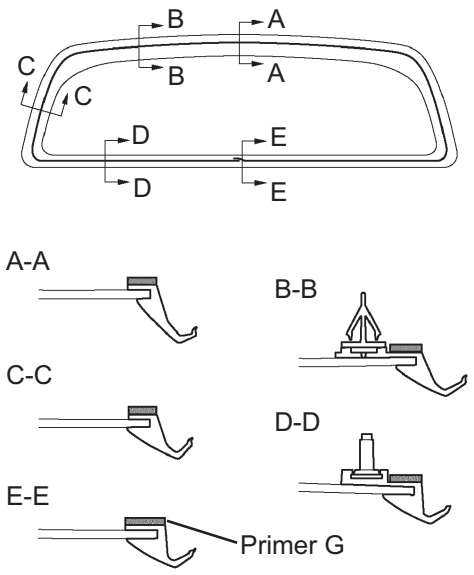

Slide Type:

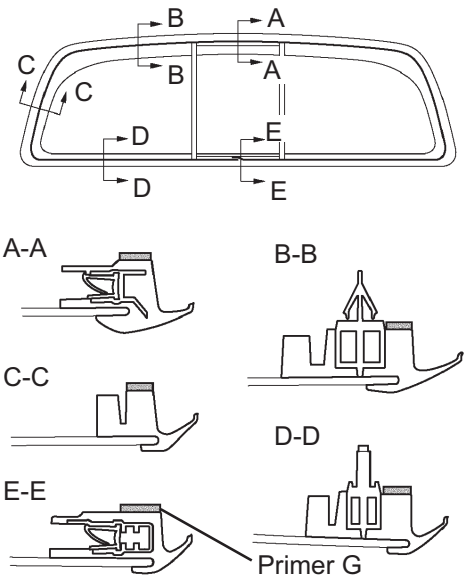

B115231E01

(c) Using a brush or sponge, apply Primer G to the edge of the back window and contact surface.
NOTICE:
- **Allow the primer to dry for 3 minutes or more.**
- **Throw away any leftover Primer G.**
- **Do not apply too much Primer G.**

HINT:
If Primer G is applied to any areas other than that which is specified, wipe off the primer with a clean shop rag before it dries.

WS

Fixed Type:

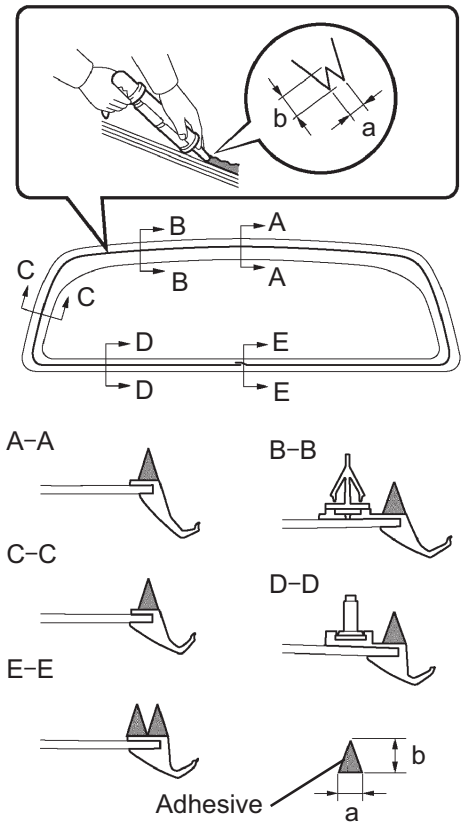

Slide Type:

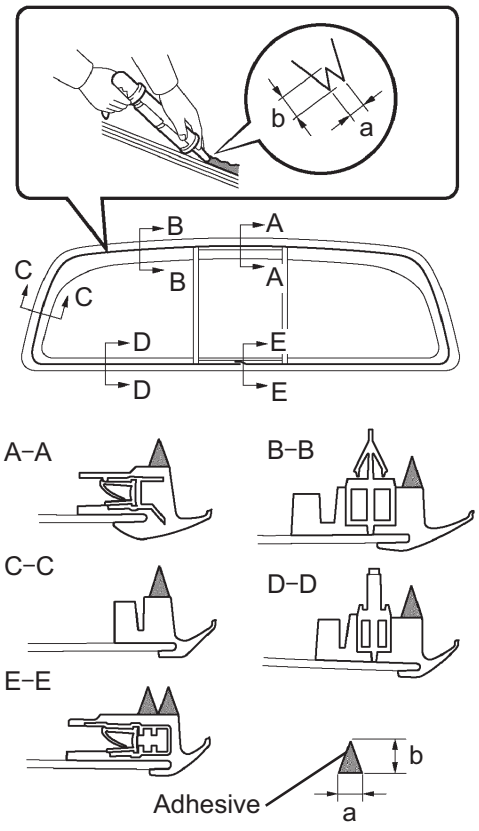

B115232E01

(d) Apply adhesive.

Adhesive:

Part No. 08850-00801 or equivalent

(1) Cut off the tip of the cartridge nozzle, as shown in the illustration.

HINT:

After cutting off the tip, use all adhesive within the time indicated in the table bellow.

Usage time frame

Temperature	Usage Time Frame
35°C (95°F)	15 minutes
20°C (68°F)	1 hour 40 minutes
5°C (41°F)	8 hours

(2) Load the sealer gun with the cartridge.

(3) Apply adhesive to the back window, as shown in the illustration.

Specification

Area	Measurement
a	6 mm (0.236 in.) or 8 mm (0.315 in.)
b	8 mm (0.315 in.) or 12 mm (0.472 in.)

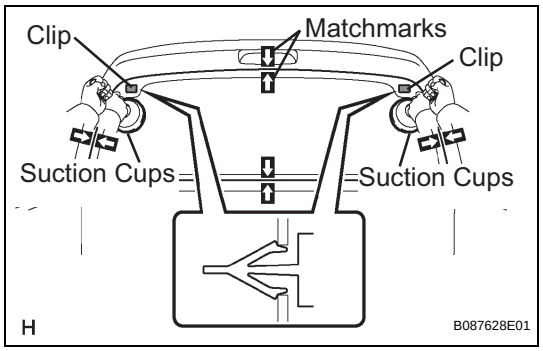

(e) Install the windshield glass onto the vehicle body.
(1) Using suction cups, position the back window so that the matchmarks are aligned. Press it in gently along the rim.
NOTICE:
- **Allow the primer to dry for 3 minutes or more.**
- **Check that the stoppers are attached to the vehicle body correctly.**
- **Check that the vehicle body and windshield glass have a small gap between them.**

(2) Lightly press the front surface of the windshield glass to ensure that the windshield glass is securely fitted to the vehicle body.

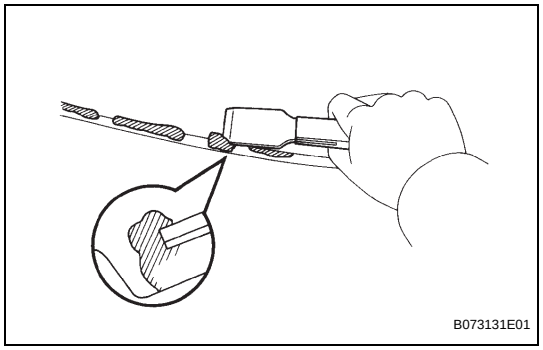

(3) Using a scraper, remove any excessive or protruding adhesive.
HINT:
Apply adhesive onto the windshield glass rim.

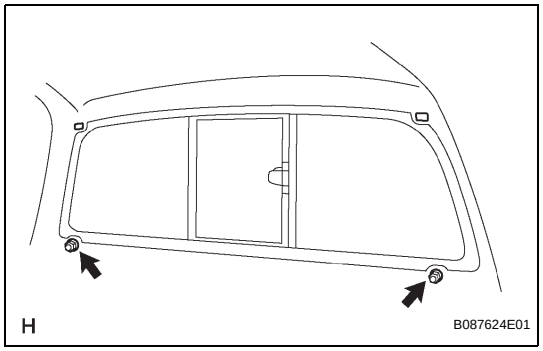

(f) Tighten the 2 nuts.
Torque: 7.8 N*m (80 kgf*cm, 69 in.*lbf)

3. **CHECK FOR LEAKAGE AND REPAIR**
(a) Conduct a leak test after the adhesive has completely hardened.
(b) Seal any leakage with auto glass sealer.

4. **INSTALL COAT HOOK (for Regular Cab) (See page IR-47)**

5. **INSTALL COAT HOOK (for Access Cab) (See page IR-69)**

6. **INSTALL COAT HOOK (for Double Cab) (See page IR-22)**

7. **INSTALL QUARTER INSIDE TRIM BOARD LH (for Regular Cab) (See page IR-48)**

8. **INSTALL QUARTER INSIDE TRIM BOARD LH (for Access Cab) (See page IR-71)**

9. **INSTALL QUARTER INSIDE TRIM BOARD LH (for Double Cab) (See page IR-24)**

10. **INSTALL QUARTER INSIDE TRIM BOARD RH (for Regular Cab)**
HINT:
Follow the same procedures as for the quarter inside trim board LH.

11. **INSTALL QUARTER INSIDE TRIM BOARD RH (for Access Cab)**
HINT:
Follow the same procedures as for the quarter inside trim board LH.

12. **INSTALL QUARTER INSIDE TRIM BOARD RH (for Double Cab)**
HINT:
Follow the same procedures as for the quarter inside trim board LH.

13. **INSTALL ROOF SIDE INNER GARNISH LH (for Access Cab) (See page IR-71)**

14. **INSTALL ROOF SIDE INNER GARNISH RH (for Access Cab)**
HINT:
Follow the same procedures as for the roof side garnish inner LH.

15. **INSTALL QUARTER TRIM LOWER PANEL LH (for Regular Cab) (See page IR-49)**

16. **INSTALL QUARTER TRIM LOWER PANEL LH (for Access Cab) (See page IR-72)**

17. **INSTALL QUARTER TRIM LOWER PANEL LH (for Double Cab) (See page IR-25)**

18. **INSTALL QUARTER TRIM LOWER PANEL RH (for Regular Cab)**
HINT:
Follow the same procedures as for the quarter inside trim board LH.

19. **INSTALL QUARTER TRIM LOWER PANEL RH (for Access Cab)**
HINT:
Follow the same procedures as for the quarter inside trim board LH.

20. **INSTALL QUARTER TRIM LOWER PANEL RH (for Double Cab)**
HINT:
Follow the same procedures as for the quarter inside trim board LH.

21. **INSTALL LUGGAGE COMPARTMENT SIDE TRAY (for Double Cab) (See page IR-25)**

22. **INSTALL REAR SEAT BACK CENTER HINGE SUB-ASSEMBLY (for Double Cab) (See page SE-77)**

23. **INSTALL LUGGAGE COMPARTMENT SIDE TRAY (for Double Cab) (See page IR-26)**

24. **INSTALL BACK PANEL TRIM (for Regular Cab on Separate Seat Type) (See page IR-49)**

25. **REMOVE BACK PANEL TRIM (for Access Cab on Separate Seat Type) (See page IR-72)**

26. **INSTALL BACK PANEL TRIM COVER (for Regular Cab on Separate Seat Type) (See page IR-50)**
27. **INSTALL JACK ASSEMBLY (for Regular Cab on Separate Seat Type)**
28. **INSTALL BACK PANEL UPPER GARNISH (for Regular Cab) (See page IR-50)**
29. **INSTALL BACK PANEL TRIM COVER (for Regular Cab on Bench Seat Type) (See page IR-50)**
30. **INSTALL BACK PANEL TRIM COVER (for Regular Cab) (See page IR-50)**
31. **INSTALL BACK PANEL TRIM COVER (for Access Cab) (See page IR-73)**
32. **INSTALL REAR DOOR OPENING TRIM WEATHERSTRIP LH (for Double Cab) (See page IR-28)**
33. **INSTALL REAR DOOR OPENING TRIM WEATHERSTRIP RH (for Double Cab)**
    HINT:
    Follow the same procedures as for the rear door opening trim weatherstrip LH.
34. **INSTALL FRONT DOOR OPENING TRIM WEATHERSTRIP LH (for Regular Cab) (See page IR-52)**
35. **INSTALL FRONT DOOR OPENING TRIM WEATHERSTRIP LH (for Access Cab) (See page IR-74)**
36. **INSTALL FRONT DOOR OPENING TRIM WEATHERSTRIP RH (for Regular Cab)**
    HINT:
    Follow the same procedures as for the front door opening trim weatherstrip LH.
37. **INSTALL FRONT DOOR OPENING TRIM WEATHERSTRIP RH (for Access Cab)**
    HINT:
    Follow the same procedures as for the front door opening trim weatherstrip LH.
38. **INSTALL ROOF SIDE INNER GARNISH CAP LH (for Access Cab) (See page IR-75)**
39. **INSTALL ROOF SIDE INNER GARNISH CAP RH (for Access Cab)**
    HINT:
    Follow the same procedures as for the roof side inner garnish LH.
40. **INSTALL REAR DOOR SCUFF PLATE LH (for Access Cab) (See page IR-75)**
41. **INSTALL REAR DOOR SCUFF PLATE LH (for Double Cab) (See page IR-29)**

42. **INSTALL REAR DOOR SCUFF PLATE RH (for Access Cab)**
HINT:
Follow the same procedures as for the rear door scuff plate LH.

43. **INSTALL REAR DOOR SCUFF PLATE RH (for Double Cab)**
HINT:
Follow the same procedures as for the rear door scuff plate LH.

44. **INSTALL FRONT DOOR SCUFF PLATE LH (for Regular Cab) (See page IR-52)**

45. **INSTALL FRONT DOOR SCUFF PLATE LH (for Access Cab) (See page IR-75)**

46. **INSTALL FRONT DOOR SCUFF PLATE RH (for Regular Cab)**
HINT:
Follow the same procedures as for the front door scuff plate LH.

47. **INSTALL FRONT DOOR SCUFF PLATE RH (for Access Cab)**
HINT:
Follow the same procedures as for the front door scuff plate LH.

48. **INSTALL REAR SEAT BACK HINGE SUB-ASSEMBLY LH (for Double Cab) (See page SE-77)**

49. **INSTALL REAR SEAT BACK HINGE SUB-ASSEMBLY RH (for Double Cab) (See page SE-90)**

50. **INSTALL REAR SEATBACK ASSEMBLY LH (for Double Cab) (See page SE-77)**

51. **INSTALL REAR SEATBACK ASSEMBLY RH (for Double Cab) (See page SE-90)**

52. **INSTALL REAR SEAT BACK HINGE COVER (for Double Cab)**
    (a) for RH Side:
        (1) Install the rear seat back hinge cover (see page SE-90).
    (b) for LH Side:
        (1) Install the rear seat back hinge cover (see page SE-78).

SFI SYSTEM

PRECAUTION

1. **INITIALIZATION**
   NOTICE:
   Perform the REGISTRATION (VIN registration) when replacing the ECM (see page ES-16).
2. **FOR USING INTELLIGENT TESTER**
   CAUTION:
   Observe the following items for safety reasons:
   - **Read its instruction books before using the tester.**
   - **Prevent the tester cable from being caught on the pedals, shift lever and steering wheel when driving with the tester connected to the vehicle.**
   - **When driving the vehicle for testing purposes using the tester, two persons are required. One is for driving the vehicle, and the other operates the tester.**

DEFINITION OF TERMS

Terms	Definitions
Monitor Description	Description of what ECM monitors and how detects malfunctions (monitoring purpose and details)
Related DTCs	A group of diagnostic trouble codes that are output by ECM based on same malfunction detection logic.
Typical Enabling Conditions	Preconditions that allow ECM to detect malfunctions. With all preconditions satisfied, ECM sets DTC when monitored value(s) exceeds malfunction threshold(s)
Sequence of Operation	Order of monitor priority, applied if multiple sensors and components are involved in single malfunction detection process. Each sensor and component monitored in turn and not monitored until previous detection operation completed
Required Sensors/Components	Sensors and components used by ECM to detect each malfunction.
Frequency of Operation	Number of times ECM checks for each malfunction during each driving cycle. "Once per driving cycle" means ECM only performs checks for that malfunction once during single driving cycle. "Continuous" means ECM performs checks for that malfunction whenever enabling conditions met.
Duration	Minimum time for which ECM must detect continuous deviation in monitored value(s) in order to set DTC. Timing begins when Typical Enabling Conditions are met.
Malfunction Thresholds	Value beyond which ECM determines malfunctions exist and sets DTCs.
MIL Operation	Timing of MIL illumination after defect detected. "Immediate" means ECM illuminates MIL as soon as malfunction detected. "2 driving cycles" means ECM illuminates MIL if same malfunction detected second time during next sequential driving cycle.

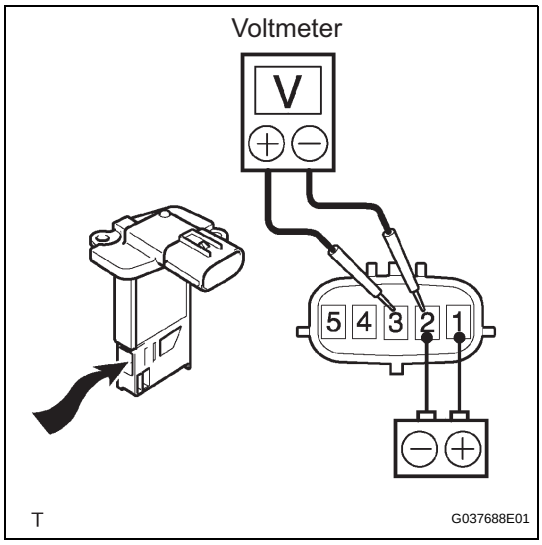

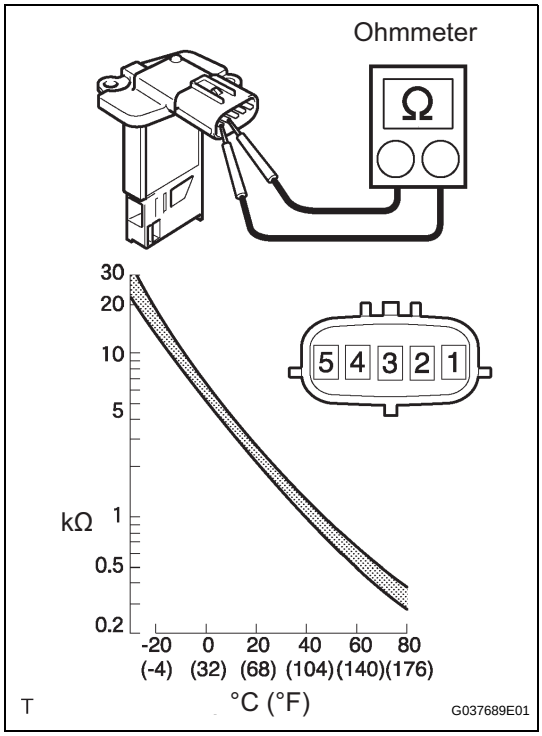

MASS AIR FLOW METER

INSPECTION

1. INSPECT MASS AIR FLOW METER

(a) Check the operation.

(1) Apply battery voltage across terminals 1 (+B) and 2 (E2G).

(2) Using a voltmeter, connect the positive (+) tester prove to terminal 3 (VG) and the negative (-) tester prove to terminal 2 (E2G).

(3) Blow air into the mass air flow meter and check that the voltage fluctuates.

If the voltage does not fluctuate, replace the mass air flow meter.

(b) Check the resistance.

(1) Using an ohmmeter, measure the resistance between the terminals.

Standard

Tester Connection	Specified Condition
4 (THA) - 5 (E2)	12.5 to 16.9kΩ at -20°C (-4°F)
4 (THA) - 5 (E2)	2.19 to 2.67kΩ at 20°C (68°F)
4 (THA) - 5 (E2)	0.50 to 0.68kΩ at 60°C (140°F)

If the result is not as specified, replace the mass air flow meter.

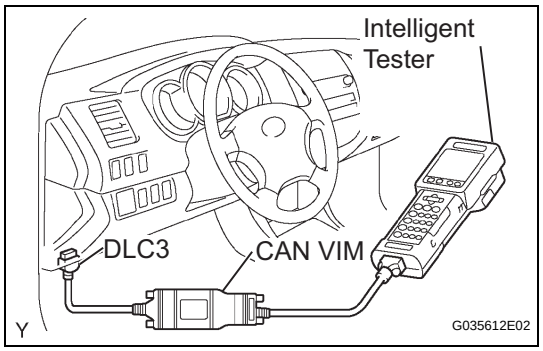

CAMSHAFT TIMING OIL CONTROL VALVE ASSEMBLY

ON-VEHICLE INSPECTION

1. INSPECT CAMSHAFT TIMING OIL CONTROL VALVE ASSEMBLY

(a) Check the operation.

(1) Connect the intelligent tester to the DLC3.

(2) Turn the ignition switch to ON.

(3) Turn the intelligent tester ON.

(4) Start the engine and warm it up.

(5) Select the following menu items: DIAGNOSIS / ENHANCED OBD II / ACTIVE TEST / VVT CTRL B1.

(6) Operate the OCV using the hand-held tester, then check the engine speed.

Standard

Tester Operation	Specified Condition
OCV OFF	Normal engine speed
OCV ON	Rough idling engine stalls

If the operation is not specified, check the camshaft timing oil control valve, wire harness and ECM.

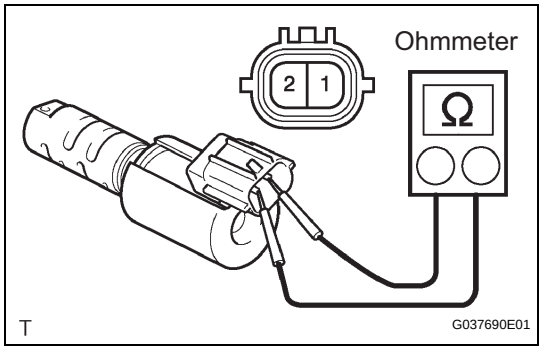

INSPECTION

1. INSPECT CAMSHAFT TIMING OIL CONTROL VALVE ASSEMBLY

(a) Check the resistance.

(1) Using an ohmmeter, measure the resistance between the terminals.

Standard

Tester Connection	Specified Condition
1 (+B) - 2 (GND)	6.9 to 7.9 kΩ at 20°C (68°F)

If the result is not as specified, replace the camshaft timing oil control valve.

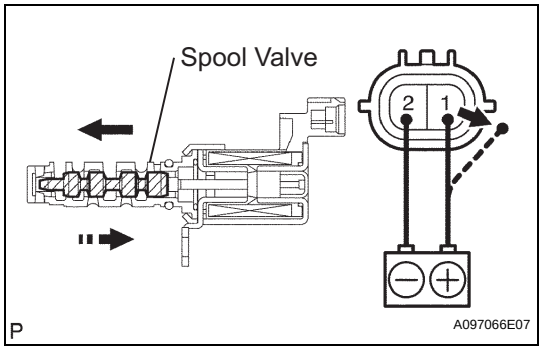

(b) Check the operation.

(1) Apply battery voltage across the terminals, and check that the spool valve operates.

NOTICE:

Check that the spool valve is not stuck.

HINT:

The spool valve may not return if foreign objects are caught in it. This may cause subtle pressure leakage to the advance side, and a DTC may be set.

CAMSHAFT POSITION SENSOR

REMOVAL

1. DISCONNECT CABLE FROM NEGATIVE BATTERY TERMINAL

2. REMOVE CAMSHAFT POSITION SENSOR

(a) Disconnect the camshaft position sensor connector.

(b) Remove the bolt, then remove the camshaft position sensor.

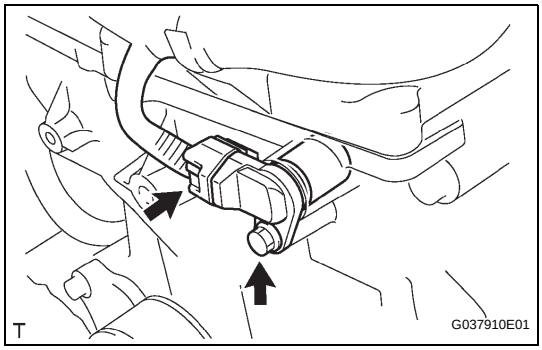

INSPECTION

1. INSPECT CAMSHAFT POSITION SENSOR

(a) Check the resistance.

(1) Using an ohmmeter, measure the resistance between the terminals.

Standard

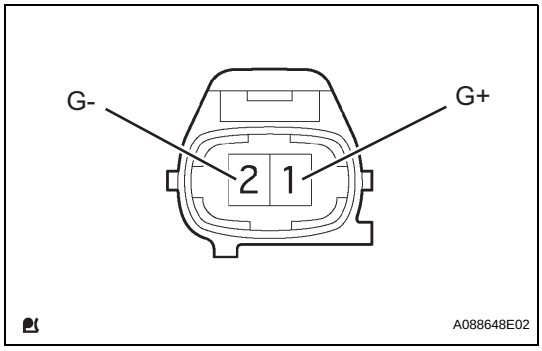

Tester Connection	Specified Condition
1 (G+) - 2 (G-)	835 to 1,400 Ω at COLD
1 (G+) - 2 (G-)	1,060 to 1,645 Ω at HOT

HINT:

Cold and Hot mean the temperature of the coils themselves. Cold is from -10 to 50°C (14 to 122°F) and Hot is from 50 to 100°C (122 to 212°F).

If the result is not as specified, replace the camshaft position sensor.

INSTALLATION

1. INSTALL CAMSHAFT POSITION SENSOR

(a) Apply a light coat of engine oil to the O-ring of the camshaft position sensor.

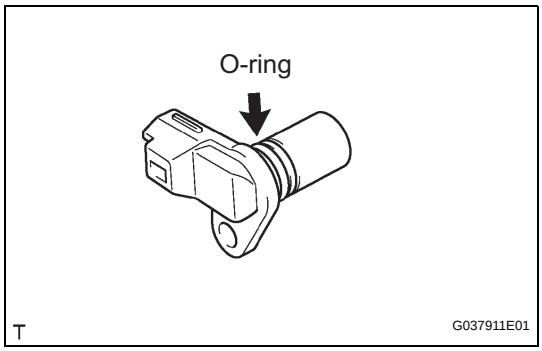

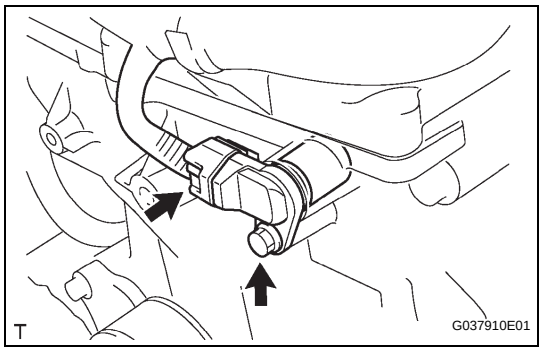

(b) Install the camshaft position sensor with the bolt.
Torque: 8.5 N*m (87 kgf*cm, 75 in.*lbf)
NOTICE:
Make sure that the O-ring is not cracked or jammed when installing.

(c) Connect the camshaft position sensor connector.

2. CONNECT CABLE TO NEGATIVE BATTERY TERMINAL
Torque: 3.9 N*m (40 kgf*cm, 35 in.*lbf)

CRANKSHAFT POSITION SENSOR

REMOVAL

1. **DISCONNECT CABLE FROM NEGATIVE BATTERY TERMINAL**
2. **REMOVE ENGINE UNDER COVER SUB-ASSEMBLY NO.1 (for 4WD and Pre-Runner)**
3. **REMOVE FAN AND GENERATOR V BELT (W/ AIR CONDITIONING) (See page EM-5)**
4. **SEPARATE COMPRESSOR AND MAGNETIC CLUTCH (W/ AIR CONDITIONING) (See page EM-21)**
5. **REMOVE IDLE PULLEY ASSEMBLY WITH BRACKET (W/ AIR CONDITIONING)**
   (a) Remove the 5 bolts, then remove the idle pulley with bracket.

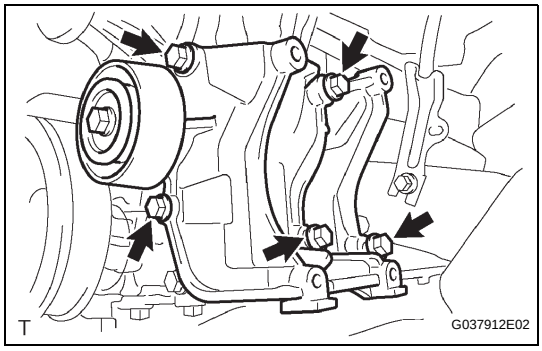

6. **REMOVE CRANKSHAFT POSITION SENSOR**
   (a) Disconnect the crankshaft position sensor connector and the 2 wire harness clamps.

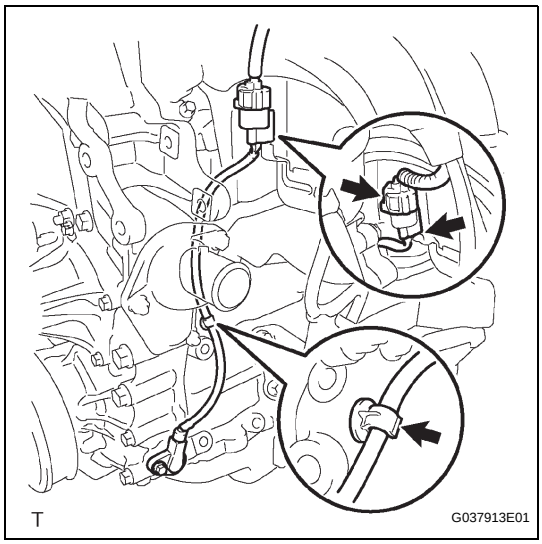

   (b) Remove the bolt, then remove the crankshaft position sensor.

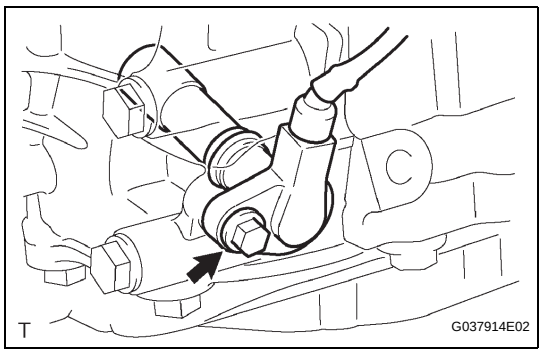

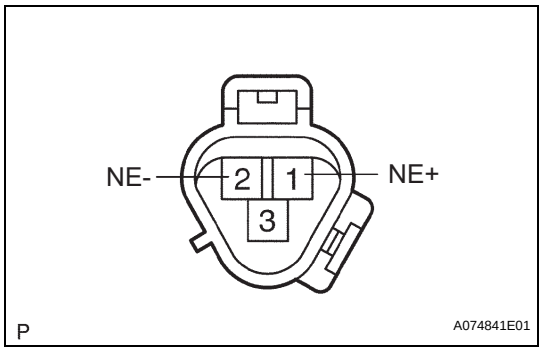

INSPECTION

1. INSPECT CRANKSHAFT POSITION SENSOR

(a) Check the resistance.

(1) Using an ohmmeter, measure the resistance between the terminals.

Standard

Tester Connection	Specified Condition
1 (NE+) - 2 (NE-)	1,630 to 2,740 Ω at COLD
1 (NE+) - 2 (NE-)	2,065 to 3,225 Ω at HOT

HINT:

Cold and Hot mean the temperature of the coils themselves. Cold is from -10 to 50°C (14 to 122°F) and Hot is from 50 to 100°C (122 to 212°F).

If the result is not as specified, replace the camshaft position sensor.

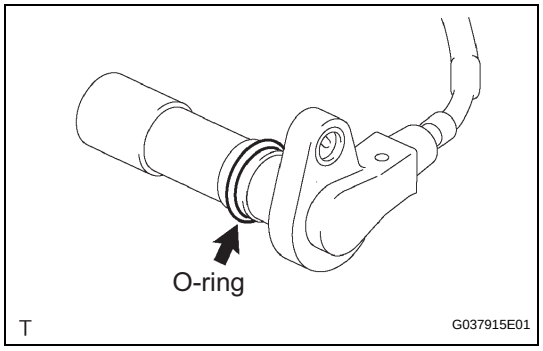

INSTALLATION

1. INSTALL CRANKSHAFT POSITION SENSOR

(a) Apply a light coat of engine oil to the O-ring of the crankshaft position sensor.

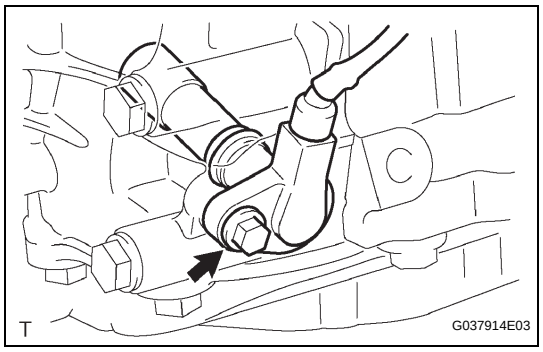

(b) Install the camshaft position sensor with the bolt.

Torque: 8.5 N*m (87 kgf*cm, 75 in.*lbf)

NOTICE:

Make sure that the O-ring is not cracked or jammed when installing.

ES

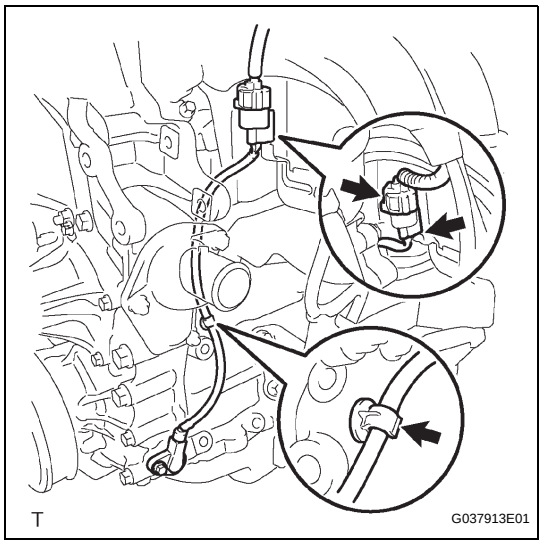

(c) Connect the crankshaft position sensor connector and the 2 wire harness clamps.

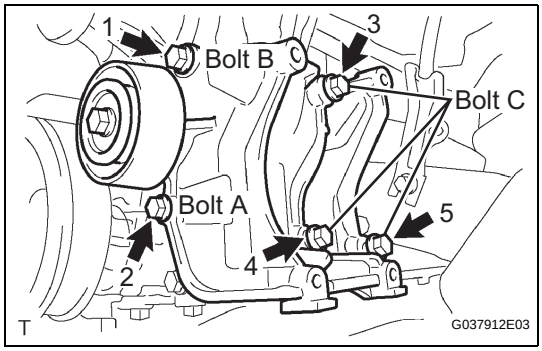

2. INSTALL IDLE PULLEY ASSEMBLY WITH BRACKET (W/ AIR CONDITIONING)

(a) Using several steps, uniformly install and tighten the 5 bolts in the sequence shown in the illustration.

Torque: 21 N*m (214 kgf*cm, 16 ft.*lbf) for bolt A
43 N*m (438 kgf*cm, 32 ft.*lbf) for bolt B, C

3. INSTALL COMPRESSOR AND MAGNETIC CLUTCH (W/ AIR CONDITIONING) (See page EM-34)

4. INSTALL FAN AND GENERATOR V BELT (W/ AIR CONDITIONING) (See page EM-6)

5. INSTALL ENGINE UNDER COVER SUB-ASSEMBLY NO.1 (for 4WD and Pre-Runner)

6. CONNECT CABLE TO NEGATIVE BATTERY TERMINAL
Torque: 3.9 N*m (40 kgf*cm, 35 in.*lbf)

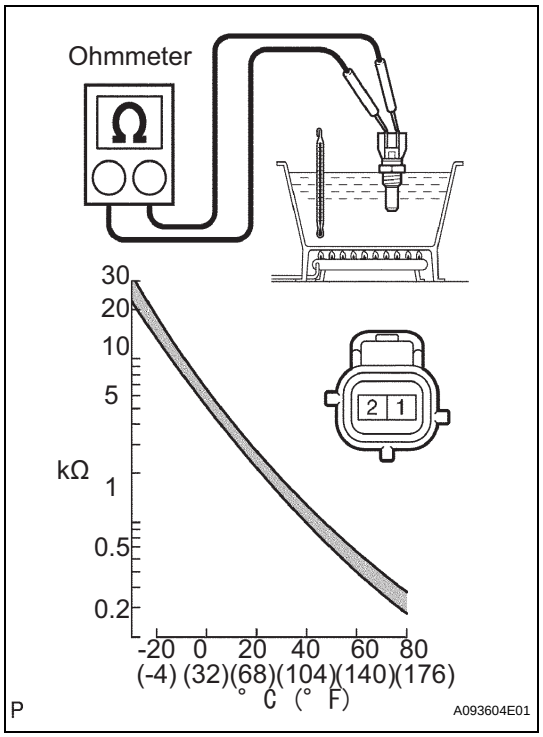

ENGINE COOLANT TEMPERATURE SENSOR

INSPECTION

1. INSPECT E.F.I. ENGINE COOLANT TEMPERATURE SENSOR

(a) Check the resistance.

(1) Using an ohmmeter, measure the resistance between the terminals.

Standard

Tester Connection	Specified Condition
1 (E2) - 2 (THW)	2.32 to 2.59 kΩ at 20°C (68°F)
1 (E2) - 2 (THW)	0.310 to 0.326 kΩ at 80°C (176°F)

ES

NOTICE:

If checking the engine coolant temperature sensor in water, be careful not to allow water to intrude into the terminals. After checking, wipe the water off the engine coolant temperature sensor.

If the result is not as specified, replace the engine coolant temperature sensor.

THROTTLE BODY

COMPONENTS

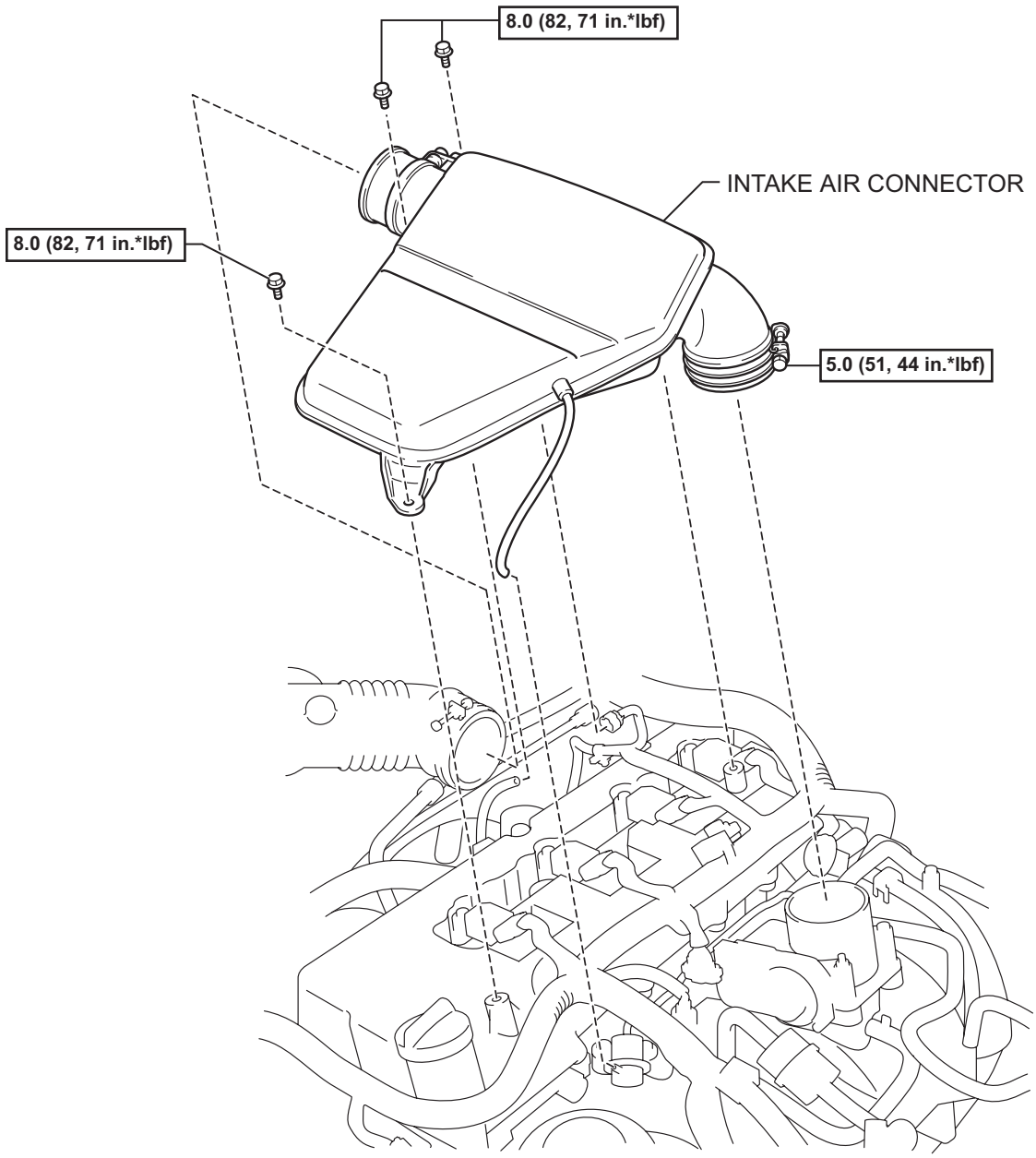

N*m (kgf*cm, ft*lbf) : Specified torque

T

A113623E01

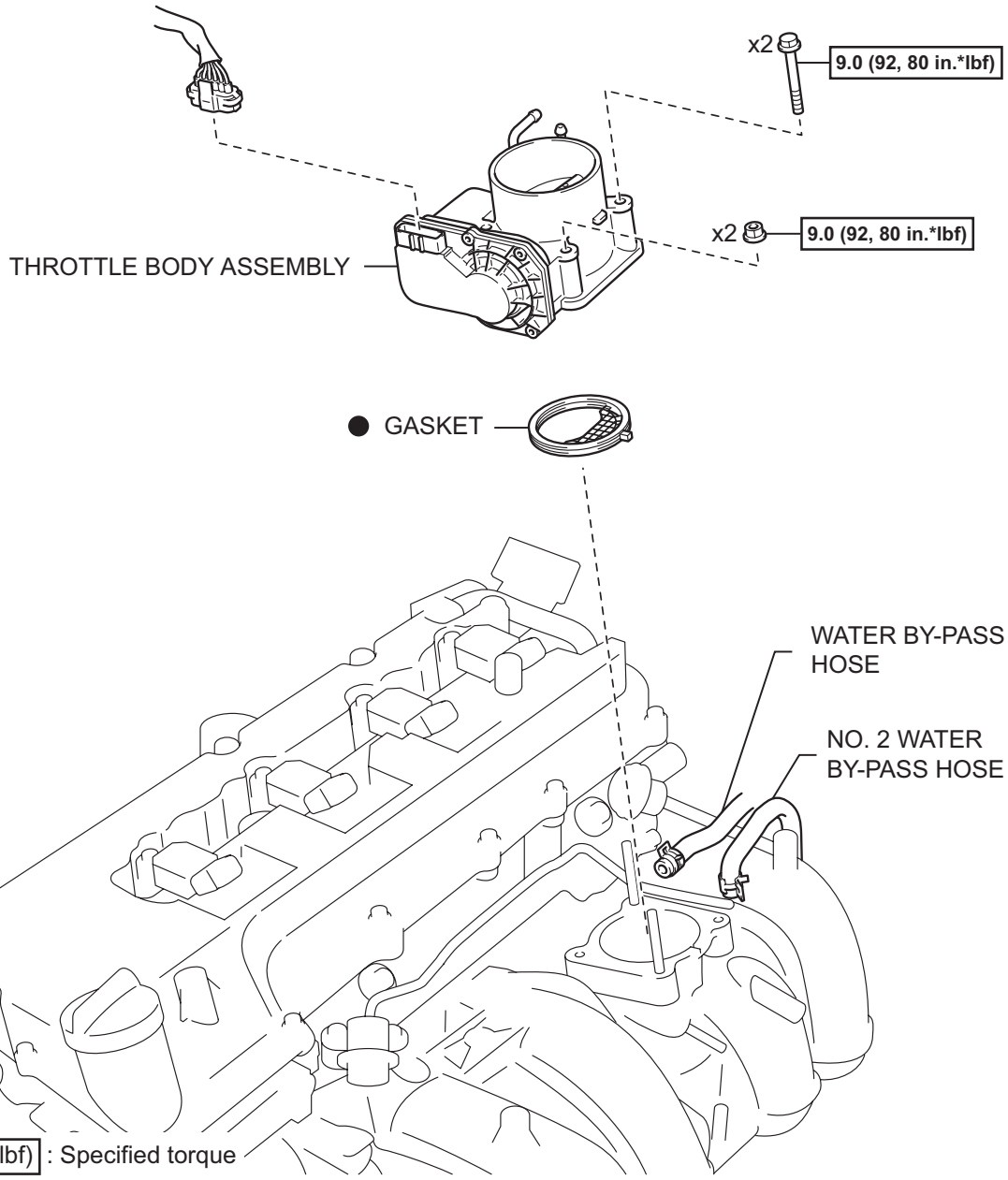
x2
9.0 (92, 80 in.*lbf)
x2
9.0 (92, 80 in.*lbf)
THROTTLE BODY ASSEMBLY
● GASKET
WATER BY-PASS HOSE
NO. 2 WATER BY-PASS HOSE
N*m (kgf*cm, ft*lbf) : Specified torque
● Non-reusable part
T
A113624E01

ES

KNOCK SENSOR

COMPONENTS

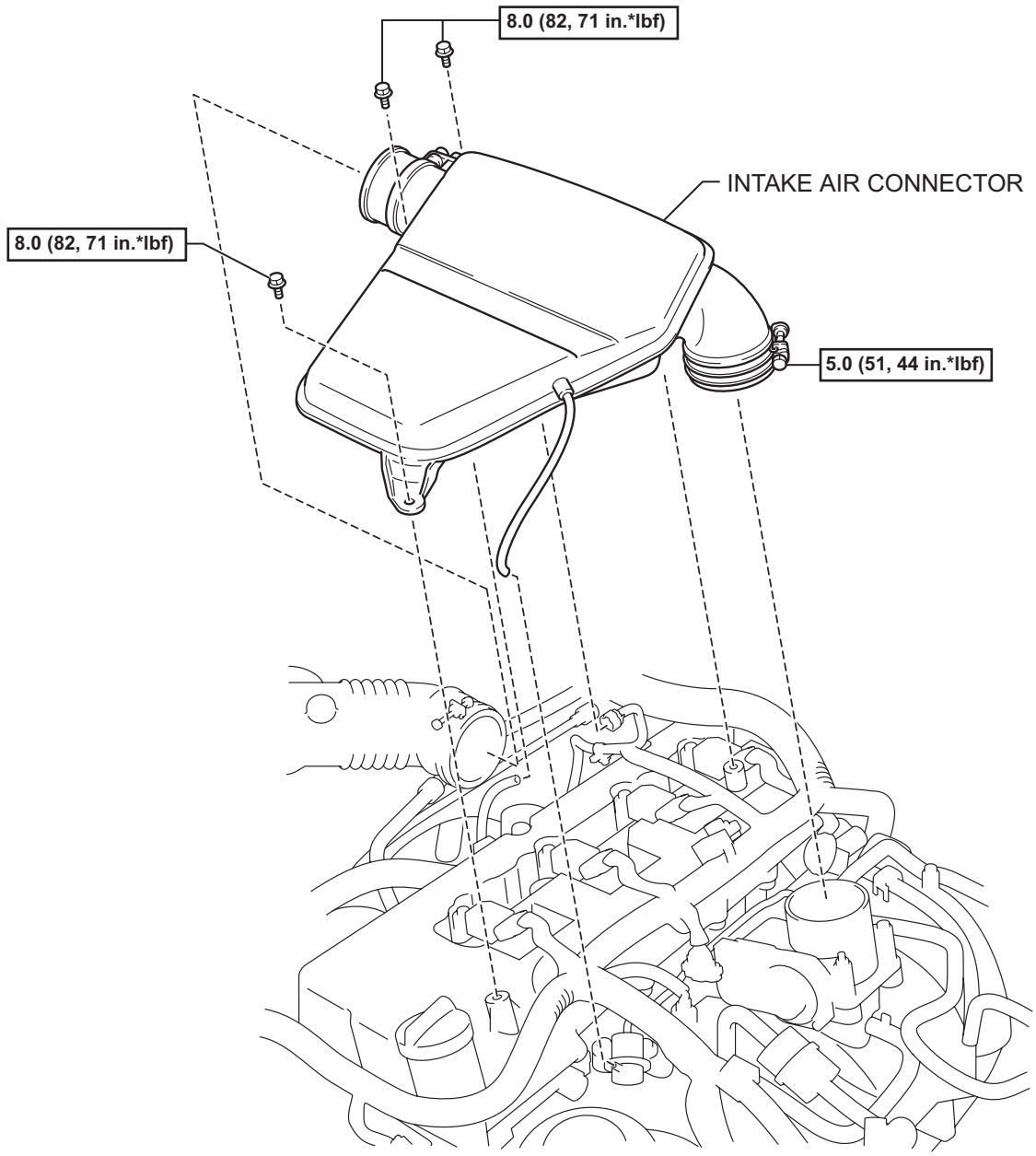

N*m (kgf*cm, ft*lbf) : Specified torque

T

A113623E01

ES

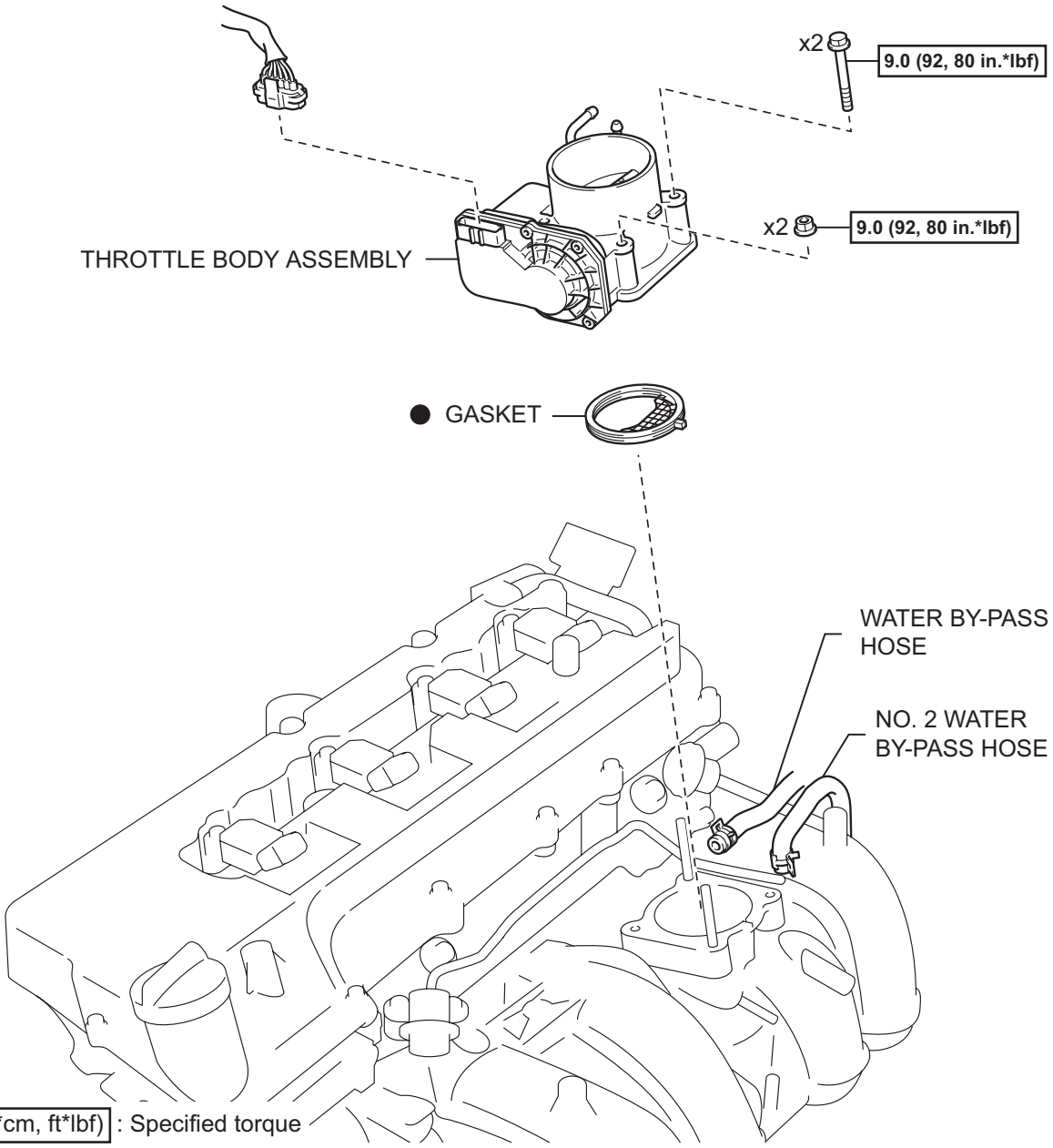

● Non-reusable part

T

A113624E01

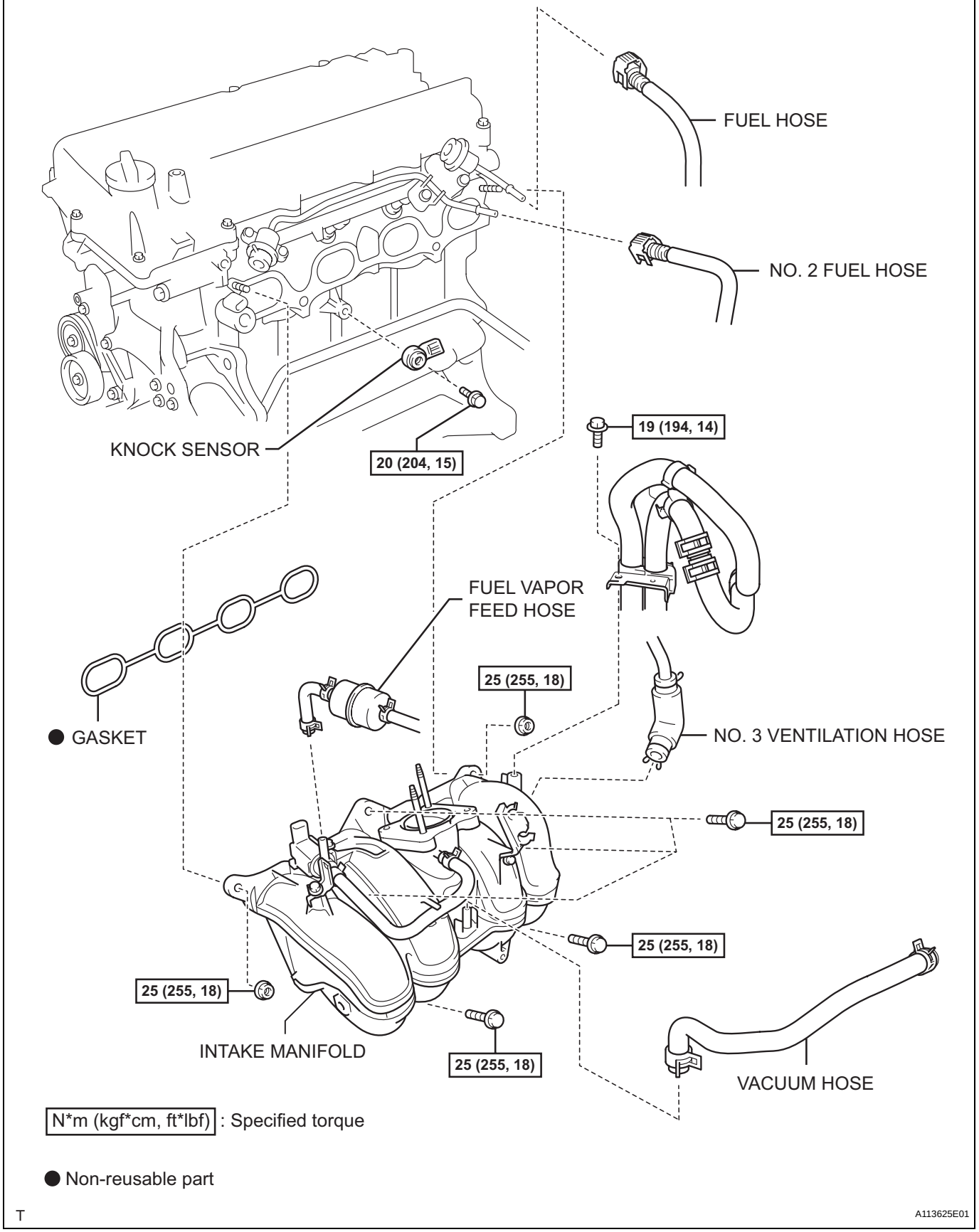
FUEL HOSE
NO. 2 FUEL HOSE
KNOCK SENSOR
20 (204, 15)
19 (194, 14)
FUEL VAPOR FEED HOSE
25 (255, 18)
● GASKET
NO. 3 VENTILATION HOSE
25 (255, 18)
25 (255, 18)
25 (255, 18)
INTAKE MANIFOLD
25 (255, 18)
VACUUM HOSE
N*m (kgf*cm, ft*lbf) : Specified torque
● Non-reusable part
T
A113625E01

ES

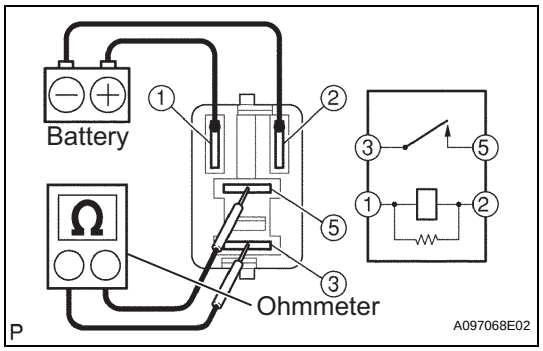

EFI RELAY

INSPECTION

1. INSPECT EFI RELAY

(a) Check the resistance.

(1) Using an ohmmeter, measure the resistance between the terminals.

Standard

Tester Connection	Specified Condition
3 - 5	10 kΩ or higher
3 - 5	Below 1 Ω (Apply battery voltage to terminals 1 and 2)

If the result is not as specified, replace the E.F.I. relay.

ES

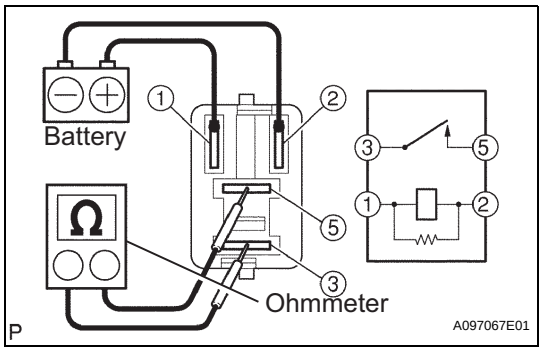

CIRCUIT OPENING RELAY

INSPECTION

1. INSPECT CIRCUIT OPENING RELAY ASSEMBLY

(a) Check the resistance.

(1) Using an ohmmeter, measure the resistance between the terminals.

Standard

Tester Connection	Specified Condition
3 - 5	10 kΩ or higher
3 - 5	Below 1 Ω (Apply battery voltage to terminals 1 and 2)

If the result is not as specified, replace the circuit opening relay assembly.

ES

ECM

REMOVAL

NOTICE:
Perform REGISTRATION (VIN registration) when replacing the ECM (see page ES-16).

1. **DISCONNECT CABLE FROM NEGATIVE BATTERY TERMINAL**
2. **REMOVE GLOVE COMPARTMENT DOOR ASSEMBLY (See page IP-13)**
3. **REMOVE INSTRUMENT PANEL FINISH PANEL SUB-ASSEMBLY LOWER RH (See page IP-14)**
4. **REMOVE ECM**
   (a) Disconnect the 4 connectors.
   (b) Remove the 2 bolts and nut, then remove the ECM.

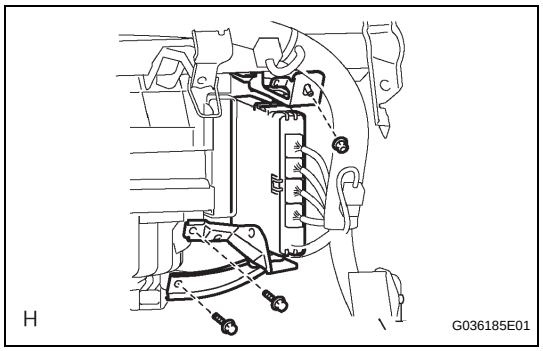

5. **REMOVE ECM BRACKET**
   (a) Remove the 3 screws, then remove the ECM bracket.

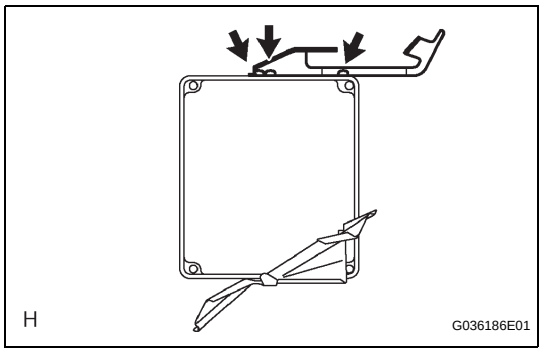

6. **REMOVE ECM BRACKET NO.2**
   (a) Remove the 2 screws, then remove the ECM bracket No. 2.

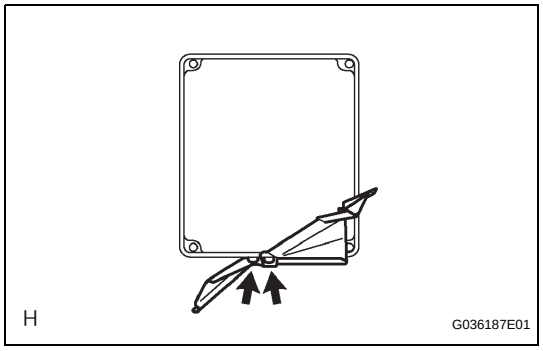

INSTALLATION

1. **INSTALL ECM BRACKET NO.2**
   Torque: 3 N*m (32 kgf*cm, 28 in.*lbf)
2. **INSTALL ECM BRACKET**
   Torque: 3 N*m (32 kgf*cm, 28 in.*lbf)
3. **INSTALL ECM**
   Torque: 5 N*m (51 kgf*cm, 44 in.*lbf)
4. **INSTALL INSTRUMENT PANEL FINISH PANEL SUB-ASSEMBLY LOWER RH (See page IP-20)**
5. **INSTALL GLOVE COMPARTMENT DOOR ASSEMBLY (See page IP-20)**
6. **CONNECT CABLE TO NEGATIVE BATTERY TERMINAL**
   Torque: 3.9 N*m (40 kgf*cm, 35 in.*lbf)

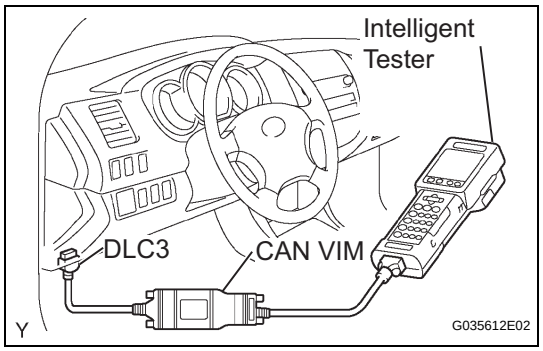

ACCELERATOR PEDAL

ON-VEHICLE INSPECTION

1. INSPECT ACCELERATOR PEDAL ASSEMBLY

(a) Inspect the voltage.

(1) Connect the intelligent tester to the DLC3.

(2) Turn the ignition switch to ON.

(3) Turn the intelligent tester ON.

(4) Select the following menu items: DIAGNOSIS / ENHANCED OBD ll / DATA LIST /ALL /ACCEL POS #1, ACCEL POS #2.

(5) Operate the accelerator pedal, then check that the ACCEL POS #1 and ACCEL POS #2 values are within the specified ranges.

ACCEL POS #1

Accelerator Pedal Condition	Specified Condition
Released	0.5 to 1.1 V
Depressed	2.6 to 4.5 V

ACCEL POS #2

Accelerator Pedal Condition	Specified Condition
Released	1.2 to 2.0 V
Depressed	3.4 to 5.0 V

If the result is not as specified, check the accelerator pedal, wire harness and ECM.

ES

REMOVAL

1. **DISCONNECT CABLE FROM NEGATIVE BATTERY TERMINAL**

2. **REMOVE ACCELERATOR PEDAL ROD ASSEMBLY**
   (a) Disconnect the accelerator position sensor connector.
   (b) Remove the 2 bolts, then remove the accelerator pedal.

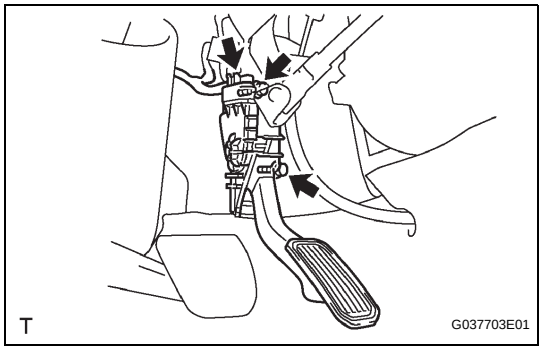

ES

INSPECTION

1. **INSPECT ACCELERATOR PEDAL ROD ASSEMBLY**
   (a) Check the resistance.
      (1) Using an ohmmeter, measure the resistance between the terminals.
      Standard

Tester Connection	Specified Condition
5 (EP1) - 4 (VCP1)	1M Ω or higher
2 (EP2) - 1 (VCP2)	1M Ω or higher

If the result is not as specified, replace the accelerator pedal.

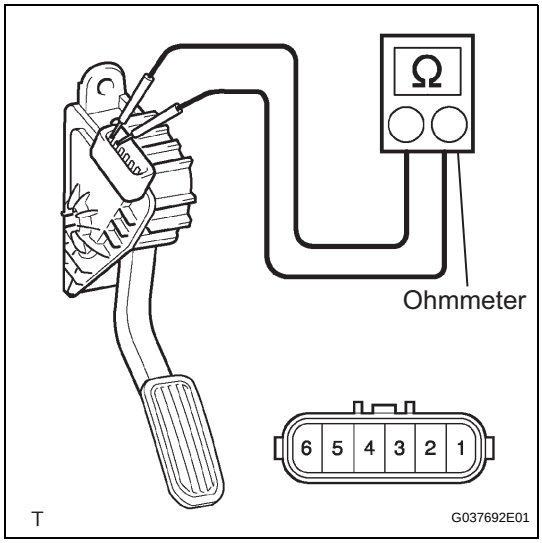

INSTALLATION

1. **INSTALL ACCELERATOR PEDAL ROD ASSEMBLY**
   NOTICE:
   - **Avoid any physical impact to the accelerator pedal assembly.**
   - **Do not disassemble the accelerator pedal assembly.**
   (a) Install the accelerator pedal with the 2 bolts.
   Torque: 5 N*m (51 kgf*cm, 44 in.*lbf)
   (b) Connect the accelerator position sensor connector.

2. **CONNECT CABLE TO NEGATIVE BATTERY TERMINAL**
   Torque: 3.9 N*m (40 kgf*cm, 35 in.*lbf)

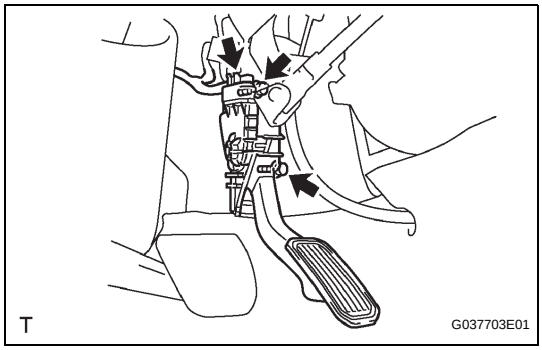

REASSEMBLY

CAUTION:
Wear protective gloves. Sharp surfaces on the front seat back spring and the front seat cushion spring could cause injuries to your hands.
NOTICE:
Remove the front seat cushion pad and the front seat cushion cover together, in order to avoid occupant classification sensor malfunctions.

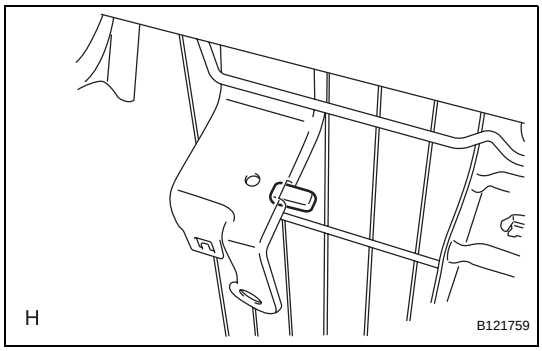

1. INSTALL FRONT SEAT CUSHION SPRING PROTECTOR

(a) Install the front seat cushion spring protector.

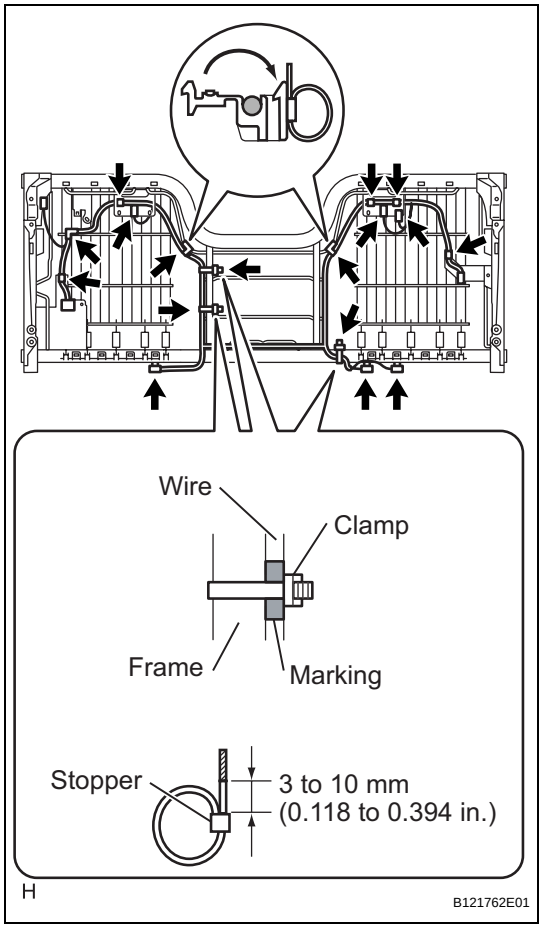

2. INSTALL SEAT WIRE

(a) Install the seat wire with the 12 wiring harness clamps.
(b) Install the 2 wiring harness clamps as shown in the illustration.
(c) Install 3 new wiring harness clamps as shown in the illustration.
(d) Cut each wiring harness clamp 3 to 10 mm (0.118 to 0.394 in.) from the stopper, as shown in the illustration.

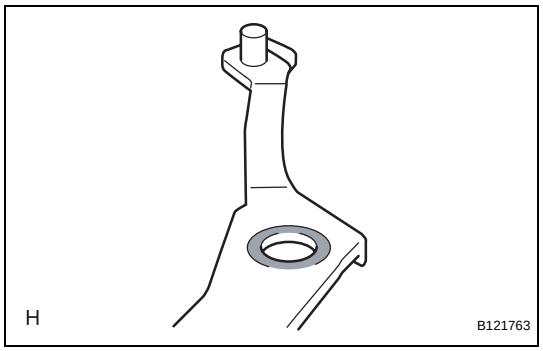

3. INSTALL SEAT TRACK HANDLE SUB-ASSEMBLY LH

(a) Apply grease to the seat track handle as shown in the illustration.

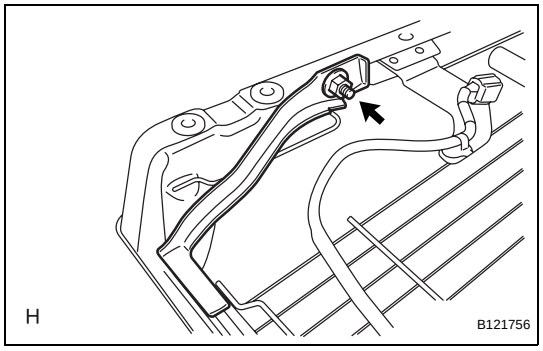

(b) Install the seat track handle with the nut.
Torque: 14 N*m (145 kgf*cm, 10 ft.*lbf)

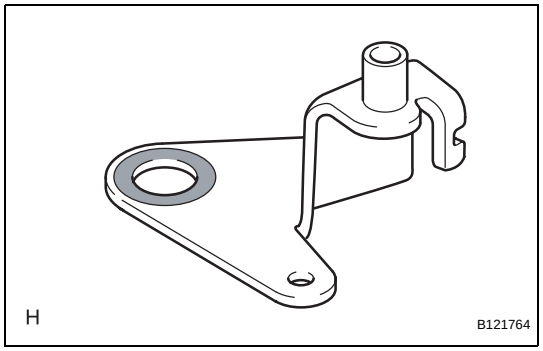

4. INSTALL SEAT TRACK HANDLE SUB-ASSEMBLY RH

(a) Apply grease to the seat track handle as shown in the illustration.

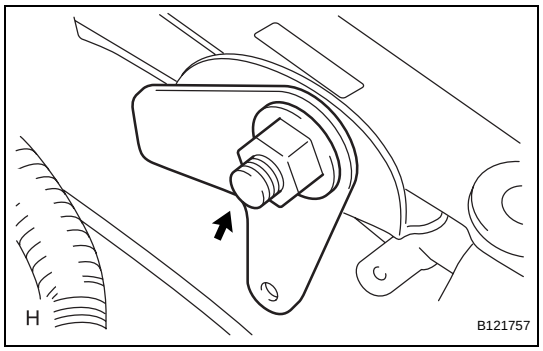

(b) Install the seat track handle with the nut.
Torque: 14 N*m (145 kgf*cm, 10 ft.*lbf)

5. INSTALL FRONT SEAT SLIDE CONTROL CABLE ASSEMBLY

(a) Install the 2 cable ends and the front seat slide control cable.
(b) Install the casing cap.
(c) Install the screw cap with the nut.
(d) Check that the cable is slack.
HINT:
If not, adjust the cable tension by loosening the nut.
(e) Install 4 new wiring harness clamps as shown in the illustration.

(f) Cut each wiring harness clamp 3 to 10 mm (0.118 to 0.394 in.) from the stopper, as shown in the illustration.

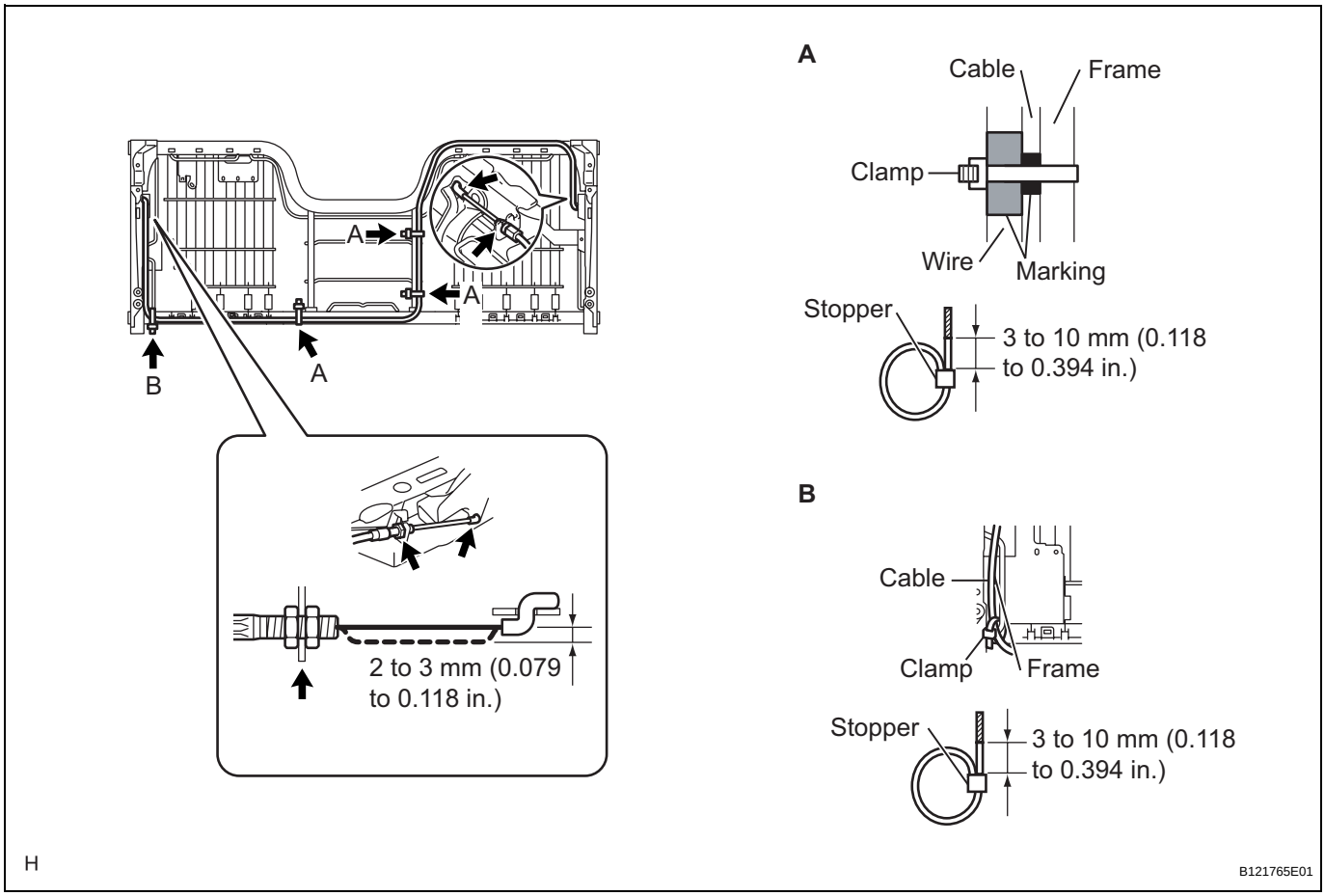

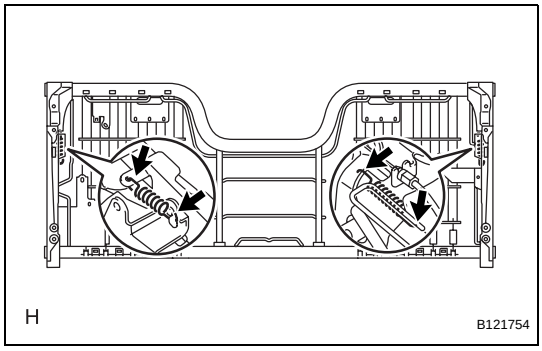

6. INSTALL SEAT TRACK SPRING

(a) Install the 2 seat track springs.

7. INSTALL OCCUPANT CLASSIFICATION SENSOR (See page RS-627)

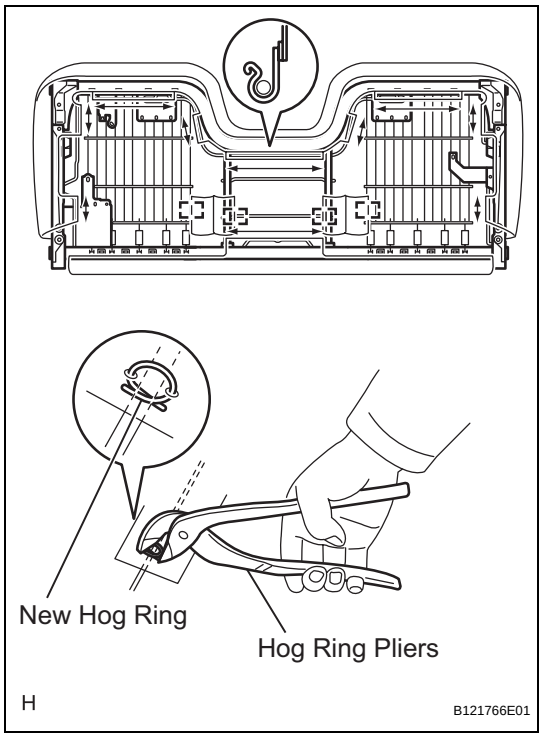

8. INSTALL FRONT SEAT CUSHION SPRING ASSEMBLY

(a) Engage the 10 hooks and install the front seat cushion spring.

(b) Using hog ring pliers, install 4 new hog rings.

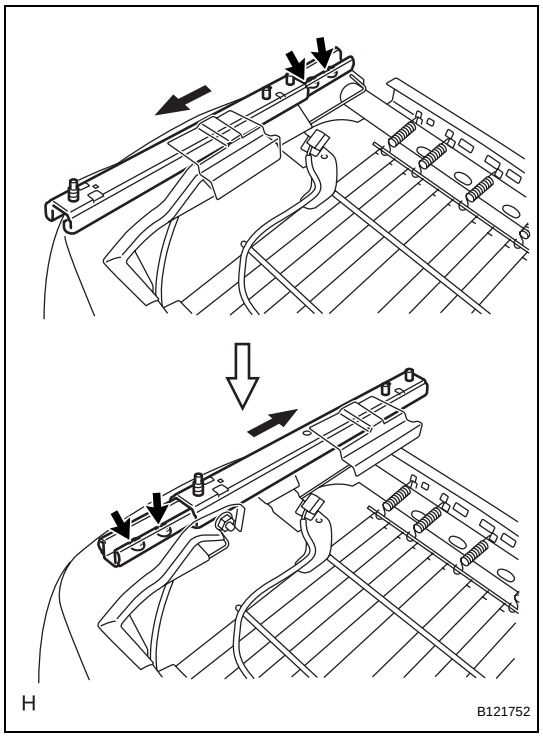

9. INSTALL FRONT SEAT TRACK OUTER ASSEMBLY LH

(a) Insert the lever as shown in the illustration.

(b) Slide the front seat track outer to the most forward position.

(c) Using "Torx" socket wrench T40, tighten the 2 bolts.
Torque: 20 N*m (205 kgf*cm, 15 ft.*lbf)

(d) Slide the front seat track outer to the most rearward position.

(e) Using "Torx" socket wrench T40, tighten the 2 bolts.

10. INSTALL FRONT SEAT TRACK OUTER ASSEMBLY RH

HINT:
Use the same procedure as for the LH side.

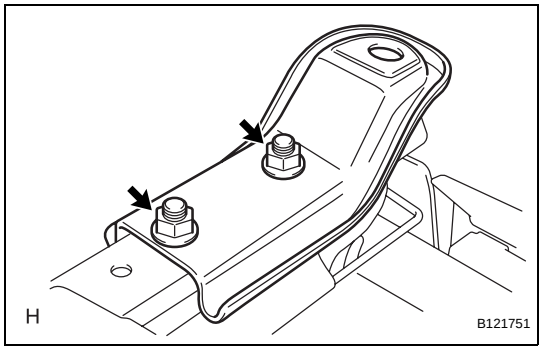

11. INSTALL FRONT SEAT TRACK REAR BRACKET LH

(a) Install the front seat track rear bracket with the 2 nuts.
Torque: 32 N*m (325 kgf*cm, 24 ft.*lbf)

12. INSTALL FRONT SEAT TRACK REAR BRACKET RH

HINT:
Use the same procedure as for the LH side.

SE

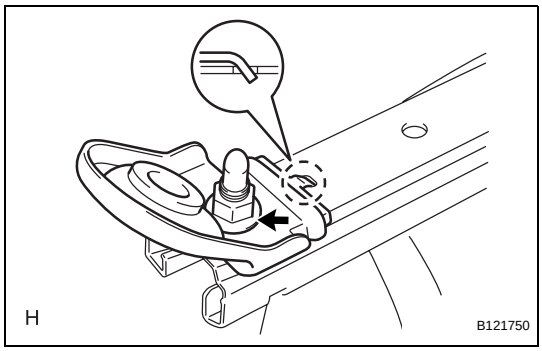

13. **INSTALL FRONT SEAT TRACK FRONT BRACKET LH**
    (a) Engage the hook and install the front seat track front bracket with the nut.
    Torque: 32 N*m (325 kgf*cm, 24 ft.*lbf)

14. **INSTALL FRONT SEAT TRACK FRONT BRACKET RH**
    HINT:
    Use the same procedure as for the LH side.

15. **INSTALL SEAT POSITION SENSOR**
    (a) for Driver Side:
        (1) Install the seat position sensor (See page RS-622).
    (b) for Front Passenger Side:
        (1) Install the seat position sensor (See page RS-621).

16. **INSTALL SEAT POSITION SENSOR PROTECTOR (See page RS-622)**

17. **INSTALL OCCUPANT CLASSIFICATION ECU (See page RS-635)**

18. **INSTALL FRONT SEAT BACK COVER**
    (a) Using hog ring pliers, install the front seat back cover with 4 new hog rings.
    NOTICE:
    - **Do not contaminate or scratch the front seat cushion cover.**
    - **When installing the hog rings, minimize wrinkles as far as possible.**
    (b) Using hog ring pliers, install 4 wires with the 4 new hog rings.

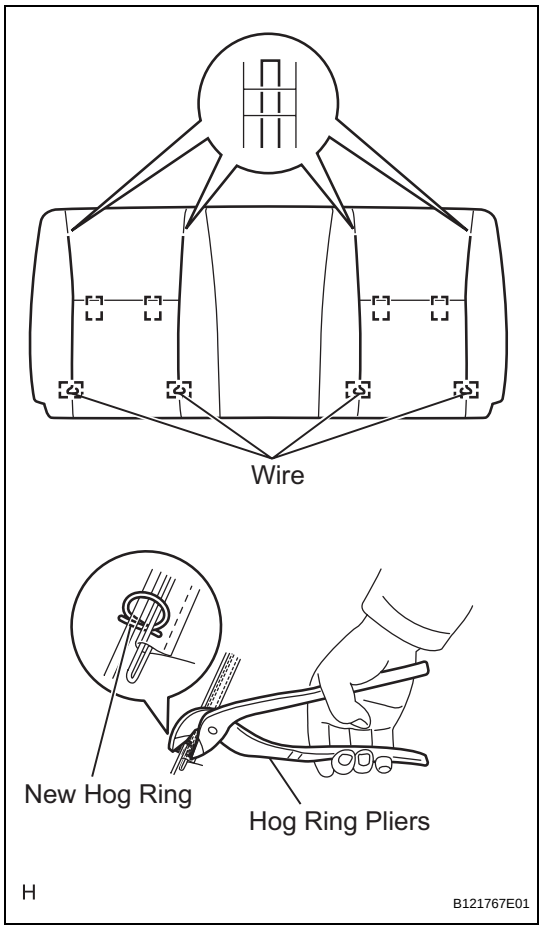

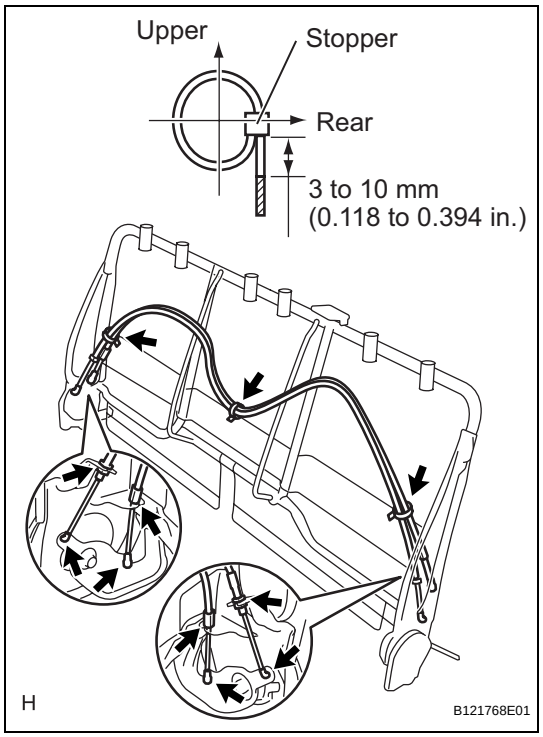

19. INSTALL FRONT SEAT RECLINING CONTROL CABLE ASSEMBLY

(a) Install the 4 cable ends and the 2 front seat reclining control cables.
(b) Install the 2 casing caps.
(c) Install the 2 screw caps with the 2 nuts.
(d) Install 3 new wiring harness clamps as shown in the illustration.
(e) Cut each wiring harness clamp 3 to 10 mm (0.118 to 0.394 in.) from the stopper, as shown in the illustration.

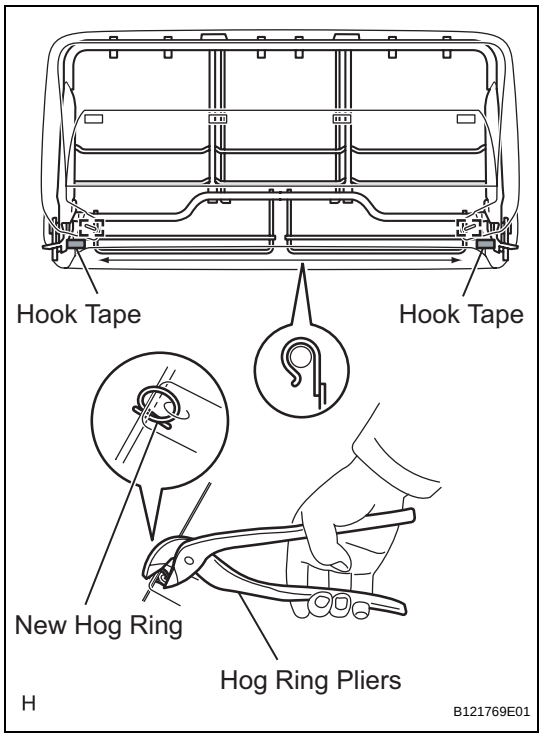

20. INSTALL FRONT SEAT BACK SPRING ASSEMBLY

(a) Engage the 4 hooks and install the front seat back spring.
(b) Install the 2 pieces of hook tape.
(c) Using hog ring pliers, install 2 new hog rings.

SE

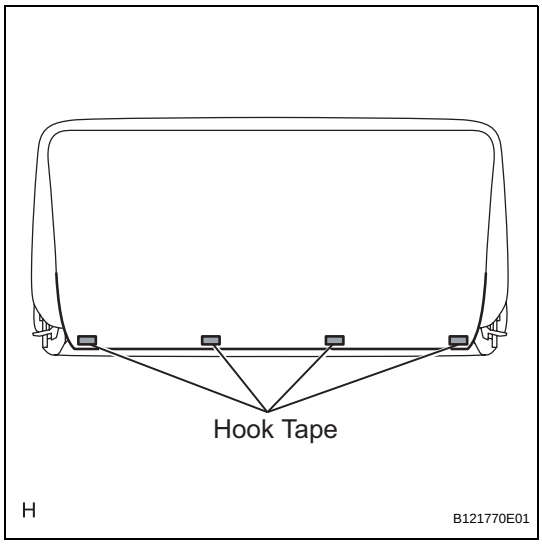

(d) Install the 4 pieces of hook tape.

SE

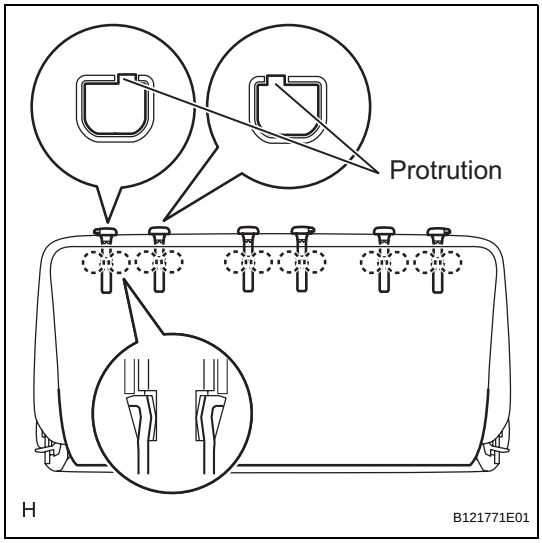

21. INSTALL FRONT SEAT HEADREST SUPPORT

(a) Align the protruding portions of the front seat headrest support with the installation grooves of the front seat back spring.

(b) Engage the 12 claws and install the 6 front seat headrest supports.

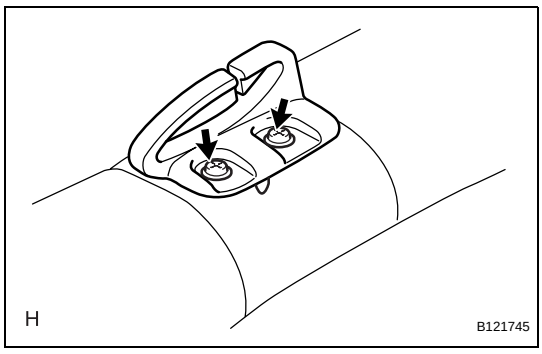

22. INSTALL FRONT CENTER SEAT OUTER BELT GUIDE

(a) Align the pin of the front center seat outer belt guide with the installation hole in the front seat back spring.

(b) Install the front center seat outer belt guide with the 2 screws.

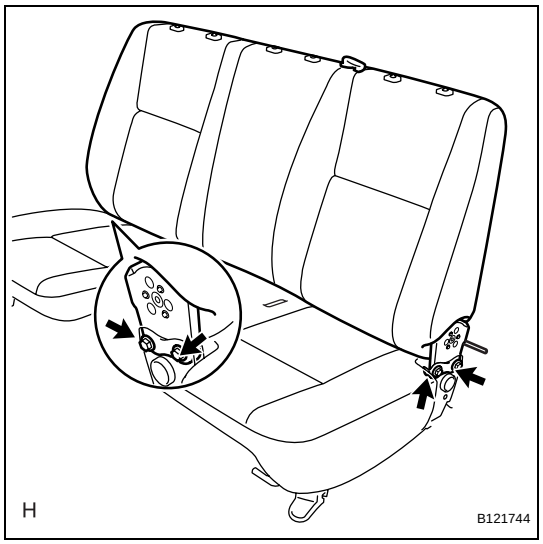

23. INSTALL FRONT SEAT BACK ASSEMBLY

(a) Install the front seat back with the 4 bolts.
Torque: 42 N*m (430 kgf*cm, 31 ft.*lbf)

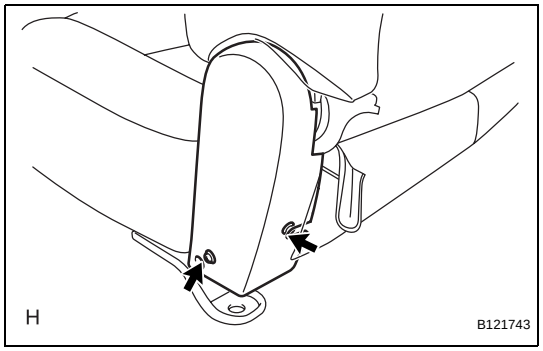

24. INSTALL FRONT SEAT HINGE COVER LH

(a) Install the front seat hinge cover with the 2 screws.

25. INSTALL FRONT SEAT HINGE COVER RH

HINT:
Use the same procedure as for the LH side.

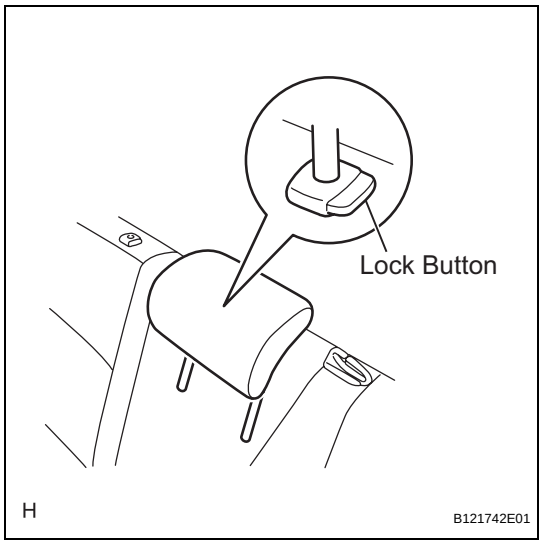

26. INSTALL FRONT CENTER SEAT HEADREST ASSEMBLY

(a) Push in the lock button of the front seat headrest support and install the front center seat headrest.

SE

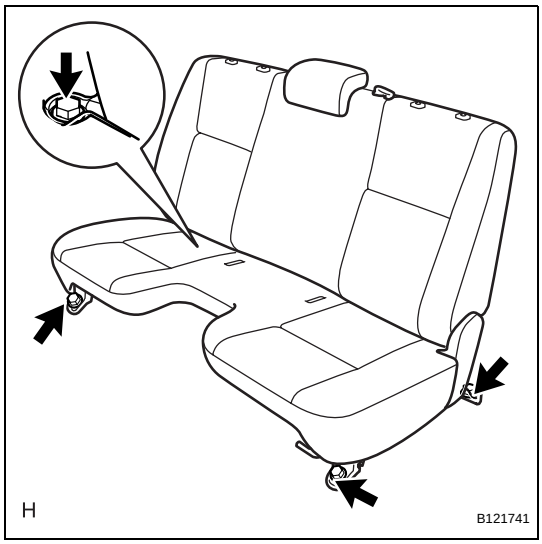

INSTALLATION

1. INSTALL FRONT SEAT ASSEMBLY

(a) Place the front seat in the cabin.
(b) Slide the front seat to the most rearward position.
(c) Tighten the 2 bolts on the front side.
Torque: 37 N*m (375 kgf*cm, 27 ft.*lbf)
(d) Slide the front seat to the most forward position.
(e) Tighten the 2 bolts on the rear side.
Torque: 37 N*m (375 kgf*cm, 27 ft.*lbf)

SE

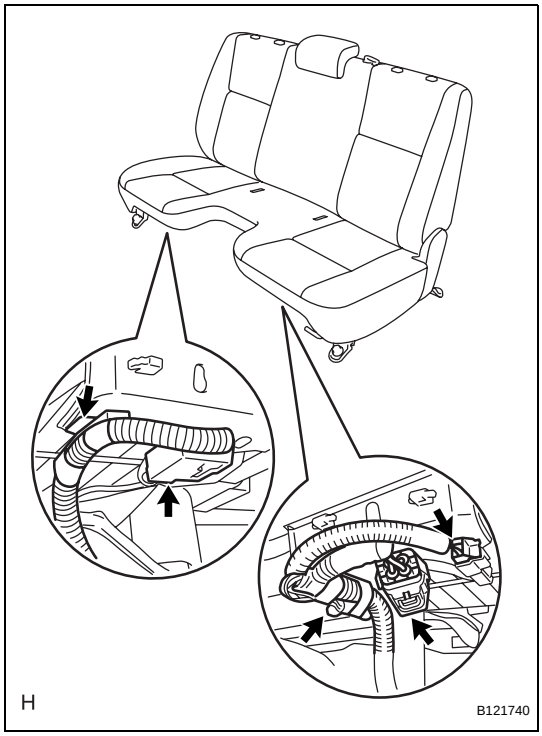

(f) Install the 2 wiring harness clamps.
(g) Connect the 3 connectors.

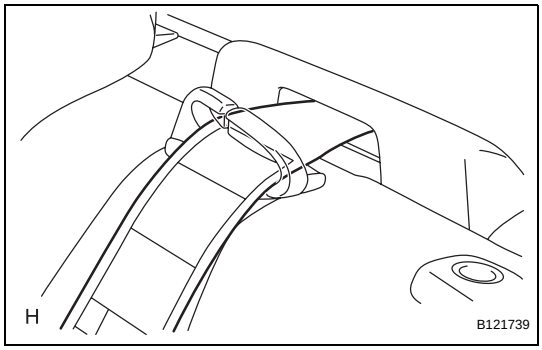

(h) Install the belt of the front center seat outer belt into the front center seat outer belt guide.

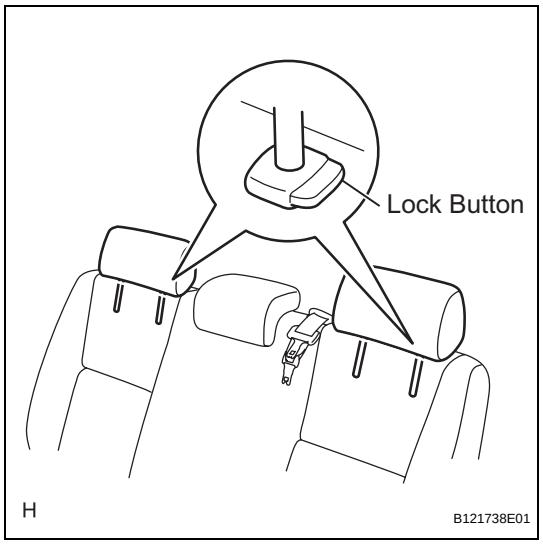

2. **INSTALL FRONT SEAT HEADREST ASSEMBLY**
   (a) Push in the 2 lock buttons of the 2 front seat headrest supports and install the 2 front seat headrests.
3. **INSTALL FRONT SEAT INNER BELT ASSEMBLY LH (See page SB-13)**
4. **INSTALL FRONT SEAT INNER BELT ASSEMBLY RH (See page SB-14)**
5. **CONNECT CABLE TO NEGATIVE BATTERY TERMINAL**
   Torque: 3.9 N*m (40 kgf*cm, 35 in.*lbf)

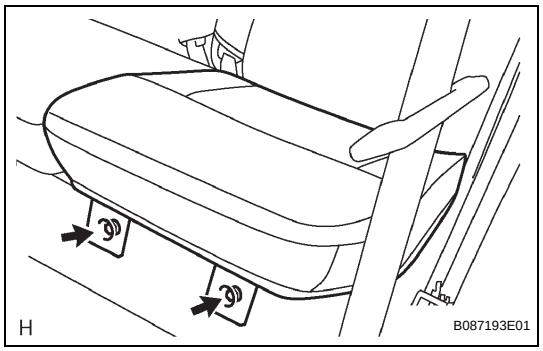

REMOVAL

1. REMOVE REAR SEAT CUSHION ASSEMBLY

(a) Remove the 2 bolts and rear seat cushion.

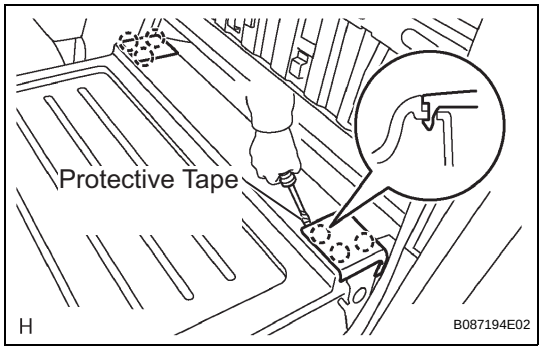

2. REMOVE REAR SEAT BACK HINGE COVER

(a) for LH Side:

HINT:

Follow the same procedures as for the opposite side.

(1) Using a screwdriver with its tip taped in protective tape, disengage the 3 claws and remove the rear seat back hinge cover.

(b) for RH Side:

(1) Remove the rear seat back hinge cover (See page SE-82).

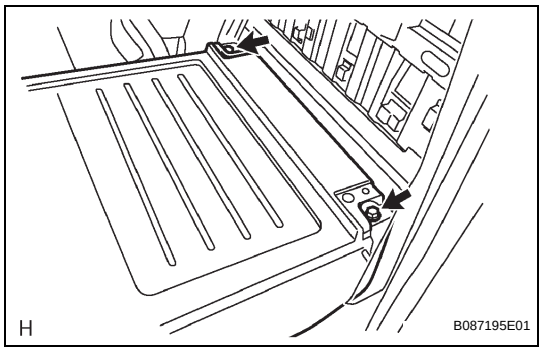

3. REMOVE REAR SEAT BACK ASSEMBLY LH

(a) Remove the 2 bolts and rear seat back.

4. REMOVE REAR SEAT BACK ASSEMBLY RH (See page SE-82)

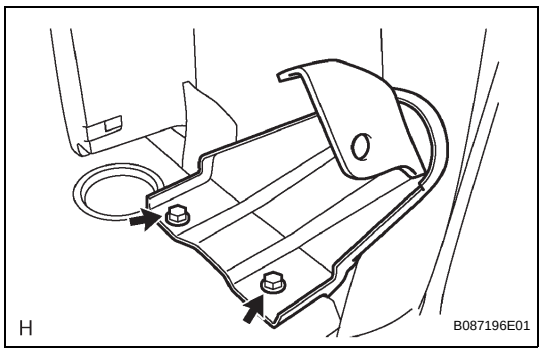

5. REMOVE REAR SEAT BACK HINGE SUB-ASSEMBLY

(a) Remove the 2 bolts and rear seat back hinge.

6. REMOVE LUGGAGE COMPARTMENT SIDE TRAY (See page IR-16)

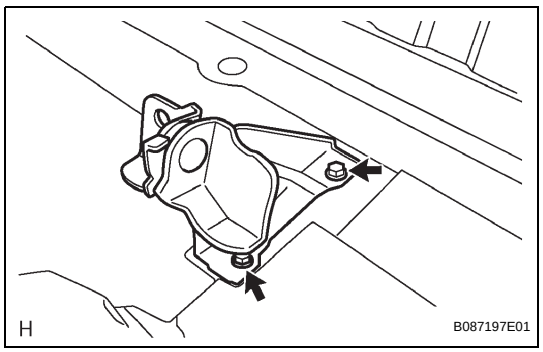

7. REMOVE REAR SEAT BACK CENTER HINGE SUB-ASSEMBLY

(a) Remove the 2 bolts and rear seat back center hinge.

SE

DISASSEMBLY

CAUTION:
Wear protective gloves. Sharp surface on the rear seat back frame could cause injuries to your hands.

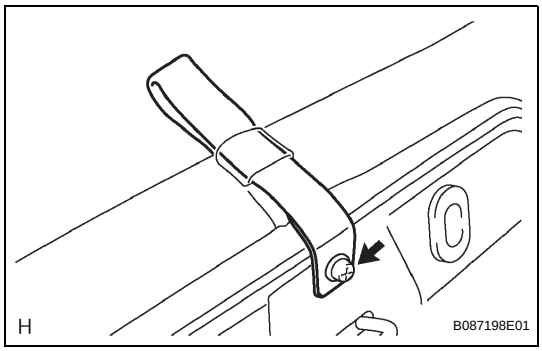

1. REMOVE REAR SEAT CUSHION BAND
(a) Remove the screw and rear seat cushion band.

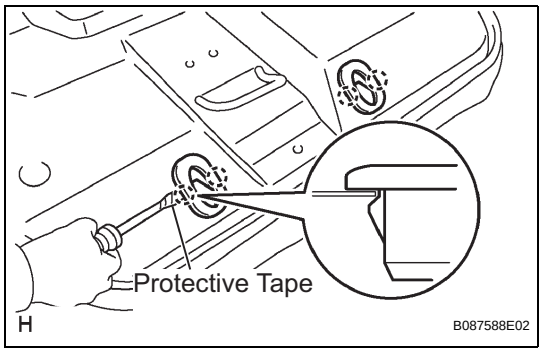

2. REMOVE REAR SEAT HEADREST HOLDER
HINT:
Follow the same procedures as for the opposite side.
(a) Using a screwdriver, disengage the 2 claws and remove the rear seat headrest holder.

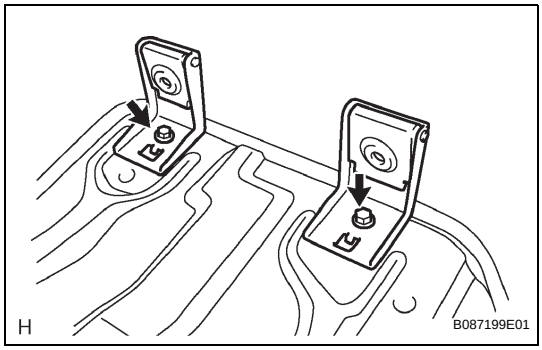

3. REMOVE REAR SEAT CUSHION HINGE SUB-ASSEMBLY
HINT:
Follow the same procedures as for the opposite side.
(a) Remove the bolt and rear seat cushion hinge.

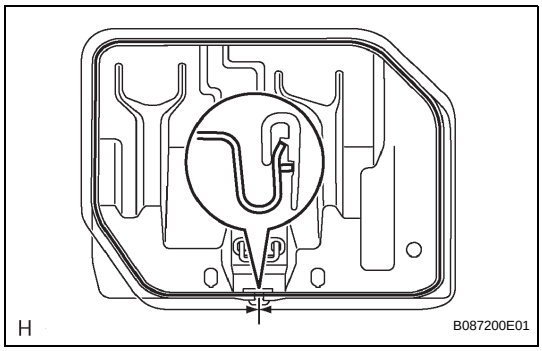

4. REMOVE REAR SEAT CUSHION FRAME SUB-ASSEMBLY
(a) Disengage the hook and remove the rear seat cushion frame.

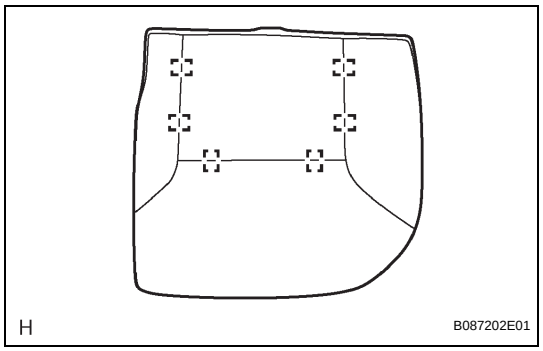

5. REMOVE REAR SEAT CUSHION COVER

(a) Remove the 6 hog rings and rear seat cushion cover.

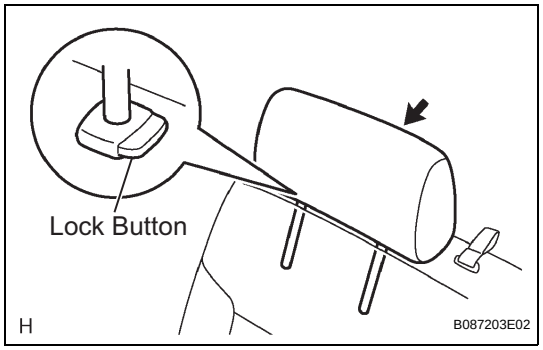

6. REMOVE REAR SEAT HEADREST ASSEMBLY

(a) Disengage the lock button of the rear seat headrest support and remove the rear seat headrest.

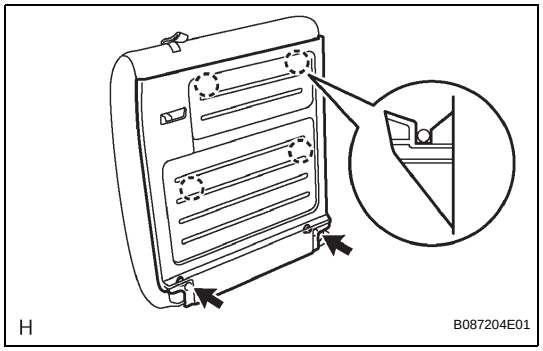

7. REMOVE REAR SEAT BACK BOARD SUB-ASSEMBLY

(a) Remove the 2 screws.

(b) Disengage the 4 claws and remove the rear seat back board.

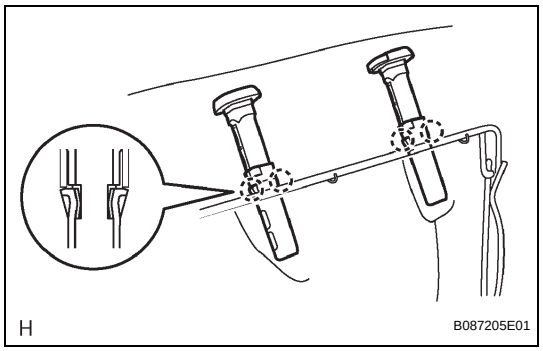

8. REMOVE REAR SEAT HEADREST SUPPORT

HINT:

Follow the same procedures as for the opposite side.

(a) Disengage the 2 claws and remove the rear seat headrest support.

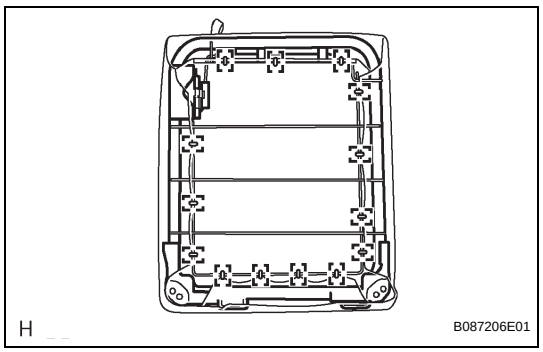

9. REMOVE REAR SEAT BACK FRAME SUB-ASSEMBLY

(a) Remove the 14 hog rings.

(b) Remove the rear seat back spring from the rear seat back pad.

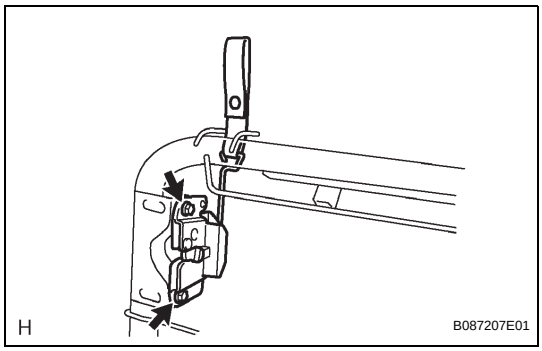

10. REMOVE REAR SEAT BACK LOCK ASSEMBLY

(a) Remove the 2 bolts and rear seat back lock.

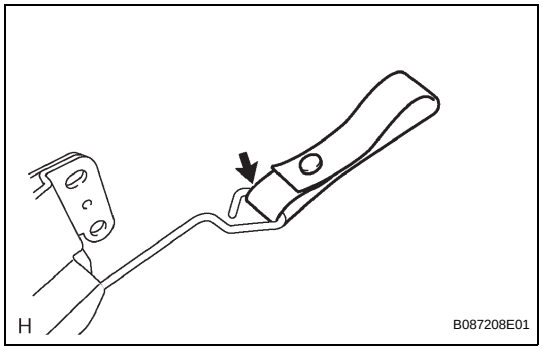

11. REMOVE REAR SEAT LOCK HANDLE

(a) Remove the rear seat lock handle from the rear seat back lock.

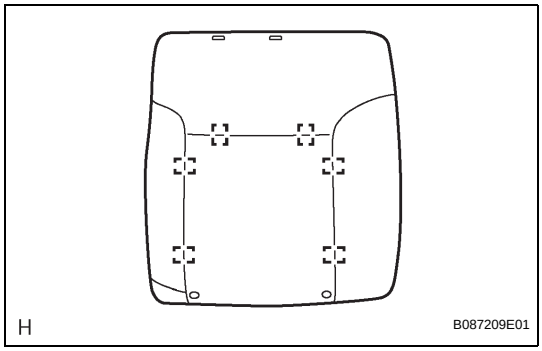

12. REMOVE REAR SEAT BACK COVER

(a) Remove the 6 hog rings and rear seat back cover.

REASSEMBLY

CAUTION:
Wear protective gloves. Sharp surface on the rear seat back frame could cause injuries to your hands.

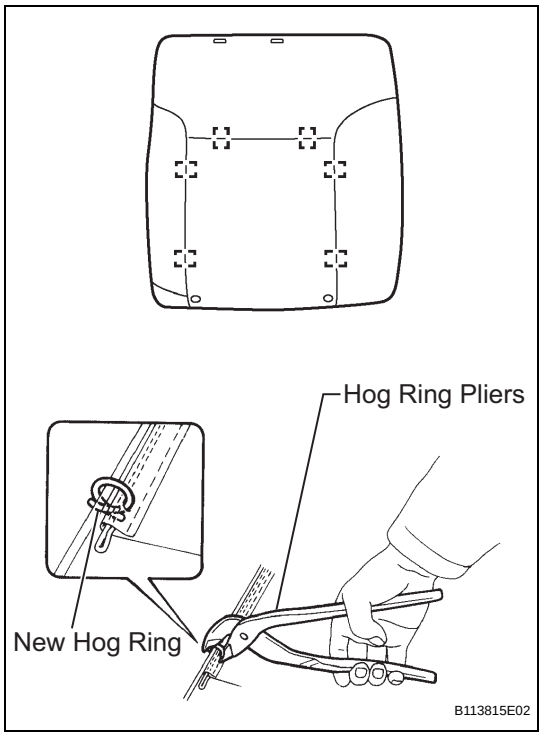

1. INSTALL REAR SEAT BACK COVER

(a) Using hog ring pliers, install the rear seat back cover with new hog rings.
NOTICE:
- **Do not contaminate or scratch the rear seat back cover.**
- **When installing the hog rings, minimize wrinkles as far as possible.**

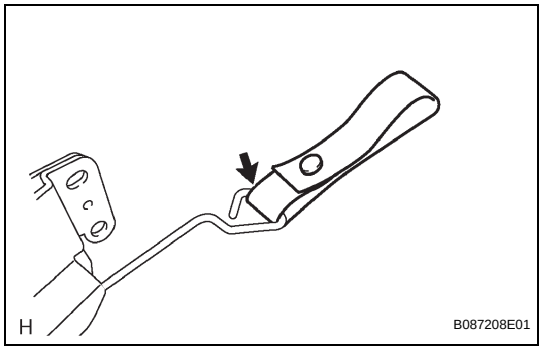

2. INSTALL REAR SEAT LOCK HANDLE

(a) Install the rear seat lock handle onto the rear seat back lock.

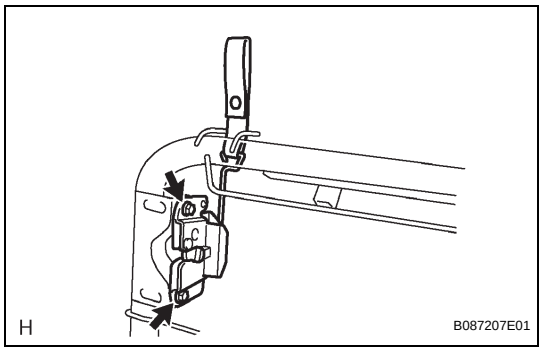

3. INSTALL REAR SEAT BACK LOCK ASSEMBLY

(a) Install the rear seat back lock with the 2 bolts.
Torque: 30 N*m (305 kgf*cm, 22 ft.*lbf)

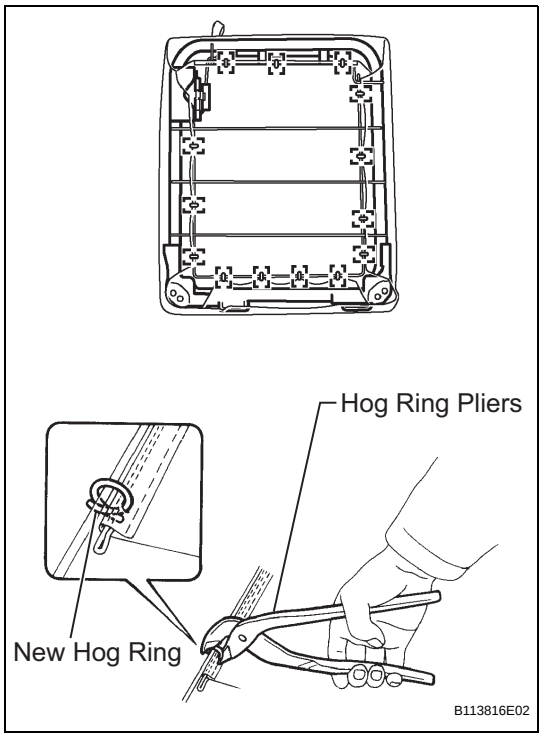

4. INSTALL REAR SEAT BACK FRAME SUB-ASSEMBLY

(a) Install the rear seat back spring into the rear seat back pad.

(b) Using hog ring pliers, install new hog rings.

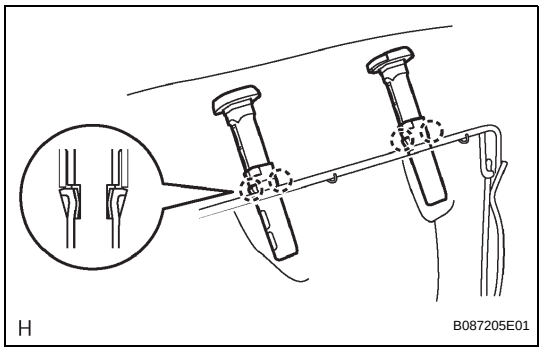

5. INSTALL REAR SEAT HEADREST SUPPORT

HINT:

Follow the same procedures as for the opposite side.

(a) Engage the 2 claws and install the front seat headrest support.

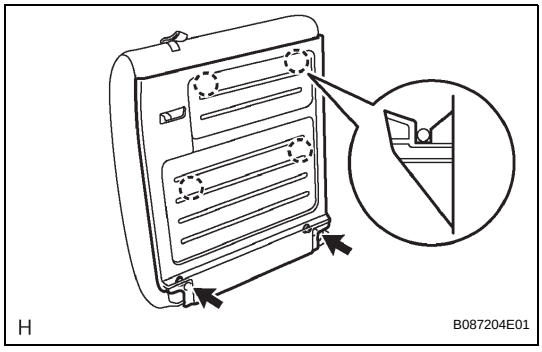

6. INSTALL REAR SEAT BACK BOARD SUB-ASSEMBLY

(a) Engage the 4 claws and install the rear seat back board.

(b) Tighten the 2 screws.

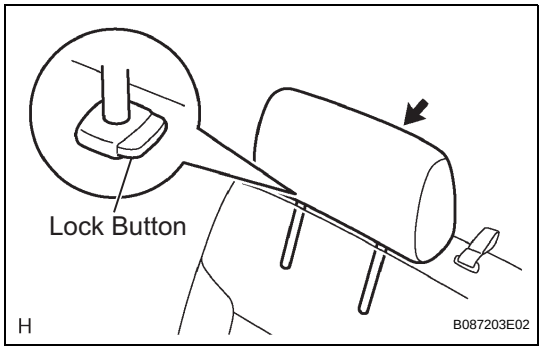

7. INSTALL REAR SEAT HEADREST ASSEMBLY

(a) Disengage the lock button of the rear seat headrest support and install the rear seat headrest.

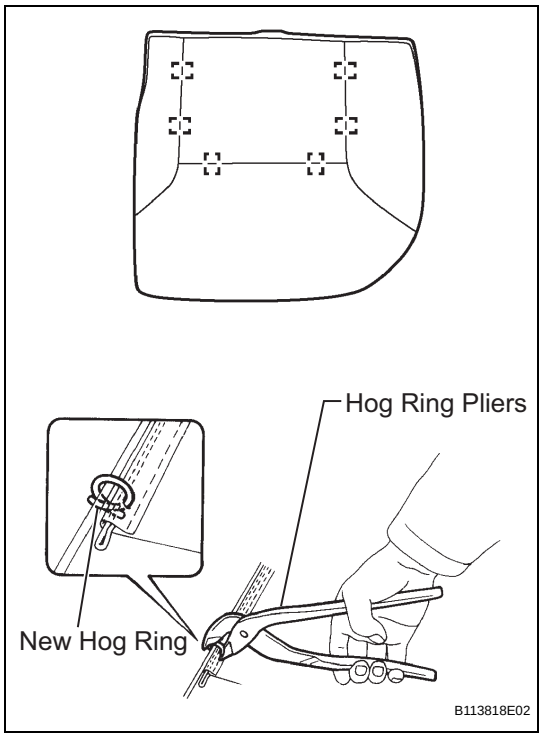

8. INSTALL REAR SEAT CUSHION COVER

(a) Using hog ring pliers, install the rear seat cushion cover with new hog rings.

NOTICE:

- **Do not contaminate or scratch the rear seat cushion cover.**
- **When installing the hog rings, minimize wrinkles as far as possible.**

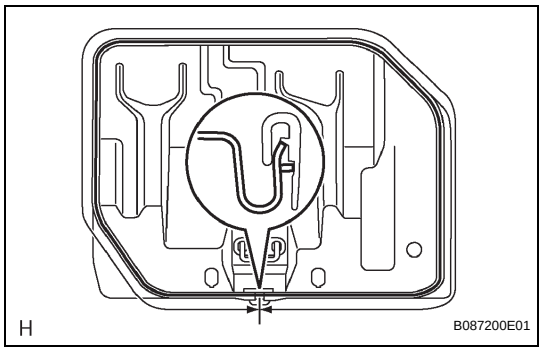

9. INSTALL REAR SEAT CUSHION FRAME SUB-ASSEMBLY

(a) Engage the hook and install the rear seat cushion frame.

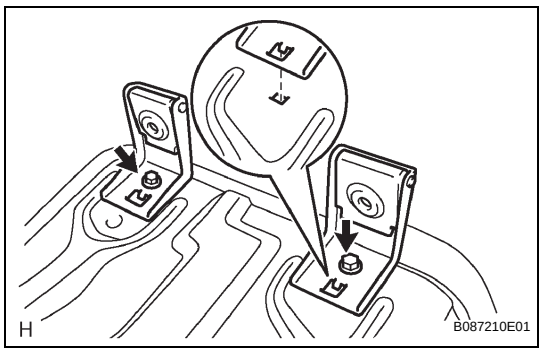

10. INSTALL REAR SEAT CUSHION HINGE SUB-ASSEMBLY

HINT:

Follow the same procedures as for the opposite side.

(a) Install the rear seat cushion hinge with the bolts.
Torque: 21 N*m (215 kgf*cm, 16 ft.*lbf)

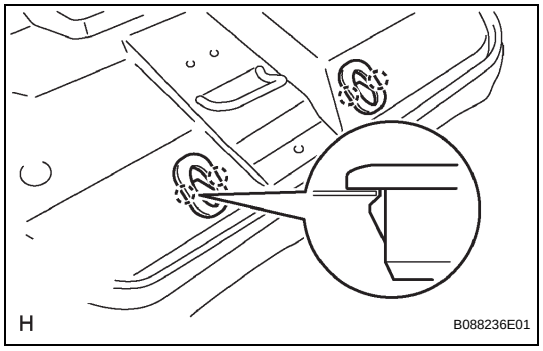

11. INSTALL REAR SEAT HEADREST HOLDER

HINT:

Follow the same procedures as for the opposite side.

(a) Engage the 2 claws and install the rear seat headrest holder.

SE

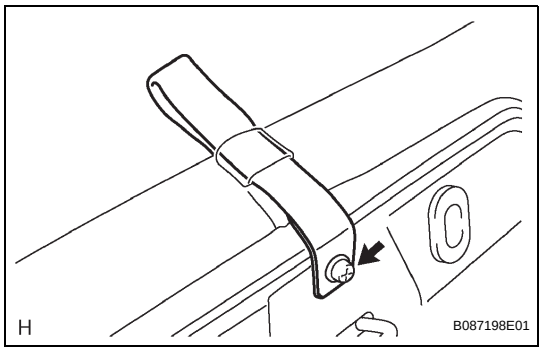

12. INSTALL REAR SEAT CUSHION BAND
(a) Install the rear seat cushion band with the screw.

INSTALLATION

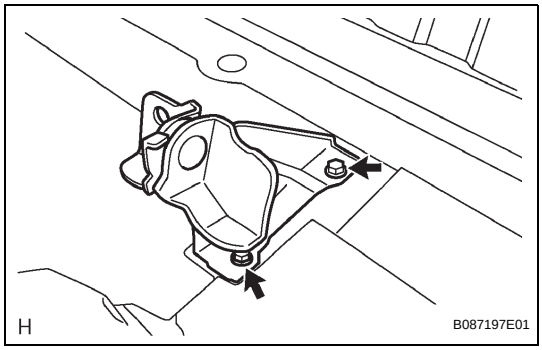

1. INSTALL REAR SEAT BACK CENTER HINGE SUB-ASSEMBLY
(a) Install the rear seat back center hinge with the 2 bolts.
Torque: 18 N*m (185 kgf*cm, 14 ft.*lbf)

2. INSTALL LUGGAGE COMPARTMENT SIDE TRAY (See page IR-26)

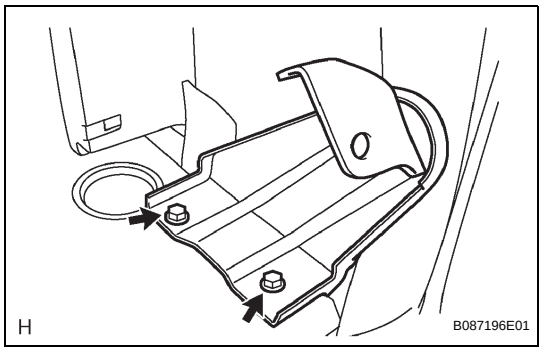

3. INSTALL REAR SEAT BACK HINGE SUB-ASSEMBLY
(a) Install the rear seat back hinge with the 2 bolts.
Torque: 18 N*m (185 kgf*cm, 14 ft.*lbf)

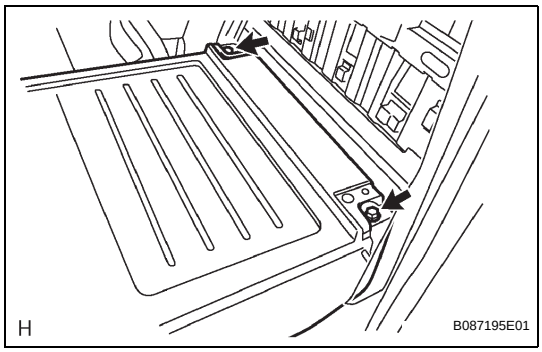

4. INSTALL REAR SEAT BACK ASSEMBLY LH
(a) Install the rear seat back with the 2 bolts.
Torque: 37 N*m (375 kgf*cm, 27 ft.*lbf)

5. INSTALL REAR SEAT BACK ASSEMBLY RH (See page SE-90)

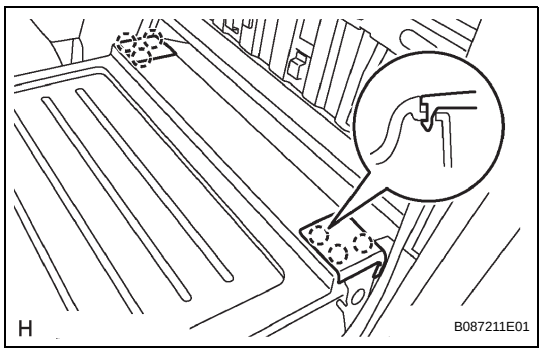

6. INSTALL REAR SEAT BACK HINGE COVER
(a) for LH Side:
HINT:
Follow the same procedures as for the opposite side.
(1) Engage the 3 claws and install the rear seat back hinge cover.
(b) for RH Side:
(1) Remove the rear seat back hinge cover (See page SE-90).

SE

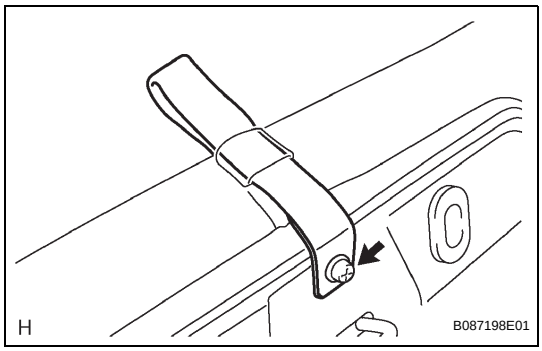

12. INSTALL REAR SEAT CUSHION BAND
(a) Install the rear seat cushion band with the screw.

INSTALLATION

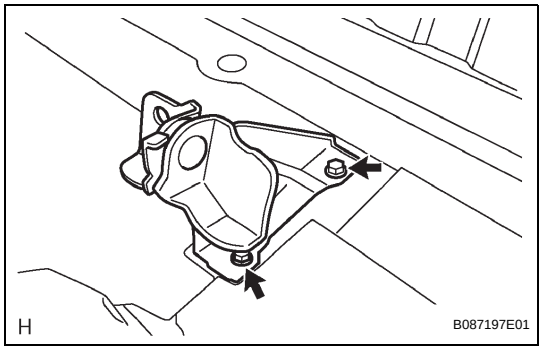

1. INSTALL REAR SEAT BACK CENTER HINGE SUB-ASSEMBLY
(a) Install the rear seat back center hinge with the 2 bolts.
Torque: 18 N*m (185 kgf*cm, 14 ft.*lbf)

2. INSTALL LUGGAGE COMPARTMENT SIDE TRAY (See page IR-26)

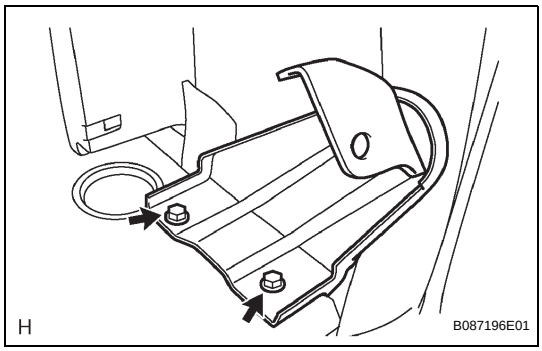

3. INSTALL REAR SEAT BACK HINGE SUB-ASSEMBLY
(a) Install the rear seat back hinge with the 2 bolts.
Torque: 18 N*m (185 kgf*cm, 14 ft.*lbf)

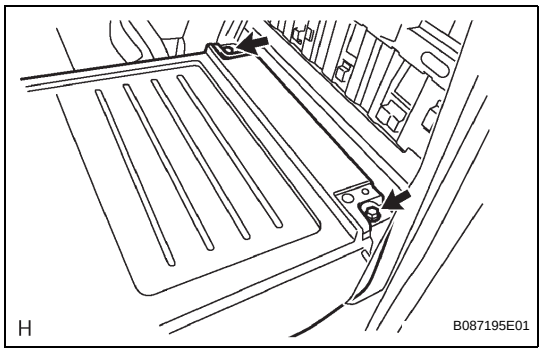

4. INSTALL REAR SEAT BACK ASSEMBLY LH
(a) Install the rear seat back with the 2 bolts.
Torque: 37 N*m (375 kgf*cm, 27 ft.*lbf)

5. INSTALL REAR SEAT BACK ASSEMBLY RH (See page SE-90)

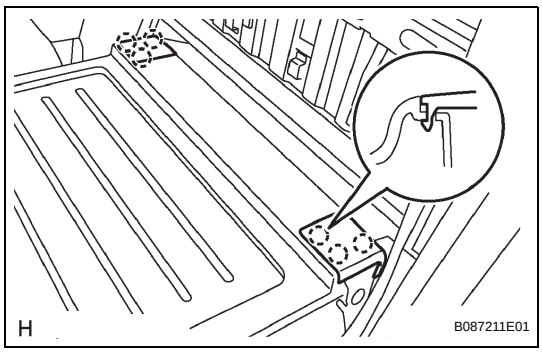

6. INSTALL REAR SEAT BACK HINGE COVER
(a) for LH Side:
HINT:
Follow the same procedures as for the opposite side.
(1) Engage the 3 claws and install the rear seat back hinge cover.
(b) for RH Side:
(1) Remove the rear seat back hinge cover (See page SE-90).

SE

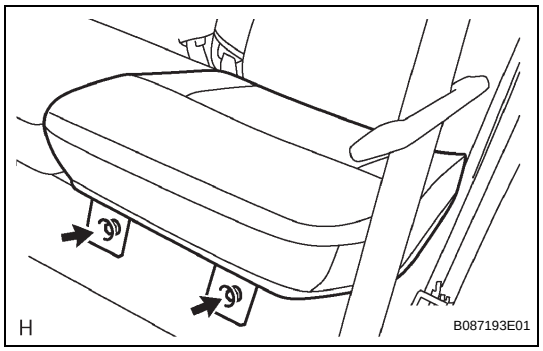

7. INSTALL REAR SEAT CUSHION ASSEMBLY

(a) Install the rear seat cushion with the 2 bolts.
Torque: 37 N*m (375 kgf*cm, 27 ft.*lbf)

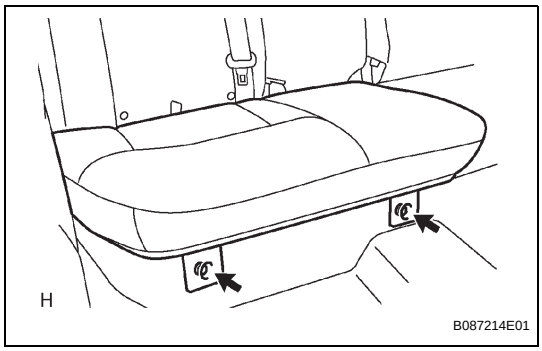

REMOVAL

1. REMOVE REAR SEAT CUSHION ASSEMBLY

(a) Remove the 2 bolts and rear seat cushion.

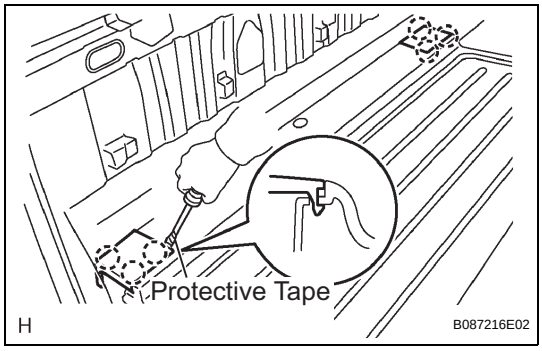

2. REMOVE REAR SEAT BACK HINGE COVER

(a) Using a screwdriver with its tip taped in protective tape, disengage the 3 claws and remove the rear seat back hinge cover.

HINT:

Follow the same procedures as for the opposite side.

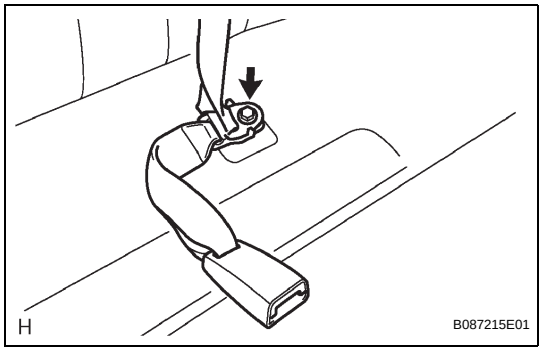

3. REMOVE REAR SEAT BACK ASSEMBLY

(a) Remove the bolt, rear seat belt outer center and floor anchor of the rear seat belt inner.

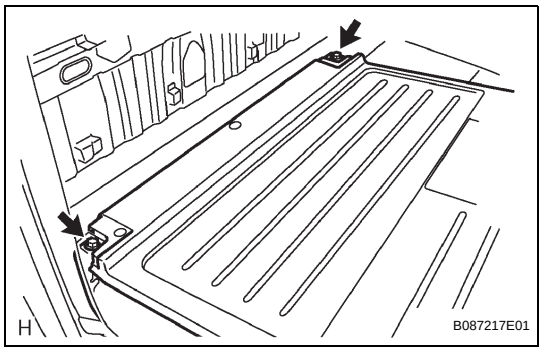

(b) Remove the 2 bolts and rear seat back.

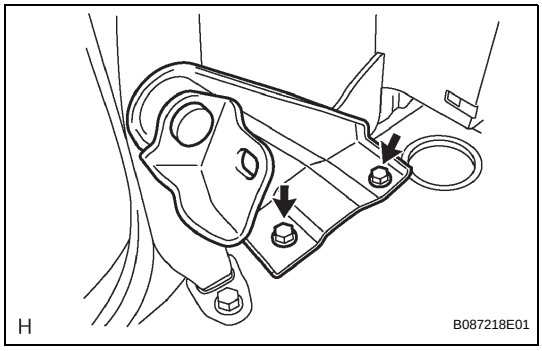

4. REMOVE REAR SEAT BACK HINGE SUB-ASSEMBLY

(a) Remove the 2 bolts and rear seat back hinge.

DISASSEMBLY

CAUTION:
Wear protective gloves. Sharp surface on the rear seat back frame could cause injuries to your hands.

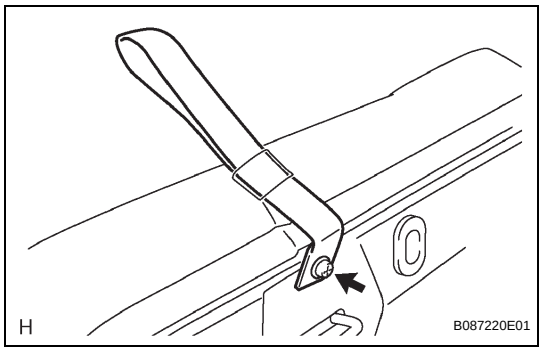

1. REMOVE REAR SEAT CUSHION BAND
(a) Remove the screw and rear seat cushion band.

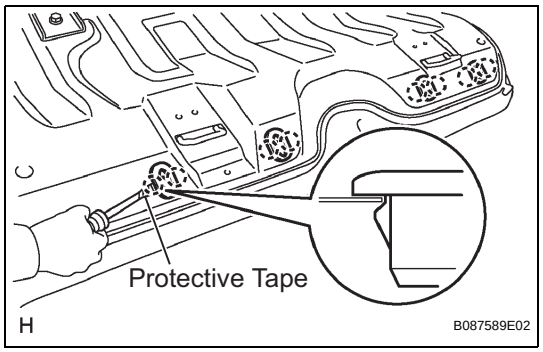

2. REMOVE REAR SEAT HEADREST HOLDER
HINT:
Follow the same procedures as for the opposite side.
(a) Disengage the 2 claws and remove the rear seat headrest holder.

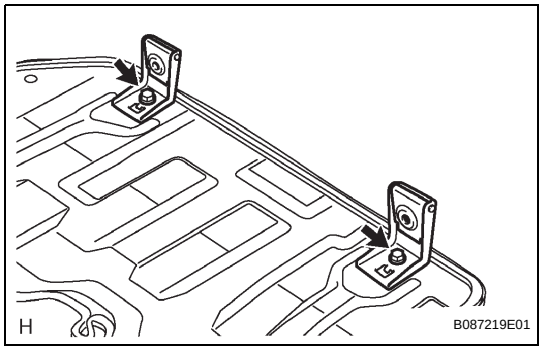

3. REMOVE REAR SEAT CUSHION HINGE SUB-ASSEMBLY
HINT:
Follow the same procedures as for the opposite side.
(a) Remove the bolt and rear seat cushion hinge.

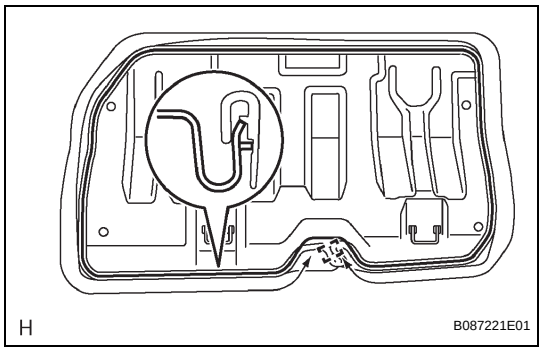

4. REMOVE REAR SEAT CUSHION FRAME SUB-ASSEMBLY
(a) Remove the hog ring.
(b) Disengage the hook and remove the rear seat cushion frame.

SE

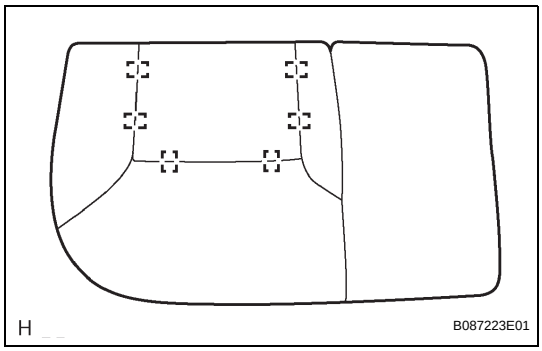

5. REMOVE REAR SEAT CUSHION COVER

(a) Remove the 6 hog rings and rear seat cushion cover.

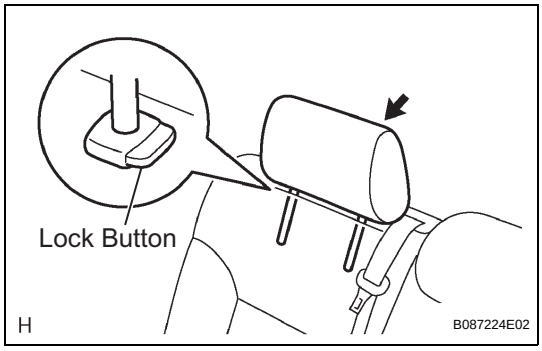

6. REMOVE REAR SEAT HEADREST ASSEMBLY

(a) Disengage the lock button of the rear seat headrest support and remove the rear seat headrest.

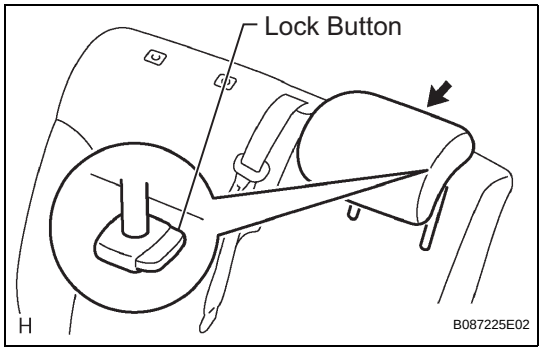

7. REMOVE REAR CENTER SEAT HEADREST ASSEMBLY

(a) Disengage the lock button of the rear seat headrest support and remove the rear seat headrest center.

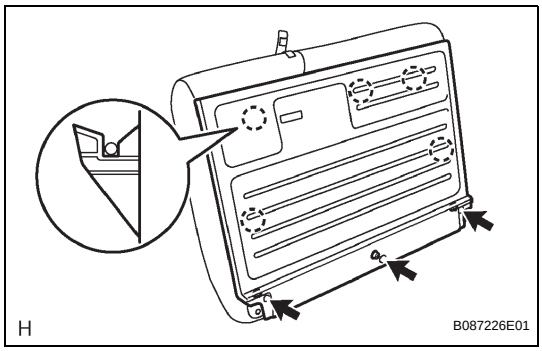

8. REMOVE REAR SEAT BACK BOARD SUB-ASSEMBLY

(a) Remove the 3 screws.

(b) Disengage the 5 claws and remove the rear seat back board.

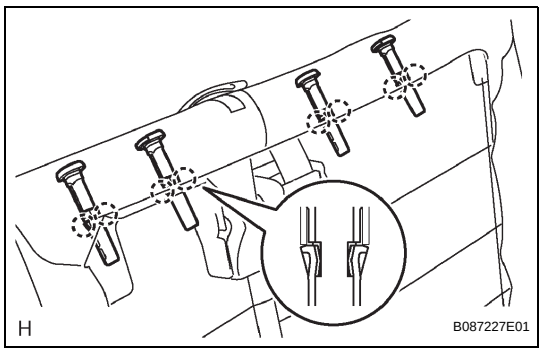

9. REMOVE REAR SEAT HEADREST SUPPORT

HINT:

Follow the same procedures as for the opposite side.

(a) Disengage the 2 claws and remove the front seat headrest support.

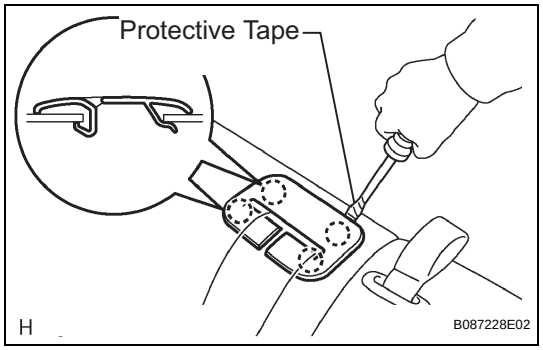

10. REMOVE REAR SEAT SHOULDER BELT COVER

(a) Using a screwdriver with its tip taped with protective tape, disengage the 4 claws and remove the rear seat shoulder belt cover.

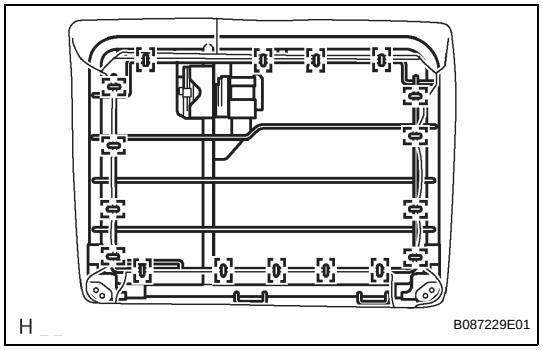

11. REMOVE REAR SEAT BACK FRAME SUB-ASSEMBLY

(a) Remove the 17 hog rings.

(b) Remove the rear seat back spring from the rear seat back pad.

SE

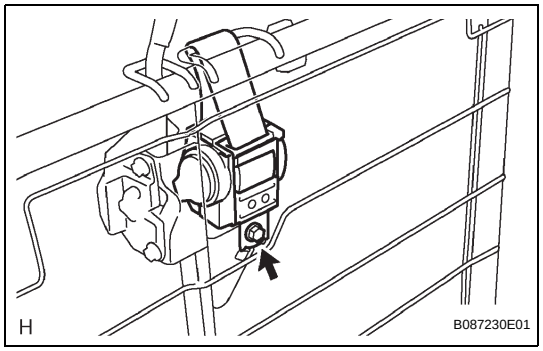

12. REMOVE REAR CENTER SEAT OUTER BELT ASSEMBLY

(a) Insert the belt through the hole into the rear seat back frame.

(b) Remove the bolt and rear seat belt outer center.

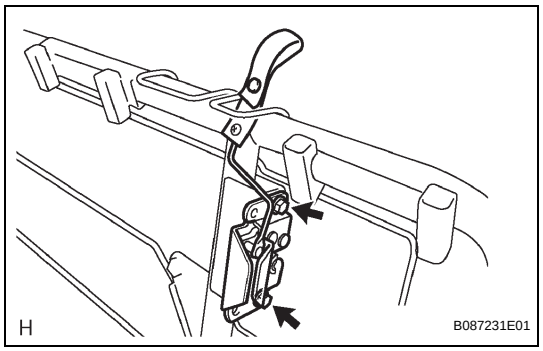

13. REMOVE REAR SEAT BACK LOCK ASSEMBLY

(a) Remove the 2 bolts and rear seat back lock.

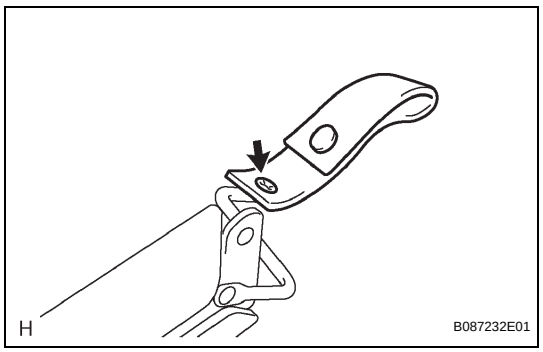

14. REMOVE REAR SEAT LOCK HANDLE

(a) Remove the screw and rear seat lock handle.

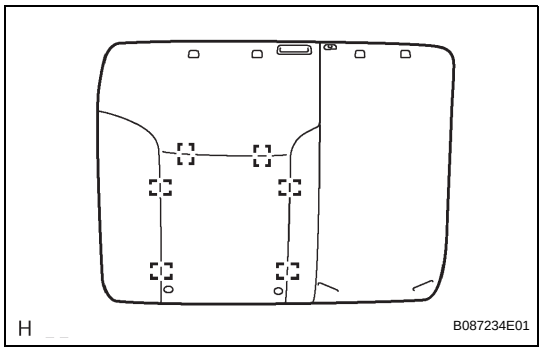

15. REMOVE REAR SEAT BACK COVER

(a) Remove the 6 hog rings and rear seat back cover.

REASSEMBLY

CAUTION:
Wear protective gloves. Sharp surface on the rear seat back frame could cause injuries to your hands.

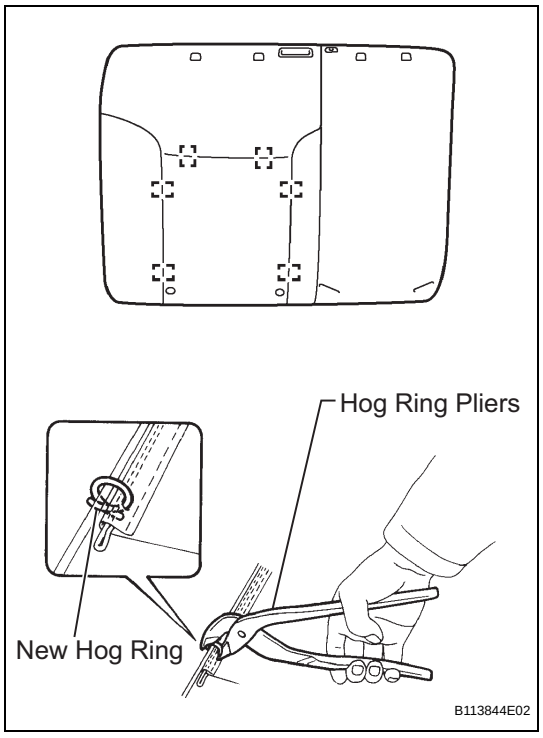

1. INSTALL REAR SEAT BACK COVER

(a) Using hog ring pliers, install the rear seat back cover with new hog rings.
NOTICE:
- **Do not contaminate or scratch the rear seat back cover.**
- **When installing the hog rings, minimize wrinkles as far as possible.**

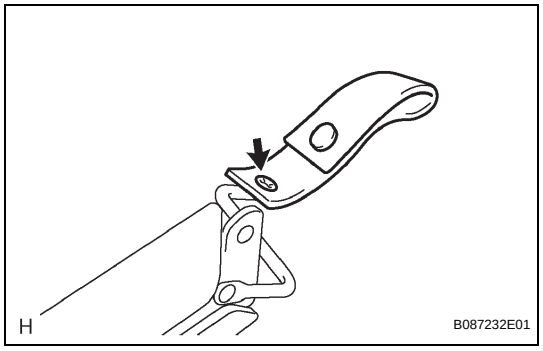

2. INSTALL REAR SEAT LOCK HANDLE

(a) Install the rear seat lock handle with the screw.

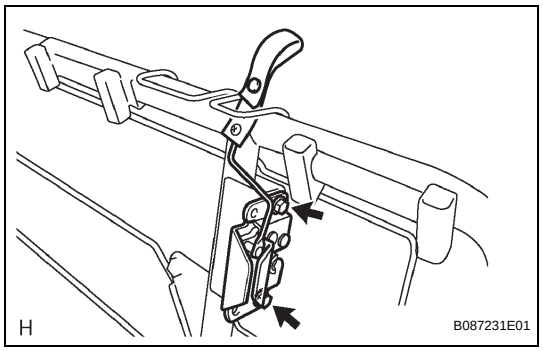

3. INSTALL REAR SEAT BACK LOCK ASSEMBLY

(a) Install the rear seat back lock with the 2 bolts.
Torque: 30 N*m (305 kgf*cm, 22 ft.*lbf)

SE

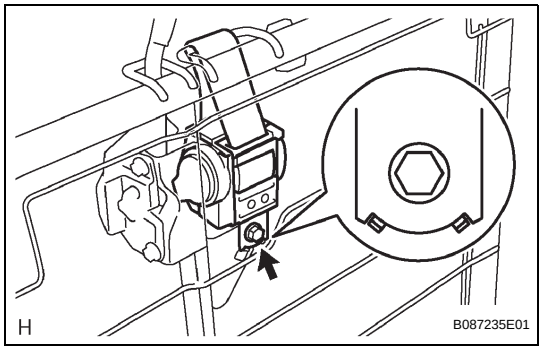

4. INSTALL REAR CENTER SEAT OUTER BELT ASSEMBLY

(a) Align the retractor with the positioning claws of the rear seat back frame and install the retractor with the bolt.
Torque: 44 N*m (450 kgf*cm, 33 ft.*lbf)

(b) Insert the belt through the hole into the rear seat back frame.

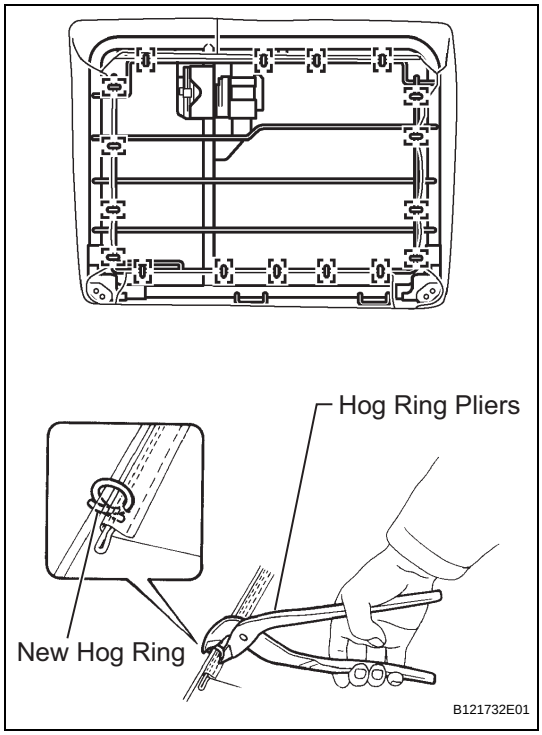

5. INSTALL REAR SEAT BACK FRAME SUB-ASSEMBLY

(a) Install the rear seat back spring into the rear seat back pad.

(b) Using hog ring pliers, install new hog rings.

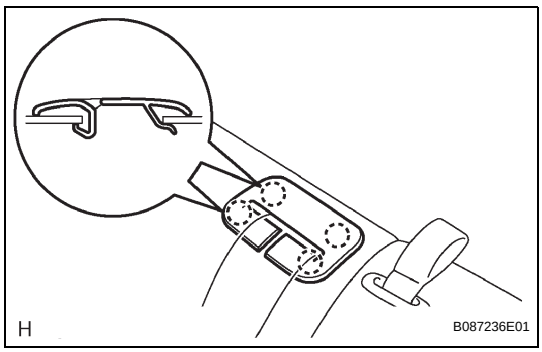

6. INSTALL REAR SEAT SHOULDER BELT COVER

(a) Engage the 4 claws and install the rear seat shoulder belt cover.

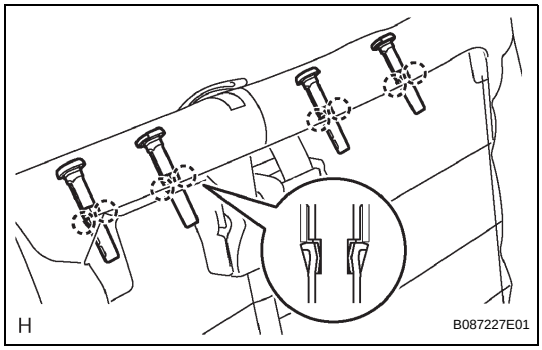

7. INSTALL REAR SEAT HEADREST SUPPORT

HINT:
Follow the same procedures as for the opposite side.

(a) Engage the 2 claws and install the front seat headrest support.

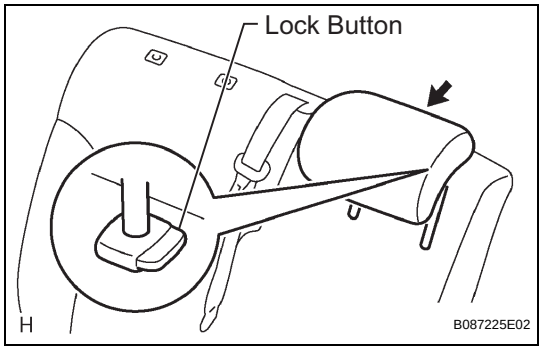

8. INSTALL REAR SEAT BACK BOARD SUB-ASSEMBLY

(a) Disengage the lock button of the rear seat headrest support and install the rear seat headrest center.

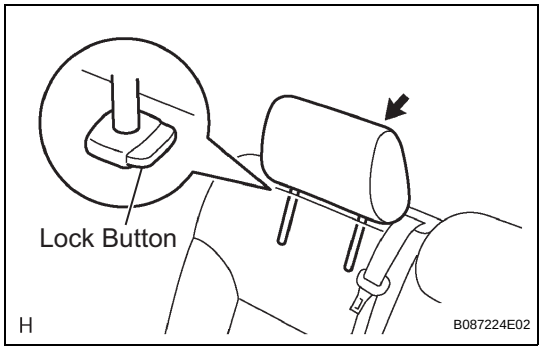

9. INSTALL REAR CENTER SEAT HEADREST ASSEMBLY

(a) Disengage the lock button of the rear seat headrest support and install the rear center seat headrest.

SE

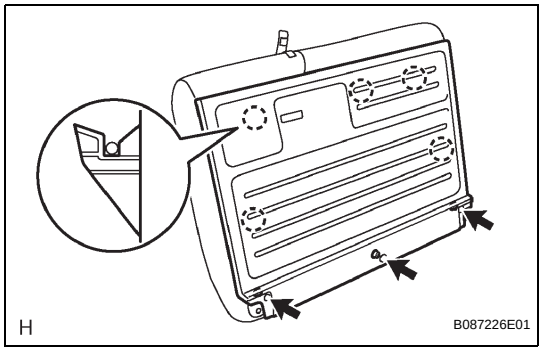

10. INSTALL REAR SEAT HEADREST ASSEMBLY

(a) Engage the 5 claws and install the rear seat back board.

(b) Tighten the 3 screws.

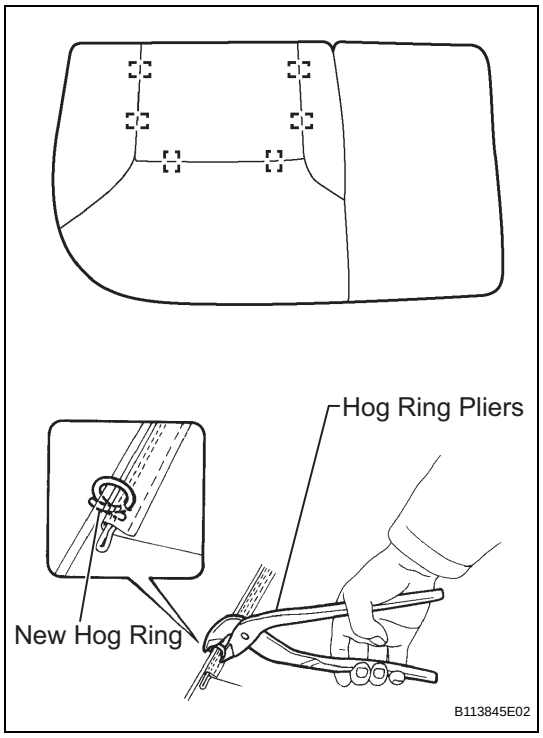

11. INSTALL REAR SEAT CUSHION COVER

(a) Using hog ring pliers, install the rear seat cushion cover with new hog rings.

NOTICE:

- **Do not contaminate or scratch the rear seat back cover.**
- **When installing the hog rings, minimize wrinkles as far as possible.**

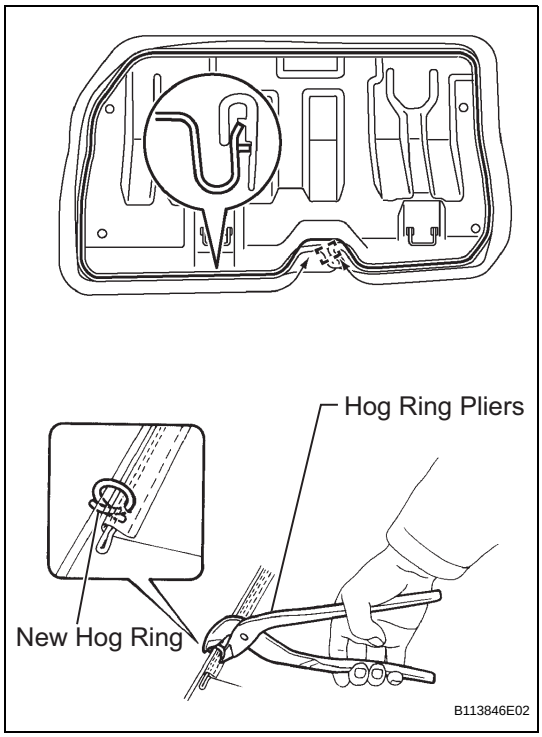

12. INSTALL REAR SEAT CUSHION FRAME SUB-ASSEMBLY

(a) Engage the hook and install the rear seat cushion frame.

(b) Install a new hog ring.

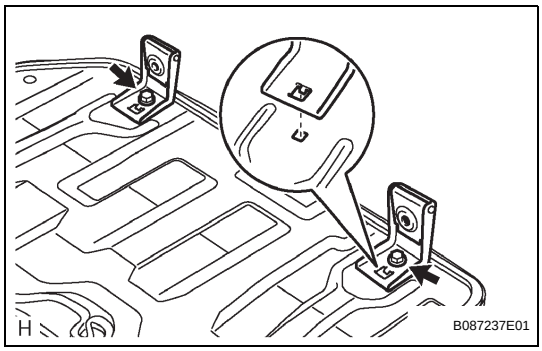

13. INSTALL REAR SEAT CUSHION HINGE SUB-ASSEMBLY

HINT:

Follow the same procedures as for the opposite side.

(a) Install the rear seat cushion hinge with the bolt.
Torque: 21 N*m (215 kgf*cm, 16 ft.*lbf)

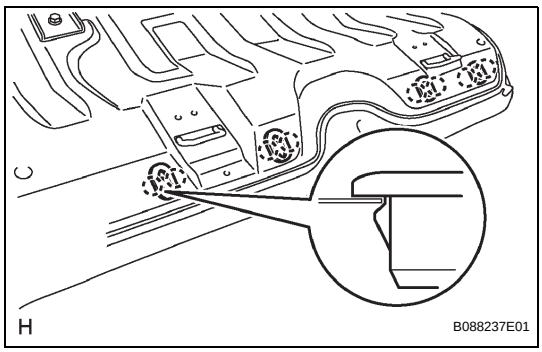

14. INSTALL REAR SEAT HEADREST HOLDER

HINT:

Follow the same procedures as for the opposite side.

(a) Engage the 2 claws and install the rear seat headrest holder.

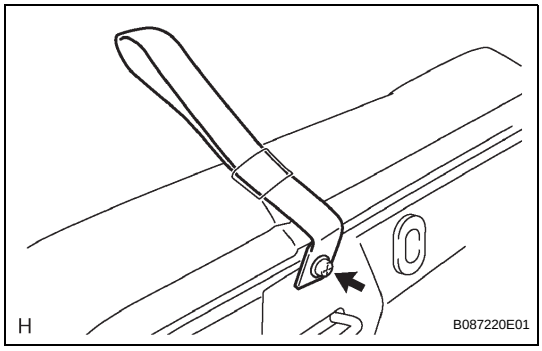

15. INSTALL REAR SEAT CUSHION BAND

(a) Install the rear seat cushion band with the screw.

INSTALLATION

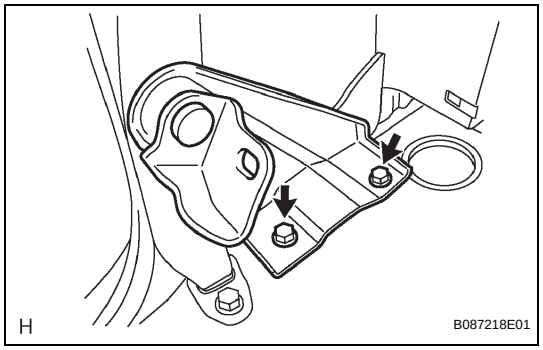

1. INSTALL REAR SEAT BACK HINGE SUB-ASSEMBLY

(a) Install the rear seat back hinge with the 2 bolts.
Torque: 18 N*m (185 kgf*cm, 14 ft.*lbf)

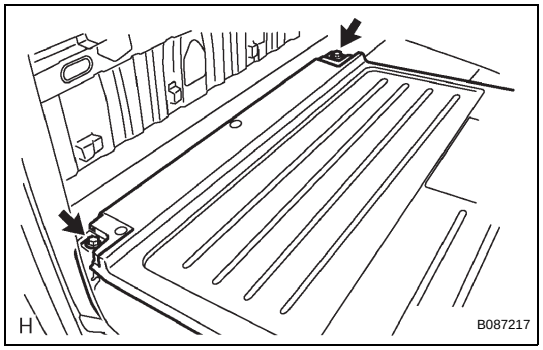

2. INSTALL REAR SEAT BACK ASSEMBLY

(a) Install the rear seat back with the 2 bolts.
Torque: 37 N*m (375 kgf*cm, 27 ft.*lbf)

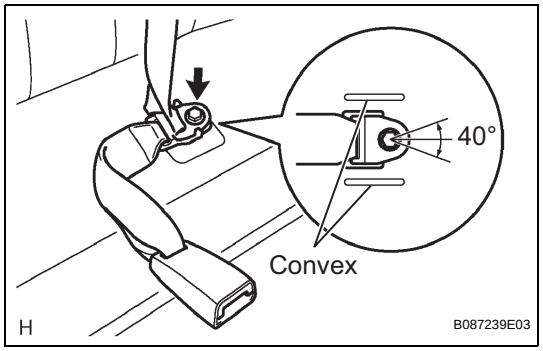

(b) Install the rear seat belt inner and rear seat belt outer center of the floor anchor with the bolt.
Torque: 42 N*m (430 kgf*cm, 31 ft.*lbf)
NOTICE:
- **Make sure that the rear seat inner belt and floor anchor of the rear center seat outer belt are oriented in the correct direction when installing.**
- **Be careful not to place the rear seat inner belt (and floor anchor of the rear center seat outer belt) over the convex areas of the floor panel.**

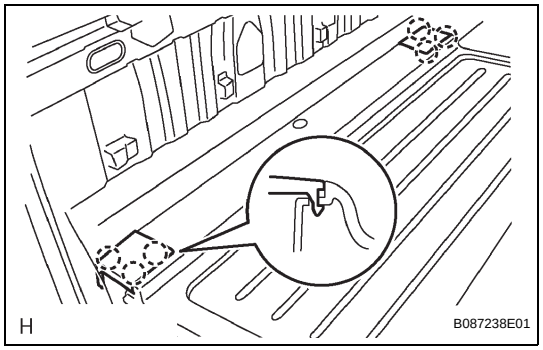

3. INSTALL REAR SEAT BACK HINGE COVER

HINT:
Follow the same procedures as for the opposite side.

(a) Lock the 3 claws and install the rear seat back hinge cover.

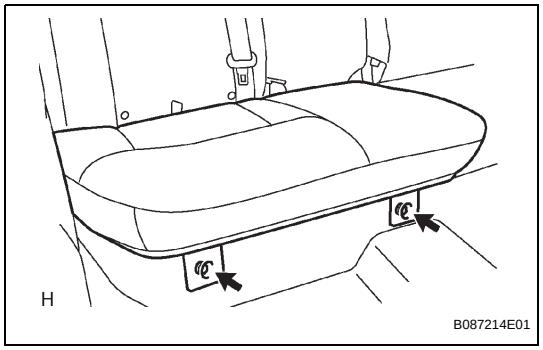

4. INSTALL REAR SEAT CUSHION ASSEMBLY

(a) Install the rear seat cushion with the 2 bolts.
Torque: 37 N*m (375 kgf*cm, 27 ft.*lbf)

SE

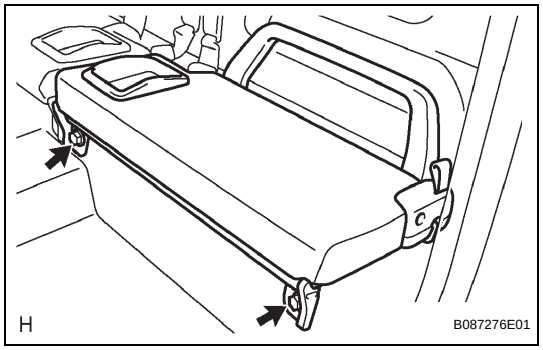

REMOVAL

1. REMOVE REAR SEAT ASSEMBLY

(a) Remove the 2 bolts and rear seat.

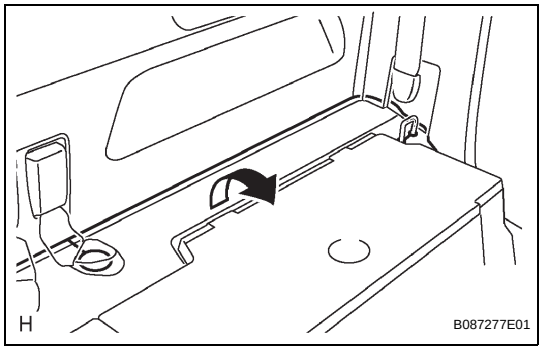

2. REMOVE REAR SEAT BACK LOCK STRIKER SUB-ASSEMBLY

(a) Open the floor carpet.

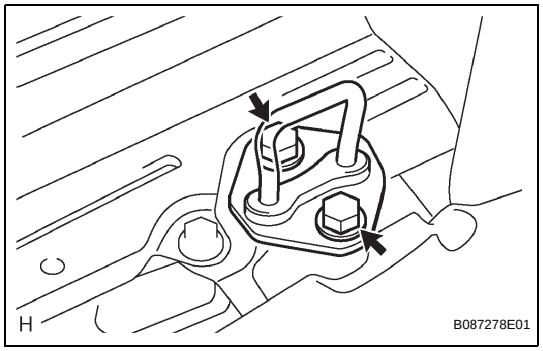

(b) Remove the 2 bolts and rear seat back lock striker.

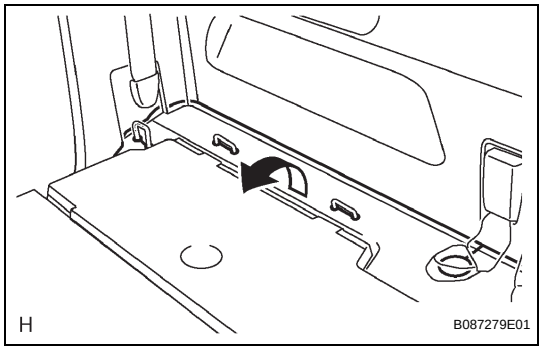

3. REMOVE CHILD RESTRAINT SEAT ANCHOR BRACKET SUB-ASSEMBLY

(a) Open the floor carpet.

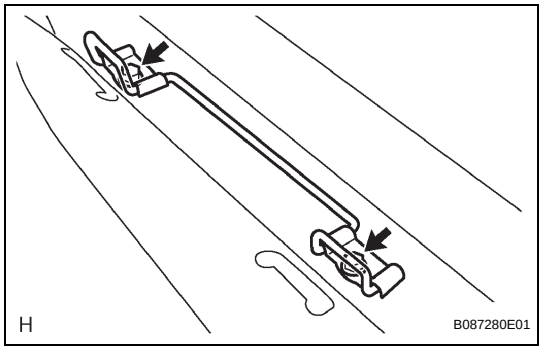

(b) Remove the 2 bolts and child restraint seat anchor bracket.

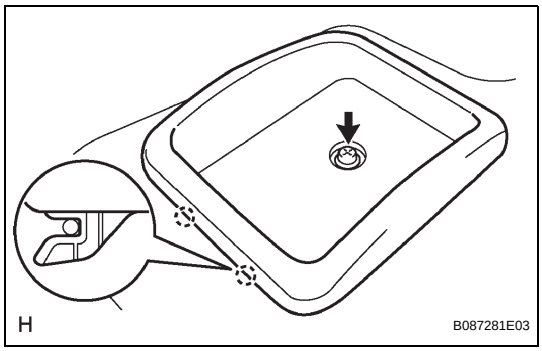

DISASSEMBLY

1. REMOVE REAR SEAT BACK TRAY
(a) Remove the screw.
(b) Disengage the 2 claws and remove the sub seat back tray.

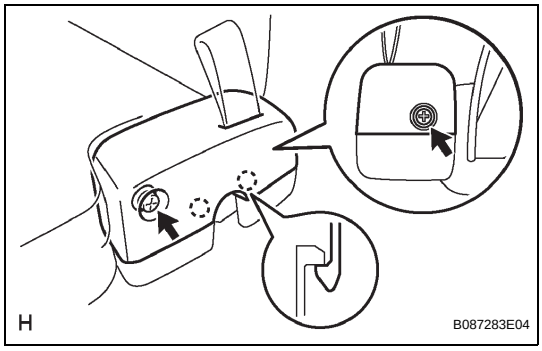

2. REMOVE REAR SEAT BACK COVER
(a) Remove the 2 screws.
(b) Disengage the 2 claws and remove the rear seat back cover.

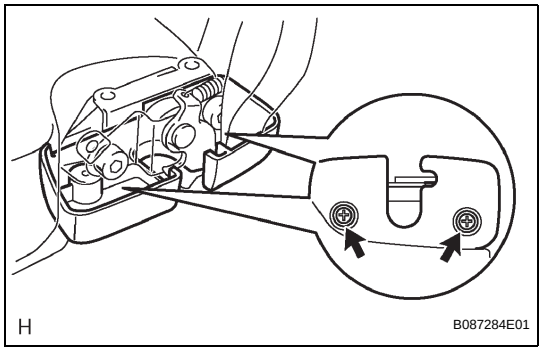

3. REMOVE REAR SEAT BACK LOCK COVER
(a) Remove the 2 screws and rear seat back lock cover.

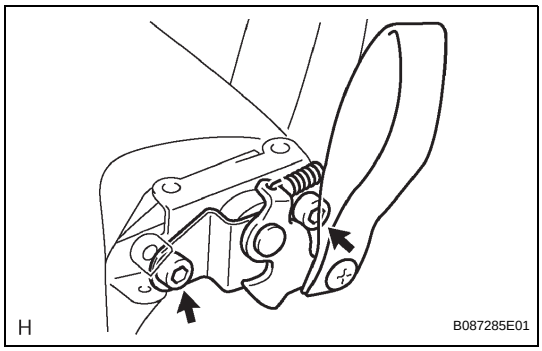

4. REMOVE REAR SEAT BACK LOCK SUB-ASSEMBLY
(a) Using a socket hexagon wrench 5, remove the 2 bolts and rear seat back lock.

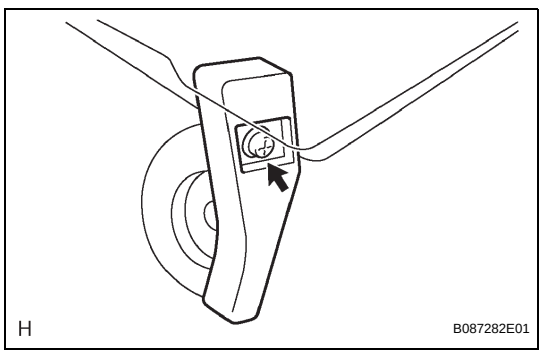

5. REMOVE REAR SEAT CUSHION COVER LH
(a) Remove the screw and rear seat cushion cover.

6. REMOVE REAR SEAT CUSHION COVER RH
HINT:
Follow the same procedures as for the rear seat cushion cover LH.

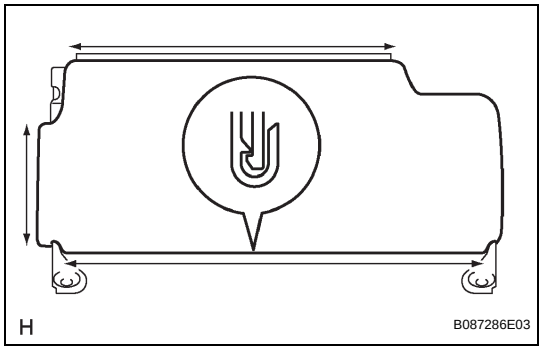

7. REMOVE REAR SEAT CUSHION COVER

(a) Disengage the 3 hooks and remove the rear seat cushion cover.

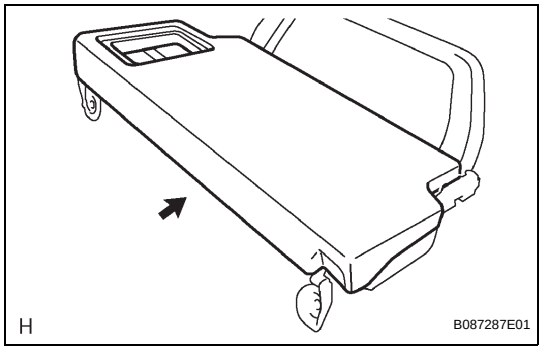

8. REMOVE REAR SEAT CUSHION UPPER PAD

(a) Remove the rear seat cushion upper pad.

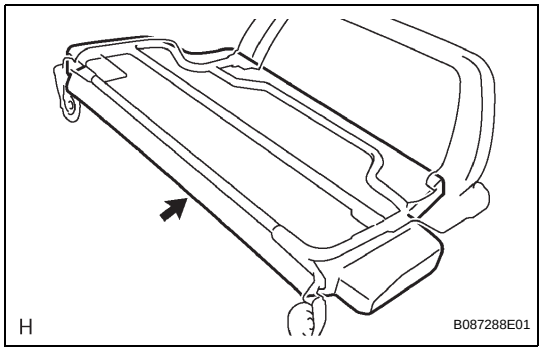

9. REMOVE REAR SEAT CUSHION LOWER PAD

(a) Remove the rear seat cushion lower pad.

REASSEMBLY

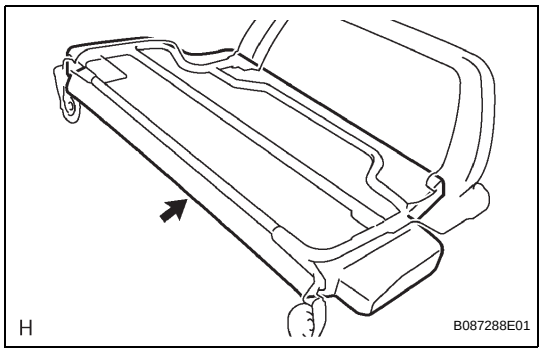

1. INSTALL REAR SEAT CUSHION LOWER PAD

(a) Install the rear seat cushion lower pad.

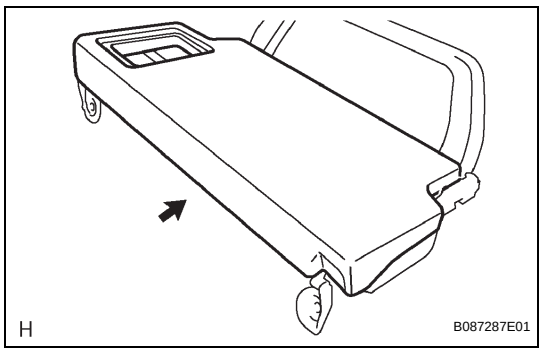

2. INSTALL REAR SEAT CUSHION UPPER PAD

(a) Install the rear seat cushion upper pad.

SE

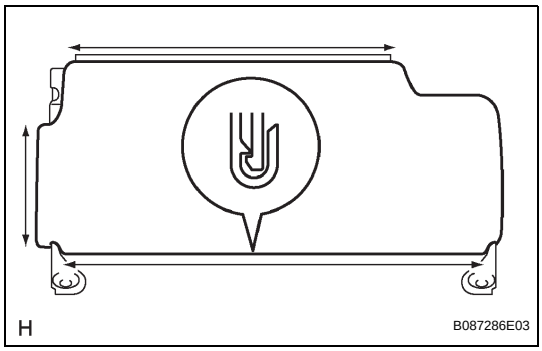

3. INSTALL REAR SEAT CUSHION COVER

(a) Engage the 3 hooks and install the rear seat cushion cover.

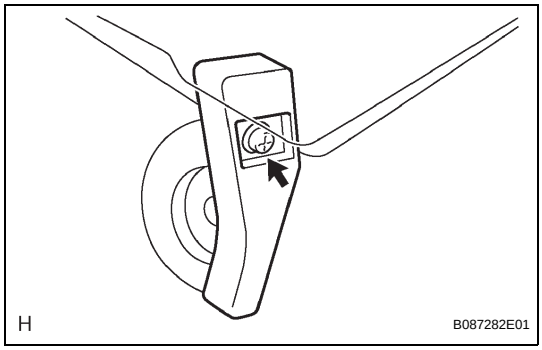

4. INSTALL REAR SEAT CUSHION COVER LH

(a) Install the rear seat cushion cover with the screw.

5. INSTALL REAR SEAT CUSHION COVER RH

HINT:
Follow the same procedures as for the rear seat cushion cover LH.

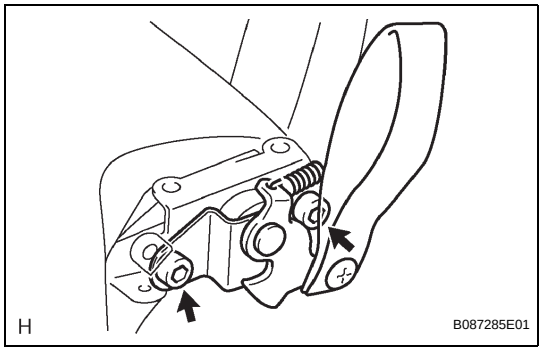

6. INSTALL REAR SEAT BACK LOCK SUB-ASSEMBLY

(a) Using a socket hexagon wrench 5, install the rear seat back lock with the 2 bolts.
Torque: 7.0 N*m (70 kgf*cm, 62 in.*lbf)

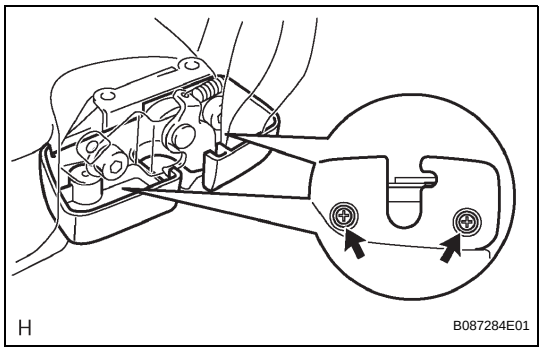

7. INSTALL REAR SEAT BACK LOCK COVER

(a) Install the rear seat back lock cover with the 2 screws.

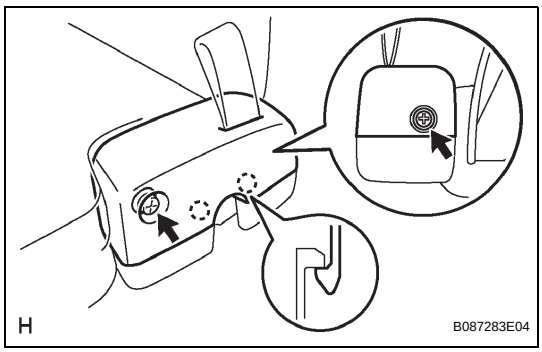

8. INSTALL REAR SEAT BACK COVER

(a) Engage the 2 claws and install the rear seat back cover.
(b) Tighten the 2 screws.

SE

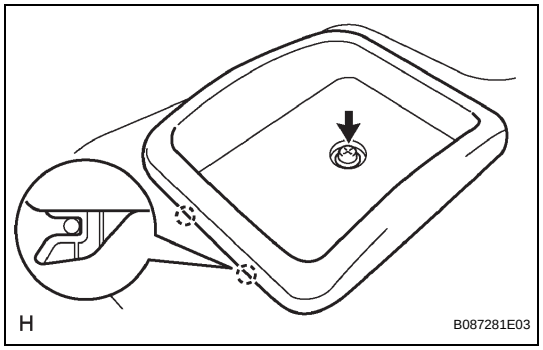

9. INSTALL REAR SEAT BACK TRAY

(a) Engage the 2 claws and install the sub seat back tray.

(b) Tighten the screw.

INSTALLATION

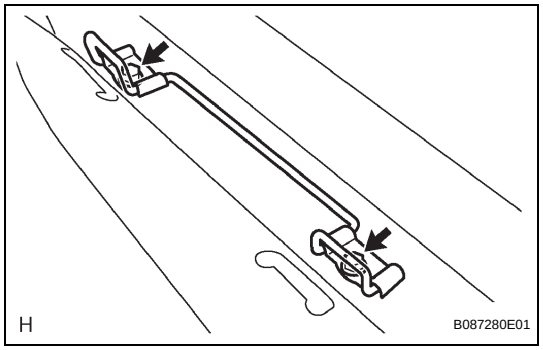

1. INSTALL CHILD RESTRAINT SEAT ANCHOR BRACKET SUB-ASSEMBLY

(a) Install the child restraint seat anchor bracket with the 2 bolts.
Torque: 18 N*m (185 kgf*cm, 13 ft.*lbf)

(b) Close the floor carpet.

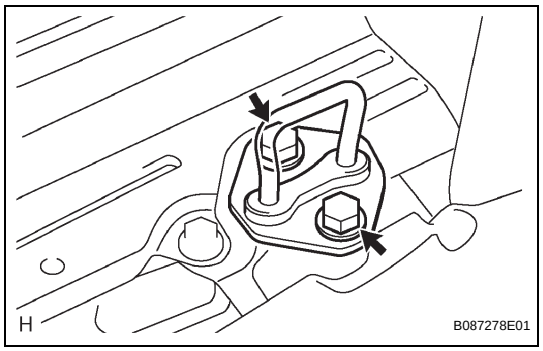

2. INSTALL REAR SEAT BACK LOCK STRIKER SUB-ASSEMBLY

(a) Install the rear seat back lock striker with the 2 bolts.
Torque: 18 N*m (185 kgf*cm, 13 ft.*lbf)

(b) Close the floor carpet.

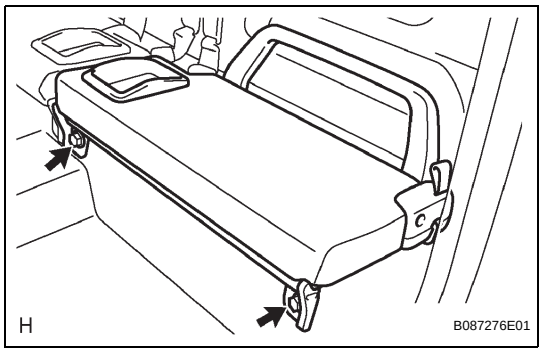

3. INSTALL REAR SEAT ASSEMBLY

(a) Install the rear seat with the 2 bolts.
Torque: 18 N*m (185 kgf*cm, 13 ft.*lbf)

SE

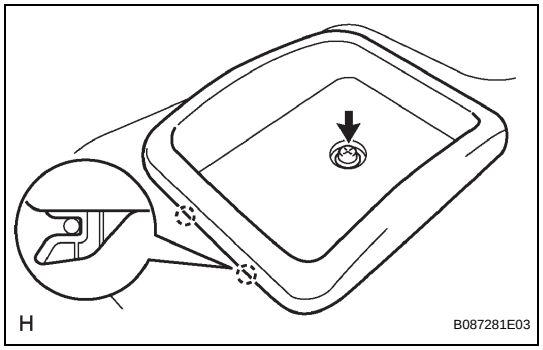

9. INSTALL REAR SEAT BACK TRAY

(a) Engage the 2 claws and install the sub seat back tray.

(b) Tighten the screw.

INSTALLATION

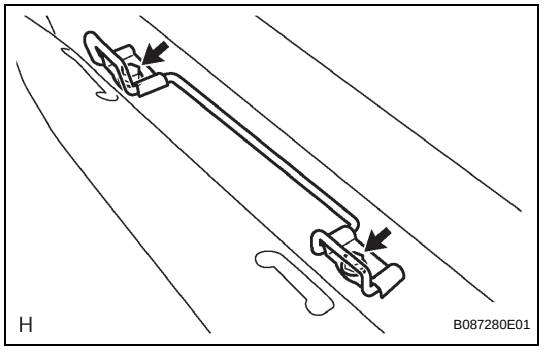

1. INSTALL CHILD RESTRAINT SEAT ANCHOR BRACKET SUB-ASSEMBLY

(a) Install the child restraint seat anchor bracket with the 2 bolts.
Torque: 18 N*m (185 kgf*cm, 13 ft.*lbf)

(b) Close the floor carpet.

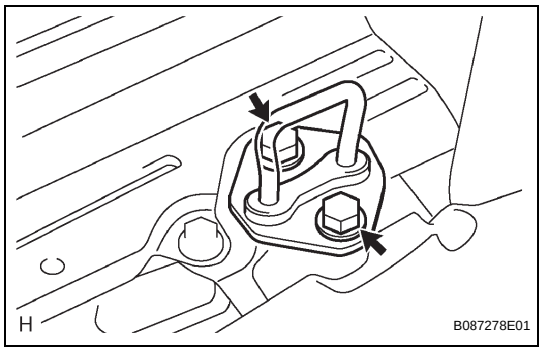

2. INSTALL REAR SEAT BACK LOCK STRIKER SUB-ASSEMBLY

(a) Install the rear seat back lock striker with the 2 bolts.
Torque: 18 N*m (185 kgf*cm, 13 ft.*lbf)

(b) Close the floor carpet.

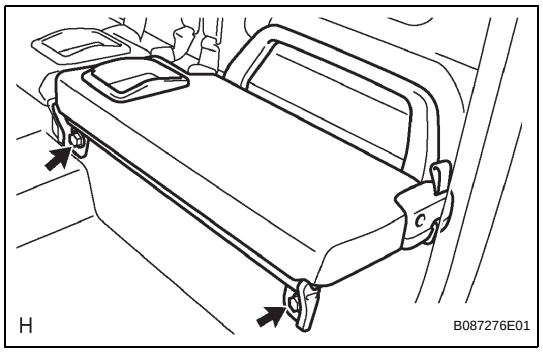

3. INSTALL REAR SEAT ASSEMBLY

(a) Install the rear seat with the 2 bolts.
Torque: 18 N*m (185 kgf*cm, 13 ft.*lbf)

SE

ADJUSTMENT

HINT:

- Before adjusting the positions of doors on vehicles equipped with side airbags and curtain shield airbags, be sure to disconnect the cable from the negative battery terminal. After making adjustments, inspect the SRS warning lamp, the side airbag system and the curtain shield airbag system for normal operation (See page RS-28).
- Use the same procedure for both the RH and LH sides.
- The procedures listed below are for the LH side.
- Centering bolts are used to mount the door hinge onto the vehicle body and door. The doors cannot be adjusted with the centering bolts on. Substitute the standard bolts (with washers) for the centering bolts when making adjustments.
- For bolts without torque specifications, check the standard bolt chart (See page SS-2).

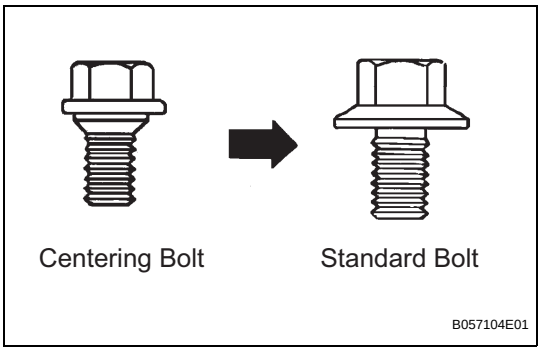

1. INSPECT REAR DOOR PANEL SUB-ASSEMBLY LH

(a) Check that the clearance measurements of areas A to F are within the standard ranges.

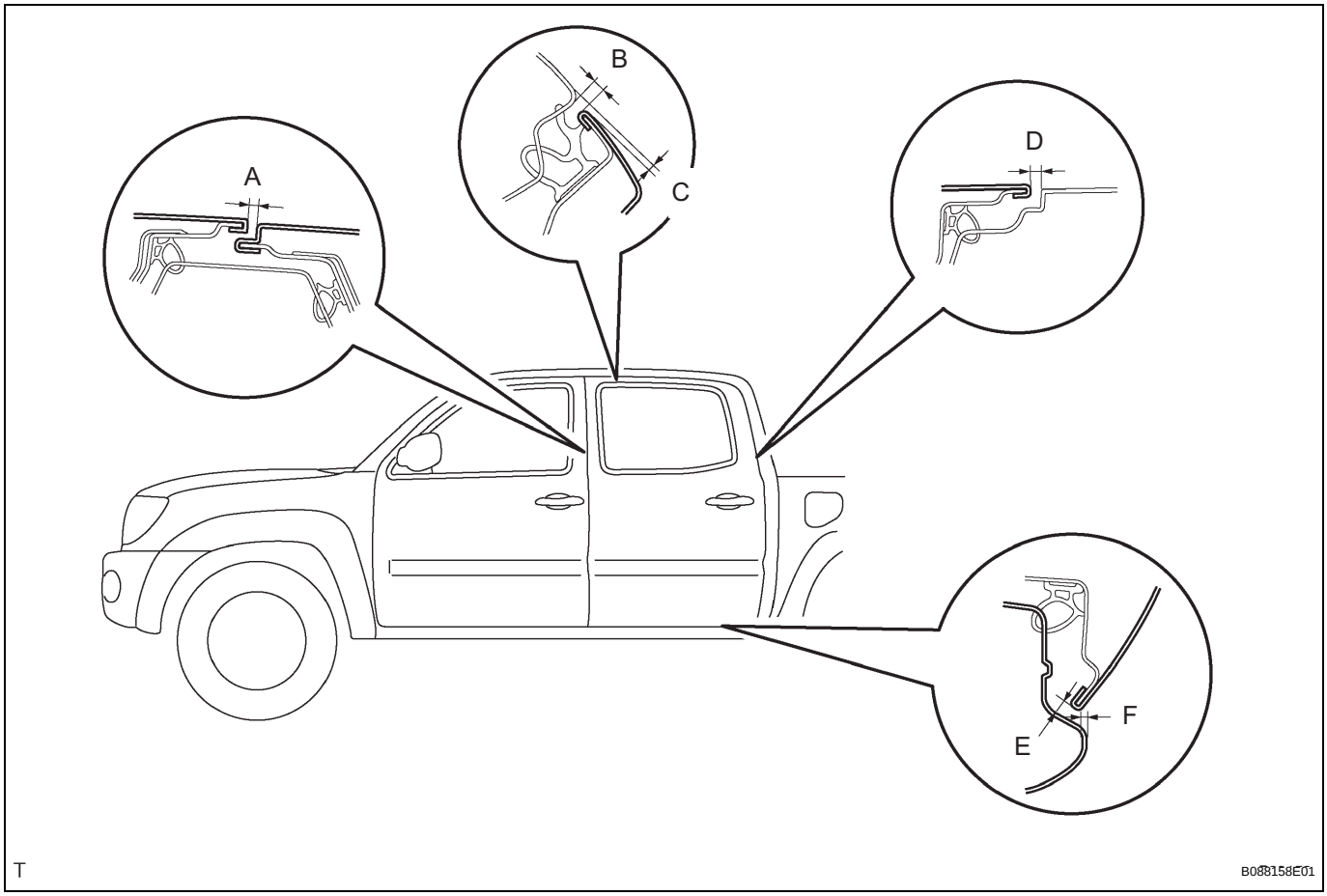

Standard:

Area	Measurement	Area	Measurement
A	5.0 +- 1.5 mm (0.197 +- 0.059 in.)	D	4.5 +- 1.5 mm (0.177 +- 0.059 in.)
B	5.0 +- 1.5 mm (0.197 +- 0.059 in.)	E	5.0 +- 1.5 mm (0.197 +- 0.059 in.)
C	1.8 +- 1.5 mm (0.071 +- 0.059 in.)	F	2.0 +- 1.5 mm (0.079 +- 0.059 in.)

2. ADJUST REAR DOOR PANEL SUB-ASSEMBLY LH

(a) Disconnect the cable from the negative battery terminal.
CAUTION:
Work must be started at least 90 seconds after the ignition switch is turned to OFF and the cable is disconnected from the negative battery terminal. (The SRS is equipped with a back-up power source. If work is started within 90 seconds of disconnecting the cable from the negative battery terminal and the ignition switch being turned to OFF, the SRS may deploy.)

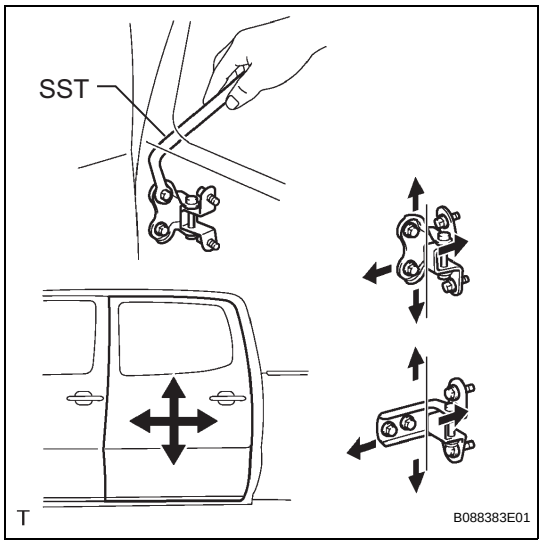

(b) Using SST, adjust the door horizontally and vertically by loosening the body side hinge bolts.
SST 09812-00010

(c) Tighten the body side hinge bolts after the adjustment.
Torque: 26 N*m (265 kgf*cm, 19 ft.*lbf)

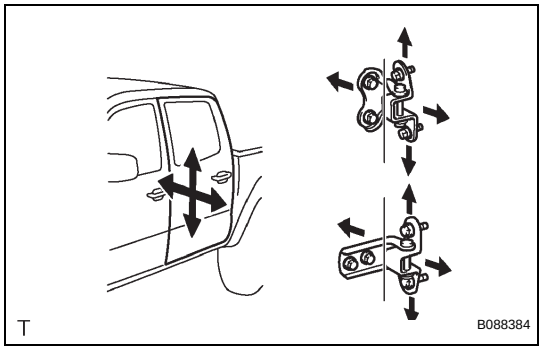

(d) Loosen the door side hinge bolts and adjust the door position.

(e) Tighten the door side hinge bolts after the adjustment.
Torque: 26 N*m (265 kgf*cm, 19 ft.*lbf)

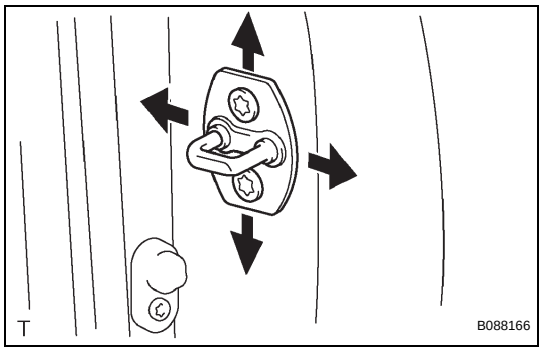

(f) Adjust the striker position by slightly loosening the striker mounting screws using a torx socket wrench T40 and hitting the striker with a plastic hammer.

(g) Using a torx socket wrench T40 , tighten the striker mounting screws after the adjustment.
Torque: 23 N*m (235 kgf*cm, 17 ft.*lbf)

(h) Connect the cable to the negative battery terminal.
Torque: 3.9 N*m (40 kgf*cm, 35 in.*lbf)

(i) Inspect the SRS warning lamp (See page RS-28).

ED

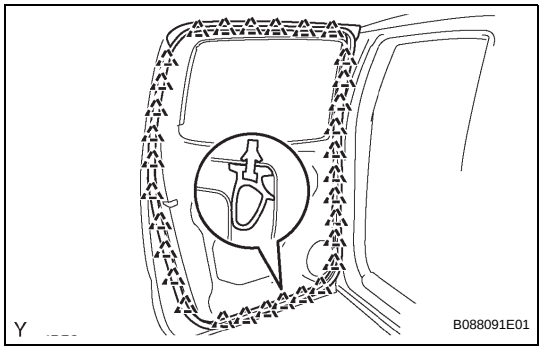

REASSEMBLY

1. INSTALL REAR DOOR WEATHERSTRIP LH

(a) Engage the 32 clips and install a new rear door weatherstrip LH.

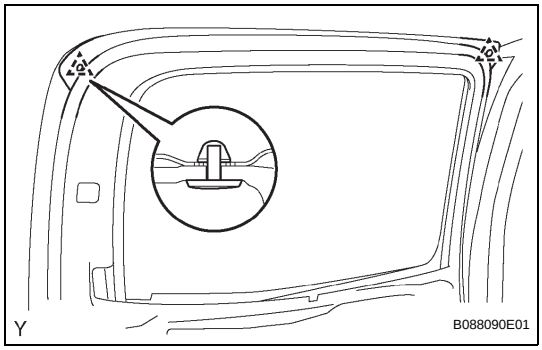

(b) Engage the 2 clips.

(c) Remove the tab tape at both ends of 2-sided tape attached to the weather strip, and attach the weather strip to the door panel with the 2-sided tape.

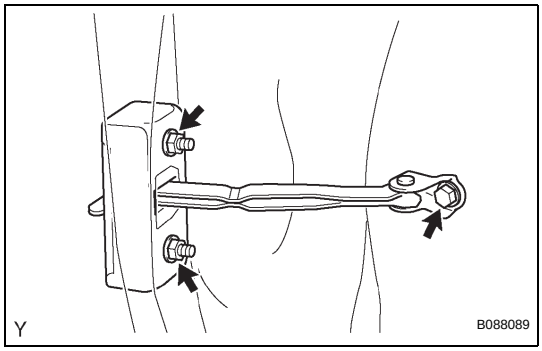

2. INSTALL REAR DOOR CHECK ASSEMBLY LH

(a) Apply MP grease to the sliding areas of the check.

(b) Install the rear door check assembly onto the door panel with the 2 nuts.
Torque: 5.5 N*m (56 kgf*cm, 49 in.*lbf)

(c) Apply adhesive to the threads of the bolt.
Adhesive:
Part No. 08833-00070, THREE BOND 1324 or equivalent

(d) Install the rear door check assembly onto the body panel with the bolt.
Torque: 30 N*m (306 kgf*cm, 22 ft.*lbf)

3. INSTALL REAR DOOR OUTSIDE HANDLE FRAME SUB-ASSEMBLY LH

(a) Apply MP grease to the sliding areas of the rear door outside handle flame sub-assembly LH.

ED

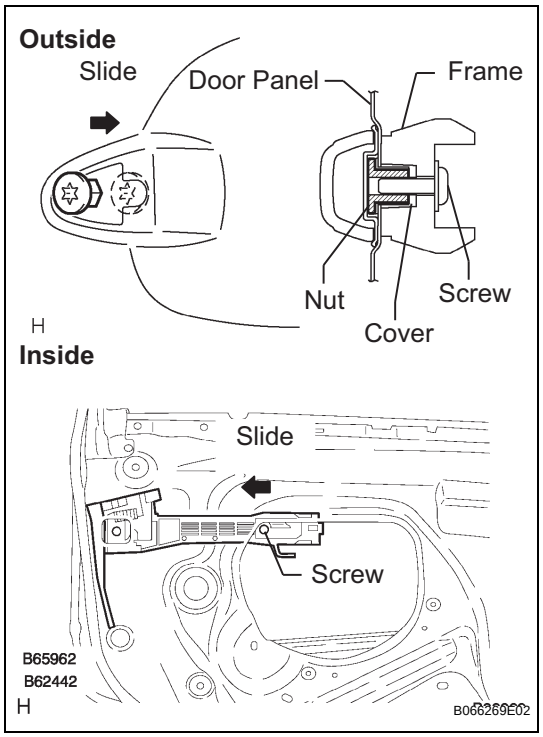

(b) Using a torx socket wrench T30 , install the handle frame sub-assembly with the screw.
Torque: 7.0 N*m (71 kgf*cm, 62 in.*lbf)
NOTICE:
A cover should be inserted between the nut and the door panel.

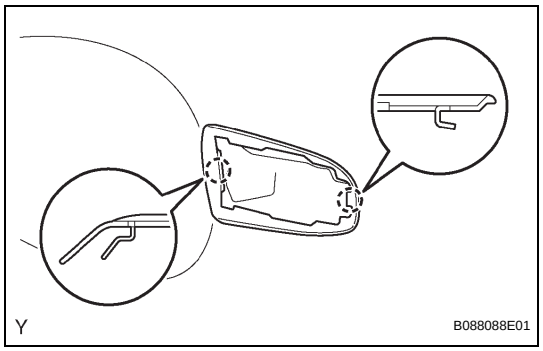

4. INSTALL REAR DOOR OUTSIDE HANDLE ASSEMBLY RH

(a) Engage the 2 claws and install the outside handle rear pad.

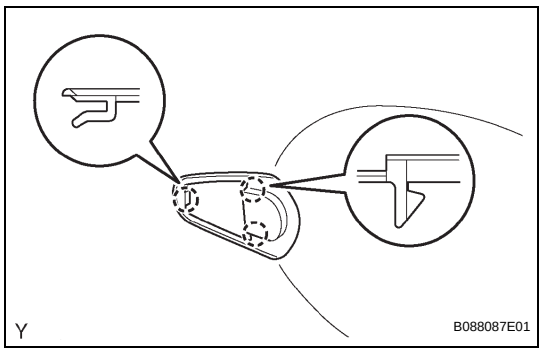

(b) Engage the 3 claws and install the outside handle front pad.

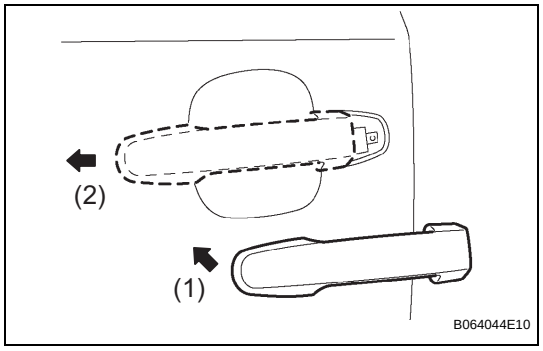

(c) Pushing the outside handle in the direction of the arrow marks shown in the illustration, install the outside handle.
NOTICE:
If the release plate is not pulled and held when installing the outside handle, the release plate will interfere with the outside handle. This will damage the release plate.

ED

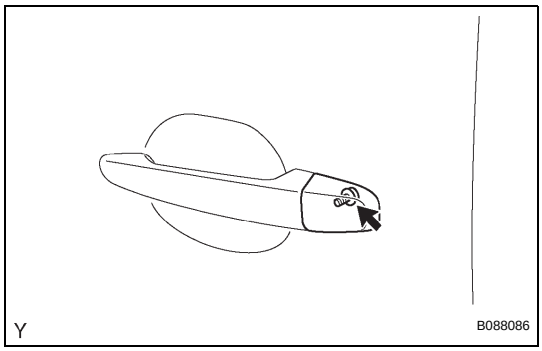

5. INSTALL REAR DOOR OUTSIDE HANDLE COVER LH

(a) Using a torx socket wrench T30 , install the rear door outside handle cover with the screw.
Torque: 7.0 N*m (71 kgf*cm, 62 in.*lbf)

6. INSTALL REAR DOOR LOCK ASSEMBLY LH

(a) Apply MP grease to the sliding and rotating areas of the rear door lock assembly.

(b) Install a new door lock wire harness packing.
NOTICE:
- **When reinstalling the door lock, always use a new packing.**
- **Do not allow grease or dirt to contaminate the gap between the door panel and packing.**
- **Old packing and damaged packing cannot effectively protect against water, which could damage the door lock.**

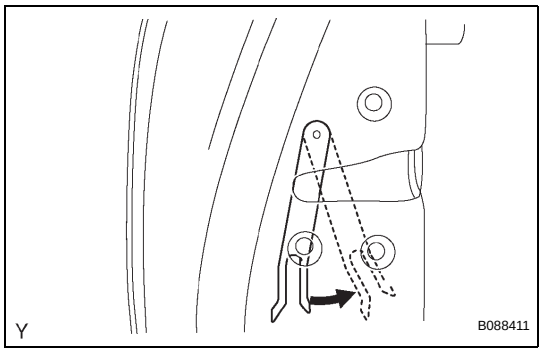

(c) Pull and hold the release plate of the outside handle frame, as shown in the illustration.

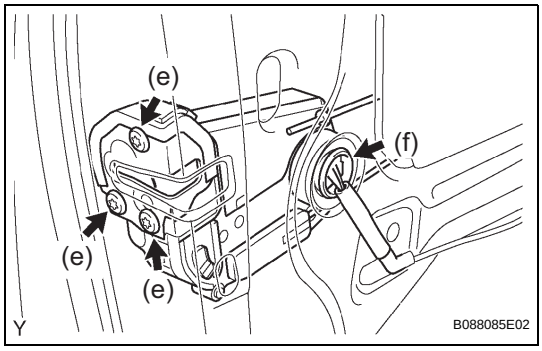

(d) Apply adhesive to the threads of the 3 screws.
Adhesive:
Part No. 08833-00070, THREE BOND 1324 or equivalent

(e) Using a torx socket wrench T30 , install the rear door lock with the 3 screws.
Torque: 12 N*m (122 kgf*cm, 9 ft.*lbf)

(f) Connect the connector.

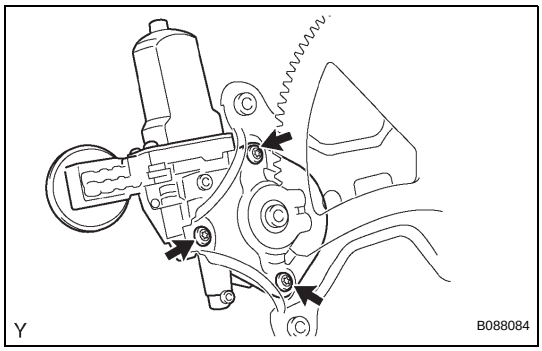

7. INSTALL POWER WINDOW REGULATOR MOTOR ASSEMBLY

(a) Using a torx socket wrench T25 , install the power window regulator motor assembly LH with the 3 screws.
Torque: 5.4 N*m (55 kgf*cm, 48 in.*lbf)

8. INSTALL REAR DOOR WINDOW REGULATOR SUB-ASSEMBLY LH

(a) Apply MP grease to the sliding and rotating areas of the rear door window regulator sub-assembly LH.
NOTICE:
Do not apply grease to the window regulator spring.

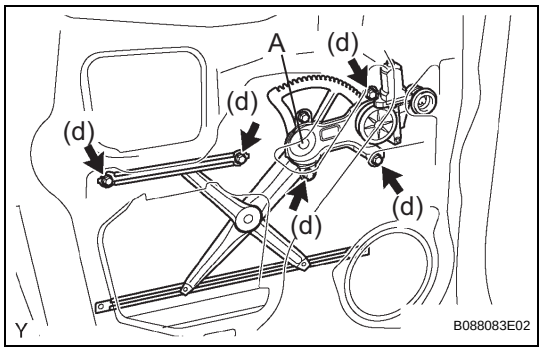

(b) Loosely screw bolt A onto the rear door window regulator sub-assembly LH.

(c) Insert the rear door window regulator into the door panel. Use bolt A to hang the rear door window regulator on the door panel.
NOTICE:
Be careful not to drop the window regulator as it may be damaged.

(d) Install the rear door window regulator with the 5 bolts, and tighten bolt A.
Torque: 11 N*m (112 kgf*cm, 8 ft.*lbf)

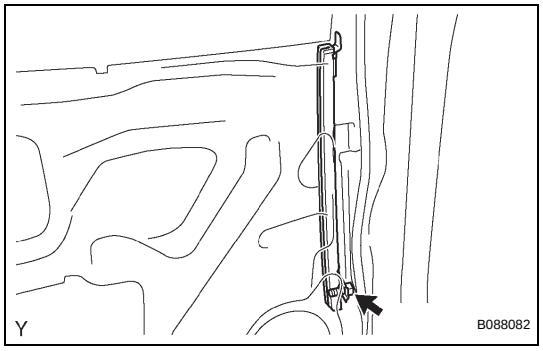

9. INSTALL REAR DOOR FRONT WINDOW GUIDE SUB-ASSEMBLY LH

(a) Install the rear door front window guide sub-assembly LH with the bolt.
Torque: 8.0 N*m (82 kgf*cm, 70 in.*lbf)

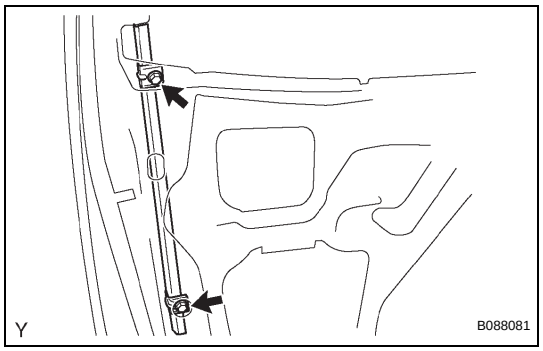

10. INSTALL REAR DOOR REAR LOWER WINDOW FRAME SUB-ASSEMBLY LH

(a) Install the rear door rear lower window frame sub-assembly LH with the 2 bolts.
Torque: 8.0 N*m (82 kgf*cm, 70 in.*lbf)

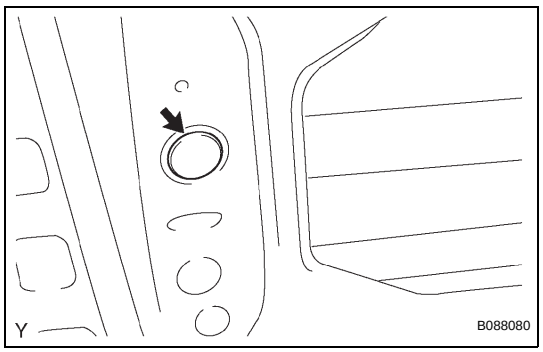

(b) Install the hole plug.

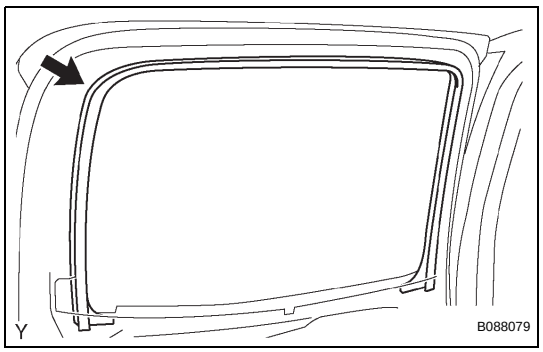

11. INSTALL REAR DOOR GLASS RUN LH

(a) Install the rear door glass run LH.

ED

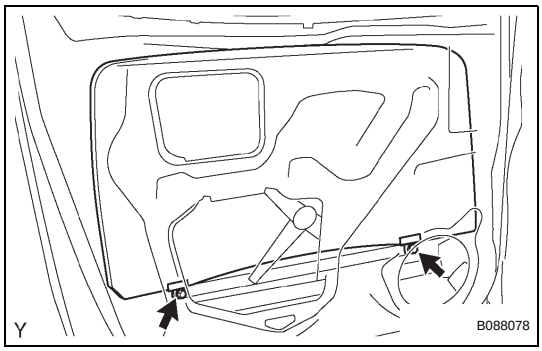

12. INSTALL REAR DOOR GLASS SUB-ASSEMBLY LH

(a) Install the rear door glass sub-assembly LH onto the rear door window regulator sub-assembly LH with the 2 bolts.

Torque: 8.0 N*m (82 kgf*cm, 71 in.*lbf)

13. INSTALL REAR DOOR BELT MOULDING LH (See page ET-35)

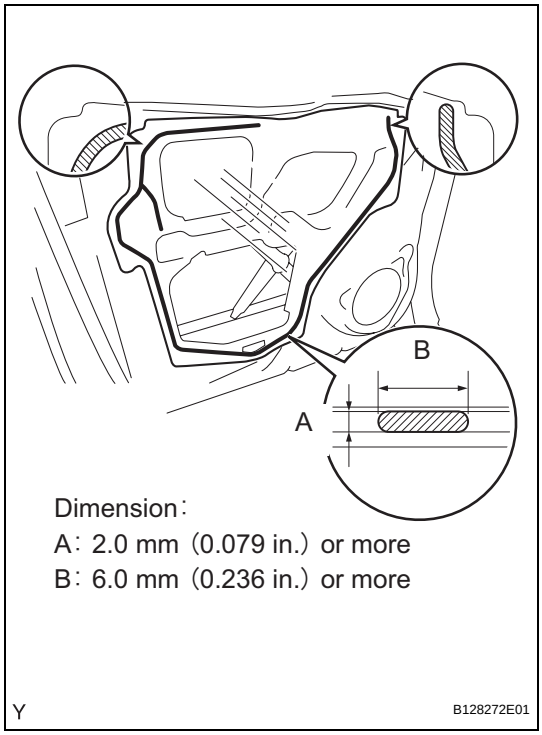

14. INSTALL REAR DOOR SERVICE HOLE COVER LH

(a) Apply butyl tape to the door panel, then install the rear door service hole cover LH as shown in the illustration.

HINT:

- When installing the service hole cover, pull the links and connectors out through the service hole cover.
- There should be no wrinkles or folds after attaching the service hole cover.
- After attaching the service hole cover, check the quality of the seal.

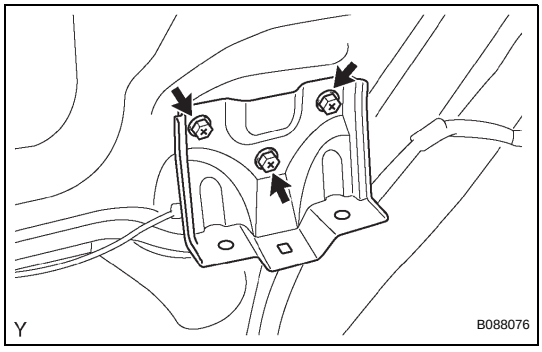

15. INSTALL NO. 2 REAR DOOR TRIM BRACKET

(a) Install the No. 2 rear door trim bracket with the 3 screws.

16. INSTALL REAR SPEAKER ASSEMBLY

HINT:

- Access cab (See page AV-88)
- Double cab (See page AV-86)

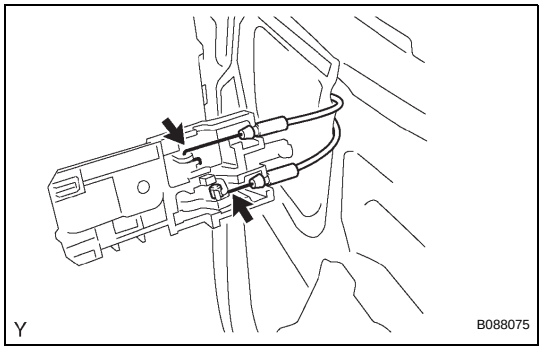

17. INSTALL REAR DOOR INSIDE HANDLE SUB-ASSEMBLY LH

(a) Connect the 2 cables to the rear door inside handle sub-assembly LH.

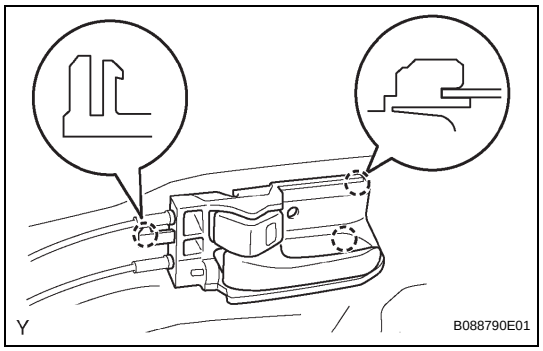

(b) Engage the 3 claws and install the rear door inside handle sub-assembly LH onto the door panel.

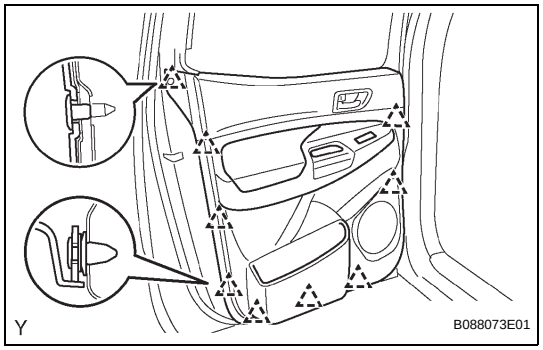

18. INSTALL REAR DOOR TRIM PANEL ASSEMBLY LH

(a) Engage the 9 clips and install the rear door trim panel assembly LH.

(b) Install the door assist grip assembly LH with the screw.

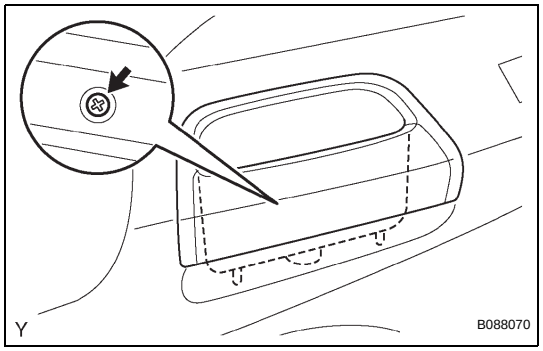

19. INSTALL REAR POWER WINDOW REGULATOR SWITCH ASSEMBLY

(a) Connect the connector.

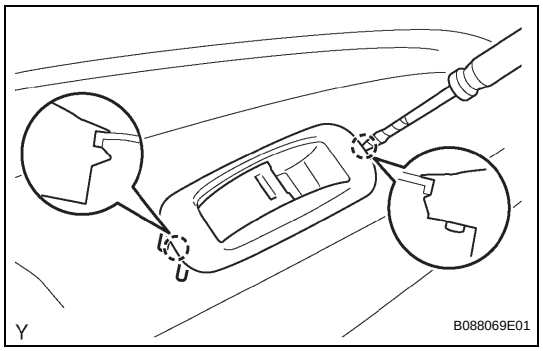

(b) Engage the 2 claws and install the rear power window regulator switch assembly.

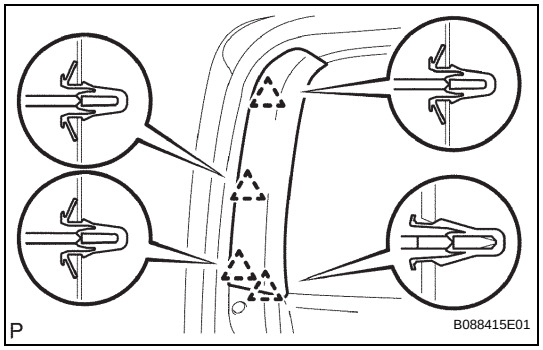

20. INSTALL REAR DOOR FRAME GARNISH LH

(a) Engage the 4 clips and install the rear door frame garnish LH.

NOTICE:

Confirm that no clips remain on the door panel before the garnish is installed. Transfer any remaining clips to the garnish side before installing it. Installing the garnish with any clips remaining on the door panel side could cause the clips to drop inside the door panel.

21. CONNECT CABLE TO NEGATIVE BATTERY TERMINAL
Torque: 3.9 N*m (40 kgf*cm, 35 in.*lbf)

Short to B+ in CAN Bus Line

DESCRIPTION

A short to +B is suspected in the CAN bus line when there is continuity between terminals 16 (BAT) and 6 (CANH) or terminals 16 (BAT) and 14 (CANL) of the DLC3.

Symptom	Trouble Area
There is continuity between terminals 16 (BAT) and 6 (CANH) or 16 (BAT) and 14 (CANL) of the DLC3.	• Short to +B in CAN bus line • ECM • Skid control ECU • Steering angle sensor • Yaw rate sensor

WIRING DIAGRAM

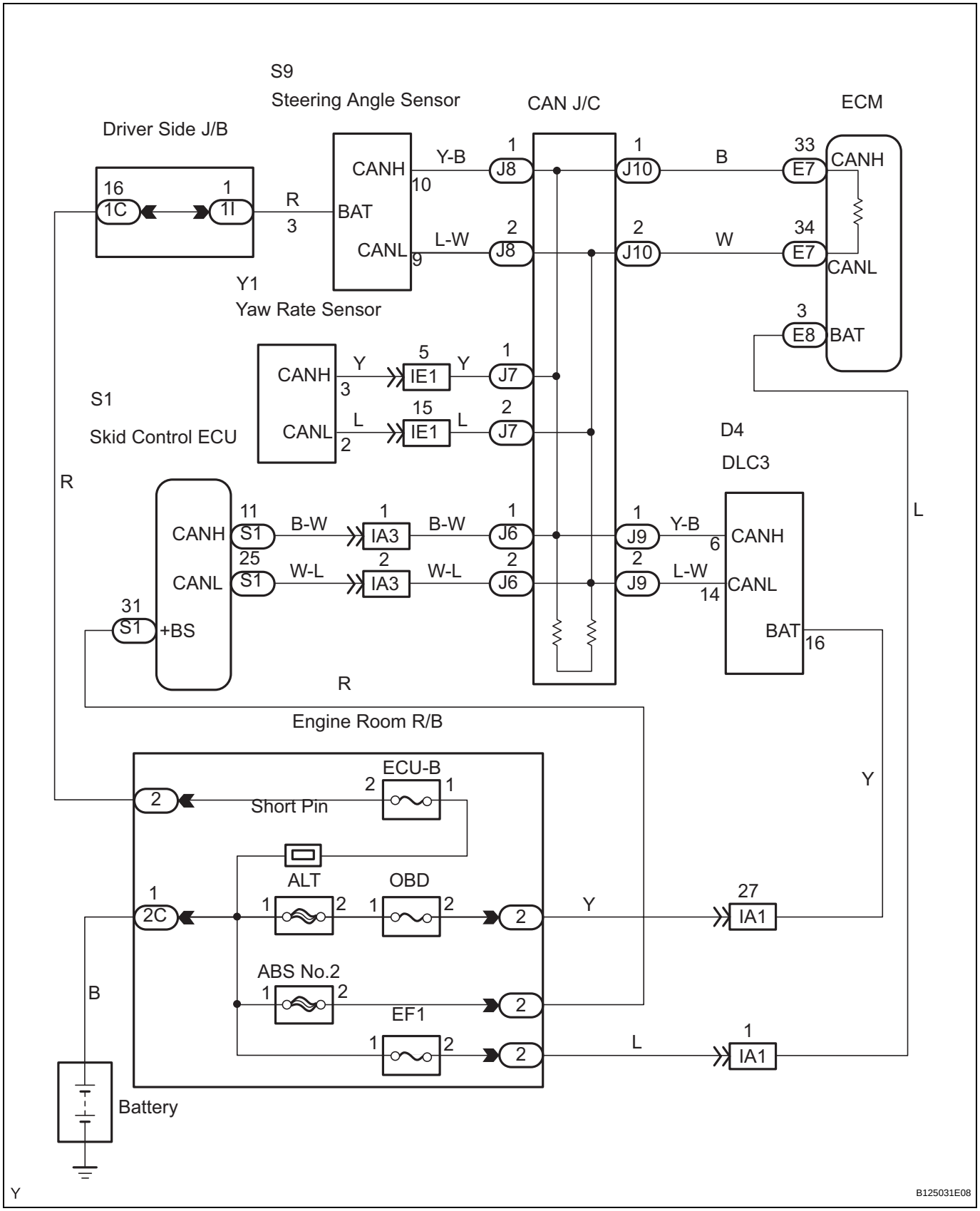

CA

1	CHECK CAN BUS LINES FOR SHORT TO +B (DLC3 SUB BUS LINE)

CAN J/C "A" Side (w/ Earth Terminal) Wire Harness View:

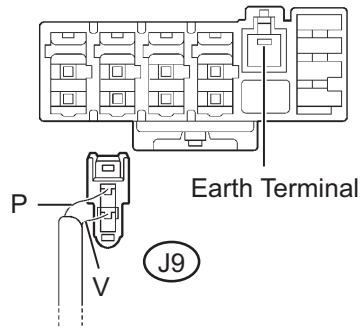

G031933E13

(a) Disconnect the DLC3 sub bus line connector (J9) from the CAN J/C.

NOTICE:

- **Before disconnecting the connector, make a note of where it is connected.**
- **Reconnect the connector to its original position.**

DLC3:

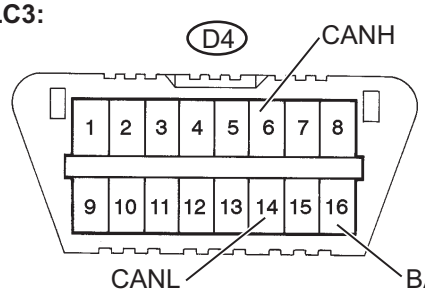

G026206E58

(b) Measure the resistance according to the value(s) in the table below.

Standard resistance

Tester Connection	Condition	Specified Value
D4-6 (CANH) - D4-16 (BAT)	• Ignition switch OFF • Stop light switch OFF	1 MΩ or more
D4-14 (CANL) - D4-16 (BAT)		

NG → **REPAIR OR REPLACE DLC3 BRANCH LINE OR CONNECTOR (CAN-H,CAN-L)**

OK

2	CONNECT CONNECTOR

(a) Reconnect the DLC3 sub bus line connector (J9) to the CAN J/C.

NEXT

3	CHECK CAN BUS LINES FOR SHORT TO +B (SKID CONTROL ECU SUB BUS LINE)

CAN J/C "B" Side (w/o Earth Terminal) Wire Harness View:

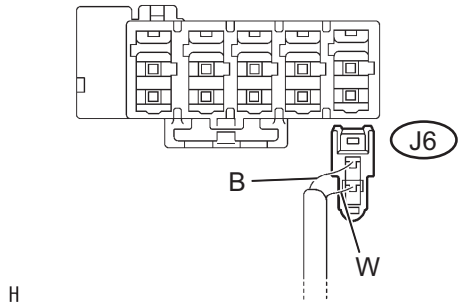

G031932E78

(a) Disconnect the skid control ECU sub bus line connector (J6) from the CAN J/C.

NOTICE:

- **Before disconnecting the connector, make a note of where it is connected.**
- **Reconnect the connector to its original position.**

DLC3:

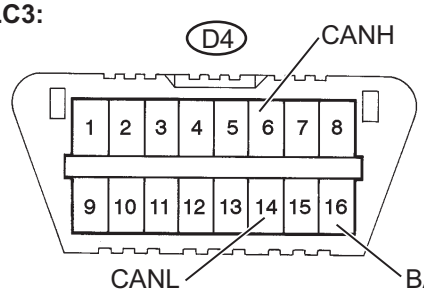

G026206E58

(b) Measure the resistance according to the value(s) in the table below.

Standard resistance

Tester Connection	Condition	Specified Value
D4-6 (CANH) - D4-16 (BAT)	• Ignition switch OFF • Stop light switch OFF	1 MΩ or more
D4-14 (CANL) - D4-16 (BAT)		

OK → **Go to step 10**

NG

4	CONNECT CONNECTOR

(a) Reconnect the skid control ECU sub bus line connector (J6) to the CAN J/C.

NEXT

CA

5	CHECK CAN BUS LINES FOR SHORT TO +B (YAW RATE SENSOR SUB BUS LINE)

CAN J/C "A" Side (w/ Earth Terminal) Wire Harness View:

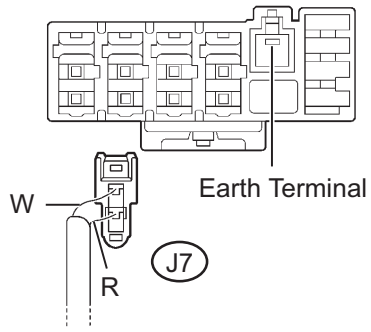

G031933E10

(a) Disconnect the yaw rate sensor sub bus line connector (J7) from the CAN J/C.

NOTICE:

- **Before disconnecting the connector, make a note of where it is connected.**
- **Reconnect the connector to its original position.**

DLC3:

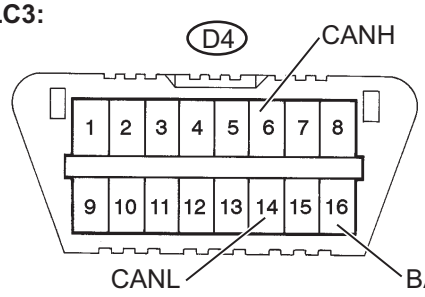

G026206E58

(b) Measure the resistance according to the value(s) in the table below.

Standard resistance

Tester Connection	Condition	Specified Value
D4-6 (CANH) - D4-16 (BAT)	•Ignition switch OFF •Stop light switch OFF	1 MΩ or more
D4-14 (CANL) - D4-16 (BAT)		

OK → **Go to step 12**

NG

6	CONNECT CONNECTOR

(a) Reconnect the yaw rate sensor sub bus line connector (J7) to CAN J/C.

NEXT

7	**CHECK CAN BUS LINES FOR SHORT TO +B (STEERING ANGLE SENSOR SUB BUS LINE)**

CAN J/C "A" Side (w/ Earth Terminal) Wire Harness View:

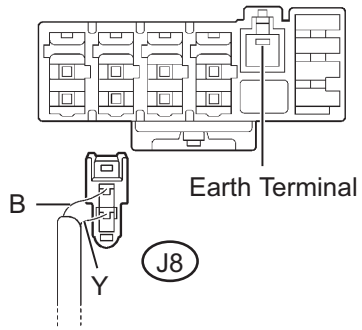

G031933E11

(a) Disconnect the steering angle sensor sub bus line connector (J8) from the CAN J/C.

NOTICE:

- **Before disconnecting the connector, make a note of where it is connected.**
- **Reconnect the connector to its original position.**

DLC3:

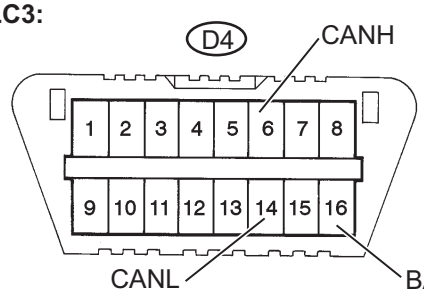

G026206E58

(b) Measure the resistance according to the value(s) in the table below.

Standard resistance

Tester Connection	Condition	Specified Value
D4-6 (CANH) - D4-16 (BAT)	• Ignition switch OFF • Stop light switch OFF	1 MΩ or more
D4-14 (CANL) - D4-16 (BAT)		

OK → **Go to step 14**

NG

8	**CONNECT CONNECTOR**

(a) Reconnect the steering angle sensor sub bus line connector (J8) to the CAN J/C.

NEXT

9	**CHECK CAN BUS LINES FOR SHORT TO +B (ECM MAIN BUS LINE)**

(a) Disconnect the ECM sub bus line connector (E7).

CA

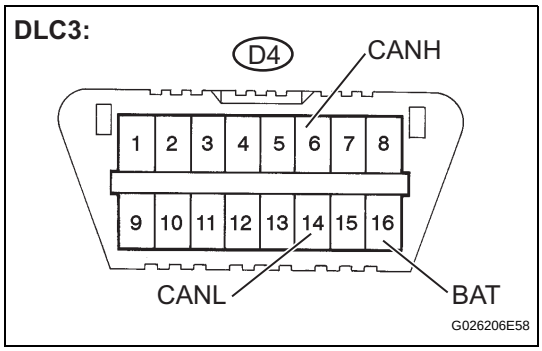

(b) Measure the resistance according to the value(s) in the table below.

Standard resistance

Tester Connection	Condition	Specified Value
D4-6 (CANH) - D4-16 (BAT)	•Ignition switch OFF •Stop light switch OFF	1 MΩ or more
D4-14 (CANL) - D4-16 (BAT)		

OK → REPLACE ECM

NG

REPAIR OR REPLACE ECM MAIN BUS LINE OR CONNECTOR (CAN-H,CAN-L)

10 CONNECT CONNECTOR

(a) Reconnect the skid control ECU sub bus line connector (J6) to the CAN J/C.

NEXT

CA

11 CHECK CAN BUS LINES FOR SHORT TO +B (SKID CONTROL ECU SUB BUS LINE)

(a) Disconnect the skid control ECU connector (S1).

(b) Measure the resistance according to the value(s) in the table below.

Standard resistance

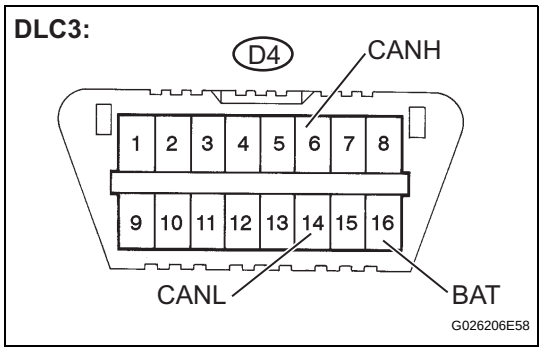

Tester Connection	Condition	Specified Value
D4-6 (CANH) - D4-16 (BAT)	• Ignition switch OFF • Stop light switch OFF	1 MΩ or more
D4-14 (CANL) - D4-16 (BAT)		

OK → REPLACE MASTER CYLINDER SOLENOID

NG

REPAIR OR REPLACE SKID CONTROL ECU BRANCH LINE OR CONNECTOR (CAN-H,CAN-L)

12 CONNECT CONNECTOR

(a) Reconnect the yaw rate sensor sub bus line connector (J7) to the CAN J/C.

NEXT

13	CHECK CAN BUS LINES FOR SHORT TO +B (YAW RATE SENSOR SUB BUS LINE)

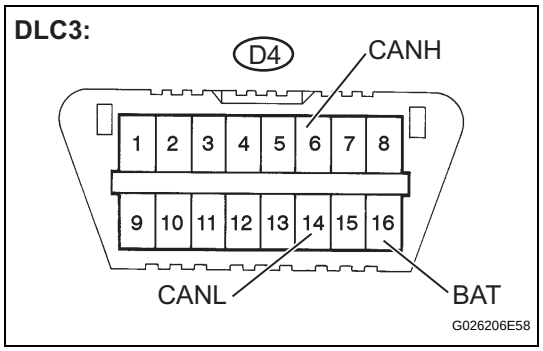

(a) Disconnect the yaw rate sensor connector (Y1).
(b) Measure the resistance according to the value(s) in the table below.

Standard resistance

Tester Connection	Condition	Specified Value
D4-6 (CANH) - D4-16 (BAT)	• Ignition switch OFF • Stop light switch OFF	1 MΩ or more
D4-14 (CANL) - D4-16 (BAT)		

OK → **REPLACE YAW RATE SENSOR**

NG

REPAIR OR REPLACE YAW RATE SENSOR SUB BUS LINE CONNECTOR (CAN-H,CAN-L)

14	CONNECT CONNECTOR

(a) Reconnect the steering angle sensor sub bus line connector (J8) to the CAN J/C.

NEXT

15	CHECK CAN BUS LINES FOR SHORT TO +B (STEERING SENSOR SUB BUS LINE)

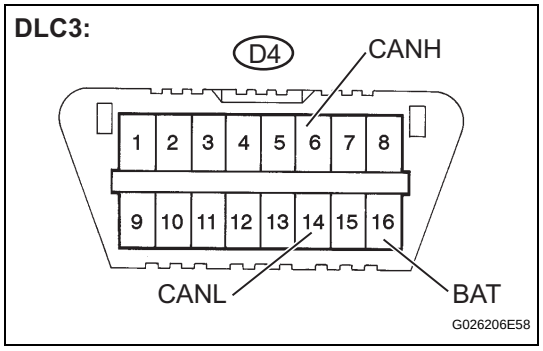

(a) Disconnect the steering angle sensor connector (S9).
(b) Measure the resistance according to the value(s) in the table below.

Standard resistance

Tester Connection	Condition	Specified Value
D4-6 (CANH) - D4-16 (BAT)	• Ignition switch OFF • Stop light switch OFF	1 MΩ or more
D4-14 (CANL) - D4-16 (BAT)		

OK → **REPLACE STEERING ANGLE SENSOR**

NG

REPAIR OR REPLACE STEERING ANGLE SENSOR BRANCH LINE OR CONNECTOR (CAN-H,CAN-L)

CA

Short to GND in CAN Bus Line

DESCRIPTION

A short to GND is suspected in the CAN bus line when there is continuity between terminals 4 (CG) and 6 (CANH) or terminals 4 (CG) and 14 (CANL) of the DLC3.

Symptoms	Trouble Area
There is continuity between terminals 4 (CG) and 6 (CANH) or terminals 4 (CG) and 14 (CANL) of the DLC3.	• Short to GND in CAN bus line • ECM • Skid control ECU • Steering angle sensor • Yaw rate sensor • CAN J/C

WIRING DIAGRAM

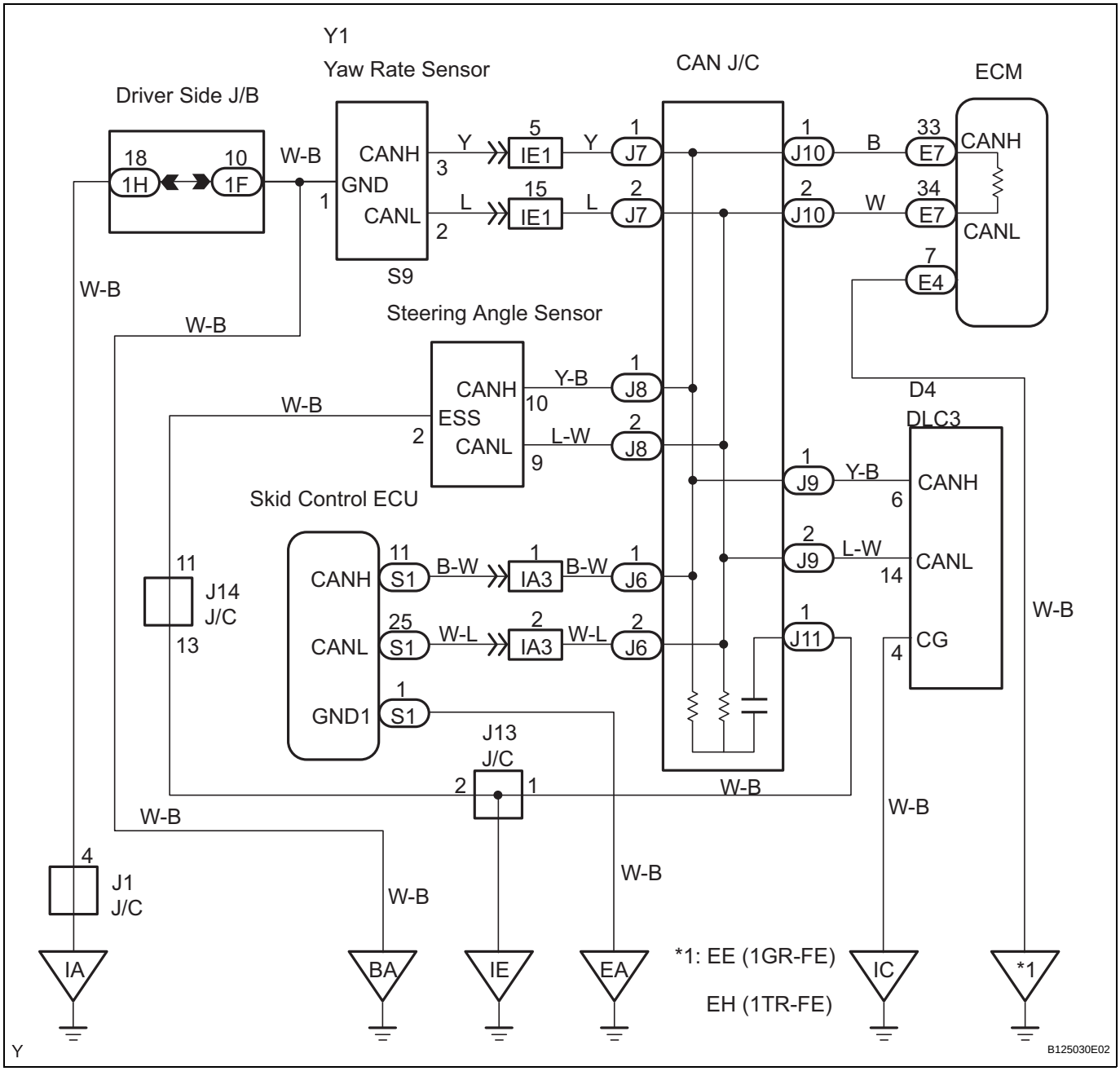

1	CHECK CAN BUS LINE FOR SHORT TO GND (DLC3 SUB BUS LINE)

CAN J/C "A" Side (w/ Earth Terminal) Wire Harness View:

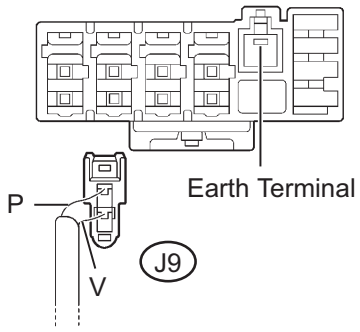

G031933E13

(a) Disconnect the DLC3 sub bus line connector (J9) from the CAN J/C.

NOTICE:

- **Before disconnecting the connector, make a note of where it is connected.**
- **Reconnect the connector to its original position.**

DLC3:

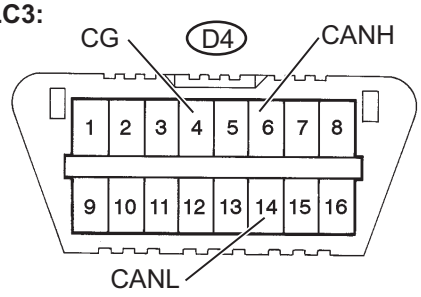

G026206E59

(b) Measure the resistance according to the value(s) in the table below.

Standard resistance

Tester Connection	Condition	Specified Value
D4-6 (CANH) - D4-4 (CG)	•Ignition switch OFF •Stop light switch OFF	1 MΩ or more
KD4-14 (CANL) - D4-4 (CG)		

CA

NG → **REPAIR OR REPLACE DLC3 BRANCH LINE OR CONNECTOR (CAN-H,CAN-L)**

OK

2	CONNECT CONNECTOR

(a) Reconnect the DLC3 sub bus line connector (J9) to the CAN J/C.

NEXT

3	CHECK CAN BUS LINE FOR SHORT TO GND (SKID CONTROL ECU SUB BUS LINE)

CAN J/C "B" Side (w/o Earth Terminal) Wire Harness View:

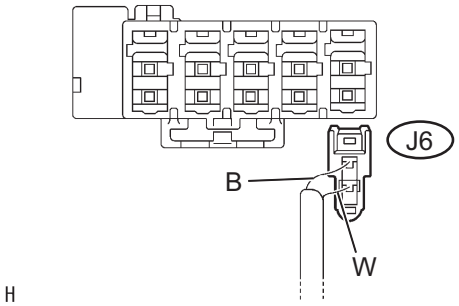

G031932E78

(a) Disconnect the skid control ECU sub bus line connector (J6) from the CAN J/C.

NOTICE:

- **Before disconnecting the connector, make a note of where it is connected.**
- **Reconnect the connector to its original position.**

DLC3:

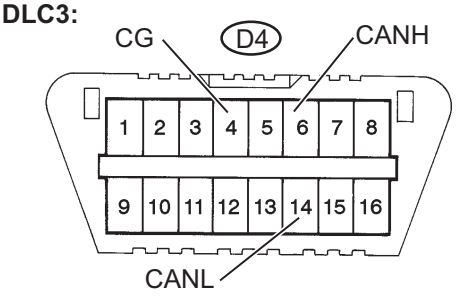

G026206E59

(b) Measure the resistance according to the value(s) in the table below.

Standard resistance

Tester Connection	Condition	Specified Value
D4-6 (CANH) - D4-4 (CG)	•Ignition switch OFF •Stop light switch OFF	3 kΩ or more
D4-14 (CANL) - D4-4 (CG)		

OK → **Go to step 10**

NG

4	CONNECT CONNECTOR

(a) Reconnect the skid control ECU sub bus line connector (J6) to the CAN J/C.

NEXT

CA

5	CHECK CAN BUS LINE FOR SHORT TO GND (YAW RATE SENSOR SUB BUS LINE)

CAN J/C "A" Side (w/ Earth Terminal) Wire Harness View:

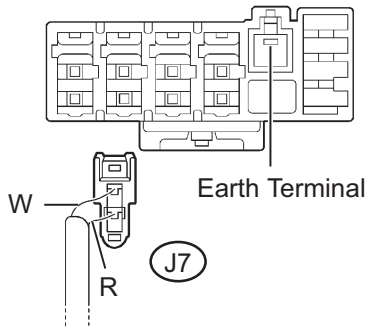

G031933E10

(a) Disconnect the yaw rate sensor sub bus line connector (J7) from the CAN J/C.

NOTICE:

- **Before disconnecting the connector, make a note of where it is connected.**
- **Reconnect the connector to its original position.**

DLC3:

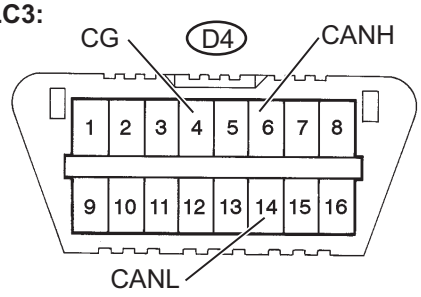

G026206E59

(b) Measure the resistance according to the value(s) in the table below.

Standard resistance

Tester Connection	Condition	Specified Value
D4-6 (CANH) - D4-4 (CG)	• Ignition switch OFF • Stop light switch OFF	3 kΩ or more
D4-14 (CANL) - D4-4 (CG)		

CA

NG → **Go to step 12**

OK

6	CONNECT CONNECTOR

(a) Reconnect the yaw rate sensor sub bus line connector (J7) to the CAN J/C.

NEXT

7	CHECK CAN BUS LINE FOR SHORT TO GND (STEERING ANGLE SENSOR SUB BUS LINE)

CAN J/C "A" Side (w/ Earth Terminal) Wire Harness View:

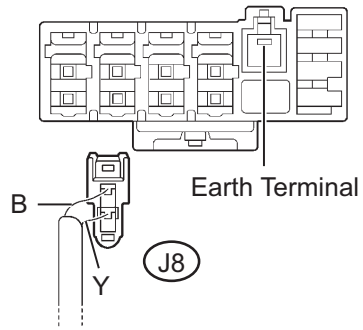

G031933E11

(a) Disconnect the steering angle sensor sub bus line connector (J8) from the CAN J/C.

NOTICE:

- **Before disconnecting the connector, make a note of where it is connected.**
- **Reconnect the connector to its original position.**

DLC3:

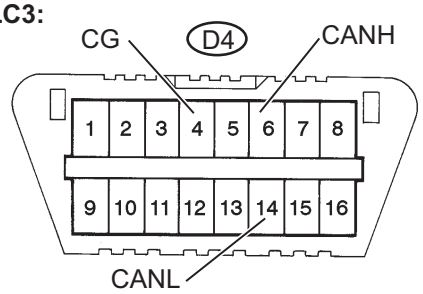

G026206E59

(b) Measure the resistance according to the value(s) in the table below.

Standard resistance

Tester Connection	Condition	Specified Value
D4-6 (CANH) - D4-4 (CG)	• Ignition switch OFF • Stop light switch OFF	3 kΩ or more
D4-14 (CANL) - D4-4 (CG)		

OK → **Go to step 14**

NG

8	CONNECT CONNECTOR

(a) Reconnect the steering angle sensor sub bus line connector (J8) to the CAN J/C.

NEXT

9	CHECK CAN BUS LINE FOR SHORT TO GND (ECM MAIN BUS LINE)

CAN J/C "A" Side (w/ Earth Terminal) Wire Harness View:

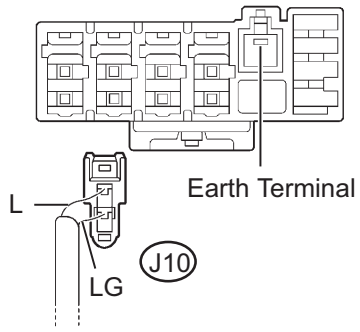

G031933E12

(a) Disconnect the ECM main bus line connector (J10) from the CAN J/C.

NOTICE:

- **Before disconnecting the connector, make a note of where it is connected.**
- **Reconnect the connector to its original position.**

DLC3:

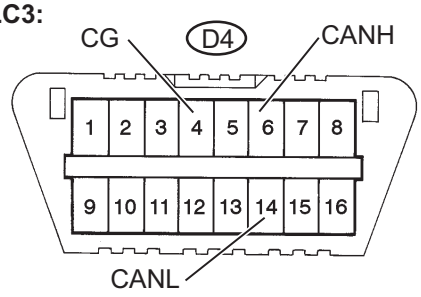

G026206E59

(b) Measure the resistance according to the value(s) in the table below.

Standard resistance

Tester Connection	Condition	Specified Value
D4-6 (CANH) - D4-4 (CG)	•Ignition switch OFF •Stop light switch OFF	3 kΩ or more
D4-14 (CANL) - D4-4 (CG)		

CA

OK → **Go to step 16**

NG

REPLACE CAN J/C

10	CONNECT CONNECTOR

(a) Reconnect the skid control ECU sub bus line connector (J6) to the CAN J/C.

NEXT

11	CHECK CAN BUS LINE FOR SHORT TO GND (SKID CONTROL ECU SUB BUS LINE)

(a) Disconnect the skid control ECU connector (S1).

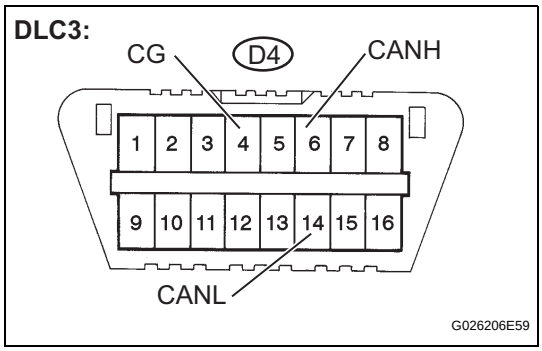

(b) Measure the resistance according to the value(s) in the table below.

Standard resistance

Tester Connection	Condition	Specified Value
D4-6 (CANH) - D4-4 (CG)	• Ignition switch OFF • Stop light switch OFF	3 kΩ or more
D4-14 (CANL) - D4-4 (CG)		

OK → REPLACE MASTER CYLINDER SOLENOID

NG

REPAIR OR REPLACE SKID CONTROL ECU BRANCH LINE OR CONNECTOR (CAN-H,CAN-L)

12 CONNECT CONNECTOR

(a) Reconnect the yaw rate sensor sub bus line connector (J7) to the CAN J/C.

NEXT

CA

13 CHECK CAN BUS LINE FOR SHORT TO GND (YAW RATE SENSOR SUB BUS LINE)

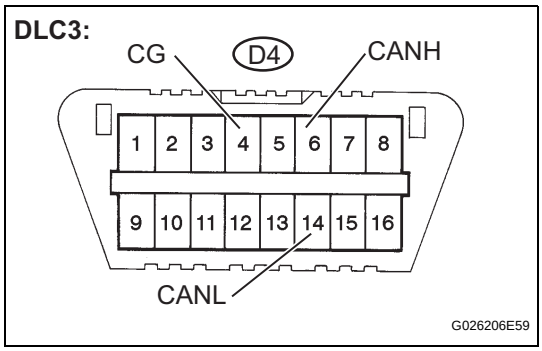

(a) Disconnect the yaw rate sensor connector (Y1).

(b) Measure the resistance according to the value(s) in the table below.

Standard resistance

Tester Connection	Condition	Specified Value
D4-6(CANH) - D46-4(CG)	•Ignition switch OFF •Stop light switch OFF	3 kΩ or more
D4-14(CANL) - D4-4(CG)		

OK → REPLACE YAW RATE SENSOR

NG

REPAIR OR REPLACE YAW RATE SENSOR SUB BUS LINE OR CONNECTOR (CAN-H,CAN-L)

14 CONNECT CONNECTOR

(a) Reconnect the steering angle sensor sub bus line connector (J8) to the CAN J/C.

NEXT

15	CHECK CAN BUS LINE FOR SHORT TO GND (STEERING ANGLE SENSOR SUB BUS LINE)

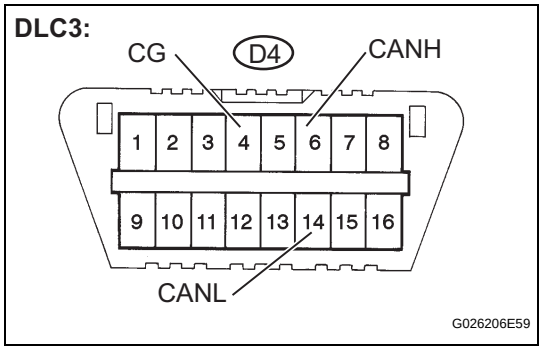

(a) Disconnect the steering angle sensor connector (S9).
(b) Measure the resistance according to the value(s) in the table below.

Standard resistance

Tester Connection	Condition	Specified Value
D4-6 (CANH) - D4-4 (CG)	• Ignition switch OFF • Stop light switch OFF	3 kΩ or more
D4-14 (CANL) - D4-4 (CG)		

OK → REPLACE STEERING ANGLE SENSOR

NG

REPAIR OR REPLACE STEERING ANGLE SENSOR BRANCH LINE OR CONNECTOR (CAN-H,CAN-L)

16	CONNECT CONNECTOR

(a) Reconnect the ECM main bus line connector (J10) to the CAN J/C.

NEXT

17	CHECK CAN BUS LINE FOR SHORT TO GND (ECM MAIN BUS LINE)

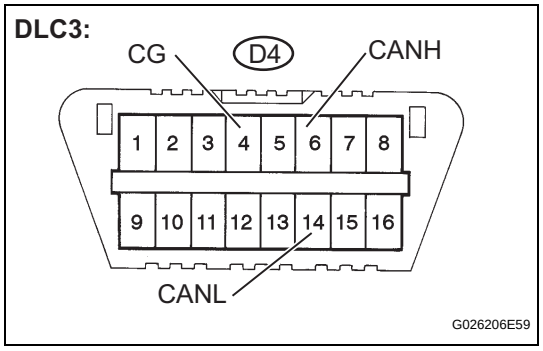

(a) Disconnect the ECM connector (E7).
(b) Measure the resistance according to the value(s) in the table below.

Standard resistance

Tester Connection	Condition	Specified Value
D4-6 (CANH) - D4-4 (CG)	• Ignition switch OFF • Stop light switch OFF	3 kΩ or more
D4-14 (CANL) - D4-4 (CG)		

OK → REPLACE ECM

NG

REPAIR OR REPLACE ECM MAIN BUS LINE OR CONNECTOR (CAN-H,CAN-L)

Open in One Side of CAN Sub Bus Line

DESCRIPTION

If 2 or more ECUs and/or sensors do not appear on the intelligent tester "BUS CHECK" screen via the CAN VIM , one side of the CAN sub-bus line may be open. (ONE side of the CAN-H [sub-bus line] / CAN-L [sub-bus line] of the ECU and/or sensor is open.)

Symptom	Trouble Alrea
2 or more ECUs and/or sensors do not appear on the intelligent tester "BUS CHECK" screen via the CAN VIM.	• One side of the CAN sub-bus line is open • Skid control ECU • Steering angle sensor • Yaw rate sensor • ECM • CAN J/C

WIRING DIAGRAM

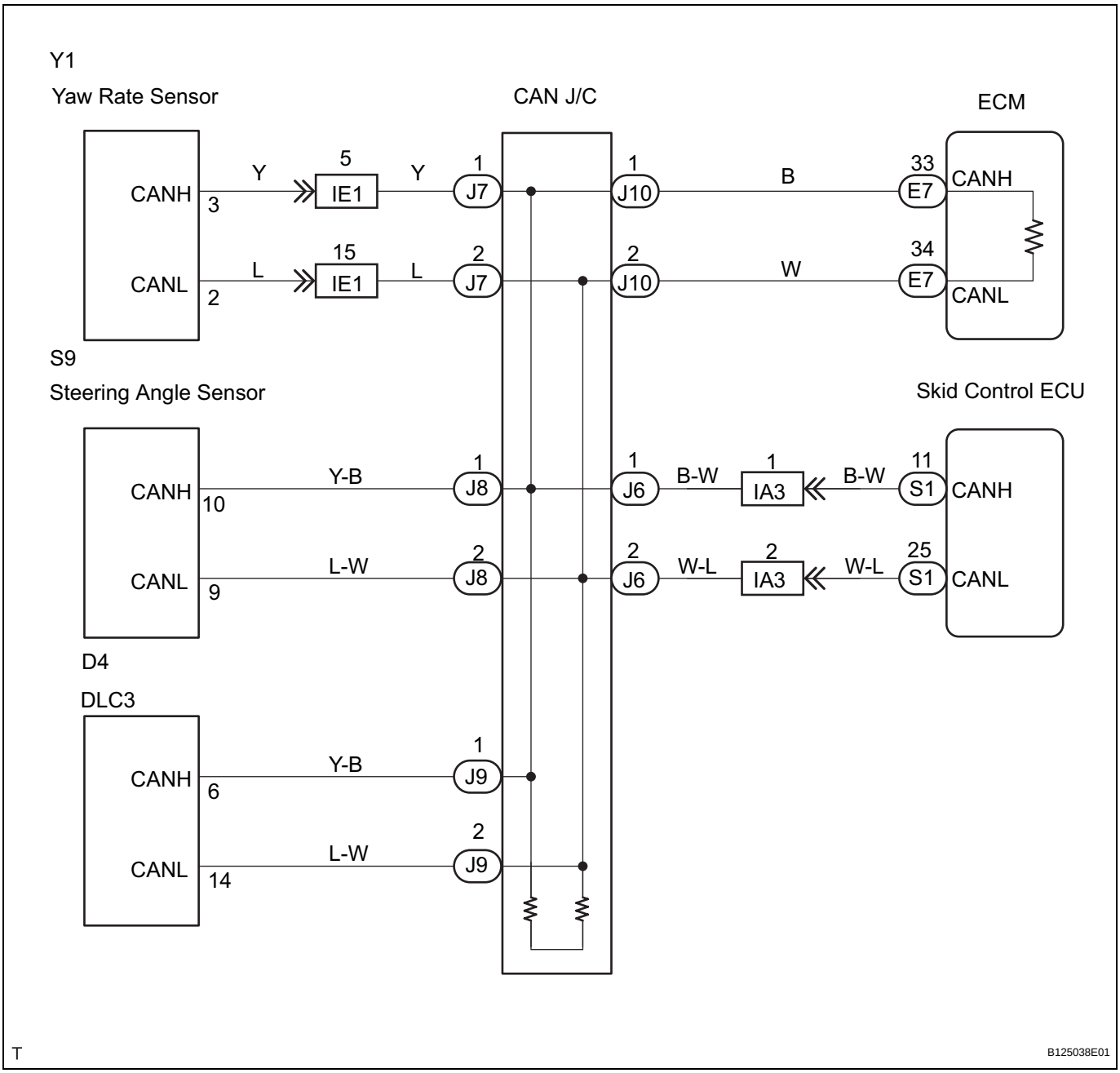

1	CHECK FOR AN OPEN IN ONE SIDE OF THE CAN SUB BUS LINE (SKID CONTROL ECU SUB BUS LINE)

CAN J/C "B" Side (w/o Earth Terminal) Wire Harness View:

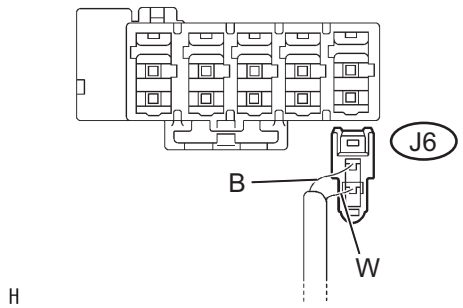

(a) Disconnect the skid control ECU sub bus line connector (J6) from the CAN J/C.
NOTICE:
- **Before disconnecting the connector, make a note of where it is connected.**
- **Reconnect the connector to its original position.**

(b) Connect the intelligent tester via the CAN VIM to the DLC3.
(c) Turn the ignition switch ON.
(d) Select "BUS CHECK" on the intelligent tester display via the CAN VIM (See page CA-14).

Result

A	"ABS/VSC/TRAC" does not appear
B	2 or more ECUs and/or sensors do not appear

A → **Go to step 8**

B

2	CONNECT CONNECTOR

(a) Reconnect the skid control ECU sub bus line connector (J6) to the CAN J/C.

NEXT

3	CHECK FOR AN OPEN IN ONE SIDE OF THE CAN SUB BUS LINE (STEERING ANGLE SENSOR SUB BUS LINE)

CAN J/C "A" Side (w/ Earth Terminal) Wire Harness View:

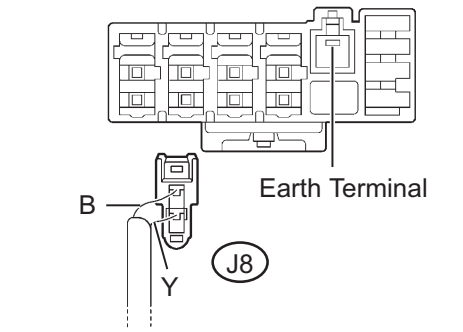

(a) Disconnect the steering angle sensor sub bus line connector (J8) from the CAN J/C.
NOTICE:
- **Before disconnecting the connector, make a note of where it is connected.**
- **Reconnect the connector to its original position.**

(b) Connect the intelligent tester via the CAN VIM to the DLC3.
(c) Turn the ignition switch ON.
(d) Select "BUS CHECK" on the intelligent tester display via the CAN VIM (See page CA-14).

Result

A	"STEERING SENSOR" does not appear
B	2 or more ECUs and/or sensors do not appear

A → **Go to step 10**

B

CA

4	CONNECT CONNECTOR

(a) Reconnect the steering angle sensor sub bus line connector (J8) CAN J/C.

NEXT

5	CHECK FOR AN OPEN IN ONE SIDE OF THE CAN SUB BUS LINE (YAW RATE SENSOR SUB BUS LINE)

CAN J/C "A" Side (w/ Earth Terminal) Wire Harness View:

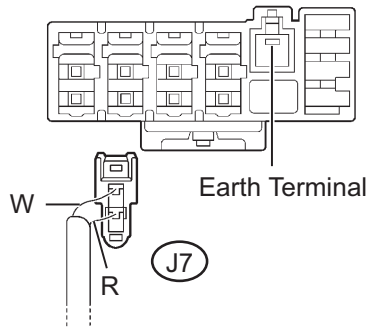

G031933E10

(a) Disconnect the yaw rate sensor sub bus line connector (J7) from the CAN J/C.
CAUTION:
- **Before disconnecting the connector, make a note of where it is connected.**
- **Reconnect the connector to its original position.**

(b) Connect the intelligent tester via the CAN VIM to the DLC3.
(c) Turn the ignition switch ON.
(d) Select "BUS CHECK" on the intelligent tester display via the CAN VIM (See page CA-14).

Result

A	"YAW /DECELERAT" does not appear
B	2 or more ECUs and/or sensors do not appear

B → **Go to step 12**

A

6	CONNECT CONNECTOR

(a) Reconnect the yaw rate sensor sub bus line connector (J7) to the CAN J/C.

NEXT

7	CHECK FOR AN OPEN IN ONE SIDE OF THE CAN SUB BUS LINE (YAW RATE SENSOR SUB BUS LINE)

Yaw Rate Sensor Wire Harness Front View:

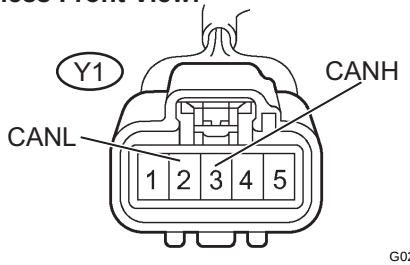

H

G026359E46

(a) Disconnect the yaw rate sensor connector (Y1).
(b) Measure the resistance according to the value(s) in the table below.

Standard resistance

Tester connection	Condition	Specified value
Y1-2 (CANL) - Y1-3 (CANH)	•Ignition switch OFF •Stop light switch OFF	54 to 69 Ω

NG → **REPAIR OR REPLACE YAW RATE SENSOR SUB BUS LINE OR CONNECTOR (CAN-H or CAN-L)**

OK

REPLACE YAW RATE SENSOR

8	CONNECT CONNECTOR

(a) Reconnect the skid control ECU sub bus line connector (J6) to the CAN J/C.

NEXT

9	CHECK FOR AN OPEN IN ONE SIDE OF THE CAN SUB BUS LINE (SKID CONTROL ECU SUB BUS LINE)

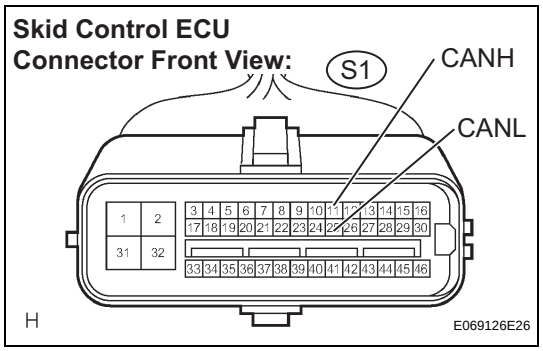

(a) Disconnect the skid control ECU connector (S1).
(b) Measure the resistance according to the value(s) in the table below.

Standard resistance

Tester connection	Condition	Specified value
S1-11 (CANH) - S1-25 (CANL)	•Ignition switch OFF •Stop light switch OFF	54 to 69 Ω

NG → **REPAIR OR REPLACE SKID CONTROL ECU BRANCH LINE OR CONNECTOR (CAN-H or CAN-L)**

OK

REPLACE MASTER CYLINDER SOLENOID

10	CONNECT CONNECTOR

(a) Reconnect the steering angle sensor sub bus line connector (J8) to the CAN J/C.

NEXT

CA

11	CHECK FOR AN OPEN IN ONE SIDE OF THE CAN SUB BUS LINE (STEERING ANGLE SENSOR SUB BUS LINE)

Steering Angle Sensor Wire Harness View:

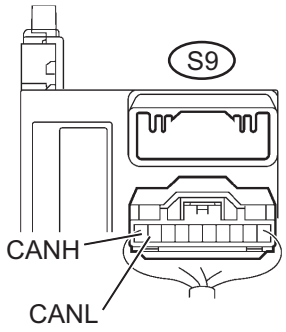

G030155E23

(a) Disconnect steering angle sensor connector (S9).
(b) Measure the resistance according to the value(s) in the table below.

Standard resistance

Tester connection	Condition	Specified value
S9-10 (CANH) - S9-9 (CANL)	•Ignition switch OFF •Stop light switch OFF	54 to 69 Ω

NG → **REPAIR OR REPLACE STEERING ANGLE SENSOR BRANCH LINE OR CONNECTOR (CAN-H or CAN-L)**

OK

CA

REPLACE STEERING ANGLE SENSOR

12	INSPECT CAN J/C

CAN J/C "A" Side (w/ Earth Terminal):

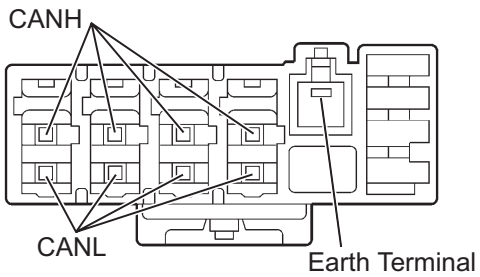

CAN J/C "B" Side (w/o Earth Terminal):

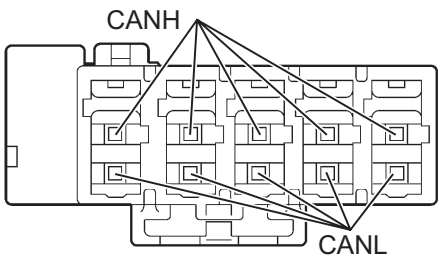

G026214E10

(a) Disconnect connectors (J6), (J7), (J8), (J9), and (J10) from the CAN J/C.
(b) Measure the resistance according to the value(s) in the table below.

Standard resistance

Tester connection	Condition	Specified value
1 (CANH) - 2 (CANL)	• Ignition switch OFF • Stop light switch OFF	108 to 132 Ω

NG → **REPLACE CAN J/C**

OK

REPLACE ECM

ENGINE

ON-VEHICLE INSPECTION

1. **INSPECT ENGINE COOLANT (See page CO-2)**
2. **INSPECT ENGINE OIL (See page LU-2)**
3. **INSPECT BATTERY (See page CH-4)**
4. **INSPECT AIR CLEANER FILTER ELEMENT SUB-ASSEMBLY**
5. **INSPECT SPARK PLUG (See page IG-5)**
6. **INSPECT DRIVE BELT**

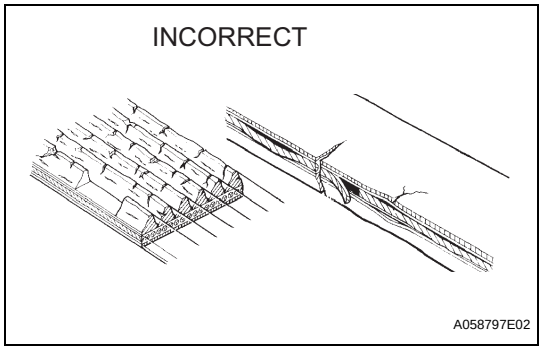

(a) Visually check the driver belt for excessive wear, frayed cords, etc. If any defect is found, replace the drive belt.
HINT:
Cracks on the rib side of a drive belt are considered acceptable. If the drive belt has chunks missing from the ribs, it should be replaced.

7. **INSPECT IGNITION TIMING**

NOTICE:
- **Turn all electrical systems OFF.**
- **Operate the inspection when the cooling fan motor is turned OFF.**

(a) Warm up the engine.

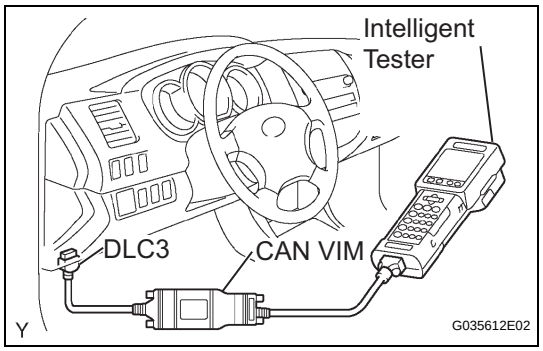

(b) When using the intelligent tester.
(1) Connect the intelligent tester to the DLC3.
(2) Select the following menu items: DIAGNOSIS / ENHANCED OBD ll / DATA LIST / IGN ADVANCE.
(3) Inspect the ignition timing during idling.
Ignition timing:
7 to 24°CA BTDC during idling
(Transmission in neutral position)
(4) Check that the ignition timing advances immediately when the engine speed is increased.

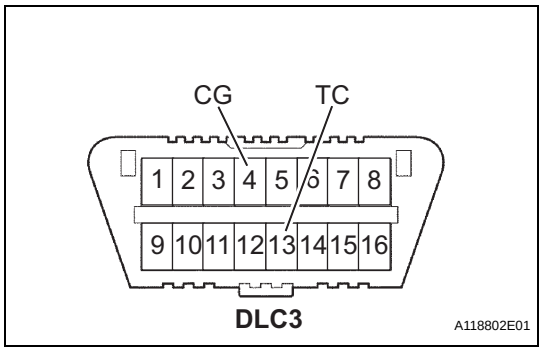

(c) When not using intelligent tester.
(1) Using SST, connect the terminals 13 (TC) and 4 (CG) of the DLC3.
SST 09843-18040
NOTICE:
Be sure not to connect the terminals wrongly. It causes breakage of the engine.
(2) Remove the air cleaner.

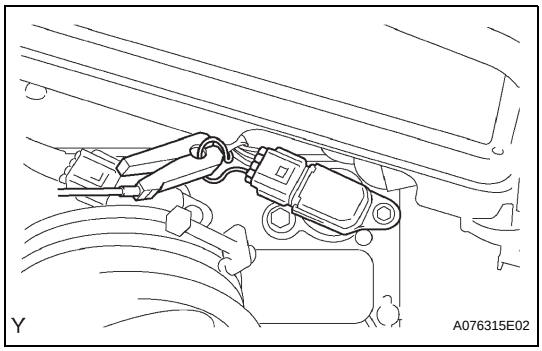

(3) Pull out the wire harness as shown in the illustration.
(4) Connect the tester probe of a timing light to the wire of the ignition coil connector for No. 1 cylinder.
NOTICE:
- **Use a timing light that detects the first signal.**
- **After checking, be sure to wrap the wire harness with tape.**

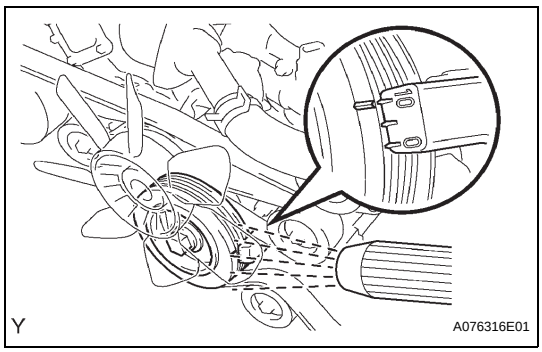

(5) Inspect the ignition timing during idling.
Ignition timing:
8 to 12°CA BTDC during idling (Transmission in neutral position)
(6) Remove the SST from the DLC3.
(7) Inspect the ignition timing during idling.
Ignition timing:
7 to 24°CA BTDC during idling (Transmission in neutral position)
(8) Install the air cleaner.

8. INSPECT ENGINE IDLING SPEED
NOTICE:
- **Turn all the electrical systems OFF.**
- **Operate the inspection when the cooling fan motor is turned OFF.**

(a) Warm up the engine.

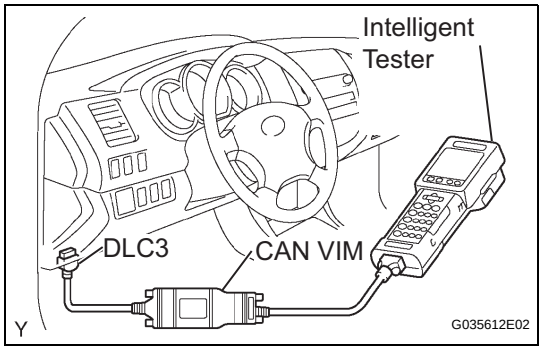

(b) When using the intelligent tester:
(1) Connect the intelligent tester to the DLC3.
(2) Select the following menu items: DIAGNOSIS / ENHANCED OBD ll / DATA LIST / ENGINE SPD.
(3) Inspect the engine idling speed.
Idling speed:
650 to 750 rpm (Transmission in neutral position)

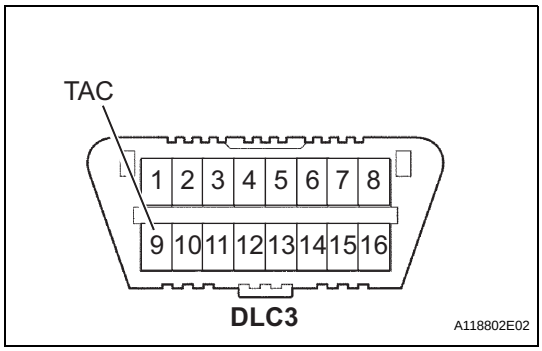

(c) When not using the intelligent tester:
(1) Using SST, connect the terminal 8 (TAC) of the DLC3.
SST 09843-18030
(2) Race the engine speed at 2,500 rpm for approximately 90 seconds.
(3) Inspect the engine idling speed.
Idling speed:
650 to 750 rpm (Transmission in neutral position)

9. INSPECT COMPRESSION
(a) Warm up and stop the engine.
(b) Remove the circuit opening relay.
(c) Remove the V-bank cover.
(d) Remove the air cleaner assembly.

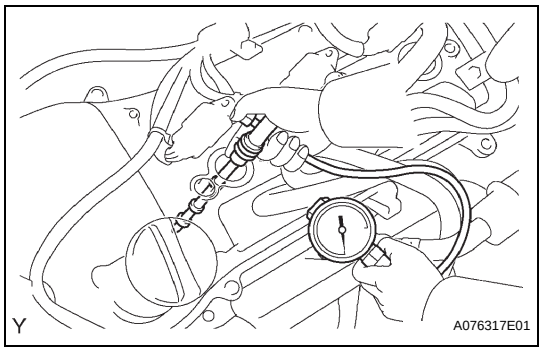

(e) Remove the ignition coils.
(f) Remove the spark plugs.
(g) Inspect the cylinder compression pressure.
(1) Insert a compression gage into the spark plug hole.
SST 09992-00500
(2) Fully open the throttle.
(3) While cranking the engine, measure the compression pressure.
Compression pressure:
1,300 kPa (13.3 kgf/cm^2, 189 psi)
Minimum pressure:
1,000 kPa (10.2 kgf/cm^2, 145 psi)
Difference between each cylinder:
100 kPa (1.0 kgf/cm^2, 15 psi)
NOTICE:
- **Use a fully-charged battery so the engine speed can be increased to 250 rpm or more.**
- **Inspect the other cylinders in the same way.**
- **Measure the compression in as short a time as possible.**

(4) If the cylinder compression is low, pour a small amount of engine oil into the cylinder through the spark plug hole and repeat steps (1) through (3) for cylinders with low compression.
- If adding oil increases the compression, the piston rings and/or cylinder bore may be worn or damaged.
- If pressure stays low, a valve may be stuck or seated improperly, or there may be leakage from the gasket.

10. INSPECT CO/HC
(a) Start the engine.
(b) Run the engine at 2,500 rpm for approximately 180 seconds.
(c) Insert the CO/HC meter testing probe at least 40 cm (1.3 ft) into the tailpipe during idling.
(d) Immediately check the CO/HC concentration during idling and/or at 2,500 rpm.
HINT:
- Complete the measurement within 3 minutes.
- When carrying out the 2 modes (idling and 2,500 rpm) test, the measurement orders are prescribed by the applicable local regulations.

(e) If the CO/HC concentration does not comply with regulations, troubleshoot in the order given below.
(1) Check the heated oxygen sensor operation.

CO	HC	Problems	Causes
Normal	High	Rough idling	1. Faulty ignition: – Incorrect timing – Fouled, shorted or improperly gapped plugs 2. Incorrect valve clearance 3. Leaky intake and exhaust valves 4. Leaky cylinders
Low	High	Rough idling (Fluctuating HC reading)	1. Vacuum leaks: – PCV hoses – Intake manifold – Throttle body – IAC valve – Brake booster line 2. Lean mixture causing misfire
High	High	Rough idling (Black smoke from exhaust)	1. Restricted air filter 2. Plugged PCV valve 3. Faulty EFI systems: – Faulty pressure regulator – Faulty engine coolant temperature sensor – Faulty mass air flow meter – Faulty ECM – Faulty injectors – Faulty throttle position sensor

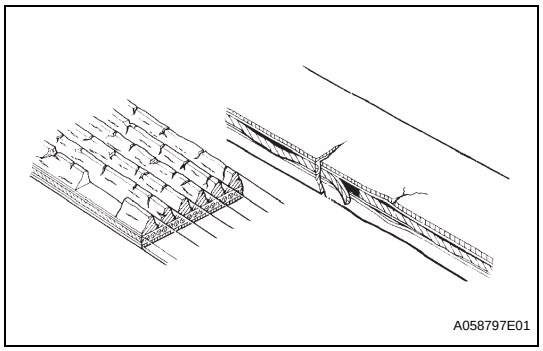

DRIVE BELT

ON-VEHICLE INSPECTION

1. INSPECT DRIVE BELT

(a) Visually check the drive belt for excessive wear frayed cords, etc. If any defect is found, replace the drive belt

HINT:

Cracks on the rib side of a drive belt are considered acceptable.

If the drive belt has chunks missing from the ribs, it should be replaced.

REMOVAL

1. REMOVE NO.1 ENGINE UNDER COVER SUB-ASSEMBLY (for Pre Runner and 4WD Type)

(a) Remove the 4 bolts, then remove the under cover No. 1.

2. REMOVE FAN AND GENERATOR V BELT

(a) While releasing the belt tension by turning the belt tensioner counterclockwise, remove the V-ribbed belt from the belt tensioner.

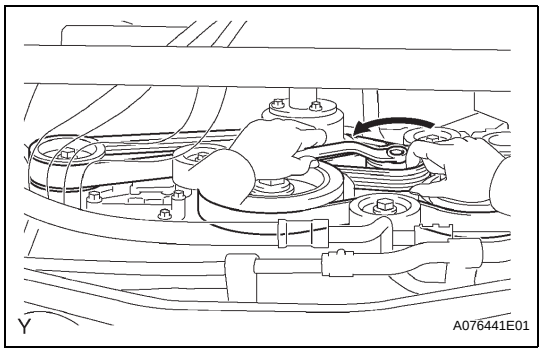

VALVE CLEARANCE

ADJUSTMENT

1. **DISCONNECT CABLE FROM NEGATIVE BATTERY TERMINAL**
2. **DRAIN ENGINE COOLANT (See page CO-3)**
3. **REMOVE V-BANK COVER (See page ES-414)**
4. **REMOVE AIR CLEANER ASSEMBLY (See page ES-415)**
5. **REMOVE INTAKE AIR SURGE TANK (See page EM-57)**
6. **REMOVE IGNITION COIL ASSEMBLY (See page IG-7)**
7. **REMOVE CYLINDER HEAD COVER SUB-ASSEMBLY (See page EM-59)**
8. **REMOVE CYLINDER HEAD COVER SUB-ASSEMBLY LH (See page EM-59)**
9. **SET NO.1 CYLINDER TO TDC/COMPRESSION**
   (a) Turn the crankshaft pulley until its groove and the timing mark "0" of the timing chain cover are aligned.

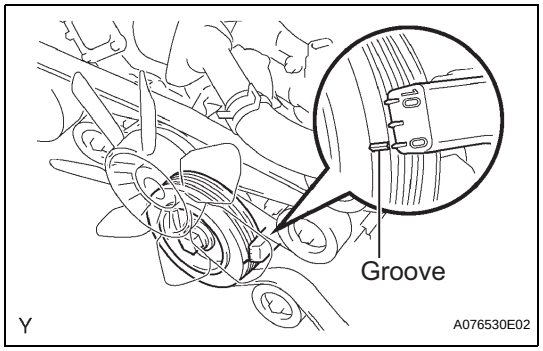

   (b) Check that the timing marks of the camshaft timing gears are aligned with the timing marks of the bearing cap as shown in the illustration.
   If not, turn the crankshaft 1 complete revolution (360°) and align the timing marks above.

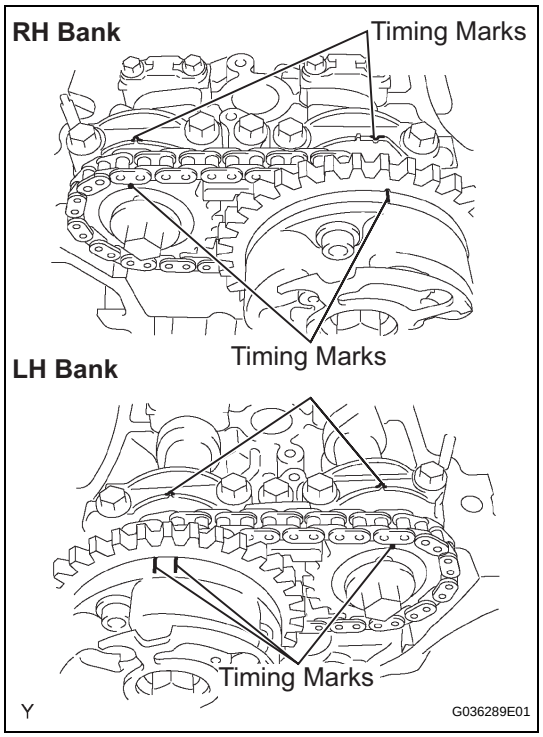

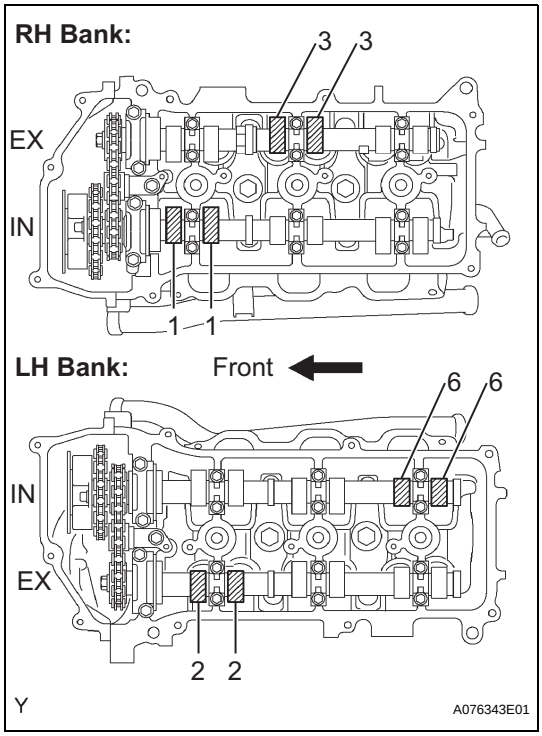

10. INSPECT VALVE CLEARANCE

(a) Check the valves indicated in the illustration.

(1) Using a feeler gauge, measure the clearance between the valve lifter and camshaft.

Valve clearance (Cold):

Intake 0.15 to 0.25 mm (0.006 to 0.010 in.)
Exhaust 0.29 to 0.39 mm (0.011 to 0.015 in.)

(2) Record any out-of-specification valve clearance measurements. They will be used later to determine the required replacement valve lifter.

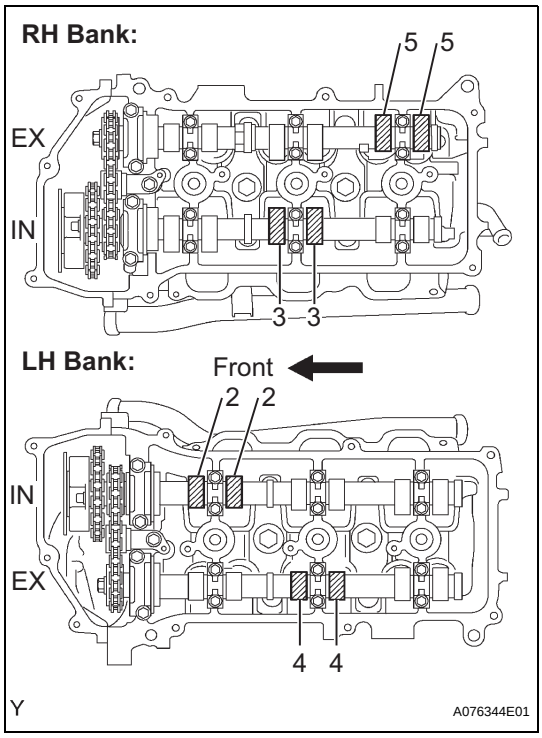

(b) Turn the crankshaft 240° clockwise, and check the valves indicated in the illustration.

(1) Using a feeler gauge, measure the clearance between the valve lifter and camshaft.

Valve clearance (Cold):

Intake 0.15 to 0.25 mm (0.006 to 0.010 in.)
Exhaust 0.29 to 0.39 mm (0.011 to 0.015 in.)

(2) Record any out-of-specification valve clearance measurements. They will be used later to determine the required replacement valve lifter.

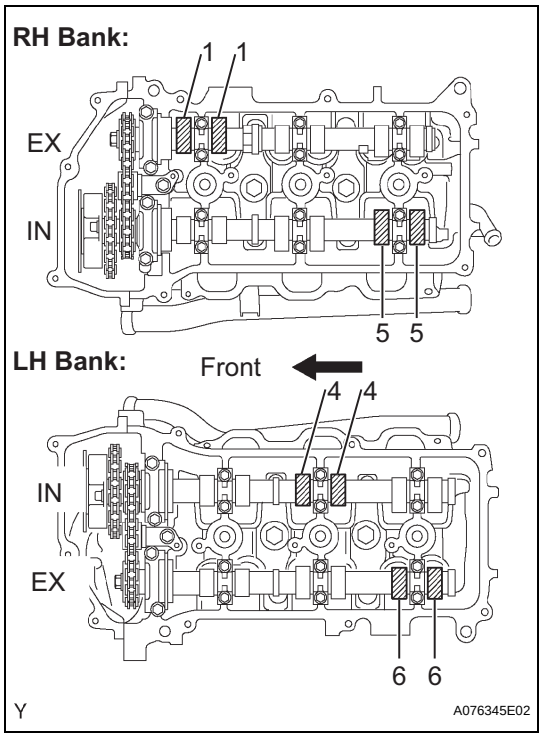

(c) Turn the crankshaft 240° clockwise, and check the valves indicated in the illustration.

(1) Using a feeler gauge, measure the clearance between the valve lifter and camshaft.

(2) Valve clearance (Cold):

Intake 0.15 to 0.25 mm (0.006 to 0.010 in.)
Exhaust 0.29 to 0.39 mm (0.011 to 0.015 in.)

Record any out-of-specification valve clearance measurements. They will be used later to determine the required replacement valve lifter.

EM

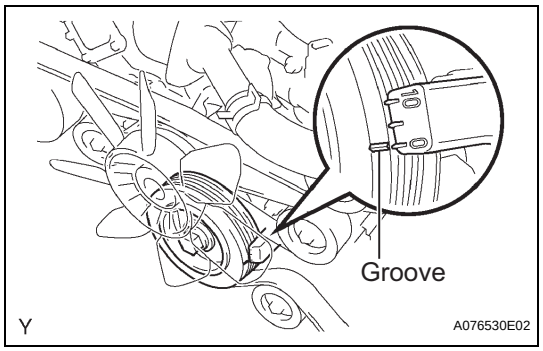

11. ADJUST VALVE CLEARANCE

(a) Set No. 1 cylinder to TDC/compression.

(1) Turn the crankshaft pulley until its groove and the timing mark "0" of the timing chain cover are aligned.

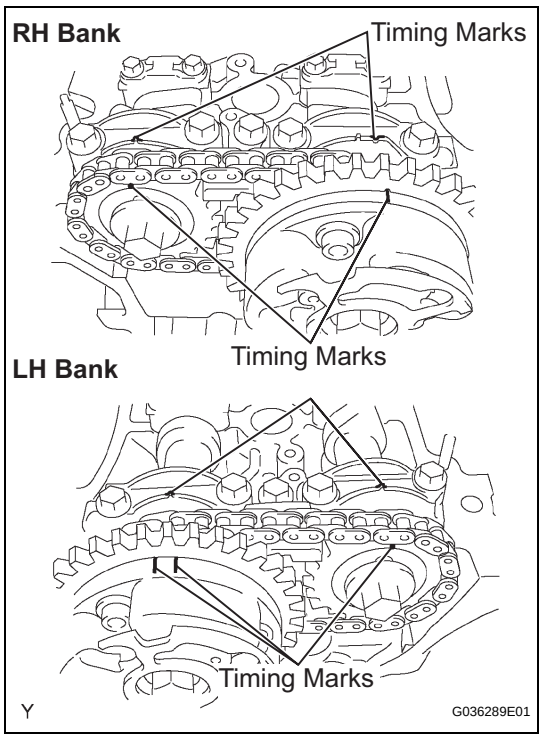

(2) Check that the timing marks of the camshaft timing gears are aligned with the timing marks of the bearing cap as shown in the illustration. If not, turn the crankshaft 1 complete revolution (360°) and align the timing marks as above.

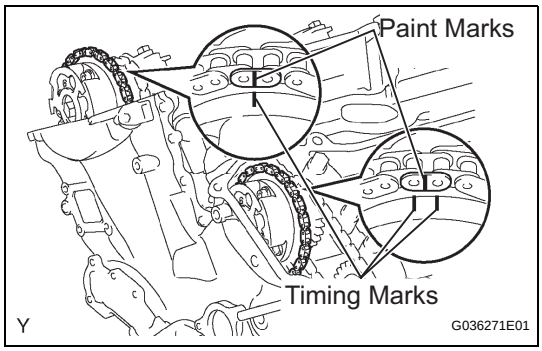

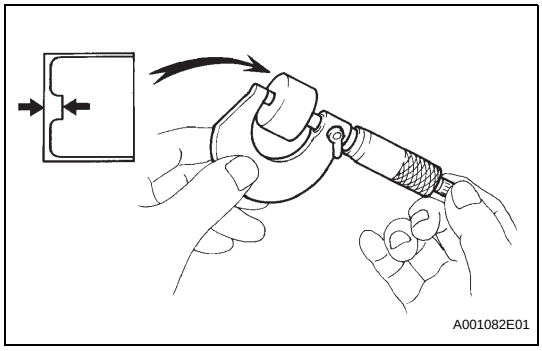

(3) Place paint marks on the No. 1 chain links corresponding to the timing marks of the camshaft timing gears.

(b) Remove the chain tensioner assembly No. 1.
(c) Remove the No. 2 camshaft.
(d) Remove the chain tensioner assembly No. 2.
(e) Remove the camshaft.
(f) Remove the No. 4 camshaft sub-assembly.
(g) Remove the chain tensioner assembly No. 3.
(h) Remove the No. 3 camshaft sub-assembly.
(i) Remove the valve lifters.

(j) Determine the replacement valve lifter size according to the following formulas and charts:

(1) Using a micrometer, measure the thickness of the removed lifter.

(2) Calculate the thickness of a new lifter so that the valve clearance comes within the specified value.

T:
Thickness of removed lifter
A:
Measured valve clearance
N:
Thickness of new lifter
Intake:
N = T + (A - 0.20 mm (0.008 in.))
Exhaust:
N = T + (A - 0.30 mm (0.012 in.))

(3) Select a new lifter with a thickness as close as possible to the calculated value.

HINT:
Lifters are available in 35 sizes in increments of 0.020 mm (0.0008 in.), from 5.060 mm (0.1992 in.) to 5.740 mm (0.2260 in.).

EM

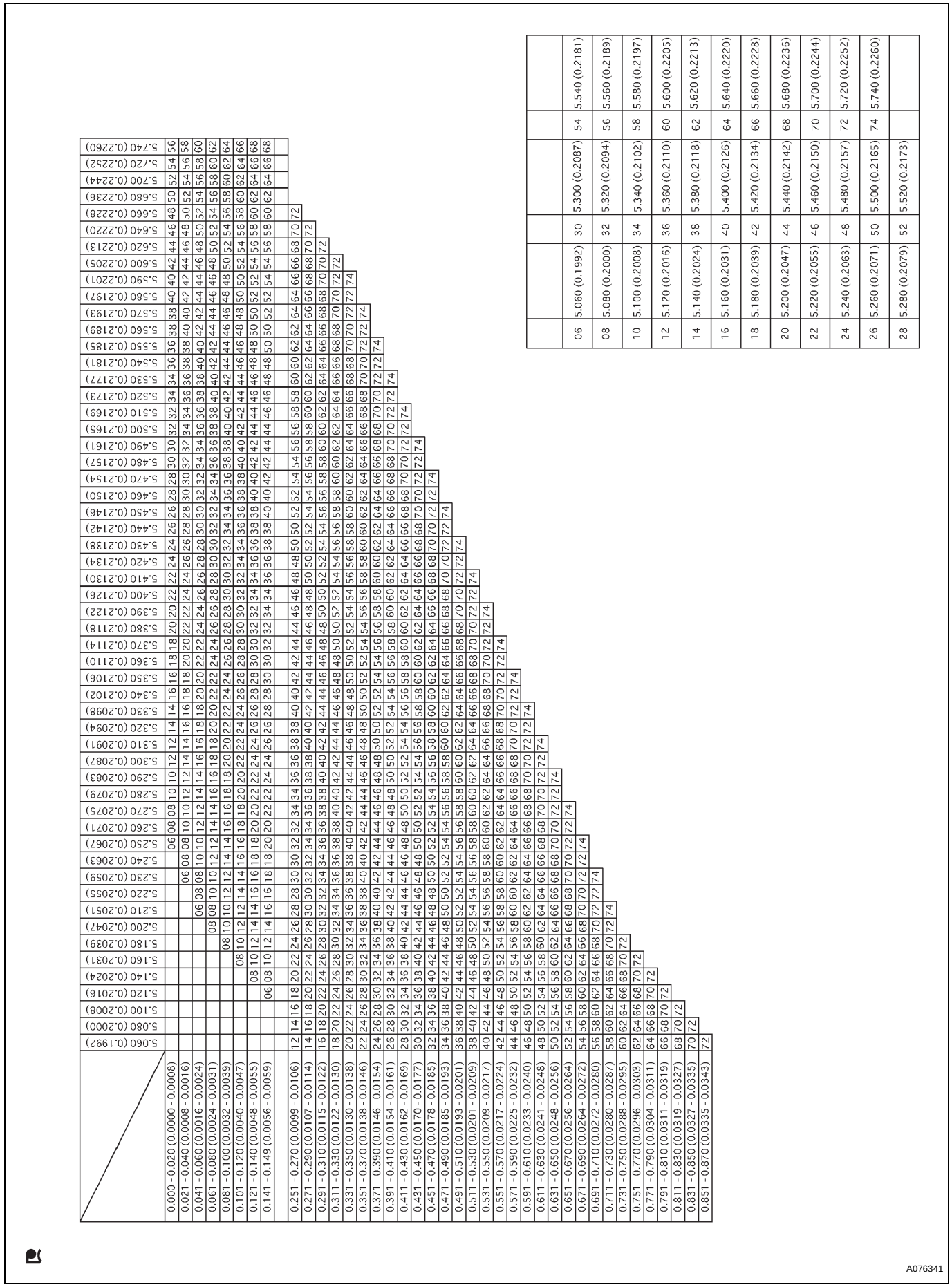

06	5.060 (0.1992)	5.300 (0.2087)	54	5.540 (0.2181)
08	5.080 (0.2000)	5.320 (0.2094)	56	5.560 (0.2189)
10	5.100 (0.2008)	5.340 (0.2102)	58	5.580 (0.2197)
12	5.120 (0.2016)	5.360 (0.2110)	60	5.600 (0.2205)
14	5.140 (0.2024)	5.380 (0.2118)	62	5.620 (0.2213)
16	5.160 (0.2031)	5.400 (0.2126)	64	5.640 (0.2220)
18	5.180 (0.2039)	5.420 (0.2134)	66	5.660 (0.2228)
20	5.200 (0.2047)	5.440 (0.2142)	68	5.680 (0.2236)
22	5.220 (0.2055)	5.460 (0.2150)	70	5.700 (0.2244)
24	5.240 (0.2063)	5.480 (0.2157)	72	5.720 (0.2252)
26	5.260 (0.2071)	5.500 (0.2165)	74	5.740 (0.2260)
28	5.280 (0.2079)	5.520 (0.2173)		

EM

EM

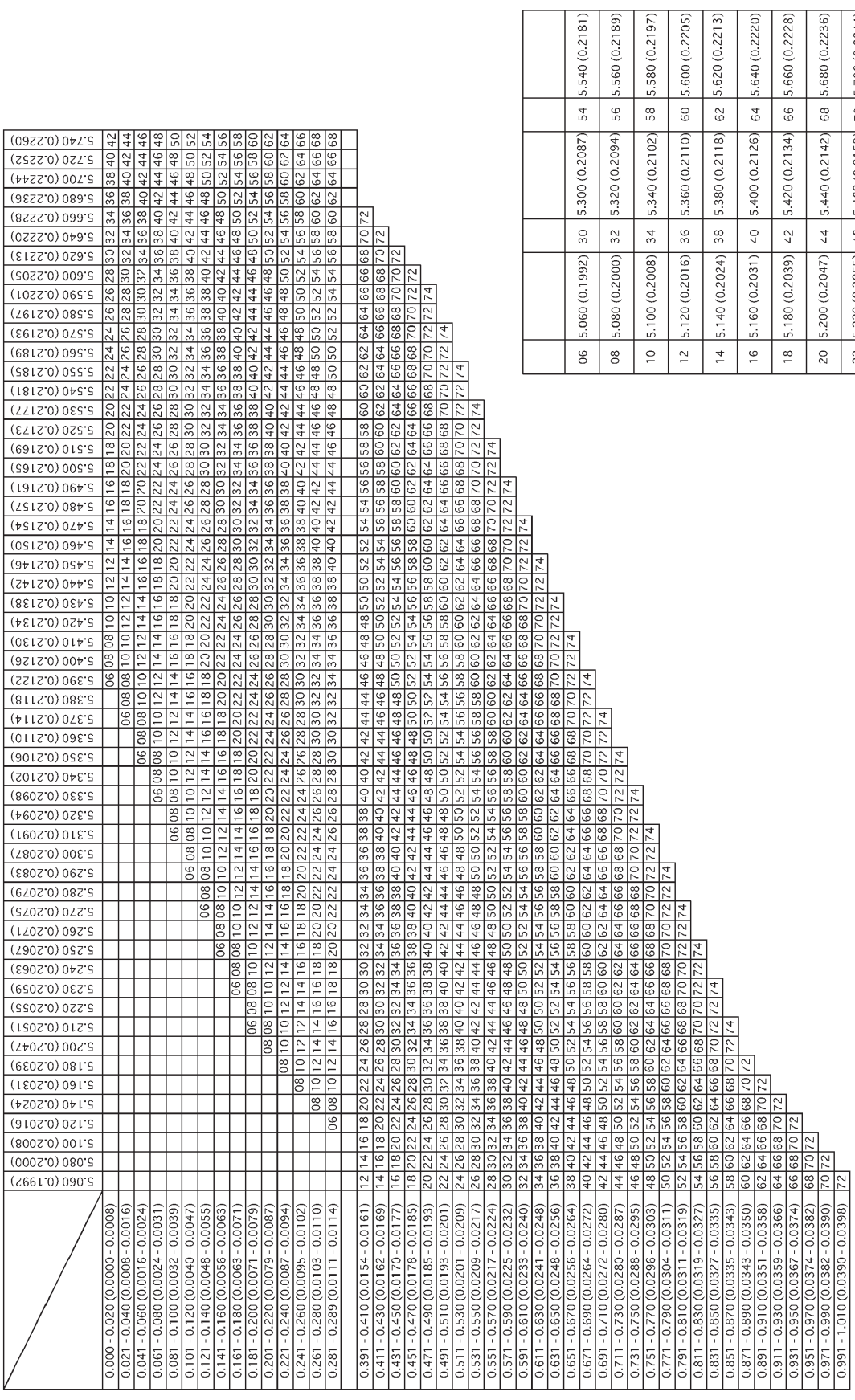

06	5.060 (0.1992)	30	5.300 (0.2087)	54	5.540 (0.2181)
08	5.080 (0.2000)	32	5.320 (0.2094)	56	5.560 (0.2189)
10	5.100 (0.2008)	34	5.340 (0.2102)	58	5.580 (0.2197)
12	5.120 (0.2016)	36	5.360 (0.2110)	60	5.600 (0.2205)
14	5.140 (0.2024)	38	5.380 (0.2118)	62	5.620 (0.2213)
16	5.160 (0.2031)	40	5.400 (0.2126)	64	5.640 (0.2220)
18	5.180 (0.2039)	42	5.420 (0.2134)	66	5.660 (0.2228)
20	5.200 (0.2047)	44	5.440 (0.2142)	68	5.680 (0.2236)
22	5.220 (0.2055)	46	5.460 (0.2150)	70	5.700 (0.2244)
24	5.240 (0.2063)	48	5.480 (0.2157)	72	5.720 (0.2252)
26	5.260 (0.2071)	50	5.500 (0.2165)	74	5.740 (0.2260)
28	5.280 (0.2079)	52	5.520 (0.2173)		

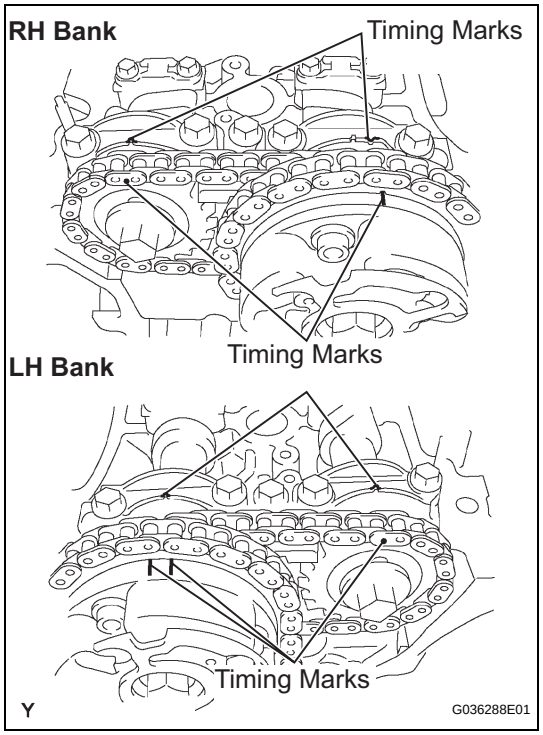

(k) Install the No. 3 camshaft sub-assembly.
(l) Install the chain tensioner assembly No. 3.
(m) Install the No. 4 camshaft sub-assembly.
(n) Install the camshaft.
(o) Install the chain tensioner assembly No. 2.
(p) Install the No. 2 camshaft.
(q) Install the chain tensioner assembly No. 1.
  (1) Check that the timing marks of the camshaft timing gears are aligned with the timing marks of the bearing cap as shown in the illustration.

12. INSTALL CYLINDER HEAD COVER SUB-ASSEMBLY LH (See page EM-68)

13. INSTALL CYLINDER HEAD COVER SUB-ASSEMBLY (See page EM-68)

14. INSTALL IGNITION COIL ASSEMBLY
Torque: 10 N*m (102 kgf*cm, 7.4 ft.*lbf)

15. INSTALL INTAKE AIR SURGE TANK (See page EM-69)

16. INSTALL AIR CLEANER ASSEMBLY (See page ES-416)

17. ADD ENGINE COOLANT (See page CO-3)

18. CONNECT CABLE TO NEGATIVE BATTERY TERMINAL

19. CHECK FOR ENGINE COOLANT LEAKAGE (See page CO-4)

20. INSTALL V-BANK COVER
(a) Install the V-bank cover with the 2 nuts.
Torque: 7.5 N*m (76 kgf*cm, 66 in.*lbf)

21. INSPECT IGNITION TIMING (See page EM-1)

TIMING CHAIN (for 2WD)

COMPONENTS

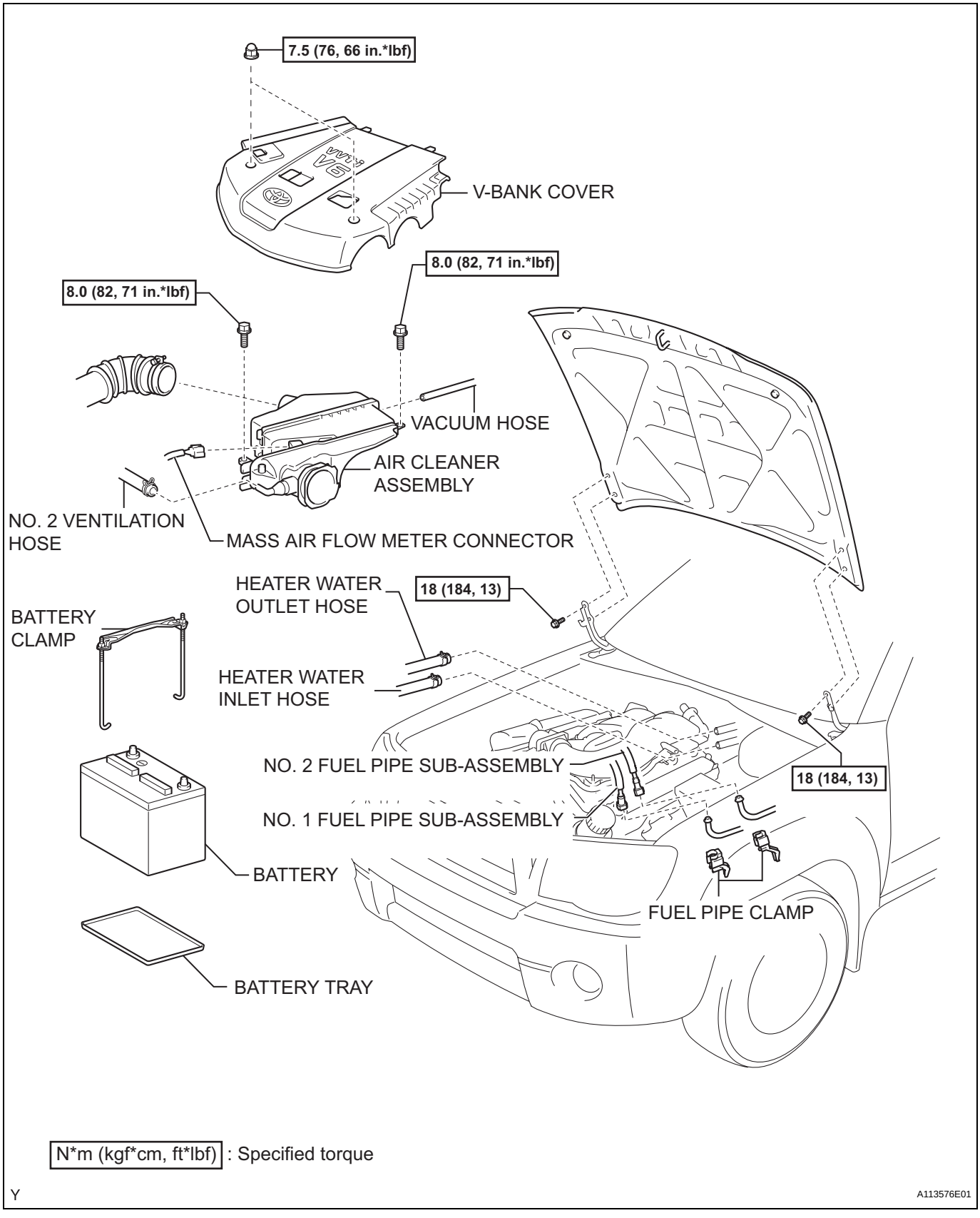

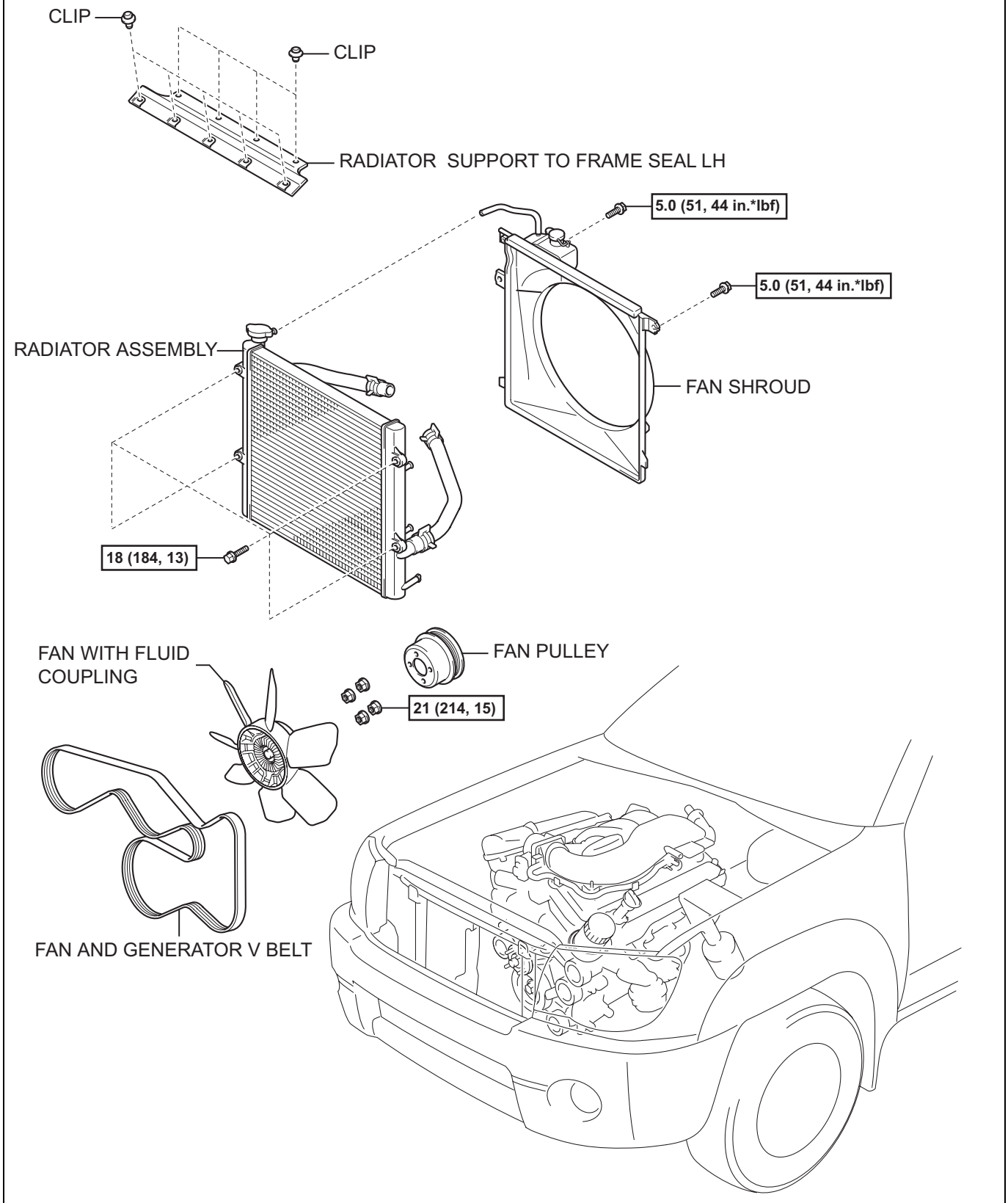

EM

N*m (kgf*cm, ft*lbf) : Specified torque

Y

A113586E01

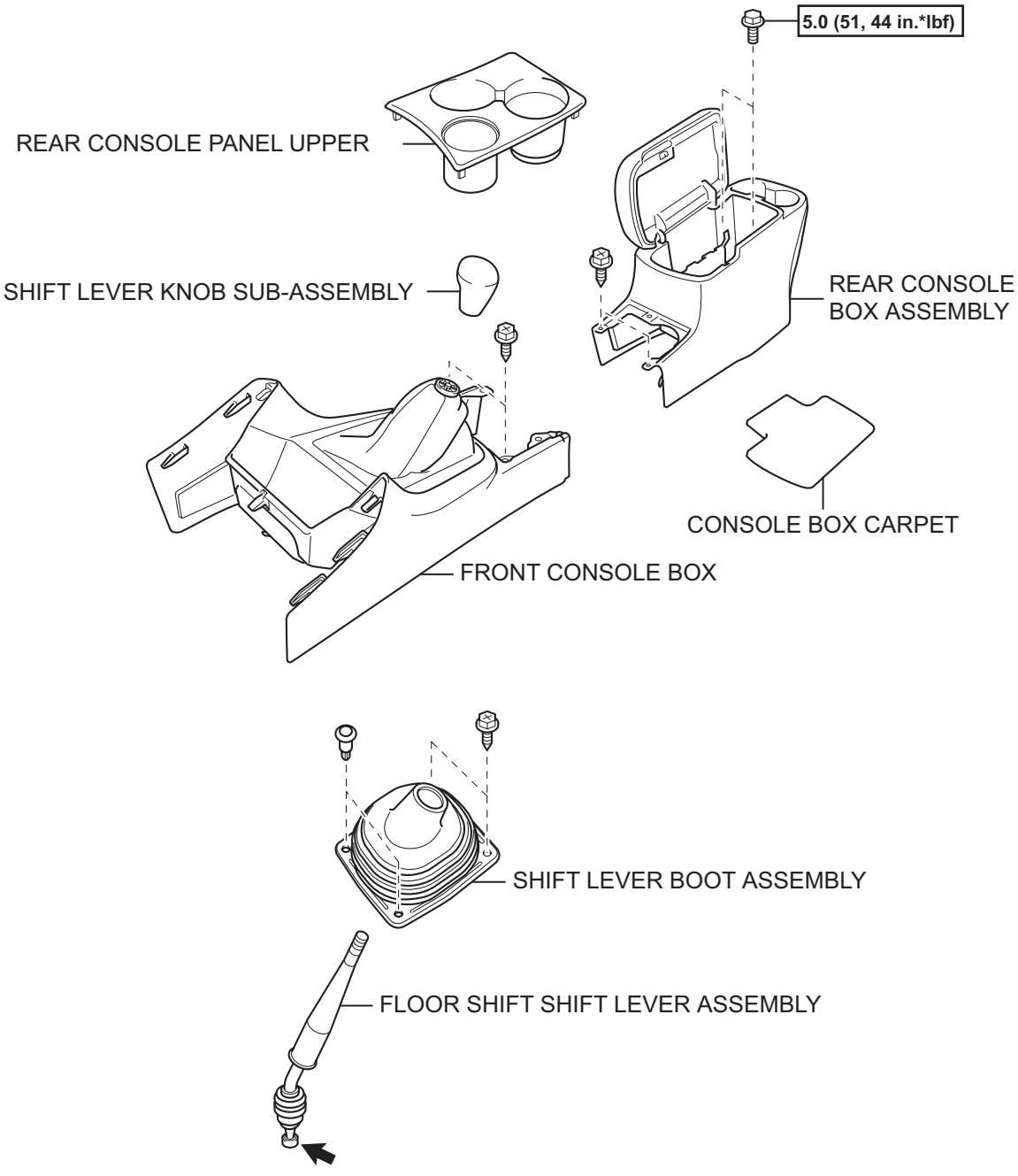
5.0 (51, 44 in.*lbf)
REAR CONSOLE PANEL UPPER
SHIFT LEVER KNOB SUB-ASSEMBLY
REAR CONSOLE BOX ASSEMBLY
CONSOLE BOX CARPET
FRONT CONSOLE BOX
SHIFT LEVER BOOT ASSEMBLY
FLOOR SHIFT SHIFT LEVER ASSEMBLY
N*m (kgf*cm, ft*lbf) : Specified torque
MP grease
A113553E01

EM

Y

2WD AND PRE RUNNER, MANUAL TRANSMISSION:

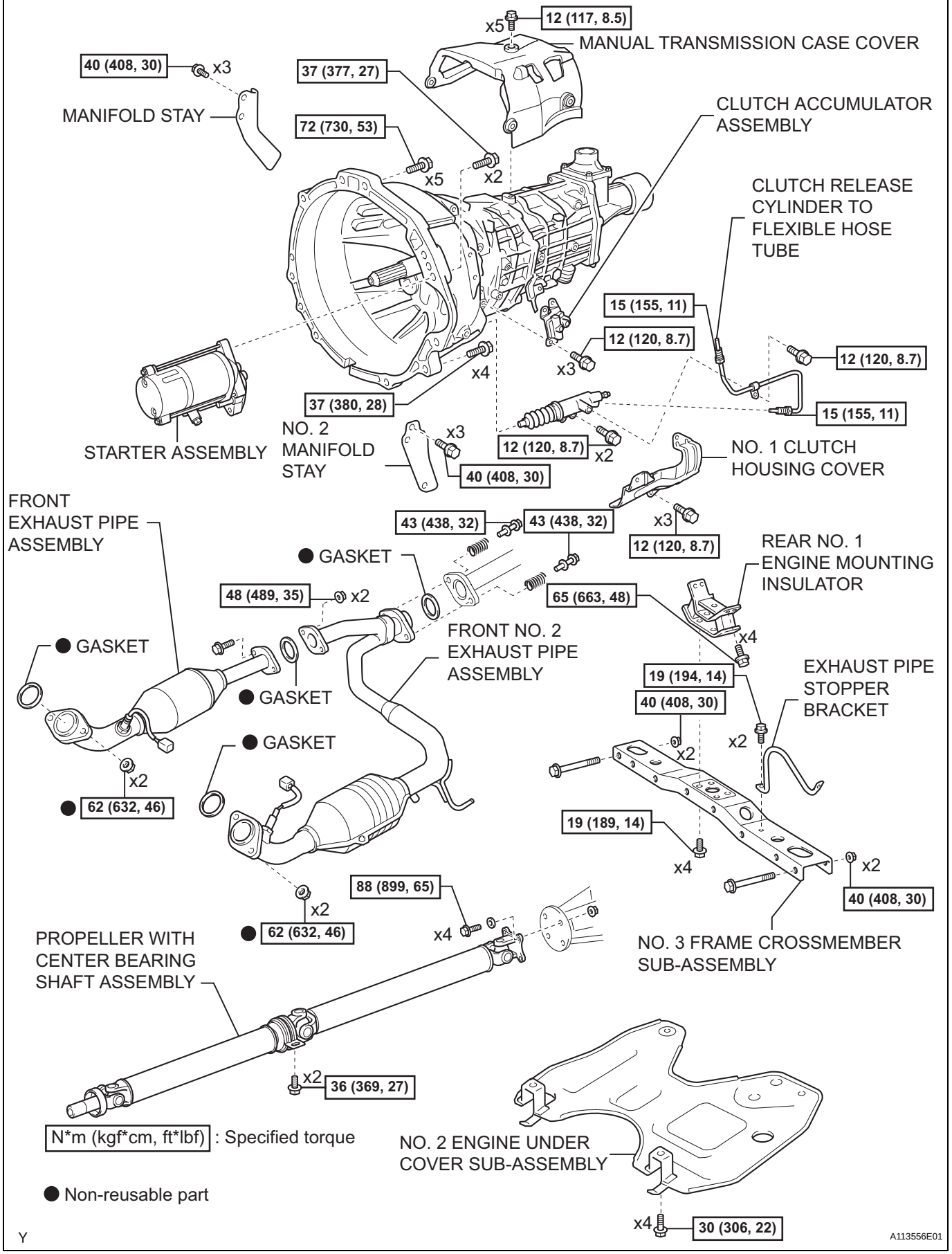

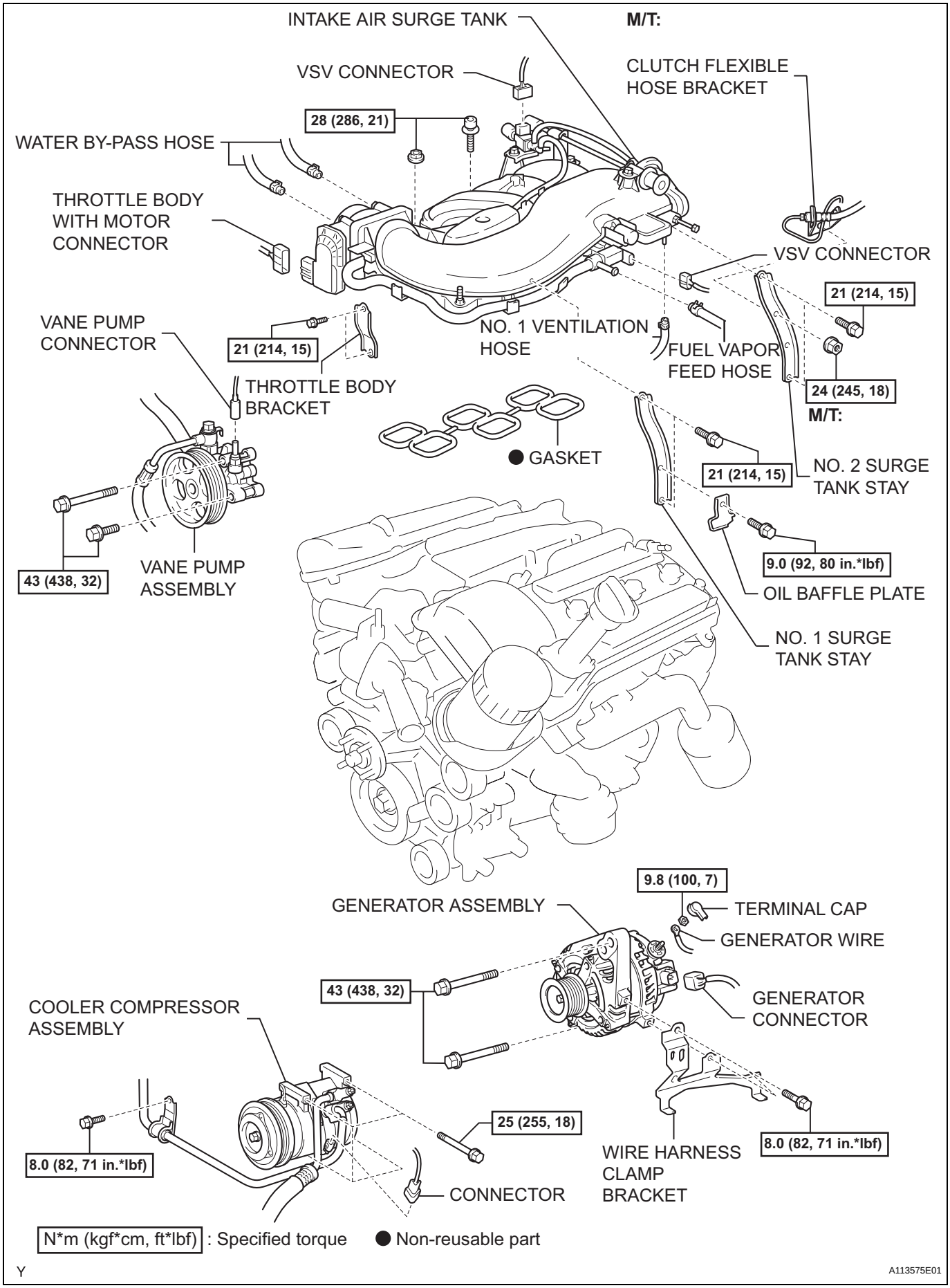
INTAKE AIR SURGE TANK
M/T:
VSV CONNECTOR
CLUTCH FLEXIBLE HOSE BRACKET
28 (286, 21)
WATER BY-PASS HOSE
THROTTLE BODY WITH MOTOR CONNECTOR
VSV CONNECTOR
21 (214, 15)
VANE PUMP CONNECTOR
21 (214, 15)
NO. 1 VENTILATION HOSE
FUEL VAPOR FEED HOSE
24 (245, 18)
M/T:
THROTTLE BODY BRACKET
GASKET
21 (214, 15)
NO. 2 SURGE TANK STAY
9.0 (92, 80 in.*lbf)
43 (438, 32)
VANE PUMP ASSEMBLY
OIL BAFFLE PLATE
NO. 1 SURGE TANK STAY
9.8 (100, 7)
GENERATOR ASSEMBLY
TERMINAL CAP
GENERATOR WIRE
43 (438, 32)
GENERATOR CONNECTOR
COOLER COMPRESSOR ASSEMBLY
25 (255, 18)
8.0 (82, 71 in.*lbf)
8.0 (82, 71 in.*lbf)
WIRE HARNESS CLAMP BRACKET
CONNECTOR
N*m (kgf*cm, ft*lbf) : Specified torque
● Non-reusable part
Y
A113575E01

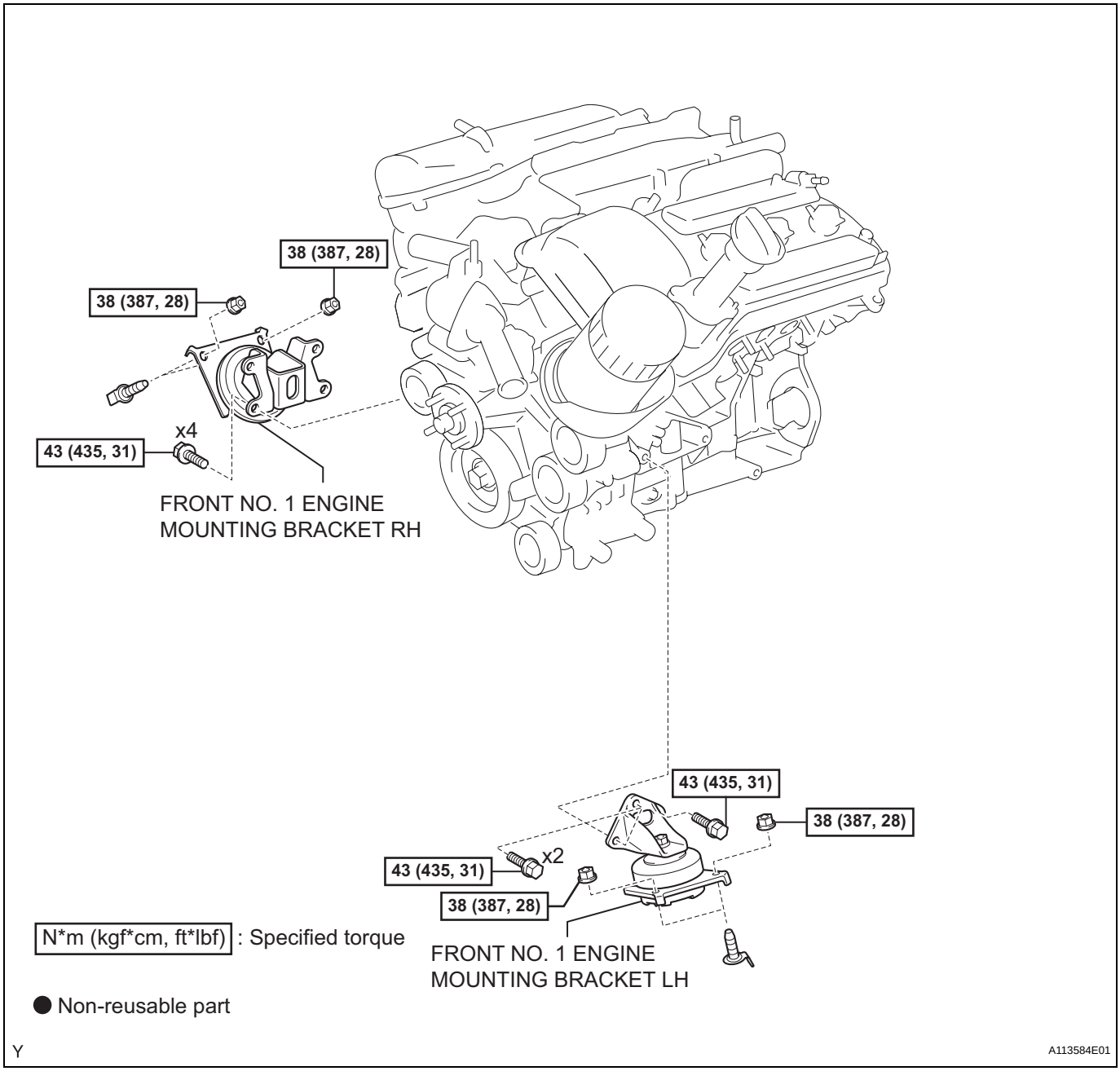
38 (387, 28)
38 (387, 28)
x4
43 (435, 31)
FRONT NO. 1 ENGINE MOUNTING BRACKET RH
43 (435, 31)
38 (387, 28)
x2
43 (435, 31)
38 (387, 28)
FRONT NO. 1 ENGINE MOUNTING BRACKET LH
N*m (kgf*cm, ft*lbf) : Specified torque
● Non-reusable part
Y
A113584E01

EM

EM

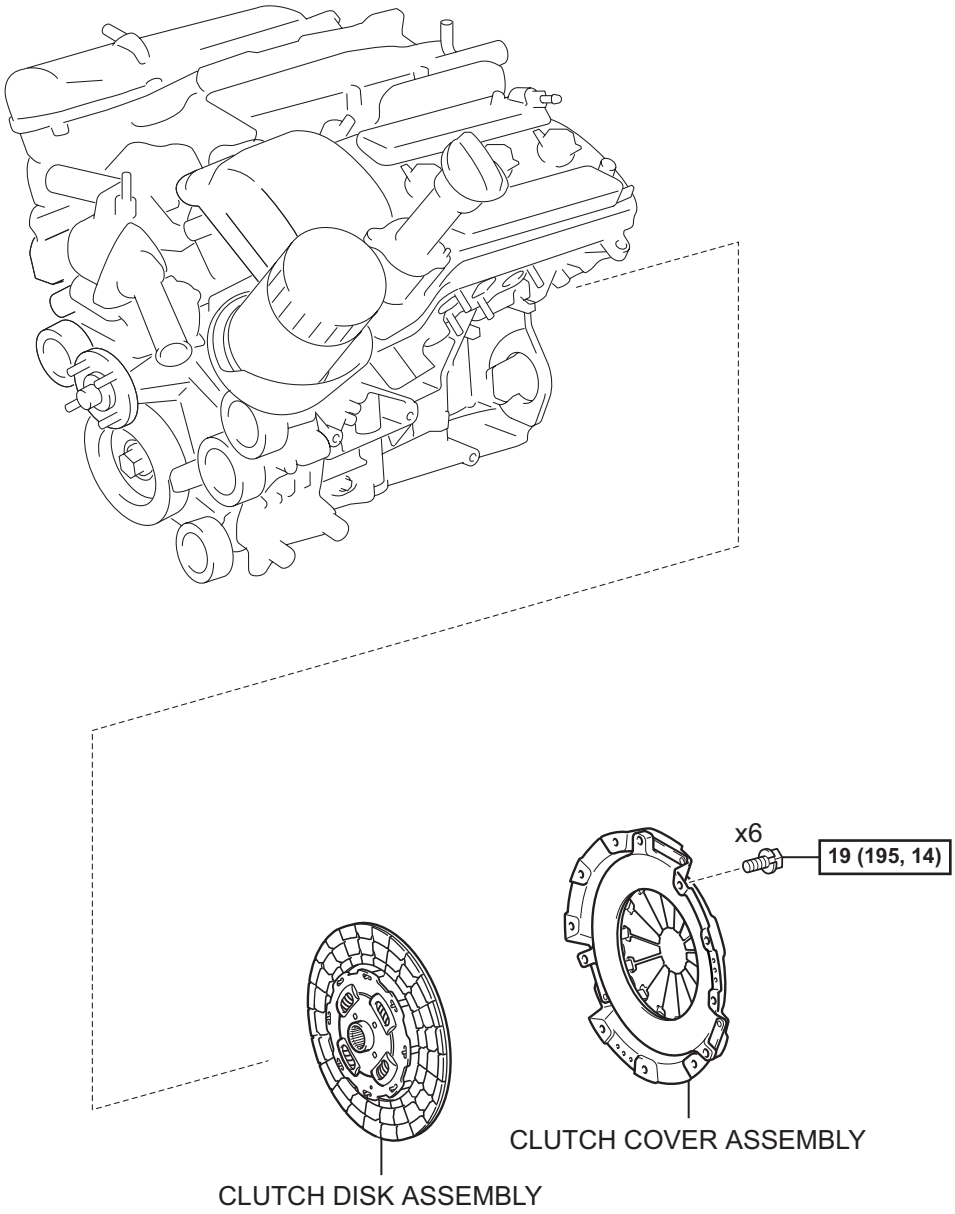

N*m (kgf*cm, ft*lbf) : Specified torque

Y

A113585E01

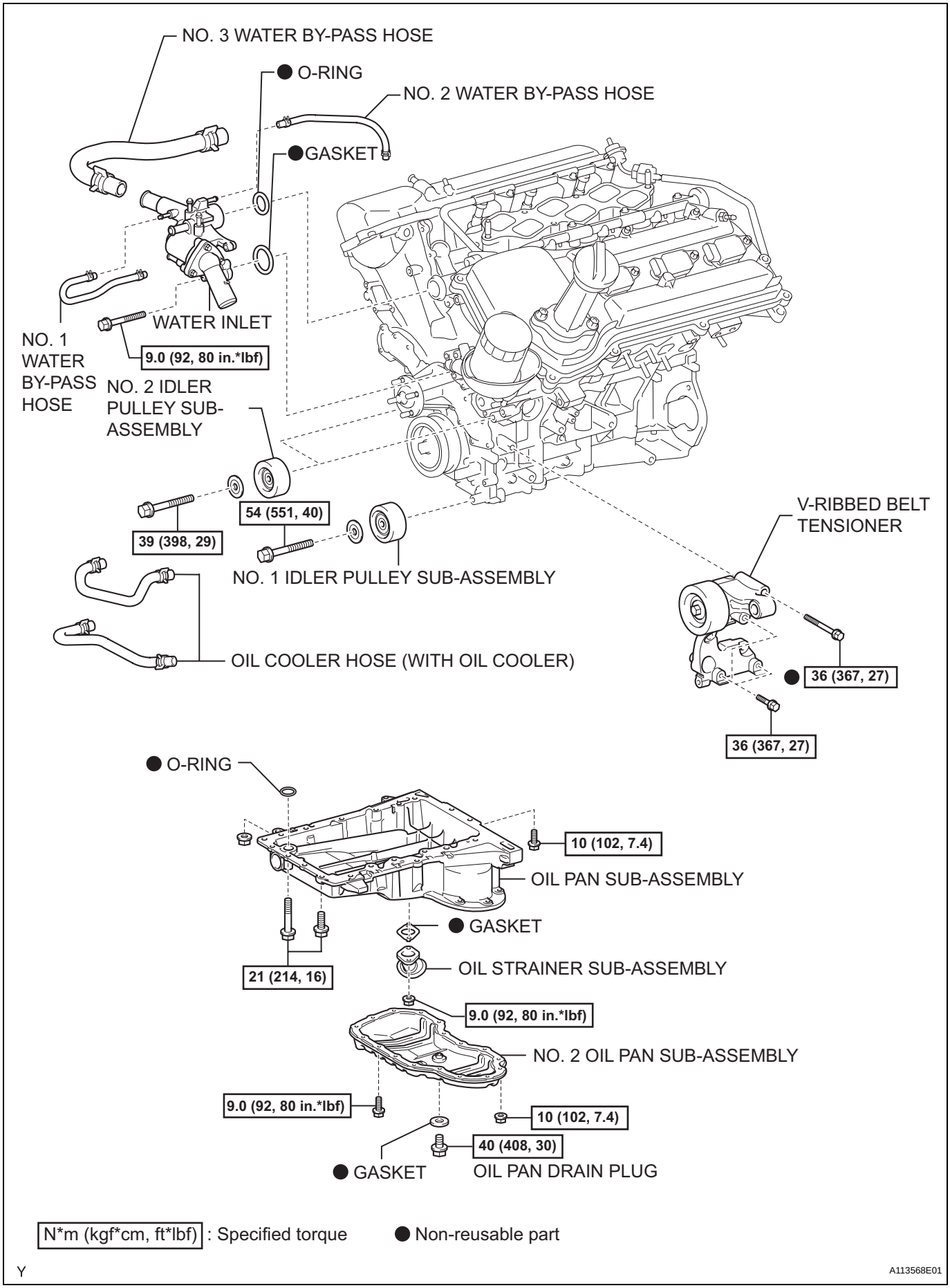

EM

N*m (kgf*cm, ft*lbf) : Specified torque ● Non-reusable part

Y

A113568E01

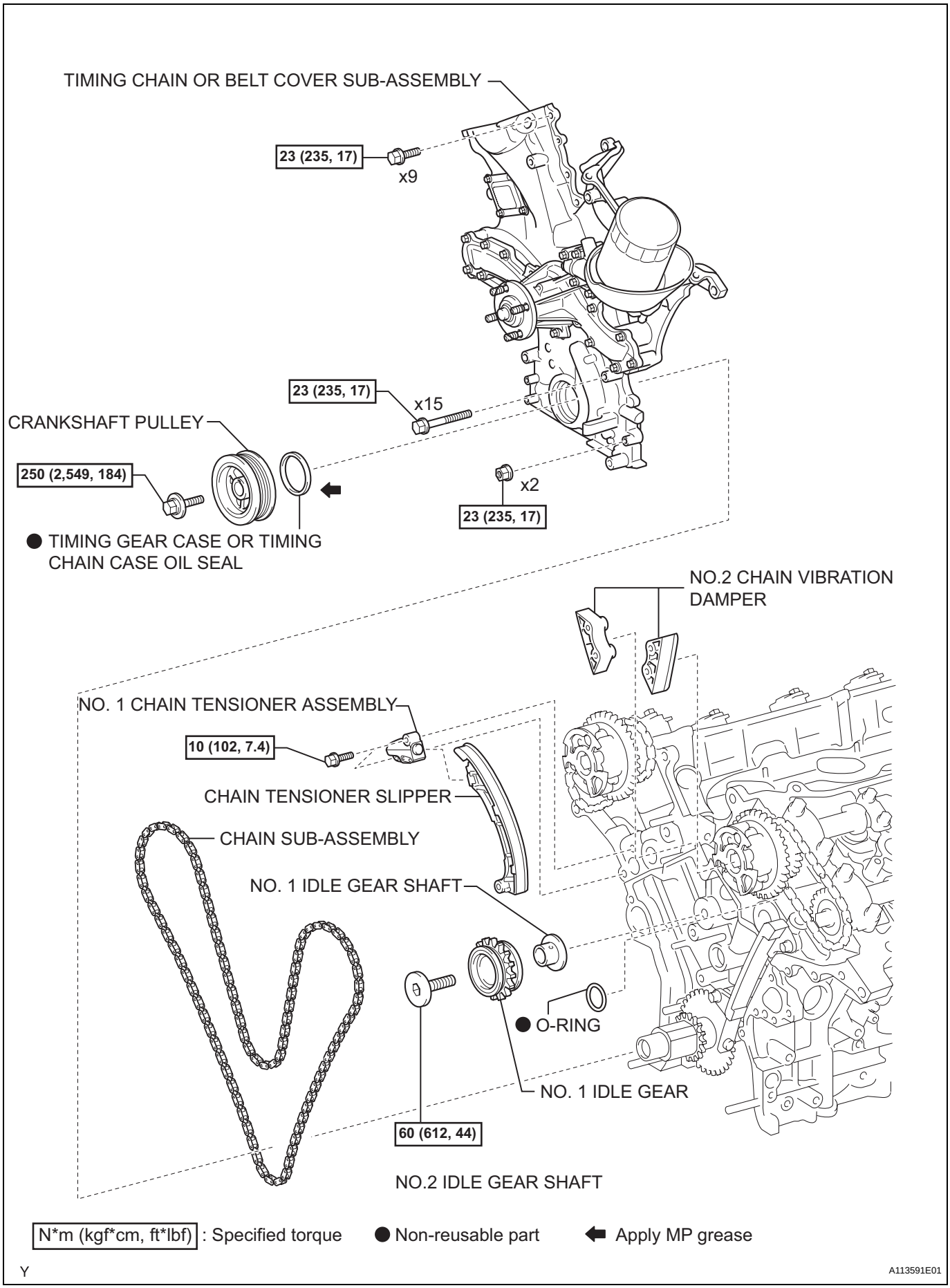

N*m (kgf*cm, ft*lbf) : Specified torque ● Non-reusable part ⬅ Apply MP grease

Y

A113591E01

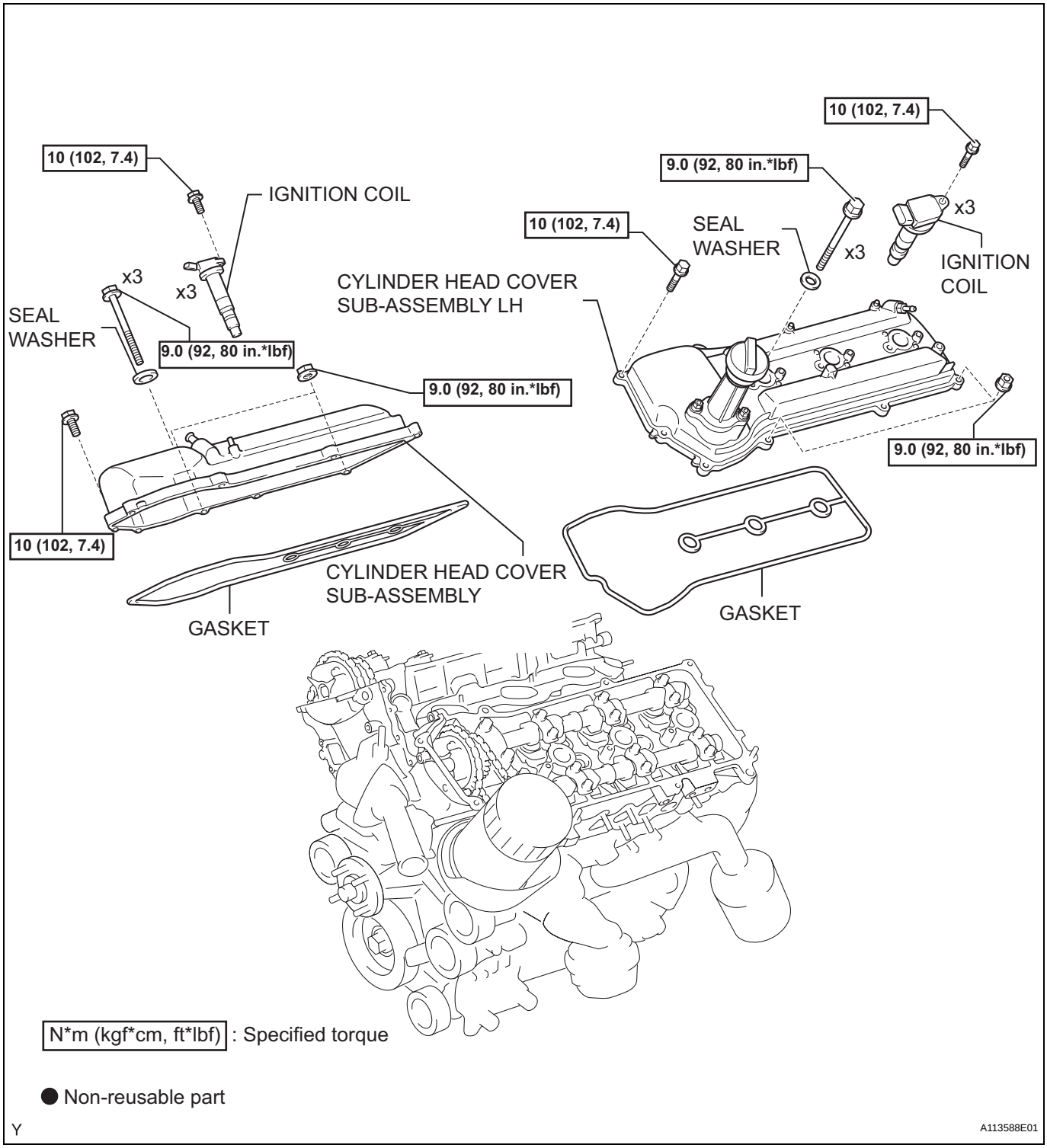
10 (102, 7.4)
IGNITION COIL
x3
x3
SEAL WASHER
9.0 (92, 80 in.*lbf)
9.0 (92, 80 in.*lbf)
10 (102, 7.4)
CYLINDER HEAD COVER SUB-ASSEMBLY
GASKET
10 (102, 7.4)
9.0 (92, 80 in.*lbf)
10 (102, 7.4)
SEAL WASHER
x3
x3
IGNITION COIL
CYLINDER HEAD COVER SUB-ASSEMBLY LH
9.0 (92, 80 in.*lbf)
GASKET
N*m (kgf*cm, ft*lbf) : Specified torque
● Non-reusable part
Y
A113588E01

EM

TIMING CHAIN (for 4WD and Pre-Runner)

COMPONENTS

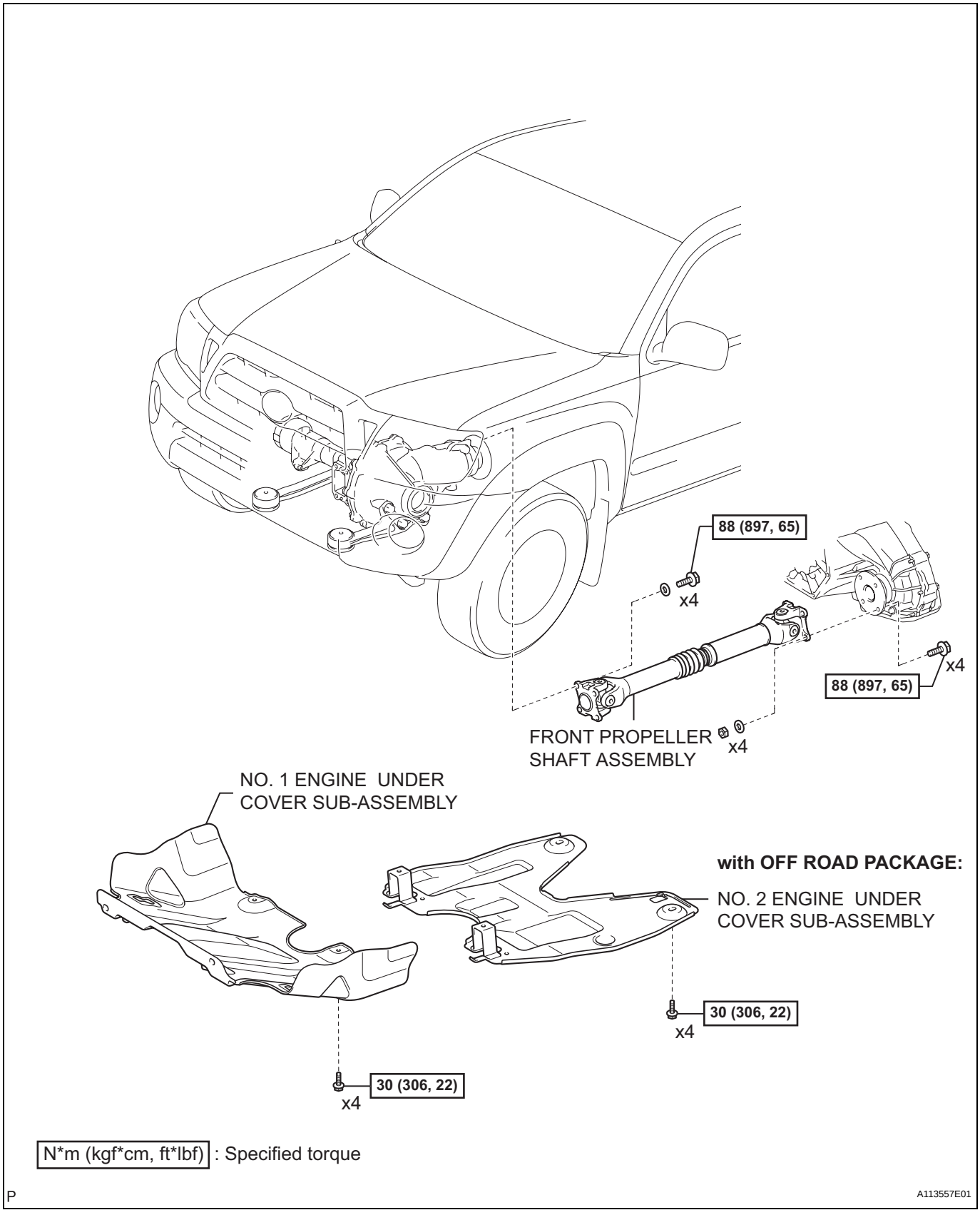

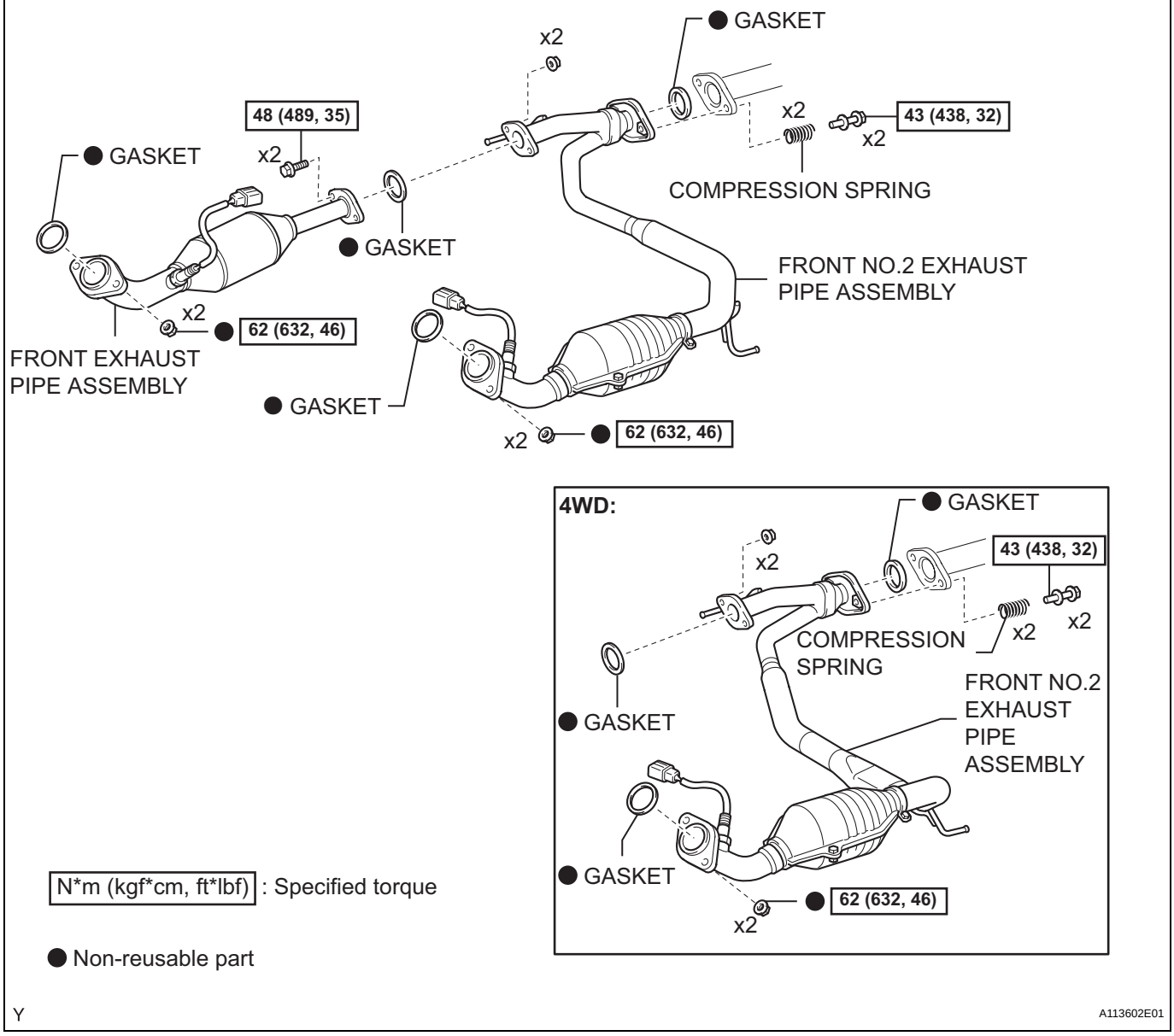
GASKET
x2
48 (489, 35)
GASKET
x2
43 (438, 32)
x2
x2
COMPRESSION SPRING
GASKET
FRONT NO.2 EXHAUST PIPE ASSEMBLY
x2
62 (632, 46)
FRONT EXHAUST PIPE ASSEMBLY
GASKET
x2
62 (632, 46)
4WD:
GASKET
x2
43 (438, 32)
x2
x2
COMPRESSION SPRING
FRONT NO.2 EXHAUST PIPE ASSEMBLY
GASKET
GASKET
62 (632, 46)
x2
N*m (kgf*cm, ft*lbf) : Specified torque
Non-reusable part
Y
A113602E01

EM

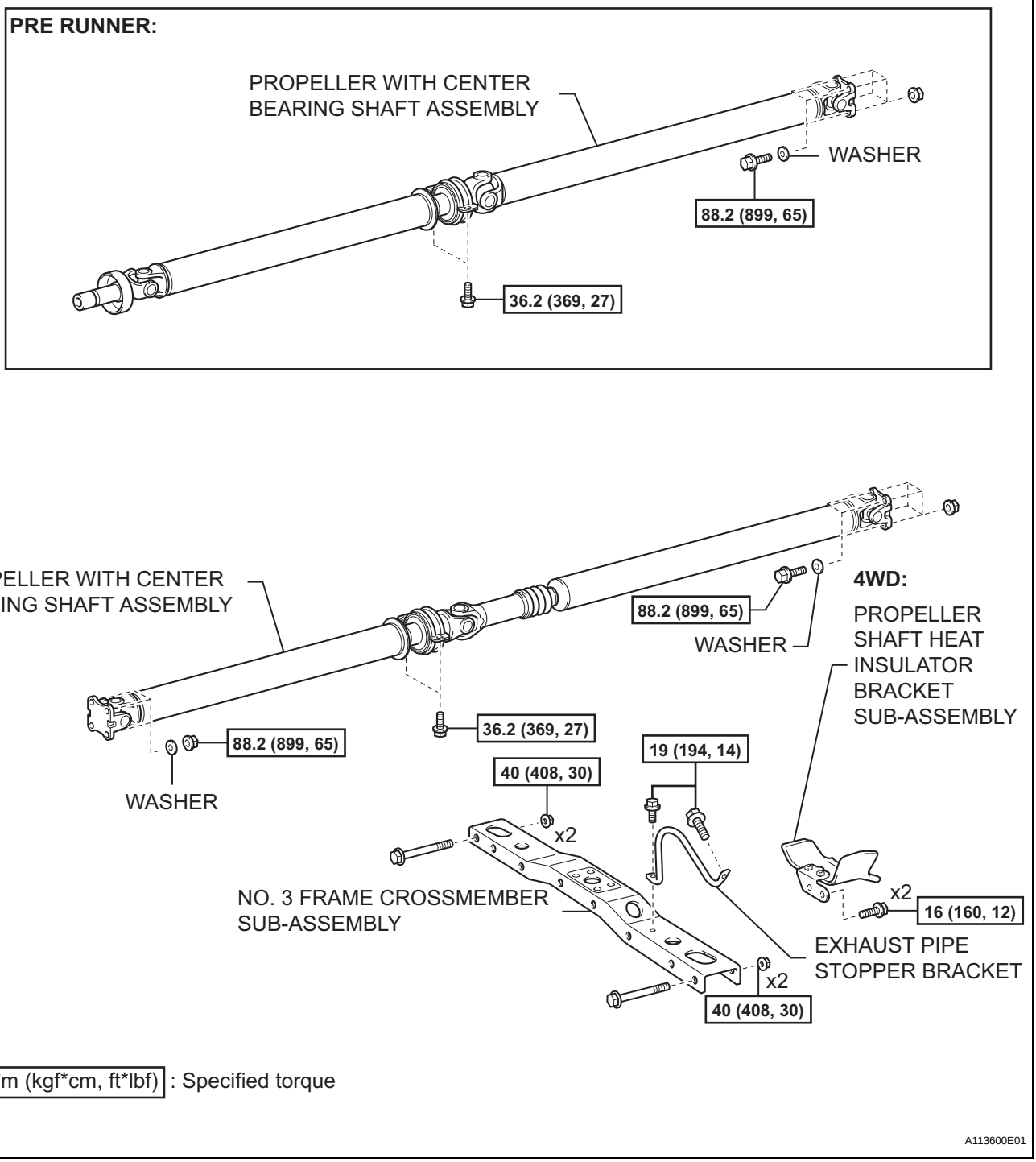
PRE RUNNER:
PROPELLER WITH CENTER BEARING SHAFT ASSEMBLY
WASHER
88.2 (899, 65)
36.2 (369, 27)
4WD:
PROPELLER WITH CENTER BEARING SHAFT ASSEMBLY
88.2 (899, 65)
WASHER
36.2 (369, 27)
88.2 (899, 65)
WASHER
4WD:
PROPELLER SHAFT HEAT INSULATOR BRACKET SUB-ASSEMBLY
19 (194, 14)
40 (408, 30)
x2
NO. 3 FRAME CROSSMEMBER SUB-ASSEMBLY
x2
16 (160, 12)
EXHAUST PIPE STOPPER BRACKET
x2
40 (408, 30)
N*m (kgf*cm, ft*lbf) : Specified torque
Y
A113600E01

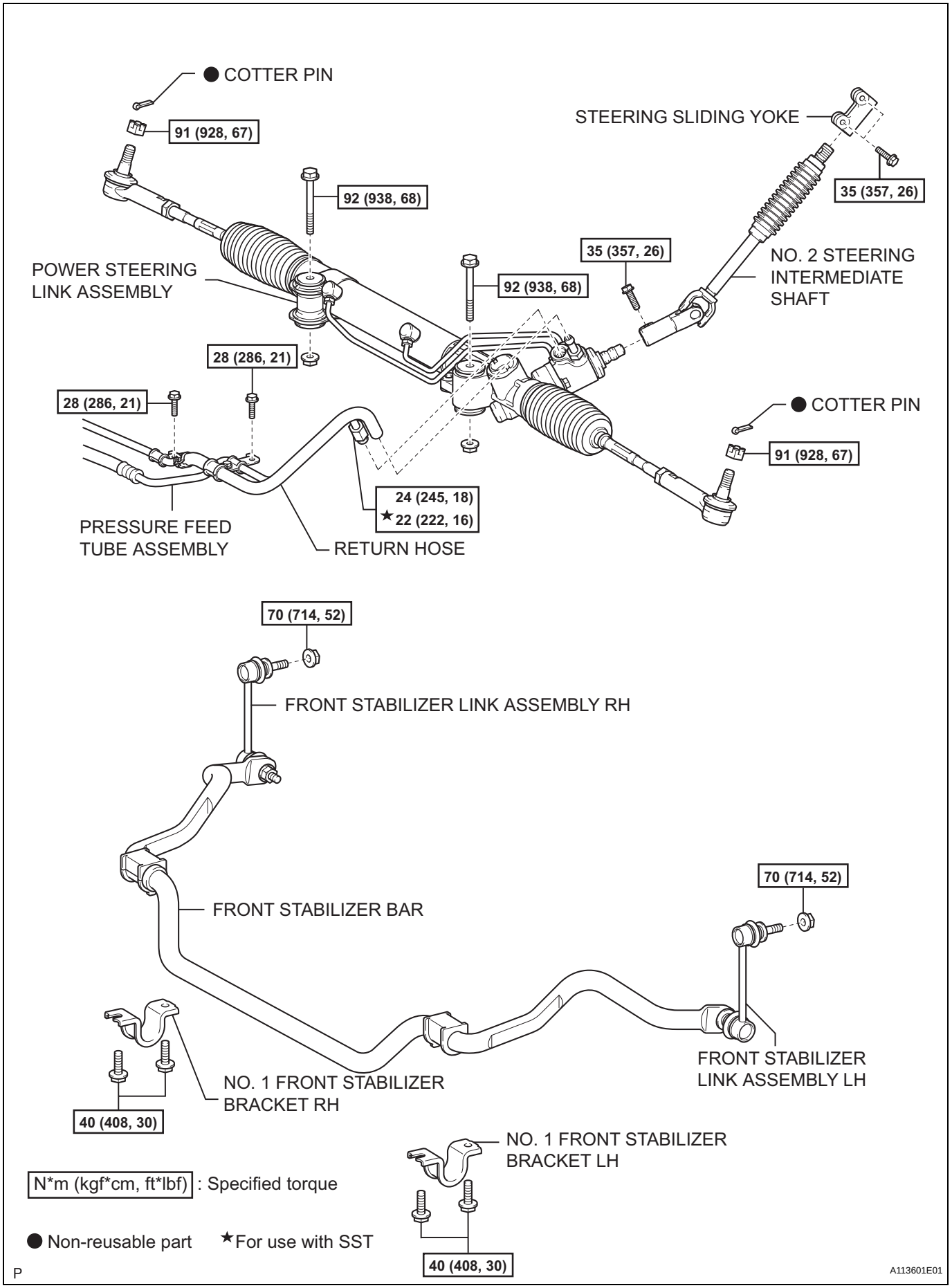
● COTTER PIN
91 (928, 67)
92 (938, 68)
STEERING SLIDING YOKE
35 (357, 26)
35 (357, 26)
NO. 2 STEERING INTERMEDIATE SHAFT
POWER STEERING LINK ASSEMBLY
92 (938, 68)
28 (286, 21)
28 (286, 21)
● COTTER PIN
91 (928, 67)
24 (245, 18)
★22 (222, 16)
PRESSURE FEED TUBE ASSEMBLY
RETURN HOSE
70 (714, 52)
FRONT STABILIZER LINK ASSEMBLY RH
FRONT STABILIZER BAR
70 (714, 52)
NO. 1 FRONT STABILIZER BRACKET RH
FRONT STABILIZER LINK ASSEMBLY LH
40 (408, 30)
NO. 1 FRONT STABILIZER BRACKET LH
40 (408, 30)
N*m (kgf*cm, ft*lbf) : Specified torque
● Non-reusable part ★For use with SST
P
A113601E01

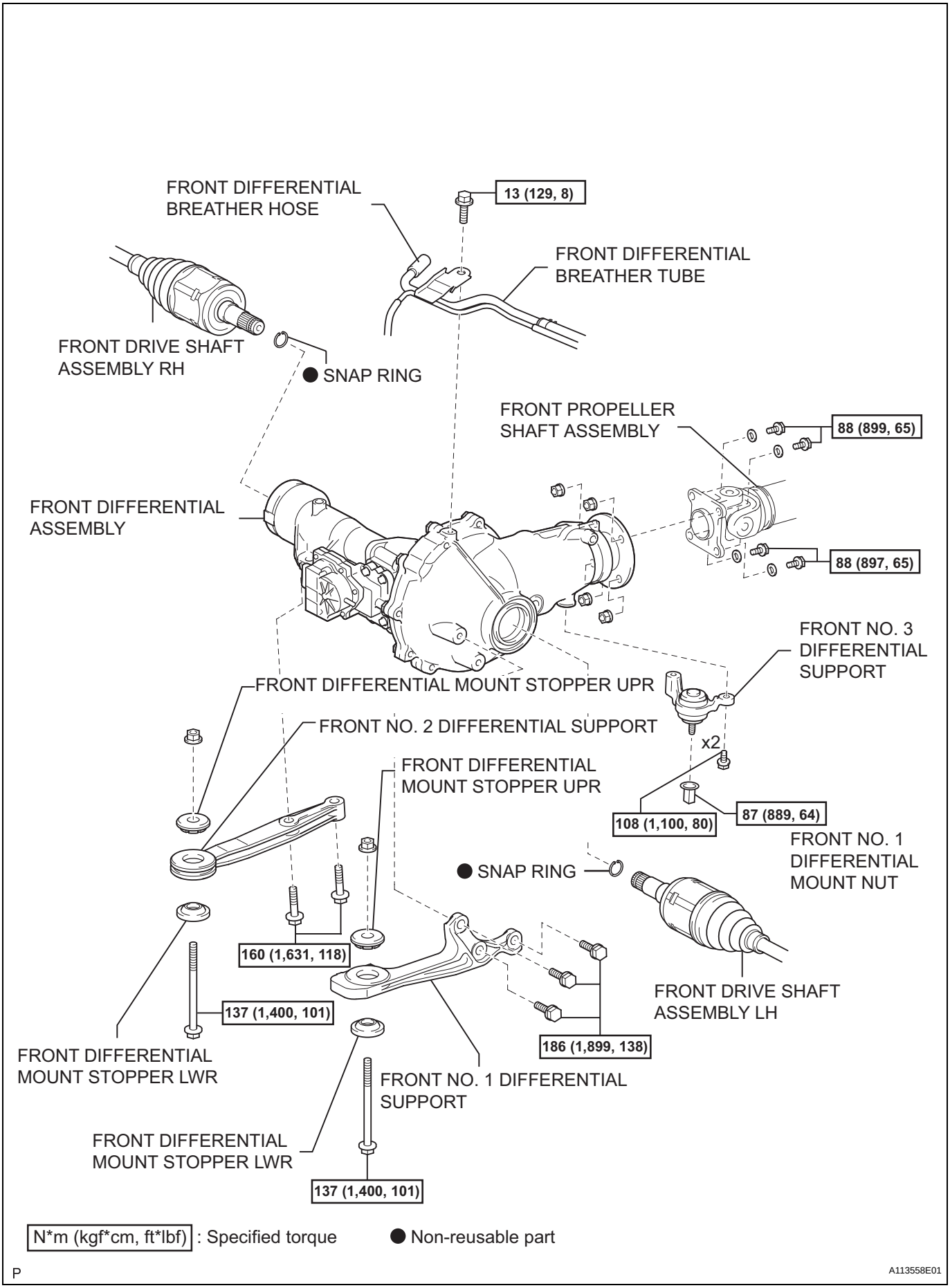

N*m (kgf*cm, ft*lbf) : Specified torque ● Non-reusable part

P

A113558E01

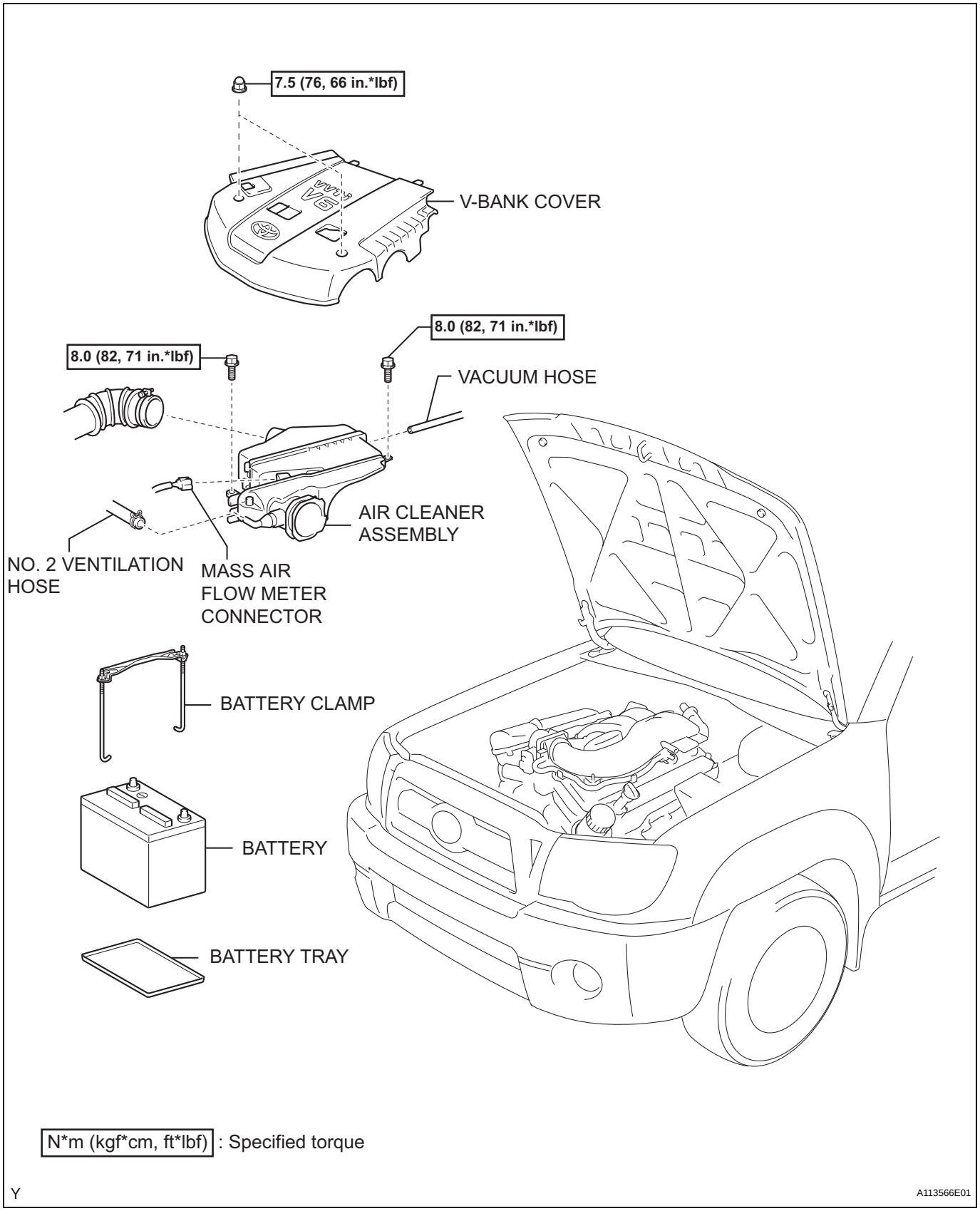
7.5 (76, 66 in.*lbf)
V-BANK COVER
8.0 (82, 71 in.*lbf)
8.0 (82, 71 in.*lbf)
VACUUM HOSE
AIR CLEANER ASSEMBLY
NO. 2 VENTILATION HOSE
MASS AIR FLOW METER CONNECTOR
BATTERY CLAMP
BATTERY
BATTERY TRAY
N*m (kgf*cm, ft*lbf) : Specified torque
Y
A113566E01

EM

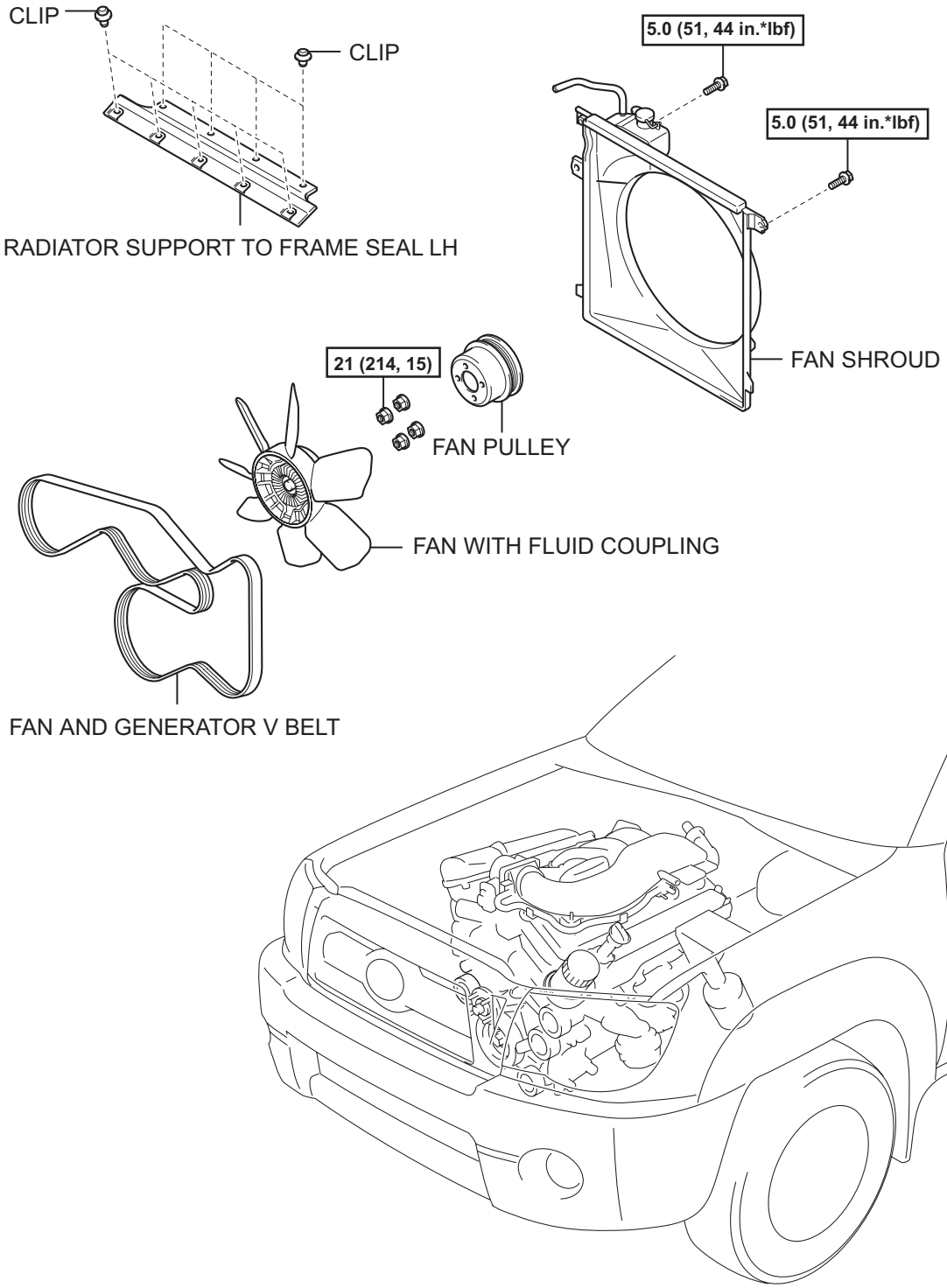

N*m (kgf*cm, ft*lbf) : Specified torque

Y

A113567E01

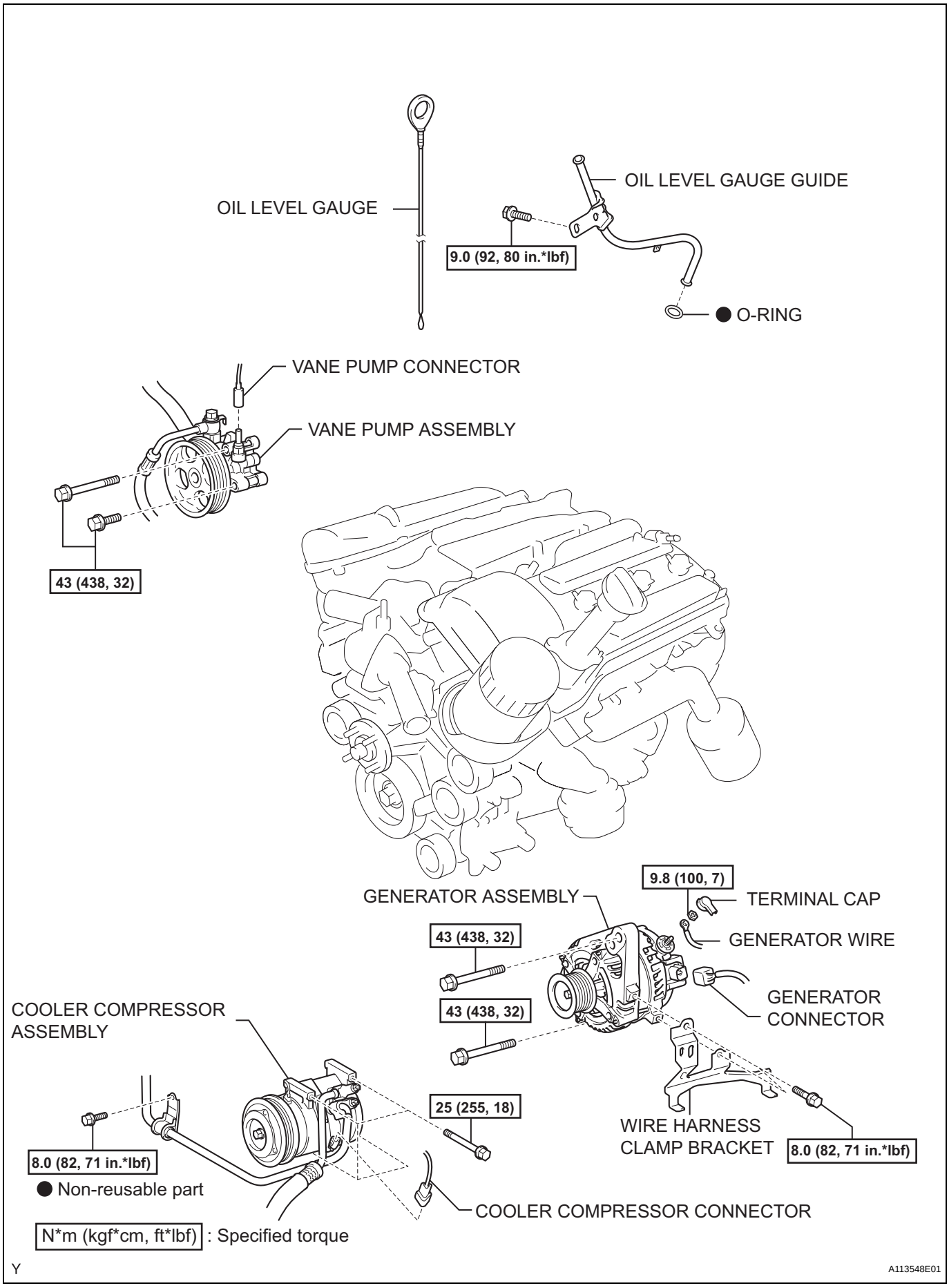
OIL LEVEL GAUGE
OIL LEVEL GAUGE GUIDE
9.0 (92, 80 in.*lbf)
● O-RING
VANE PUMP CONNECTOR
VANE PUMP ASSEMBLY
43 (438, 32)
9.8 (100, 7)
GENERATOR ASSEMBLY
TERMINAL CAP
GENERATOR WIRE
43 (438, 32)
GENERATOR CONNECTOR
COOLER COMPRESSOR ASSEMBLY
43 (438, 32)
25 (255, 18)
WIRE HARNESS CLAMP BRACKET
8.0 (82, 71 in.*lbf)
8.0 (82, 71 in.*lbf)
● Non-reusable part
COOLER COMPRESSOR CONNECTOR
N*m (kgf*cm, ft*lbf) : Specified torque
Y
A113548E01

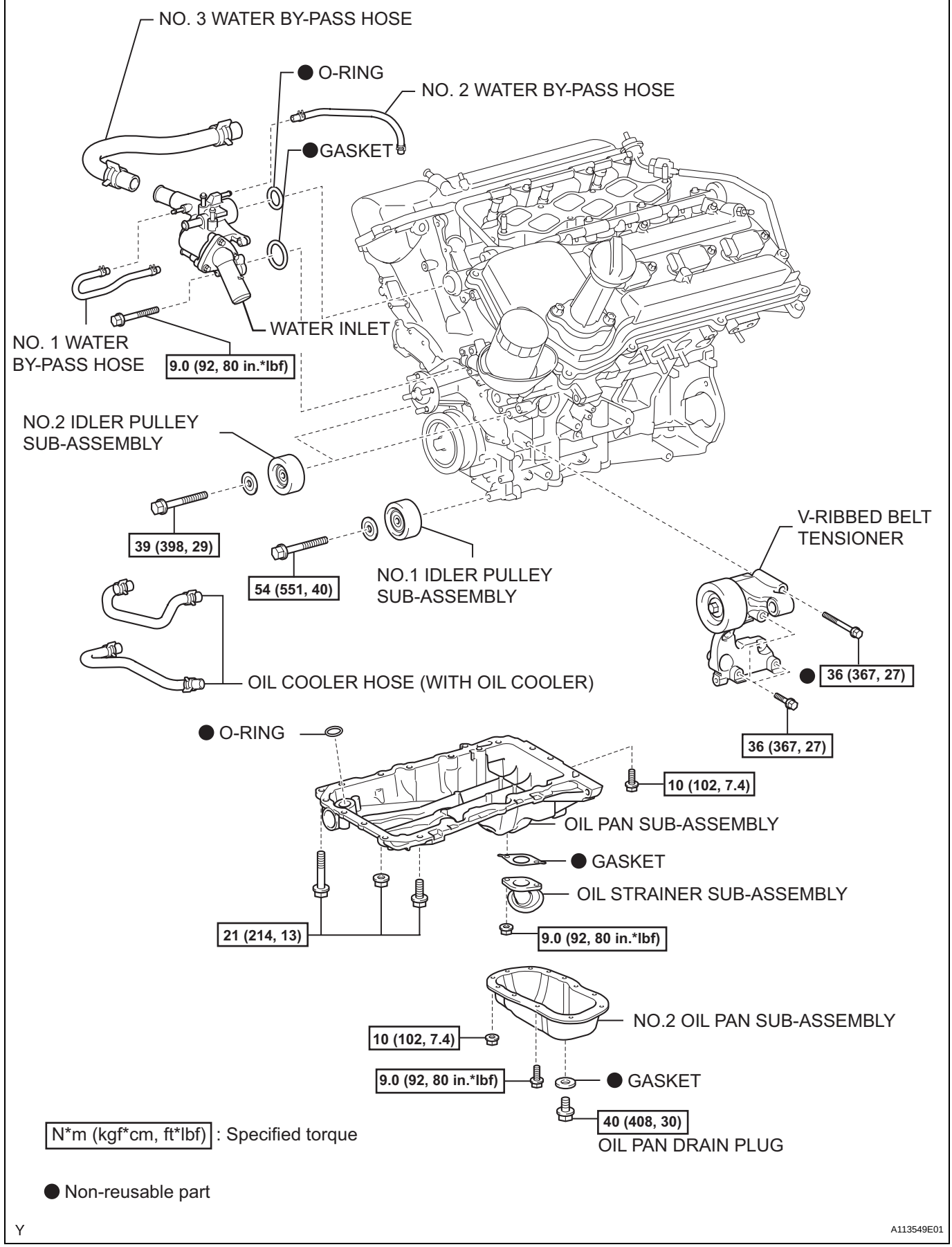

EM

Y

A113549E01

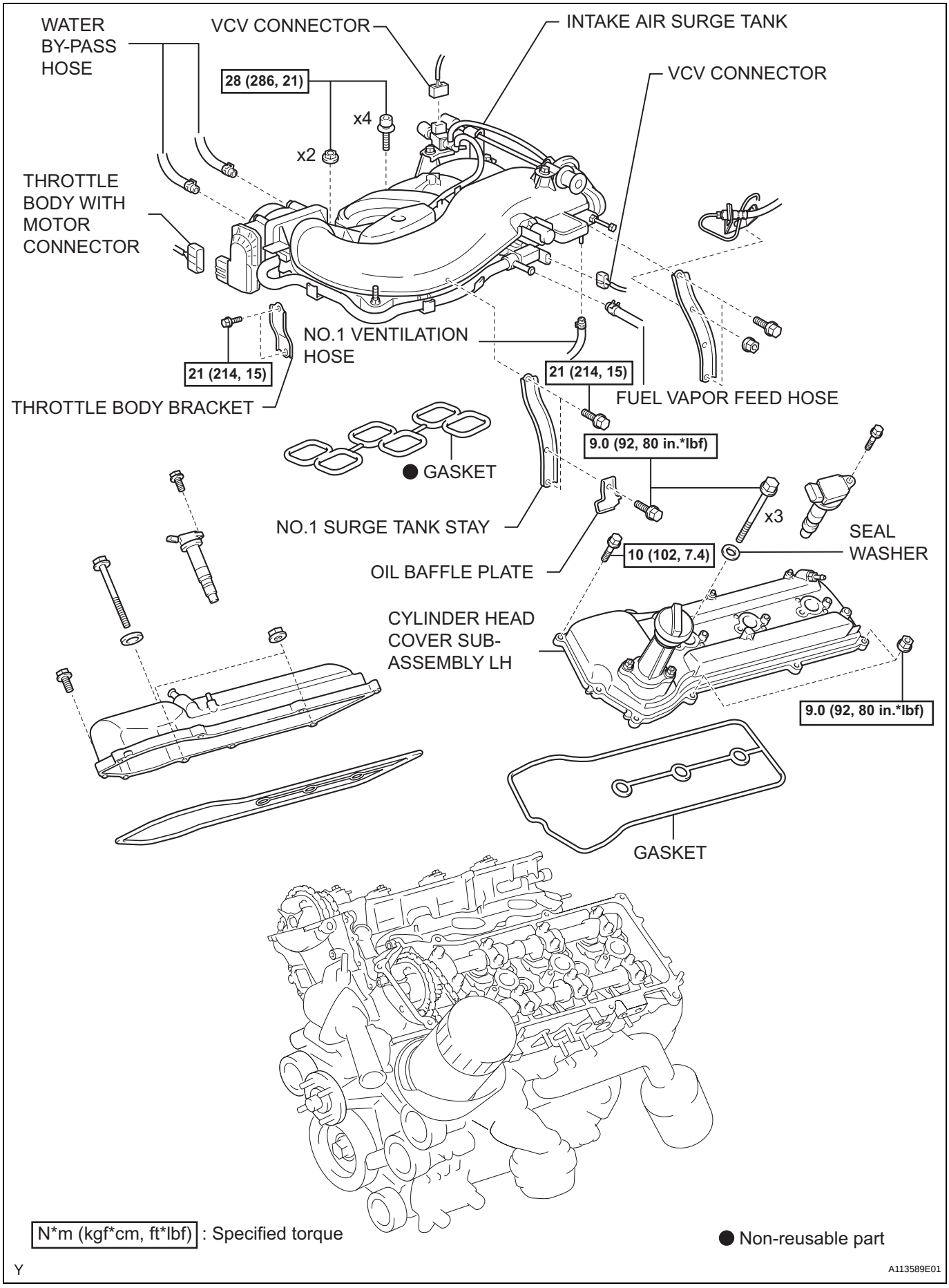
WATER BY-PASS HOSE
VCV CONNECTOR
INTAKE AIR SURGE TANK
VCV CONNECTOR
28 (286, 21)
x4
x2
THROTTLE BODY WITH MOTOR CONNECTOR
NO.1 VENTILATION HOSE
21 (214, 15)
21 (214, 15)
THROTTLE BODY BRACKET
FUEL VAPOR FEED HOSE
9.0 (92, 80 in.*lbf)
GASKET
NO.1 SURGE TANK STAY
x3
SEAL WASHER
10 (102, 7.4)
OIL BAFFLE PLATE
CYLINDER HEAD COVER SUB-ASSEMBLY LH
9.0 (92, 80 in.*lbf)
GASKET
N*m (kgf*cm, ft*lbf) : Specified torque
● Non-reusable part
Y
A113589E01

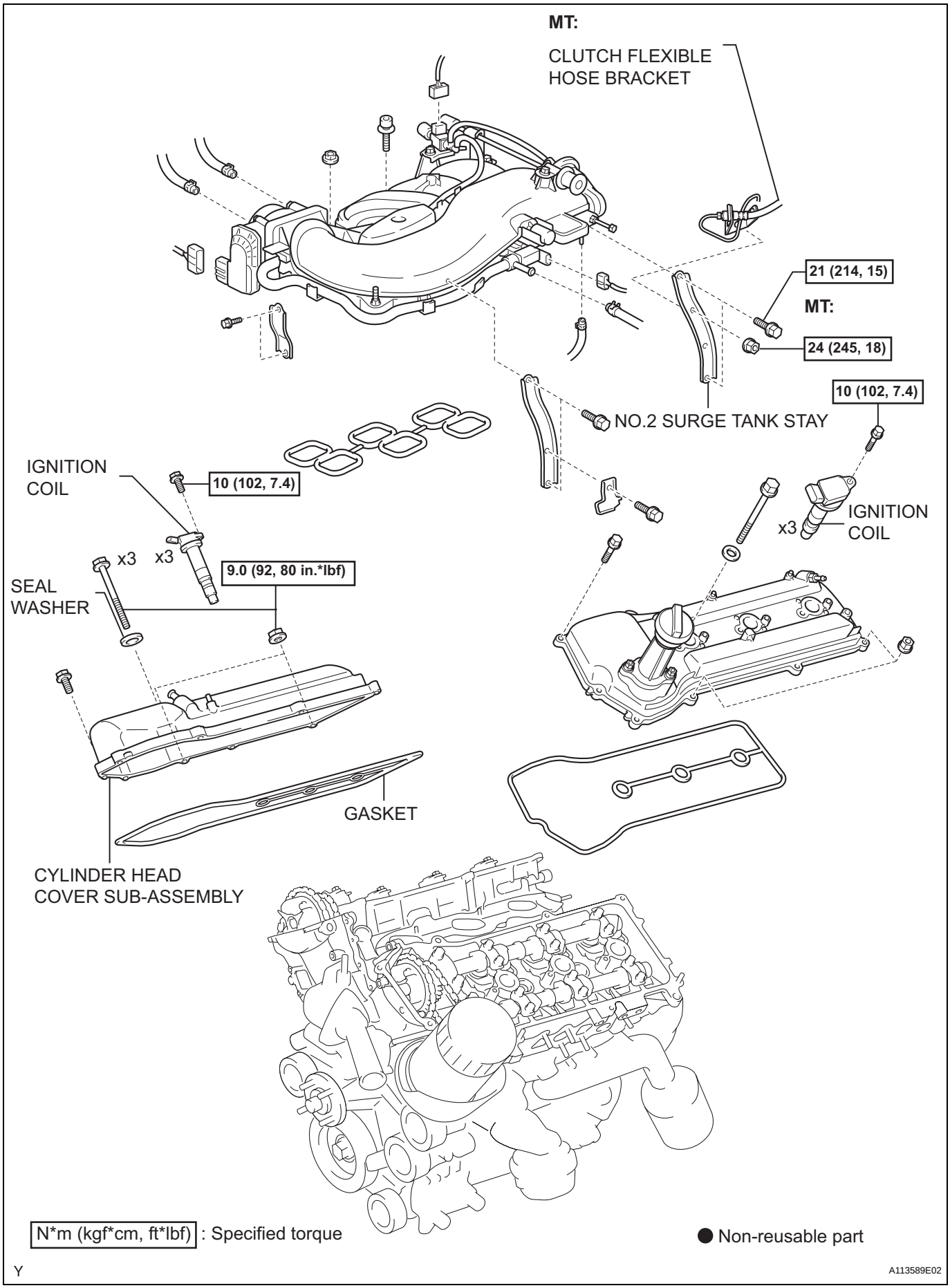
MT:
CLUTCH FLEXIBLE HOSE BRACKET
21 (214, 15)
MT:
24 (245, 18)
10 (102, 7.4)
NO.2 SURGE TANK STAY
IGNITION COIL
10 (102, 7.4)
x3
x3
IGNITION COIL
x3
9.0 (92, 80 in.*lbf)
SEAL WASHER
GASKET
CYLINDER HEAD COVER SUB-ASSEMBLY
N*m (kgf*cm, ft*lbf) : Specified torque
● Non-reusable part
Y
A113589E02

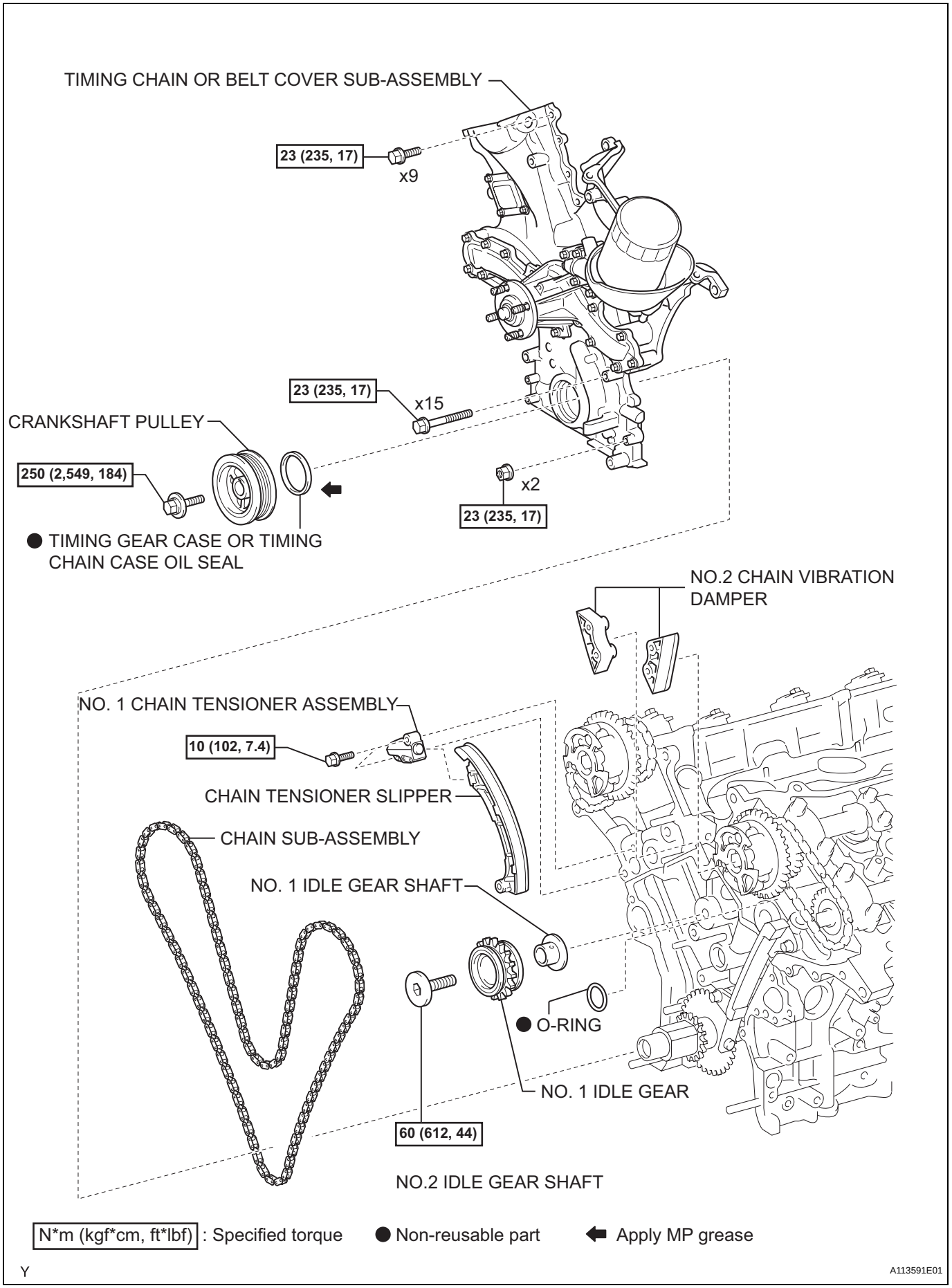
TIMING CHAIN OR BELT COVER SUB-ASSEMBLY
23 (235, 17)
x9
23 (235, 17)
x15
CRANKSHAFT PULLEY
250 (2,549, 184)
x2
23 (235, 17)
● TIMING GEAR CASE OR TIMING CHAIN CASE OIL SEAL
NO.2 CHAIN VIBRATION DAMPER
NO. 1 CHAIN TENSIONER ASSEMBLY
10 (102, 7.4)
CHAIN TENSIONER SLIPPER
CHAIN SUB-ASSEMBLY
NO. 1 IDLE GEAR SHAFT
● O-RING
NO. 1 IDLE GEAR
60 (612, 44)
NO.2 IDLE GEAR SHAFT
N*m (kgf*cm, ft*lbf) : Specified torque
● Non-reusable part
Apply MP grease
Y
A113591E01

EM

CAMSHAFT (for Bank 1)

COMPONENTS

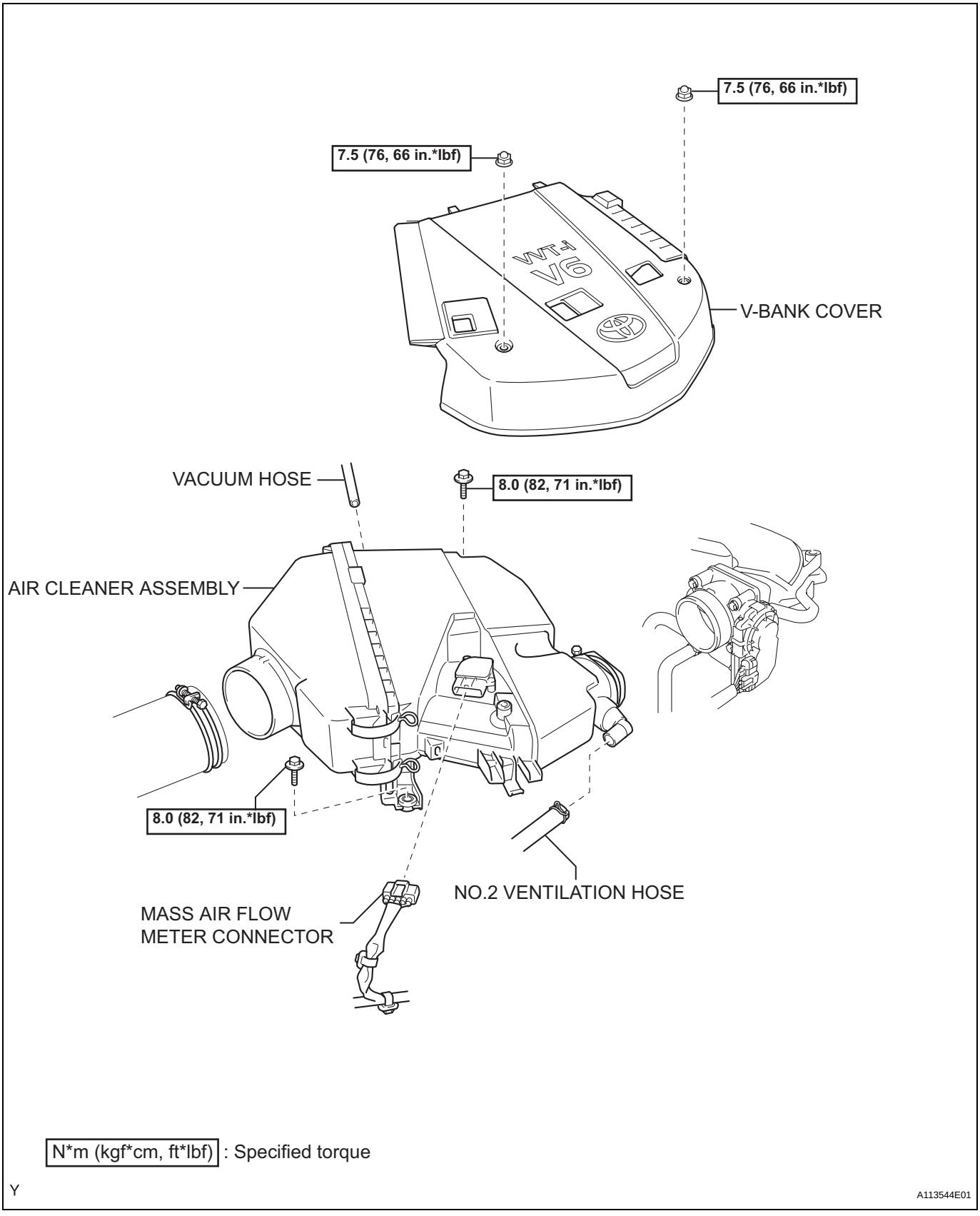

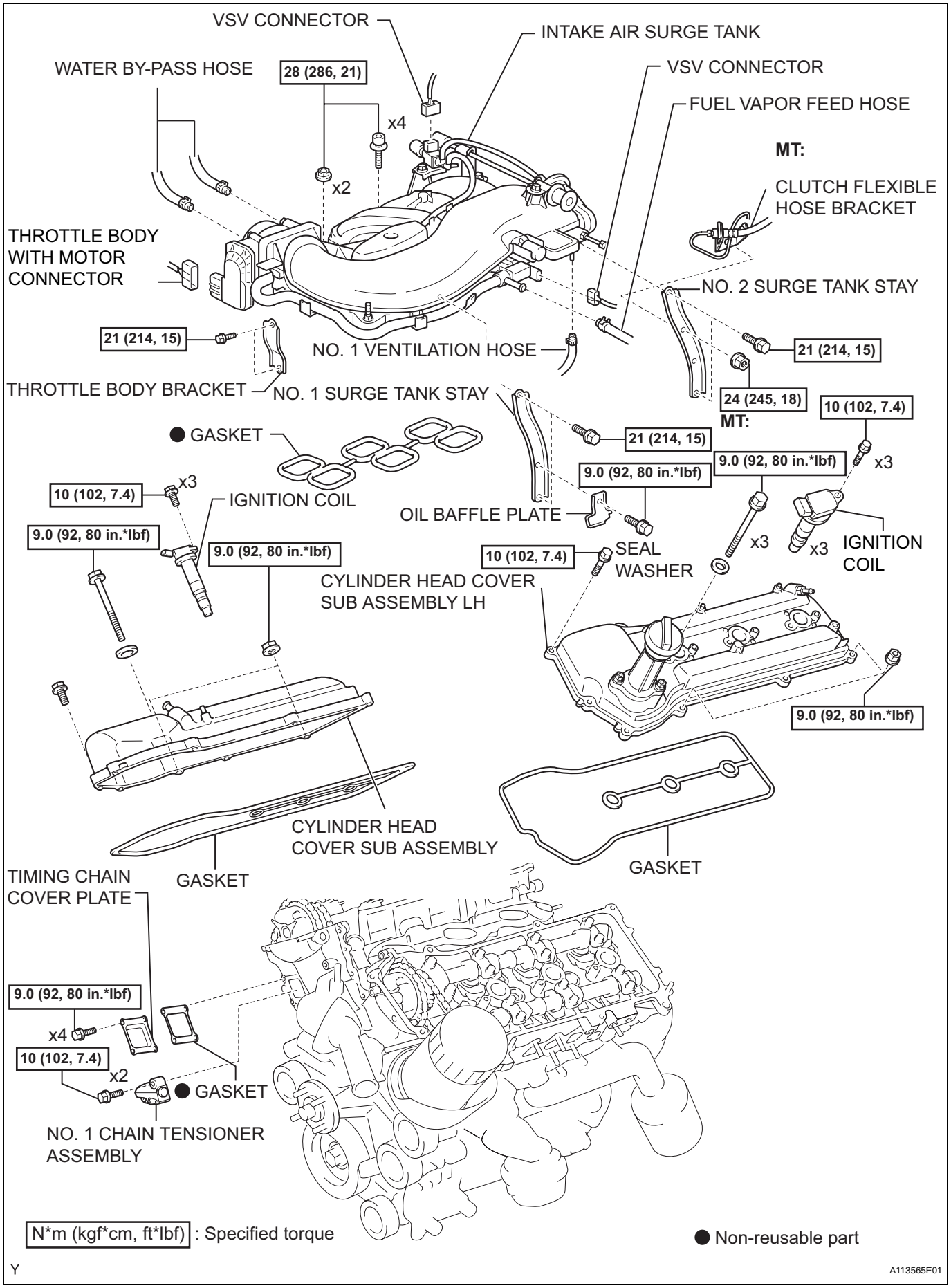
VSV CONNECTOR
INTAKE AIR SURGE TANK
WATER BY-PASS HOSE
28 (286, 21)
x4
x2
VSV CONNECTOR
FUEL VAPOR FEED HOSE
MT:
CLUTCH FLEXIBLE HOSE BRACKET
THROTTLE BODY WITH MOTOR CONNECTOR
NO. 2 SURGE TANK STAY
21 (214, 15)
NO. 1 VENTILATION HOSE
21 (214, 15)
THROTTLE BODY BRACKET
NO. 1 SURGE TANK STAY
24 (245, 18)
MT:
10 (102, 7.4)
GASKET
21 (214, 15)
9.0 (92, 80 in.*lbf)
x3
10 (102, 7.4)
x3
IGNITION COIL
OIL BAFFLE PLATE
9.0 (92, 80 in.*lbf)
9.0 (92, 80 in.*lbf)
x3
IGNITION COIL
9.0 (92, 80 in.*lbf)
9.0 (92, 80 in.*lbf)
10 (102, 7.4)
SEAL WASHER
CYLINDER HEAD COVER SUB ASSEMBLY LH
9.0 (92, 80 in.*lbf)
CYLINDER HEAD COVER SUB ASSEMBLY
GASKET
GASKET
TIMING CHAIN COVER PLATE
9.0 (92, 80 in.*lbf)
x4
10 (102, 7.4)
x2
GASKET
NO. 1 CHAIN TENSIONER ASSEMBLY
N*m (kgf*cm, ft*lbf) : Specified torque
Non-reusable part
Y
A113565E01

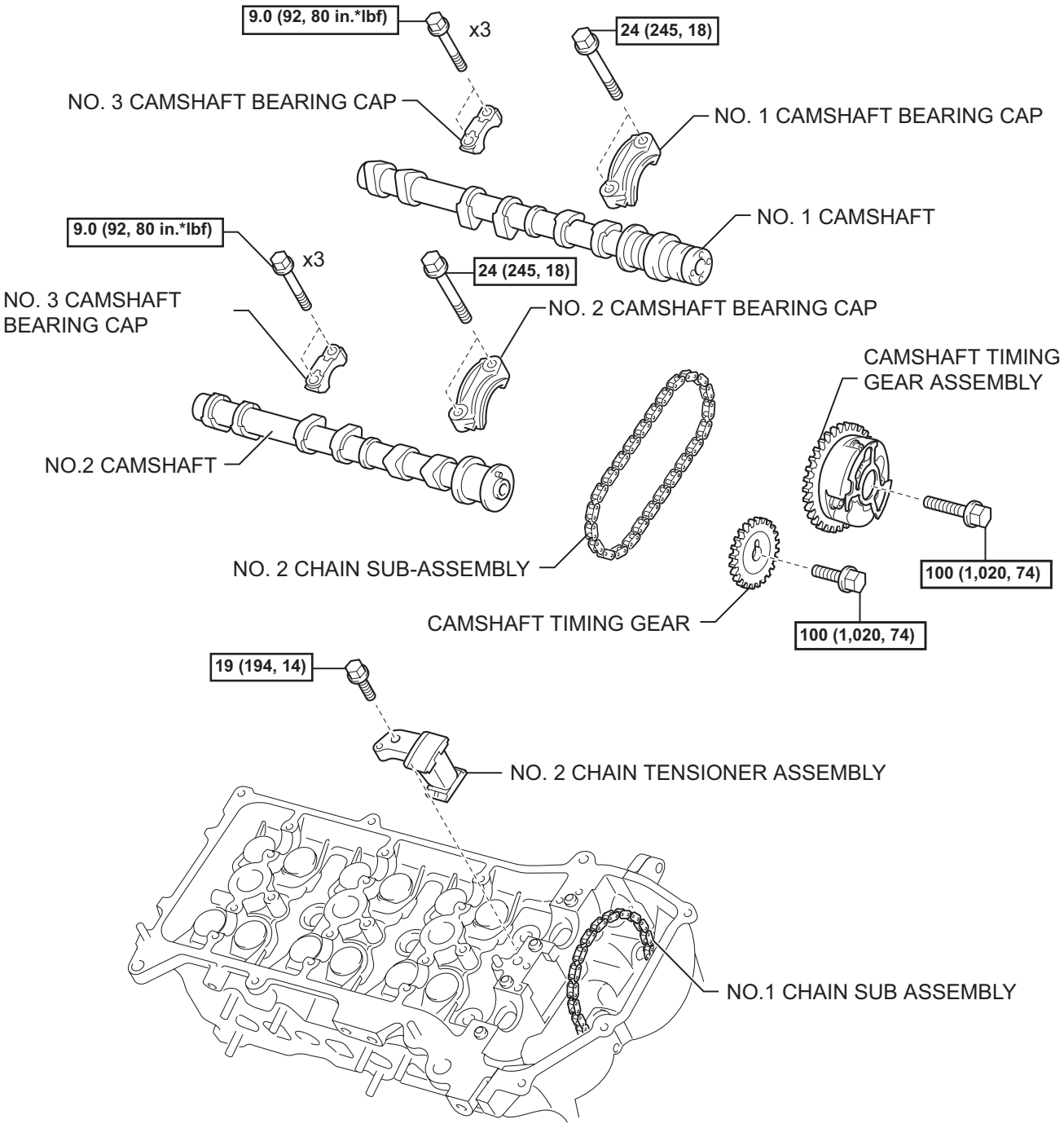

EM

N*m (kgf*cm, ft*lbf) : Specified torque

Y

A113592E02

CAMSHAFT (for Bank 2)

COMPONENTS

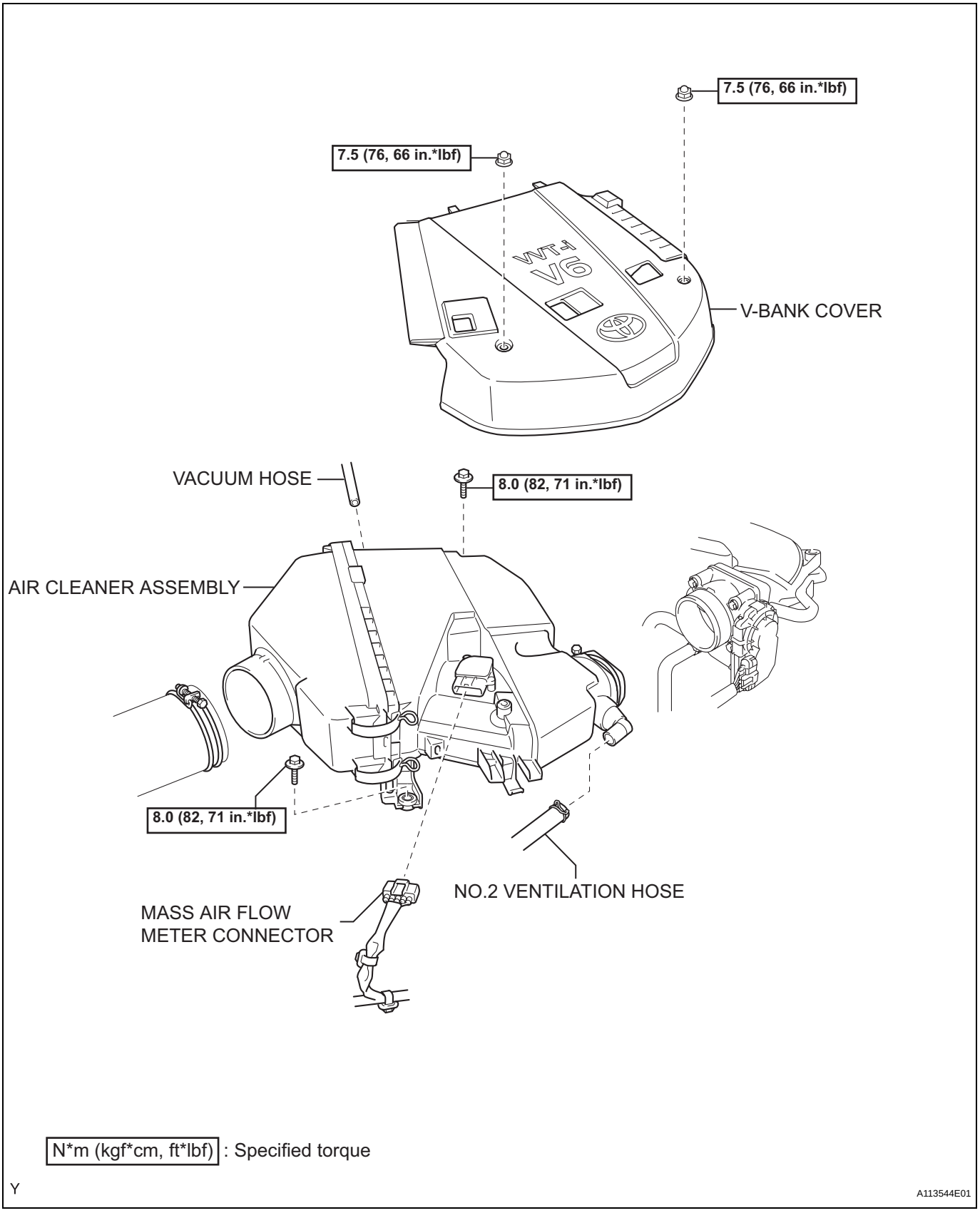

EM

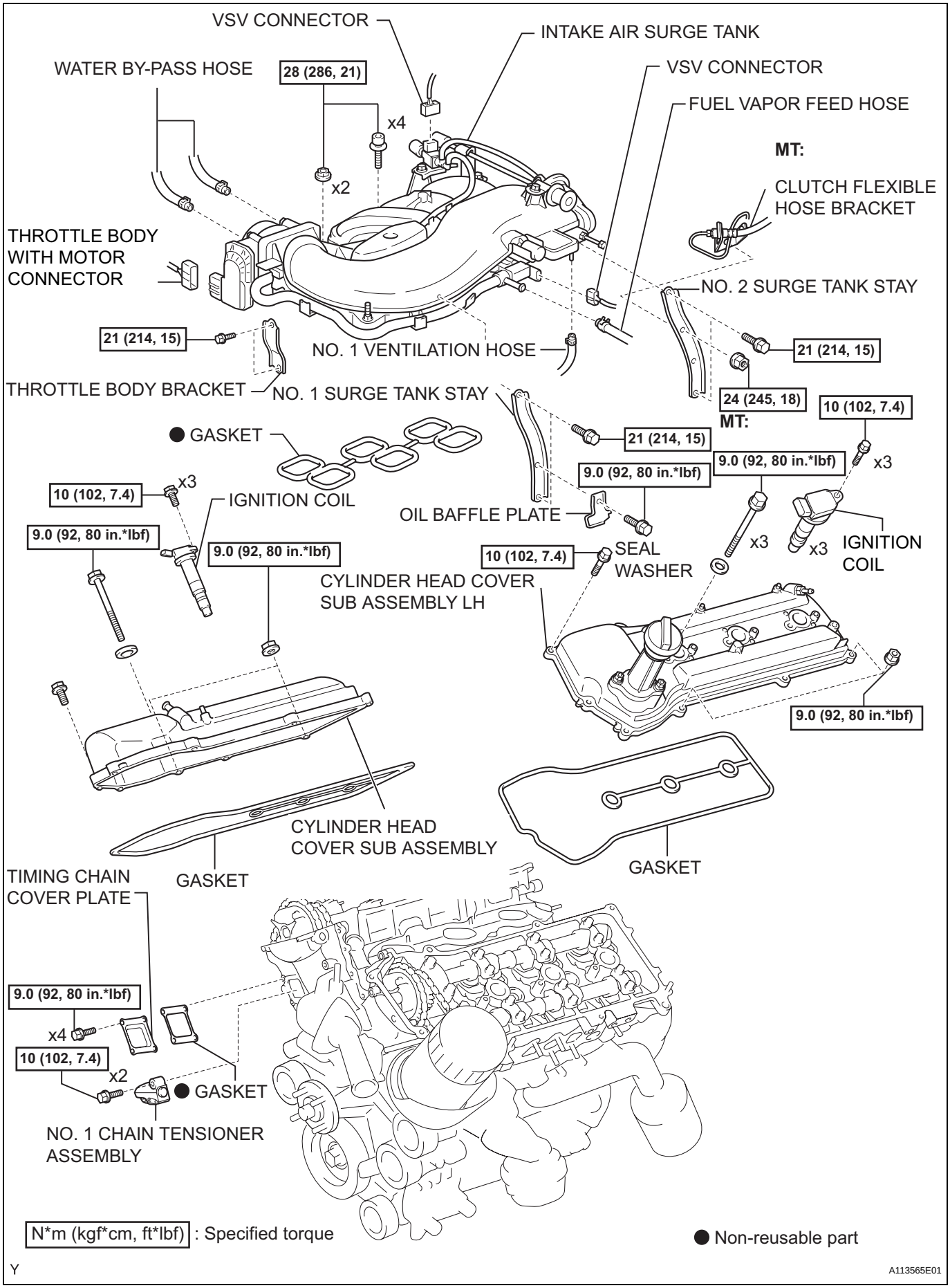
VSV CONNECTOR
INTAKE AIR SURGE TANK
WATER BY-PASS HOSE
28 (286, 21)
VSV CONNECTOR
FUEL VAPOR FEED HOSE
x4
MT:
x2
CLUTCH FLEXIBLE HOSE BRACKET
THROTTLE BODY WITH MOTOR CONNECTOR
NO. 2 SURGE TANK STAY
21 (214, 15)
NO. 1 VENTILATION HOSE
21 (214, 15)
THROTTLE BODY BRACKET
NO. 1 SURGE TANK STAY
24 (245, 18)
MT:
10 (102, 7.4)
GASKET
21 (214, 15)
9.0 (92, 80 in.*lbf)
x3
10 (102, 7.4)
x3
IGNITION COIL
OIL BAFFLE PLATE
9.0 (92, 80 in.*lbf)
9.0 (92, 80 in.*lbf)
x3
IGNITION COIL
x3
10 (102, 7.4)
SEAL WASHER
9.0 (92, 80 in.*lbf)
CYLINDER HEAD COVER SUB ASSEMBLY LH
9.0 (92, 80 in.*lbf)
CYLINDER HEAD COVER SUB ASSEMBLY
GASKET
GASKET
TIMING CHAIN COVER PLATE
9.0 (92, 80 in.*lbf)
x4
10 (102, 7.4)
x2
GASKET
NO. 1 CHAIN TENSIONER ASSEMBLY
N*m (kgf*cm, ft*lbf) : Specified torque
Non-reusable part
Y
A113565E01

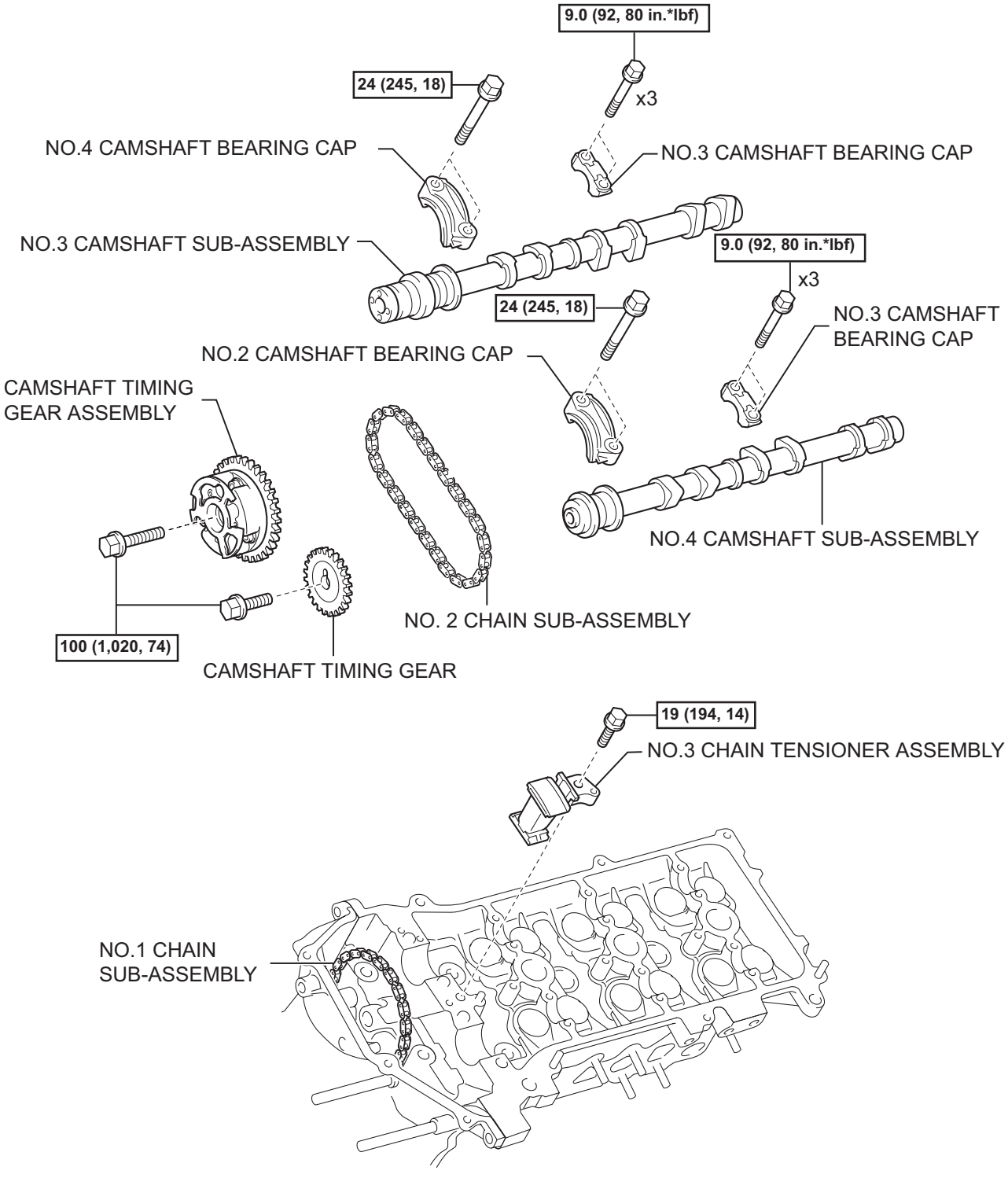

EM

N*m (kgf*cm, ft*lbf) : Specified torque

Y

A113593E01

CYLINDER HEAD (for Bank 1 2WD)

COMPONENTS

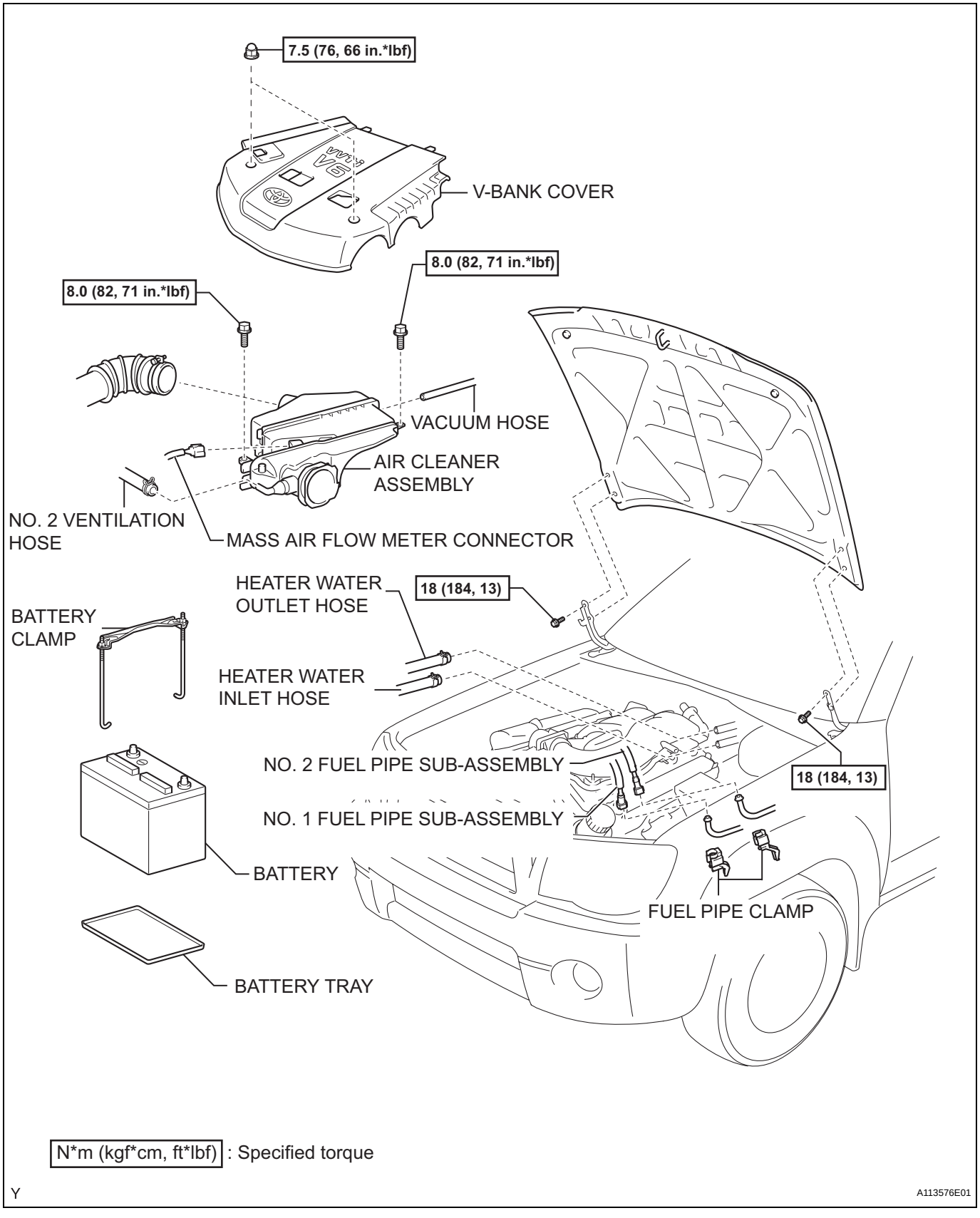

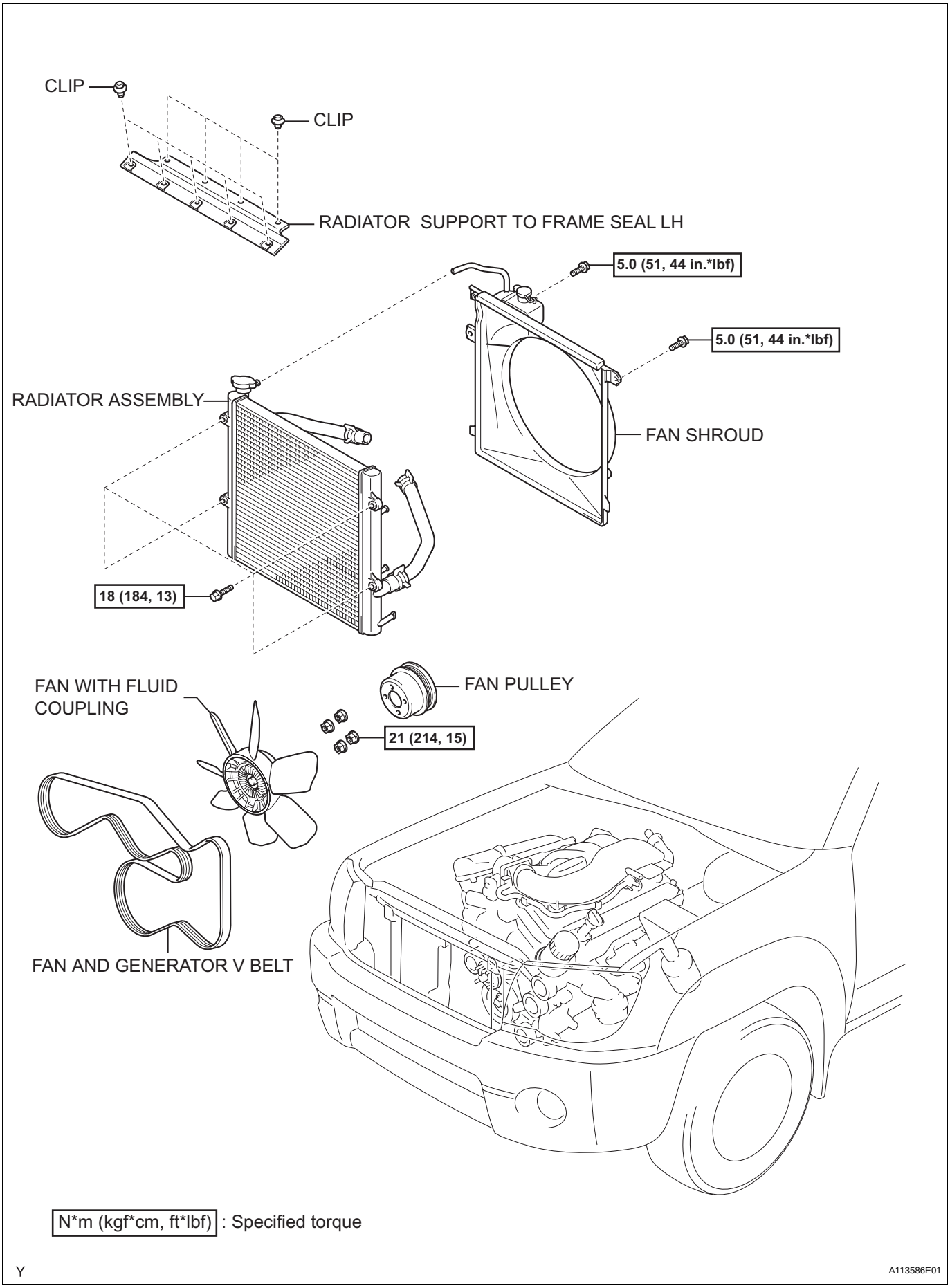

EM

N*m (kgf*cm, ft*lbf) : Specified torque

Y

A113586E01

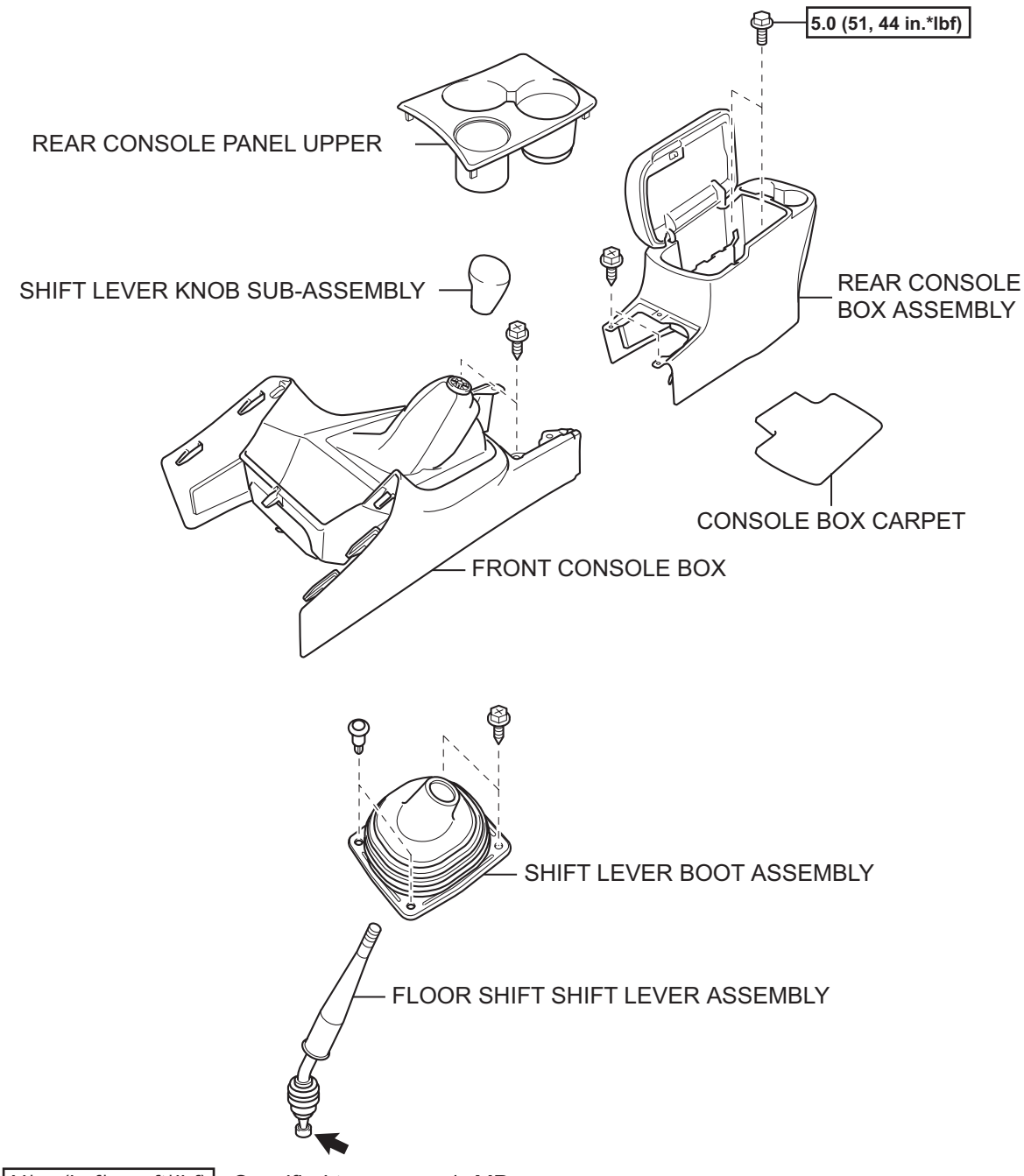

EM

Y

A113553E01

2WD AND PRE RUNNER, MANUAL TRANSMISSION:

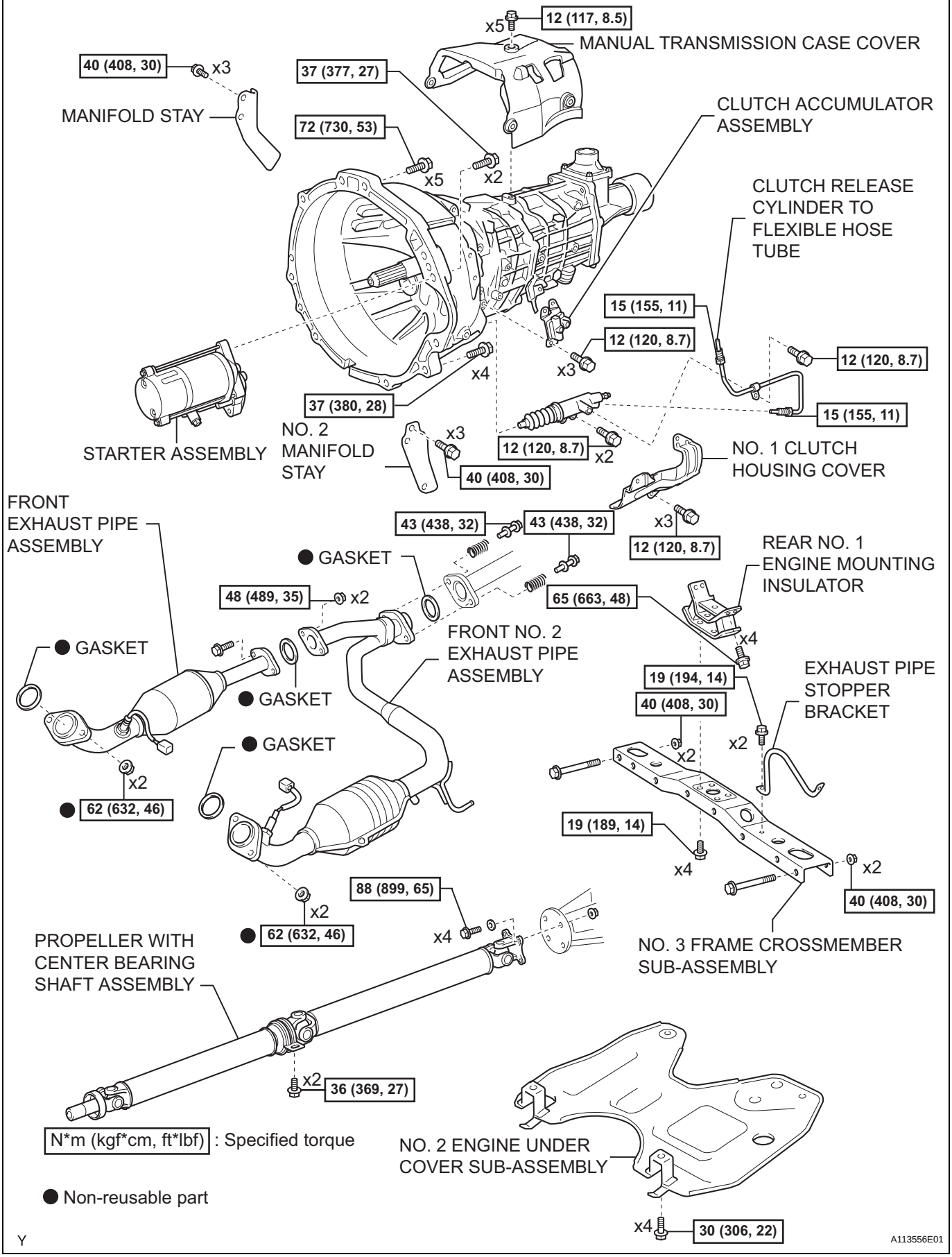

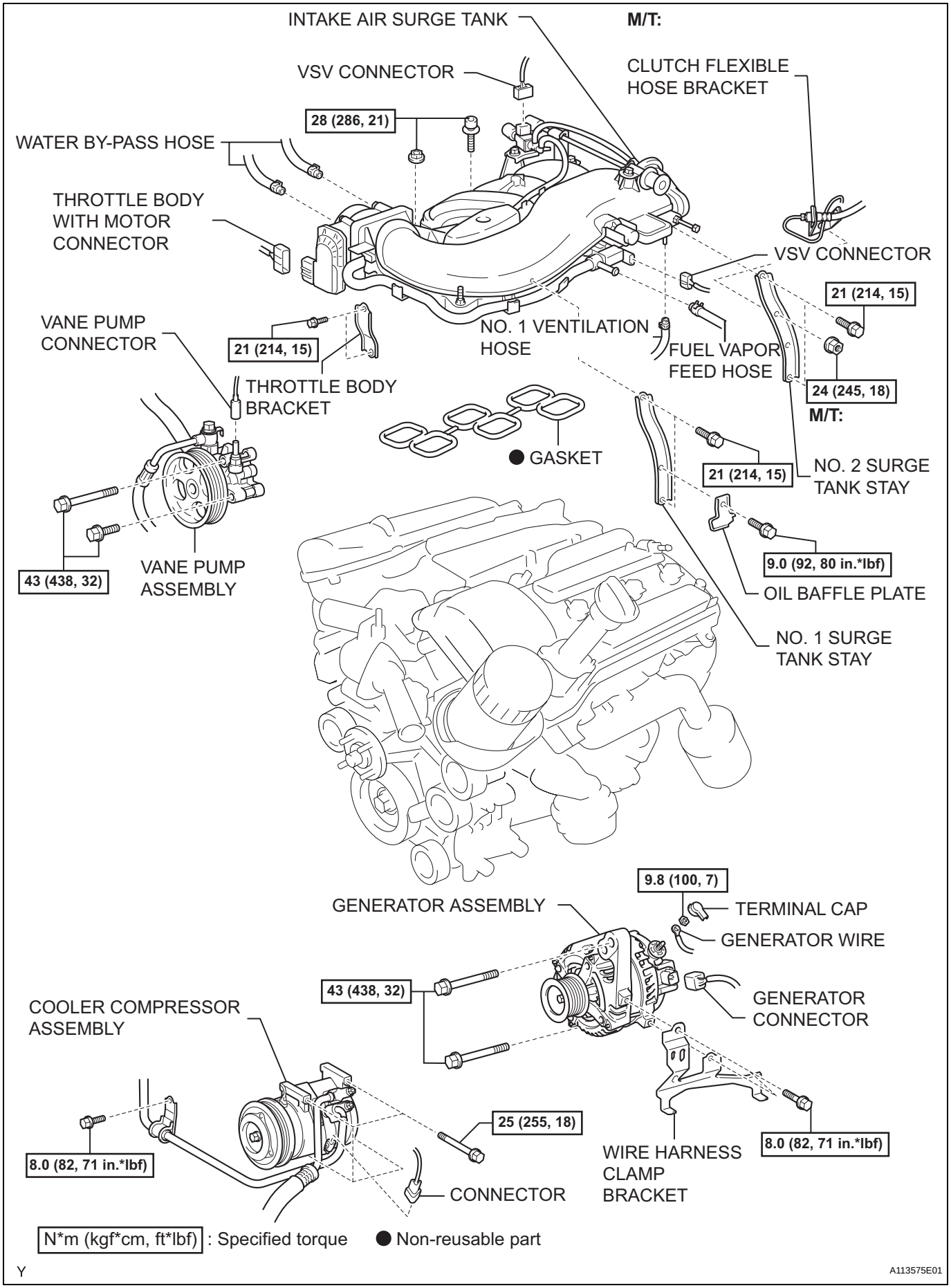
INTAKE AIR SURGE TANK
M/T:
VSV CONNECTOR
CLUTCH FLEXIBLE HOSE BRACKET
28 (286, 21)
WATER BY-PASS HOSE
THROTTLE BODY WITH MOTOR CONNECTOR
VSV CONNECTOR
21 (214, 15)
VANE PUMP CONNECTOR
21 (214, 15)
NO. 1 VENTILATION HOSE
FUEL VAPOR FEED HOSE
24 (245, 18)
M/T:
THROTTLE BODY BRACKET
GASKET
21 (214, 15)
NO. 2 SURGE TANK STAY
9.0 (92, 80 in.*lbf)
43 (438, 32)
VANE PUMP ASSEMBLY
OIL BAFFLE PLATE
NO. 1 SURGE TANK STAY
9.8 (100, 7)
GENERATOR ASSEMBLY
TERMINAL CAP
GENERATOR WIRE
43 (438, 32)
GENERATOR CONNECTOR
COOLER COMPRESSOR ASSEMBLY
25 (255, 18)
8.0 (82, 71 in.*lbf)
8.0 (82, 71 in.*lbf)
WIRE HARNESS CLAMP BRACKET
CONNECTOR
N*m (kgf*cm, ft*lbf) : Specified torque
● Non-reusable part
Y
A113575E01

EM

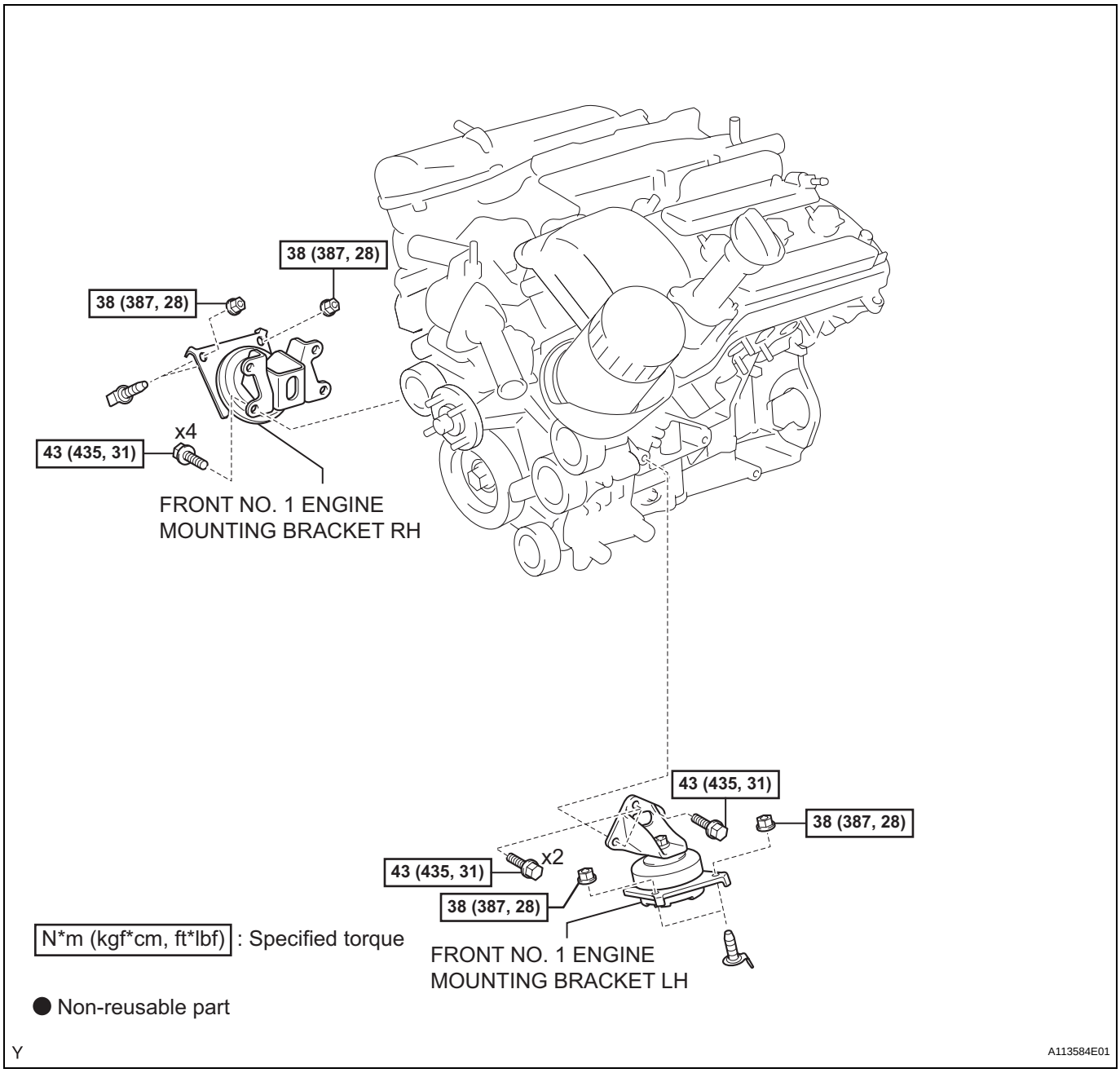
38 (387, 28)
38 (387, 28)
x4
43 (435, 31)
FRONT NO. 1 ENGINE MOUNTING BRACKET RH
43 (435, 31)
38 (387, 28)
43 (435, 31)
x2
38 (387, 28)
FRONT NO. 1 ENGINE MOUNTING BRACKET LH
N*m (kgf*cm, ft*lbf) : Specified torque
● Non-reusable part
Y
A113584E01

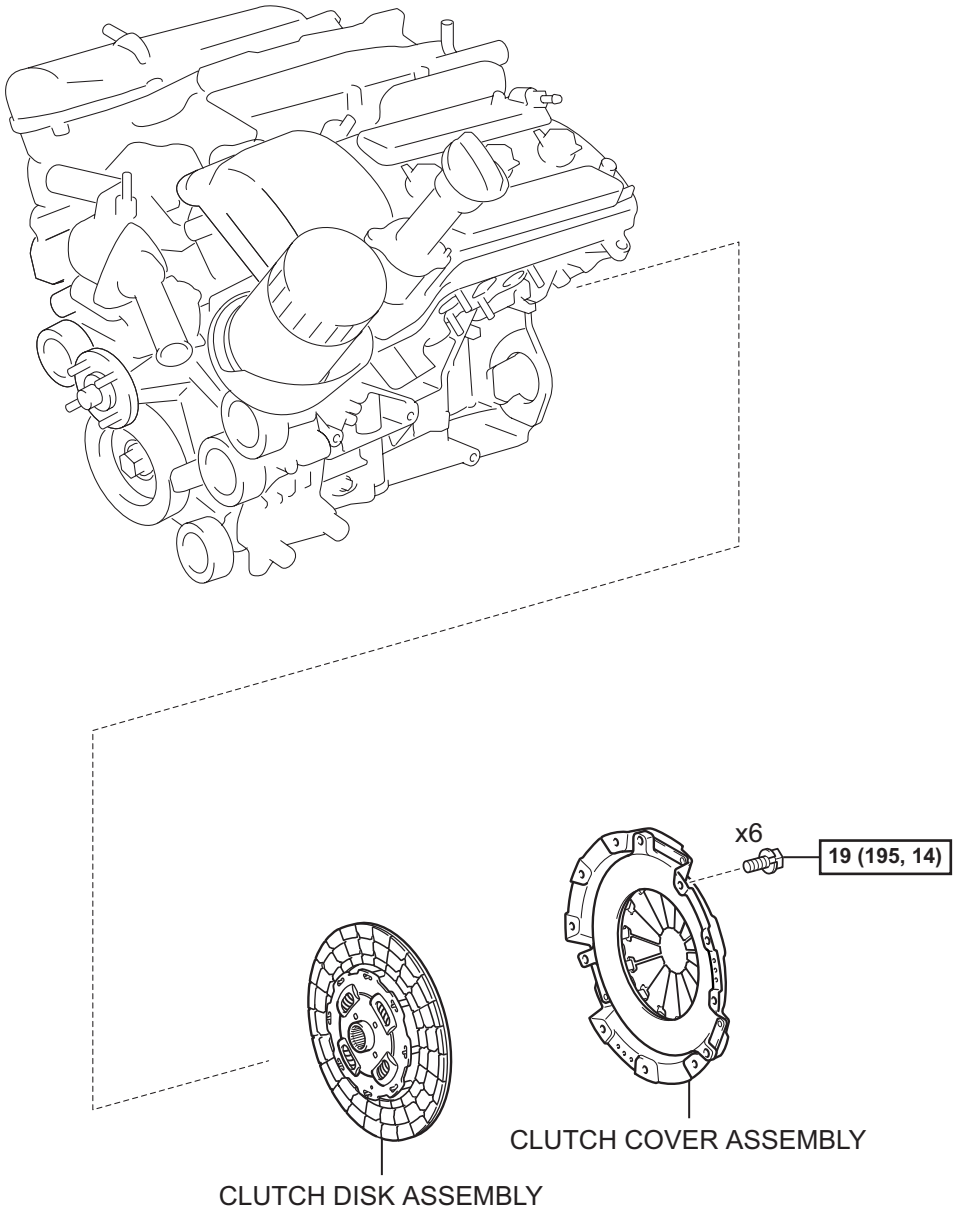

N*m (kgf*cm, ft*lbf) : Specified torque

Y

A113585E01

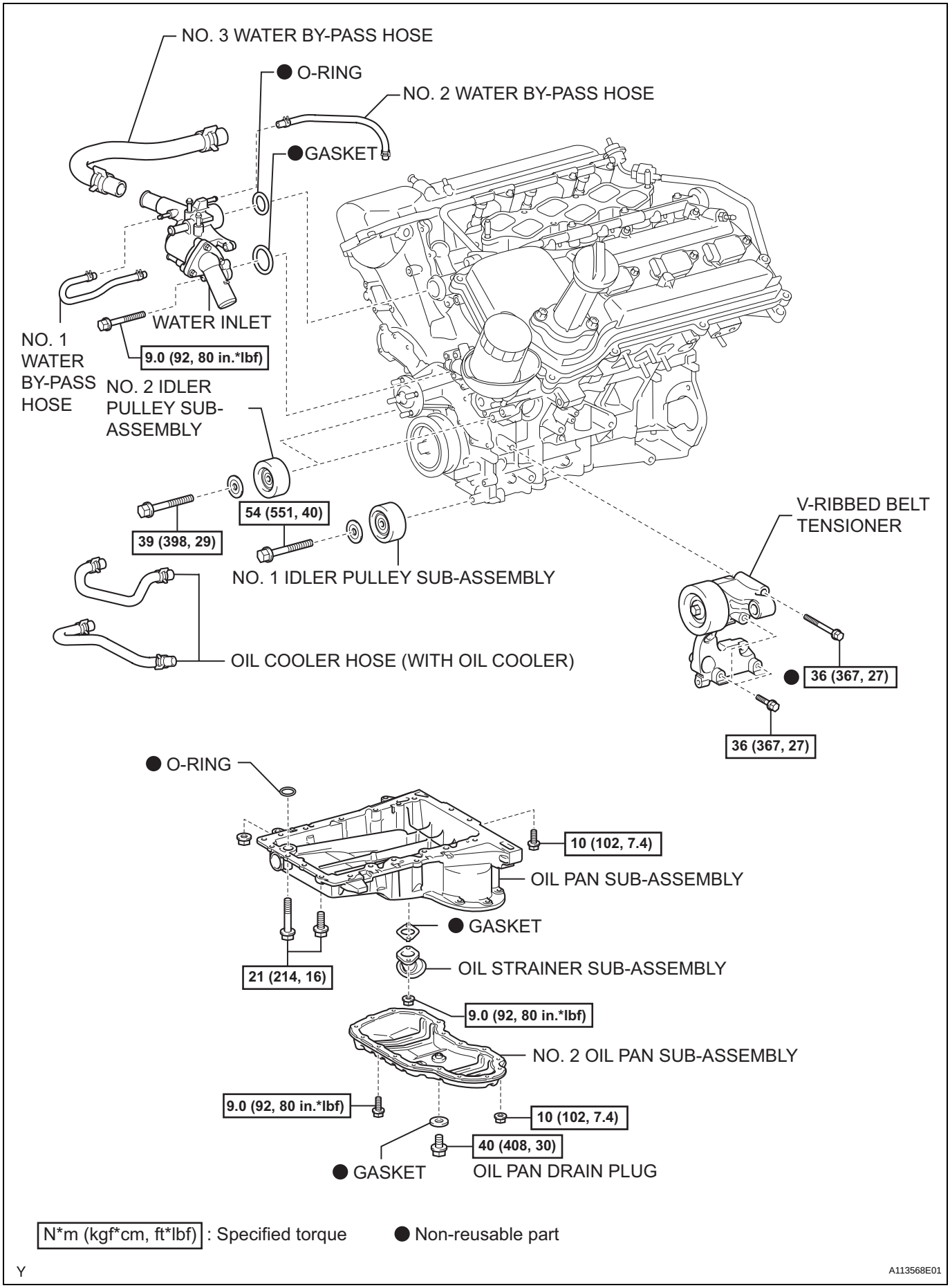

N*m (kgf*cm, ft*lbf) : Specified torque ● Non-reusable part

Y

A113568E01

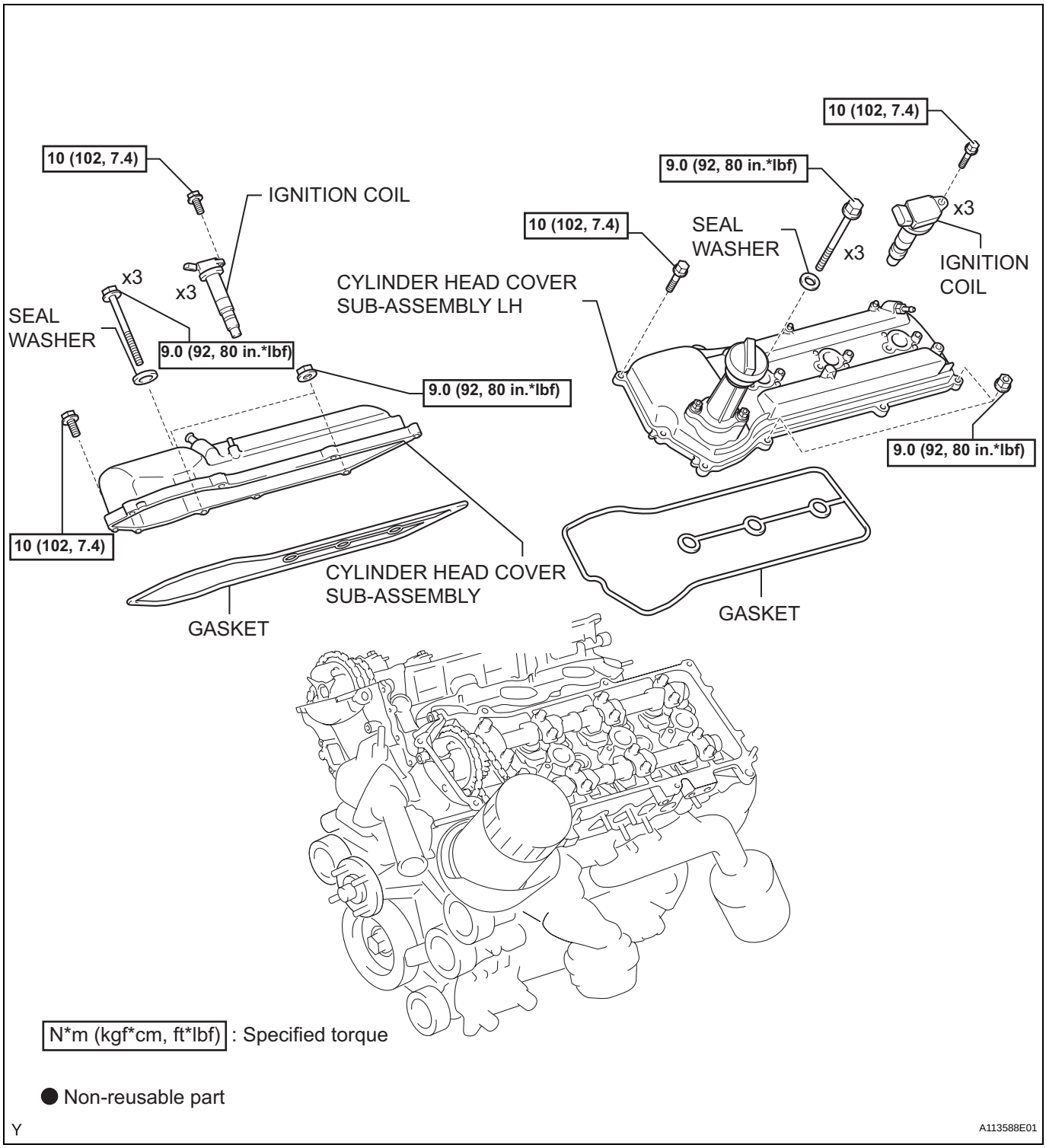
10 (102, 7.4)
IGNITION COIL
x3
x3
SEAL WASHER
9.0 (92, 80 in.*lbf)
9.0 (92, 80 in.*lbf)
10 (102, 7.4)
CYLINDER HEAD COVER SUB-ASSEMBLY
GASKET
10 (102, 7.4)
9.0 (92, 80 in.*lbf)
10 (102, 7.4)
SEAL WASHER
x3
x3
IGNITION COIL
CYLINDER HEAD COVER SUB-ASSEMBLY LH
9.0 (92, 80 in.*lbf)
GASKET
N*m (kgf*cm, ft*lbf) : Specified torque
● Non-reusable part
Y
A113588E01

EM

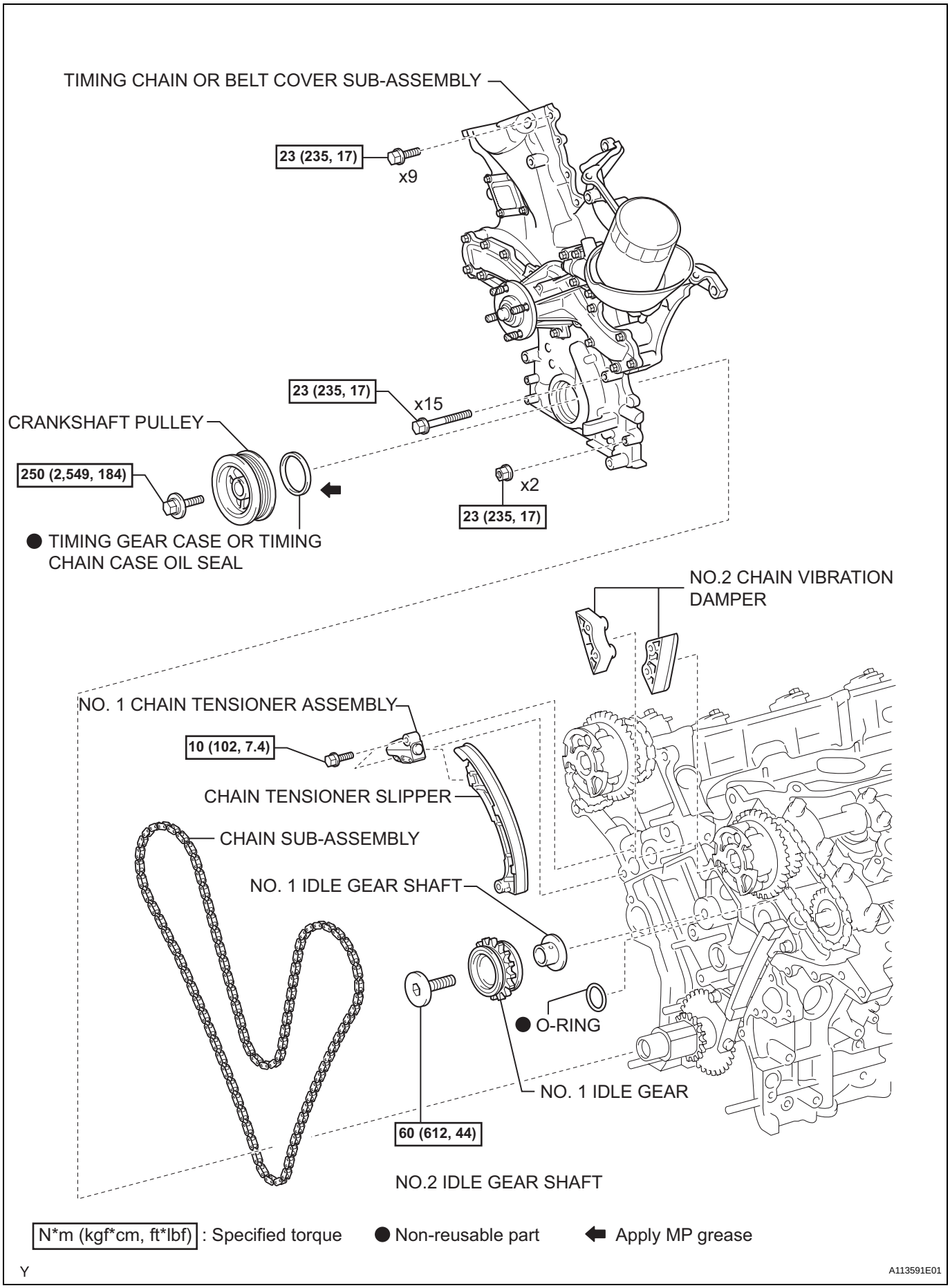
TIMING CHAIN OR BELT COVER SUB-ASSEMBLY
23 (235, 17)
x9
23 (235, 17)
x15
CRANKSHAFT PULLEY
250 (2,549, 184)
x2
23 (235, 17)
● TIMING GEAR CASE OR TIMING CHAIN CASE OIL SEAL
NO.2 CHAIN VIBRATION DAMPER
NO. 1 CHAIN TENSIONER ASSEMBLY
10 (102, 7.4)
CHAIN TENSIONER SLIPPER
CHAIN SUB-ASSEMBLY
NO. 1 IDLE GEAR SHAFT
● O-RING
NO. 1 IDLE GEAR
60 (612, 44)
NO.2 IDLE GEAR SHAFT
N*m (kgf*cm, ft*lbf) : Specified torque
● Non-reusable part
Apply MP grease
Y
A113591E01

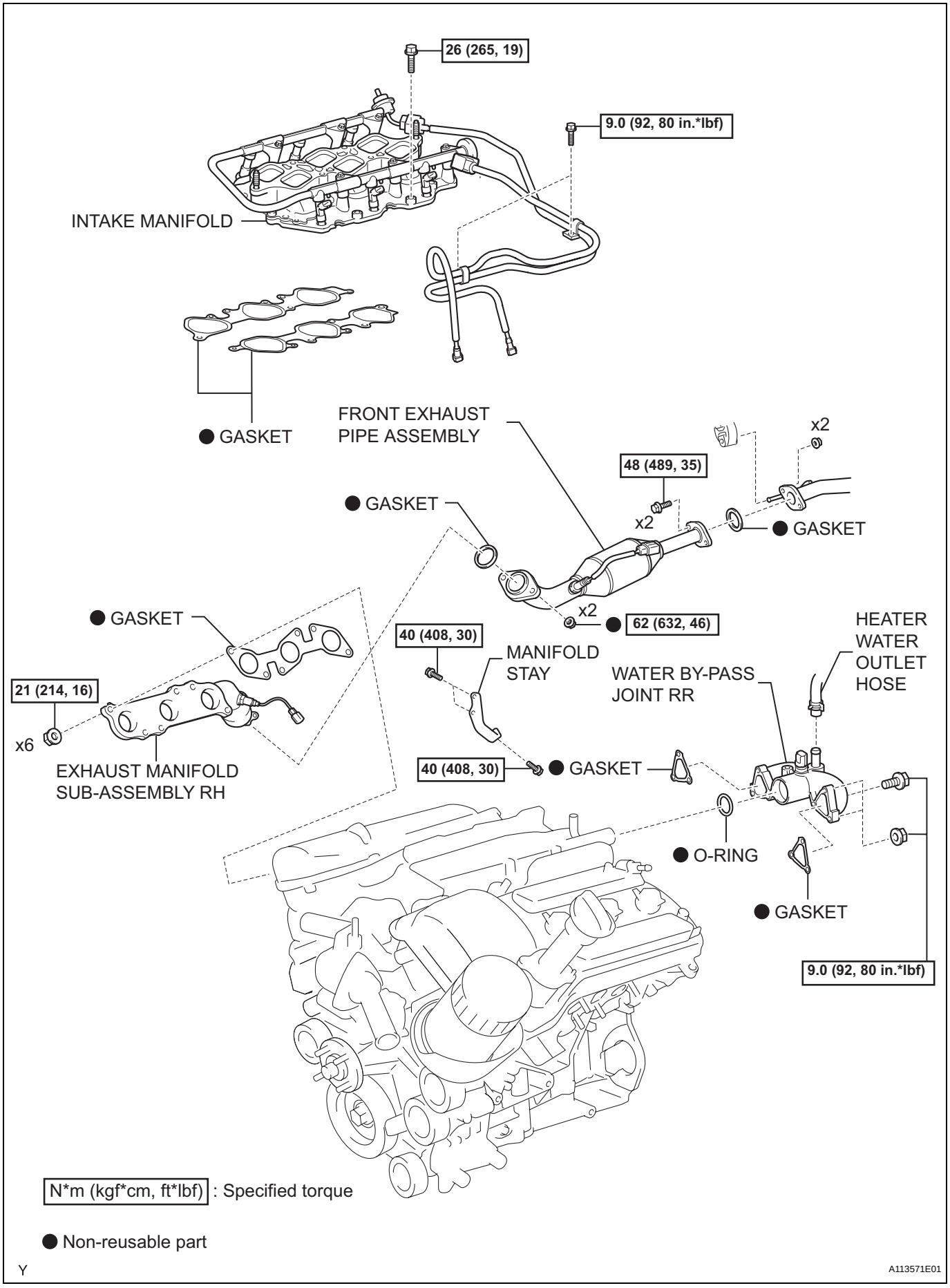
26 (265, 19)
9.0 (92, 80 in.*lbf)
INTAKE MANIFOLD
GASKET
FRONT EXHAUST PIPE ASSEMBLY
x2
48 (489, 35)
GASKET
x2
GASKET
x2
62 (632, 46)
GASKET
40 (408, 30)
MANIFOLD STAY
HEATER WATER OUTLET HOSE
WATER BY-PASS JOINT RR
21 (214, 16)
x6
EXHAUST MANIFOLD SUB-ASSEMBLY RH
40 (408, 30)
GASKET
O-RING
GASKET
9.0 (92, 80 in.*lbf)
N*m (kgf*cm, ft*lbf) : Specified torque
Non-reusable part
Y
A113571E01

EM

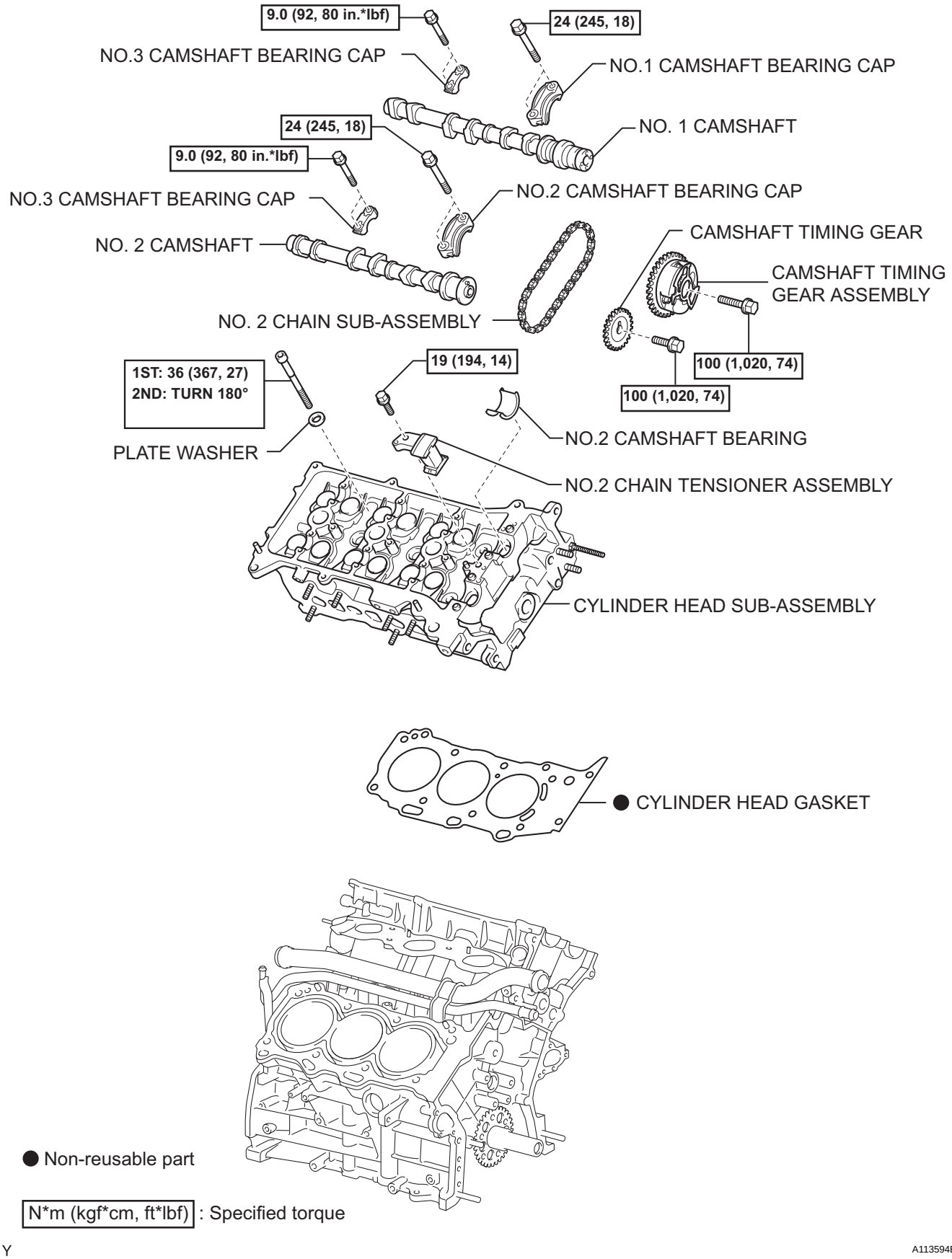
9.0 (92, 80 in.*lbf)
24 (245, 18)
NO.3 CAMSHAFT BEARING CAP
NO.1 CAMSHAFT BEARING CAP
24 (245, 18)
NO. 1 CAMSHAFT
9.0 (92, 80 in.*lbf)
NO.3 CAMSHAFT BEARING CAP
NO.2 CAMSHAFT BEARING CAP
NO. 2 CAMSHAFT
CAMSHAFT TIMING GEAR
CAMSHAFT TIMING GEAR ASSEMBLY
NO. 2 CHAIN SUB-ASSEMBLY
1ST: 36 (367, 27)
2ND: TURN 180°
19 (194, 14)
100 (1,020, 74)
100 (1,020, 74)
PLATE WASHER
NO.2 CAMSHAFT BEARING
NO.2 CHAIN TENSIONER ASSEMBLY
CYLINDER HEAD SUB-ASSEMBLY
● CYLINDER HEAD GASKET
● Non-reusable part
N*m (kgf*cm, ft*lbf) : Specified torque
Y
A113594E01

CYLINDER HEAD (for Bank 1 4WD and Pre-Runner)

COMPONENTS

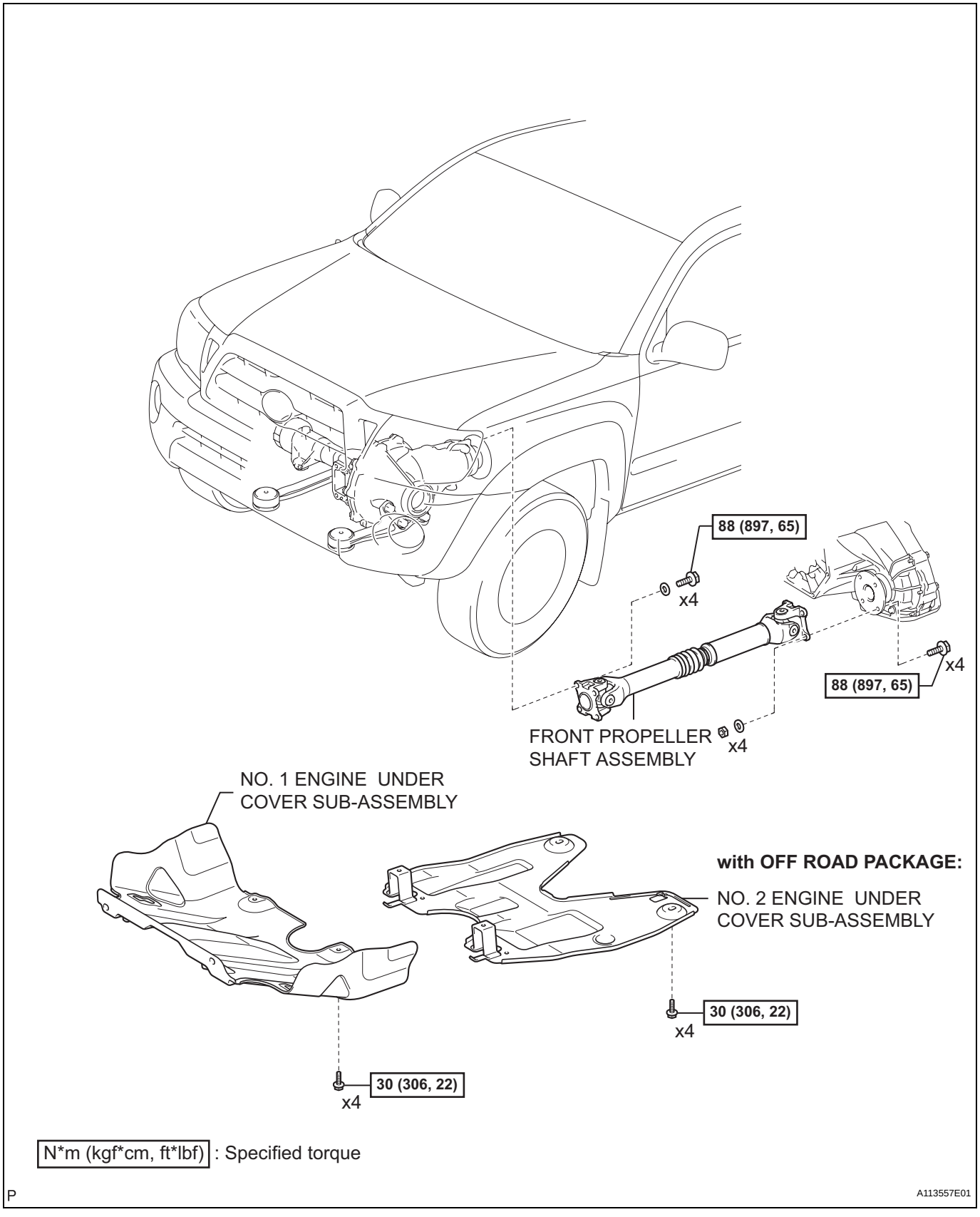

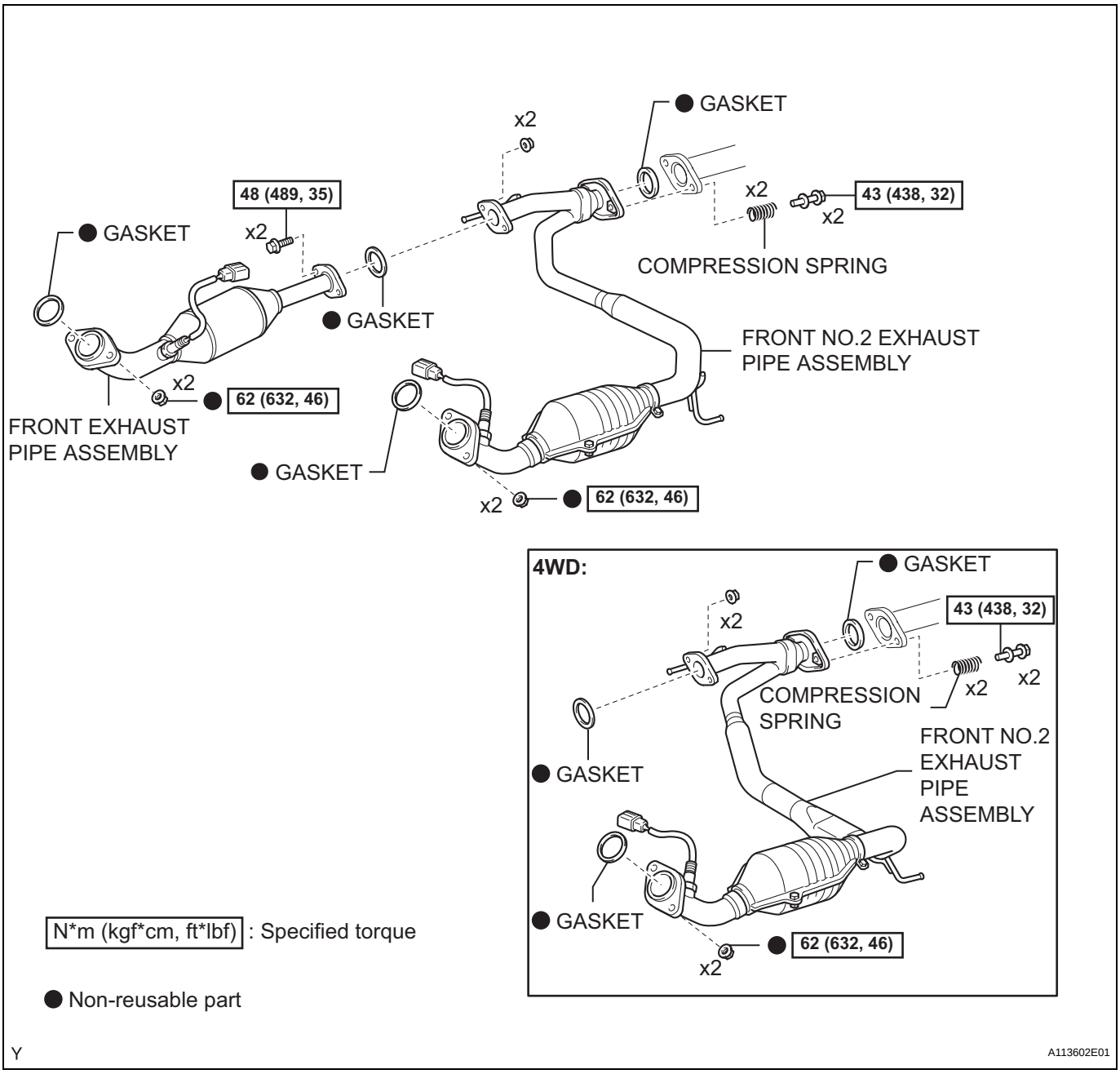
GASKET
x2
48 (489, 35)
GASKET
x2
43 (438, 32)
x2
x2
COMPRESSION SPRING
GASKET
FRONT NO.2 EXHAUST PIPE ASSEMBLY
x2
62 (632, 46)
FRONT EXHAUST PIPE ASSEMBLY
GASKET
x2
62 (632, 46)
4WD:
GASKET
x2
43 (438, 32)
x2
x2
COMPRESSION SPRING
FRONT NO.2 EXHAUST PIPE ASSEMBLY
GASKET
GASKET
62 (632, 46)
x2
N*m (kgf*cm, ft*lbf) : Specified torque
Non-reusable part
Y
A113602E01

EM

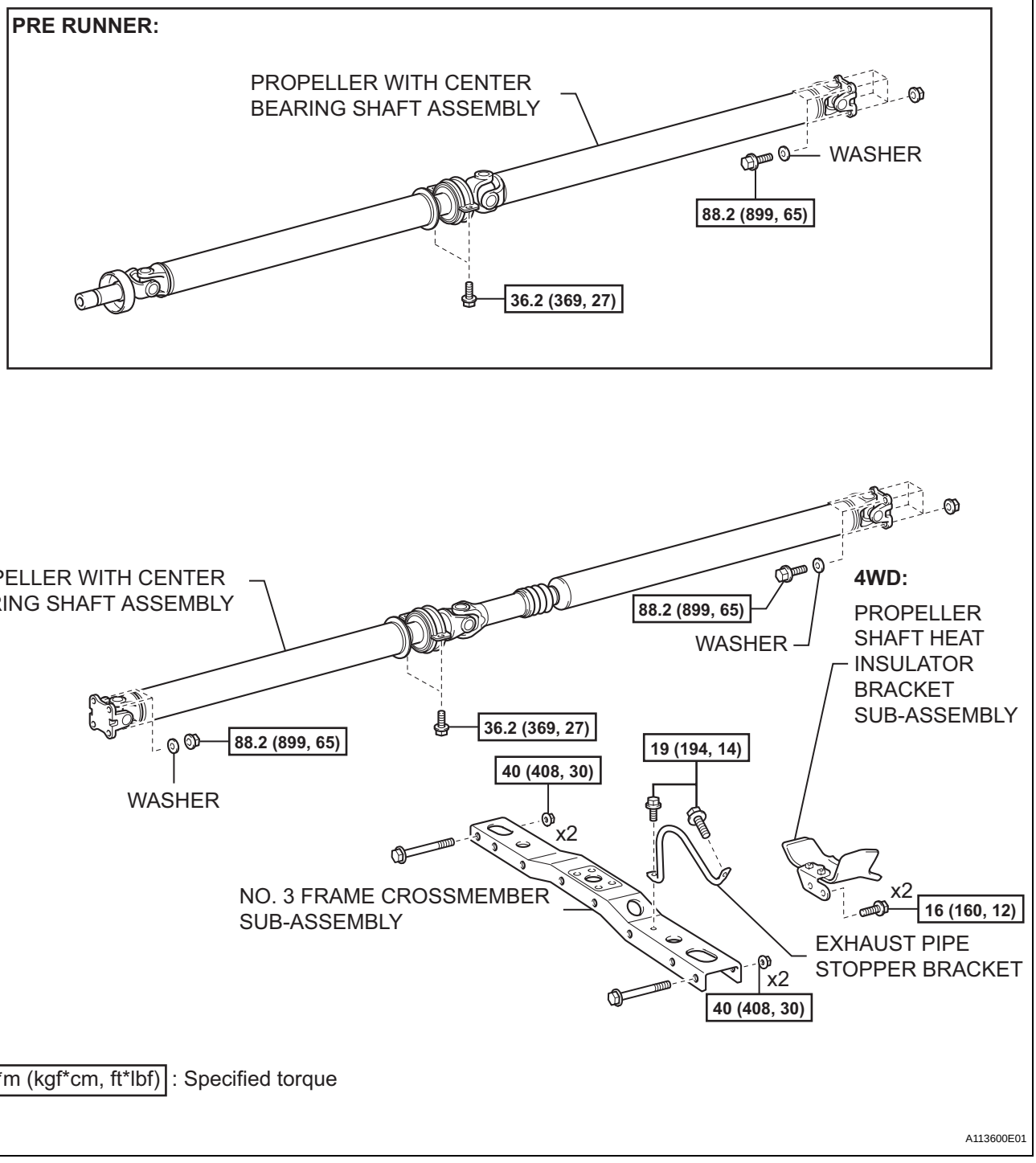
PRE RUNNER:
PROPELLER WITH CENTER BEARING SHAFT ASSEMBLY
WASHER
88.2 (899, 65)
36.2 (369, 27)
4WD:
PROPELLER WITH CENTER BEARING SHAFT ASSEMBLY
88.2 (899, 65)
WASHER
36.2 (369, 27)
88.2 (899, 65)
WASHER
4WD:
PROPELLER SHAFT HEAT INSULATOR BRACKET SUB-ASSEMBLY
19 (194, 14)
40 (408, 30)
x2
NO. 3 FRAME CROSSMEMBER SUB-ASSEMBLY
x2
16 (160, 12)
EXHAUST PIPE STOPPER BRACKET
x2
40 (408, 30)
N*m (kgf*cm, ft*lbf) : Specified torque
Y
A113600E01

EM

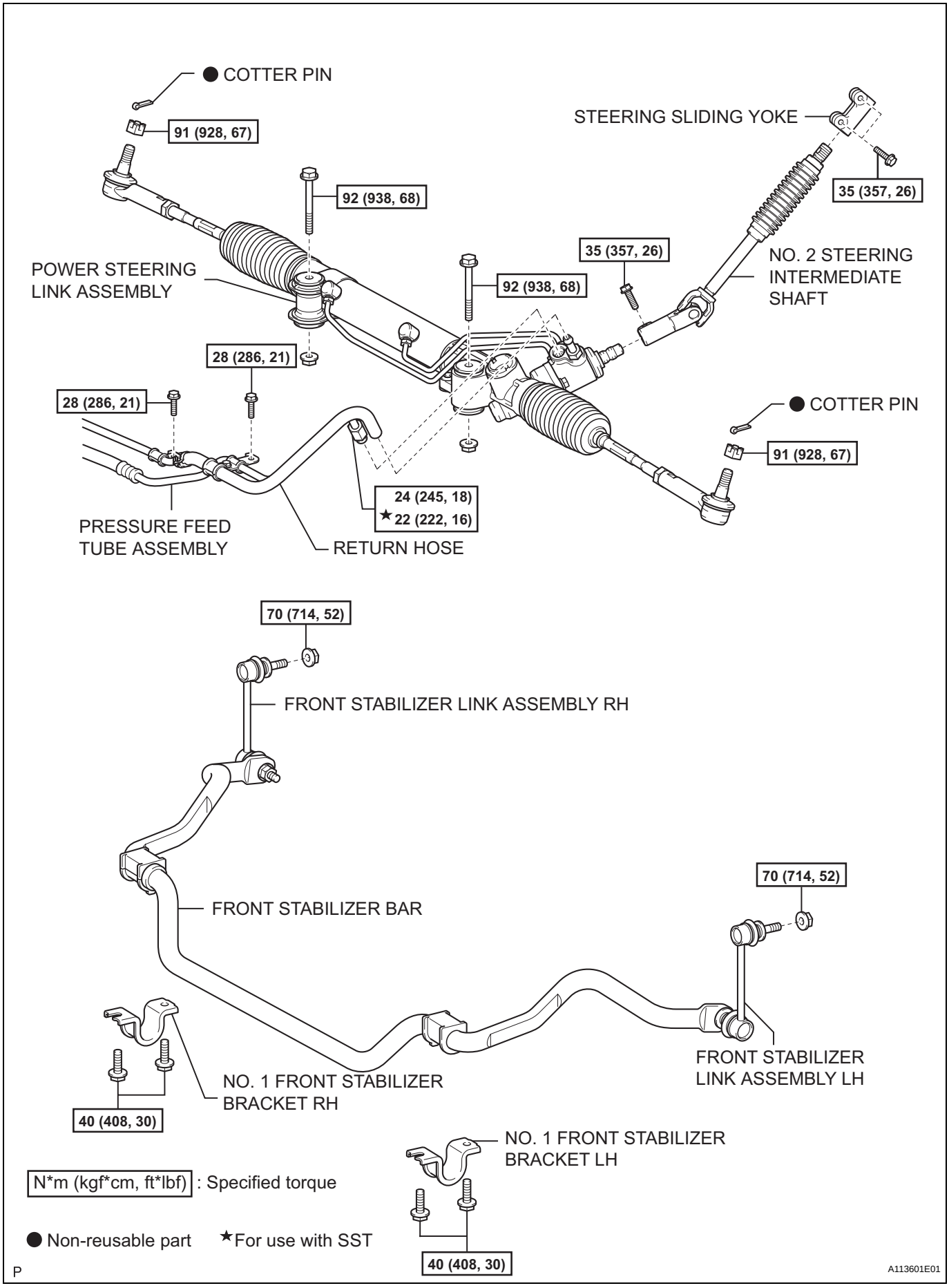
● COTTER PIN
91 (928, 67)
92 (938, 68)
POWER STEERING LINK ASSEMBLY
28 (286, 21)
28 (286, 21)
PRESSURE FEED TUBE ASSEMBLY
24 (245, 18)
★22 (222, 16)
RETURN HOSE
STEERING SLIDING YOKE
35 (357, 26)
35 (357, 26)
92 (938, 68)
NO. 2 STEERING INTERMEDIATE SHAFT
● COTTER PIN
91 (928, 67)
70 (714, 52)
FRONT STABILIZER LINK ASSEMBLY RH
FRONT STABILIZER BAR
70 (714, 52)
NO. 1 FRONT STABILIZER BRACKET RH
40 (408, 30)
FRONT STABILIZER LINK ASSEMBLY LH
NO. 1 FRONT STABILIZER BRACKET LH
40 (408, 30)
N*m (kgf*cm, ft*lbf) : Specified torque
● Non-reusable part
★For use with SST
P
A113601E01

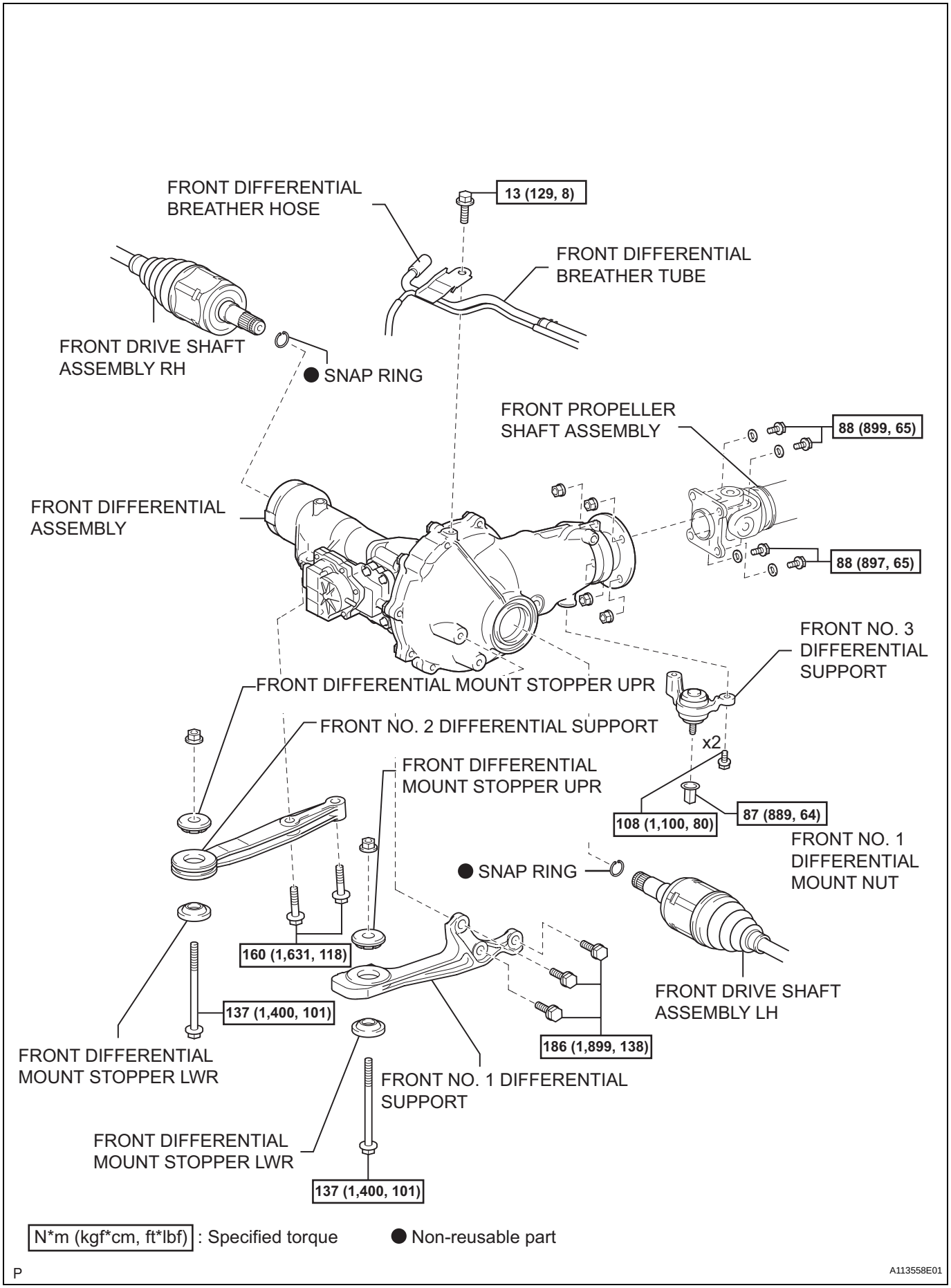
FRONT DIFFERENTIAL BREATHER HOSE
13 (129, 8)
FRONT DIFFERENTIAL BREATHER TUBE
FRONT DRIVE SHAFT ASSEMBLY RH
SNAP RING
FRONT PROPELLER SHAFT ASSEMBLY
88 (899, 65)
FRONT DIFFERENTIAL ASSEMBLY
88 (897, 65)
FRONT NO. 3 DIFFERENTIAL SUPPORT
FRONT DIFFERENTIAL MOUNT STOPPER UPR
FRONT NO. 2 DIFFERENTIAL SUPPORT
x2
FRONT DIFFERENTIAL MOUNT STOPPER UPR
108 (1,100, 80)
87 (889, 64)
FRONT NO. 1 DIFFERENTIAL MOUNT NUT
SNAP RING
160 (1,631, 118)
FRONT DRIVE SHAFT ASSEMBLY LH
137 (1,400, 101)
186 (1,899, 138)
FRONT DIFFERENTIAL MOUNT STOPPER LWR
FRONT NO. 1 DIFFERENTIAL SUPPORT
FRONT DIFFERENTIAL MOUNT STOPPER LWR
137 (1,400, 101)
N*m (kgf*cm, ft*lbf) : Specified torque
Non-reusable part
P
A113558E01

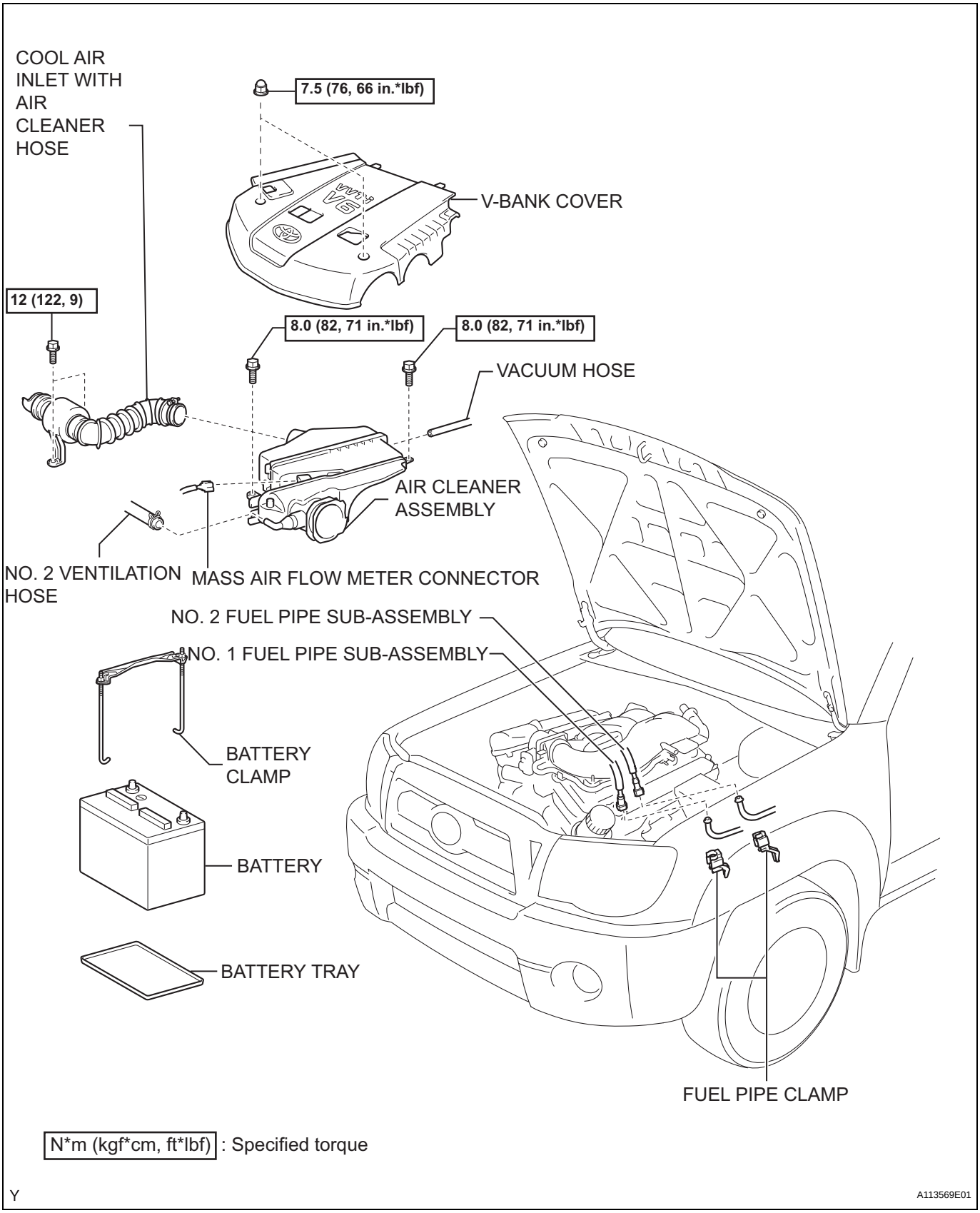
COOL AIR INLET WITH AIR CLEANER HOSE
7.5 (76, 66 in.*lbf)
V-BANK COVER
12 (122, 9)
8.0 (82, 71 in.*lbf)
8.0 (82, 71 in.*lbf)
VACUUM HOSE
AIR CLEANER ASSEMBLY
NO. 2 VENTILATION HOSE
MASS AIR FLOW METER CONNECTOR
NO. 2 FUEL PIPE SUB-ASSEMBLY
NO. 1 FUEL PIPE SUB-ASSEMBLY
BATTERY CLAMP
BATTERY
BATTERY TRAY
FUEL PIPE CLAMP
N*m (kgf*cm, ft*lbf) : Specified torque
Y
A113569E01

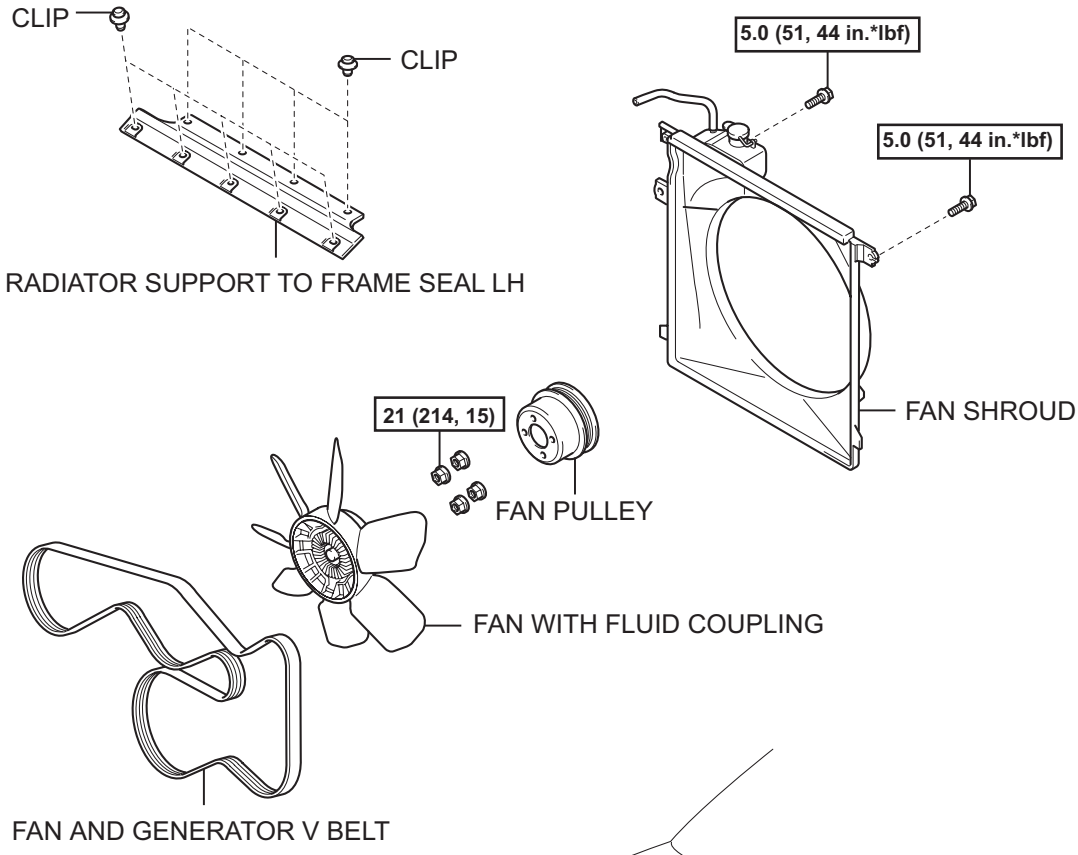

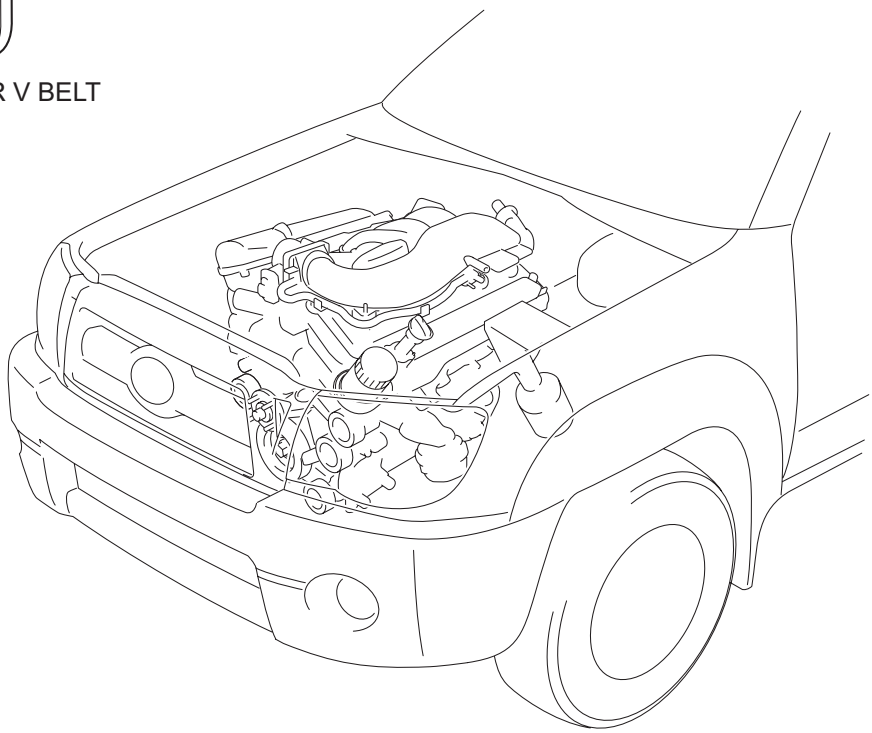

N*m (kgf*cm, ft*lbf) : Specified torque

Y

A113567E01

EM

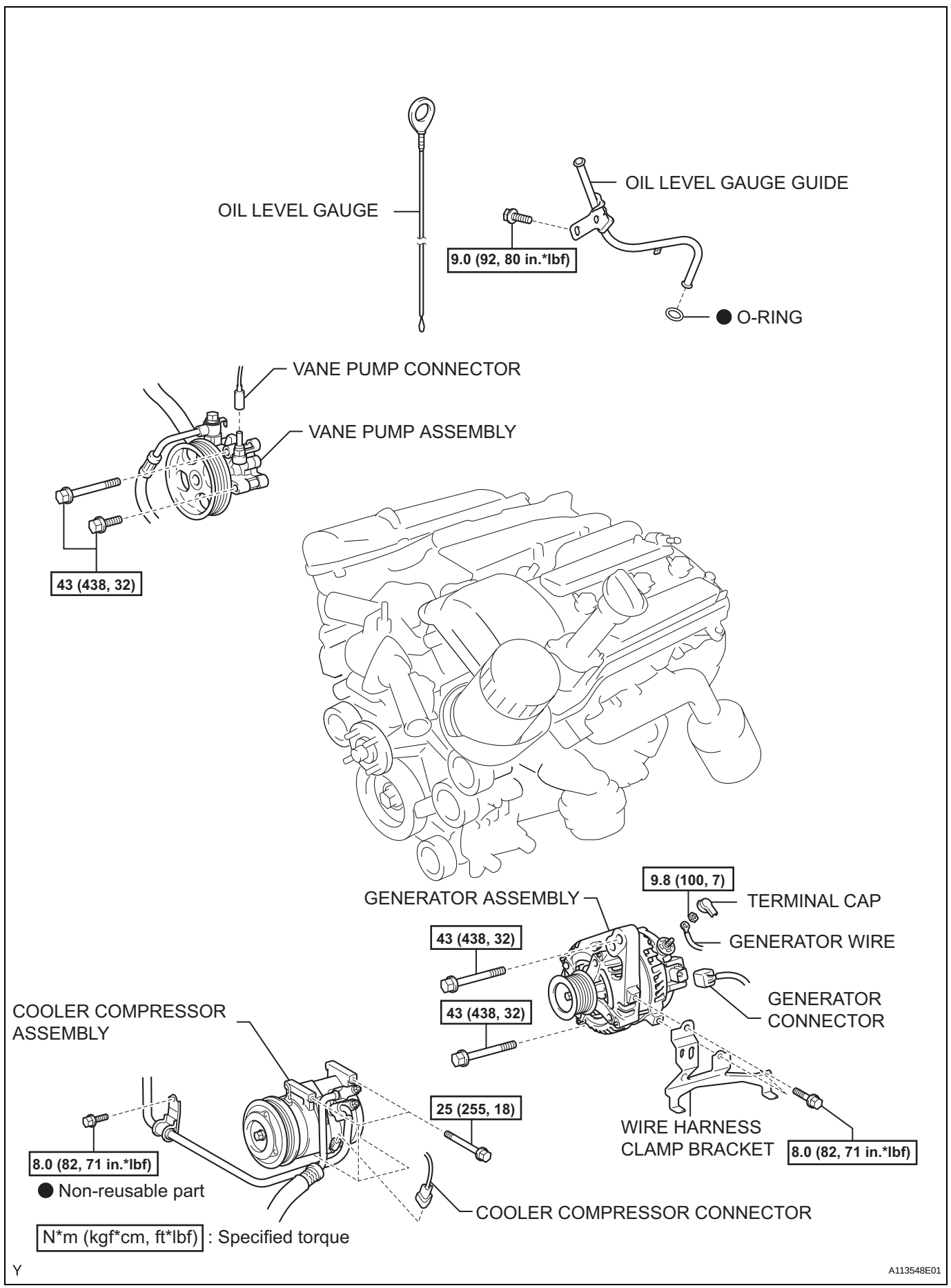
OIL LEVEL GAUGE
OIL LEVEL GAUGE GUIDE
9.0 (92, 80 in.*lbf)
● O-RING
VANE PUMP CONNECTOR
VANE PUMP ASSEMBLY
43 (438, 32)
9.8 (100, 7)
GENERATOR ASSEMBLY
TERMINAL CAP
GENERATOR WIRE
43 (438, 32)
GENERATOR CONNECTOR
COOLER COMPRESSOR ASSEMBLY
43 (438, 32)
25 (255, 18)
WIRE HARNESS CLAMP BRACKET
8.0 (82, 71 in.*lbf)
8.0 (82, 71 in.*lbf)
● Non-reusable part
COOLER COMPRESSOR CONNECTOR
N*m (kgf*cm, ft*lbf) : Specified torque
Y
A113548E01

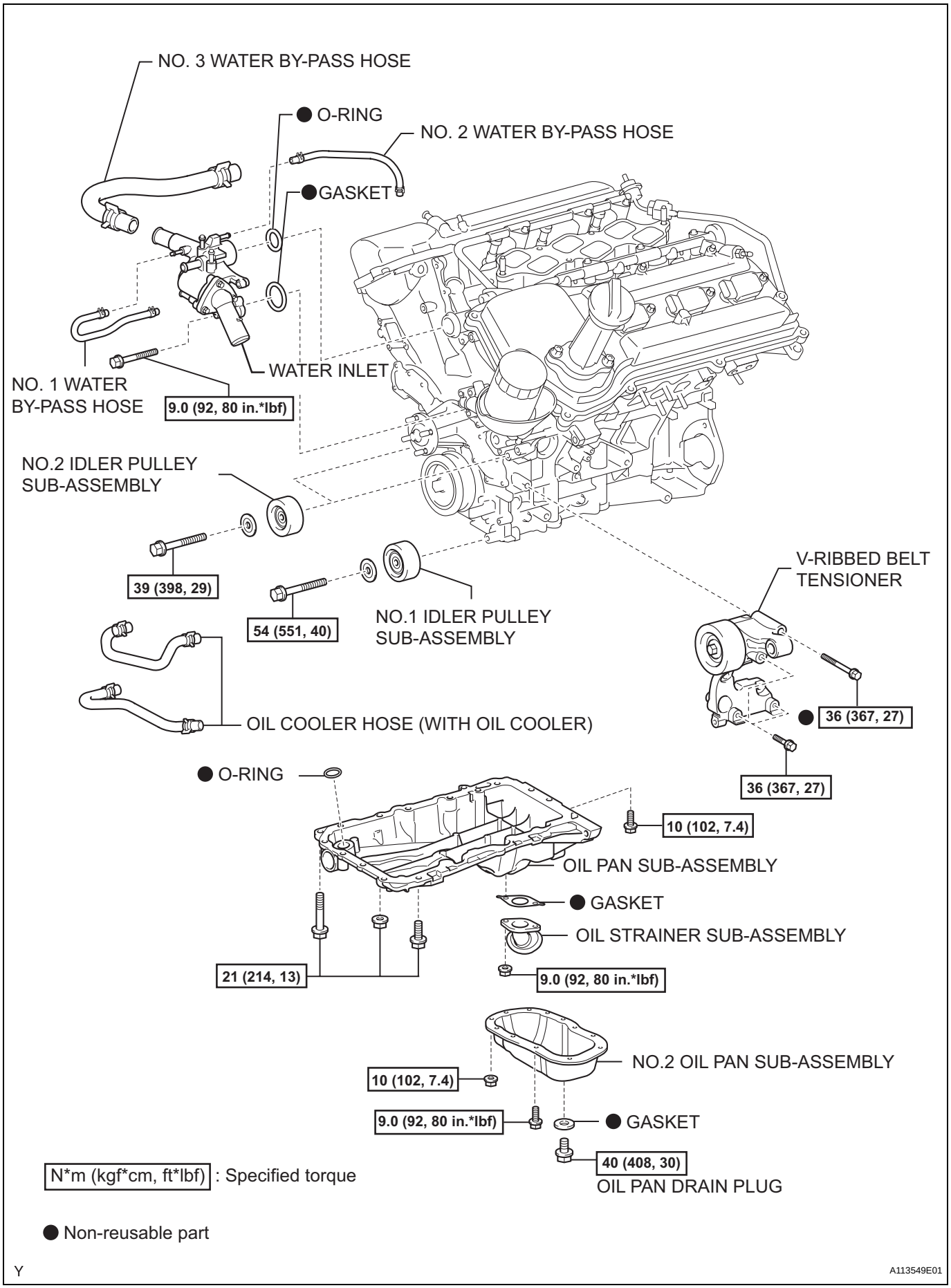
NO. 3 WATER BY-PASS HOSE
● O-RING
NO. 2 WATER BY-PASS HOSE
●GASKET
WATER INLET
NO. 1 WATER BY-PASS HOSE
9.0 (92, 80 in.*lbf)
NO.2 IDLER PULLEY SUB-ASSEMBLY
39 (398, 29)
54 (551, 40)
NO.1 IDLER PULLEY SUB-ASSEMBLY
V-RIBBED BELT TENSIONER
OIL COOLER HOSE (WITH OIL COOLER)
● 36 (367, 27)
36 (367, 27)
● O-RING
10 (102, 7.4)
OIL PAN SUB-ASSEMBLY
● GASKET
OIL STRAINER SUB-ASSEMBLY
21 (214, 13)
9.0 (92, 80 in.*lbf)
NO.2 OIL PAN SUB-ASSEMBLY
10 (102, 7.4)
9.0 (92, 80 in.*lbf)
● GASKET
40 (408, 30)
OIL PAN DRAIN PLUG
N*m (kgf*cm, ft*lbf) : Specified torque
● Non-reusable part
Y
A113549E01

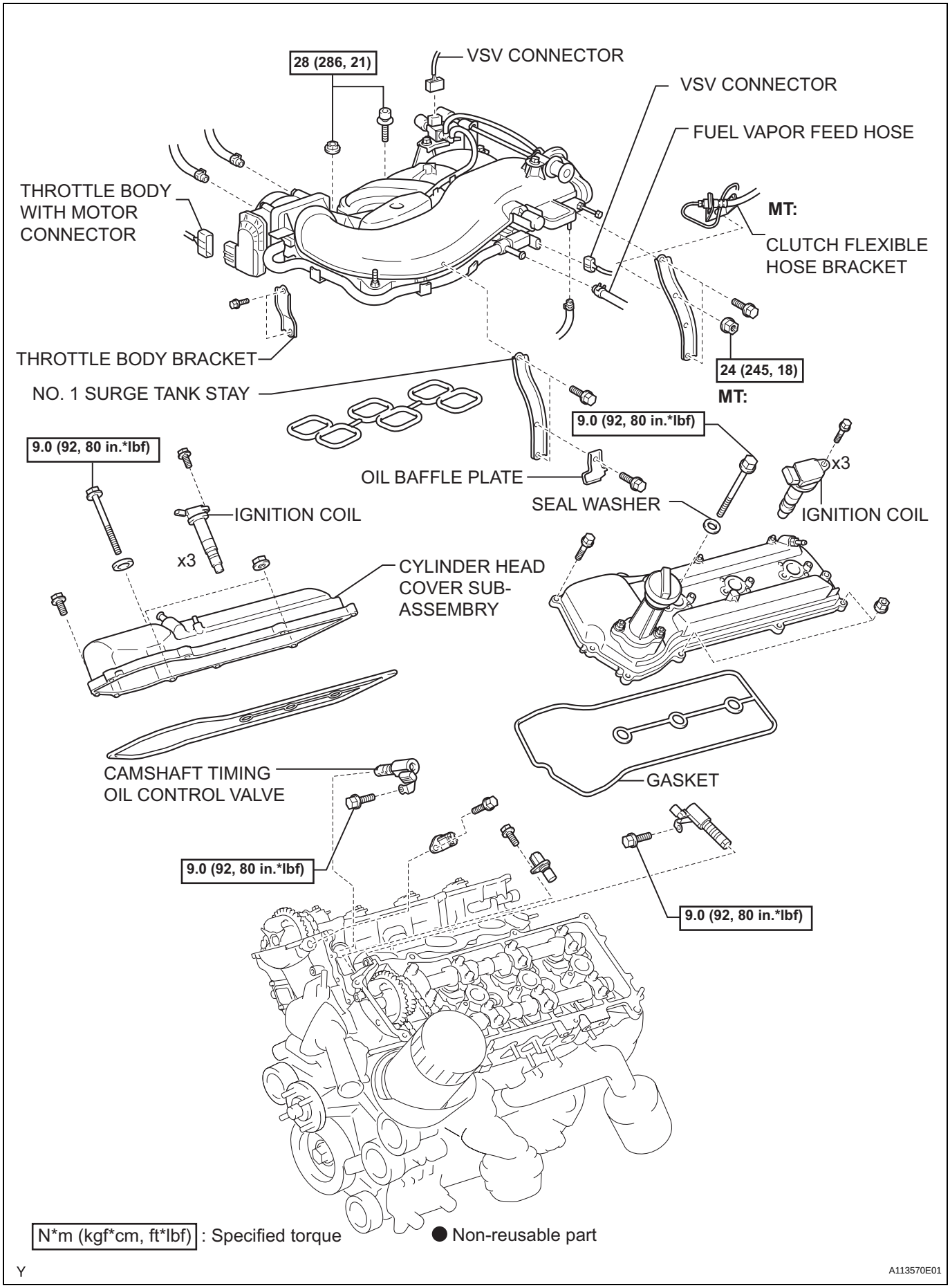
28 (286, 21)
VSV CONNECTOR
VSV CONNECTOR
FUEL VAPOR FEED HOSE
THROTTLE BODY WITH MOTOR CONNECTOR
MT:
CLUTCH FLEXIBLE HOSE BRACKET
THROTTLE BODY BRACKET
24 (245, 18)
MT:
NO. 1 SURGE TANK STAY
9.0 (92, 80 in.*lbf)
9.0 (92, 80 in.*lbf)
OIL BAFFLE PLATE
SEAL WASHER
x3
IGNITION COIL
IGNITION COIL
x3
CYLINDER HEAD COVER SUB-ASSEMBRY
CAMSHAFT TIMING OIL CONTROL VALVE
GASKET
9.0 (92, 80 in.*lbf)
9.0 (92, 80 in.*lbf)
N*m (kgf*cm, ft*lbf) : Specified torque
● Non-reusable part
Y
A113570E01

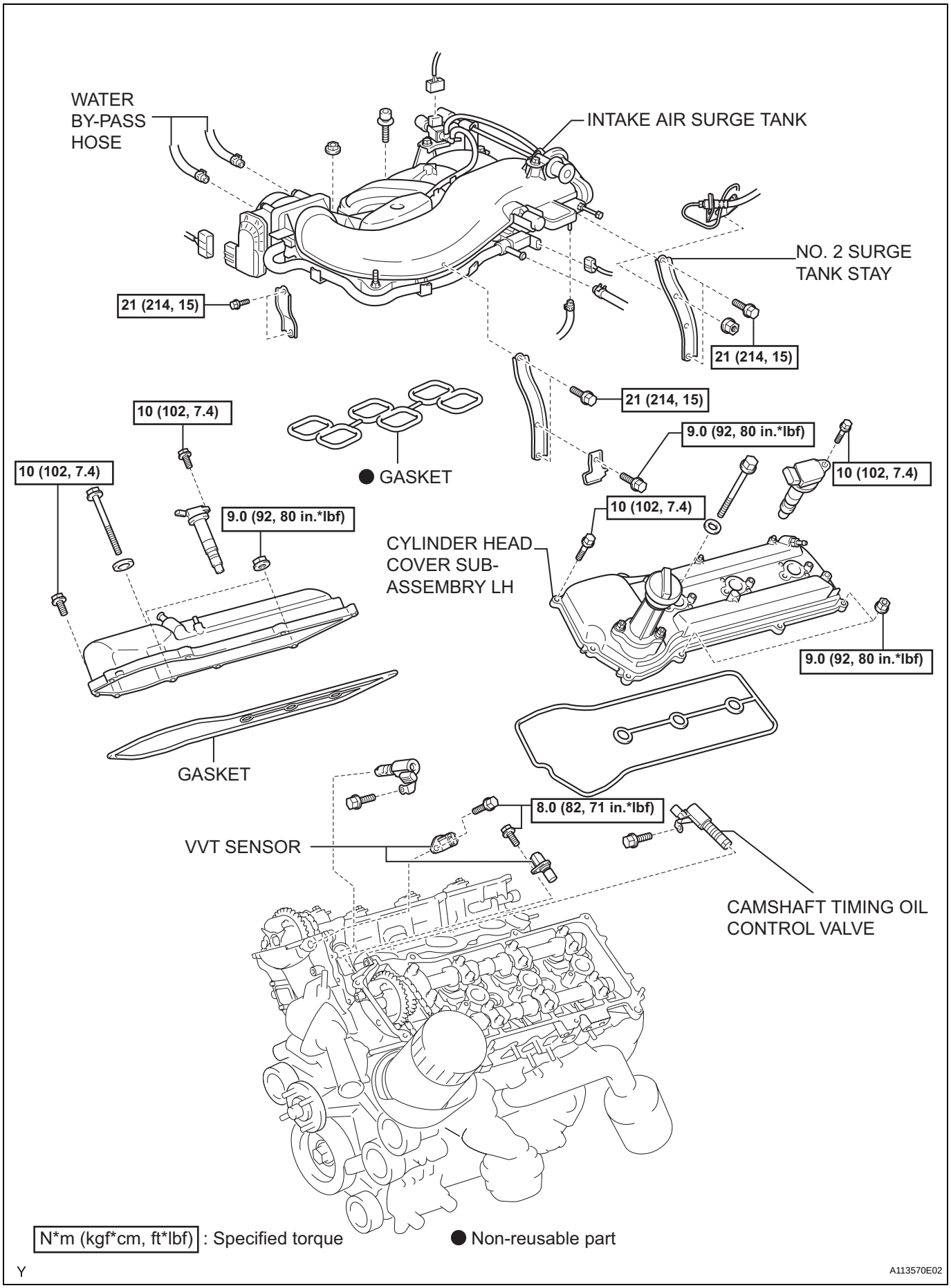
WATER BY-PASS HOSE
INTAKE AIR SURGE TANK
NO. 2 SURGE TANK STAY
21 (214, 15)
21 (214, 15)
21 (214, 15)
10 (102, 7.4)
GASKET
9.0 (92, 80 in.*lbf)
10 (102, 7.4)
10 (102, 7.4)
9.0 (92, 80 in.*lbf)
CYLINDER HEAD COVER SUB-ASSEMBRY LH
10 (102, 7.4)
9.0 (92, 80 in.*lbf)
GASKET
8.0 (82, 71 in.*lbf)
VVT SENSOR
CAMSHAFT TIMING OIL CONTROL VALVE
N*m (kgf*cm, ft*lbf) : Specified torque
● Non-reusable part
Y
A113570E02

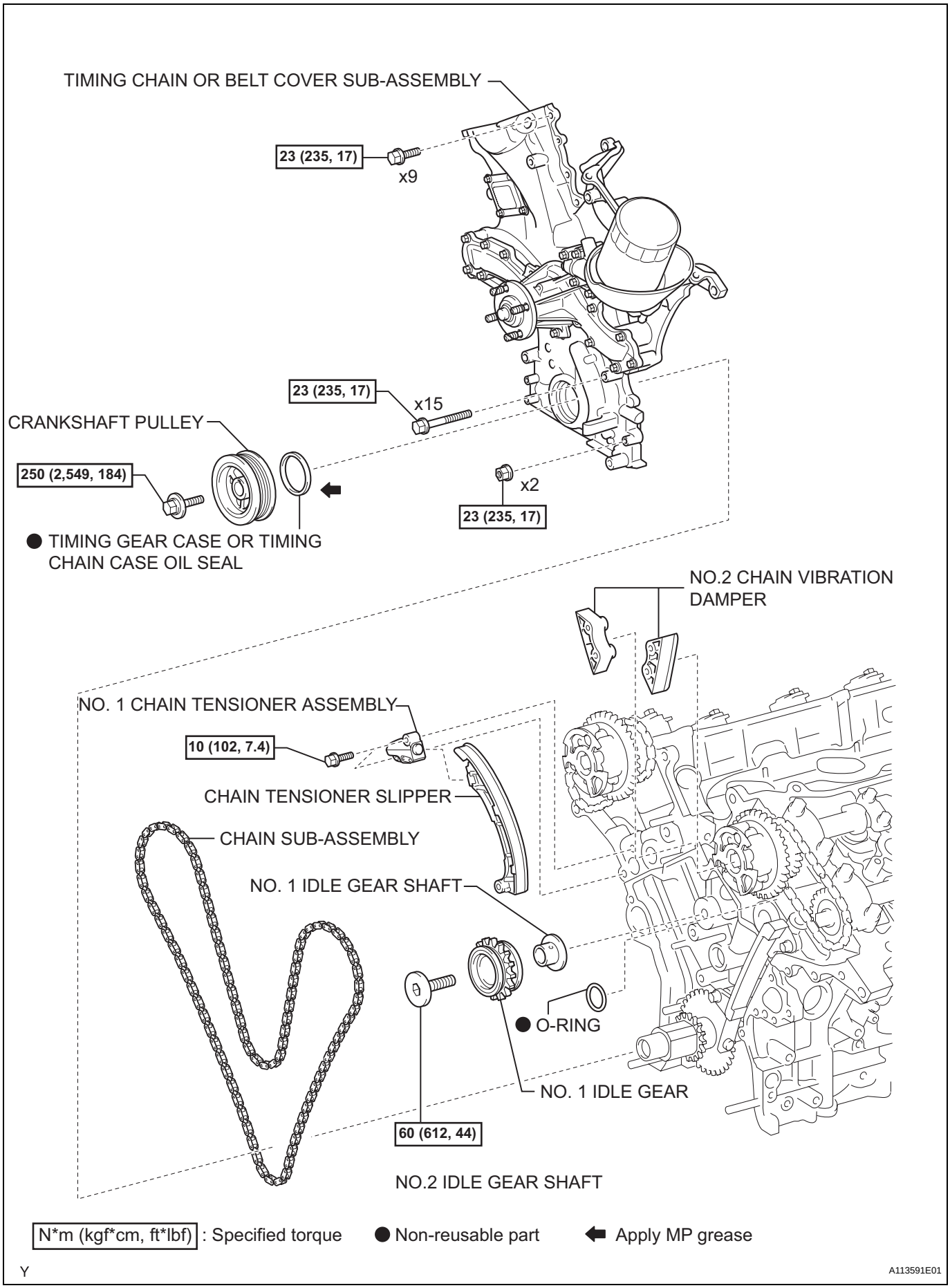

EM

N*m (kgf*cm, ft*lbf) : Specified torque ● Non-reusable part ⬅ Apply MP grease

Y

A113591E01

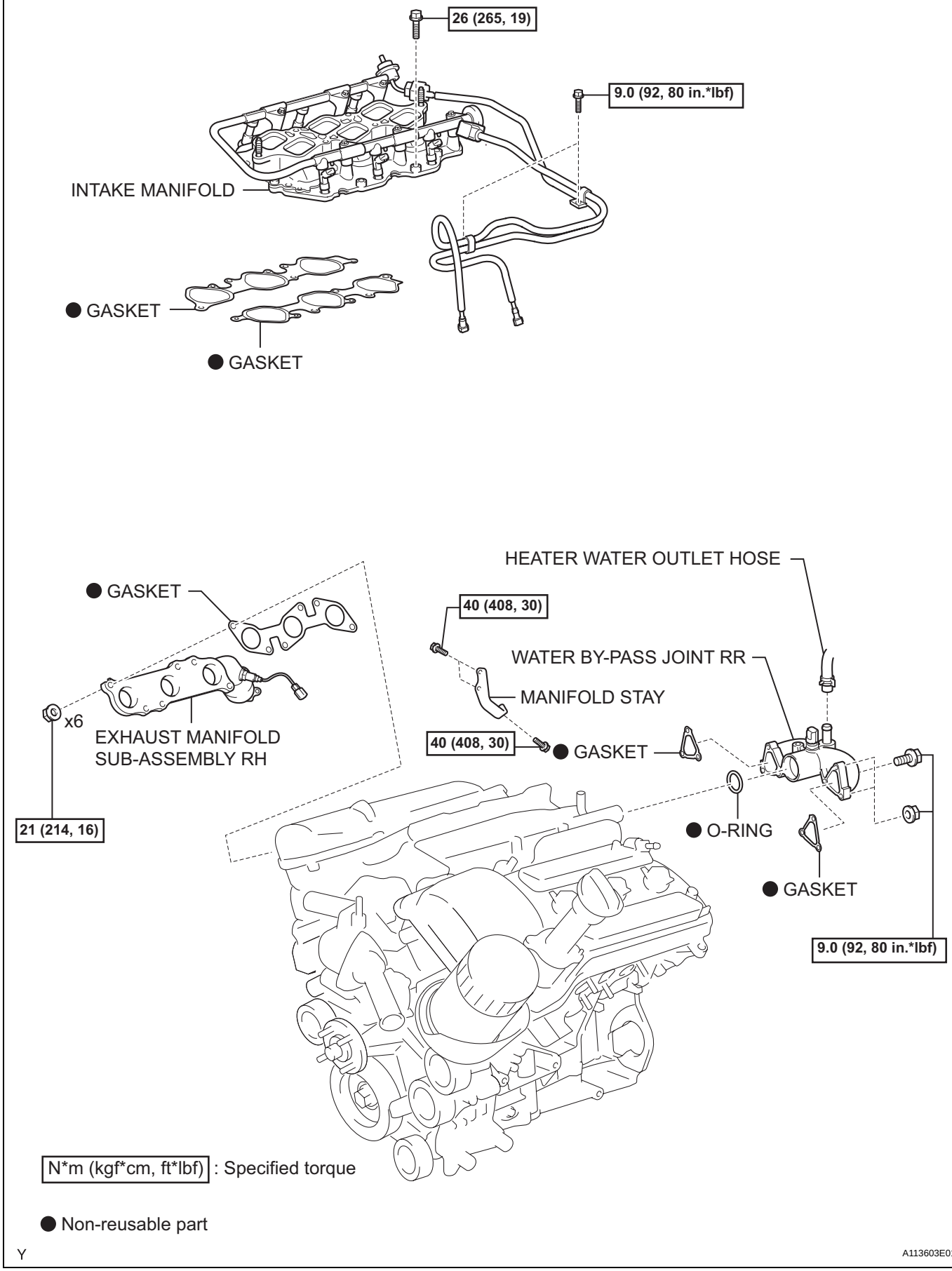
26 (265, 19)
9.0 (92, 80 in.*lbf)
INTAKE MANIFOLD
● GASKET
● GASKET
HEATER WATER OUTLET HOSE
● GASKET
40 (408, 30)
WATER BY-PASS JOINT RR
MANIFOLD STAY
x6
EXHAUST MANIFOLD
SUB-ASSEMBLY RH
40 (408, 30)
● GASKET
21 (214, 16)
● O-RING
● GASKET
9.0 (92, 80 in.*lbf)
N*m (kgf*cm, ft*lbf) : Specified torque
● Non-reusable part
Y
A113603E01

EM

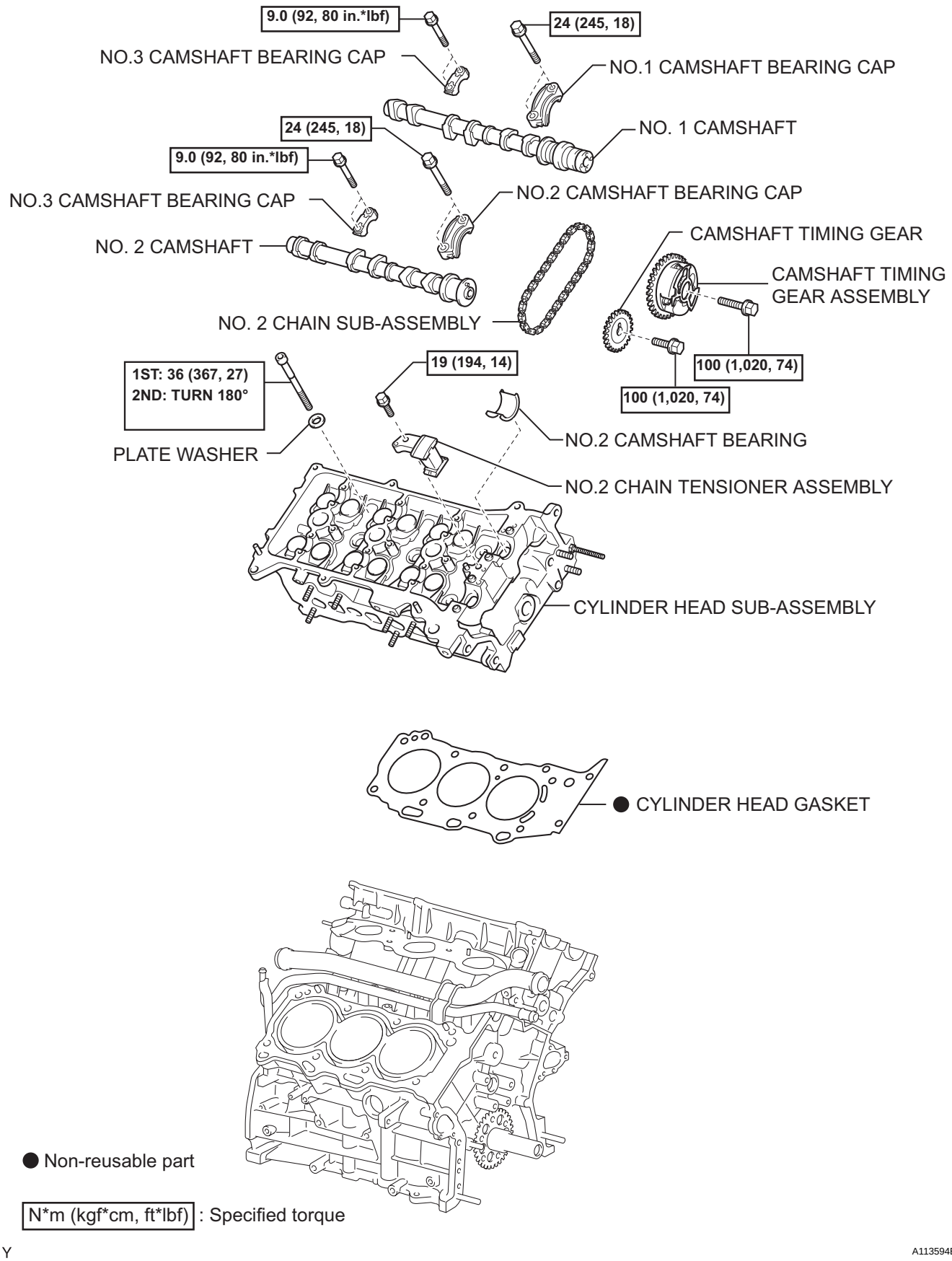
9.0 (92, 80 in.*lbf)
24 (245, 18)
NO.3 CAMSHAFT BEARING CAP
NO.1 CAMSHAFT BEARING CAP
24 (245, 18)
NO. 1 CAMSHAFT
9.0 (92, 80 in.*lbf)
NO.3 CAMSHAFT BEARING CAP
NO.2 CAMSHAFT BEARING CAP
NO. 2 CAMSHAFT
CAMSHAFT TIMING GEAR
CAMSHAFT TIMING GEAR ASSEMBLY
NO. 2 CHAIN SUB-ASSEMBLY
100 (1,020, 74)
100 (1,020, 74)
1ST: 36 (367, 27)
2ND: TURN 180°
19 (194, 14)
NO.2 CAMSHAFT BEARING
PLATE WASHER
NO.2 CHAIN TENSIONER ASSEMBLY
CYLINDER HEAD SUB-ASSEMBLY
● CYLINDER HEAD GASKET
● Non-reusable part
N*m (kgf*cm, ft*lbf) : Specified torque
Y
A113594E01

CYLINDER HEAD (for Bank 2 2WD)

COMPONENTS

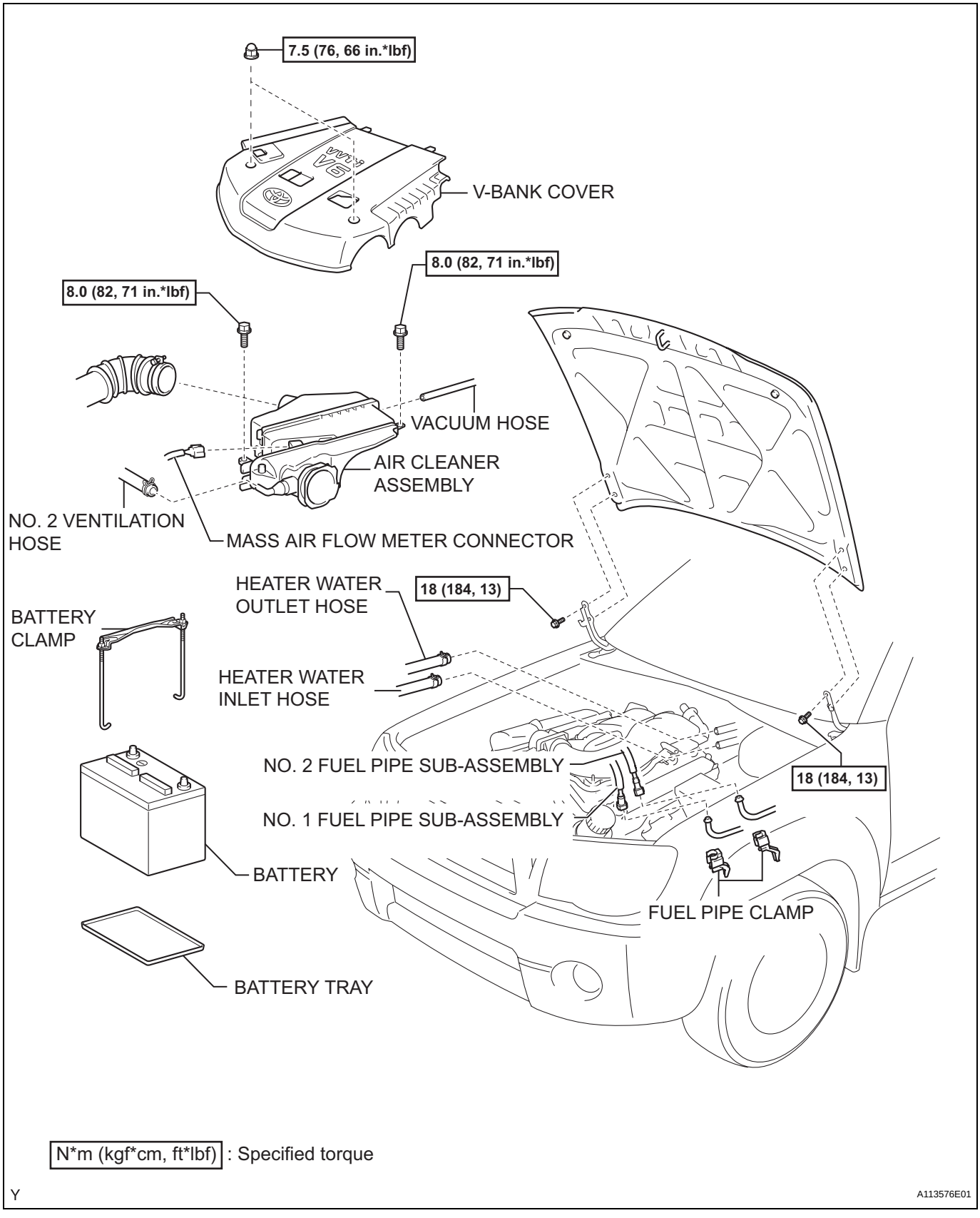

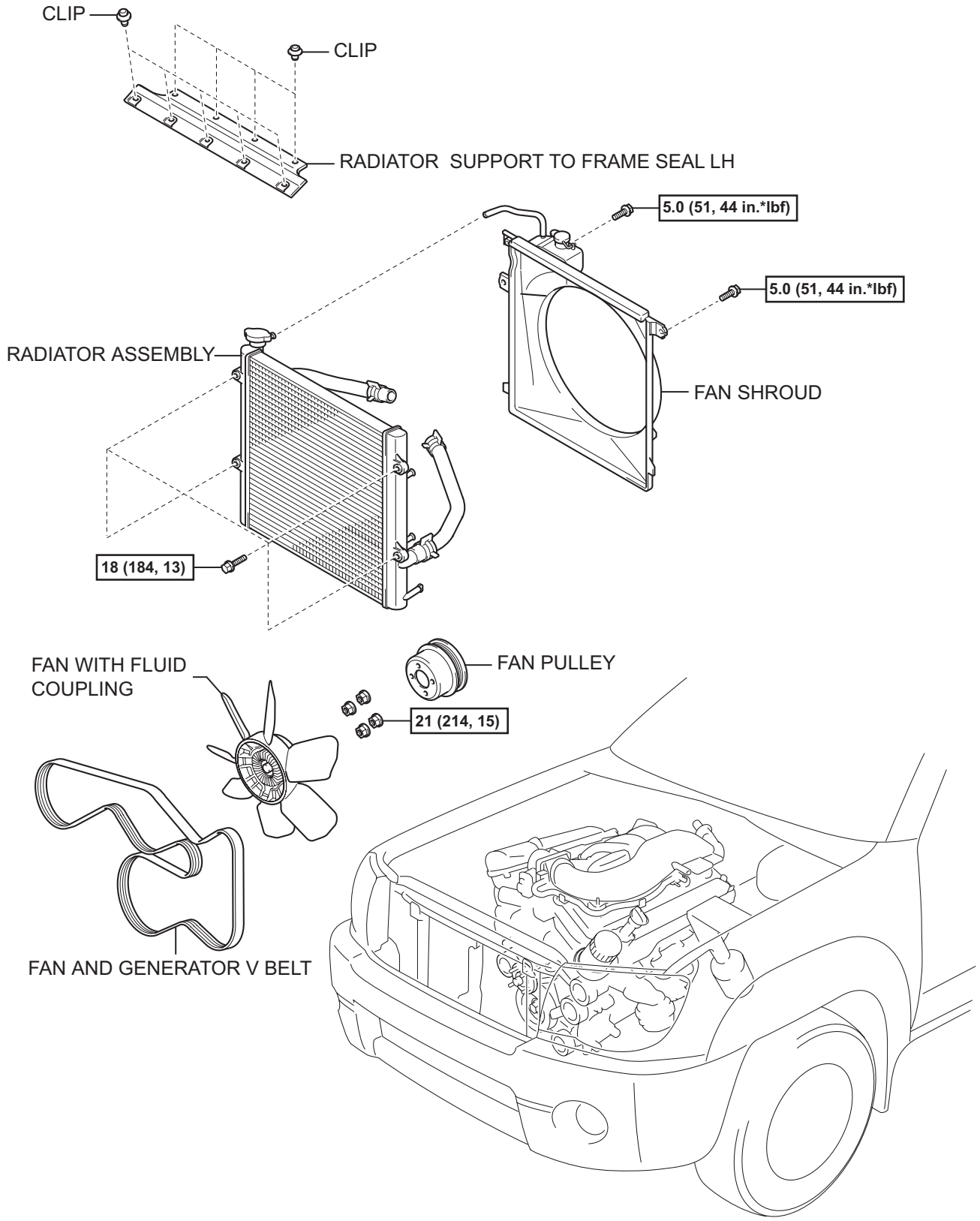

EM

N*m (kgf*cm, ft*lbf) : Specified torque

Y

A113586E01

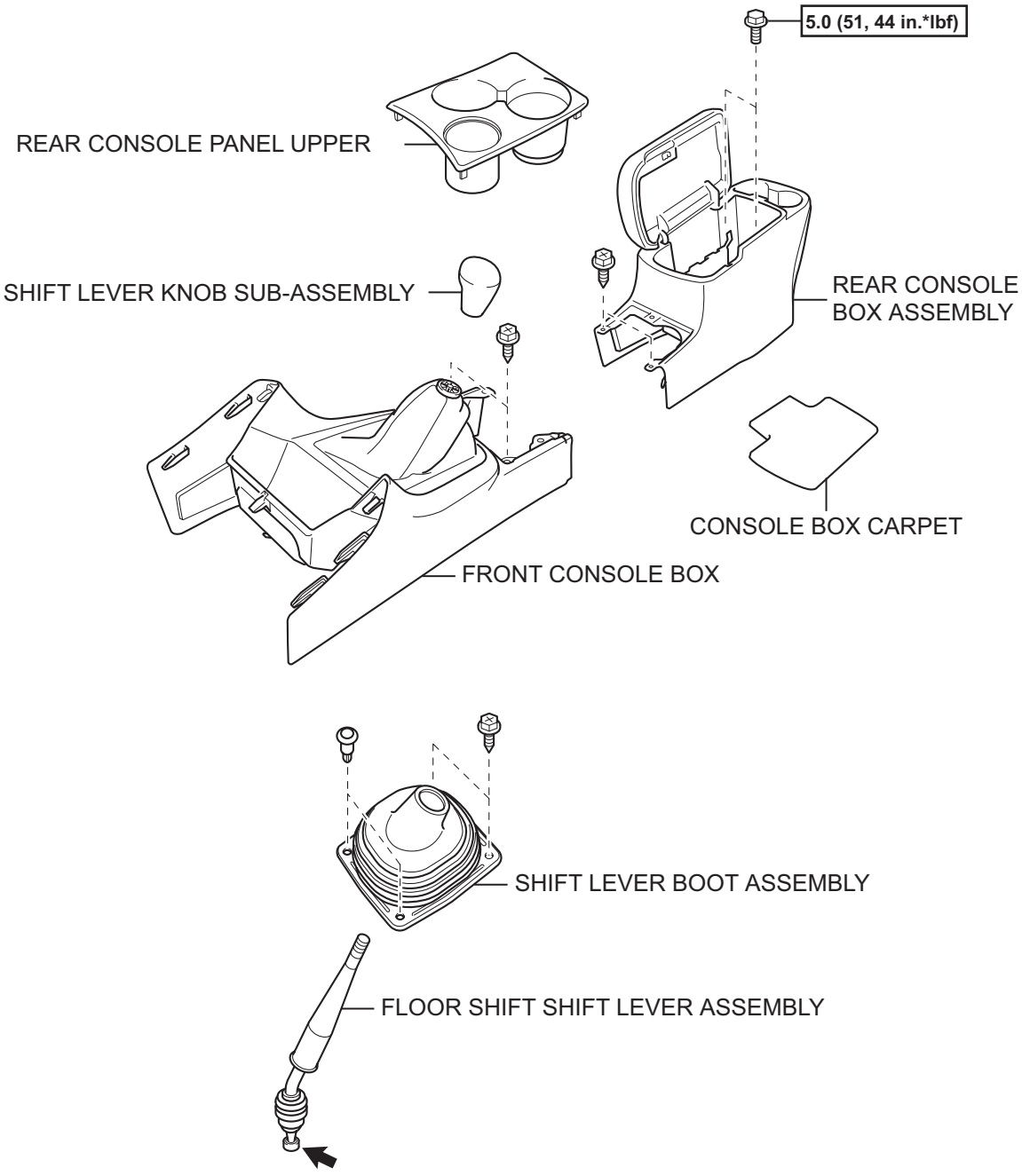
5.0 (51, 44 in.*lbf)
REAR CONSOLE PANEL UPPER
SHIFT LEVER KNOB SUB-ASSEMBLY
REAR CONSOLE BOX ASSEMBLY
CONSOLE BOX CARPET
FRONT CONSOLE BOX
SHIFT LEVER BOOT ASSEMBLY
FLOOR SHIFT SHIFT LEVER ASSEMBLY
N*m (kgf*cm, ft*lbf) : Specified torque
MP grease
A113553E01

EM

Y

2WD AND PRE RUNNER, MANUAL TRANSMISSION:

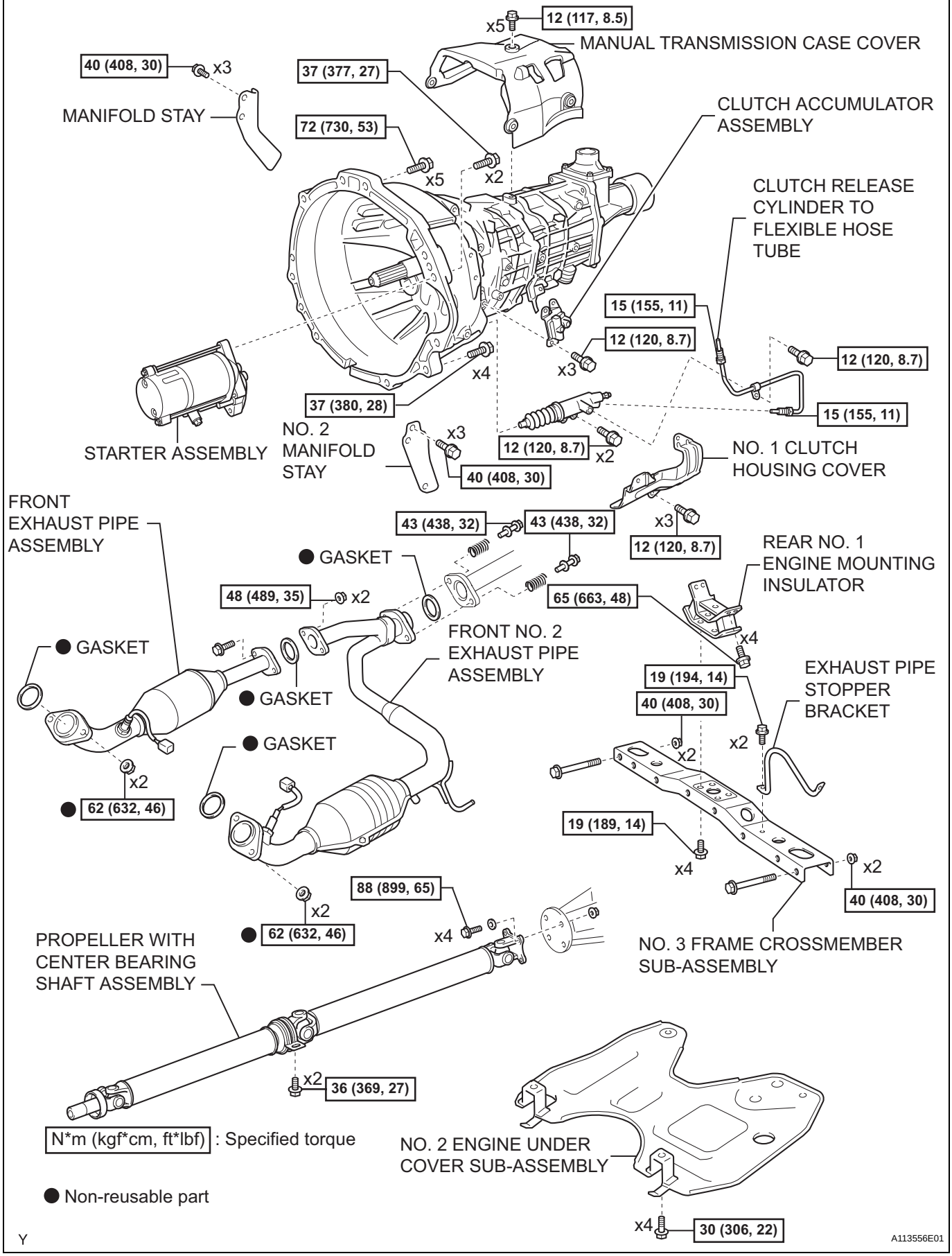

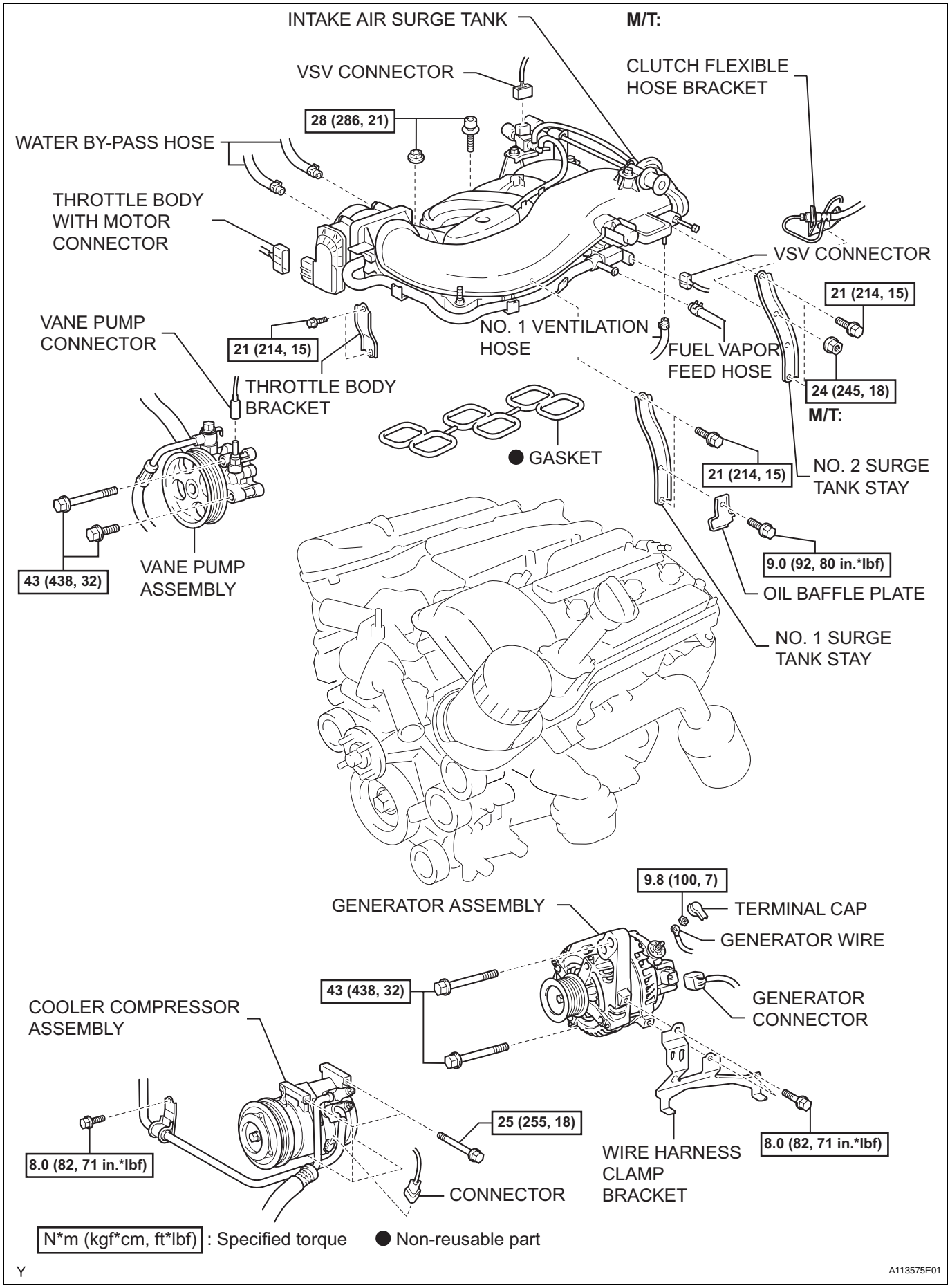
INTAKE AIR SURGE TANK
M/T:
VSV CONNECTOR
CLUTCH FLEXIBLE HOSE BRACKET
28 (286, 21)
WATER BY-PASS HOSE
THROTTLE BODY WITH MOTOR CONNECTOR
VSV CONNECTOR
21 (214, 15)
VANE PUMP CONNECTOR
21 (214, 15)
NO. 1 VENTILATION HOSE
FUEL VAPOR FEED HOSE
24 (245, 18)
M/T:
THROTTLE BODY BRACKET
GASKET
21 (214, 15)
NO. 2 SURGE TANK STAY
9.0 (92, 80 in.*lbf)
43 (438, 32)
VANE PUMP ASSEMBLY
OIL BAFFLE PLATE
NO. 1 SURGE TANK STAY
9.8 (100, 7)
GENERATOR ASSEMBLY
TERMINAL CAP
GENERATOR WIRE
43 (438, 32)
GENERATOR CONNECTOR
COOLER COMPRESSOR ASSEMBLY
25 (255, 18)
8.0 (82, 71 in.*lbf)
8.0 (82, 71 in.*lbf)
WIRE HARNESS CLAMP BRACKET
CONNECTOR
N*m (kgf*cm, ft*lbf) : Specified torque
● Non-reusable part
Y
A113575E01

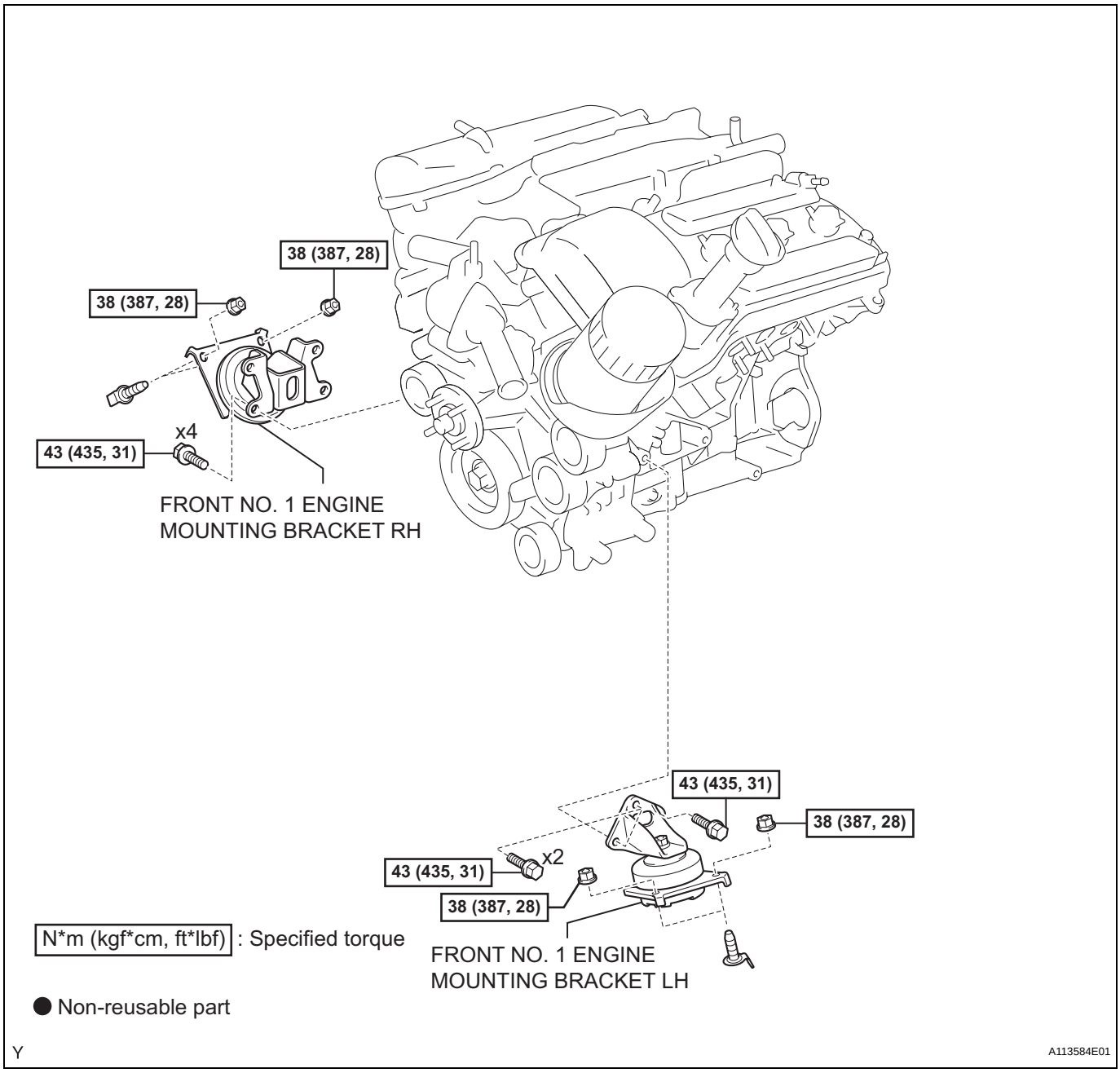
38 (387, 28)
38 (387, 28)
x4
43 (435, 31)
FRONT NO. 1 ENGINE MOUNTING BRACKET RH
43 (435, 31)
38 (387, 28)
x2
43 (435, 31)
38 (387, 28)
FRONT NO. 1 ENGINE MOUNTING BRACKET LH
N*m (kgf*cm, ft*lbf) : Specified torque
● Non-reusable part
Y
A113584E01

EM

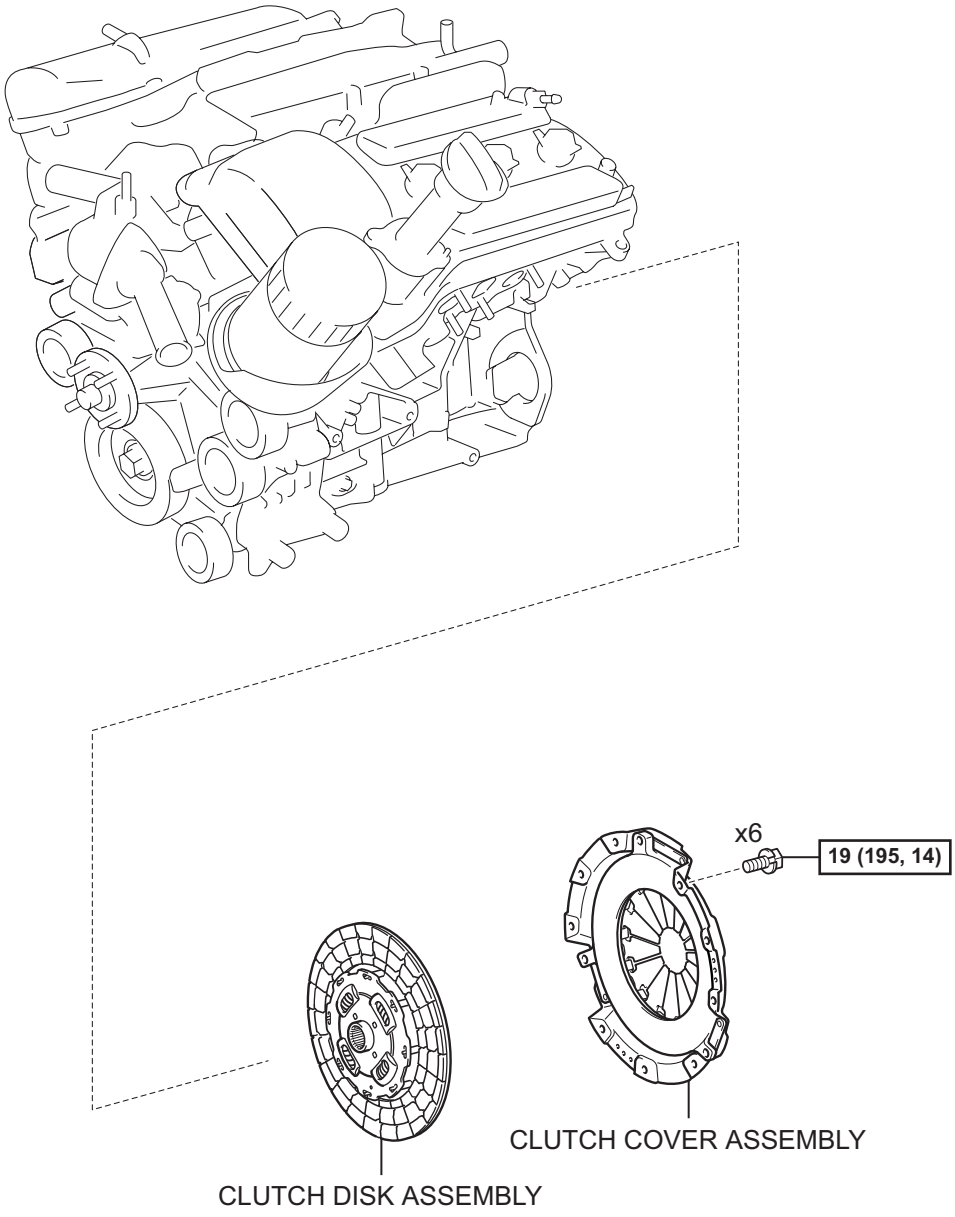

N*m (kgf*cm, ft*lbf) : Specified torque

Y

A113585E01

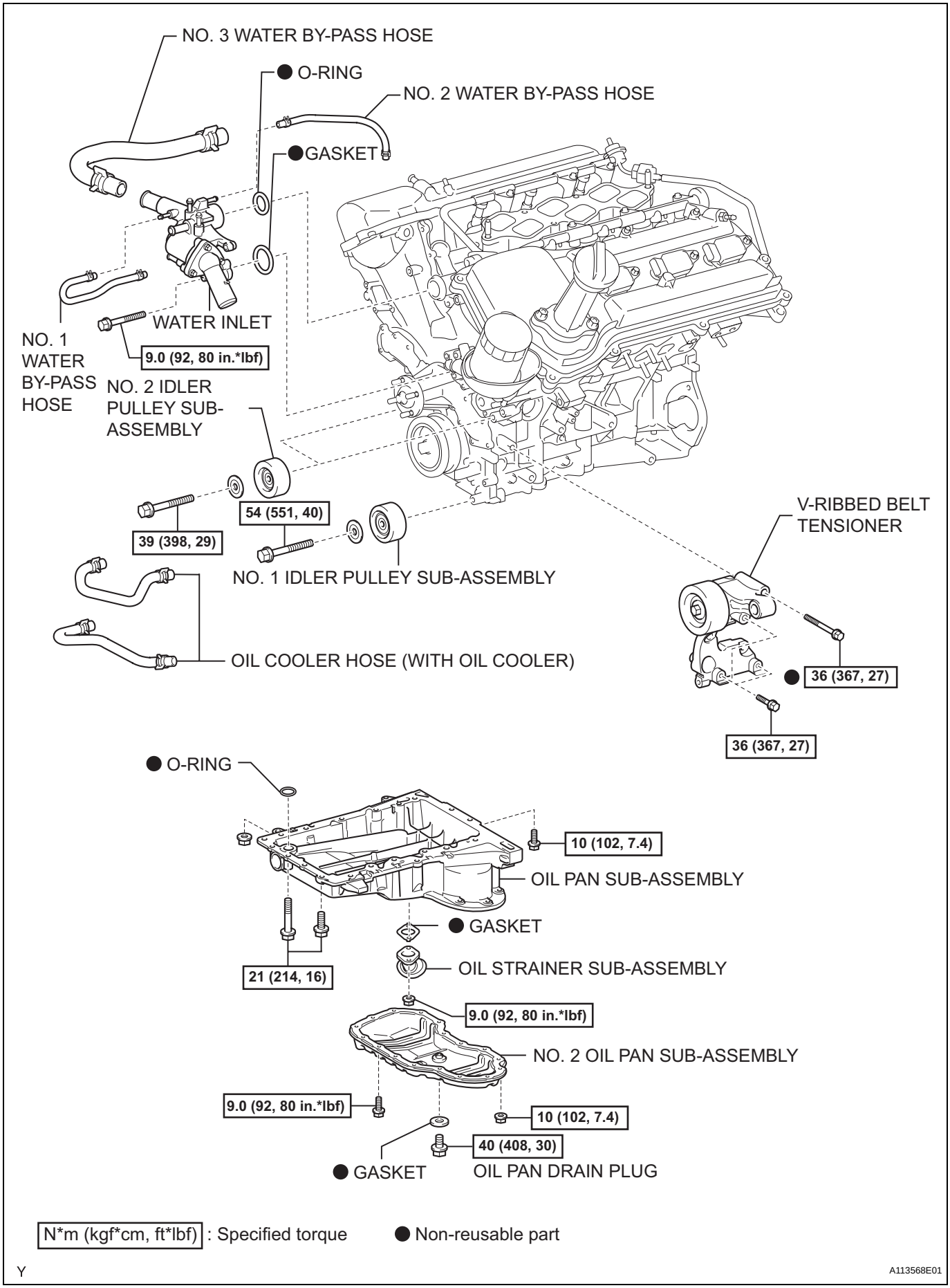
NO. 3 WATER BY-PASS HOSE
O-RING
NO. 2 WATER BY-PASS HOSE
GASKET
WATER INLET
9.0 (92, 80 in.*lbf)
NO. 1 WATER BY-PASS HOSE
NO. 2 IDLER PULLEY SUB-ASSEMBLY
54 (551, 40)
39 (398, 29)
NO. 1 IDLER PULLEY SUB-ASSEMBLY
V-RIBBED BELT TENSIONER
OIL COOLER HOSE (WITH OIL COOLER)
36 (367, 27)
36 (367, 27)
O-RING
10 (102, 7.4)
OIL PAN SUB-ASSEMBLY
GASKET
OIL STRAINER SUB-ASSEMBLY
21 (214, 16)
9.0 (92, 80 in.*lbf)
NO. 2 OIL PAN SUB-ASSEMBLY
9.0 (92, 80 in.*lbf)
10 (102, 7.4)
40 (408, 30)
GASKET
OIL PAN DRAIN PLUG
N*m (kgf*cm, ft*lbf) : Specified torque
Non-reusable part
Y
A113568E01

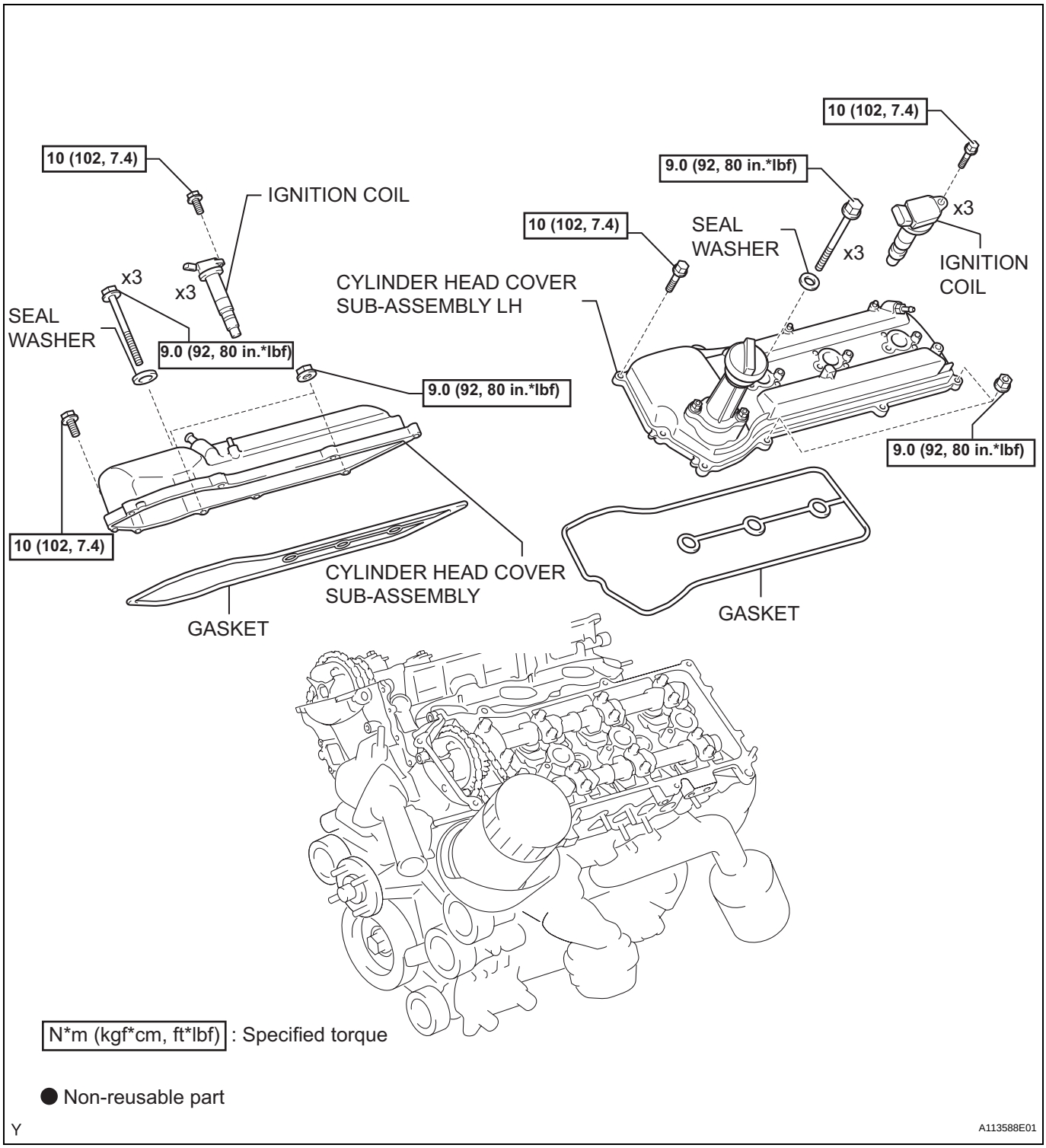
10 (102, 7.4)
IGNITION COIL
x3
x3
SEAL WASHER
9.0 (92, 80 in.*lbf)
9.0 (92, 80 in.*lbf)
10 (102, 7.4)
CYLINDER HEAD COVER SUB-ASSEMBLY
GASKET
10 (102, 7.4)
9.0 (92, 80 in.*lbf)
SEAL WASHER
x3
10 (102, 7.4)
x3
IGNITION COIL
CYLINDER HEAD COVER SUB-ASSEMBLY LH
9.0 (92, 80 in.*lbf)
GASKET
N*m (kgf*cm, ft*lbf) : Specified torque
● Non-reusable part
Y
A113588E01

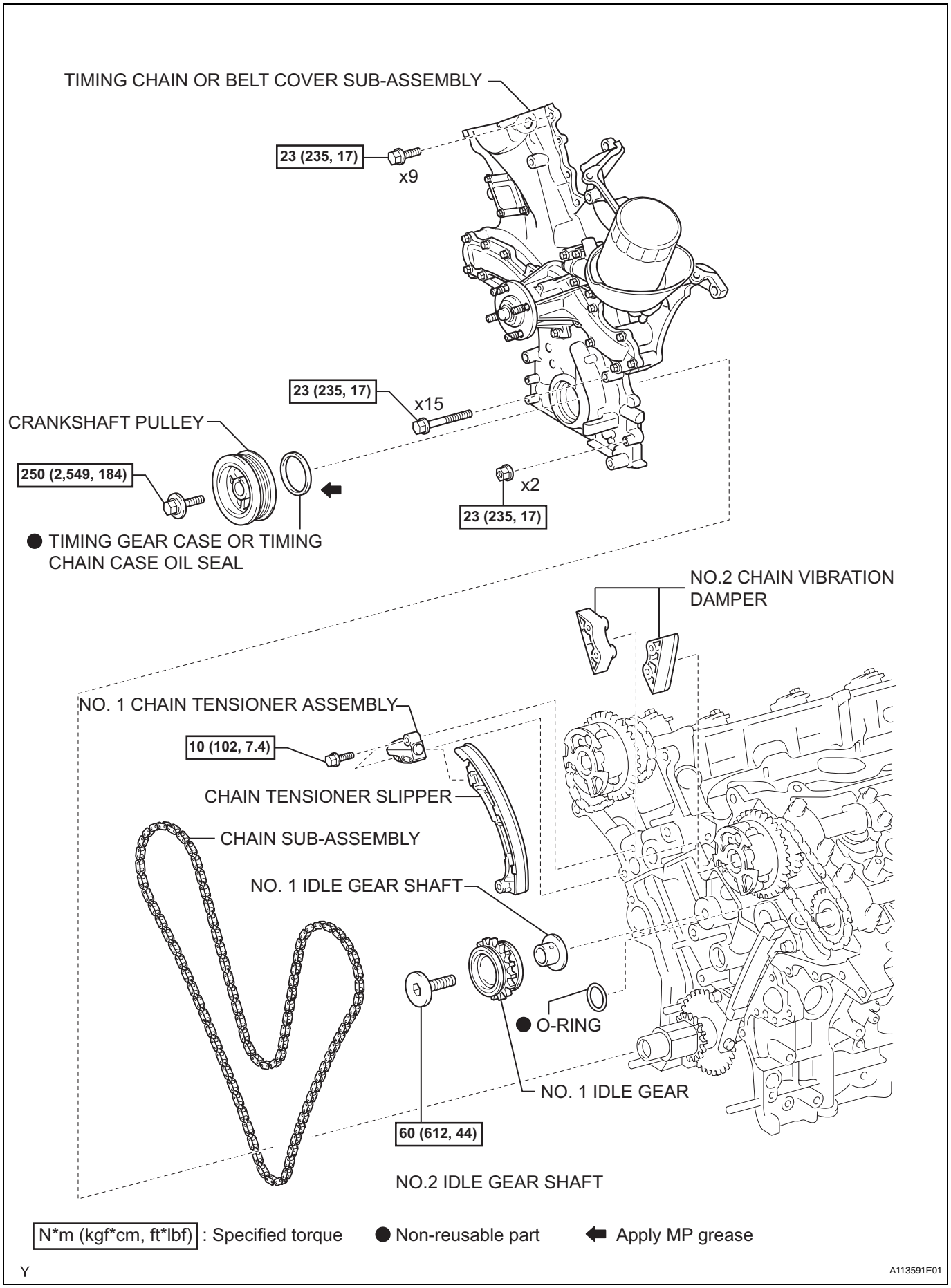

EM

N*m (kgf*cm, ft*lbf) : Specified torque ● Non-reusable part ⬅ Apply MP grease

Y

A113591E01

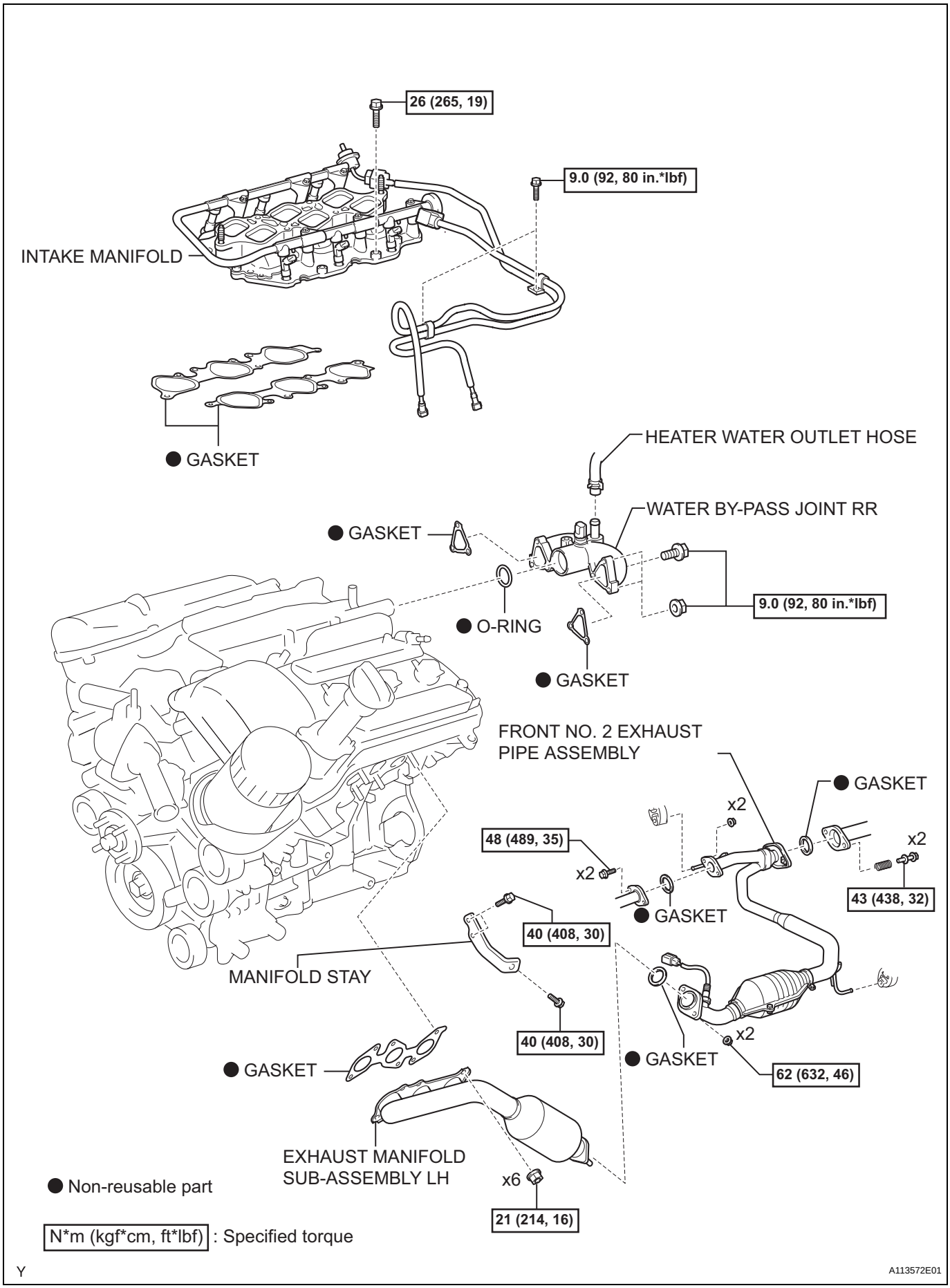
26 (265, 19)
9.0 (92, 80 in.*lbf)
INTAKE MANIFOLD
GASKET
HEATER WATER OUTLET HOSE
WATER BY-PASS JOINT RR
GASKET
9.0 (92, 80 in.*lbf)
O-RING
GASKET
FRONT NO. 2 EXHAUST PIPE ASSEMBLY
GASKET
x2
48 (489, 35)
x2
x2
43 (438, 32)
GASKET
40 (408, 30)
MANIFOLD STAY
40 (408, 30)
x2
GASKET
62 (632, 46)
GASKET
EXHAUST MANIFOLD SUB-ASSEMBLY LH
x6
21 (214, 16)
Non-reusable part
N*m (kgf*cm, ft*lbf) : Specified torque
Y
A113572E01

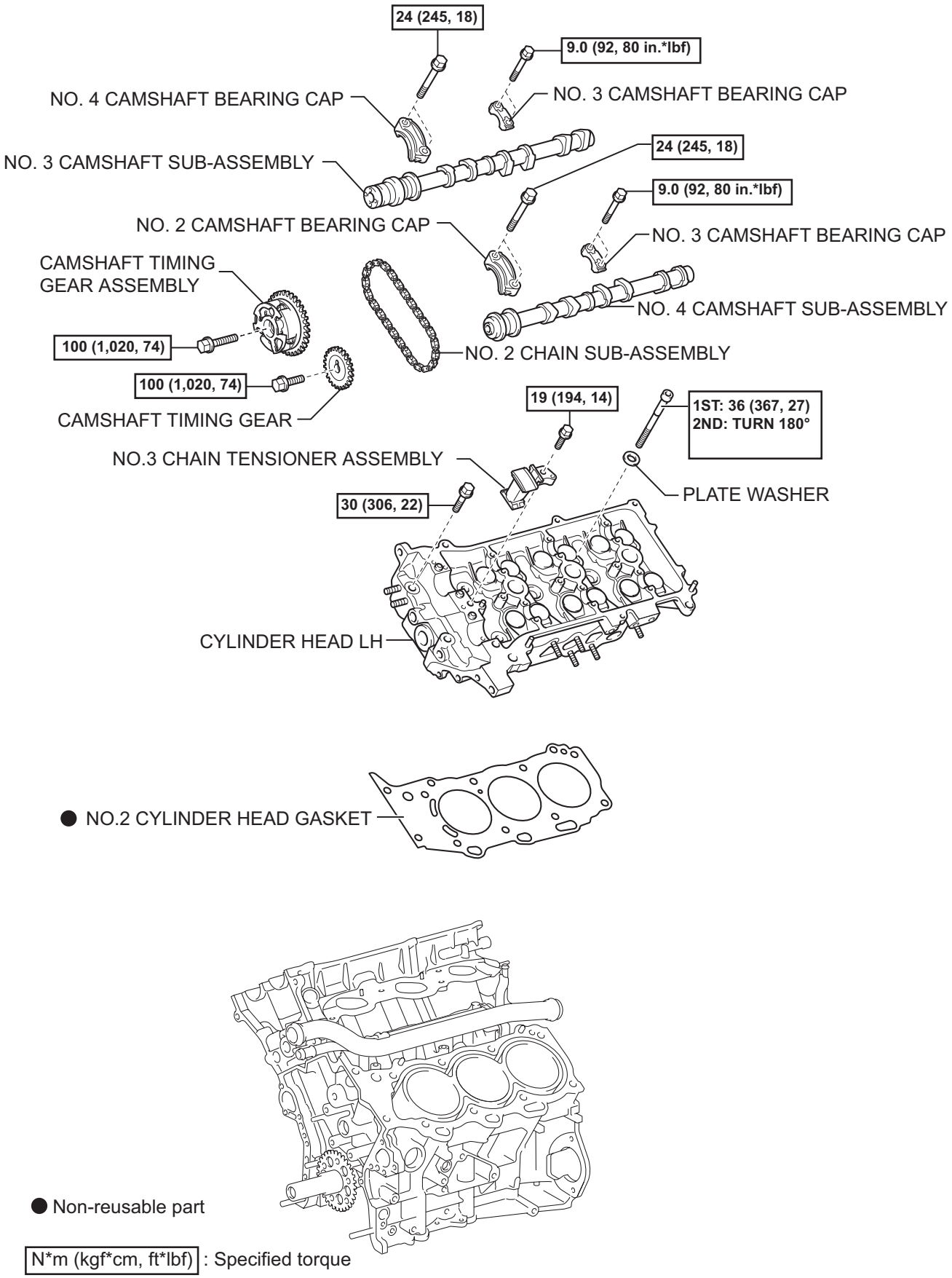
24 (245, 18)
9.0 (92, 80 in.*lbf)
NO. 4 CAMSHAFT BEARING CAP
NO. 3 CAMSHAFT BEARING CAP
NO. 3 CAMSHAFT SUB-ASSEMBLY
24 (245, 18)
9.0 (92, 80 in.*lbf)
NO. 2 CAMSHAFT BEARING CAP
NO. 3 CAMSHAFT BEARING CAP
CAMSHAFT TIMING GEAR ASSEMBLY
NO. 4 CAMSHAFT SUB-ASSEMBLY
100 (1,020, 74)
NO. 2 CHAIN SUB-ASSEMBLY
100 (1,020, 74)
CAMSHAFT TIMING GEAR
19 (194, 14)
1ST: 36 (367, 27)
2ND: TURN 180°
NO.3 CHAIN TENSIONER ASSEMBLY
PLATE WASHER
30 (306, 22)
CYLINDER HEAD LH
● NO.2 CYLINDER HEAD GASKET
● Non-reusable part
N*m (kgf*cm, ft*lbf) : Specified torque
Y
A113595E01

EM

CYLINDER HEAD (for Bank 2 4WD and Pre-Runner)

COMPONENTS

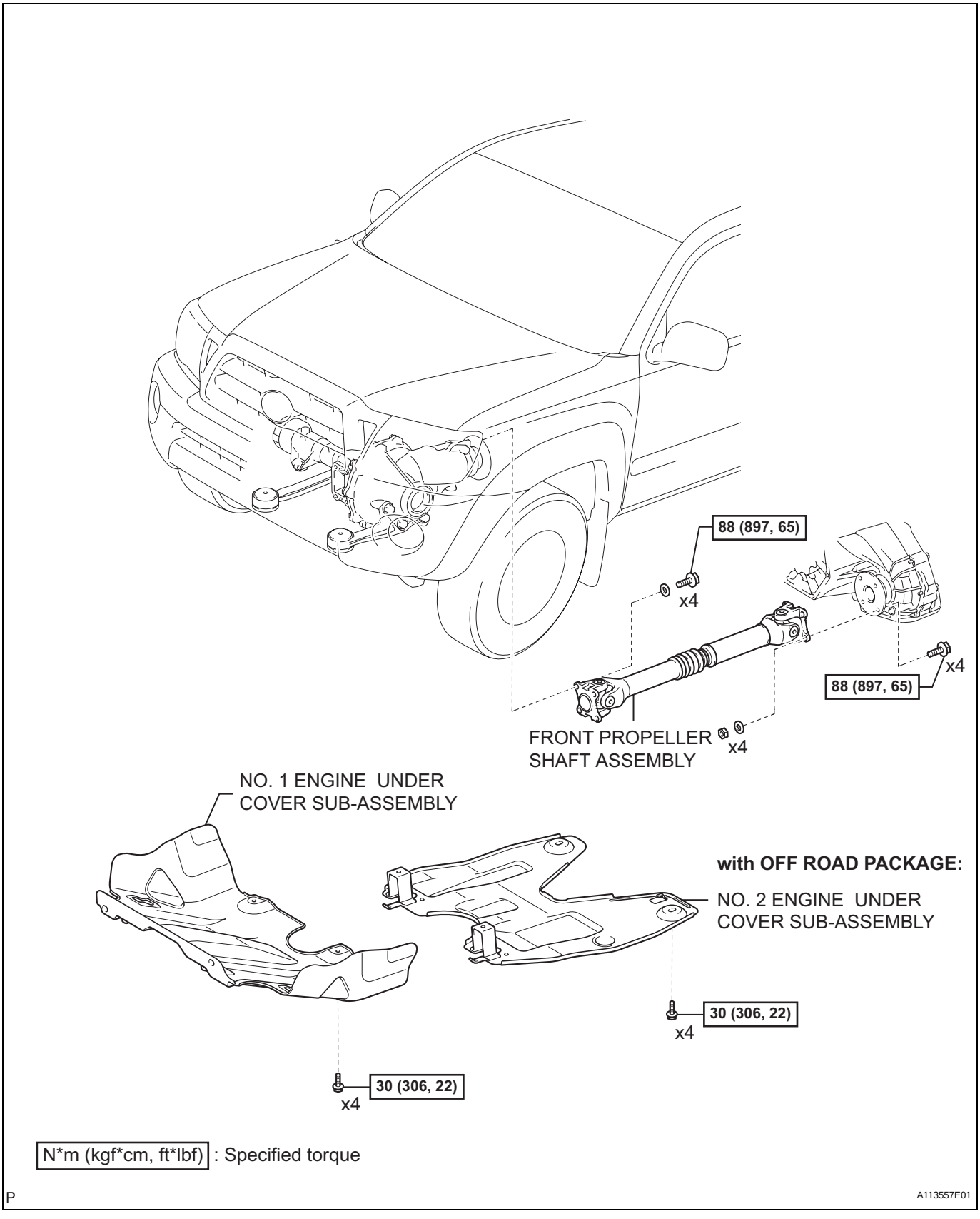

N*m (kgf*cm, ft*lbf) : Specified torque

P

A113557E01

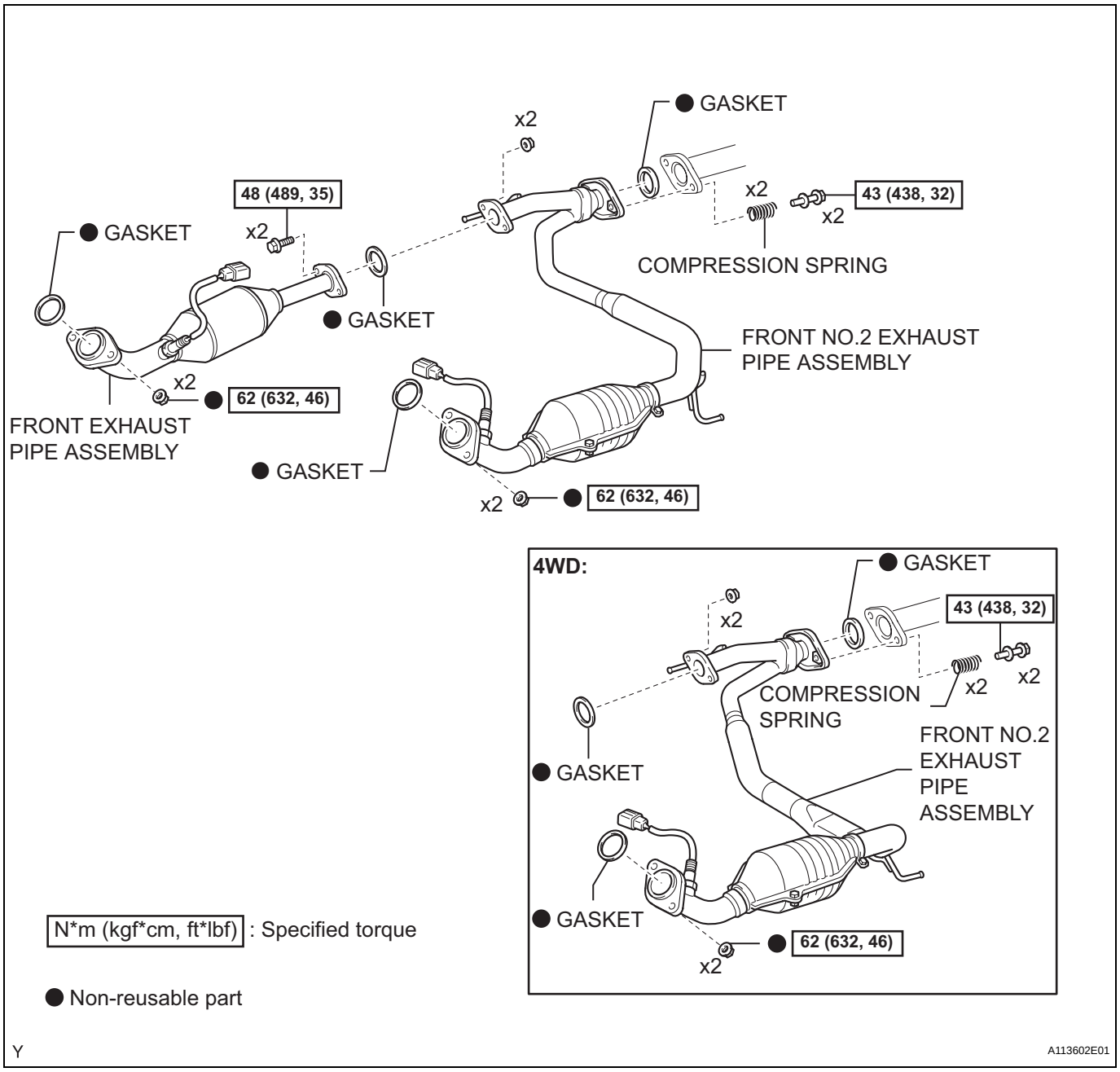
GASKET
x2
48 (489, 35)
GASKET
x2
x2
43 (438, 32)
x2
COMPRESSION SPRING
GASKET
FRONT NO.2 EXHAUST PIPE ASSEMBLY
x2
62 (632, 46)
FRONT EXHAUST PIPE ASSEMBLY
GASKET
x2
62 (632, 46)
4WD:
GASKET
x2
43 (438, 32)
x2
x2
COMPRESSION SPRING
FRONT NO.2 EXHAUST PIPE ASSEMBLY
GASKET
GASKET
62 (632, 46)
x2
N*m (kgf*cm, ft*lbf) : Specified torque
Non-reusable part
Y
A113602E01

EM

PRE RUNNER:

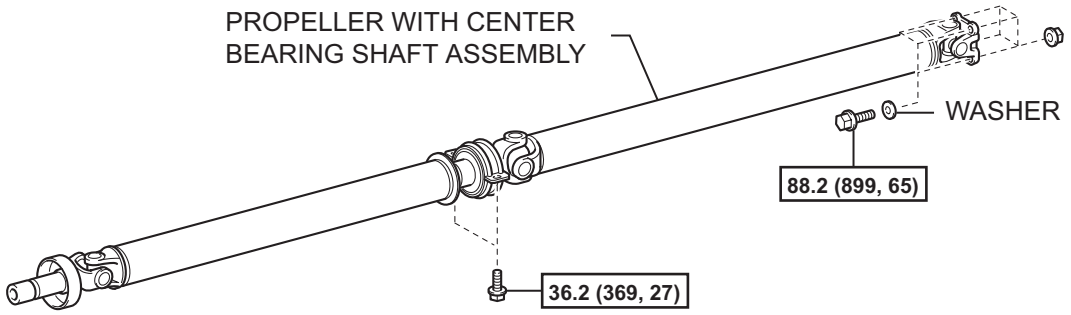

EM

4WD:

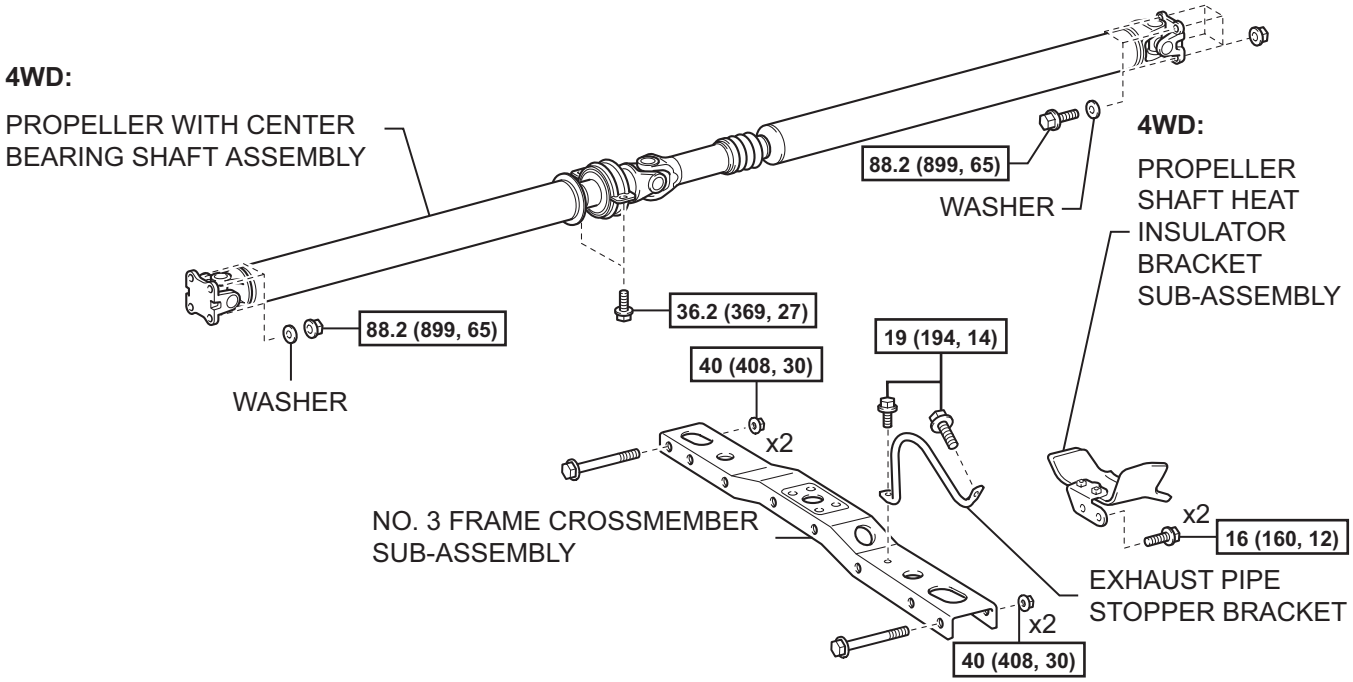

N*m (kgf*cm, ft*lbf) : Specified torque

Y

A113600E01

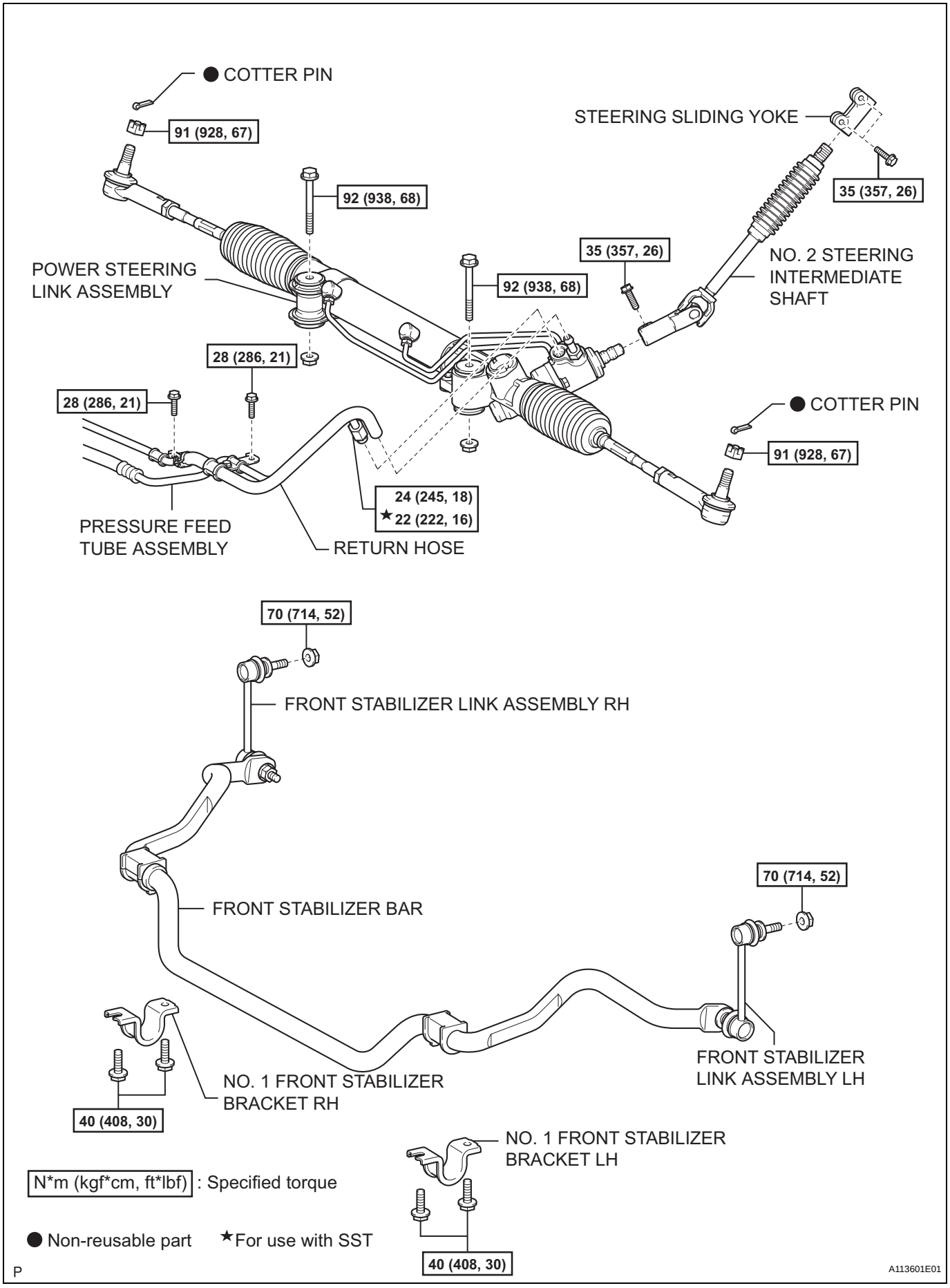
● COTTER PIN
91 (928, 67)
92 (938, 68)
STEERING SLIDING YOKE
35 (357, 26)
35 (357, 26)
NO. 2 STEERING INTERMEDIATE SHAFT
POWER STEERING LINK ASSEMBLY
92 (938, 68)
28 (286, 21)
28 (286, 21)
● COTTER PIN
91 (928, 67)
24 (245, 18)
★22 (222, 16)
PRESSURE FEED TUBE ASSEMBLY
RETURN HOSE
70 (714, 52)
FRONT STABILIZER LINK ASSEMBLY RH
FRONT STABILIZER BAR
70 (714, 52)
NO. 1 FRONT STABILIZER BRACKET RH
FRONT STABILIZER LINK ASSEMBLY LH
40 (408, 30)
NO. 1 FRONT STABILIZER BRACKET LH
40 (408, 30)
N*m (kgf*cm, ft*lbf) : Specified torque
● Non-reusable part ★For use with SST
P
A113601E01

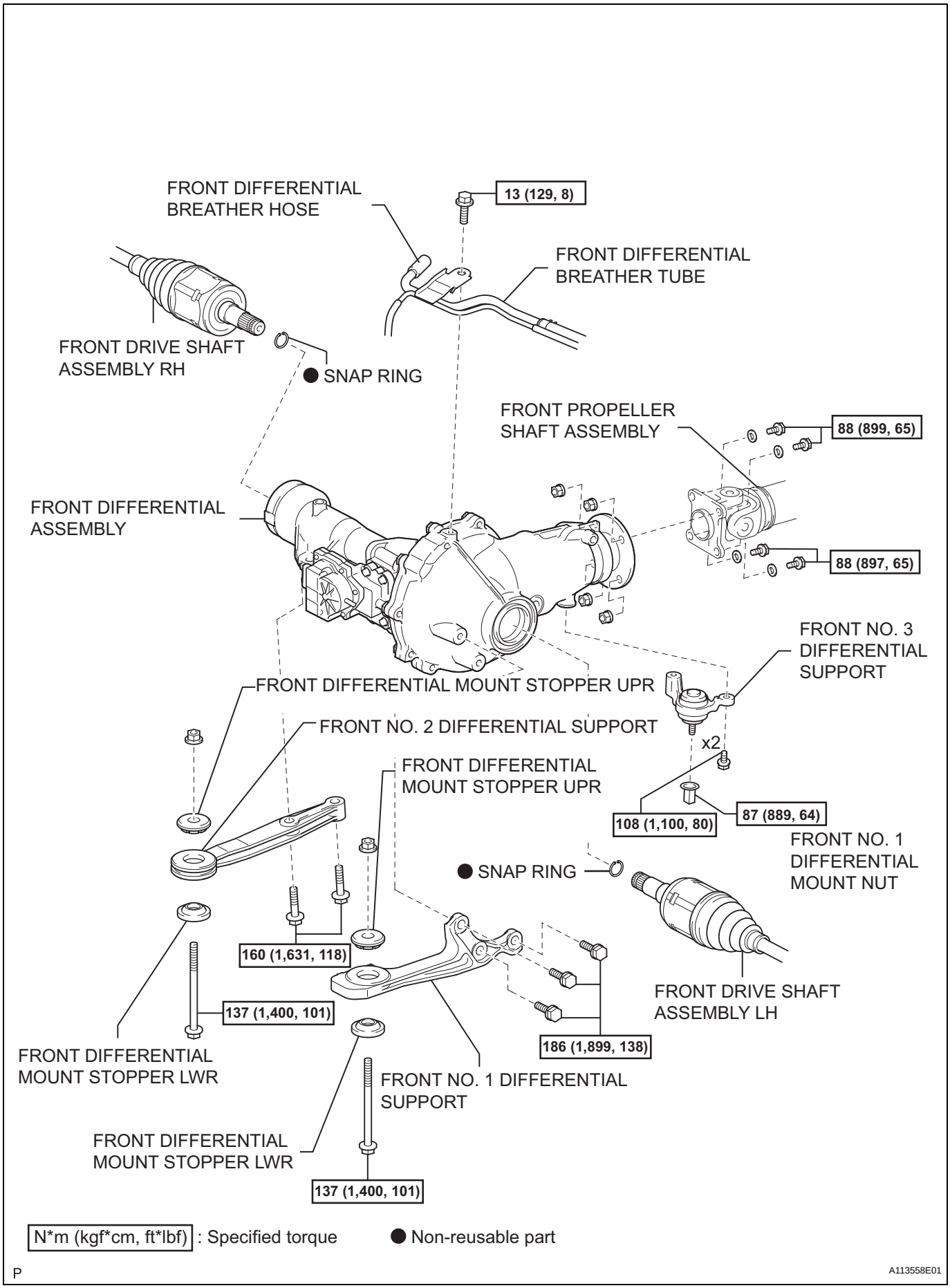

N*m (kgf*cm, ft*lbf) : Specified torque ● Non-reusable part

P

A113558E01

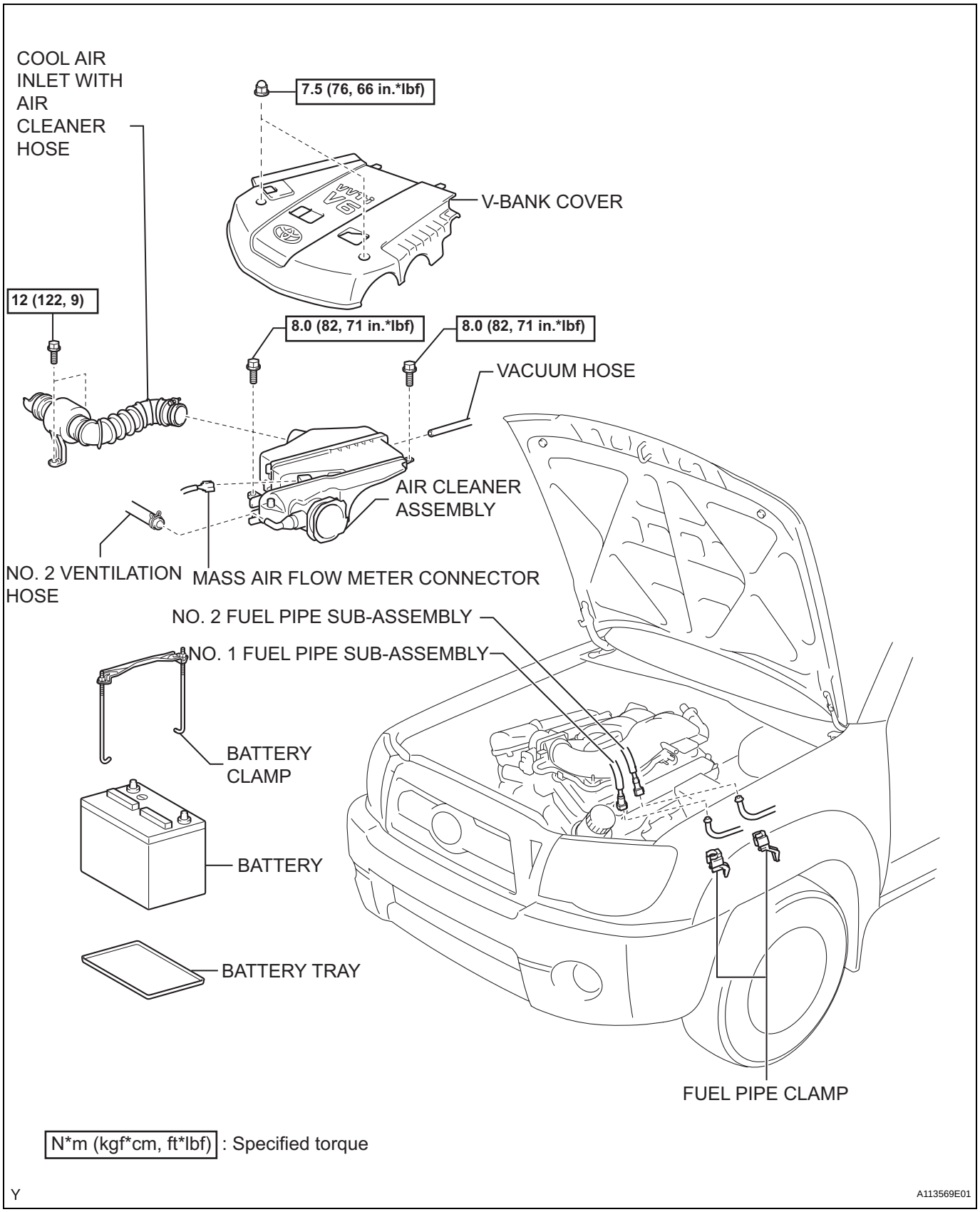
COOL AIR INLET WITH AIR CLEANER HOSE
7.5 (76, 66 in.*lbf)
V-BANK COVER
12 (122, 9)
8.0 (82, 71 in.*lbf)
8.0 (82, 71 in.*lbf)
VACUUM HOSE
AIR CLEANER ASSEMBLY
NO. 2 VENTILATION HOSE
MASS AIR FLOW METER CONNECTOR
NO. 2 FUEL PIPE SUB-ASSEMBLY
NO. 1 FUEL PIPE SUB-ASSEMBLY
BATTERY CLAMP
BATTERY
BATTERY TRAY
FUEL PIPE CLAMP
N*m (kgf*cm, ft*lbf) : Specified torque
Y
A113569E01

EM

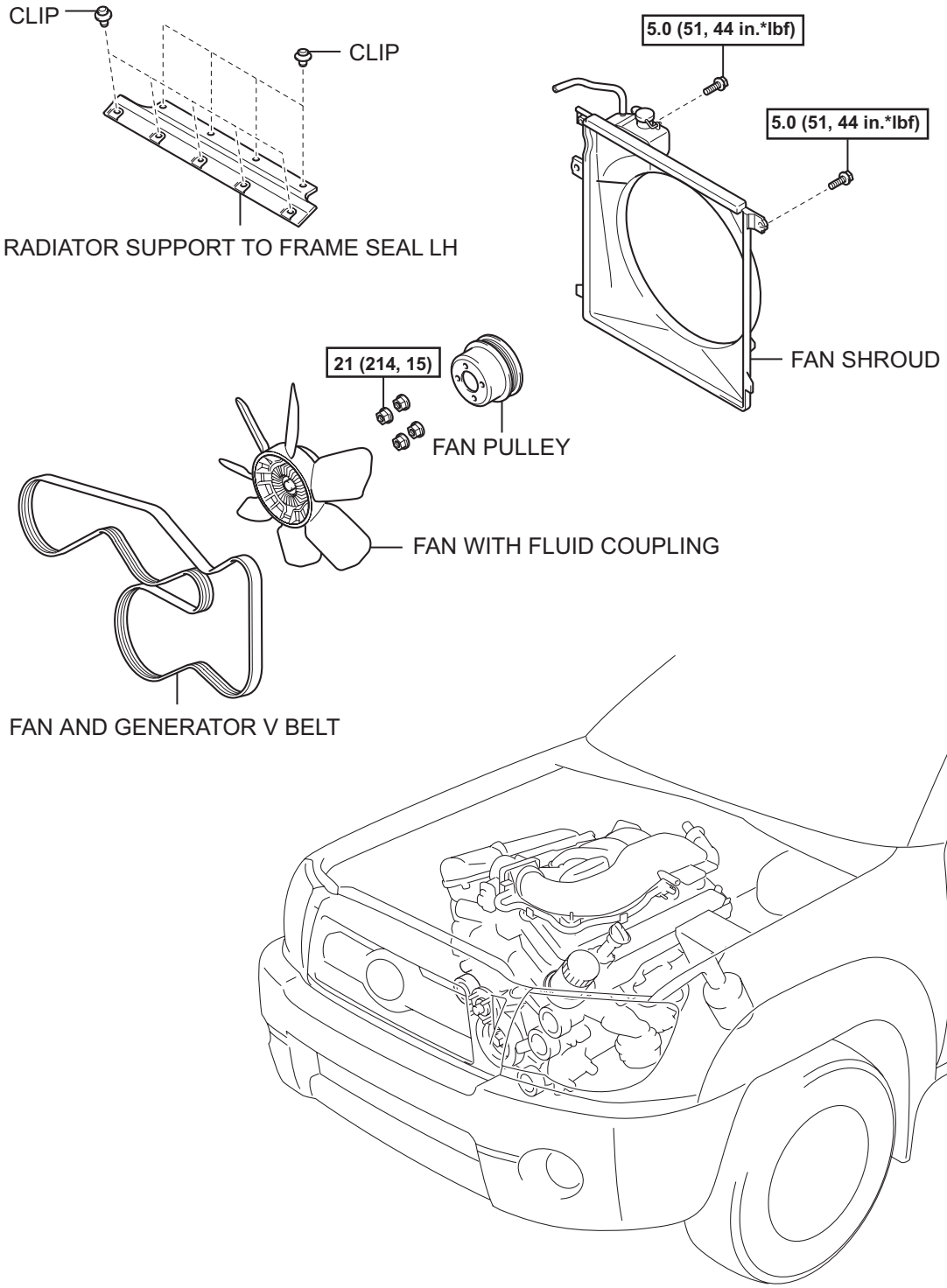

EM

N*m (kgf*cm, ft*lbf) : Specified torque

Y

A113567E01

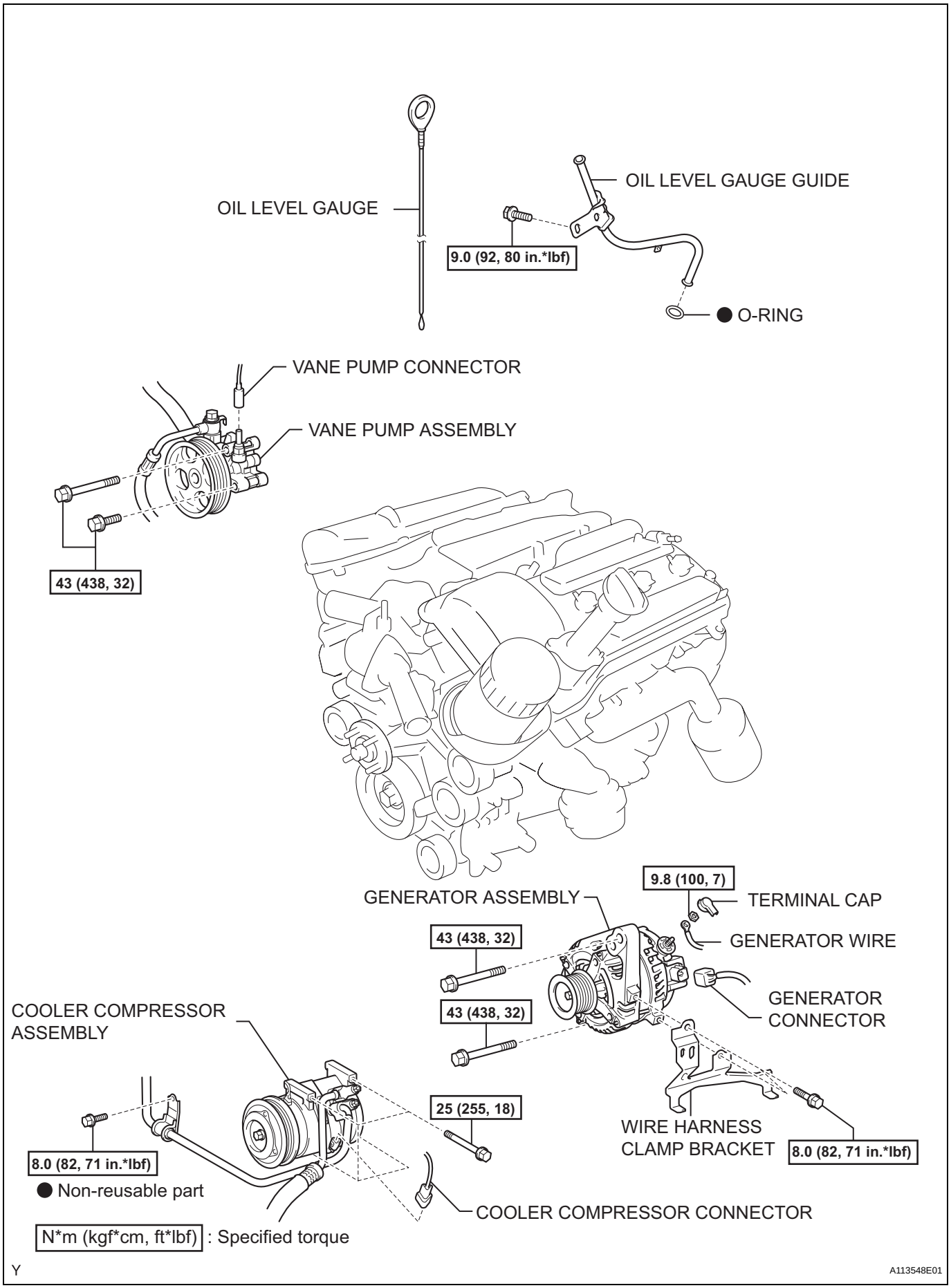
OIL LEVEL GAUGE
OIL LEVEL GAUGE GUIDE
9.0 (92, 80 in.*lbf)
● O-RING
VANE PUMP CONNECTOR
VANE PUMP ASSEMBLY
43 (438, 32)
GENERATOR ASSEMBLY
9.8 (100, 7)
TERMINAL CAP
GENERATOR WIRE
43 (438, 32)
GENERATOR CONNECTOR
COOLER COMPRESSOR ASSEMBLY
43 (438, 32)
25 (255, 18)
WIRE HARNESS CLAMP BRACKET
8.0 (82, 71 in.*lbf)
8.0 (82, 71 in.*lbf)
● Non-reusable part
COOLER COMPRESSOR CONNECTOR
N*m (kgf*cm, ft*lbf) : Specified torque
Y
A113548E01

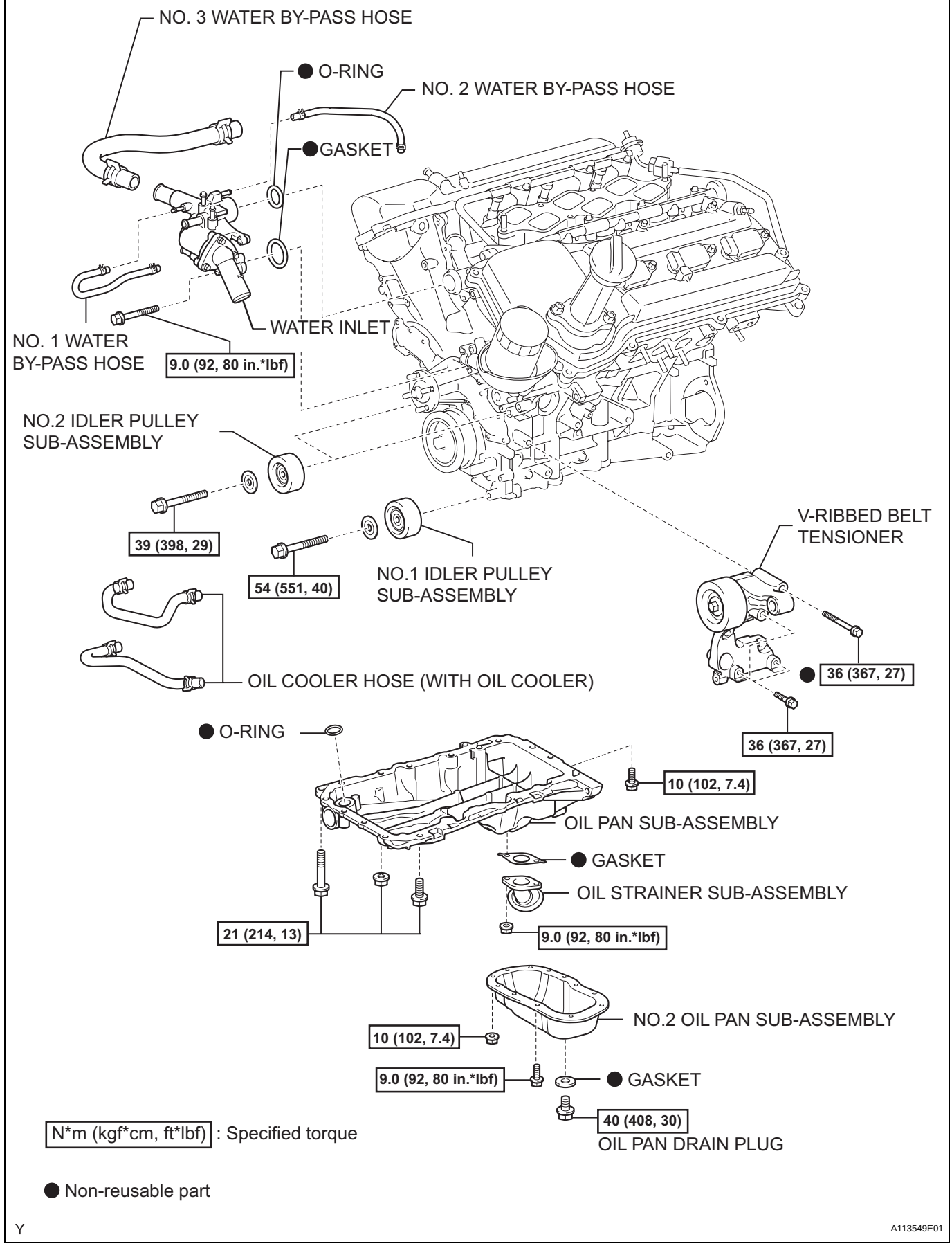
NO. 3 WATER BY-PASS HOSE
● O-RING
NO. 2 WATER BY-PASS HOSE
●GASKET
WATER INLET
NO. 1 WATER BY-PASS HOSE
9.0 (92, 80 in.*lbf)
NO.2 IDLER PULLEY SUB-ASSEMBLY
39 (398, 29)
54 (551, 40)
NO.1 IDLER PULLEY SUB-ASSEMBLY
V-RIBBED BELT TENSIONER
OIL COOLER HOSE (WITH OIL COOLER)
● 36 (367, 27)
36 (367, 27)
● O-RING
10 (102, 7.4)
OIL PAN SUB-ASSEMBLY
● GASKET
OIL STRAINER SUB-ASSEMBLY
21 (214, 13)
9.0 (92, 80 in.*lbf)
NO.2 OIL PAN SUB-ASSEMBLY
10 (102, 7.4)
9.0 (92, 80 in.*lbf)
● GASKET
40 (408, 30)
OIL PAN DRAIN PLUG
N*m (kgf*cm, ft*lbf) : Specified torque
● Non-reusable part
A113549E01

EM

Y

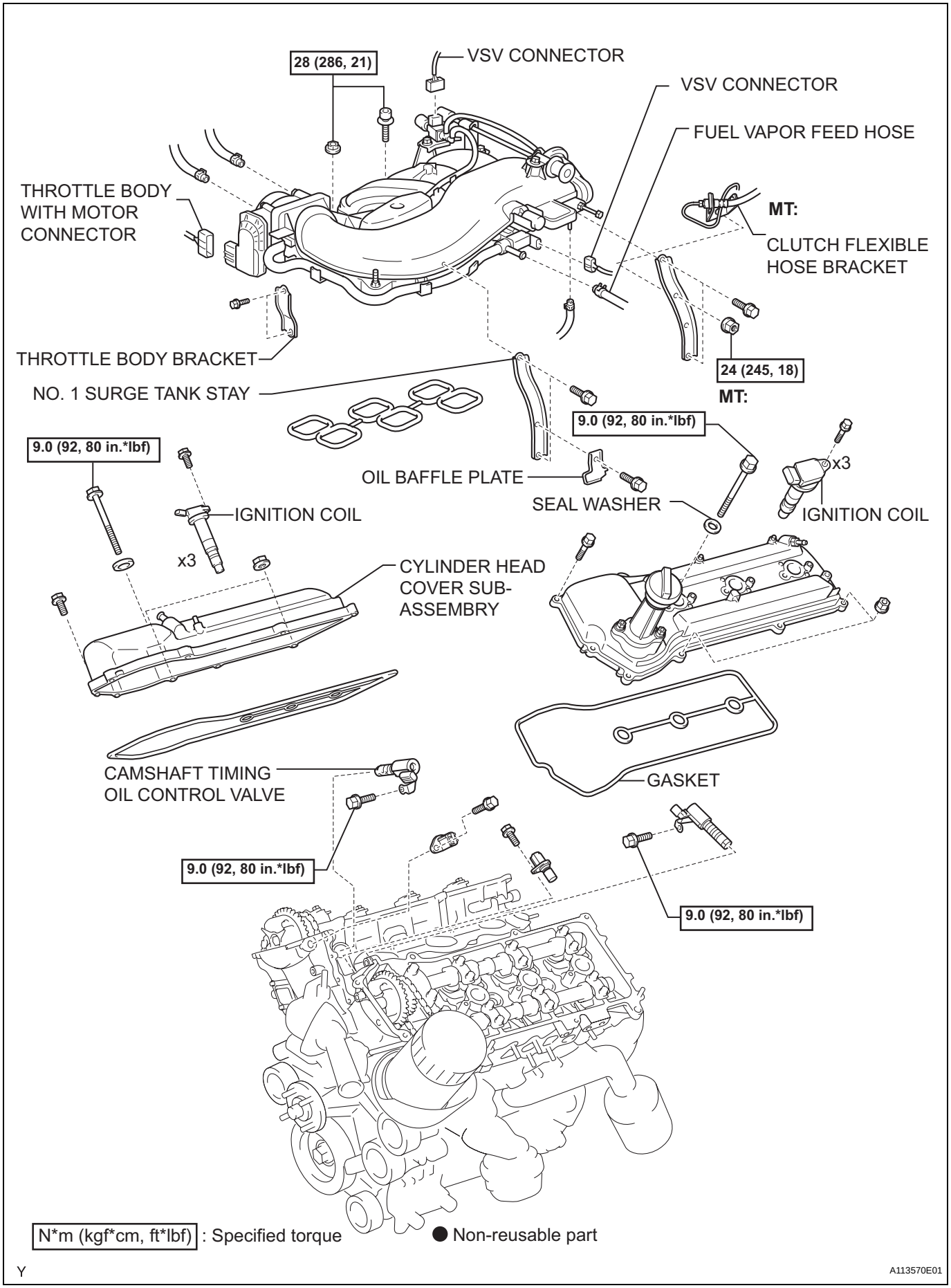
28 (286, 21)
VSV CONNECTOR
VSV CONNECTOR
FUEL VAPOR FEED HOSE
THROTTLE BODY WITH MOTOR CONNECTOR
MT:
CLUTCH FLEXIBLE HOSE BRACKET
THROTTLE BODY BRACKET
24 (245, 18)
MT:
NO. 1 SURGE TANK STAY
9.0 (92, 80 in.*lbf)
9.0 (92, 80 in.*lbf)
OIL BAFFLE PLATE
x3
SEAL WASHER
IGNITION COIL
IGNITION COIL
x3
CYLINDER HEAD COVER SUB-ASSEMBRY
CAMSHAFT TIMING OIL CONTROL VALVE
GASKET
9.0 (92, 80 in.*lbf)
9.0 (92, 80 in.*lbf)
N*m (kgf*cm, ft*lbf) : Specified torque
● Non-reusable part
Y
A113570E01

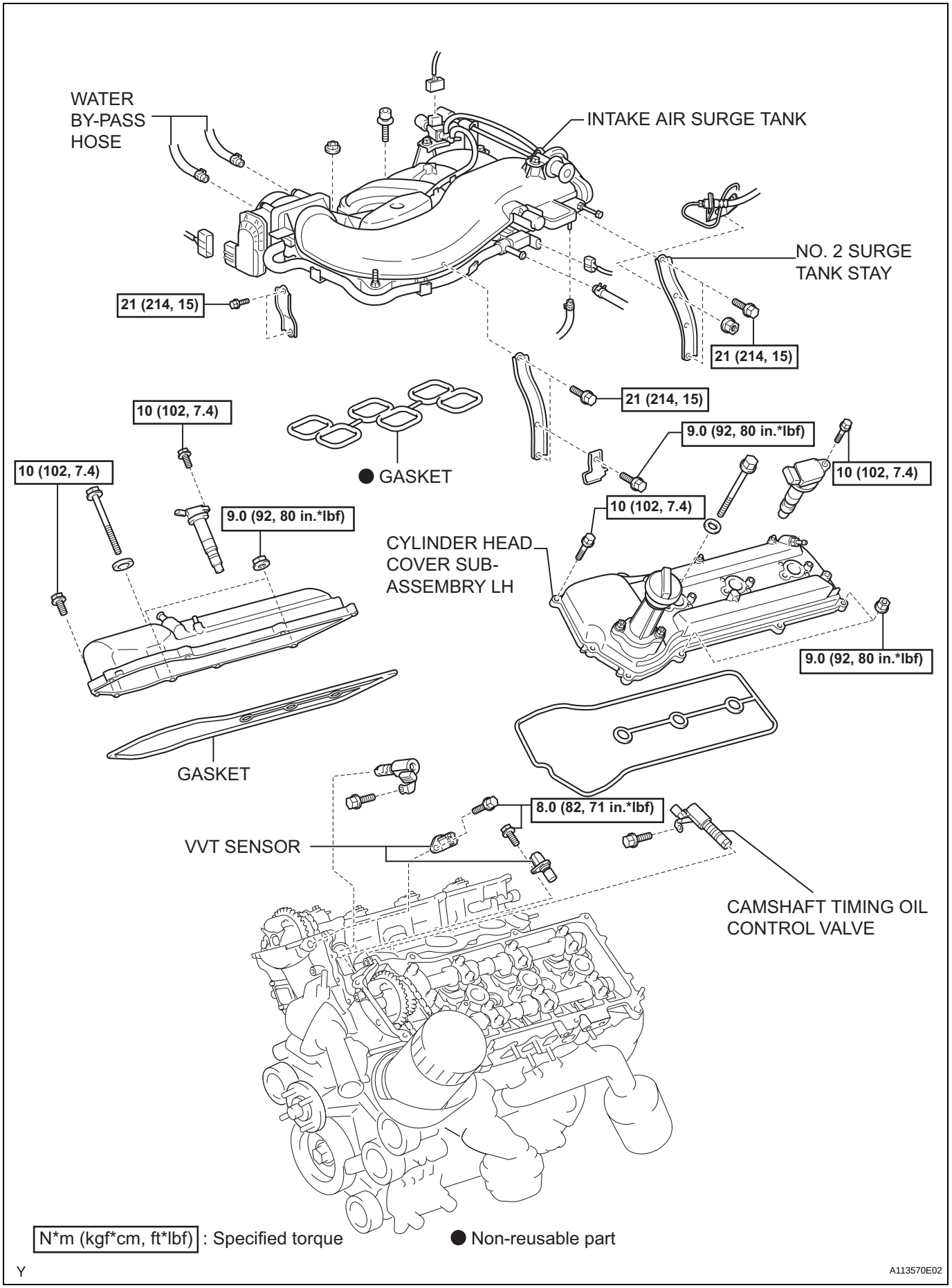
WATER BY-PASS HOSE
INTAKE AIR SURGE TANK
NO. 2 SURGE TANK STAY
21 (214, 15)
21 (214, 15)
21 (214, 15)
10 (102, 7.4)
GASKET
9.0 (92, 80 in.*lbf)
10 (102, 7.4)
10 (102, 7.4)
9.0 (92, 80 in.*lbf)
10 (102, 7.4)
CYLINDER HEAD COVER SUB-ASSEMBRY LH
9.0 (92, 80 in.*lbf)
GASKET
8.0 (82, 71 in.*lbf)
VVT SENSOR
CAMSHAFT TIMING OIL CONTROL VALVE
N*m (kgf*cm, ft*lbf) : Specified torque
● Non-reusable part
Y
A113570E02

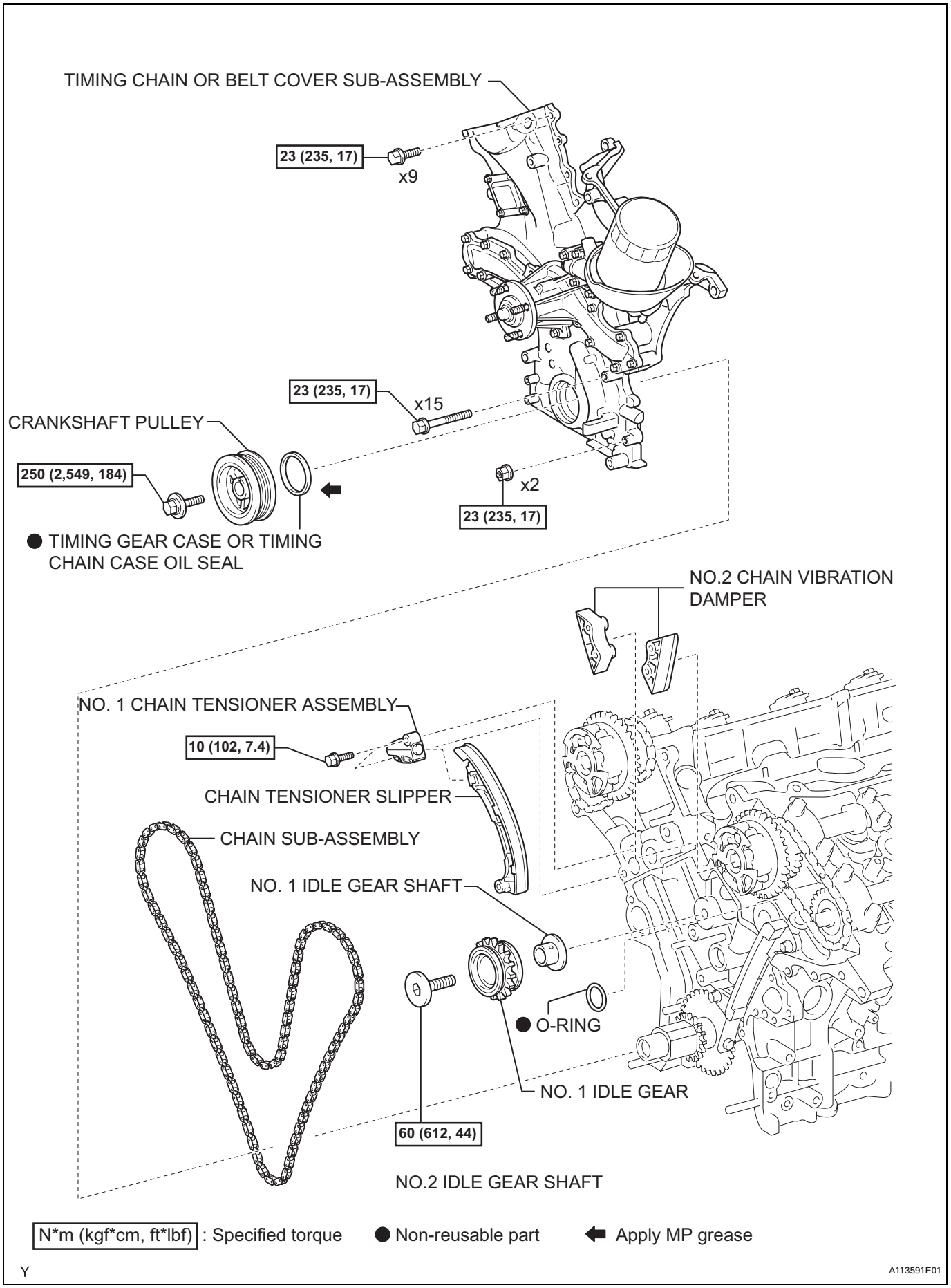

N*m (kgf*cm, ft*lbf) : Specified torque ● Non-reusable part ⬅ Apply MP grease

Y

A113591E01

EM

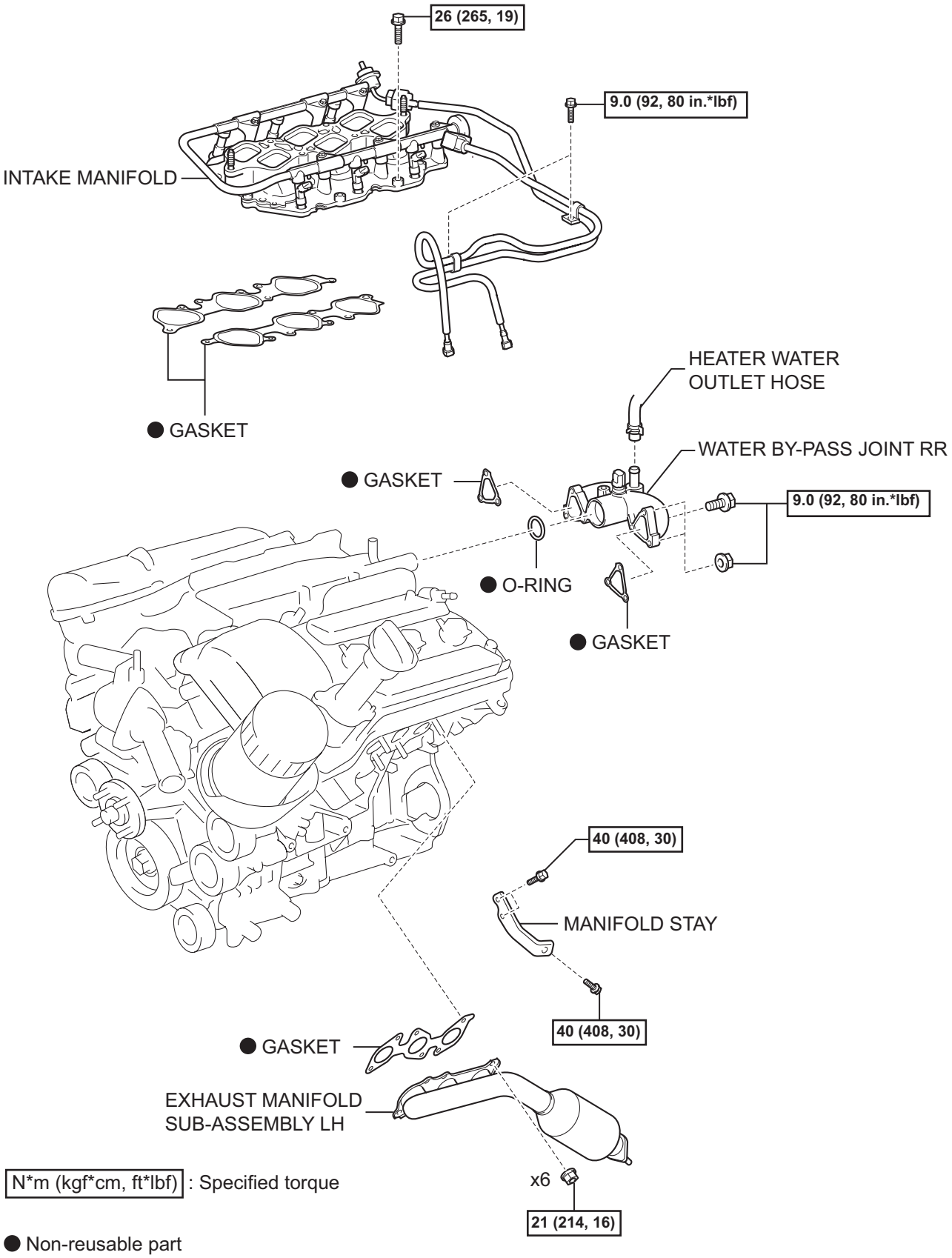
26 (265, 19)
9.0 (92, 80 in.*lbf)
INTAKE MANIFOLD
GASKET
HEATER WATER OUTLET HOSE
WATER BY-PASS JOINT RR
GASKET
9.0 (92, 80 in.*lbf)
O-RING
GASKET
40 (408, 30)
MANIFOLD STAY
40 (408, 30)
GASKET
EXHAUST MANIFOLD SUB-ASSEMBLY LH
x6
21 (214, 16)
N*m (kgf*cm, ft*lbf) : Specified torque
Non-reusable part
Y
A113604E01

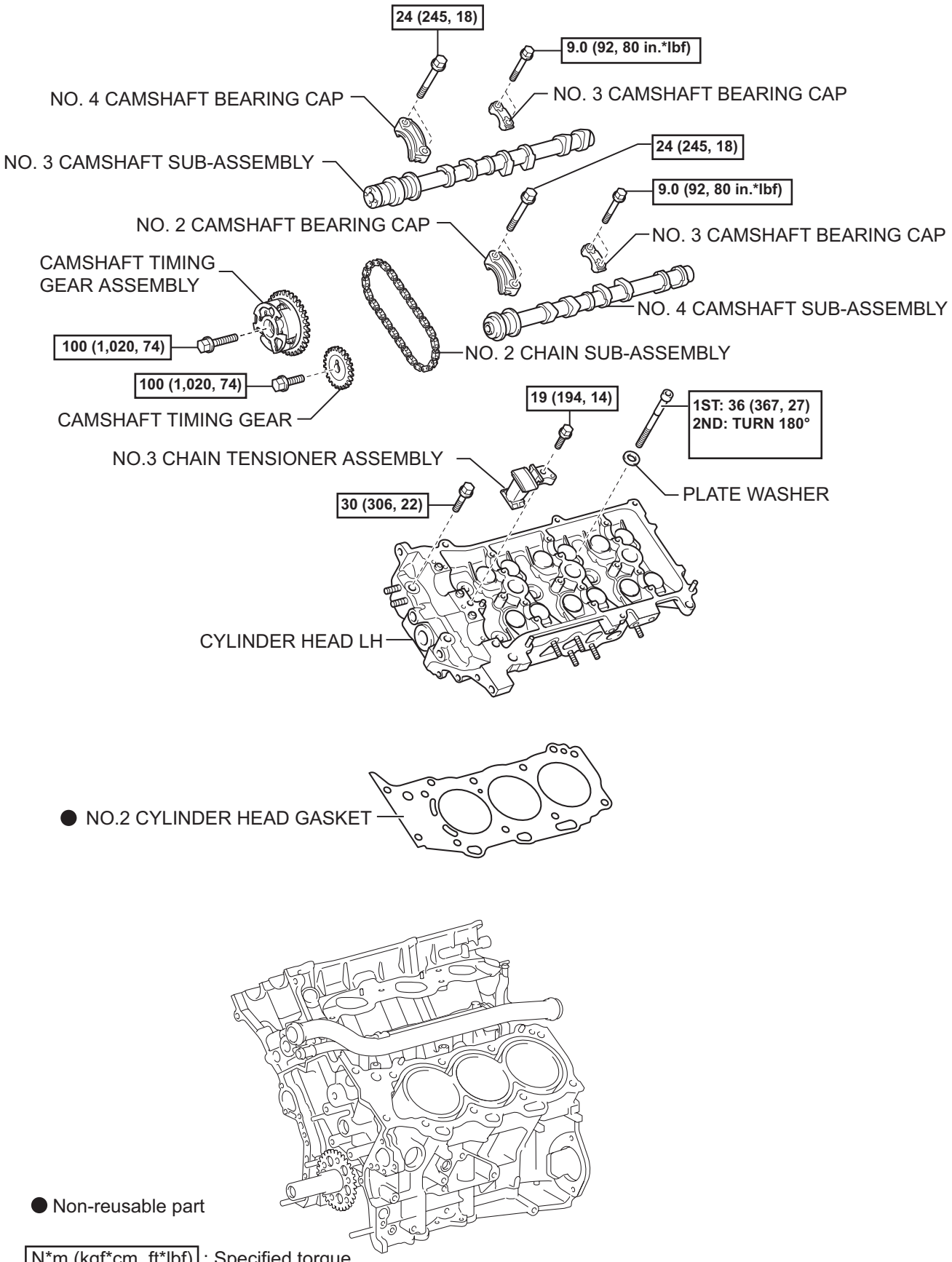
24 (245, 18)
9.0 (92, 80 in.*lbf)
NO. 4 CAMSHAFT BEARING CAP
NO. 3 CAMSHAFT BEARING CAP
NO. 3 CAMSHAFT SUB-ASSEMBLY
24 (245, 18)
9.0 (92, 80 in.*lbf)
NO. 2 CAMSHAFT BEARING CAP
NO. 3 CAMSHAFT BEARING CAP
CAMSHAFT TIMING GEAR ASSEMBLY
NO. 4 CAMSHAFT SUB-ASSEMBLY
100 (1,020, 74)
NO. 2 CHAIN SUB-ASSEMBLY
100 (1,020, 74)
CAMSHAFT TIMING GEAR
19 (194, 14)
1ST: 36 (367, 27)
2ND: TURN 180°
NO.3 CHAIN TENSIONER ASSEMBLY
PLATE WASHER
30 (306, 22)
CYLINDER HEAD LH
● NO.2 CYLINDER HEAD GASKET
● Non-reusable part
N*m (kgf*cm, ft*lbf) : Specified torque
Y
A113595E01

EM

ENGINE FRONT OIL SEAL

REMOVAL

1. **DISCONNECT CABLE FROM NEGATIVE BATTERY TERMINAL**
2. **REMOVE V-BANK COVER (See page ES-414)**
3. **REMOVE RADIATOR SUPPORT TO FRAME SEAL LH (See page CO-15)**
4. **REMOVE NO.1 ENGINE UNDER COVER SUB-ASSEMBLY (for 4WD and Pre Runner Drive Type)**
   (a) Remove the 4 bolts and engine under cover.
5. **REMOVE FAN SHROUD (See page CO-15)**
6. **REMOVE CRANKSHAFT PULLEY (See page EM-45)**
7. **REMOVE TIMING GEAR CASE OR TIMING CHAIN CASE OIL SEAL**
   (a) Using a screwdriver, pry out the oil seal.
   NOTICE:
   Be careful not to damage the crankshaft. Wrap a tip of the screwdriver with tape.

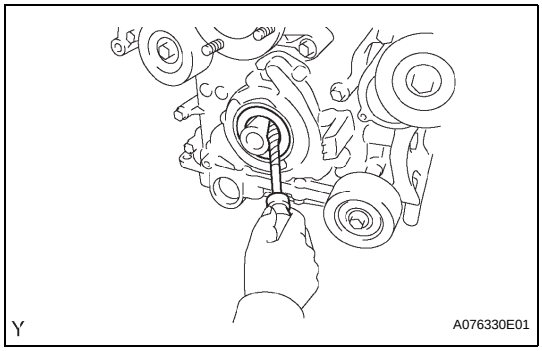

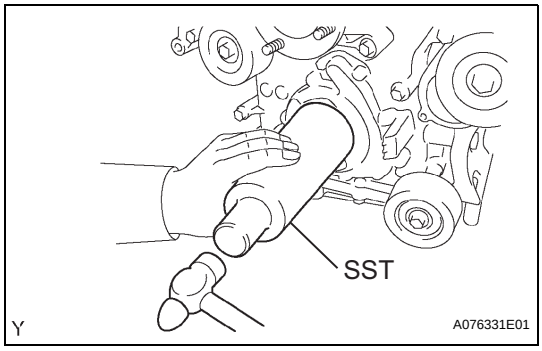

INSTALLATION

1. **INSTALL TIMING GEAR CASE OR TIMING CHAIN CASE OIL SEAL**
   (a) Apply MP grease to a new oil seal lip.
   (b) Using SST and a hammer, tap in the oil seal until its surface is flush with the timing chain cover edge.
   SST 09226-10010
2. **INSTALL CRANKSHAFT PULLEY (See page EM-30)**
3. **INSTALL FAN SHROUD (See page CO-20)**
4. **INSTALL RADIATOR SUPPORT TO FRAME SEAL LH**
5. **CONNECT CABLE TO NEGATIVE BATTERY TERMINAL**
   Torque: 3.9 N*m (40 kgf*cm, 35 in.*lbf)
6. **CHECK FOR ENGINE OIL LEAKAGE**
7. **INSTALL ENGINE UNDER COVER SUB-ASSEMBLY (for 4WD and Pre Runner Drive Type)**
   (a) Install the engine under cover with the 4 bolts.
   Torque: 29 N*m (296 kgf*cm, 21 ft.*lbf)
8. **INSTALL V-BANK COVER**
   (a) Install the V-bank cover with the 2 nuts.
   Torque: 7.5 N*m (76 kgf*cm, 66 in.*lbf)

ENGINE REAR OIL SEAL

REMOVAL

1. **REMOVE TRANSMISSION ASSEMBLY (See page EM-186)**

2. **REMOVE FLYWHEEL SUB-ASSEMBLY (for Manual Transmission)**

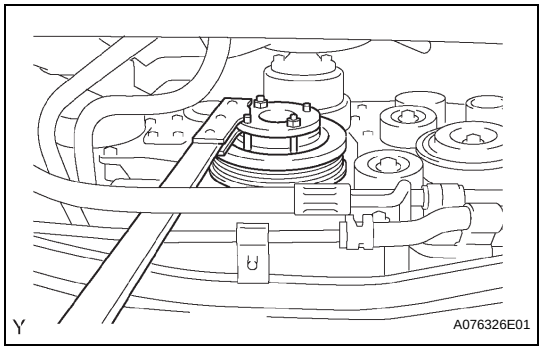

(a) Using SST, hold the crankshaft.
SST 09213-54015 (91651-60855), 09330-00021

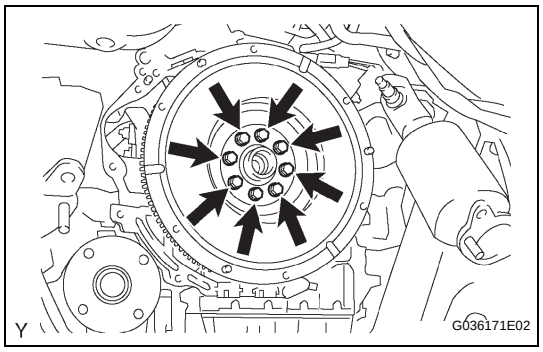

(b) Remove the 8 bolts, then remove the flywheel and 2 spacers.

3. **REMOVE DRIVE PLATE & RING GEAR SUB-ASSEMBLY (for Automatic Transmission)**

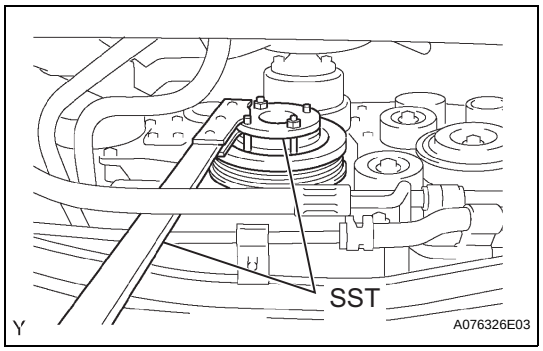

(a) Using SST, hold the crankshaft.
SST 09213-54015 (91651-60855), 09330-00021

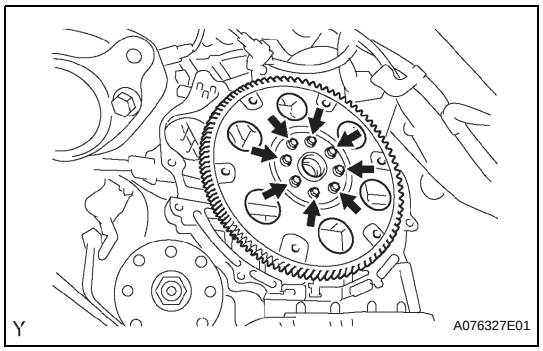

(b) Remove the 8 bolts, then remove the drive plate and 2 spacers.

EM

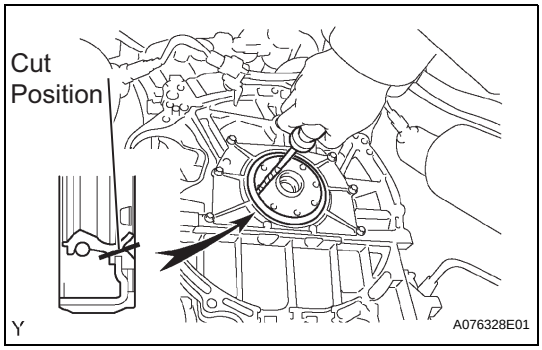

4. REMOVE REAR ENGINE OIL SEAL

(a) Using a knife, cut off the oil seal lip.

(b) Using a screwdriver, pry out the oil seal.

NOTICE:

Be careful not to damage the crankshaft. Wrap the screwdriver tip with tape.

INSTALLATION

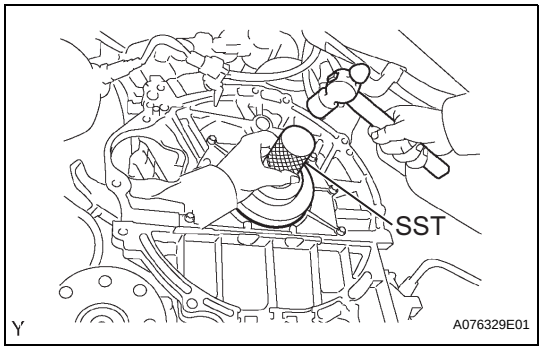

1. INSTALL REAR ENGINE OIL SEAL

(a) Apply MP grease to a new oil seal tip.

(b) Using SST and a hammer, tap in the oil seal until its surface is flush with the rear oil seal retainer edge.

SST 09223-78010

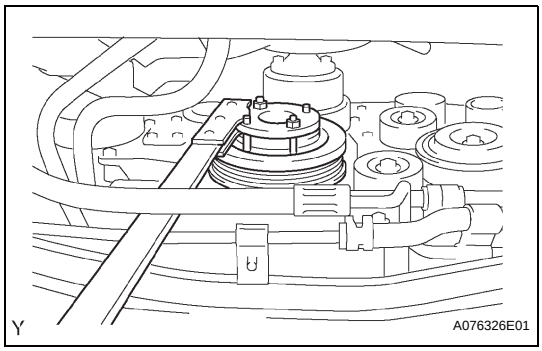

2. INSTALL FLYWHEEL SUB-ASSEMBLY (for Manual Transmission)

(a) Using SST, hold the crankshaft.

SST 09213-54015 (91651-60855), 09330-00021

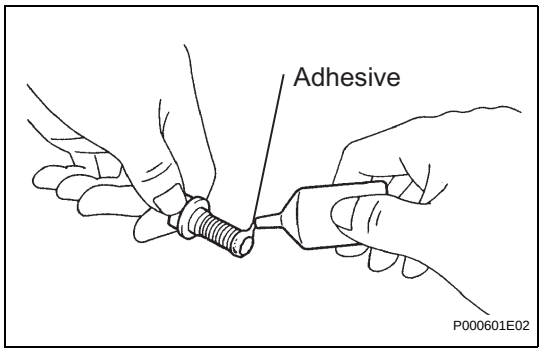

(b) Apply adhesive to 2 or 3 threads of the mounting bolt end.

Adhesive:

Part No. 08833-00070, THREE BOND 1324 or equivalent

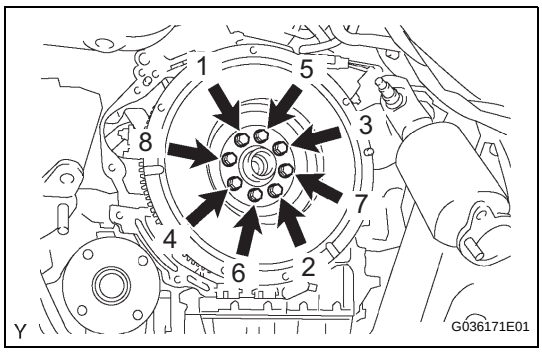

(c) Install the flywheel and 2 spacers onto the crankshaft.

(d) Using several steps, uniformly install and tighten the 8 mounting bolts in the sequence shown in the illustration.

Torque: 83 N*m (846 kgf*cm, 61 ft.*lbf)

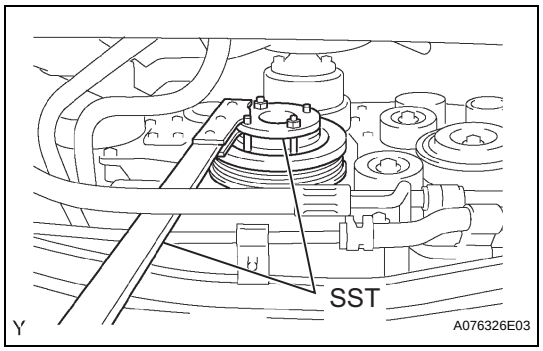

3. INSTALL DRIVE PLATE & RING GEAR SUB-ASSEMBLY (for Automatic Transmission)

(a) Using SST, hold the crankshaft.
SST 09213-54015 (91651-60855), 09330-00021

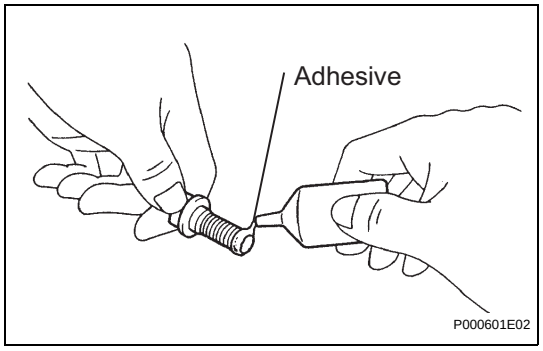

(b) Apply adhesive to 2 or 3 threads of the mounting bolt end.
Adhesive:
Part No. 08833-00070, THREE BOND 1324 or equivalent

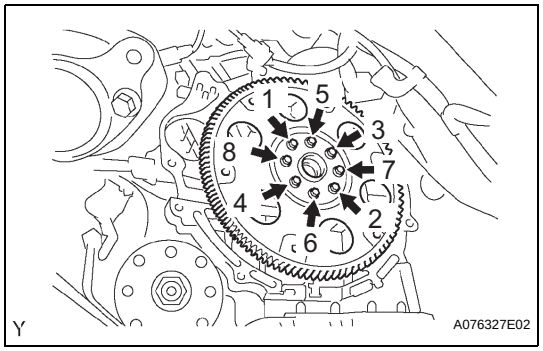

(c) Install the drive plate and 2 spacers onto the crankshaft.

(d) Using several steps, uniformly install and tighten the 8 mounting bolts in the sequence shown in the illustration.
Torque: 83 N*m (846 kgf*cm, 61 ft.*lbf)

4. INSTALL TRANSMISSION ASSEMBLY (See page EM-192)

EM

ENGINE ASSEMBLY

COMPONENTS

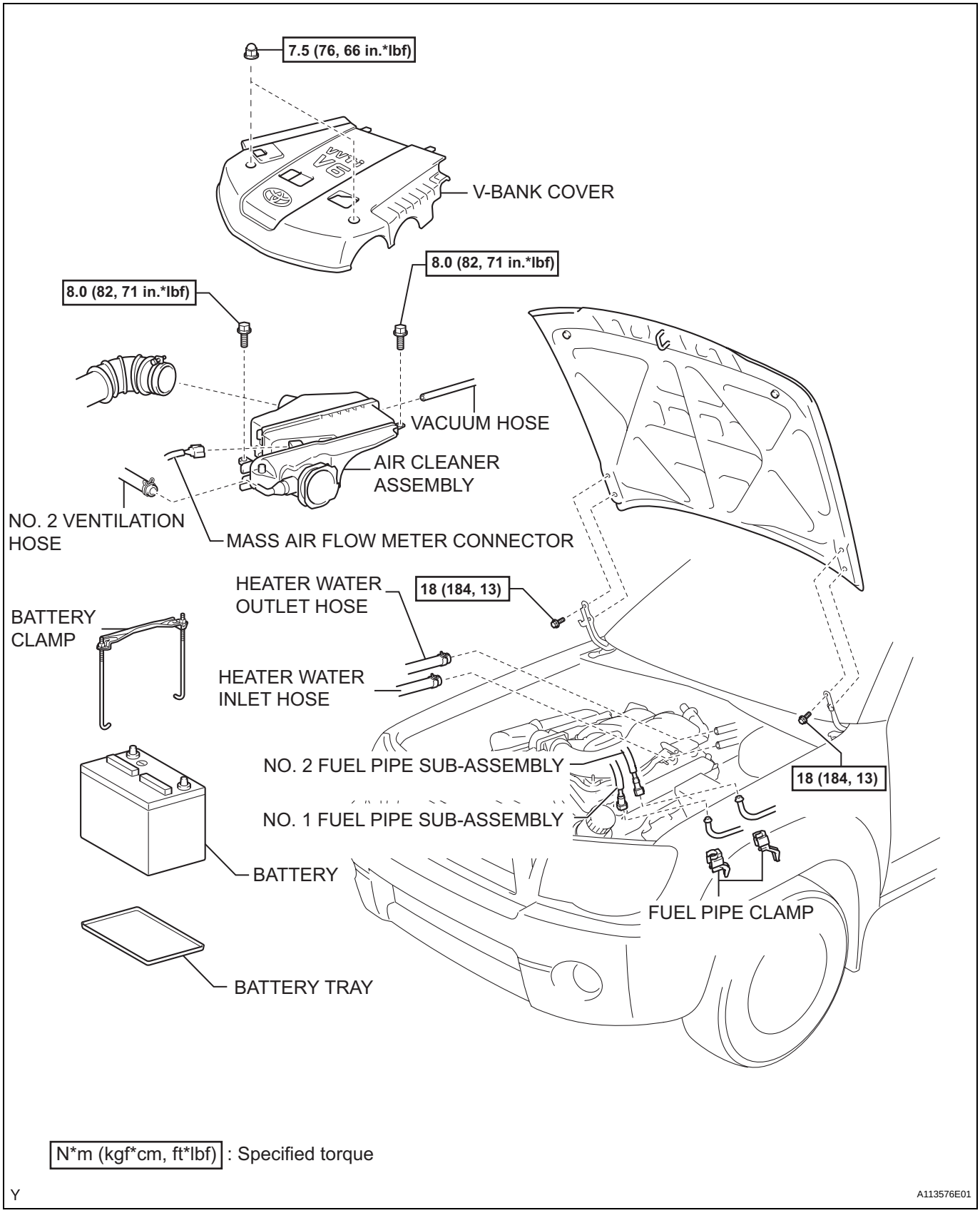

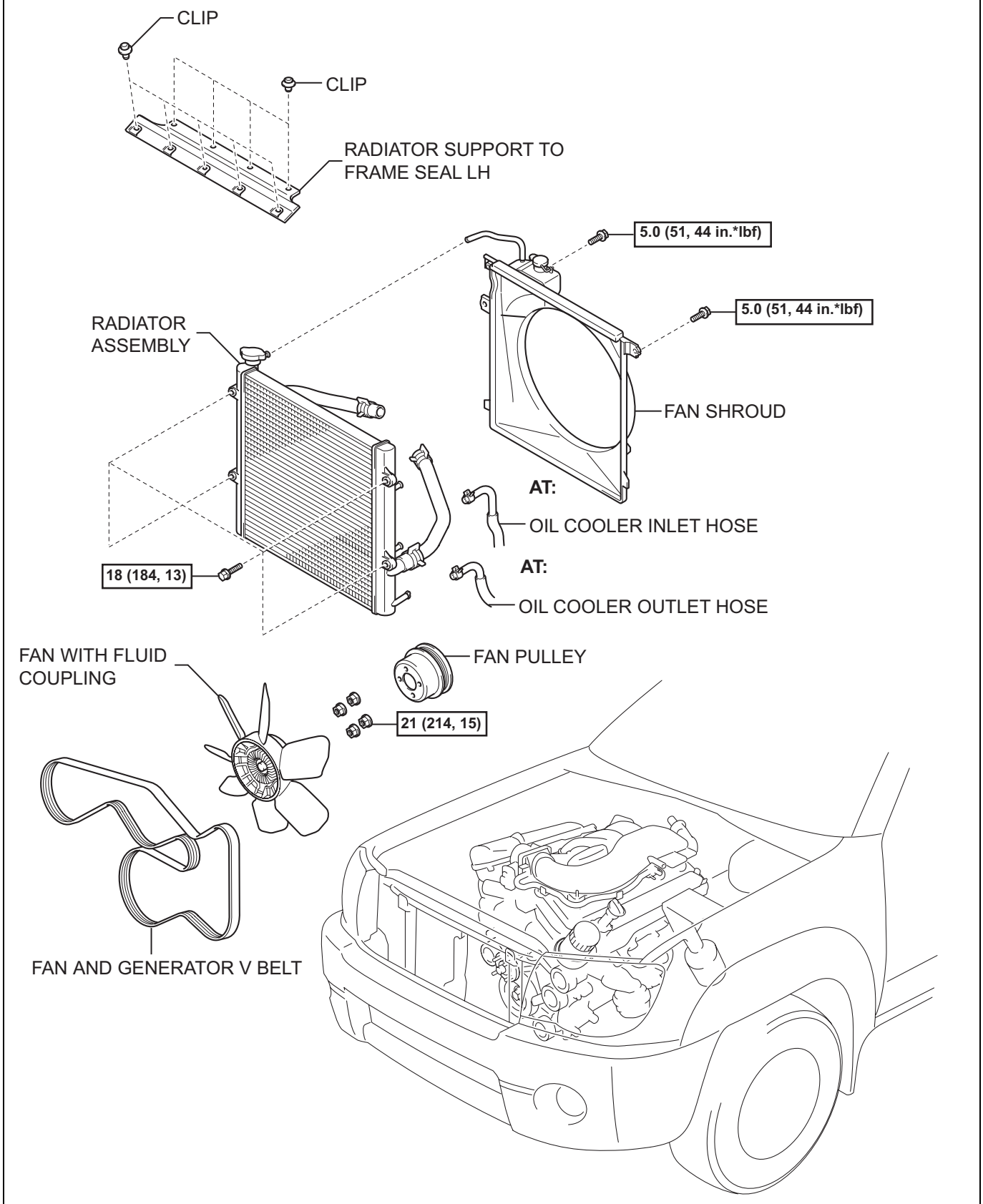

N*m (kgf*cm, ft*lbf) : Specified torque

Y

A113577E01

EM

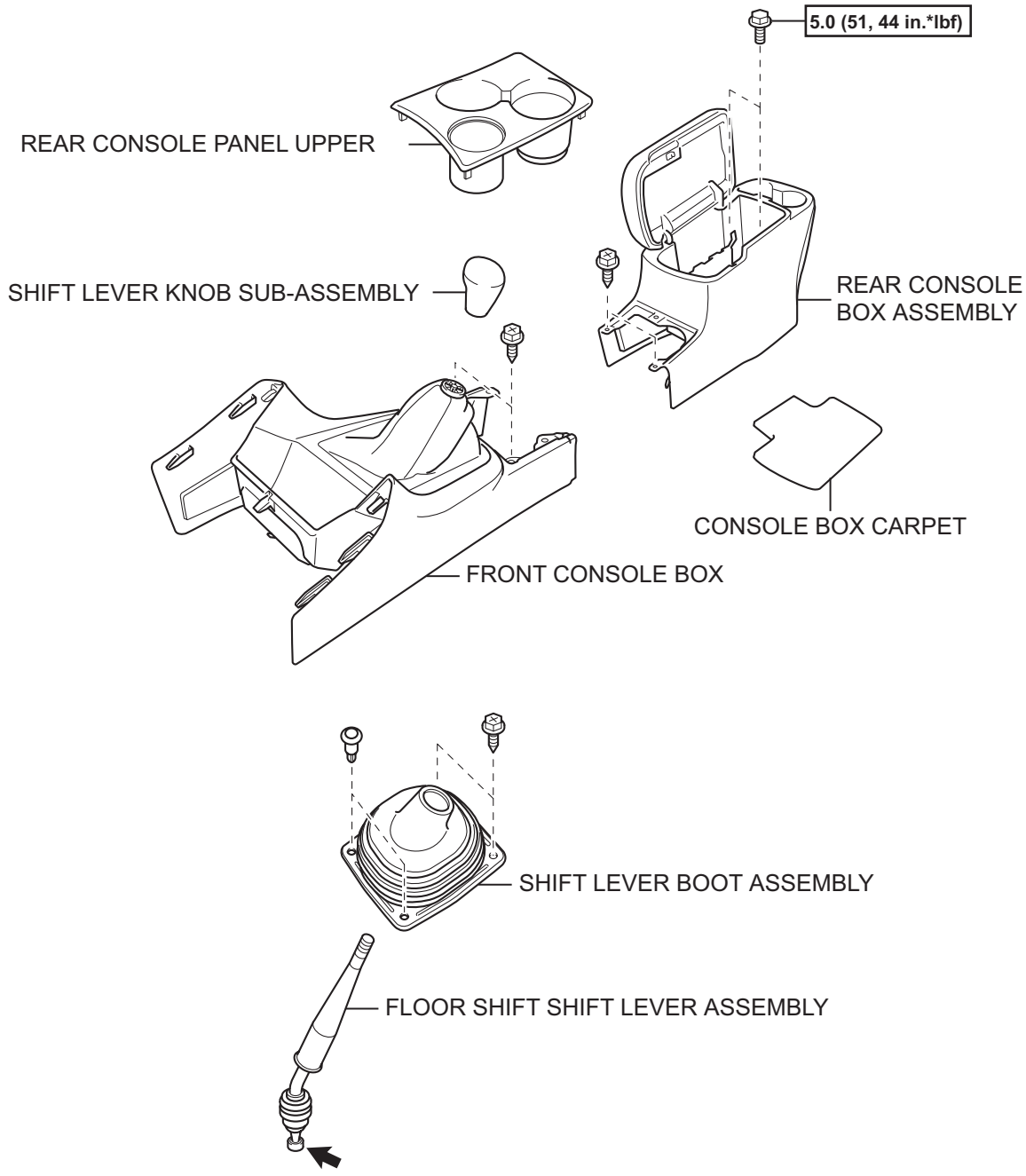
5.0 (51, 44 in.*lbf)
REAR CONSOLE PANEL UPPER
SHIFT LEVER KNOB SUB-ASSEMBLY
REAR CONSOLE BOX ASSEMBLY
CONSOLE BOX CARPET
FRONT CONSOLE BOX
SHIFT LEVER BOOT ASSEMBLY
FLOOR SHIFT SHIFT LEVER ASSEMBLY
N*m (kgf*cm, ft*lbf) : Specified torque
MP grease
A113553E01

EM

Y

2WD AND PRE RUNNER, MANUAL TRANSMISSION:

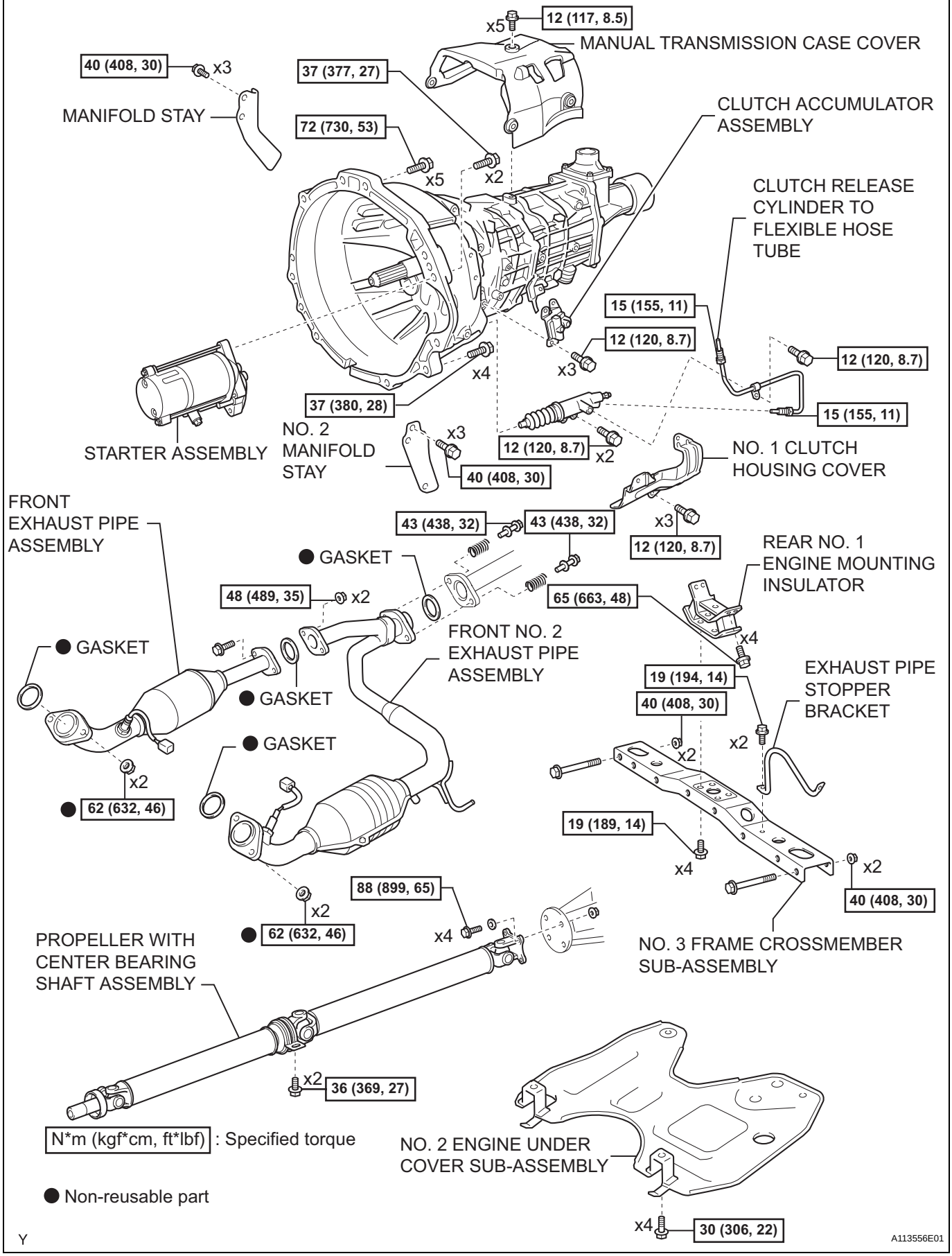

4WD, MANUALTRANSMISSION:

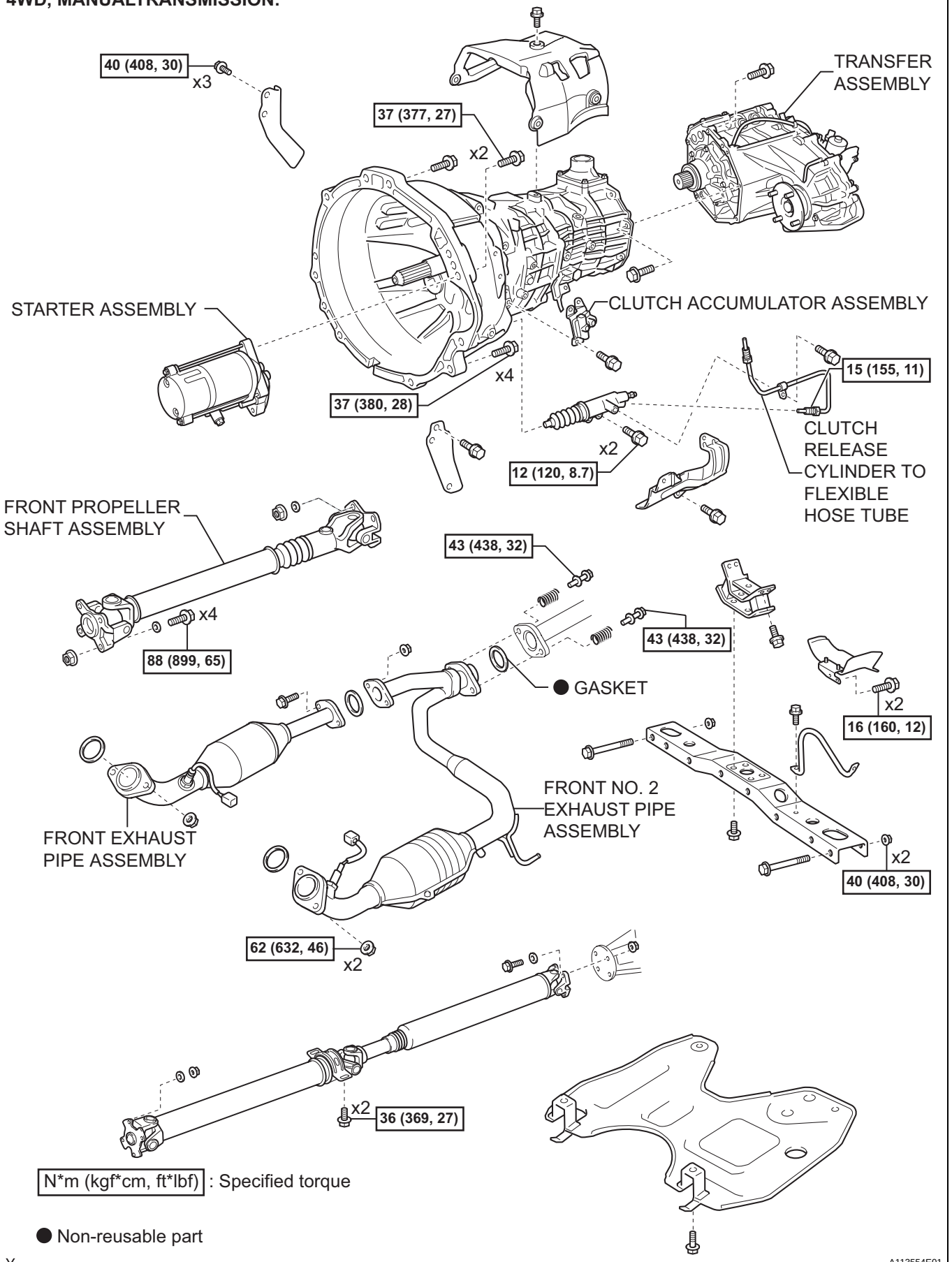

N*m (kgf*cm, ft*lbf) : Specified torque

● Non-reusable part

Y

A113554E01

4WD, MANUALTRANSMISSION:

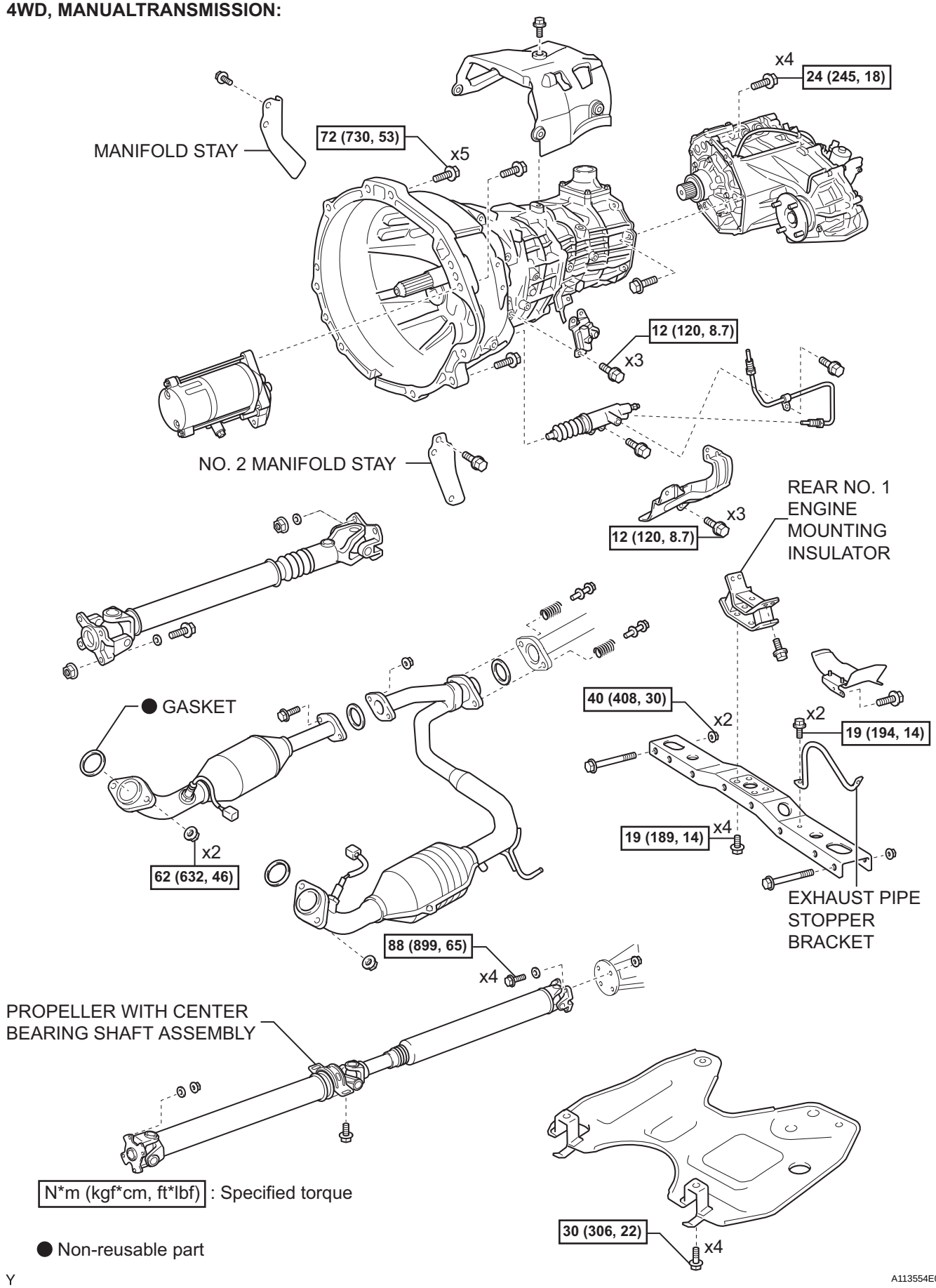

EM

4WD, MANUALTRANSMISSION:

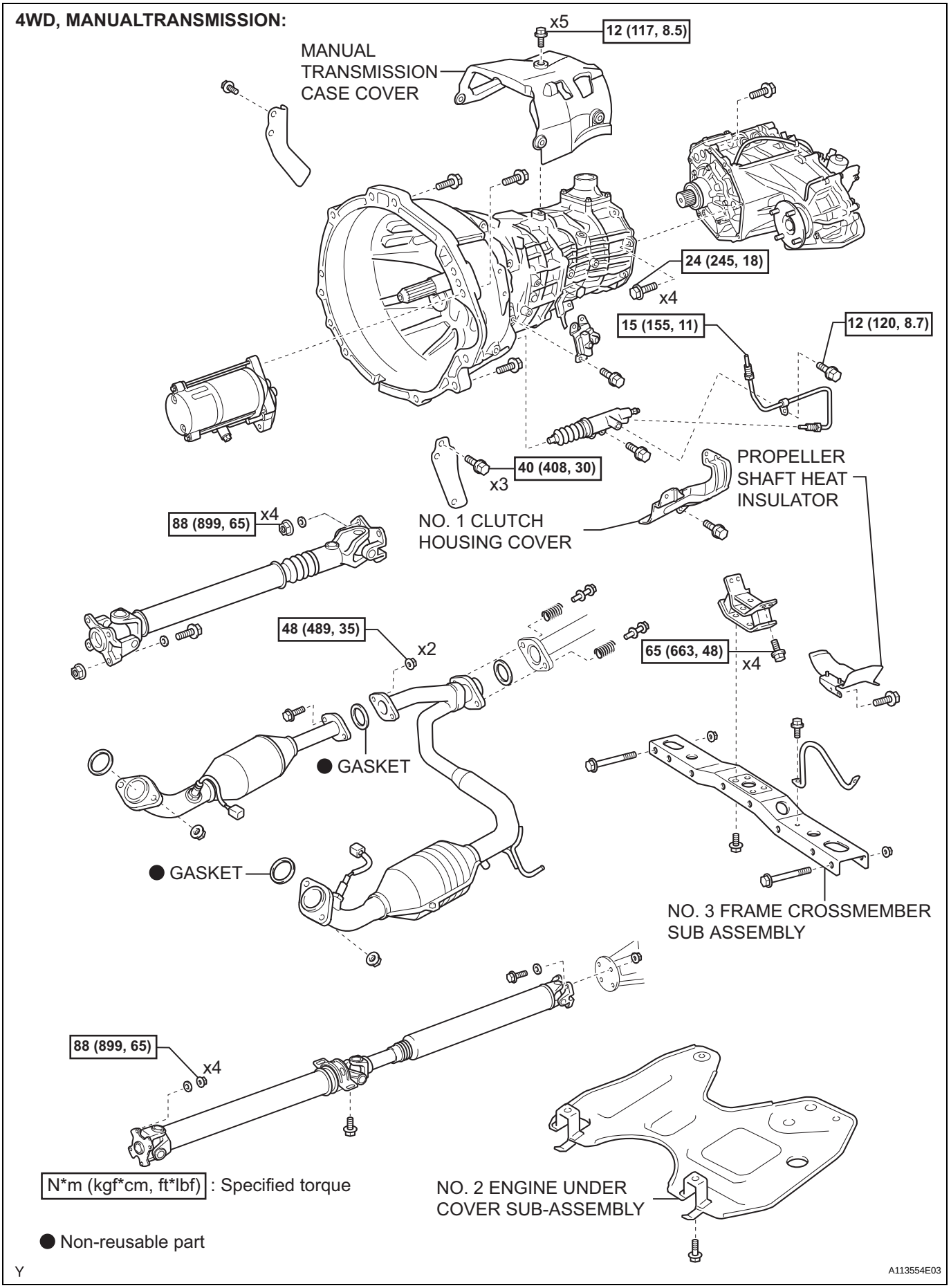

N*m (kgf*cm, ft*lbf) : Specified torque

● Non-reusable part

Y

A113554E03

2WD AND PRE RUNNER, AUTOMATIC TRANSMISSION:

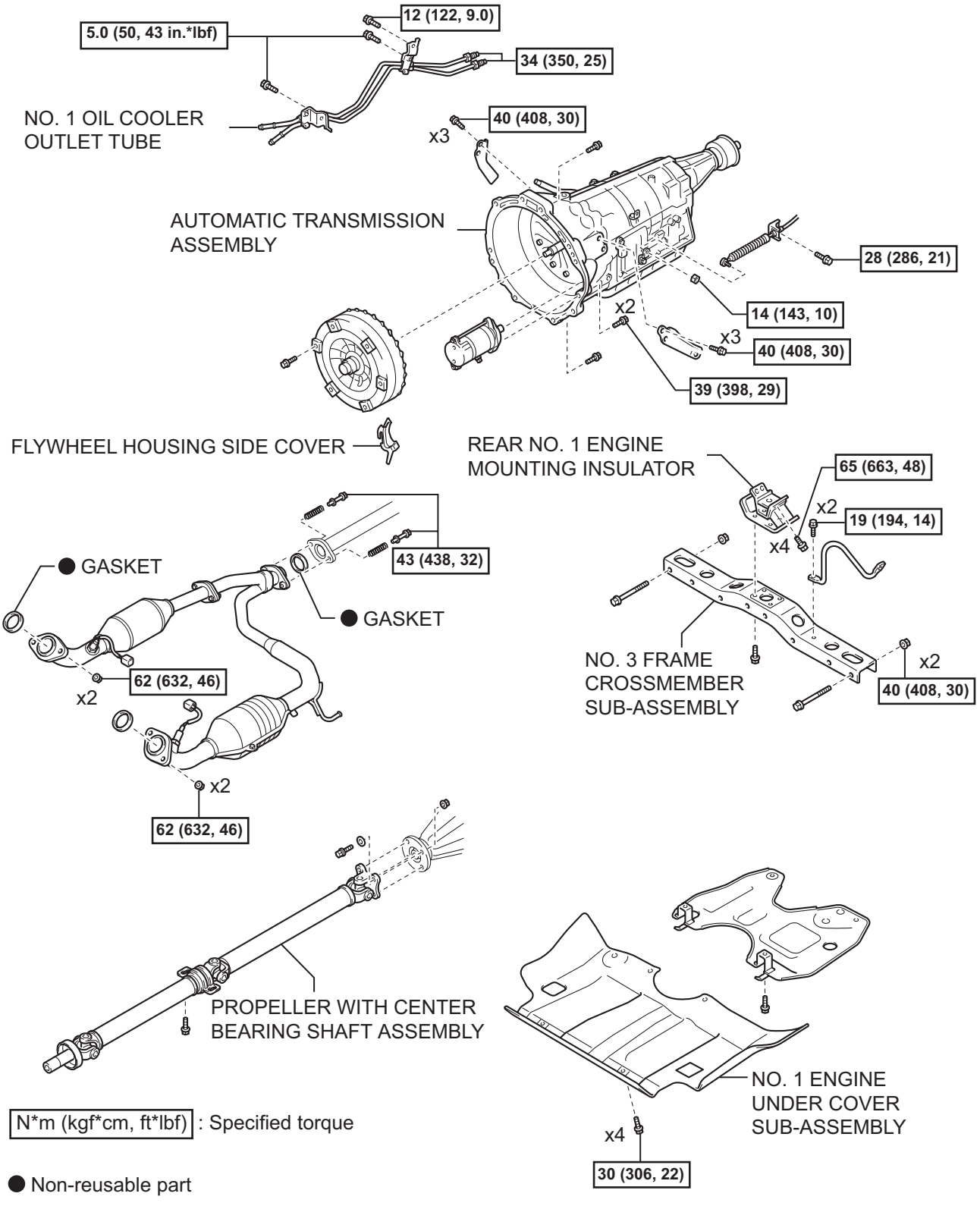

EM

2WD AND PRE RUNNER, AUTOMATIC TRANSMISSION:

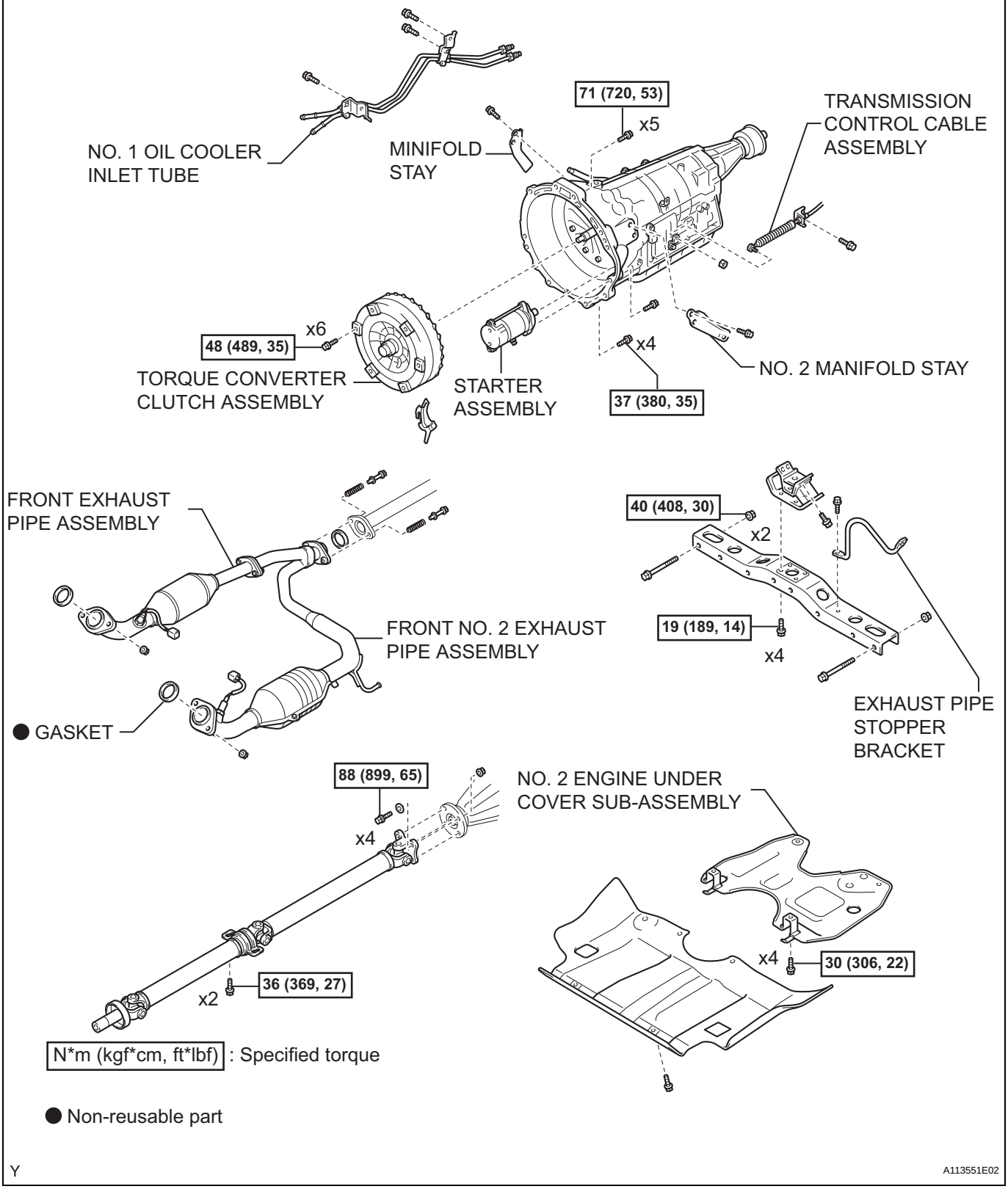

N*m (kgf*cm, ft*lbf) : Specified torque

● Non-reusable part

Y

A113551E02

4WD, MANUALTRANSMISSION:

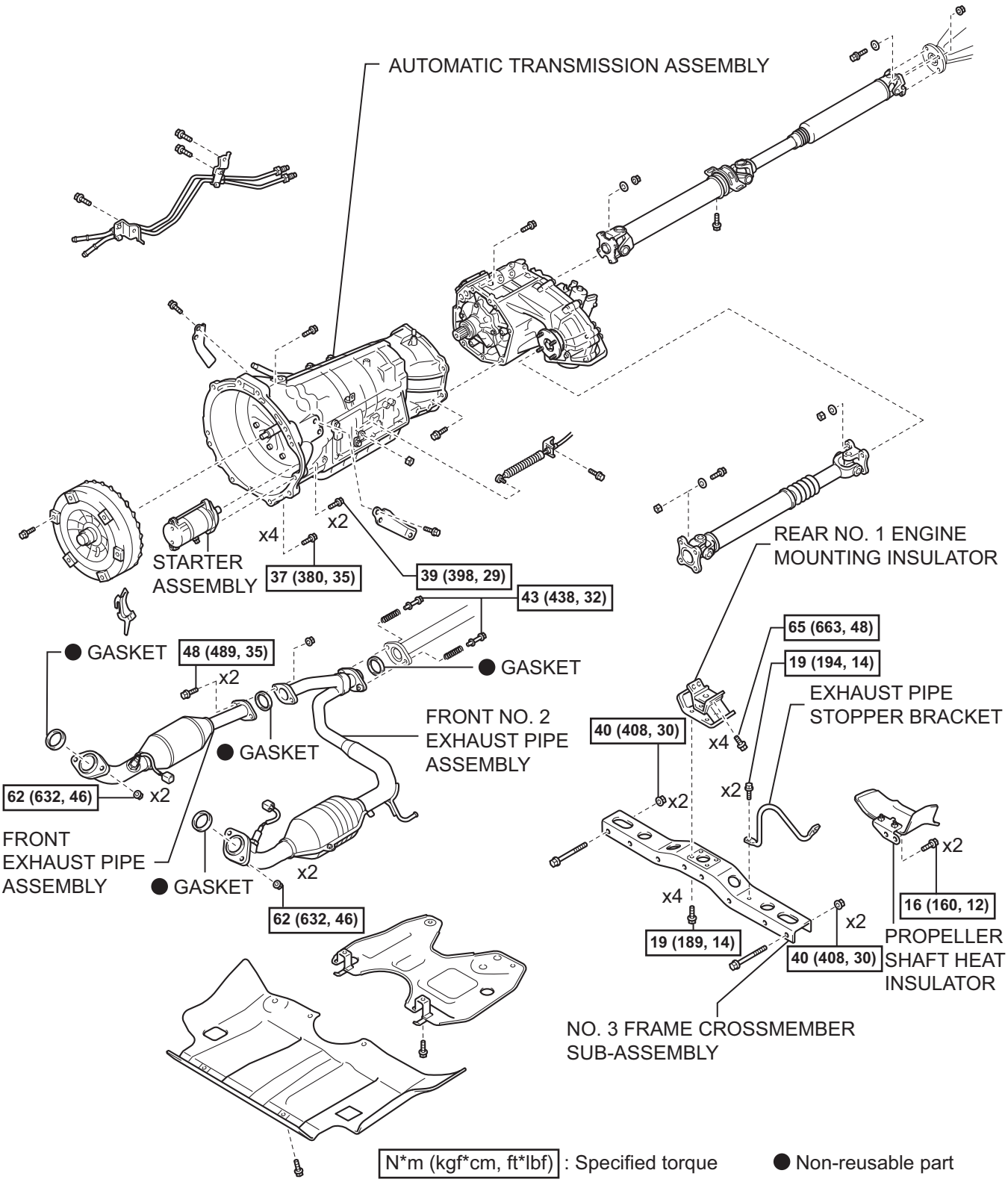

EM

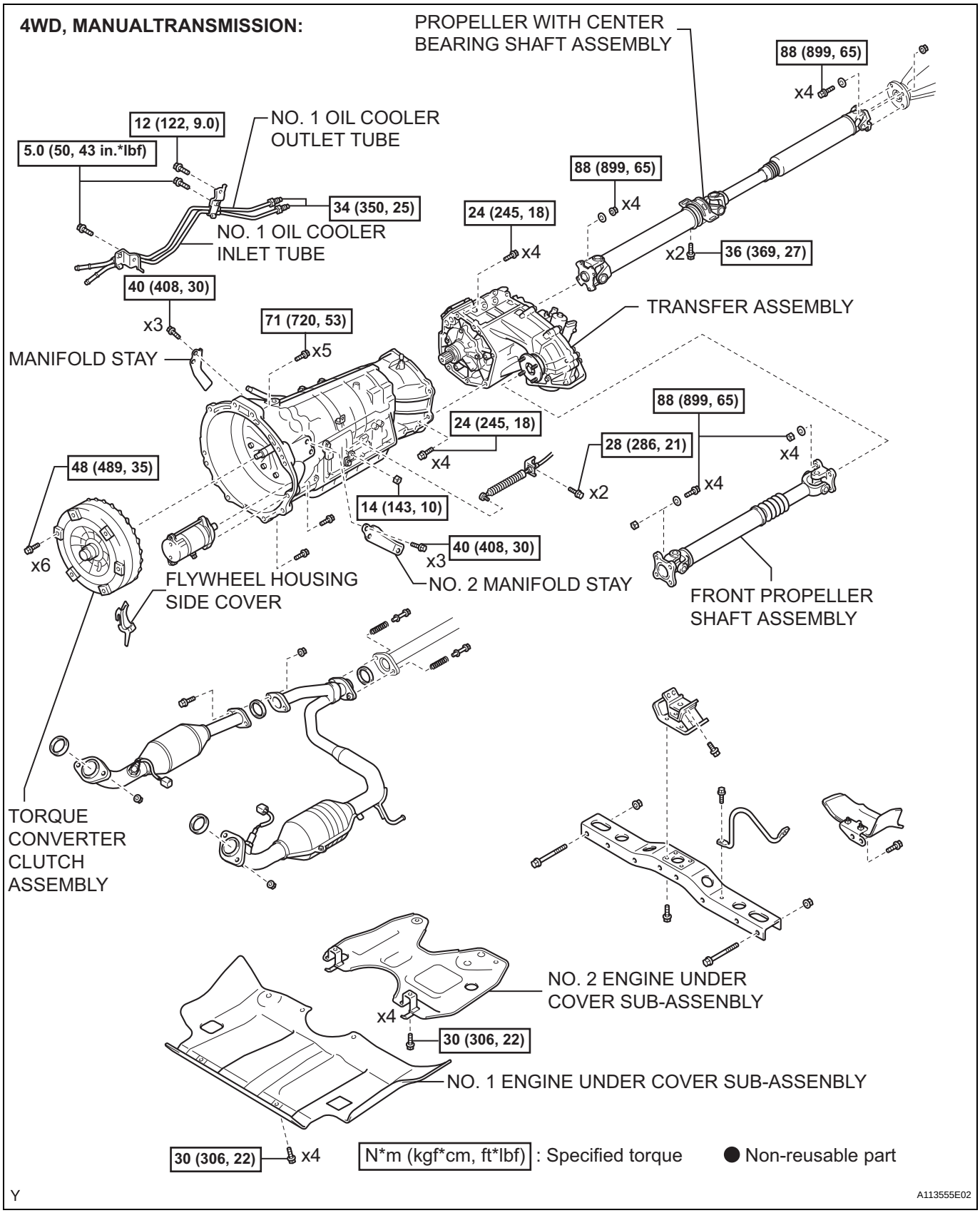
4WD, MANUALTRANSMISSION:
PROPELLER WITH CENTER BEARING SHAFT ASSEMBLY
88 (899, 65)
x4
12 (122, 9.0)
5.0 (50, 43 in.*lbf)
NO. 1 OIL COOLER OUTLET TUBE
34 (350, 25)
NO. 1 OIL COOLER INLET TUBE
88 (899, 65)
x4
24 (245, 18)
x4
x2
36 (369, 27)
40 (408, 30)
x3
TRANSFER ASSEMBLY
71 (720, 53)
x5
MANIFOLD STAY
EM
24 (245, 18)
x4
88 (899, 65)
28 (286, 21)
x4
x2
x4
48 (489, 35)
x6
14 (143, 10)
40 (408, 30)
x3
NO. 2 MANIFOLD STAY
FLYWHEEL HOUSING SIDE COVER
FRONT PROPELLER SHAFT ASSEMBLY
TORQUE CONVERTER CLUTCH ASSEMBLY
NO. 2 ENGINE UNDER COVER SUB-ASSENBLY
x4
30 (306, 22)
NO. 1 ENGINE UNDER COVER SUB-ASSENBLY
30 (306, 22)
x4
N*m (kgf*cm, ft*lbf) : Specified torque
● Non-reusable part
Y
A113555E02

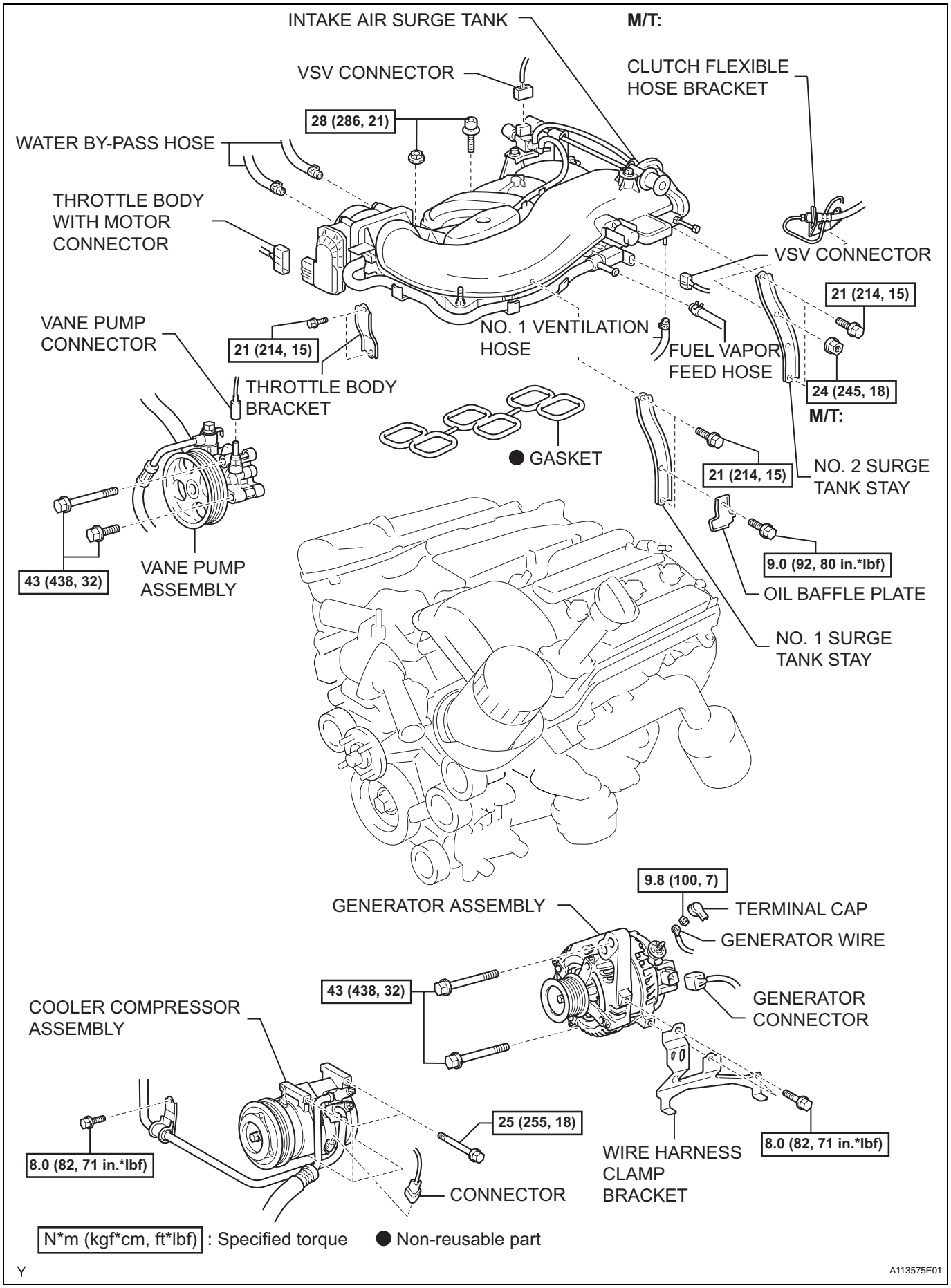
INTAKE AIR SURGE TANK
M/T:
VSV CONNECTOR
CLUTCH FLEXIBLE HOSE BRACKET
28 (286, 21)
WATER BY-PASS HOSE
THROTTLE BODY WITH MOTOR CONNECTOR
VSV CONNECTOR
21 (214, 15)
VANE PUMP CONNECTOR
21 (214, 15)
NO. 1 VENTILATION HOSE
FUEL VAPOR FEED HOSE
24 (245, 18)
M/T:
THROTTLE BODY BRACKET
GASKET
21 (214, 15)
NO. 2 SURGE TANK STAY
9.0 (92, 80 in.*lbf)
43 (438, 32)
VANE PUMP ASSEMBLY
OIL BAFFLE PLATE
NO. 1 SURGE TANK STAY
9.8 (100, 7)
GENERATOR ASSEMBLY
TERMINAL CAP
GENERATOR WIRE
43 (438, 32)
GENERATOR CONNECTOR
COOLER COMPRESSOR ASSEMBLY
25 (255, 18)
8.0 (82, 71 in.*lbf)
8.0 (82, 71 in.*lbf)
WIRE HARNESS CLAMP BRACKET
CONNECTOR
N*m (kgf*cm, ft*lbf) : Specified torque
● Non-reusable part
Y
A113575E01

EM

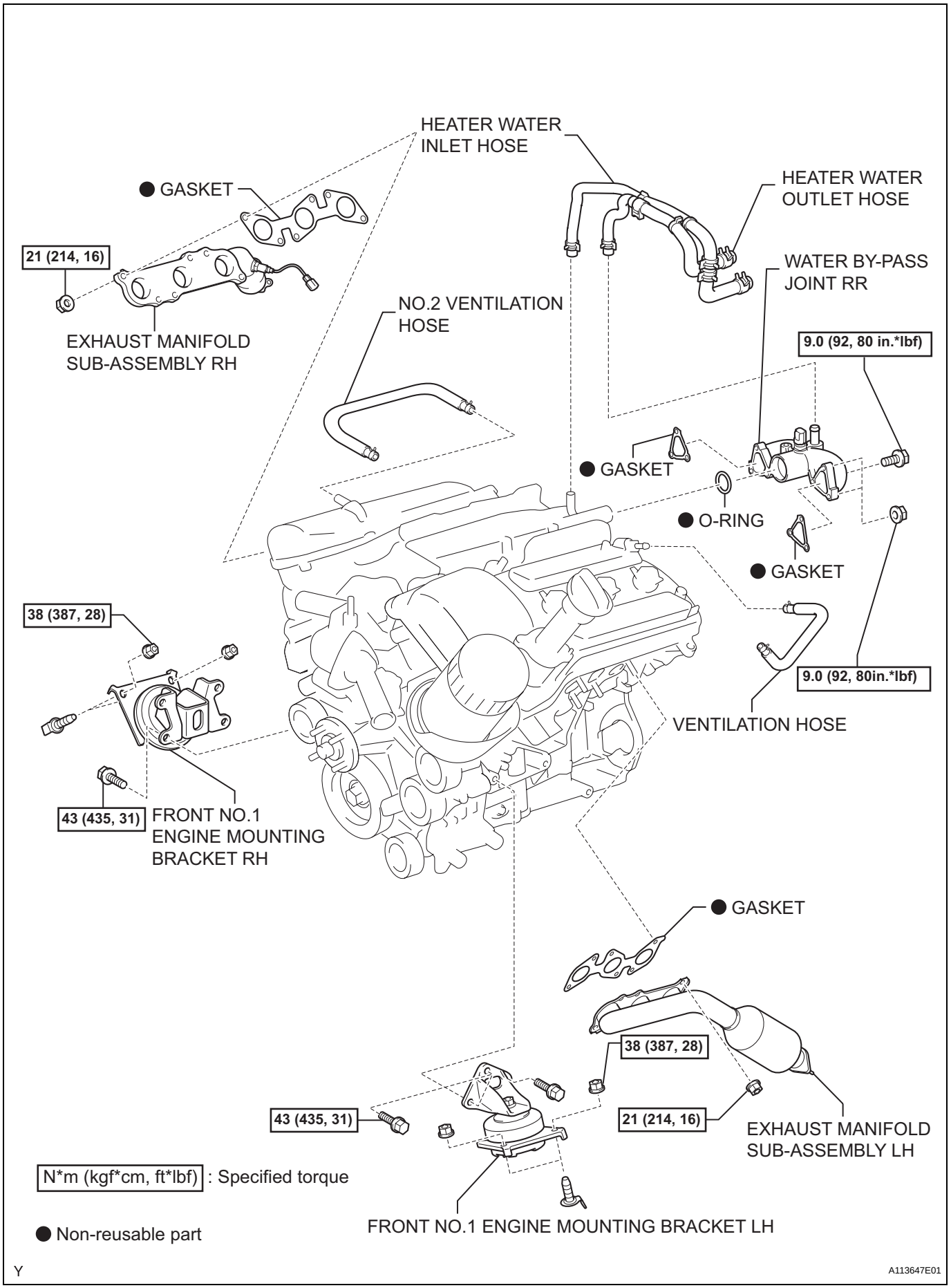
HEATER WATER INLET HOSE
HEATER WATER OUTLET HOSE
● GASKET
21 (214, 16)
WATER BY-PASS JOINT RR
NO.2 VENTILATION HOSE
EXHAUST MANIFOLD SUB-ASSEMBLY RH
9.0 (92, 80 in.*lbf)
● GASKET
● O-RING
● GASKET
38 (387, 28)
9.0 (92, 80in.*lbf)
VENTILATION HOSE
43 (435, 31)
FRONT NO.1 ENGINE MOUNTING BRACKET RH
● GASKET
38 (387, 28)
43 (435, 31)
21 (214, 16)
EXHAUST MANIFOLD SUB-ASSEMBLY LH
N*m (kgf*cm, ft*lbf) : Specified torque
● Non-reusable part
FRONT NO.1 ENGINE MOUNTING BRACKET LH
Y
A113647E01

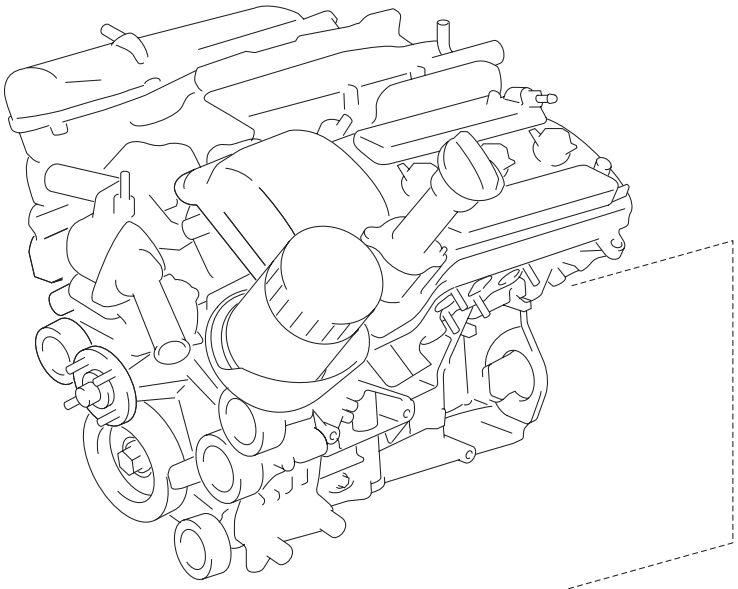

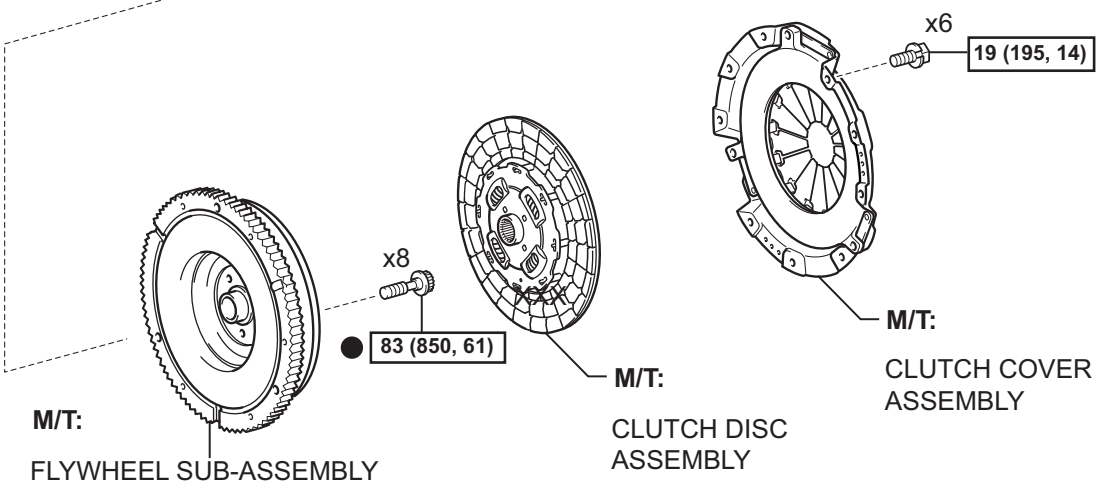

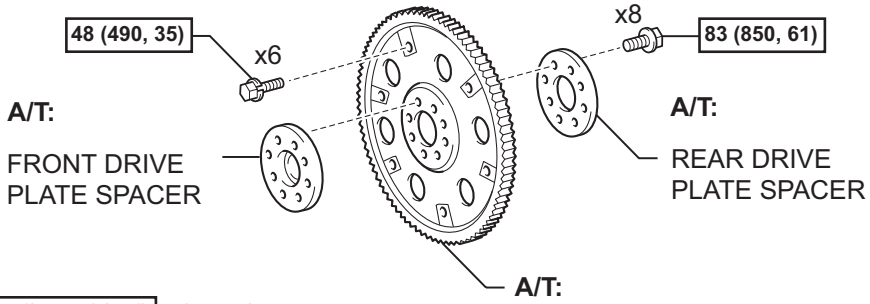

N*m (kgf*cm, ft*lbf) : Specified torque

● Non-reusable part

Y

A113550E01

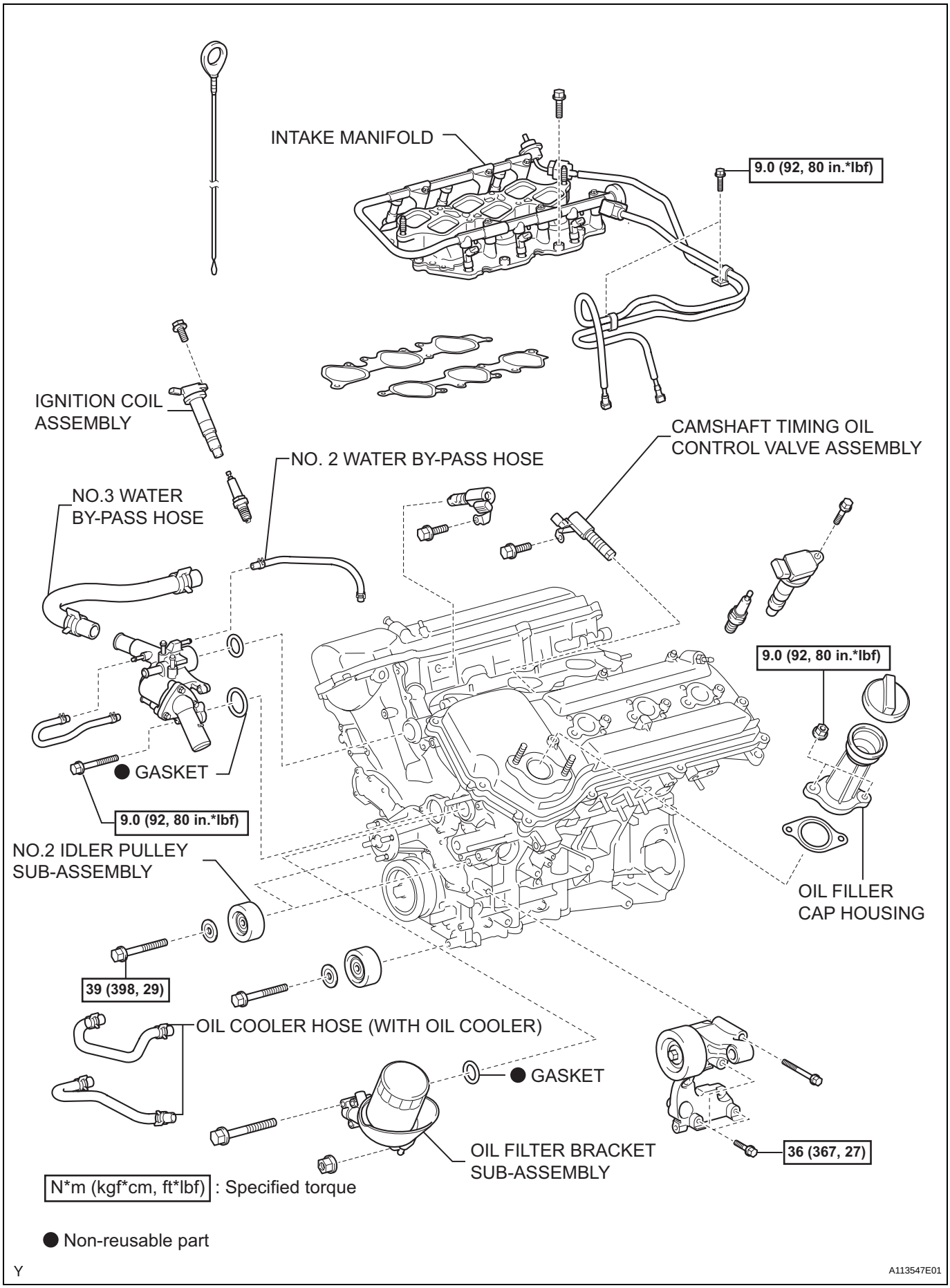
INTAKE MANIFOLD
9.0 (92, 80 in.*lbf)
IGNITION COIL ASSEMBLY
NO. 2 WATER BY-PASS HOSE
CAMSHAFT TIMING OIL CONTROL VALVE ASSEMBLY
NO.3 WATER BY-PASS HOSE
● GASKET
9.0 (92, 80 in.*lbf)
9.0 (92, 80 in.*lbf)
NO.2 IDLER PULLEY SUB-ASSEMBLY
OIL FILLER CAP HOUSING
39 (398, 29)
OIL COOLER HOSE (WITH OIL COOLER)
● GASKET
OIL FILTER BRACKET SUB-ASSEMBLY
36 (367, 27)
N*m (kgf*cm, ft*lbf) : Specified torque
● Non-reusable part
Y
A113547E01

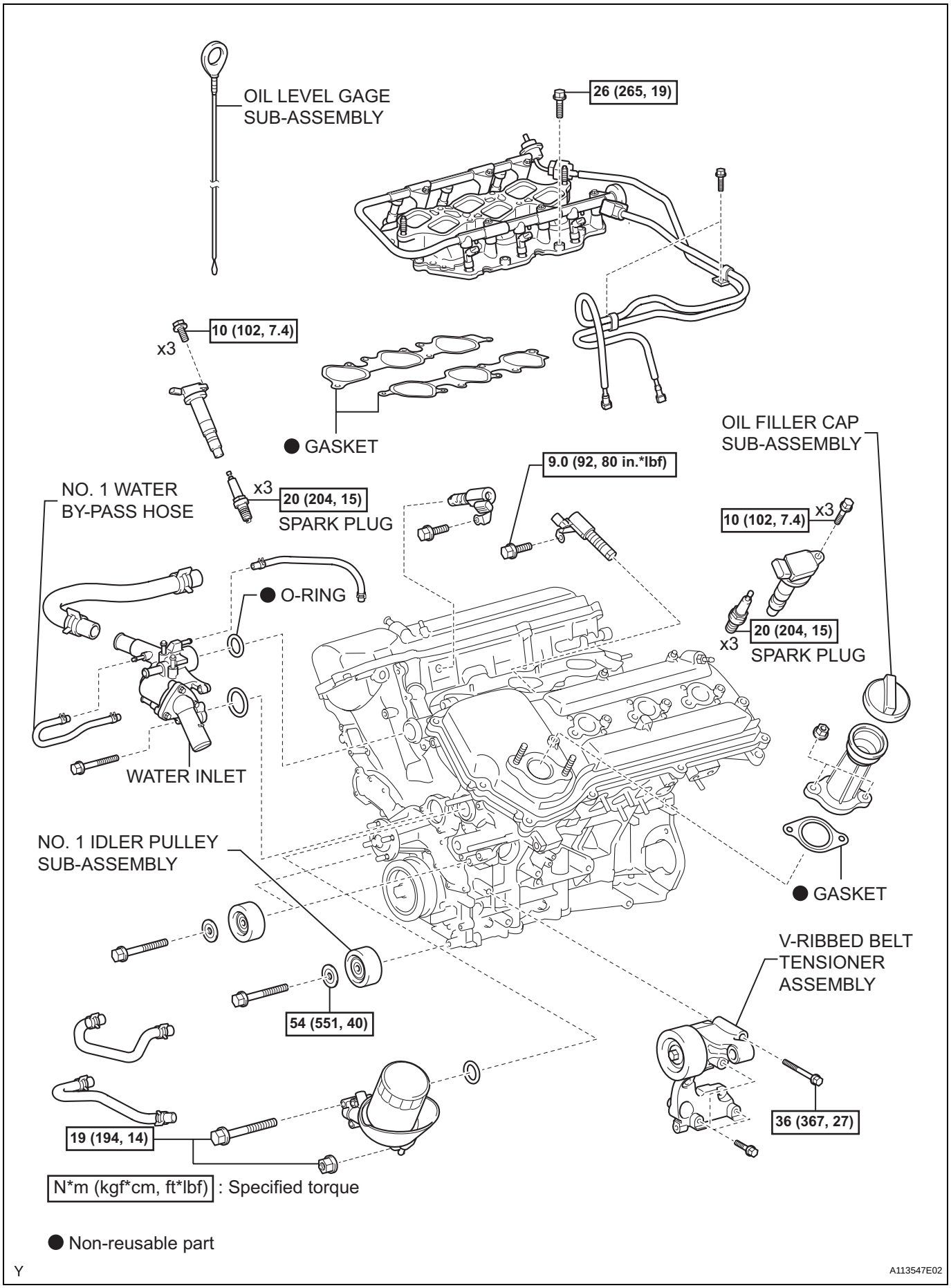
OIL LEVEL GAGE SUB-ASSEMBLY
26 (265, 19)
x3
10 (102, 7.4)
● GASKET
OIL FILLER CAP SUB-ASSEMBLY
NO. 1 WATER BY-PASS HOSE
x3
20 (204, 15)
SPARK PLUG
9.0 (92, 80 in.*lbf)
10 (102, 7.4)
x3
● O-RING
20 (204, 15)
x3
SPARK PLUG
WATER INLET
NO. 1 IDLER PULLEY SUB-ASSEMBLY
● GASKET
V-RIBBED BELT TENSIONER ASSEMBLY
54 (551, 40)
36 (367, 27)
19 (194, 14)
N*m (kgf*cm, ft*lbf) : Specified torque
● Non-reusable part
Y
A113547E02

ENGINE UNIT

COMPONENTS

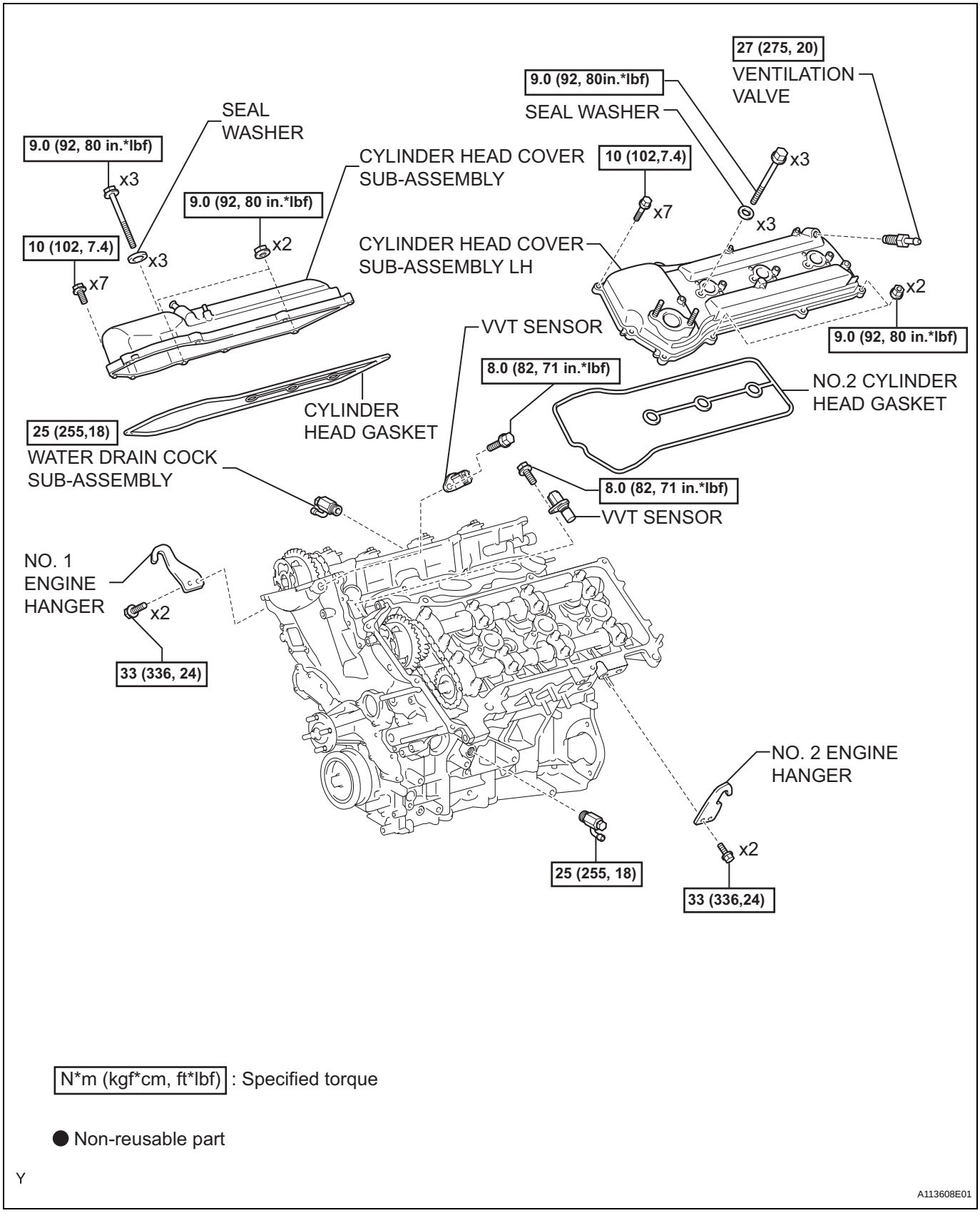

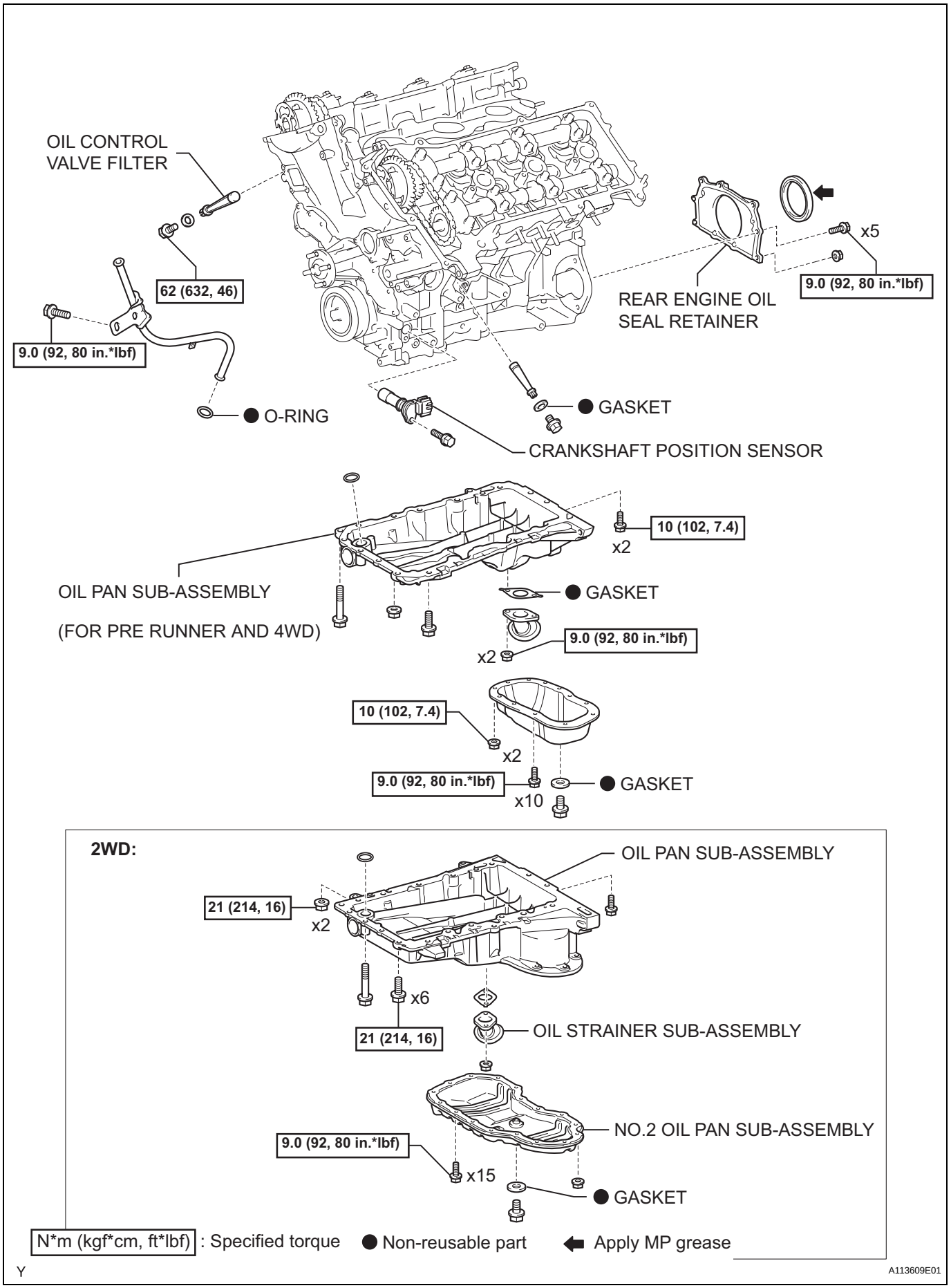
OIL CONTROL VALVE FILTER
62 (632, 46)
9.0 (92, 80 in.*lbf)
O-RING
GASKET
CRANKSHAFT POSITION SENSOR
x5
9.0 (92, 80 in.*lbf)
REAR ENGINE OIL SEAL RETAINER
10 (102, 7.4)
x2
OIL PAN SUB-ASSEMBLY
(FOR PRE RUNNER AND 4WD)
GASKET
9.0 (92, 80 in.*lbf)
x2
10 (102, 7.4)
x2
9.0 (92, 80 in.*lbf)
x10
GASKET
2WD:
OIL PAN SUB-ASSEMBLY
21 (214, 16)
x2
x6
21 (214, 16)
OIL STRAINER SUB-ASSEMBLY
NO.2 OIL PAN SUB-ASSEMBLY
9.0 (92, 80 in.*lbf)
x15
GASKET
N*m (kgf*cm, ft*lbf) : Specified torque
Non-reusable part
Apply MP grease
Y
A113609E01

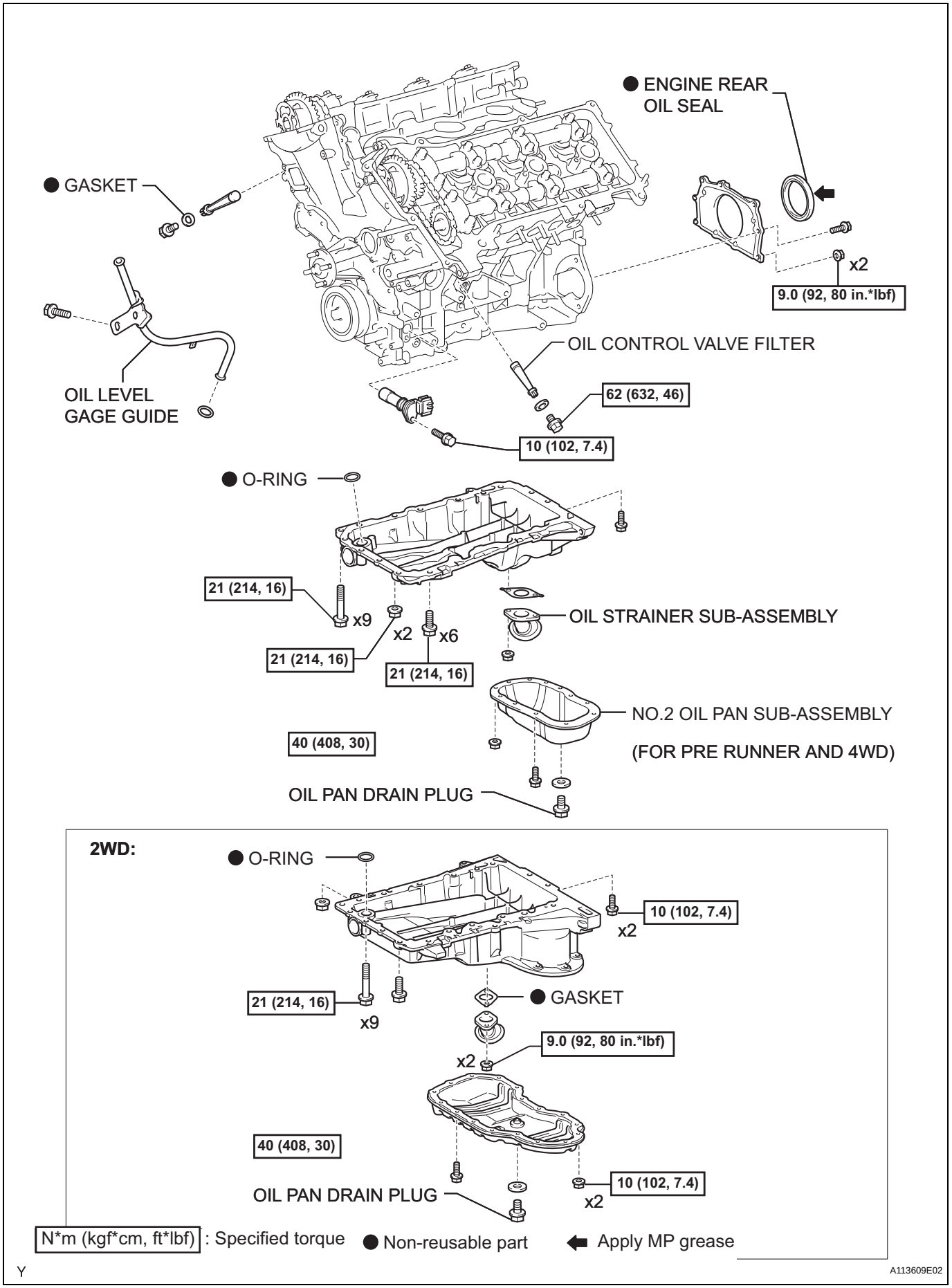
● ENGINE REAR OIL SEAL
● GASKET
x2
9.0 (92, 80 in.*lbf)
OIL CONTROL VALVE FILTER
OIL LEVEL GAGE GUIDE
62 (632, 46)
10 (102, 7.4)
● O-RING
21 (214, 16)
x9
x2
x6
21 (214, 16)
21 (214, 16)
OIL STRAINER SUB-ASSEMBLY
NO.2 OIL PAN SUB-ASSEMBLY
(FOR PRE RUNNER AND 4WD)
40 (408, 30)
OIL PAN DRAIN PLUG
2WD:
● O-RING
10 (102, 7.4)
x2
21 (214, 16)
x9
● GASKET
9.0 (92, 80 in.*lbf)
x2
40 (408, 30)
OIL PAN DRAIN PLUG
10 (102, 7.4)
x2
N*m (kgf*cm, ft*lbf) : Specified torque
● Non-reusable part
Apply MP grease
Y
A113609E02

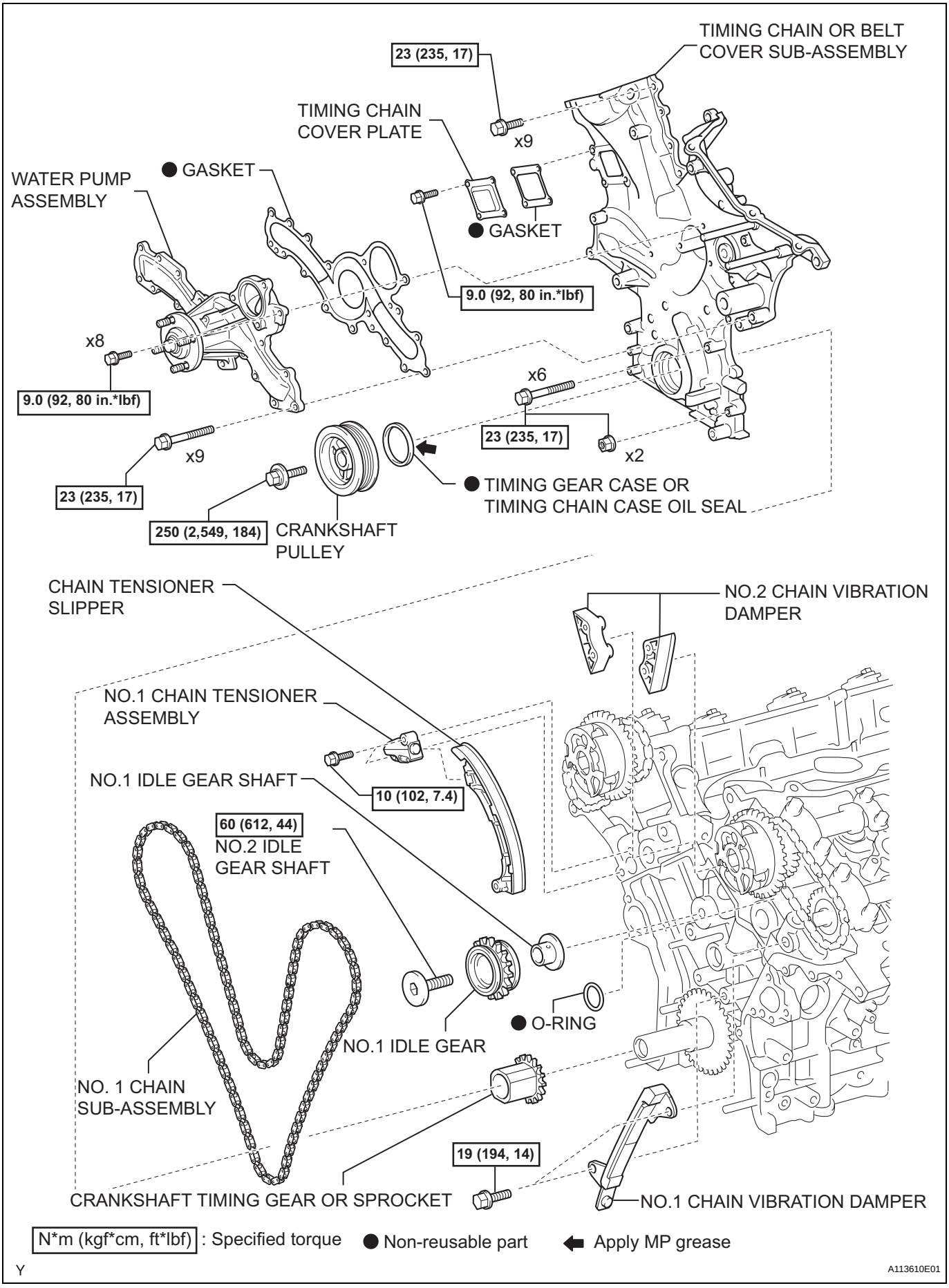
TIMING CHAIN OR BELT COVER SUB-ASSEMBLY
23 (235, 17)
TIMING CHAIN COVER PLATE
x9
WATER PUMP ASSEMBLY
● GASKET
● GASKET
9.0 (92, 80 in.*lbf)
x8
9.0 (92, 80 in.*lbf)
x6
23 (235, 17)
x2
x9
23 (235, 17)
● TIMING GEAR CASE OR TIMING CHAIN CASE OIL SEAL
250 (2,549, 184)
CRANKSHAFT PULLEY
CHAIN TENSIONER SLIPPER
NO.2 CHAIN VIBRATION DAMPER
NO.1 CHAIN TENSIONER ASSEMBLY
NO.1 IDLE GEAR SHAFT
10 (102, 7.4)
60 (612, 44)
NO.2 IDLE GEAR SHAFT
● O-RING
NO.1 IDLE GEAR
NO. 1 CHAIN SUB-ASSEMBLY
19 (194, 14)
CRANKSHAFT TIMING GEAR OR SPROCKET
NO.1 CHAIN VIBRATION DAMPER
N*m (kgf*cm, ft*lbf) : Specified torque
● Non-reusable part
Apply MP grease
Y
A113610E01

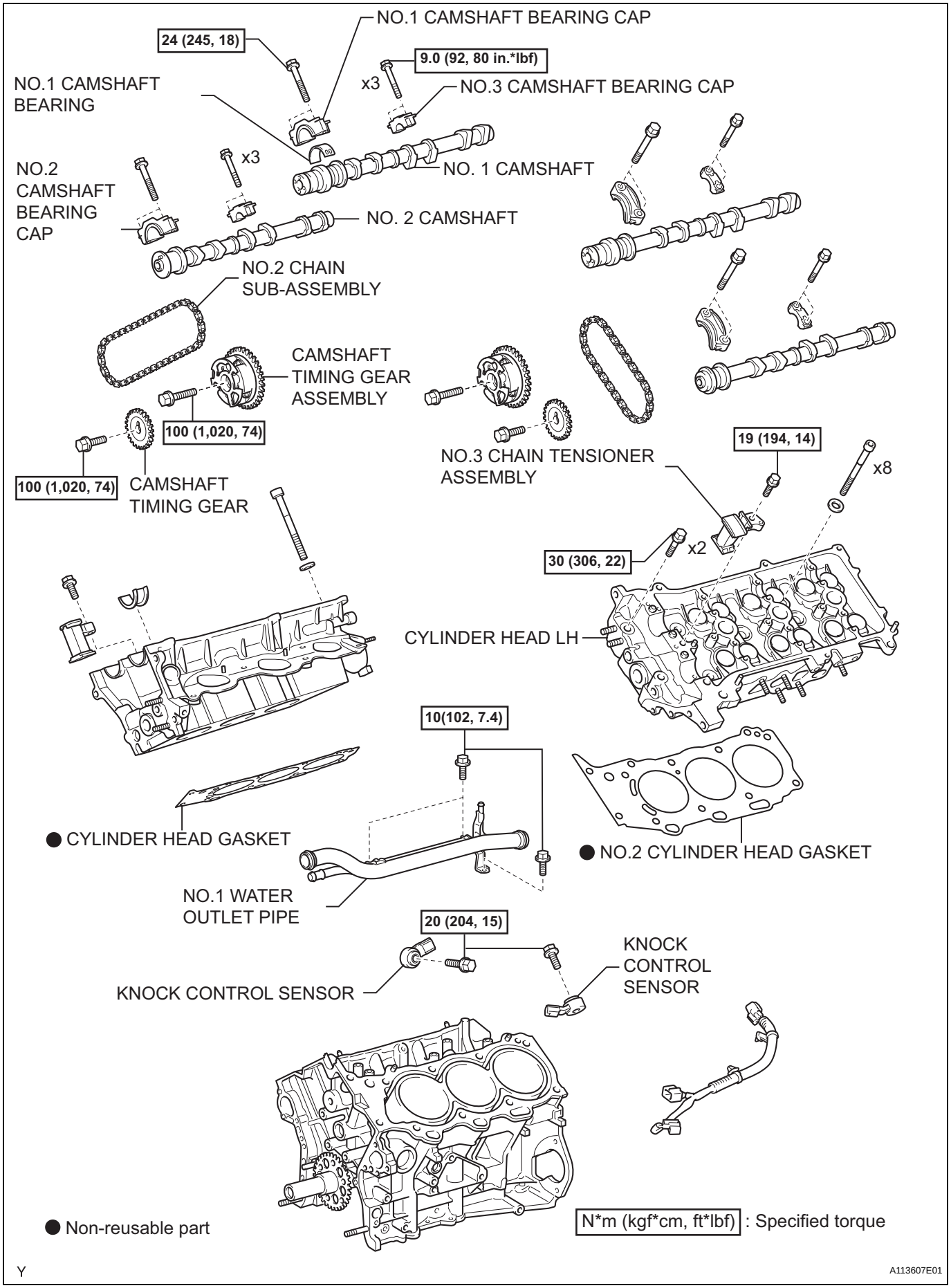
NO.1 CAMSHAFT BEARING CAP
24 (245, 18)
9.0 (92, 80 in.*lbf)
x3
NO.1 CAMSHAFT BEARING
NO.3 CAMSHAFT BEARING CAP
x3
NO.2 CAMSHAFT BEARING CAP
NO. 1 CAMSHAFT
NO. 2 CAMSHAFT
NO.2 CHAIN SUB-ASSEMBLY
CAMSHAFT TIMING GEAR ASSEMBLY
100 (1,020, 74)
100 (1,020, 74)
CAMSHAFT TIMING GEAR
NO.3 CHAIN TENSIONER ASSEMBLY
19 (194, 14)
x8
x2
30 (306, 22)
CYLINDER HEAD LH
10(102, 7.4)
● CYLINDER HEAD GASKET
● NO.2 CYLINDER HEAD GASKET
NO.1 WATER OUTLET PIPE
20 (204, 15)
KNOCK CONTROL SENSOR
KNOCK CONTROL SENSOR
● Non-reusable part
N*m (kgf*cm, ft*lbf) : Specified torque
Y
A113607E01

EM

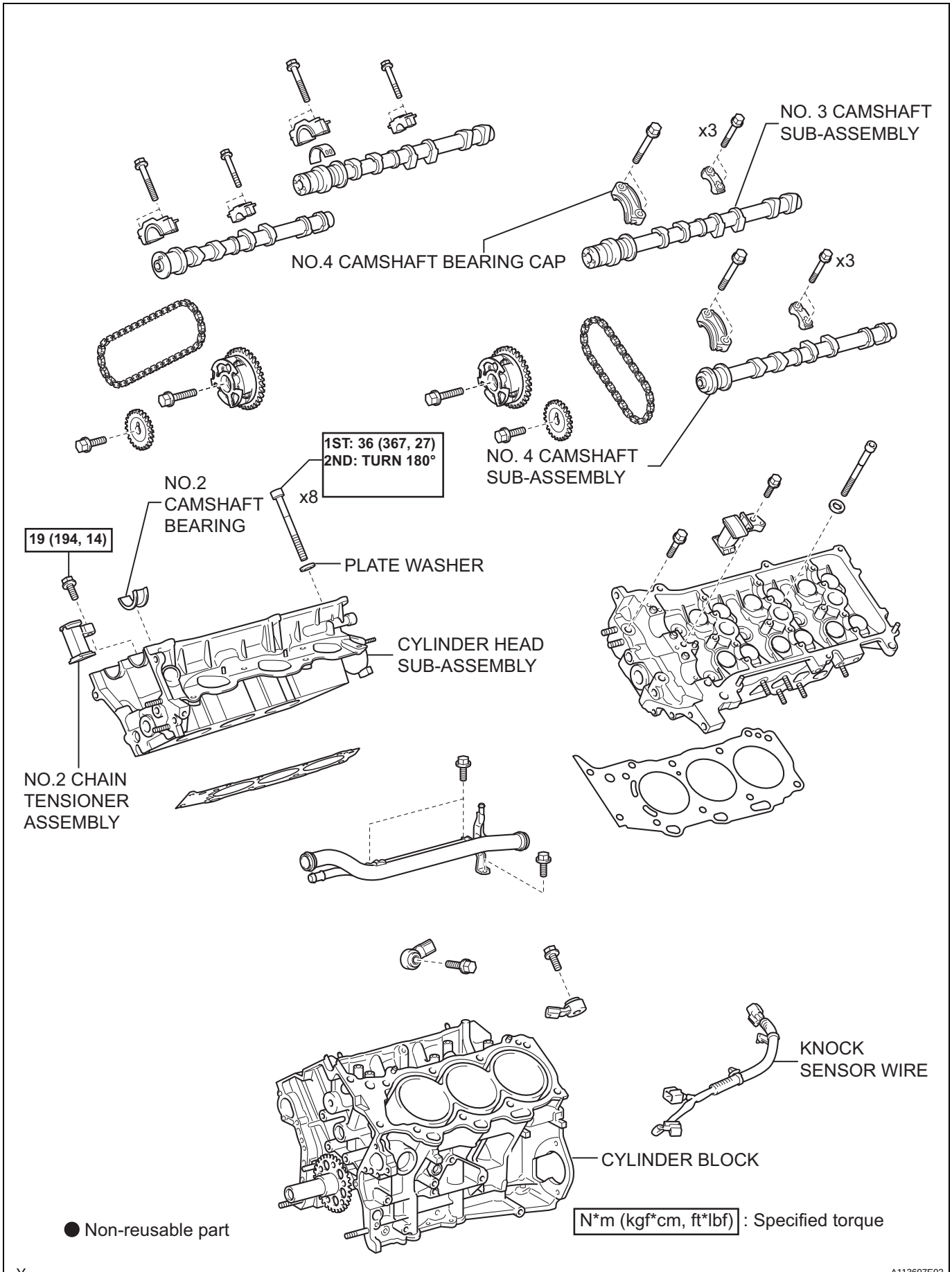
NO. 3 CAMSHAFT SUB-ASSEMBLY
x3
NO.4 CAMSHAFT BEARING CAP
x3
NO. 4 CAMSHAFT SUB-ASSEMBLY
1ST: 36 (367, 27)
2ND: TURN 180°
x8
NO.2 CAMSHAFT BEARING
19 (194, 14)
PLATE WASHER
CYLINDER HEAD SUB-ASSEMBLY
NO.2 CHAIN TENSIONER ASSEMBLY
KNOCK SENSOR WIRE
CYLINDER BLOCK
● Non-reusable part
N*m (kgf*cm, ft*lbf) : Specified torque
Y
A113607E02

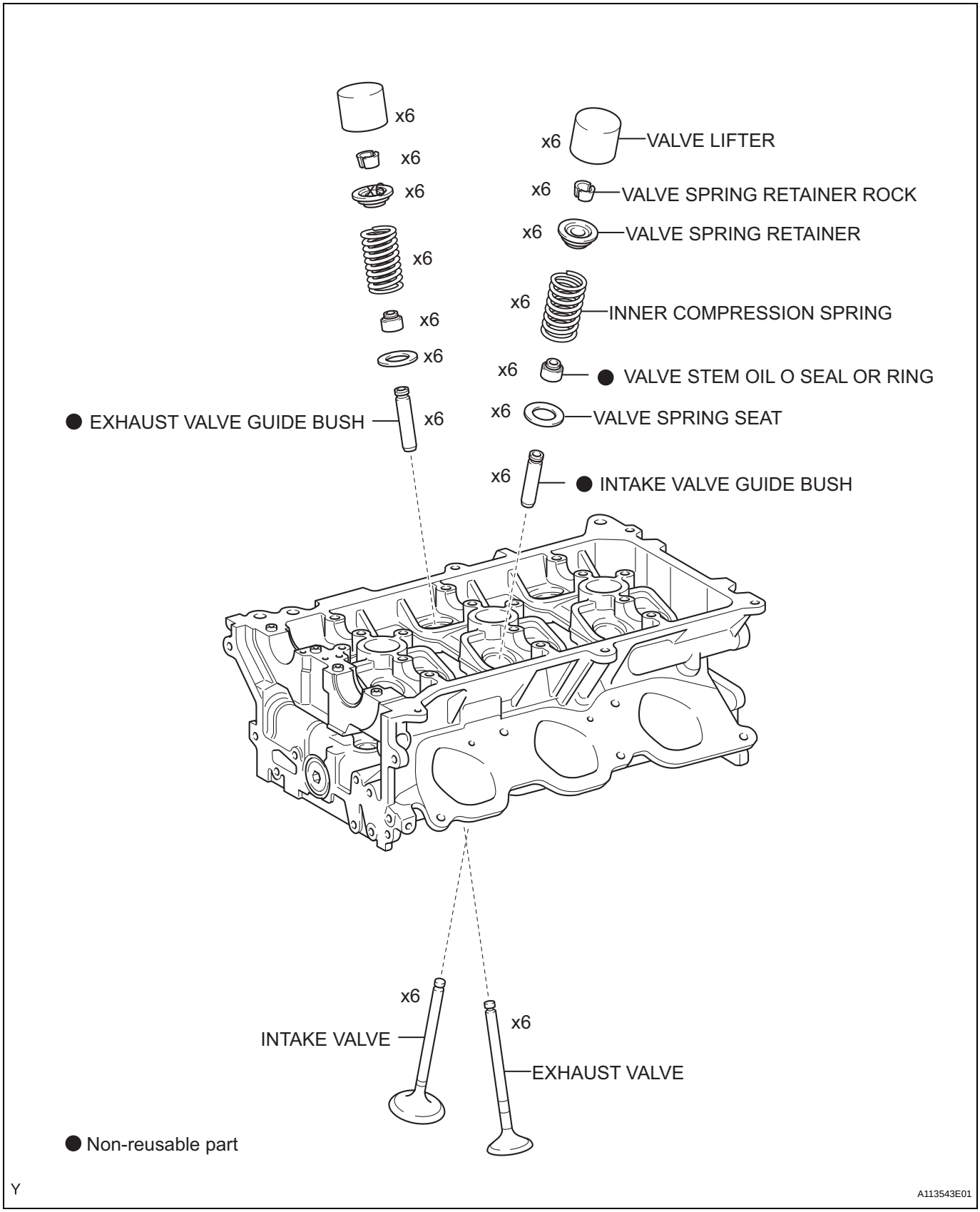
x6
x6
x6
x6
x6
x6
x6
● EXHAUST VALVE GUIDE BUSH
x6
x6
VALVE LIFTER
x6
VALVE SPRING RETAINER ROCK
x6
VALVE SPRING RETAINER
x6
INNER COMPRESSION SPRING
x6
● VALVE STEM OIL O SEAL OR RING
x6
VALVE SPRING SEAT
x6
● INTAKE VALVE GUIDE BUSH
x6
INTAKE VALVE
x6
EXHAUST VALVE
● Non-reusable part
Y
A113543E01

EM

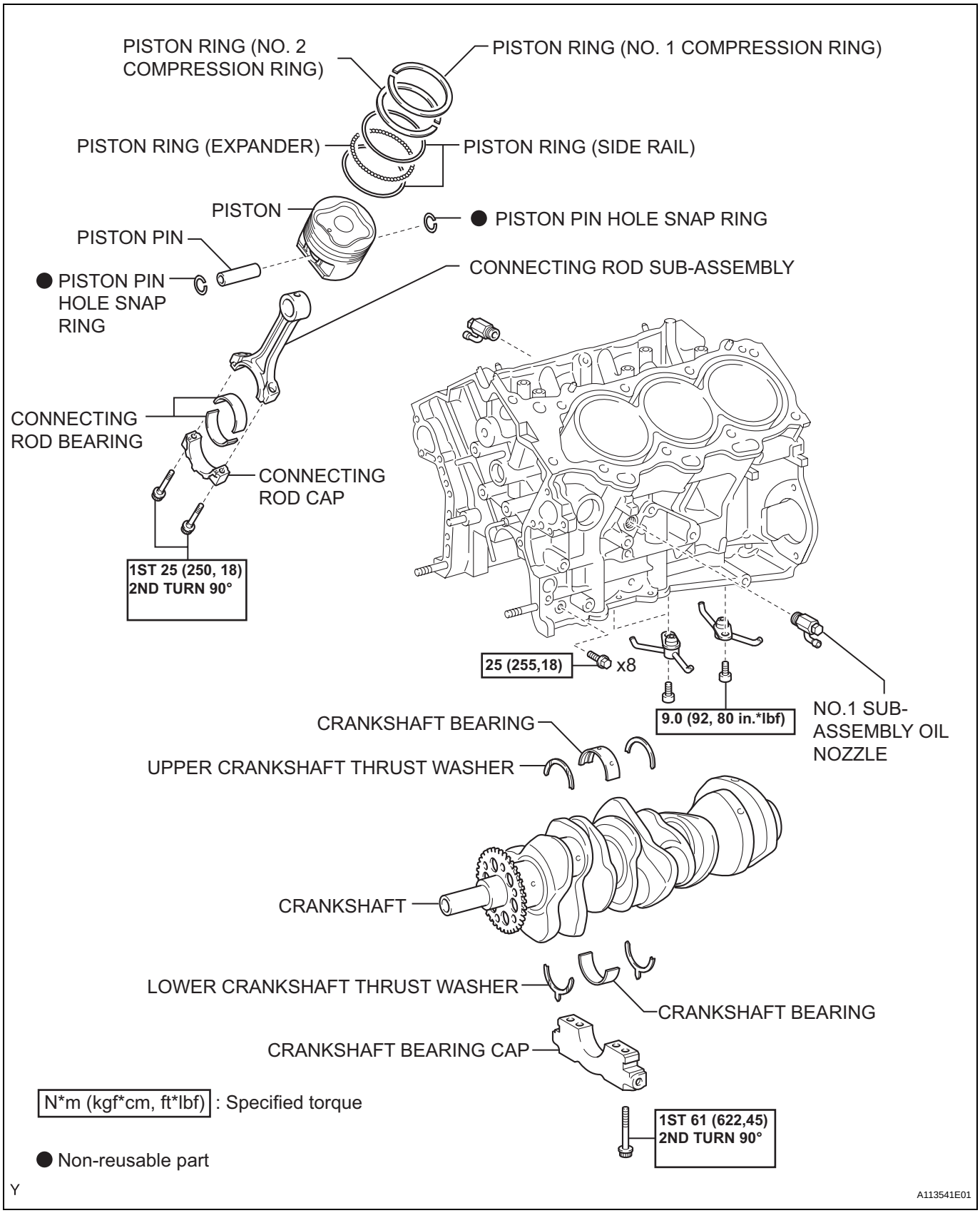
PISTON RING (NO. 2 COMPRESSION RING)
PISTON RING (NO. 1 COMPRESSION RING)
PISTON RING (EXPANDER)
PISTON RING (SIDE RAIL)
PISTON
● PISTON PIN HOLE SNAP RING
PISTON PIN
● PISTON PIN HOLE SNAP RING
CONNECTING ROD SUB-ASSEMBLY
CONNECTING ROD BEARING
CONNECTING ROD CAP
1ST 25 (250, 18)
2ND TURN 90°
25 (255,18)
x8
9.0 (92, 80 in.*lbf)
NO.1 SUB-ASSEMBLY OIL NOZZLE
CRANKSHAFT BEARING
UPPER CRANKSHAFT THRUST WASHER
CRANKSHAFT
LOWER CRANKSHAFT THRUST WASHER
CRANKSHAFT BEARING
CRANKSHAFT BEARING CAP
1ST 61 (622,45)
2ND TURN 90°
N*m (kgf*cm, ft*lbf) : Specified torque
● Non-reusable part
Y
A113541E01

ENGINE

ON-VEHICLE INSPECTION

1. **INSPECT ENGINE COOLANT (See page CO-2)**
2. **INSPECT ENGINE OIL**
   (See page LU-1)
3. **INSPECT BATTERY (See page CH-4)**
4. **INSPECT AIR CLEANER FILTER ELEMENT SUB-ASSEMBLY**
   (a) Remove the air filter.
   (b) Visually check that the air filter is not excessively damaged or oily. If necessary, replace the air filter.
5. **INSPECT SPARK PLUG**
   (See page IG-3)
6. **INSPECT V-RIBBED BELT TENSIONER ASSEMBLY**
   (a) Idle the engine and then stop the engine. Check that the drive belt is between the edges of the tensioner pulley.
   (b) Remove the drive belt from the tensioner pulley.
   (c) Turn the pulley, and check that the tensioner bearing moves smoothly and quietly.
   If necessary, replace the tensioner.
7. **INSPECT VALVE LASH ADJUSTER NOISE**
   (a) Rev up the engine several times. Check that the engine does not make any abnormal noises [*a].
   If abnormal noises are heard, warm up the engine and idle it for more than 30 minutes. Then repeat step [*a].
   HINT:
   If any defects or problems are found during the inspection above, perform the lash adjuster inspection.

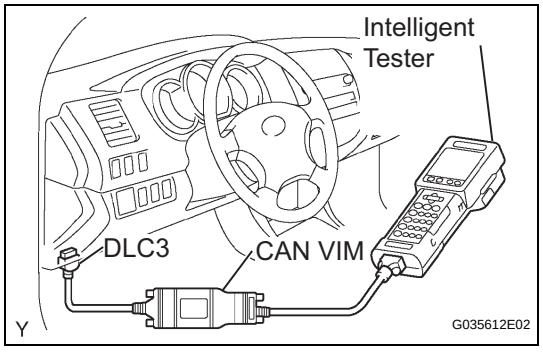

8. **INSPECT IGNITION TIMING**
   (a) When using a intelligent tester:
      (1) Connect the intelligent tester to the DLC3.
      (2) Turn the ignition switch to ON.
      (3) Turn the intelligent tester ON.
      (4) Start the engine and warm it up.
      (5) Select the following menu items:
      DIAGNOSIS / ENHANCED OBDII / DATA LIST / PRIMARY / IGN ADVANCE.
      Ignition timing:
      3 to7°BTDC (during idling)
      NOTICE:
      Turn all electrical systems OFF.
      HINT:
      Refer to the intelligent tester operator's manual for further information regarding the selection of DATA LIST.

(6) Check that the ignition timing advances immediately when engine speed is increased.

(b) When not using a intelligent tester:

(1) Turn the ignition switch to ON.

(2) Start the engine and warm it up.

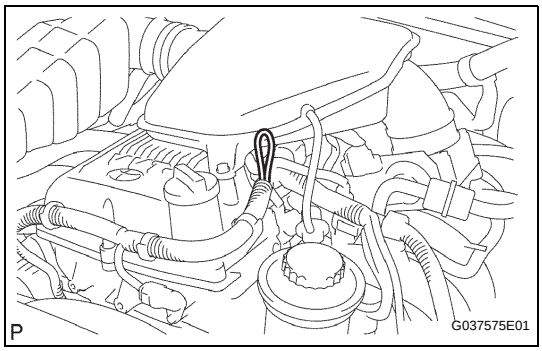

(3) Install the tester terminal of a timing light in the position shown in the illustration.

NOTICE:

- **Use a timing light that detects the first signal.**
- **After checking, be sure to wrap the wire harness with tape.**

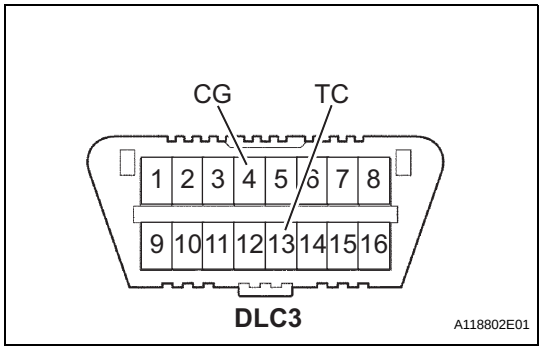

(4) Using SST, connect terminals 13 (TC) and 4 (CG) of the DLC3.

SST 09843-18040

NOTICE:

Be careful not to connect the wrong terminals. It may damage the engine.

(5) Check that the ignition timing is within the specification.

Ignition timing:

3 to7° BTDC (during idling)

NOTICE:

Turn all electrical systems OFF.

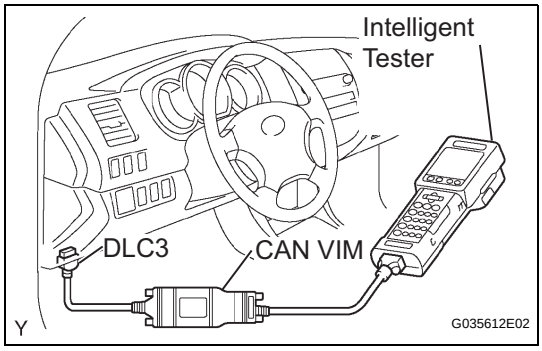

9. INSPECT ENGINE IDLING SPEED

(a) When using a intelligent tester:

(1) Connect the intelligent tester to the DLC3

(2) Turn the ignition switch to ON.

(3) Turn the intelligent tester ON.

(4) Start the engine and warm it up.

(5) Select the following menu items:
DIAGNOSIS / ENHANCED OBDII / DATA LIST / PRIMARY / ENGINE SPD.

Idling speed:

600 to 700 rpm

NOTICE:

- **Turn all electrical system OFF.**
- **When checking the idling speed, the transmission is in the neutral position.**

HINT:

Refer to the intelligent tester operator's manual for further information regarding the selection of DATA LIST.

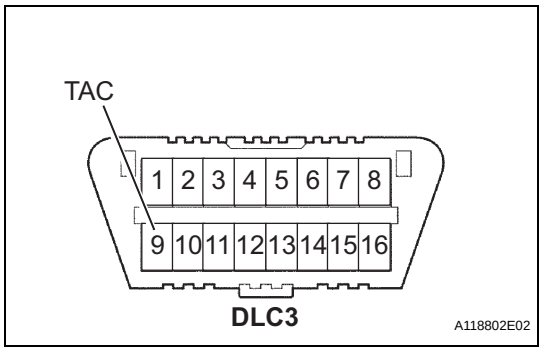

(b) When not using a intelligent tester:
(1) Turn the ignition switch ON.
(2) Start the engine and warm it up.
(3) Install SST onto terminal 9 (TAC) of the DLC3. Connect a tachometer, then measure the engine idling speed.
SST 09843-18030
Idling speed:
600 to 700 rpm
NOTICE:
- **Turn all electrical systems OFF.**
- **When checking the idling speed, the transmission should be in the neutral position.**

10. INSPECT COMPRESSION
(a) Warm up the engine, then stop it.
(b) Remove the intake air connector
(c) Remove the ignition coils.
(d) Remove the spark plugs.
(e) Disconnect the fuel infector connector.

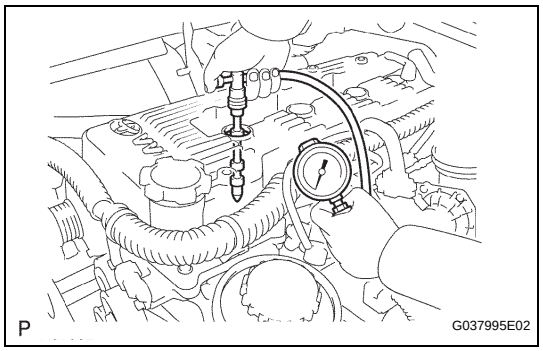

(f) Inspect the compression.
(1) Insert a compression gauge into the plug hole.
(2) Crank the engine, then measure the compression pressure.
Compression pressure:
1230 kPa (12.5 kgf/cm^2, 178 psi)
Minimum pressure:
880 kPa (9.0 kgf/cm^2, 128 psi) or more
Difference between each cylinder:
68 kPa (0.7 kgf/cm^2, 10psi) or less
NOTICE:
- **Use a fully-charged battery so the engine speed can be increased to 250 rpm or more.**
- **Inspect the other cylinders in the same way.**
- **Measure the compression pressure in as short a time as possible.**

(3) If the compression pressure is low, pour a small amount of engine oil into the cylinder block, then measure it again.
HINT:
- If the compression pressure increases after adding the engine oil, the piston rings may be worn.
- If the compression pressure does not charge after pouring engine oil, defects may be occurring around the valves.

11. INSPECT CO/HC
HINT:
This inspection is for checking whether the CO/HC concentration in the emission gas while idling complies with the regulations.

EM

(a) Start the engine.
(b) Keep the engine speed at 2,500 rpm for approximately 180 seconds.
(c) Insert the CO/HC meter testing probe at least 40 cm (1.3 ft) into the tailpipe while idling.
(d) Immediately check the CO/HC concentration while idling and/or at 2,500 rpm.
HINT:
When performing the 2 mode (2,500 rpm and idle) test, follow the applicable local regulations. If the CO/HC concentration does not comply with the regulations, troubleshoot in the order given below.
(1) Check the A/F sensor and heated oxygen sensor operation.
(2) See the table below for possible causes, then inspect and correct the applicable parts if necessary.

CO	HC	Problems	Causes
Normal	High	Rough idling	1. Faulty ignition: – Incorrect timing – Fouled, shorted or improperly gapped plugs 2. Incorrect valve clearance 3. Leakage in intake and exhaust valves 4. Leakage in cylinders
Low	High	Rough idling (Fluctuation HC reading)	1. Vacuum leakage: – PCV hoses – Intake manifold – Throttle body – Brake booster line 2. Lean mixture causing misfire
High	High	Rough idling (Black smoke from exhaust)	1. Restricted air filter 2. Plugged PCV valve 3. Faulty SFI systems: – Faulty pressure regulator – Faulty engine coolant temperature sensor – Faulty mass air flow meter – Faulty ECM – Faulty injectors – Faulty throttle body

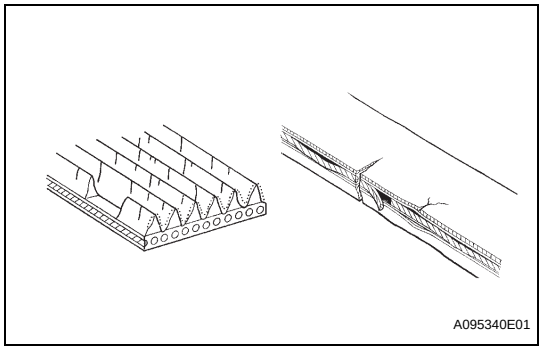

DRIVE BELT

ON-VEHICLE INSPECTION

1. INSPECT FAN AND GENERATOR V BELT

(a) Visually check the belt for excessive wear, frayed cords, etc..
- If any defects are found, replace the V-ribbed belt.
- Cracks on the rib side of the belt are considered acceptable. If the belt has chunks missing from the ribs, it should be replaced.

(b) Check that the tensioner indicator mark is within range A shown in the illustration. If the mark is not within range A, replace the V belt.

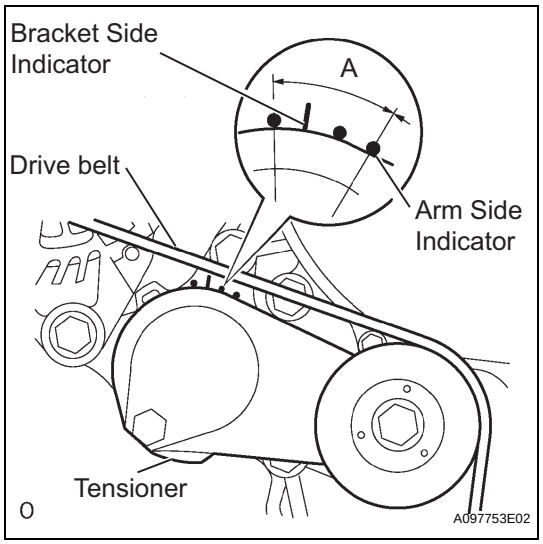

EM

REMOVAL

1. REMOVE FAN AND GENERATOR V BELT

(a) Turning the hexagonal bolt on the V-ribbed belt tensioner clockwise, loosen and then remove the V belt.

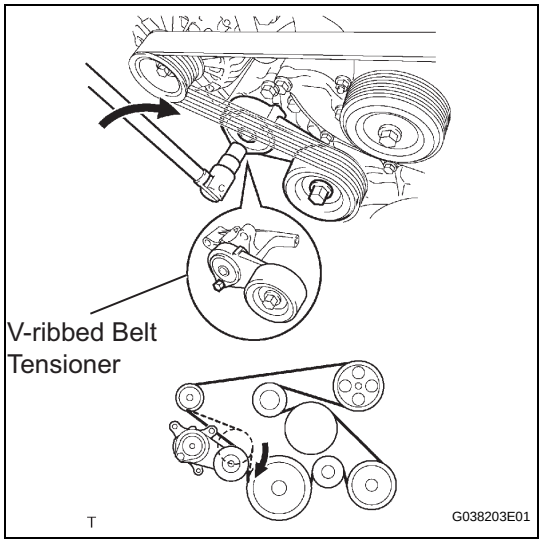

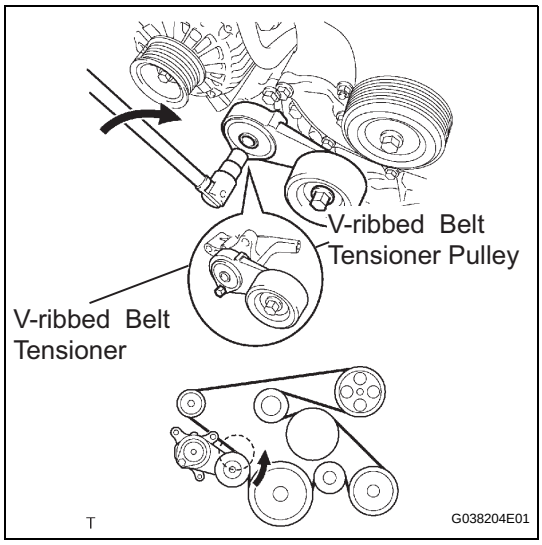

INSTALLATION

1. **INSTALL FAN AND GENERATOR V BELT**
   (a) Provisionally install the V belt onto each pulley.
   NOTICE:
   Install the V belt onto each pulley and finally install the V belt onto the V-ribbed belt tensioner.
   (b) Turn the hexagonal bolt on the V-ribbed belt tensioner clockwise and install the V belt onto the V-ribbed belt tensioner pulley.

2. **INSPECT FAN AND GENERATOR V BELT (See page EM-5)**

TIMING CHAIN

COMPONENTS

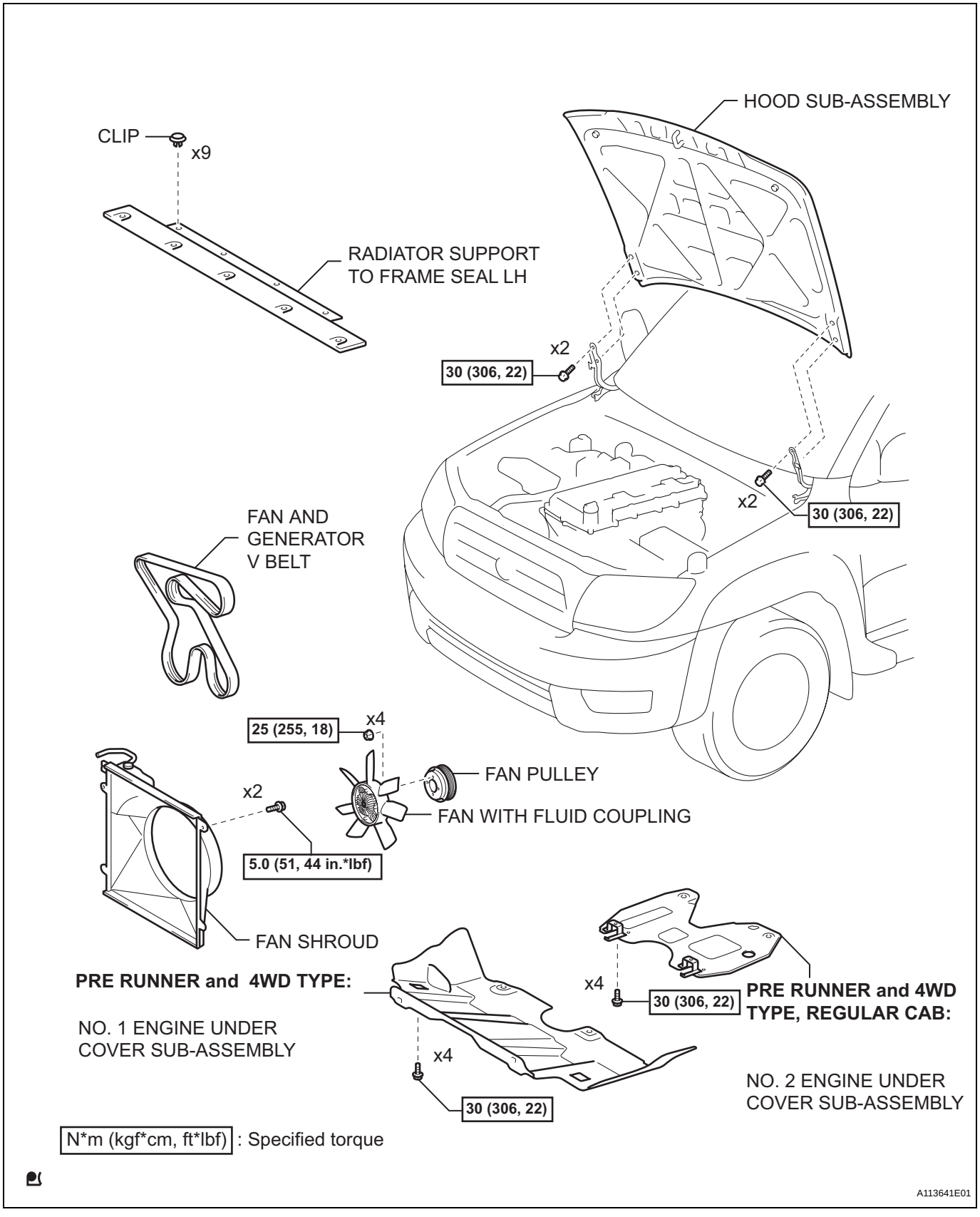

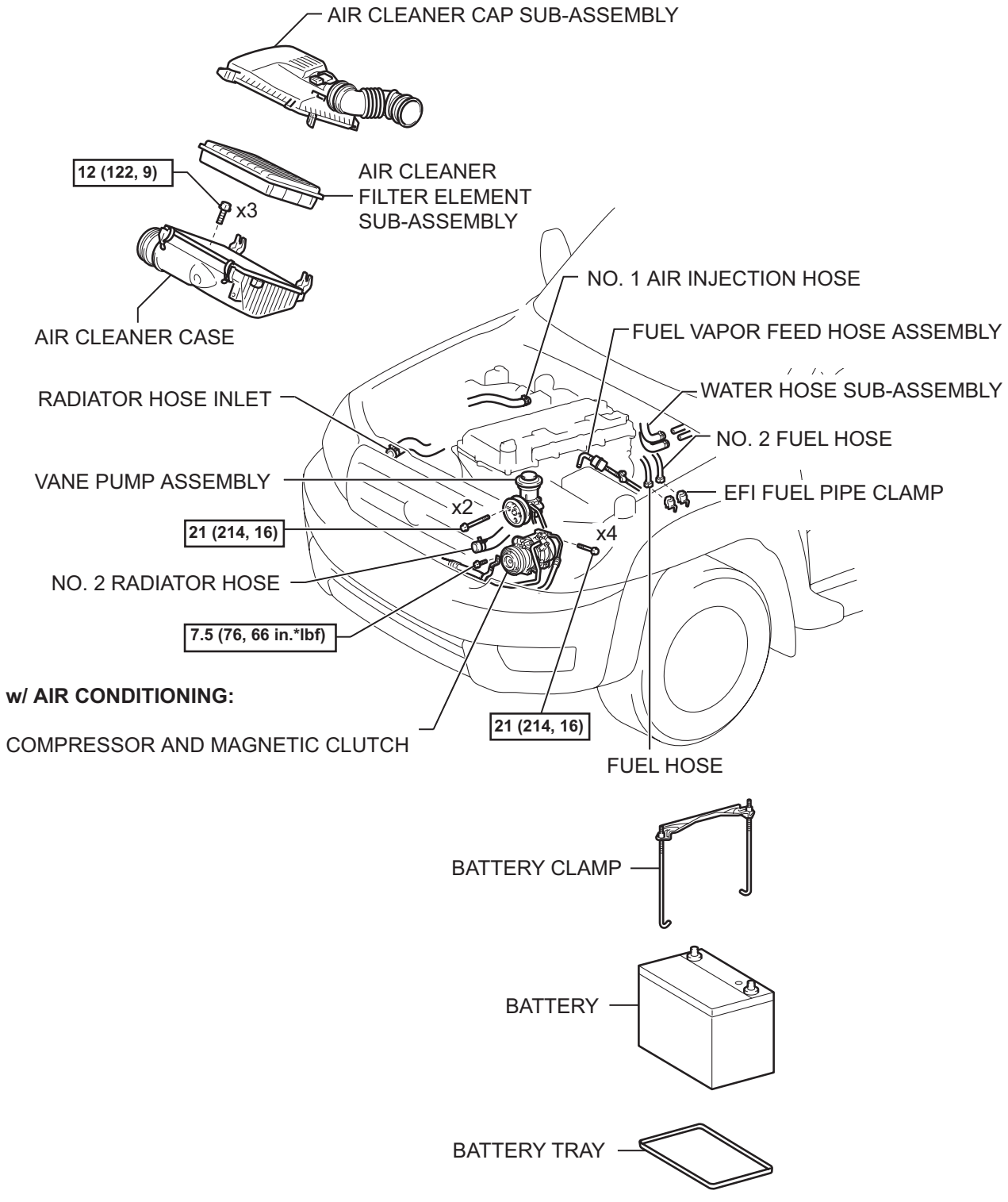

EM

N*m (kgf*cm, ft*lbf) : Specified torque

A113642E01

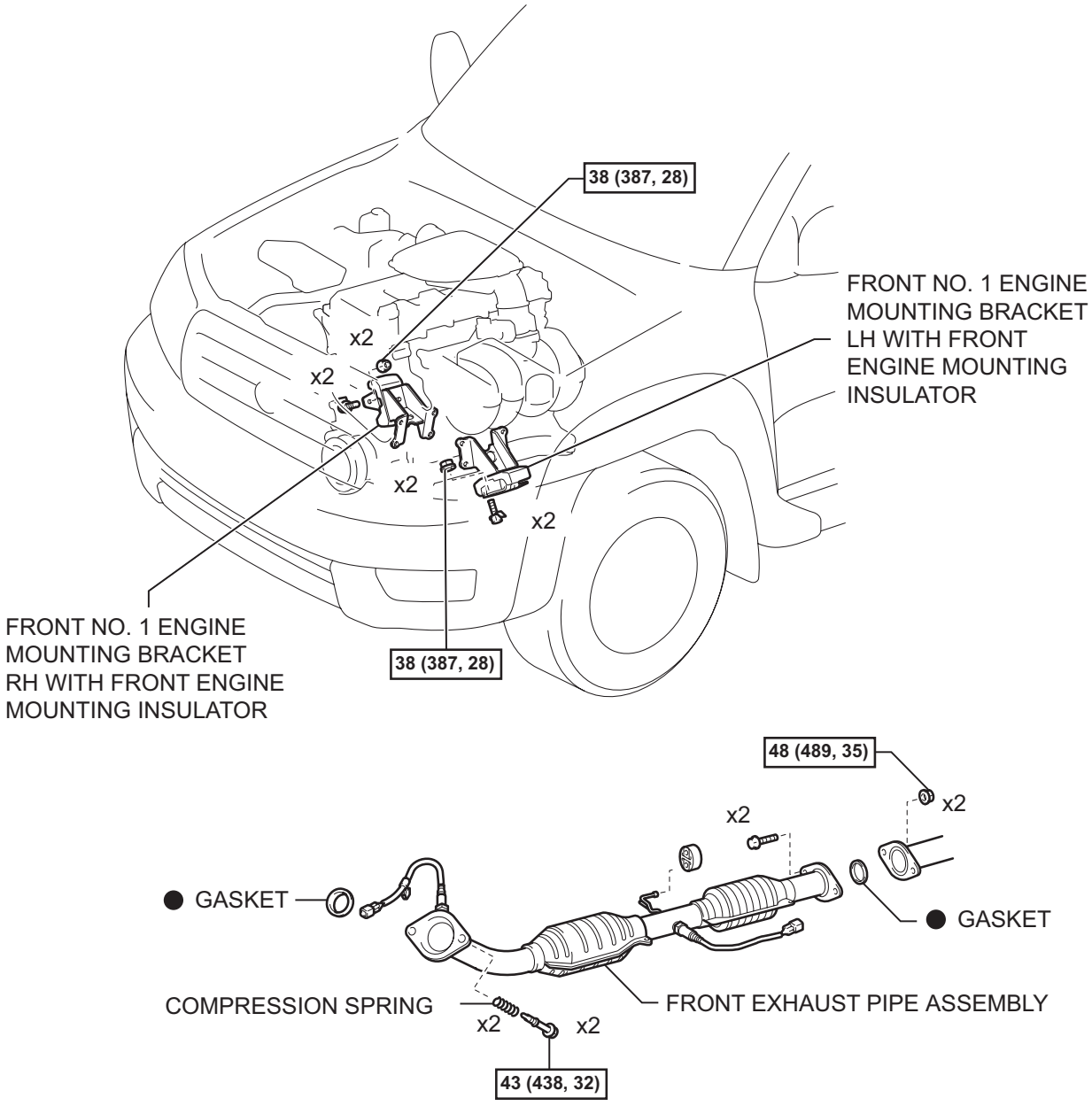

N*m (kgf*cm, ft*lbf) : Specified torque

● Non-reusable part

A113643E01

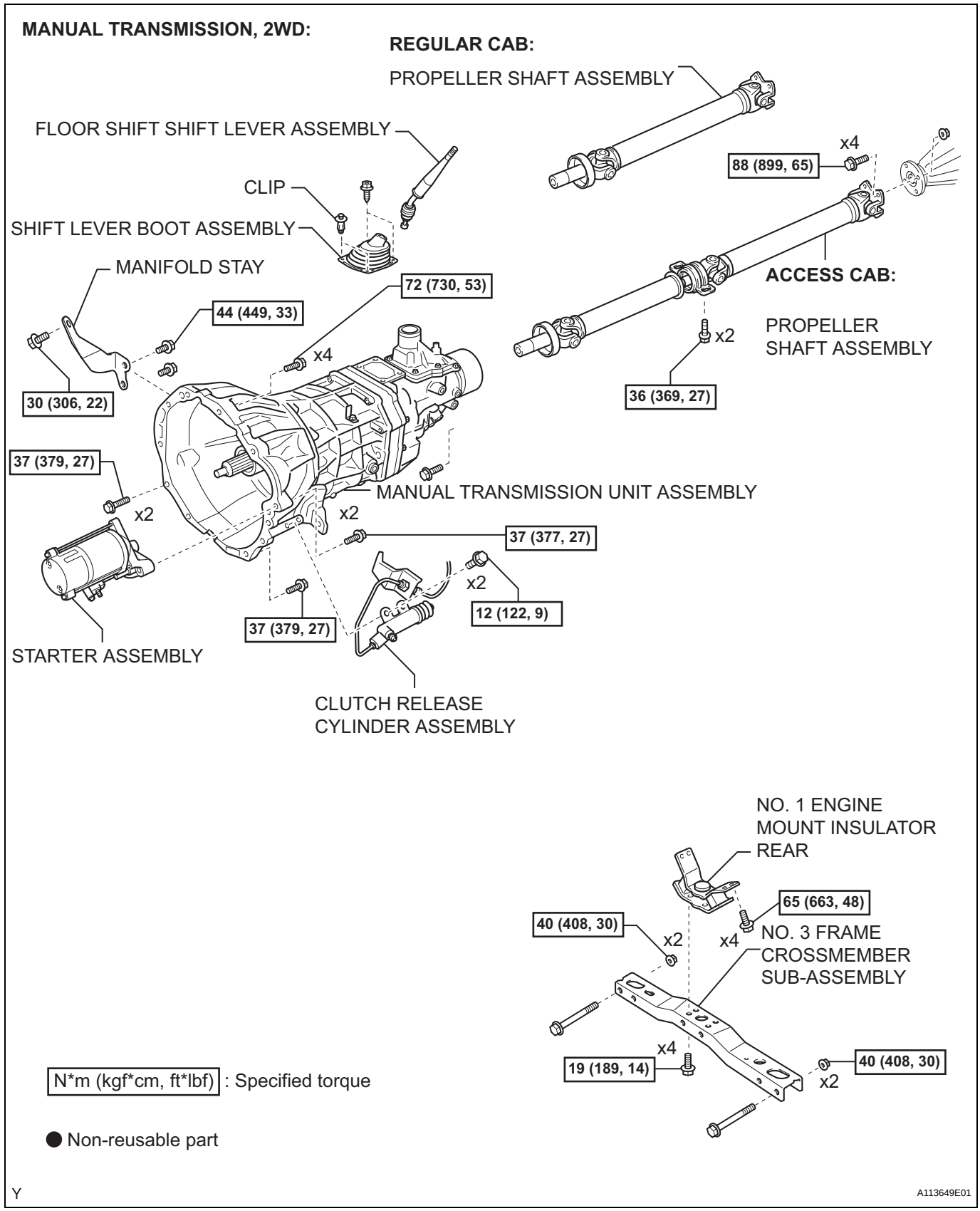
MANUAL TRANSMISSION, 2WD:
REGULAR CAB:
PROPELLER SHAFT ASSEMBLY
FLOOR SHIFT SHIFT LEVER ASSEMBLY
CLIP
SHIFT LEVER BOOT ASSEMBLY
MANIFOLD STAY
88 (899, 65)
x4
ACCESS CAB:
PROPELLER SHAFT ASSEMBLY
x2
36 (369, 27)
72 (730, 53)
44 (449, 33)
x4
30 (306, 22)
EM
37 (379, 27)
x2
MANUAL TRANSMISSION UNIT ASSEMBLY
x2
37 (377, 27)
x2
12 (122, 9)
37 (379, 27)
STARTER ASSEMBLY
CLUTCH RELEASE CYLINDER ASSEMBLY
NO. 1 ENGINE MOUNT INSULATOR REAR
65 (663, 48)
40 (408, 30)
x2
x4
NO. 3 FRAME CROSSMEMBER SUB-ASSEMBLY
x4
19 (189, 14)
40 (408, 30)
x2
N*m (kgf*cm, ft*lbf) : Specified torque
● Non-reusable part
Y
A113649E01

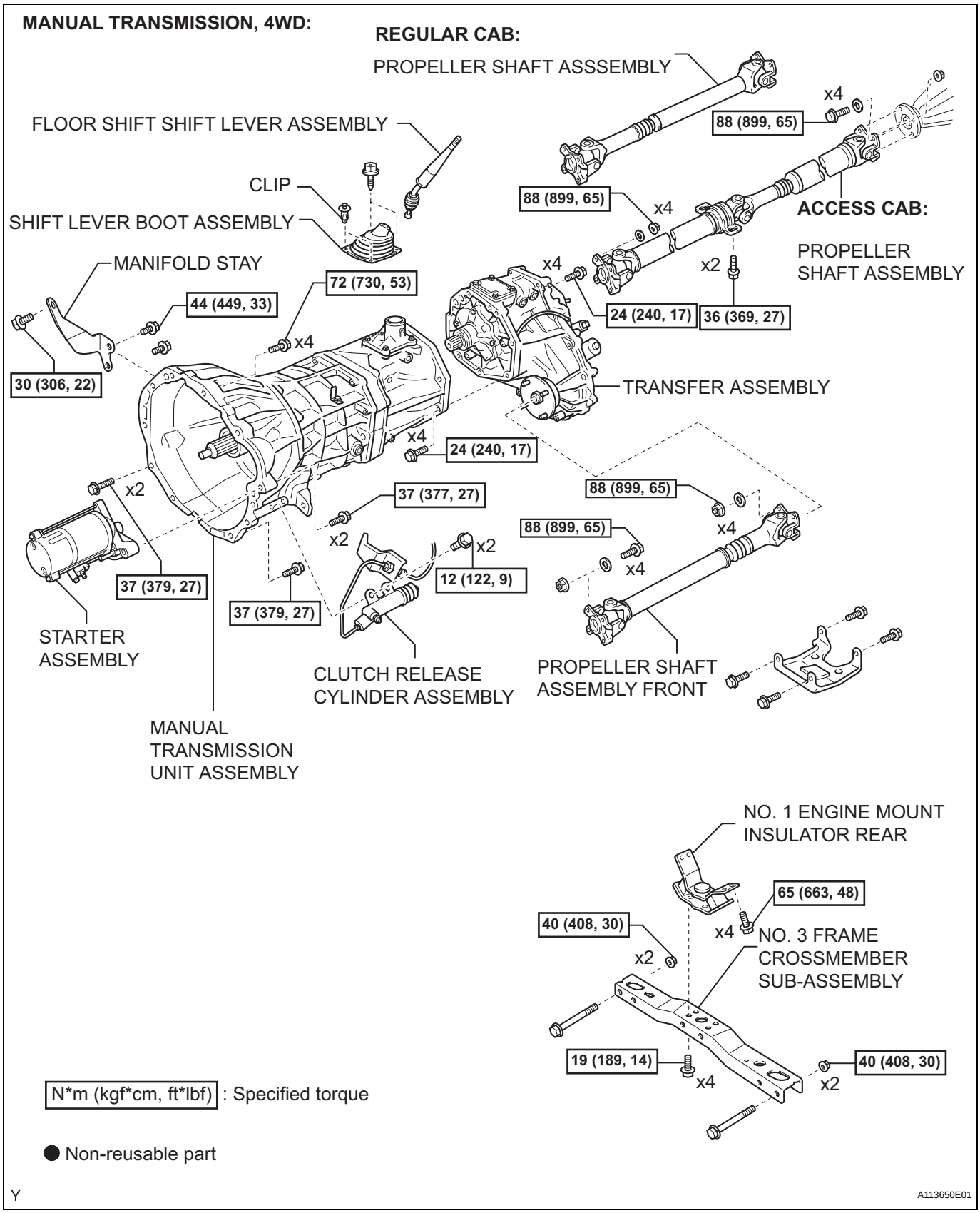
MANUAL TRANSMISSION, 4WD:
REGULAR CAB:
PROPELLER SHAFT ASSSEMBLY
FLOOR SHIFT SHIFT LEVER ASSEMBLY
CLIP
SHIFT LEVER BOOT ASSEMBLY
MANIFOLD STAY
88 (899, 65)
x4
ACCESS CAB:
PROPELLER SHAFT ASSEMBLY
x2
44 (449, 33)
72 (730, 53)
30 (306, 22)
24 (240, 17)
36 (369, 27)
TRANSFER ASSEMBLY
37 (377, 27)
12 (122, 9)
STARTER ASSEMBLY
CLUTCH RELEASE CYLINDER ASSEMBLY
PROPELLER SHAFT ASSEMBLY FRONT
MANUAL TRANSMISSION UNIT ASSEMBLY
NO. 1 ENGINE MOUNT INSULATOR REAR
65 (663, 48)
40 (408, 30)
NO. 3 FRAME CROSSMEMBER SUB-ASSEMBLY
19 (189, 14)
N*m (kgf*cm, ft*lbf) : Specified torque
● Non-reusable part
Y
A113650E01

EM

MANUAL TRANSMISSION:

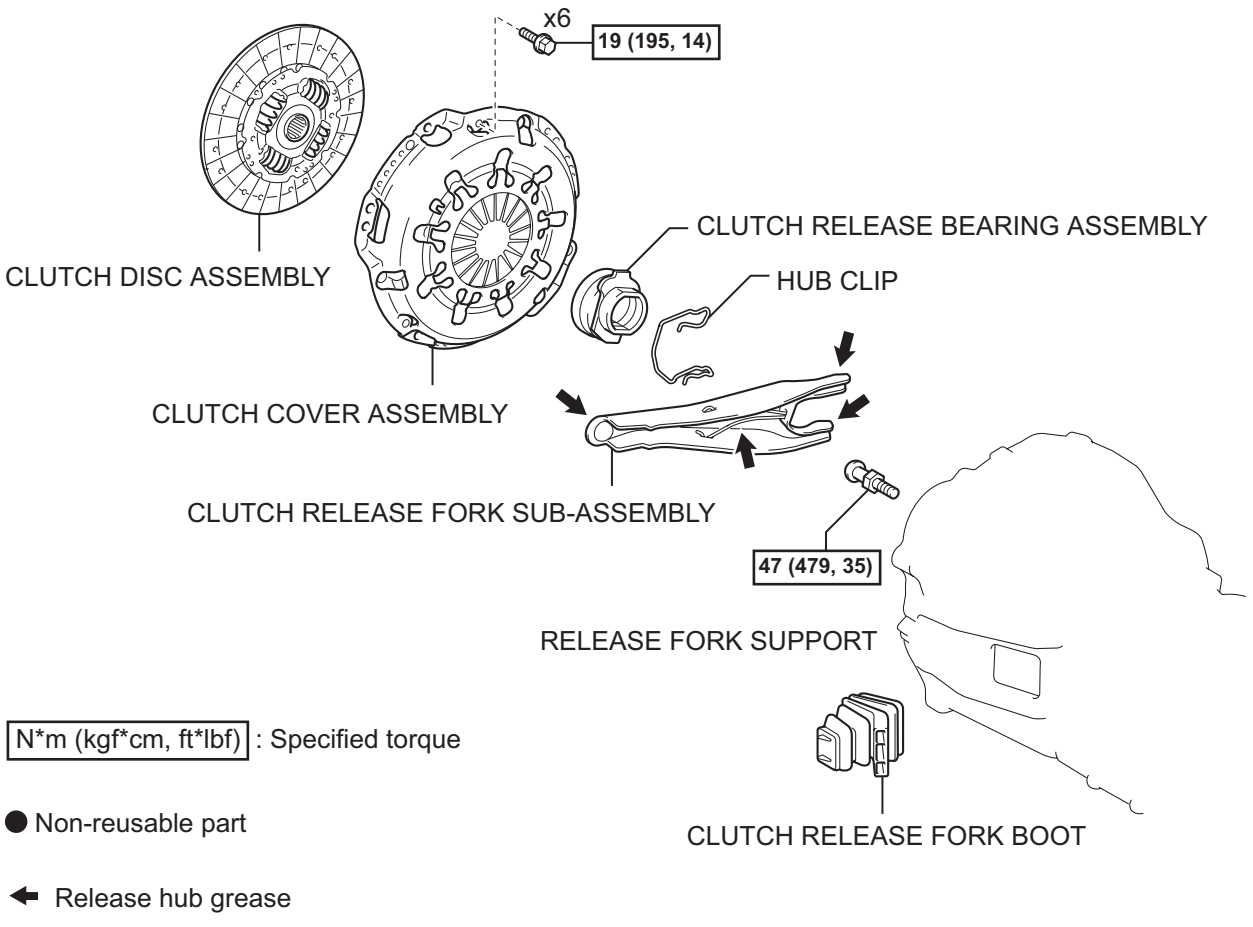

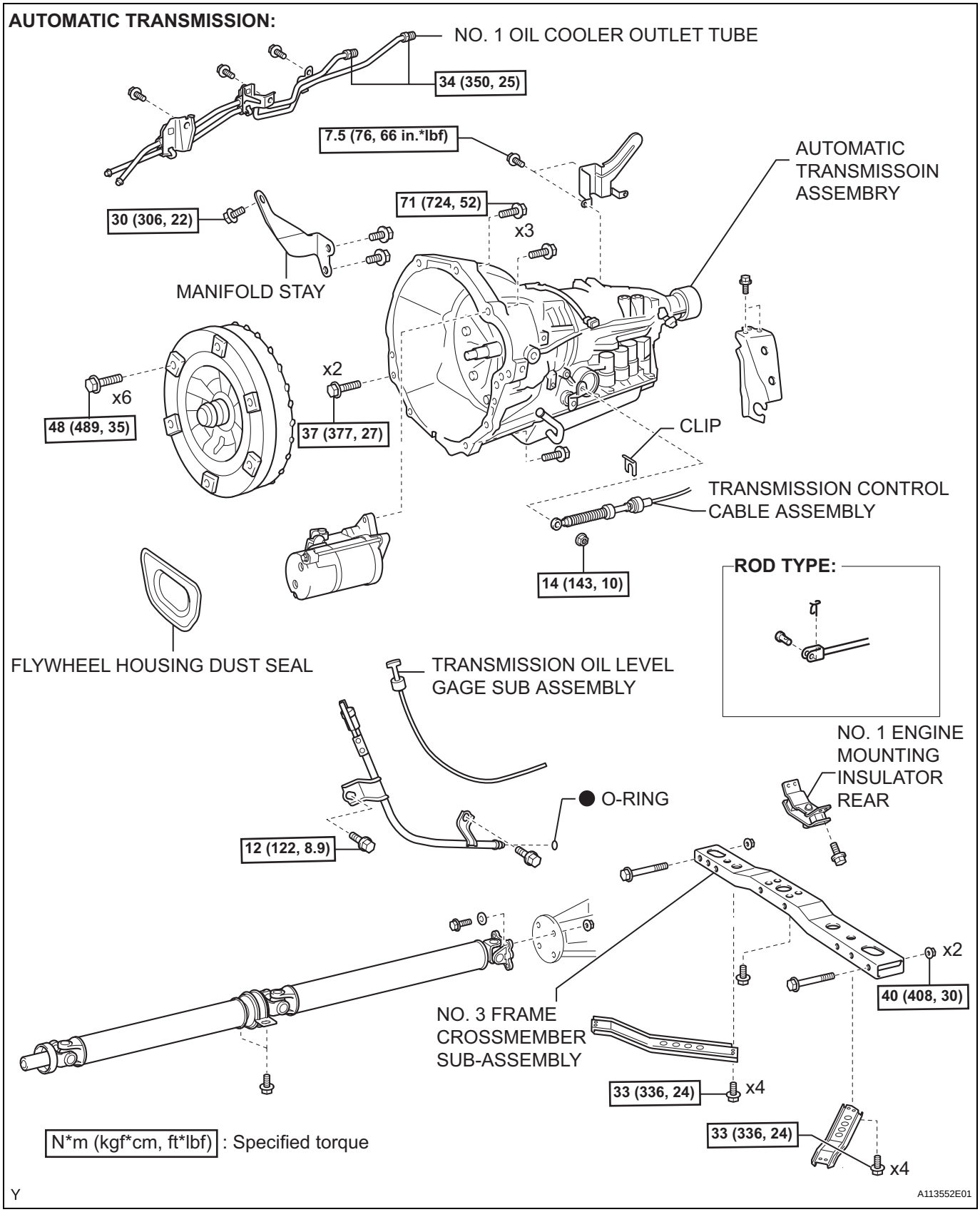
AUTOMATIC TRANSMISSION:
NO. 1 OIL COOLER OUTLET TUBE
34 (350, 25)
7.5 (76, 66 in.*lbf)
AUTOMATIC TRANSMISSOIN ASSEMBRY
30 (306, 22)
71 (724, 52)
x3
MANIFOLD STAY
x2
x6
48 (489, 35)
37 (377, 27)
CLIP
TRANSMISSION CONTROL CABLE ASSEMBLY
14 (143, 10)
ROD TYPE:
FLYWHEEL HOUSING DUST SEAL
TRANSMISSION OIL LEVEL GAGE SUB ASSEMBLY
NO. 1 ENGINE MOUNTING INSULATOR REAR
O-RING
12 (122, 8.9)
x2
40 (408, 30)
NO. 3 FRAME CROSSMEMBER SUB-ASSEMBLY
33 (336, 24)
x4
33 (336, 24)
x4
N*m (kgf*cm, ft*lbf) : Specified torque
Y
A113552E01

AUTOMATIC TRANSMISSION:

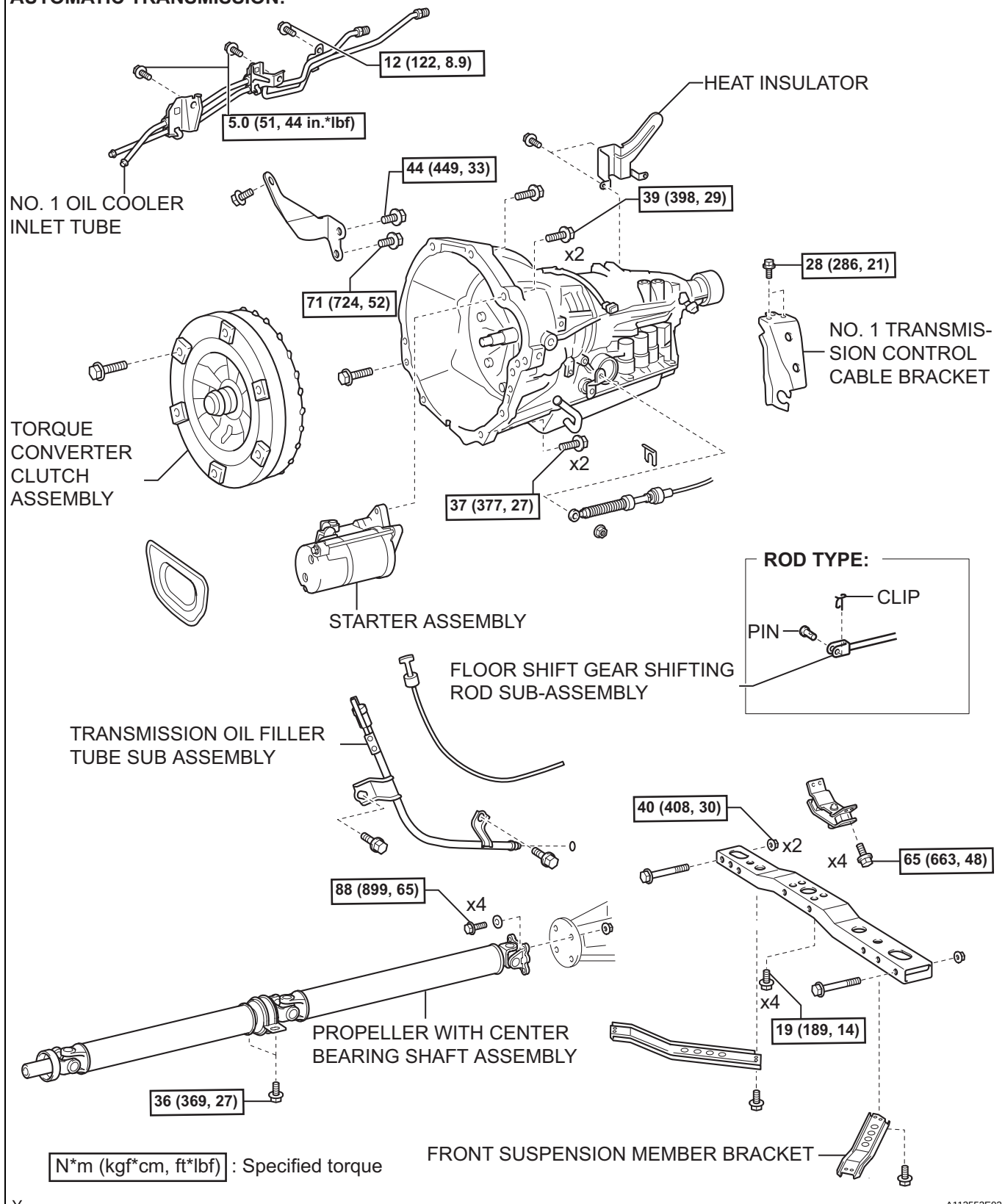

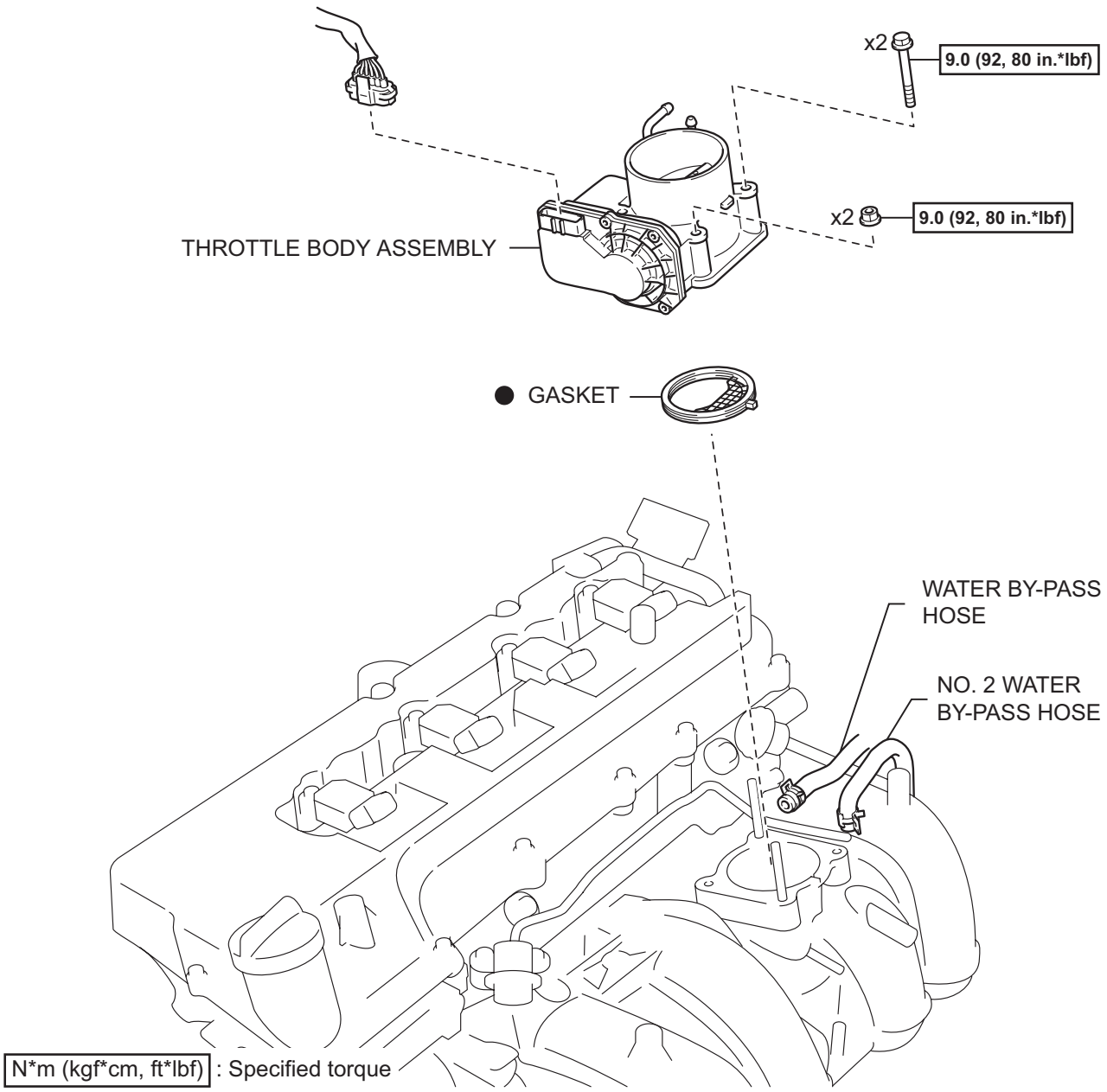
x2
9.0 (92, 80 in.*lbf)
x2
9.0 (92, 80 in.*lbf)
THROTTLE BODY ASSEMBLY
● GASKET
WATER BY-PASS HOSE
NO. 2 WATER BY-PASS HOSE
N*m (kgf*cm, ft*lbf) : Specified torque
● Non-reusable part
A113624E01

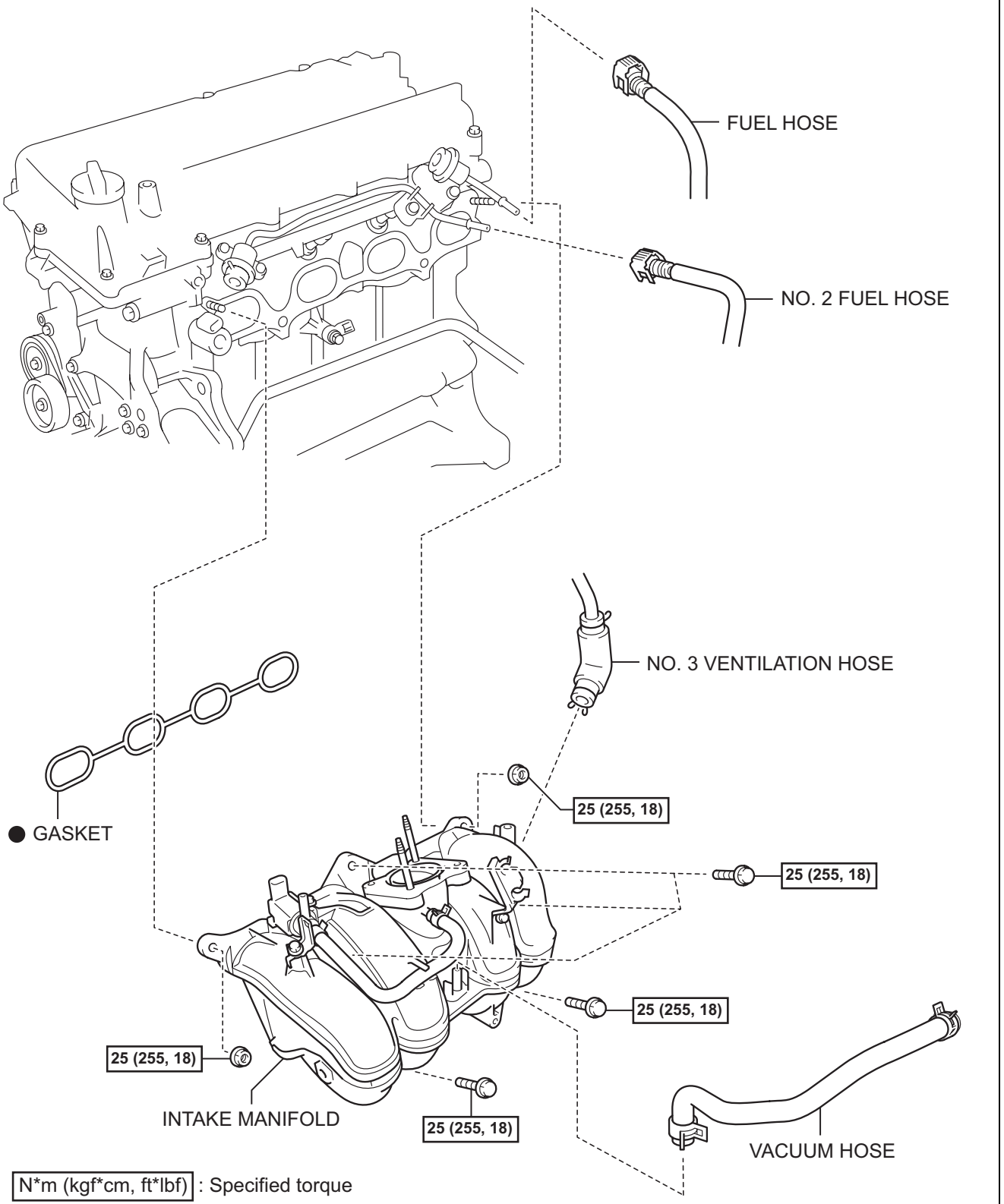
FUEL HOSE
NO. 2 FUEL HOSE
NO. 3 VENTILATION HOSE
● GASKET
25 (255, 18)
25 (255, 18)
25 (255, 18)
25 (255, 18)
25 (255, 18)
INTAKE MANIFOLD
VACUUM HOSE
N*m (kgf*cm, ft*lbf) : Specified torque
● Non-reusable part
A113644E01

EM

T

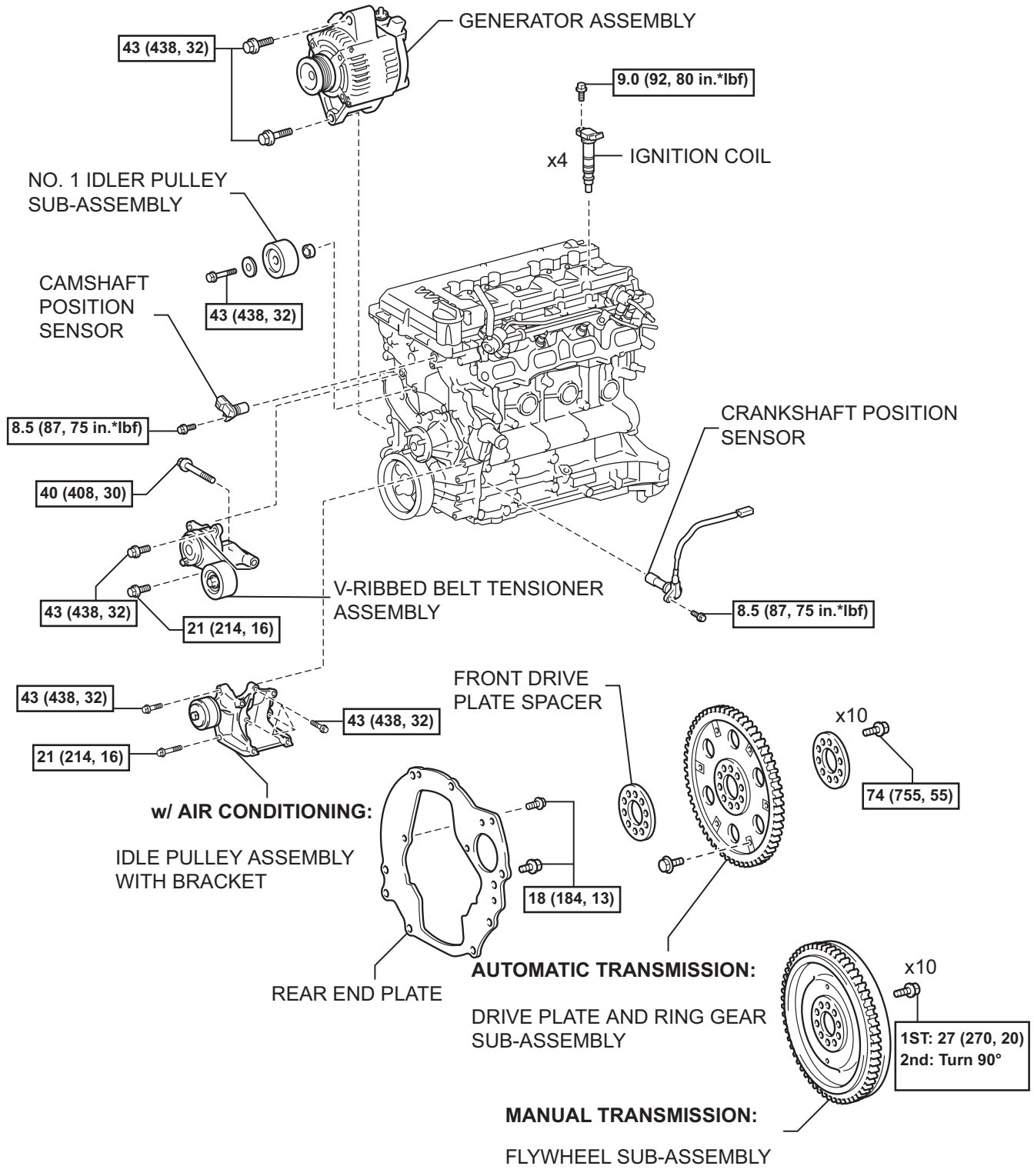

N*m (kgf*cm, ft*lbf) : Specified torque

T

A113645E01

EM

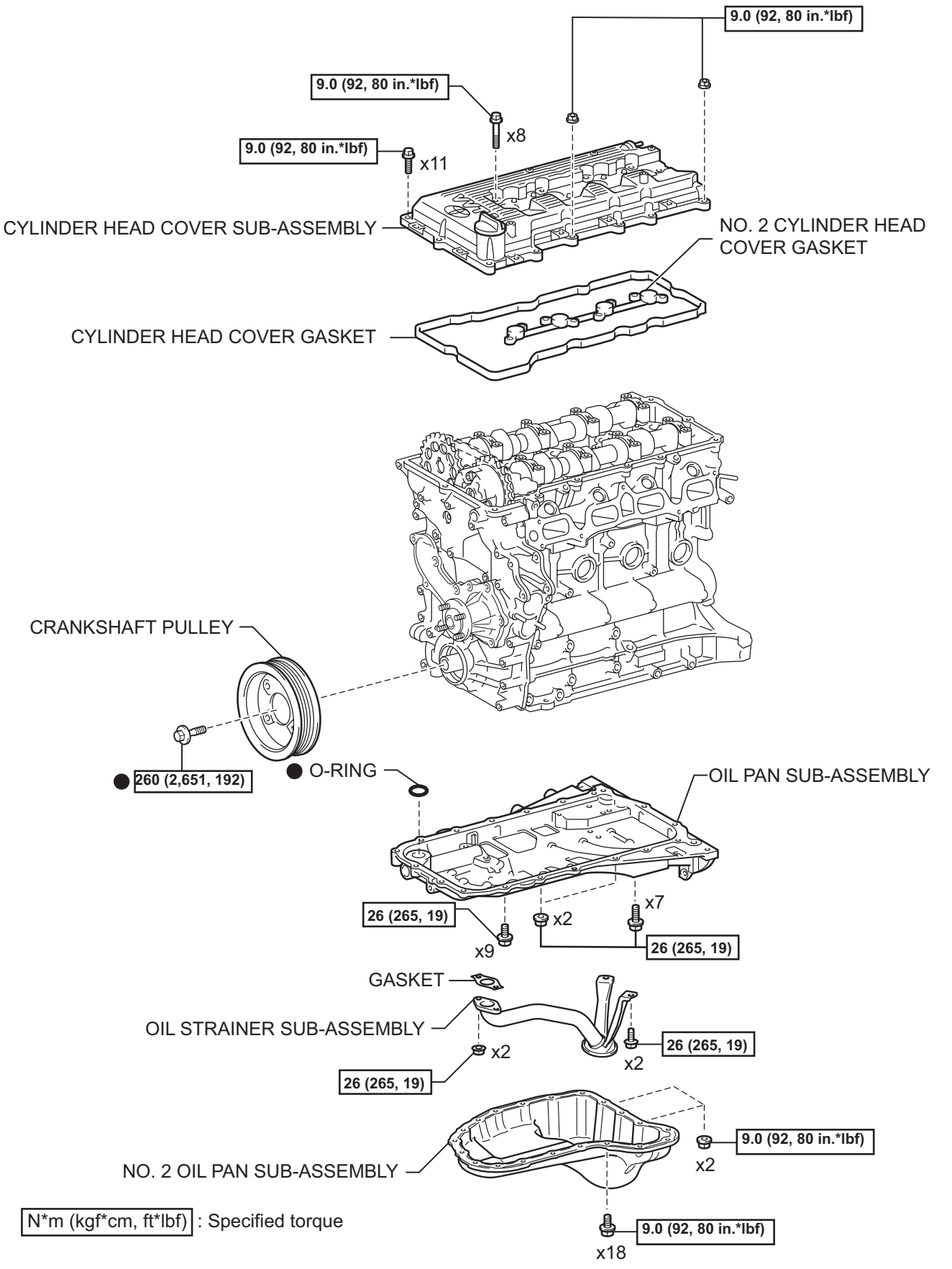
9.0 (92, 80 in.*lbf)
9.0 (92, 80 in.*lbf)
x8
9.0 (92, 80 in.*lbf)
x11
CYLINDER HEAD COVER SUB-ASSEMBLY
NO. 2 CYLINDER HEAD COVER GASKET
CYLINDER HEAD COVER GASKET
CRANKSHAFT PULLEY
260 (2,651, 192)
O-RING
OIL PAN SUB-ASSEMBLY
26 (265, 19)
x9
x2
x7
26 (265, 19)
GASKET
OIL STRAINER SUB-ASSEMBLY
x2
26 (265, 19)
26 (265, 19)
x2
NO. 2 OIL PAN SUB-ASSEMBLY
9.0 (92, 80 in.*lbf)
x2
9.0 (92, 80 in.*lbf)
x18
N*m (kgf*cm, ft*lbf) : Specified torque
● Non-reusable part
T
A113620E01

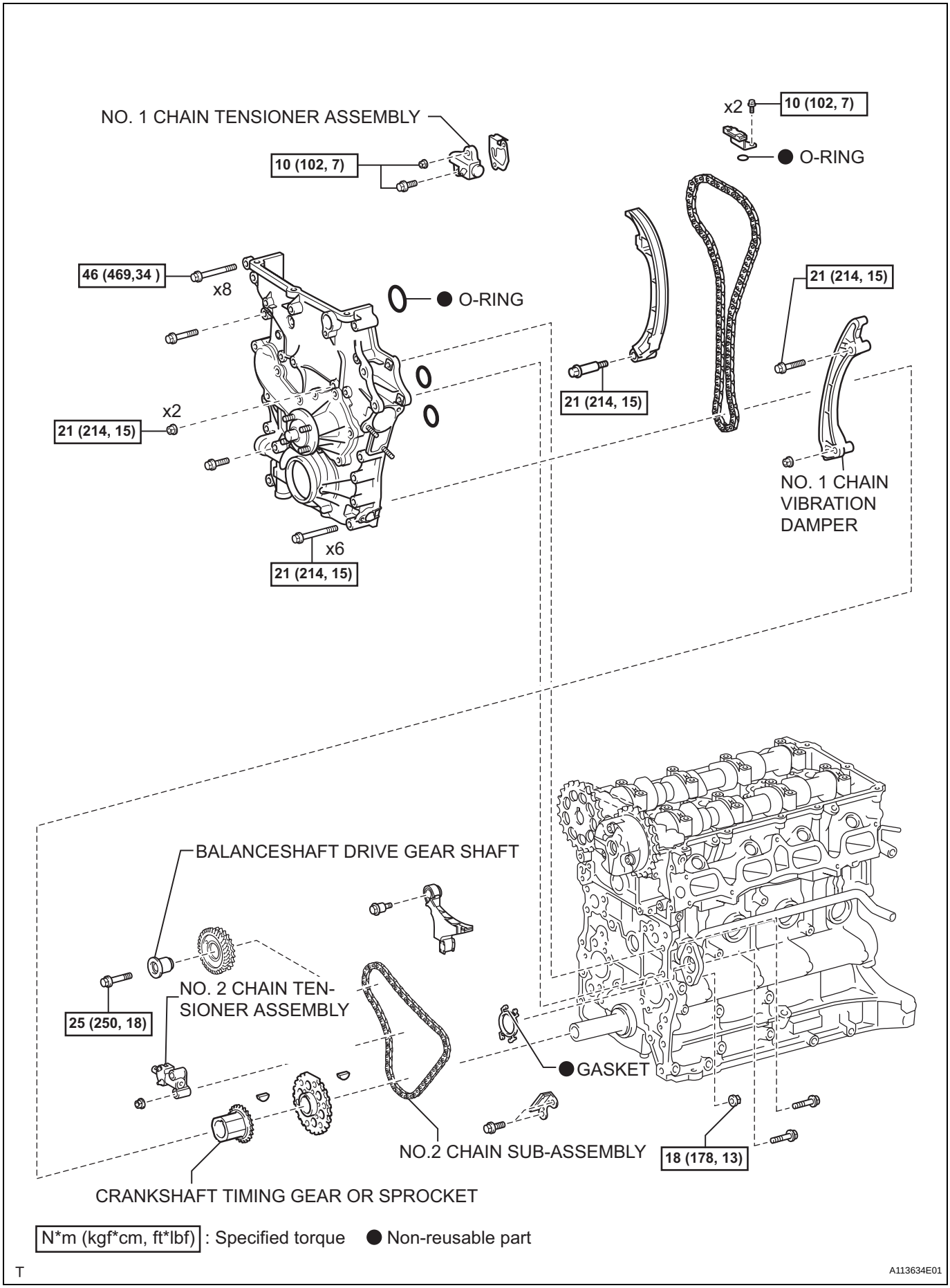
NO. 1 CHAIN TENSIONER ASSEMBLY
10 (102, 7)
x2
10 (102, 7)
● O-RING
46 (469,34)
x8
● O-RING
21 (214, 15)
21 (214, 15)
NO. 1 CHAIN VIBRATION DAMPER
x2
21 (214, 15)
x6
21 (214, 15)
BALANCESHAFT DRIVE GEAR SHAFT
25 (250, 18)
NO. 2 CHAIN TENSIONER ASSEMBLY
● GASKET
NO.2 CHAIN SUB-ASSEMBLY
18 (178, 13)
CRANKSHAFT TIMING GEAR OR SPROCKET
N*m (kgf*cm, ft*lbf) : Specified torque ● Non-reusable part
T
A113634E01

EM

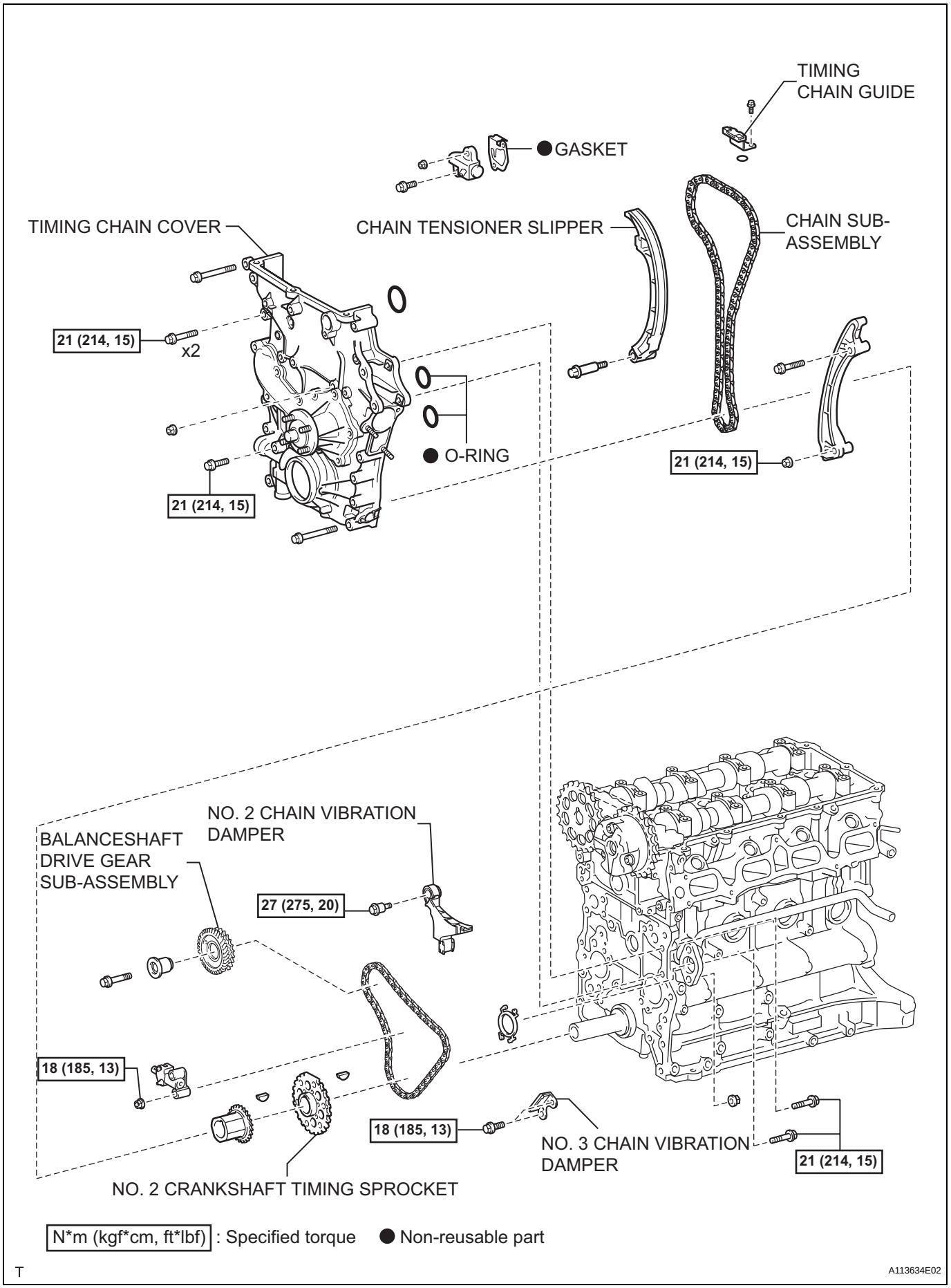

N*m (kgf*cm, ft*lbf) : Specified torque ● Non-reusable part

T

A113634E02

CAMSHAFT

COMPONENTS

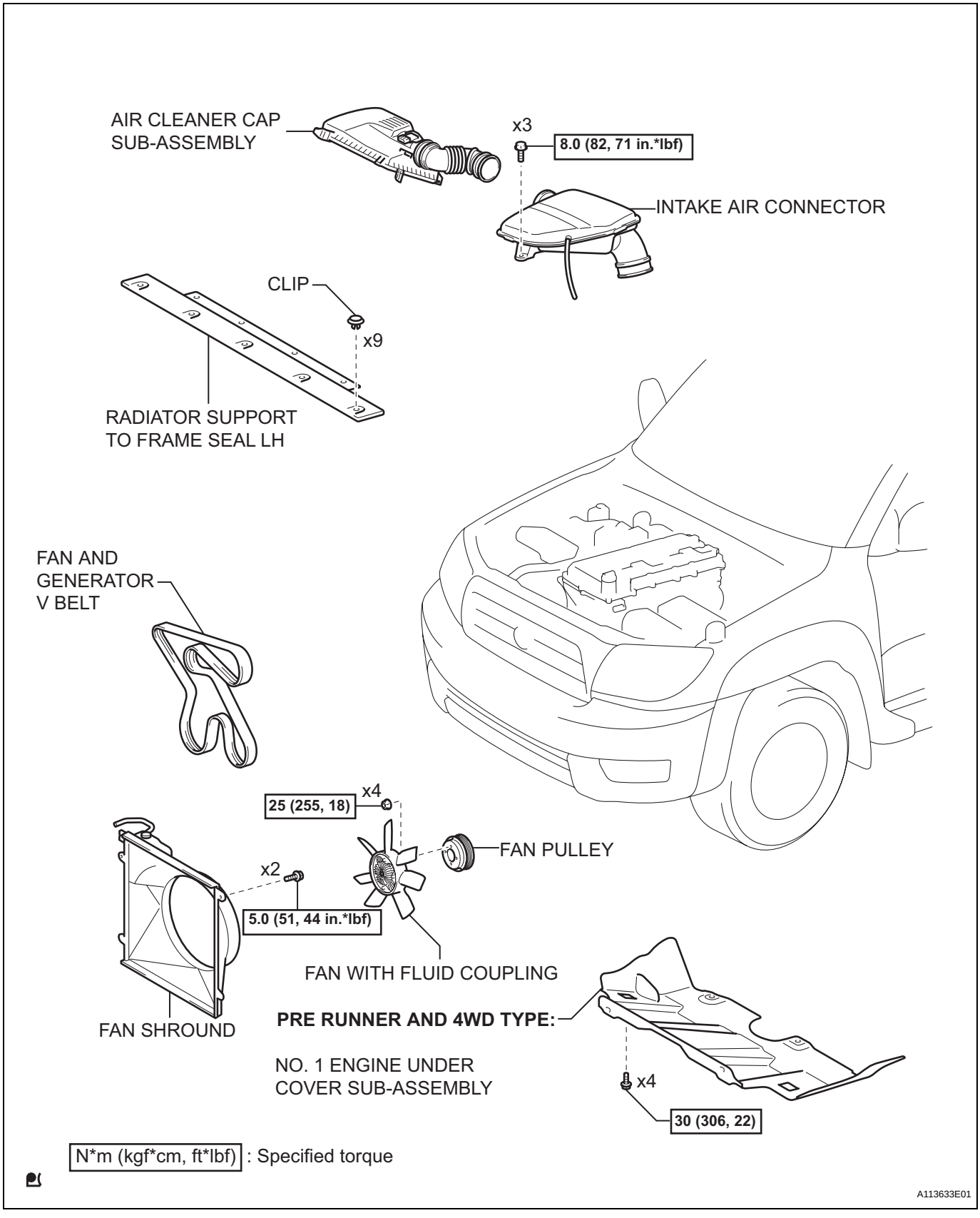

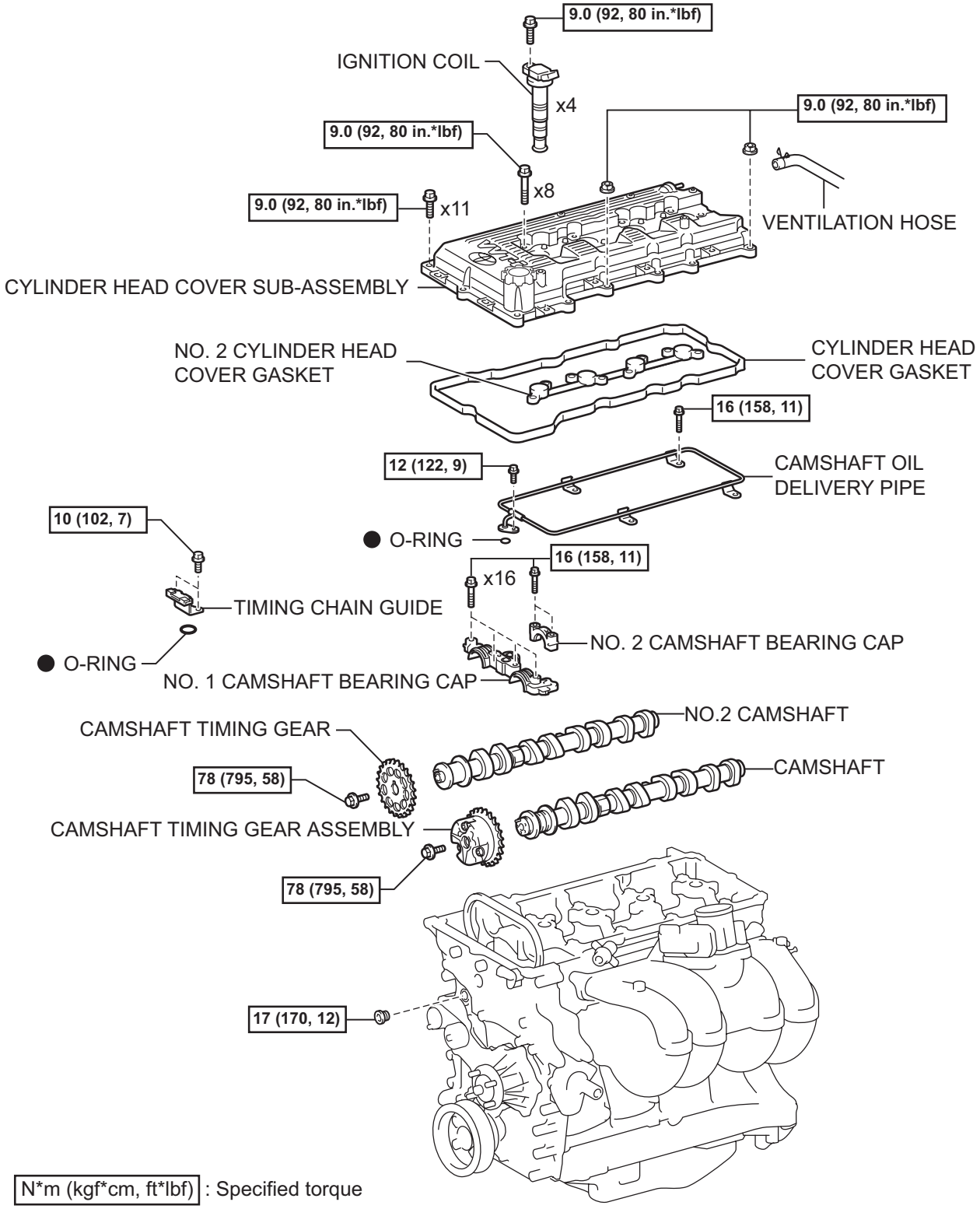

EM

T

A113648E01

CYLINDER HEAD

COMPONENTS

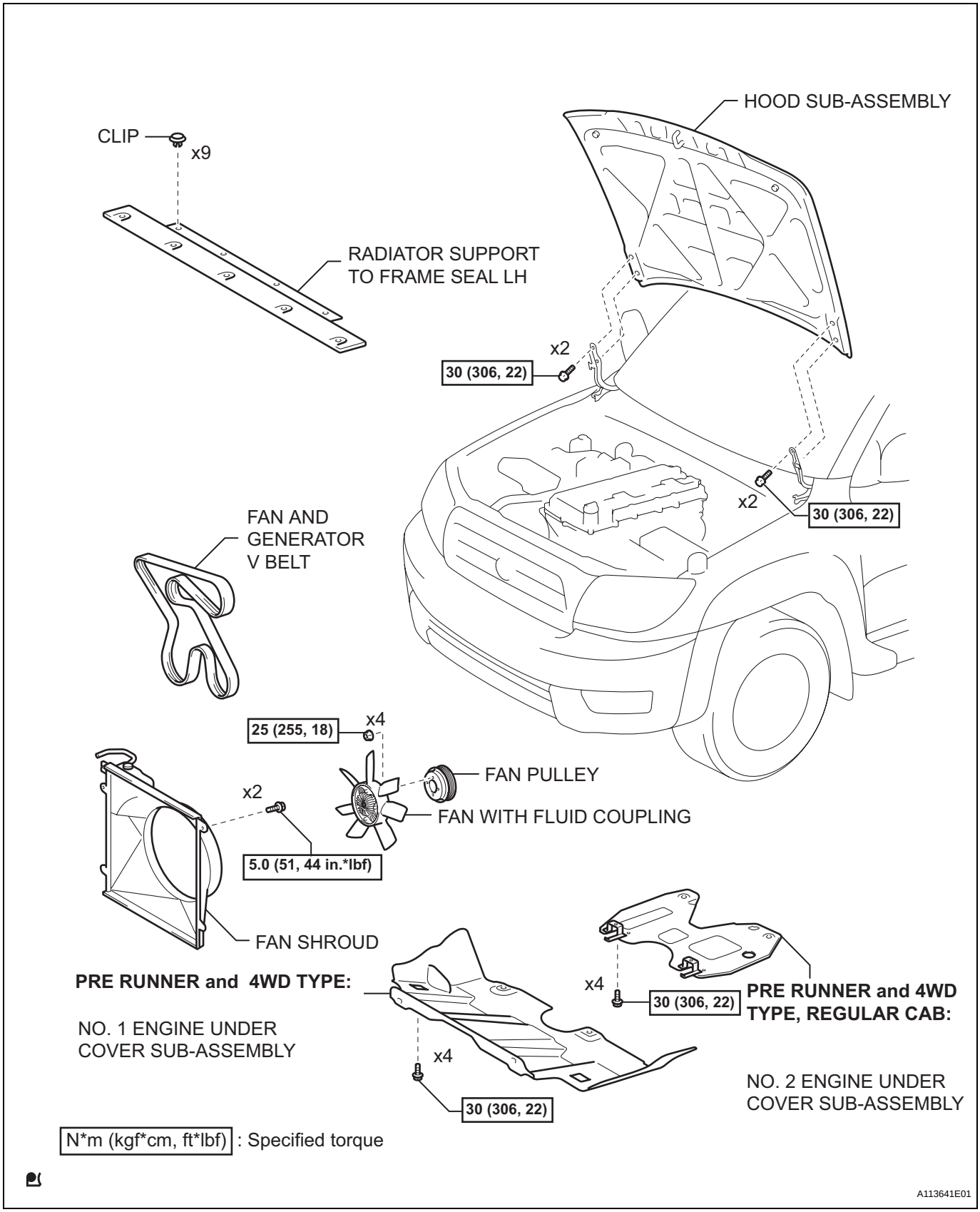

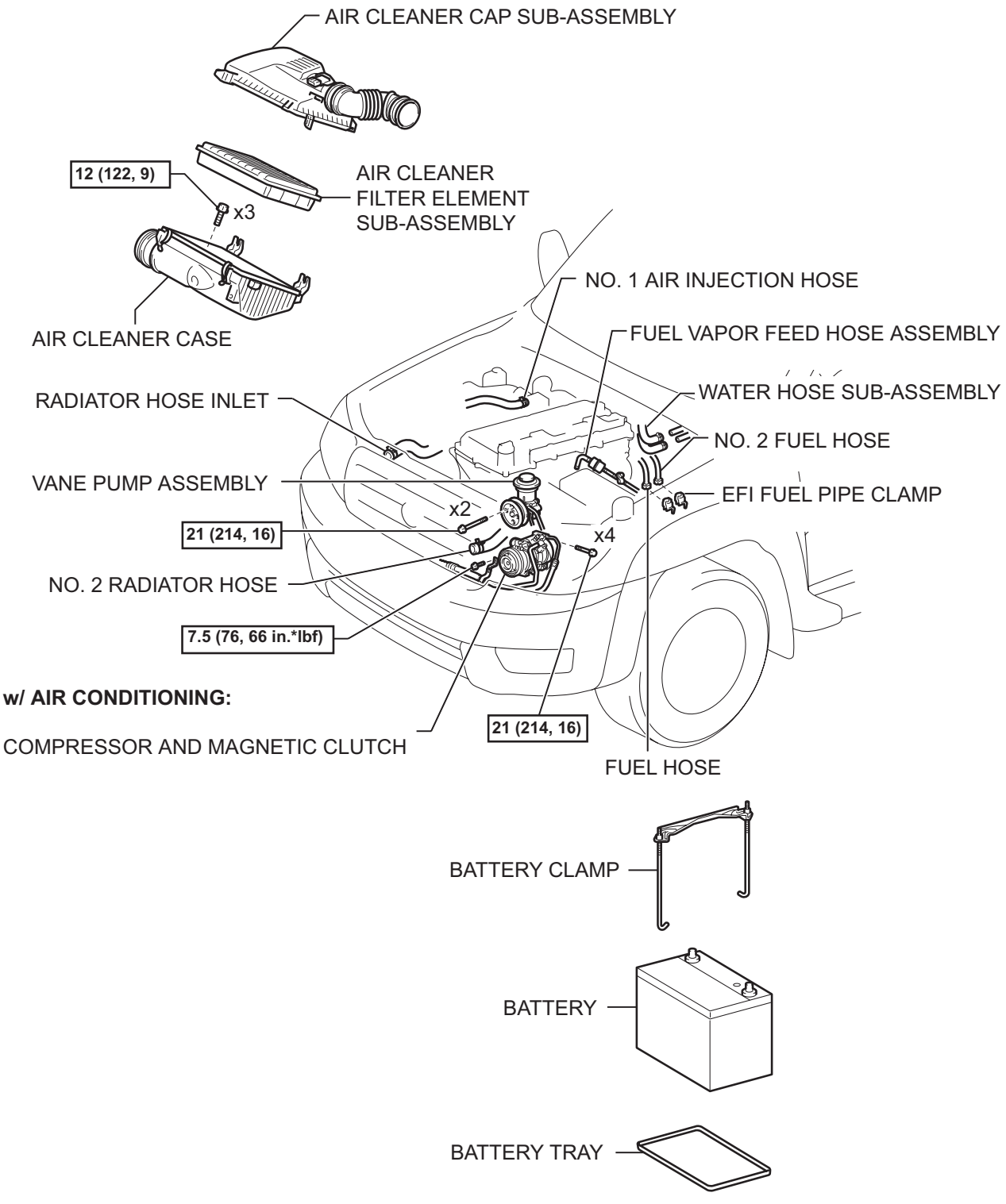

EM

N*m (kgf*cm, ft*lbf) : Specified torque

A113642E01

EM

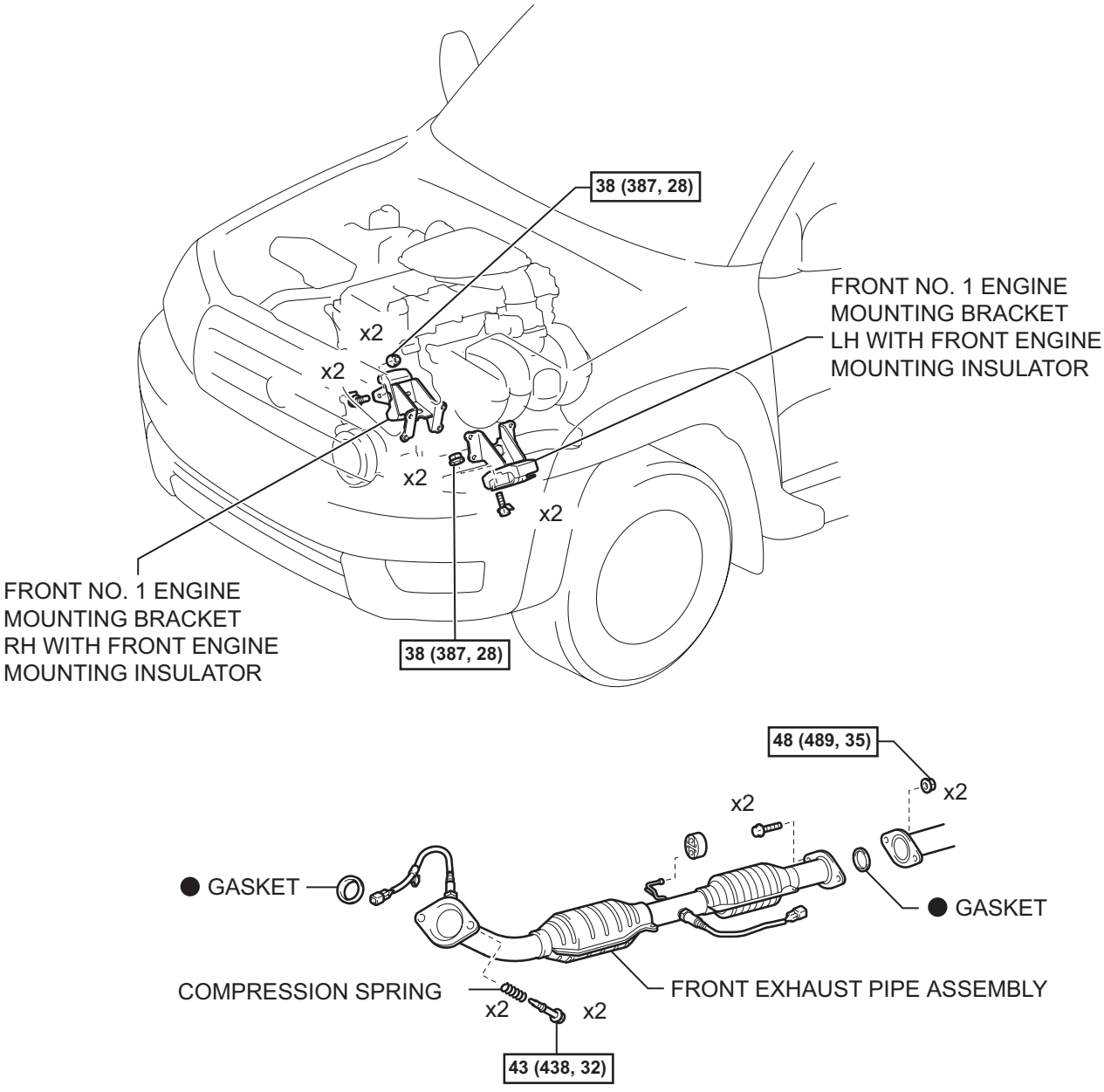

N*m (kgf*cm, ft*lbf) : Specified torque

● Non-reusable part

A113643E04

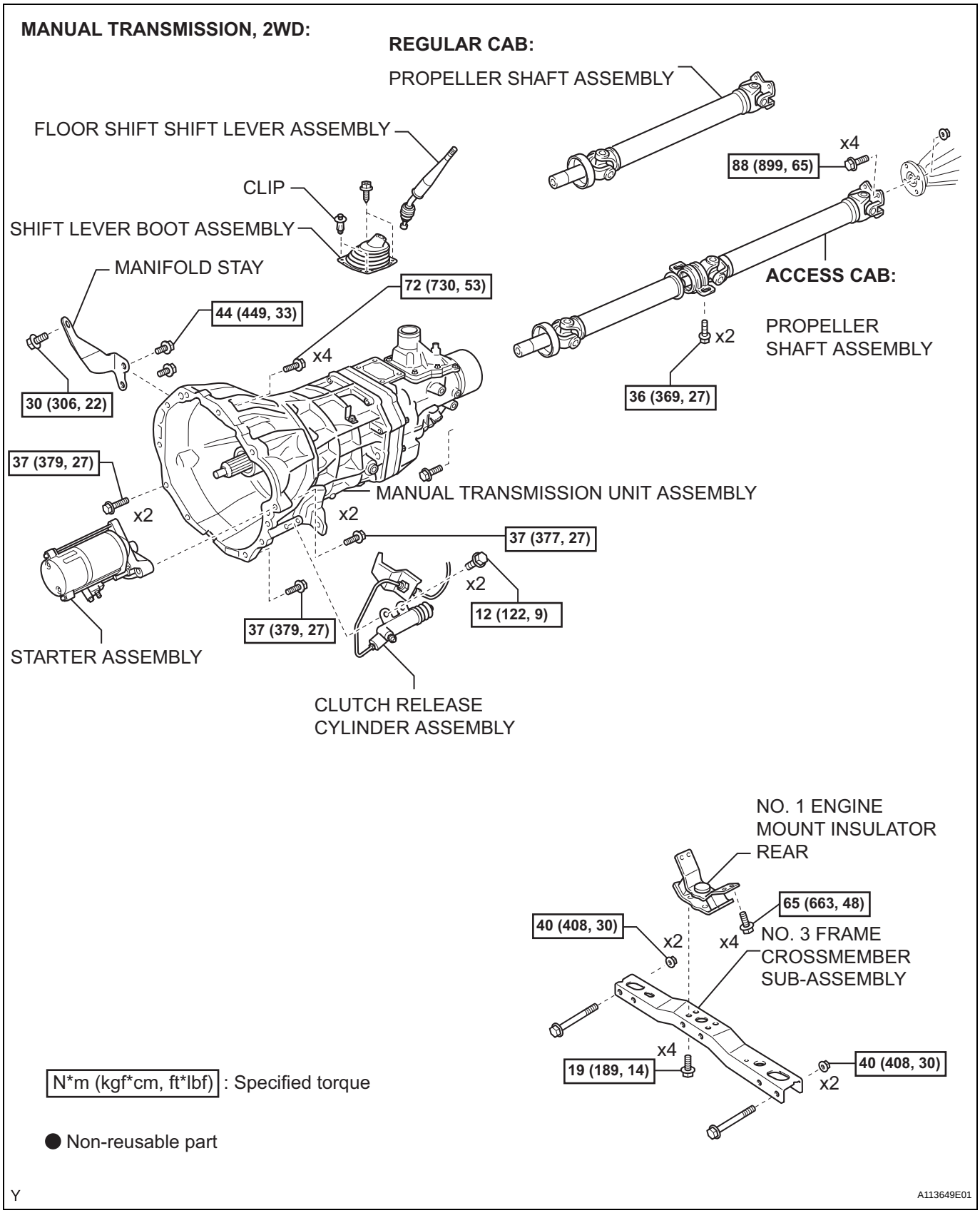
MANUAL TRANSMISSION, 2WD:
REGULAR CAB:
PROPELLER SHAFT ASSEMBLY
FLOOR SHIFT SHIFT LEVER ASSEMBLY
CLIP
SHIFT LEVER BOOT ASSEMBLY
MANIFOLD STAY
72 (730, 53)
44 (449, 33)
x4
30 (306, 22)
88 (899, 65)
x4
ACCESS CAB:
PROPELLER SHAFT ASSEMBLY
x2
36 (369, 27)
37 (379, 27)
x2
MANUAL TRANSMISSION UNIT ASSEMBLY
x2
37 (377, 27)
x2
12 (122, 9)
37 (379, 27)
STARTER ASSEMBLY
CLUTCH RELEASE CYLINDER ASSEMBLY
NO. 1 ENGINE MOUNT INSULATOR REAR
65 (663, 48)
40 (408, 30)
x2
x4
NO. 3 FRAME CROSSMEMBER SUB-ASSEMBLY
x4
19 (189, 14)
40 (408, 30)
x2
N*m (kgf*cm, ft*lbf) : Specified torque
● Non-reusable part
Y
A113649E01

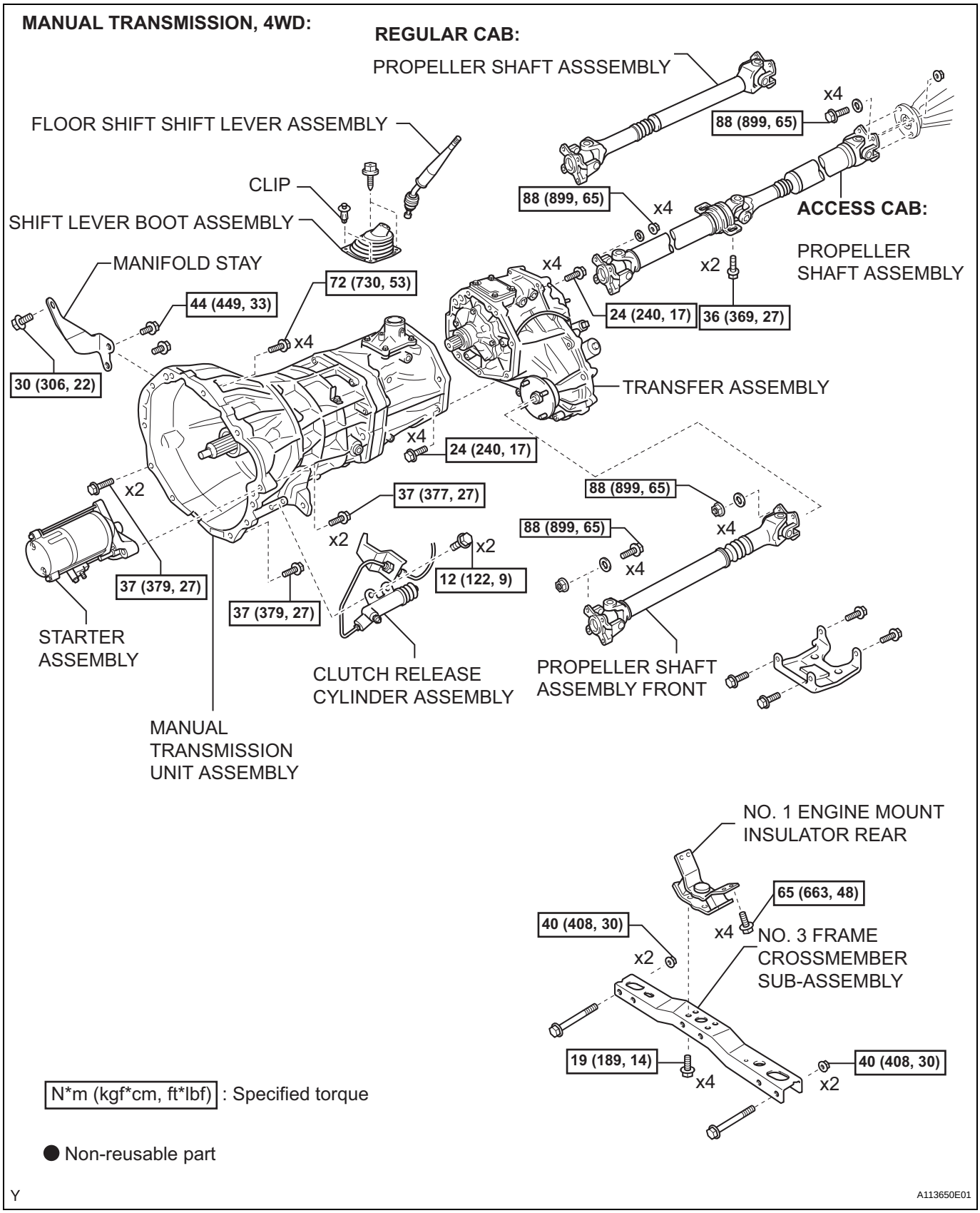
MANUAL TRANSMISSION, 4WD:
REGULAR CAB:
PROPELLER SHAFT ASSSEMBLY
FLOOR SHIFT SHIFT LEVER ASSEMBLY
CLIP
SHIFT LEVER BOOT ASSEMBLY
MANIFOLD STAY
88 (899, 65)
x4
ACCESS CAB:
PROPELLER SHAFT ASSEMBLY
x2
24 (240, 17)
36 (369, 27)
72 (730, 53)
44 (449, 33)
30 (306, 22)
TRANSFER ASSEMBLY
37 (377, 27)
12 (122, 9)
STARTER ASSEMBLY
CLUTCH RELEASE CYLINDER ASSEMBLY
PROPELLER SHAFT ASSEMBLY FRONT
MANUAL TRANSMISSION UNIT ASSEMBLY
NO. 1 ENGINE MOUNT INSULATOR REAR
65 (663, 48)
40 (408, 30)
NO. 3 FRAME CROSSMEMBER SUB-ASSEMBLY
19 (189, 14)
N*m (kgf*cm, ft*lbf) : Specified torque
● Non-reusable part
Y
A113650E01

MANUAL TRANSMISSION:

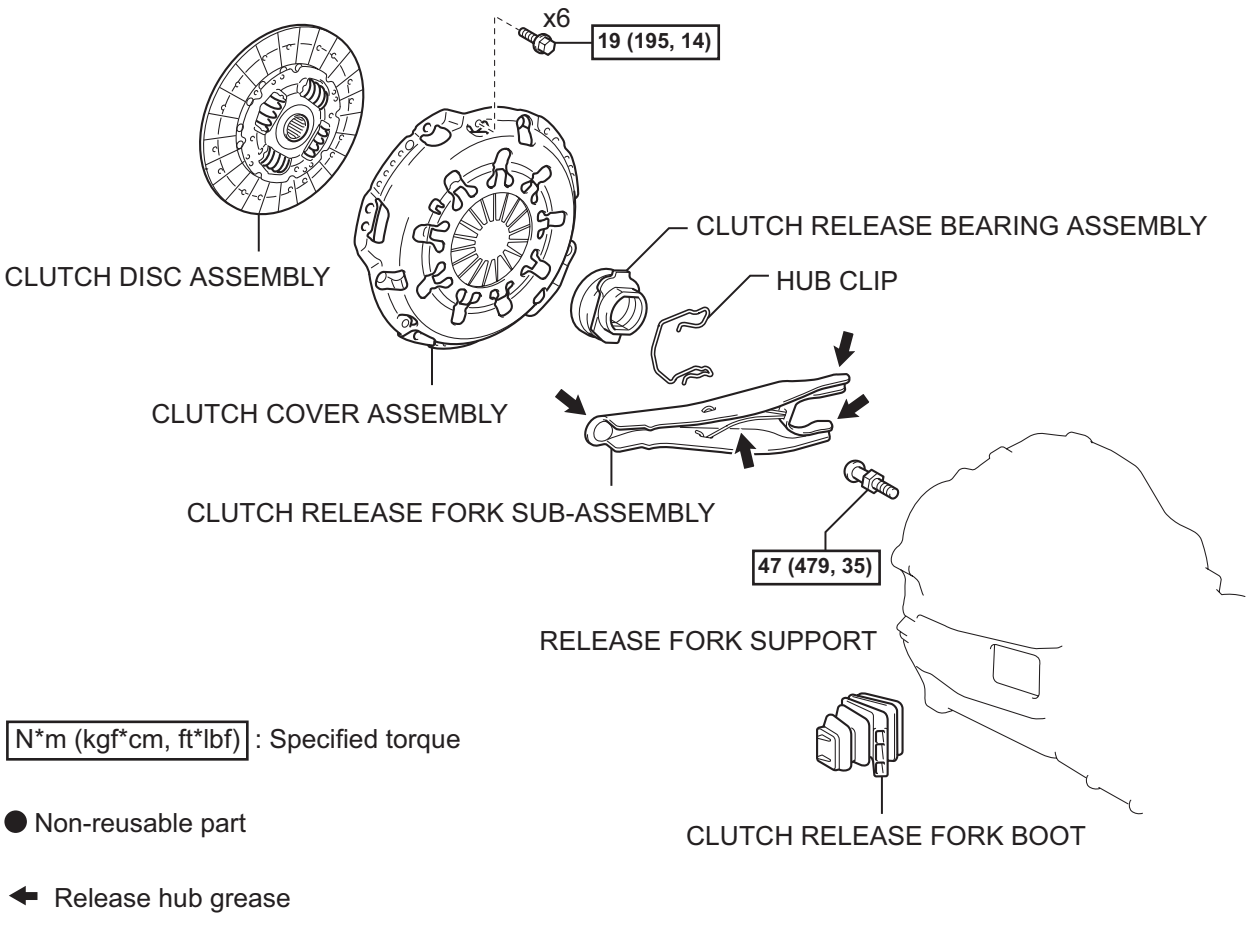

EM

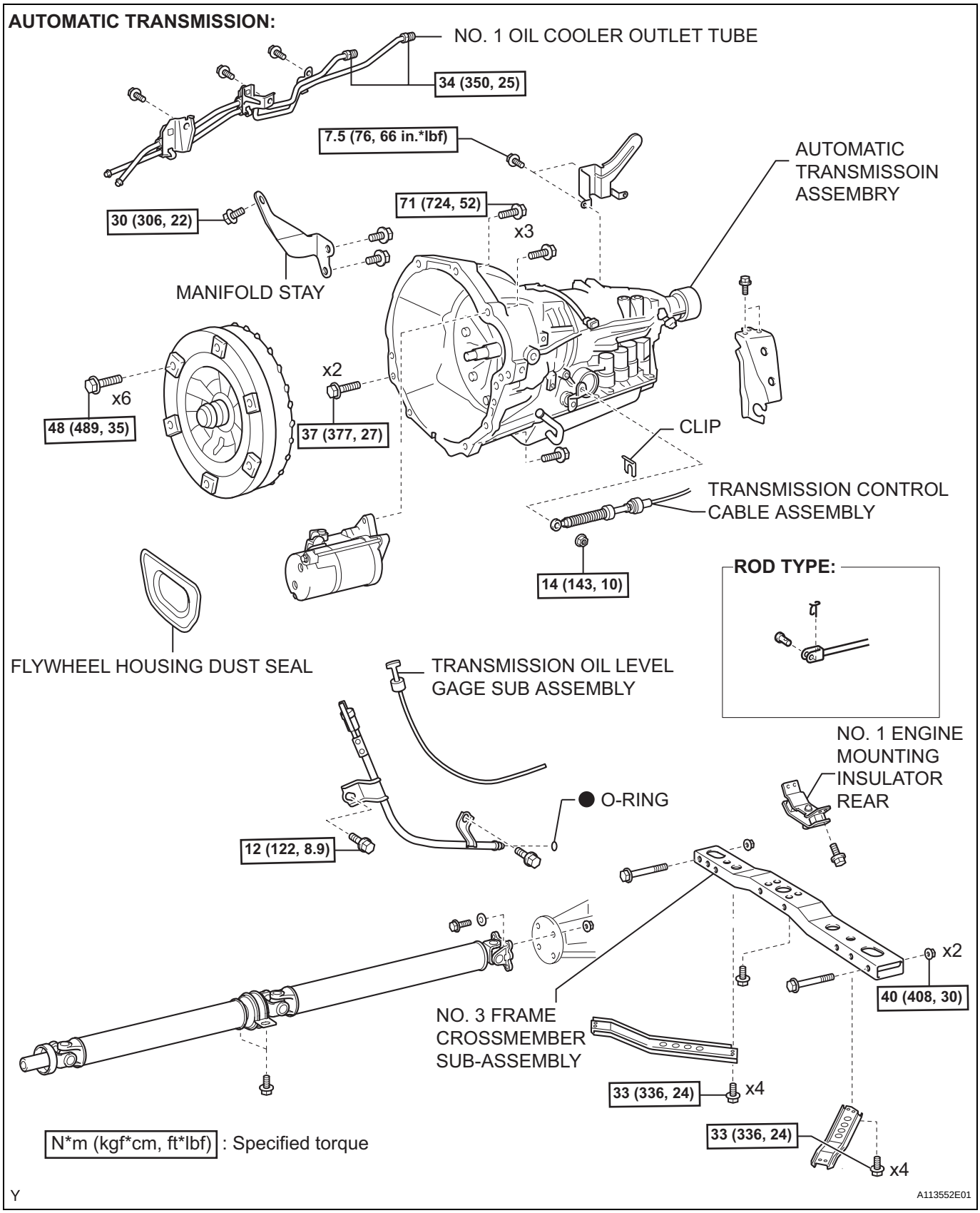
AUTOMATIC TRANSMISSION:
NO. 1 OIL COOLER OUTLET TUBE
34 (350, 25)
7.5 (76, 66 in.*lbf)
AUTOMATIC TRANSMISSOIN ASSEMBRY
30 (306, 22)
71 (724, 52)
x3
MANIFOLD STAY
x6
48 (489, 35)
x2
37 (377, 27)
CLIP
TRANSMISSION CONTROL CABLE ASSEMBLY
14 (143, 10)
ROD TYPE:
FLYWHEEL HOUSING DUST SEAL
TRANSMISSION OIL LEVEL GAGE SUB ASSEMBLY
NO. 1 ENGINE MOUNTING INSULATOR REAR
O-RING
12 (122, 8.9)
x2
40 (408, 30)
NO. 3 FRAME CROSSMEMBER SUB-ASSEMBLY
33 (336, 24)
x4
33 (336, 24)
x4
N*m (kgf*cm, ft*lbf) : Specified torque
Y
A113552E01

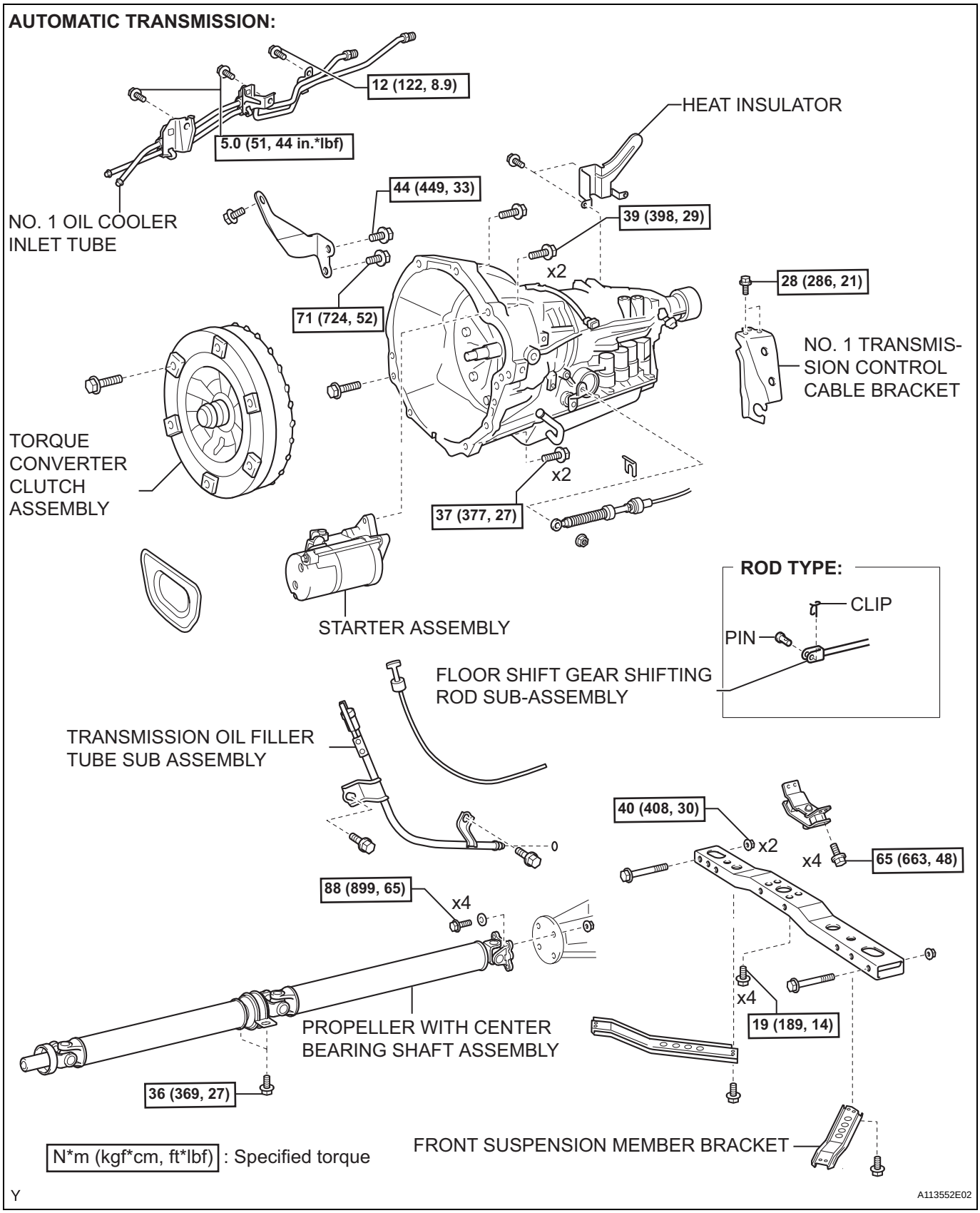
AUTOMATIC TRANSMISSION:
12 (122, 8.9)
5.0 (51, 44 in.*lbf)
NO. 1 OIL COOLER INLET TUBE
HEAT INSULATOR
44 (449, 33)
39 (398, 29)
x2
71 (724, 52)
28 (286, 21)
NO. 1 TRANSMISSION CONTROL CABLE BRACKET
TORQUE CONVERTER CLUTCH ASSEMBLY
x2
37 (377, 27)
STARTER ASSEMBLY
ROD TYPE:
CLIP
PIN
FLOOR SHIFT GEAR SHIFTING ROD SUB-ASSEMBLY
TRANSMISSION OIL FILLER TUBE SUB ASSEMBLY
40 (408, 30)
x2
x4
65 (663, 48)
88 (899, 65)
x4
x4
19 (189, 14)
PROPELLER WITH CENTER BEARING SHAFT ASSEMBLY
36 (369, 27)
FRONT SUSPENSION MEMBER BRACKET
N*m (kgf*cm, ft*lbf) : Specified torque
Y
A113552E02

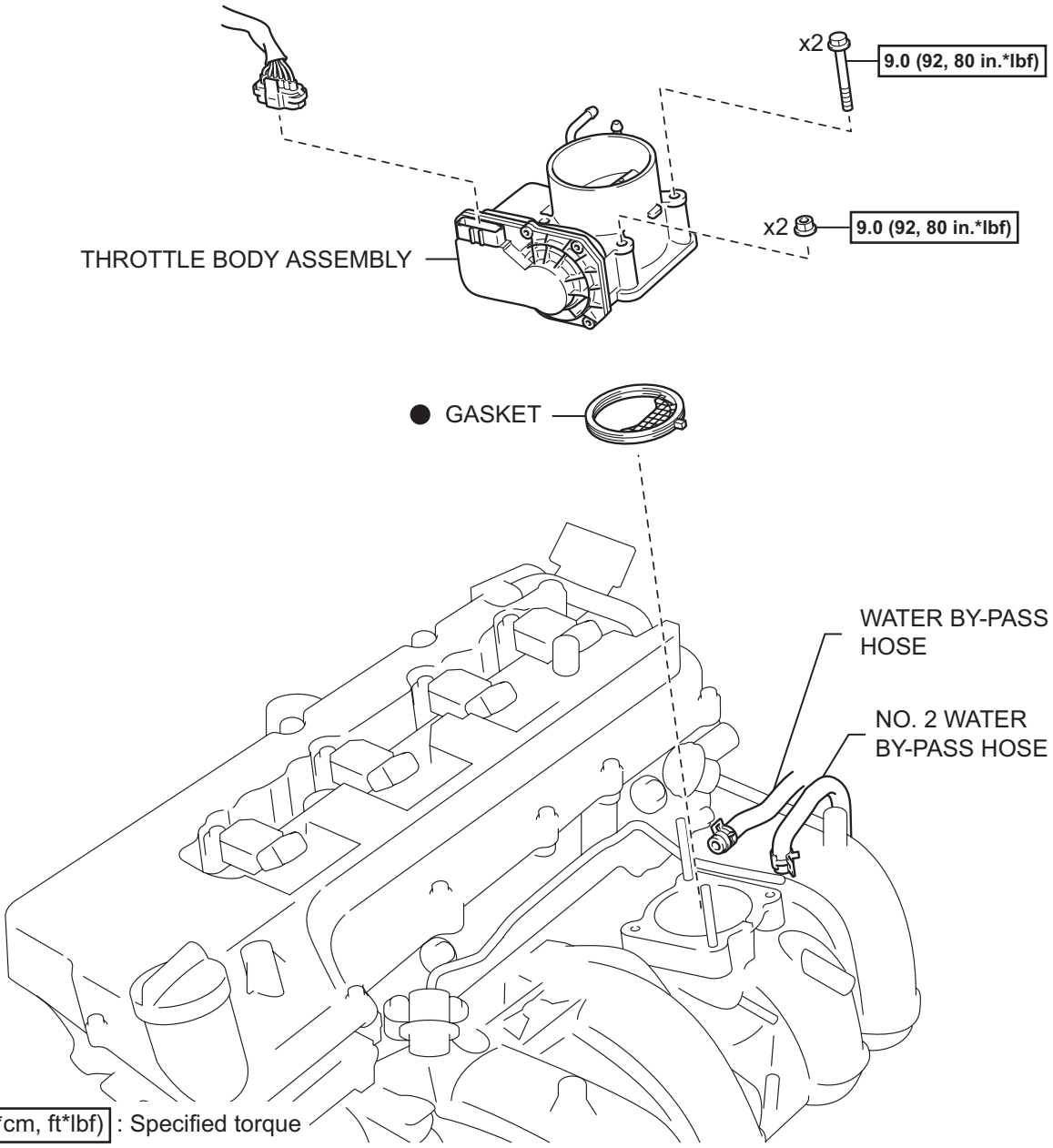
x2
9.0 (92, 80 in.*lbf)
x2
9.0 (92, 80 in.*lbf)
THROTTLE BODY ASSEMBLY
● GASKET
WATER BY-PASS HOSE
NO. 2 WATER BY-PASS HOSE
N*m (kgf*cm, ft*lbf) : Specified torque
● Non-reusable part
T
A113624E01

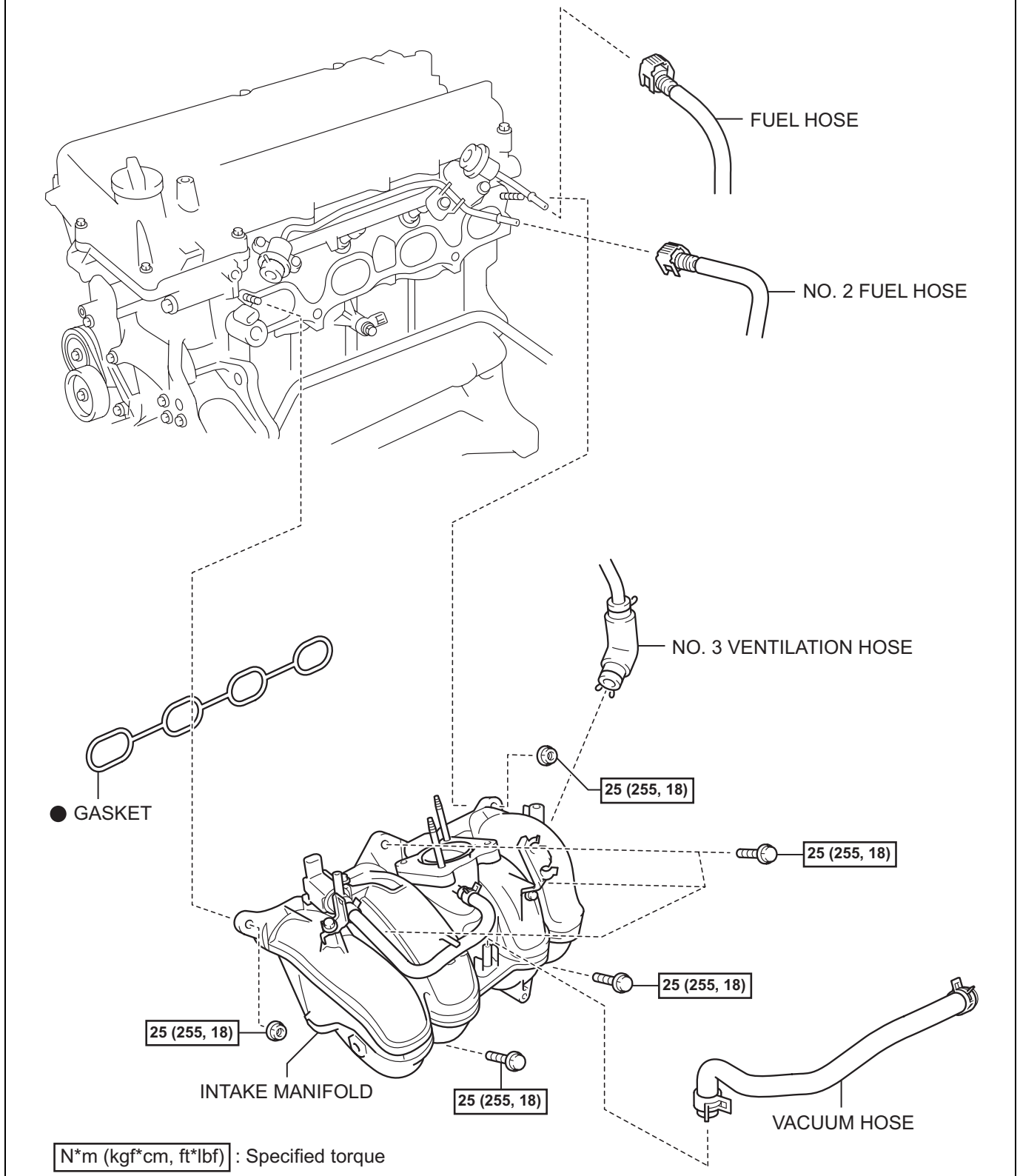
FUEL HOSE
NO. 2 FUEL HOSE
NO. 3 VENTILATION HOSE
25 (255, 18)
25 (255, 18)
25 (255, 18)
25 (255, 18)
25 (255, 18)
● GASKET
INTAKE MANIFOLD
VACUUM HOSE
N*m (kgf*cm, ft*lbf) : Specified torque
● Non-reusable part
T
A113644E01

EM

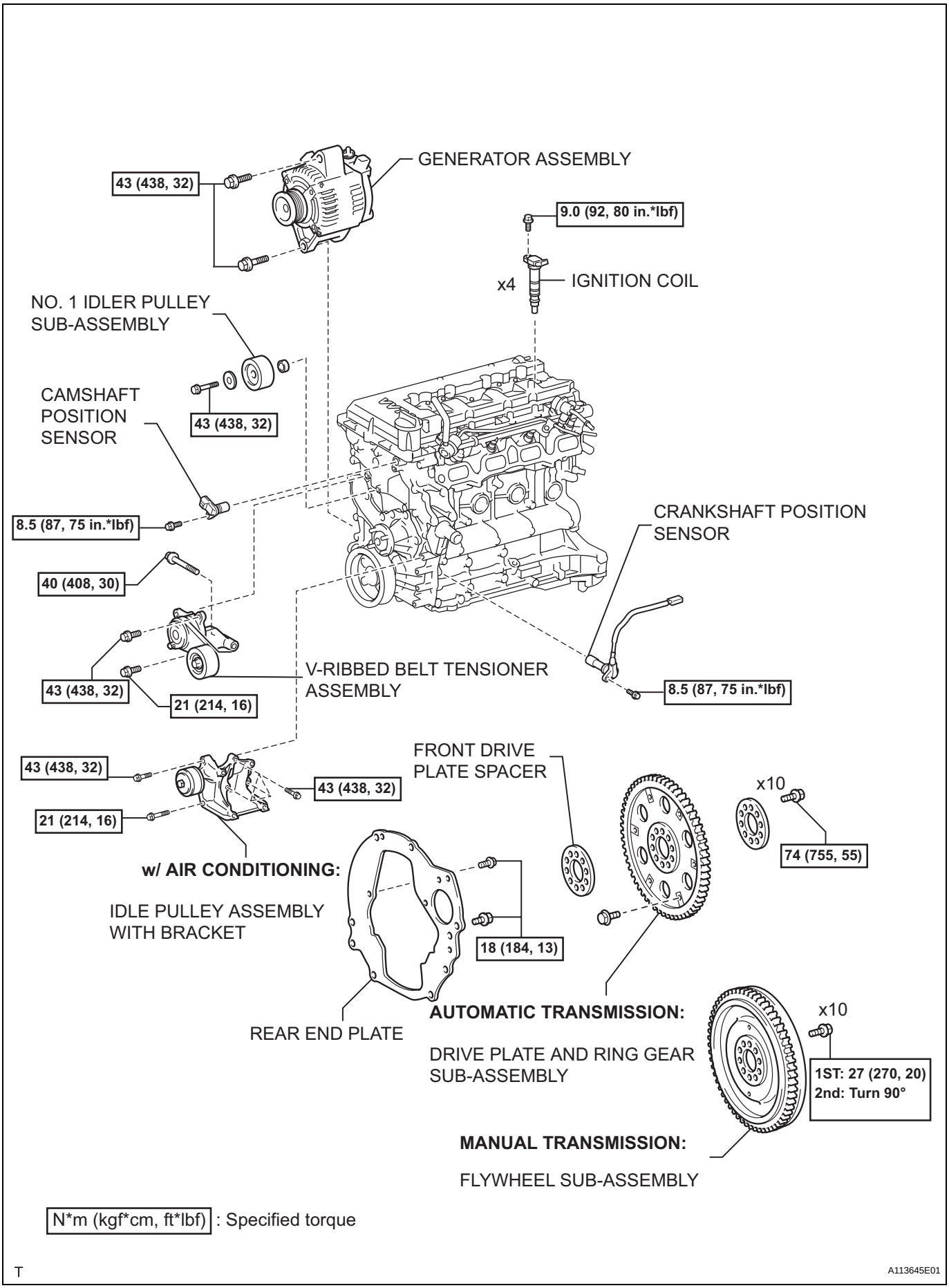
GENERATOR ASSEMBLY
43 (438, 32)
9.0 (92, 80 in.*lbf)
x4
IGNITION COIL
NO. 1 IDLER PULLEY SUB-ASSEMBLY
CAMSHAFT POSITION SENSOR
43 (438, 32)
8.5 (87, 75 in.*lbf)
CRANKSHAFT POSITION SENSOR
40 (408, 30)
43 (438, 32)
21 (214, 16)
V-RIBBED BELT TENSIONER ASSEMBLY
8.5 (87, 75 in.*lbf)
43 (438, 32)
43 (438, 32)
21 (214, 16)
FRONT DRIVE PLATE SPACER
x10
74 (755, 55)
w/ AIR CONDITIONING:
IDLE PULLEY ASSEMBLY WITH BRACKET
18 (184, 13)
REAR END PLATE
AUTOMATIC TRANSMISSION:
DRIVE PLATE AND RING GEAR SUB-ASSEMBLY
x10
1ST: 27 (270, 20)
2nd: Turn 90°
MANUAL TRANSMISSION:
FLYWHEEL SUB-ASSEMBLY
N*m (kgf*cm, ft*lbf) : Specified torque
T
A113645E01

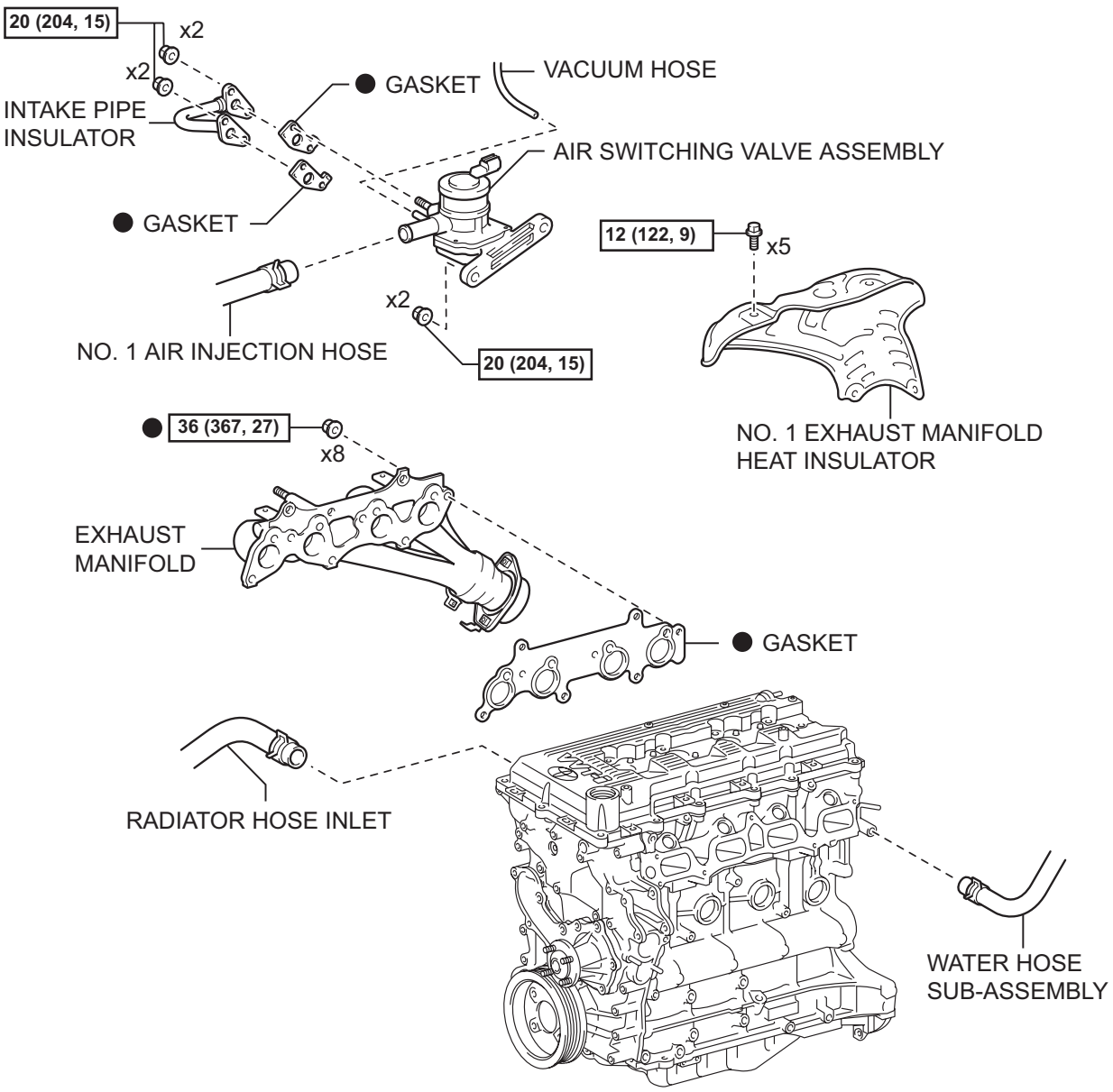

N*m (kgf*cm, ft*lbf) : Specified torque

● Non-reusable part

T

A113637E01

EM

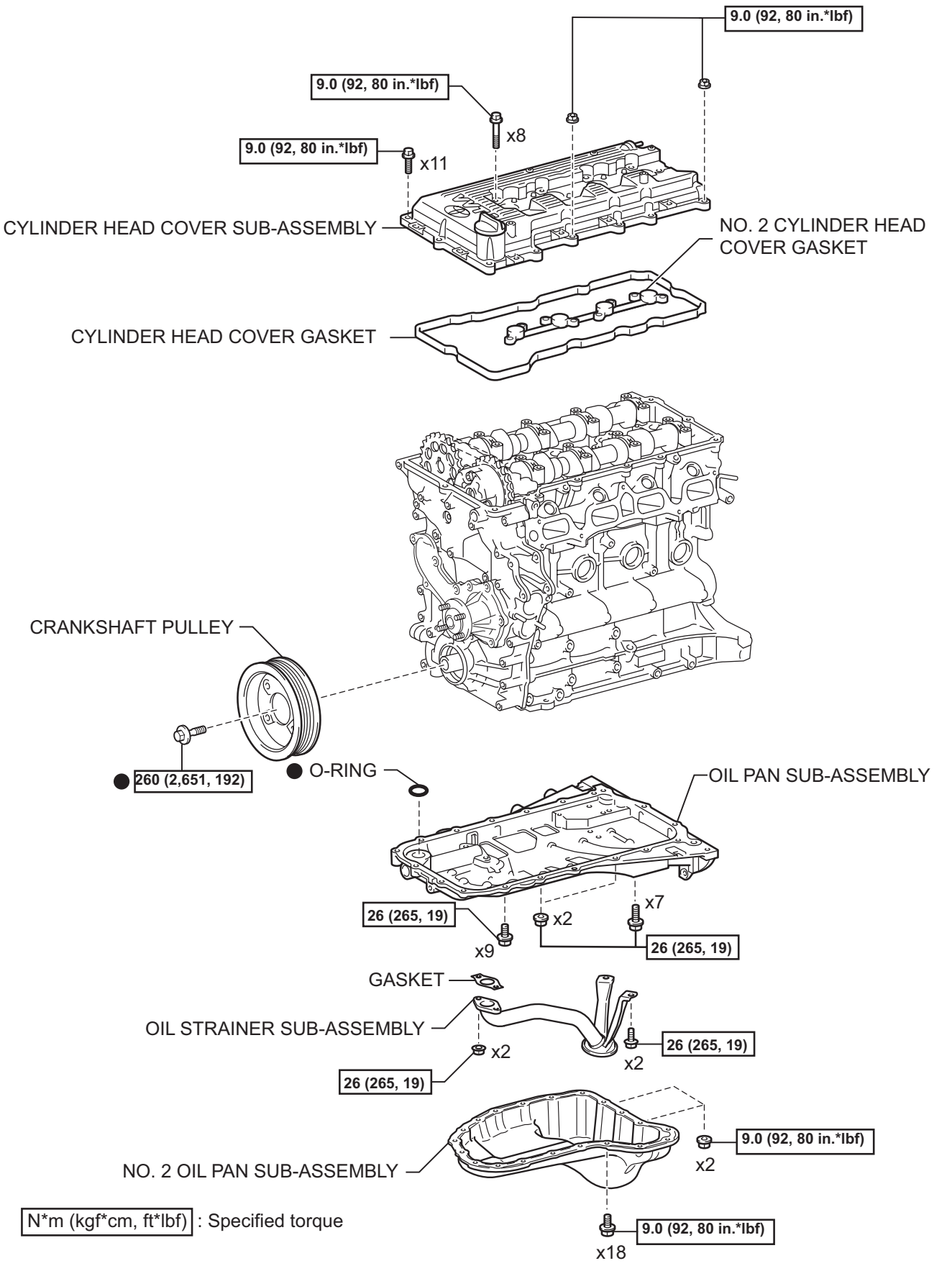
9.0 (92, 80 in.*lbf)
9.0 (92, 80 in.*lbf)
x8
9.0 (92, 80 in.*lbf)
x11
CYLINDER HEAD COVER SUB-ASSEMBLY
NO. 2 CYLINDER HEAD COVER GASKET
CYLINDER HEAD COVER GASKET
CRANKSHAFT PULLEY
● 260 (2,651, 192)
● O-RING
OIL PAN SUB-ASSEMBLY
26 (265, 19)
x9
x2
x7
26 (265, 19)
GASKET
OIL STRAINER SUB-ASSEMBLY
x2
26 (265, 19)
26 (265, 19)
x2
NO. 2 OIL PAN SUB-ASSEMBLY
9.0 (92, 80 in.*lbf)
x2
9.0 (92, 80 in.*lbf)
x18
N*m (kgf*cm, ft*lbf) : Specified torque
● Non-reusable part
T
A113620E01

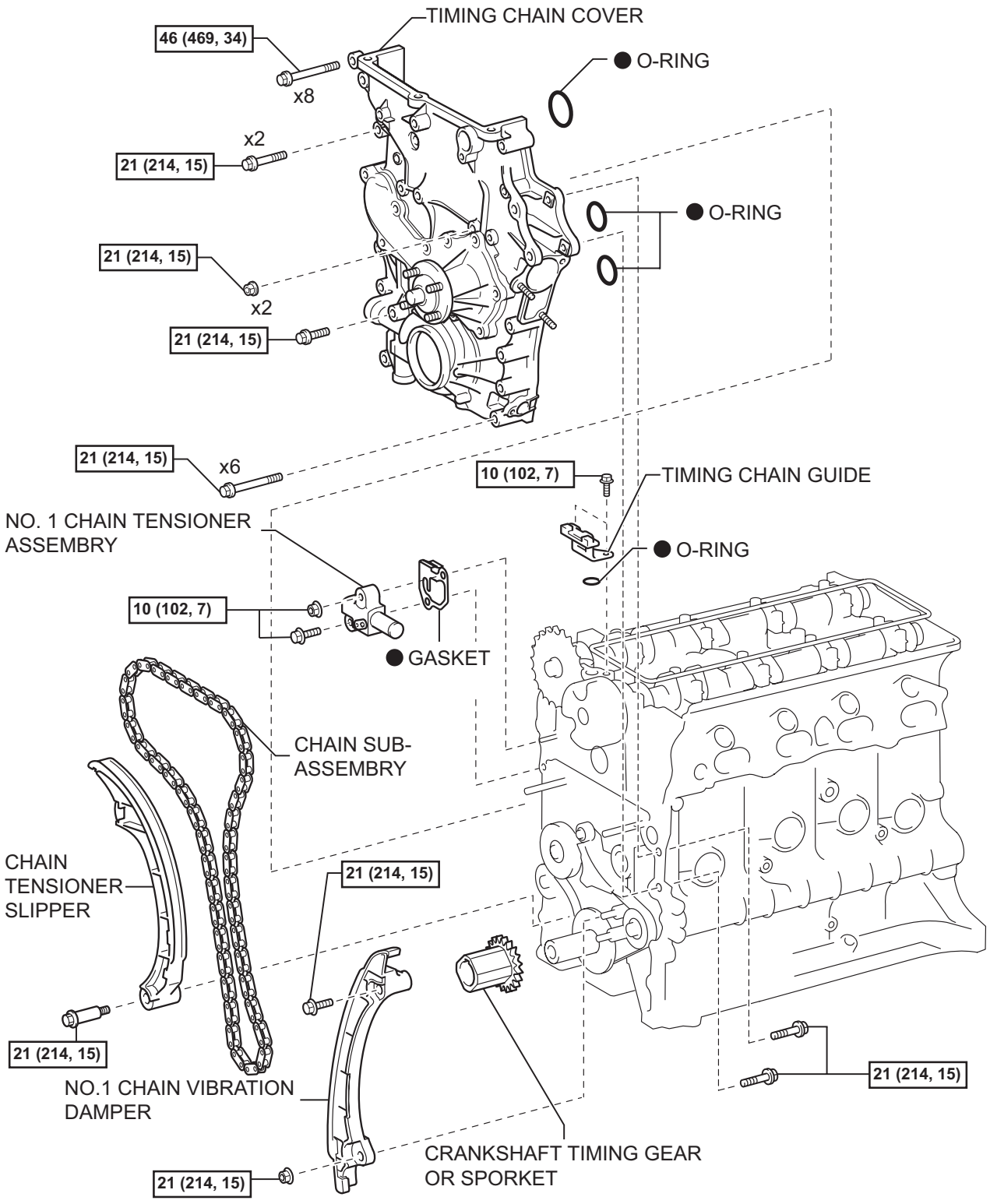

EM

21 (214, 15) : Specified torque

● Non-reusable part

T

A113636E01

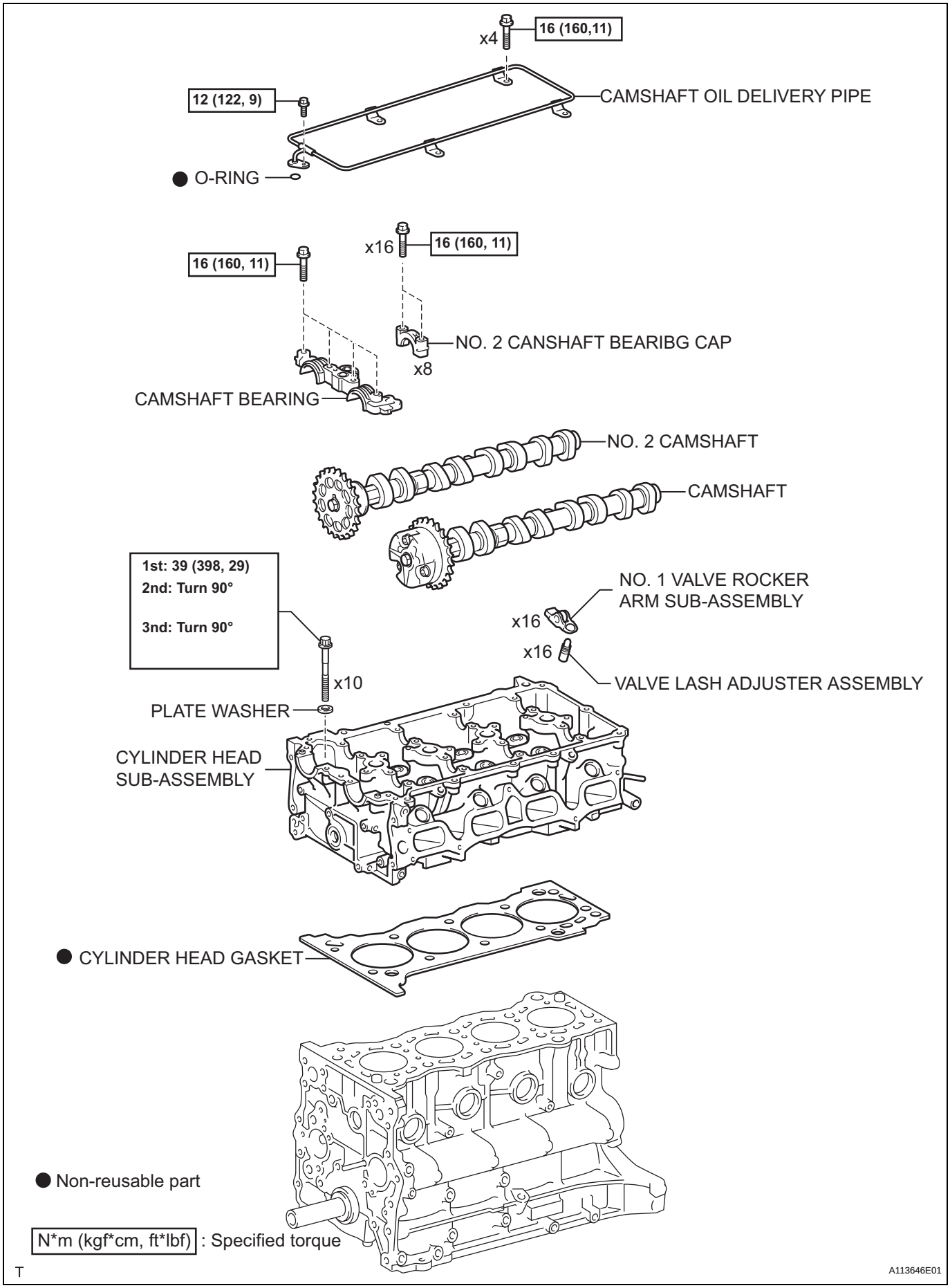
x4
16 (160,11)
12 (122, 9)
CAMSHAFT OIL DELIVERY PIPE
● O-RING
x16
16 (160, 11)
16 (160, 11)
NO. 2 CANSHAFT BEARIBG CAP
x8
CAMSHAFT BEARING
NO. 2 CAMSHAFT
CAMSHAFT
1st: 39 (398, 29)
2nd: Turn 90°
3nd: Turn 90°
NO. 1 VALVE ROCKER ARM SUB-ASSEMBLY
x16
x16
VALVE LASH ADJUSTER ASSEMBLY
x10
PLATE WASHER
CYLINDER HEAD SUB-ASSEMBLY
● CYLINDER HEAD GASKET
● Non-reusable part
N*m (kgf*cm, ft*lbf) : Specified torque
T
A113646E01

ENGINE FRONT OIL SEAL

REMOVAL

1. **REMOVE ENGINE UNDER COVER SUB-ASSEMBLY NO.1 (for Pre Runner and 4WD Type)**
   (a) Remove the 4 bolts, then remove the No. 1 engine under cover.
2. **DRAIN ENGINE COOLANT (See page CO-3)**
3. **REMOVE RADIATOR SUPPORT TO FRAME SEAL LH (See page CO-12)**
4. **REMOVE FAN SHROUD (See page CO-13)**
5. **REMOVE CRANKSHAFT PULLEY**
   (a) Remove the bolt, then separate the bracket. (w/ AIR CONDITIONING)

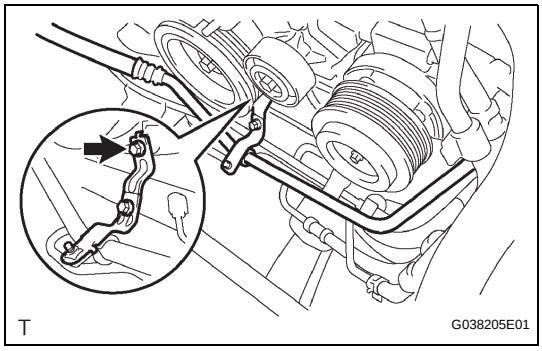

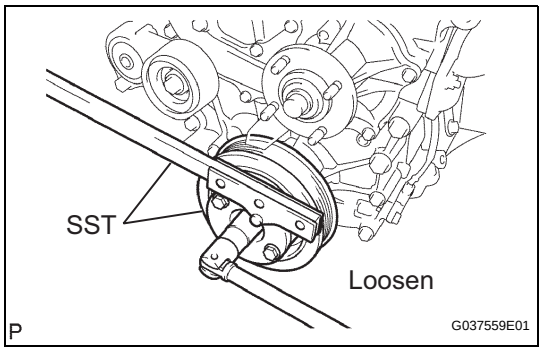

(b) Using SST, loosen the crankshaft pulley bolt.
SST 09213-54015 (91651-60855), 09330-00021
HINT:
Loosen the crankshaft pulley bolt until only 2 or 3 threads are still installed in the crankshaft.

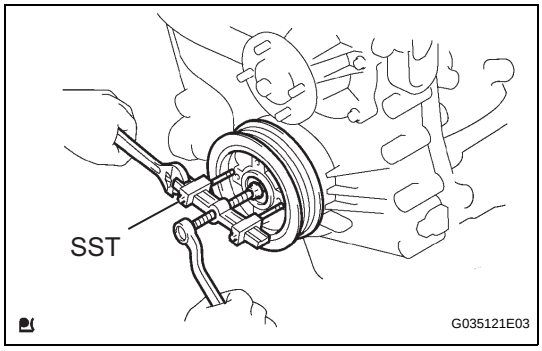

(c) Using SST, remove the crankshaft pulley and crankshaft pulley bolt.
SST 09950-50013 (09951-05010, 09952-05010, 09953-05010, 09954-05021)

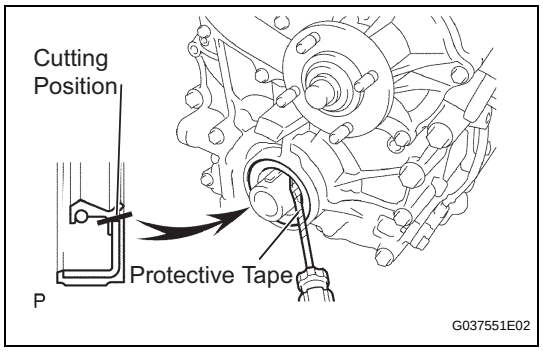

6. REMOVE TIMING GEAR CASE OR TIMING CHAIN CASE OIL SEAL

(a) Using a cutter knife, cut off the lip of the oil seal.

(b) Using a screwdriver with its tip wrapped in tape, pry out the oil seal and remove it.

NOTICE:

Check the crankshaft for damage after removing the oil seal. If damaged, smooth the surface with 400-grit sandpaper.

INSTALLATION

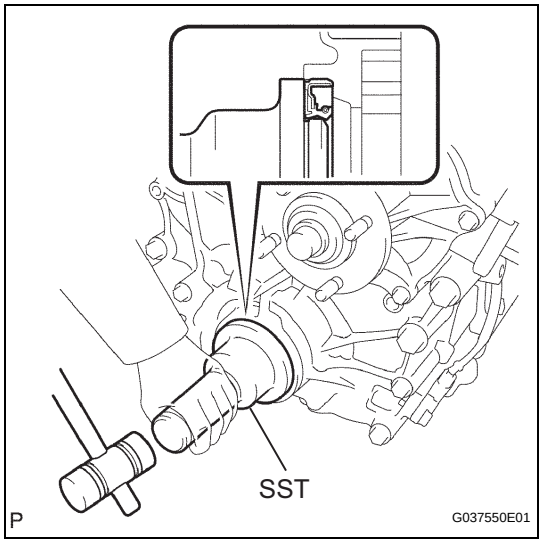

1. INSTALL TIMING GEAR CASE OR TIMING CHAIN CASE OIL SEAL

(a) Apply a light coat of MP grease to the lip of a new oil seal.

NOTICE:

Keep the lip free of foreign objects.

(b) Using SST, uniformly tap a new oil seal in until its surface is flush with the timing chain cover edge.

SST 09223-50010

NOTICE:

- **Do not tap the oil seal in at an angle.**
- **Wipe any extra grease off the crankshaft.**

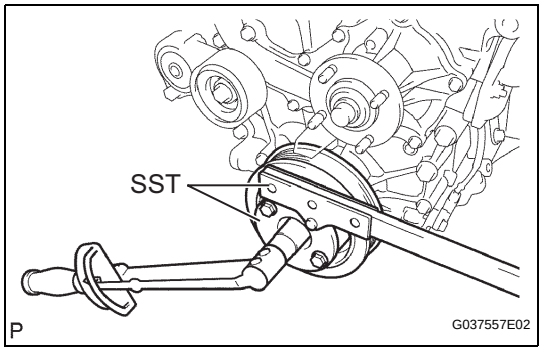

2. INSTALL CRANKSHAFT PULLEY

(a) Align the set key of the crankshaft with the key groove of the pulley, and slide on the pulley.

(b) Provisionally install a new crankshaft pulley bolt onto the crankshaft.

(c) Using SST, hold the crankshaft pulley and tighten the crankshaft pulley bolt.

SST 09213-54015 (91651-60855), 09330-00021

Torque: 260 N*m (2,651 kgf*cm, 192 ft.*lbf)

NOTICE:

Do not reuse the pulley bolt.

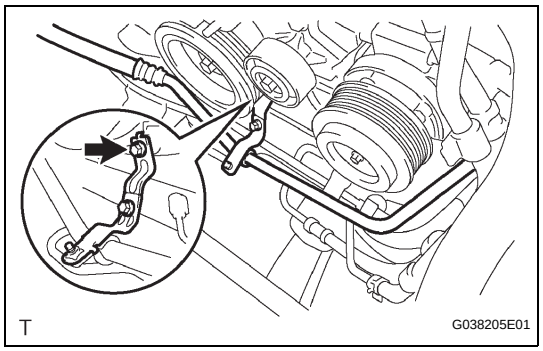

(d) Install the bracket with the bolt. (w/ AIR CONDITIONING)

Torque: 7.5 N*m (76 kgf*cm, 66 in.*lbf)

3. INSTALL FAN SHROUD (See page CO-18)

4. INSTALL RADIATOR SUPPORT TO FRAME SEAL LH (See page CO-19)

5. ADD ENGINE COOLANT (See page CO-3)

6. CHECK FOR ENGINE COOLANT LEAKAGE (See page CO-2)

7. CHECK FOR ENGINE OIL LEAKAGE

EM

8. INSTALL NO. 1 ENGINE UNDER COVER SUB-ASSEMBLY (for Pre Runner and 4WD Type)

(a) Install the No. 1 engine under cover with the 4 bolts.
Torque: 30 N*m (306 kgf*cm, 22 ft.*lbf)

ENGINE REAR OIL SEAL

REMOVAL

1. REMOVE MANUAL TRANSMISSION UNIT ASSEMBLY

Transmission	See page
R155	MT-6
R155F	MT-8

2. REMOVE AUTOMATIC TRANSMISSION ASSEMBLY

(See page AT-113)

3. REMOVE CLUTCH COVER ASSEMBLY (for Manual Transmission)

Transmission	See page
R155	CL-30
R155F	CL-35

4. REMOVE CLUTCH DISC ASSEMBLY (for Manual Transmission)

Transmission	See page
R155	CL-30
R155F	CL-35

5. REMOVE FLYWHEEL SUB-ASSEMBLY (for Manual Transmission)

(a) Using SST, hold the crankshaft pulley.

SST 09213-54015 (91651-60855), 09330-00021

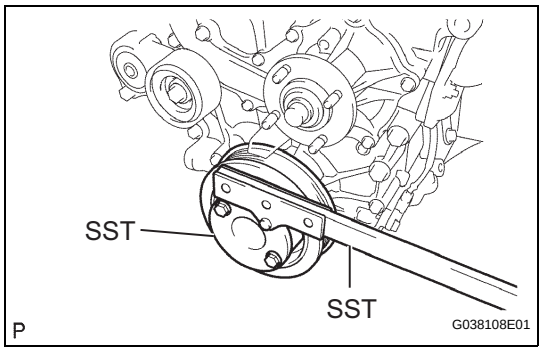

(b) Remove the 10 bolts, then remove the flywheel.

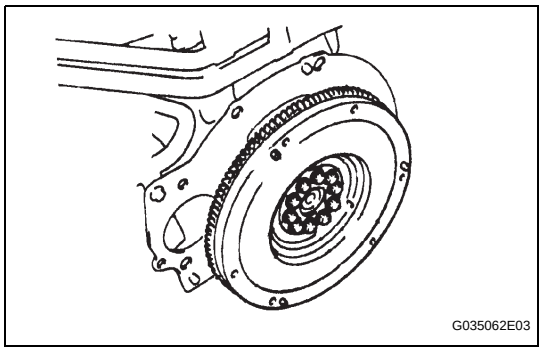

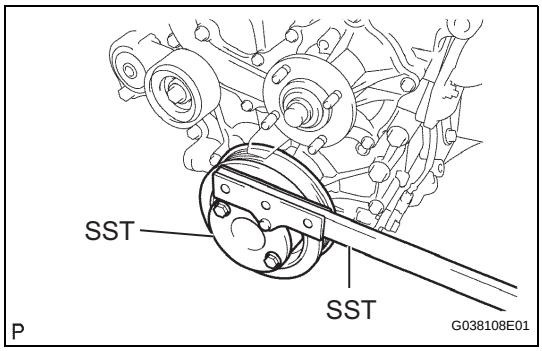

6. REMOVE DRIVE PLATE and RING GEAR SUB-ASSEMBLY (for Automatic Transmission)

(a) Using SST, hold the crankshaft pulley.
SST 09213-54015 (91651-60855), 09330-00021

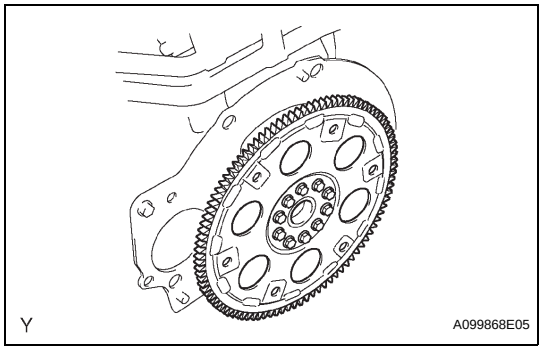

(b) Remove the 10 bolts, drive plate spacer rear, drive plate and ring gear and drive plate spacer front.

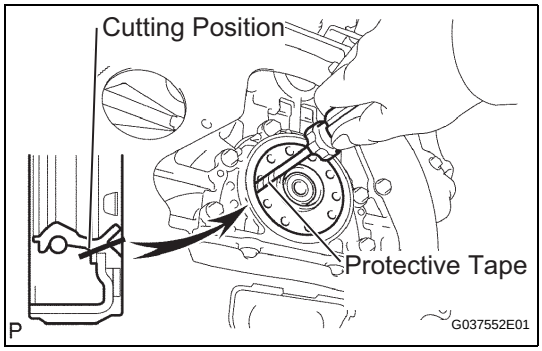

7. REMOVE ENGINE REAR OIL SEAL

(a) Using a cutter knife, cut off the lip of the oil seal.
(b) Using a screwdriver with its tip wrapped in tape, pry out the oil seal and remove it.
NOTICE:
Check the crankshaft for damage after removing the oil seal. If damaged, smooth the surface with 400-grit sandpaper.

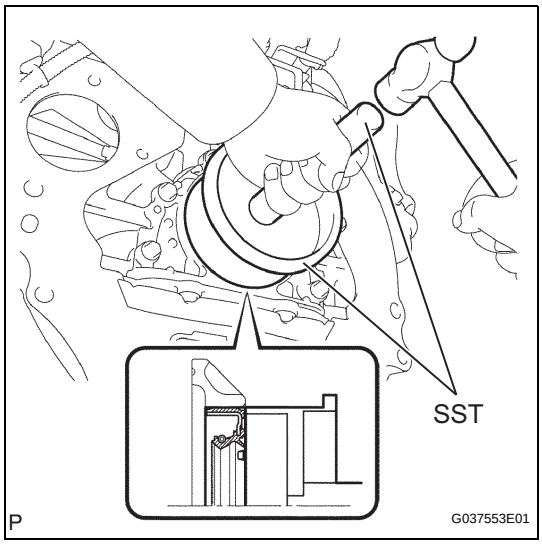

INSTALLATION

1. INSTALL ENGINE REAR OIL SEAL

(a) Apply a light coat of MP grease to the lip of a new oil seal.
NOTICE:
Keep the lip free of foreign objects.
(b) Using SST and a hammer, tap the oil seal in until its surface is flush with the rear oil seal retainer edge.
SST 09223-15030, 09950-70010 (09951-07150)
NOTICE:
- **Do not tap the oil seal in at an angle.**
- **Wipe any extra grease off the crankshaft.**

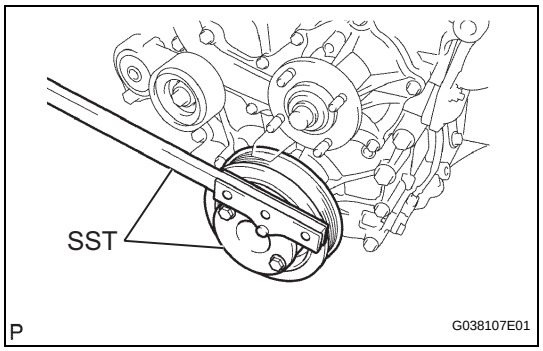

2. INSTALL FLYWHEEL SUB-ASSEMBLY (for Manual Transmission)

(a) Clean the 10 bolts and 10 bolt holes.

(b) Apply adhesive to 2 or 3 threads of the 10 bolts.
Adhesive:
Part No. 08833-00070, THREE BOND 1324 or equivalent

(c) Using SST, hold the crankshaft.
SST 09213-54015 (91651-60855), 09330-00021

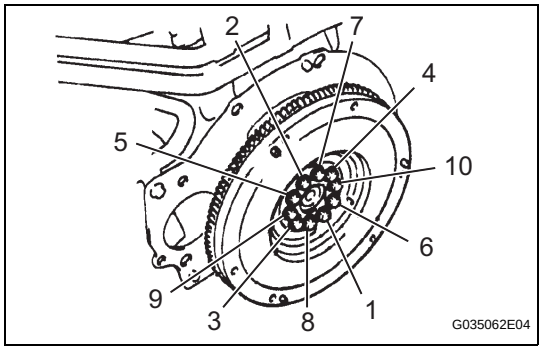

(d) Using several steps, uniformly install and tighten the 10 bolts in the sequence shown in the illustration.
Torque: 27 N*m (270 kgf*cm, 20 ft.*lbf)

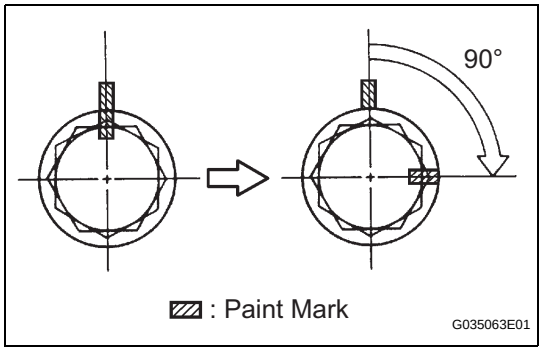

(e) Mark the bolts with paint as shown in the illustration.

(f) Retighten the bolts by 90° in the same sequence as in step (d).

(g) Check that the paint mark of each bolt is at a 90° from the original position.
NOTICE:
Do not start the engine for at least 1 hour after installation.

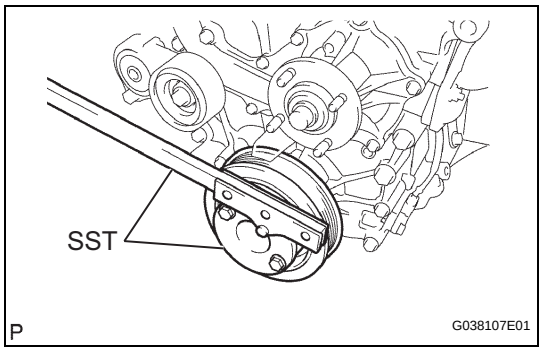

3. INSTALL DRIVE PLATE and RING GEAR SUB-ASSEMBLY (for Automatic Transmission)

(a) Clean the 10 bolts and 10 bolt holes.

(b) Apply adhesive to 2 or 3 threads of the 10 bolts.
Adhesive:
Part No. 08833-00070, THREE BOND 1324 or equivalent

(c) Provisionally install the drive plate spacer front, drive plate and ring gear and drive plate rear with the 10 bolts.

(d) Using SST, hold the crankshaft.
SST 09213-54015 (91651-60855), 09330-00021

EM

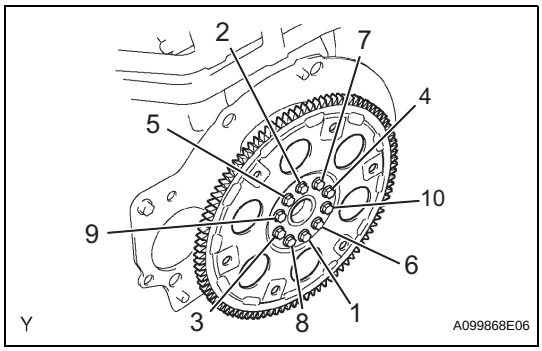

(e) Using several steps, uniformly install and tighten the 10 bolts in the sequence shown in the illustration.
Torque: 74 N*m (755 kgf*cm, 55 ft.*lbf)
NOTICE:
Do not start the engine for at least 1 hour after installation.

4. INSTALL CLUTCH DISC ASSEMBLY (for Manual Transmission)

Transmission	See page
R155	CL-32
R155F	CL-37

SST 09301-00210

5. INSTALL CLUTCH COVER ASSEMBLY (for Manual Transmission)

Transmission	See page
R155	CL-32
R155F	CL-37

6. INSTALL MANUAL TRANSMISSION UNIT ASSEMBLY

Transmission	See page
R155	MT-9
R155F	MT-11

7. INSTALL AUTOMATIC TRANSMISSION ASSEMBLY (See page ED-7)

8. CHECK FOR ENGINE OIL LEAKAGE

EM

ENGINE ASSEMBLY

COMPONENTS

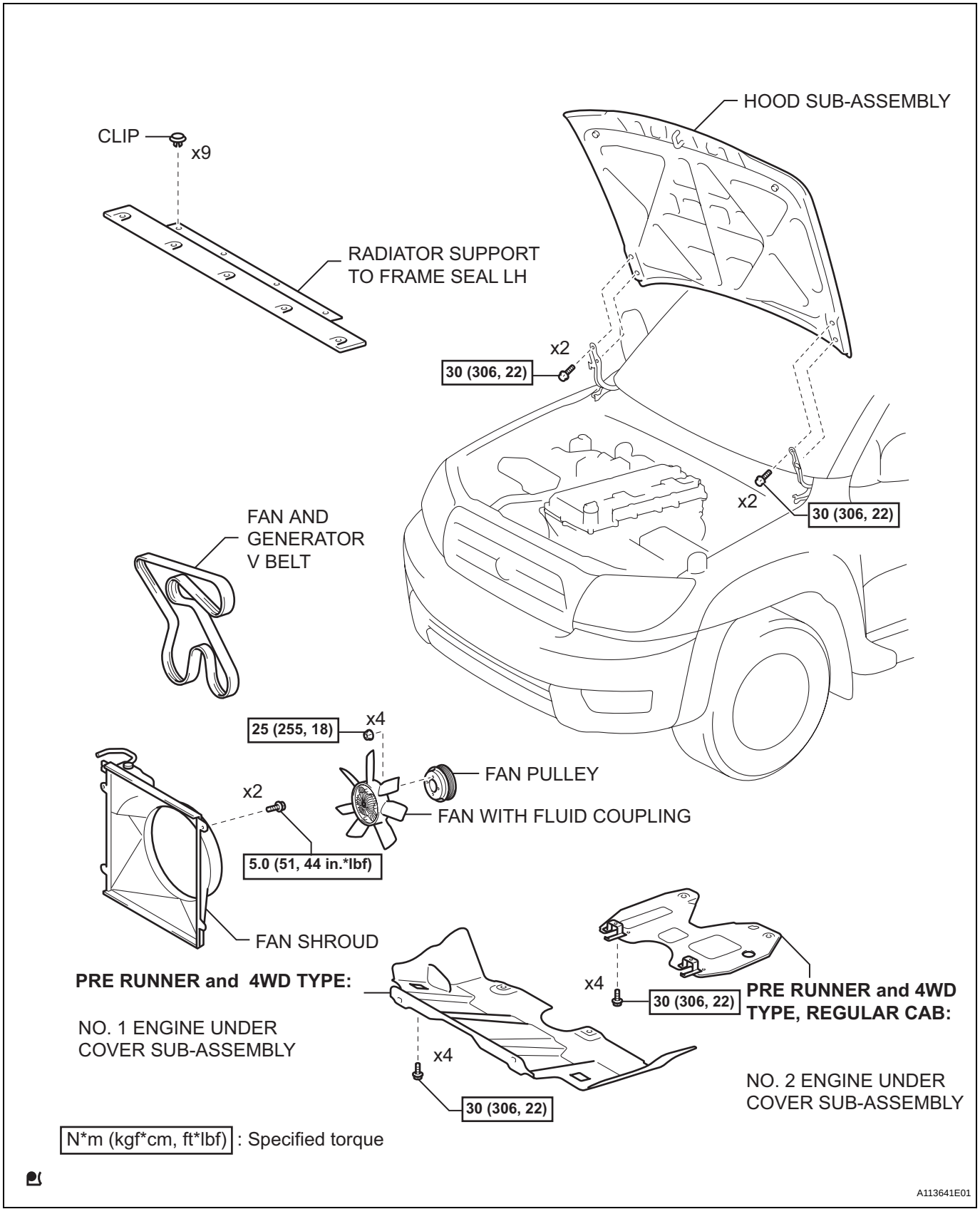

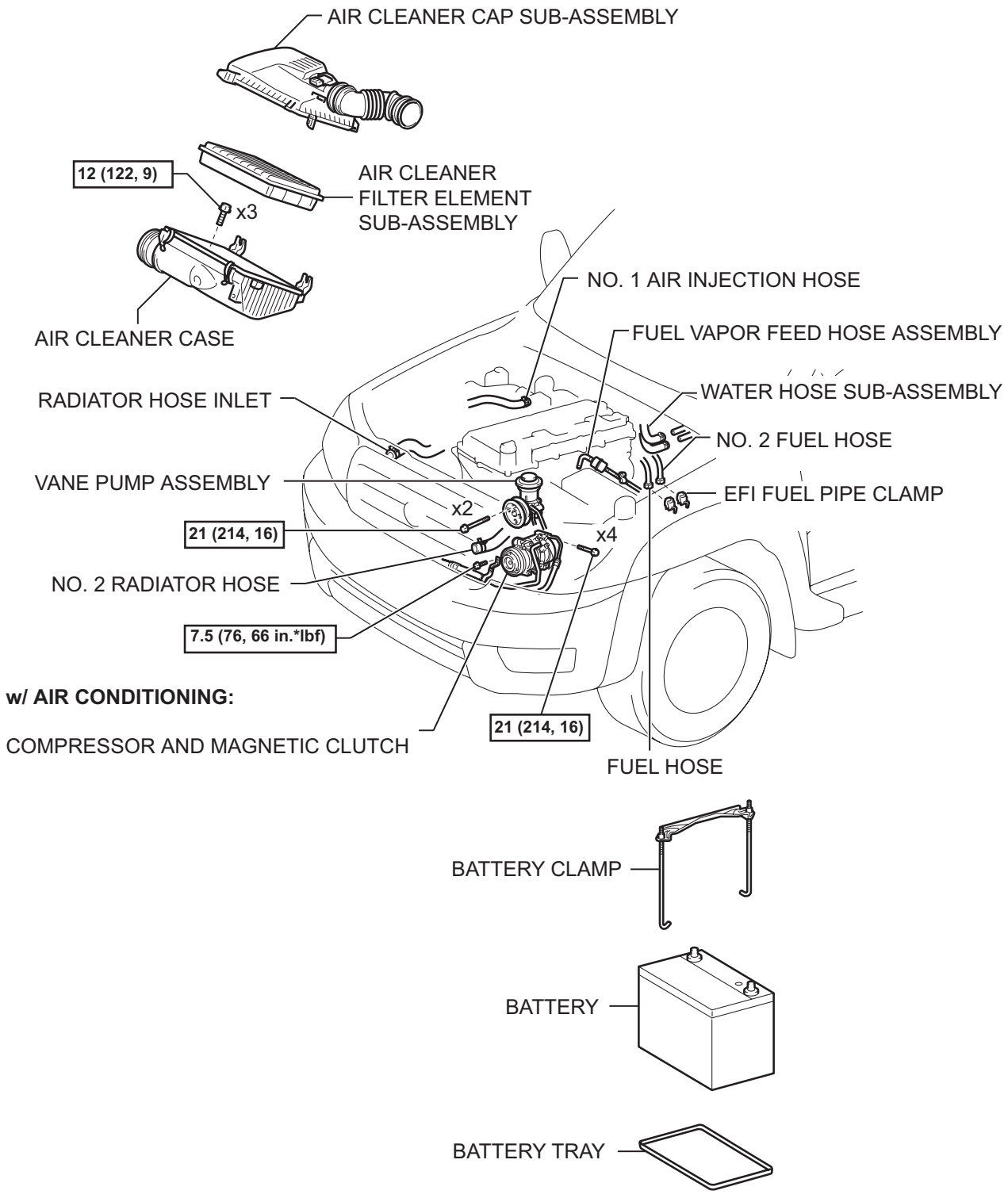

EM

N*m (kgf*cm, ft*lbf) : Specified torque

A113642E01

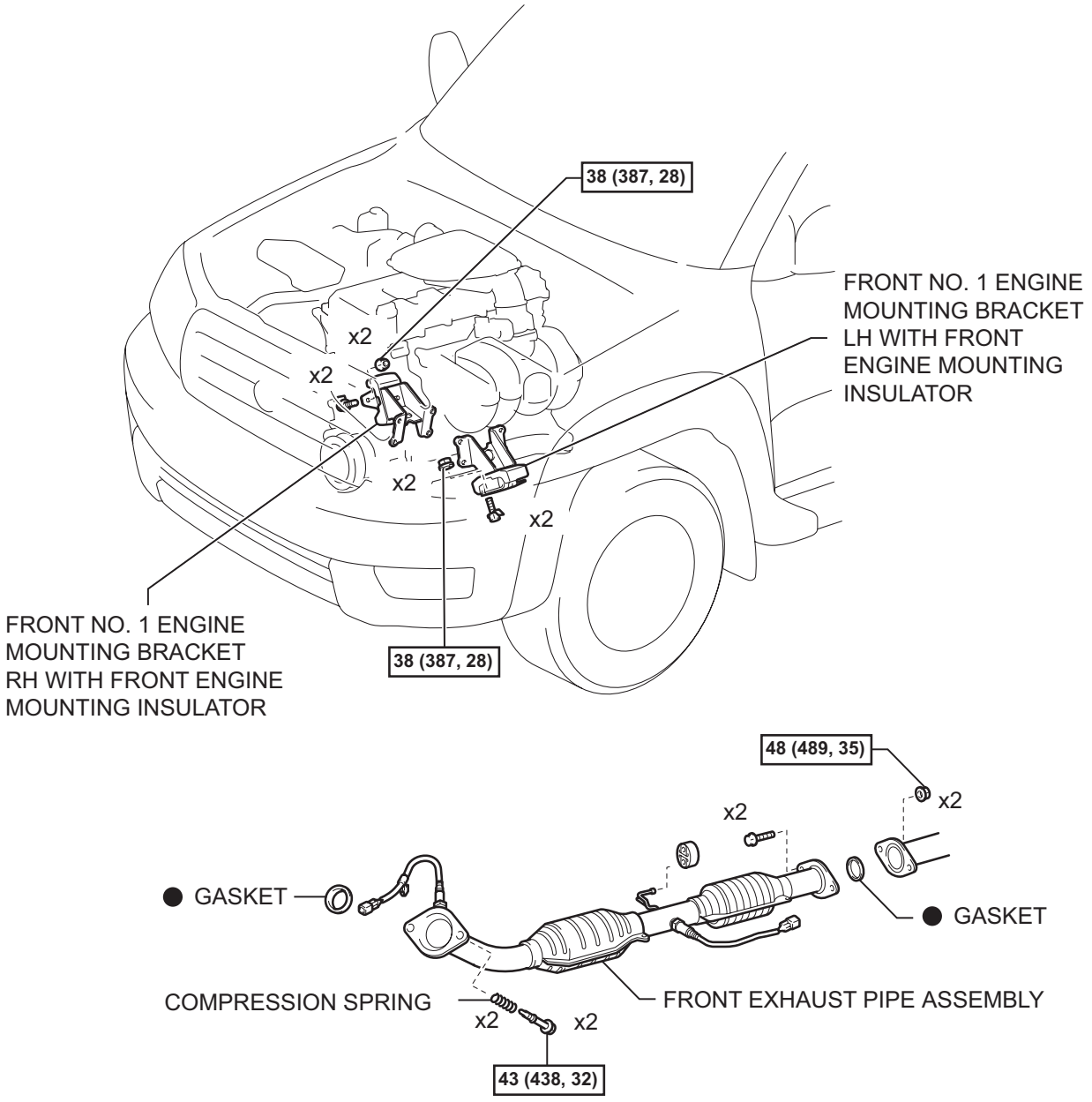

N*m (kgf*cm, ft*lbf) : Specified torque

● Non-reusable part

A113643E01

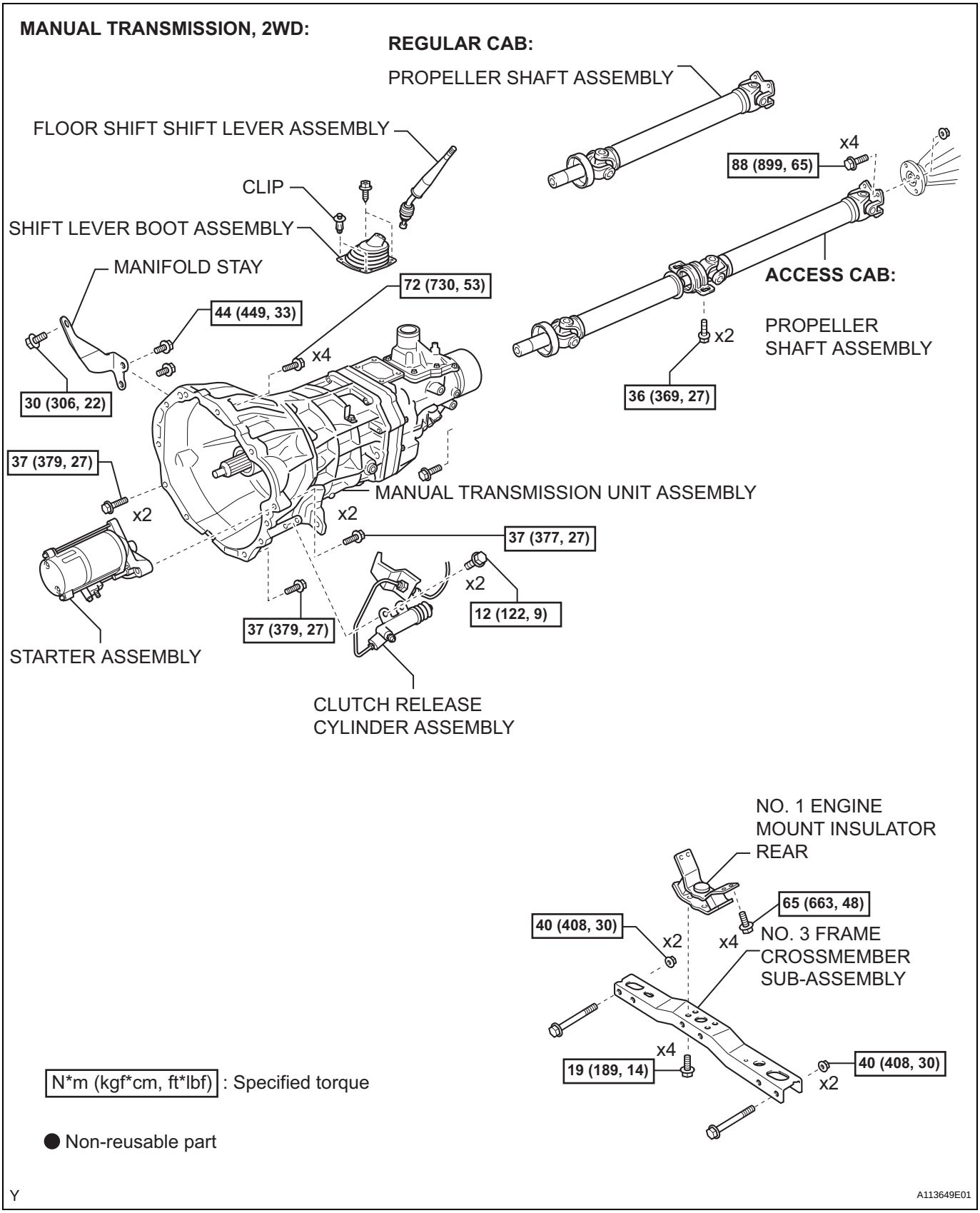
MANUAL TRANSMISSION, 2WD:
REGULAR CAB:
PROPELLER SHAFT ASSEMBLY
FLOOR SHIFT SHIFT LEVER ASSEMBLY
CLIP
SHIFT LEVER BOOT ASSEMBLY
MANIFOLD STAY
72 (730, 53)
44 (449, 33)
30 (306, 22)
x4
88 (899, 65)
x4
ACCESS CAB:
PROPELLER SHAFT ASSEMBLY
x2
36 (369, 27)
37 (379, 27)
x2
MANUAL TRANSMISSION UNIT ASSEMBLY
x2
37 (377, 27)
x2
12 (122, 9)
37 (379, 27)
STARTER ASSEMBLY
CLUTCH RELEASE CYLINDER ASSEMBLY
NO. 1 ENGINE MOUNT INSULATOR REAR
65 (663, 48)
40 (408, 30)
x2
x4
NO. 3 FRAME CROSSMEMBER SUB-ASSEMBLY
x4
19 (189, 14)
40 (408, 30)
x2
N*m (kgf*cm, ft*lbf) : Specified torque
● Non-reusable part
Y
A113649E01

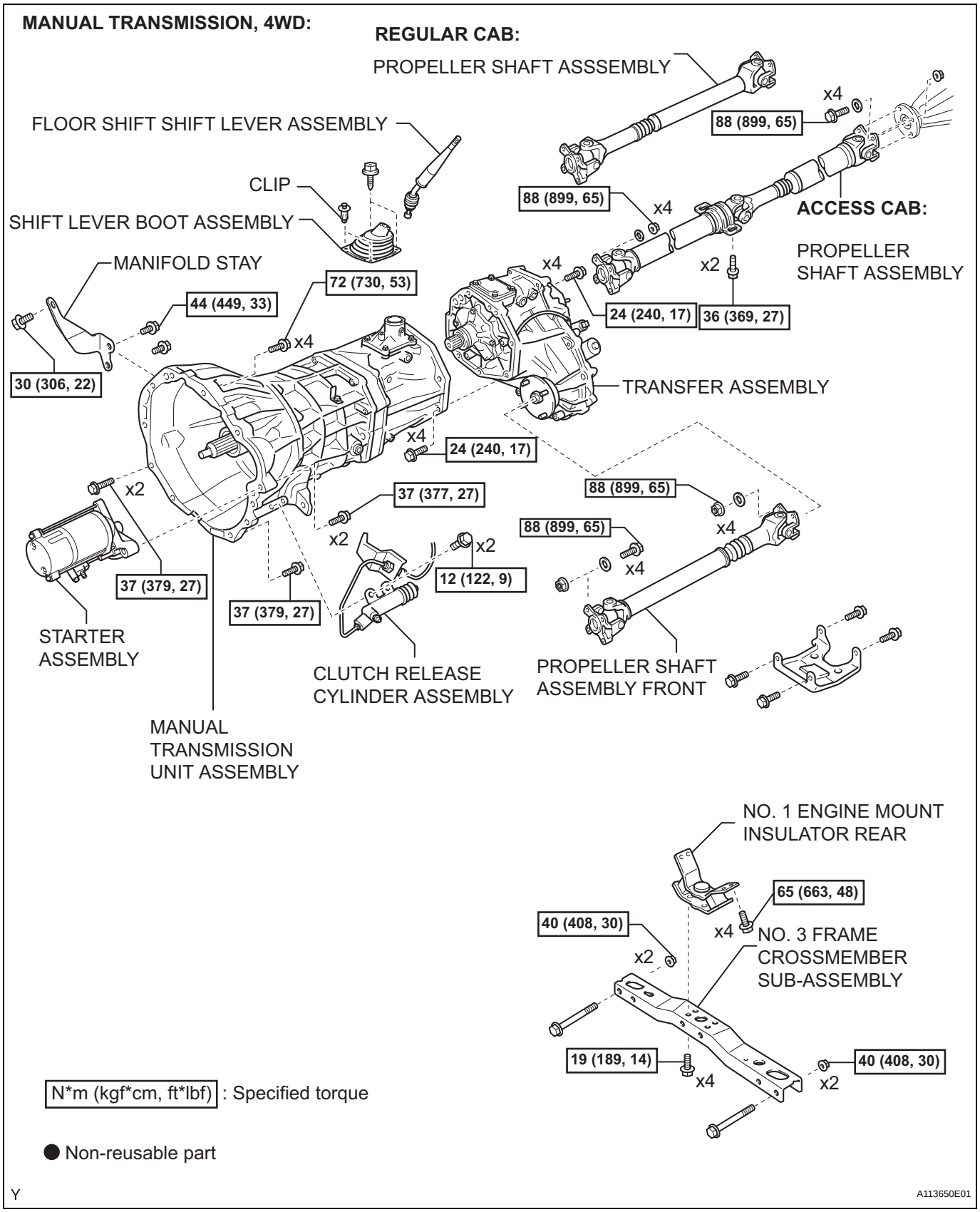
MANUAL TRANSMISSION, 4WD:
REGULAR CAB:
PROPELLER SHAFT ASSSEMBLY
FLOOR SHIFT SHIFT LEVER ASSEMBLY
CLIP
SHIFT LEVER BOOT ASSEMBLY
MANIFOLD STAY
88 (899, 65)
x4
ACCESS CAB:
PROPELLER SHAFT ASSEMBLY
x2
44 (449, 33)
72 (730, 53)
30 (306, 22)
24 (240, 17)
36 (369, 27)
TRANSFER ASSEMBLY
37 (377, 27)
12 (122, 9)
STARTER ASSEMBLY
CLUTCH RELEASE CYLINDER ASSEMBLY
PROPELLER SHAFT ASSEMBLY FRONT
MANUAL TRANSMISSION UNIT ASSEMBLY
NO. 1 ENGINE MOUNT INSULATOR REAR
65 (663, 48)
40 (408, 30)
NO. 3 FRAME CROSSMEMBER SUB-ASSEMBLY
19 (189, 14)
N*m (kgf*cm, ft*lbf) : Specified torque
● Non-reusable part
Y
A113650E01

EM

MANUAL TRANSMISSION:

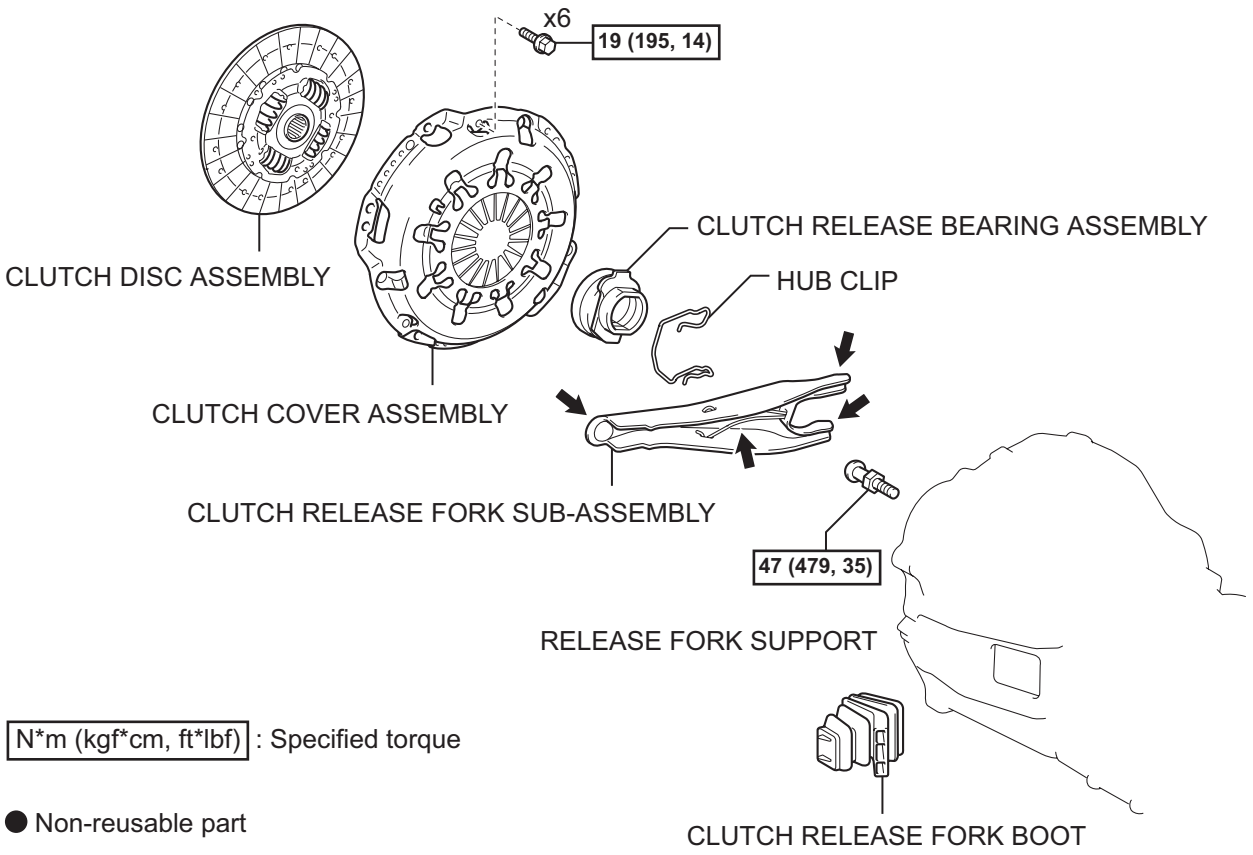

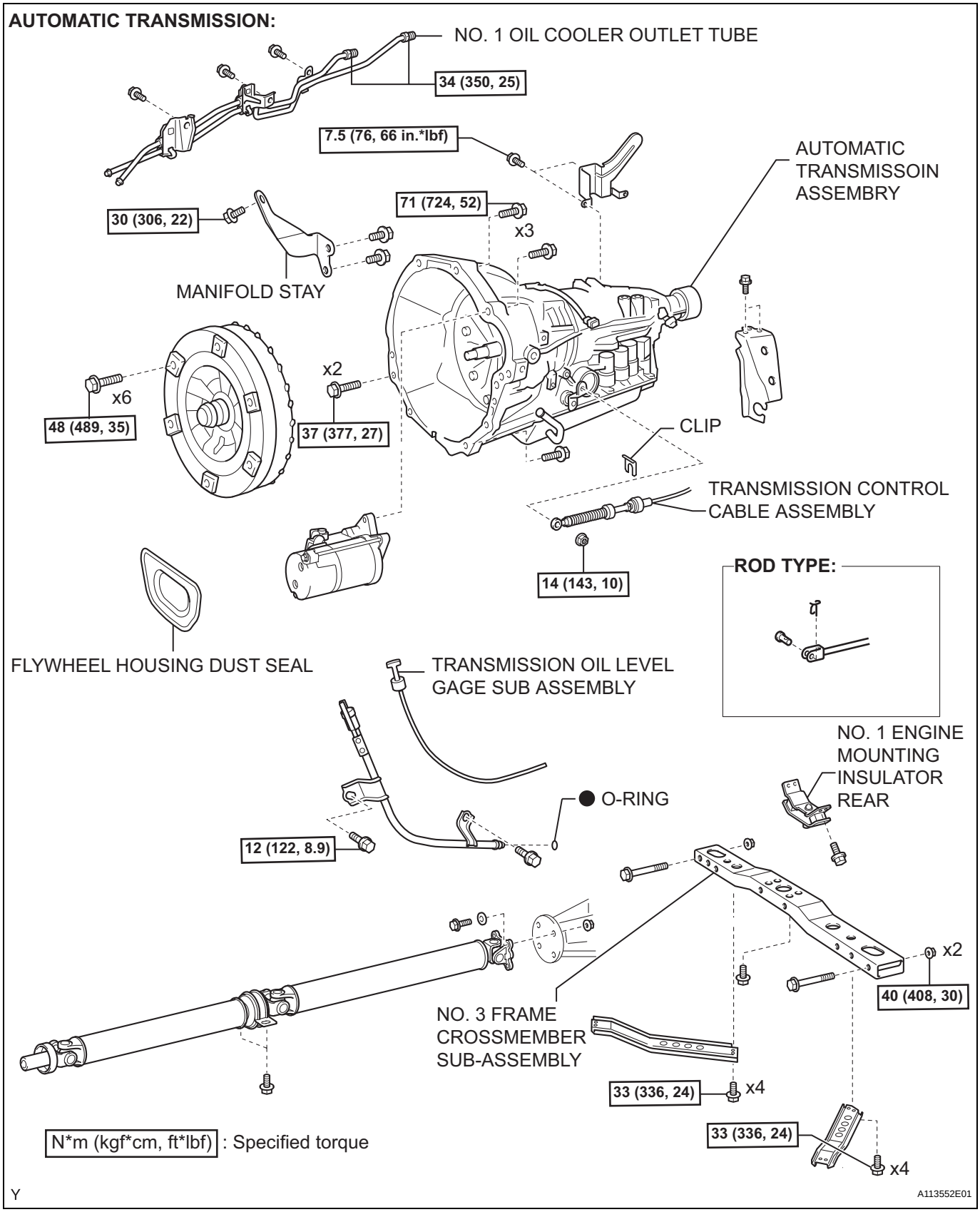
AUTOMATIC TRANSMISSION:
NO. 1 OIL COOLER OUTLET TUBE
34 (350, 25)
7.5 (76, 66 in.*lbf)
AUTOMATIC TRANSMISSOIN ASSEMBRY
71 (724, 52)
x3
30 (306, 22)
MANIFOLD STAY
x2
x6
48 (489, 35)
37 (377, 27)
CLIP
TRANSMISSION CONTROL CABLE ASSEMBLY
14 (143, 10)
ROD TYPE:
FLYWHEEL HOUSING DUST SEAL
TRANSMISSION OIL LEVEL GAGE SUB ASSEMBLY
NO. 1 ENGINE MOUNTING INSULATOR REAR
O-RING
12 (122, 8.9)
x2
40 (408, 30)
NO. 3 FRAME CROSSMEMBER SUB-ASSEMBLY
33 (336, 24)
x4
33 (336, 24)
x4
N*m (kgf*cm, ft*lbf) : Specified torque
Y
A113552E01

AUTOMATIC TRANSMISSION:

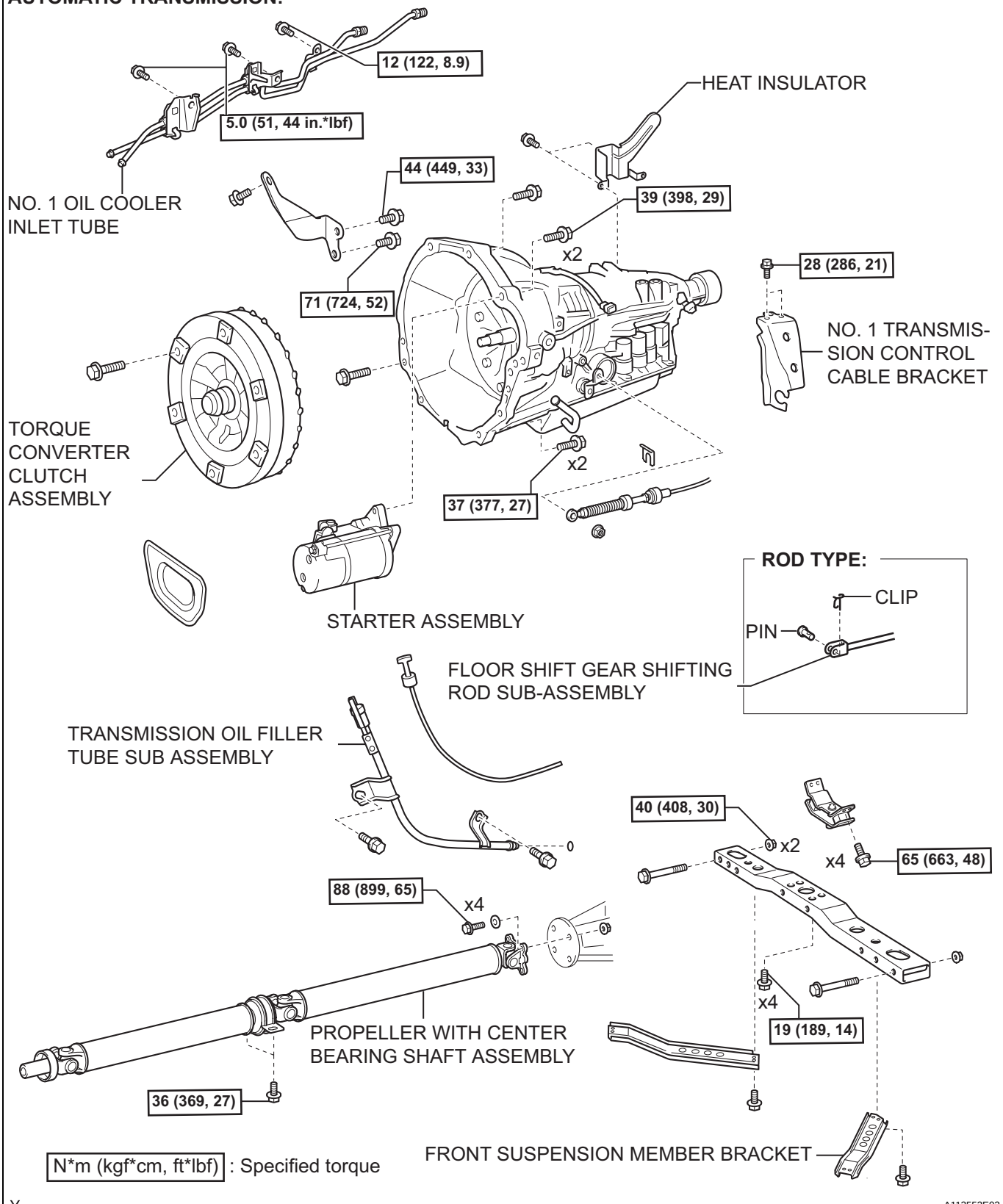

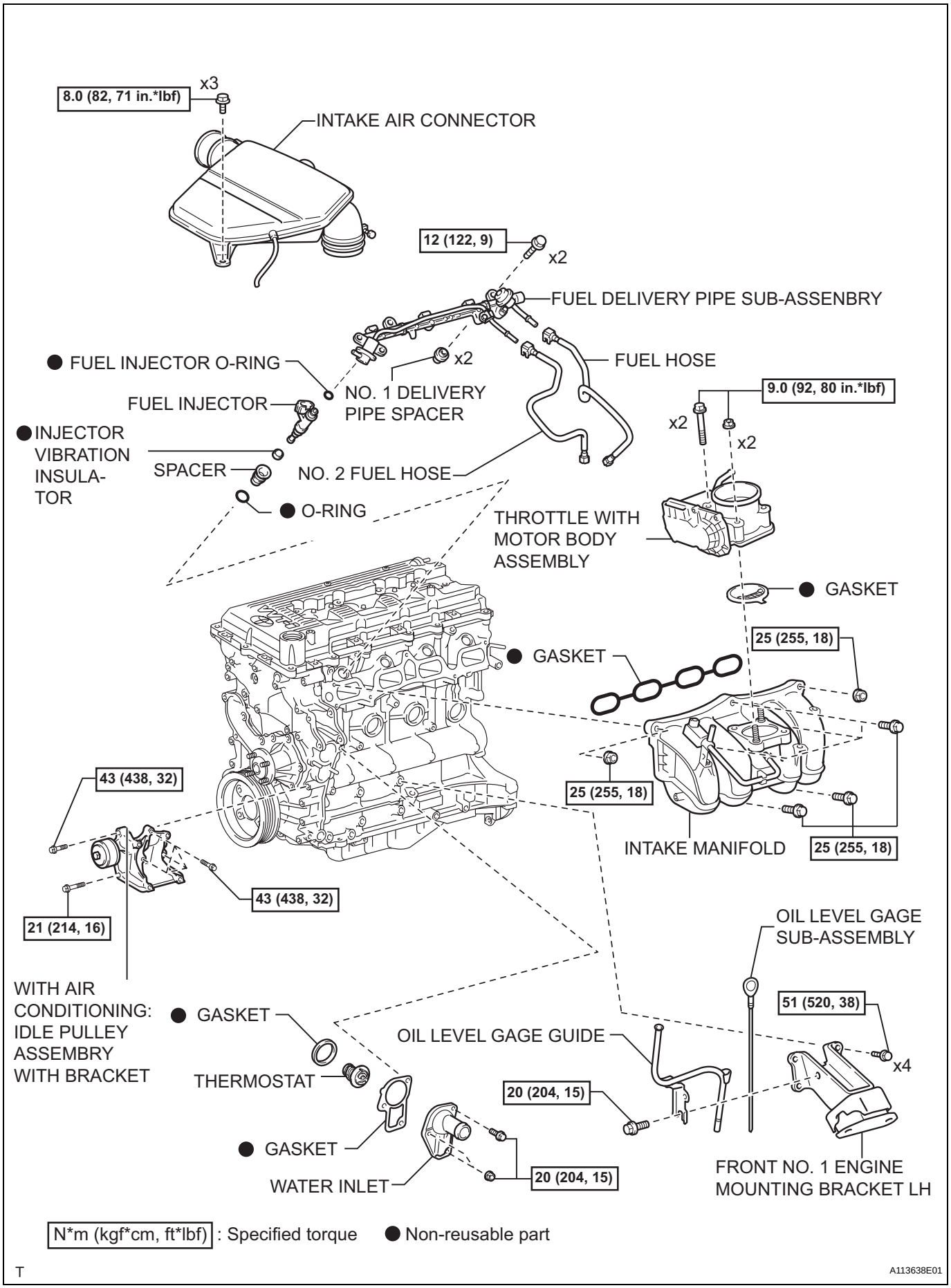

N*m (kgf*cm, ft*lbf) : Specified torque ● Non-reusable part

T

A113638E01

EM

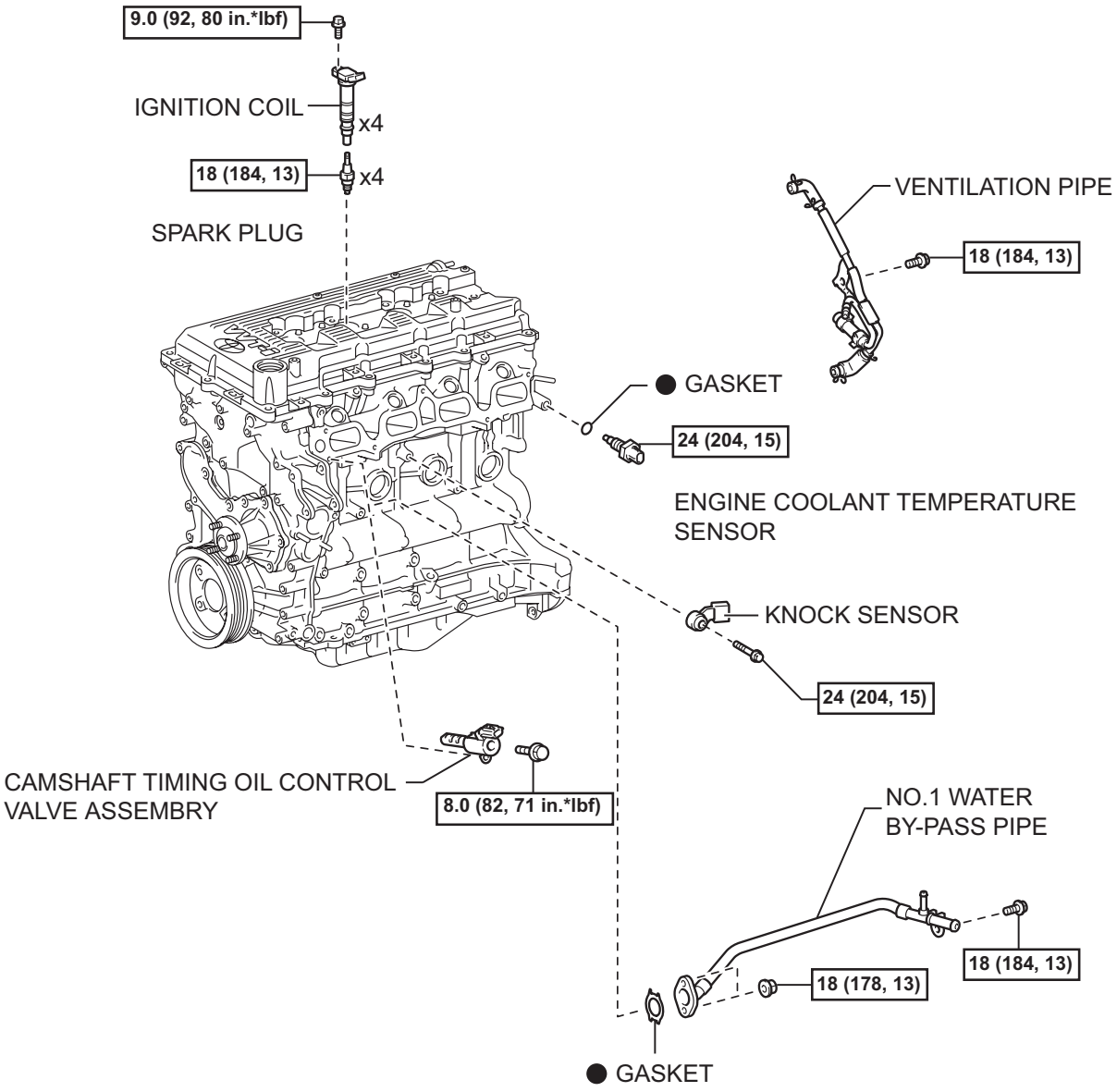

EM

N*m (kgf*cm, ft*lbf) : Specified torque

● Non-reusable part

T

A113639E01

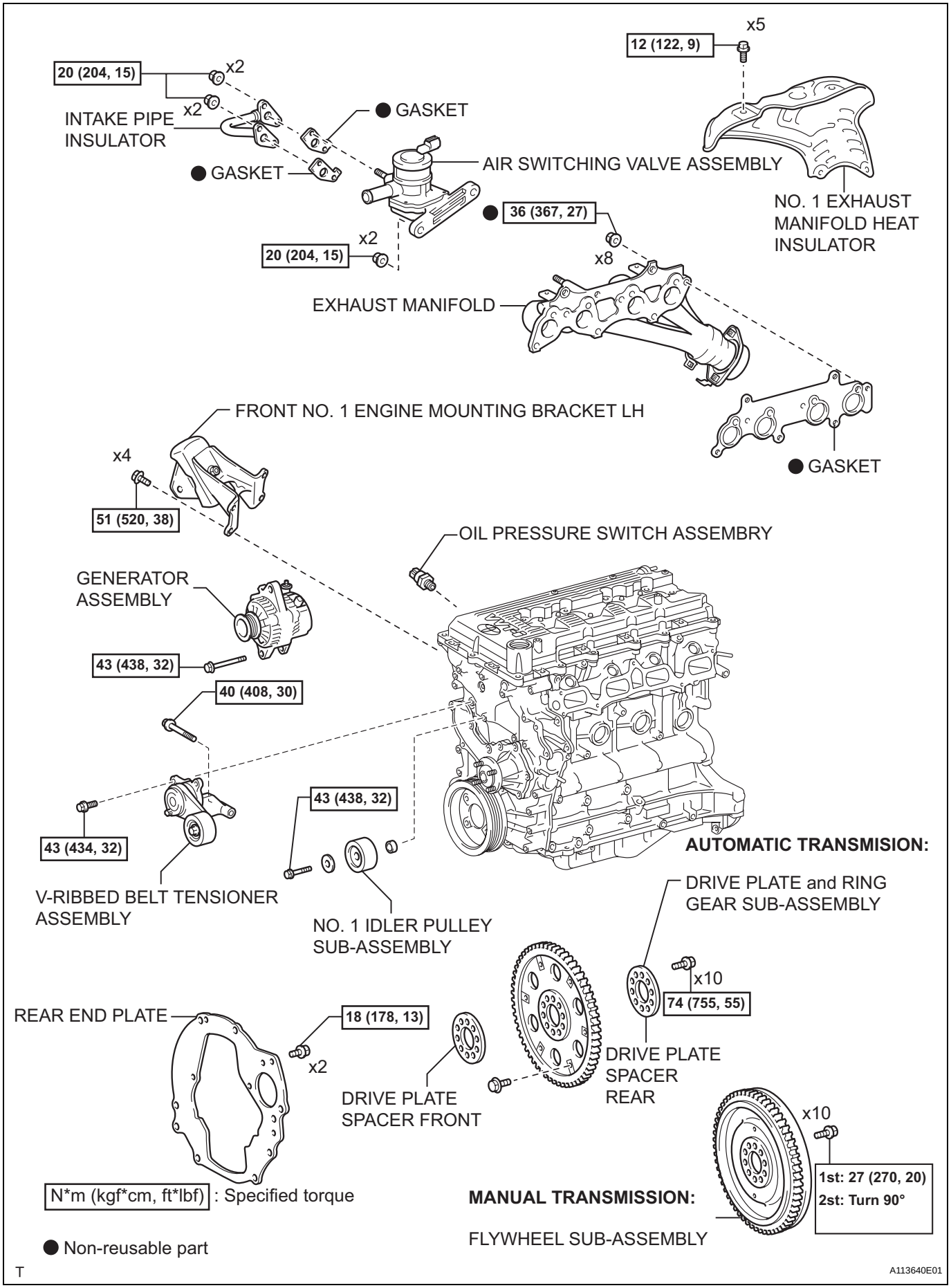
x5
12 (122, 9)
20 (204, 15)
x2
x2
INTAKE PIPE INSULATOR
GASKET
GASKET
AIR SWITCHING VALVE ASSEMBLY
NO. 1 EXHAUST MANIFOLD HEAT INSULATOR
36 (367, 27)
x8
x2
20 (204, 15)
EXHAUST MANIFOLD
FRONT NO. 1 ENGINE MOUNTING BRACKET LH
x4
51 (520, 38)
GASKET
OIL PRESSURE SWITCH ASSEMBRY
GENERATOR ASSEMBLY
43 (438, 32)
40 (408, 30)
43 (434, 32)
43 (438, 32)
V-RIBBED BELT TENSIONER ASSEMBLY
NO. 1 IDLER PULLEY SUB-ASSEMBLY
AUTOMATIC TRANSMISION:
DRIVE PLATE and RING GEAR SUB-ASSEMBLY
x10
74 (755, 55)
REAR END PLATE
18 (178, 13)
x2
DRIVE PLATE SPACER FRONT
DRIVE PLATE SPACER REAR
x10
1st: 27 (270, 20)
2st: Turn 90°
MANUAL TRANSMISSION:
FLYWHEEL SUB-ASSEMBLY
N*m (kgf*cm, ft*lbf) : Specified torque
● Non-reusable part
T
A113640E01

EM

ENGINE UNIT

COMPONENTS

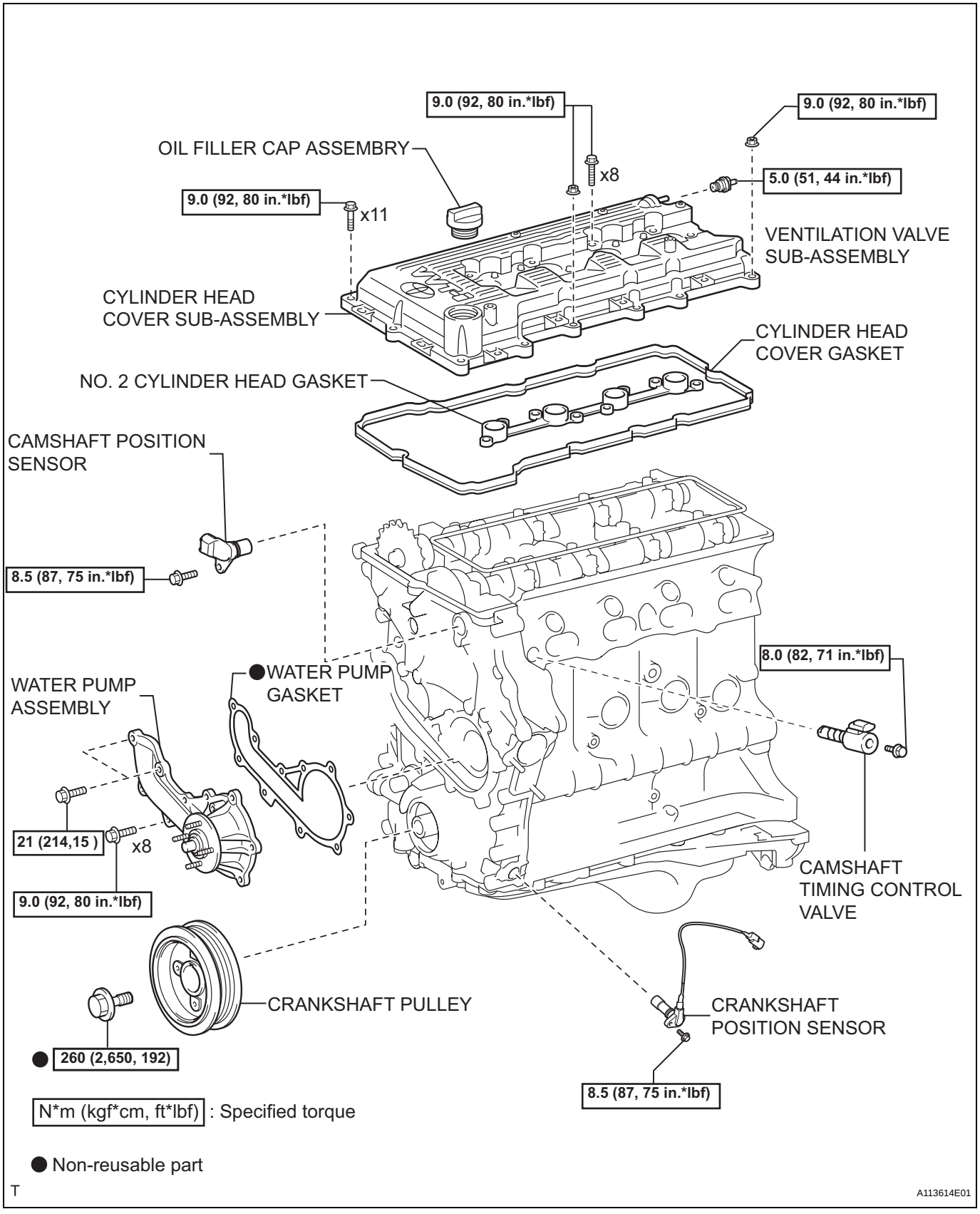

EM

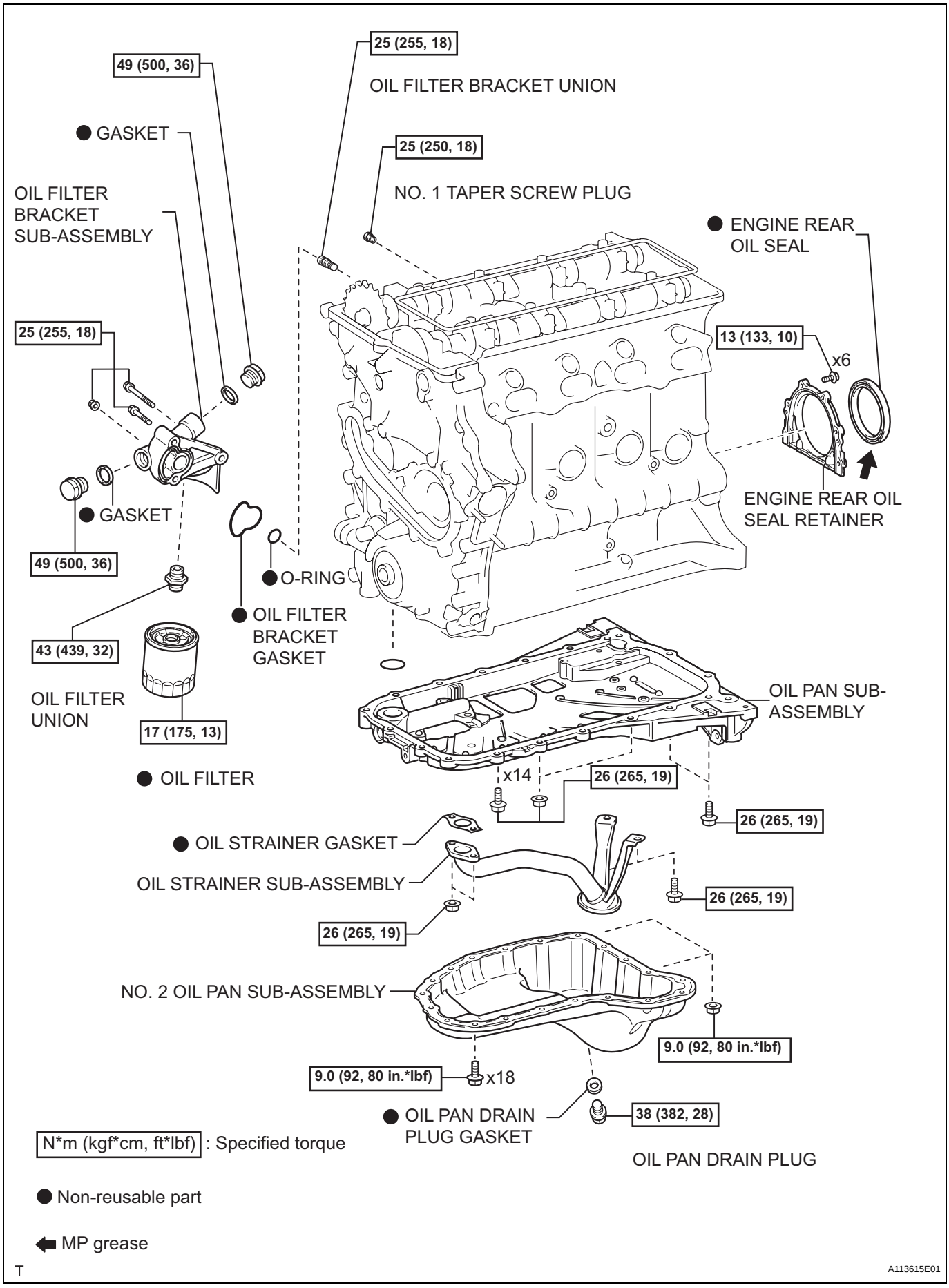
25 (255, 18)
49 (500, 36)
OIL FILTER BRACKET UNION
● GASKET
25 (250, 18)
NO. 1 TAPER SCREW PLUG
OIL FILTER BRACKET SUB-ASSEMBLY
● ENGINE REAR OIL SEAL
25 (255, 18)
13 (133, 10)
x6
● GASKET
ENGINE REAR OIL SEAL RETAINER
49 (500, 36)
● O-RING
● OIL FILTER BRACKET GASKET
43 (439, 32)
OIL FILTER UNION
17 (175, 13)
OIL PAN SUB-ASSEMBLY
● OIL FILTER
x14
26 (265, 19)
26 (265, 19)
● OIL STRAINER GASKET
OIL STRAINER SUB-ASSEMBLY
26 (265, 19)
26 (265, 19)
NO. 2 OIL PAN SUB-ASSEMBLY
9.0 (92, 80 in.*lbf)
9.0 (92, 80 in.*lbf)
x18
● OIL PAN DRAIN PLUG GASKET
38 (382, 28)
OIL PAN DRAIN PLUG
N*m (kgf*cm, ft*lbf) : Specified torque
● Non-reusable part
MP grease
T
A113615E01

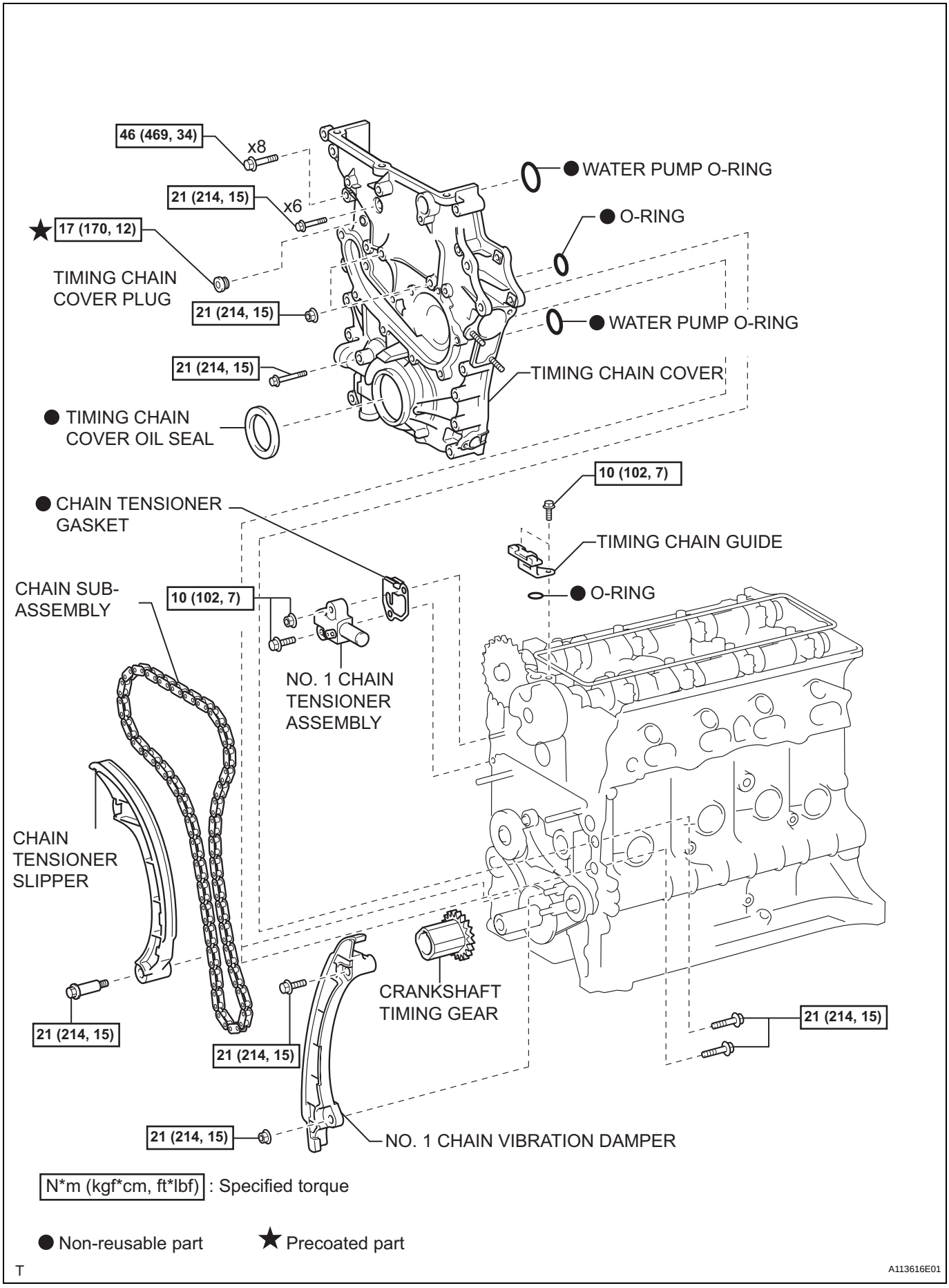
46 (469, 34)
x8
21 (214, 15)
x6
17 (170, 12)
TIMING CHAIN COVER PLUG
21 (214, 15)
21 (214, 15)
TIMING CHAIN COVER OIL SEAL
WATER PUMP O-RING
O-RING
WATER PUMP O-RING
TIMING CHAIN COVER
10 (102, 7)
CHAIN TENSIONER GASKET
TIMING CHAIN GUIDE
O-RING
CHAIN SUB-ASSEMBLY
10 (102, 7)
NO. 1 CHAIN TENSIONER ASSEMBLY
CHAIN TENSIONER SLIPPER
CRANKSHAFT TIMING GEAR
21 (214, 15)
21 (214, 15)
21 (214, 15)
21 (214, 15)
NO. 1 CHAIN VIBRATION DAMPER
N*m (kgf*cm, ft*lbf) : Specified torque
● Non-reusable part
★ Precoated part
T
A113616E01

EM

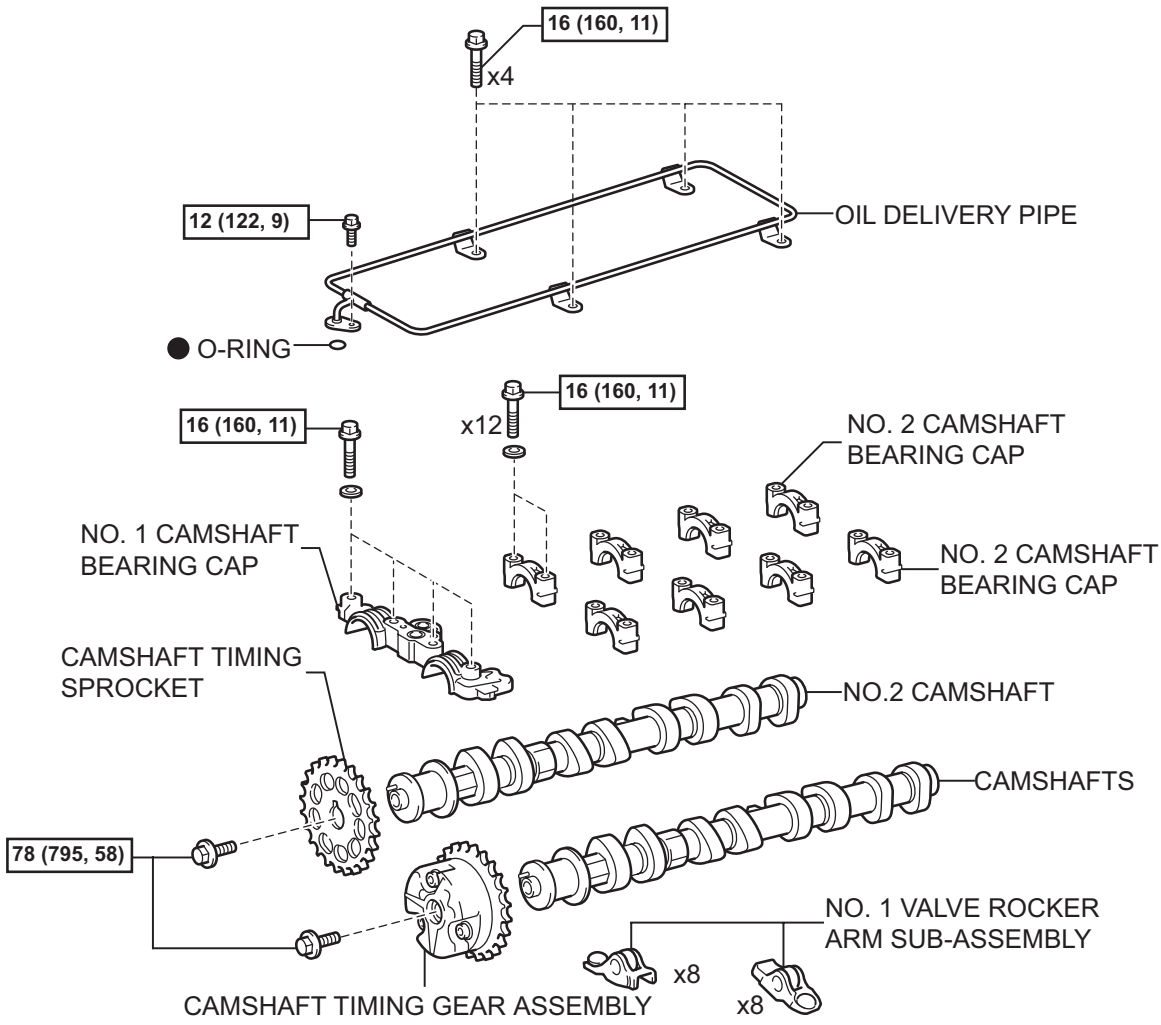

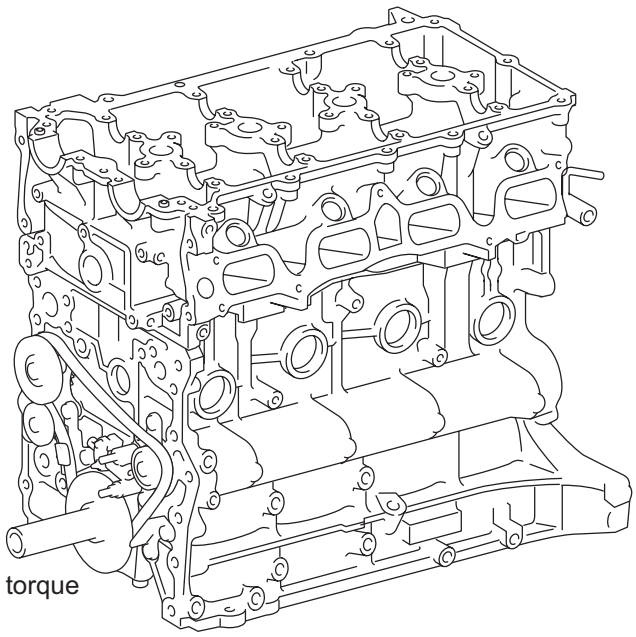

N*m (kgf*cm, ft*lbf) : Specified torque

● Non-reusable part

T

A113617E01

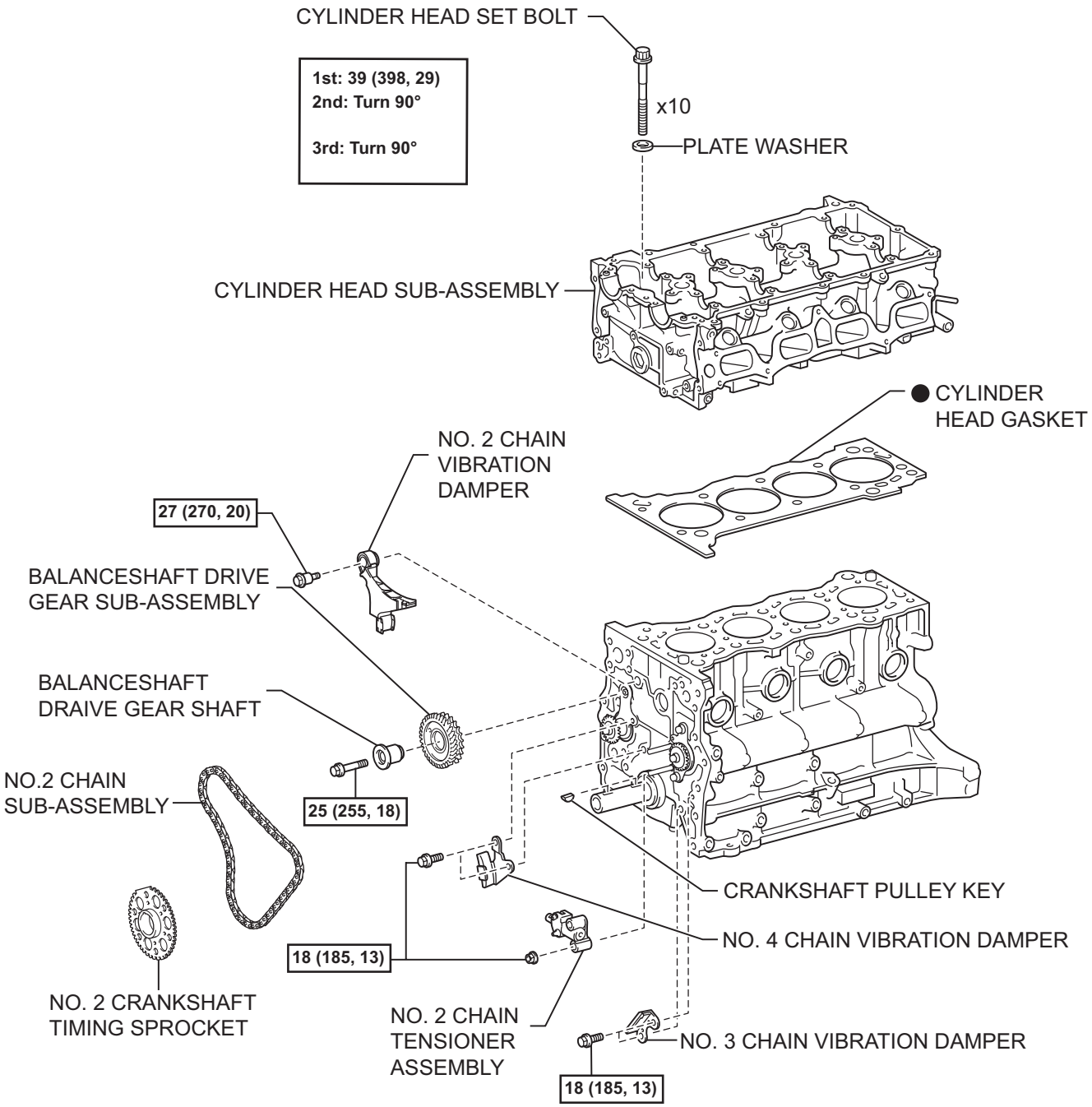

N*m (kgf*cm, ft*lbf) : Specified torque

● Non-reusable part

T

A113618E01

EM

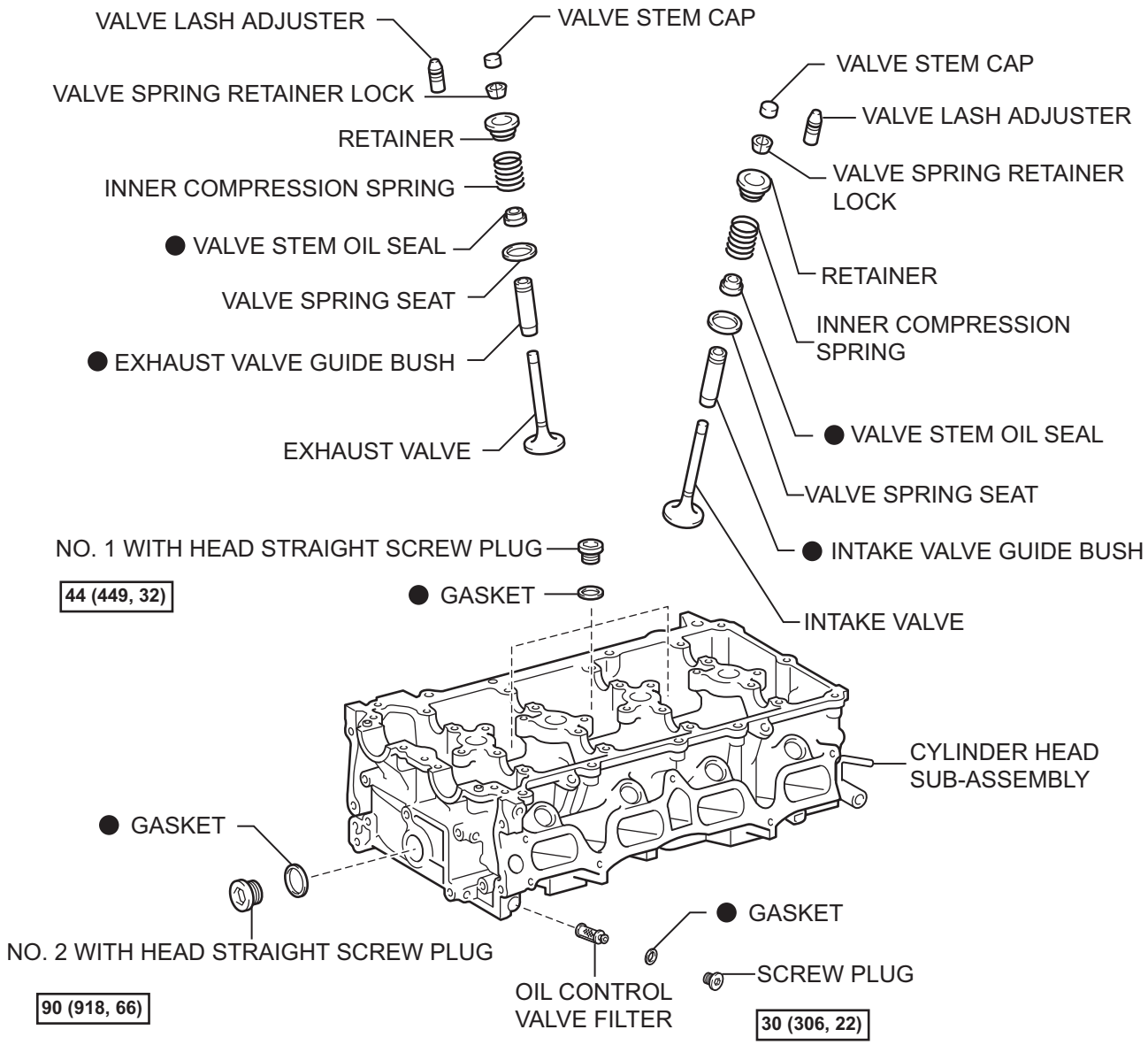

N*m (kgf*cm, ft*lbf) : Specified torque

● Non-reusable part

T

A113619E01

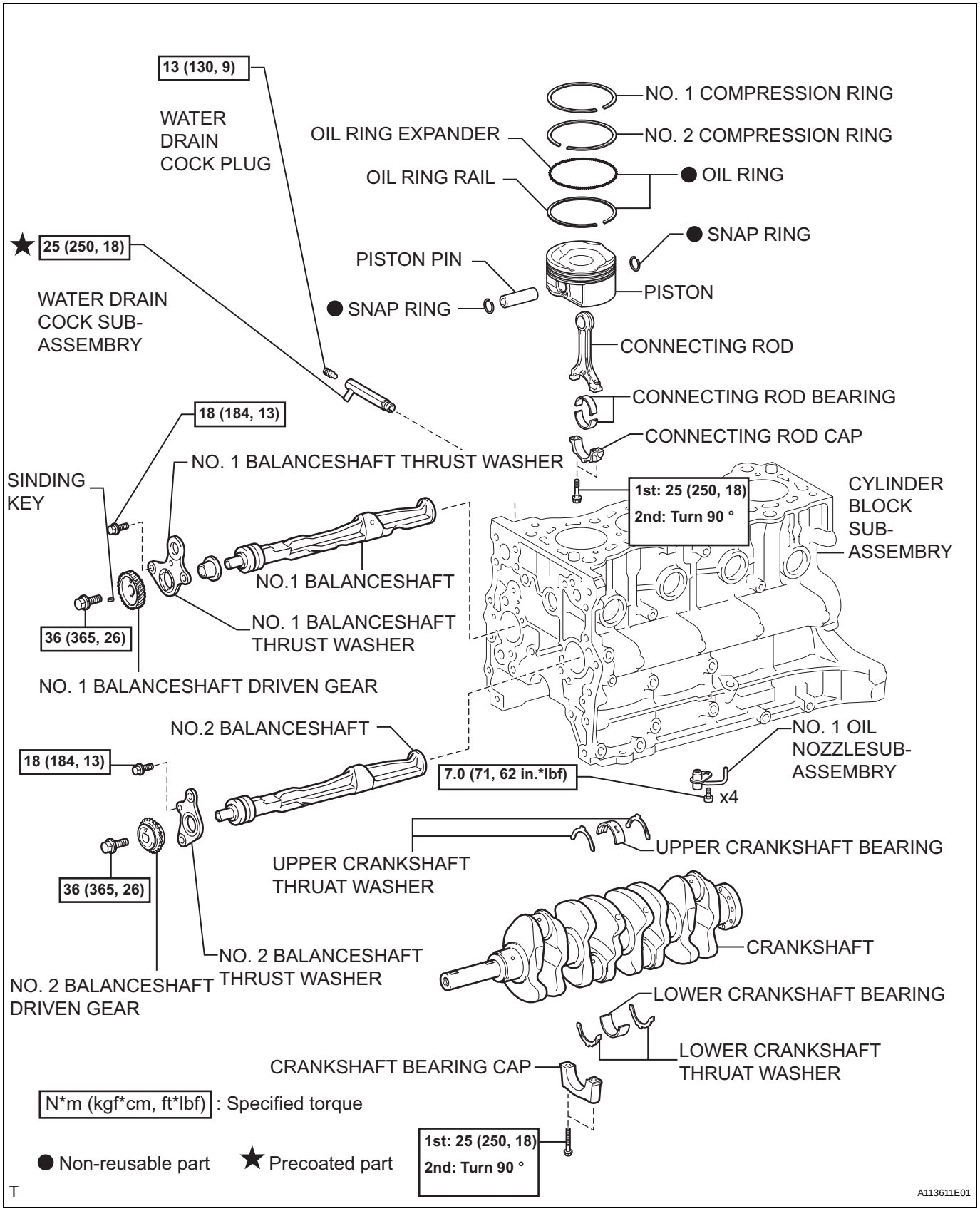
13 (130, 9)
WATER DRAIN COCK PLUG
NO. 1 COMPRESSION RING
NO. 2 COMPRESSION RING
OIL RING EXPANDER
OIL RING
OIL RING RAIL
SNAP RING
★ 25 (250, 18)
PISTON PIN
PISTON
WATER DRAIN COCK SUB-ASSEMBRY
SNAP RING
CONNECTING ROD
CONNECTING ROD BEARING
18 (184, 13)
CONNECTING ROD CAP
NO. 1 BALANCESHAFT THRUST WASHER
SINDING KEY
1st: 25 (250, 18)
2nd: Turn 90 °
CYLINDER BLOCK SUB-ASSEMBRY
NO.1 BALANCESHAFT
NO. 1 BALANCESHAFT THRUST WASHER
36 (365, 26)
NO. 1 BALANCESHAFT DRIVEN GEAR
NO.2 BALANCESHAFT
18 (184, 13)
7.0 (71, 62 in.*lbf)
x4
NO. 1 OIL NOZZLESUB-ASSEMBRY
UPPER CRANKSHAFT BEARING
UPPER CRANKSHAFT THRUAT WASHER
36 (365, 26)
CRANKSHAFT
NO. 2 BALANCESHAFT THRUST WASHER
NO. 2 BALANCESHAFT DRIVEN GEAR
LOWER CRANKSHAFT BEARING
LOWER CRANKSHAFT THRUAT WASHER
CRANKSHAFT BEARING CAP
N*m (kgf*cm, ft*lbf) : Specified torque
● Non-reusable part
★ Precoated part
1st: 25 (250, 18)
2nd: Turn 90 °
T
A113611E01

EM

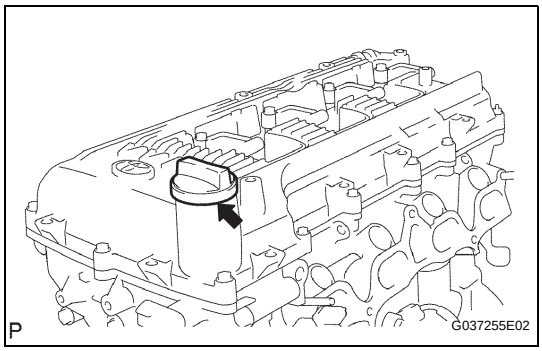

DISASSEMBLY

1. REMOVE OIL FILLER CAP SUB-ASSEMBLY

(a) Remove the oil filler cap sub-assembly.

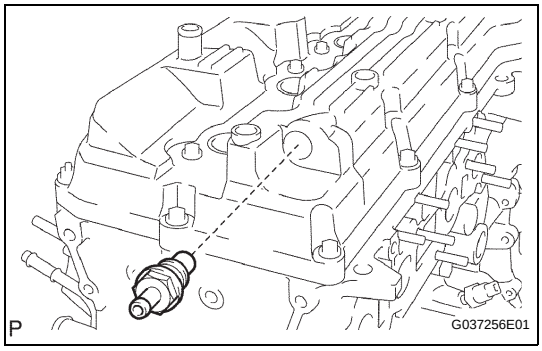

2. REMOVE VENTILATION VALVE SUB-ASSEMBLY

(a) Remove the ventilation valve sub-assembly.

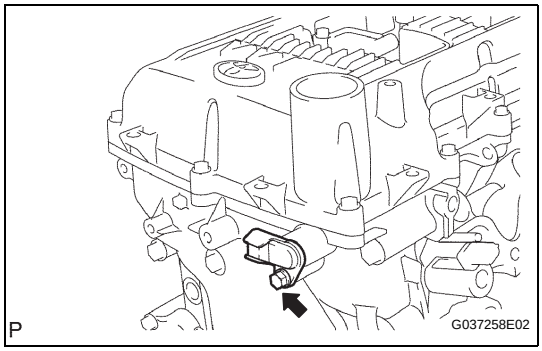

3. REMOVE CAMSHAFT POSITION SENSOR

(a) Remove the bolt and camshaft position sensor.

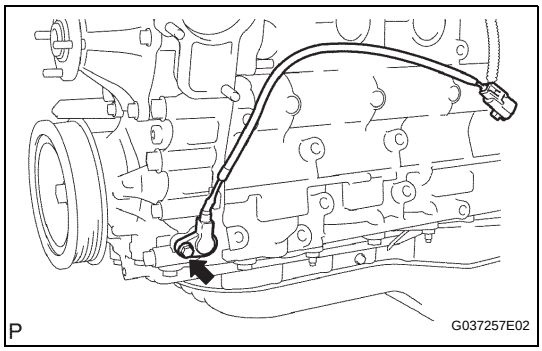

4. REMOVE CRANKSHAFT POSITION SENSOR

(a) Remove the bolt and crankshaft position sensor.

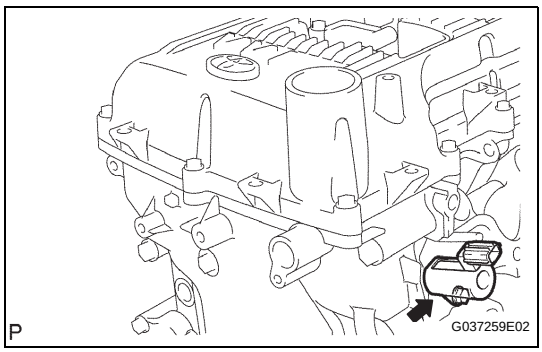

5. REMOVE CAMSHAFT TIMING OIL CONTROL VALVE ASSEMBLY

(a) Remove the bolt and camshaft timing oil control valve.

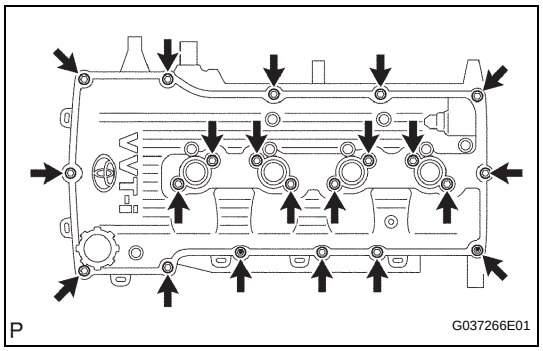

6. REMOVE CYLINDER HEAD COVER SUB-ASSEMBLY

(a) Remove the 19 bolts, 2 nuts, head cover and 2 gaskets.

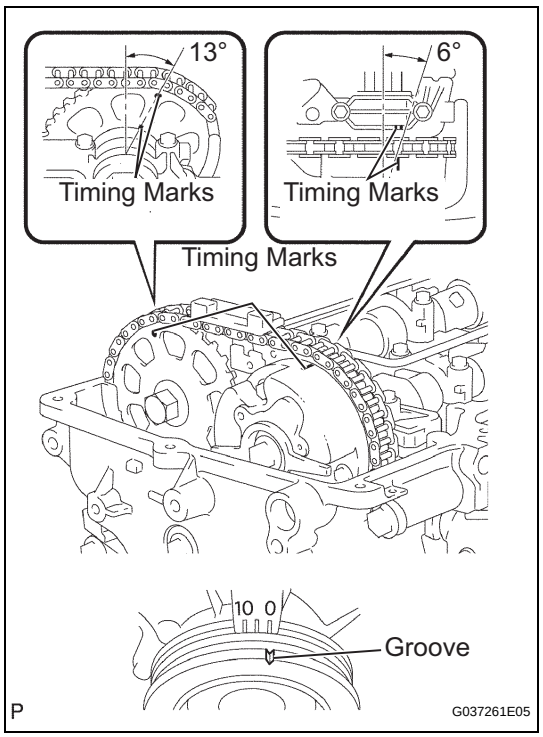

7. REMOVE CRANKSHAFT PULLEY

(a) Turn the crankshaft pulley, and align its groove with timing mark 0 of the timing chain cover.

(b) Check that the timing marks of the camshaft timing gear and sprocket are aligned with the timing marks of the bearing cap No.1, as shown in the illustration.

EM

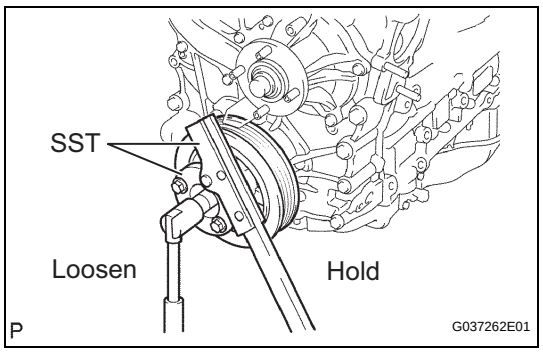

(c) Using SST, loosen the crankshaft pulley bolt.
SST 09213-54015 (91651-60855), 09330-00021

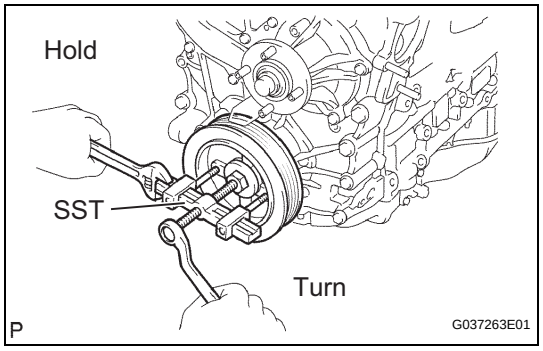

(d) Using SST, remove the crankshaft pulley bolt and crankshaft pulley.
SST 09950-50013 (09951-05010, 09952-05010, 09953-05010, 09954-05021)

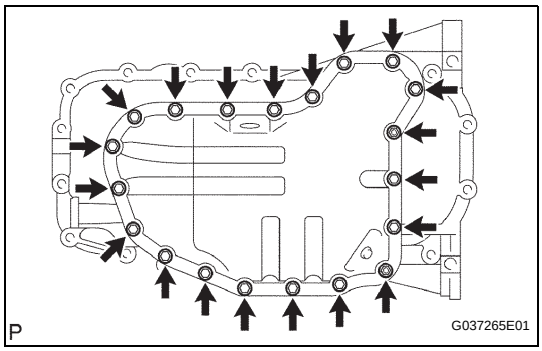

8. REMOVE NO. 2 OIL PAN SUB-ASSEMBLY

(a) Remove the drain plug and gasket.

(b) Remove the 18 bolts and 2 nuts.

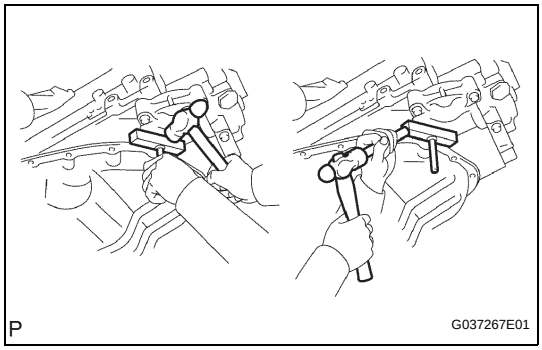

(c) Insert the blade of SST between the oil pans. Cut through the applied sealer and remove the oil pan sub-assembly No.2.

SST 09032-00100

NOTICE:

Be careful not to damage the contact surfaces of the oil pans.

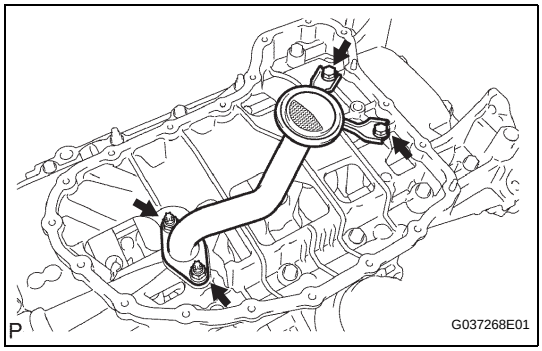

9. REMOVE OIL STRAINER SUB-ASSEMBLY

(a) Remove the 2 bolts, 2 nuts, oil strainer and gasket.

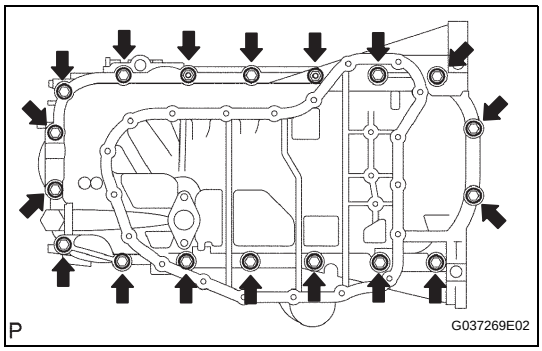

10. REMOVE OIL PAN SUB-ASSEMBLY

(a) Remove the 16 bolts and 2 nuts.

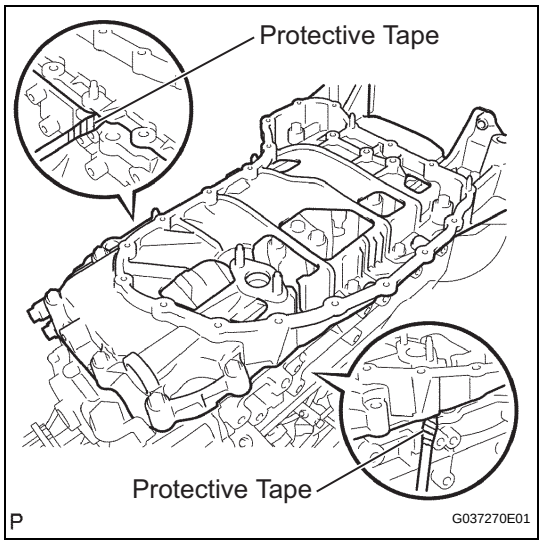

(b) Remove the oil pan by prying between the oil pan and cylinder block with a screwdriver.
NOTICE:
Be careful not to damage the contact surfaces of the cylinder block and oil pan.
HINT:
Tape the screwdriver tip before use.

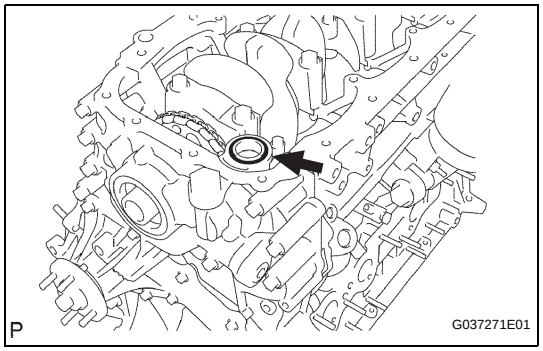

(c) Remove the O-ring.

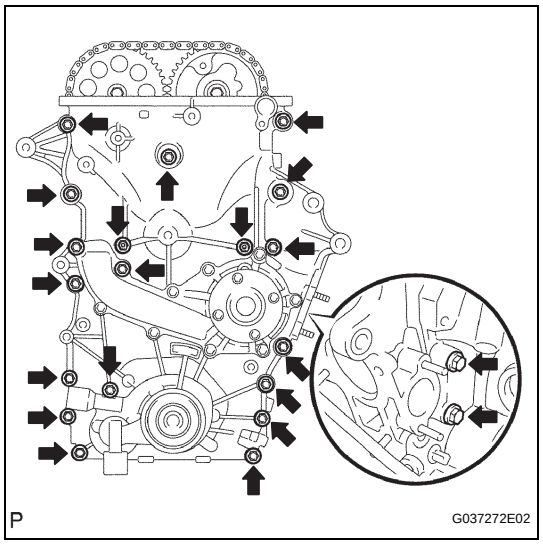

11. REMOVE TIMING CHAIN COVER

(a) Remove the 19 bolts and 2 nuts as shown in the illustration.

EM

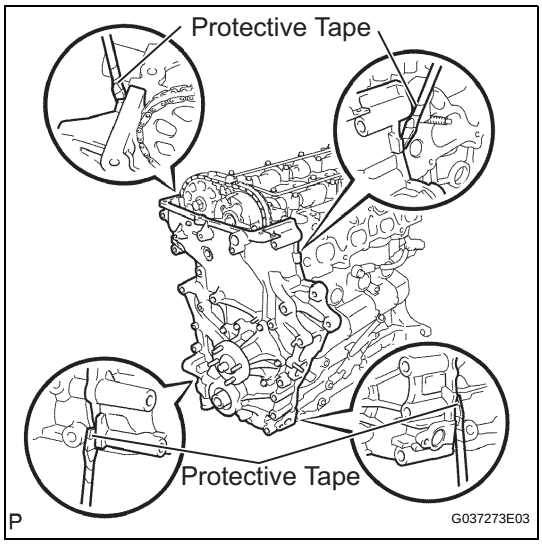

(b) Remove the timing chain cover by prying between the timing chain cover and cylinder head or cylinder block with a screwdriver.
HINT:
Tape the screwdriver tip before use.
NOTICE:
Be careful not to damage the contact surfaces of the cylinder head, cylinder block and timing chain cover.

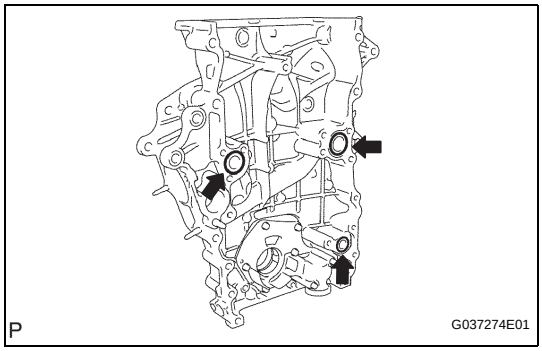

(c) Remove the 3 O-rings.

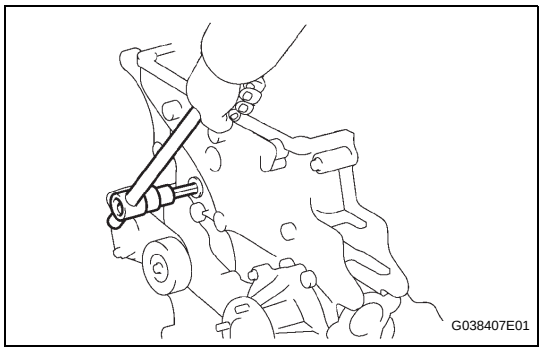

(d) Using a 10 mm socket hexagon wrench, remove the timing chain cover plug.

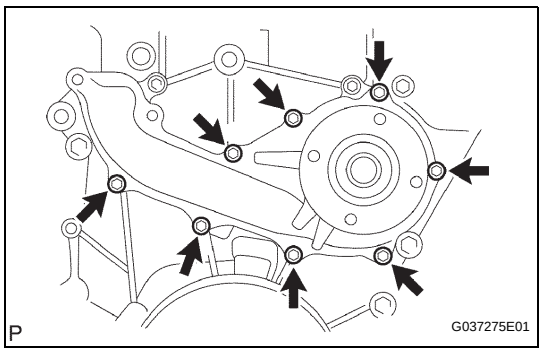

12. REMOVE WATER PUMP ASSEMBLY

(a) Remove the 8 bolts, water pump and gasket.

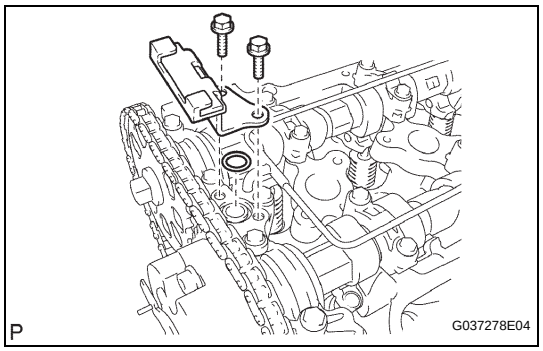

13. REMOVE TIMING CHAIN GUIDE

(a) Remove the 2 bolts, timing chain guide and O-ring.

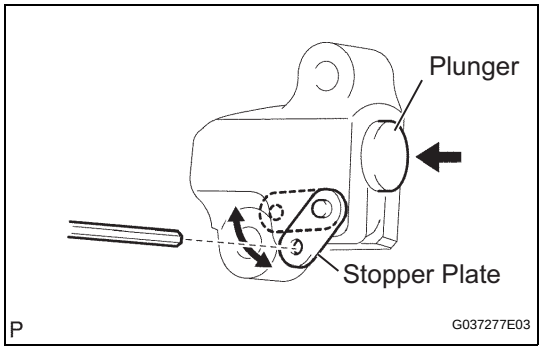

14. REMOVE NO. 1 CHAIN TENSIONER ASSEMBLY

NOTICE:

- **When the chain tensioner is removed, do not rotate the crankshaft.**
- **When the chain is removed and the camshaft needs to be rotated, rotate the crankshaft 90 degrees to the right.**

(a) Move the stopper plate upward to release the lock, and push the plunger deep into the tensioner.

(b) Move the stopper plate downward to set the lock, and insert a hexagon wrench into the stopper plate's hole.

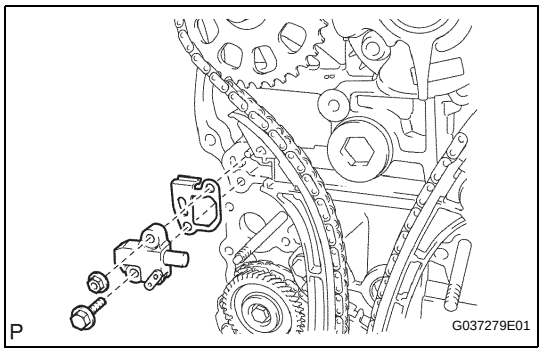

(c) Remove the bolt, nut, chain tensioner assembly No.1 and gasket.

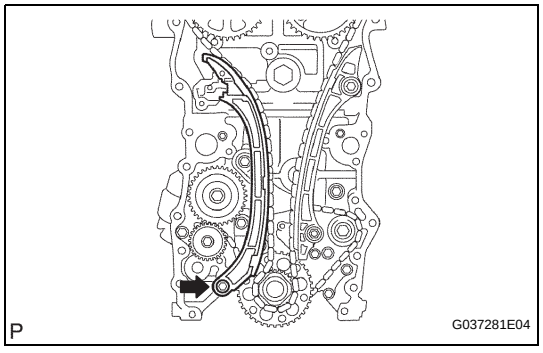

15. REMOVE CHAIN TENSIONER SLIPPER

(a) Remove the bolt and tensioner slipper.

EM

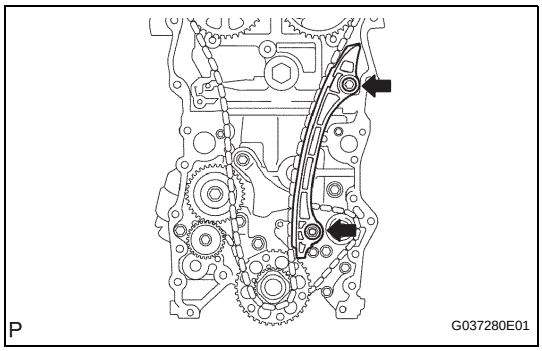

16. REMOVE NO. 1 CHAIN VIBRATION DAMPER

(a) Remove the bolt, nut, and vibration damper.

17. REMOVE CHAIN SUB-ASSEMBLY

(a) Remove the chain.

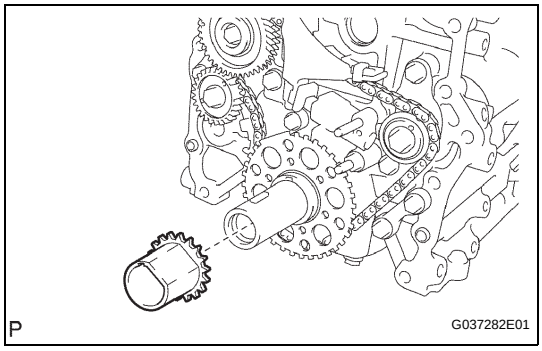

18. REMOVE CRANKSHAFT TIMING GEAR OR SPROCKET

(a) Remove the crankshaft timing gear from the crankshaft.

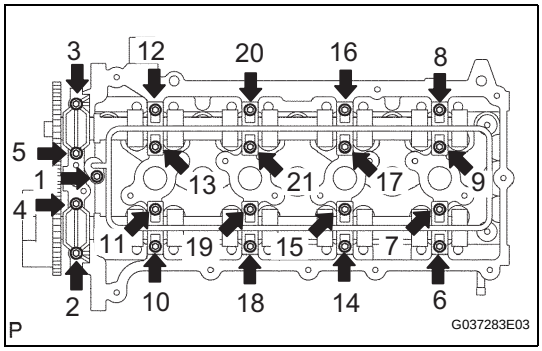

19. REMOVE CAMSHAFT BEARING CAP

(a) Uniformly loosen and remove the 21 bearing cap bolts and 20 washers on the camshafts in the sequence shown in the illustration.

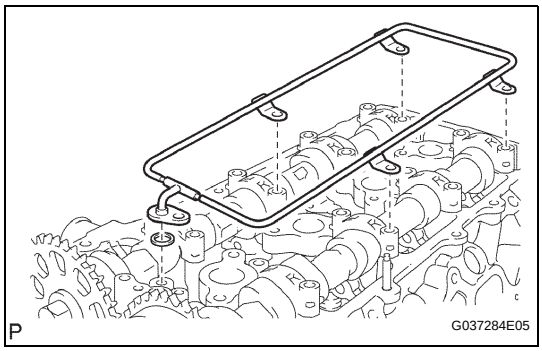

(b) Remove the oil delivery pipe and O-ring from the bearing caps.

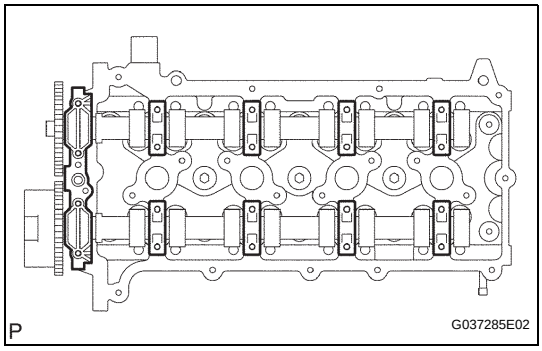

(c) Remove the 9 bearing caps.

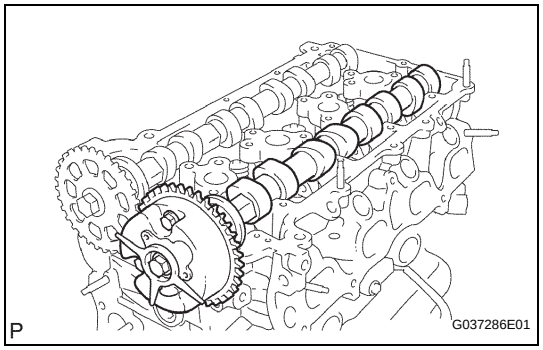

20. REMOVE CAMSHAFT

(a) Remove the camshaft sub-assembly.

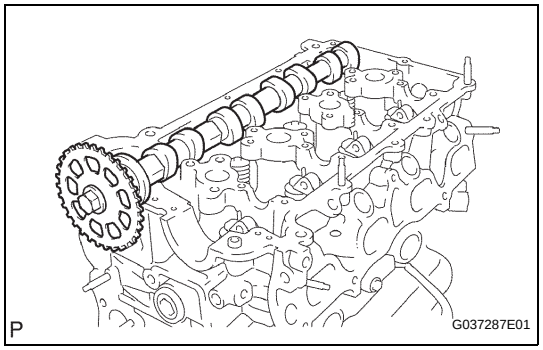

21. REMOVE NO.2 CAMSHAFT

(a) Remove the No.2 camshaft sub-assembly.

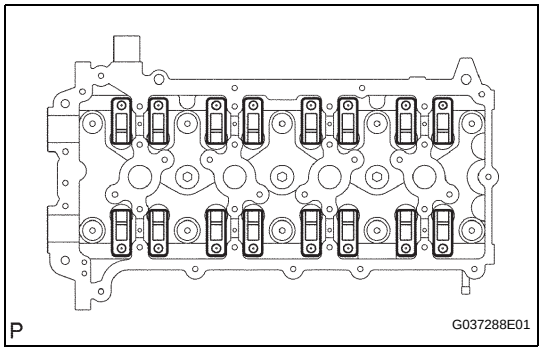

22. REMOVE NO. 1 VALVE ROCKER ARM SUB-ASSEMBLY

(a) Remove the 16 valve rocker arm sub-assembly.

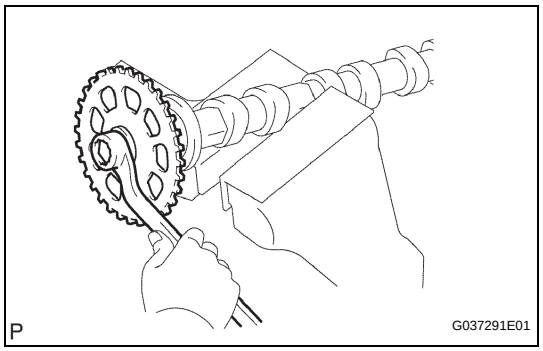

23. REMOVE CAMSHAFT TIMING SPROCKET

(a) Fix the camshaft with a vise and then remove the sprocket bolt and camshaft timing sprocket.
NOTICE:
Be careful not to damage the camshaft.

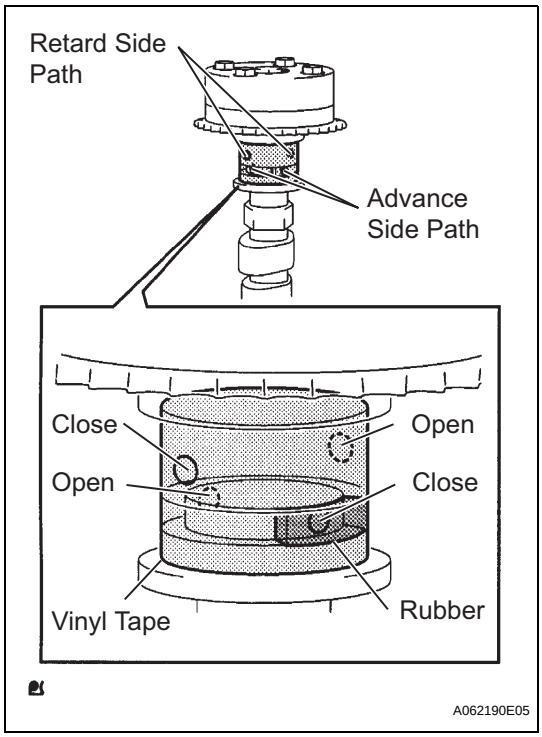

24. REMOVE CAMSHAFT TIMING GEAR ASSEMBLY

(a) Check the lock of the camshaft timing gear.

(1) Clamp the camshaft in a vise, and confirm that the camshaft timing gear is locked.

NOTICE:

Be careful not to damage the camshaft.

(b) Release the lock pin.

(1) Cover the 4 oil paths of the cam journal with vinyl tape as shown in the illustration.

HINT:

2 advance side paths are provided in the groove of the camshaft. Plug one of the paths with a rubber piece.

(2) Break through the tape of the advance side path and the retard side path on the opposite side to the hole of the advance side path, as shown in the illustration.

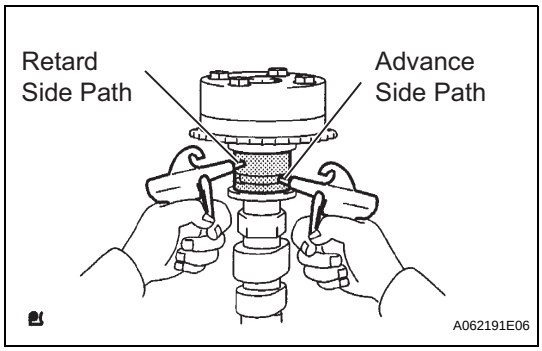

(3) Apply approximately 200 kPa (2.0 kgf*cm^2, 28 psi) of air pressure to the two broken paths.

CAUTION:

Some oil splashing will occur. Cover the paths with a shop rag.

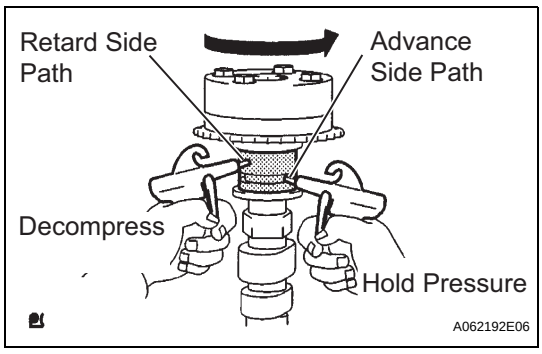

(4) Check that the camshaft timing gear revolves in the advance direction when reducing the air pressure applied to the retard side path.

OK:

Gear rotates in the advance direction.

HINT:

This operation releases the lock pin for the most retarded position.

(5) When the camshaft timing gear reaches the most advanced position, release the air pressure from the retard side path and advance side path, in that order.

NOTICE:

Do not release the air pressure from the advance side path first. The gear may abruptly shift in the retard direction and break the lock pin.

EM

(c) Check for smooth rotation.
(1) Rotate the camshaft timing gear within its movable range several times, but do not turn it to the most retarded position. Check that the gear rotates smoothly.
OK:
Gear rotates in the advance direction.
CAUTION:
Do not use an air pressure to perform the smooth operation check.

(d) Check the lock in the most retarded position.
(1) Confirm that the camshaft timing gear is locked at the most retarded position.

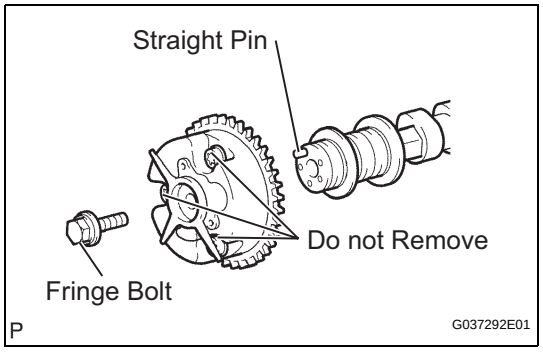

25. REMOVE CAMSHAFT TIMING GEAR ASSEMBLY
(a) Remove the fringe bolt and camshaft timing gear.
NOTICE:
- **Be sure not to remove the other 3 bolts.**
- **If planning to reuse the gear, be sure to release the straight pin lock before installing the gear.**

EM

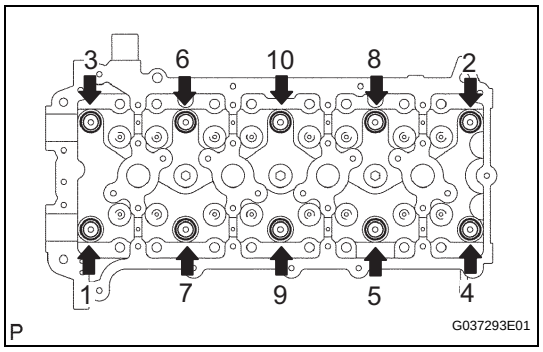

26. REMOVE CYLINDER HEAD SUB-ASSEMBLY
(a) Uniformly loosen the 10 bolts in the sequence shown in the illustration. Remove the 10 cylinder head bolts and plate washers.
NOTICE:
- **Be careful not to drop washers into the cylinder head.**
- **Head warpage or cracking could result from removing bolts in an incorrect order.**

(b) Remove the cylinder head.

27. REMOVE CYLINDER HEAD GASKET
(a) Remove the cylinder head and gasket.

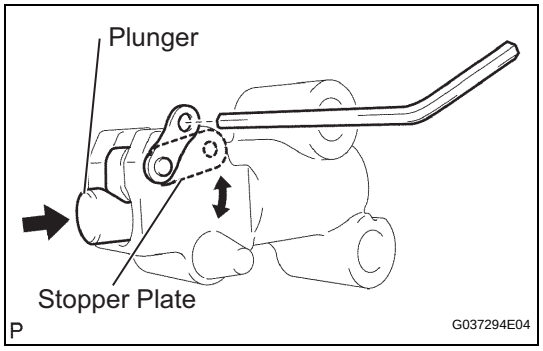

28. REMOVE NO. 2 CHAIN VIBRATION DAMPER
(a) Move the stopper plate downward to release the lock, and push the plunger deep into the tensioner.
(b) Move the stopper plate upward to set the lock, and insert a hexagon wrench into the stopper plate's hole.

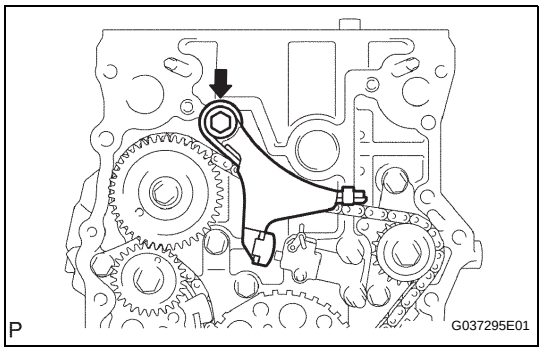

(c) Remove the bolt and chain vibration damper No.2.

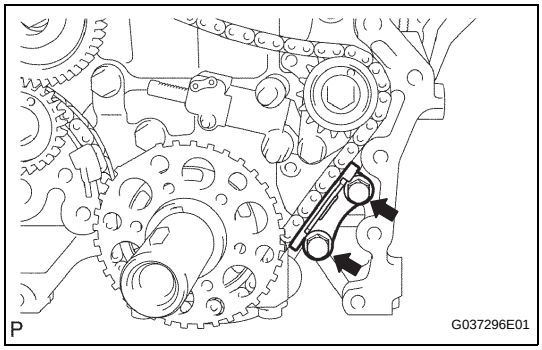

29. REMOVE NO. 3 CHAIN VIBRATION DAMPER

(a) Remove the 2 bolts and chain vibration damper No.3.

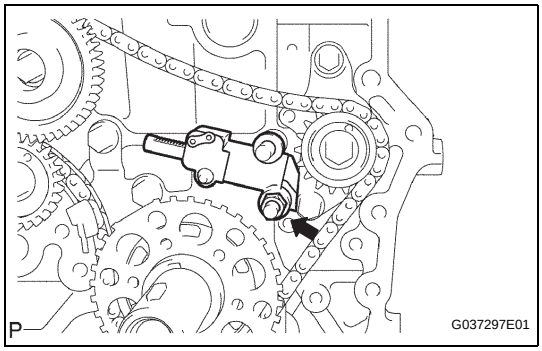

30. REMOVE NO. 2 CHAIN TENSIONER ASSEMBLY

(a) Remove the hexagon wrench from the tensioner assembly No.2.

(b) Remove the nut and chain tensioner assembly No.2.

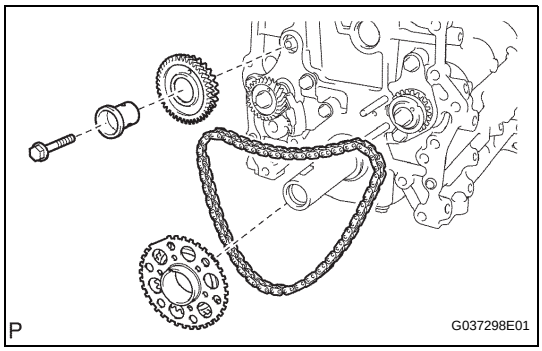

31. REMOVE NO.2 CHAIN SUB-ASSEMBLY

(a) Remove the bolt, balanceshaft drive gear shaft and balanceshaft drive gear.

(b) Remove the crankshaft timing sprocket No.2 and chain.

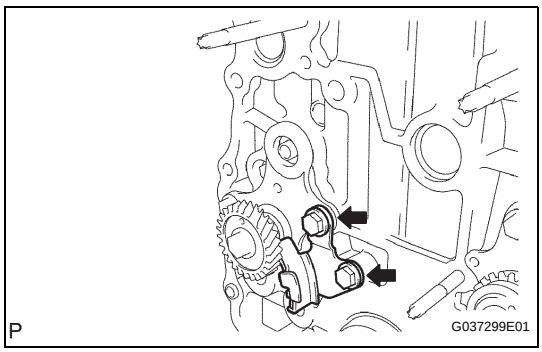

32. REMOVE NO. 4 CHAIN VIBRATION DAMPER

(a) Remove the 2 bolts and vibration damper No.4.

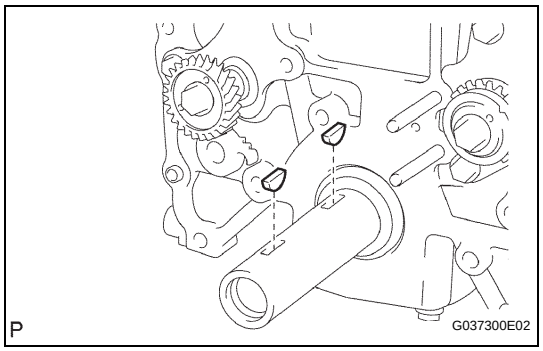

33. REMOVE CRANKSHAFT PULLEY SET CRANKSHAFT KEY

(a) Remove the 2 pulley set keys from the crankshaft.

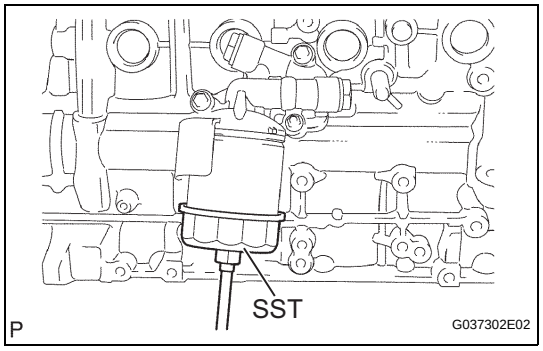

34. REMOVE OIL FILTER SUB-ASSEMBLY

(a) Using SST, remove the oil filter.
SST 09228-07501

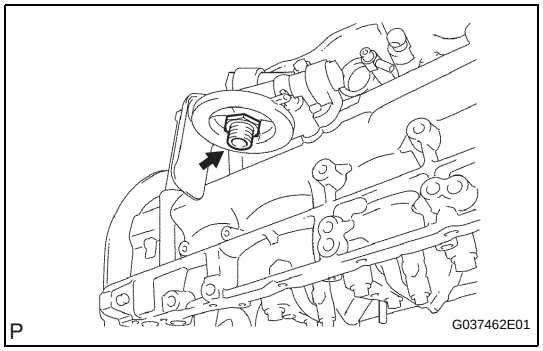

(b) Using a 27 mm socket wrench, remove the oil filter union.

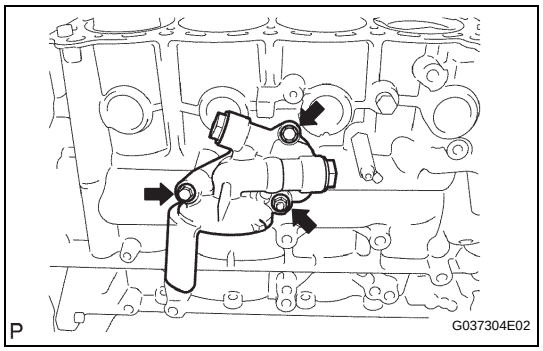

35. REMOVE OIL FILTER BRACKET SUB-ASSEMBLY

(a) Remove the 2 bolts and nut from the oil filter bracket.

(b) Remove the 2 screw plugs and 2 gaskets from the oil filter bracket.

EM

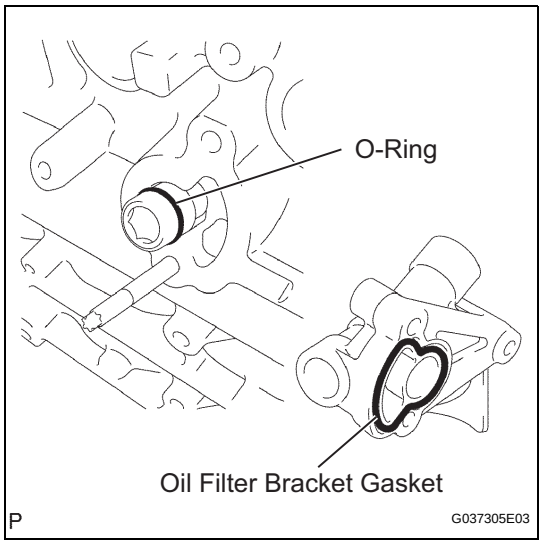

(c) Remove the oil filter bracket gasket and O-ring.

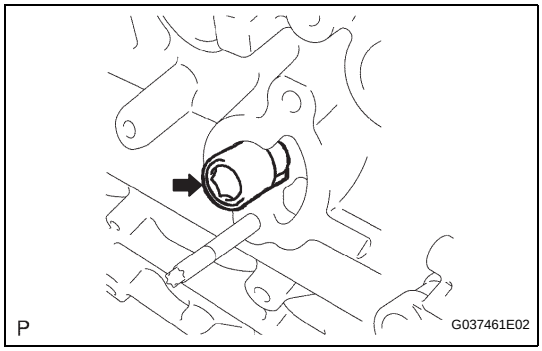

(d) Using a hexagon wrench, remove the oil filter bracket union.

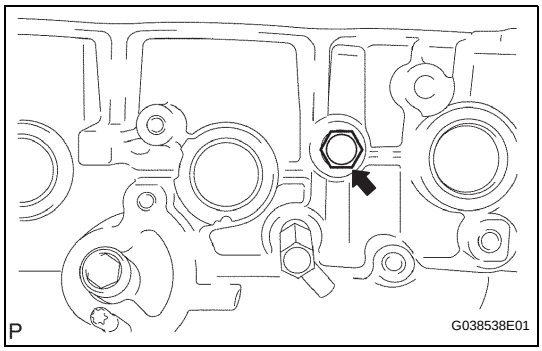

36. REMOVE NO. 1 WITH HEAD TAPER SCREW PLUG

(a) Remove the taper screw plug from the cylinder block.

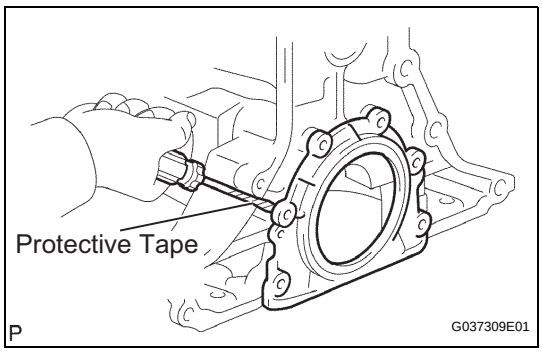

37. REMOVE ENGINE REAR OIL SEAL RETAINER

(a) Remove the 6 bolts.

(b) Using a screwdriver with its tip taped, pry out the oil seal retainer.
HINT:
Tape the screwdriver tip before use.

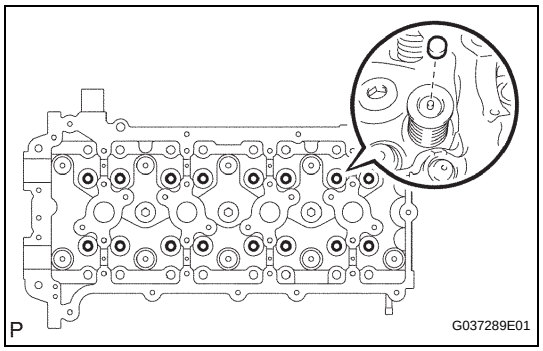

38. REMOVE VALVE STEM CAP

(a) Remove the valve stem caps from the cylinder head.
HINT:
Arrange the removed parts in the correct order.

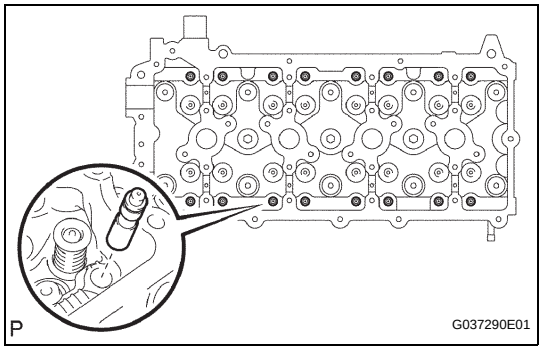

39. REMOVE VALVE LASH ADJUSTER ASSEMBLY

(a) Remove the valve lash adjusters from the cylinder head.
HINT:
Arrange the removed parts in the correct order.

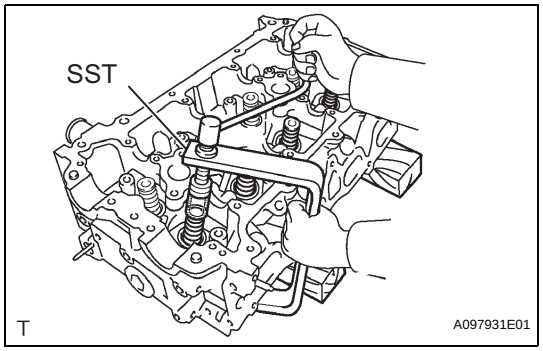

40. REMOVE INTAKE VALVE

(a) Using SST and wooden blocks, compress the compression spring and remove the valve retainer locks.
SST 09202-70020 (09202-00010)

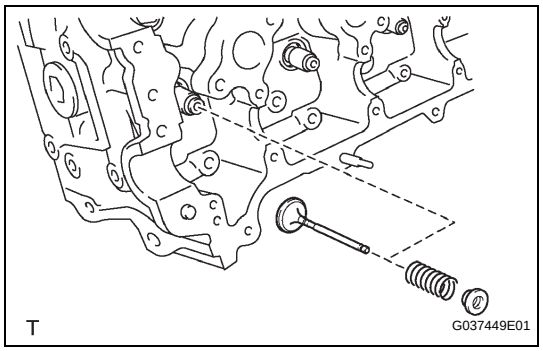

(b) Remove the retainer, compression spring, and valve.
HINT:
Arrange the removed parts in the correct order.

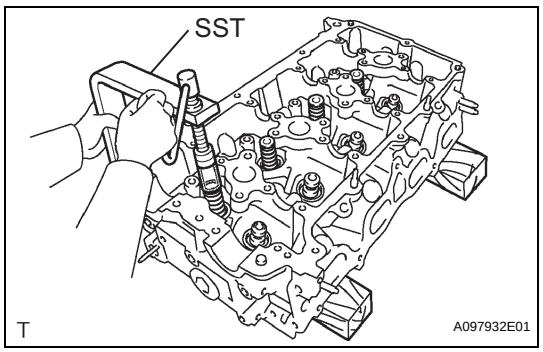

41. REMOVE EXHAUST VALVE

(a) Using SST and wooden blocks, compress the compression spring and remove the valve retainer locks.
SST 09202-70020 (09202-00010)

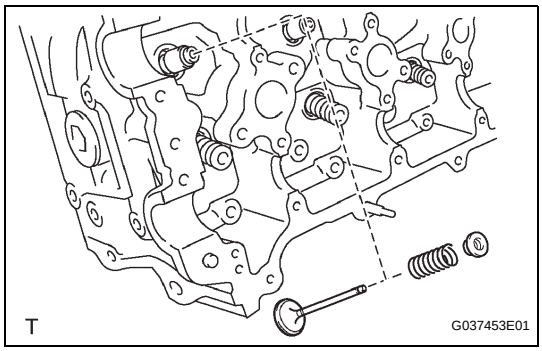

(b) Remove the retainer, compression spring, and valve.
HINT:
Arrange the removed parts in the correct order.

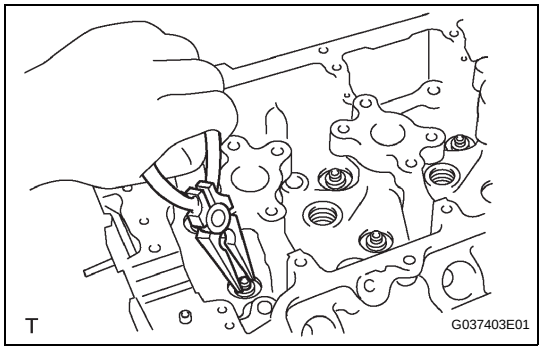

42. REMOVE VALVE STEM OIL SEAL

(a) Using needle-nose pliers, remove the oil seals.

43. REMOVE VALVE SPRING SEAT

(a) Remove the valve spring seats from the cylinder head.

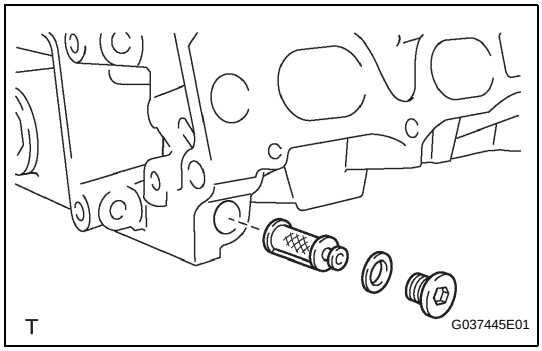

44. REMOVE OIL CONTROL VALVE FILTER

(a) Using an 8 mm hexagon wrench, remove the screw plug.

(b) Remove the oil control valve filter and gasket.

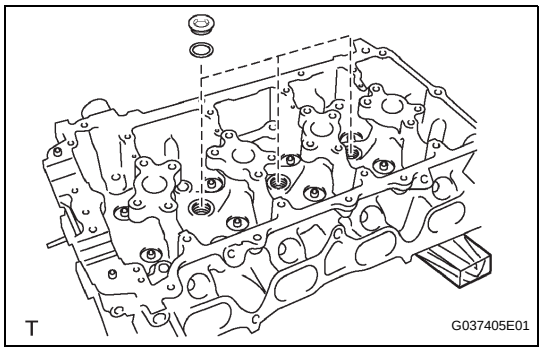

45. REMOVE NO. 1 WITH HEAD STRAIGHT SCREW PLUG

(a) Using a 10 mm hexagon wrench, remove the 3 screw plugs and 3 gaskets.
NOTICE:
If water leaks from the w/ head straight screw plug No.1 or the plug corrodes, replace it.

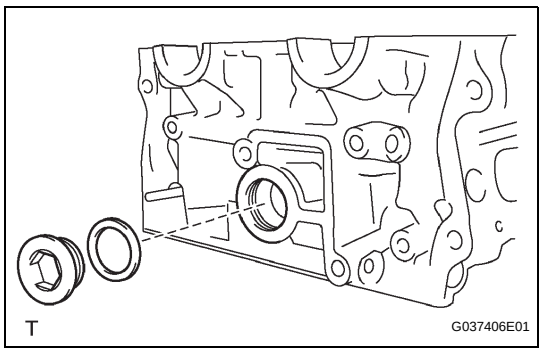

46. REMOVE NO. 2 WITH HEAD STRAIGHT SCREW PLUG

(a) Using a 19 mm hexagon wrench, remove the screw plug and gasket.
NOTICE:
If water leaks from the w/ head straight screw plug No.2 or the plug corrodes, replace it.

47. REMOVE CRANKSHAFT BEARING

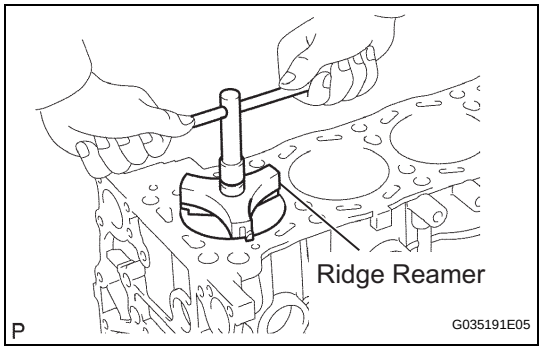

48. REMOVE PISTON SUB-ASSEMBLY WITH CONNECTING ROD

(a) Using a ridge reamer, remove all the carbon from the top of the cylinder.

(b) Push the piston, connecting rod assembly and upper bearing through the top of the cylinder block.
HINT:
- Keep the bearing, connecting rod and cap together.
- Arrange the piston and connecting rod assemblies in the correct order.

49. REMOVE CONNECTING ROD BEARING

HINT:
Arrange the removed parts in the correct order.

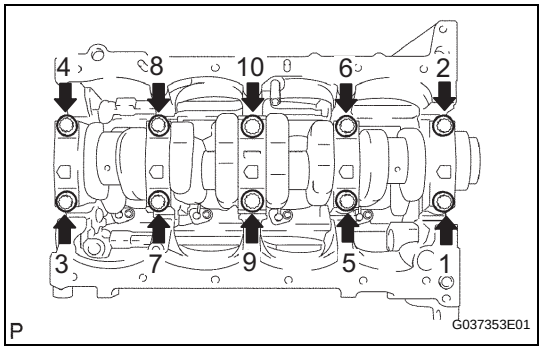

50. REMOVE CRANKSHAFT

(a) Uniformly loosen the 10 bearing cap bolts, in several steps, in the sequence shown in the illustration.
HINT:
- Keep the lower bearings and crankshaft bearing caps together.
- Arrange the thrust washers in the correct order.

(b) Lift out the crankshaft.

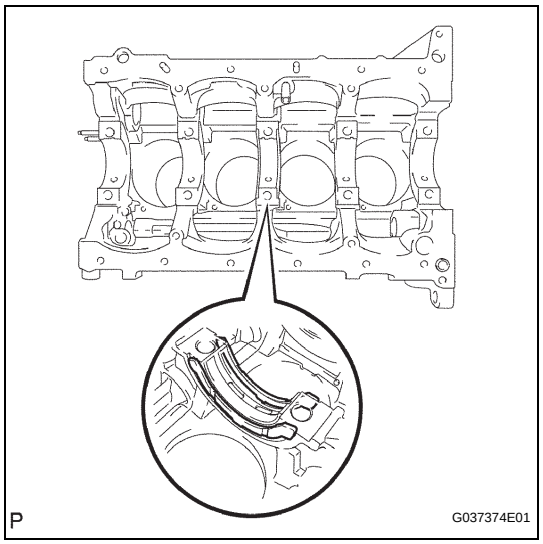

(c) Remove the upper bearings and upper thrust washers from the cylinder block.
HINT:
Arrange the main bearing caps, bearings and thrust washers in the correct order.

51. REMOVE CRANKSHAFT BEARING

HINT:
Arrange the removed parts in the correct order.

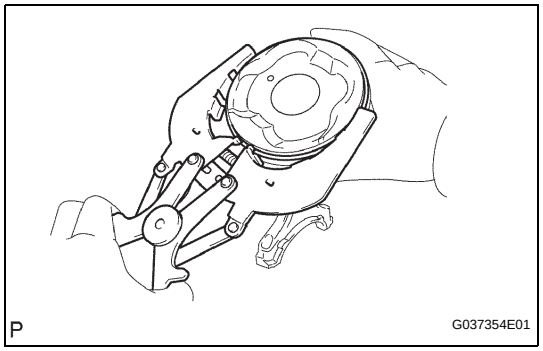

52. REMOVE PISTON RING SET

(a) Using a piston ring expander, remove the 2 compression rings.

(b) Using a piston ring expander, remove the oil ring rail.

(c) Remove the oil ring expander by hand.
HINT:
Arrange the piston rings in the correct order.

EM

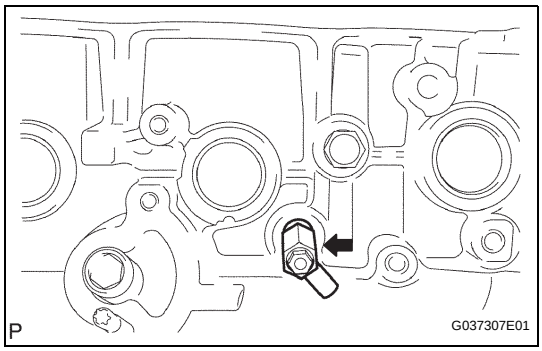

53. REMOVE CYLINDER BLOCK WATER DRAIN COCK SUB-ASSEMBLY

(a) Remove the water drain cock sub-assembly from the cylinder block.

(b) Remove the water drain cock plug from the water drain cock sub-assembly.

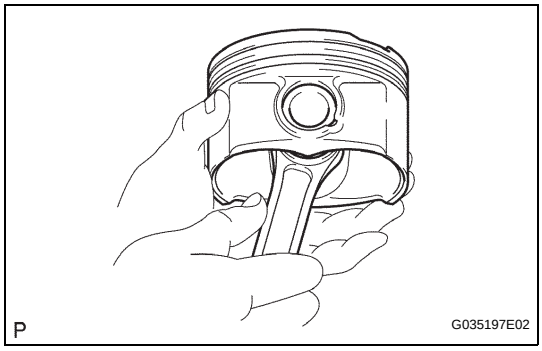

54. REMOVE WITH PIN PISTON SUB-ASSEMBLY

(a) Check the fitting condition between the piston and piston pin.

(1) Try to move the piston back and forth on the piston pin.
If any movement is felt, replace the piston and pin as a set.

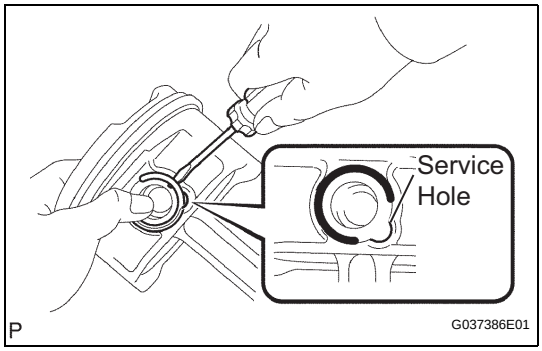

(b) Disconnect the connecting rod from the piston.

(1) Using a screwdriver, pry off the snap rings from the piston.

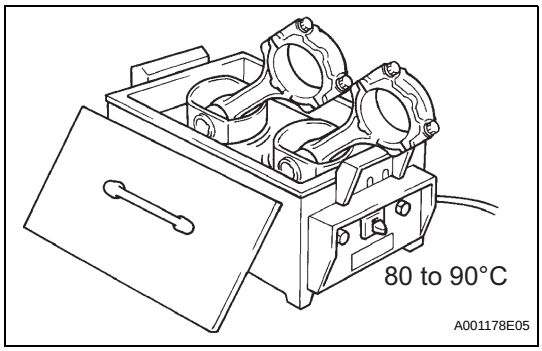

(2) Gradually heat the piston to approximately 80 to 90°C (176 to 194°F).

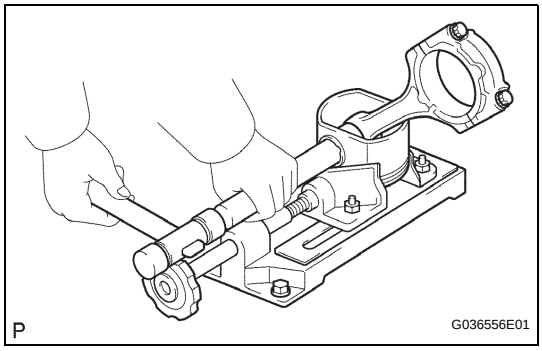

(3) Using a brass bar and plastic-faced hammer, lightly tap out the piston pin and remove the connecting rod.
HINT:
- The piston and pin are a matched set.
- Arrange the pistons, pins, rings, connecting rods and bearings in the correct order.

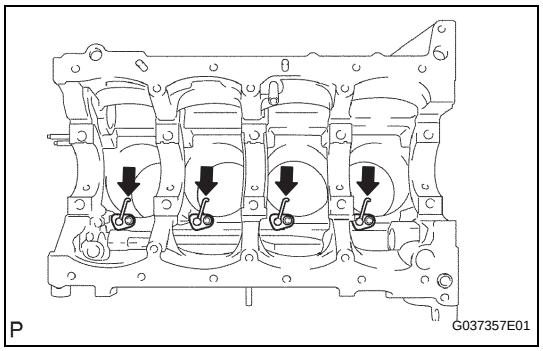

55. REMOVE NO. 1 OIL NOZZLE SUB-ASSEMBLY

(a) Using a 5 mm hexagon wrench, remove the oil nozzles.

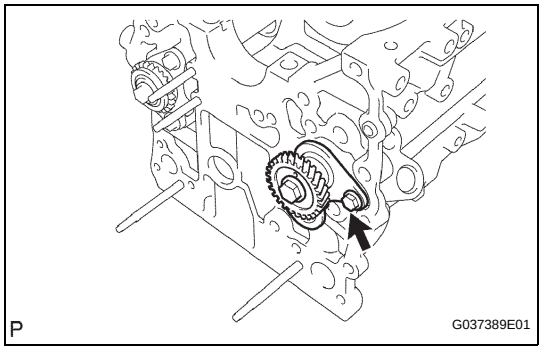

56. REMOVE NO.1 BALANCESHAFT

(a) Remove the bolt.

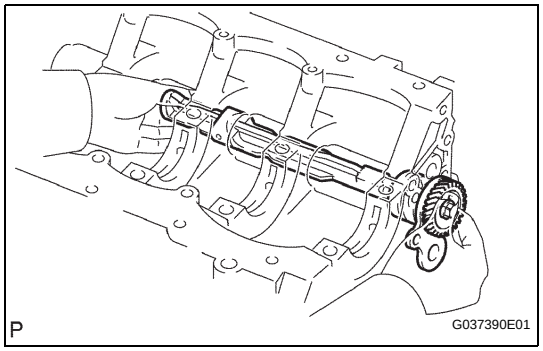

(b) Remove the balanceshaft from the cylinder block.
NOTICE:
When removing the balanceshaft, make sure to support the balanceshaft with both hands and avoid scratching the balanceshaft bearing on the cylinder block side.

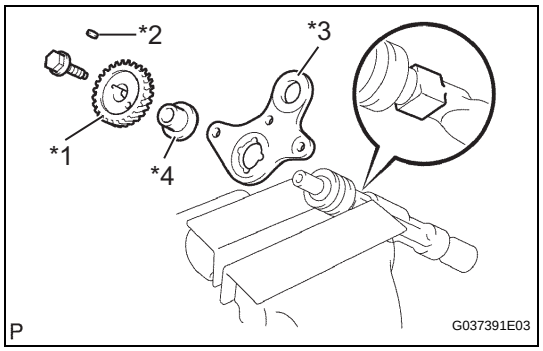

57. REMOVE NO. 1 BALANCESHAFT DRIVEN GEAR

(a) Mount the head portion of the balanceshaft in a vise.
NOTICE:
Be careful not to damage the balanceshaft.
(b) Remove the bolt.
(c) Remove the balanceshaft driven gear No.1 (*1), sliding key (*2), balanceshaft thrust washer No.1 (*3) and balanceshaft thrust spacer (*4).

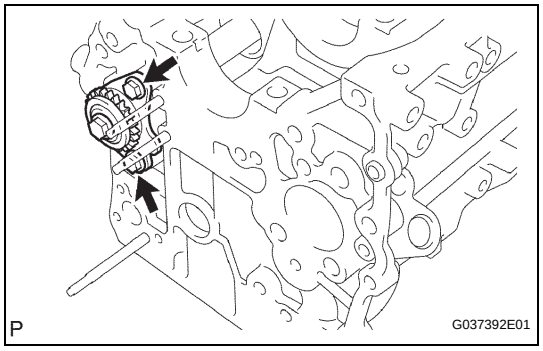

58. REMOVE NO.2 BALANCESHAFT

(a) Remove the 2 bolts.

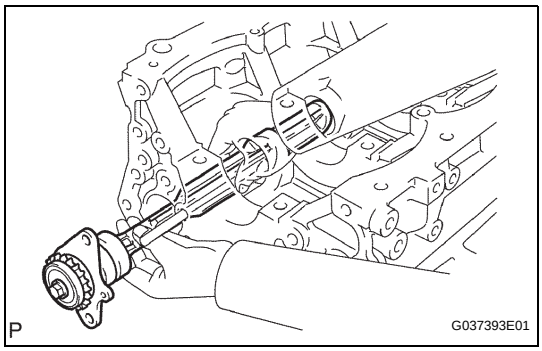

(b) Remove the balanceshaft from the cylinder block.
NOTICE:
When removing the balanceshaft, make sure to support the balanceshaft with both hands and avoid scratching the balanceshaft bearing on the cylinder block side.

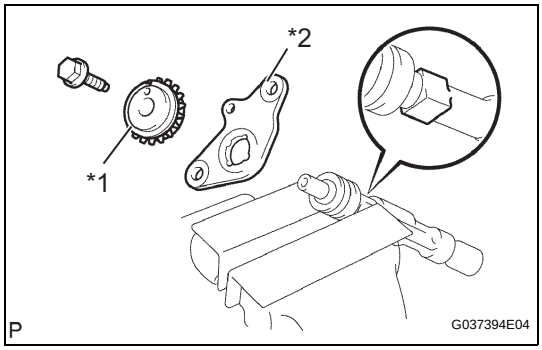

59. REMOVE NO. 2 BALANCESHAFT DRIVEN GEAR
(a) Mount the head portion of the balanceshaft in a vise.
NOTICE:
Be careful not to damage the balanceshaft.
(b) Remove the bolt.
(c) Remove the balanceshaft driven gear No.2 (*1) and balanceshaft thrust washer No.2 (*2).

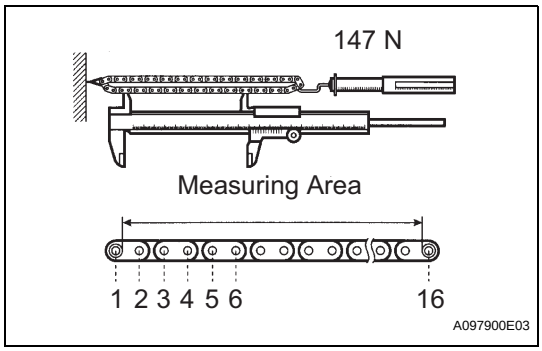

INSPECTION

1. INSPECT CHAIN SUB-ASSEMBLY
(a) Pull the chain with a force of 147 N (15 kgf, 33 lbf) as shown in the illustration.
(b) Using vernier calipers, measure the length of 16 links.
Maximum chain elongation:
147.5 mm (5.807 in.)
If the elongation is greater than the maximum, replace the chain.
NOTICE:
Perform the same measurement by pulling at random in 3 or more places to obtain an average.

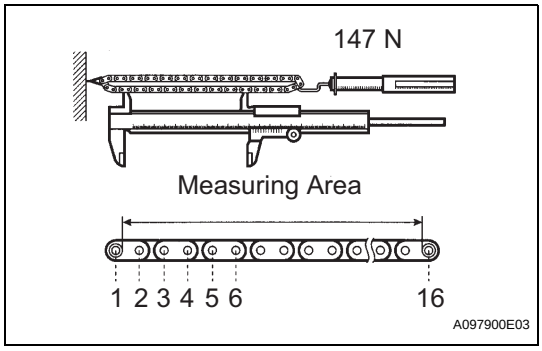

2. INSPECT NO.2 CHAIN SUB-ASSEMBLY
(a) Pull the chain with a force of 147 N (15 kgf, 33 lbf) as shown in the illustration.
(b) Using vernier calipers, measure the length of 16 links.
Maximum chain elongation:
123.6 mm (4.866 in.)
If the elongation is greater than the maximum, replace the chain.
NOTICE:
Perform the same measurement by pulling at random in 3 or more places to obtain an average.

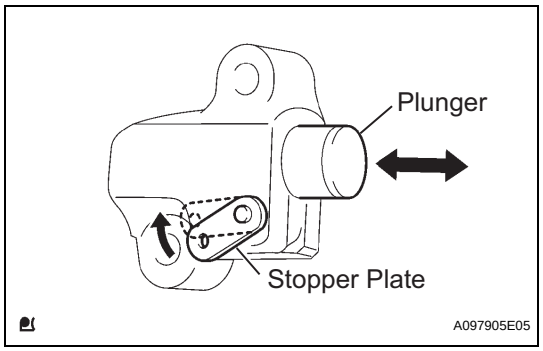

3. INSPECT NO. 1 CHAIN TENSIONER ASSEMBLY

(a) Move the stopper plate upward to release the lock. Push the plunger and check that it moves smoothly.

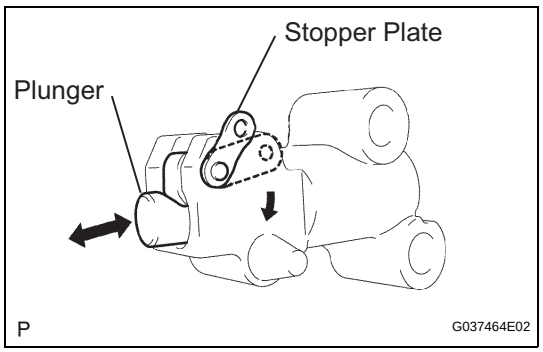

4. INSPECT NO. 2 CHAIN TENSIONER ASSEMBLY

(a) Move the stopper plate downward to release the lock. Push the plunger and check that it moves smoothly.

EM

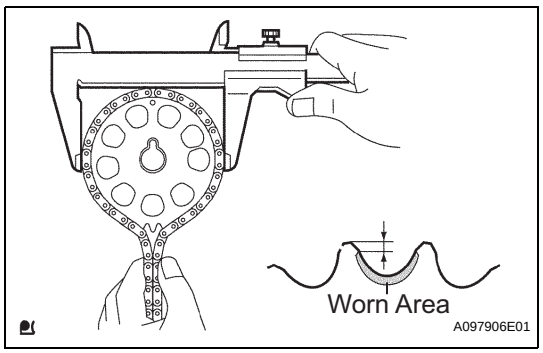

5. INSPECT CAMSHAFT TIMING GEAR OR SPROCKET

(a) Measure the distance between the most worn out sprocket tip and the beginning of the worn area below the tip.

Minimum distance:
1.0 mm (0.039 in.)

If the distance is less than the minimum, replace the sprocket.

HINT:

If the worn area is too small or difficult to distinguish from a normal area, perform steps (b) and (c) below.

(b) Wrap the chain around the sprocket.

(c) Using vernier calipers, measure the sprocket diameter with the chain.

Minimum sprocket diameter (with chain):
113.8 mm (4.480 in.)

HINT:

- The vernier calipers must contact the chain rollers for the measurement.
- If the diameter is less than the minimum, replace the chain and sprocket.

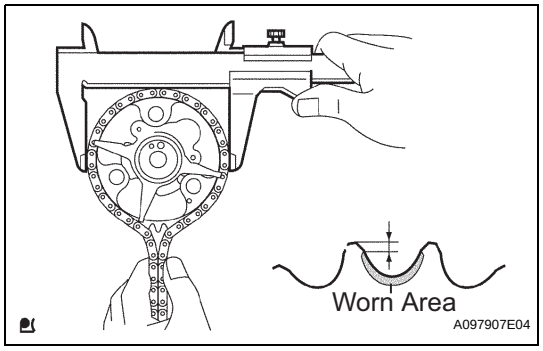

6. INSPECT CAMSHAFT TIMING GEAR ASSEMBLY

(a) Measure the distance between the most worn out timing gear tip and the beginning of the worn area below the tip.

Minimum distance:
1.0 mm (0.039 in.)

If the distance is less than the minimum, replace the timing gear.

HINT:

If the worn area is too small or difficult to distinguish from a normal area, perform steps (b) and (c) below.

(b) Wrap the chain around the timing gear.
(c) Using vernier calipers, measure the sprocket diameter with the chain.
Minimum sprocket diameter (with chain):
113.8 mm (4.480 in.)
HINT:
- The vernier calipers must contact the chain rollers for the measurement.
- If the diameter is less than the minimum, replace the chain and timing gear.

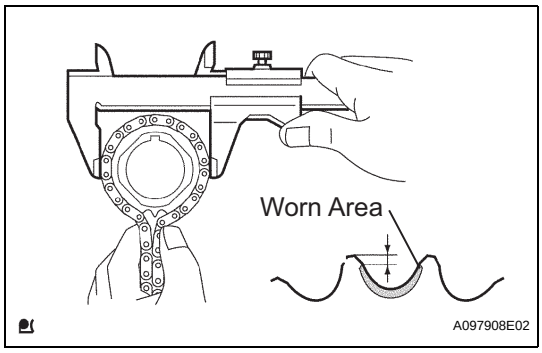

7. INSPECT CRANKSHAFT TIMING GEAR OR SPROCKET
(a) Measure the distance between the most worn out sprocket tip and the beginning of the worn area below the tip.
Minimum distance:
1.0 mm (0.039 in.)
If the distance is less than the minimum, replace the sprocket.
HINT:
If the worn area is too small or difficult to distinguish from a normal area, perform steps (b) and (c) below.
(b) Wrap the chain around the drive sprocket.
(c) Using vernier calipers, measure the sprocket diameter with the chain.
Minimum sprocket diameter (with chain):
59.4 mm (2.338 in.)
HINT:
- The vernier calipers must contact the chain rollers for the measurement.
- If the diameter is less than the minimum, replace the chain and sprocket.

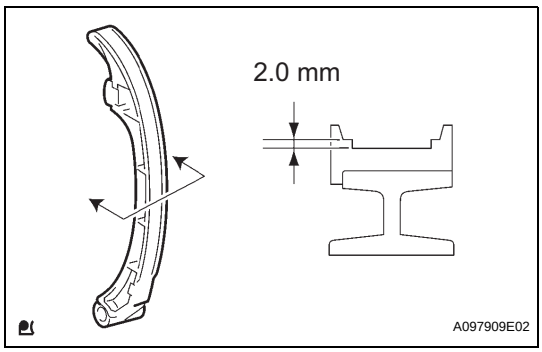

8. INSPECT CHAIN TENSIONER SLIPPER
(a) Using vernier calipers, measure the tensioner slipper wear.
Maximum wear:
2.0 mm (0.079 in.)
If the wear is greater than the maximum, replace the tensioner slipper.

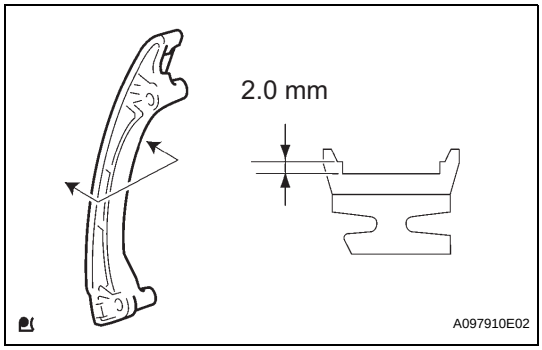

9. INSPECT NO. 1 CHAIN VIBRATION DAMPER
(a) Using vernier calipers, measure the vibration damper wear.
Maximum wear:
2.0 mm (0.079 in.)
If the wear is greater than the maximum, replace the vibration damper.

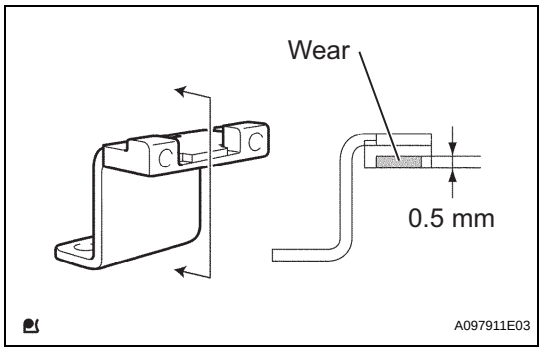

10. INSPECT TIMING CHAIN GUIDE

(a) Using vernier calipers, measure the chain guide wear.

Maximum wear:

0.5 mm (0.020 in.)

If the wear is greater than the maximum, replace the timing chain guide.

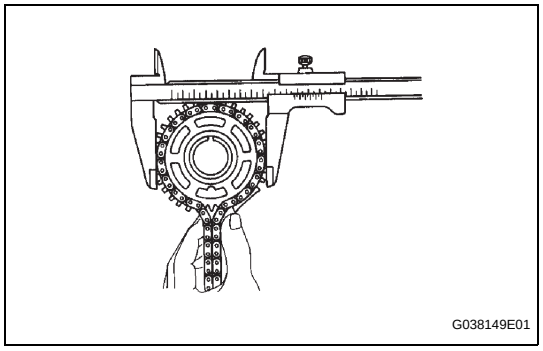

11. INSPECT NO. 2 CRANKSHAFT TIMING SPROCKET

(a) Wrap the chain around the sprocket.

(b) Using vernier calipers, measure the sprocket diameter with the chain.

Minimum sprocket diameter (with chain):

96.7 mm (3.807 in.)

HINT:

The vernier calipers must contact the chain rollers for the measurement.

If the diameter is less than the minimum, replace the chain and sprocket.

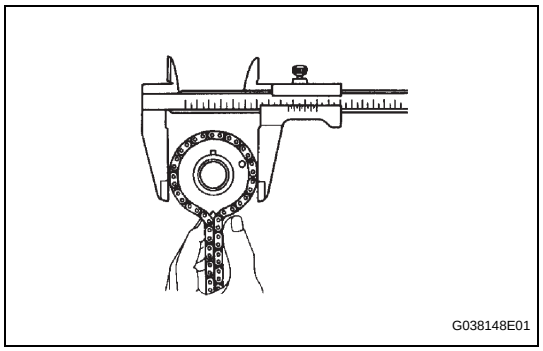

12. INSPECT BALANCESHAFT DRIVE GEAR SUB-ASSEMBLY

(a) Wrap the chain around the sprocket.

(b) Using vernier calipers, measure the sprocket diameter with the chain.

Minimum sprocket diameter (with chain):

75.9 mm (2.988 in.)

HINT:

The vernier calipers must contact the chain rollers for the measurement.

If the diameter is less than the minimum, replace the chain and sprocket.

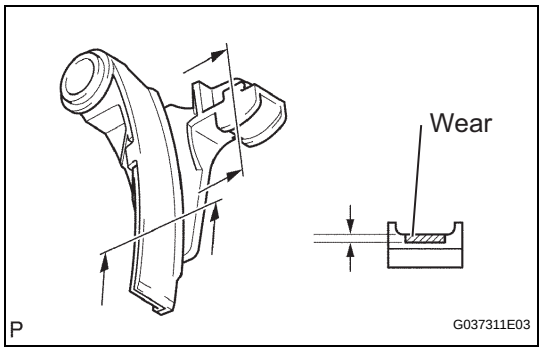

13. INSPECT NO. 2 CHAIN VIBRATION DAMPER

(a) Using vernier calipers, measure the vibration damper No.2 wear.

Maximum wear:

1.0 mm (0.039 in.)

If the wear is greater than the maximum, replace the vibration damper.

EM

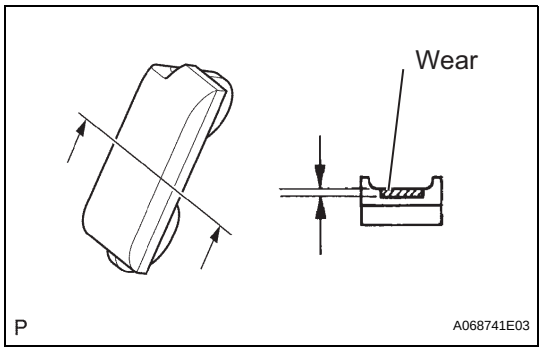

14. INSPECT NO. 3 CHAIN VIBRATION DAMPER

(a) Using vernier calipers, measure the vibration damper No.3 wear.

Maximum wear:

1.0 mm (0.039 in.)

If the wear is greater than the maximum, replace the vibration damper.

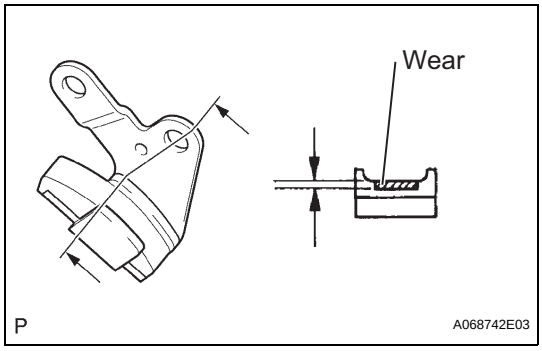

15. INSPECT NO. 4 CHAIN VIBRATION DAMPER

(a) Using vernier calipers, measure the vibration damper No.4 wear.

Maximum wear:

1.0 mm (0.039 in.)

If the wear is greater than the maximum, replace the vibration damper.

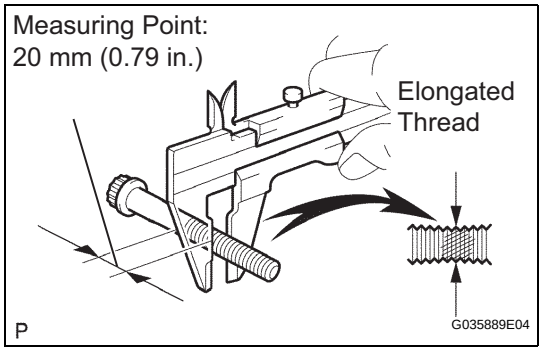

16. INSPECT CYLINDER HEAD SET BOLT

(a) Using vernier calipers, measure the minimum diameter of the elongated thread at the measuring point.

Standard outside diameter:

10.76 to 10.97 mm (0.4236 to 0.4319 in.)

Minimum outside diameter:

10.40 mm (0.4094 in.)

HINT:

- If a visual check reveals no excessively thin areas, check the center of the bolt (see illustration) and find the area that has the lowest diameter.
- If the diameter is less than the minimum, replace the cylinder head bolt.

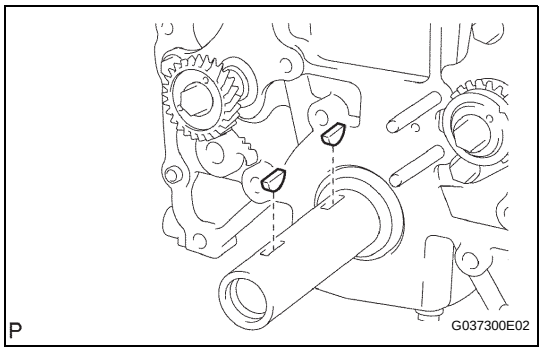

17. INSTALL CRANKSHAFT PULLEY SET CRANKSHAFT KEY

(a) Install the 2 pulley keys to the crankshaft.

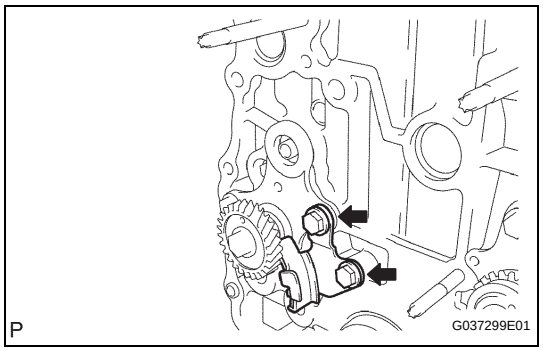

18. INSTALL NO. 4 CHAIN VIBRATION DAMPER

(a) Install the vibration damper No.4 with the 2 bolts.
Torque: 18 N*m (185 kgf*cm, 13 ft.*lbf)

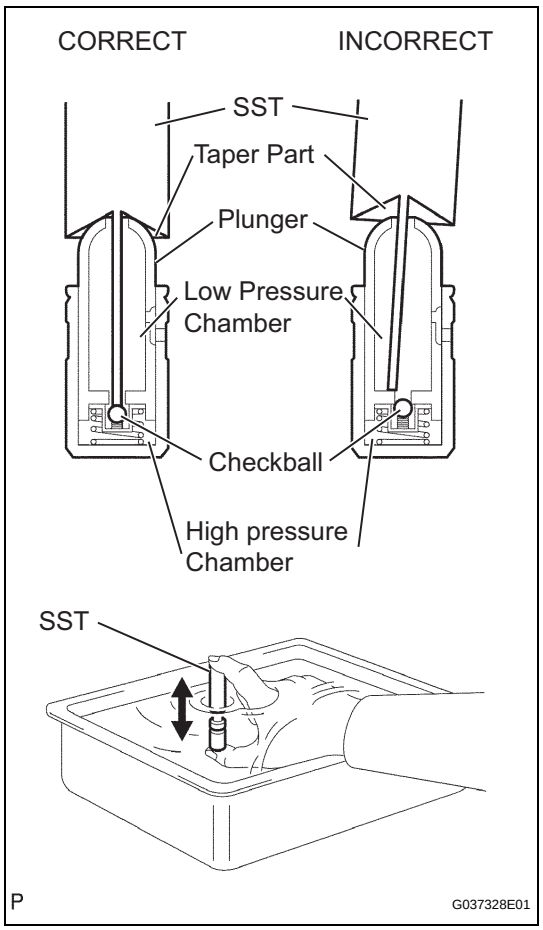

19. INSPECT VALVE LASH ADJUSTER ASSEMBLY
NOTICE:
- **Keep the lash adjuster free from dirt and foreign objects.**
- **Only use clean engine oil.**

(a) Place the lash adjuster into a container full of engine oil.

(b) Insert SST's tip into the lash adjuster's plunger and use the tip to press down on the checkball inside the plunger.
SST 09276-75010

(c) Squeeze the SST and lash adjuster together to move the plunger up and down 5 to 6 times.

(d) Check the movement of the plunger and bleed the air.
OK:
Plunger moves up and down.
NOTICE:
When bleeding high-pressure air from the compression chamber, make sure that the tip of the SST is actually pressing the checkball as shown in the illustration. If the checkball is not pressed, air will not bleed.

(e) After bleeding the air, remove the SST. Then quickly and firmly press the plunger with a finger.
OK:
Plunger is very difficult to move.
If the result is not as specified, replace the lash adjuster.

EM

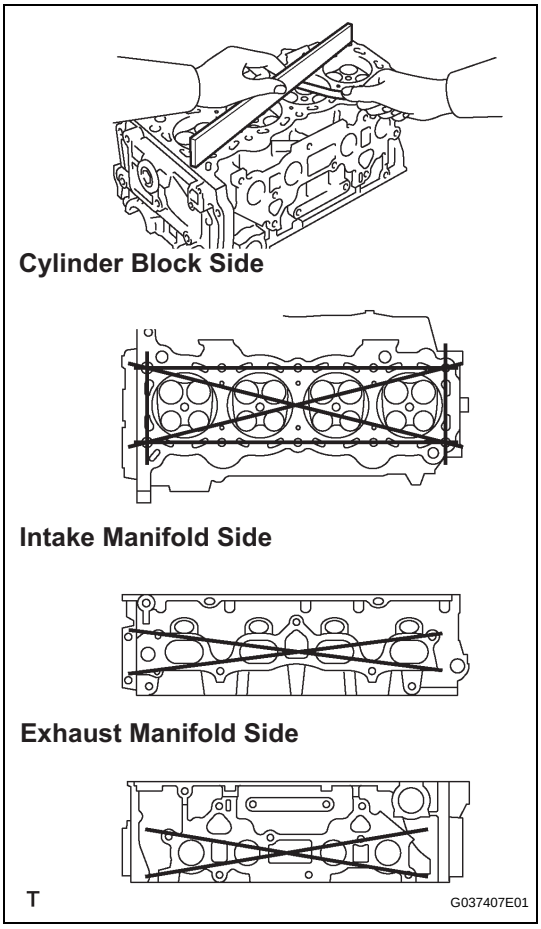

20. INSPECT CYLINDER HEAD FOR FLATNESS

(a) Using a precision straight edge and feeler gauge, measure the warpage of the contact surface of contacting the cylinder block and manifolds.

Maximum warpage:

0.05 mm (0.0020 in.)

If the warpage is greater than the maximum, replace the cylinder head.

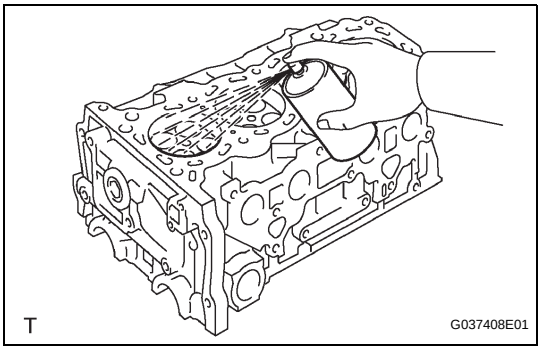

21. INSPECT CYLINDER HEAD FOR CRACKS

(a) Using a dye penetrate, check the intake ports, exhaust ports and cylinder surface for cracks.

If cracked, replace the cylinder head.

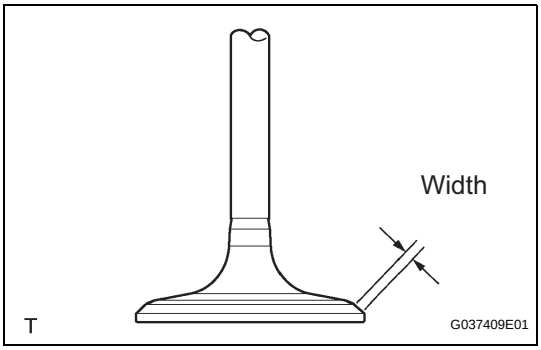

22. INSPECT INTAKE VALVE SEAT

(a) Apply a light coat of prussian blue (or white lead) to the valve face.

(b) Lightly press the valve face against the valve seat.

(c) Check the valve face and valve seat by using the following procedure.

(1) If prussian blue appears around the entire valve face, the valve face is concentric. If not, replace the valve.

(2) If prussian blue appears around the entire valve seat, the guide and valve face are concentric. If not, resurface the valve seat.

(3) Check that the valve seat contacts in the middle of the valve face with the width between 1.0 and 1.4 mm (0.039 and 0.055 in.).

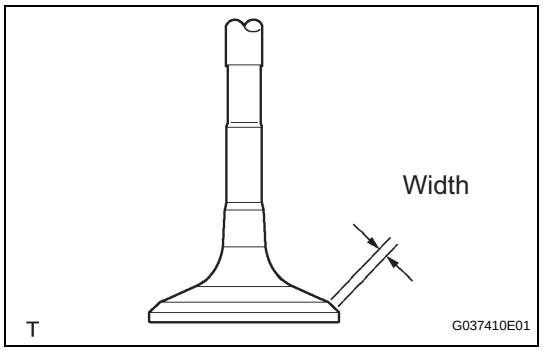

23. INSPECT EXHAUST VALVE SEAT

(a) Apply a light coat of prussian blue (or white lead) to the valve face.
(b) Lightly press the valve face against the valve seat.
(c) Check the valve face and valve seat by using to the following procedure.
  (1) If prussian blue appears around the entire valve face, the valve face is concentric. If not, replace the valve.
  (2) If prussian blue appears around the entire valve seat, the guide and valve face are concentric. If not, resurface the valve seat.
  (3) Check that the valve seat contacts in the middle of the valve face with the width between 1.0 and 1.4 mm (0.039 and 0.055 in.).

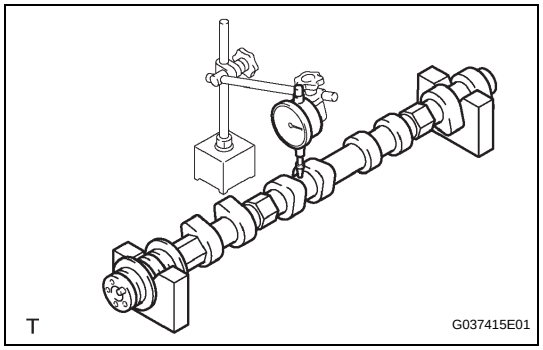

24. INSPECT CAMSHAFT

(a) Check the camshaft for runout.
  (1) Place the camshaft on V-blocks.
  (2) Using a dial indicator, measure the circle runout at the center journal.
  Maximum circle runout:
  0.03 mm (0.0012 in.)
  If the circle runout is greater than the maximum, replace the camshaft.

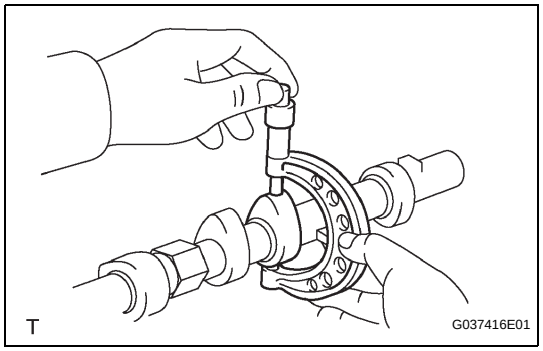

(b) Using a micrometer, measure the cam lobe height.
Standard cam lobe height:
42.855 to 42.955 mm (1.6872 to1.6911 in.)
Minimum cam lobe height:
42.855 mm (1.6872 in.)
If the cam lobe height is less than the minimum, replace the camshaft.

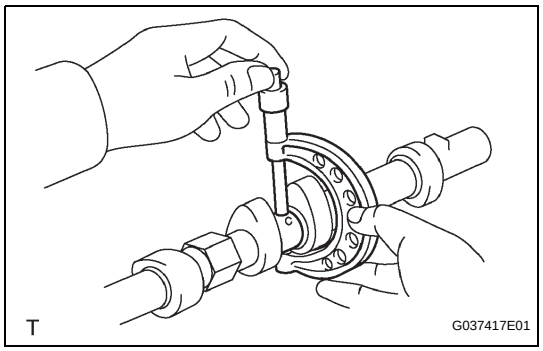

(c) Using a micrometer, measure the journal diameter.
Standard journal diameter

No.1 journal	**35.949 to 35.965 mm (1.4153 to 1.4159 in.)**
Other journal	**26.959 to 26.975 mm (1.0614 to 1.0620 in.)**

If the journal diameter is not as specified, check the oil clearance.

EM

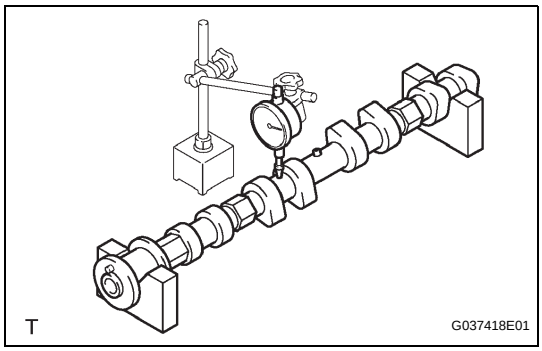

25. INSPECT NO.2 CAMSHAFT

(a) Check the camshaft for runout.
(1) Place the camshaft on V-blocks.
(2) Using a dial indicator, measure the circle runout at the center journal.
Maximum circle runout:
0.03 mm (0.0012 in.)
If the circle runout is greater than the maximum, replace the camshaft.

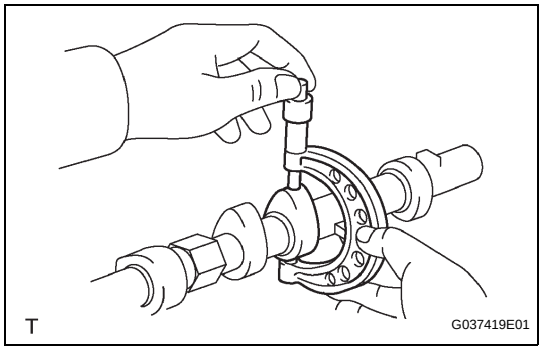

(b) Using a micrometer, measure the cam lobe height.
Standard cam lobe height:
42.854 to 42.954 mm (1.687 to 1.6911 in.)
Minimum cam lobe height:
42.854 mm (1.6872 in.)
If the cam lobe height is less than the minimum, replace the camshaft.

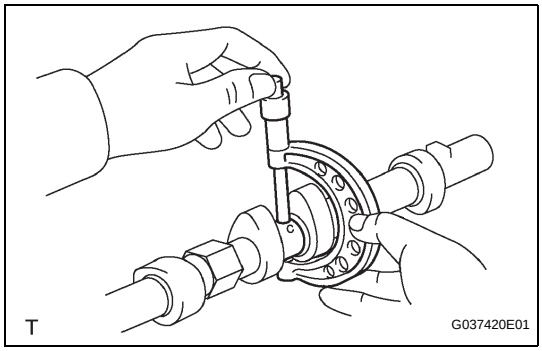

(c) Using a micrometer, measure the journal diameter.
Standard journal diameter

No.1 journal	**35.949 to 35.965 mm (1.4153 to 1.4159 in.)**
Other journal	**26.959 to 26.975 mm (1.0614 to 1.0620 in.)**

If the journal diameter is not as specified, check the oil clearance.

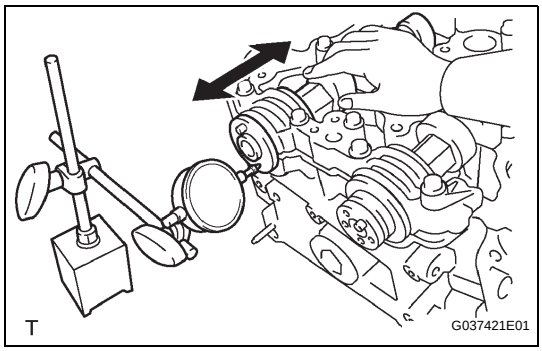

26. INSPECT CAMSHAFT THRUST CLEARANCE

(a) Install the camshafts.
(b) Using a dial indicator, measure the thrust clearance while moving the camshaft back and forth.
Standard thrust clearance:
0.10 to 0.24 mm (0.004 to 0.009 in.)
Maximum thrust clearance:
0.26 mm (0.010 in.)
If the thrust clearance is greater than the maximum, replace the cylinder head. If the thrust surface is damaged, replace the camshaft.

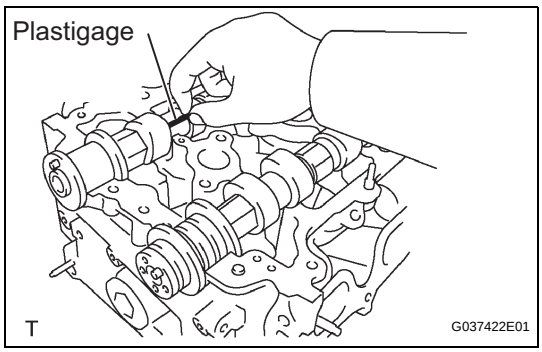

27. INSPECT CAMSHAFT OIL CLEARANCE

(a) Clean the bearing caps and camshaft journals.
(b) Place the camshafts on the cylinder head.
(c) Lay a strip of Plastigage across each of the camshaft journals.
(d) Install the bearing caps.
Torque: 16 N*m (160 kgf*cm, 11 ft.*lbf)
NOTICE:
Do not turn the camshaft.
(e) Remove the bearing caps.

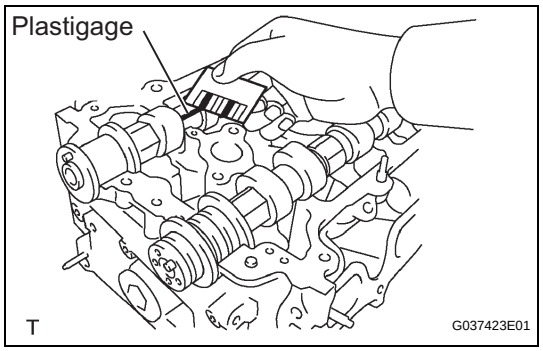

(f) Measure the Plastigage at its widest point.
Standard oil clearance

No.1 journal	**0.035 to 0.072 mm (0.0014 to 0.0029 in.)**
Other journal	**0.025 to 0.062 mm (0.00098 to 0.0024 in.)**

Maximum oil clearance:
0.08 mm (0.003 in.)
If the oil clearance is greater than the maximum, replace the camshaft. If necessary, replace the cylinder head.

(g) Completely remove the Plastigage.

28. INSPECT INNER COMPRESSION SPRING

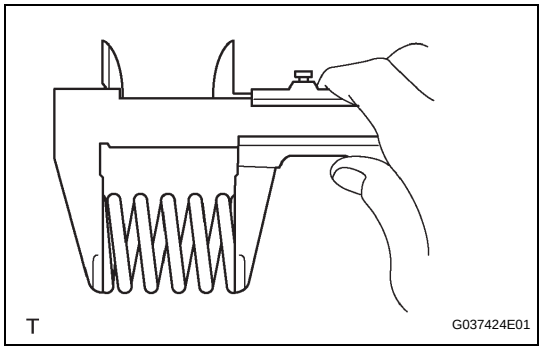

(a) Using vernier calipers, measure the free length of the inner compression spring.
Free length:
48.53 mm (1.9106 in.)
If the free length is not as specified, replace the spring.

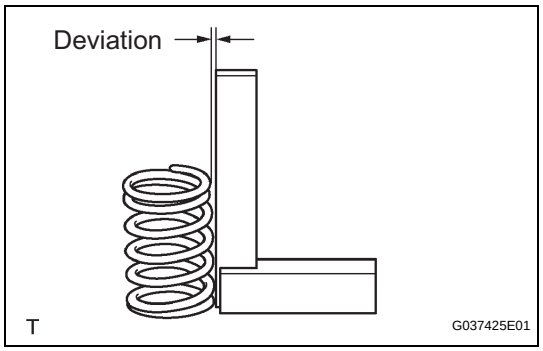

(b) Using a steel square, measure the deviation of the inner compression spring.
Maximum deviation:
1.5 mm (0.059 in.)
Maximum angle (reference):
2°
If the deviation is greater than the maximum, replace the spring.

29. INSPECT INTAKE VALVE

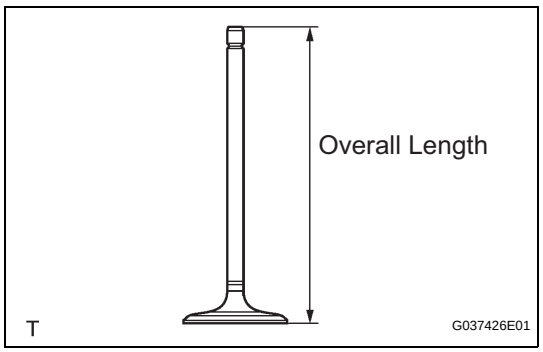

(a) Using vernier calipers, measure the valve's overall length.
Standard overall length:
106.26 mm (4.1835 in.)
Minimum overall length:
105.96 mm (4.1716 in.)
If the overall length is less than the minimum, replace the valve.

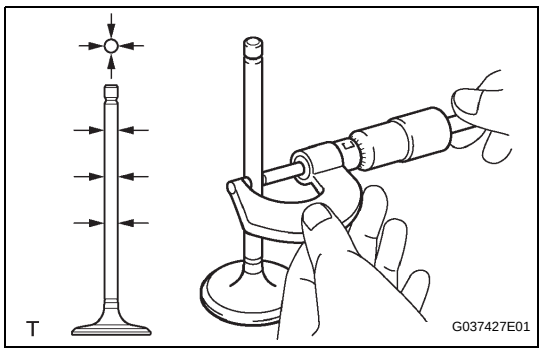

(b) Using a micrometer, measure the diameter of the valve stem.
Valve stem diameter:
5.470 to 5.485 mm (0.2154 to 0.2159 in.)

EM

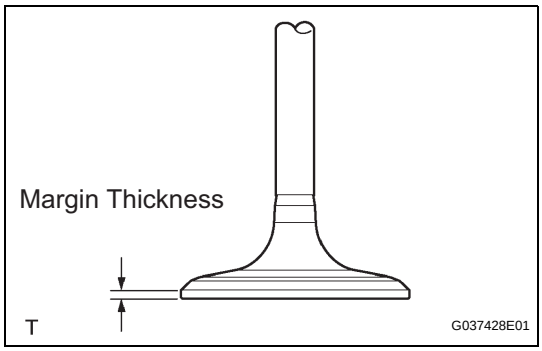

(c) Using vernier calipers, measure the valve head margin thickness.
Standard margin thickness:
1.05 to 1.45 mm (0.0413 to 0.0571 in.)
Minimum margin thickness:
0.50 mm (0.0197 in.)
Thickness If the margin thickness is less than the minimum, replace the valve.

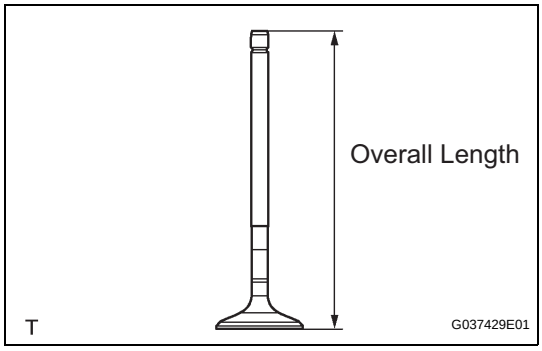

30. INSPECT EXHAUST VALVE

(a) Using vernier calipers, measure the valve's overall length.
Standard overall length:
106.74 mm (4.2024 in.)
Minimum overall length:
106.44 mm (4.1905 in.)
If the overall length is less than the minimum, replace the valve.

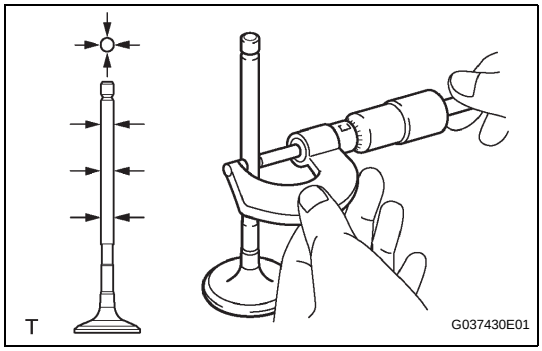

(b) Using a micrometer, measure the diameter of the valve stem.
Valve stem diameter:
5.465 to 5.480 mm (0.2151 to 0.2157 in.)

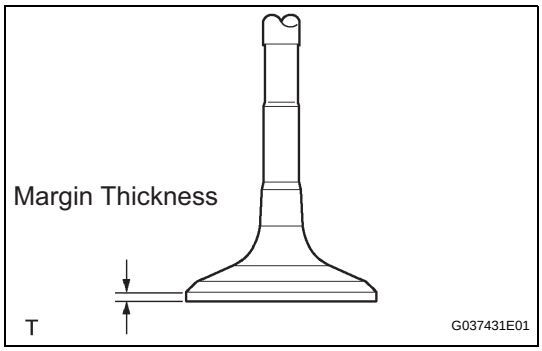

(c) Using vernier calipers, measure the valve head margin thickness.
Standard margin thickness:
1.2 to 1.6 mm (0.0472 to 0.0630 in.)
Minimum margin thickness:
0.50 mm (0.0197 in.)
If the margin thickness is less than the minimum, replace the valve.

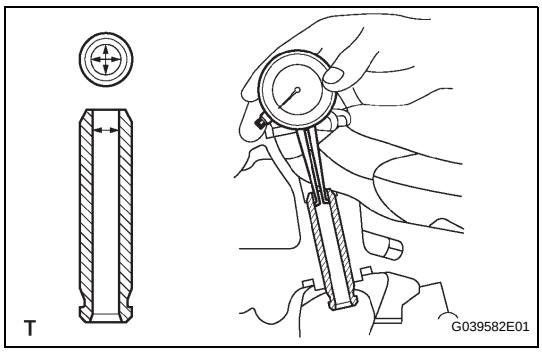

31. INSPECT VALVE GUIDE BUSHING

(a) Using a caliper gauge, measure the inside diameter of the guide bush.
Bush inside diameter:
5.510 to 5.530 mm (0.2169 to 0.2177 in.)

(b) Subtract the valve stem diameter measurement from the guide bush inside diameter measurement.
Standard oil clearance:
0.025 to 0.060 mm (0.0010 to 0.0024 in.) (Intake)
0.030 to 0.065 mm (0.0012 to 0.0026 in.) (Exhaust)

EM

Maximum oil clearance:
0.08 mm (0.0032 in.) (Intake)
0.10 mm (0.0039 in.) (Exhaust)

HINT:

- If the clearance is greater than the maximum, replace the intake valve and intake guide bush.
- If the clearance is greater than the maximum, replace the exhaust valve and exhaust guide bush.

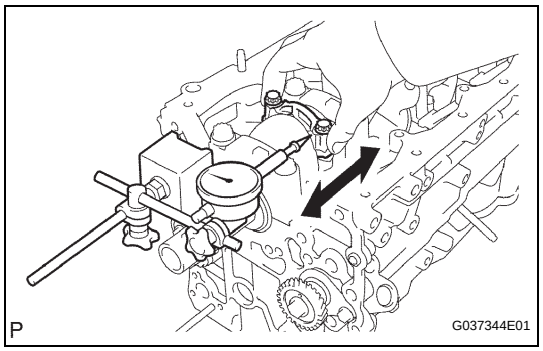

32. INSPECT CONNECTING ROD THRUST CLEARANCE

(a) Using a dial indicator, measure the thrust clearance while moving the connecting rod back and forth.
Standard thrust clearance:
0.150 to 0.350 mm (0.0059 to 0.0138 in.)
Maximum thrust clearance:
0.40 mm (0.016 in.)
If the thrust clearance is greater than the maximum, replace the connecting rod assembly(s). If necessary, replace the crankshaft.

EM

33. INSPECT CONNECTING ROD OIL CLEARANCE

(a) Check that the matchmarks on the connecting rod and cap are aligned to ensure the correct reassembly.
HINT:
The matchmarks on the connecting rods and caps are for ensuring the correct reassembly.

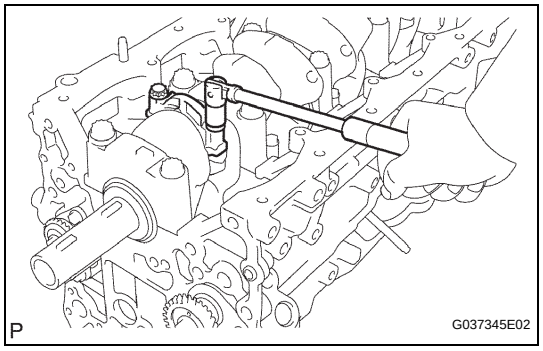

(b) Remove the 2 connecting rod cap bolts.
(c) Using the 2 removed connecting rod cap bolts, remove the connecting rod cap and lower bearing by wiggling the connecting rod cap right and left.
HINT:
Keep the lower bearing inserted to the connecting rod cap.
(d) Clean the crank pin and bearing.
(e) Check the crank pin and bearing for pitting and scratches.

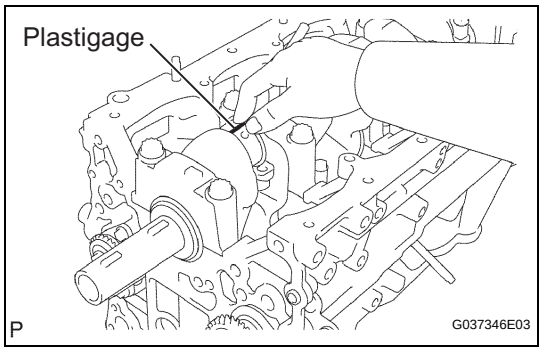

(f) Lay a strip of Plastigage on the crank pin.

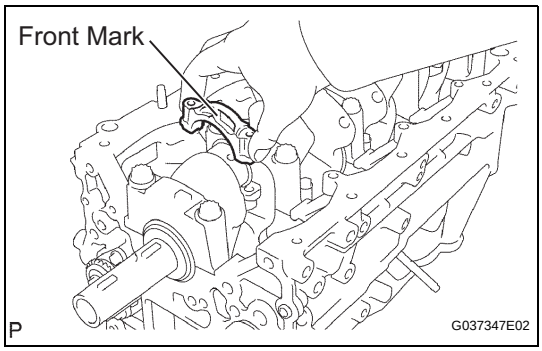

(g) Check that the front mark of the connecting rod cap is facing forward.

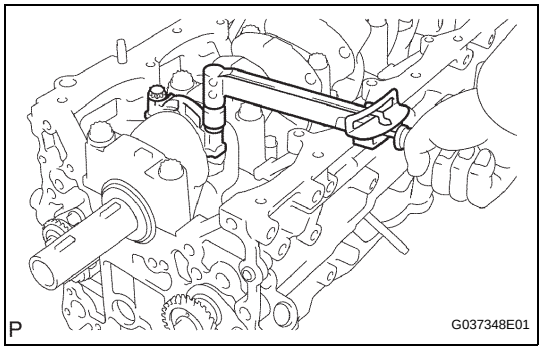

(h) Install the connecting rod cap.
NOTICE:
Do not turn the crankshaft.

(i) Remove the 2 bolts and connecting rod cap (see steps (b) and (c) above).

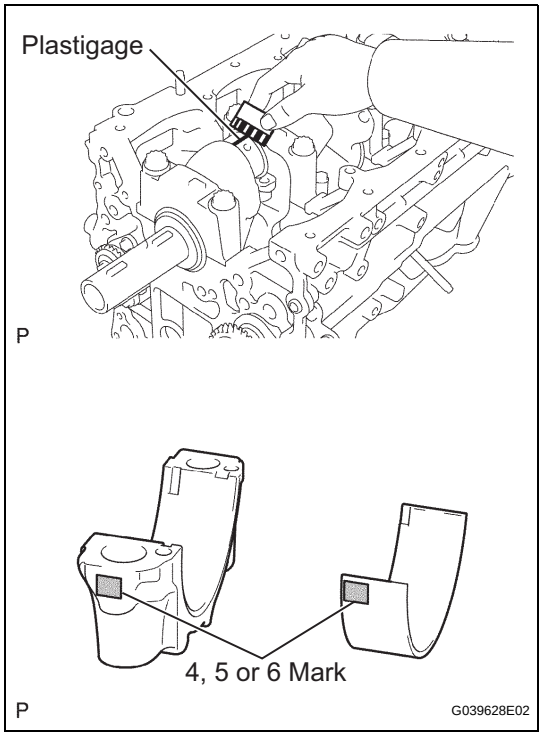

(j) Measure the Plastigage at its widest point.
Standard oil clearance:
0.024 to 0.049 mm (0.0009 to 0.0019 in.)
Maximum oil clearance:
0.066 mm (0.0026 in.)
If the oil clearance is greater than the maximum, replace the connecting rod bearings. If necessary, replace the crankshaft.
HINT:
If replacing a bearing, replace it with one that has the same number as its respective connecting rod cap. Each bearing's standard thickness is indicated by a 1, 2 and 3 mark on its surface.
Reference
Crankshaft pin diameter

Mark	Thickness
4	52.989 to 53.002 mm (2.0862 to 2.0867 in.)
5	52.989 to 53.002 mm (2.0862 to 2.0867 in.)
6	52.989 to 53.002 mm (2.0862 to 2.0867 in.)

Standard bearing center wall thickness

Mark	Thickness
4	1.484 to 1.487 mm (0.0584 to 0.0585 in.)
5	1.488 to 1.490 mm (0.0586 to 0.0587 in.)
6	1.491 to 1.493 mm (0.0587 to 0.0588 in.)

(k) Completely remove the Plastigage.

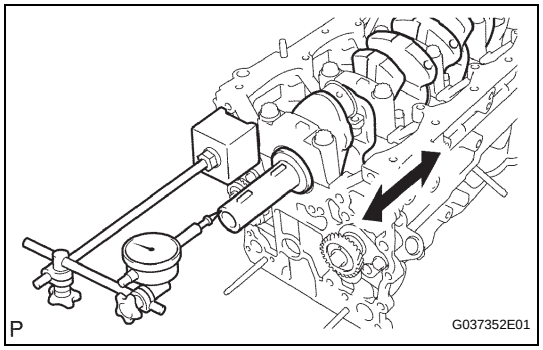

34. INSPECT CRANKSHAFT THRUST CLEARANCE

(a) Using a dial indicator, measure the thrust clearance while prying the crankshaft back and forth with a screwdriver.

Standard thrust clearance:
0.020 to 0.220 mm (0.0008 to 0.0087 in.)
Maximum thrust clearance:
0.30 mm (0.0118 in.)

If the thrust clearance is greater than the maximum, replace the thrust washers as a set. If necessary, replace the crankshaft.

Thrust washer thickness:
2.440 to 2.490 mm (0.0961 to 0.0980 in.)

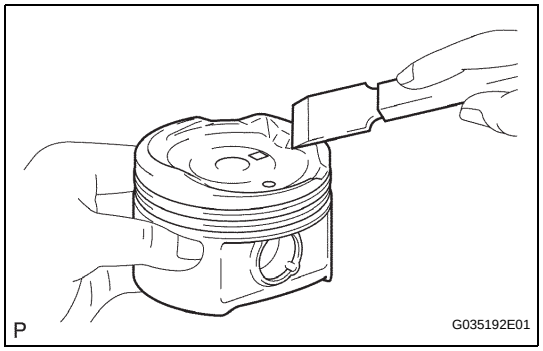

35. CLEAN WITH PIN PISTON SUB-ASSEMBLY

(a) Using a gasket scraper, remove the carbon from the piston top.

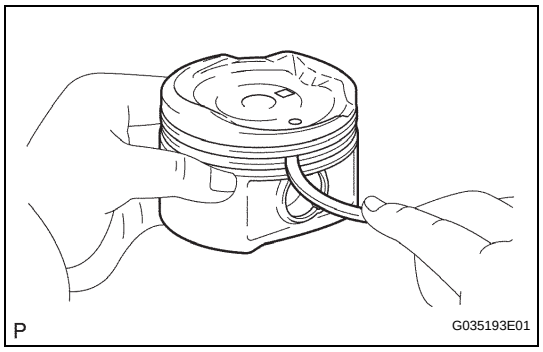

(b) Using a groove cleaning tool or broken ring, clean the piston ring grooves.

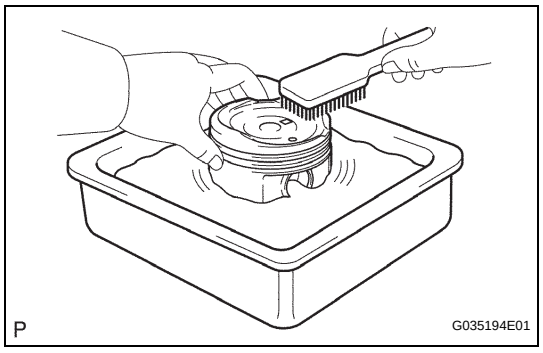

(c) Using solvent and a brush, thoroughly clean the piston.

NOTICE:
Do not use a wire brush.

36. INSPECT NO. 1 OIL NOZZLE SUB-ASSEMBLY

(a) Check the oil nozzles for damage or clogging. If necessary, replace the oil nozzle.

EM

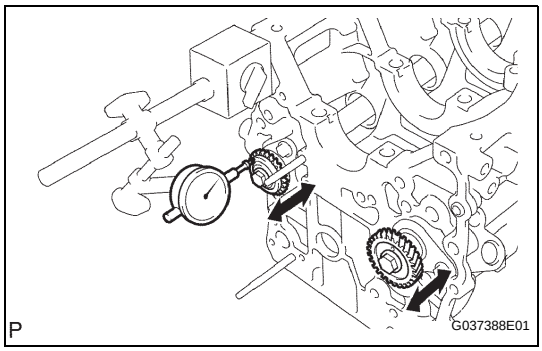

37. INSPECT BALANCE SHAFT THRUST CLEARANCE

(a) Using a dial indicator, measure the thrust clearance while moving the balanceshaft back and forth.

Standard thrust clearance:
0.07 to 0.13 mm (0.0027 to 0.0051 in.)
Maximum thrust clearance:
0.20 mm (0.0079 in.)

If the thrust clearance is greater than the maximum, replace the balanceshaft thrust washer. If necessary, replace the balanceshaft.

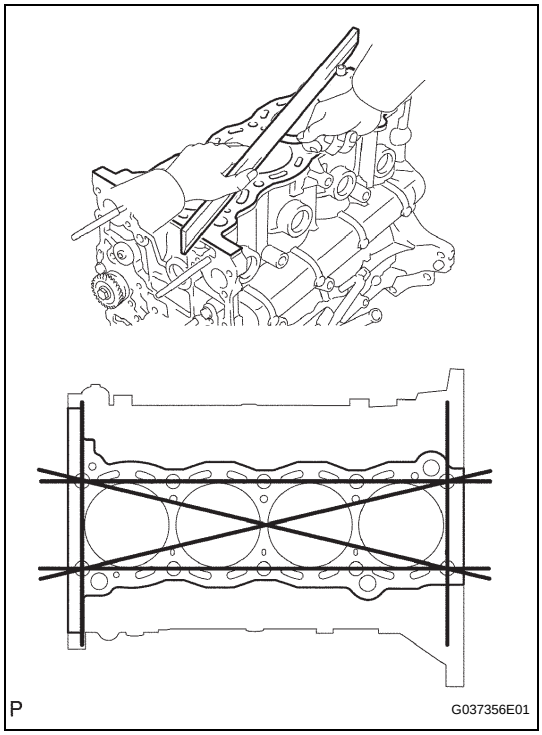

38. INSPECT CYLINDER BLOCK FOR FLATNESS

(a) Using a precision straight edge and feeler gauge, measure the warpage of the contact surface of the cylinder head gasket.

Maximum warpage:
0.05 mm (0.0020 in.)

If the warpage is greater than the maximum, replace the cylinder block.

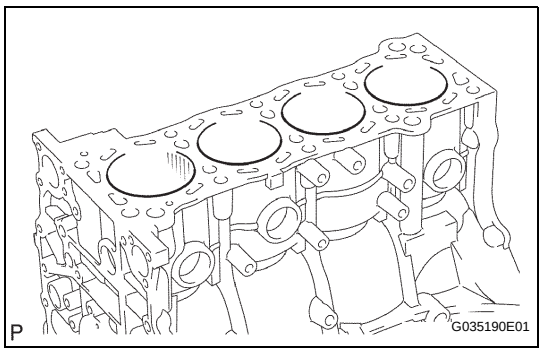

(b) Visually check the cylinder for vertical scratches. If deep scratches are present, rebore all the 4 cylinders. If necessary, replace the cylinder block.

EM

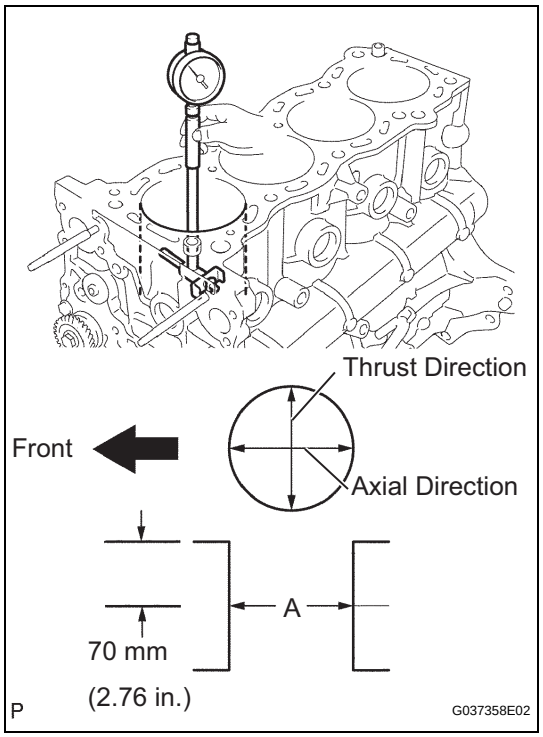

39. INSPECT CYLINDER BORE

(a) Using a cylinder gauge, measure the cylinder bore diameter at positions A in the thrust and axial directions.

Standard diameter:

94.990 to 95.003 mm (3.7398 to 3.7403 in.)

Maximum difference diameter:

0.2 mm (0.008 in.)

If the diameter is greater than the maximum, rebore all the 4 cylinders. If necessary, replace the cylinder block.

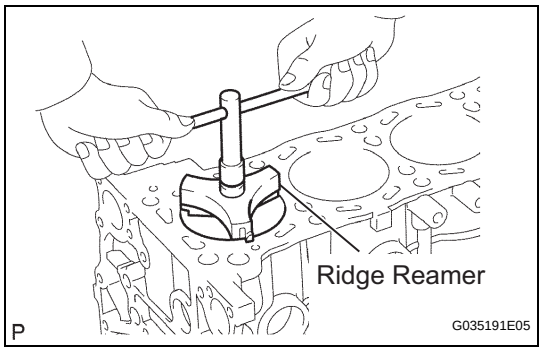

(b) Inspect the cylinder ridge.

If the wear is less than 0.2 mm (0.008 in.), using a ridge reamer, grind the top of the cylinder.

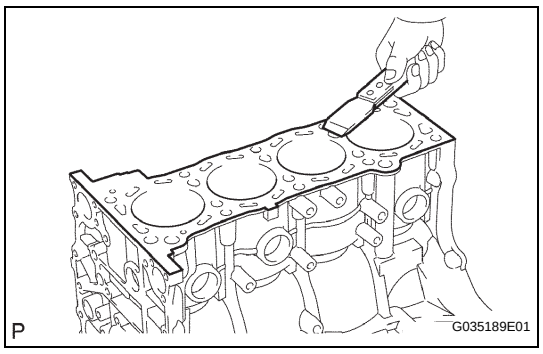

40. CLEAN CYLINDER BLOCK

(a) Using a gasket scraper, remove all the gasket material from the top surface of the cylinder block.

(b) Using a soft brush and solvent, thoroughly clean the cylinder block.

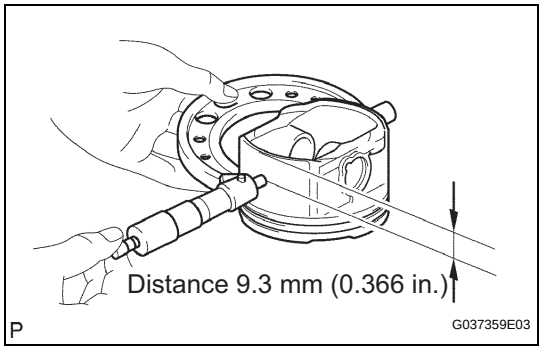

41. INSPECT PISTON DIAMETER

(a) Using a micrometer, measure the piston diameter at right angles to the piston center line, the indicated distance from the piston end.

Distance:

9.3 mm (0.366 in.)

Piston diameter:

94.941 to 94.971 mm (3.7378 to 3.7390 in.) (for standard)

EM

42. INSPECT PISTON OIL CLEARANCE

(a) Measure the cylinder bore diameter in the thrust directions (see step 20).

(b) Subtract the piston diameter measurement from the cylinder bore diameter measurement.

Standard oil clearance:
0.019 to 0.052 mm (0.0007 to 0.0020 in.)

If the oil clearance is greater than the standard, replace all the pistons and rebore all the cylinders. If necessary, replace the cylinder block.

HINT:

- Bore all the cylinders for the O/S piston outside diameter.
- Replace all the piston rings with ones to match the O/S pistons.

(c) If the oil clearance is greater than the standard.

(1) Prepare 4 new O/S pistons.

O/S 0.50 piston diameter:
95.441 to 95.451 mm (3.7575 to 3.7579 in.)

(2) Using a micrometer, measure the piston diameter at right angles to the piston center line, the indicated distance from the piston end.

Distance:
9.3 mm (0.366 in.)

(3) Calculate the amount each cylinder is to be rebored as follows:

Size to be rebored = P + C -H

P	**Piston diameter**
C	**Piston clearance: 0.019 to 0.052 mm (0.0007 to 0.0020 in.)**
H	**Allowance for honing: 0.02 mm (0.0008 in.) or less**

(4) Bore and hone the cylinders to calculated dimensions.

Maximum honing:
0.02 mm (0.0008 in.)
NOTICE:
Excess honing will destroy the finished roundness.

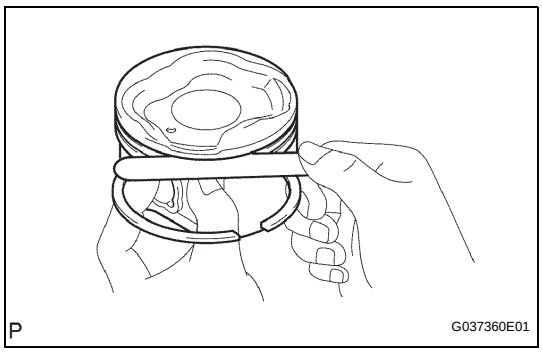

43. INSPECT RING GROOVE CLEARANCE

(a) Using a feeler gauge, measure the clearance between a new piston ring and the wall of the ring groove.

Ring groove clearance

No.1	**0.020 to 0.075 mm (0.0008 to 0.0030 in.)**
No.2	**0.020 to 0.065 mm (0.0008 to 0.0026 in.)**
Oil	**0.020 to 0.070 mm (0.0008 to 0.0028 in.)**

If the clearance is not as specified, replace the piston.

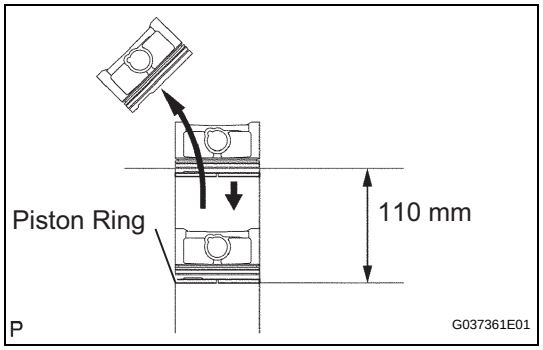

44. INSPECT PISTON RING END GAP

(a) Insert the piston ring into the cylinder bore.

(b) Using a piston, push the piston ring a little beyond the bottom of the ring travel, 110 mm (4.33 in.) from the top of the cylinder block.

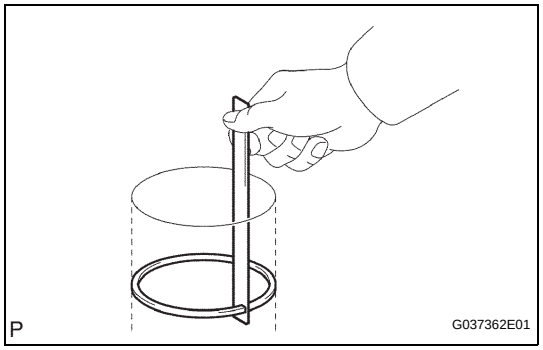

(c) Using a feeler gauge, measure the end gap.

Standard end gap

No.1	**0.22 to 0.34 mm (0.0087 to 0.0134 in.)**
No.2	**0.45 to 0.57 mm (0.0177 to 0.0224 in.)**
Oil	**0.10 to 0.40 mm (0.0039 to 0.0157 in.)**

Maximum end gap

No. 1	**0.90 mm (0.0354 in.)**
No.2	**1.36 mm (0.0535 in.)**
Oil	**0.75 mm (0.0295 in.)**

If the end gap is greater than the maximum, replace the piston ring. If the end gap is greater than the maximum, even with a new piston ring, rebore all the 4 cylinders or replace the cylinder block.

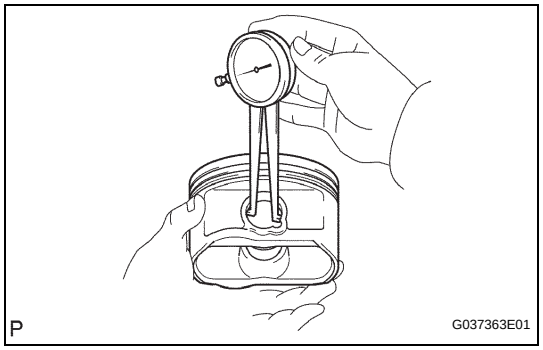

45. INSPECT PISTON PIN OIL CLEARANCE

(a) Using a caliper gauge, measure the inside diameter of the piston pin hole.

Piston pin hole inside diameter:
22.001 to 22.010 mm (0.8662 to 0.8665 in.)

EM

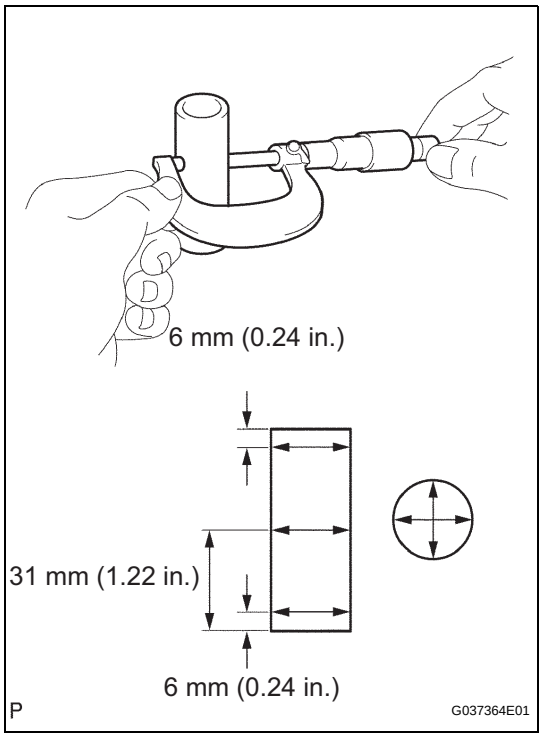

(b) Using a micrometer, measure the piston pin diameter.
Piston pin diameter:
21.997 to 22.006 mm (0.8660 to 0.8664 in.)

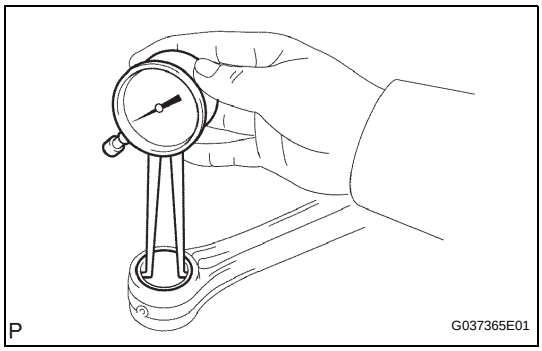

(c) Using a caliper gauge, measure the inside diameter of the connecting rod bushing.
Bushing inside diameter:
22.005 to 22.014 mm (0.8663 to 0.8667 in.)

(d) Subtract the piston pin diameter measurement from the piton pin hole diameter measurement.
Standard oil clearance:
0.001 to 0.007 mm (0.00004 to 0.00028 in.)
Maximum oil clearance:
0.010 mm (0.0004 in.)
HINT:
If the oil clearance is greater than the maximum, replace the piston and piston pin as a set.

EM

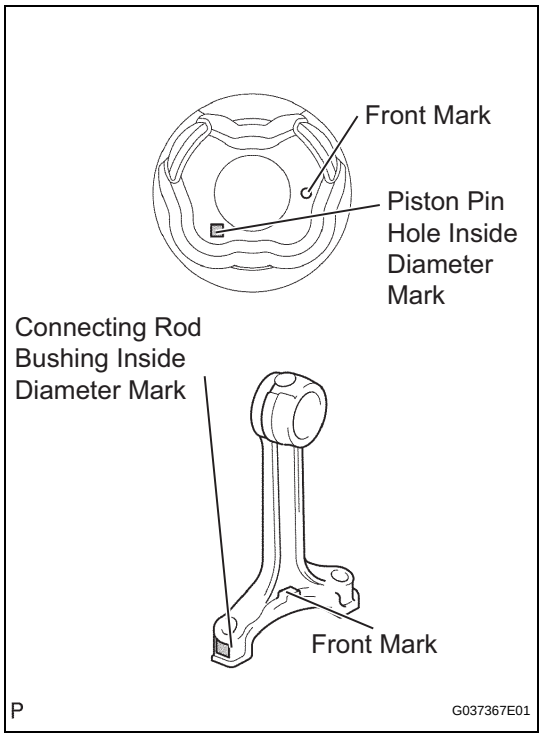

(e) Subtract the piston pin diameter measurement from the bushing inside diameter measurement.
Standard oil clearance:
0.005 to 0.011 mm (0.0002 to 0.0004 in.)
Maximum oil clearance:
0.025 mm (0.0010 in.)

(f) If the oil clearance is greater than the maximum, replace the bushing. If necessary, replace the connecting rod and piston pin as a set.

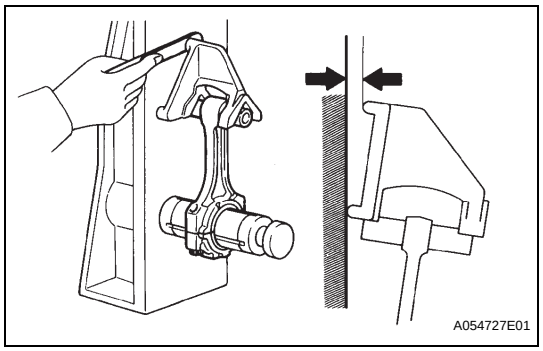

46. INSPECT CONNECTING ROD

(a) Using a rod aligner and feeler gauge, check the connecting rod alignment.

(1) Check for bend.
Maximum bend:
0.03 mm (0.0012 in.) per 100 mm (3.94 in.)
If the bend is greater than the maximum, replace the connecting rod sub-assembly.

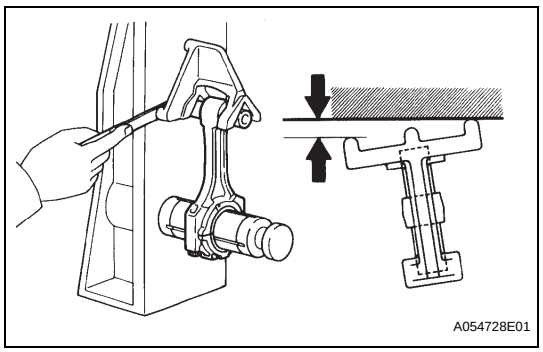

(2) Check for twist.
Maximum twist:
0.15 mm (0.0059 in.) per 100 mm (3.94 in.)
If the twist is greater than the maximum, replace the connecting rod sub-assembly.

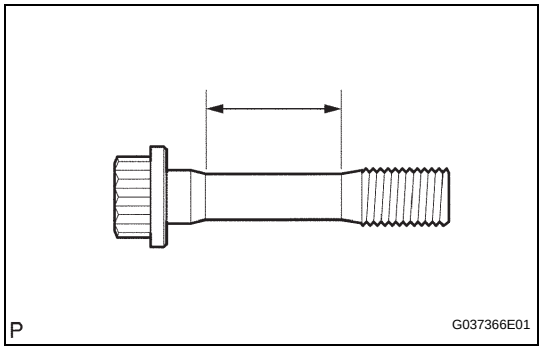

47. INSPECT CONNECTING ROD BOLT

(a) Using vernier calipers, measure the tension portion diameter of the bolt.
Standard diameter:
7.2 to 7.3 mm (0.283 to 0.287 in.)
Minimum diameter:
7.0 mm (0.276 in.)
If the diameter is less than the minimum, replace the bolt.

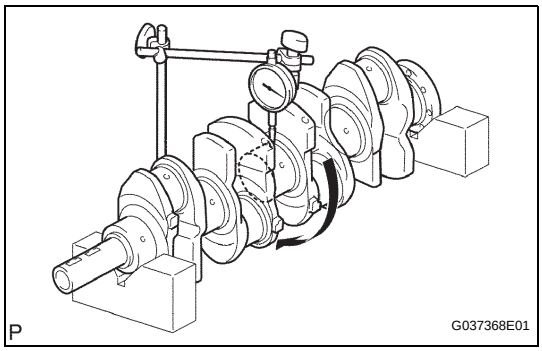

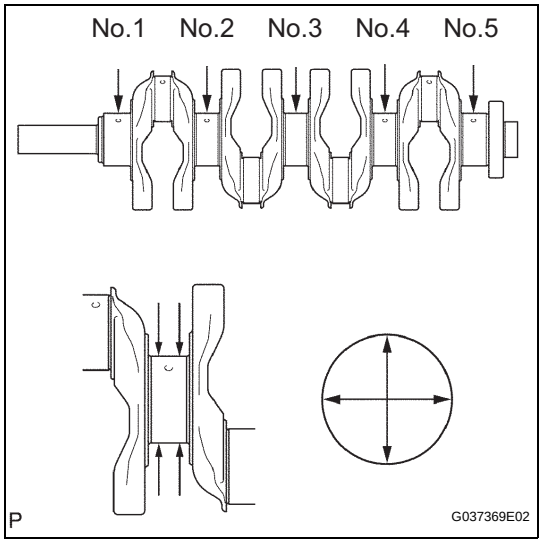

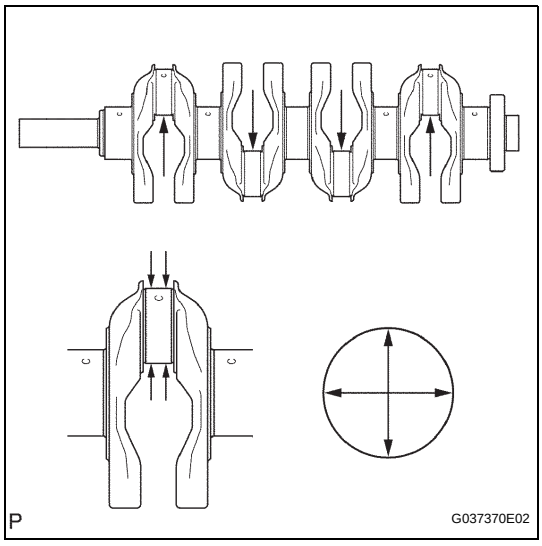

48. INSPECT CRANKSHAFT

(a) Inspect for circle runout.
  (1) Place the crankshaft on V-blocks.
  (2) Using a dial indicator, measure the circle runout at the center journal.
  Maximum circle runout:
  0.03 mm (0.0012 in.)
  If the circle runout is greater than the maximum, replace the crankshaft.

(b) Inspect the main journals.
  (1) Using a micrometer, measure the diameter of each main journal.
  Standard journal diameter:

No.3 journal	**59.981 to 59.994 mm (2.3615 to 2.3620 in.)**
Except No.3 journal	**59.987 to 60.000 mm (2.3619 to 2.3622 in.)**

  If the diameter is not as specified, check the oil clearance (see step 30). If necessary, replace the crankshaft.
  (2) Check each main journal for taper and out-of-round as shown in the illustration.
  Maximum taper and out-of-round:
  0.005 mm (0.0002 in.)
  If the taper and out-of-round is greater than the maximum, replace the crankshaft.

(c) Inspect the crank pin.
  (1) Using a micrometer, measure the diameter of each crank pin.
  Diameter:
  52.989 to 53.002 mm (2.0862 to 2.0867 in.)
  If the diameter is not as specified, check the oil clearance (see step 2). If necessary, replace the crankshaft.
  (2) Check each crank pin for taper and out-of-round as shown in the illustration.
  Maximum taper and out-of-round:
  0.003 mm (0.0001 in.)
  If the taper and out-of-round is greater than the maximum, replace the crankshaft.

49. INSPECT CRANKSHAFT OIL CLEARANCE

HINT:
- Keep the lower bearings and crankshaft bearing caps together.
- Arrange the thrust washers in the correct order.
- Keep the upper crankshaft bearings and upper thrust washers together with the cylinder block.

(a) Clean each main journal and bearing.
(b) Check each main journal and bearing for pitting and scratches.
  If the journal or bearing is damaged, replace the bearing.
(c) Place the crankshaft on the cylinder block.

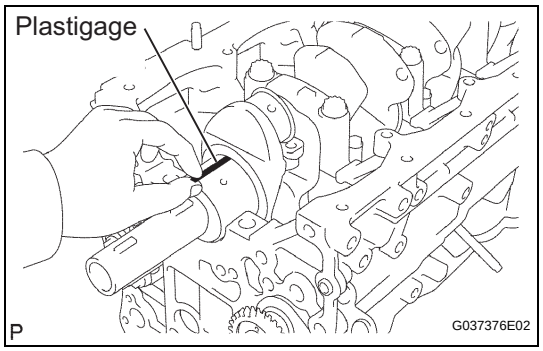

(d) Lay a strip of Plastigage across each journal.

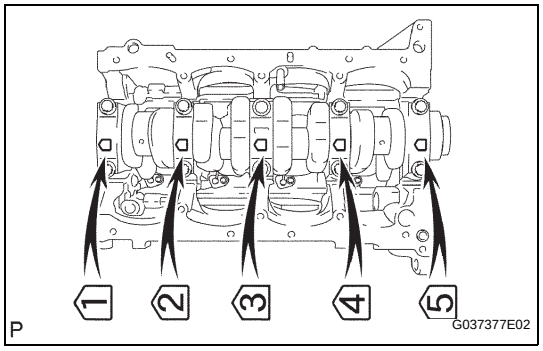

(e) Install the 5 crankshaft bearing caps in their proper locations.

(f) Install the 5 crankshaft bearing caps with the 10 bolts (see step 49).

NOTICE:

Do not turn the crankshaft.

(g) Remove the 10 bolts and 5 crankshaft bearing caps.

EM

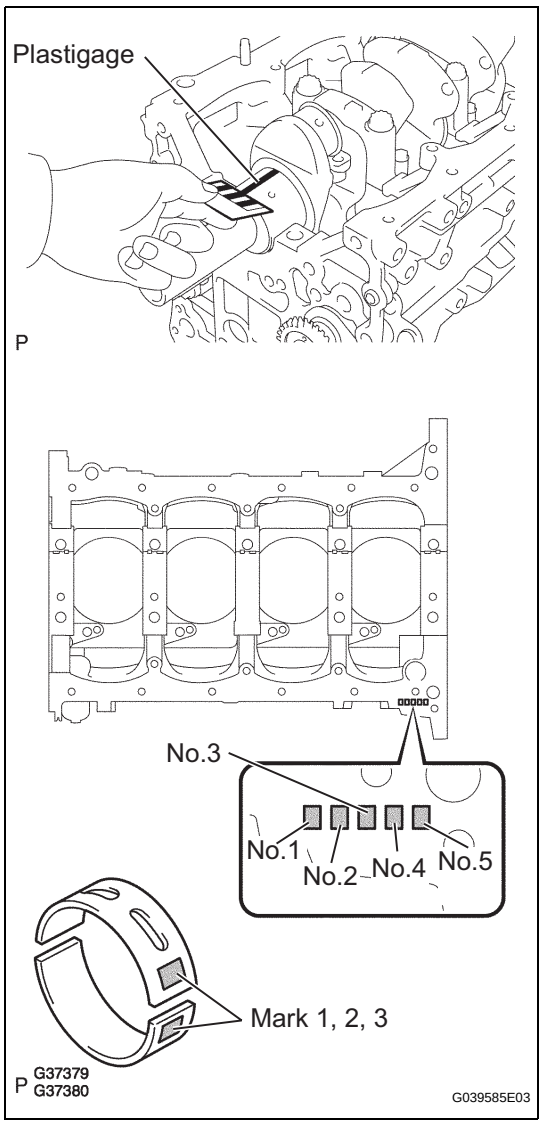

(h) Measure the Plastigage at its widest point.

Standard oil clearance

Bearing Cap	Standard
No.3	0.030 to 0.055 mm (0.0012 to 0.0022 in.)
Others	0.024 to 0.049 mm (0.0009 to 0.0019 in.)

Maximum oil clearance:
0.10 mm (0.0039 in.)

If the oil clearance is greater than the maximum, replace the crankshaft bearing.

HINT:

- If replacing the cylinder block, measure the bearing standard clearance.
- If replacing a bearing, first check the number on the cylinder block for the bearing's respective journal. Then replace the bearing with one that has the same number. Each bearing's standard thickness is indicated by a 1, 2 or 3 mark on its surface.

Reference

Cylinder block main journal bore diameter

Mark	Diameter
1	64.004 to 64.010 mm (2.5198 to 2.5201 in.)
2	64.011 to 64.016 mm (2.5201 to 2.5203 in.)
3	64.017 to 64.022 mm (2.5203 to 2.5206 in.)

Standard bearing center wall thickness

Mark	Thickness
1	1.987 to 1.990 mm (0.0782 to 0.0783 in.)
2	1.991 to 1.993 mm (0.0784 to 0.0785 in.)
3	1.994 to 1.996 mm (0.0785 to 0.0786 in.)

(i) Completely remove the Plastigage.

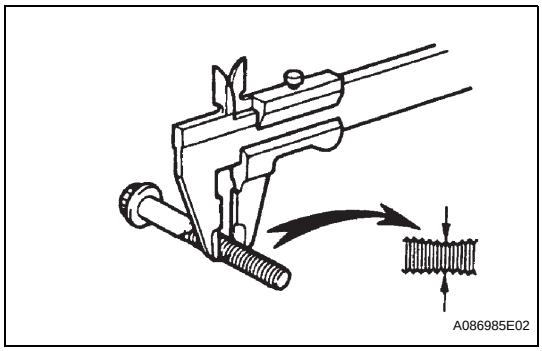

50. INSPECT CRANKSHAFT BEARING CAP SET BOLT

(a) Using vernier calipers, measure the minimum diameter of the compressed thread at the measuring point.

Standard diameter:
10.76 to 10.97 mm (0.4236 to 0.4319 in.)
Minimum diameter:
10.66 mm (0.4197 in.)

If the diameter is less than the minimum, replace the bolt.

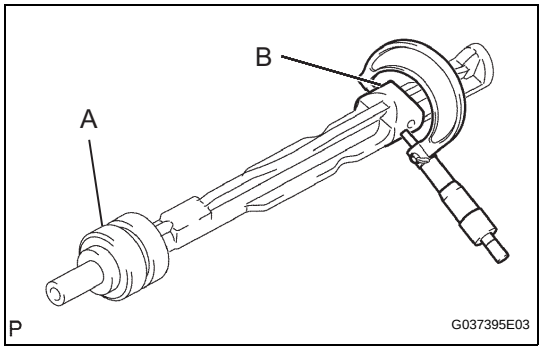

51. INSPECT NO.1 BALANCESHAFT

(a) Inspect the diameter of the journal.

(1) Using a micrometer, measure the diameter of the balanceshaft main journals.

Main journal diameter

A	37.969 to 37.985 mm (1.4948 to 1.4955 in.)
B	37.449 to 37.465 mm (1.4744 to 1.4750 in.)

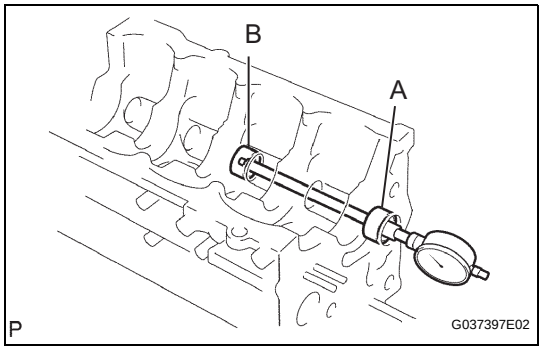

(b) Inspect the diameter of bearing.

(1) Using a cylinder gauge, measure the inside diameter of the balanceshaft bearing.

Bearing inside diameter

A	38.025 to 38.045 mm (1.4970 to 1.4978 in.)
B	37.525 to 37.545 mm (1.4774 to 1.4781 in.)

(c) Inspect oil clearance.

(1) Subtract the balanceshaft main journal diameter measurement from the balanceshaft bearing inside diameter measurement.

Standard oil clearance

A	0.040 to 0.076 mm (0.0016 to 0.0030 in.)
B	0.060 to 0.096 mm (0.0024 to 0.0038 in.)

Maximum oil clearance:
0.15 mm (0.0059 in.)

If the oil clearance is greater than the maximum, replace the cylinder block and balanceshaft.

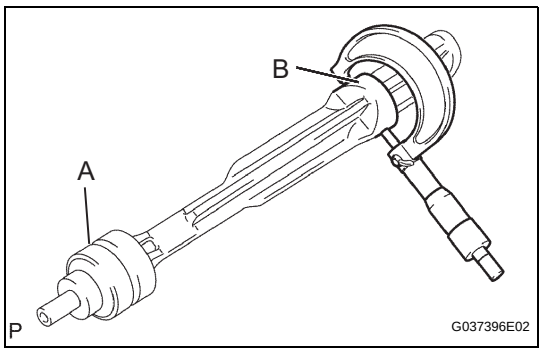

52. INSPECT NO.2 BALANCESHAFT

(a) Inspect the diameter of the journal.

(1) Using a micrometer, measure the diameter of the balanceshaft main journals.

Main journal diameter

A	37.969 to 37.985 mm (1.4948 to 1.4955 in.)
B	37.449 to 37.465 mm (1.4744 to 1.4750 in.)

EM

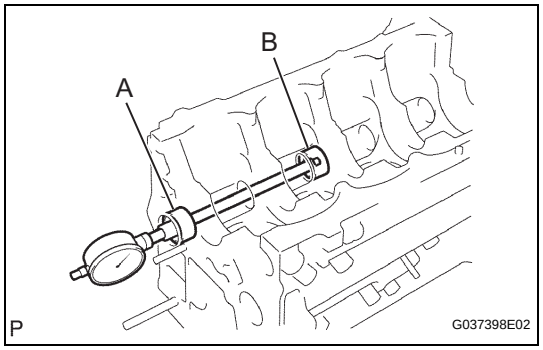

(b) Inspect the diameter of bearing.
(1) Using a cylinder gauge, measure the inside diameter of the balanceshaft bearing.
Bearing inside diameter

A	**38.025 to 38.045 mm (1.4970 to 1.4978 in.)**
B	**37.525 to 37.545 mm (1.4774 to 1.4781 in.)**

(c) Inspect oil clearance.
Standard oil clearance

A	**0.040 to 0.076 mm (0.0016 to 0.0030 in.)**
B	**0.060 to 0.096 mm (0.0024 to 0.0038 in.)**

Maximum oil clearance:
0.15 mm (0.0059 in.)
If the oil clearance is greater than the maximum, replace the cylinder block and balanceshaft.

REPLACEMENT

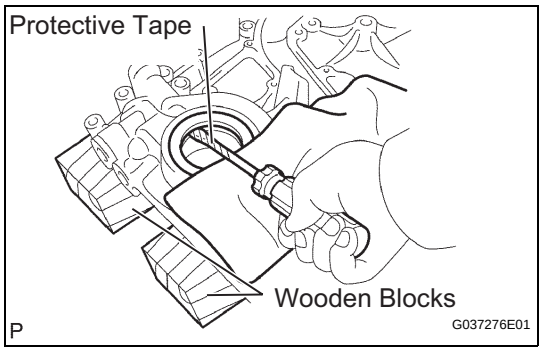

1. REMOVE TIMING CHAIN COVER OIL SEAL
(a) Using a screwdriver with its tip taped, pry out the oil seal.
HINT:
Tape the screwdriver tip before use.

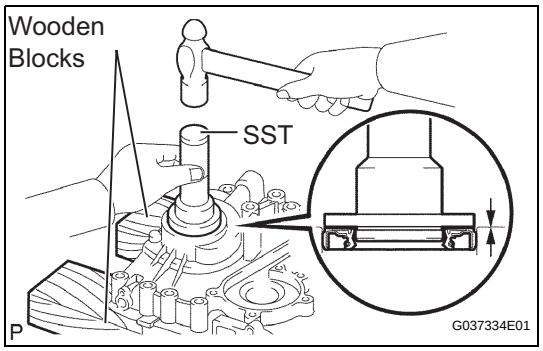

2. INSTALL TIMING CHAIN COVER OIL SEAL
(a) Place the timing chain cover on wooden blocks.
(b) Using SST, tap in a new oil seal until its surface is flush with the timing gear case edge.
SST 09223-50010
NOTICE:
- **Keep the lip free from foreign matter.**
- **Do not tap the oil seal at an angle.**

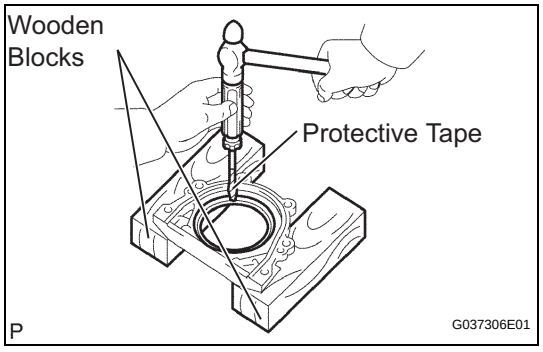

3. REMOVE ENGINE REAR OIL SEAL
(a) Place the oil seal retainer on wooden blocks.
(b) Using a screwdriver with its tip taped and a hammer, tap out the oil seal.
HINT:
Tape the screwdriver tip before use.

EM

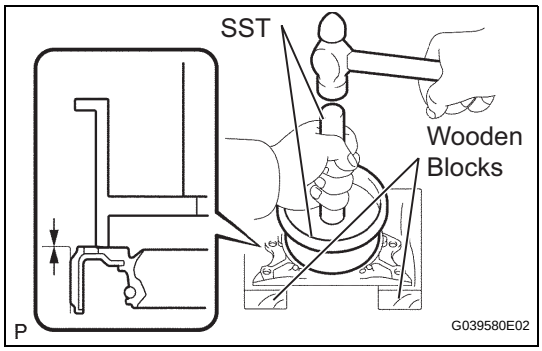

4. INSTALL ENGINE REAR OIL SEAL

(a) Place the oil seal retainer on wooden blocks.

(b) Using SST, tap in a new oil seal until its surface is flush with the oil seal retainer edge.

SST 09223-15030, 09950-70010 (09951-07150)

NOTICE:

- **Keep the lip free from foreign matter.**
- **Do not tap the oil seal at an angle.**

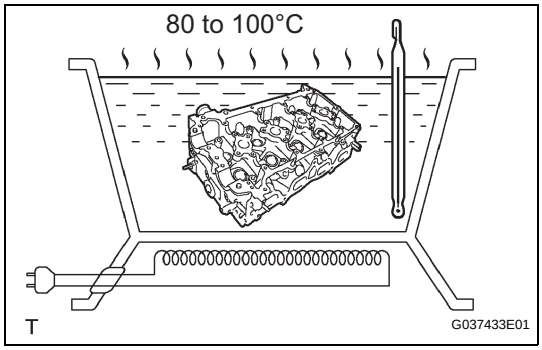

5. REMOVE INTAKE VALVE GUIDE BUSH

(a) Heat the cylinder head to 80 to 100 °C(176 to 212°F).

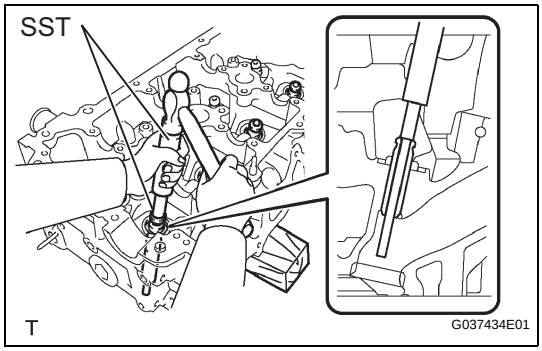

(b) Place the cylinder head on wooden blocks.

(c) Using SST and a hammer, tap out the guide bush.

SST 09201-01055, 09950-70010 (09951-07100)

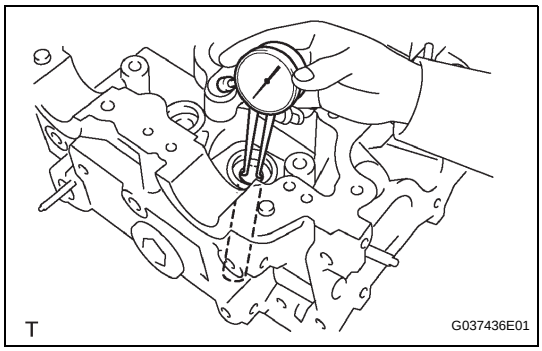

6. INSTALL INTAKE VALVE GUIDE BUSH

(a) Using a caliper gauge, measure the bush bore diameter of the cylinder head.

Cylinder bore diameter:

10.285 to 10.306 mm (0.4049 to 0.4057)

(b) Select a new guide bush (STD or O/S 0.05).

Bush bore diameter	Bush size
10.285 to 10.306 mm (0.4049 to 0.4057 in.)	Use STD
10.335 to 10.356 mm (0.4069 to 0.4077 in.)	Use O/S 0.05

If the bush bore diameter of the cylinder head is greater than 10.306 mm (0.4057 in.), machine the bush bore to the dimension of 10.335 to 10.356 mm (0.4069 to 0.4077 in.) to install a O/S 0.05 valve guide bush.

If the bush bore diameter of the cylinder head is greater than 10.356 mm (0.4077 in.), replace the cylinder head.

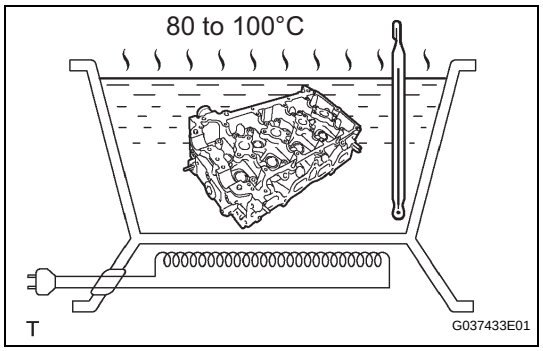

(c) Heat the cylinder head to 80 to 100°C (176 to 212°F).

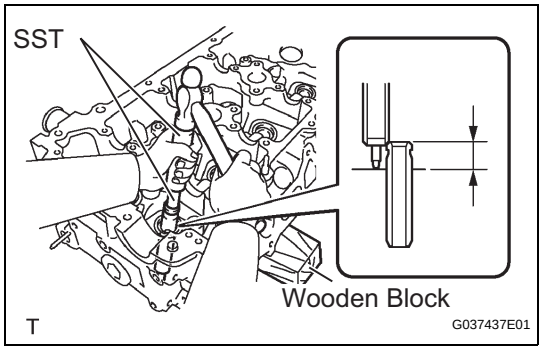

(d) Place the cylinder head on wooden blocks.
(e) Using SST, tap in a new valve guide bush to the specified protrusion height.
SST 09201-01055, 09950-70010 (09951-07100)
Protrusion height (A):
9.8 to 10.2 mm (0.3858 to 0.4016 in.)

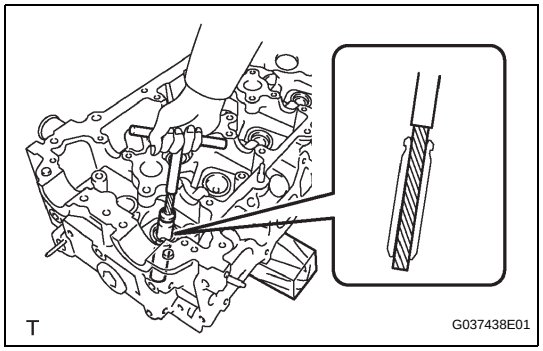

(f) Using a sharp 5.5 mm reamer, ream the valve guide bush to obtain the standard specified clearance.
Standard oil clearance:
0.025 to 0.060 mm (0.0010 to 0.0023 in.)

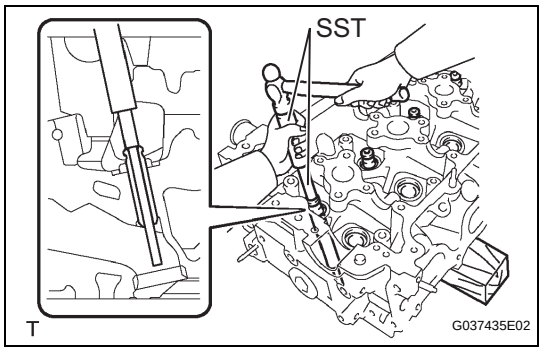

7. REMOVE EXHAUST VALVE GUIDE BUSH
(a) Heat the cylinder head to 80 to 100°C(176 to 212°F)
(b) Place the cylinder head on wooden blocks.
(c) Using SST and a hammer, tap out the guide bush.
SST 09201-01055, 09950-70010 (09951-07100)

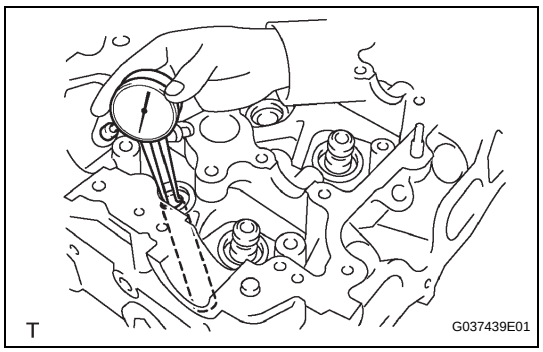

8. INSTALL EXHAUST VALVE GUIDE BUSH
(a) Using a caliper gauge, measure the bush bore diameter of the cylinder head.
Cylinder bore diameter:
10.285 to 10.306 mm (0.4049 to 0.4057)
(b) Select a new guide bush (STD or O/S 0.05).

Bush bore diameter	Bush size
10.285 to 10.306 mm (0.4049 to 0.4057 in.)	Use STD
10.335 to 10.356 mm (0.4069 to 0.4077 in.)	Use O/S 0.05

If the bush bore diameter of the cylinder head is greater than 10.306 mm (0.4057 in.), machine the bush bore to the dimension of 10.335 to 10.356 mm (0.4069 to 0.4077 in.) to install a O/S 0.05 valve guide bush.
If the bush bore diameter of the cylinder head is greater than 10.356 mm (0.4077 in.), replace the cylinder head.

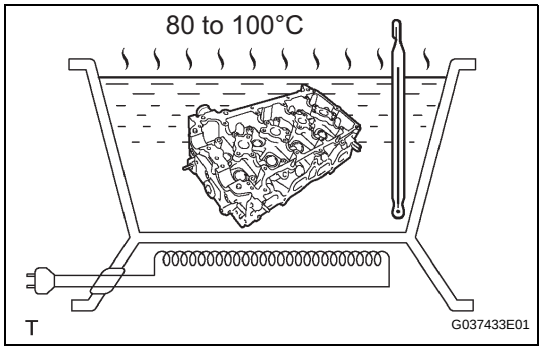

(c) Heat the cylinder head to 80 to 100°C (176 to 212°F).

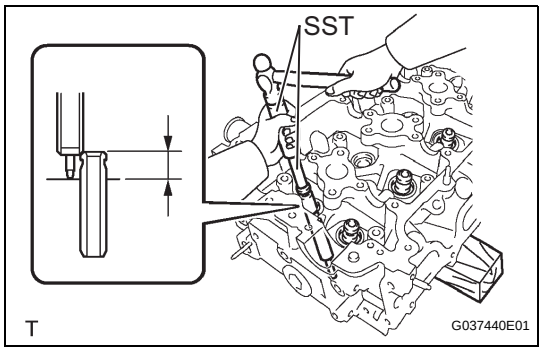

(d) Place the cylinder head on wooden blocks.
(e) Using SST, tap in a new valve guide bush to the specified protrusion height.
SST 09201-01055, 09950-70010 (09951-07100)
Protrusion height (A):
7.6 to 8.0 mm (0.2992 to 0.3150 in.)

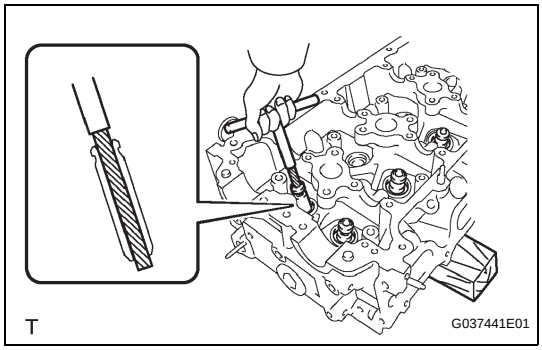

(f) Using a sharp 5.5 mm reamer, ream the valve guide bushing to obtain the standard specified clearance.
Standard oil clearance:
0.030 to 0.065 mm (0.0012 to 0.0026 in.)

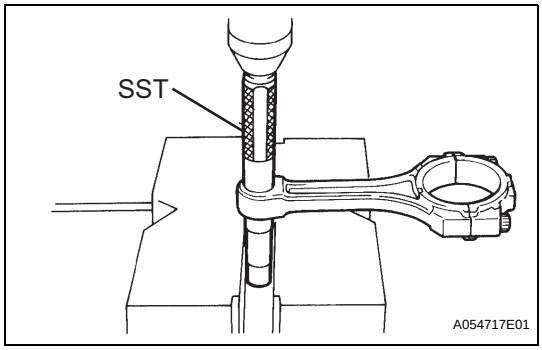

9. REMOVE CONNECTING ROD SMALL END BUSH
(a) Using SST and a press, press out the bush.
SST 09222-30010

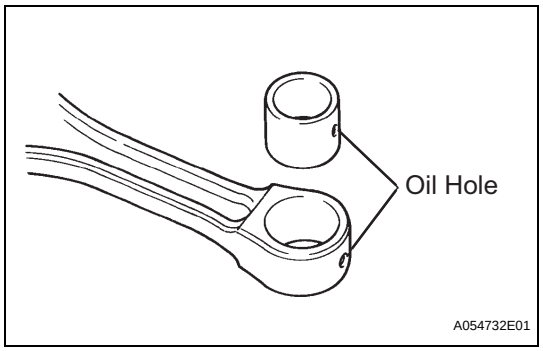

10. INSTALL CONNECTING ROD SMALL END BUSH

(a) Align the oil holes of a new bush and the connecting rod.

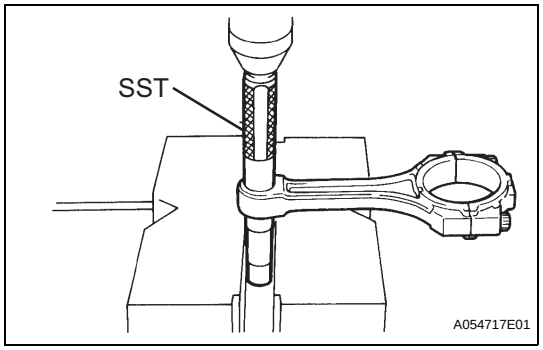

(b) Using SST and a press, press in the bush.
SST 09222-30010

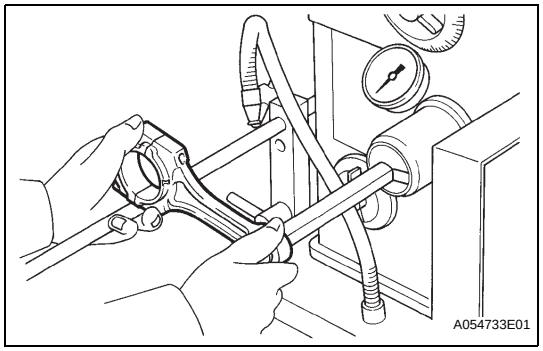

(c) Using a pin hole grinder, hone the bush to obtain the standard specified clearance (see step 26.) between the bush and piston pin.

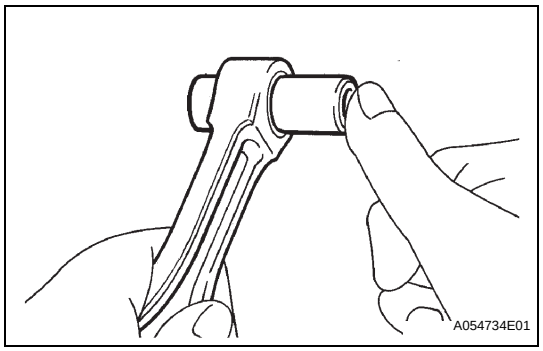

(d) Check that the piston pin fits at normal room temperature.
(1) Coat the piston pin with engine oil, and push it into the connecting rod with your thumb.

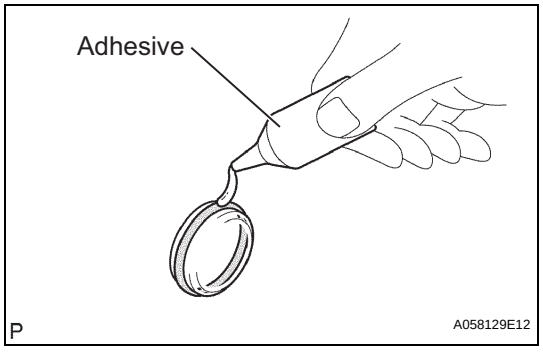

REASSEMBLY

1. INSTALL TIGHT PLUG

NOTICE:
If water leaks from the tight plug or the plug corrodes, replace it.

(a) Apply adhesive around the tight plugs.
Adhesive:
Part No. 08833-00070, THREE BOND 1324 or equivalent.

EM

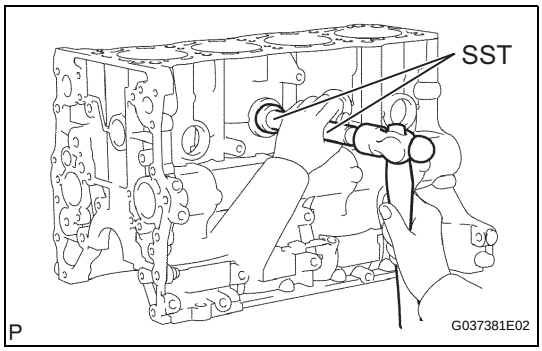

(b) Using SST and a hammer, tap in new tight plugs as shown in the illustration.
(c) Using SST, tap in the 8 tight plugs A and C.
SST 09950-60010 (09951-00350), 09950-70010 (09951-07100)
(d) Using SST, tap in the tight plug B.
SST 09950-60010 (09951-00300), 09950-70010 (09951-07100)
(e) Using SST, tap in the 3 tight plugs D.
SST 09950-60010 (09951-00400), 09950-70010 (09951-07100)

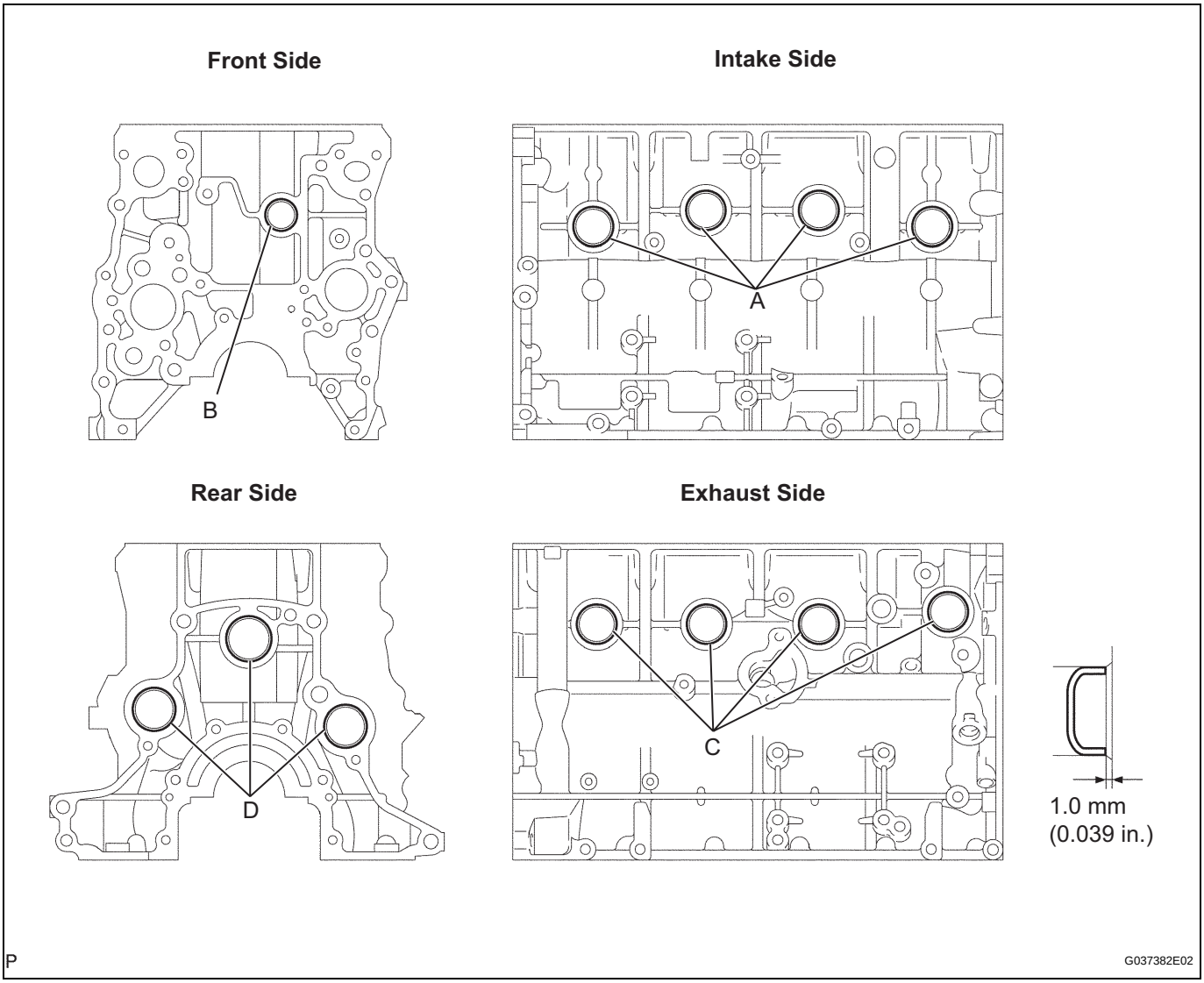

2. INSTALL STUD BOLT
(a) Using an E7 "torx" socket wrench, install the stud bolts B and D.
Torque: 7.5 N*m (77 kgf*cm, 66 in.*lbf) for stud bolts B and D
(b) Using an E8 "torx" socket wrench, install the stud bolts A.
Torque: 7.5 N*m (77 kgf*cm, 66 in.*lbf) for stud bolts A

(c) Apply adhesive to the hole for the stud bolt C on the cylinder block. Using an E7 "torx" socket wrench, install the stud bolts C.

Torque: 7.5 N*m (77 kgf*cm, 66 in.*lbf) for stud bolt C

NOTICE:

If the stud bolt is deformed or the threads are damaged, replace it.

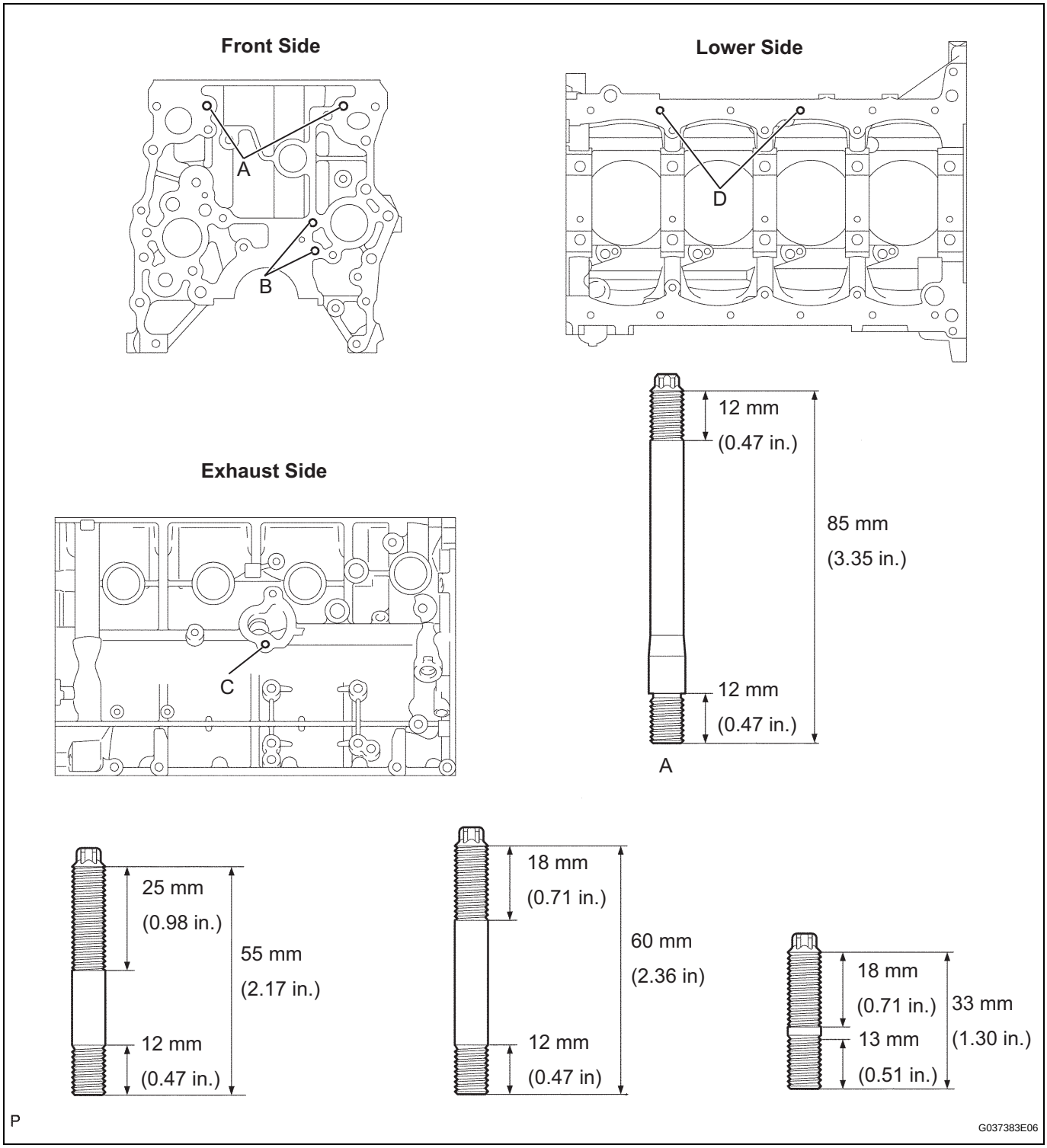

EM

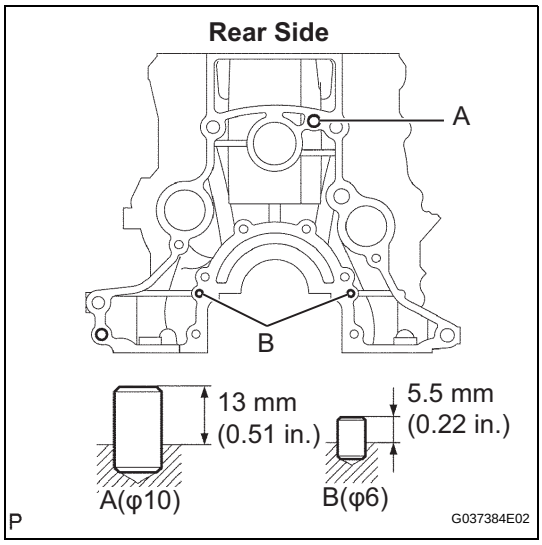

3. INSTALL STRAIGHT PIN

(a) Using a plastic-faced hammer, tap in new straight pins to the cylinder block.

4. INSTALL RING PIN

(a) Using a plastic-faced hammer, tap in new ring pins to the cylinder block.

EM

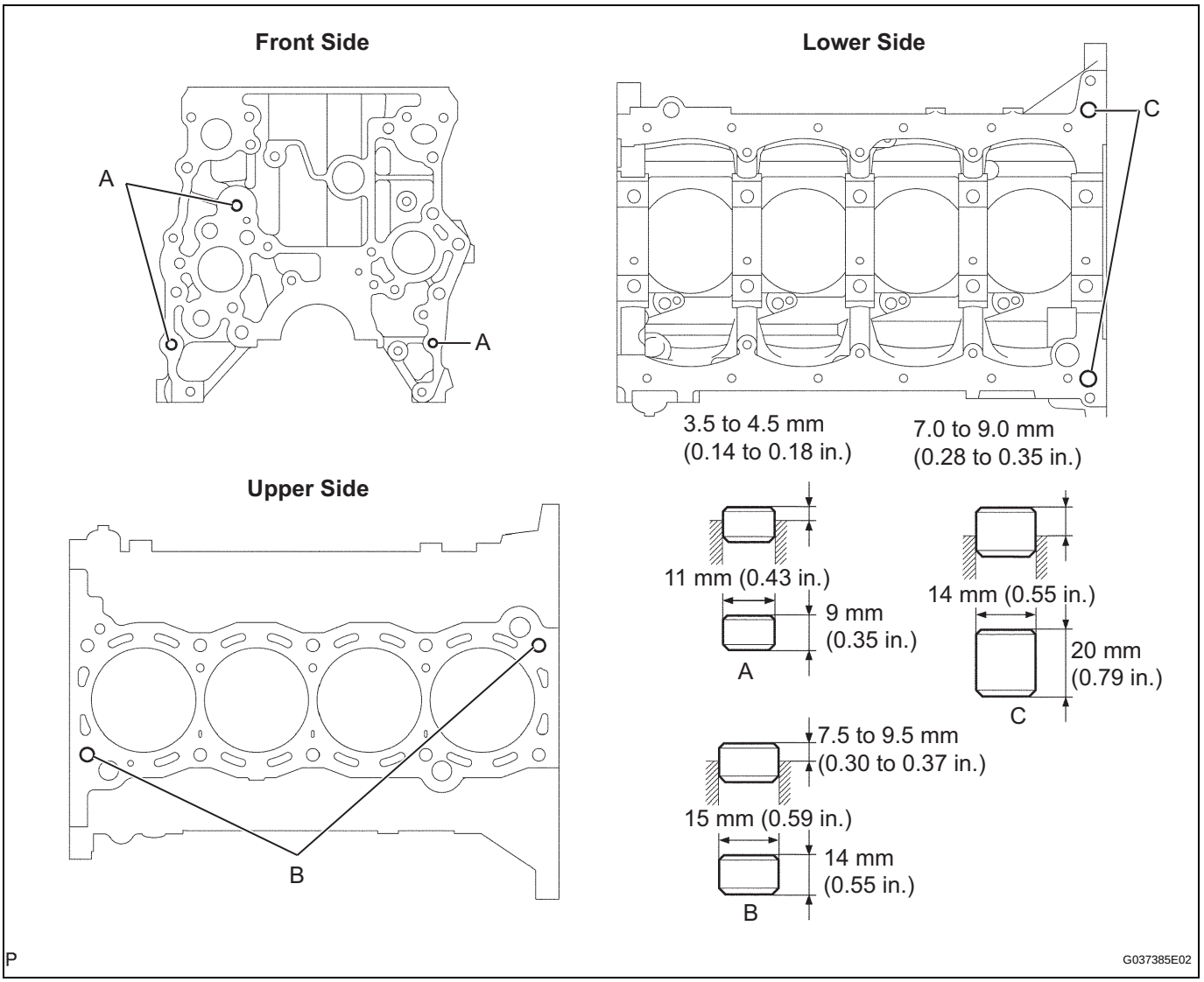

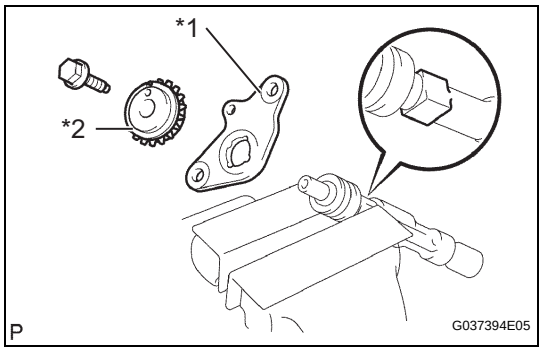

5. INSTALL NO. 2 BALANCESHAFT DRIVEN GEAR

(a) Mount the head portion of the balanceshaft in a vise.

NOTICE:

Be careful not to damage the balanceshaft.

(b) Install the balanceshaft thrust washer No.2 (* 1) and balanceshaft driven gear No.2 (* 2).

(c) Install and torque the bolt.

Torque: 36 N*m (365 kgf*cm, 26 ft.*lbf)

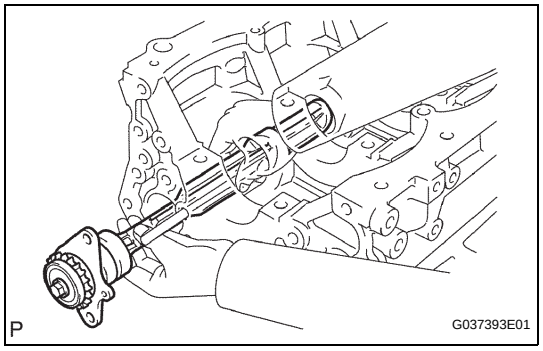

6. INSTALL NO.2 BALANCESHAFT

(a) Install the balanceshaft to the cylinder block.

NOTICE:

When installing the balanceshaft, make sure to support the balanceshaft with both hands and avoid scratching the balanceshaft bearing on the cylinder block side.

EM

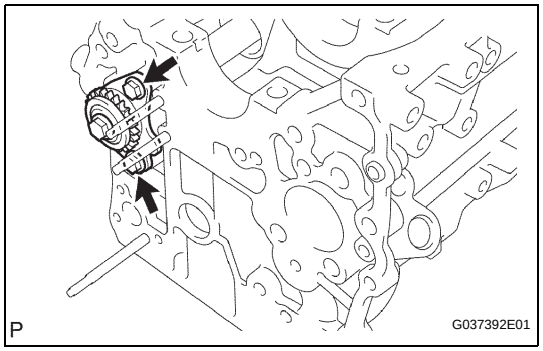

(b) Install and torque the 2 bolts.

Torque: 18 N*m (184 kgf*cm, 13 ft.*lbf)

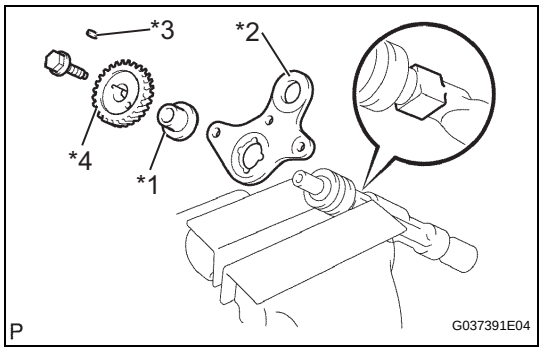

7. INSTALL NO. 1 BALANCESHAFT DRIVEN GEAR

(a) Mount the head portion of the balanceshaft in a vise.

NOTICE:

Be careful not to damage the balanceshaft.

(b) Install the balanceshaft thrust spacer (* 1), balanceshaft thrust washer No.1 (* 2), sliding key (* 3) and balanceshaft driven gear No.1 (* 4).

(c) Install and torque the bolt.

Torque: 36 N*m (365 kgf*cm, 26 ft.*lbf)

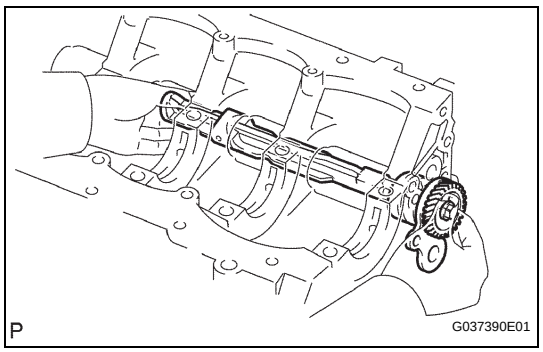

8. INSTALL NO.1 BALANCESHAFT

(a) Install the No.1 balanceshaft to the cylinder block.

NOTICE:

When installing the balanceshaft, make sure to support the balanceshaft with both hands and avoid scratching the balanceshaft bearing on the cylinder block side.

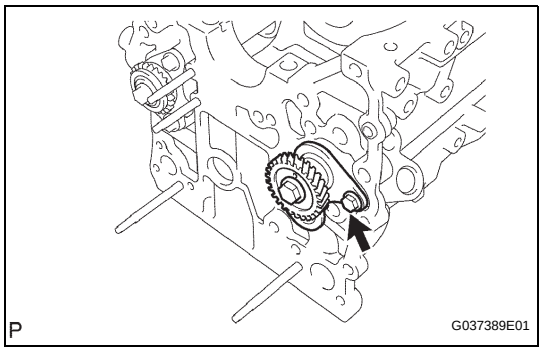

(b) Install and torque the bolt.
Torque: 18 N*m (184 kgf*cm, 13 ft.*lbf)

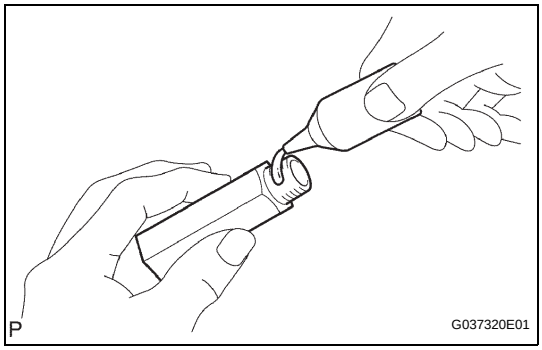

9. INSTALL CYLINDER BLOCK WATER DRAIN COCK SUB-ASSEMBLY

(a) Apply adhesive around the drain cock.

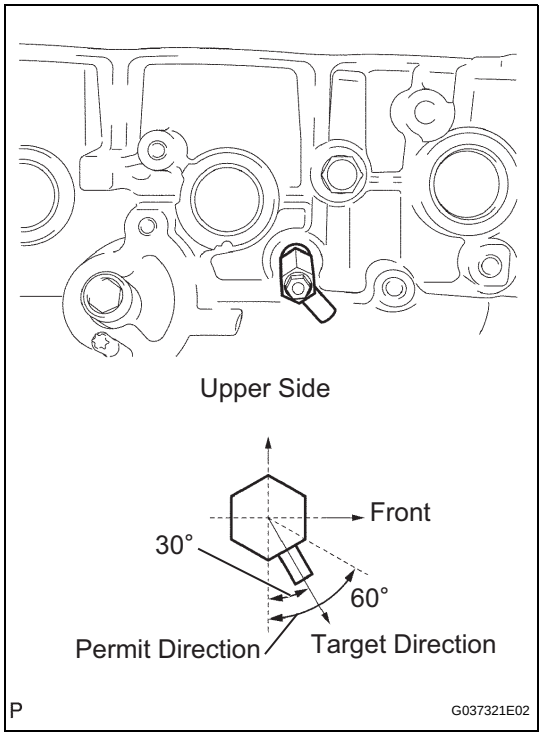

(b) Install the cylinder block water drain cock as shown in the illustration.
Torque: 25 N*m (250 kgf*cm, 18 in.*lbf)

(c) Install the water drain cock plug to the water drain cock sub-assembly.
Torque: 13 N*m (130 kgf*cm, 9 in.*lbf)

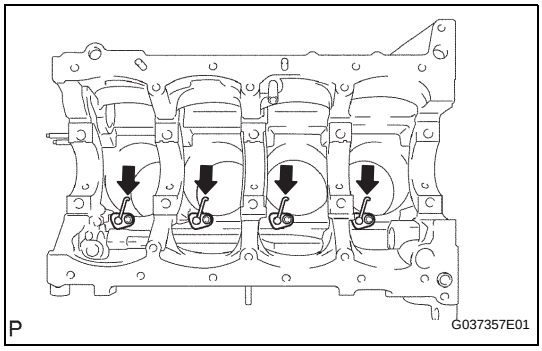

10. INSTALL NO. 1 OIL NOZZLE SUB-ASSEMBLY

(a) Using an E7 "torx" socket wrench, install the oil nozzles.
Torque: 7.0 N*m (71 kgf*cm, 62 in.*lbf)

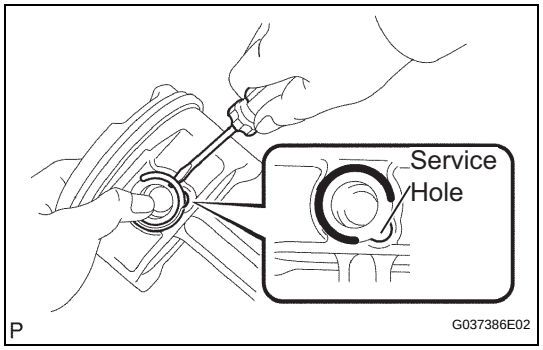

11. INSTALL WITH PIN PISTON SUB-ASSEMBLY

(a) Assemble the piston and connecting rod.

(1) Using a screwdriver, install a new snap ring at one end of the piston pin hole.

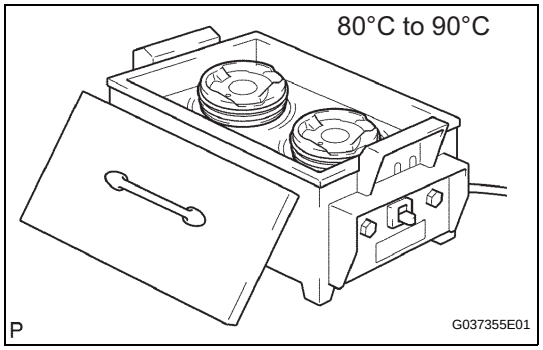

(2) Gradually heat the piston to approximately 80 to 90°C (176 to 194°F).

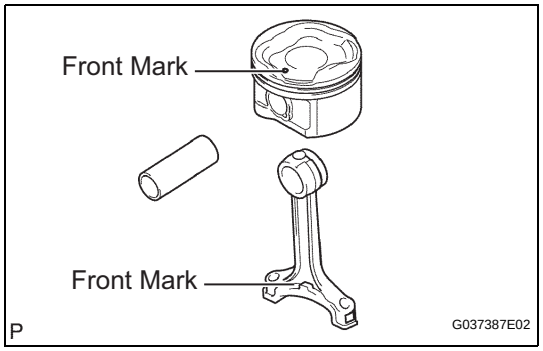

(3) Coat the piston pin with engine oil.

(4) Align the front marks of the piston and connecting rod, and push in the piston pin with your thumb.
HINT:
The piston and pin are a matched set.

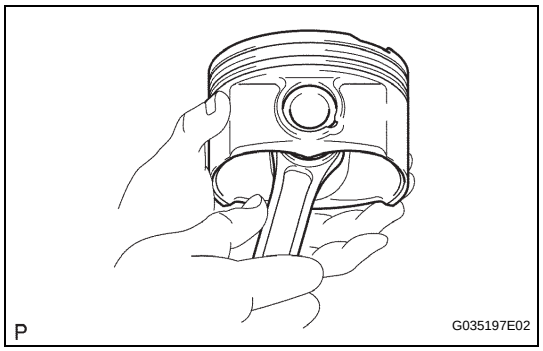

(5) Check the fitting condition between the piston and piston pin by trying to move the piston back and forth on the piston pin.

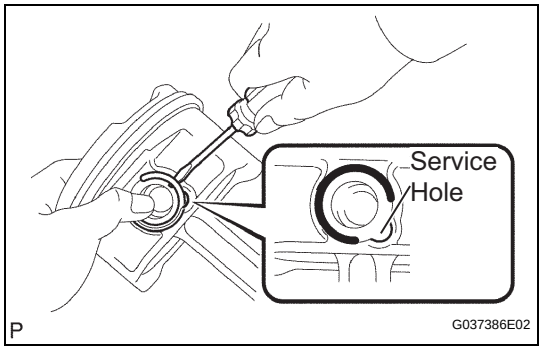

(6) Using a screwdriver, install a new snap ring at the other end of the piston pin hole.

EM

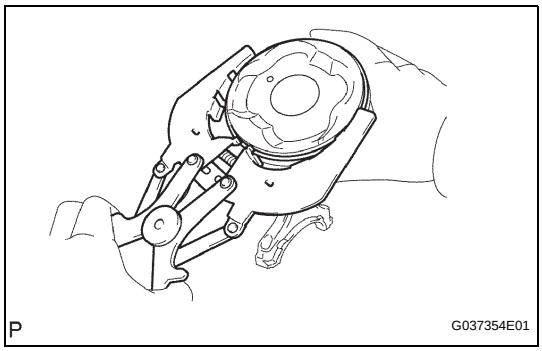

12. INSTALL PISTON RING SET

(a) Install the oil ring expander by hand.

(b) Using a piston ring expander, install the oil ring rail.

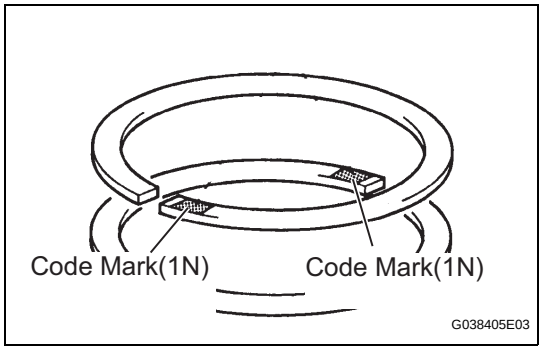

(c) Using a piston ring expander, install the 2 compression rings so that the painted marks are positioned as shown in the illustration.
HINT:
- Install the compression ring No.1 with the code mark (1N) facing upward.
- Install the compression ring No.2 with the code mark (2N) facing upward.

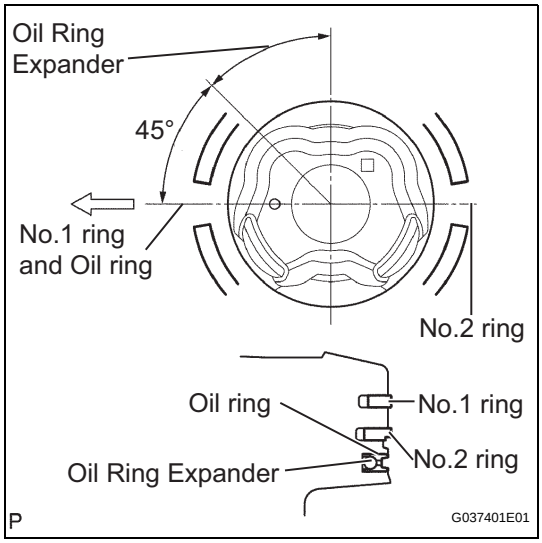

(d) Position the piston rings so that the ring ends are as shown in the illustration.
NOTICE:
Do not align the ring ends.

13. INSTALL CRANKSHAFT BEARING
NOTICE:
- **Do not apply engine oil to the bearing's contact area and backside.**
- **The crankshaft bearing cap bolt is tightened in 2 progressive steps.**

(a) Clean the main journal, and the both surfaces of the bearing.

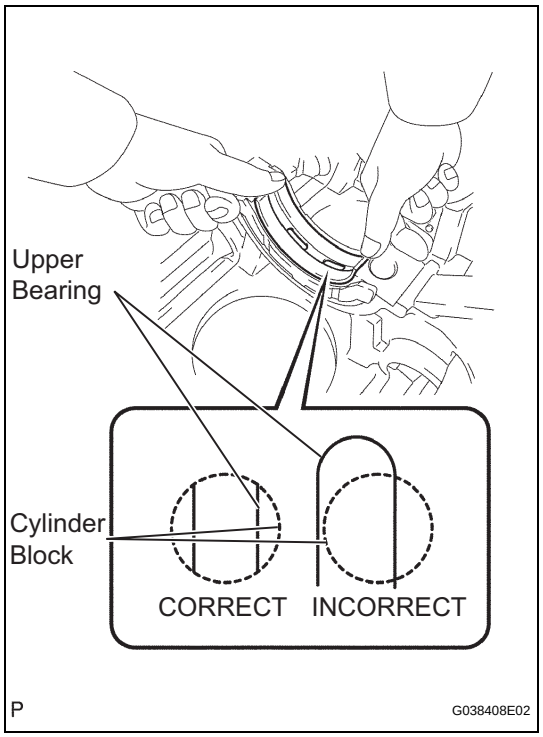

(b) Install the upper bearing.
(1) Install the upper bearing to the cylinder block as shown in the illustration.
NOTICE:
Do not apply engine oil to the bearing's contact area and backside.

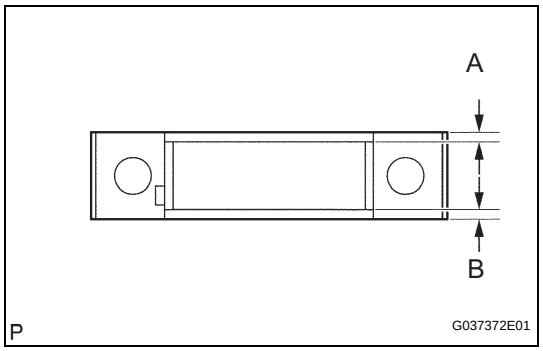

(c) Install the lower bearing.
(1) Install the lower bearing to the bearing cap.
(2) Using vernier calipers, measure the distance between the bearing cap's edge and the lower bearing's edge.
Dimension (A - B):
0.3 mm (0.0118 in.) or less
HINT:

Journal	Dimension (A)
#1, 5	3.75 mm (0.1476 in.)
#3	1.75 mm (0.0689 in.)
#2, 4	2.75 mm (0.1083 in.)

NOTICE:
Do not apply engine oil to the bearing's contact area and backside.

(d) With the upper bearing and lower bearing installed, use a plastic-faced hammer to install the bearing caps to the cylinder block.
NOTICE:
Make sure that the bearing caps are installed in the correct positions and direction.

EM

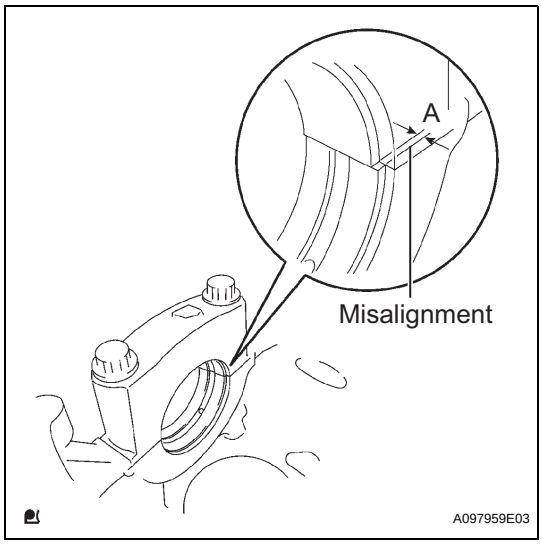

(e) Using vernier calipers, measure the amount of misalignment between the upper bearing and lower bearing, as shown in the illustration.
Standard:
0.9 mm (0.035 in.) or less

(f) Remove the bearing cap.

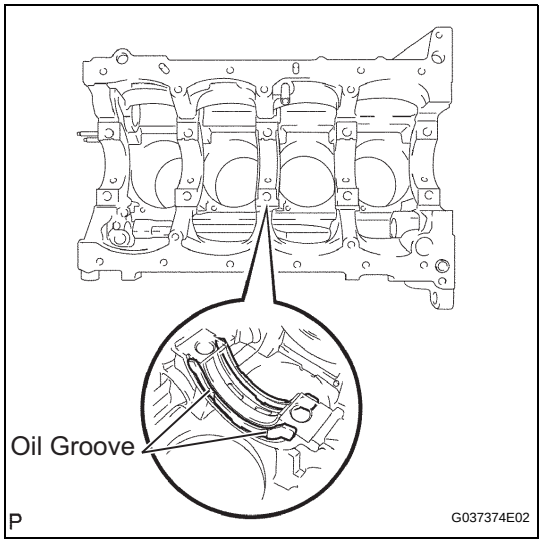

(g) Install the crankshaft thrust washer upper to the cylinder block.
(1) Install the 2 thrust washers under the No.3 journal position of the cylinder block with the oil grooves facing outward.
NOTICE:
Be careful when installing the thrust bearing upper and lower as they are similar but cannot be interchanged.

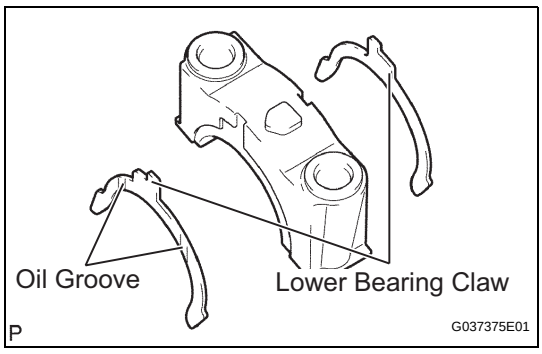

(h) Install the 2 thrust washers on the No.3 bearing cap with the grooves facing outward.
NOTICE:
Be careful when installing the thrust bearing upper and lower as they are similar but cannot be interchanged. The bearing lower has a claw as shown in the illustration.

(i) Apply engine oil to the lower bearing.

14. INSTALL CRANKSHAFT

(a) Apply engine oil to the upper bearing, then place the crankshaft on the cylinder block.

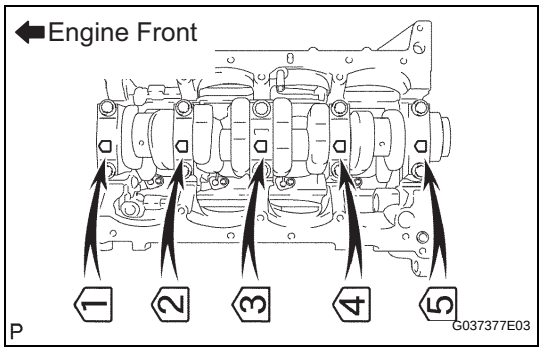

(b) Install the 5 crankshaft bearing caps in their proper locations.

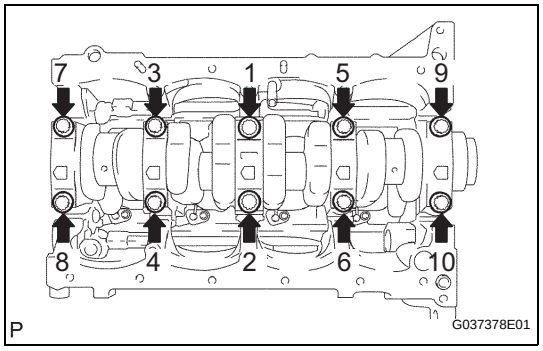

(c) Install the crankshaft bearing cap bolts.
HINT:
The main bearing cap bolts are tightened in 2 progressive steps.

(d) Step 1
(1) Install and uniformly tighten the 10 main bearing cap bolts in the sequence shown in the illustration.
Torque: 39 N*m (398 kgf*cm, 29 ft.*lbf)
If any of the main bearing cap bolts does not meet the torque specification, replace the main bearing cap bolt.

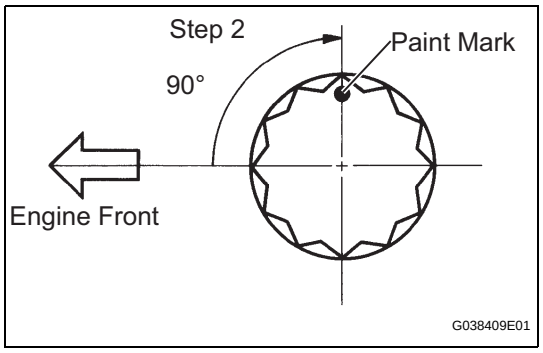

(e) Step 2
(1) Mark the front of the bearing cap bolts with paint.
(2) Retighten the bearing cap bolts by 90° in the order above.
(3) Check that the painted mark is now at a 90° angle to the front.

(f) Check that the crankshaft turns smoothly.

(g) Check the crankshaft thrust clearance (see step 5).

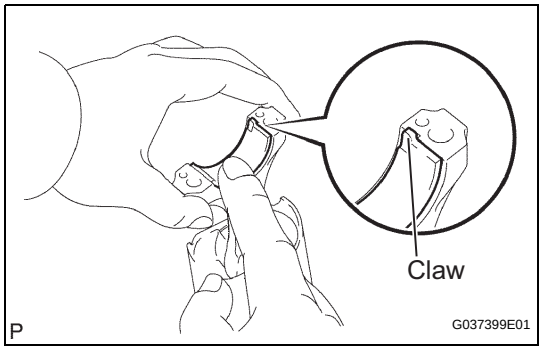

15. INSTALL CONNECTING ROD BEARING

(a) Align the bearing claw with the groove of the connecting rod or connecting cap.

(b) Install the bearings in the connecting rod and connecting rod cap.
NOTICE:
Clean the backside of the bearing and the bearing surface of the connecting rod.

16. INSTALL PISTON SUB-ASSEMBLY WITH CONNENTING ROD

(a) Apply engine oil to the cylinder walls, the pistons, and the surfaces of connecting rod bearings.

EM

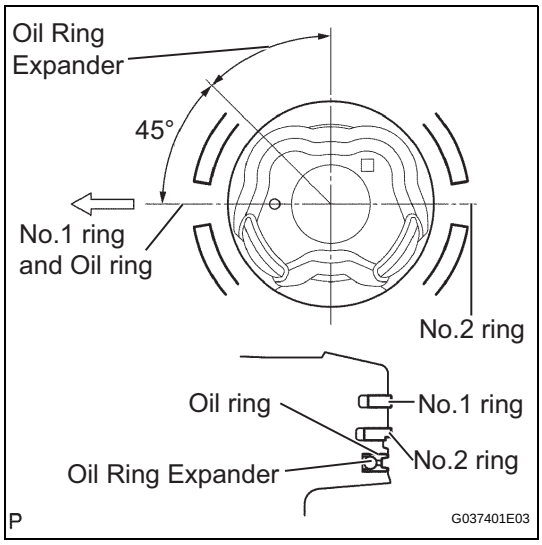

(b) Position the piston rings so that the ring ends are as shown in the illustration.
CAUTION:
Do not align the ring ends.

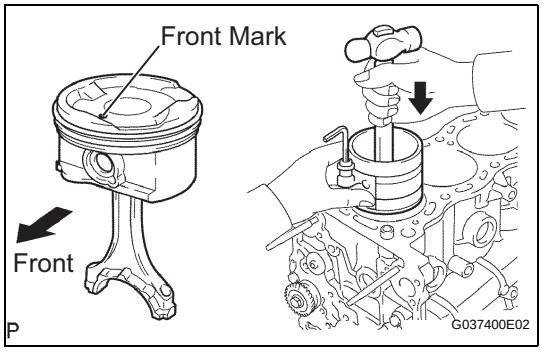

(c) Using a piston ring compressor, push the correctly numbered piston and connecting rod assembly into the cylinder with the front mark of the piston facing forward.
(d) Match the numbered connecting rod cap with the connecting rod.
NOTICE:
- **Match the numbered connecting rod cap with the connecting rod.**

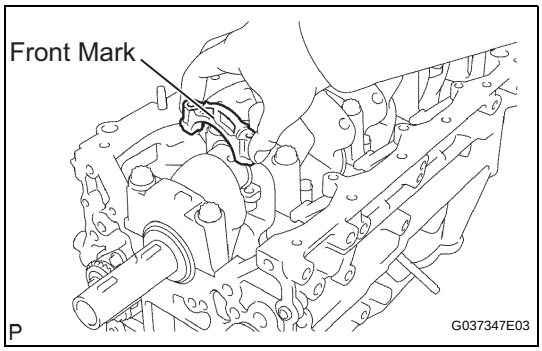

(e) Check that the front mark of the connecting rod cap is facing forward.
(f) Apply a light coat of engine oil to the threads and under the heads of the connecting rod cap bolts.

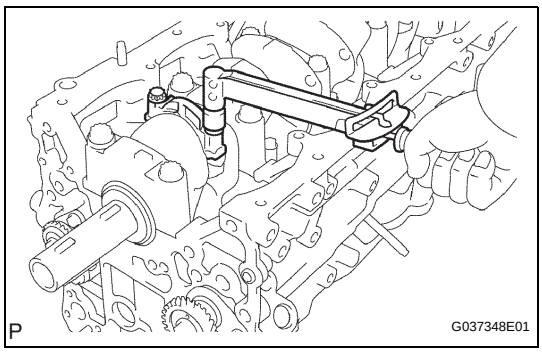

(g) Install and alternately tighten the bolts of the connecting rod cap in several steps.
Torque: 25 N*m (250 kgf*cm, 18 ft.*lbf)

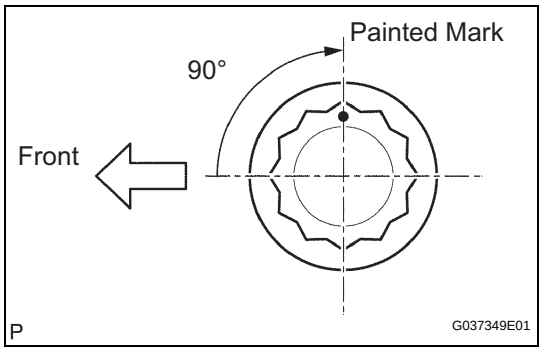

(h) Mark the front side of each connecting cap bolt with paint.
(i) Retighten the cap bolts by 90° as shown.
(j) Check that the painted mark is now at a 90° angle to the front.
(k) Check that the crankshaft turns smoothly.
(l) Check the connecting rod thrust clearance (see step 1).

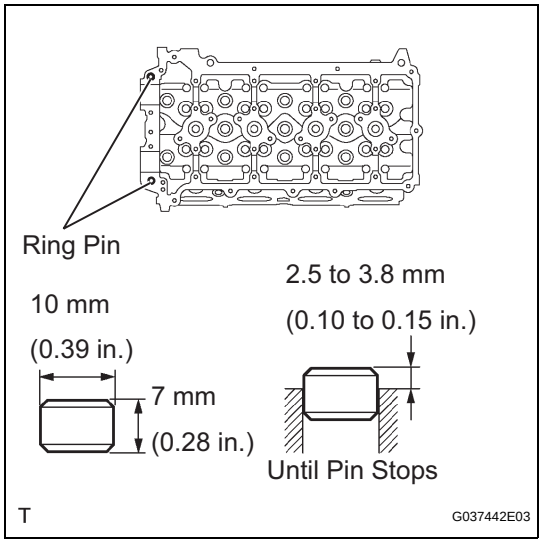

17. INSTALL CAMSHAFT BEARING CAP SETTING RING PIN

NOTICE:

It is not necessary to remove with head pin unless it is being replaced.

(a) Using a plastic-faced hammer, tap in a new ring pin until the pin stops.

EM

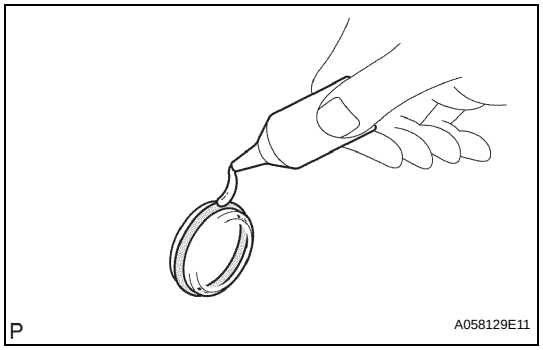

18. INSTALL NO. 1 TIGHT PLUG

NOTICE:

If water leaks from the tight plug or the plug corrodes, replace it.

(a) Apply adhesive to the tight plug hole of the cylinder head.

Adhesive:

Part No. 08833-00070, THREE BOND 1324 or equivalent.

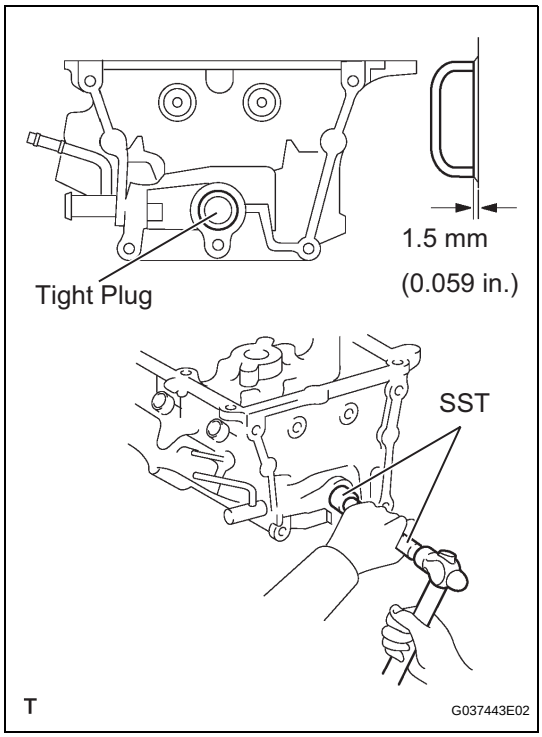

(b) Using SST, tap in a new tight plug to the cylinder head as shown in the illustration.
SST 09950-60010 (09951-00250), 09950-70010 (09951-07100)

19. INSTALL STUD BOLT
NOTICE:
If the stud bolt is deformed or the threads are damaged, replace it.

(a) Using E6 and E7 "torx" socket wrenchs, install the stud bolts.
Torque: 3.0 N*m (31 kgf*cm, 27 in.*lbf) for stud bolt A
7.5 N*m (76 kgf*cm, 66 in.*lbf) for stud bolt B
9.5 N*m (97 kgf*cm, 84 in.*lbf) for stud bolt C

EM

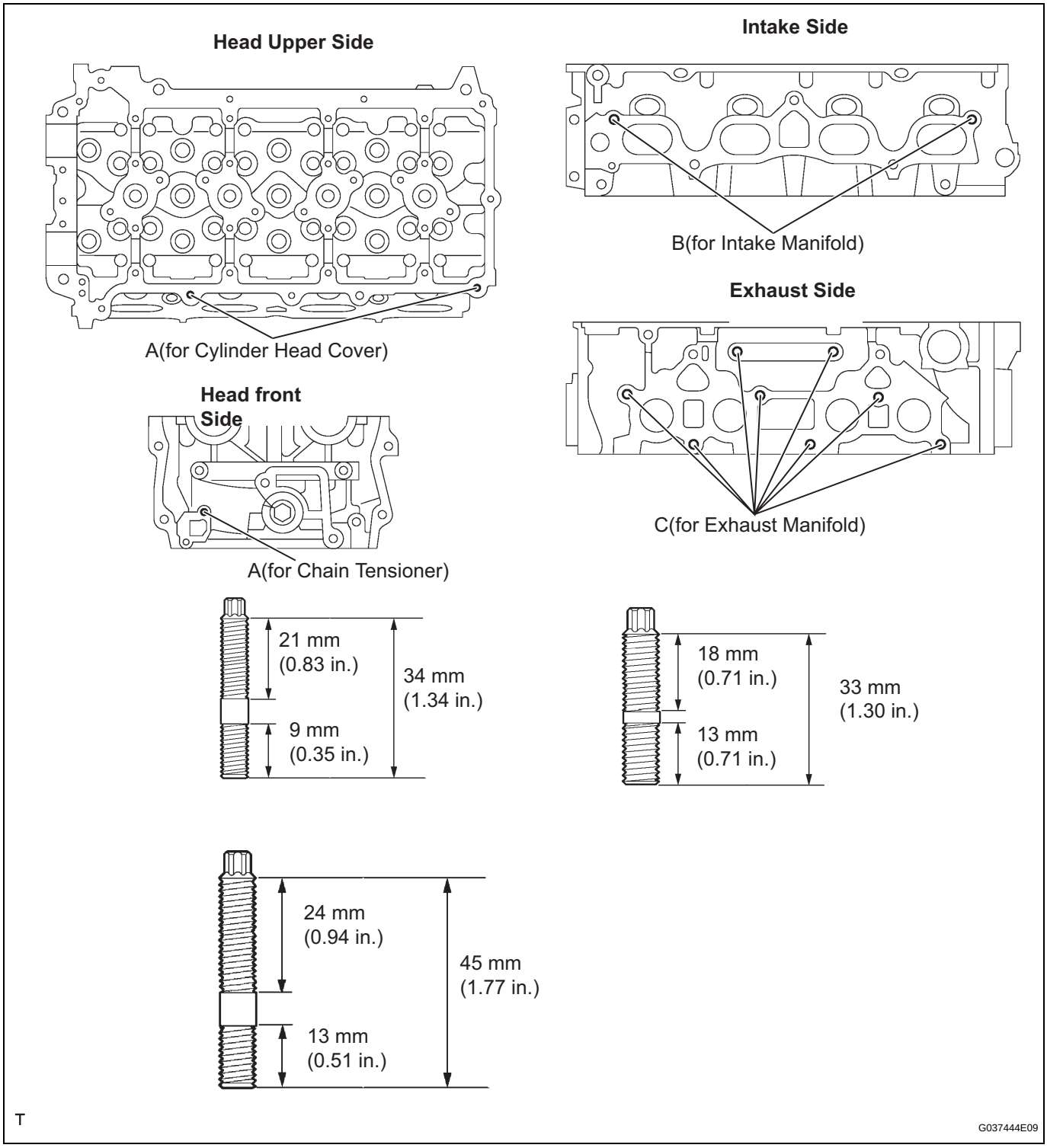

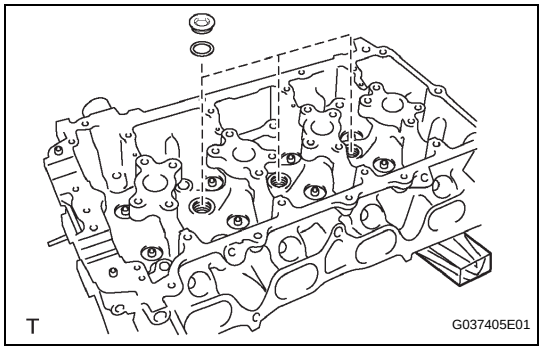

20. INSTALL NO. 1 WITH HEAD STRAIGHT SCREW PLUG

(a) Using a 10 mm hexagon wrench, install 3 new gaskets and the straight screw plugs.
Torque: 44 N*m (449 kgf*cm, 32 ft.*lbf)

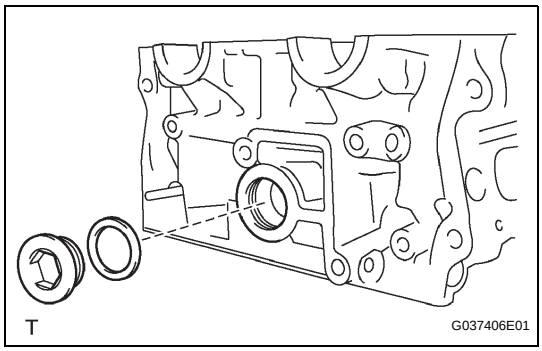

21. INSTALL NO. 2 WITH HEAD STRAIGHT SCREW PLUG

(a) Using a 19 mm hexagon wrench, install a new gasket and the straight screw plug.
Torque: 90 N*m (918 kgf*cm, 66 ft.*lbf)

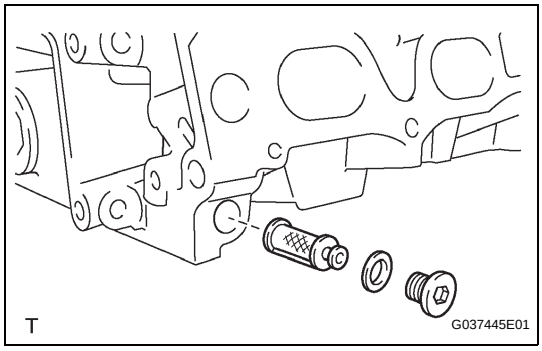

22. INSTALL OIL CONTROL VALVE FILTER

(a) Check that no foreign matter is on the mesh part of the filter.
If foreign objects are present, clean the part thoroughly.

(b) Using a 8 mm hexagon wrench, install a new gasket and the oil control valve filter with the screw plug.
Torque: 30 N*m (306 kgf*cm, 22 ft.*lbf)

EM

23. INSTALL VALVE SPRING SEAT

(a) Install the valve spring seats to the cylinder head.

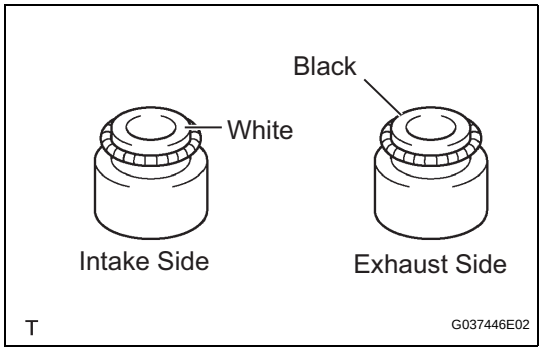

24. INSTALL VALVE STEM OIL SEAL

(a) Apply a light coat of engine oil to new oil seals.
NOTICE:
Pay attention when installing the intake and exhaust oil seals. For example, installing the intake oil seal into the exhaust side or installing the exhaust oil seal to the intake side can cause installation problems later.
HINT:
The intake valve oil seals are white and the exhaust valve oil seals are black.

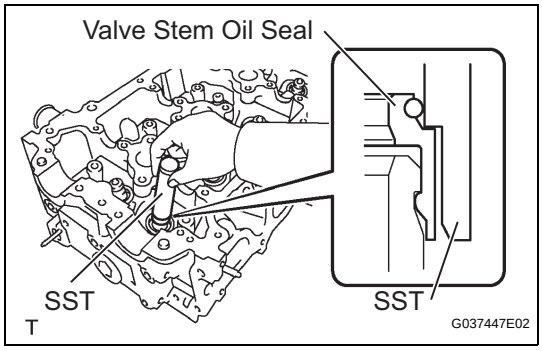

(b) Using SST, push in the oil seals.
SST 09201-41020
NOTICE:
Failure to use SST will cause the seal to be damaged or improperly seated.

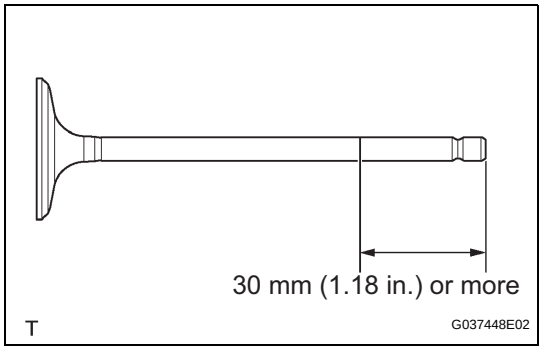

25. INSTALL INTAKE VALVE

(a) Apply plenty of engine oil to the tip area of the intake valve shown in the illustration.

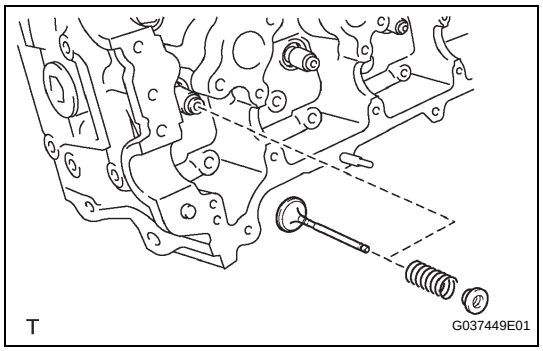

(b) Install the valve, compression spring and spring retainer to the cylinder head.
NOTICE:
Install the same parts in the same combination to the original locations.

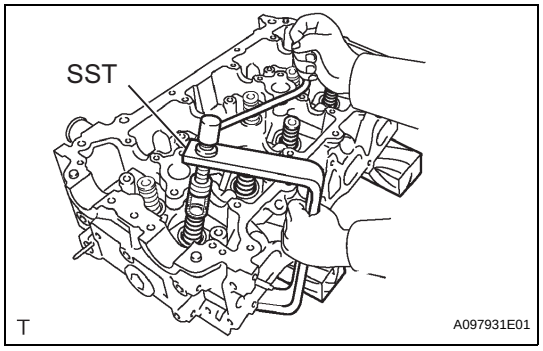

(c) Using SST and wooden blocks, compress the spring and install the 2 retainer locks.
SST 09202-70020 (09202-00010)

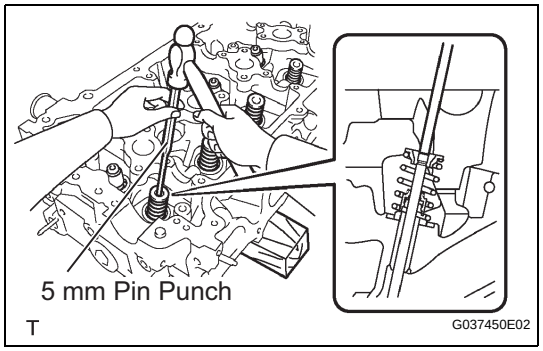

(d) Using a 5 mm pin punch and plastic-faced hammer, lightly tap the valve stem tip to ensure a proper fit.
NOTICE:
Be careful not to damage the valve stem tip.

26. INSTALL EXHAUST VALVE

(a) Apply plenty of engine oil to the tip area of the intake valve shown in the illustration.

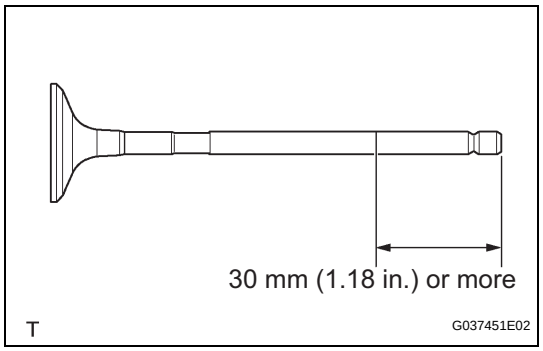

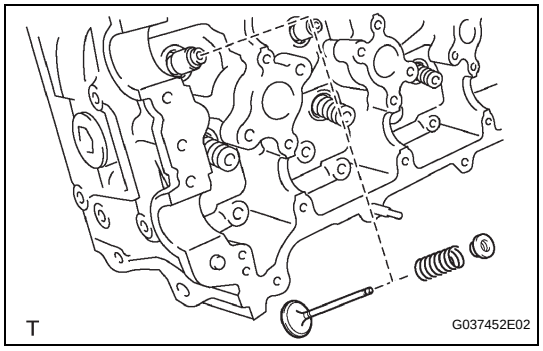

(b) Install the valve, compression spring and spring retainer to the cylinder head.
NOTICE:
Install the same parts in the same combination to the original locations.

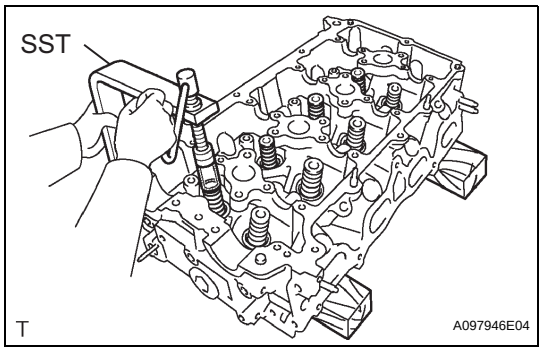

(c) Using SST and wooden blocks, compress the spring and install the 2 retainer locks.
SST 09202-70020 (09202-00010)

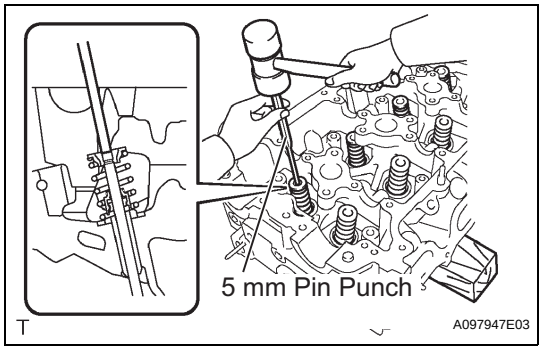

(d) Using a 5 mm pin punch and plastic-faced hammer, lightly tap the valve stem tip to ensure a proper fit.
NOTICE:
Be careful not to damage the valve stem tip.

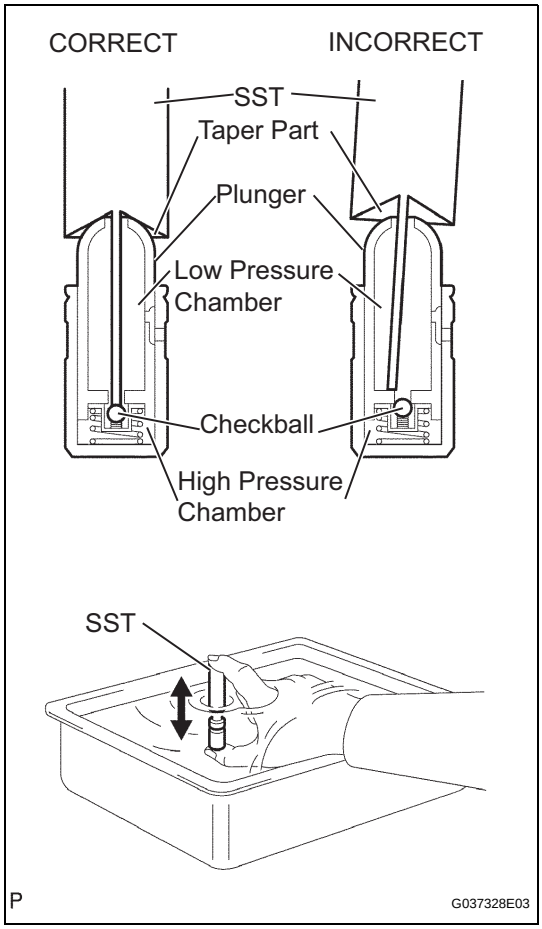

27. INSTALL VALVE LASH ADJUSTER ASSEMBLY
NOTICE:
- **Keep the lash adjuster free from dirt and foreign objects.**
- **Only use clean engine oil.**

(a) Place the lash adjuster into a container full of engine oil.
(b) Insert SST's tip into the lash adjuster's plunger and use the tip to press down on the checkball inside the plunger.
SST 09276-75010
(c) Squeeze the SST and lash adjuster together to move the plunger up and down 5 to 6 times.
(d) Check the movement of the plunger and bleed the air.
OK:
Plunger moves up and down.
NOTICE:
When bleeding high-pressure air from the compression chamber, make sure that the tip of the SST is actually pressing the checkball as shown in the illustration. If the checkball is not pressed, air will not bleed.
(e) After bleeding the air, remove the SST. Then quickly and firmly press the plunger with a finger.
OK:
Plunger is very difficult to move.
If the result is not as specified, replace the lash adjuster.

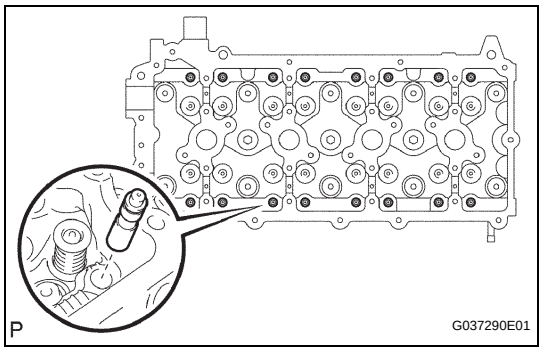

(f) Install the lash adjusters.
NOTICE:
Install the lash adjuster to the original position.

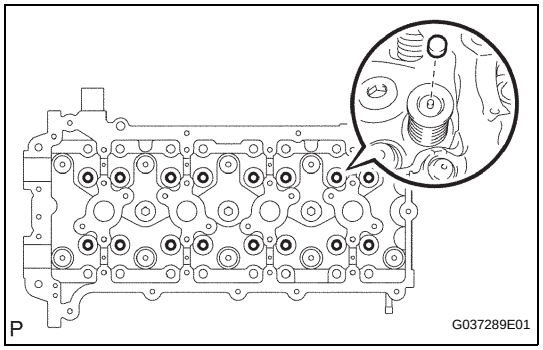

28. INSTALL VALVE STEM CAP
(a) Apply a light coat of engine oil to the valve stem caps.
(b) Install the valve stem caps to the cylinder head.

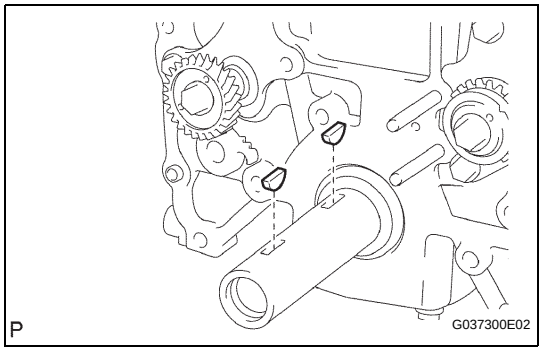

29. INSTALL CRANKSHAFT PULLEY SET CRANKSHAFT KEY
(a) Install the 2 pulley keys to the crankshaft.

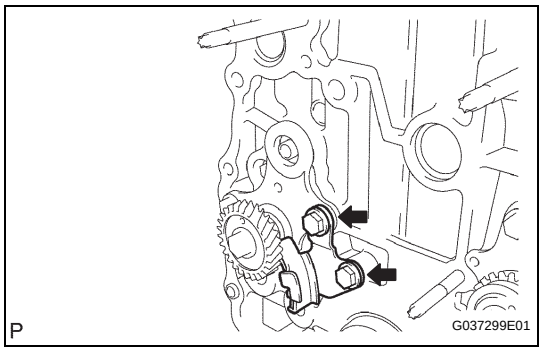

30. INSTALL NO. 4 CHAIN VIBRATION DAMPER
(a) Install the vibration damper No.4 with the 2 bolts.
Torque: 18 N*m (185 kgf*cm, 13 ft.*lbf)

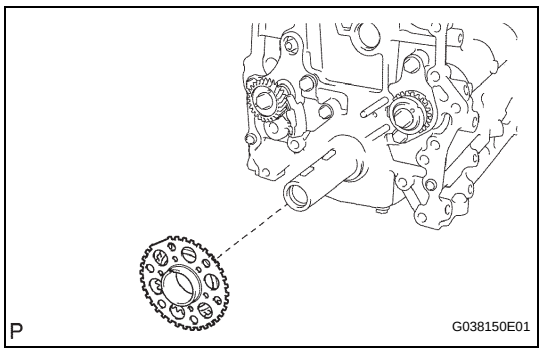

31. INSTALL NO.2 CHAIN SUB-ASSEMBLY
(a) Install the timing sprocket No.2 as shown in the illustration.
NOTICE:
Check that the No.1 cylinder is at TDC and that the weights of the No.1 and No.2 balanceshafts are at the bottom side.
HINT:
Install the sensor plate with the front mark facing forward.

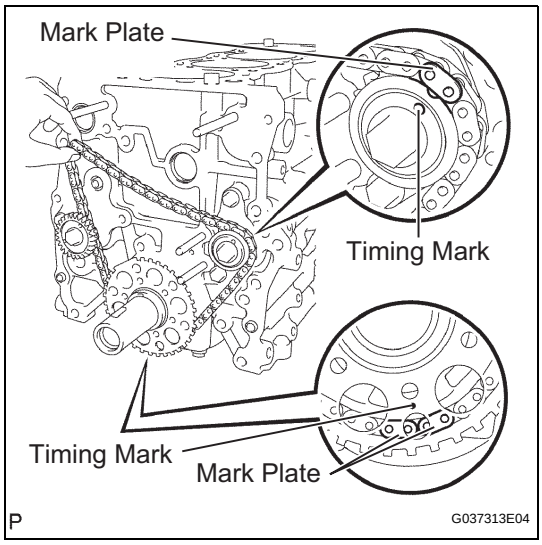

(b) As shown in the illustration, install the chain on the sprocket and gear with the painted marks aligned with the timing marks on the sprocket and gear.

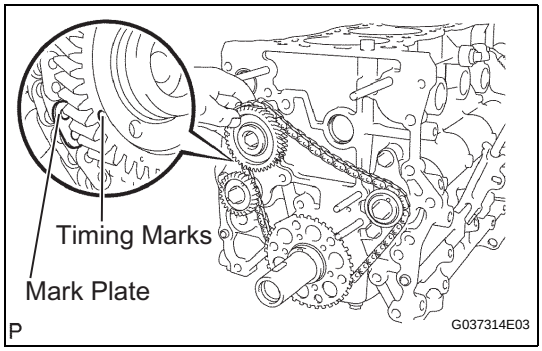

(c) Fit the other mark link of the crankshaft timing sprocket behind the large timing mark of the balanceshaft drive gear.

(d) Insert the balanceshaft drive gear shaft through the balanceshaft drive gear so that it fits into the thrust plate hole.

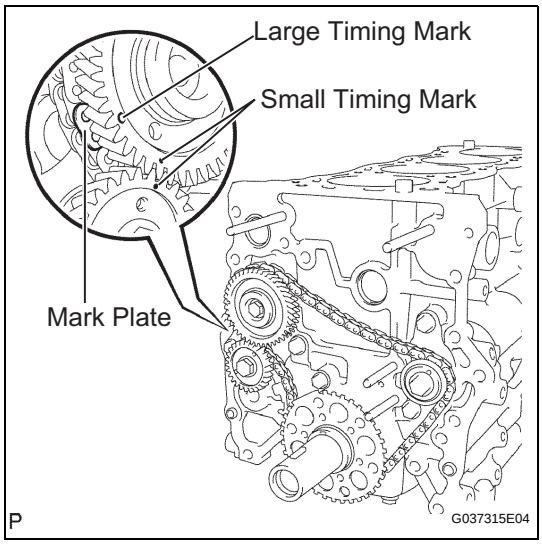

(e) Align the small timing mark of the balanceshaft drive gear with the timing mark of the balanceshaft timing gear.

(f) Install the bolt to the balanceshaft drive gear and tighten it.
Torque: 25 N*m (255 kgf*cm, 18 ft.*lbf)

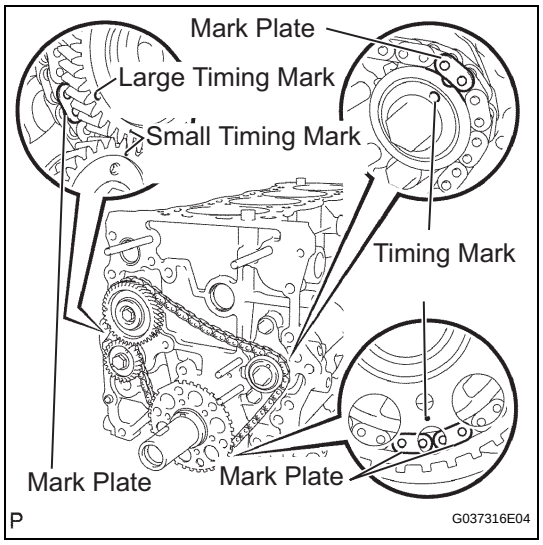

(g) Check that each timing mark is matched with the corresponding mark link.
NOTICE:
Check that the No.1 cylinder is at TDC and that the weights of the No.1 and No.2 balanceshafts are at the bottom side.

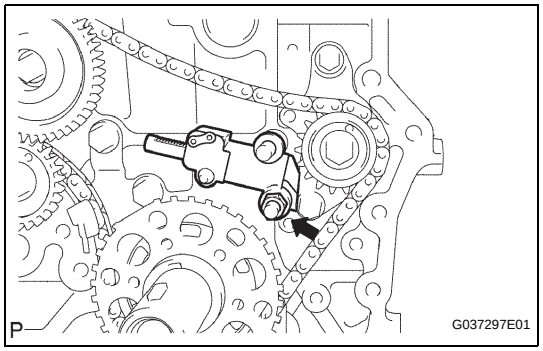

32. INSTALL NO. 2 CHAIN TENSIONER ASSEMBLY

(a) Install the chain tensioner assembly No.2 with the nut.
Torque: 18 N*m (185 kgf*cm, 13 ft.*lbf)
NOTICE:
Assemble the chain tensioner with the pin installed, then remove the pin after assembly. When doing this, avoid pushing the vibration damper against the chain.

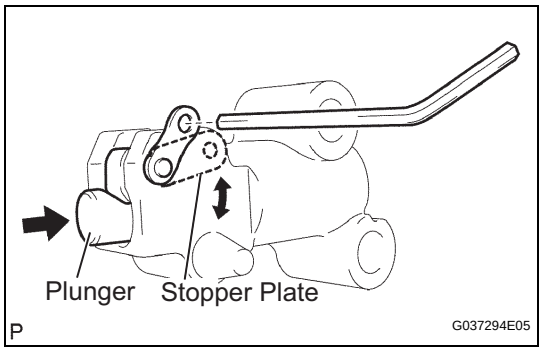

(b) Move the stopper plate downward to release the lock, and push the plunger deep into the tensioner.
(c) Move the stopper plate upward to set the lock, and insert a hexagon wrench into the stopper plate's hole.

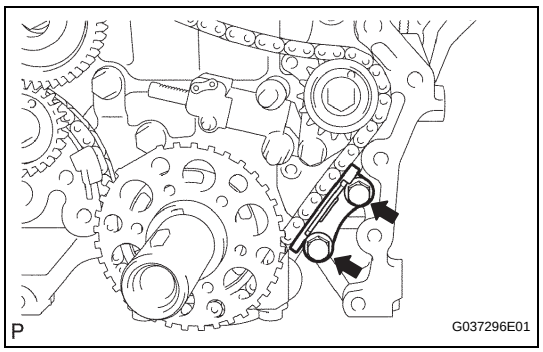

33. INSTALL NO. 3 CHAIN VIBRATION DAMPER

(a) Install the chain vibration damper No.3 with the 2 bolts.
Torque: 18 N*m (185 kgf*cm, 13 ft.*lbf)

EM

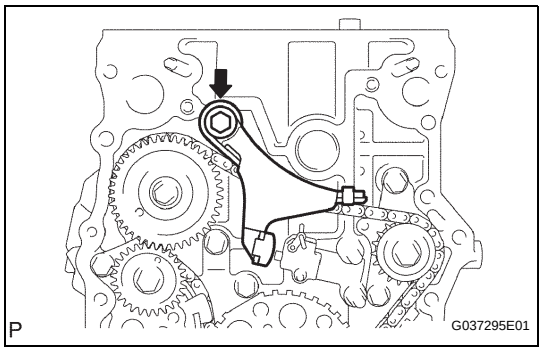

34. INSTALL NO. 2 CHAIN VIBRATION DAMPER

(a) Install the chain vibration damper No.2 with the bolt.
Torque: 27 N*m (270 kgf*cm, 20 ft.*lbf)

(b) Remove a pin from the chain tensioner assy No.2 and release the plunger.

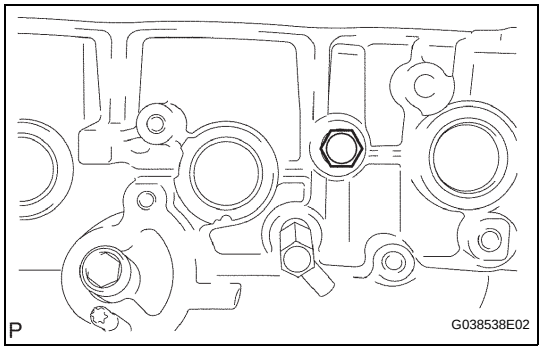

35. INSTALL NO. 1 WITH HEAD TAPER SCREW PLUG

(a) Install the screw plug No.1 to the cylinder block.
Torque: 25 N*m (250 kgf*cm, 18 ft.*lbf)

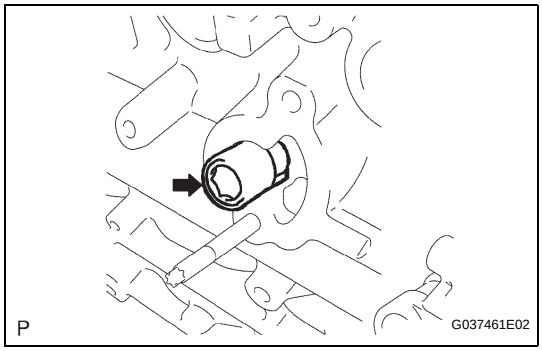

36. INSTALL OIL FILTER BRACKET SUB-ASSEMBLY

(a) Using a hexagon wrench, install the oil filter bracket union.
Torque: 25 N*m (255 kgf*cm, 18 ft.*lbf)

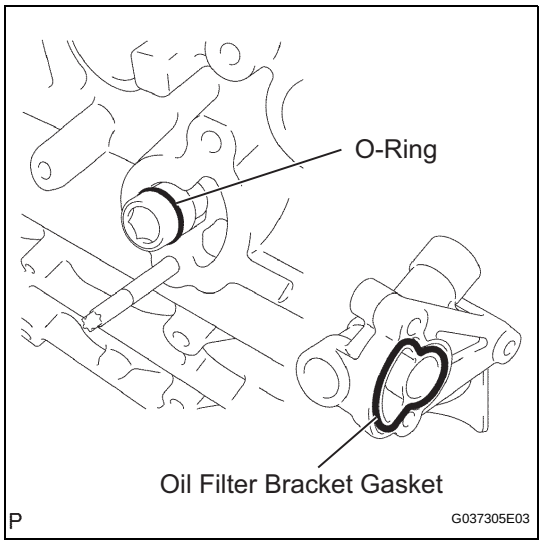

(b) Install a new oil filter bracket gasket to the oil filter bracket.

(c) Install a new O-ring to the oil filter bracket union.
NOTICE:
Apply a light coat of engine oil to the new O-ring and oil filter bracket.

(d) Install 2 new gaskets and the 2 screw plugs to the oil filter bracket.
Torque: 49 N*m (500 kgf*cm, 36 ft.*lbf)

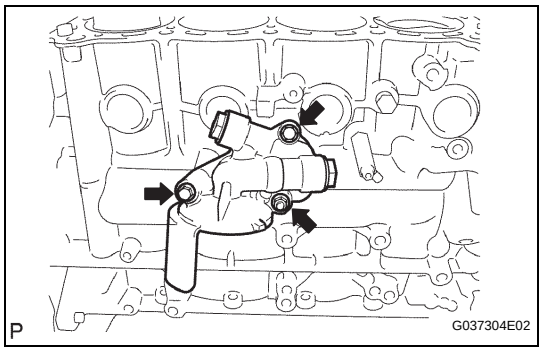

(e) Install the oil filter bracket with the 2 bolts and nut.
Torque: 25 N*m (255 kgf*cm, 18 ft.*lbf)

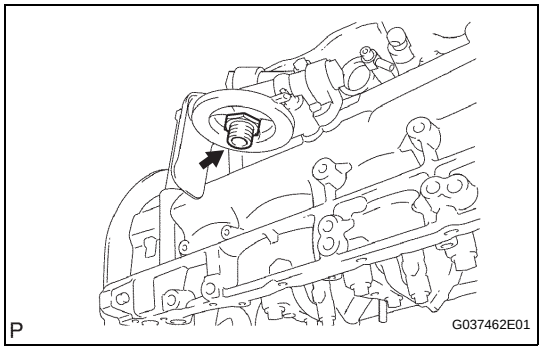

(f) Using a 27 mm socket wrench, install the oil filter union.
Torque: 43 N*m (439 kgf*cm, 32 ft.*lbf)

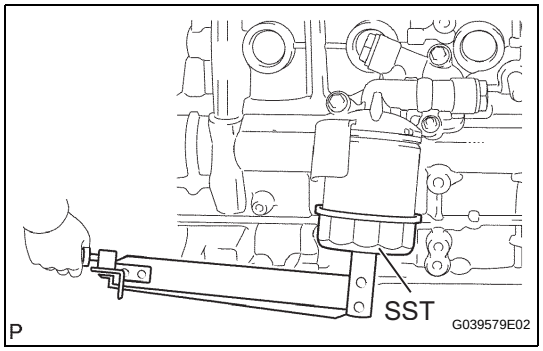

37. INSTALL OIL FILTER SUB-ASSEMBLY

(a) Check and clean the oil filter installation surface.
(b) Apply clean engine oil to the gasket of a new oil filter.
(c) Lightly screw the oil filter into place, and tighten it until the gasket contacts the seat.
(d) Using SST, tighten the oil filter.
SST 09228-07501
(1) When using a torque wrench:
Using a torque wrench, tighten the oil filter.
Torque: 17 N*m (175 kgf*cm, 13 ft.*lbf)
(2) When not using a torque wrench:
Tighten it an additional 3/4 turn.

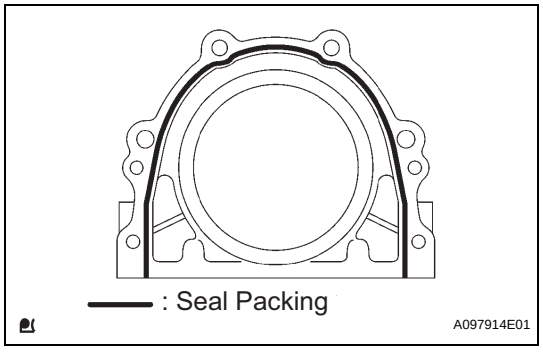

38. INSTALL ENGINE REAR OIL SEAL RETAINER

(a) Apply seal packing in a continuous bead as shown in the illustration.
Seal packing:
Part No. 08826-00080 or equivalent
Seal width:
2 to 3 mm (0.079 to 0.118 in.)
NOTICE:
- **Remove any oil from the contact surface.**
- **Install the crankcase within 3 minutes after applying seal packing.**
- **Do not start the engine for at least 4 hours after installing.**

(b) Install the oil seal retainer with the 6 bolts.
Torque: 13 N*m (133 kgf*cm, 10 ft.*lbf)

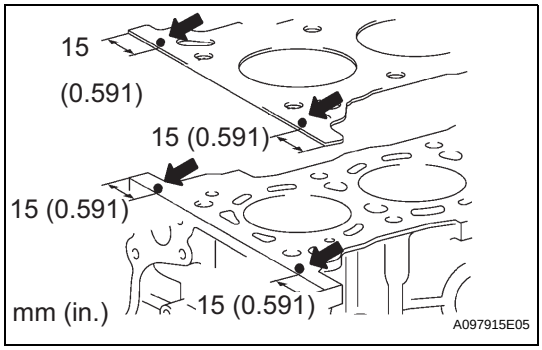

39. INSTALL CYLINDER HEAD GASKET

(a) Apply a continuous bead (seal width: 4 to 7 mm (0.15 to 0.28 in.)) of seal packing to the cylinder block upper side and cylinder head gasket upper side as shown in the illustration.

Seal packing:
Part No. 08826-00100 or equivalent
Seal width:
4 to 7 mm (0.15 to 0.28 in.)
NOTICE:
- **Remove any oil from the contact surface.**
- **Install the cylinder head gasket within 3 minutes after applying the seal packing.**
- **Install the cylinder head bolt within 15 minutes after applying the seal packing.**
- **Do not put into engine oil within 4 hours of installation.**

EM

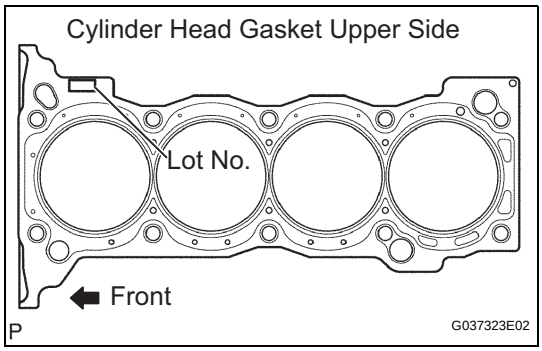

(b) Install a new cylinder head gasket on the cylinder block surface with the Lot No. stamp upper side facing upward.

NOTICE:
- **Make sure that the installation direction is correct.**
- **Place the cylinder head gently to avoid damaging the gasket with the bottom part of the head.**

40. INSTALL CYLINDER HEAD SUB-ASSEMBLY

HINT:
The cylinder head bolts are tightened in 3 progressive steps.

(a) Place the cylinder head on the cylinder block.

(b) Apply a light coat of engine oil to the threads and under the heads of the cylinder head bolts.

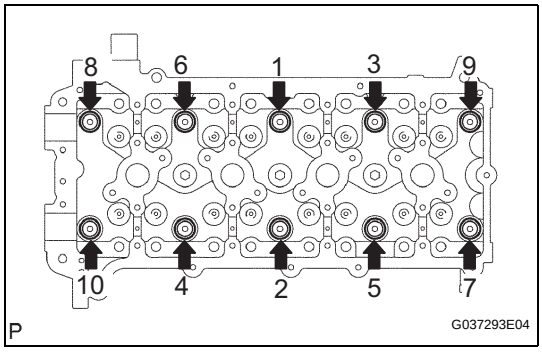

(c) Step 1

(1) Install and uniformly tighten the 10 cylinder head bolts with the plate washers, in several steps, in the sequence shown.

Torque: 39 N*m (398 kgf*cm, 29 ft.*lbf)

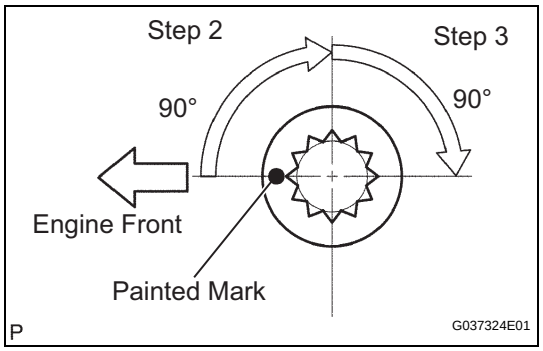

(d) Step 2
  (1) Mark the cylinder head bolt head with paint as shown in the illustration.
  (2) Retighten the cylinder head bolts by 90°.

(e) Step 3
  (1) Retighten the cylinder head bolts by an additional 90°.
  (2) Check that the painted mark is now facing rearward.

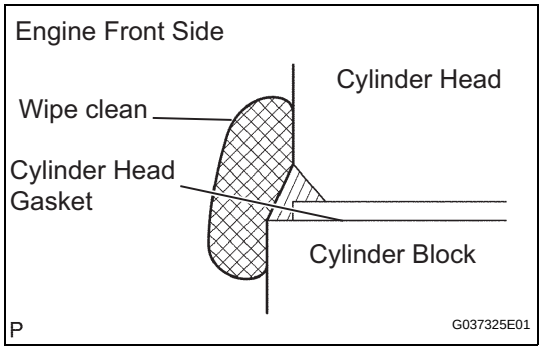

(f) Seal packing will seep out on the engine's front side. Thoroughly wipe clean any seal packing.

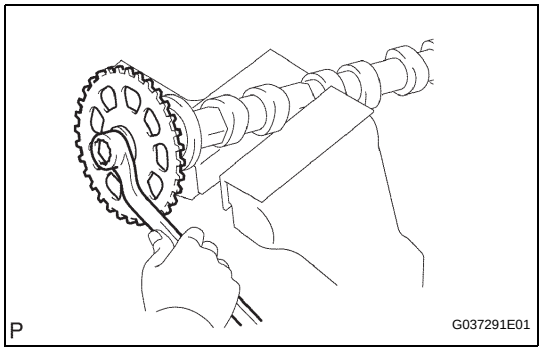

41. INSTALL CAMSHAFT TIMING SPROCKET

(a) Clamp the camshaft in a vise and then install the camshaft timing sprocket to the camshaft with the sprocket bolt.
Torque: 78 N*m (795 kgf*cm, 58 ft.*lbf)
NOTICE:
Be careful not to damage the camshaft in the vise.

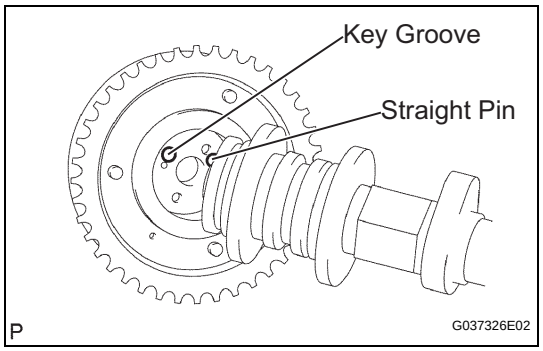

42. INSTALL CAMSHAFT TIMING GEAR ASSEMBLY

(a) Put the camshaft timing gear and camshaft together by aligning the key groove and straight pin.

(b) Lightly press the gear against the camshaft, and turn the gear. Push further at the position where the pin enters the groove.
CAUTION:
Be sure not to turn the camshaft timing gear in the retard direction (the right angle).

(c) Check that there is no clearance between the gear's fringe and the camshaft.

(d) Tighten the fringe bolt with the camshaft timing gear fixed.
Torque: 78 N*m (795 kgf*cm, 58 ft.*lbf)

(e) Check that the camshaft timing gear can move in the retard direction (the right angle), and is locked at the most retarded position.

EM

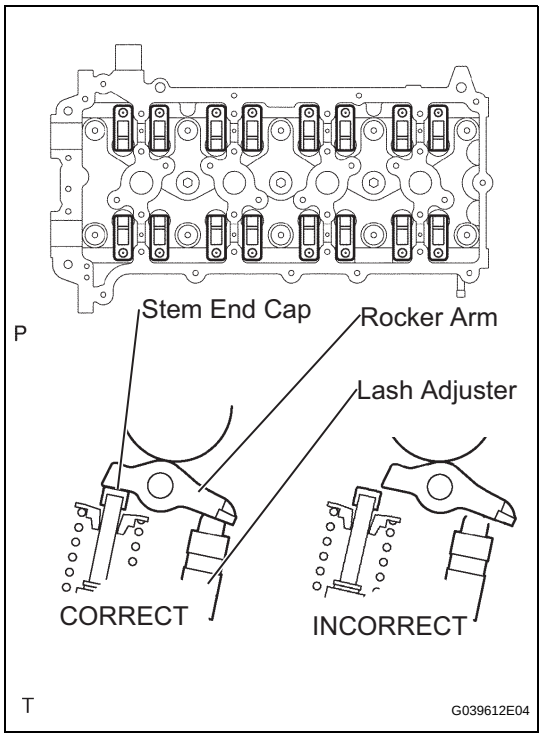

43. INSTALL NO. 1 VALVE ROCKER ARM SUB-ASSEMBLY

(a) Set the 16 rocker arms to the lash adjusters.

NOTICE:

Before and after setting the camshaft and No.2 camshaft, firmly set the rocker arm to the lash adjuster.

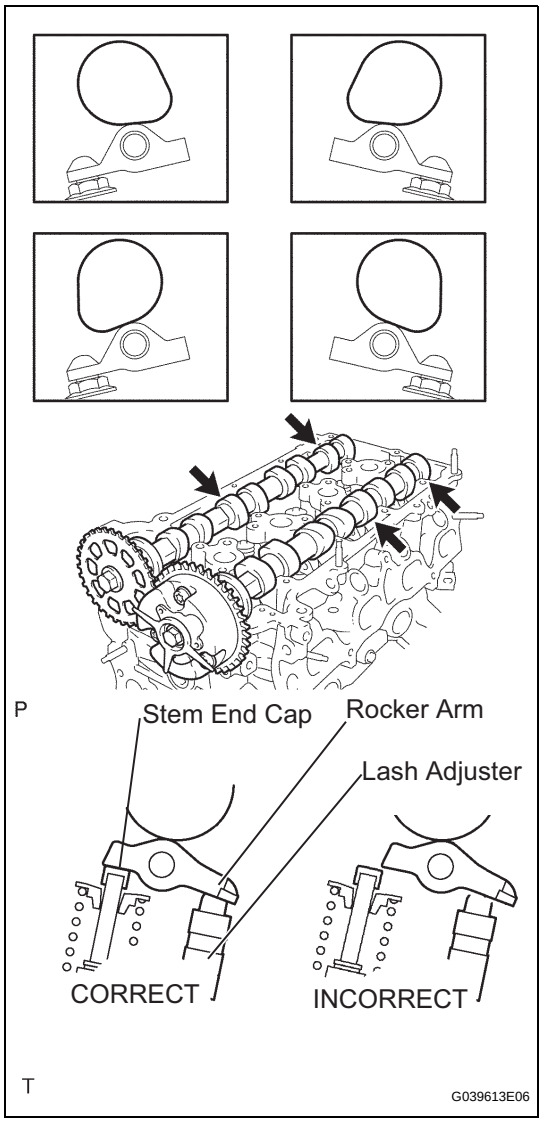

44. INSTALL CAMSHAFTS

(a) Apply clean engine oil to the camshaft's cam portion and the cylinder head journals.

(b) Set the camshaft and No.2 camshaft as shown in the illustration.

NOTICE:

Before and after setting the camshaft and No.2 camshaft, firmly set the rocker arm to the lash adjuster.

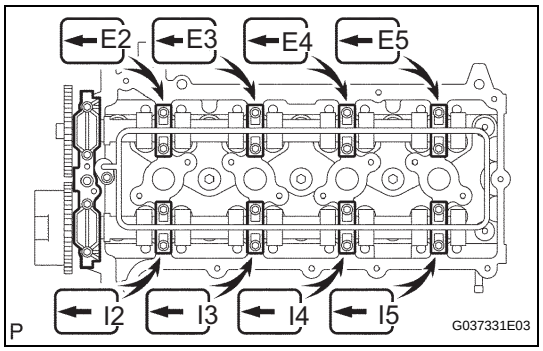

45. INSTALL CAMSHAFT BEARING CAP

(a) Temporarily install the camshaft bearing cap No.1.

(b) Check the proper location of each camshaft bearing cap No.2 and install them.

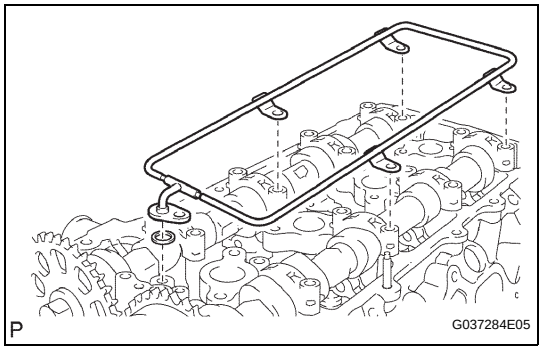

(c) Install a new O-ring to the camshaft bearing cap No.1.

(d) Temporarily install the oil delivery pipe.

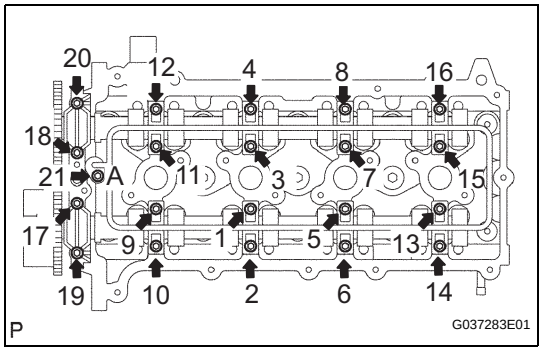

(e) Tighten the 21 bolts and 20 washers in the order shown in the illustration.

Torque: 12 N*m (122 kgf*cm, 9 ft.*lbf) for bolt A
16 N*m (160 kgf*cm, 11 ft.*lbf) for except bolt A

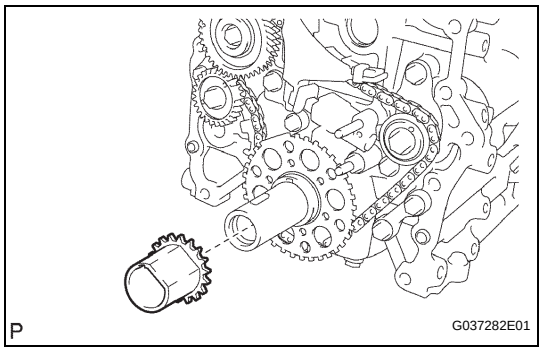

46. INSTALL CRANKSHAFT TIMING SPROCKET

(a) Install the timing sprocket as shown in the illustration.

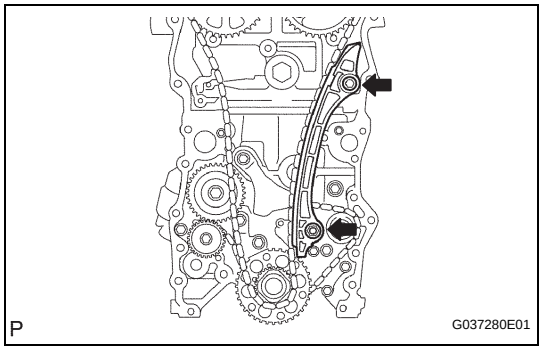

47. INSTALL NO. 1 CHAIN VIBRATION DAMPER

(a) Install the vibration damper with the bolt and nut.
Torque: 21 N*m (214 kgf*cm, 15 ft.*lbf)

EM

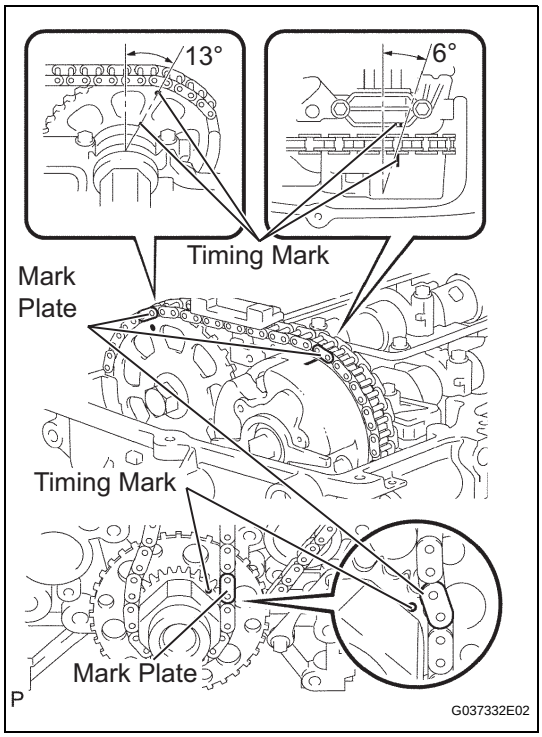

48. INSTALL CHAIN SUB-ASSEMBLY

(a) As shown in the illustration, install the chain on the sprocket and gear with the painted marks aligned with the timing marks on the sprocket and gear.
HINT:
- The camshaft mark plate is yellow.
- The crankshaft mark plate is orange.

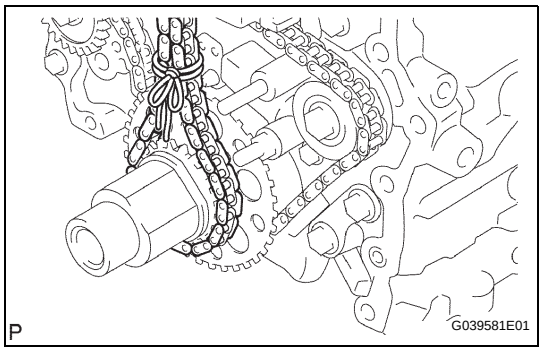

(b) Use a rope to tie the chain of the crankshaft timing sprocket. Tie the rope near the sprocket.
NOTICE:
After the chain tensioner has been installed, the rope must be removed.
HINT:
The rope is tied so that the chain will not jump a tooth.

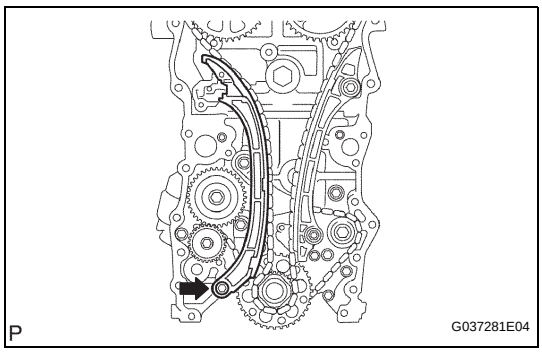

49. INSTALL CHAIN TENSIONER SLIPPER

(a) Install the tensioner slipper with the bolt.
Torque: 21 N*m (214 kgf*cm, 15 ft.*lbf)

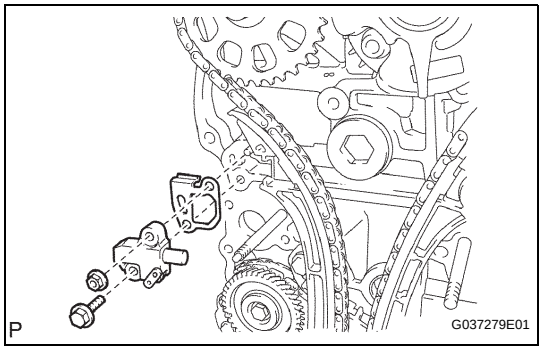

50. INSTALL NO. 1 CHAIN TENSIONER ASSEMBLY

(a) Install a new gasket and the chain tensioner No.1 with the bolt and nut.
Torque: 10 N*m (102 kgf*cm, 7 ft.*lbf)

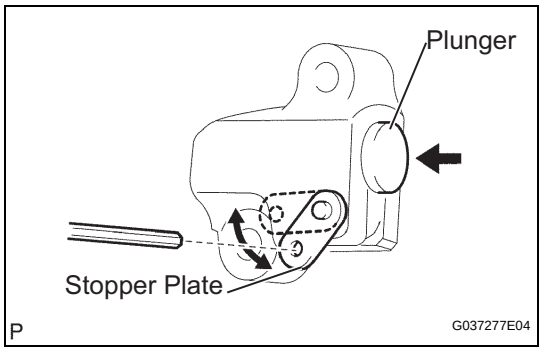

(b) Move the stopper plate upward to release the lock, and push the plunger deep into the tensioner.
(c) Move the stopper plate downward to set the lock, and insert a hexagon wrench into the stopper plate's hole.

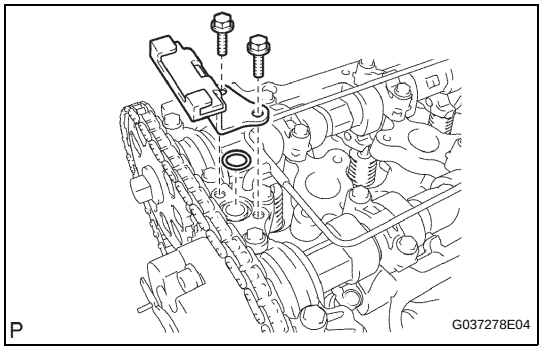

51. INSTALL TIMING CHAIN GUIDE

(a) Install a new O-ring and the chain guide with the 2 bolts.
Torque: 10 N*m (102 kgf*cm, 7 ft.*lbf)

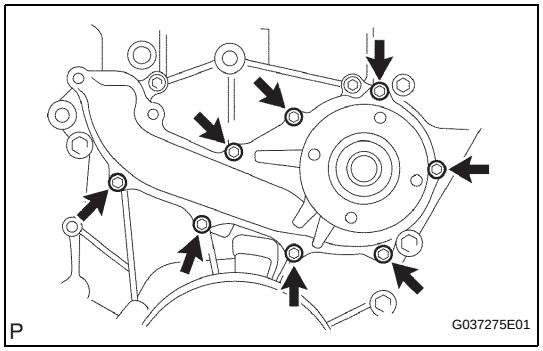

52. INSTALL WATER PUMP ASSEMBLY

(a) Install a new gasket and the water pump with the 8 bolts.
Torque: 9.0 N*m (92 kgf*cm, 80 in.*lbf)

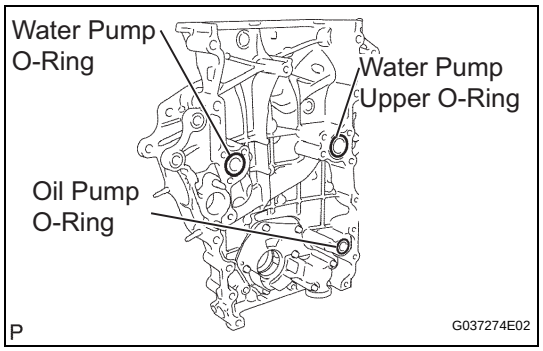

53. INSTALL TIMING CHAIN COVER

(a) Install 3 new O-rings to the timing chain cover as shown in the illustration.

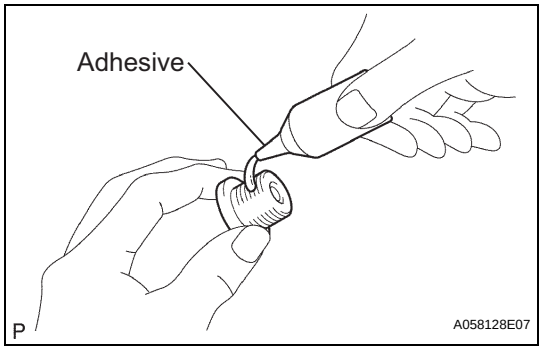

(b) Apply adhesive to the timing gear case plug.
Adhesive:
Part No. 08833-00070, THREE BOND 1324 or equivalent

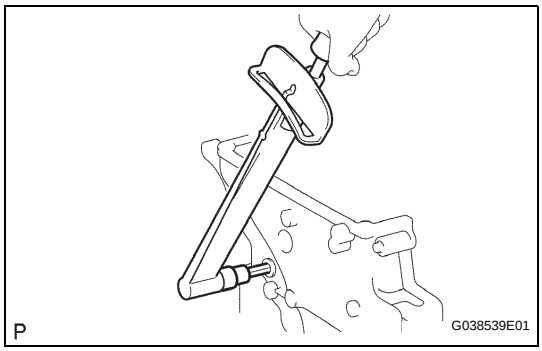

(c) Using a 10 mm socket hexagon wrench, install the timing chain cover plug.
Torque: 17 N*m (170 kgf*cm, 12 ft.*lbf)

(d) Apply seal packing in a continuous bead to the timing chain cover as shown in the following illustration.
Seal packing:
Part No. 08826-00080 or equivalent

Seal width

Position	Specified Condition
A - A,	2.5 to 3.0 mm (0.098 to 0.118 in.)
B - B, C - C	4.0 to 4.5 mm (0.157 to 0.177 in.)
D - D	2.5 to 3.0 mm (0.098 to 0.118 in.)
E	2.5 to 3.5 mm (0.098 to 0.138 in.)

EM

NOTICE:
- **Be sure to clean and degrease the contact surfaces, especially 4 areas indicated by * in the illustration.**
- **When the contact surfaces are wet, wipe off with an oil-free cloth before applying seal packing.**
- **Install the crankcase within 3 minutes and tighten the bolts within 15 minutes after applying seal packing.**
- **Do not start the engine for at least 4 hours after installing.**

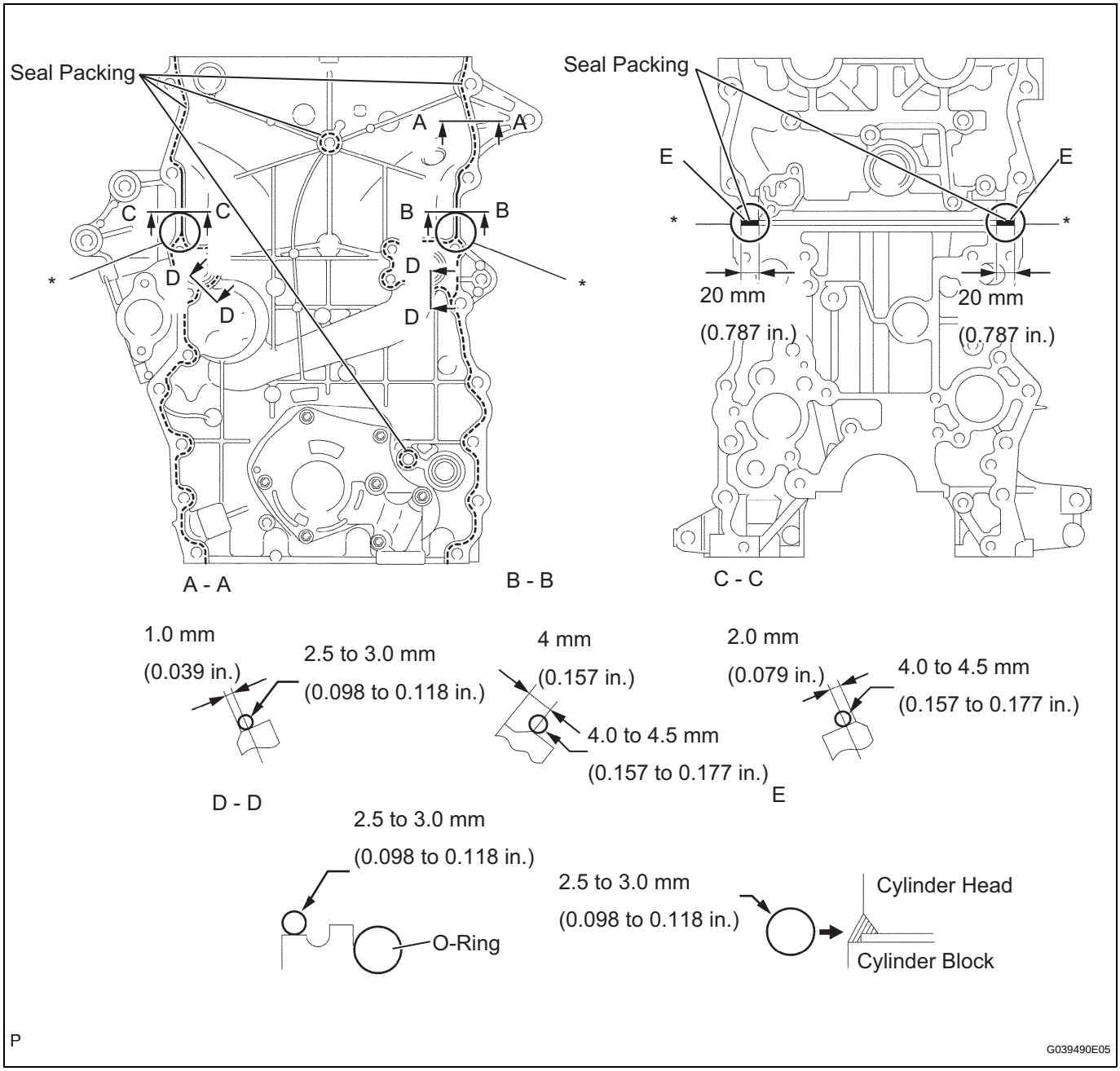

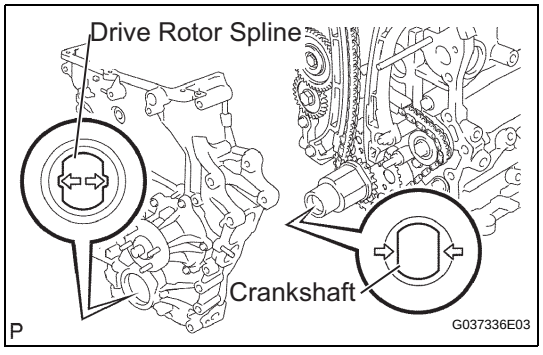

(e) Align the oil pump's drive rotor spline and the crankshaft as shown in the illustration. Install the spline and chain cover to the crankshaft.

(f) Temporarily install the the timing chain cover with the 19 bolts and 2 nuts, but do not tighten the bolts and nuts yet.

(g) Excluding bolts A, fully tighten the bolts and nuts in this order: Area 1, Area 2 and Area 3.
Torque: 21 N*m (214 kgf*cm, 15 ft.*lbf)
HINT:
Bolt length:
75 mm (2.95 in.) for bolt A (M10)
75 mm (2.95 in.) for bolt B (M8)
87 mm (3.43 in.) for bolt C
95 mm (3.74 in.) for bolt D

(h) Fully tighten the bolts labeled A in this order: Area 2 and Area 3.
Torque: 46 N*m (469 kgf*cm, 34 ft.*lbf)

(i) Fully tighten the bolts labeled E in Area 4.
Torque: 21 N*m (214 kgf*cm, 15 ft.*lbf)
HINT:
Bolt length: 35 mm (1.37 in.) for bolt E

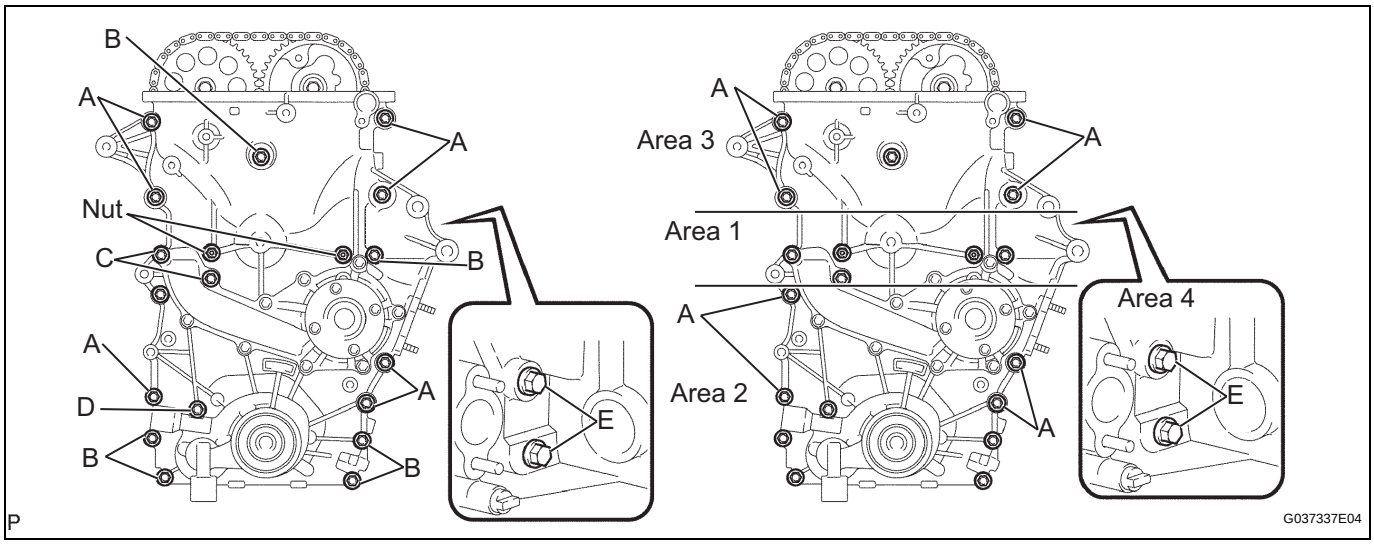

54. INSTALL OIL PAN SUB-ASSEMBLY

(a) Install the stud bolt.

(1) Using an E5 "torx" socket wrench, install the stud bolts labeled A for the oil pan as shown in the illustration.

(2) Using an E7 "torx" socket wrench, install the stud bolts labeled B for the oil strainer as shown in the illustration.
Torque: 7.5 N*m (76 kgf*cm, 66 in.*lbf) for stud bolt A
3.0 N*m (31 kgf*cm, 27 in.*lbf) for stud bolt B

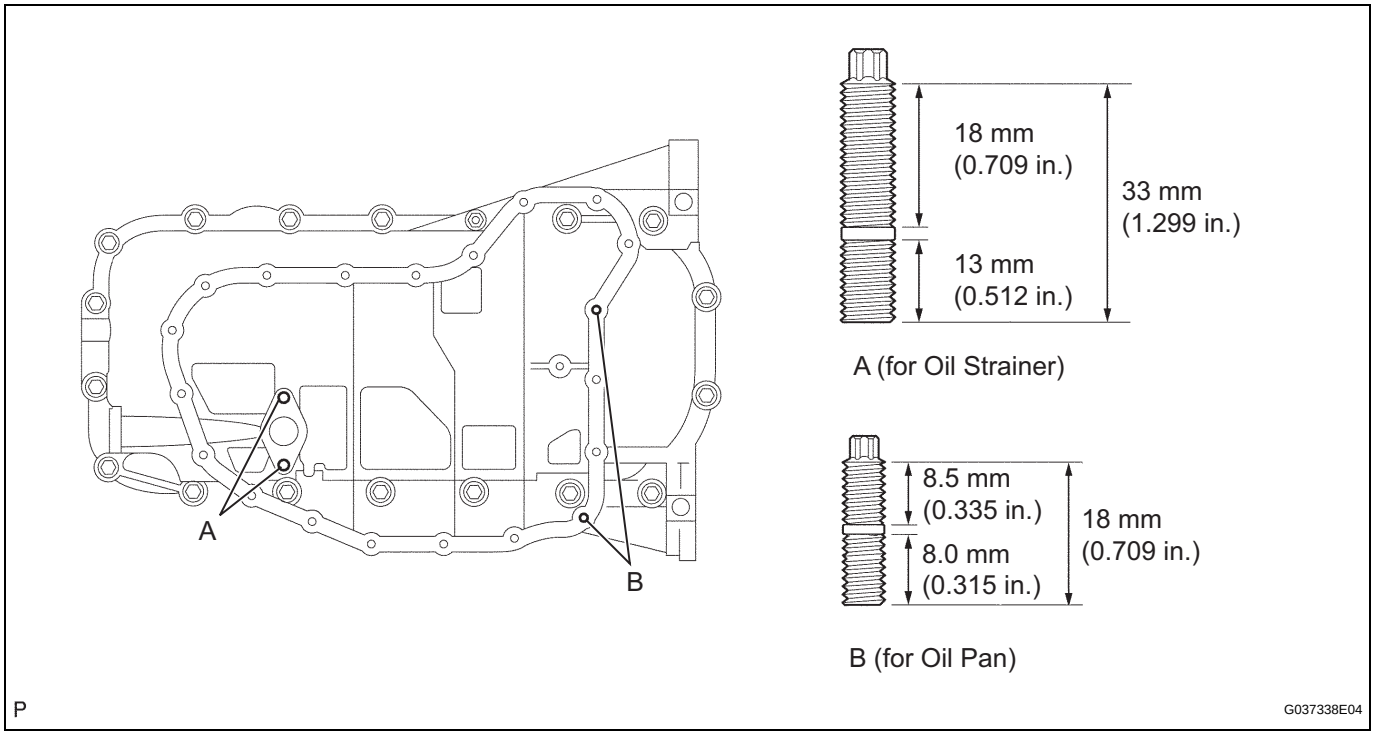

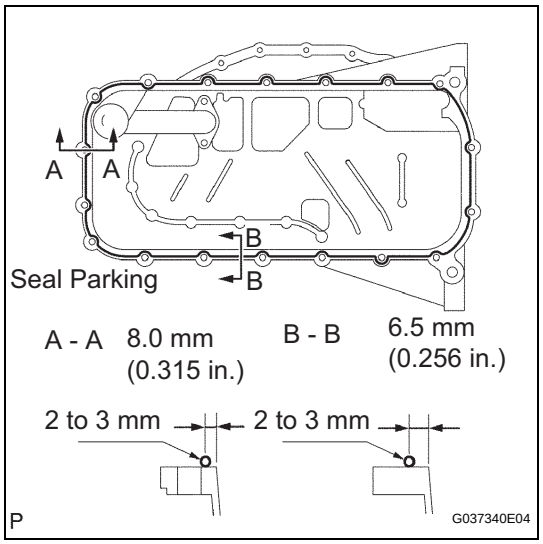

(b) Apply seal packing in a continuous bead as shown in the illustration.

Seal packing:

No. 08826-00080 or equivalent

Seal width:

2 to 3 mm (0.08 to 0.12 in.)

NOTICE:

- **Remove any oil from the contact surface.**
- **Install the crankcase within 3 minutes after applying seal packing.**
- **Do not start the engine for at least 4 hours after installing.**

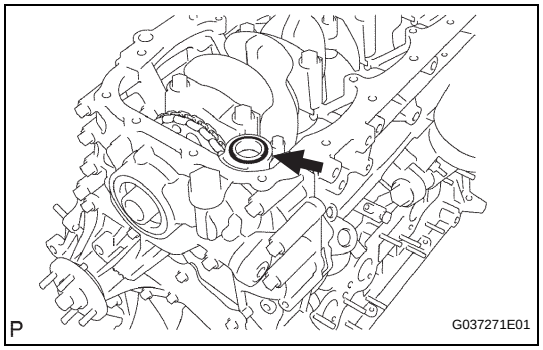

(c) Install a new O-ring.

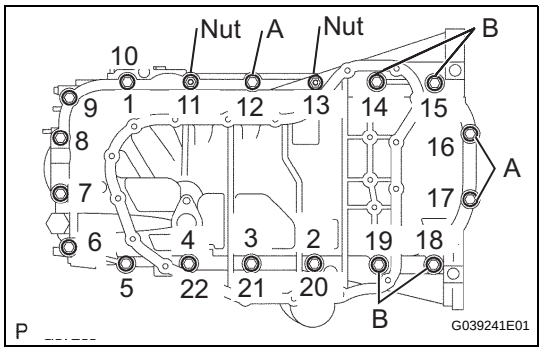

(d) Temporarily install the oil pan with the 16 bolts and 2 nuts.
HINT:
Bolt length:
20 mm (0.79 in.) for bolt A
40 mm (1.57 in.) for bolt B

(e) Uniformly tighten the 16 bolts and 2 nuts in the sequence shown in the illustration.
Torque: 26 N*m (265 kgf*cm, 19 ft.*lbf)

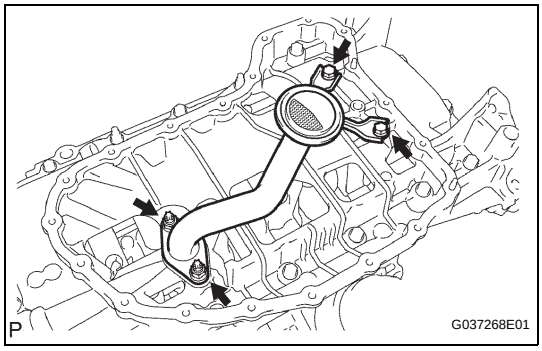

55. INSTALL OIL STRAINER SUB-ASSEMBLY

(a) Install a new gasket and the oil strainer with the 2 bolts and 2 nuts.
Torque: 26 N*m (265 kgf*cm, 19 ft.*lbf)

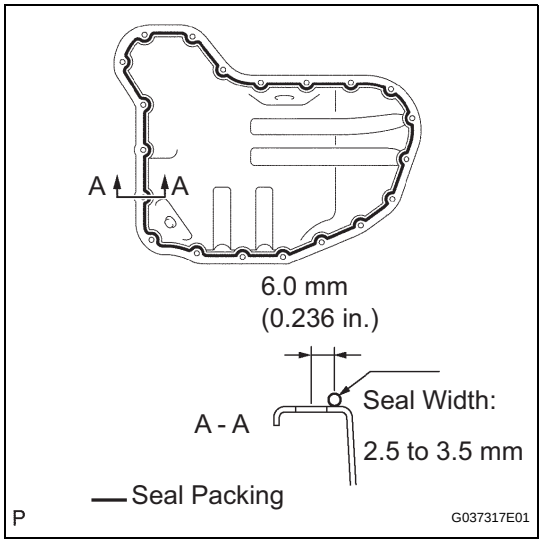

56. INSTALL NO. 2 OIL PAN SUB-ASSEMBLY

(a) Apply seal packing in a continuous bead as shown in the illustration.
Seal packing:
Part No. 08826-00080 or equivalent
Seal width:
2.5 to 3.5 mm (0.098 to 0.138 in.)
NOTICE:
- **Remove any oil from the contact surface.**
- **Install the crankcase within 3 minutes after applying seal packing.**
- **Do not start the engine for at least 4 hours after installing.**

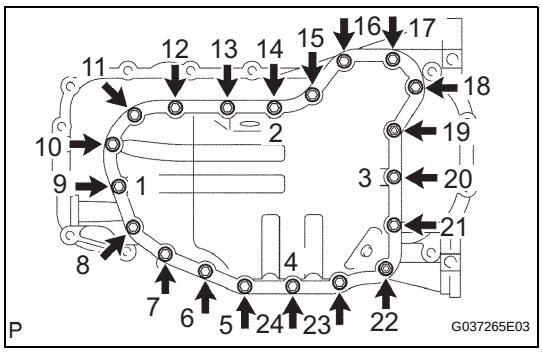

(b) Temporarily install the oil pan with the 18 bolts and 2 nuts.

(c) Uniformly tighten the 18 bolts and 2 nuts in the sequence shown in the illustration.
Torque: 9.0 N*m (92 kgf*cm, 80 in.*lbf)

(d) Install a new gasket and the drain plug.
Torque: 38 N*m (382 kgf*cm, 28 ft.*lbf)

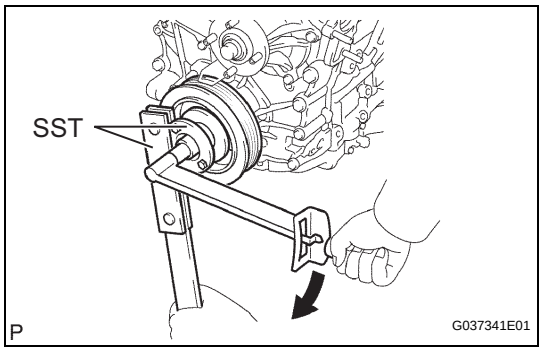

57. INSTALL CRANKSHAFT PULLEY

(a) Align the pulley set key with the key groove of the pulley, and slide on the pulley.

(b) Using SST, install the new pulley bolt.
SST 09213-54015 (91651-60855), 09330-00021
Torque: 260 N*m (2,650 kgf*cm, 192 ft.*lbf)
NOTICE:
Do not reuse the pulley bolt.

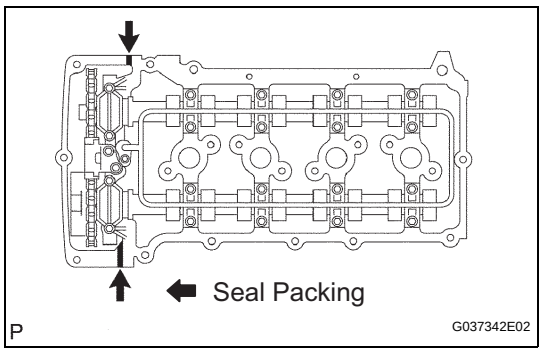

58. INSTALL CYLINDER HEAD COVER SUB-ASSEMBLY

(a) Apply seal packing as shown in the illustration.

(b) Install the 2 gaskets to the head cover.
Seal packing:
Part No. 08826-00080 or equivalent
NOTICE:
- **Remove any oil from the contact surface.**
- **Install the crankcase within 3 minutes after applying seal packing.**
- **Do not start the engine for at least 4 hours after installing.**

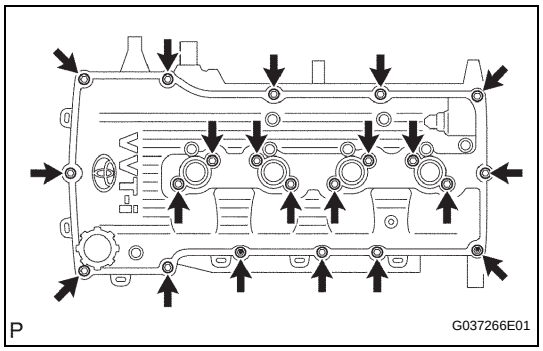

(c) Temporarily install the cover with the 19 bolts and 2 nuts.

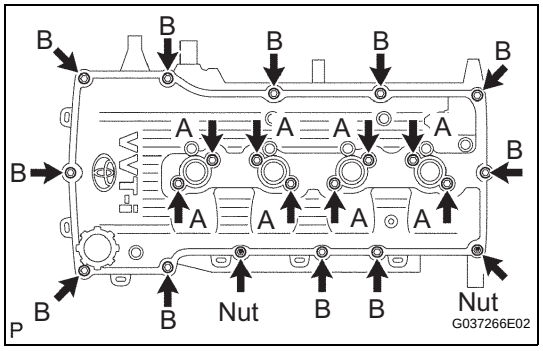

(d) Fully tighten the bolts (A) shown in the illustration.
Torque: 9.0 N*m (92 kgf*cm, 80 in.*lbf)

(e) Fully tighten the bolts (B) shown in the illustration.
Torque: 9.0 N*m (92 kgf*cm, 80 in.*lbf)
HINT:
Make sure the tightening torque of bolts (A).

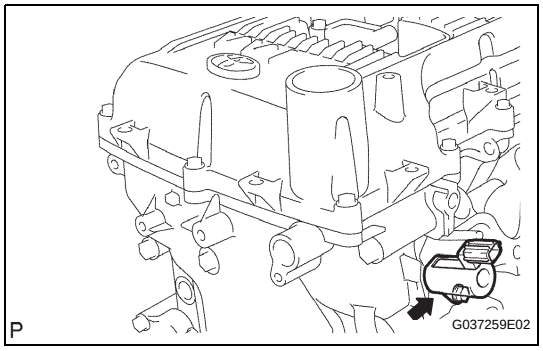

59. INSTALL CAMSHAFT TIMING OIL CONTROL VALVE ASSEMBLY

(a) Install the camshaft timing oil control valve assembly with the bolt.
Torque: 8.0 N*m (82 kgf*cm, 71 in.*lbf)

EM

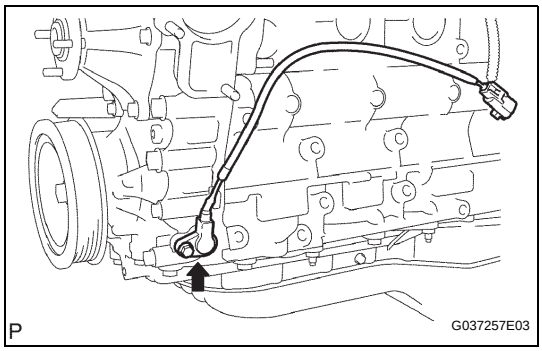

60. INSTALL CRANKSHAFT POSITION SENSOR

(a) Apply engine oil to the O-ring.

(b) Install the crankshaft position sensor with the bolt.
Torque: 8.5 N*m (87 kgf*cm, 75 in.*lbf)

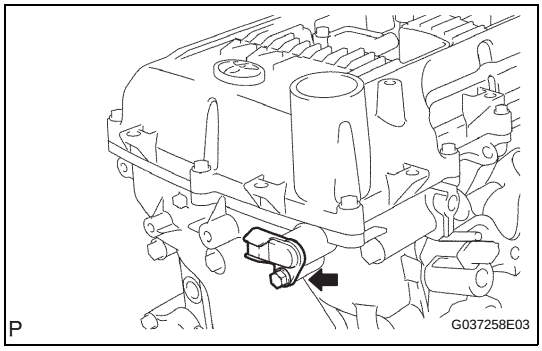

61. INSTALL CAMSHAFT POSITION SENSOR

(a) Apply engine oil to the O-ring.

(b) Install the camshaft position sensor with the bolt.
Torque: 8.5 N*m (87 kgf*cm, 75 in.*lbf)

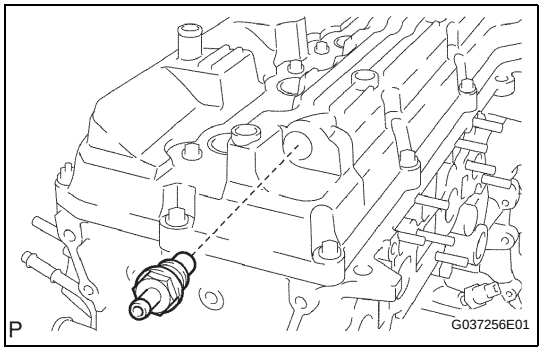

62. INSTALL VENTILATION VALVE SUB-ASSEMBLY

(a) Install the ventilation valve sub-assembly.
Torque: 5.0 N*m (51 kgf*cm, 44 in.*lbf)

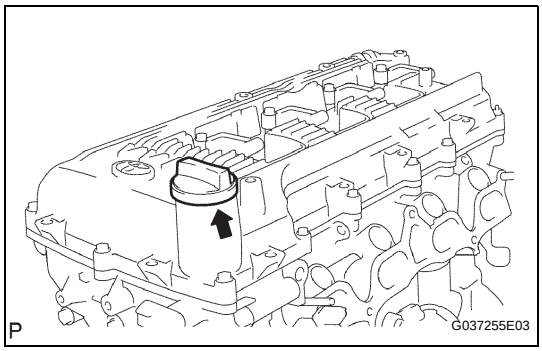

63. INSTALL OIL FILLER CAP SUB-ASSEMBLY

(a) Install the oil filler cap assembly.

FUEL SYSTEM

PRECAUTION

1. PRECAUTION

(a) Before working on the fuel system, disconnect the cable from the battery negative terminal.

(b) Do not work on the fuel system near fire. Never smoke during the work.

(c) Keep rubber and leather parts away from gasoline.

2. DISCHARGE FUEL PRESSURE

CAUTION:

- **Before removing fuel system parts, take precautions to prevent gasoline spillage.**
- **As some pressure remains in the fuel line even after taking precautions to prevent gasoline spillage, use a shop rag to prevent gasoline splashes when disconnecting the fuel line.**

(a) Disconnect the cable from the battery negative terminal.

(b) Remove the engine relay block cover.

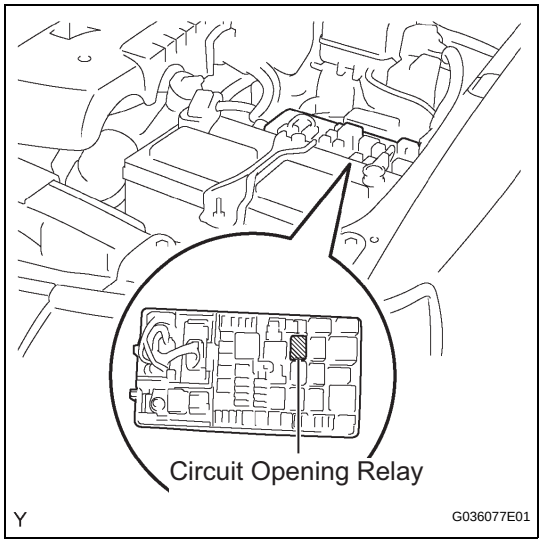

(c) Remove the circuit opening relay.

(d) Connect the cable to the battery negative terminal.
Torque: 5.4 N*m (55 kgf*cm, 48 in.*lbf)

(e) Start the engine.

(f) Turn the ignition switch to ON after the engine stops.
HINT:
DTC P0171 (system to lean) may be present.

(g) Crank the engine again and check that the engine stops.

(h) Remove the fuel tank cap and discharge the pressure in the fuel tank completely.

(i) Install the circuit opening relay.

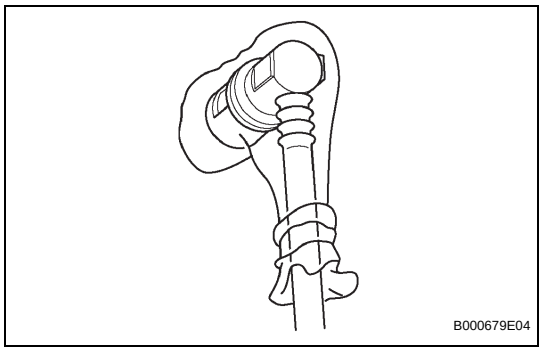

3. FUEL SYSTEM

(a) When disconnecting the high-pressure fuel line, a large amount of gasoline will splash. So take the following precautions.

(1) Discharge the fuel system pressure (step 2).

(2) Disconnect the fuel tank main tube (see page FU-30).

(3) Drain the fuel remaining in the fuel tank main tube.

(4) Cover the disconnected fuel tank main tube (fuel tube joint and fuel tube connector) with a vinyl bag to prevent damage and the intrusion of foreign objects.

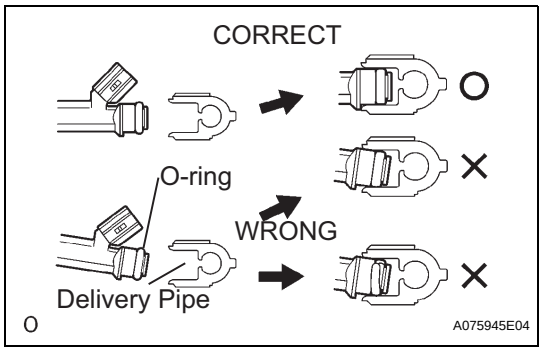

(b) Take the following precautions when installing the fuel injector.
(1) Do not reuse the O-ring.
(2) Do not damage a new O-ring when installing it into the fuel injector.
(3) Before installing a new O-ring, apply gasoline or spindle oil.
NOTICE:
Do not use engine oil, gear oil or brake oil.

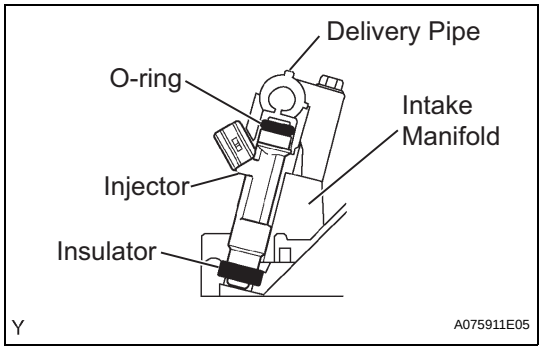

(4) Install the fuel injector into the fuel delivery pipe and cylinder head as illustrated.
NOTICE:
Apply gasoline or spindle oil to the contact surface of the fuel delivery pipe and fuel injector before installing the fuel injector.

FU

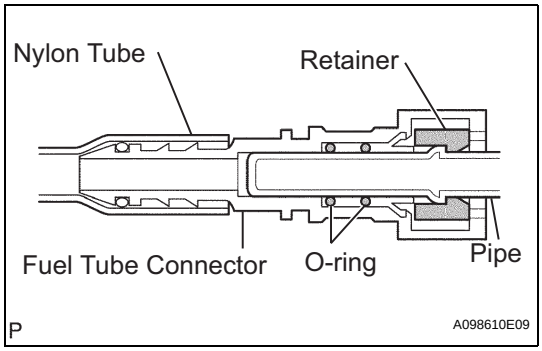

(c) Take the following precautions when disconnecting the fuel tube connector (type A).
HINT:
The structure of the fuel tube connector is as shown in the illustration.
(1) Check the fuel tube connector and pipe for dirt and mud before removing the fuel tube connector.
If dirty, wipe it with a shop rag.

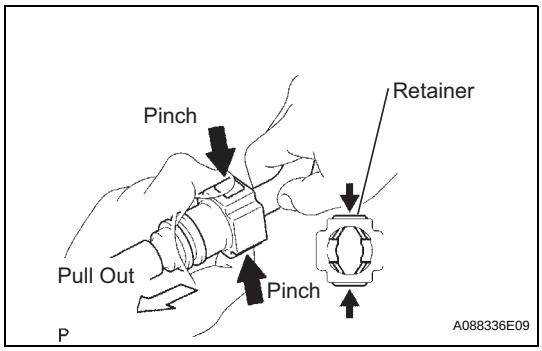

(2) Pinch the retainer as illustrated, and pull the fuel tube connector out of the pipe.

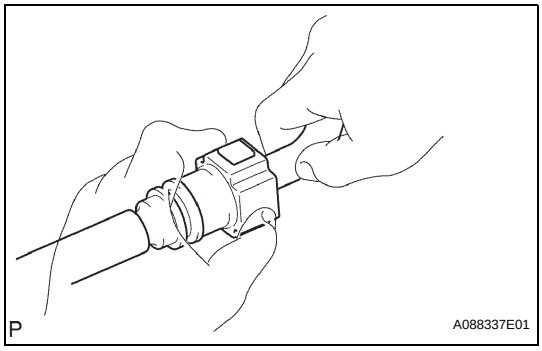

(3) If the fuel tube connector and pipe are stuck, pinch the pipe, then push and pull the fuel tube connector to release and disconnect it.
NOTICE:
Never use any tools.
(4) After removing the fuel tube, check the sealing surface of the pipe for dirt and mud.
If dirty, wipe it with a shop rag.

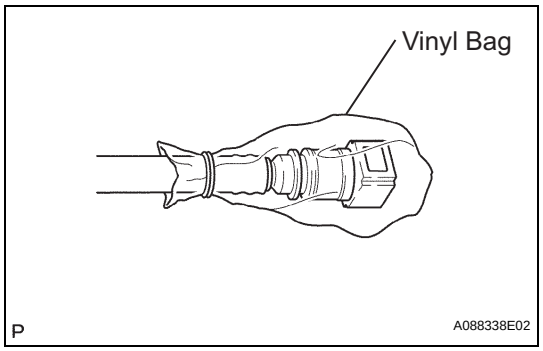

(5) Cover the disconnected fuel tube connector and pipe with a vinyl bag to prevent damage and the intrusion of foreign objects.

(d) Take the following precautions when installing the fuel tube connector (type A).

(1) Align the fuel tube connector with the pipe, then push in the fuel tube connector until the retainer makes a "click" sound.

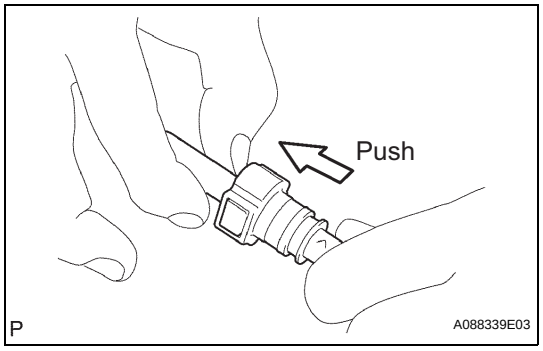

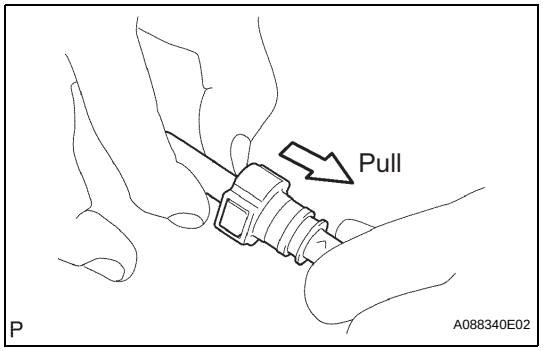

(2) After connecting the fuel tube connector, check that the fuel tube connector and pipe are securely connected by pulling them.

FU

FUEL INJECTOR

COMPONENTS

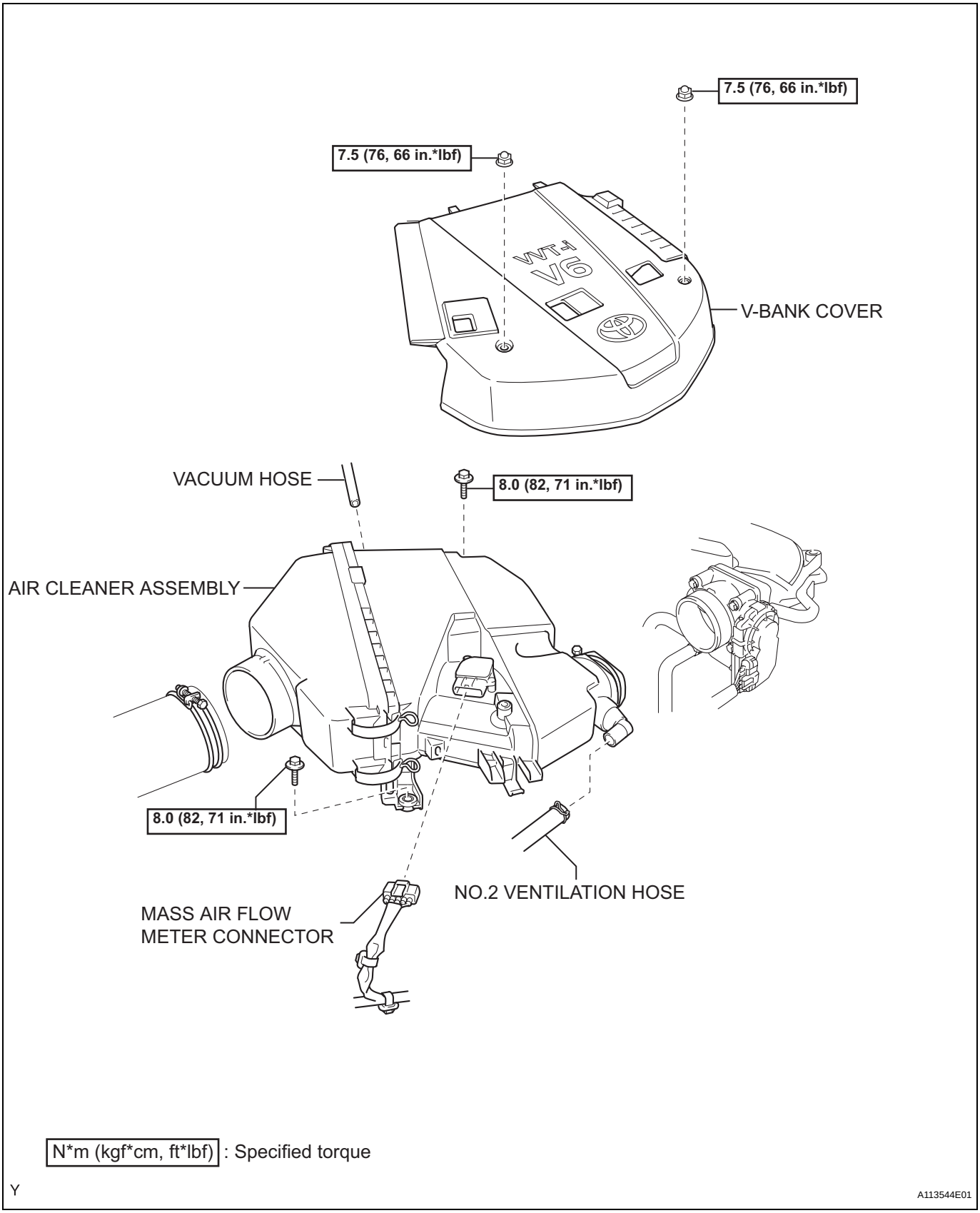

FU

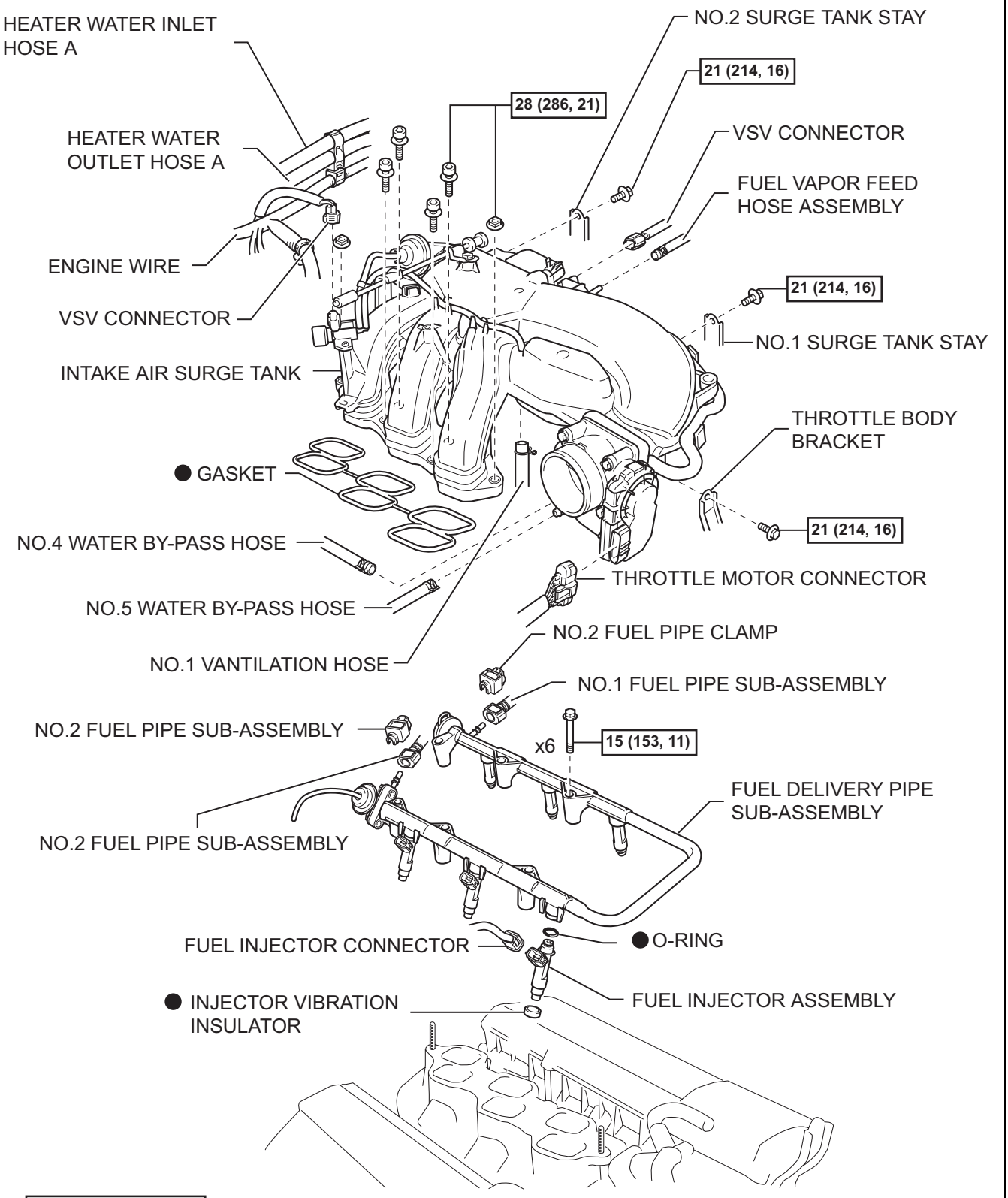

N*m (kgf*cm, ft*lbf) : Specified torque

● Non-reusable part

Y

A113545E01

FUEL PRESSURE REGULATOR

REMOVAL

1. **DISCHARGE FUEL SYSTEM PRESSURE**
   (See page FU-1)
2. **DISCONNECT CABLE FROM NEGATIVE BATTERY TERMINAL**
3. **REMOVE V-BANK COVER (See page ES-414)**
4. **REMOVE AIR CLEANER ASSEMBLY (See page ES-415)**
5. **DISCONNECT NO.2 FUEL PIPE SUB-ASSEMBLY (See page FU-13)**
6. **REMOVE FUEL PRESSURE REGULATOR ASSEMBLY**
   (a) Remove the 2 bolts, then remove the fuel pressure regulator.
   (b) Remove the vacuum hose.

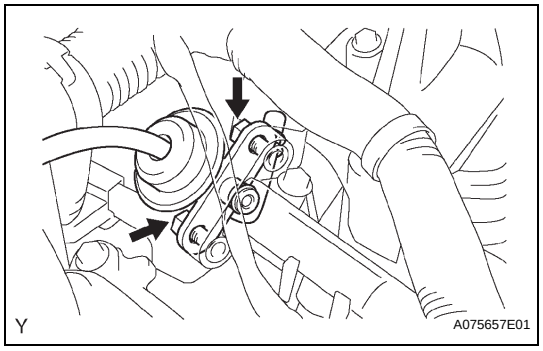

FU

INSTALLATION

1. **INSTALL FUEL PRESSURE REGULATOR ASSEMBLY**
   (a) Install the vacuum hose.
   (b) Apply a light coat of spindle oil or gasoline to a new O-ring and install it onto the fuel pressure regulator.
   (c) Install the fuel pressure regulator with the 2 bolts.
   Torque: 9.0 N*m (92 kgf*cm, 80 in.*lbf)
2. **CONNECT NO.2 FUEL PIPE SUB-ASSEMBLY (See page FU-17)**
3. **INSTALL AIR CLEANER ASSEMBLY (See page ES-416)**
4. **INSTALL V-BANK COVER (See page ES-416)**
5. **CONNECT CABLE TO NEGATIVE BATTERY TERMINAL**
   Torque: 3.9 N*m (40 kgf*cm, 35 in.*lbf)
6. **CHECK FOR FUEL LEAKAGE**

FUEL PRESSURE PULSATION DAMPER

REMOVAL

1. **DISCHARGE FUEL SYSTEM PRESSURE**
   (See page FU-1)
2. **REMOVE V-BANK COVER (See page ES-414)**
3. **REMOVE FUEL PRESSURE PULSATION DAMPER ASSEMBLY**
   (a) Remove the clip.
   (b) Pull the fuel pressure pulsation damper out of the fuel delivery pipe.

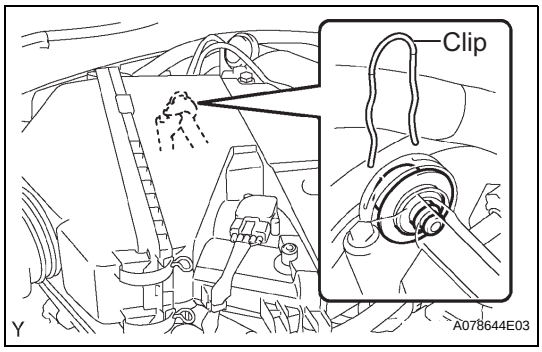

INSTALLATION

1. **INSTALL FUEL PRESSURE PULSATION DAMPER ASSEMBLY**
   (a) Apply a light coat of spindle oil or gasoline to a new O-ring and install it onto the fuel pressure pulsation damper.
   (b) Install the fuel pressure pulsation damper onto the fuel delivery pipe.
   (c) Install the clip.
2. **INSTALL V-BANK COVER (See page ES-416)**
3. **CHECK FOR FUEL LEAKAGE**

FUEL PUMP

COMPONENTS

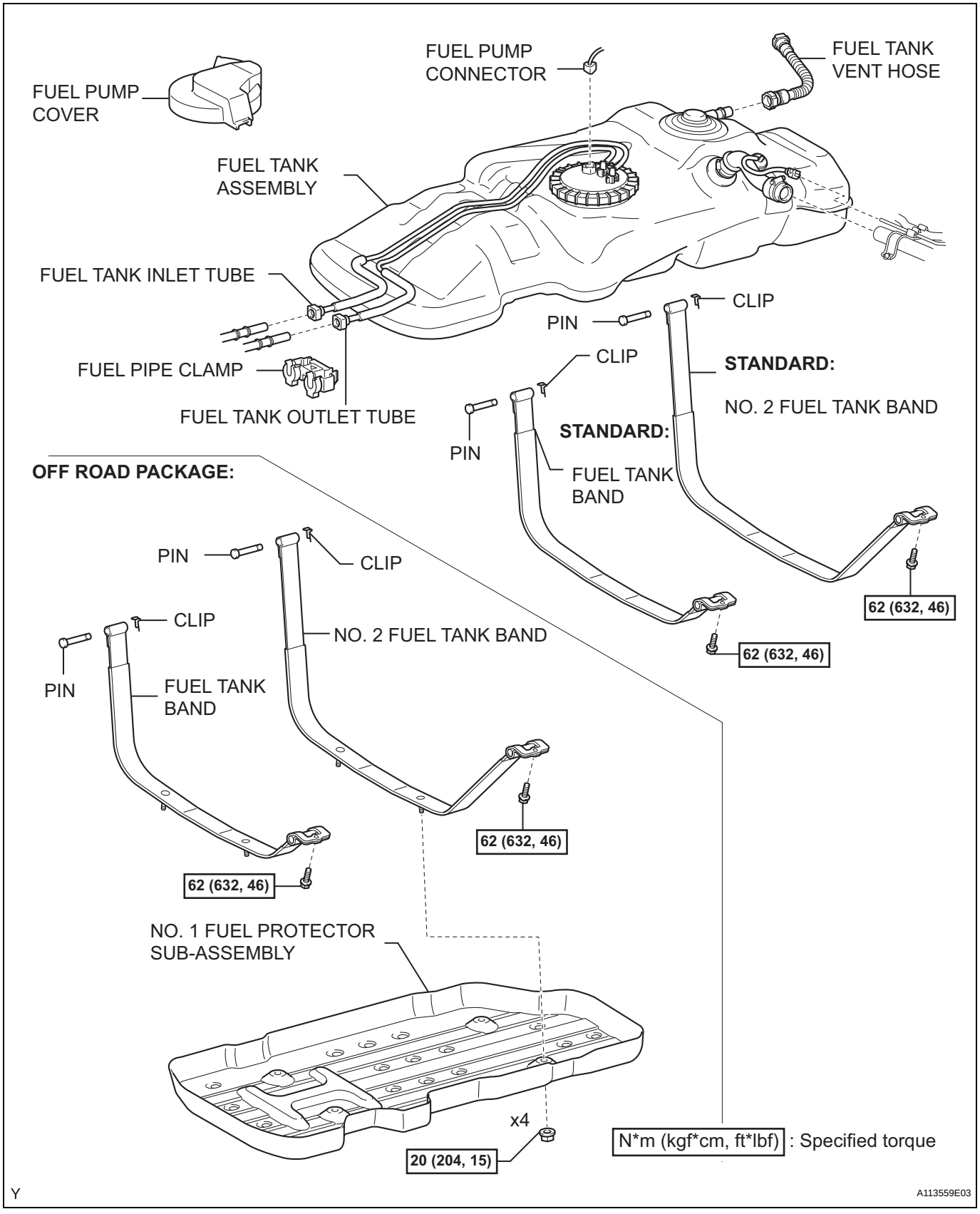

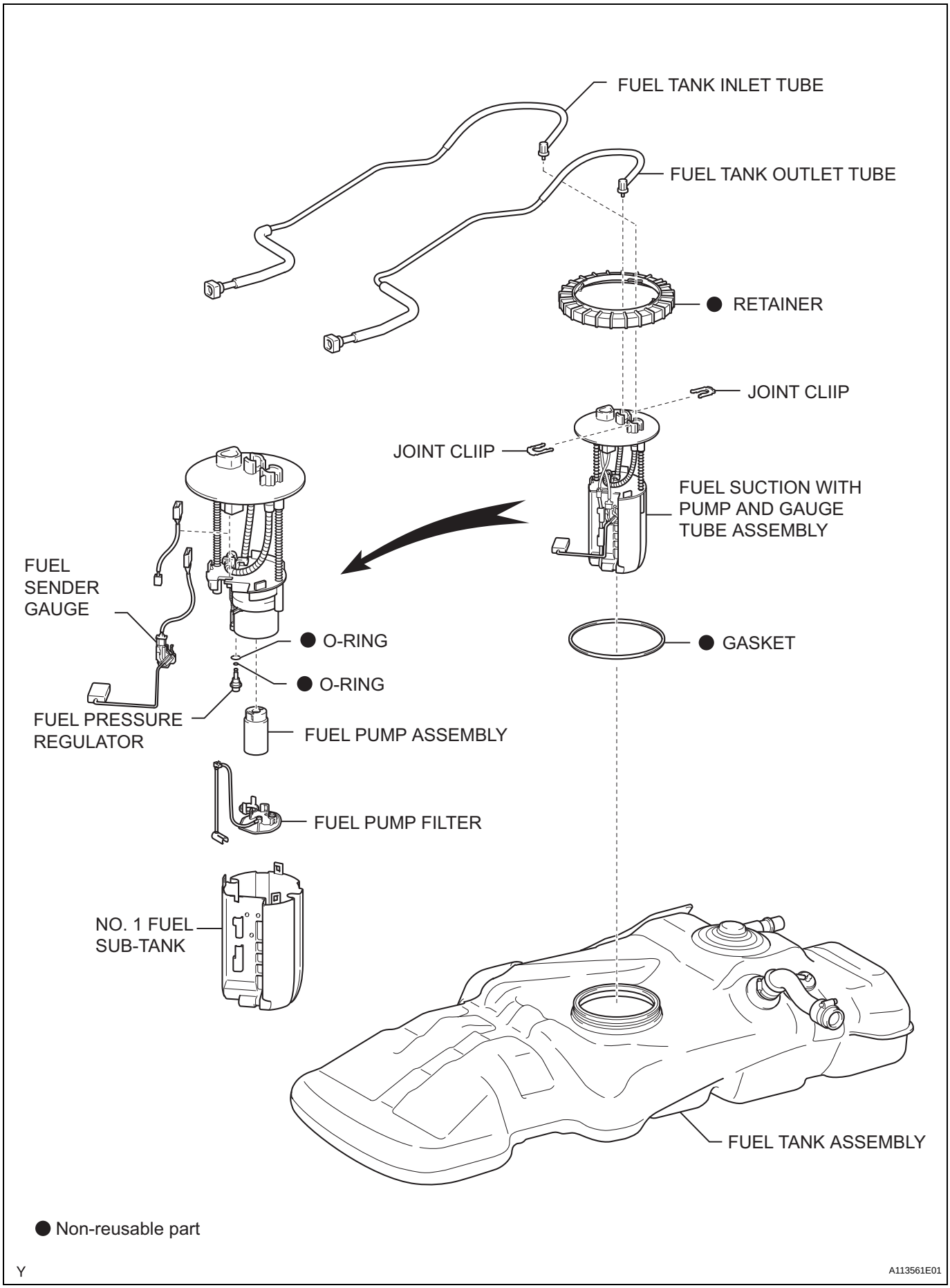
FUEL TANK INLET TUBE
FUEL TANK OUTLET TUBE
● RETAINER
JOINT CLIIP
JOINT CLIIP
FUEL SUCTION WITH PUMP AND GAUGE TUBE ASSEMBLY
FUEL SENDER GAUGE
● O-RING
● O-RING
● GASKET
FUEL PRESSURE REGULATOR
FUEL PUMP ASSEMBLY
FUEL PUMP FILTER
NO. 1 FUEL SUB-TANK
FUEL TANK ASSEMBLY
● Non-reusable part
Y
A113561E01

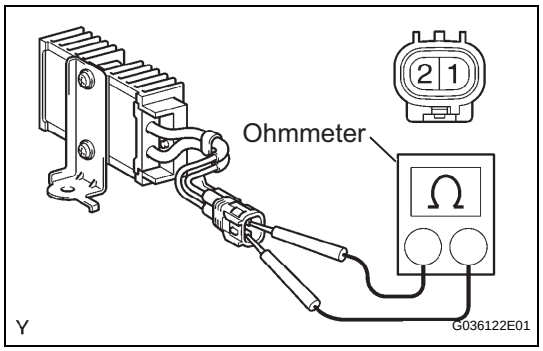

FUEL PUMP RESISTOR

INSPECTION

1. INSPECT FUEL PUMP RESISTER

(a) Check the resistance.

(1) Using an ohmmeter, measure the resistance between the terminals.

Resistance:

0.71 to 0.75 Ω

If the result is not as specified, replace the fuel pump resistor.

FUEL TANK

COMPONENTS

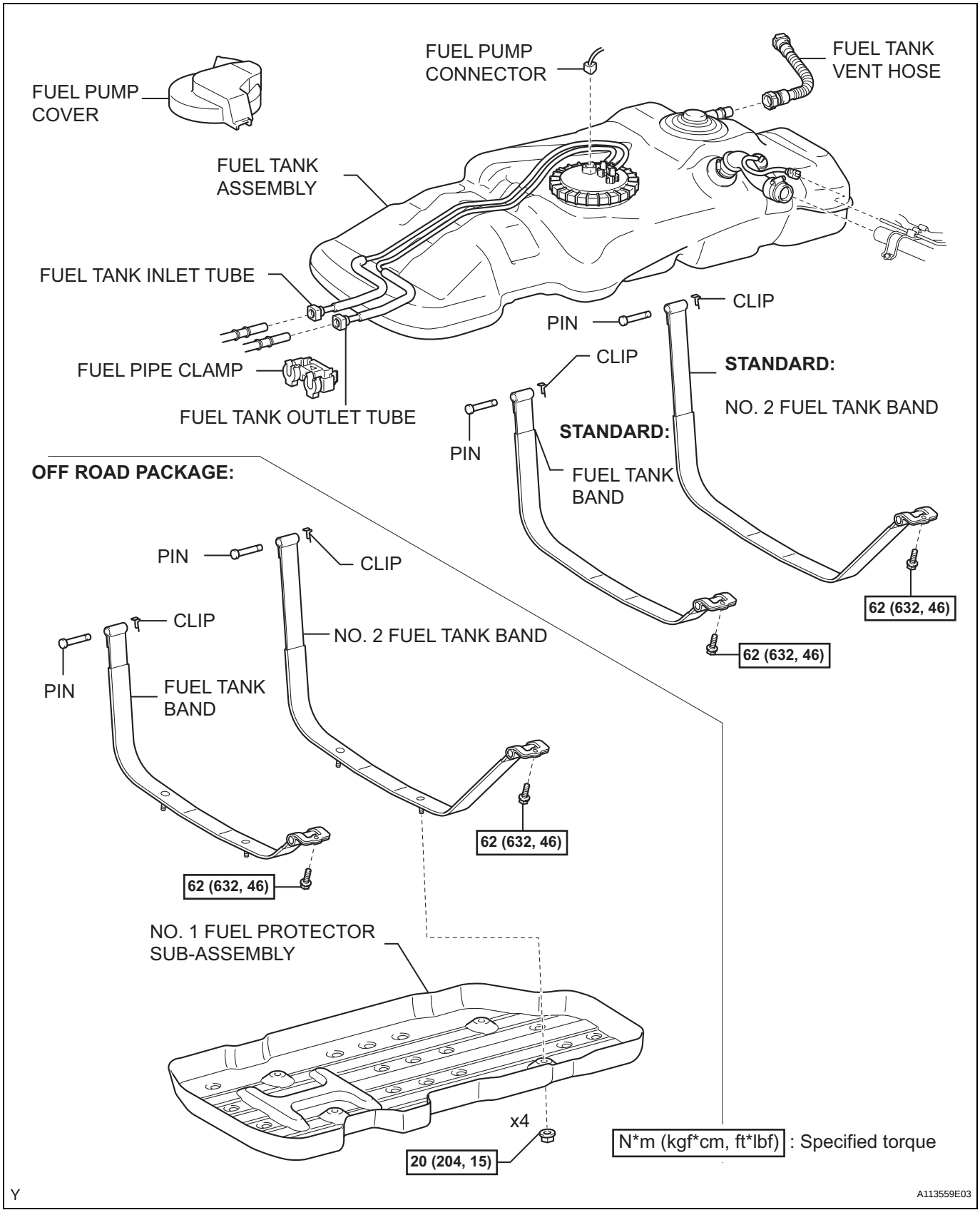

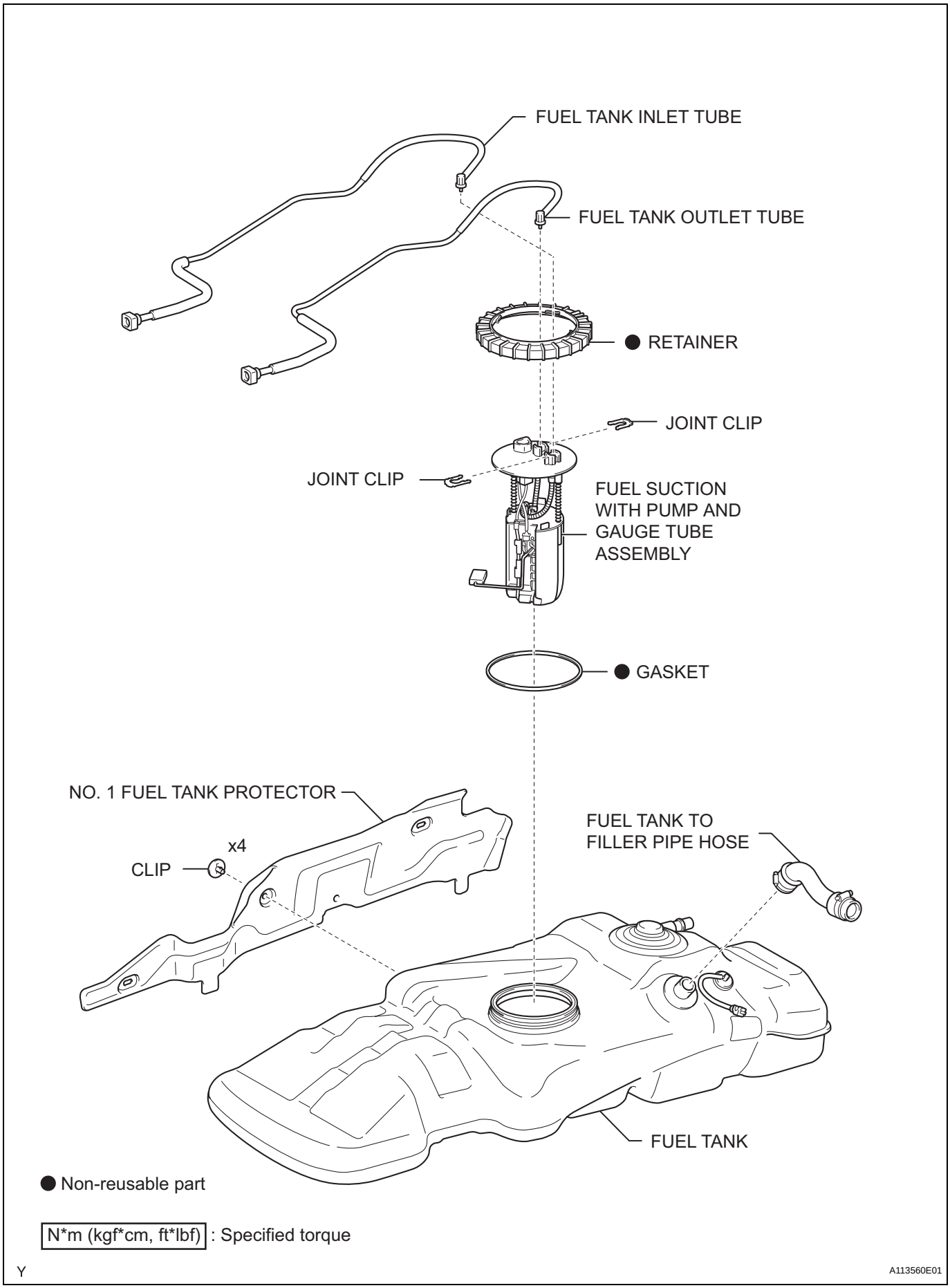
FUEL TANK INLET TUBE
FUEL TANK OUTLET TUBE
● RETAINER
JOINT CLIP
JOINT CLIP
FUEL SUCTION WITH PUMP AND GAUGE TUBE ASSEMBLY
● GASKET
NO. 1 FUEL TANK PROTECTOR
x4
CLIP
FUEL TANK TO FILLER PIPE HOSE
FUEL TANK
● Non-reusable part
N*m (kgf*cm, ft*lbf) : Specified torque
Y
A113560E01

FU

MADE BY VB-SERVICES

FUEL SYSTEM

PRECAUTION

1. PRECAUTION

(a) Before working on the fuel system, disconnect the cable from the negative battery terminal.

(b) Do not work on the fuel system near fire. Never smoke during the work.

(c) Keep rubber and leather parts away from gasoline.

2. DISCHARGE FUEL PRESSURE

CAUTION:

- **Before removing fuel system parts, take precautions to prevent gasoline spillage.**
- **As some pressure remains in the fuel line even after taking precautions to prevent gasoline spillage, use a shop rag to prevent gasoline splashes when disconnecting the fuel line.**

(a) Disconnect the cable from the negative battery terminal.

(b) Remove the engine relay block cover.

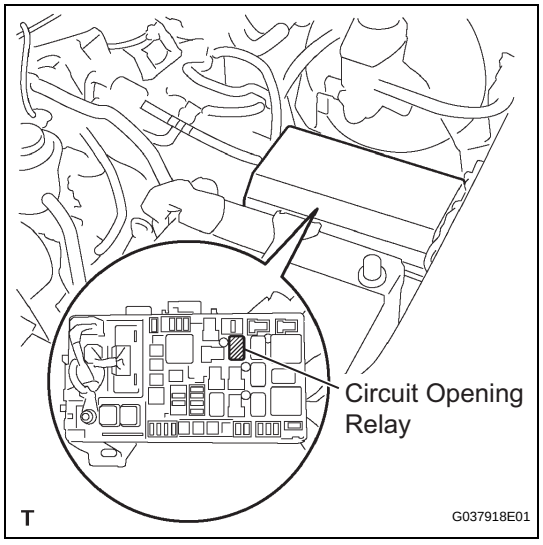

(c) Remove the circuit opening relay.

(d) Connect the cable to the negative battery terminal.
Torque: 3.9 N*m (40 kgf*cm, 35 in.*lbf)

(e) Start the engine.

(f) Turn the ignition switch to ON after the engine stops.
HINT:
DTC P0171 (system to lean) may be present.

(g) Crank the engine again, and check that the engine stops.

(h) Remove the fuel tank cap, and discharge the pressure in the fuel tank completely.

(i) Install the circuit opening relay.

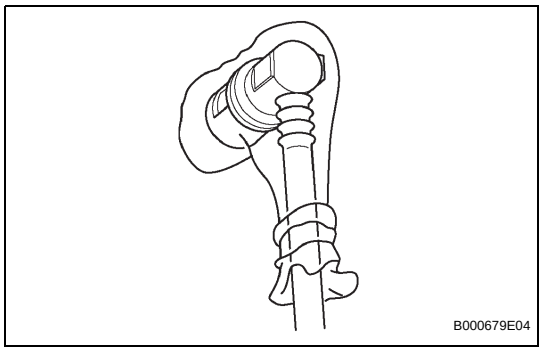

3. FUEL SYSTEM

(a) When disconnecting the high-pressure fuel line, a large amount of gasoline will splash. So take the following precautions.

(1) Discharge the fuel system pressure (step 2).

(2) Disconnect the fuel tank main tube (see page FU-30).

(3) Drain the fuel remaining in the fuel tank main tube.

(4) Cover the disconnected fuel tank main tube (fuel tube joint and fuel tube connector) with a vinyl bag to prevent damage and the intrusion of foreign objects.

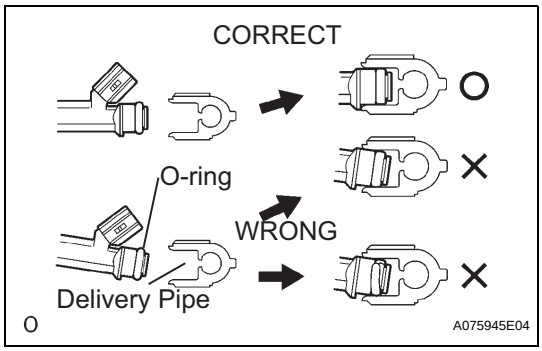

(b) Take the following precautions when installing the fuel injector.
(1) Do not reuse the O-ring.
(2) Do not damage a new O-ring when installing it onto the fuel injector.
(3) Before installing a new O-ring, apply gasoline or spindle oil.
NOTICE:
Do not use engine oil, gear oil or brake oil.

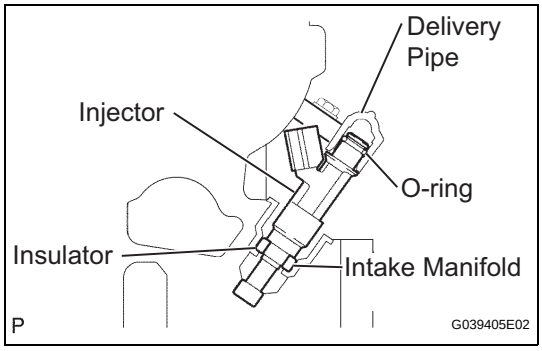

(4) Install the fuel injector into the fuel delivery pipe and cylinder head as illustrated.
HINT:
Apply gasoline or spindle oil to the contact surface of the fuel delivery pipe and fuel injector before installing the fuel injector.

FU

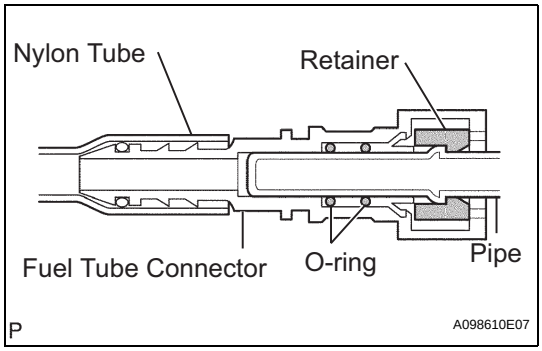

(c) Take the following precautions when disconnecting the fuel tube connector.
HINT:
The structure of the fuel tube connector is as shown in the illustration.
(1) Check the fuel tube connector and pipe for dirt and mud before removing the fuel tube connector.
If dirty, wipe it with a shop rag.

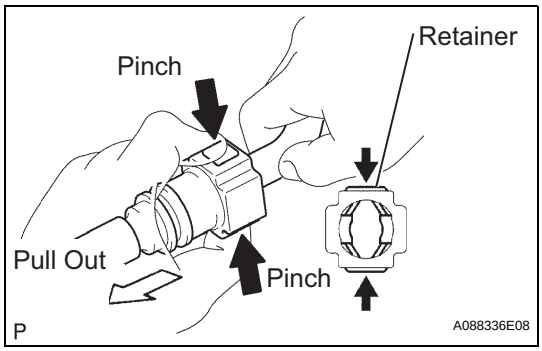

(2) Pinch the retainer as illustrated, then pull the fuel tube connector out of the pipe.

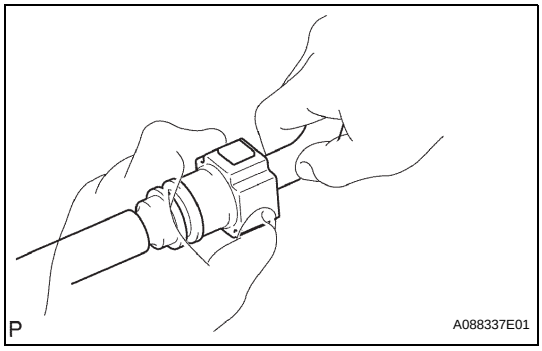

(3) If the fuel tube connector and pipe are stuck, pinch the pipe and push and pull the fuel tube connector to release it.
NOTICE:
Never use any tools.
(4) After disconnecting the fuel tube, check the sealing surface of the pipe for dirt and mud.
If dirty, wipe it with a shop rag.

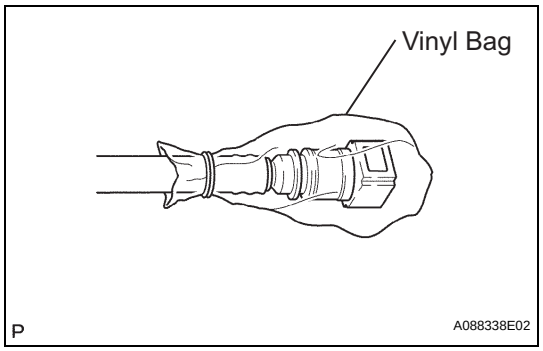

(5) Cover the disconnected fuel tube connector and pipe with a vinyl bag to prevent damage and the intrusion of foreign objects.

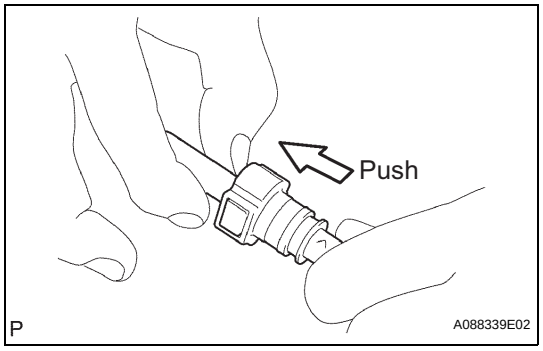

(d) Take the following precautions when installing the fuel tube connector.
(1) Align the fuel tube connector with the pipe, then push in the fuel tube connector until the retainer makes a "click" sound.

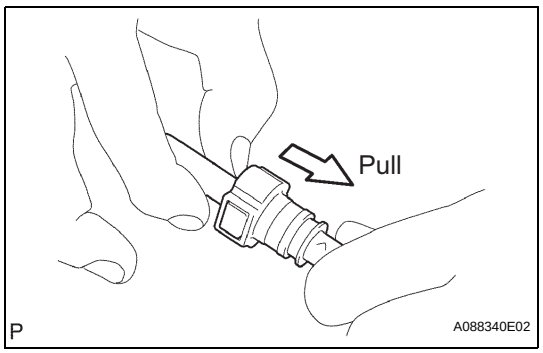

(2) After connecting the fuel tube connector, check that the fuel tube connector and pipe are securely connected by pulling them.

FU

FUEL INJECTOR

COMPONENTS

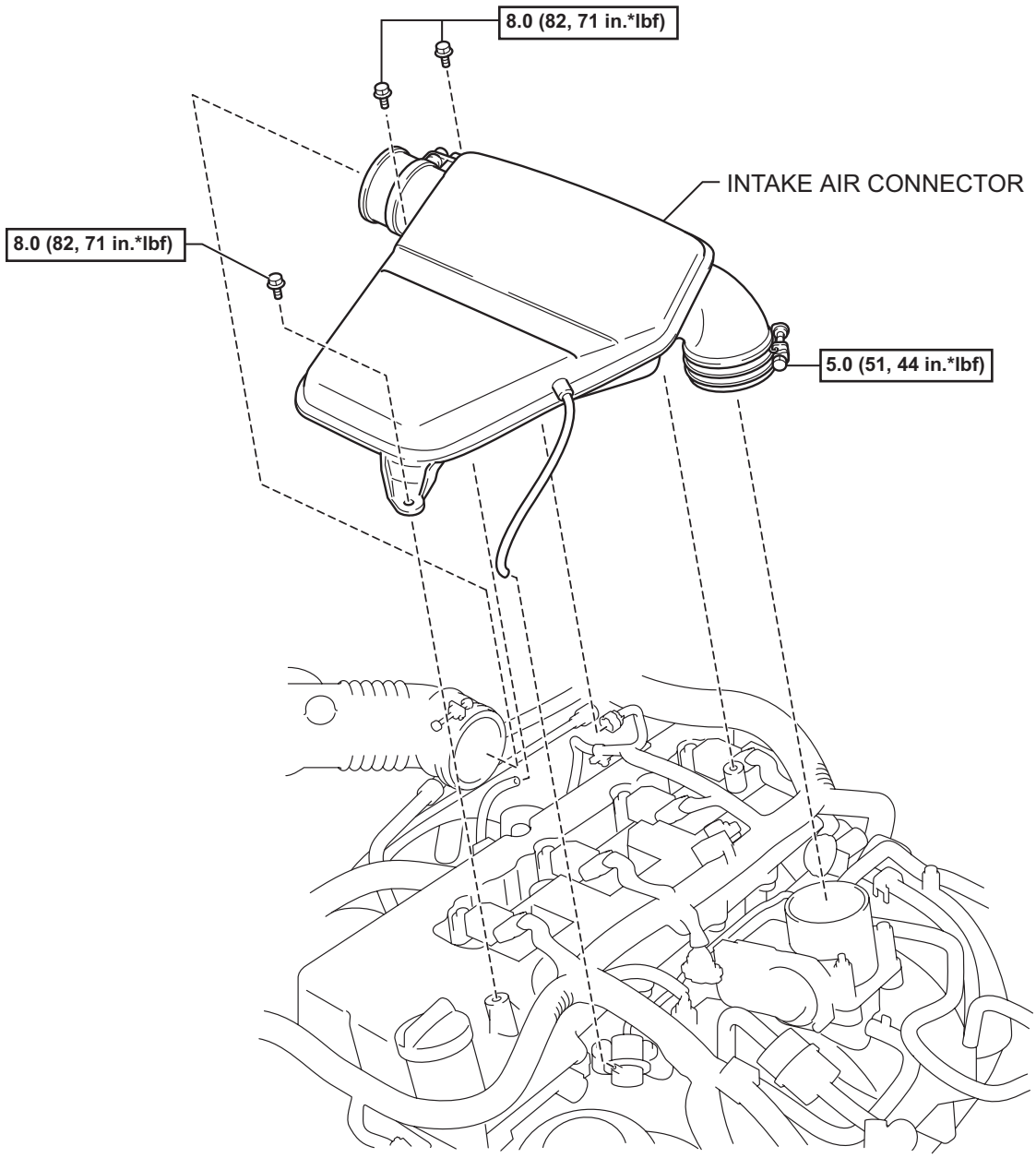

N*m (kgf*cm, ft*lbf) : Specified torque

T

A113623E01

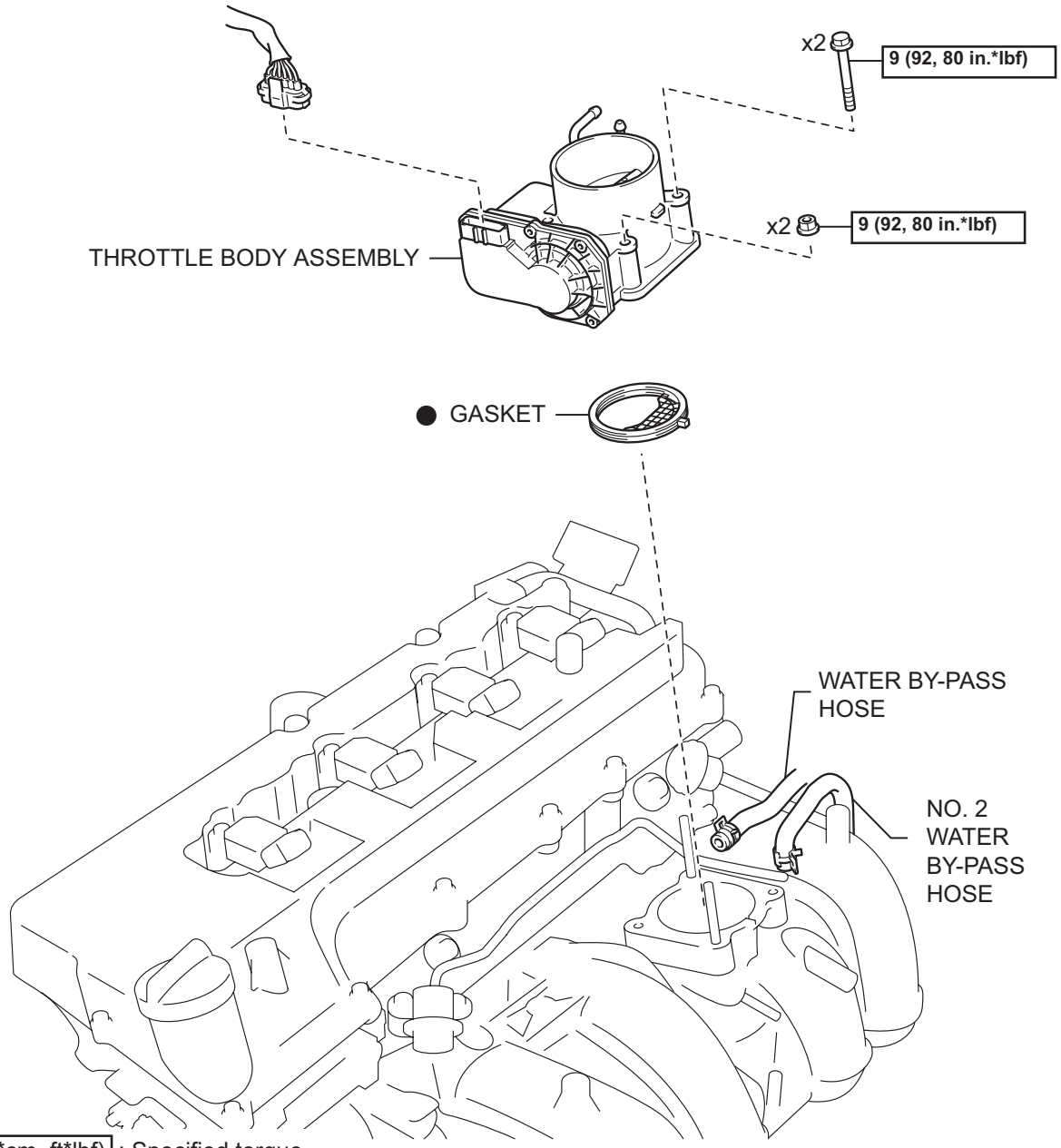

N*m (kgf*cm, ft*lbf) : Specified torque

● Non-reusable part

T

A113624E02

FU

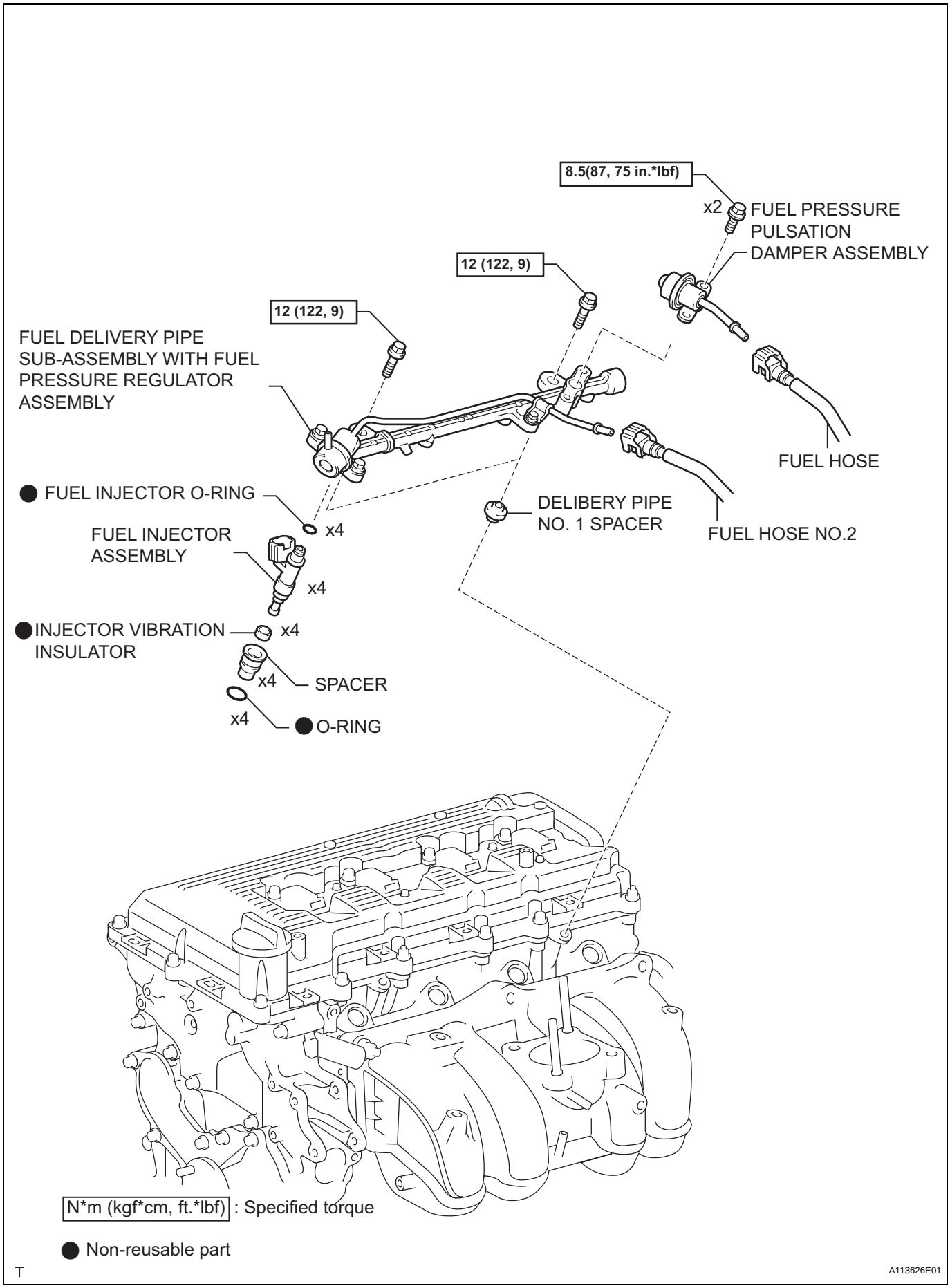
8.5(87, 75 in.*lbf)
x2
FUEL PRESSURE PULSATION DAMPER ASSEMBLY
12 (122, 9)
12 (122, 9)
FUEL DELIVERY PIPE SUB-ASSEMBLY WITH FUEL PRESSURE REGULATOR ASSEMBLY
FUEL HOSE
FUEL INJECTOR O-RING
x4
DELIBERY PIPE NO. 1 SPACER
FUEL HOSE NO.2
FUEL INJECTOR ASSEMBLY
x4
INJECTOR VIBRATION INSULATOR
x4
x4
SPACER
x4
O-RING
N*m (kgf*cm, ft.*lbf) : Specified torque
Non-reusable part
T
A113626E01

FUEL PRESSURE REGULATOR

REMOVAL

1. **DISCHARGE FUEL SYSTEM PRESSURE**
   (See page FU-1)
2. **DISCONNECT CABLE FROM NEGATIVE BATTERY TERMINAL**
3. **REMOVE INTAKE AIR CONNECTOR (See page ES-452)**
4. **DISCONNECT NO. 2 FUEL HOSE (See page FU-11)**
5. **REMOVE FUEL PRESSURE REGULATOR**
   (a) Disconnect the throttle with motor body connectors.
   (b) Disconnect the VSV connector.
   (c) Disconnect the engine wire harness clamp.
   (d) Remove the bolt, then remove the harness clamp bracket.

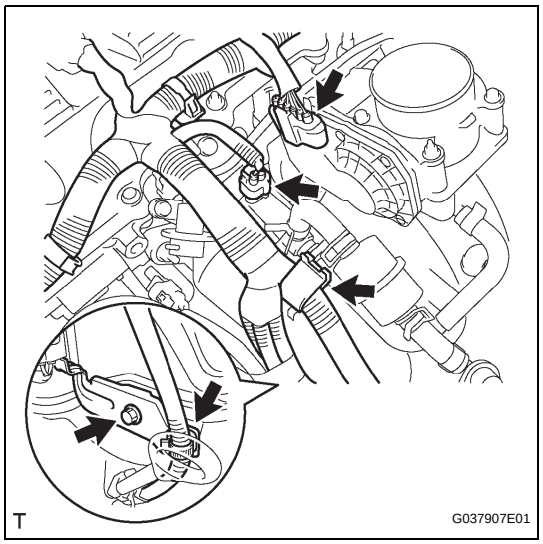

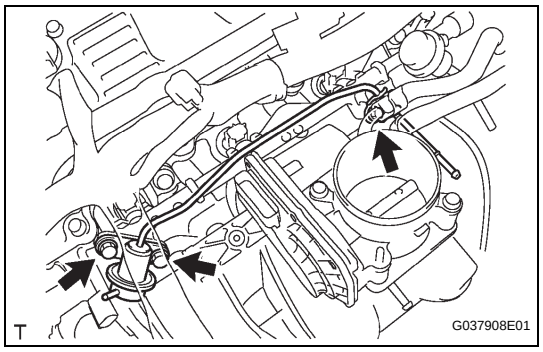

   (e) Remove the 3 bolts, then remove the fuel pressure regulator.

INSTALLATION

1. **INSTALL FUEL PRESSURE REGULATOR ASSEMBLY**
   (a) Apply a light coat of gasoline or spindle oil to the O-ring.

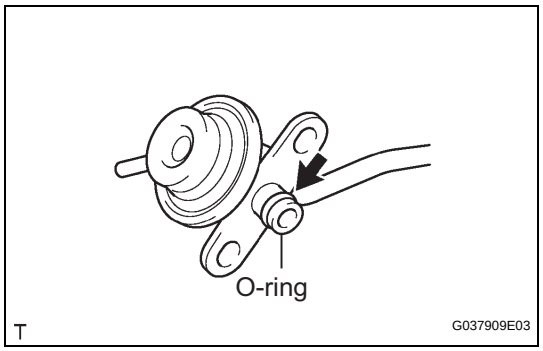

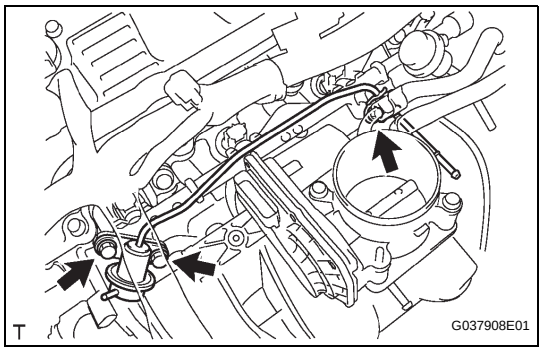

(b) Install the fuel pressure regulator with the 3 bolts.
Torque: 8.5 N*m (87 kgf*cm, 75 in.*lbf)

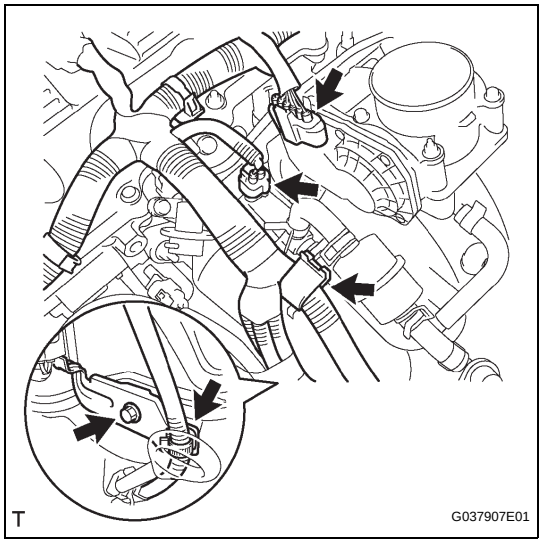

(c) Install the harness clamp bracket with the bolt.
Torque: 8.2 N*m (84 kgf*cm, 73 in.*lbf)
(d) Connect the engine wire harness clamp.
(e) Connect the VSV connector.
(f) Connect the throttle with motor body connectors.

2. **CONNECT NO. 2 FUEL HOSE (See page FU-17)**
3. **INSTALL INTAKE AIR CONNECTOR (See page ES-455)**
4. **CONNECT CABLE TO NEGATIVE BATTERY TERMINAL**
Torque: 3.9 N*m (40 kgf*cm, 35 in.*lbf)
5. **CHECK FOR FUEL LEAKAGE (See page FU-7)**

FU

FUEL PRESSURE PULSATION DAMPER

REMOVAL

1. **DISCHARGE FUEL SYSTEM PRESSURE**
   (See page FU-1)
2. **DISCONNECT FUEL HOSE (See page FU-11)**
3. **REMOVE FUEL PRESSURE PULSATION DAMPER ASSEMBLY**
   (a) Remove the 2 bolts, then remove the fuel pressure pulsation damper.

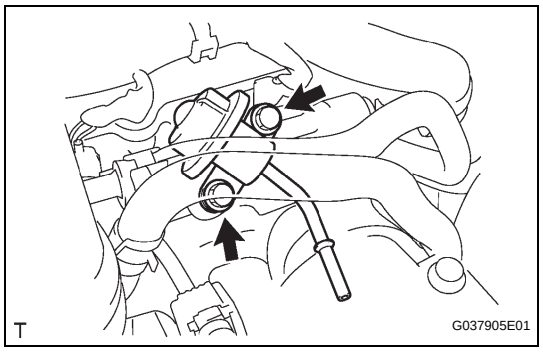

INSTALLATION

1. **INSTALL FUEL PRESSURE PULSATION DAMPER ASSEMBLY**
   (a) Apply a light coat of gasoline or spindle oil to the O-ring.

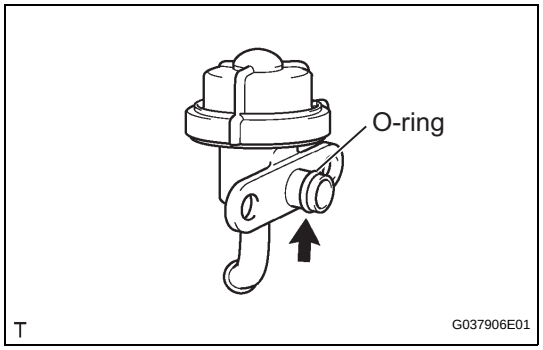

   (b) Install the fuel pressure pulsation damper with the 2 bolts.
   Torque: 8.5 N*m (87 kgf*cm, 75 in.*lbf)
2. **CONNECT FUEL HOSE (See page FU-17)**
3. **CHECK FOR FUEL LEAKAGE (See page FU-7)**

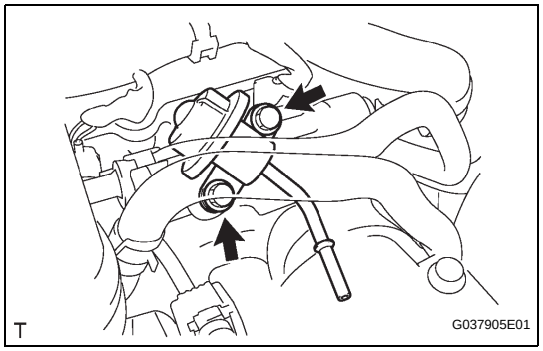

FU

FUEL PUMP

COMPONENTS

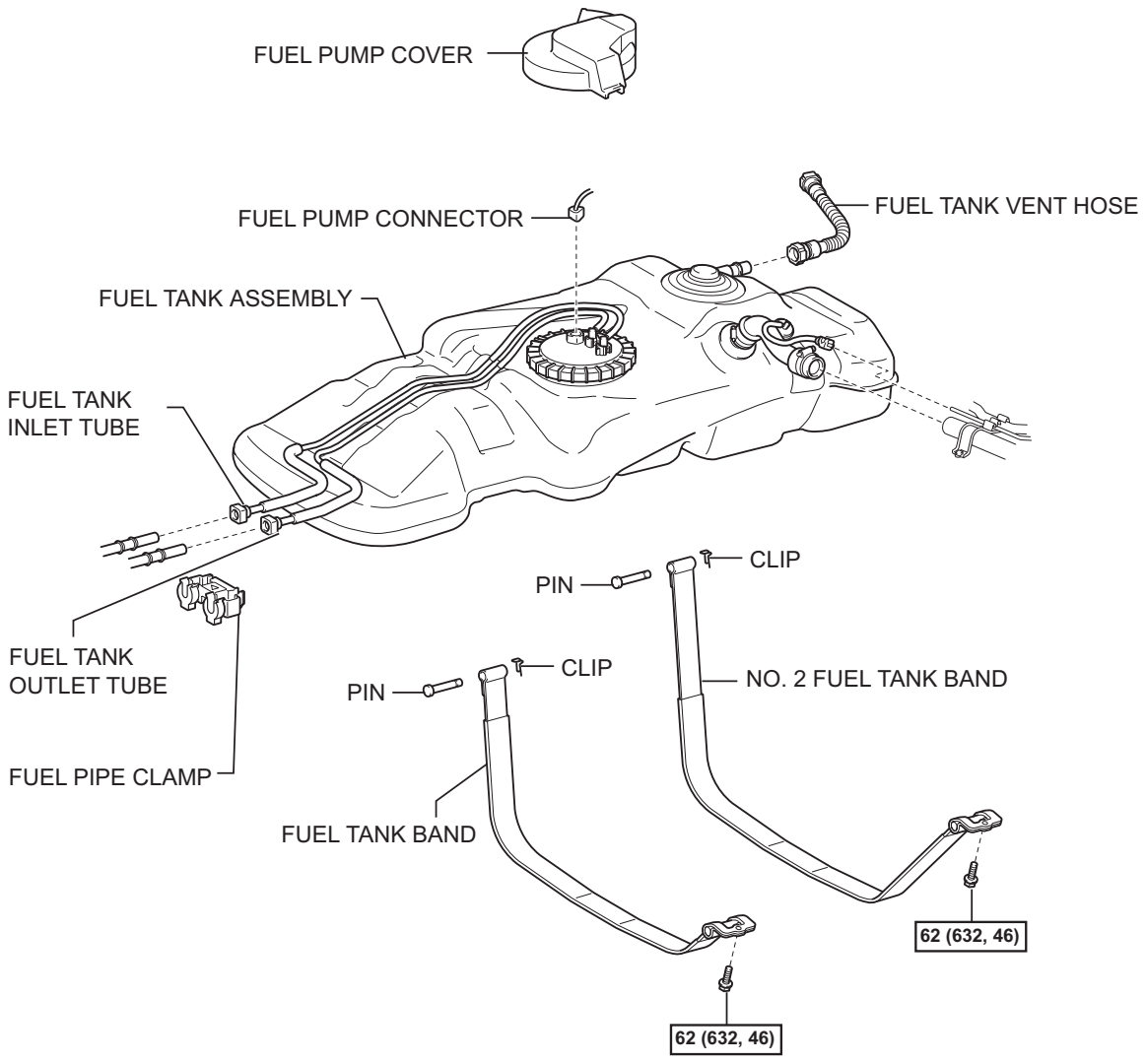

N*m (kgf*cm, ft*lbf) : Specified torque

Y

A113599E03

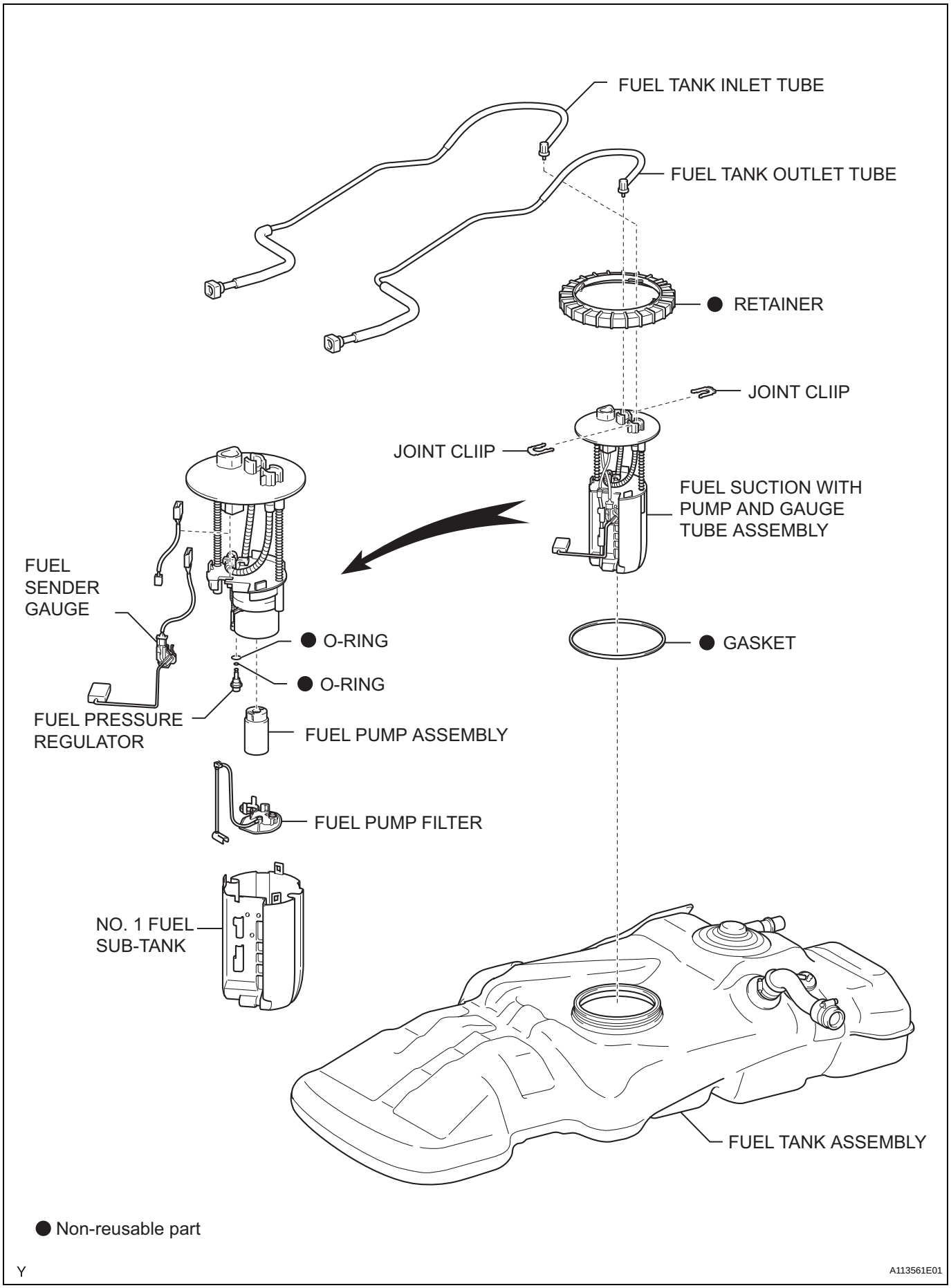
FUEL TANK INLET TUBE
FUEL TANK OUTLET TUBE
● RETAINER
JOINT CLIIP
JOINT CLIIP
FUEL SUCTION WITH PUMP AND GAUGE TUBE ASSEMBLY
FUEL SENDER GAUGE
● O-RING
● GASKET
● O-RING
FUEL PRESSURE REGULATOR
FUEL PUMP ASSEMBLY
FUEL PUMP FILTER
NO. 1 FUEL SUB-TANK
FUEL TANK ASSEMBLY
● Non-reusable part
Y
A113561E01

FU

FUEL TANK

COMPONENTS

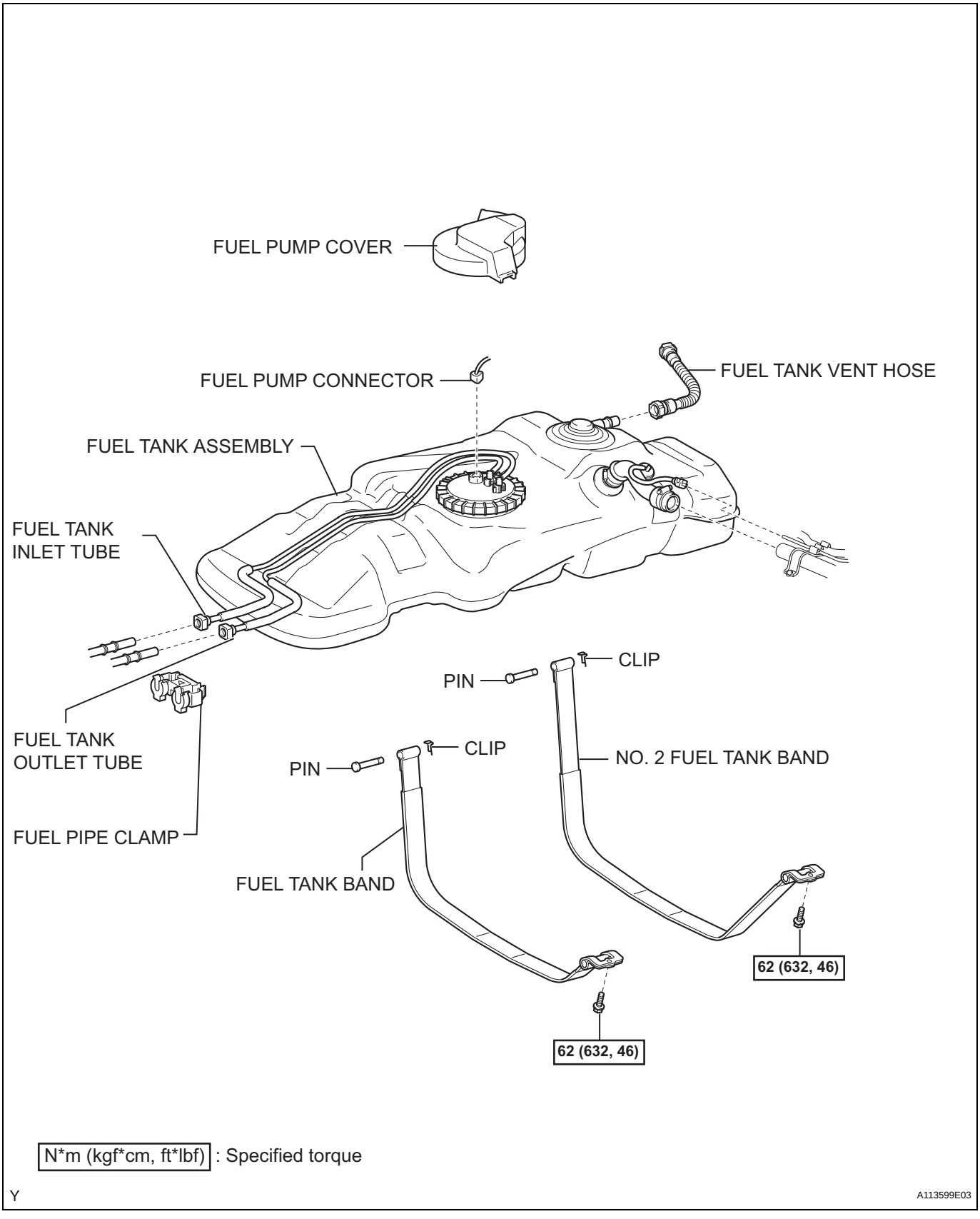

N*m (kgf*cm, ft*lbf) : Specified torque

Y

A113599E03

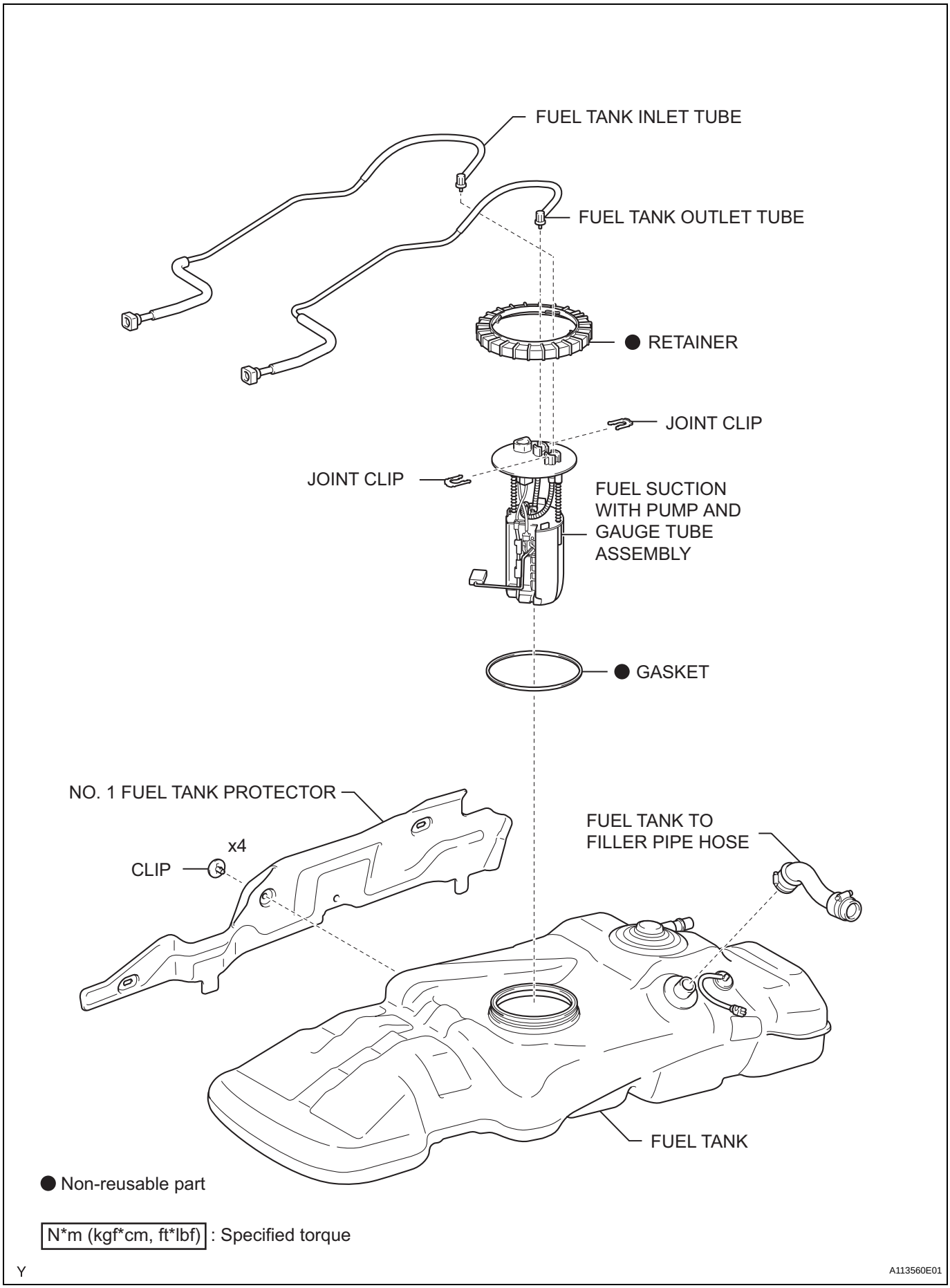
FUEL TANK INLET TUBE
FUEL TANK OUTLET TUBE
● RETAINER
JOINT CLIP
JOINT CLIP
FUEL SUCTION WITH PUMP AND GAUGE TUBE ASSEMBLY
● GASKET
NO. 1 FUEL TANK PROTECTOR
x4
CLIP
FUEL TANK TO FILLER PIPE HOSE
FUEL TANK
● Non-reusable part
N*m (kgf*cm, ft*lbf) : Specified torque
Y
A113560E01

EMISSION CONTROL SYSTEM

PARTS LOCATION

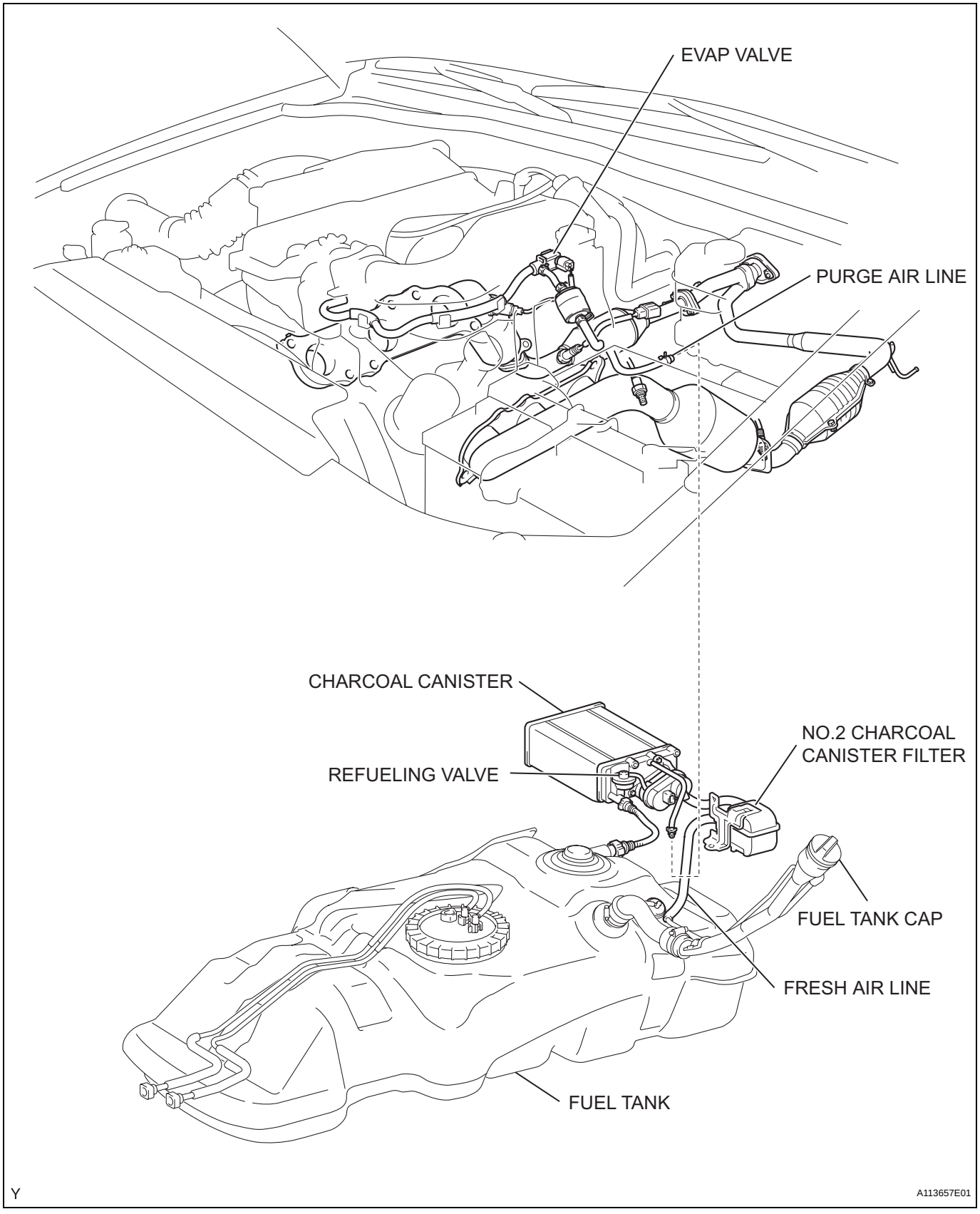

EC

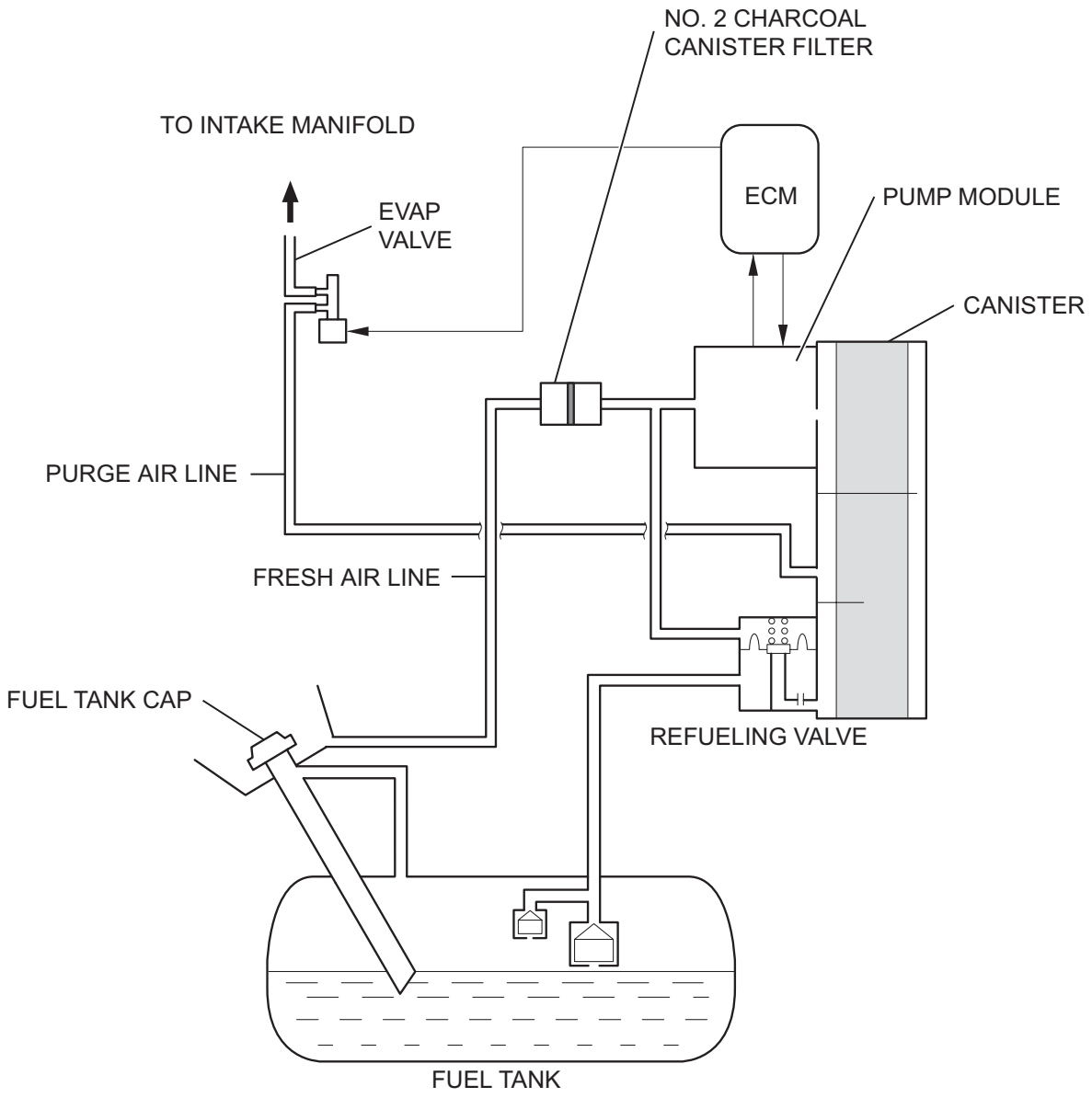

EC

Y

A113653E01

CANISTER

REMOVAL

1. **DISCHARGE FUEL SYSTEM PRESSURE**
   (See page FU-1)
2. **DISCONNECT CABLE FROM NEGATIVE BATTERY TERMINAL**
3. **REMOVE FUEL TANK PROTECTOR SUB-ASSEMBLY NO.1**
4. **DISCONNECT FUEL TANK MAIN TUBE AND FUEL TANK RETURN TUBE (See page FU-30)**
5. **REMOVE FUEL TANK ASSEMBLY (See page FU-30)**
6. **REMOVE CHARCOAL CANISTER FILTER NO.2**
   (a) Remove the bolt, then remove the ABS wire harness clamp from the charcoal canister.

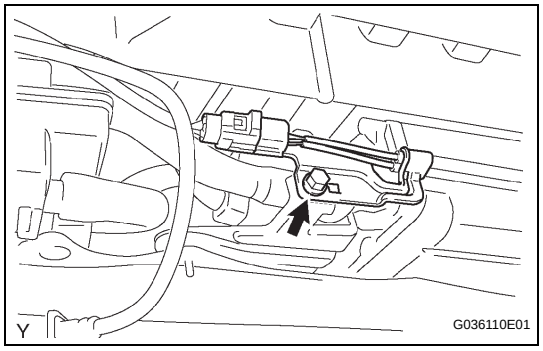

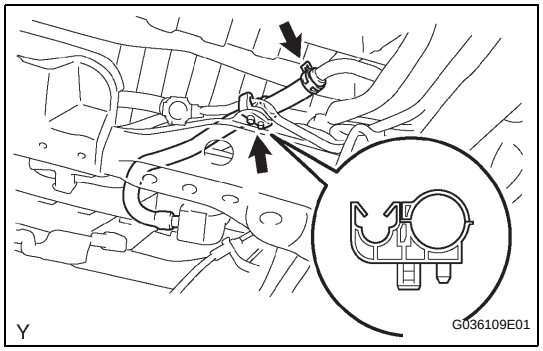

   (b) Release the EVAP pipe from the hose clamp.
   (c) Disconnect the breather hose from the pipe.
   (d) Disengage the hose clamp.

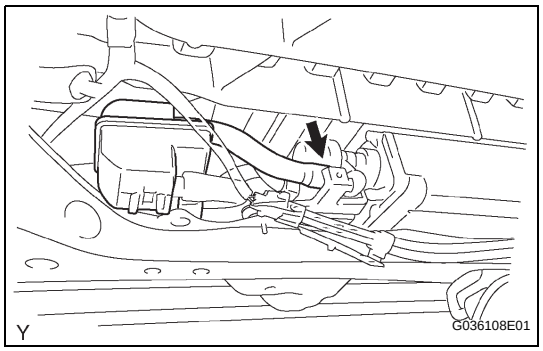

   (e) Disconnect the breather hose from the charcoal canister.

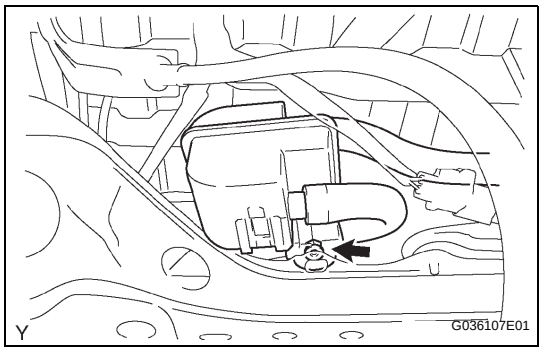

(f) Remove the nut, then remove the charcoal canister filter No. 2.

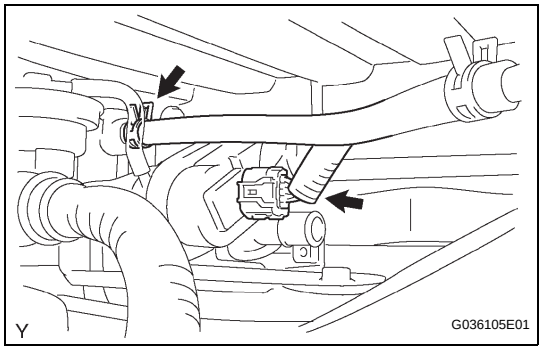

7. REMOVE CHARCOAL CANISTER ASSEMBLY

(a) Disconnect the connector.

(b) Disconnect the EVAP tube.

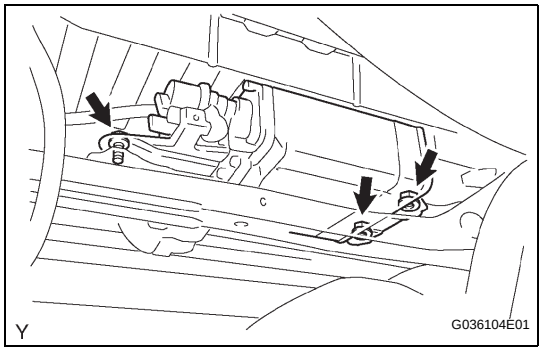

(c) Remove the bolt and 2 nuts, then remove the charcoal canister.

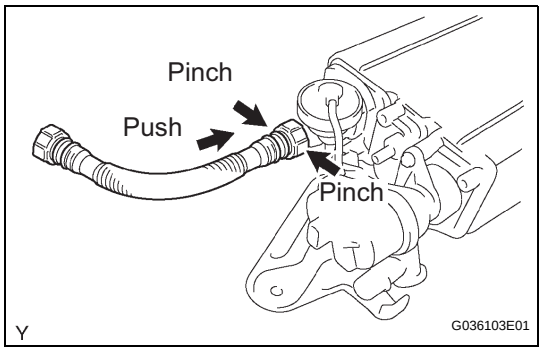

(d) Disconnect the fuel tank vent hose.

(1) Pinch the retainer and pull the fuel tank vent hose connector out of the charcoal canister to disconnect the fuel tank vent hose from the charcoal canister.

NOTICE:

- **Remove any dirt and foreign objects from the fuel tank vent hose connector before performing the work.**
- **Do not allow any scratches or foreign objects on the parts when disconnecting, as the fuel tank vent hose connector has the O?ring that seals the pipe.**
- **Perform the work by hand. Do not use any tools.**
- **Do not forcibly bend, twist or turn the nylon tube.**
- **Protect the disconnected part by covering it with a vinyl bag after disconnecting the fuel tank vent hose.**
- **If the fuel vent connector and pipe are stuck, push and pull them to release.**

VENTILATION VALVE

REMOVAL

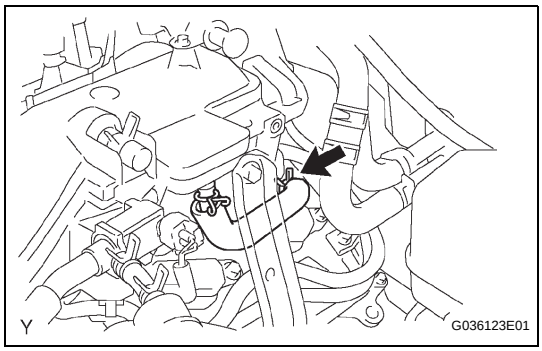

1. REMOVE VENTILATION VALVE SUB-ASSEMBLY

(a) Disconnect the ventilation hose.

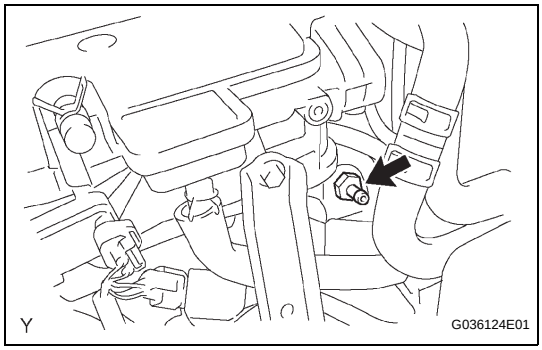

(b) Remove the ventilation valve.

INSPECTION

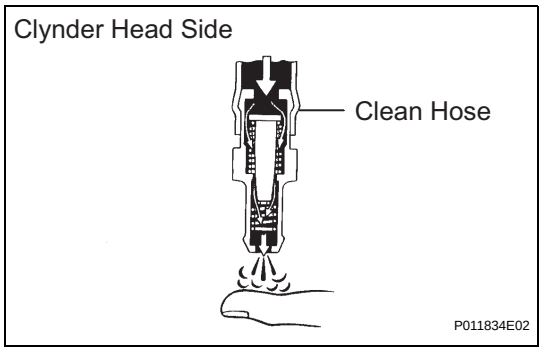

1. INSPECT VENTILATION VALVE SUB-ASSEMBLY

(a) Check the operation.

(1) Install a clean hose as shown in the illustration.

(2) Blow air into the cylinder head side and check that the air passes through freely.

CAUTION:
Do not suck air through the ventilation valve. Petroleum substances inside the ventilation valve are harmful.

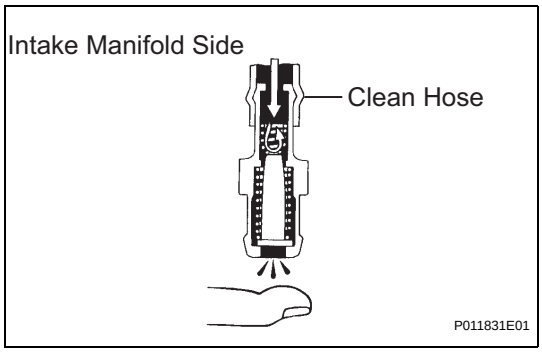

(3) Blow air into the intake manifold side and check that the air does not pass through freely.
If the operation is not as specified, replace the ventilation valve.

INSTALLATION

1. INSTALL VENTILATION VALVE SUB-ASSEMBLY

(a) Install the ventilation valve.
Torque: 27 N*m (275 kgf*cm, 20 ft.*lbf)

(b) Connect the ventilation hose.

DUTY VACUUM SWITCHING VALVE

REMOVAL

1. **DISCONNECT CABLE FROM NEGATIVE BATTERY TERMINAL**
2. **REMOVE V-BANK COVER (See page ES-414)**
3. **REMOVE DUTY VACUUM SWITCHING VALVE**
   (a) Disconnect the connector.
   (b) Disconnect the fuel vapor feed hose.

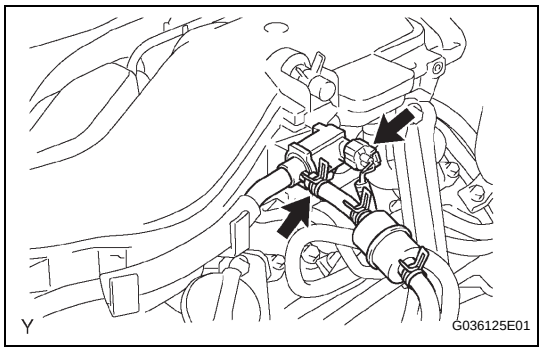

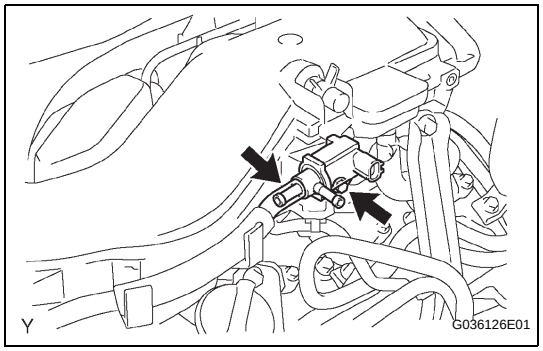

   (c) Remove the bolt, then separate the vacuum switching valve from the intake air surge tank.
   (d) Disconnect the hose, then remove the vacuum switching valve.

EC

INSPECTION

1. **INSPECT DUTY VACUUM SWITCHING VALVE**
   (a) Check the resistance.
      (1) Using an ohmmeter, measure the resistance between the terminals.
      Standard

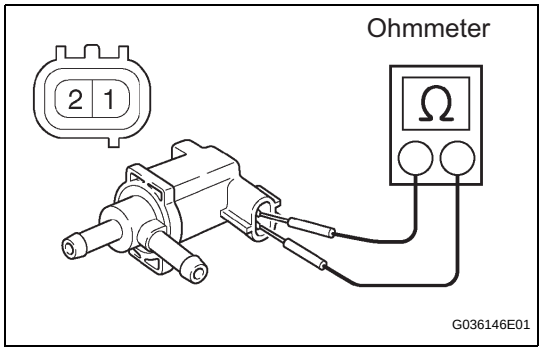

Tester Connection	Specified Condition
1 - 2	26 to 30 Ω at 20°C (68°F)

If the result is not as specified, replace the vacuum switching valve No. 1.

   (b) Check the vacuum switching valve No. 1 for ground.
      (1) Using an ohmmeter, check the resistance between each terminal and the body.
      Standard

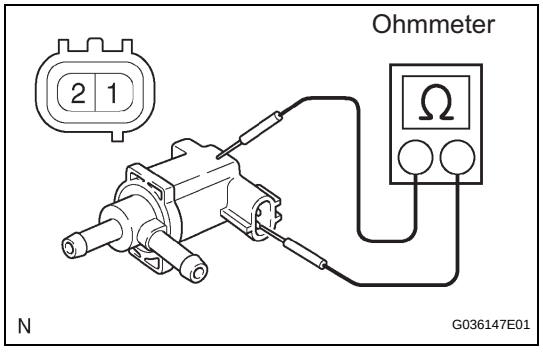

Tester Connection	Specified Condition
1 - Body	10 MΩ or higher
2 - Body	10 MΩ or higher

If the result is not as specified, replace the vacuum switching valve No. 1.

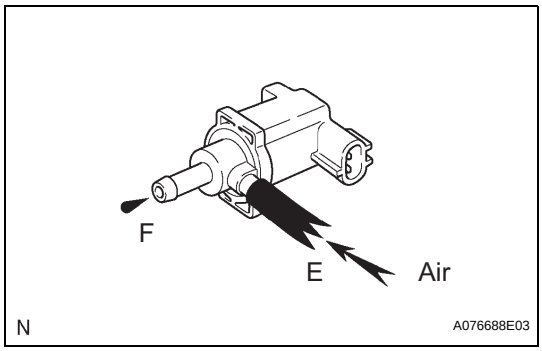

(c) Check the operation.

(1) Check that air does not flow from port E to port F.

If the operation is not as specified, replace the vacuum switching valve No. 1.

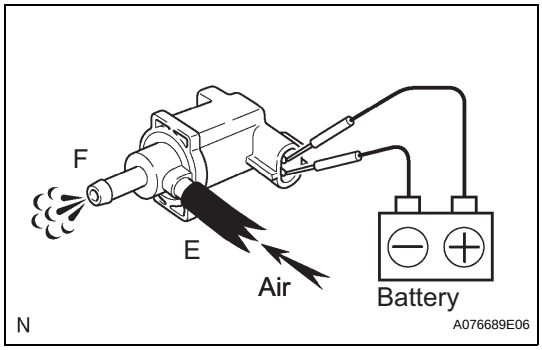

(2) Apply battery voltage across the terminals.

(3) Check that air flows from port E to port F.

If the operation is not as specified, replace the vacuum switching valve No. 1.

EC

AIR FUEL RATIO SENSOR

REMOVAL

1. DISCONNECT CABLE FROM BATTERY NEGATIVE TERMINAL

2. REMOVE AIR FUEL RATIO SENSOR

(a) Disconnect the 2 air fuel ratio sensor connectors.

(b) Remove the 2 air fuel ratio sensors from the exhaust manifold.

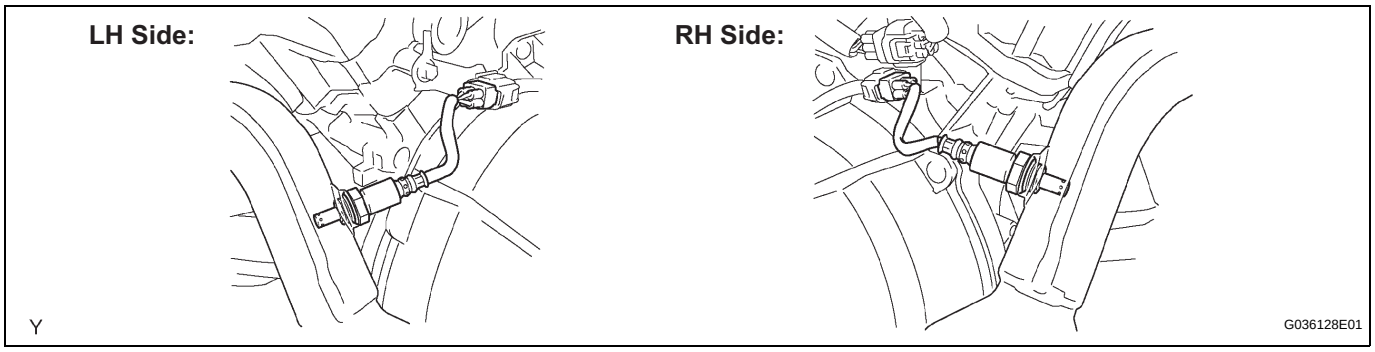

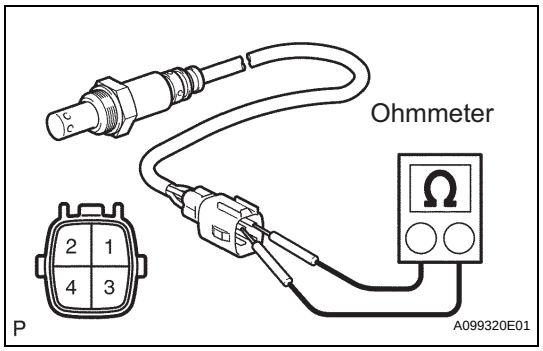

INSPECTION

1. INSPECT AIR FUEL RATIO SENSOR

(a) Check the resistance. (Bank 1 Sensor 1)

(1) Using an ohmmeter, measure the resistance between the terminals.

Standard

Tester Connection	Specified Condition
1 (HT) - 2 (+B)	1.8 to 3.4 Ω at 20°C (68°F)
1 (HT) - 4 (E1)	10 kΩ or higher

If the result is not as specified, replace the air fuel ratio sensor.

EC

INSTALLATION

1. INSTALL AIR FUEL RATIO SENSOR

(a) Using SST, install the 2 air fuel ratio sensors onto the exhaust manifold.

SST 09224-00010

Torque: 44 N*m (449 kgf*cm, 33 ft.*lbf)

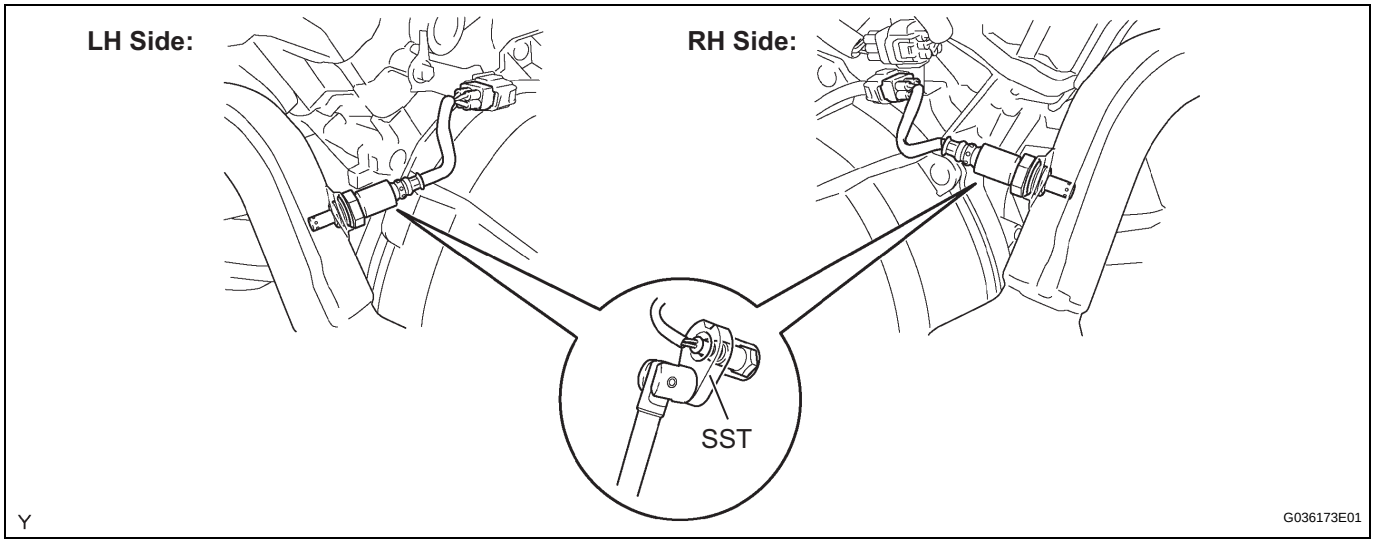

EC

(b) Connect the 2 air fuel ratio sensor connectors.

2. CONNECT CABLE TO NEGATIVE BATTERY TERMINAL

Torque: 3.9 N*m (40 kgf*cm, 35 in.*lbf)

3. CHECK FOR EXHAUST GAS LEAKAGE

HEATED OXYGEN SENSOR

REMOVAL

1. **DISCONNECT CABLE FROM NEGATIVE BATTERY TERMINAL**

2. **REMOVE HEATED OXYGEN SENSOR**
   (a) Disconnect the 2 heated oxygen sensor connectors.
   (b) Remove the 2 heated oxygen sensors from the exhaust pipe.

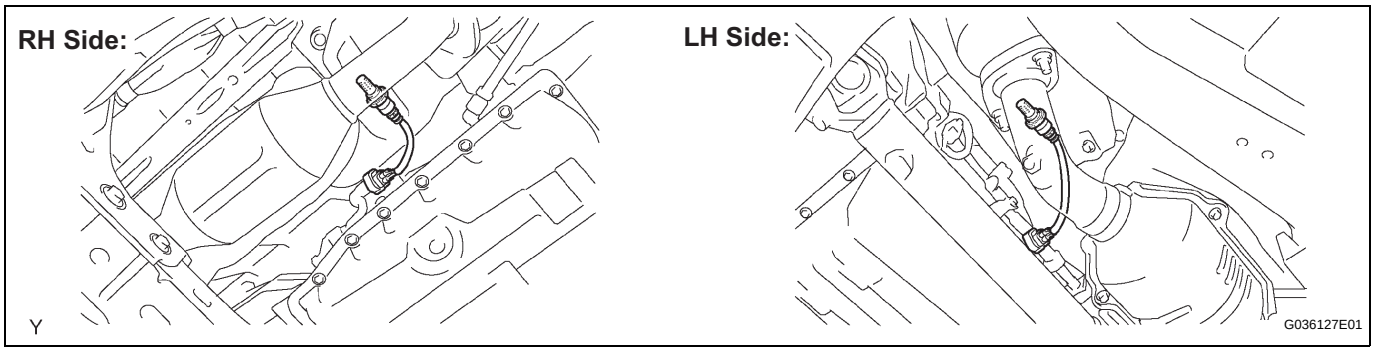

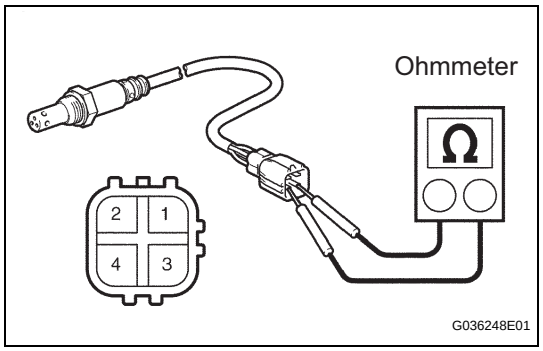

INSPECTION

1. **INSPECT HEATED OXYGEN SENSOR**
   (a) Check the resistance. (Bank 1 Sensor 2)
      (1) Using an ohmmeter, measure the resistance between the terminals.
      Standard

Tester Connection	Specified Condition
1 (HT) - 2 (+B)	11 to 16 Ω at 20°C (68°F)
1 (HT) - 4 (E)	10 kΩ or higher

If the result is not as specified, replace the heated oxygen sensor.

EC

INSTALLATION

1. INSTALL HEATED OXYGEN SENSOR

(a) Using SST, install the 2 heated oxygen sensors onto the exhaust pipe.
SST 09224-00010
Torque: 44 N*m (449 kgf*cm, 33 ft.*lbf)

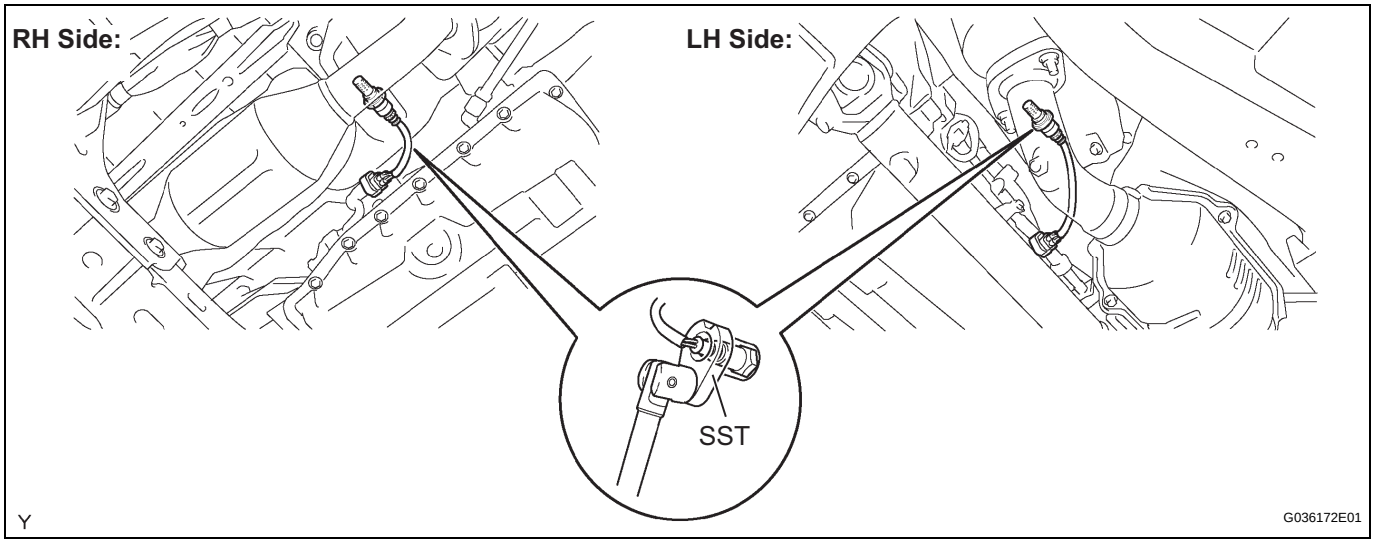

EC

(b) Connect the 2 heated oxygen sensor connectors.

2. CONNECT CABLE TO NEGATIVE BATTERY TERMINAL
Torque: 3.9 N*m (40 kgf*cm, 35 in.*lbf)

3. CHECK FOR EXHAUST GAS LEAKAGE

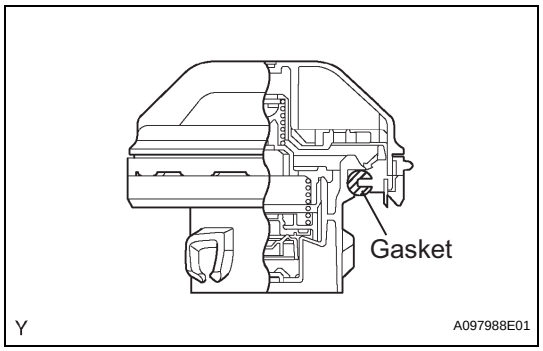

FUEL TANK CAP

INSPECTION

1. INSPECT FUEL TANK CAP ASSEMBLY

(a) Check the appearance.

(1) Visually check the fuel tank cap and gasket for any deformation and damage.
If necessary, repair or replace the cap and/or gasket.

EMISSION CONTROL SYSTEM

PARTS LOCATION

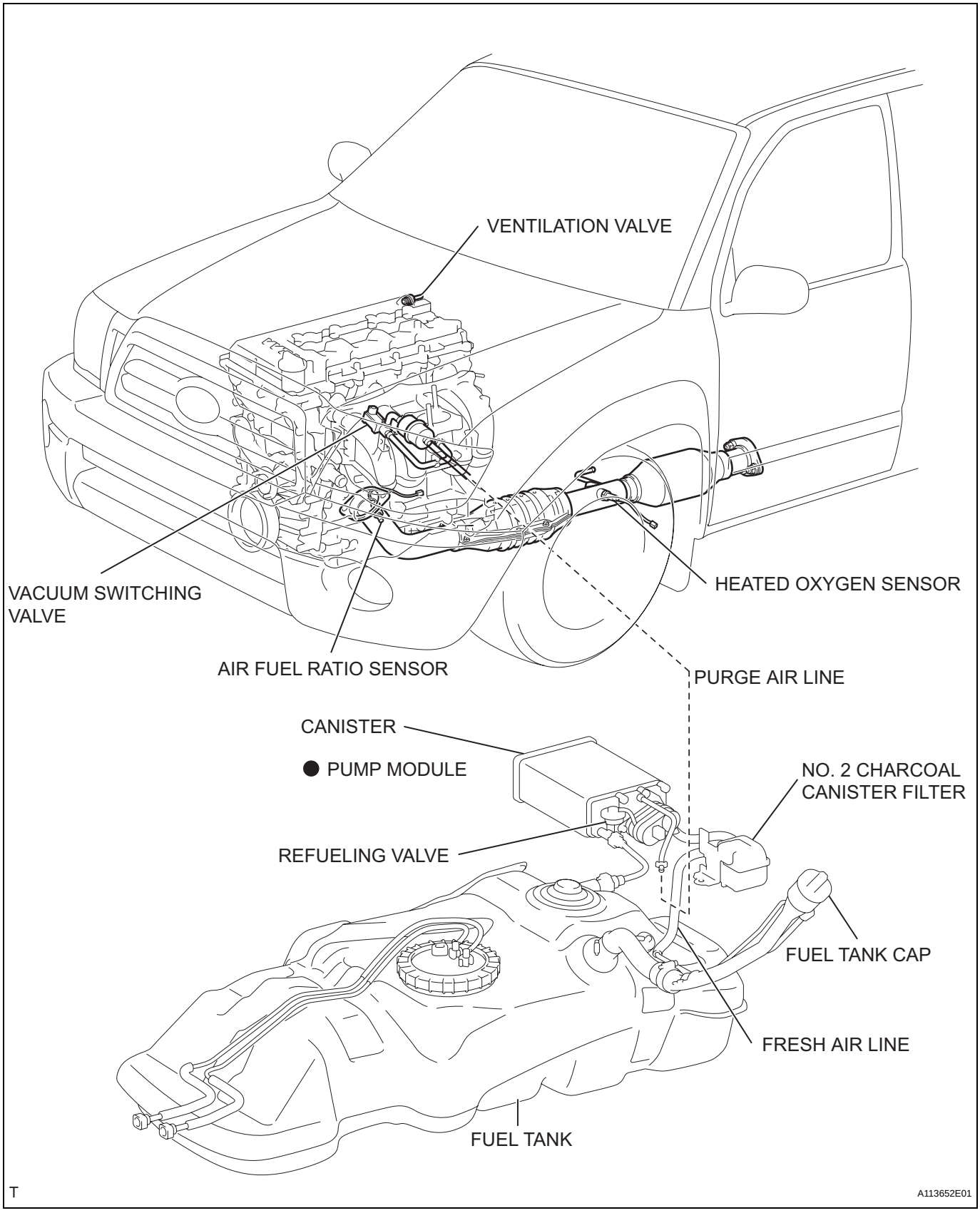

EC

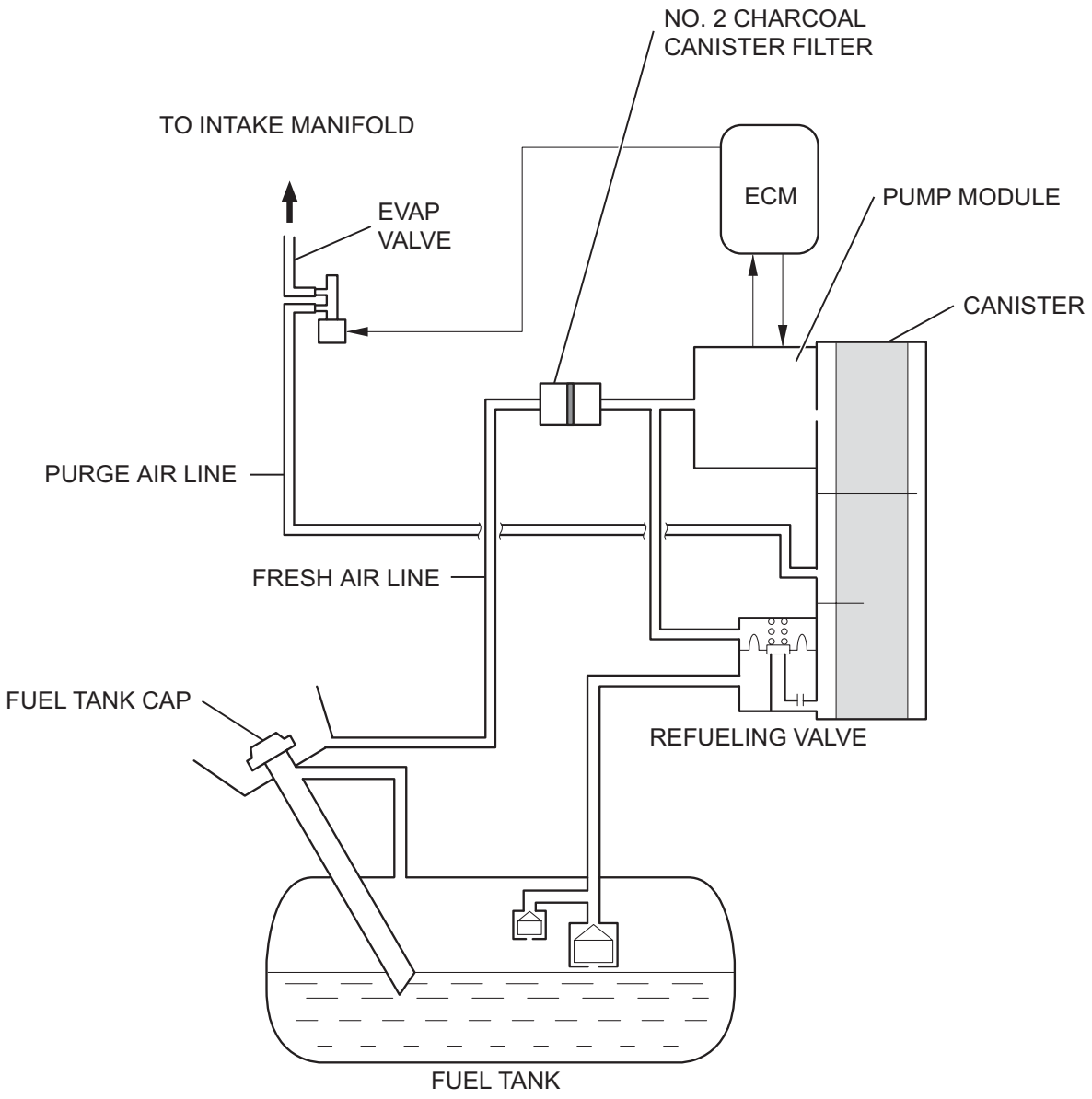

Y

A113653E01

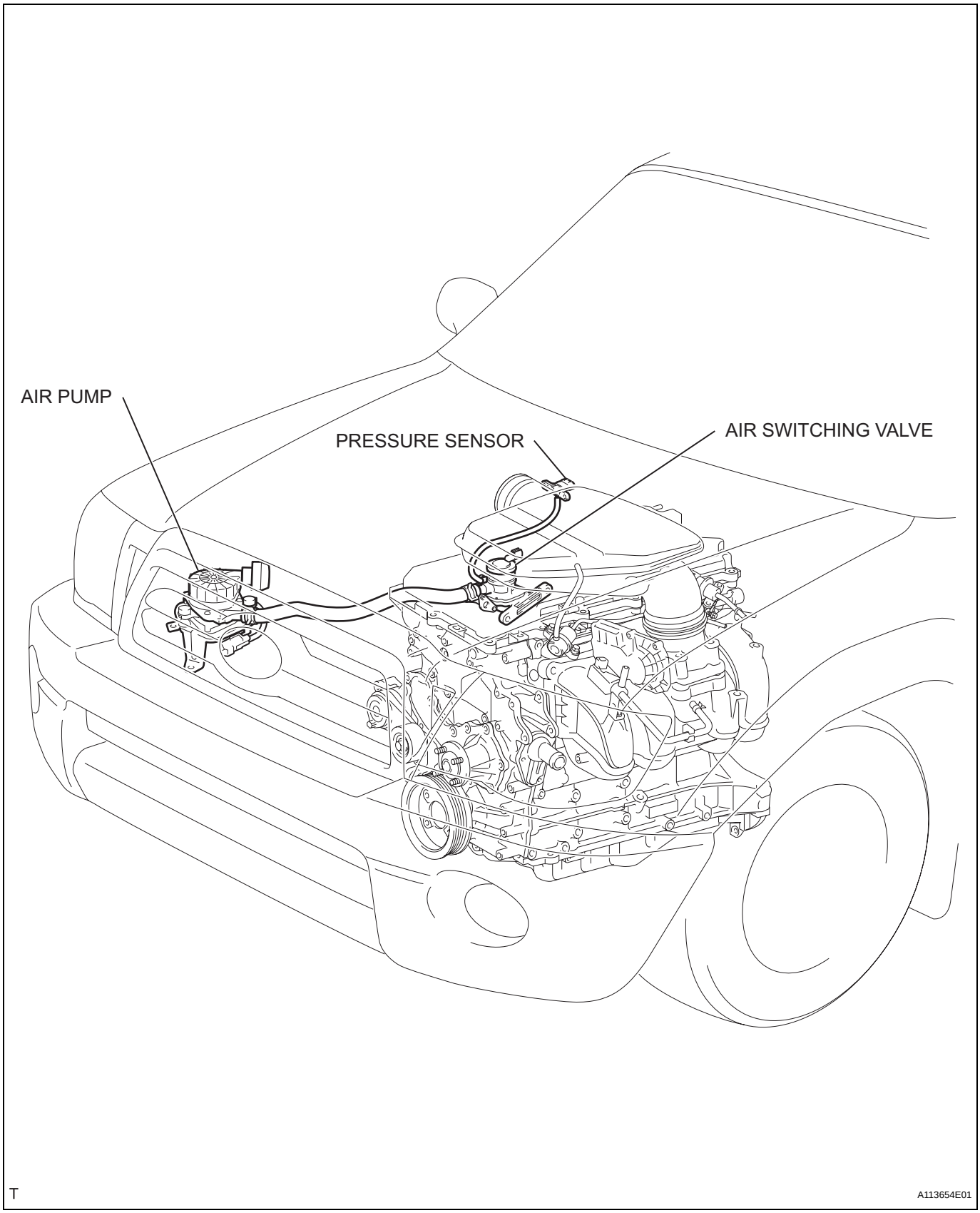
AIR PUMP
PRESSURE SENSOR
AIR SWITCHING VALVE
T
A113654E01

AIR PUMP

REMOVAL

1. DISCONNECT CABLE FROM NEGATIVE BATTERY TERMINAL

2. REMOVE AIR PUMP ASSEMBLY

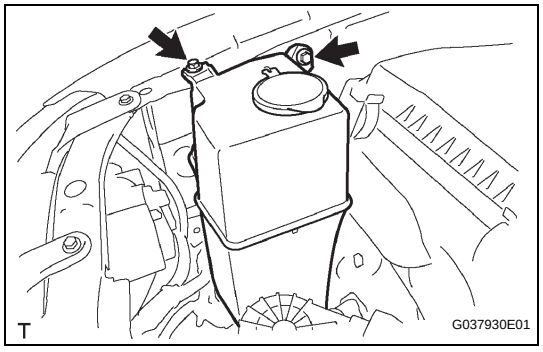

(a) Remove the 2 bolts, then separate the washer jar.
HINT:
Perform the above procedure to make space for removing the air pump assy.

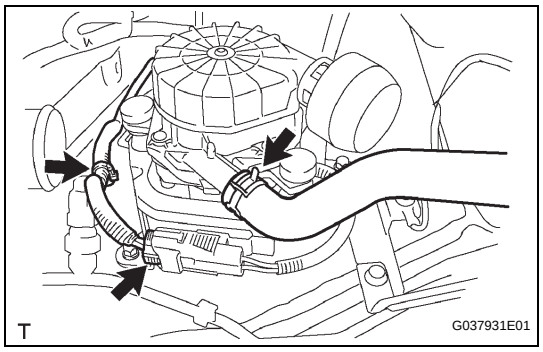

(b) Disconnect the air injection system No. 1 hose.
(c) Disconnect the air pump connector and wire harness clamp.

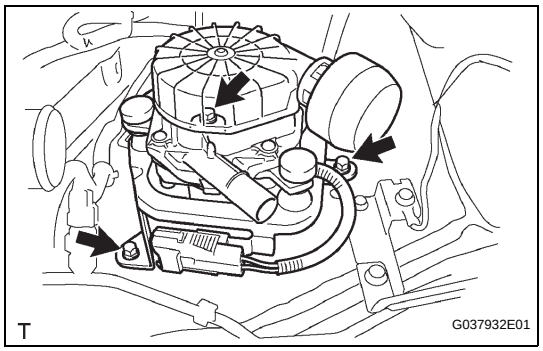

(d) Remove the 3 bolts, then remove the air pump with bracket.

EC

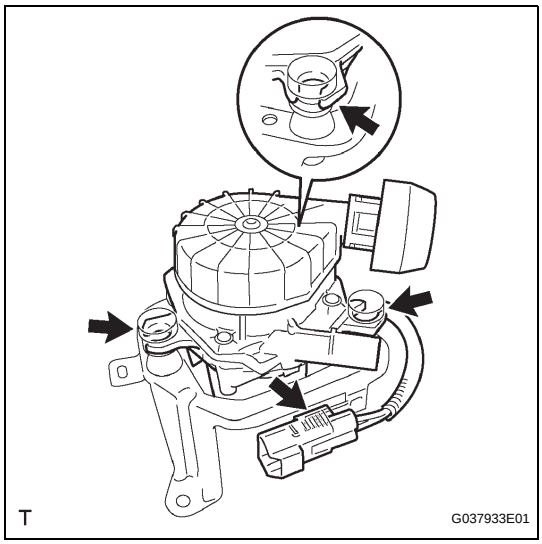

(e) Disconnect the air pump connector clamp.
(f) Disengage the 3 fittings of the air pump insulator, and remove the air pump from the bracket.

INSPECTION

1. INSPECT AIR PUMP ASSEMBLY

(a) Check the resistance.
(1) Using an ohmmeter, measure the resistance between the terminals.
Resistance:
0.4 to 1.0 Ω at 20°C (68°F)
If the result is not as specified, replace the air pump.

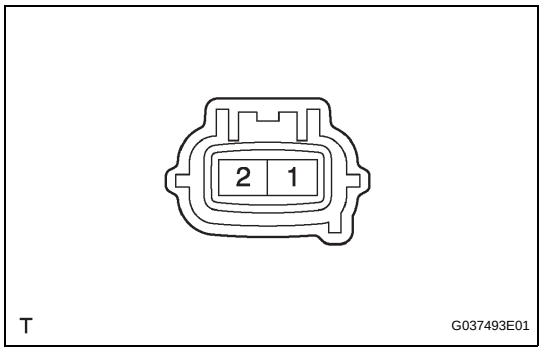

EC

INSTALLATION

1. INSTALL AIR PUMP ASSEMBLY

(a) Engage the 3 fittings of the air pump insulator, and install the air pump onto the bracket.
(b) Connect the air pump connector clamp.

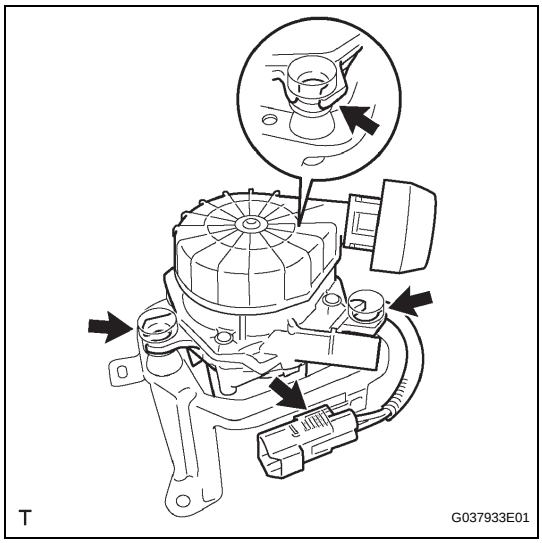

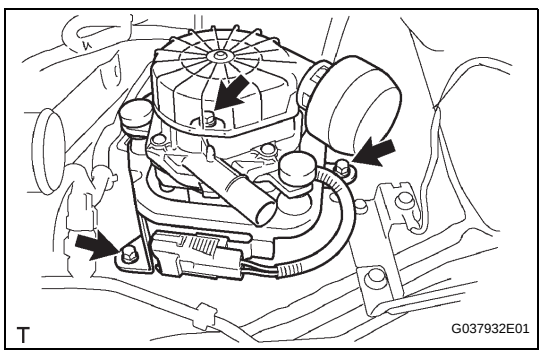

(c) Install the air pump with bracket with the 3 bolts.
Torque: 18 N*m (184 kgf*cm, 13 ft.*lbf)

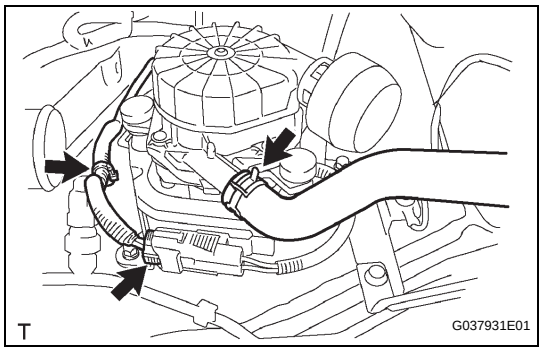

(d) Connect the air pump connector and wire harness clamp.
(e) Connect the air injection system No. 1 hose.

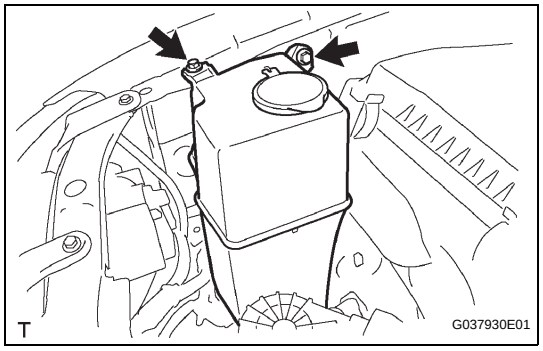

(f) Install the washer jar with the 2 bolts.
Torque: 6 N*m (56 kgf*cm, 49 in.*lbf)

2. CONNECT CABLE TO NEGATIVE BATTERY TERMINAL
Torque: 3.9 N*m (40 kgf*cm, 35 in.*lbf)

EC

AIR SWITCHING VALVE

REMOVAL

1. **DISCONNECT CABLE FROM NEGATIVE BATTERY TERMINAL**

2. **REMOVE INTAKE AIR CONNECTOR (See page ES-452)**

3. **REMOVE AIR CLEANER CAP SUB-ASSEMBLY**
   (a) Disconnect the mass air flow meter connector.
   (b) Disconnect the wire harness clamp.
   (c) Loosen the hose clamp bolt, then disconnect the air cleaner hose No. 1.
   (d) Disconnect the 2 air cleaner clamps.
   (e) Remove the air cleaner cap together with the air cleaner hose No. 1.

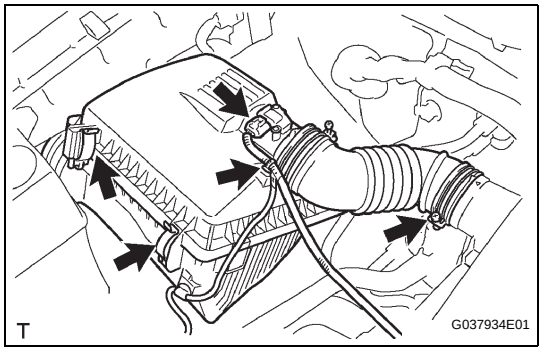

4. **REMOVE NO.1 EXHAUST MANIFOLD HEAT INSULATOR**
   (a) Remove the 5 bolts, then remove the exhaust manifold heat insulator No. 1.

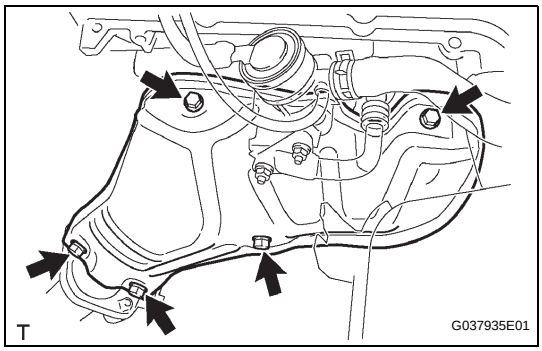

5. **DISCONNECT AIR INJECTION SYSTEM NO.1 HOSE**
   (a) Disconnect the air injection system No. 1 hose from the air switching valve.

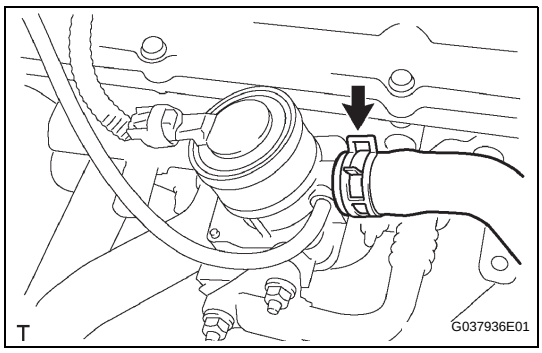

6. **REMOVE INTAKE PIPE INSULATOR**
   (a) Remove the 4 nuts, then remove the intake pipe insulator.
   (b) Remove the 2 gaskets.

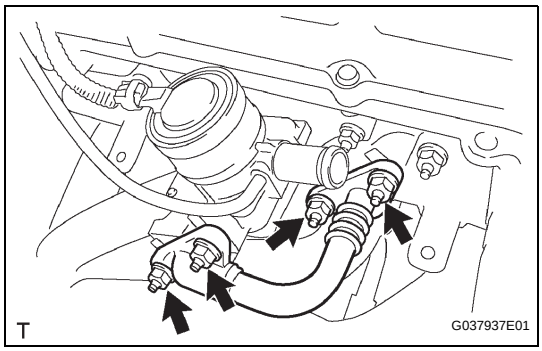

EC

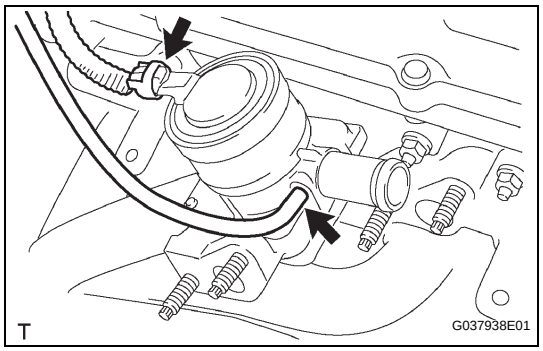

7. REMOVE AIR SWITCHING VALVE ASSEMBLY

(a) Disconnect the vacuum hose.

(b) Disconnect the air switching valve connector.

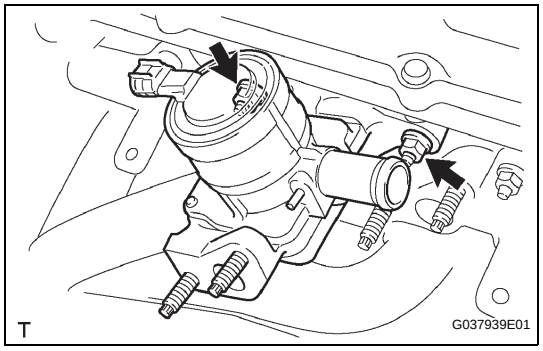

(c) Remove the 2 nuts, then remove the air switching valve.

(d) Remove the gasket.

INSPECTION

1. INSPECT AIR SWITCHING VALVE ASSEMBLY

(a) Check the resistance.

(1) Using an ohmmeter, measure the resistance between the terminals.

Resistance:

4.5 to 5.5 Ω at 20°C (68°F)

If the result is not as specified, replace the air switching valve.

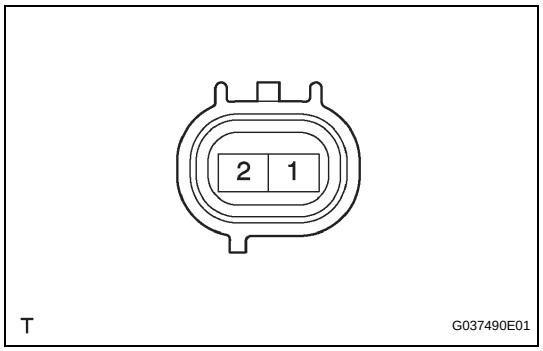

(b) Check the operation.

(1) Check that air does not flow from the port.

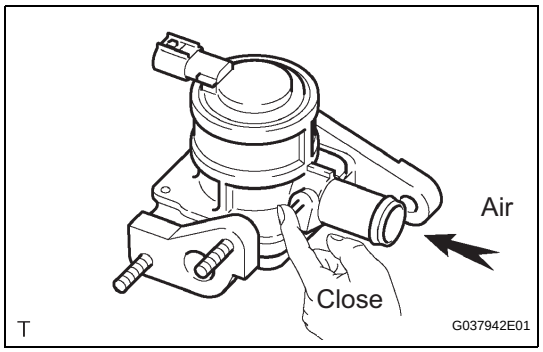

(2) Apply battery positive voltage across the terminals.

(3) Check that air flows from the port.

If the operation is not as specified, replace the air switching valve.

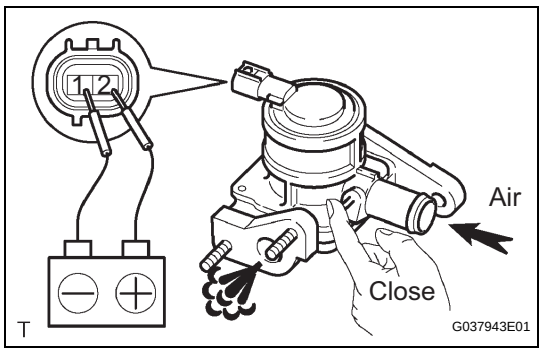

EC

CANISTER

REMOVAL

1. **DISCHARGE FUEL SYSTEM PRESSURE**
   (See page FU-1)
2. **DISCONNECT CABLE FROM NEGATIVE BATTERY TERMINAL**
3. **DISCONNECT FUEL TANK MAIN TUBE AND FUEL TANK RETURN TUBE (See page FU-30)**
4. **REMOVE FUEL TANK ASSEMBLY (See page FU-31)**
5. **REMOVE CHARCOAL CANISTER FILTER NO.2**
   (a) Remove the bolt, then remove the ABS wire harness clamp from the charcoal canister.

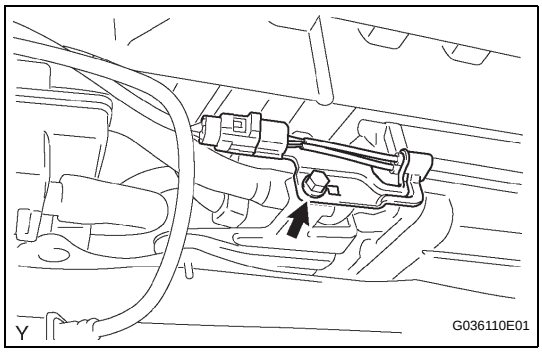

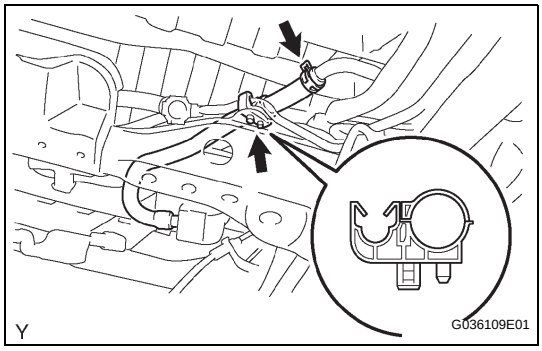

   (b) Release the EVAP pipe from the hose clamp.
   (c) Disconnect the breather hose from the pipe.
   (d) Disengage the hose clamp.

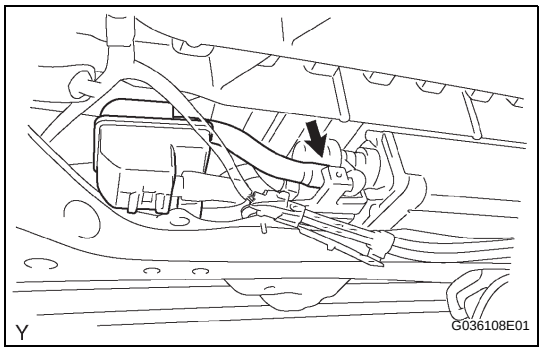

   (e) Disconnect the breather hose from the charcoal canister.

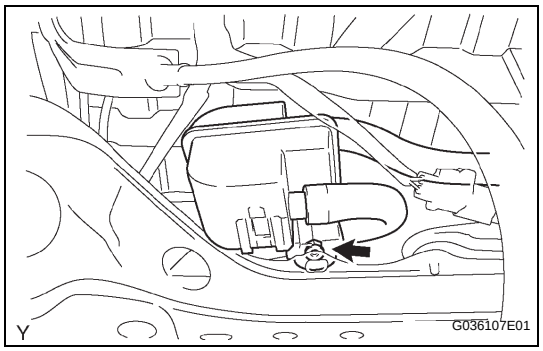

(f) Remove the nut, then remove the charcoal canister filter No. 2.

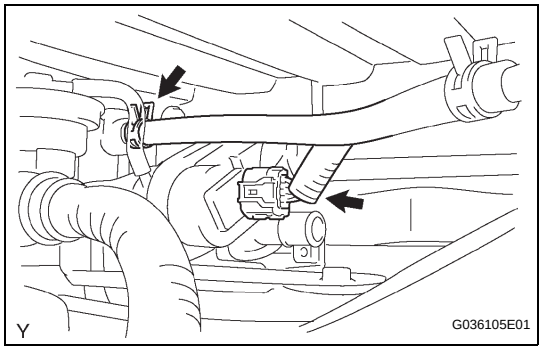

6. REMOVE CHARCOAL CANISTER ASSEMBLY

(a) Disconnect the connector.

(b) Disconnect the EVAP tube.

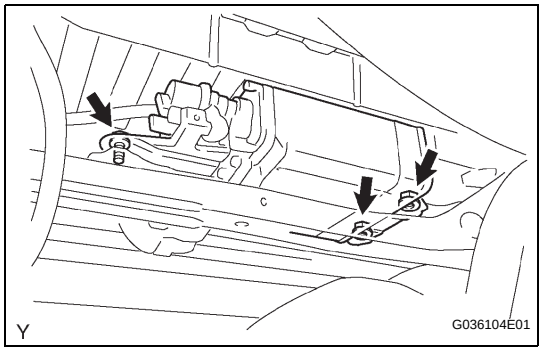

(c) Remove the bolt and 2 nuts, then remove the charcoal canister.

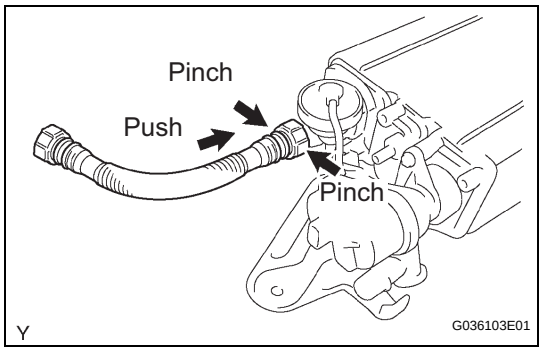

(d) Disconnect the fuel tank vent hose.

(1) Pinch the retainer and pull the fuel tank vent hose connector out of the charcoal canister to disconnect the fuel tank vent hose from the charcoal canister.

NOTICE:

- **Remove any dirt and foreign objects from the fuel tank vent hose connector before performing the work.**
- **Do not allow any scratches or foreign objects on the parts when disconnecting, as the fuel tank vent hose connector has the O-ring that seals the pipe.**
- **Perform the work by hand. Do not use any tools.**
- **Do not forcibly bend, twist or turn the nylon tube.**
- **Protect the disconnected part by covering it with a vinyl bag after disconnecting the fuel tank vent hose.**
- **If the fuel vent connector and pipe are stuck, push and pull them to release.**

EC

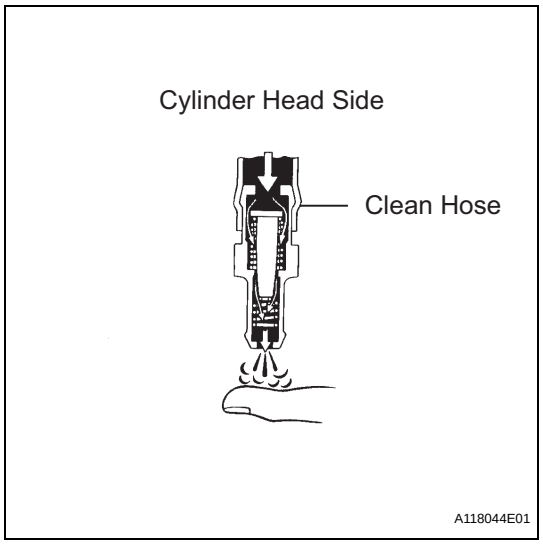



VENTILATION VALVE

INSPECTION

1. INSPECT VENTILATION VALVE SUB-ASSY

(a) Check the operation.

(1) Install a clean hose as shown in the illustration.

(2) Blow air into the cylinder head side and check that the air passes through freely.

CAUTION:
Do not suck air through the ventilation valve. Petroleum substances inside the ventilation valve are harmful.

(3) Blow air into the intake manifold side and check that the air does not pass through freely.
If the operation is not as specified, replace the ventilation valve.

EC

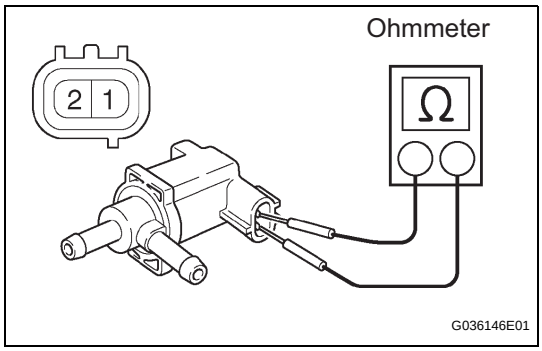

DUTY VACUUM SWITCHING VALVE

INSPECTION

1. INSPECT DUTY VACUUM SWITCHING VALVE

(a) Check the resistance.

(1) Using an ohmmeter, measure the resistance between the terminals.

Standard

Tester Connection	Specified Condition
1 - 2	26 to 30 Ω at 20°C (68°F)

If the result is not as specified, replace the duty vacuum switching valve.

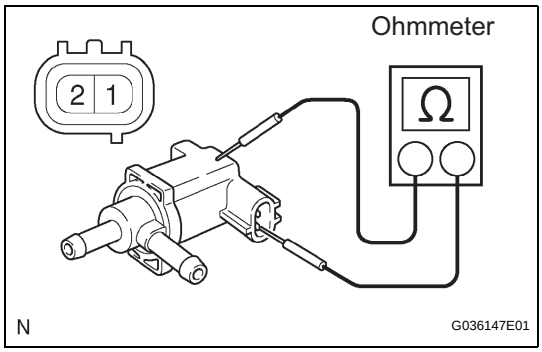

(b) Check the vacuum switching valve No. 1 for ground.

(1) Using an ohmmeter, check the resistance between each terminal and the body.

Standard

Tester Connection	Specified Condition
1 - Body	10 MΩ or higher
2 - Body	10 MΩ or higher

If the result is not as specified, replace the duty vacuum switching valve.

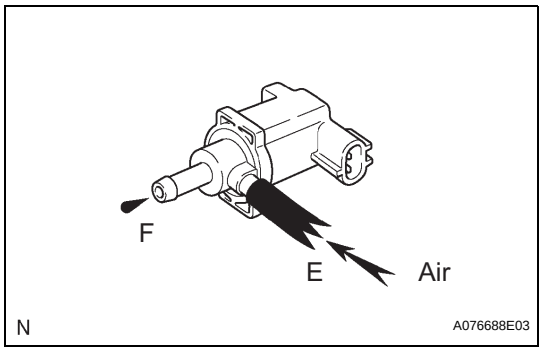

(c) Check the operation.

(1) Check that air does not flow from port E to port F.

If the operation is not as specified, replace the duty vacuum switching valve.

(2) Apply battery voltage across the terminals.

(3) Check that air flows from port E to port F.

If the operation is not as specified, replace the duty vacuum switching valve.

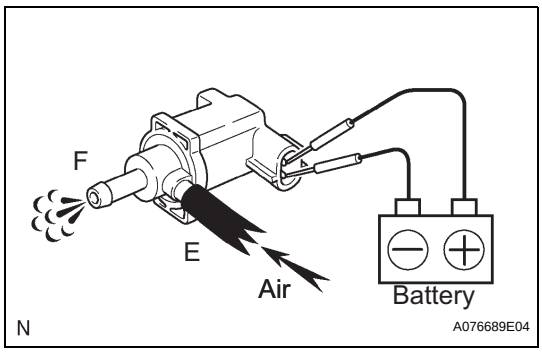

AIR FUEL RATIO SENSOR

REMOVAL

1. DISCONNECT CABLE FROM NEGATIVE BATTERY TERMINAL

2. REMOVE AIR FUEL RATIO SENSOR

(a) Disconnect the air fuel ratio sensor connector.

(b) Disconnect the wire harness clamp.

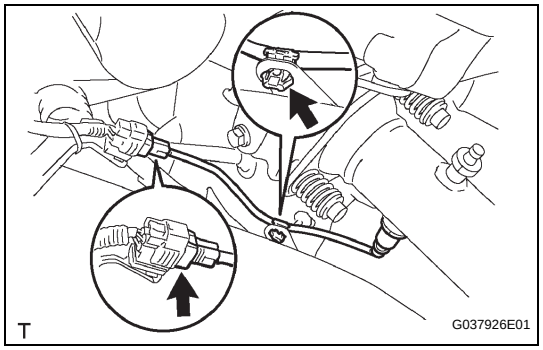

(c) Using SST, remove the air fuel ratio sensor.
SST 09224-00010

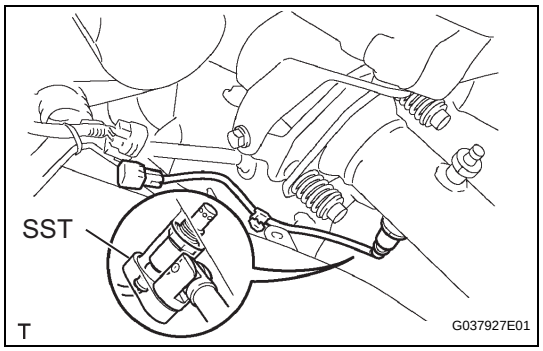

INSPECTION

1. INSPECT AIR FUEL RATIO SENSOR

(a) Check the resistance.

(1) Using an ohmmeter, measure the resistance between the terminals.
Standard

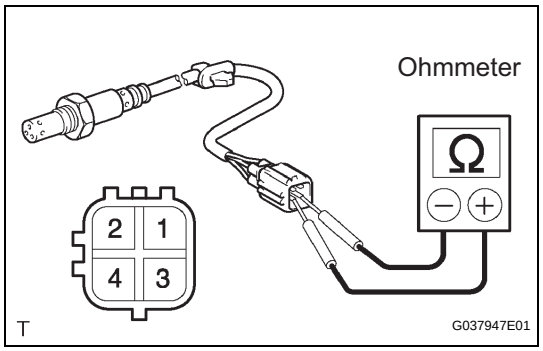

Tester Connection	Specified Condition
1 (HT) - 2 (+B)	1.8 to 3.4 Ω at 20°C (68°F)
1 (HT) - 4 (AF-)	10 kΩ or higher

If the result is not as specified, replace the air fuel ratio sensor.

INSTALLATION

1. INSTALL AIR FUEL RATIO SENSOR

(a) Using SST, install the air fuel ratio sensor.
SST 09224-00010
Torque: 44 N*m (449 kgf*cm, 33 ft.*lbf)
40 N*m (408 kgf*cm, 30 ft.*lbf) with SST
NOTICE:
Use a torque wrench with a fulcrum length of 300 mm (11.81 in.).

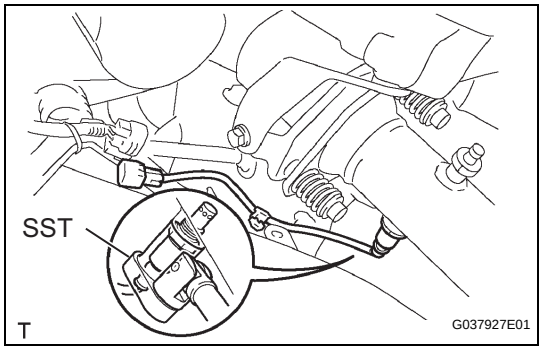

EC

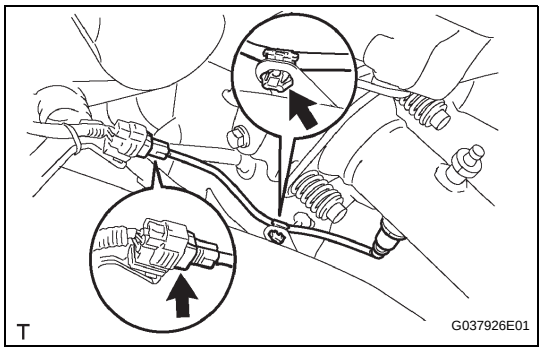

(b) Connect the wire harness clamp.
(c) Connect the air fuel ratio sensor connector.

2. CONNECT CABLE TO NEGATIVE BATTERY TERMINAL
Torque: 3.9 N*m (40 kgf*cm, 35 in.*lbf)

HEATED OXYGEN SENSOR

REMOVAL

1. DISCONNECT CABLE FROM NEGATIVE BATTERY TERMINAL

2. REMOVE HEATED OXYGEN SENSOR

(a) Disconnect the heated oxygen sensor connector.

(b) Disconnect the wire harness clamp. (4WD DRIVE TYPE)

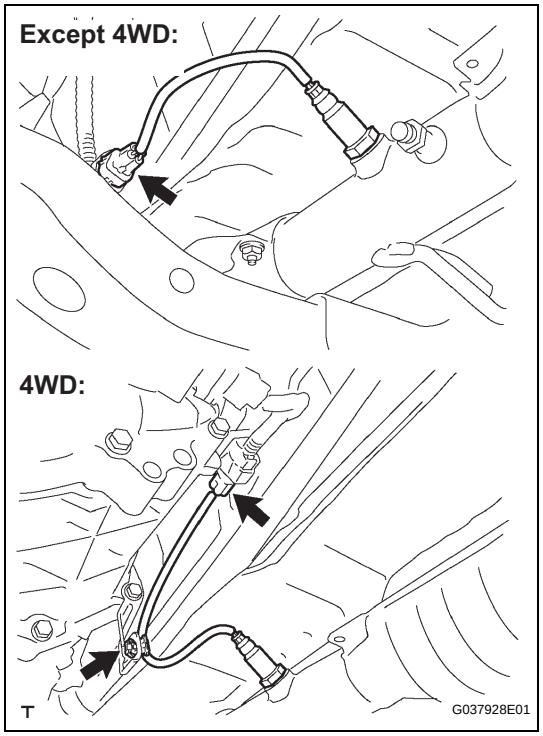

(c) Using SST, remove the heated oxygen sensor.
SST 09224-00010

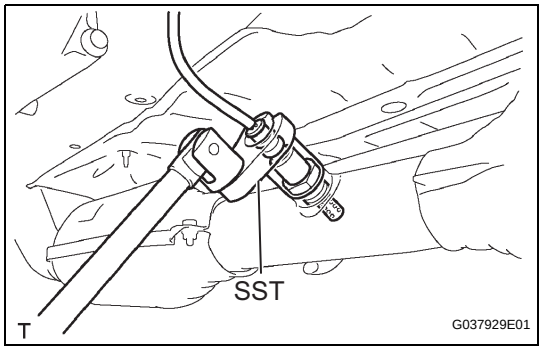

INSPECTION

1. INSPECT HEATED OXYGEN SENSOR

(a) Check the resistance.

(1) Using an ohmmeter, measure the resistance between the terminals.
Standard

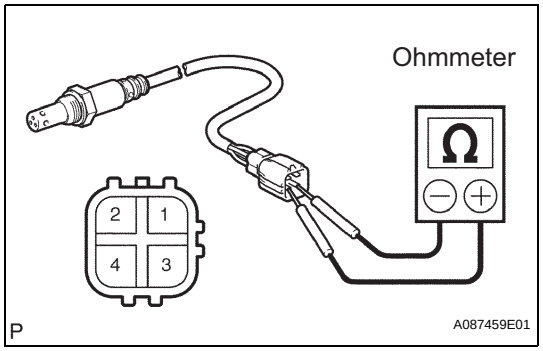

Tester Connection	Specified Condition
1 (HT) - 2 (+B)	11 to 16 Ω at 20°C (68°F)
1 (HT) - 4 (E)	10 kΩ or higher

If the result is not as specified, replace the heated oxygen sensor.

EC

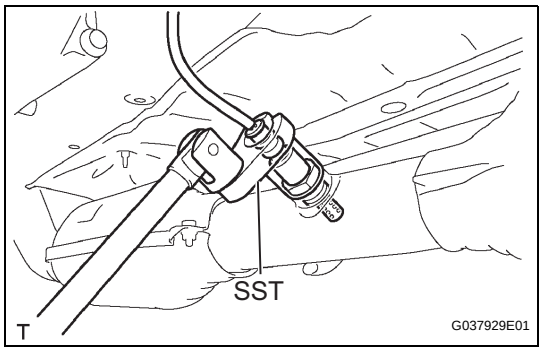

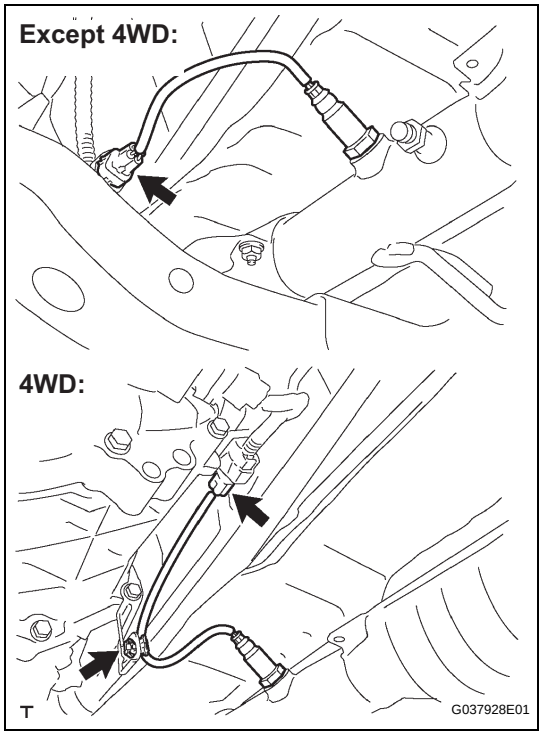

INSTALLATION

1. INSTALL HEATED OXYGEN SENSOR

(a) Using SST, install the heated oxygen sensor.
SST 09224-00010
Torque: 44 N*m (449 kgf*cm, 33 ft.*lbf)
40 N*m (408 kgf*cm, 30 ft.*lbf) with SST
NOTICE:
Use a torque wrench with a fulcrum length of 300 mm (11.81 in.).

(b) Connect the wire harness clamp. (4WD DRIVE TYPE)

(c) Connect the oxygen sensor connector.

2. CONNECT CABLE TO NEGATIVE BATTERY TERMINAL
Torque: 3.9 N*m (40 kgf*cm, 35 in.*lbf)

3. CHECK FOR EXHAUST GAS LEAKAGE

EC

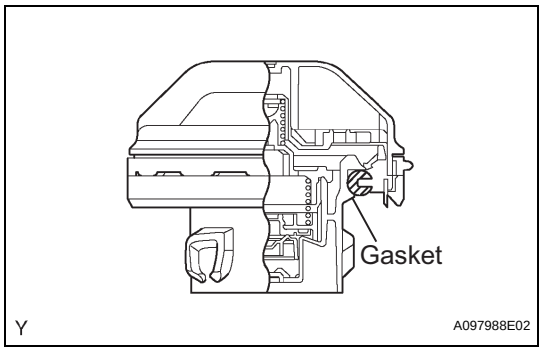

FUEL TANK CAP

INSPECTION

1. INSPECT FUEL TANK CAP ASSEMBLY

(a) Check the appearance.

(1) Visually check whether the fuel tank cap and gasket are deformed or damaged.
If necessary, repair or replace the cap and/or gasket.

INTAKE SYSTEM

PARTS LOCATION

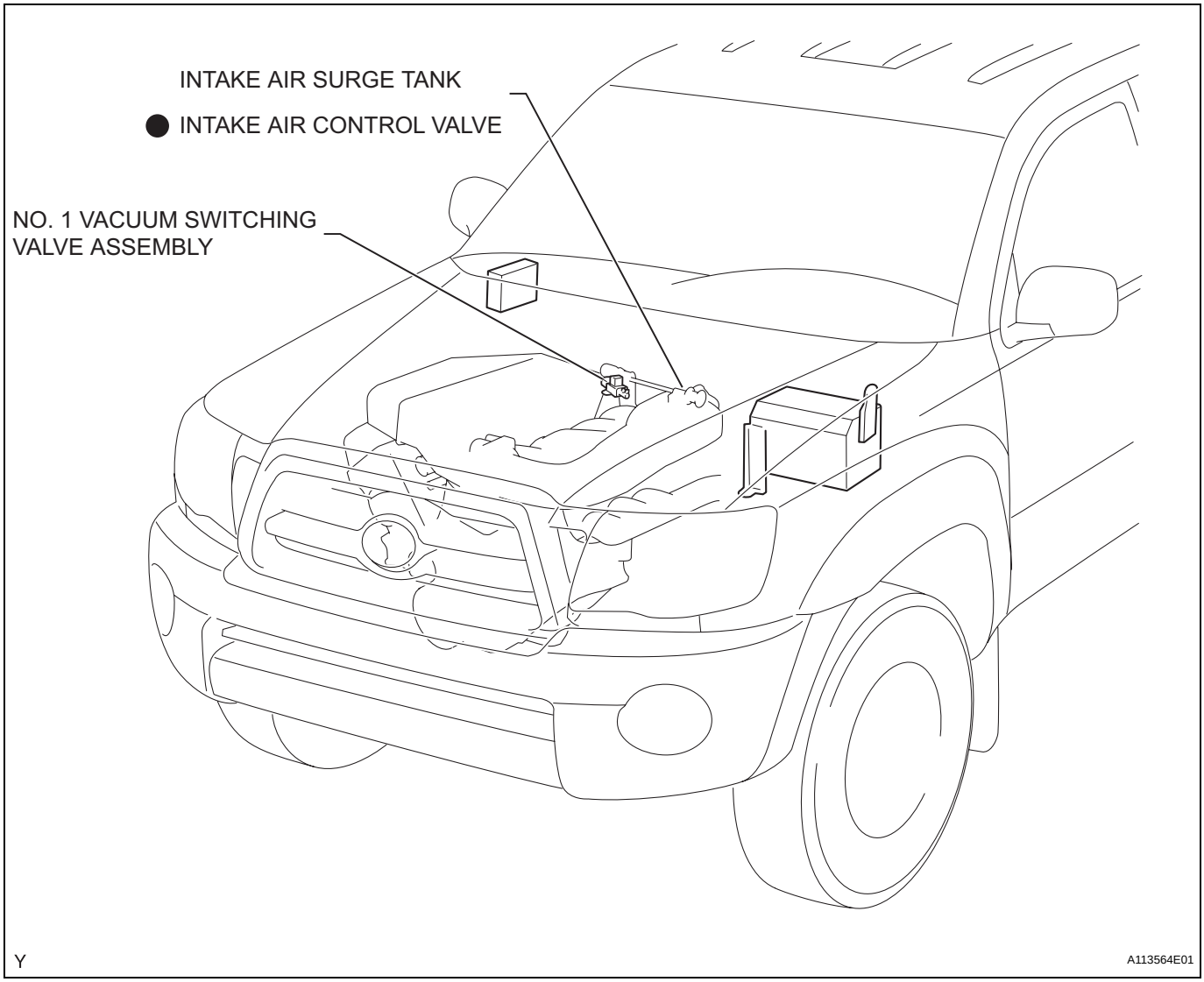

SYSTEM DIAGRAM

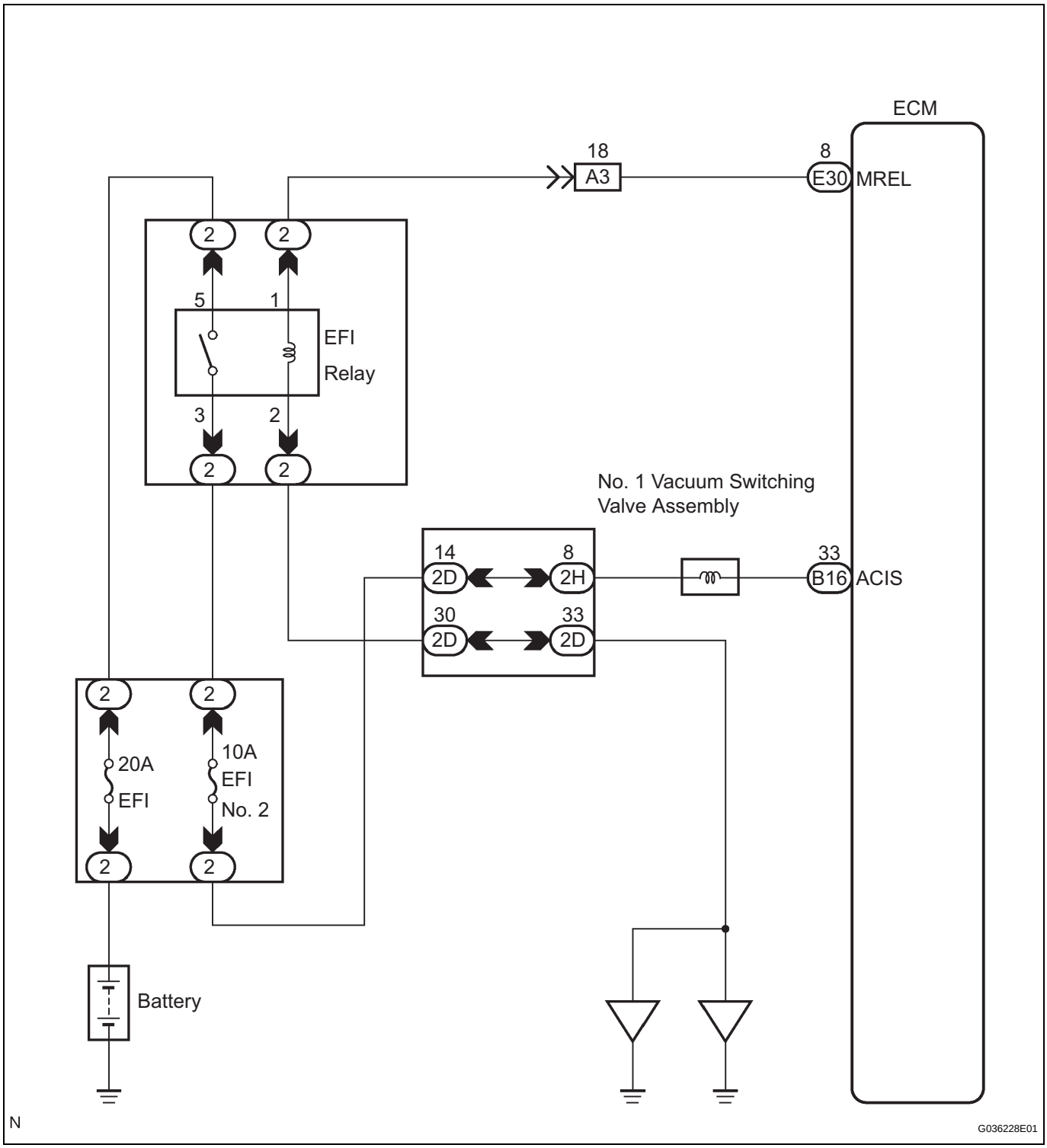

EXHAUST PIPE

COMPONENTS

For 2WD, PRE RUNNER:

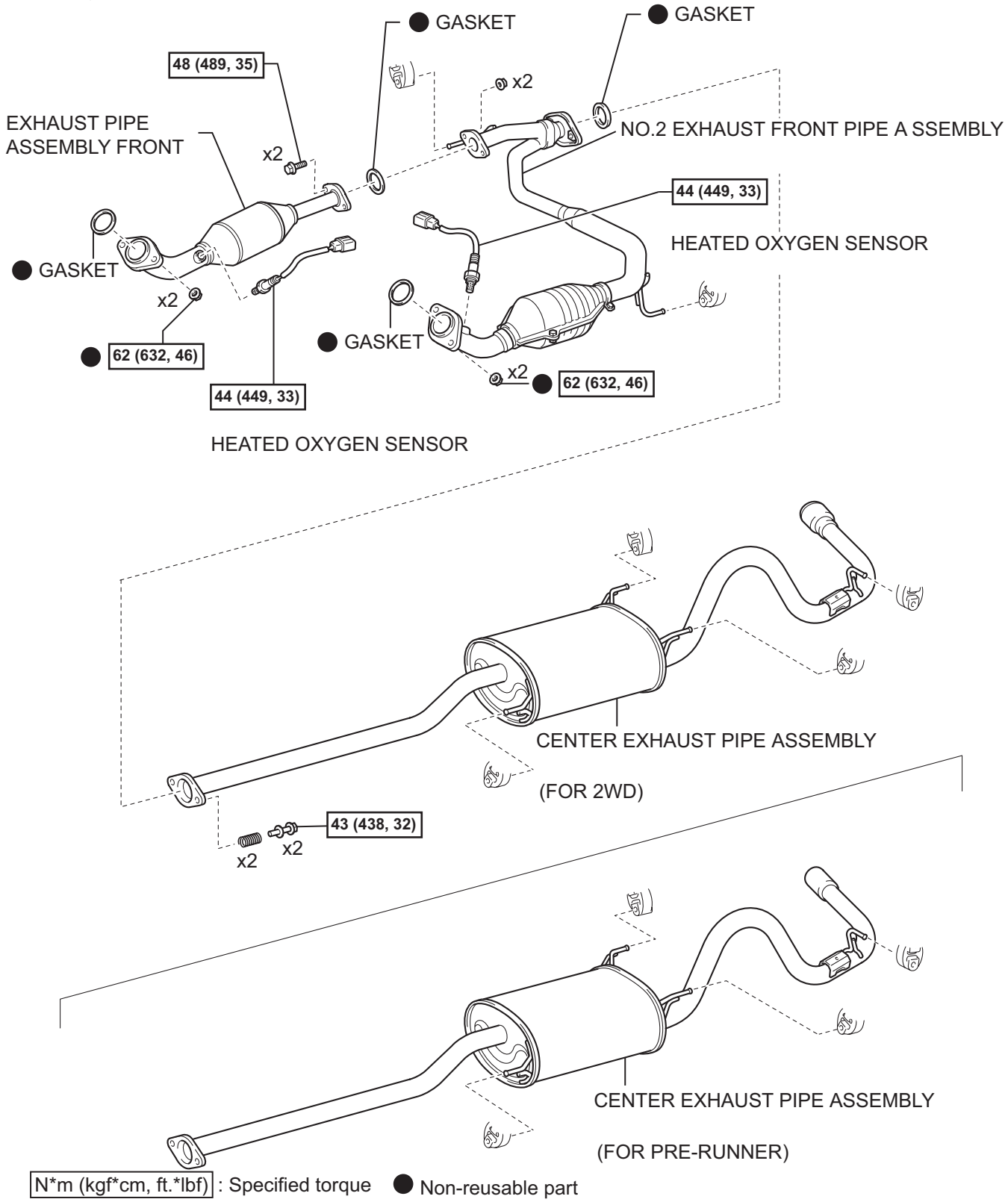

Y

A113562E01

EX

For 4WD:

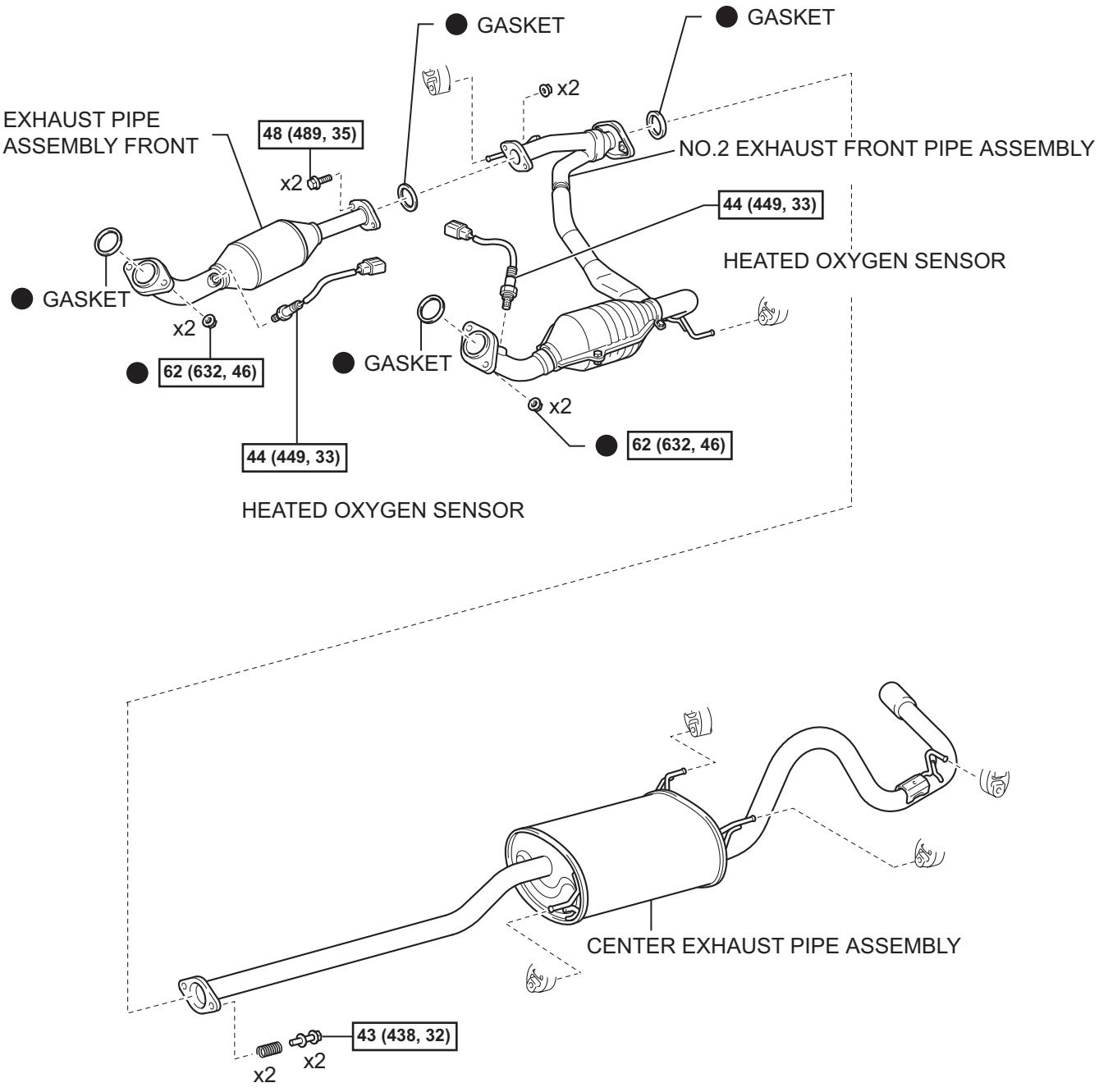

EX

N*m (kgf*cm, ft.*lbf) : Specified torque

● Non-reusable part

Y

A113563E01

EXHAUST PIPE

COMPONENTS

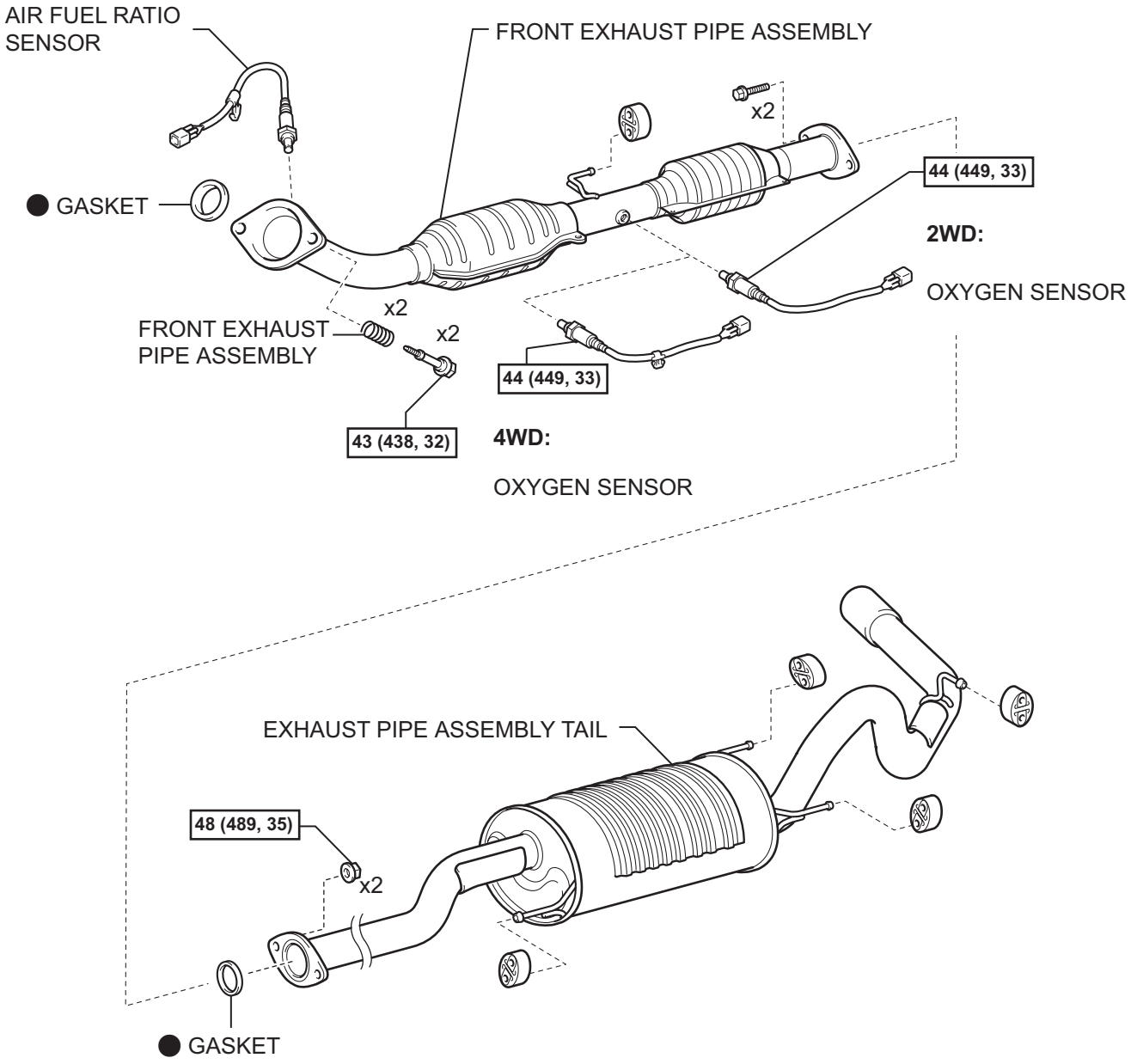

N*m (kgf*cm, ft.*lbf) : Specified torque

● Non-reusable part

T

A113621E01

EX

REMOVAL

1. **CABLE FROM NEGATIVE BATTERY TERMINAL**
2. **REMOVE AIR FUEL RATIO SENSOR (See page EC-25)**
3. **REMOVE OXYGEN SENSOR (See page EC-27)**
4. **REMOVE EXHAUST PIPE ASSEMBLY TAIL**
   (a) Remove the 2 bolts and 2 nuts.
   (b) Remove the exhaust pipe tail from the 4 exhaust pipe supports.
   (c) Remove the gasket from the exhaust pipe front.
5. **REMOVE EXHAUST PIPE ASSEMBLY FRONT**
   (a) Remove the 2 bolts and 2 compression springs.
   (b) Remove the exhaust pipe front from the exhaust pipe support.
   (c) Remove the gasket from the exhaust manifold.

INSTALLATION

1. **INSTALL EXHAUST PIPE ASSEMBLY FRONT**
   (a) Check the free length.
      (1) Using vernier calipers, measure the free length of the compression spring.
      Minimum:
      40.5 mm (1.594 in.)
      If the free length is less than the minimum, replace the compression spring.

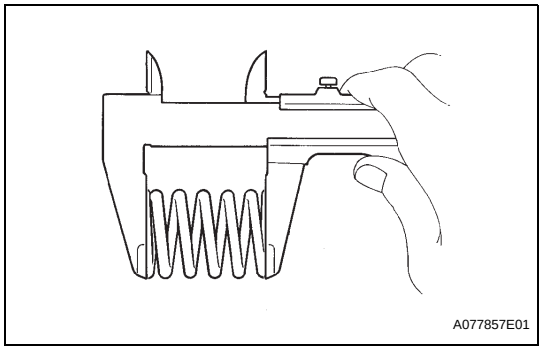

   (b) Using a wooden block and plastic-faced hammer, tap in a new gasket until it is flush with the exhaust manifold.
      NOTICE:
      - **Make sure that the gasket is in the correct angle when installing.**
      - **Do not reuse the removed gasket.**
      - **Never push a new gasket into the exhaust manifold by installing the exhaust pipe front into the exhaust manifold.**

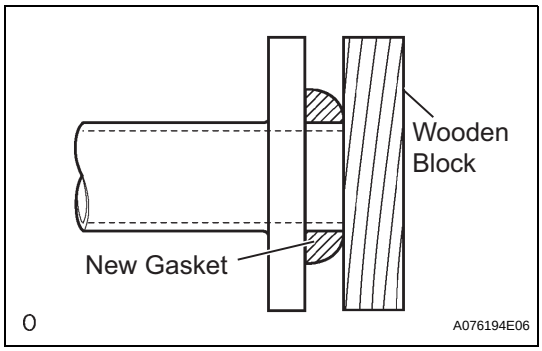

   (c) Install the exhaust pipe front into the exhaust pipe support.
   (d) Tighten the 2 bolts and 2 compression springs.
      Torque: 43 N*m (438 kgf*cm, 32 ft.*lbf)
2. **INSTALL EXHAUST PIPE ASSEMBLY TAIL**
   (a) Install a new gasket onto the exhaust pipe front.
   (b) Install the exhaust pipe tail onto the 4 exhaust pipe supports.
   (c) Tighten the 2 bolts and 2 nuts.
      Torque: 48 N*m (489 kgf*cm, 35 ft.*lbf)
3. **INSTALL OXYGEN SENSOR (See page EC-28)**
4. **INSTALL AIR FUEL RATIO SENSOR (See page EC-28)**

EX

5. **CONNECT CABLE TO NEGATIVE BATTERY TERMINAL**
   Torque: 3.9 N*m (40 kgf*cm, 35 in.*lbf)
6. **CHECK FOR EXHAUST GAS LEAKAGE**

COOLING SYSTEM

PARTS LOCATION

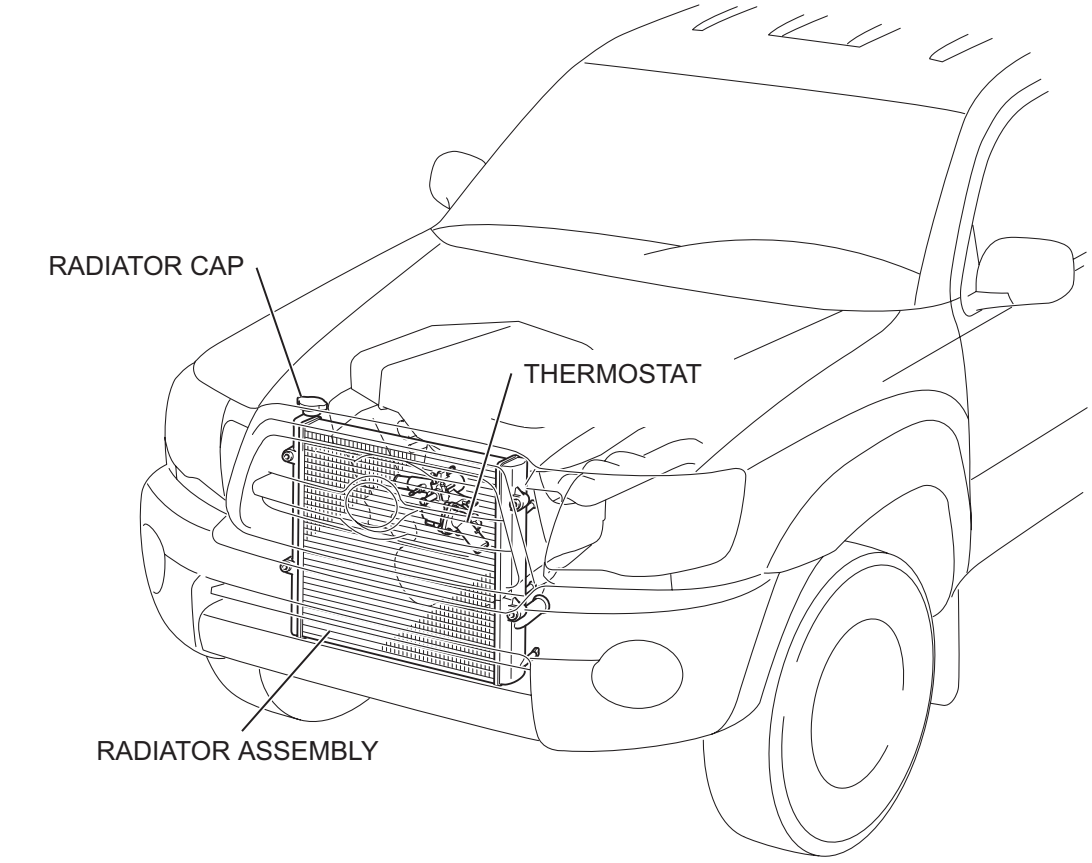

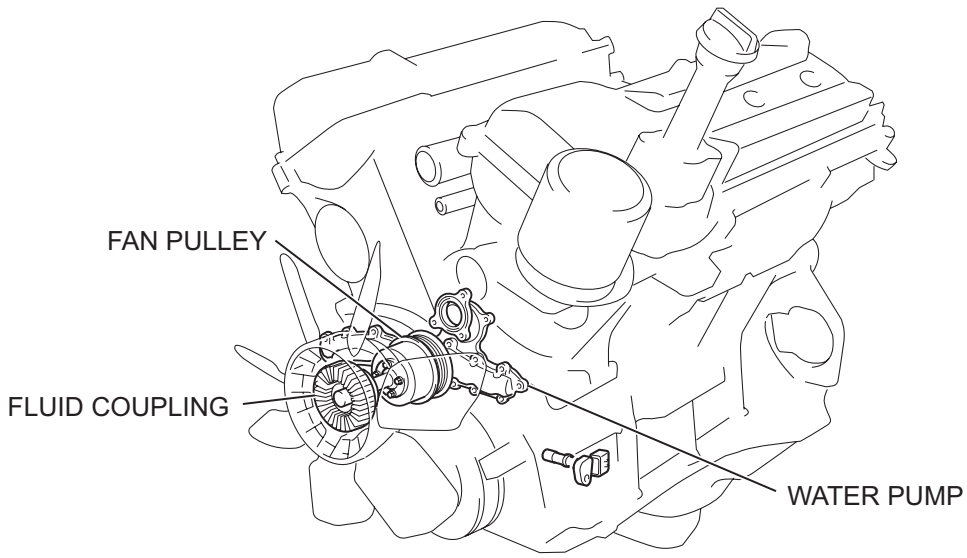

Y

A113579E01

CO

ON-VEHICLE INSPECTION

1. CHECK COOLING SYSTEM FOR LEAKAGE

(a) Remove the radiator cap.

CAUTION:
To avoid the danger of being burned, do not remove the radiator cap while the engine and radiator are still hot. Thermal expansion will cause hot engine coolant and steam to blow out from the radiator.

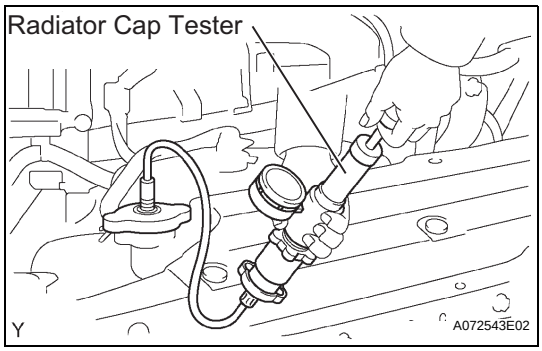

(b) Fill the radiator with coolant and attach a radiator cap tester.

(c) Warm up the engine.

(d) Pump it to 118 kPa (1.2 kgf/cm^2, 17.1 psi), then check that the pressure does not drop.
If the pressure drops, check the hoses, radiator and water pump for leakage. If there are no signs of external coolant leakage, check the heater core, cylinder block and head.

(e) Reinstall the radiator cap.

2. CHECK COOLANT LEVEL OF RESERVOIR

(a) The engine coolant should be between the LOW and FULL lines when the engine is cold.
If low, check for leakage and add Toyota Super Long Life Coolant or similar high quality ethylene glycol based non-silicate, non-amine, non-nitrite, and non-borate coolant with long-life hybrid organic acid technology up to the FULL line.

3. CHECK ENGINE COOLANT QUALITY

(a) Remove the radiator cap.

CAUTION:
To avoid the danger of being burned, do not remove the radiator cap while the engine and radiator are still hot. Thermal expansion will cause hot engine coolant and steam to blow out from the radiator.

(b) Check for any excessive deposits of rust or scale around the radiator cap and radiator filler hole; the coolant should be free of oil.
If excessively dirty, replace the coolant.

(c) Reinstall the radiator cap.

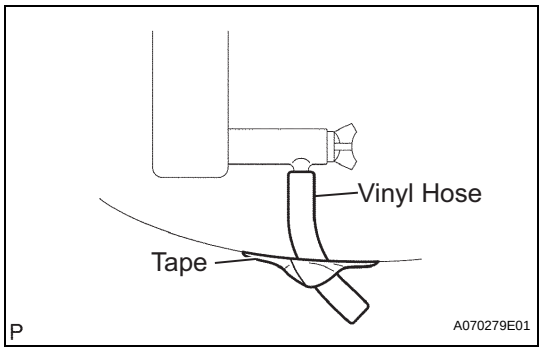

COOLANT

REPLACEMENT

1. DRAIN ENGINE COOLANT

CAUTION:

To avoid the danger of being burned, do not remove the radiator cap while the engine and radiator are still hot. Thermal expansion will cause hot engine coolant and steam to blow out from the radiator.

(a) Remove the service hole cover from the engine under cover.

(b) Install a vinyl hose onto the drain on the radiator side.

(c) Fix the vinyl hose with tape.

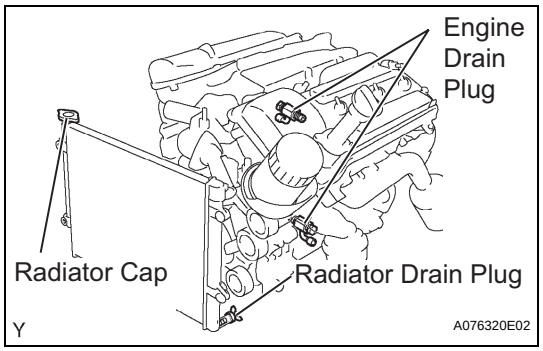

(d) Loosen the 3 drain plugs on the engine and radiator, and drain the coolant.

(e) Remove the radiator cap.

(f) Drain the coolant from the reservoir tank.

(g) Tighten the 3 drain plugs.

Torque: 13 N*m (130 kgf*cm, 9 ft.*lbf) for the engine

(h) Remove the vinyl hose from the radiator.

2. ADD ENGINE COOLANT

(a) Pour coolant into the radiator until it overflows.

Capacity

Transmission	Capacity
Manual Transmission	9.7 liters (10.3 Us qts, 8.5 Imp. qts)
Automatic Transmission	9.8 liters (10.4 Us qts, 8.6 Imp. qts)

HINT:

- Use of improper coolants may damage the engine cooling system.
- Use only Toyota Super Long Life Coolant or similar high quality ethylene glycol based non-silicate, non-amine, non-nitrite, and non-borate coolant with long-life hybrid organic acid technology (coolant with long-life hybrid organic acid technology consists of a combination of low phosphates and organic acids).
- New Toyota vehicles are filled with Toyota Super Long Life Coolant (color is pink, premixed ethylene glycol concentration is approximately 50 % and freezing temperature is -35°C (-31°F)). When replacing the coolant, Toyota Super Long Life Coolant is recommended.

NOTICE:

Do not substitute plain water for engine coolant.

(b) Check the coolant level inside the radiator by squeezing the inlet and outlet radiator hoses several times by hand. If the coolant level goes down, add coolant.

(c) Install the radiator cap securely.

(d) Slowly pour coolant into the radiator reservoir until it reaches the FULL line.
(e) Warm up the engine until the cooling fan operates.
(1) Set the air conditioning as follows while warming up the engine.

Item	Condition
Fan Speed	Any setting except OFF
Temperature	Toward WARM
Air Conditioning Switch	OFF

(2) Maintain the engine speed at 2,000 to 2,500 rpm and warm up the engine until the cooling fan operates.
(f) Squeeze the inlet and outlet radiator hoses several times by hand while warming up the engine.
(g) Stop the engine and wait until the coolant cools down.
(h) Remove the radiator cap and check the coolant level inside the radiator.
(i) If the coolant level is below the full level, perform the steps from (a) through (h) and repeat the operation until the coolant level remains at the full level.
(j) Check the coolant level inside the radiator reservoir tank again. If it is below the full level, add coolant.

3. CHECK FOR ENGINE COOLANT LEAKAGE

(a) Fill the radiator with coolant and attach a radiator cap tester.
(b) Pump it to 118 kPa (1.2 kgf/cm^2 17.1 psi), then check for leakage.

WATER PUMP

REMOVAL

1. **DISCONNECT CABLE FROM NEGATIVE BATTERY TERMINAL**
2. **REMOVE NO. 1 ENGINE UNDER COVER SUB-ASSEMBLY (for Pre Runner and 4WD Type)**
   (a) Remove the 4 bolts, then remove the engine under cover.
3. **DRAIN ENGINE COOLANT (See page CO-3)**
4. **REMOVE RADIATOR SUPPORT TO FRAME SEAL LH (See page CO-15)**
5. **REMOVE V-BANK COVER (See page ES-414)**
6. **REMOVE FAN SHROUD (See page CO-15)**
7. **REMOVE AIR CLEANER ASSEMBLY (See page ES-415)**
8. **REMOVE WATER INLET**
   (a) Disconnect the 2 oil cooler hoses (with oil cooler).

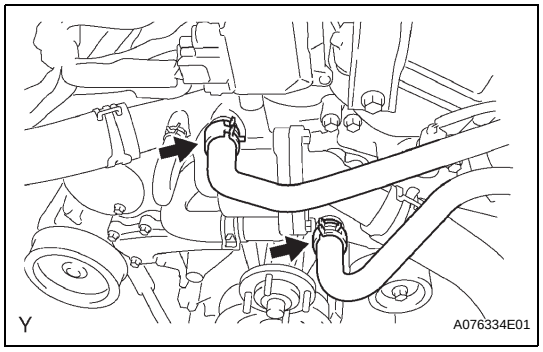

(b) Disconnect the 2 radiator hoses.

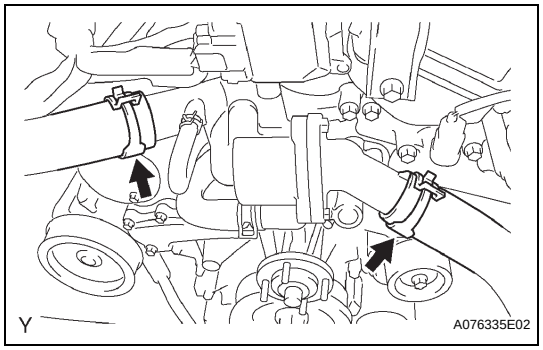

(c) Disconnect the 5 water by-pass hoses.

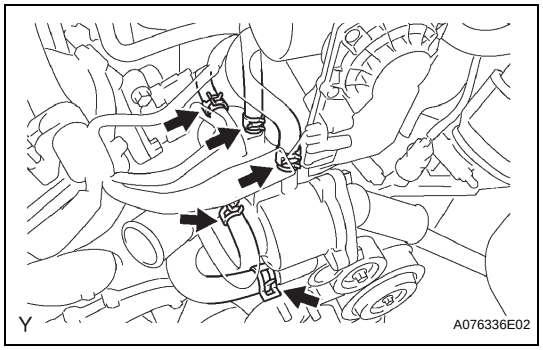

CO

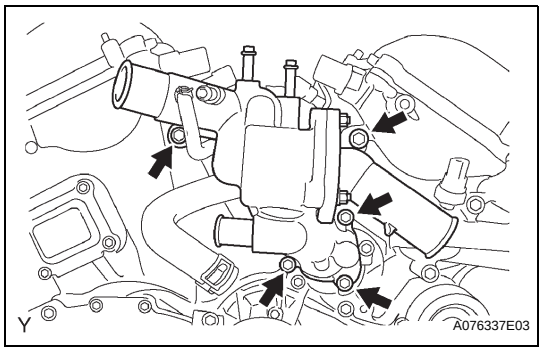

(d) Remove the 5 bolts and water inlet.
(e) Remove the O-ring from the water outlet pipe.
(f) Remove the gasket from the water pump.

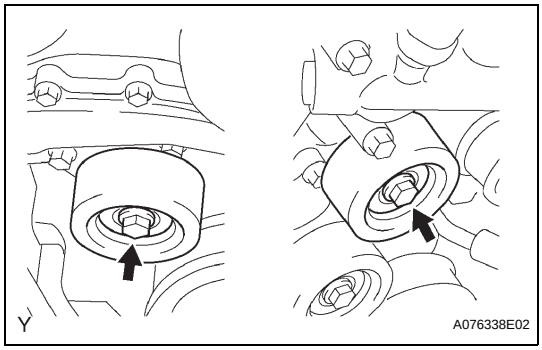

9. REMOVE NO. 2 IDLER PULLEY SUB-ASSEMBLY
(a) Remove the 2 bolts, then remove the 2 idler pulleys.

10. REMOVE GENERATOR ASSEMBLY (See page CH-7)

11. SEPARATE COOLER COMPRESSOR ASSEMBLY (See page ES-409)

12. REMOVE V-RIBBED BELT TENSIONER ASSEMBLY
HINT:

Drive Type	See Page
2WD	EM-23
Pre Runner and 4WD	EM-44

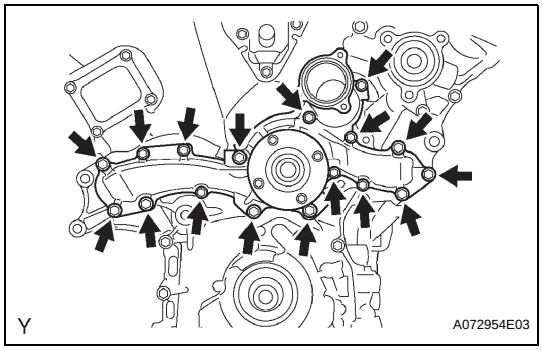

13. REMOVE WATER PUMP ASSEMBLY
(a) Remove the 17 bolts, then remove the water pump and gasket.

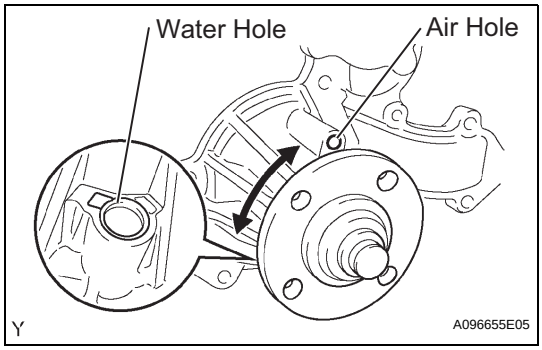

INSPECTION

1. INSPECT WATER PUMP ASSEMBLY
(a) Visually check the water hole for coolant leakage.
If leakage is found, replace the water pump assembly.
(b) Turn the pulley and check that the water pump bearing moves smoothly and quietly.
If necessary, replace the water pump assembly.

CO

THERMOSTAT

REMOVAL

HINT:
If the thermostat is not installed, cooling efficiency will be reduced. Do not remove the thermostat, to prevent the engine overheating.

1. **DISCONNECT CABLE FROM NEGATIVE BATTERY TERMINAL**
2. **DRAIN ENGINE COOLANT (See page CO-3)**
3. **REMOVE V-BANK COVER (See page ES-414)**
4. **REMOVE NO.2 RADIATOR HOSE**
5. **REMOVE WATERY INLET WITH THERMOSTAT**
   (a) Remove the 3 nuts, then remove the water inlet with thermostat and gasket.

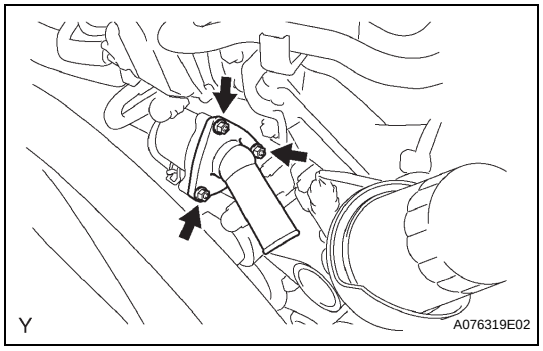

INSPECTION

1. **INSPECT WATER INLET WITH THERMOSTAT**
   HINT:
   The valve opening temperature is inscribed on the thermostat.

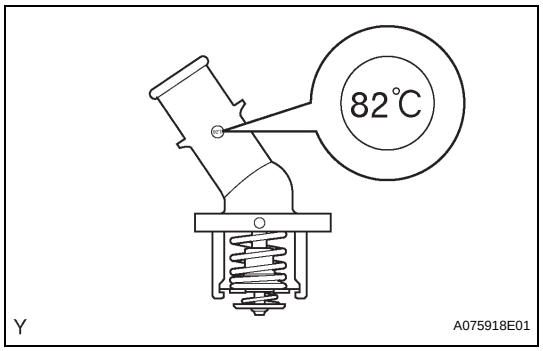

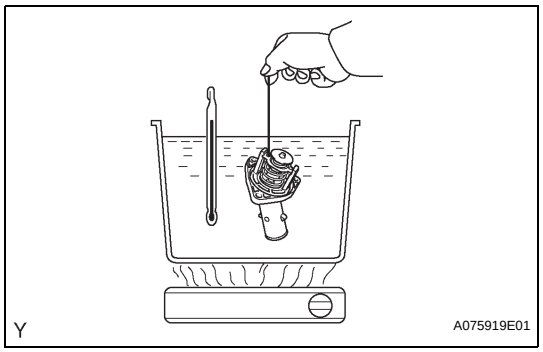

   (a) Immerse the thermostat in water, then gradually heat the water.
   (b) Check the valve opening temperature of the thermostat.
   Valve opening temperature:
   80 to 84°C (176 to 183°F)
   If the valve opening temperature is not as specified, replace the thermostat.

CO

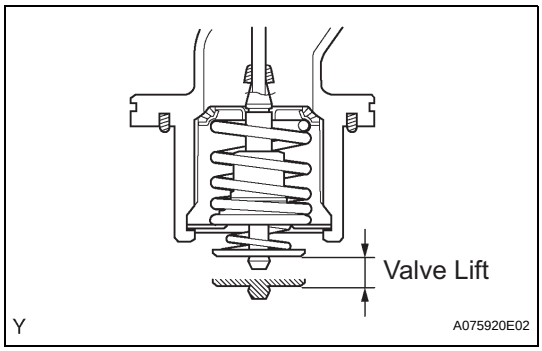

(c) Check the valve lift.
Valve lift:
8.0 mm (0.31 in.) or more at 95°C (203°F)
If the valve lift is not as specified, replace the thermostat.

(d) Check that the valve is fully closed when the thermostat is at low temperatures (below 77°C (171°F)).
If not fully closed, replace the thermostat.

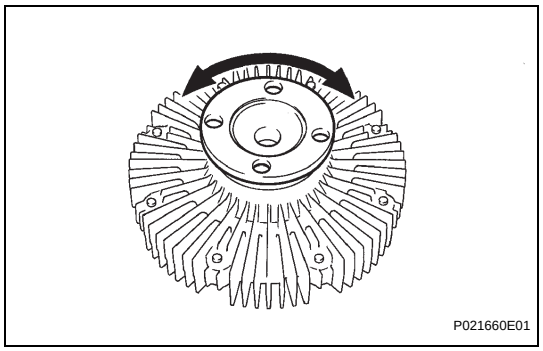

FAN

INSPECTION

1. INSPECT FLUID COUPLING ASSEMBLY

(a) Check the fluid coupling for damage and silicon oil leakage.
If necessary, replace the fluid coupling.

RADIATOR

COMPONENTS

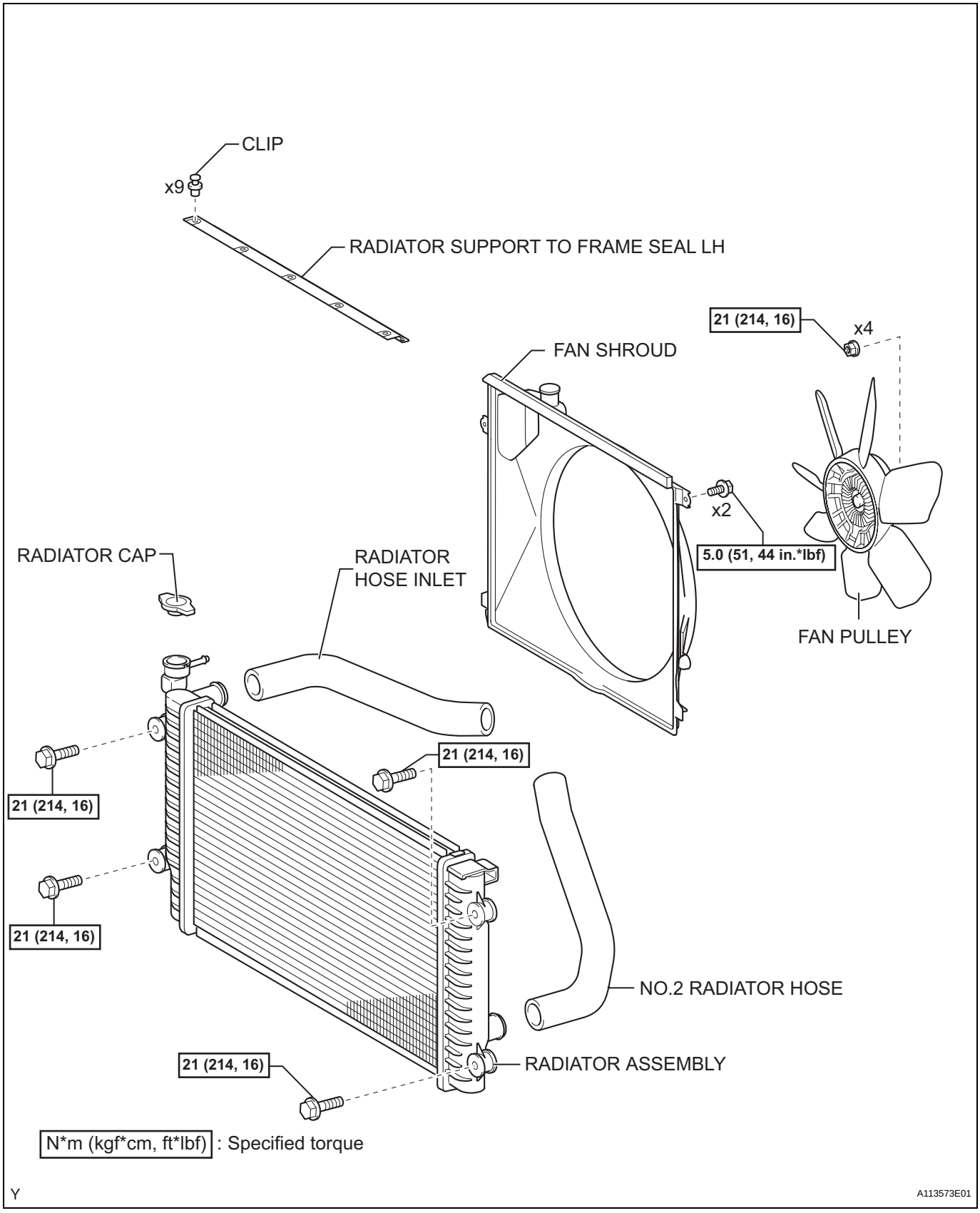

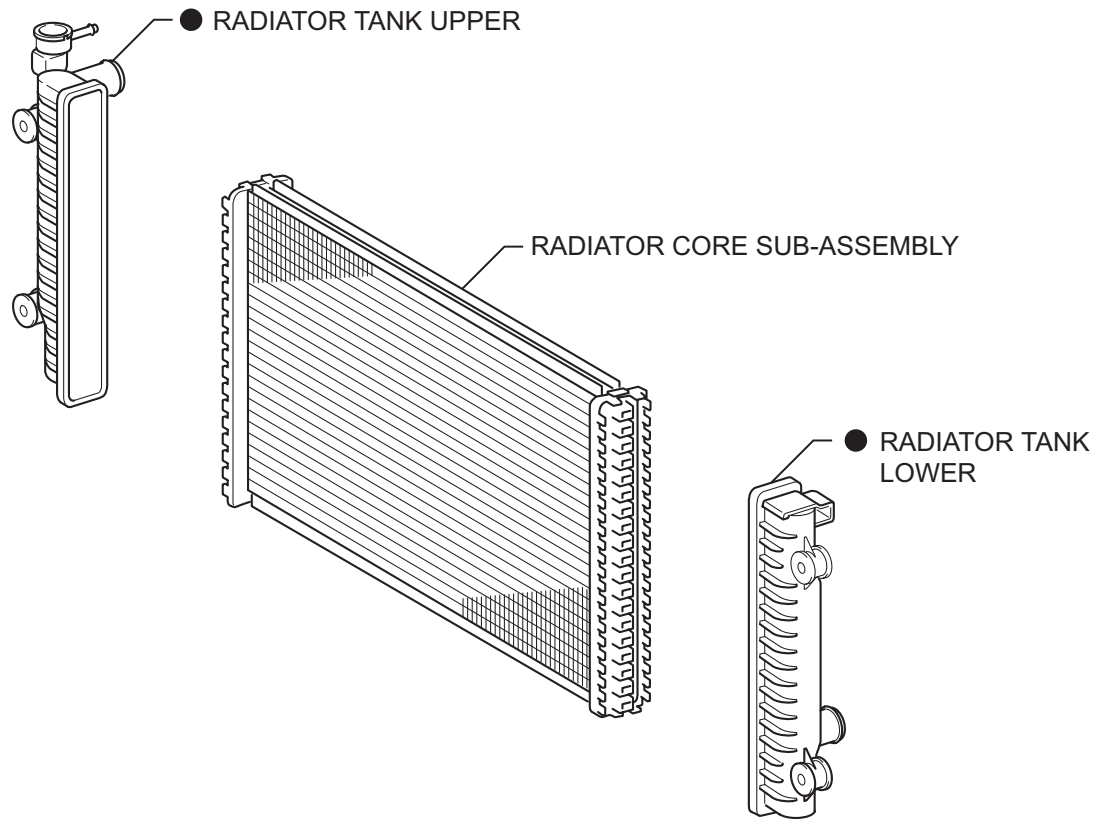
● RADIATOR TANK UPPER
RADIATOR CORE SUB-ASSEMBLY
● RADIATOR TANK LOWER
● Non-reusable part
Y
A113605E01

COOLING SYSTEM

PARTS LOCATION

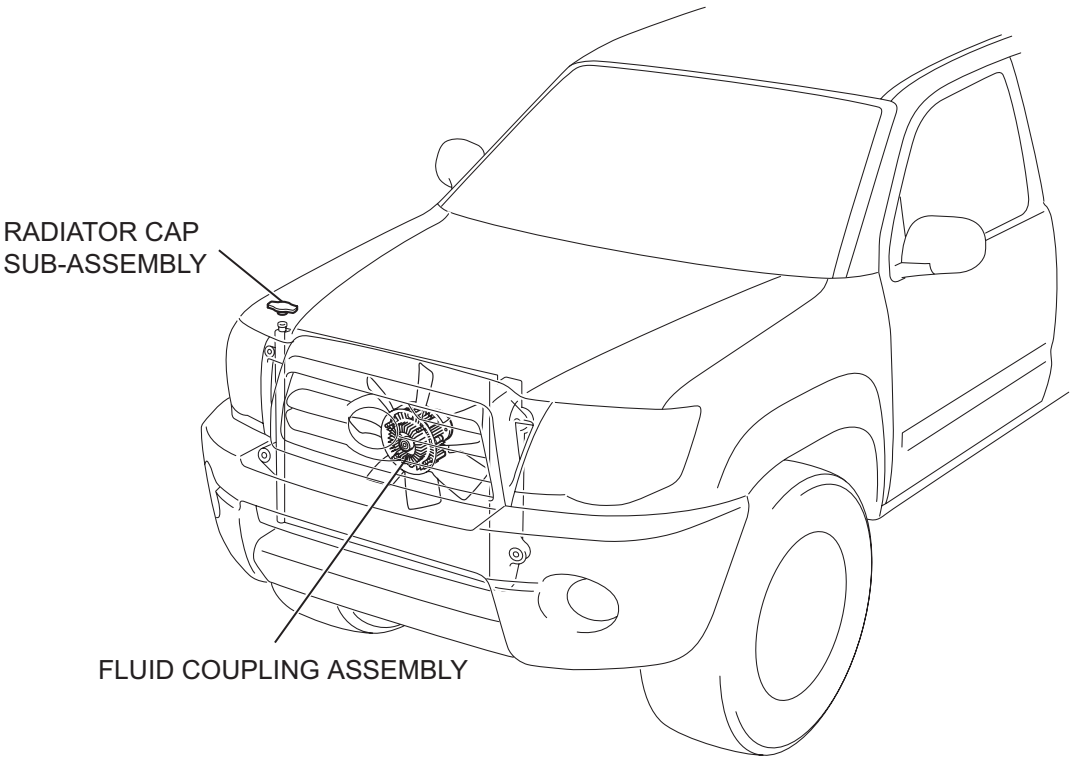

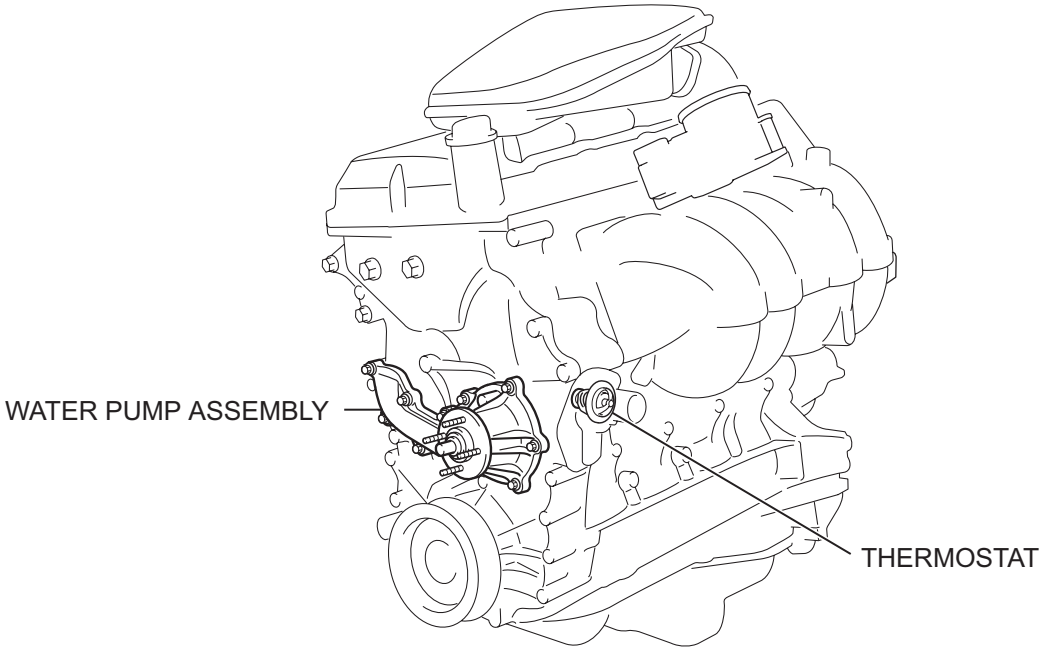

T

A113631E01

CO

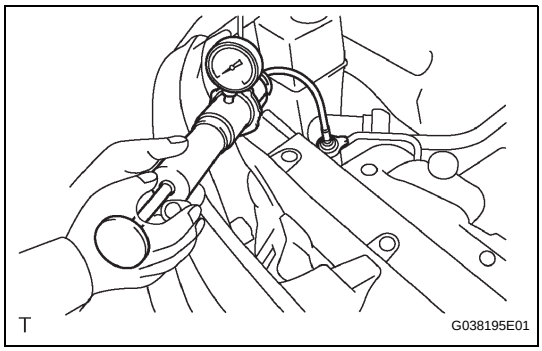

ON-VEHICLE INSPECTION

1. INSPECT COOLING SYSTEM FOR LEAKAGE

CAUTION:

To avoid the danger of being burned, do not remove the radiator cap while the engine and radiator are still hot. Fluid and steam could be blown out under pressure.

(a) Fill the radiator with coolant and attach a radiator cap tester.

(b) Warm up the engine.

(c) Pump it up to 118 kPa (1.2 kgf/cm^2, 17.1 psi) and check that the pressure does not drop.

HINT:

If the pressure drops, check the hose, radiator and water pump for leakage. If no external leakage is found, check the heater core, cylinder block and cylinder head.

2. CHECK ENGINE COOLANT LEVEL AT RESERVOIR

(a) Check that the coolant level in the reservoir tank is between the FULL and LOW lines when the engine is cold.

If low, check for leakage and add Toyota Super Long Life Coolant or similar high quality ethylene glycol based non-silicate, non-amine, non-nitrite, and non-borate coolant with long-life hybrid organic acid technology up to the FULL line.

3. CHECK ENGINE COOLANT QUALITY

(a) Remove the radiator cap.

CAUTION:

To avoid the danger of being burned, do not remove the radiator cap while the engine and radiator are still hot. Fluid and steam could be blown out under pressure.

(b) Check that there are no excessive deposits of rust or scale around the radiator cap or radiator filler hole.

If excessively dirty, replace the coolant.

(c) Attach the radiator cap.

COOLANT

REPLACEMENT

1. DRAIN ENGINE COOLANT

CAUTION:
To avoid the danger of being burned, do not remove the radiator cap while the engine and radiator are still hot. Thermal expansion will cause hot engine coolant and steam to blow out from the radiator.

(a) Remove the 4 bolts, then remove the engine under cover No. 1. (PRE RUNNER AND 4WD TYPE)

(b) Install a vinyl hose onto the radiator side.

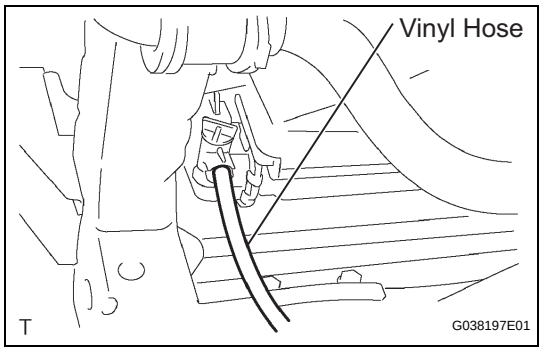

(c) Install a vinyl hose onto the engine side.

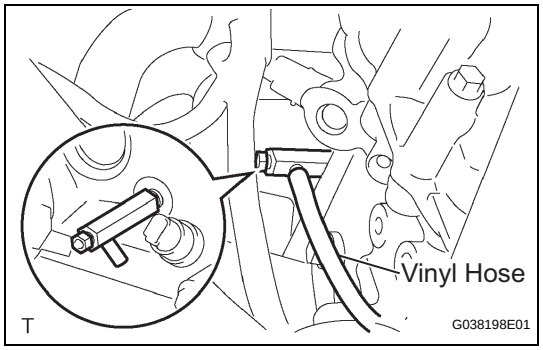

(d) Loosen the engine drain plug.
(e) Loosen the radiator drain plug.
(f) Remove the radiator cap and drain coolant.
(g) Drain the coolant from the reservoir tank.

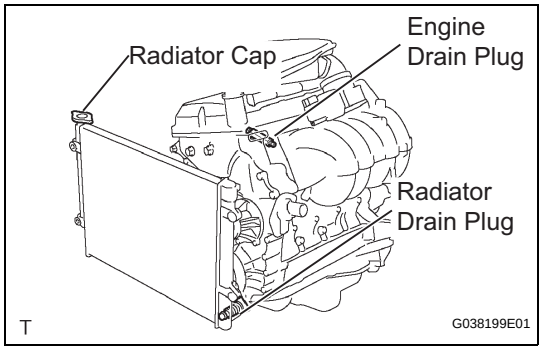

2. ADD ENGINE COOLANT

(a) Tighten the engine drain plug.
Torque: 13 N*m (130 kgf*cm, 9 ft.*lbf)
(b) Tighten the radiator drain plug.
(c) Disconnect the 2 vinyl hoses.
(d) Slowly fill the system with engine coolant.
Capacity:
M/T: 8.7 liters (9.2 US qts, 7.7 lmp. qts)
A/T: 8.6 liters (9.1 US qts, 7.6 lmp. qts)
HINT:
- Use of improper coolants may damage the engine cooling system.

CO

- Use only Toyota Super Long Life Coolant or similar high quality ethylene glycol based non-silicate, non-amine, non-nitrite, and non-borate coolant with long-life hybrid organic acid technology (coolant with long-life hybrid organic acid technology consists of a combination of low phosphates and organic acids.)
- New Toyota vehicles are filled with Toyota Super Long Life Coolant. When replacing the coolant, Toyota Super Long Life Coolant (color is pink, premixed ethylene glycol concentration is approximately 50 % and freezing temperature is -35°C (-31°F)) is recommended.

NOTICE:

Do not substitute plain water for engine coolant.

(e) Check the coolant level inside the radiator by squeezing the inlet and outlet radiator hoses several times by hand. If the coolant level goes down, add coolant.

(f) Install the radiator cap securely.

(g) Slowly pour coolant into the radiator reservoir until it reaches the FULL line.

(h) Warm up the engine until the cooling fan operates.

- Set the air conditioning as follows while warming up the engine.

Item	Condition
Fan speed	Any setting except OFF
Temperature	Toward warm
Air condition switch	OFF

(i) Squeeze the inlet and outlet radiator hoses several times by hand while warning up the engine.

(j) Stop the engine and wait until the coolant cools down.

(k) Remove the radiator cap and check the coolant level inside the radiator.

(l) If the coolant level is below the full level, perform the steps from (d) through (k) and repeat the operation until the coolant level remains at the full level.

(m) Check the coolant level inside the radiator reservoir tank again. If it is below the full level, add coolant.

(n) Install the engine under cover No. 1 with the 4 bolts. (PRE RUNNER AND 4WD TYPE)
Torque: 30 N*m (306 kgf*cm, 22 ft.*lbf)

3. CHECK FOR ENGINE COOLANT LEAKAGE

WATER PUMP

REMOVAL

1. **DISCONNECT CABLE FROM NEGATIVE BATTERY TERMINAL**
2. **REMOVE NO. 1 ENGINE UNDER COVER SUB-ASSEMBLY (for Pre Runner and 4WD Type)**
   (a) Remove the 4 bolts, then remove the engine under cover No. 1.
3. **DRAIN ENGINE COOLANT (See page CO-3)**
4. **REMOVE RADIATOR SUPPORT TO FRAME SEAL LH (See page CO-12)**
5. **REMOVE FAN SHROUD (See page CO-13)**
6. **REMOVE GENERATOR ASSEMBLY**
   (See page CH-7)
7. **REMOVE V-RIBBED BELT TENSIONER ASSEMBLY**
   (a) Remove the 3 bolts, then remove the V-ribbed belt tensioner.

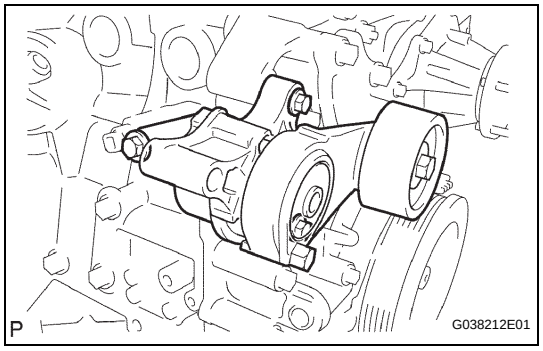

8. **REMOVE WATER PUMP ASSEMBLY**
   (a) Remove the 10 bolts, then remove the water pump and gasket.

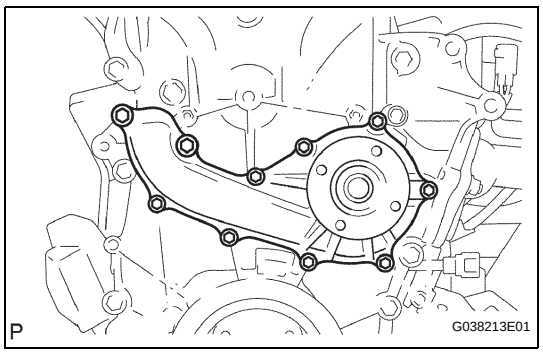

INSPECTION

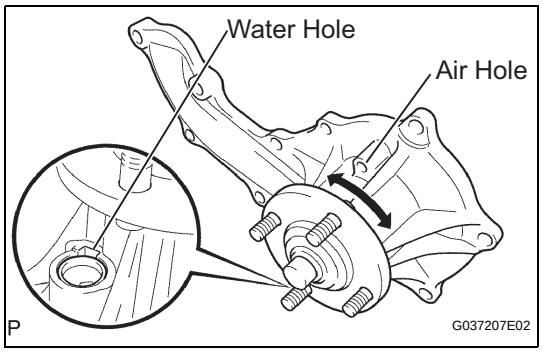

1. **INSPECT WATER PUMP ASSEMBLY**
   (a) Visually check the air hole and water hole for coolant leakage.
   If any leakage is found, replace the water pump.
   (b) Turn the pulley seat and check that the water pump bearing moves smoothly and does not make a noise.
   If necessary, replace the water pump.

CO

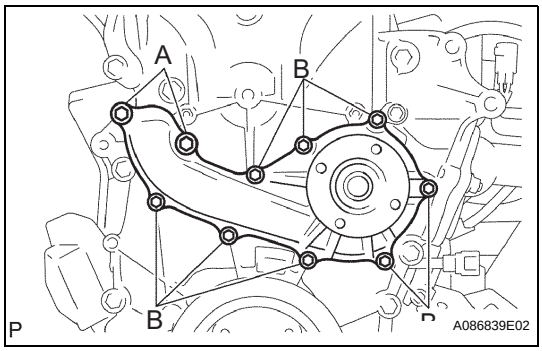

INSTALLATION

1. INSTALL WATER PUMP ASSEMBLY

(a) Install a new gasket, then install the water pump with the 10 bolts.

Torque: 21 N*m (214 kgf*cm, 15 ft.*lbf) for bolt A
9 N*m (92 kgf*cm, 80 in.*lbf) for bolt B

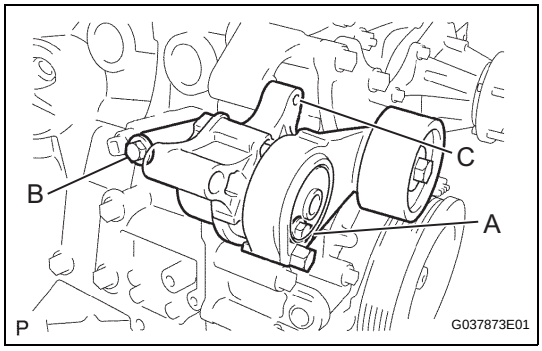

2. INSTALL V-RIBBED BELT TENSIONER ASSEMBLY

(a) Provisionally install the V-ribbed belt tensioner with bolts A and B.

(b) Tighten bolt B.

Torque: 40 N*m (408 kgf*cm, 30 ft.*lbf)

(c) Tighten bolt A.

Torque: 21 N*m (214 kgf*cm, 16 ft.*lbf)

(d) Check that the bolt holes of the V-ribbed belt tensioner and timing chain cover are aligned, and install bolt C.

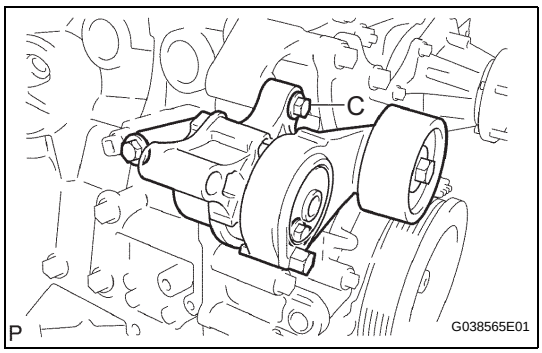

(e) Tighten bolt C.

Torque: 43 N*m (434 kgf*cm, 32 ft.*lbf)

3. INSTALL GENERATOR ASSEMBLY

(See page CH-13)

4. INSTALL FAN SHROUD (See page CO-18)

5. INSTALL RADIATOR SUPPORT TO FRAME SEAL LH (See page CO-19)

6. CONNECT CABLE TO NEGATIVE BATTERY TERMINAL

Torque: 3.9 N*m (40 kgf*cm, 35 in.*lbf)

7. ADD ENGINE COOLANT (See page CO-3)

8. CHECK FOR ENGINE COOLANT LEAKAGE (See page CO-2)

9. INSTALL NO. 1 ENGINE UNDER COVER SUB-ASSEMBLY (for Pre Runner and 4WD Type)

(a) Install the engine under cover No. 1 with the 4 bolts.

Torque: 30 N*m (306 kgf*cm, 22 ft.*lbf)

CO

THERMOSTAT

REMOVAL

1. **DRAIN ENGINE COOLANT (See page CO-3)**
2. **REMOVE WATER INLET**
   (a) Remove the bolt and 2 nuts, then remove the water inlet.
   (b) Remove the gasket from the timing chain cover.

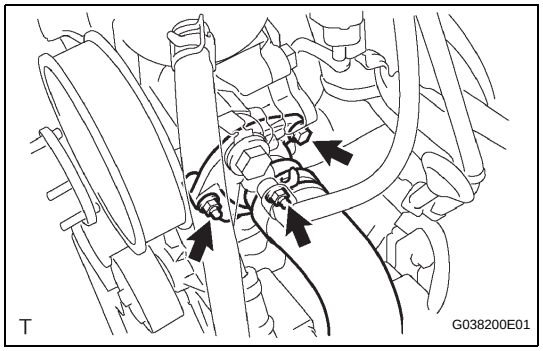

3. **REMOVE THERMOSTAT**
   (a) Remove the thermostat from the timing chain cover.

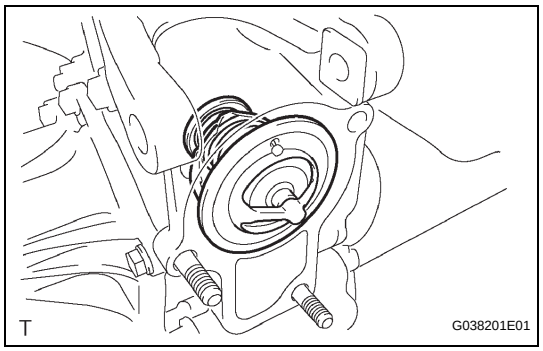

INSPECTION

1. **INSPECT THERMOSTAT**
   HINT:
   The valve opening temperature is inscribed on the thermostat.

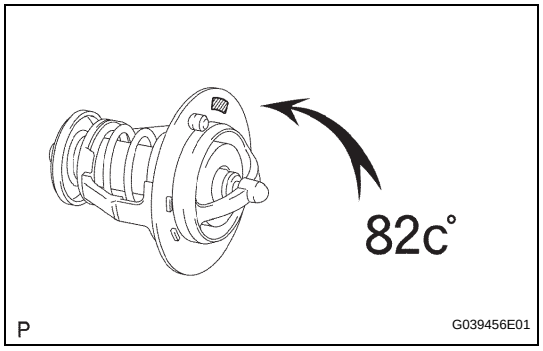

   (a) Immerse the thermostat in water, then gradually heat the water.
   (b) Check the valve opening temperature of the thermostat.
   Valve opening temperature:
   80 to 84°C (176 to 183°F)
   If the valve opening temperature is not as specified, replace the thermostat.

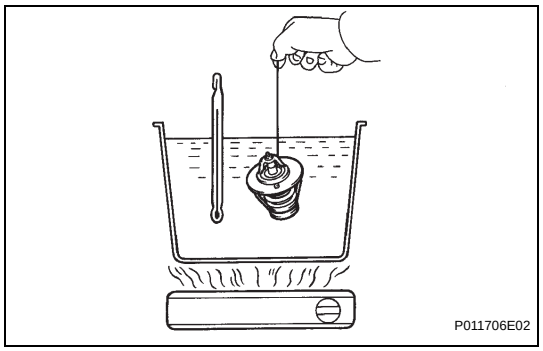

CO

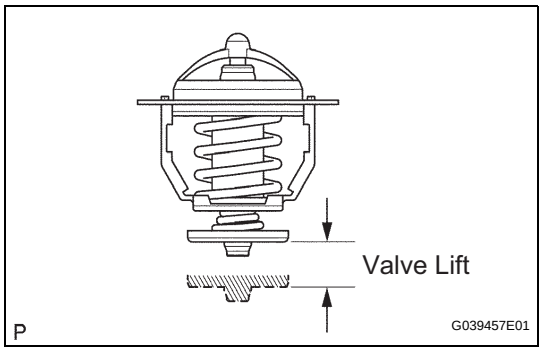

(c) Check the valve lift.
Valve lift:
8.5 mm (0.355 in.) or more at 95°C (203°F)
If the valve lift is not as specified, replace the thermostat.

(d) Check that the valve is fully closed when the thermostat is at low temperatures (below 77°C (171°F)).
If not fully closed, replace the thermostat.

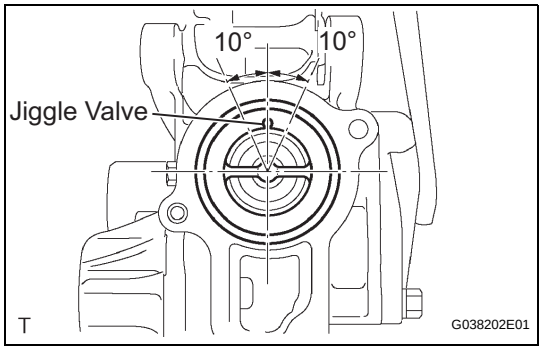

INSTALLATION

1. INSTALL THERMOSTAT

(a) Install a new gasket onto the thermostat.

(b) Install the thermostat with the jiggle valve upward.
HINT:
The jiggle valve may be set within 10° to either side of the prescribed position.

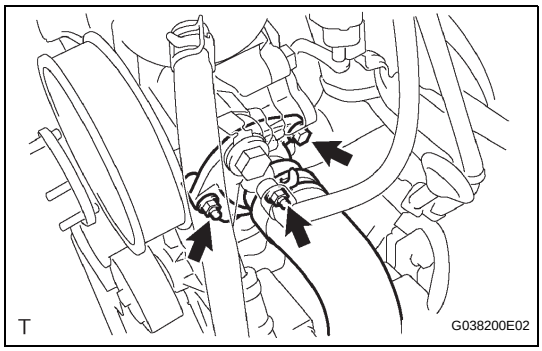

2. INSTALL WATER INLET

(a) Install a new gasket and the water inlet with the bolt and 2 nuts.
Torque: 20 N*m (204 kgf*cm, 15 ft.*lbf)

3. ADD ENGINE COOLANT (See page CO-3)

4. CHECK FOR ENGINE COOLANT LEAKAGE (See page CO-2)

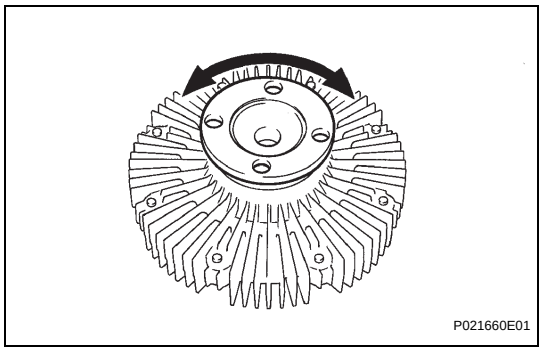
P021660E01

FAN

INSPECTION

1. INSPECT FLUID COUPLING ASSY

(a) Check the fluid coupling for damage and silicon oil leakage.
If necessary, replace the fluid coupling.

RADIATOR

COMPONENTS

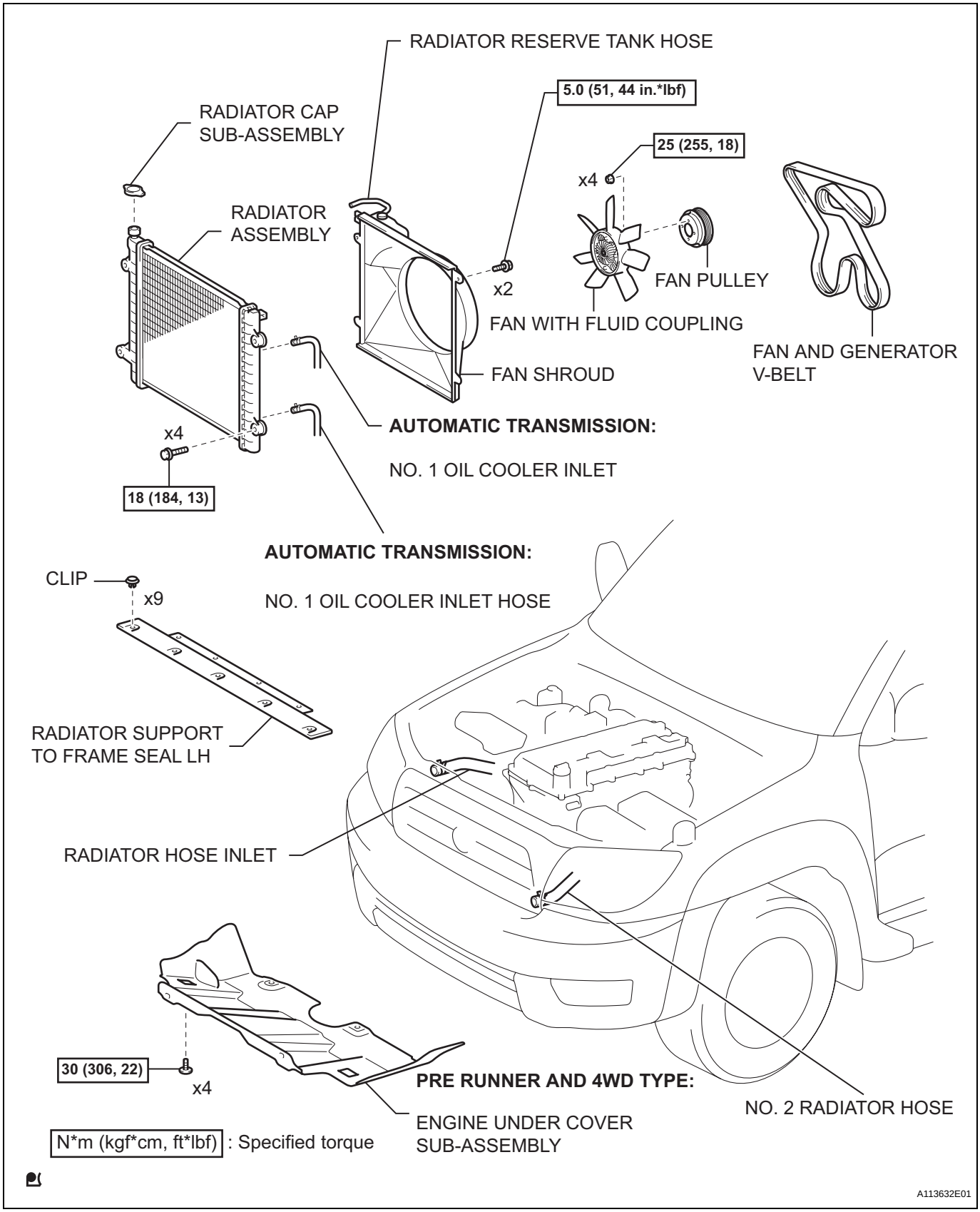

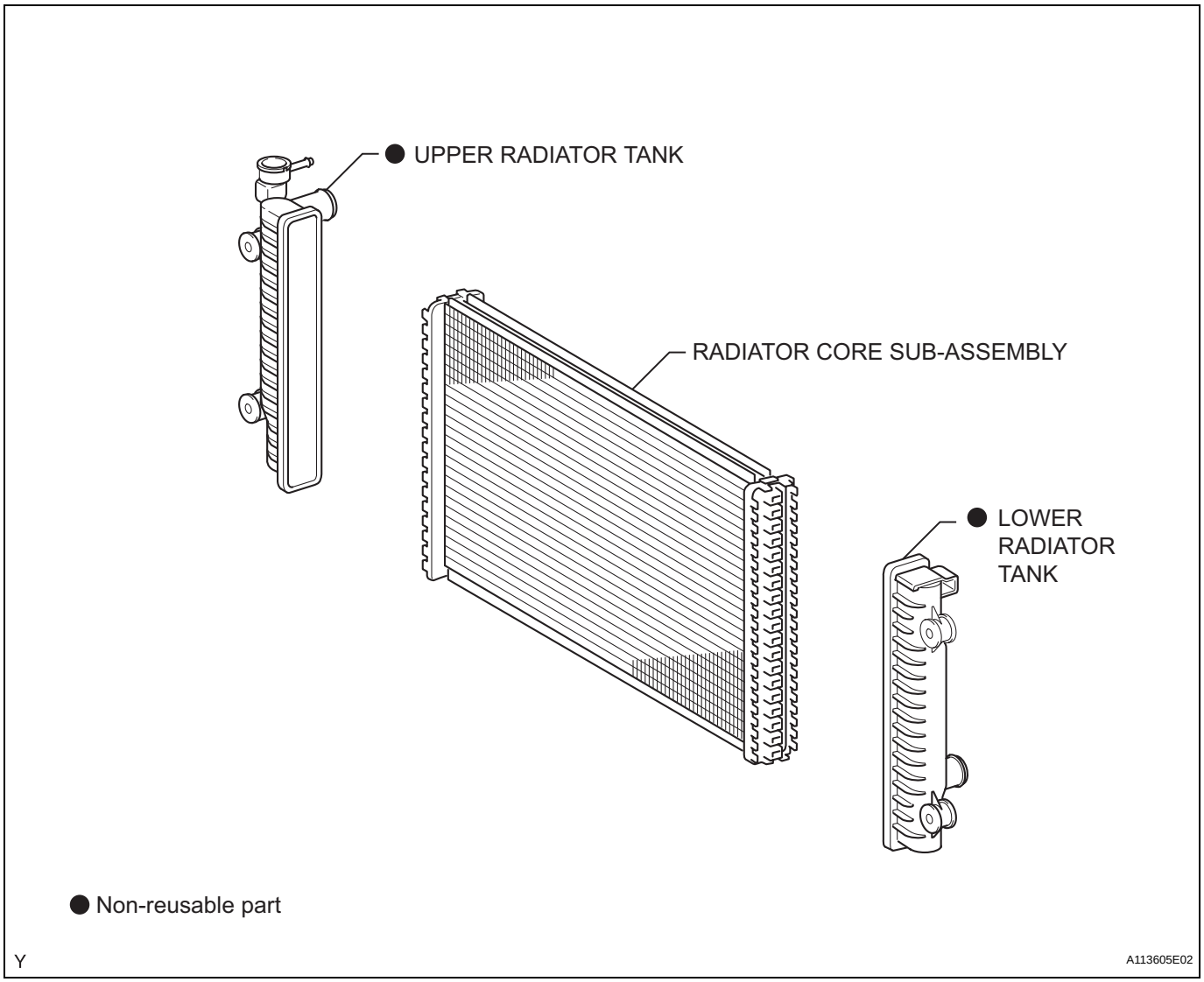

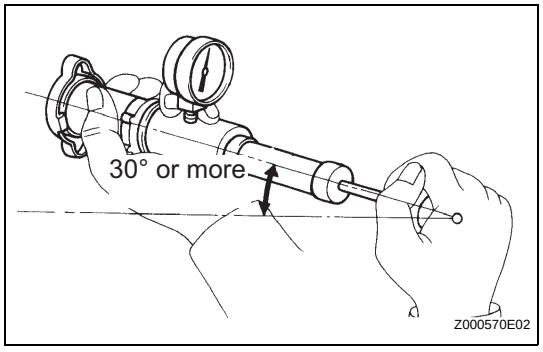

ON-VEHICLE INSPECTION

1. CHECK RADIATOR CAP SUB-ASSEMBLY

(a) Using a radiator cap tester, slowly pump and check that air comes from the vacuum valve.

Pumping speed:

1 push every 3 seconds or more

NOTICE:

Push the pump at a constant speed.

If air does not come from the vacuum valve, replace the radiator cap.

(b) Pump the tester and measure the relief valve opening pressure.

Standard opening pressure:

93 to 123 kPa (0.95 to 1.25 kgf/cm^2, 13.5 to 17.8 psi)

Minimum opening pressure:

78 kPa (0.8 kgf/cm^2, 11.4 psi)

CO

NOTICE:
The above pumping speed is for the first pumping only (in order to close the vacuum valve). After the first pumping, the pumping speed can be reduced.
HINT:
Use the tester's maximum reading as the opening pressure. If the opening pressure is less than the minimum, replace the radiator cap.

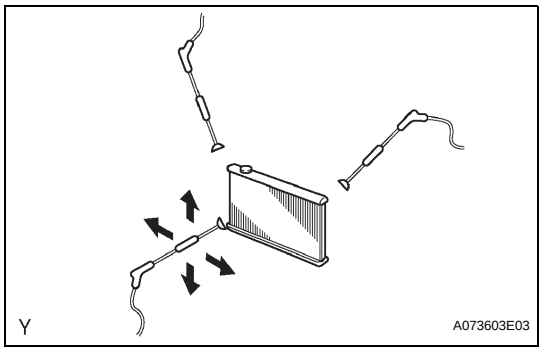

ON-VEHICLE CLEANING

1. CHECK FINS FOR BLOCKAGE

(a) If the fins are clogged, wash them with water or a steam cleaner and then dry them with compressed air.

NOTICE:

- **If the distance between the steam cleaner and core is too small, the fins may be damaged. So, keep to the following injection distances.**

Injection Pressure kPa (kgf/cm^2, psi)	Injection Distance mm (in.)
2,942 to 4,903 (30 to 50, 427 to 711)	300 (11.811)
4,903 to 7,845 (50 to 80, 711 to 1,138)	500 (19.685)

- **If the fins are bent, straighten them with a screwdriver or pliers.**
- **Be careful not to expose electronic components to water.**

LUBRICATION SYSTEM

PARTS LOCATION

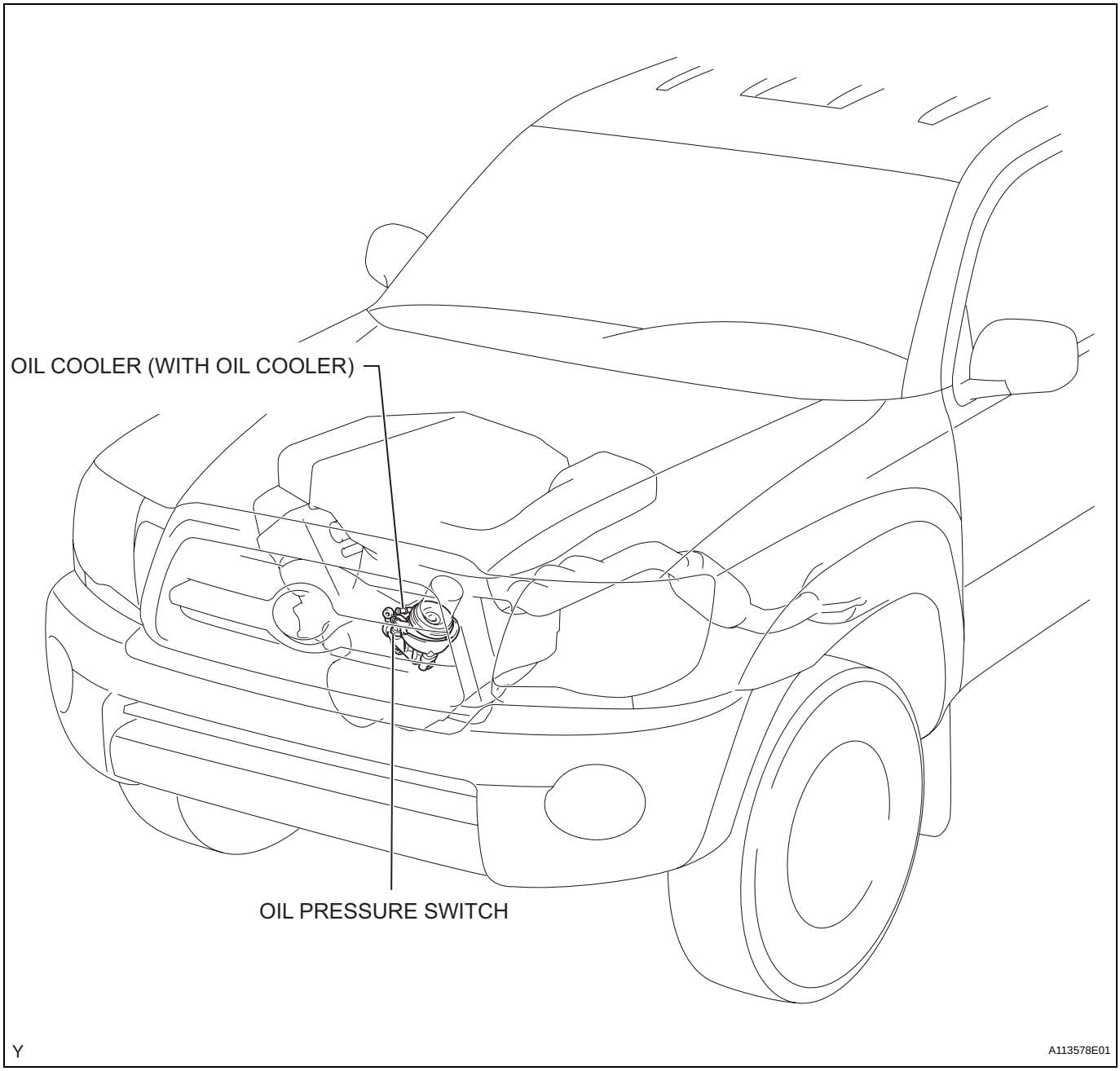

SYSTEM DIAGRAM

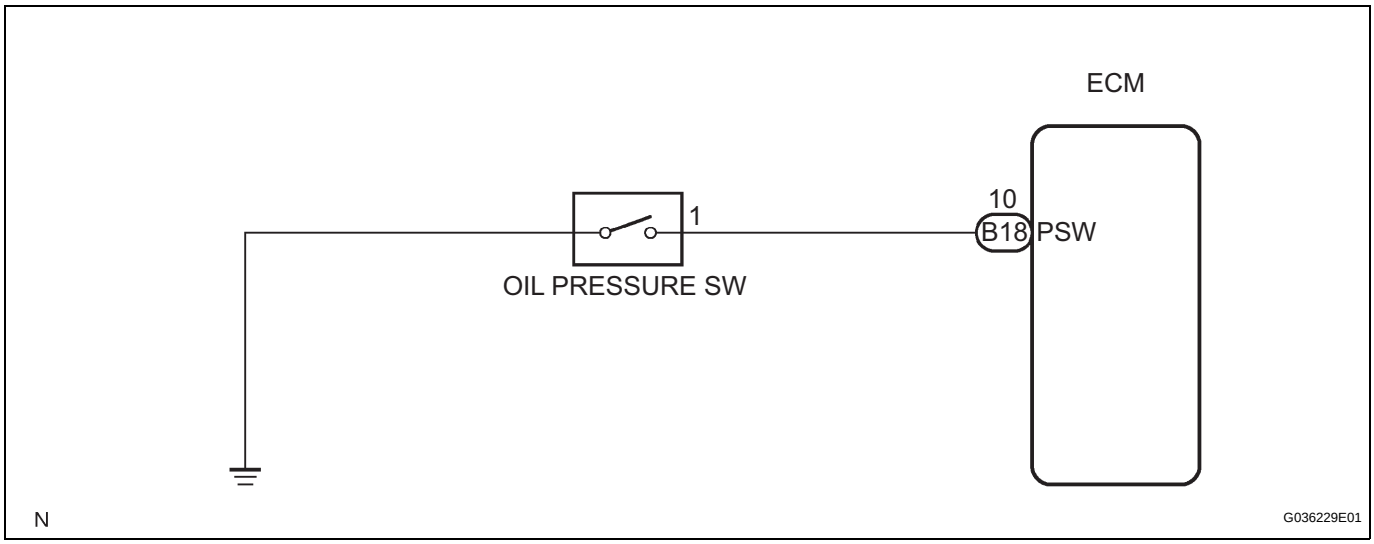

OIL FILTER

REMOVAL

CAUTION:

- **Prolonged and repeated contact with engine oil will cause the removal of natural oils from the skin, leading to dryness, irritation and dermatitis. In addition, used engine oil contains potentially harmful contaminants which may cause skin cancer.**
- **Precautions should be taken when replacing engine oil to minimize the risk of your skin making contact with used engine oil.**
- **Wash your skin thoroughly with soap and water, or use waterless hand cleaner to remove any used engine oil. Do not use gasoline, thinners, or solvents.**
- **For environmental protection, used oil and used oil filters must be disposed of only at designated disposal sites.**

1. DRAIN ENGINE OIL

(a) Remove the engine under cover seal No. 3.

(b) Remove the oil pan drain plug and drain the engine oil.

(c) Clean the oil pan drain plug and install it with a new gasket.
Torque: 40 N*m (408 kgf*cm, 30 ft.*lbf)

2. REMOVE OIL FILTER SUB-ASSEMBLY

(a) Remove the drain pipe cap.

(b) While removing the oil filter with SST, catch the oil from the oil filter with a container.
SST 09228-07501

(c) Install the drain pipe cap.

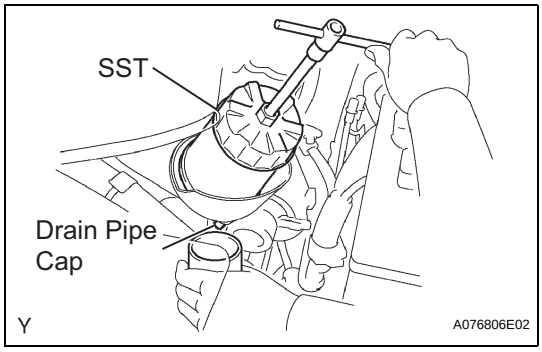

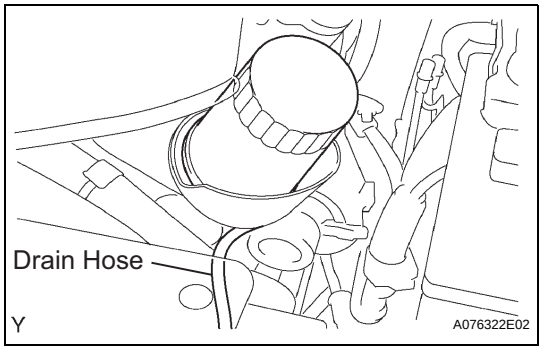

(d) Clean the oil catch plate.
HINT:
When using a drain hose, perform the following procedures.

(e) Remove the drain pipe cap.

(f) Connect a drain hose to the oil filter bracket.
HINT:
- Drain hose inside diameter: 8 mm (0.31 in.)
- Drain hose length: 900 mm (35.43 in.)

(g) Feed the drain hose down through the engine under cover, and put the drain oil container beneath the drain hose to catch the oil from the oil filter.

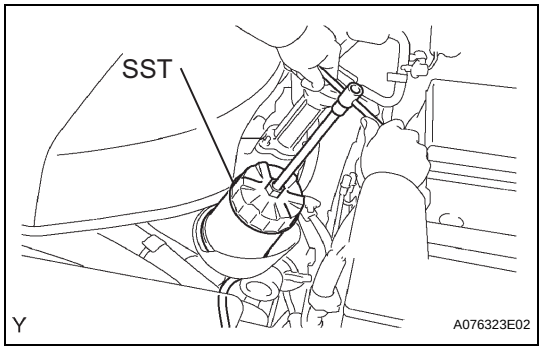

(h) Using SST, remove the oil filter.
SST 09228-07501

(i) Remove the drain hose and install the drain pipe cap.

(j) Clean the oil catch plate.

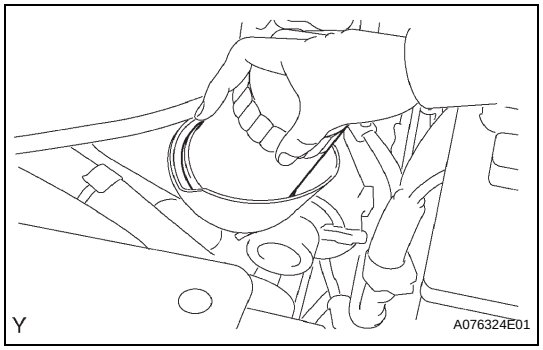

INSTALLATION

1. INSTALL OIL FILTER SUB-ASSEMBLY

(a) Clean the oil filter contact surface on the oil filter bracket.

(b) Apply clean engine oil to the rubber gasket of a new oil filter.

(c) Tighten the oil filter by hand until the rubber gasket comes into contact with the seat of the filter bracket.

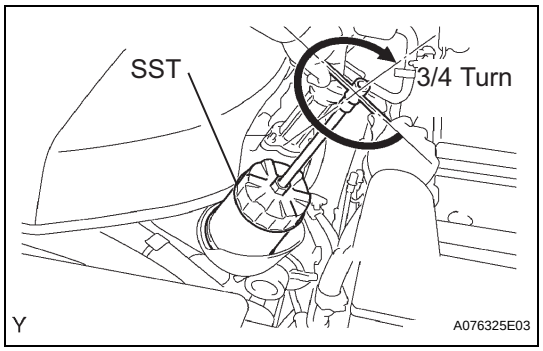

(d) Using SST, tighten it an additional 3/4 turn to set the filter.
SST 09228-07501
Torque: 18 N*m (184 kgf*cm, 13 ft.*lbf)

2. ADD ENGINE OIL

(a) Fill with fresh engine oil.
Capacity:
2WD

Drain and refill with oil filter change	**4.5 liters (4.8 US qts, 4.0 lmp. qts)**
Drain and refill without oil filter change	**4.2 liters (4.4 US qts, 3.7 lmp. qts)**
Dry fill	**5.6 liters (5.9 US qts, 4.9 lmp. qts)**

PRE RUNNER and 4WD

Drain and refill with oil filter change	**5.2 liters (5.5 US qts, 4.6 lmp. qts)**
Drain and refill without oil filter change	**4.9 liters (5.2 US qts, 4.3 lmp. qts)**
Dry fill	**6.0 liters (6.3 US qts, 5.3 lmp. qts)**

(b) Reinstall the oil filler cap.

3. CHECK FOR ENGINE OIL LEAKAGE

4. CHECK ENGINE OIL LEVEL

OIL PUMP (for 2WD)

COMPONENTS

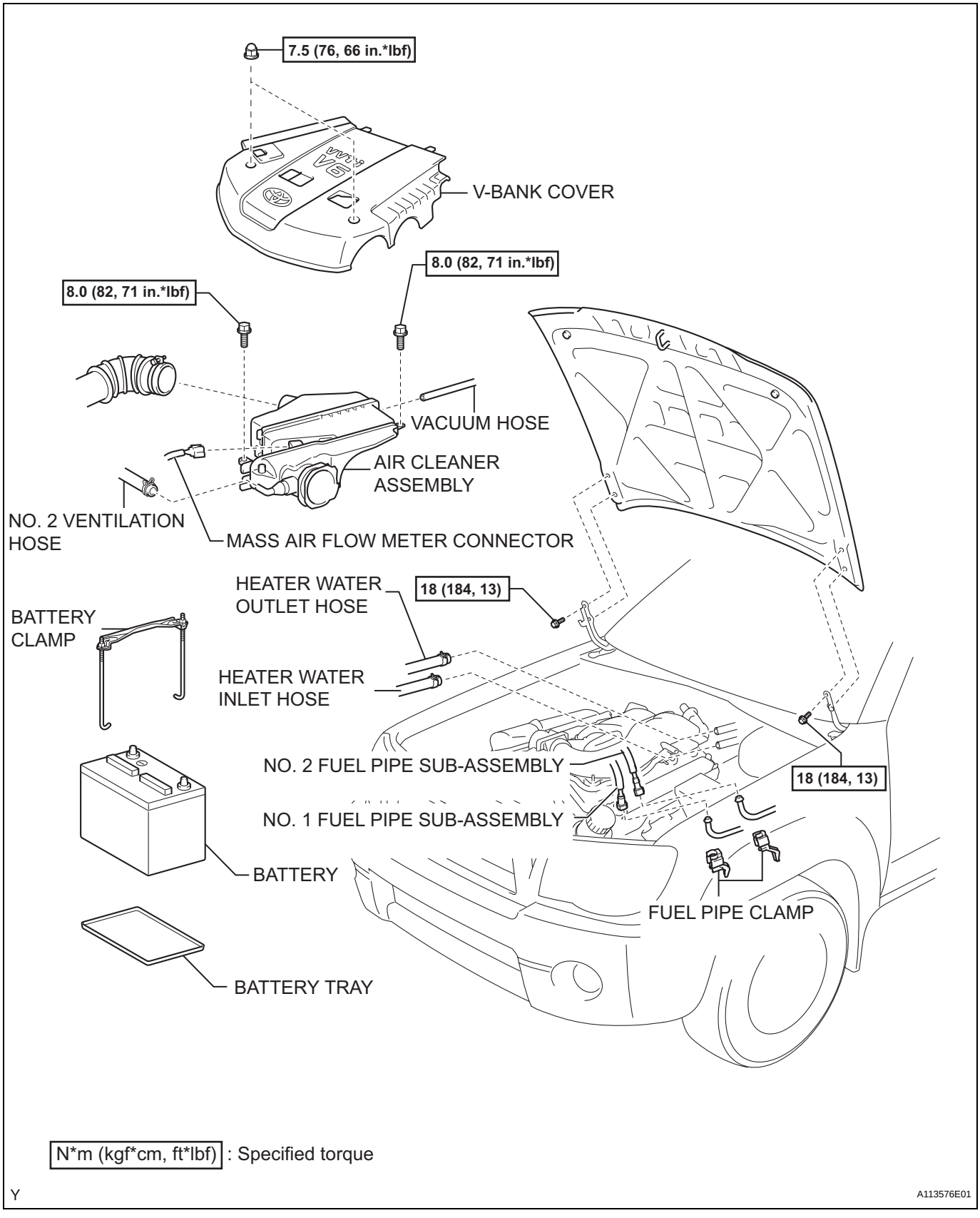

LU

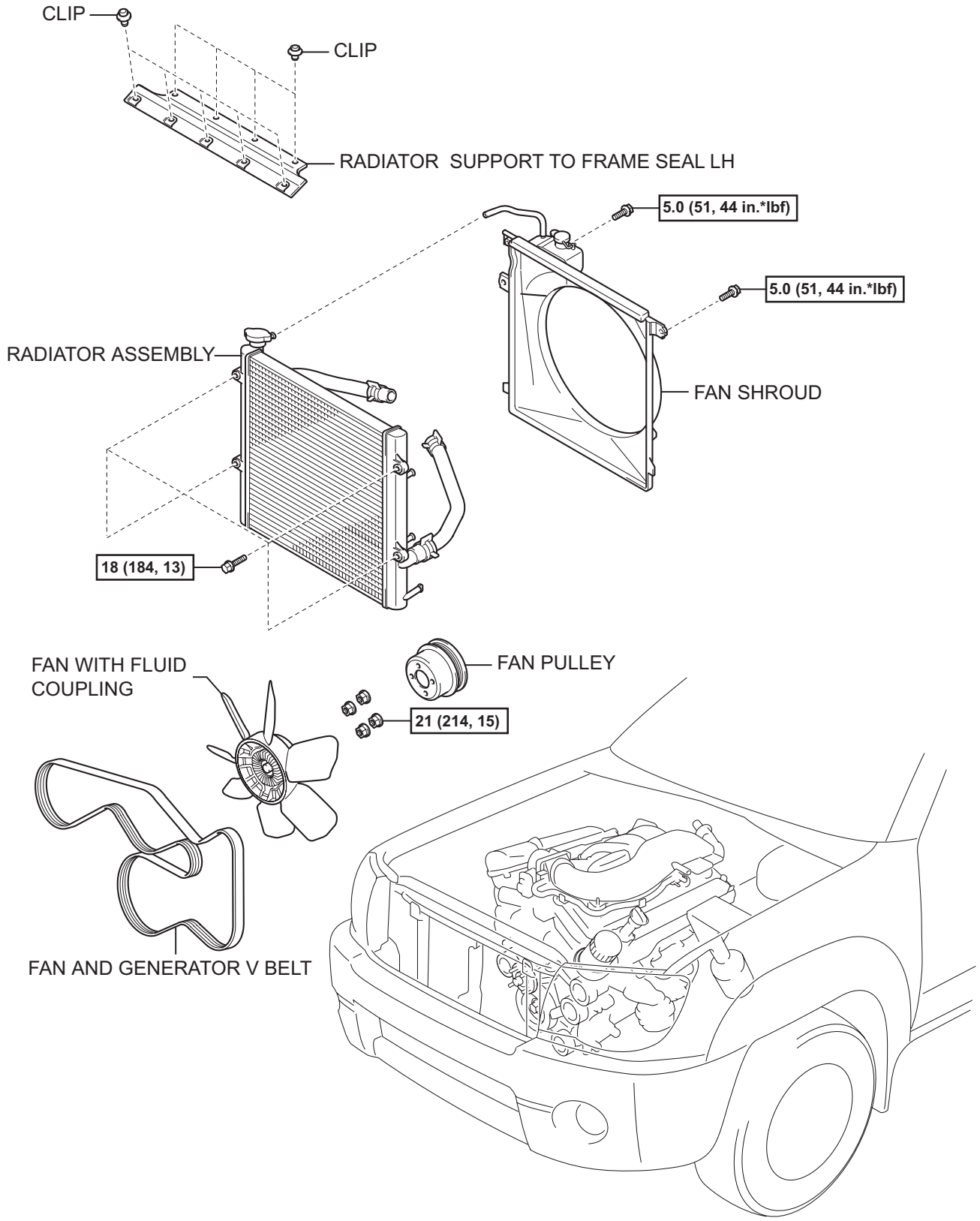

N*m (kgf*cm, ft*lbf) : Specified torque

Y

A113586E01

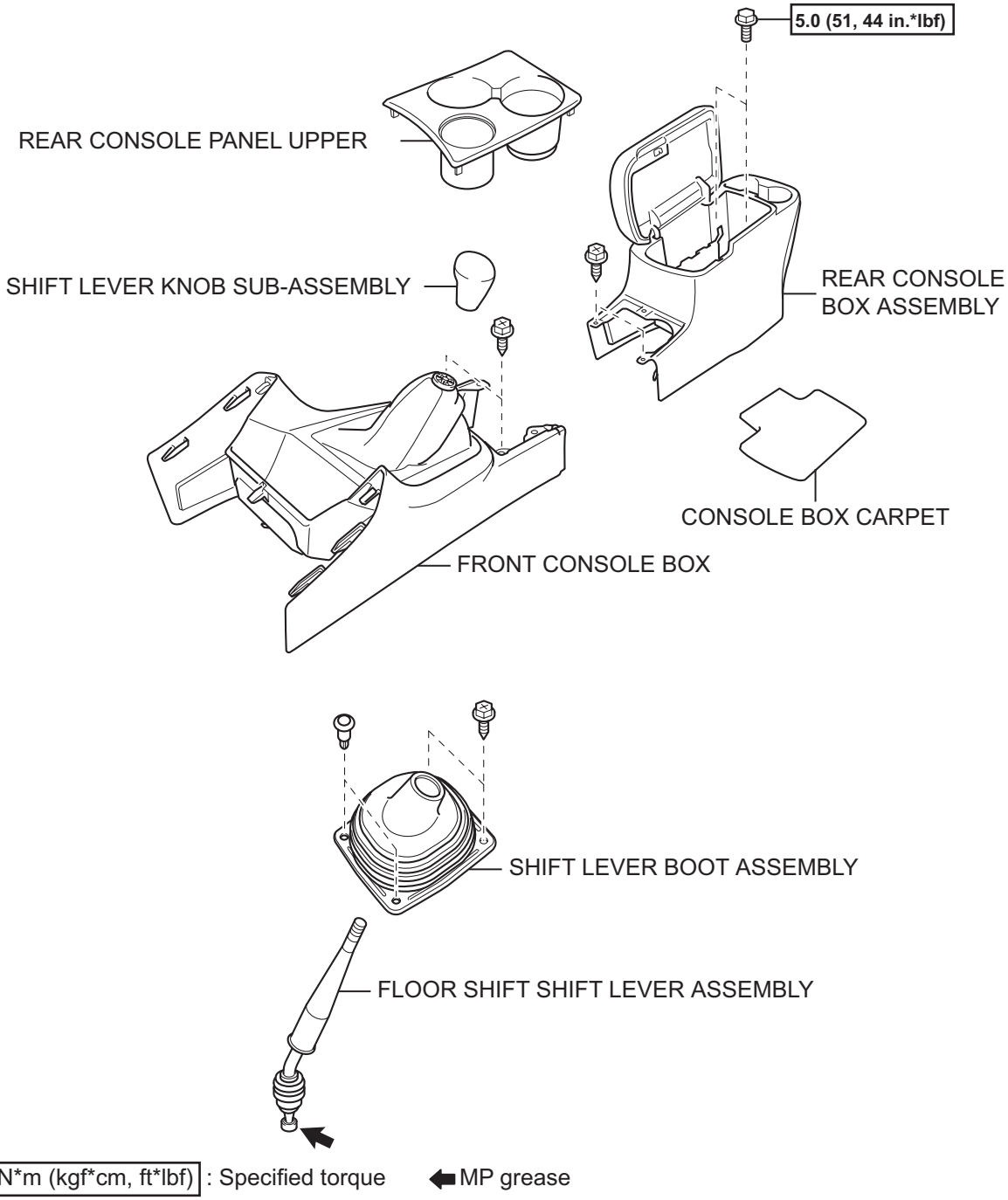

Y

A113553E01

LU

2WD AND PRE RUNNER, MANUAL TRANSMISSION:

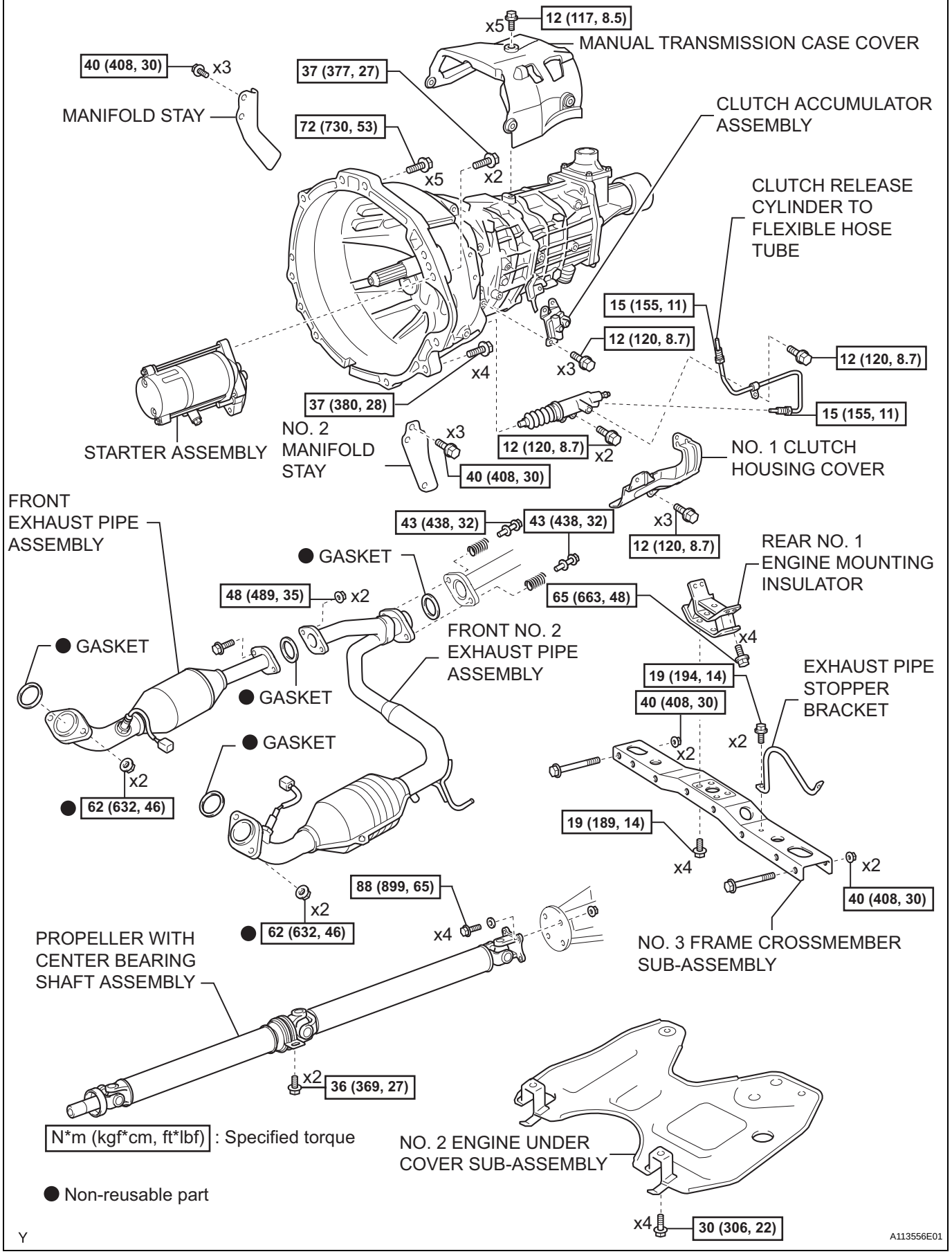

LU

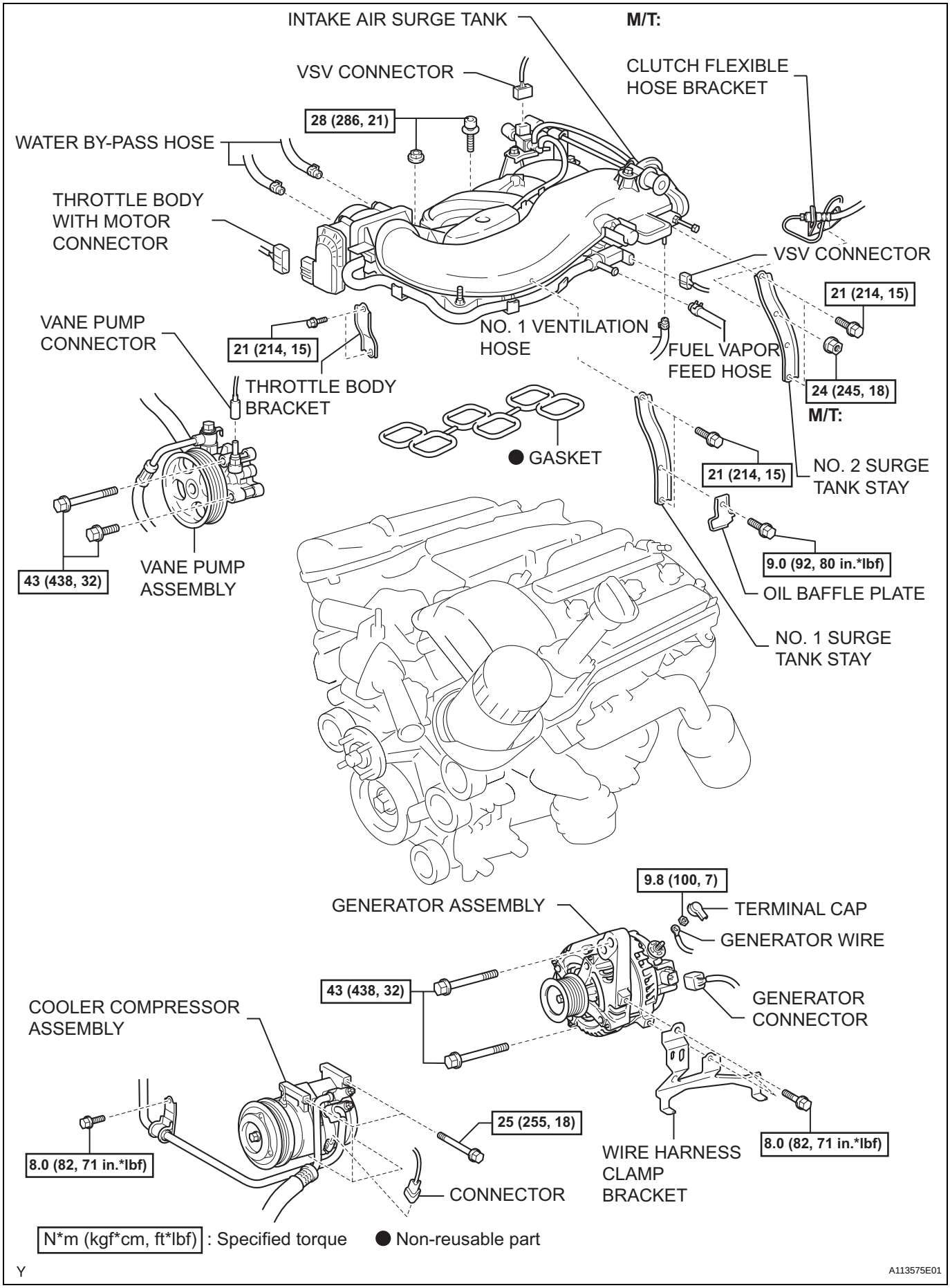
INTAKE AIR SURGE TANK
M/T:
VSV CONNECTOR
CLUTCH FLEXIBLE HOSE BRACKET
28 (286, 21)
WATER BY-PASS HOSE
THROTTLE BODY WITH MOTOR CONNECTOR
VSV CONNECTOR
21 (214, 15)
VANE PUMP CONNECTOR
21 (214, 15)
NO. 1 VENTILATION HOSE
FUEL VAPOR FEED HOSE
24 (245, 18)
M/T:
THROTTLE BODY BRACKET
GASKET
21 (214, 15)
NO. 2 SURGE TANK STAY
9.0 (92, 80 in.*lbf)
43 (438, 32)
VANE PUMP ASSEMBLY
OIL BAFFLE PLATE
NO. 1 SURGE TANK STAY
9.8 (100, 7)
GENERATOR ASSEMBLY
TERMINAL CAP
GENERATOR WIRE
43 (438, 32)
GENERATOR CONNECTOR
COOLER COMPRESSOR ASSEMBLY
25 (255, 18)
8.0 (82, 71 in.*lbf)
8.0 (82, 71 in.*lbf)
WIRE HARNESS CLAMP BRACKET
CONNECTOR
N*m (kgf*cm, ft*lbf) : Specified torque
● Non-reusable part
Y
A113575E01

LU

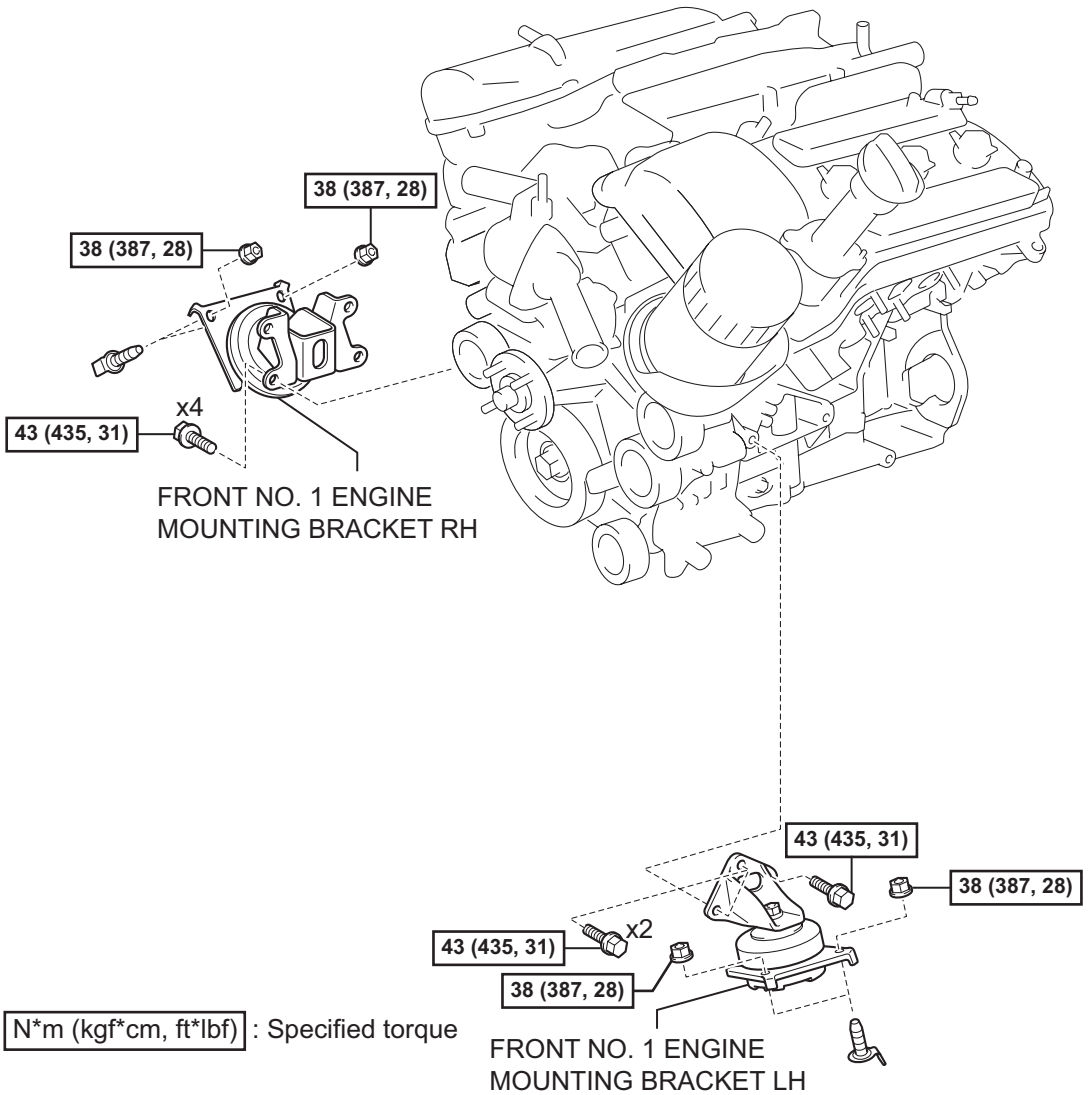
38 (387, 28)
38 (387, 28)
x4
43 (435, 31)
FRONT NO. 1 ENGINE
MOUNTING BRACKET RH
43 (435, 31)
38 (387, 28)
x2
43 (435, 31)
38 (387, 28)
FRONT NO. 1 ENGINE
MOUNTING BRACKET LH
N*m (kgf*cm, ft*lbf) : Specified torque
● Non-reusable part
Y
A113584E01

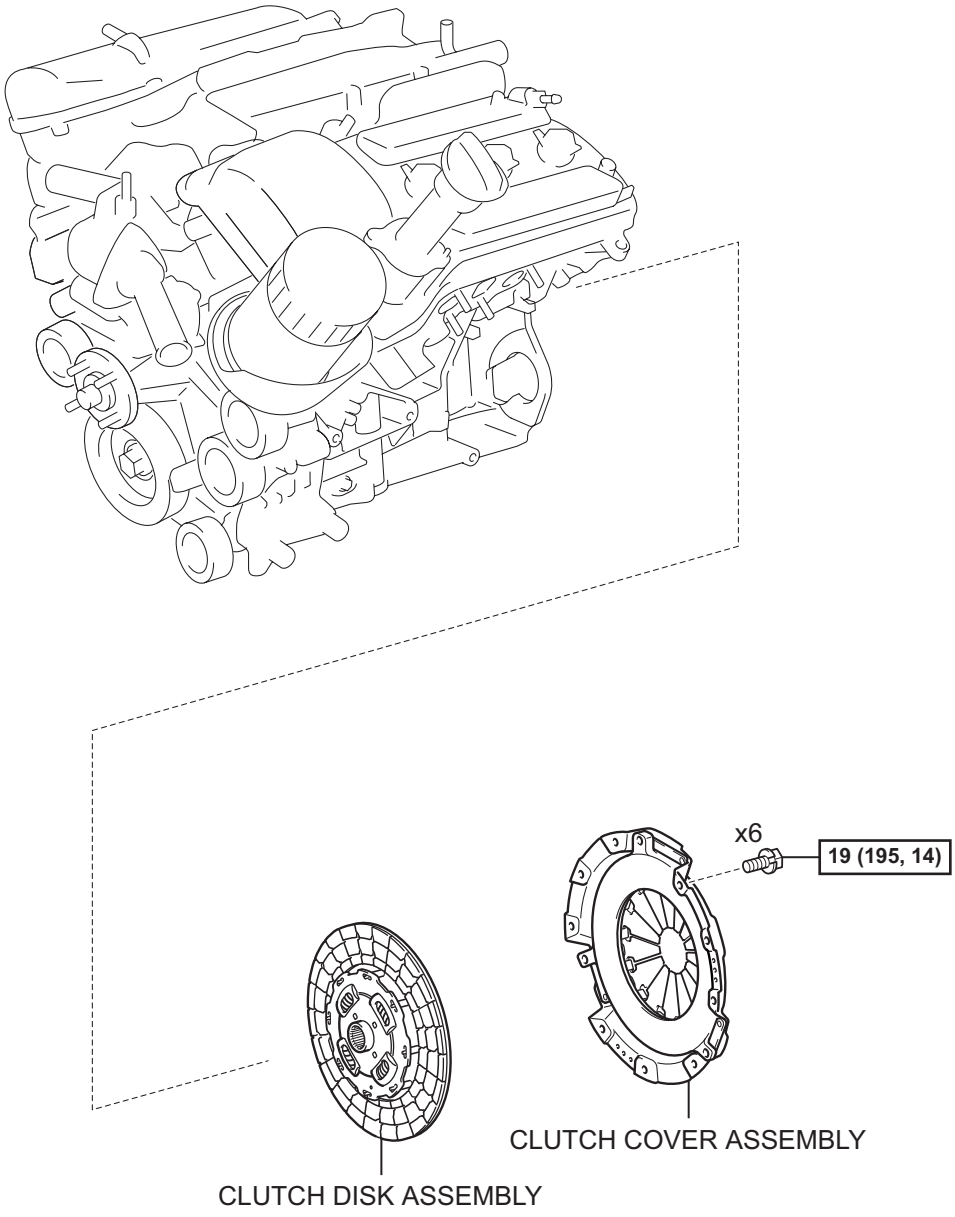

N*m (kgf*cm, ft*lbf) : Specified torque

Y

A113585E01

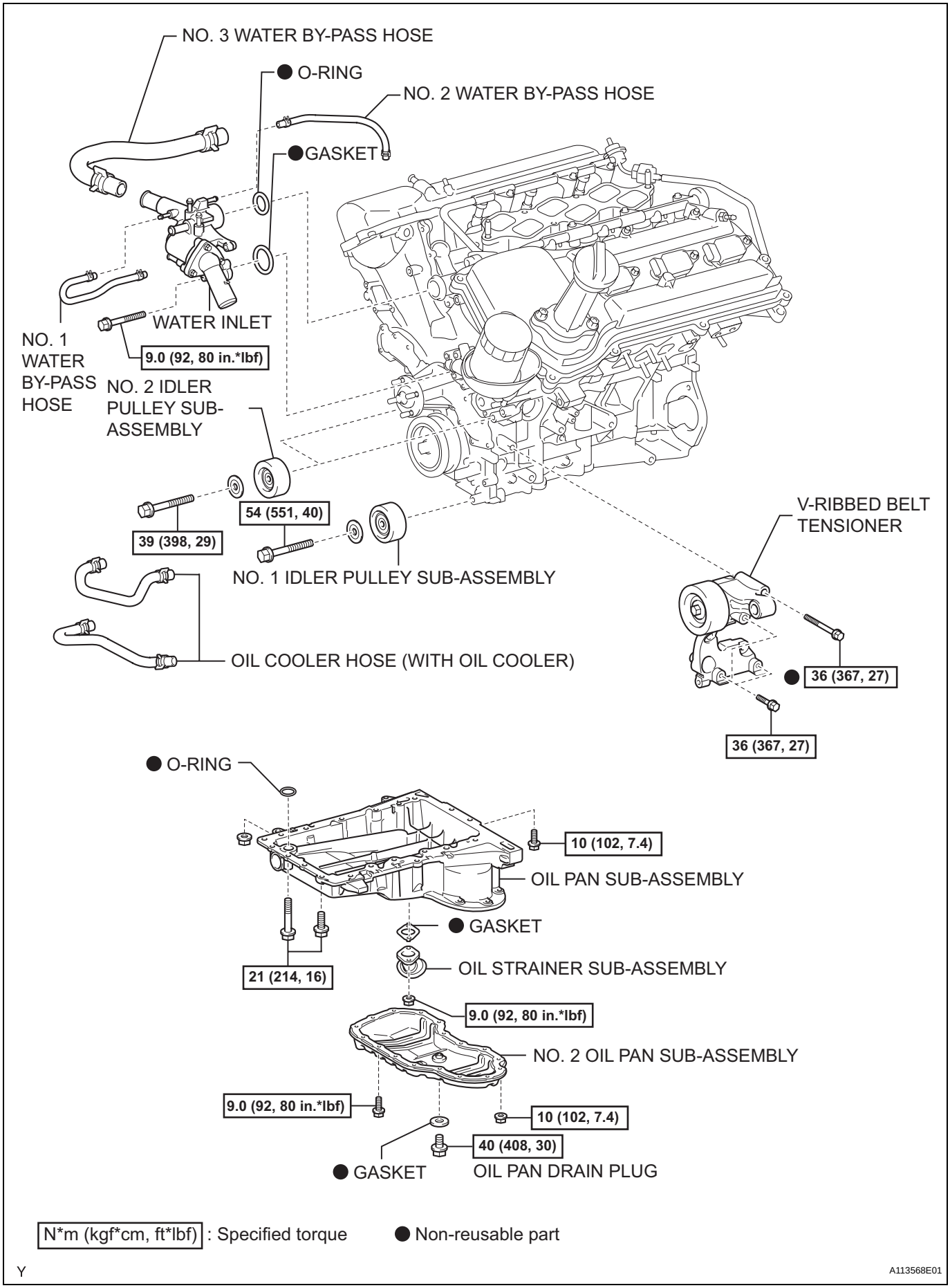
NO. 3 WATER BY-PASS HOSE
O-RING
NO. 2 WATER BY-PASS HOSE
GASKET
WATER INLET
NO. 1 WATER BY-PASS HOSE
9.0 (92, 80 in.*lbf)
NO. 2 IDLER PULLEY SUB-ASSEMBLY
54 (551, 40)
39 (398, 29)
NO. 1 IDLER PULLEY SUB-ASSEMBLY
V-RIBBED BELT TENSIONER
OIL COOLER HOSE (WITH OIL COOLER)
36 (367, 27)
36 (367, 27)
O-RING
10 (102, 7.4)
OIL PAN SUB-ASSEMBLY
GASKET
OIL STRAINER SUB-ASSEMBLY
21 (214, 16)
9.0 (92, 80 in.*lbf)
NO. 2 OIL PAN SUB-ASSEMBLY
9.0 (92, 80 in.*lbf)
10 (102, 7.4)
40 (408, 30)
GASKET
OIL PAN DRAIN PLUG
N*m (kgf*cm, ft*lbf) : Specified torque
Non-reusable part
Y
A113568E01

LU

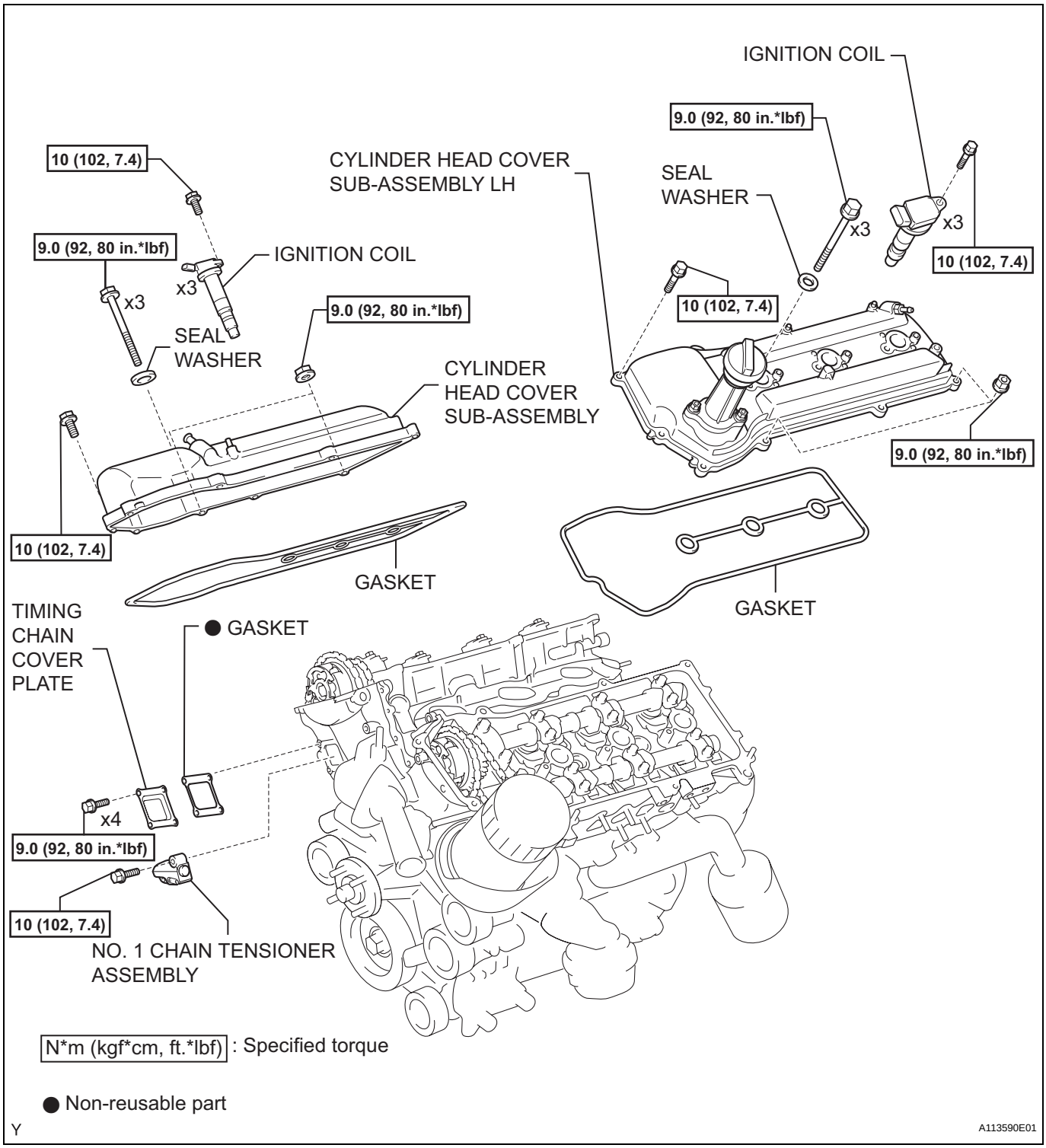
IGNITION COIL
9.0 (92, 80 in.*lbf)
SEAL WASHER
x3
x3
10 (102, 7.4)
CYLINDER HEAD COVER SUB-ASSEMBLY LH
10 (102, 7.4)
IGNITION COIL
9.0 (92, 80 in.*lbf)
x3
SEAL WASHER
9.0 (92, 80 in.*lbf)
CYLINDER HEAD COVER SUB-ASSEMBLY
10 (102, 7.4)
9.0 (92, 80 in.*lbf)
GASKET
GASKET
TIMING CHAIN COVER PLATE
● GASKET
x4
9.0 (92, 80 in.*lbf)
10 (102, 7.4)
NO. 1 CHAIN TENSIONER ASSEMBLY
N*m (kgf*cm, ft.*lbf) : Specified torque
● Non-reusable part
Y
A113590E01

LU

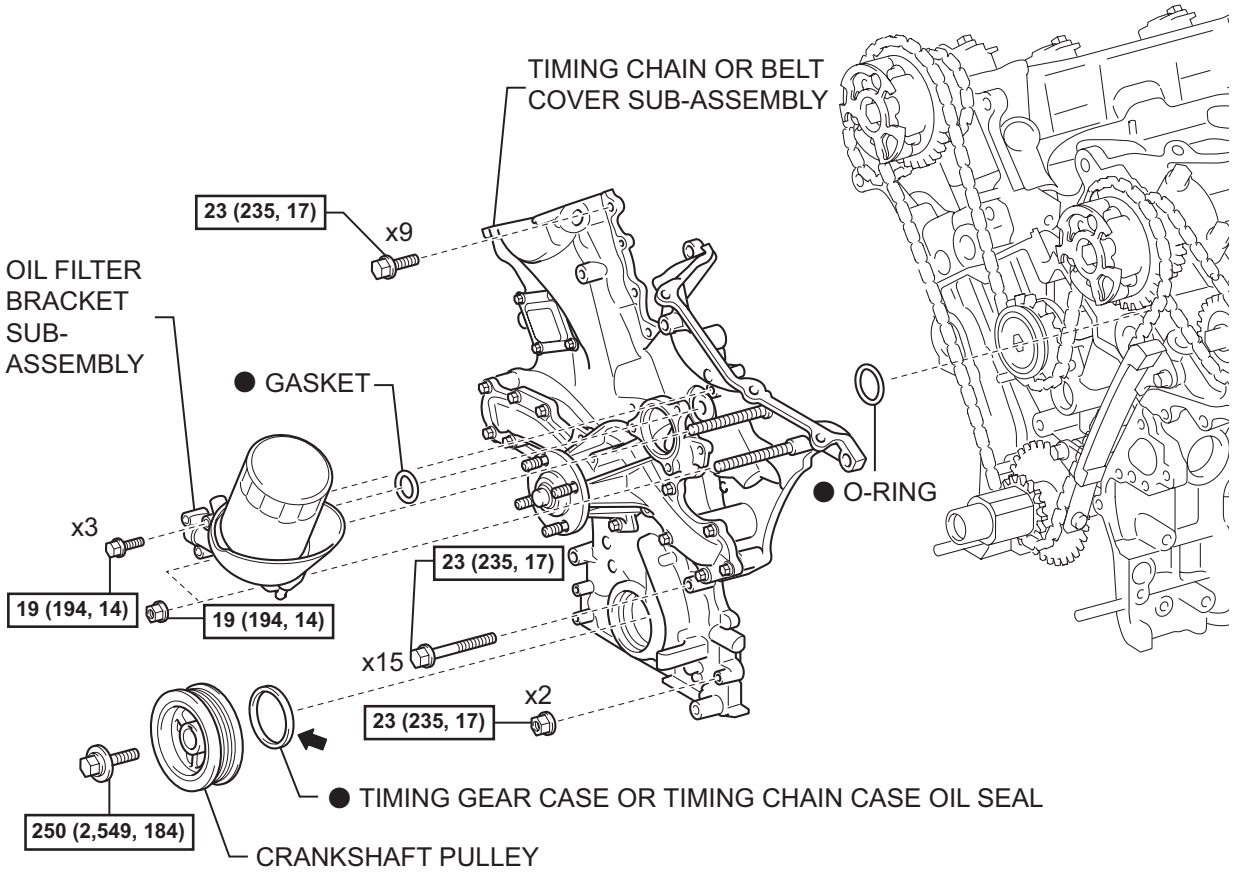

N*m (kgf*cm, ft.*lbf) : Specified torque

● Non-reusable part

⬅ Apply MP grease

Y

A113598E01

LU

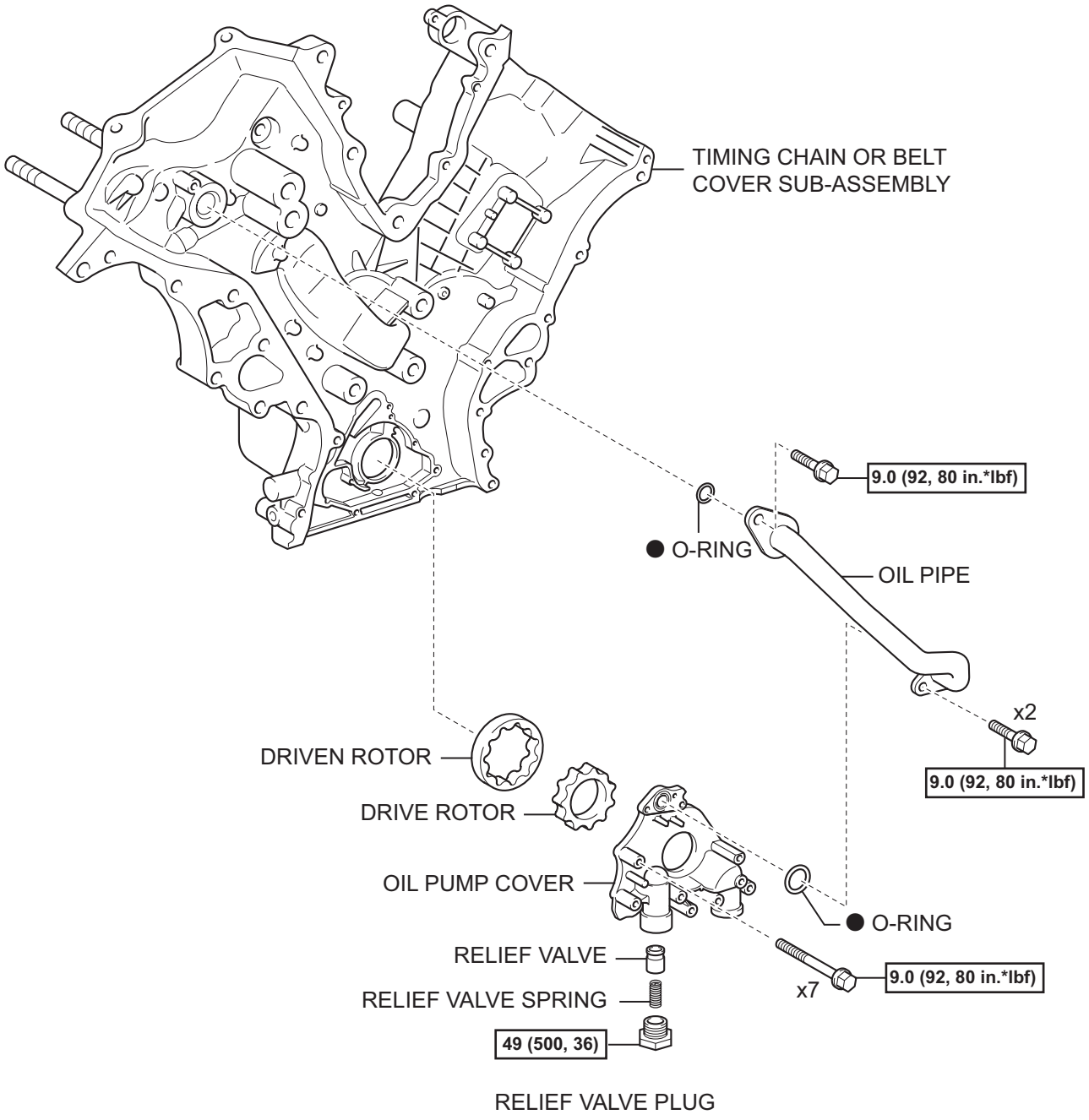
TIMING CHAIN OR BELT COVER SUB-ASSEMBLY
9.0 (92, 80 in.*lbf)
● O-RING
OIL PIPE
x2
9.0 (92, 80 in.*lbf)
DRIVEN ROTOR
DRIVE ROTOR
OIL PUMP COVER
● O-RING
RELIEF VALVE
RELIEF VALVE SPRING
x7
9.0 (92, 80 in.*lbf)
49 (500, 36)
RELIEF VALVE PLUG
N*m (kgf*cm, ft.*lbf) : Specified torque
● Non-reusable part
A113540E01

LU

Y

OIL PUMP (for 4WD and Pre-Runner)

COMPONENTS

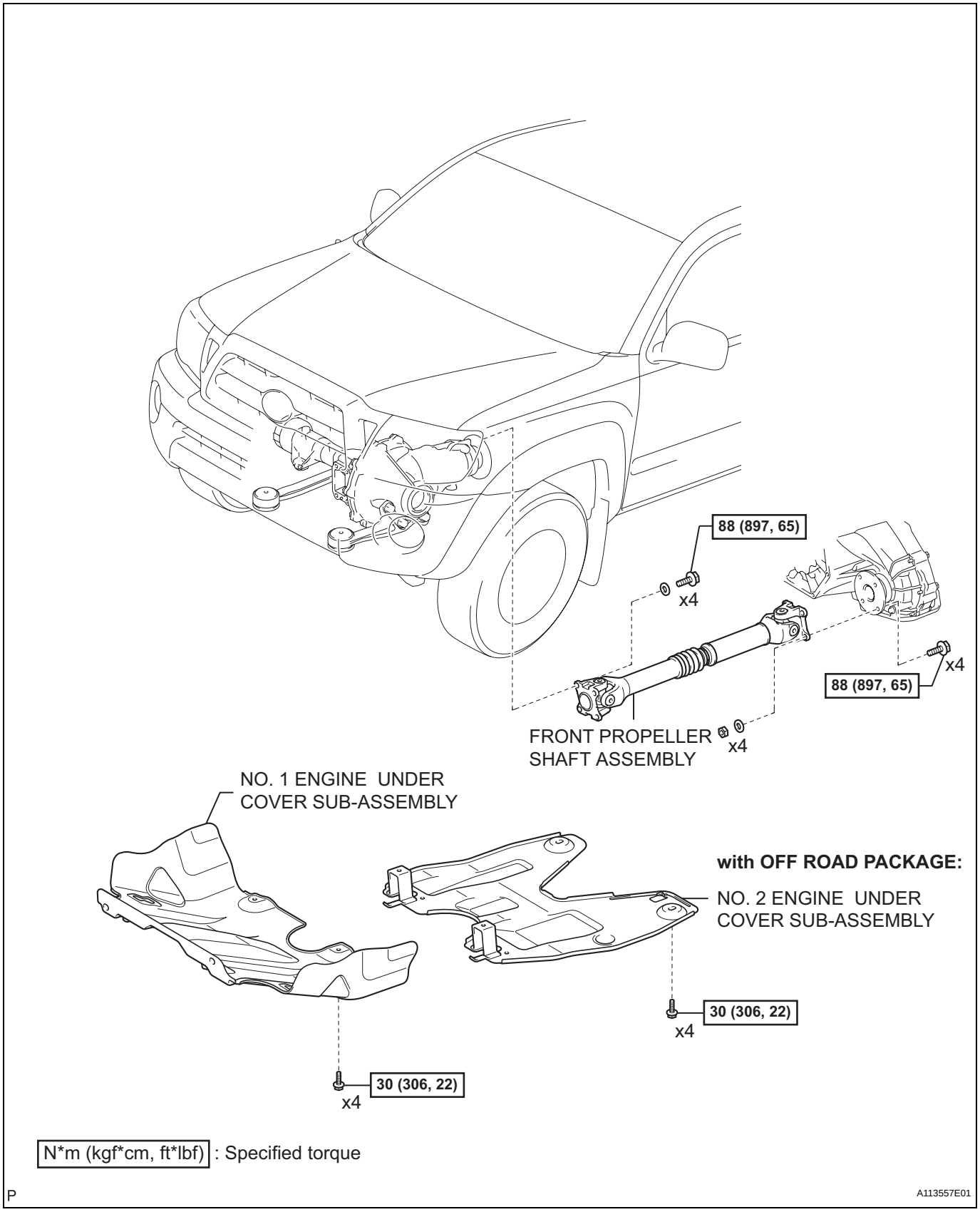

LU

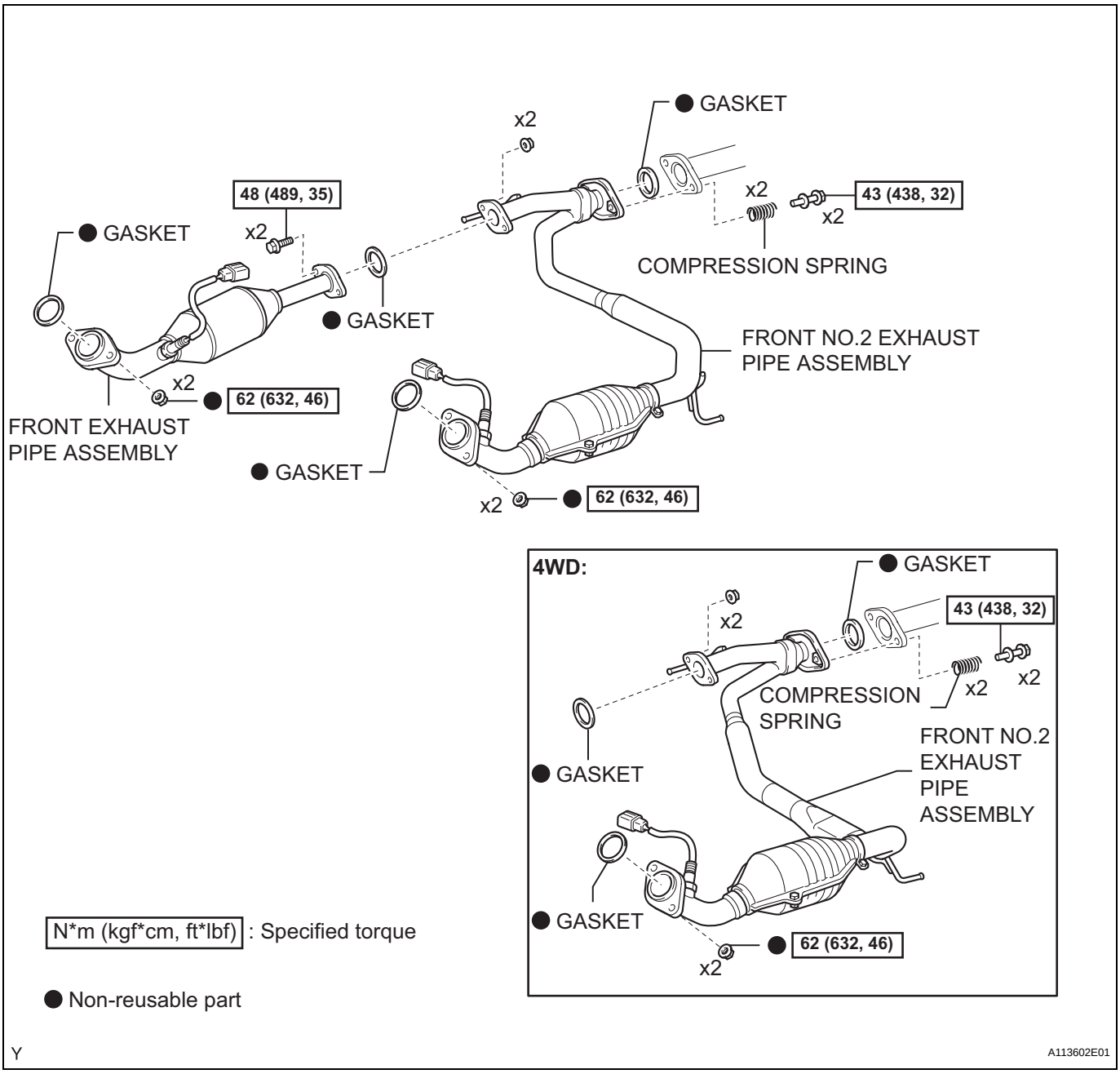
GASKET
x2
48 (489, 35)
x2
GASKET
43 (438, 32)
x2
x2
COMPRESSION SPRING
GASKET
FRONT NO.2 EXHAUST PIPE ASSEMBLY
x2
62 (632, 46)
FRONT EXHAUST PIPE ASSEMBLY
GASKET
x2
62 (632, 46)
4WD:
GASKET
x2
43 (438, 32)
x2
x2
COMPRESSION SPRING
FRONT NO.2 EXHAUST PIPE ASSEMBLY
GASKET
GASKET
62 (632, 46)
x2
N*m (kgf*cm, ft*lbf) : Specified torque
Non-reusable part
Y
A113602E01

PRE RUNNER:

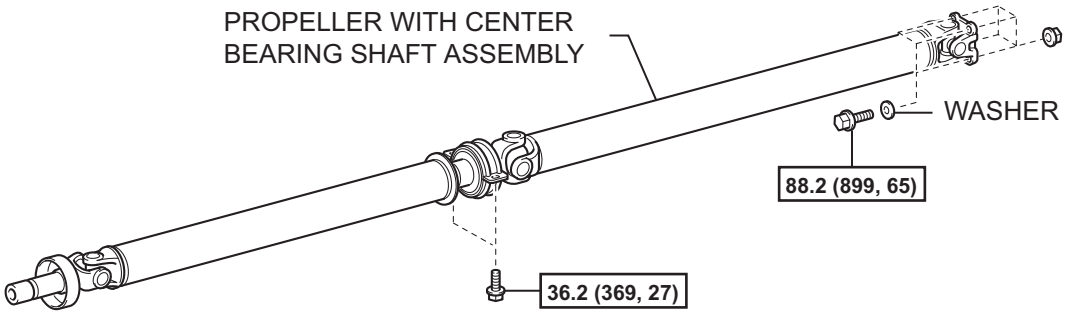

4WD:

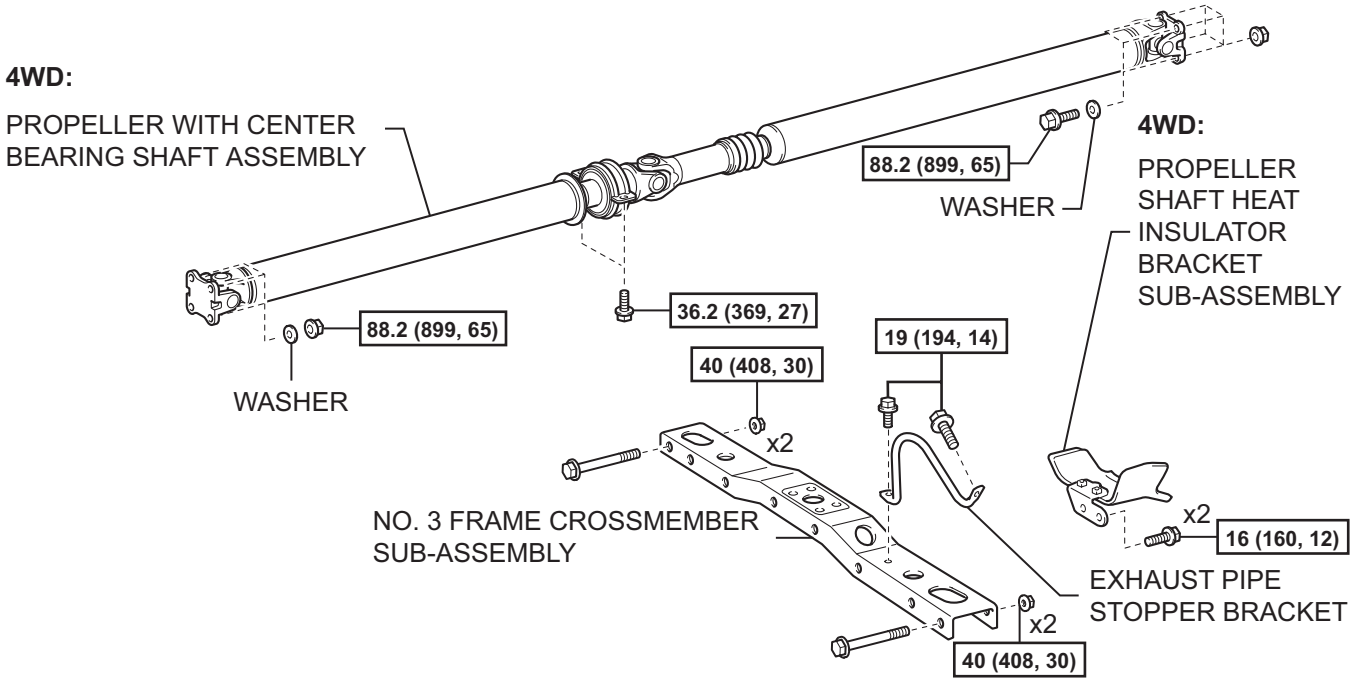

N*m (kgf*cm, ft*lbf) : Specified torque

Y

A113600E01

LU

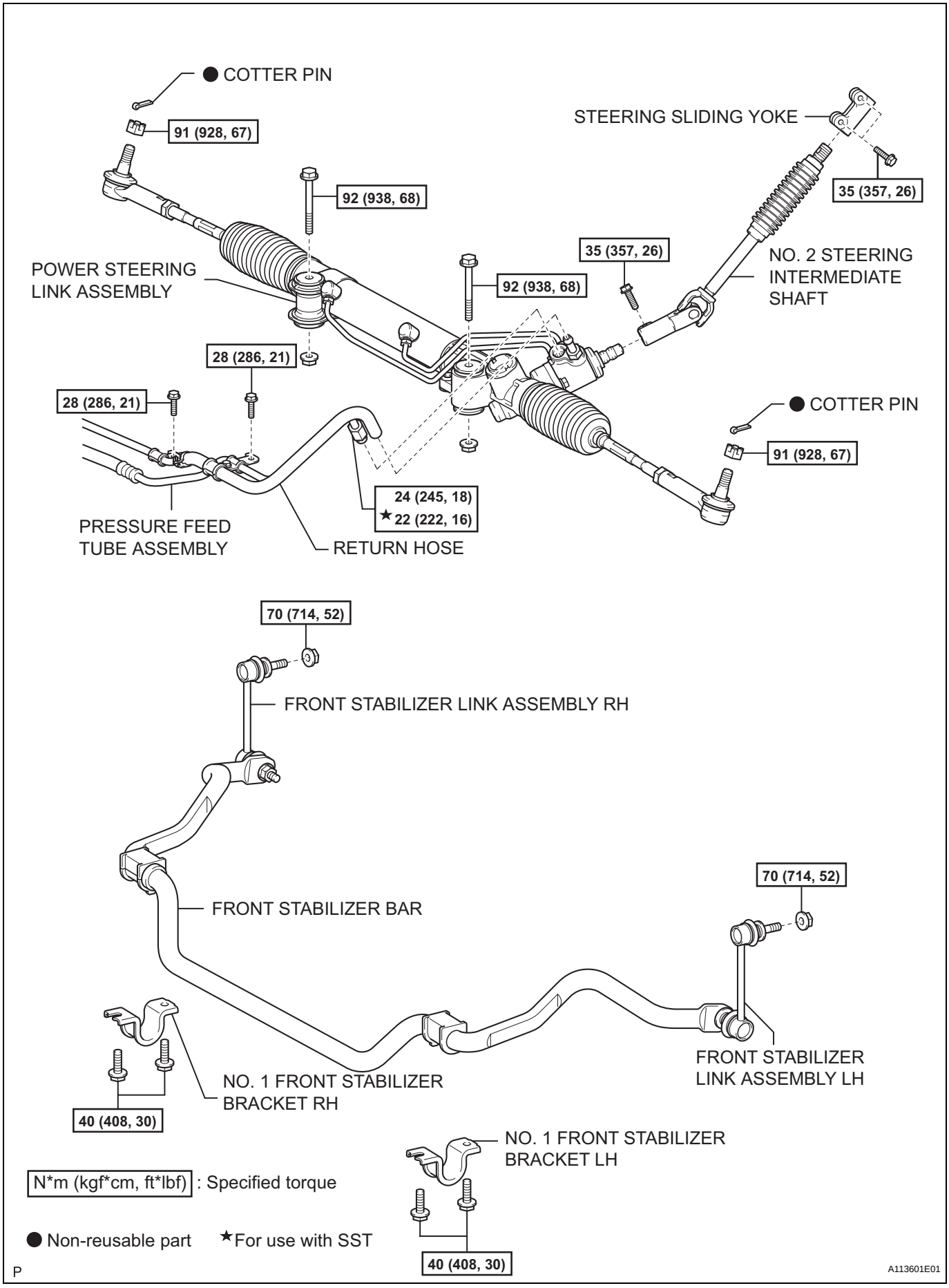
● COTTER PIN
91 (928, 67)
92 (938, 68)
STEERING SLIDING YOKE
35 (357, 26)
35 (357, 26)
NO. 2 STEERING INTERMEDIATE SHAFT
POWER STEERING LINK ASSEMBLY
92 (938, 68)
28 (286, 21)
28 (286, 21)
● COTTER PIN
91 (928, 67)
24 (245, 18)
★22 (222, 16)
PRESSURE FEED TUBE ASSEMBLY
RETURN HOSE
70 (714, 52)
FRONT STABILIZER LINK ASSEMBLY RH
FRONT STABILIZER BAR
70 (714, 52)
NO. 1 FRONT STABILIZER BRACKET RH
FRONT STABILIZER LINK ASSEMBLY LH
40 (408, 30)
NO. 1 FRONT STABILIZER BRACKET LH
40 (408, 30)
N*m (kgf*cm, ft*lbf) : Specified torque
● Non-reusable part
★For use with SST
P
A113601E01

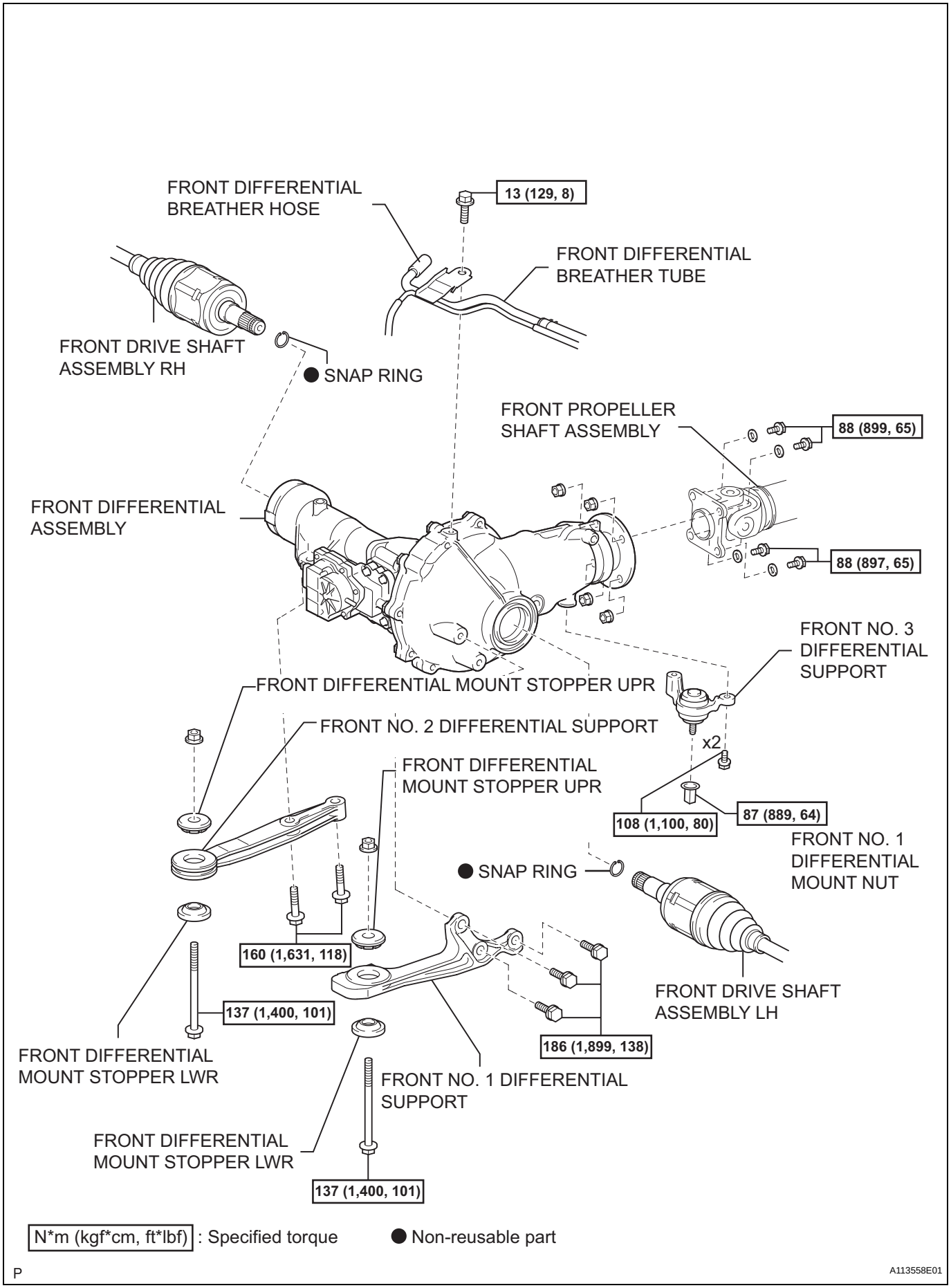
FRONT DIFFERENTIAL BREATHER HOSE
13 (129, 8)
FRONT DIFFERENTIAL BREATHER TUBE
FRONT DRIVE SHAFT ASSEMBLY RH
SNAP RING
FRONT PROPELLER SHAFT ASSEMBLY
88 (899, 65)
FRONT DIFFERENTIAL ASSEMBLY
88 (897, 65)
FRONT NO. 3 DIFFERENTIAL SUPPORT
FRONT DIFFERENTIAL MOUNT STOPPER UPR
FRONT NO. 2 DIFFERENTIAL SUPPORT
x2
FRONT DIFFERENTIAL MOUNT STOPPER UPR
108 (1,100, 80)
87 (889, 64)
FRONT NO. 1 DIFFERENTIAL MOUNT NUT
SNAP RING
160 (1,631, 118)
137 (1,400, 101)
FRONT DRIVE SHAFT ASSEMBLY LH
FRONT DIFFERENTIAL MOUNT STOPPER LWR
186 (1,899, 138)
FRONT NO. 1 DIFFERENTIAL SUPPORT
FRONT DIFFERENTIAL MOUNT STOPPER LWR
137 (1,400, 101)
N*m (kgf*cm, ft*lbf) : Specified torque
Non-reusable part
P
A113558E01

LU

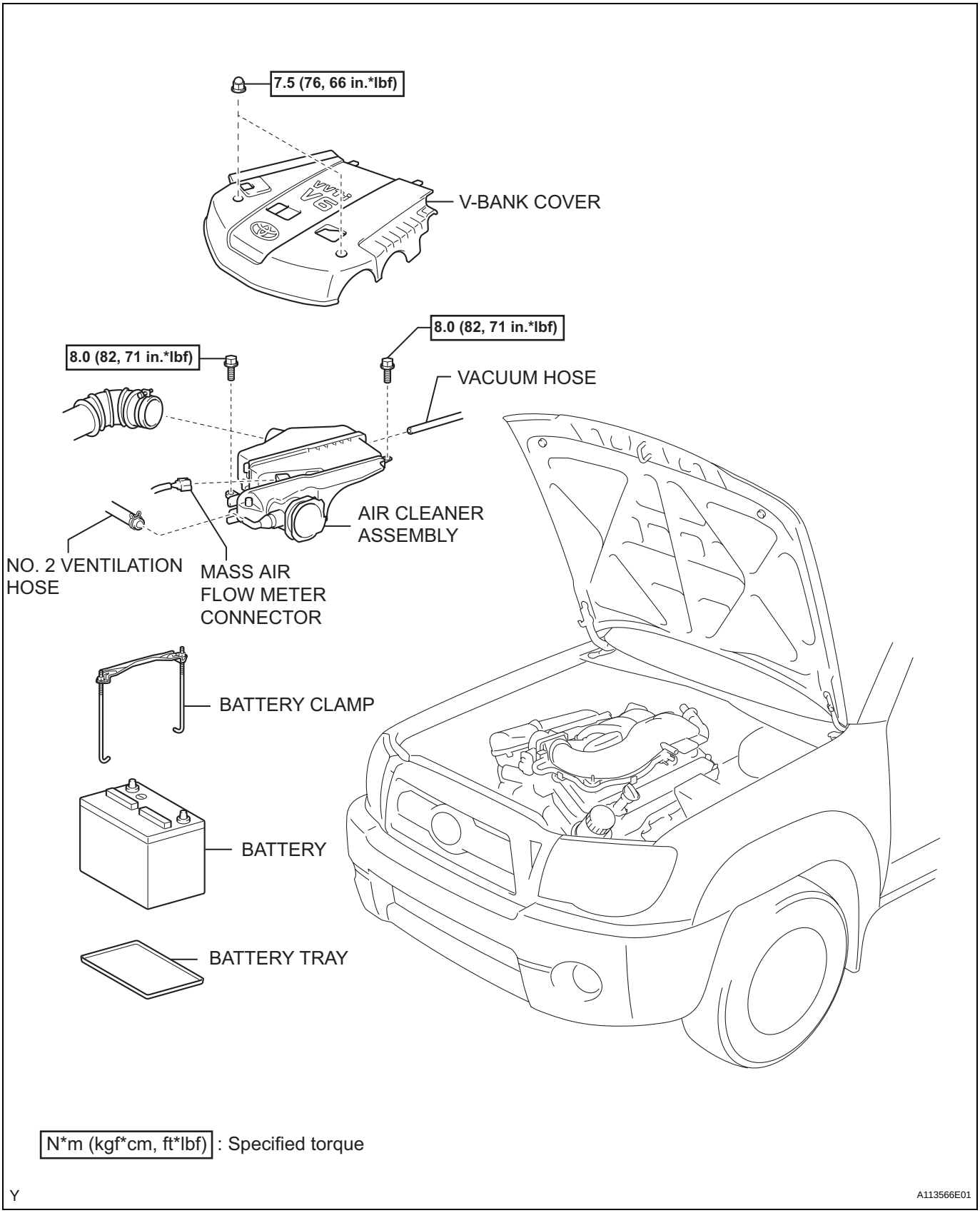
7.5 (76, 66 in.*lbf)
V-BANK COVER
8.0 (82, 71 in.*lbf)
8.0 (82, 71 in.*lbf)
VACUUM HOSE
AIR CLEANER ASSEMBLY
NO. 2 VENTILATION HOSE
MASS AIR FLOW METER CONNECTOR
BATTERY CLAMP
BATTERY
BATTERY TRAY
N*m (kgf*cm, ft*lbf) : Specified torque
Y
A113566E01

LU

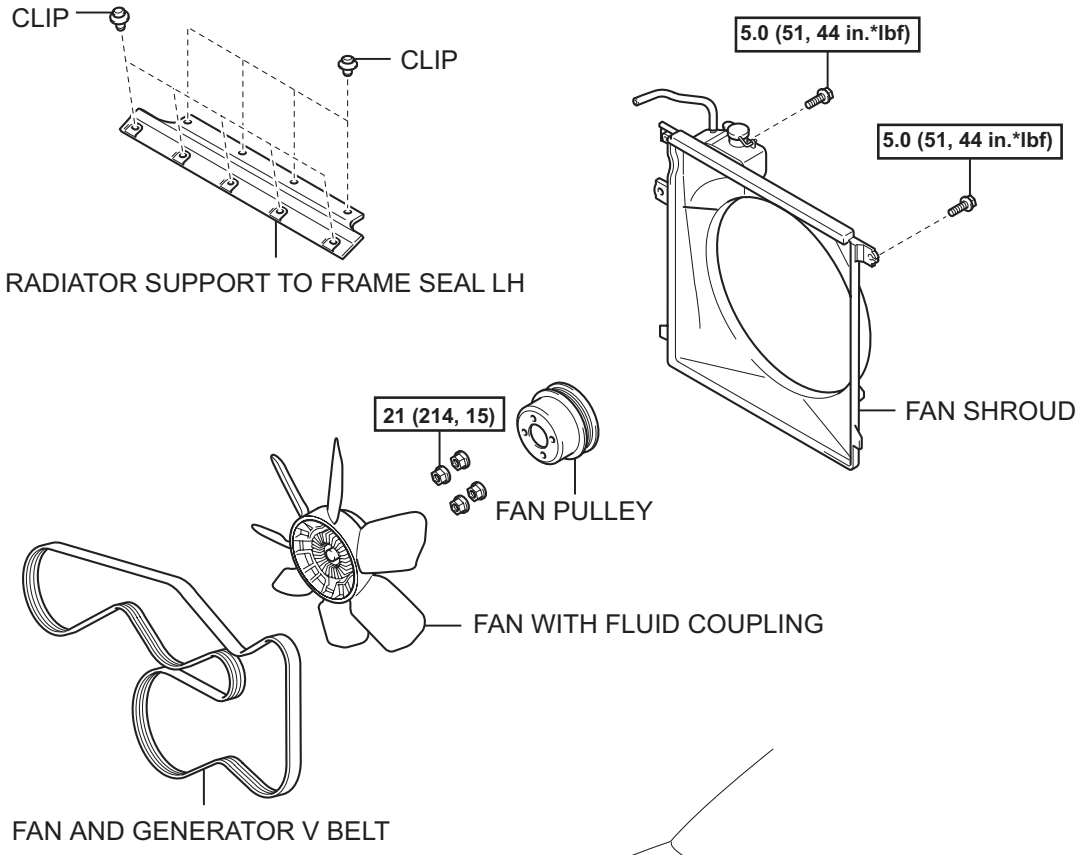

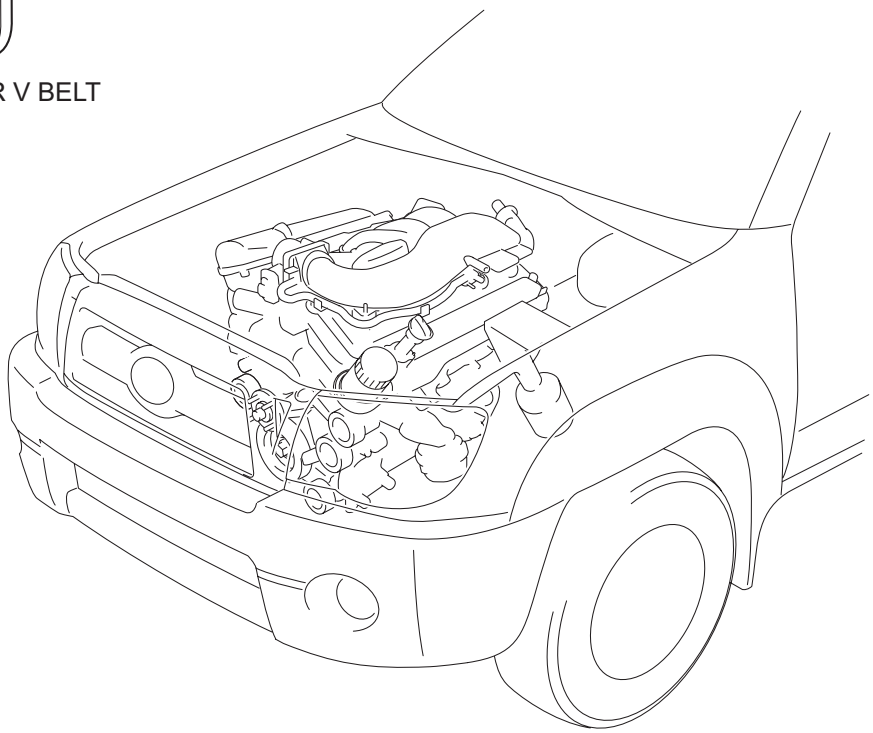

N*m (kgf*cm, ft*lbf) : Specified torque

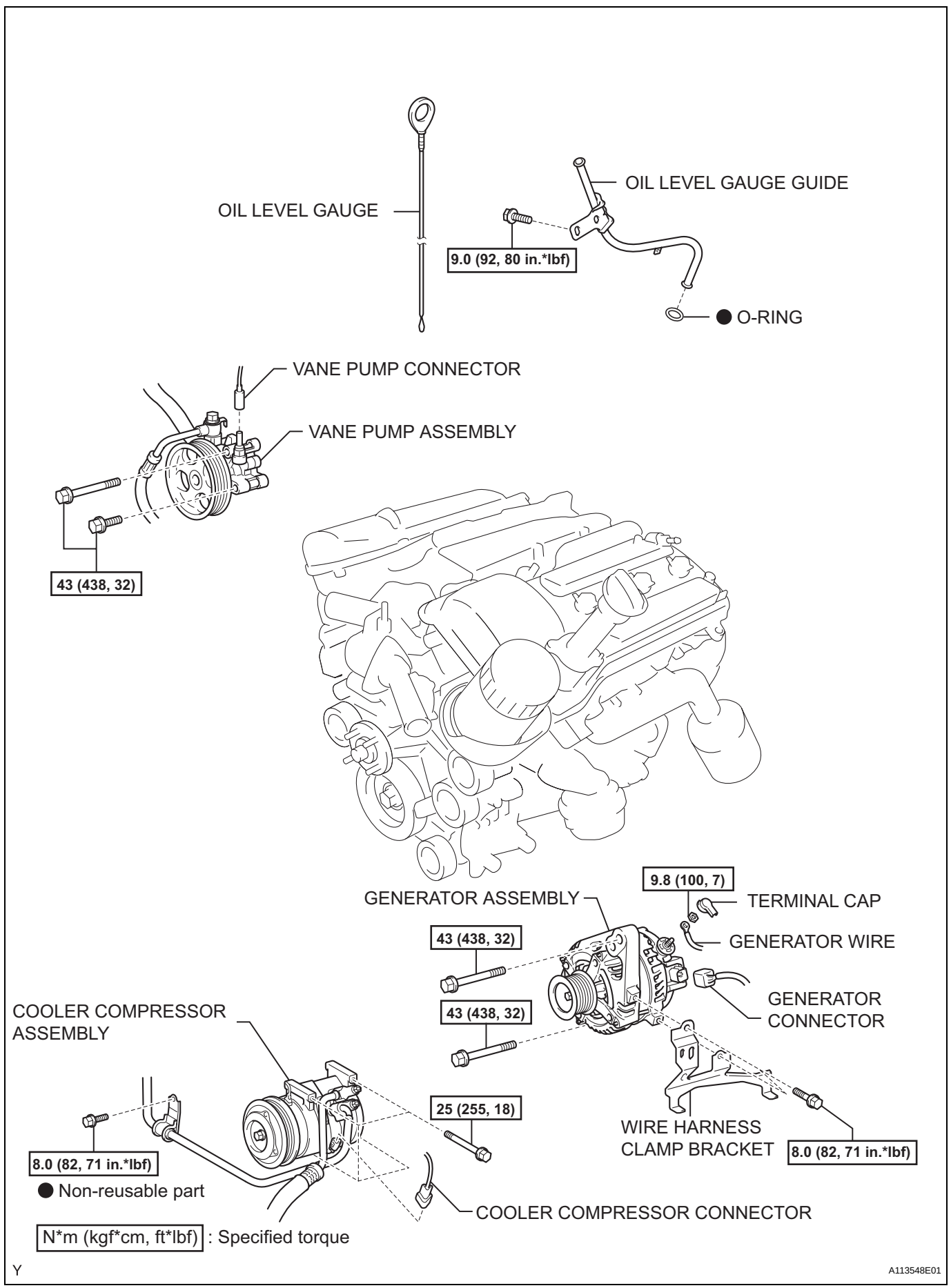
OIL LEVEL GAUGE
OIL LEVEL GAUGE GUIDE
9.0 (92, 80 in.*lbf)
● O-RING
VANE PUMP CONNECTOR
VANE PUMP ASSEMBLY
43 (438, 32)
9.8 (100, 7)
GENERATOR ASSEMBLY
TERMINAL CAP
GENERATOR WIRE
43 (438, 32)
GENERATOR CONNECTOR
COOLER COMPRESSOR ASSEMBLY
43 (438, 32)
25 (255, 18)
WIRE HARNESS CLAMP BRACKET
8.0 (82, 71 in.*lbf)
8.0 (82, 71 in.*lbf)
● Non-reusable part
COOLER COMPRESSOR CONNECTOR
N*m (kgf*cm, ft*lbf) : Specified torque
Y
A113548E01

LU

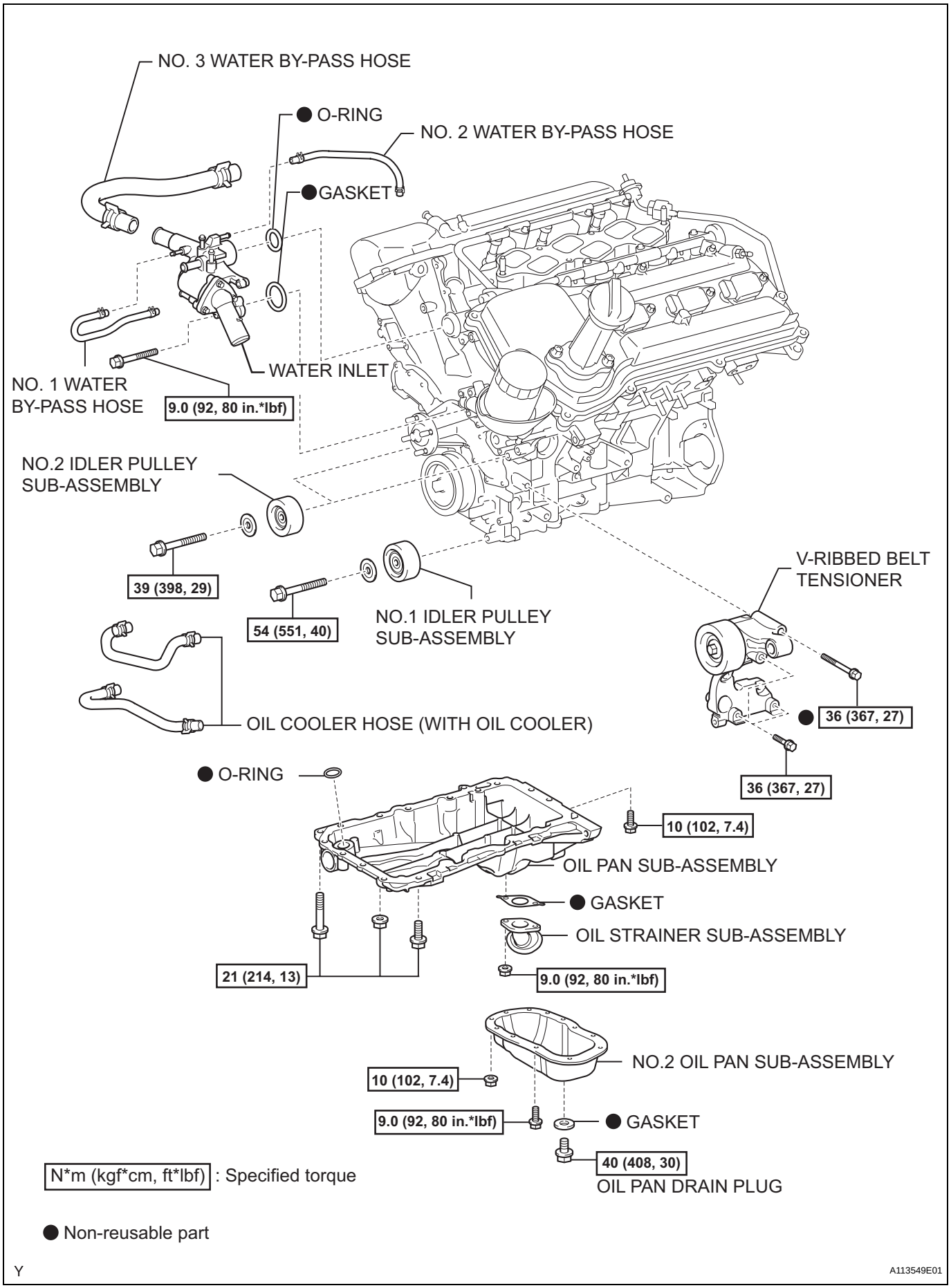
NO. 3 WATER BY-PASS HOSE
● O-RING
NO. 2 WATER BY-PASS HOSE
●GASKET
WATER INLET
NO. 1 WATER BY-PASS HOSE
9.0 (92, 80 in.*lbf)
NO.2 IDLER PULLEY SUB-ASSEMBLY
39 (398, 29)
54 (551, 40)
NO.1 IDLER PULLEY SUB-ASSEMBLY
V-RIBBED BELT TENSIONER
OIL COOLER HOSE (WITH OIL COOLER)
● 36 (367, 27)
36 (367, 27)
● O-RING
10 (102, 7.4)
OIL PAN SUB-ASSEMBLY
● GASKET
OIL STRAINER SUB-ASSEMBLY
21 (214, 13)
9.0 (92, 80 in.*lbf)
NO.2 OIL PAN SUB-ASSEMBLY
10 (102, 7.4)
9.0 (92, 80 in.*lbf)
● GASKET
40 (408, 30)
OIL PAN DRAIN PLUG
N*m (kgf*cm, ft*lbf) : Specified torque
● Non-reusable part
Y
A113549E01

LU

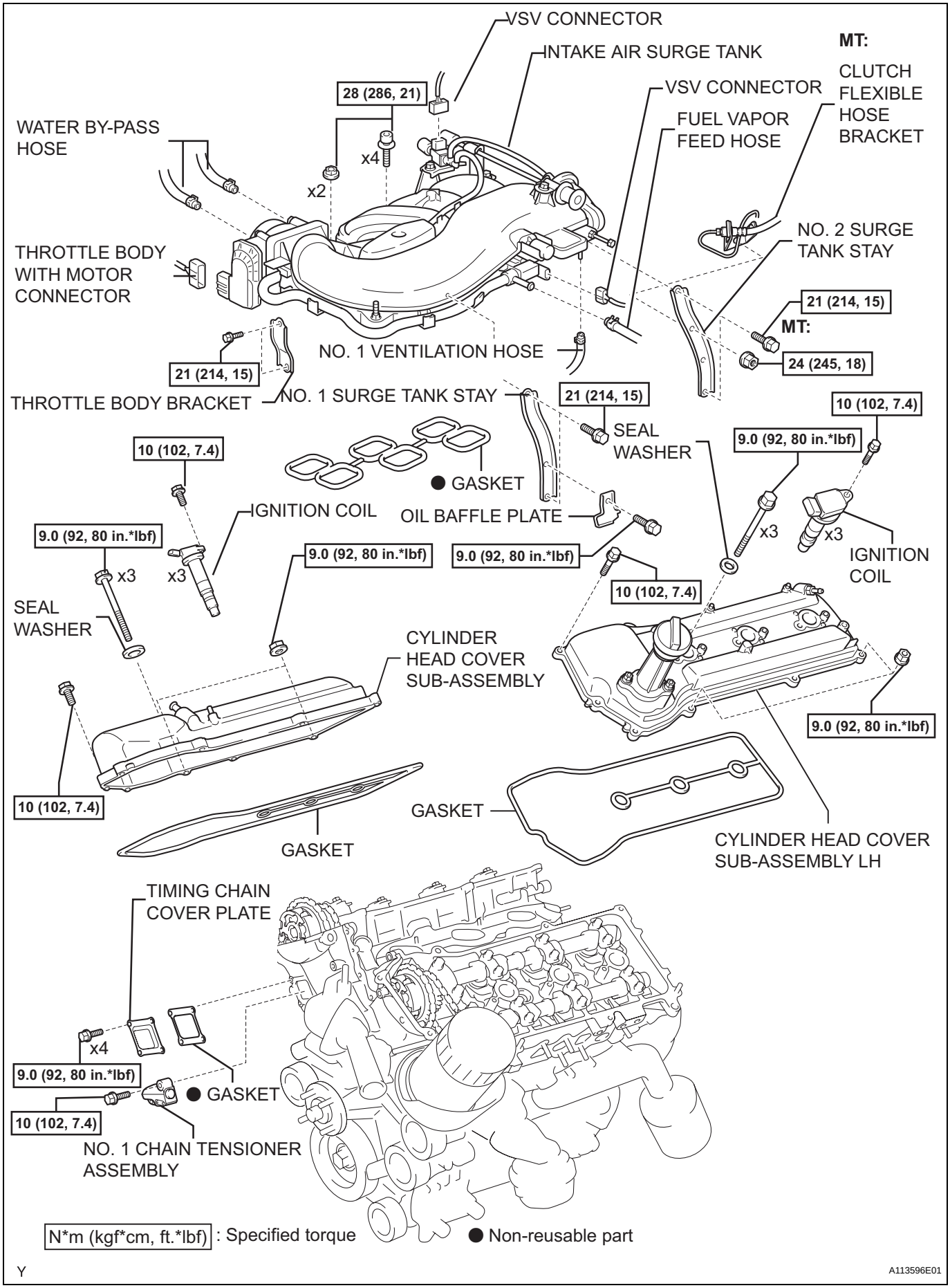
VSV CONNECTOR
INTAKE AIR SURGE TANK
MT:
CLUTCH FLEXIBLE HOSE BRACKET
VSV CONNECTOR
FUEL VAPOR FEED HOSE
28 (286, 21)
WATER BY-PASS HOSE
x4
x2
THROTTLE BODY WITH MOTOR CONNECTOR
NO. 2 SURGE TANK STAY
21 (214, 15)
MT:
24 (245, 18)
NO. 1 VENTILATION HOSE
21 (214, 15)
THROTTLE BODY BRACKET
NO. 1 SURGE TANK STAY
21 (214, 15)
SEAL WASHER
10 (102, 7.4)
9.0 (92, 80 in.*lbf)
10 (102, 7.4)
GASKET
IGNITION COIL
OIL BAFFLE PLATE
9.0 (92, 80 in.*lbf)
x3
x3
9.0 (92, 80 in.*lbf)
9.0 (92, 80 in.*lbf)
x3
x3
IGNITION COIL
10 (102, 7.4)
SEAL WASHER
CYLINDER HEAD COVER SUB-ASSEMBLY
9.0 (92, 80 in.*lbf)
10 (102, 7.4)
GASKET
GASKET
CYLINDER HEAD COVER SUB-ASSEMBLY LH
TIMING CHAIN COVER PLATE
x4
9.0 (92, 80 in.*lbf)
GASKET
10 (102, 7.4)
NO. 1 CHAIN TENSIONER ASSEMBLY
N*m (kgf*cm, ft.*lbf) : Specified torque
Non-reusable part
Y
A113596E01

LU

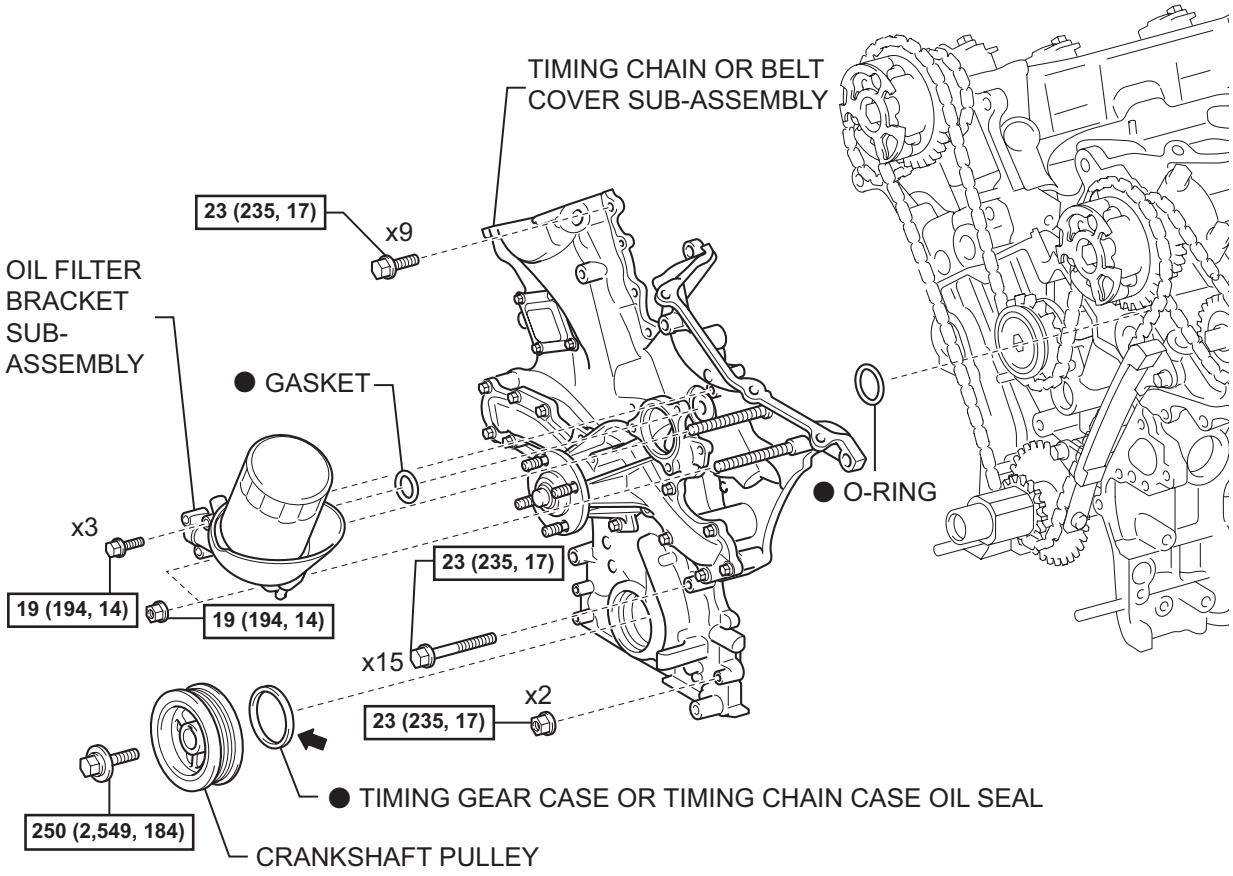

N*m (kgf*cm, ft.*lbf) : Specified torque

● Non-reusable part

⬅ Apply MP grease

Y

A113598E01

LU

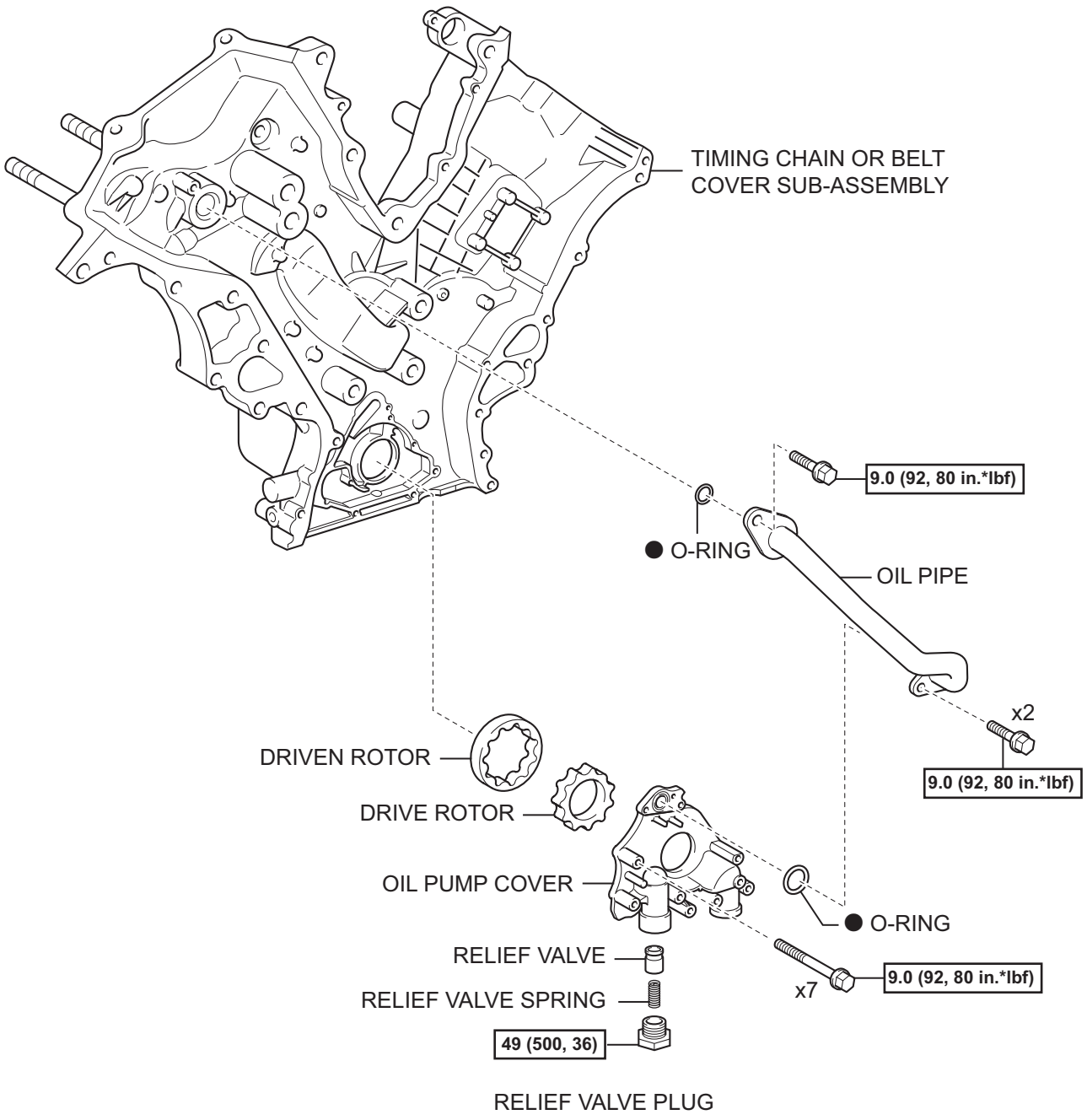
TIMING CHAIN OR BELT COVER SUB-ASSEMBLY
9.0 (92, 80 in.*lbf)
● O-RING
OIL PIPE
x2
9.0 (92, 80 in.*lbf)
DRIVEN ROTOR
DRIVE ROTOR
OIL PUMP COVER
● O-RING
RELIEF VALVE
RELIEF VALVE SPRING
x7
9.0 (92, 80 in.*lbf)
49 (500, 36)
RELIEF VALVE PLUG
N*m (kgf*cm, ft.*lbf) : Specified torque
● Non-reusable part
A113540E01

LU

Y

ENGINE OIL COOLER

REMOVAL

1. **DRAIN ENGINE COOLANT (See page CO-3)**
2. **REMOVE OIL FILTER SUB-ASSEMBLY (See page LU-4)**
3. **REMOVE V-BANK COVER (See page ES-414)**
4. **REMOVE OIL COOLER ASSEMBLY**
   (a) Disconnect the 2 oil cooler hoses from the oil cooler.
   (b) Remove the union bolt, then remove the plate washer and oil cooler.
   (c) Remove the O-ring from the oil cooler.

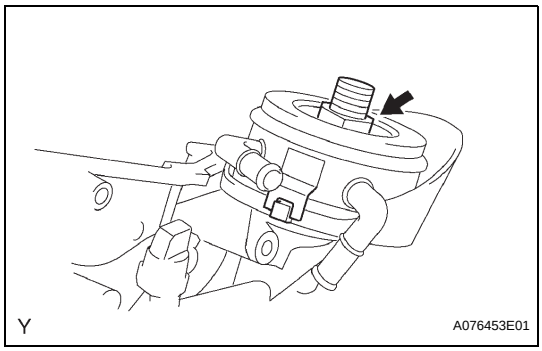

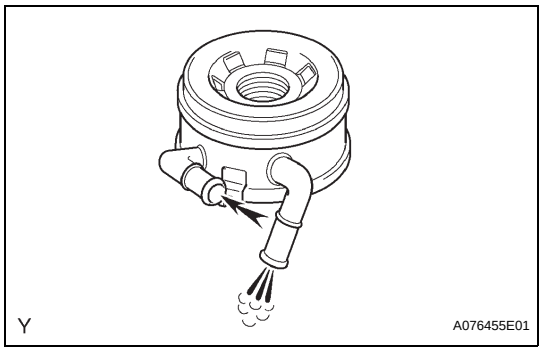

INSPECTION

1. **INSPECT OIL COOLER ASSEMBLY**
   (a) Check the oil cooler for damage and clogging.
   If necessary, replace the oil cooler.

INSTALLATION

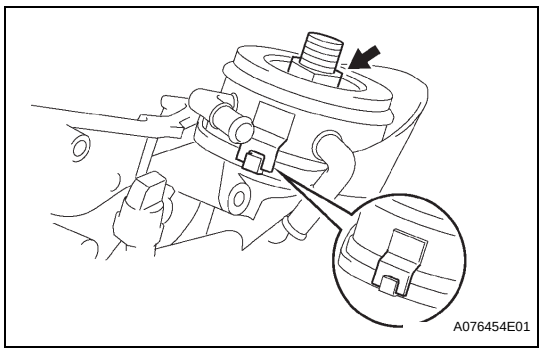

1. **INSTALL OIL COOLER ASSEMBLY**
   (a) Clean the oil cooler contact surface on the cooler mounting.
   (b) Install a new O-ring onto the oil cooler.
   (c) Apply a light coat of engine oil to the threads of the union bolt.
   (d) Install the oil cooler and plate washer with the union bolt.
   Torque: 68 N*m (693 kgf*cm, 50 ft.*lbf)
   (e) Connect the 2 oil cooler hoses to the oil cooler.
2. **INSTALL OIL FILTER SUB-ASSEMBLY (See page LU-5)**
3. **ADD ENGINE COOLANT (See page CO-3)**
4. **ADD ENGINE OIL (See page LU-5)**
5. **CHECK ENGINE OIL LEVEL**
6. **CHECK FOR ENGINE OIL LEAKAGE**
7. **CHECK FOR ENGINE COOLANT LEAKAGE (See page CO-4)**
8. **INSTALL V-BANK COVER (See page ES-416)**

LUBRICATION SYSTEM

ON-VEHICLE INSPECTION

1. CHECK ENGINE OIL LEVEL

(a) Warm up the engine, then stop the engine and wait for 5 minutes. Check that the engine oil level is between low and full marks on the oil level gage.
If the engine oil level is low, check for oil leakage and add engine oil up to the full level mark.
NOTICE:
Do not add engine oil to above the full level mark.

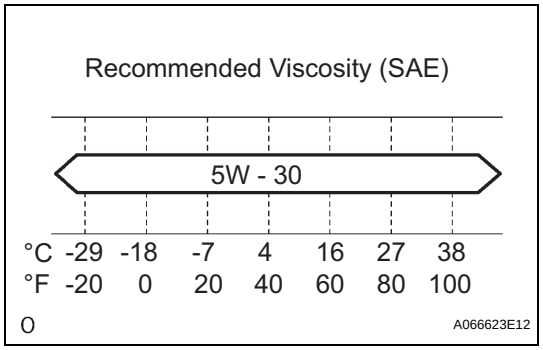

2. CHECK ENGINE OIL QUALITY

(a) Check the oil for deterioration, water intrusion, discoloration or thinning.
If the quality is visibly poor, replace the oil.
Oil grade:
Use API grade SM "Energy-Conserving", or ILSAC multigrade engine oil.
SAE 5W-30 is the best choice for good fuel economy and good starting in cold weather.
If SAE 5W-30 is not available, use SAE 10W-30. However, it should be replaced with SAE 5W-30 at the next oil replacement.

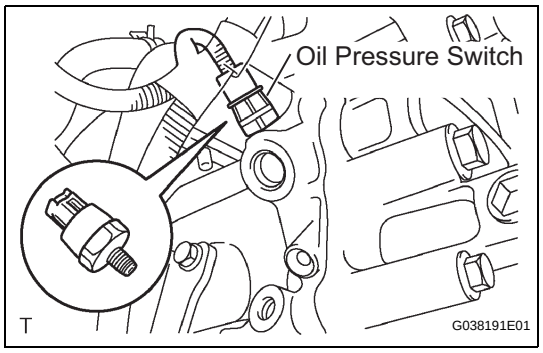

3. INSPECT OIL PRESSURE

(a) Remove the 4 bolts, then remove the No. 1 engine under cover. (PRE RUNNER AND 4WD TYPE)
(b) Disconnect the oil pressure switch connector.
(c) Using a 24 mm deep socket wrench, remove the oil pressure switch.

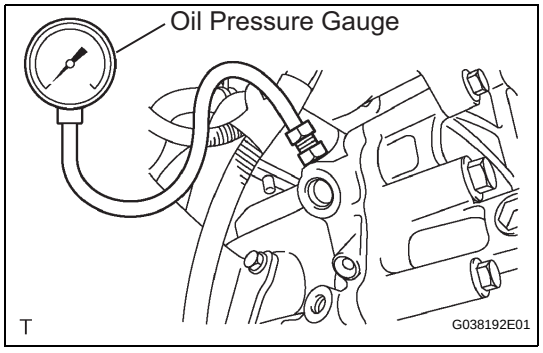

(d) Install the oil pressure gauge.
(e) Warm up the engine.
(f) Inspect the oil pressure.
Oil pressure

When Idling	**29 kPa (0.3 kgf*cm^2, 4.2 psi) or more**
At 3,000 rpm	**160 to 490 kPa (1.6 to 5.3 kgf*cm^2, 23 to 75 psi)**

(g) Remove the oil pressure gauge.

LU

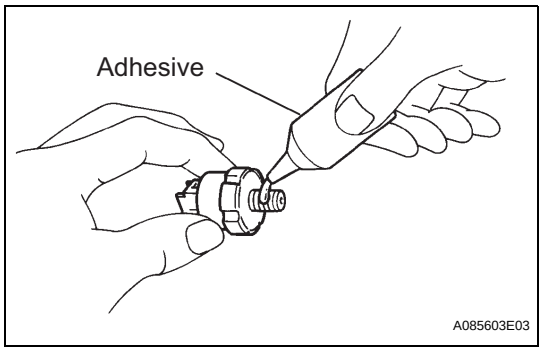

(h) Apply adhesive to 2 or 3 threads of the oil pressure switch.
Adhesive:
Part No. 08833-00070, THREE BOND 1324 or equivalent

(i) Using a 24 mm deep socket wrench, install the oil pressure switch.
Torque: 15 N*m (153 kgf*cm, 11 ft.*lbf)
NOTICE:
Do not start the engine for at least 1 hour after installation.

(j) Connect the oil pressure switch connector.

(k) Check for engine oil leakage.

(l) Install the engine under cover No. 1 with the 4 bolts. (PRE RUNNER AND 4WD TYPE)
Torque: 30 N*m (306 kgf*cm, 22 ft.*lbf)

OIL FILTER

REMOVAL

CAUTION:

- **Prolonged and repeated contact with engine oil causes removal of natural oils from the skin, leading to dryness, irritation and dermatitis. In addition, used engine oil contains potentially harmful contaminants which may cause skin cancer.**
- **Precautions should be taken when replacing engine oil to minimize the risk of your skin making contact with used engine oil. Wear protective clothing and gloves. Wash your skin thoroughly with soap and water, or use a waterless hand cleaner to remove any used engine oil. Do not use gasoline, thinners or solvents.**
- **For environmental protection, used oil and used oil filters must be disposed of at designated disposal sites.**

1. DRAIN ENGINE OIL

(a) Remove the oil filler cap.

(b) Remove the oil pan drain plug and drain the engine oil.

(c) Install a new gasket, then install the oil pan drain plug.

Torque: 38 N*m (382 kgf*cm, 28 ft.*lbf)

2. REMOVE OIL FILTER SUB-ASSEMBLY

(a) Using SST, remove the oil filter.

SST 09228-07501

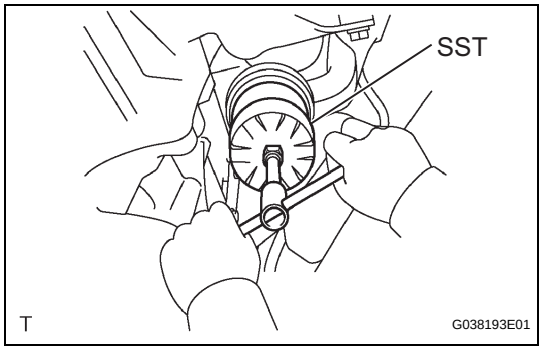

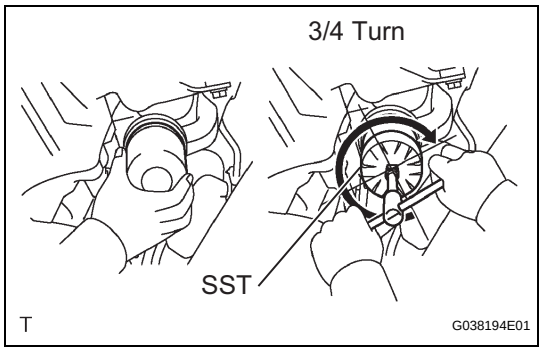

INSTALLATION

1. INSTALL OIL FILTER SUB-ASSEMBLY

(a) Remove any dirt or foreign objects from the contact surface of the engine side.

(b) Apply a light coat of engine oil to the O-ring of a new oil filter.

(c) Install the oil filter by hand until the O-ring comes into contact with the seat.

(d) Using SST, retighten it by 3/4 turn.

SST 09228-07501

Reference torque:

13 N*m(133 kgf/cm, 10 ft.*lbf)

2. ADD ENGINE OIL

(a) Fill with fresh engine oil.

Capacity

Drain and refill with oil filter change	**5.8 liters (6.1 US qts, 5.1 lmp. qts)**
Drain and refill without oil filter change	**5.1 liters (5.4 US qts, 4.5 lmp. qts)**
Dry fill	**6.1 liters (6.4 US qts, 5.4 lmp. qts)**

3. CHECK FOR ENGINE OIL LEAKAGE

OIL PUMP

COMPONENTS

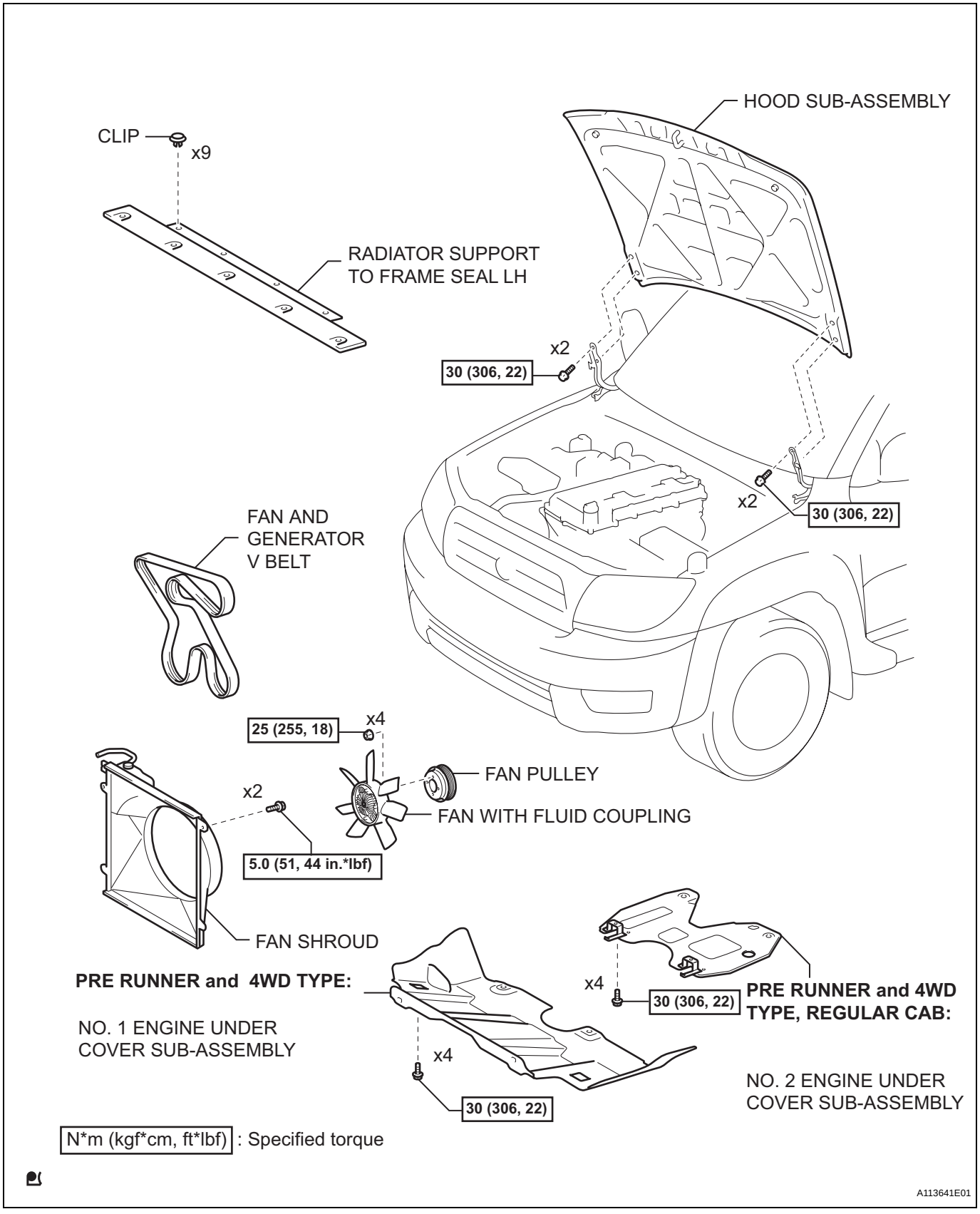

LU

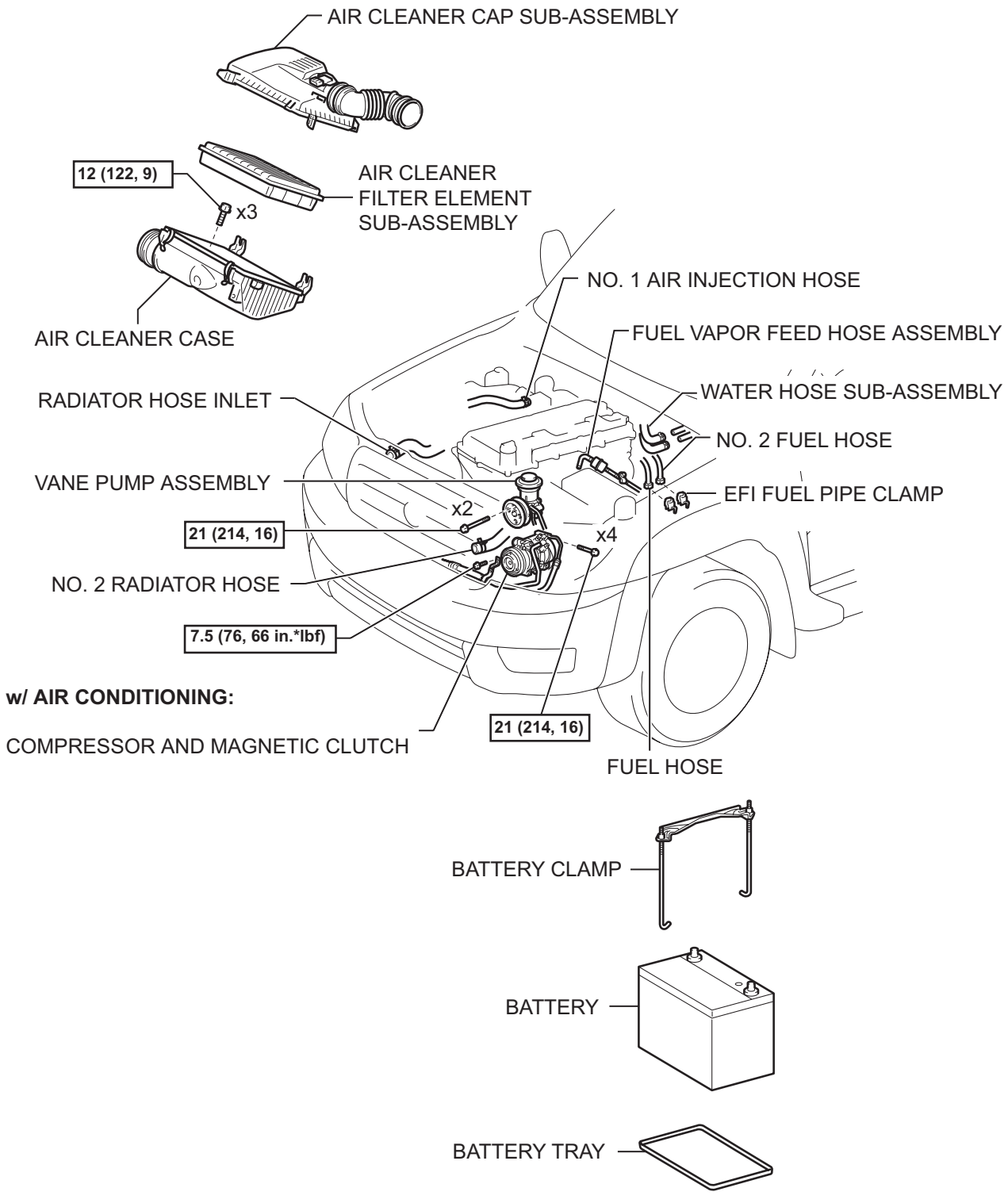

N*m (kgf*cm, ft*lbf) : Specified torque

A113642E01

LU

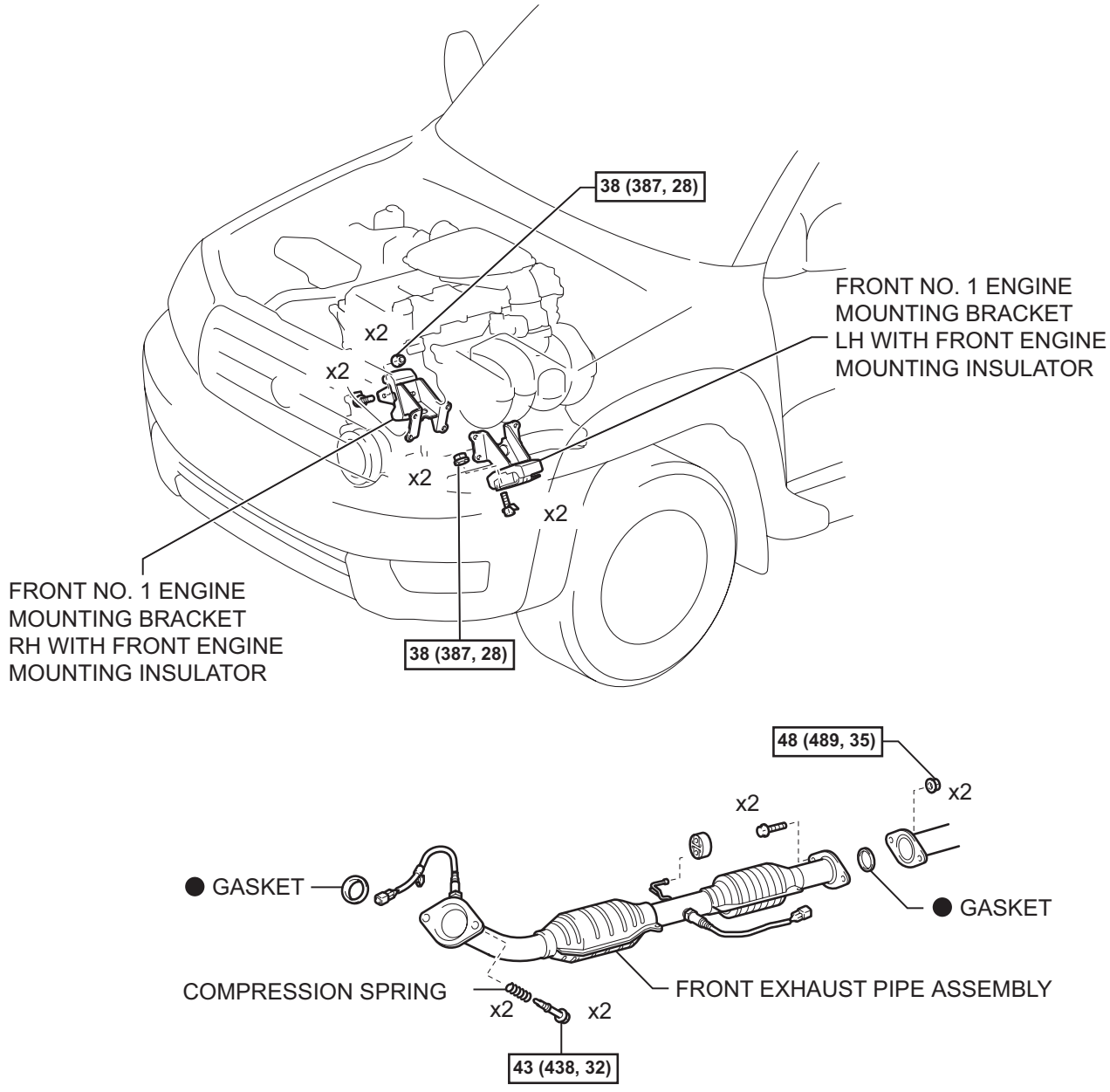

N*m (kgf*cm, ft*lbf) : Specified torque

● Non-reusable part

A113643E04

LU

MANUAL TRANSMISSION, 2WD:

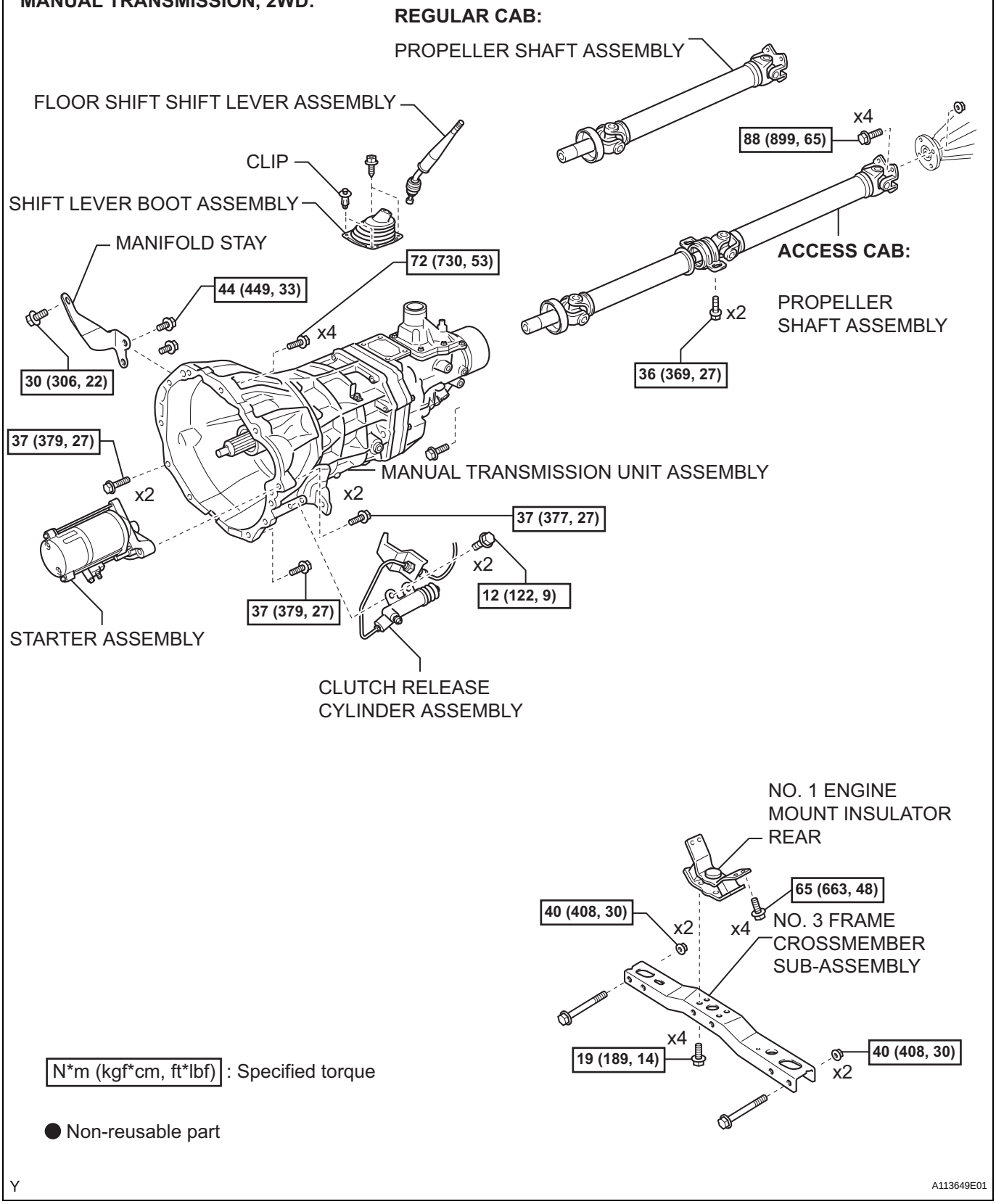

N*m (kgf*cm, ft*lbf) : Specified torque

● Non-reusable part

LU

Y

A113649E01

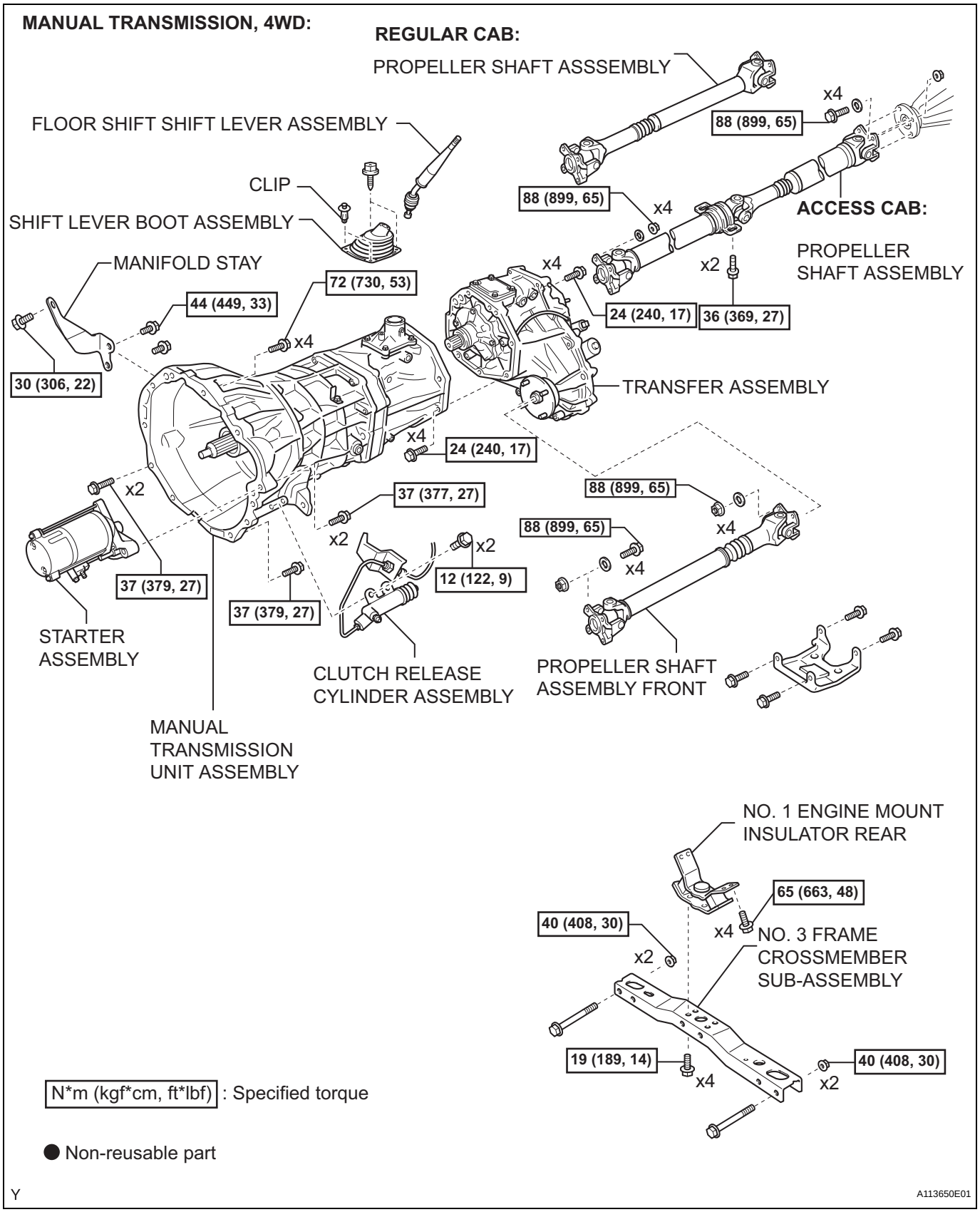
MANUAL TRANSMISSION, 4WD:
REGULAR CAB:
PROPELLER SHAFT ASSSEMBLY
FLOOR SHIFT SHIFT LEVER ASSEMBLY
CLIP
SHIFT LEVER BOOT ASSEMBLY
MANIFOLD STAY
88 (899, 65)
x4
ACCESS CAB:
PROPELLER SHAFT ASSEMBLY
x2
24 (240, 17)
36 (369, 27)
72 (730, 53)
44 (449, 33)
30 (306, 22)
TRANSFER ASSEMBLY
37 (377, 27)
12 (122, 9)
STARTER ASSEMBLY
CLUTCH RELEASE CYLINDER ASSEMBLY
PROPELLER SHAFT ASSEMBLY FRONT
MANUAL TRANSMISSION UNIT ASSEMBLY
NO. 1 ENGINE MOUNT INSULATOR REAR
65 (663, 48)
40 (408, 30)
NO. 3 FRAME CROSSMEMBER SUB-ASSEMBLY
19 (189, 14)
N*m (kgf*cm, ft*lbf) : Specified torque
● Non-reusable part
Y
A113650E01

LU

MANUAL TRANSMISSION:

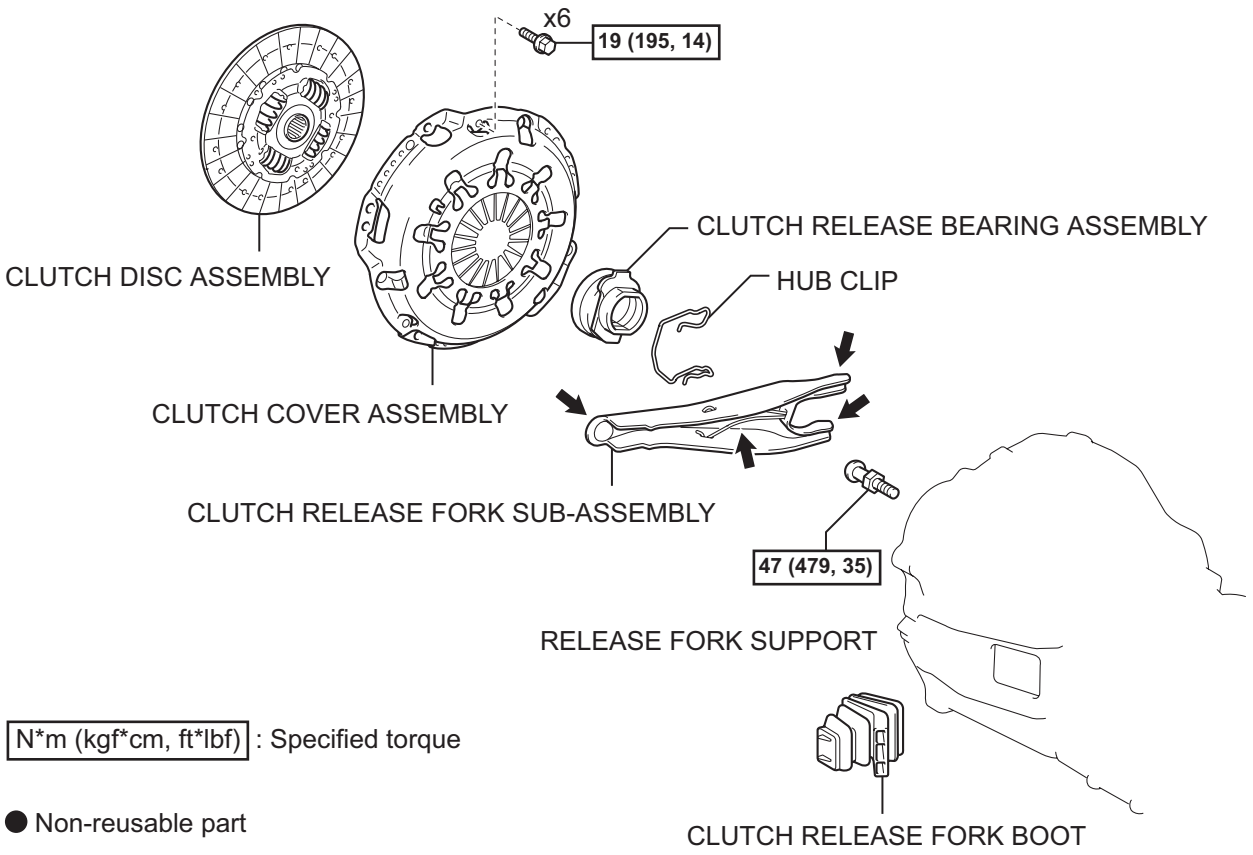

LU

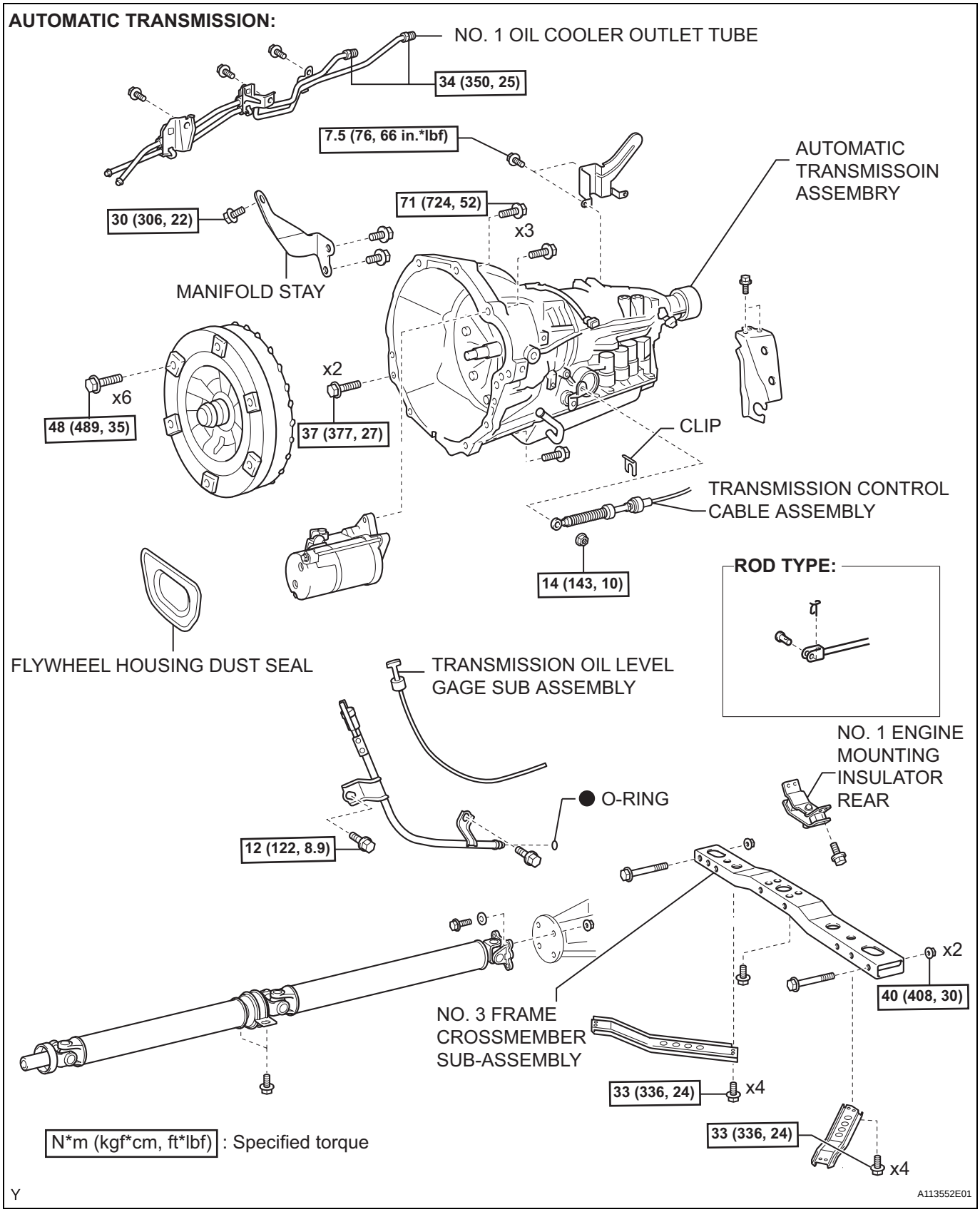
AUTOMATIC TRANSMISSION:
NO. 1 OIL COOLER OUTLET TUBE
34 (350, 25)
7.5 (76, 66 in.*lbf)
AUTOMATIC TRANSMISSOIN ASSEMBRY
71 (724, 52)
x3
30 (306, 22)
MANIFOLD STAY
x2
x6
48 (489, 35)
37 (377, 27)
CLIP
TRANSMISSION CONTROL CABLE ASSEMBLY
14 (143, 10)
ROD TYPE:
FLYWHEEL HOUSING DUST SEAL
TRANSMISSION OIL LEVEL GAGE SUB ASSEMBLY
NO. 1 ENGINE MOUNTING INSULATOR REAR
O-RING
12 (122, 8.9)
x2
40 (408, 30)
NO. 3 FRAME CROSSMEMBER SUB-ASSEMBLY
33 (336, 24)
x4
33 (336, 24)
x4
N*m (kgf*cm, ft*lbf) : Specified torque
Y
A113552E01

LU

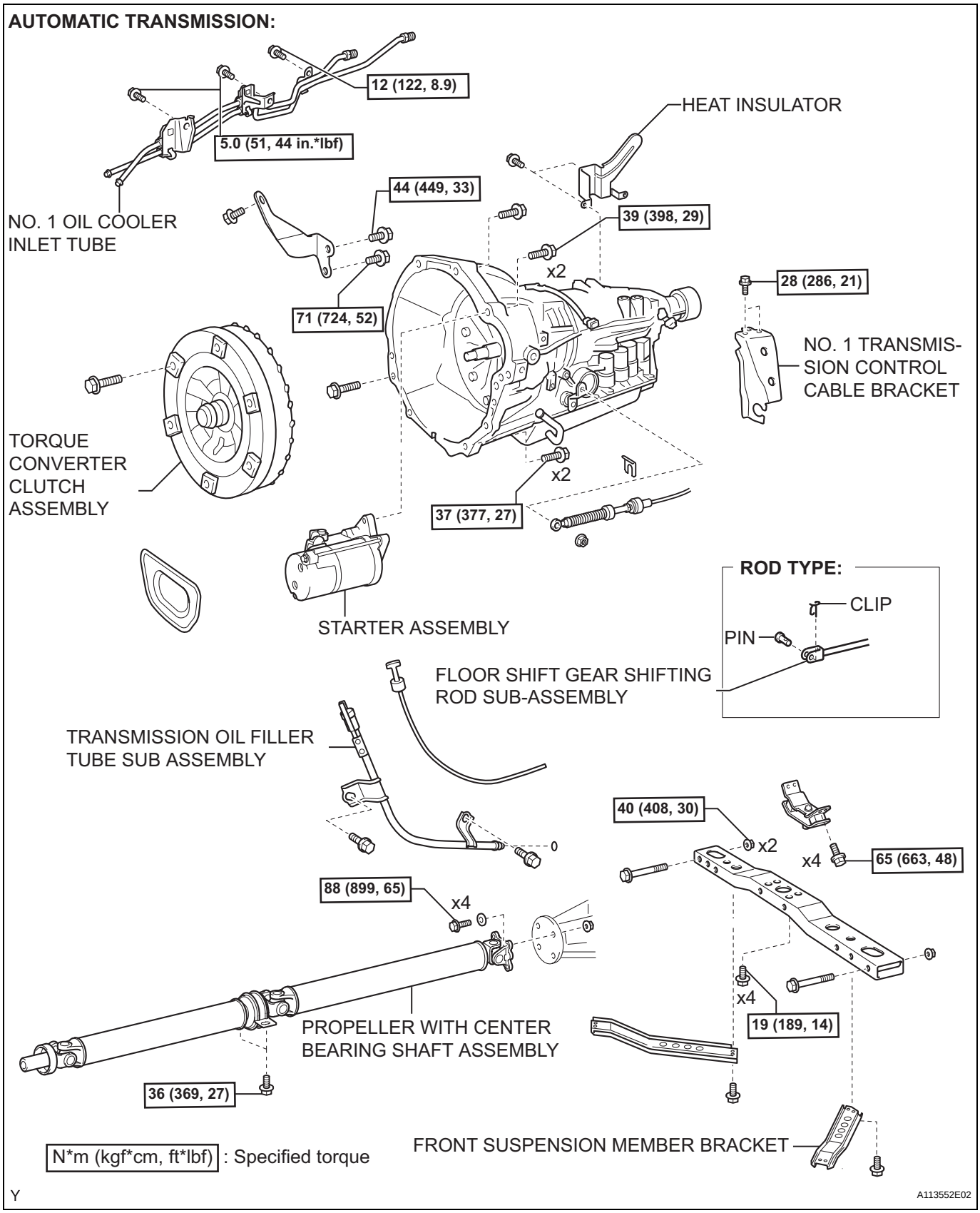
AUTOMATIC TRANSMISSION:
12 (122, 8.9)
5.0 (51, 44 in.*lbf)
HEAT INSULATOR
NO. 1 OIL COOLER INLET TUBE
44 (449, 33)
39 (398, 29)
x2
28 (286, 21)
71 (724, 52)
NO. 1 TRANSMISSION CONTROL CABLE BRACKET
TORQUE CONVERTER CLUTCH ASSEMBLY
x2
37 (377, 27)
STARTER ASSEMBLY
ROD TYPE:
CLIP
PIN
FLOOR SHIFT GEAR SHIFTING ROD SUB-ASSEMBLY
TRANSMISSION OIL FILLER TUBE SUB ASSEMBLY
40 (408, 30)
x2
x4
65 (663, 48)
88 (899, 65)
x4
x4
19 (189, 14)
PROPELLER WITH CENTER BEARING SHAFT ASSEMBLY
36 (369, 27)
FRONT SUSPENSION MEMBER BRACKET
N*m (kgf*cm, ft*lbf) : Specified torque
Y
A113552E02

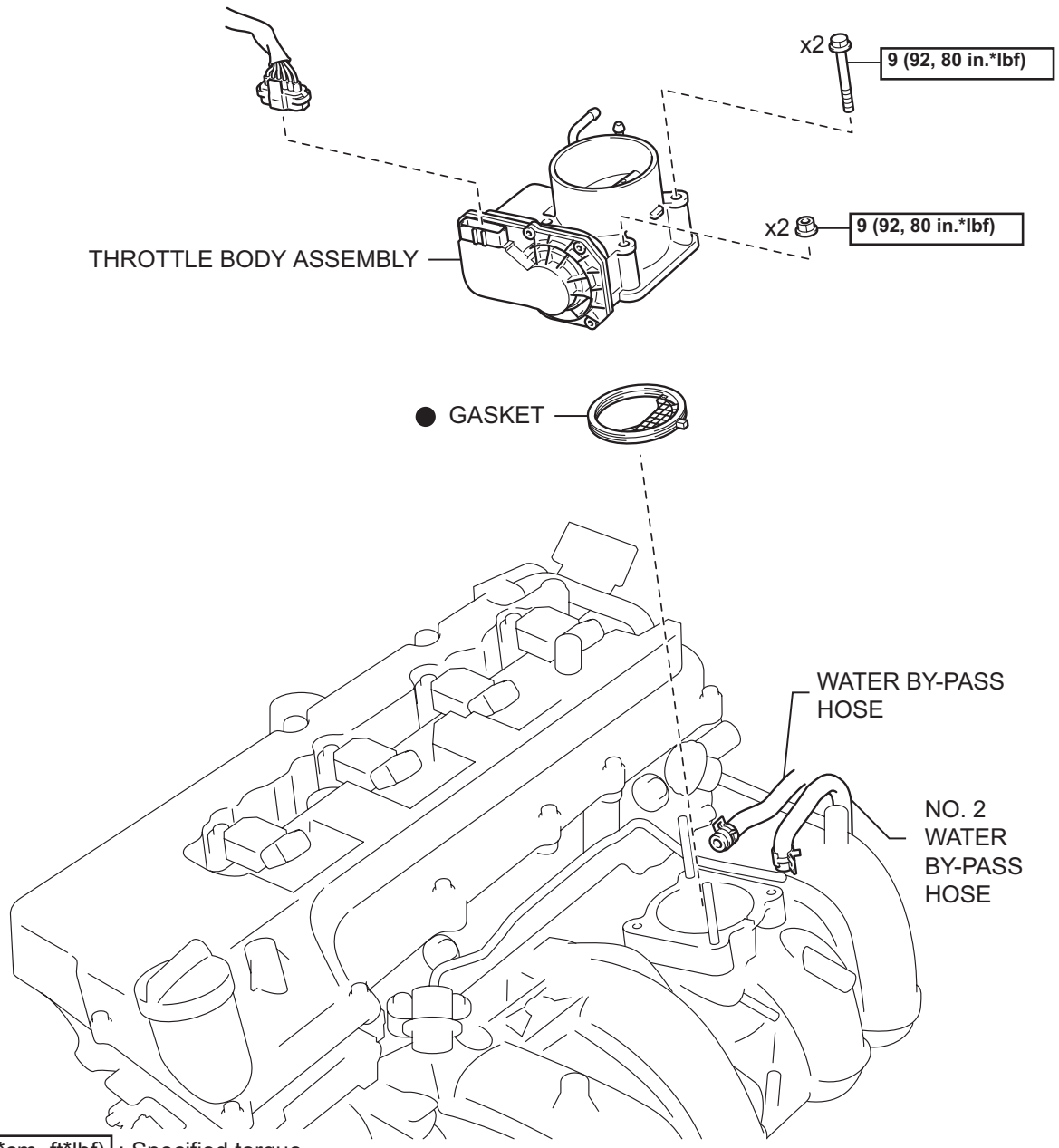

N*m (kgf*cm, ft*lbf) : Specified torque

● Non-reusable part

T

A113624E02

LU

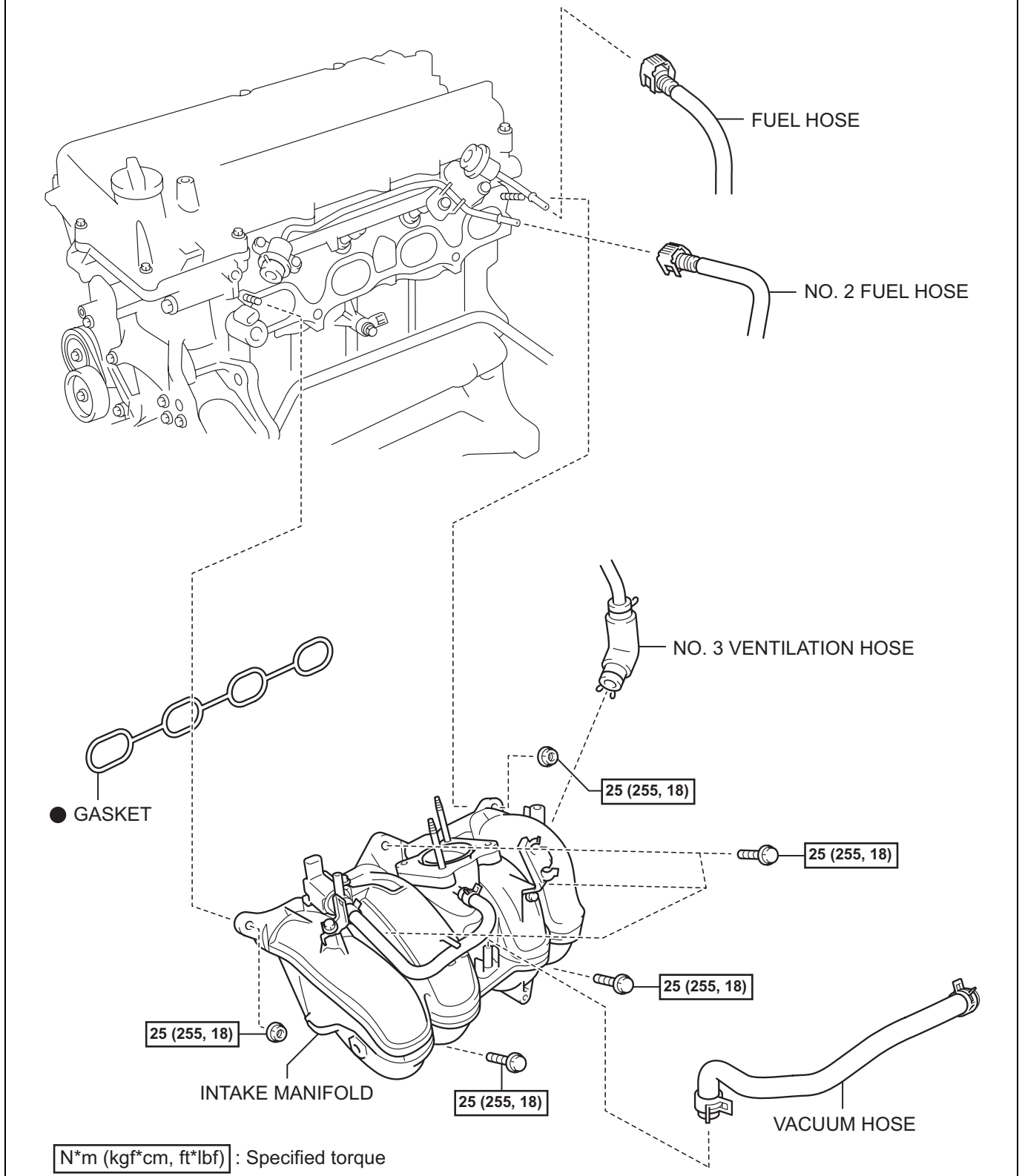

LU

T

A113644E01

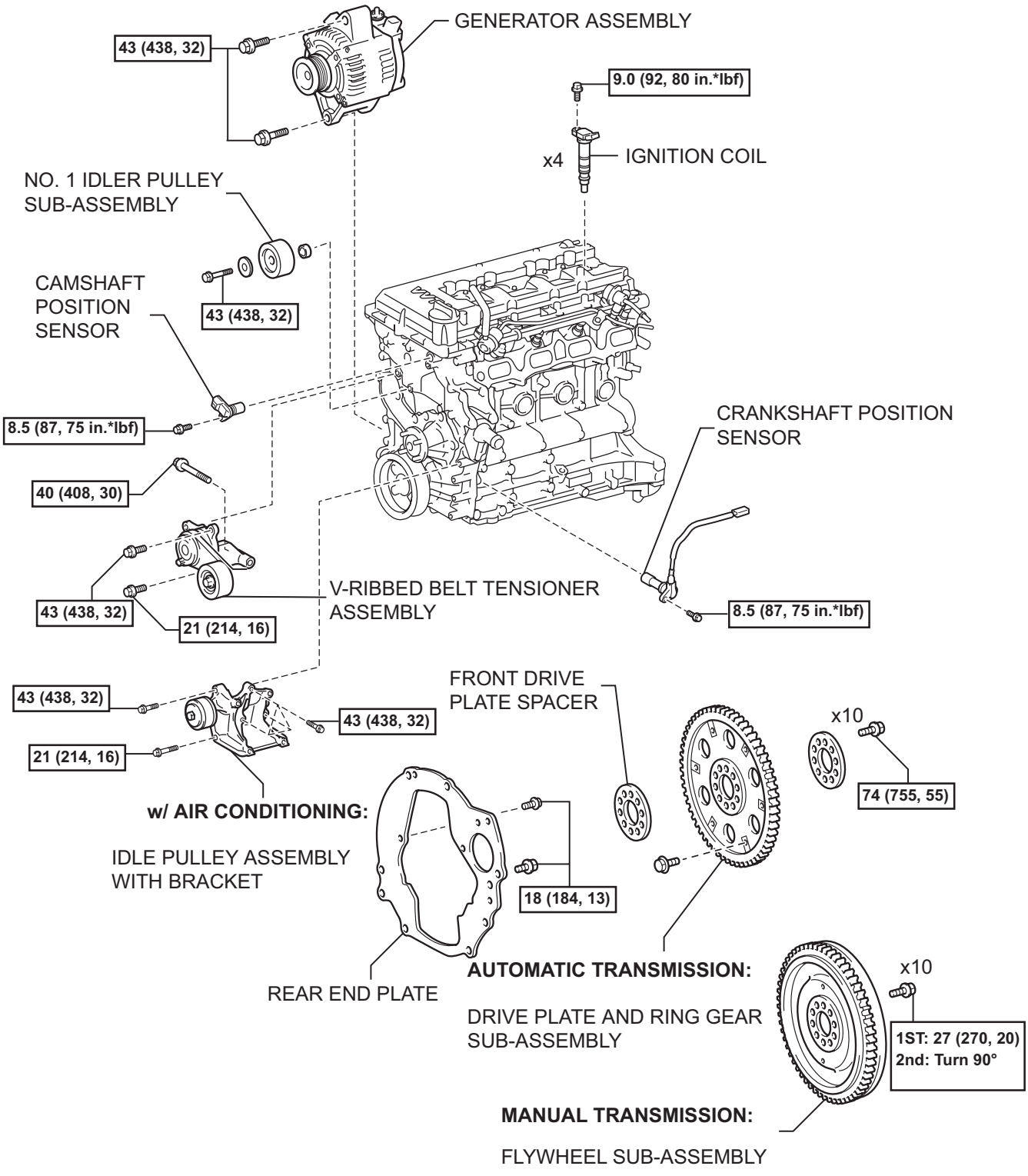

N*m (kgf*cm, ft*lbf) : Specified torque

T

A113645E01

LU

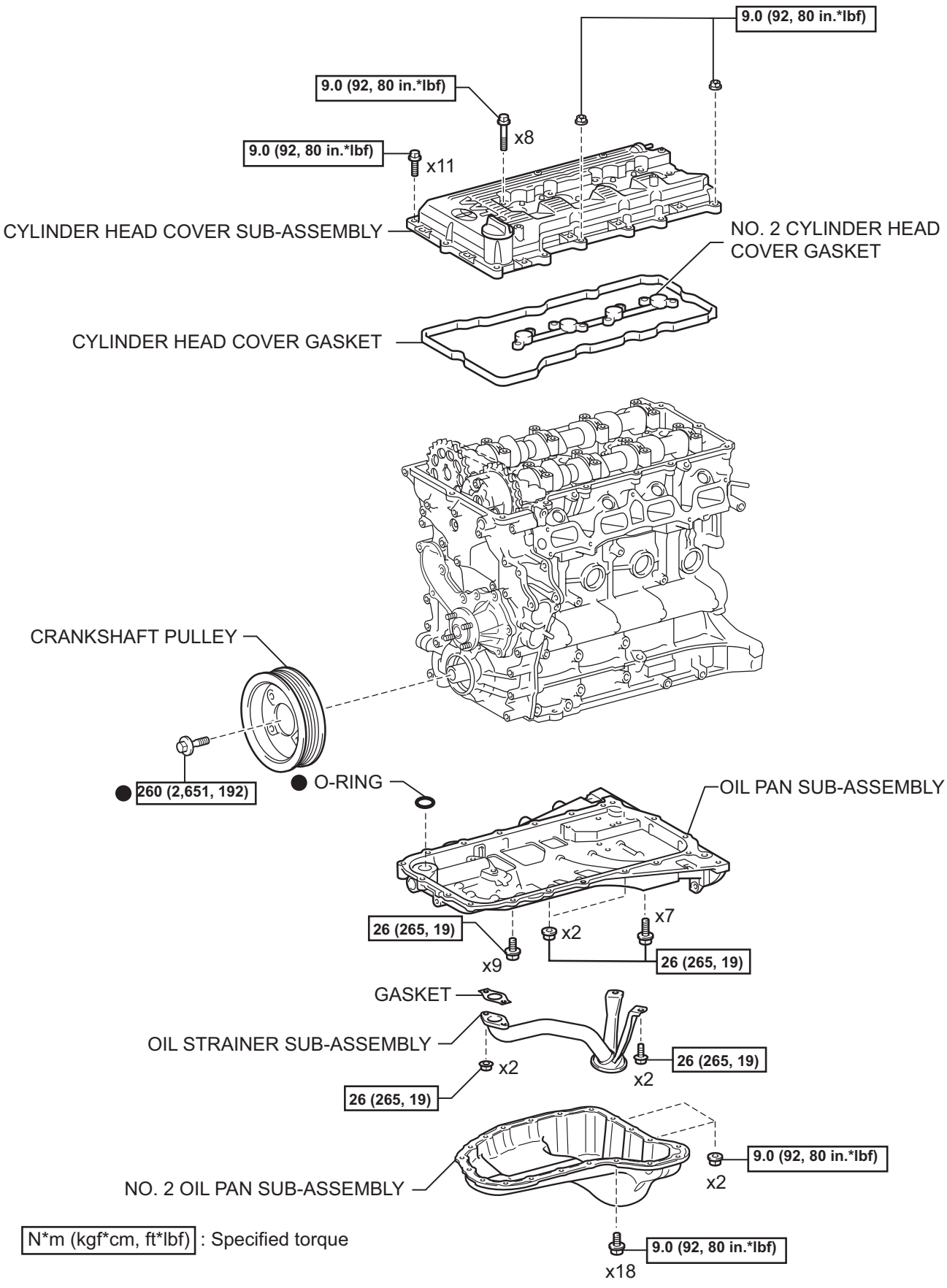

LU

T

A113620E01

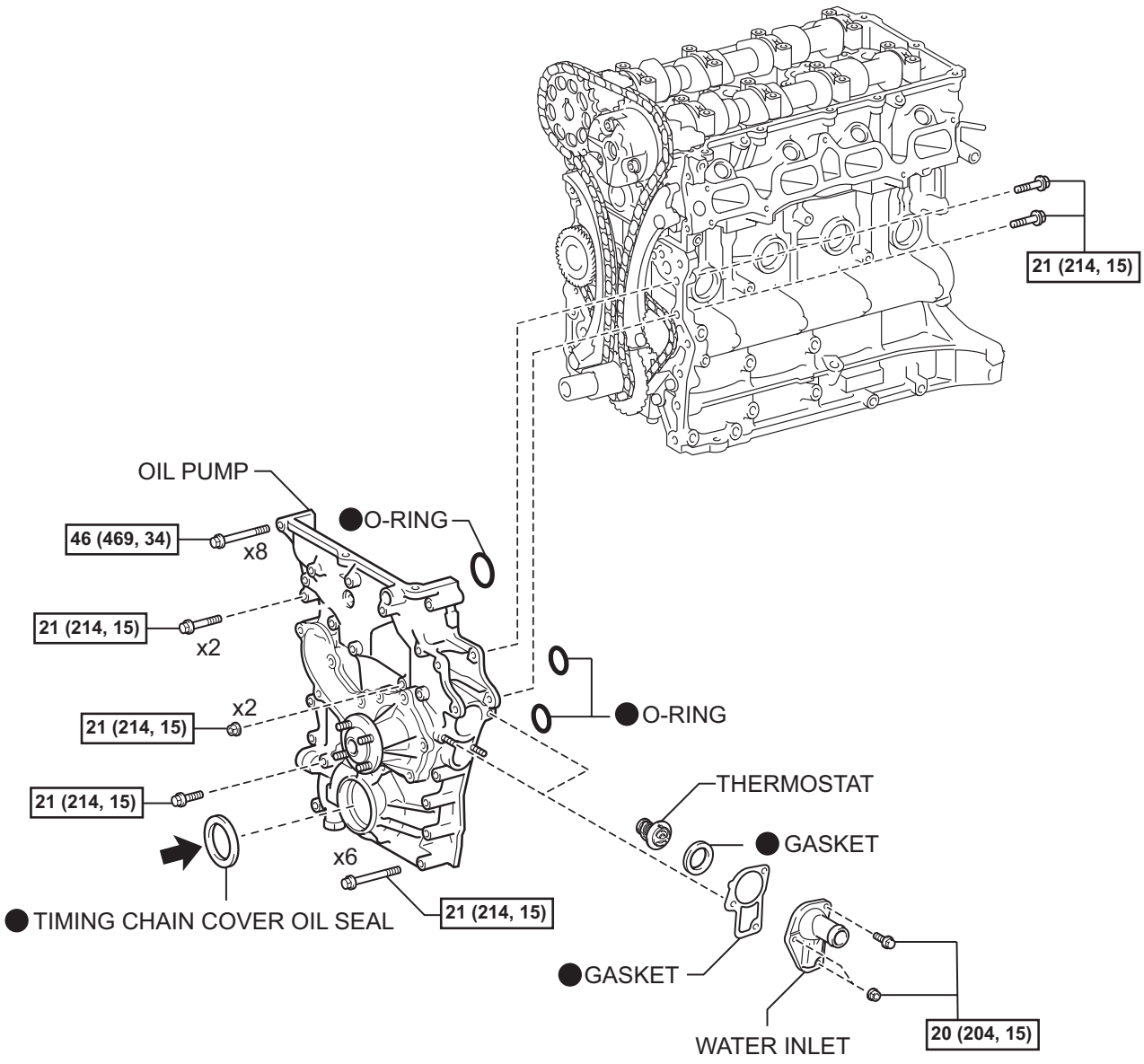

N*m (kgf*cm, ft.*lbf) : Specified torque

● Non-reusable part

⬅ Apply MP grease

T

A113635E01

LU

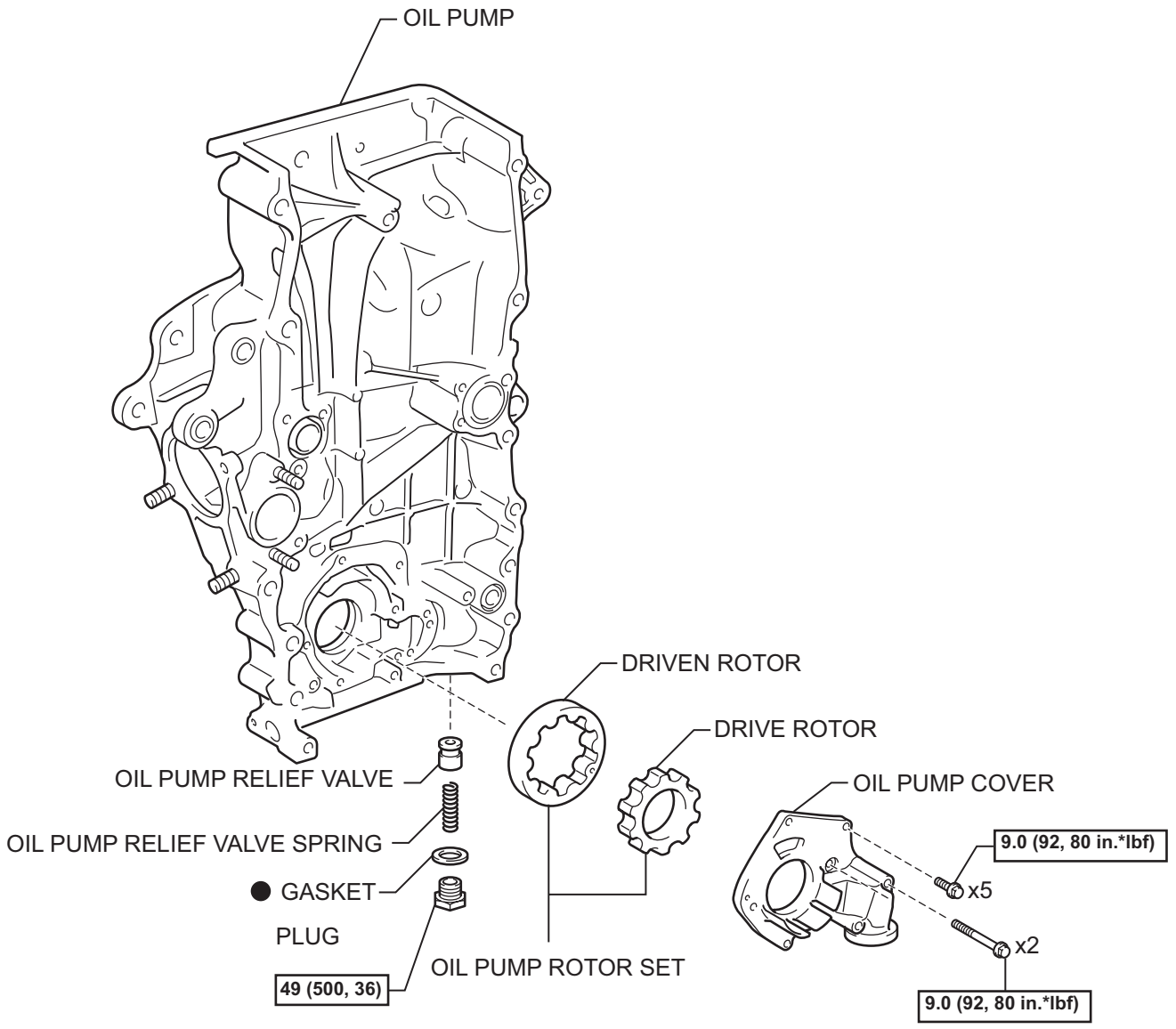

N*m (kgf*cm, ft*lbf) : Specified torque

● Non-reusable part

T

A113612E01

LU

IGNITION SYSTEM

PARTS LOCATION

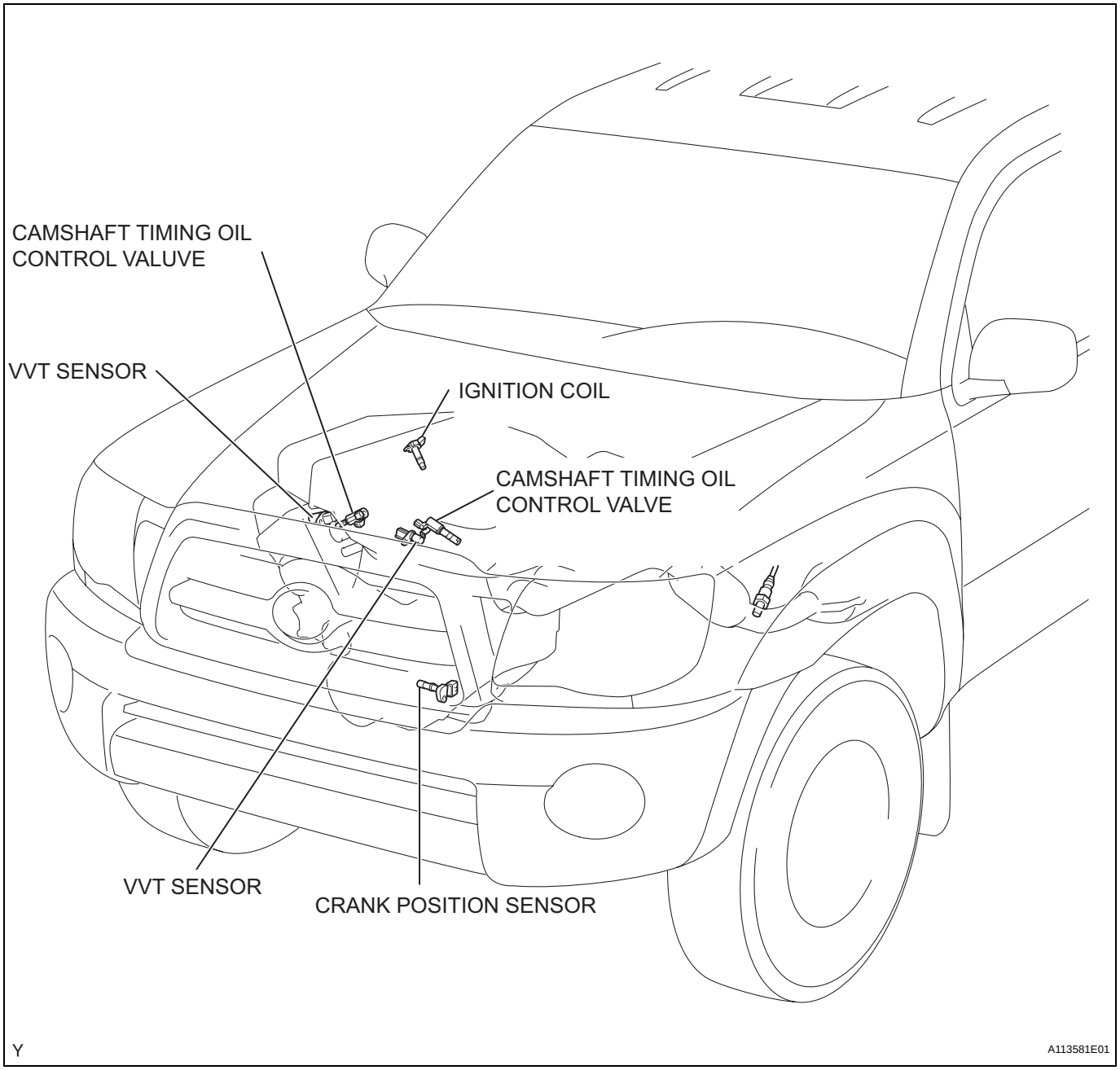

SYSTEM DIAGRAM

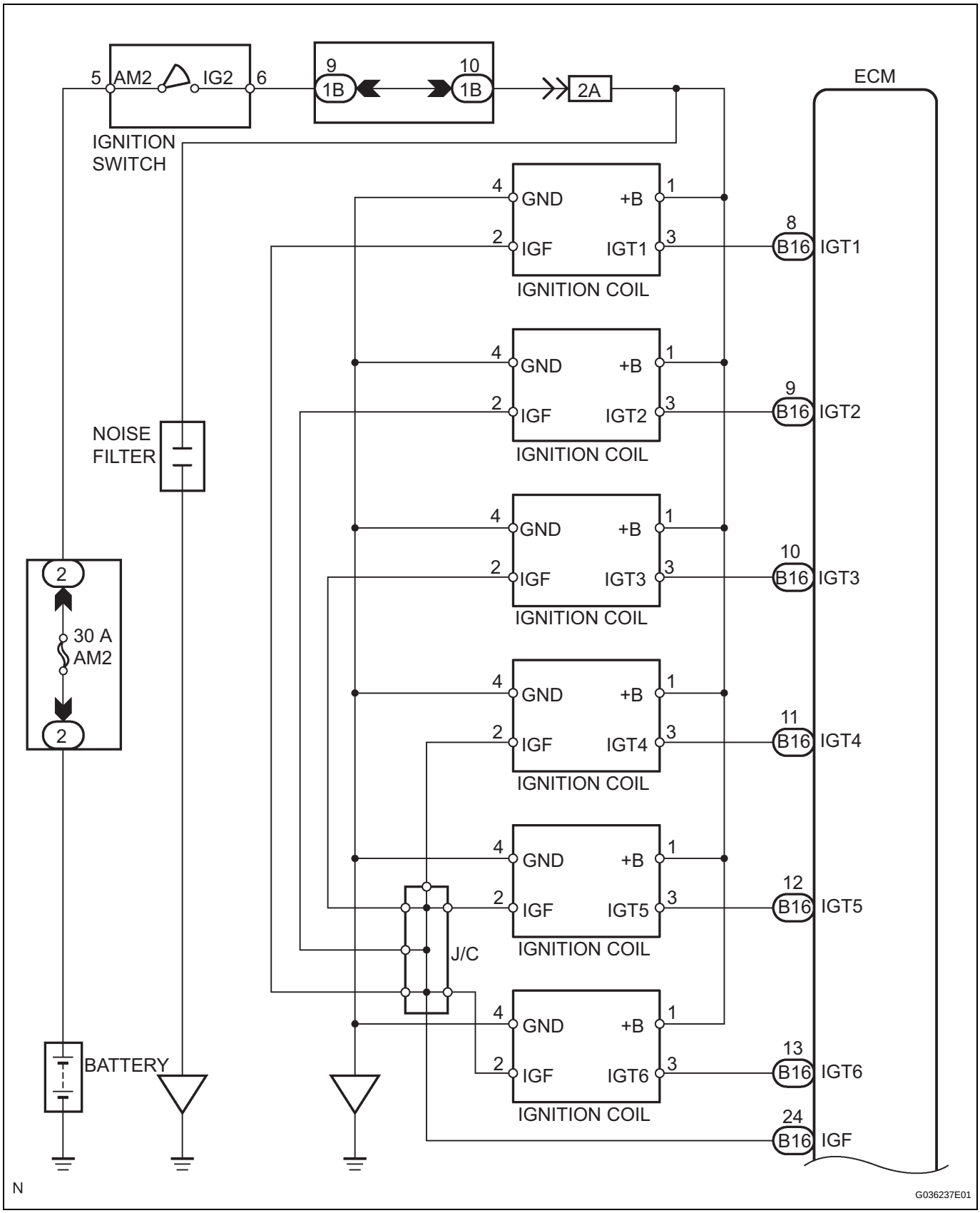

IG

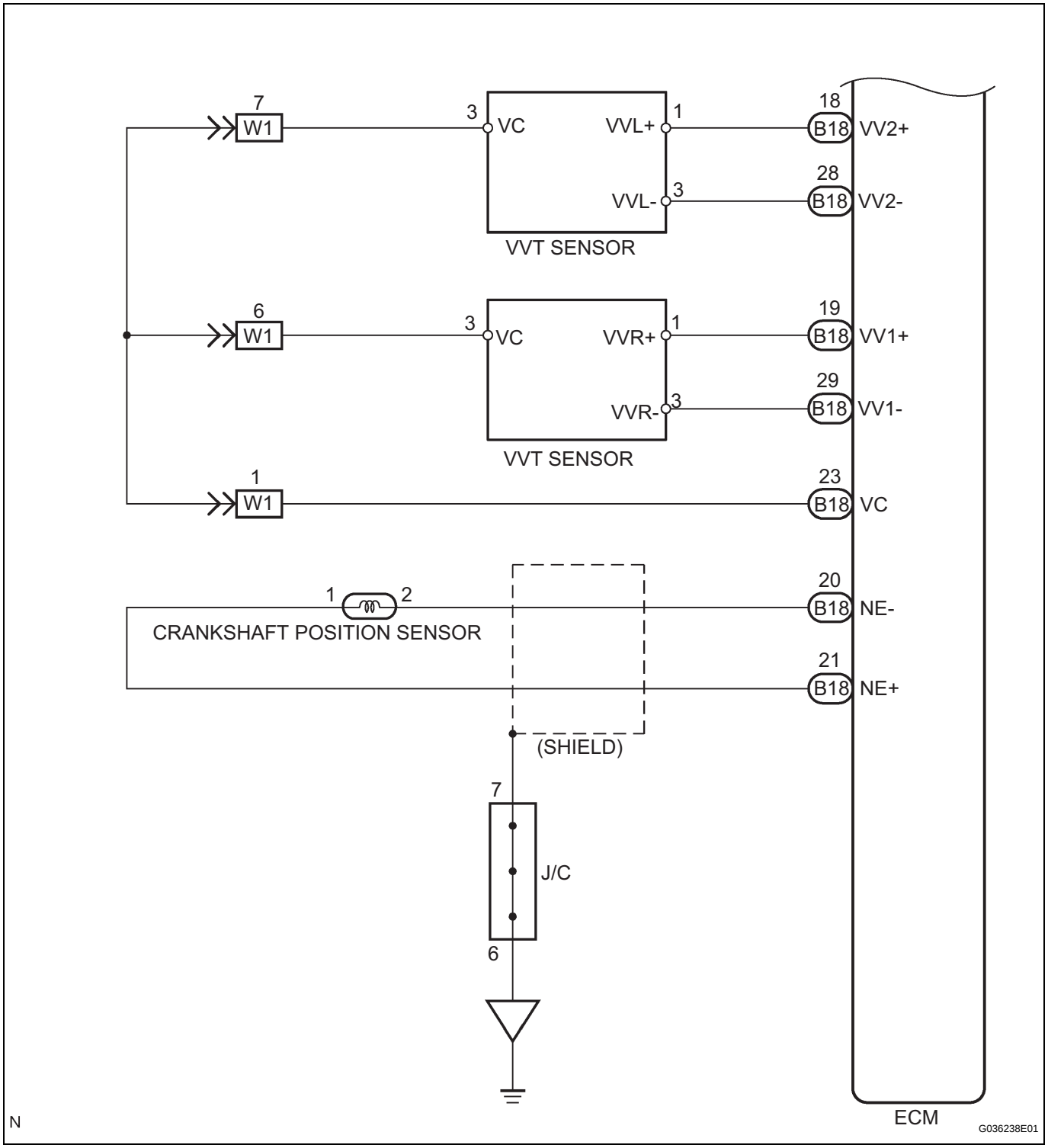
7
W1
3
VC
VVL+
1
18
B18
VV2+
28
VVL-
3
B18
VV2-
VVT SENSOR
6
W1
3
VC
VVR+
1
19
B18
VV1+
29
VVR-
3
B18
VV1-
VVT SENSOR
1
W1
23
B18
VC
1
2
20
B18
NE-
CRANKSHAFT POSITION SENSOR
21
B18
NE+
(SHIELD)
7
J/C
6
ECM
N
G036238E01

IG

IGNITION COIL

REMOVAL

1. **DISCONNECT CABLE FROM NEGATIVE BATTERY TERMINAL**
2. **REMOVE V-BANK COVER (See page ES-414)**
3. **REMOVE AIR CLEANER ASSEMBLY (See page ES-415)**
4. **DISCONNECT VENTILATION HOSE**
   (a) Disconnect the ventilation hose from the intake air surge tank.

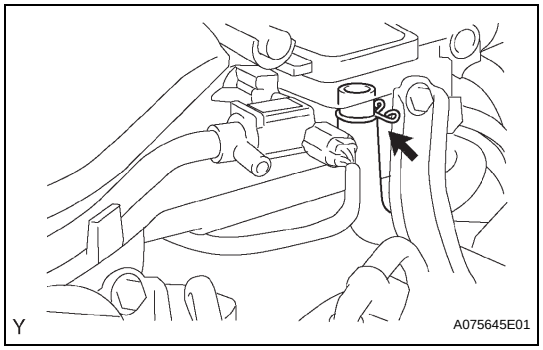

5. **REMOVE IGNITION COIL ASSEMBLY**
   (a) Disconnect the 6 connectors.
   (b) Remove the 6 bolts, then remove the 6 ignition coils.

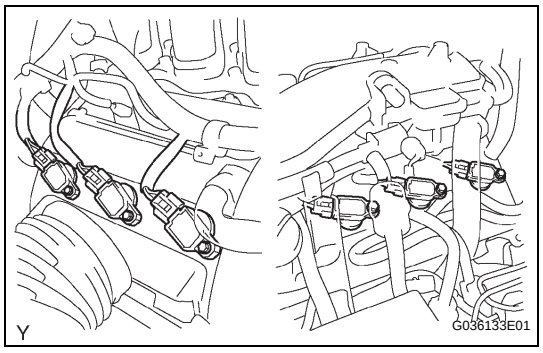

IG

INSTALLATION

1. **INSTALL IGNITION COIL ASSEMBLY**
   (a) Install the 6 ignition coils with the 6 bolts.
   Torque: 10 N*m (102 kgf*cm, 7.4 ft.*lbf)
   (b) Connect the 6 ignition coil connectors.
2. **CONNECT VENTILATION HOSE**
3. **INSTALL AIR CLEANER ASSEMBLY (See page ES-416)**
4. **INSTALL V-BANK COVER (See page ES-416)**
5. **CONNECT CABLE TO NEGATIVE BATTERY TERMINAL**
   Torque: 3.9 N*m (40 kgf*cm, 35 in.*lbf)
6. **INSPECT IGNITION TIMING (See page EM-1)**
7. **INSPECT ENGINE IDLING SPEED (See page EM-2)**

VVT SENSOR

REMOVAL

1. **DISCONNECT CABLE FROM NEGATIVE BATTERY TERMINAL**
2. **DRAIN ENGINE COOLANT (See page CO-3)**
3. **REMOVE V-BANK COVER (See page ES-414)**
4. **REMOVE AIR CLEANER ASSEMBLY (See page ES-415)**
5. **REMOVE VVT SENSOR**

(a) RH bank side VVT sensor:

(1) Disconnect the VVT sensor connector.

(2) Remove the bolt and VVT sensor.

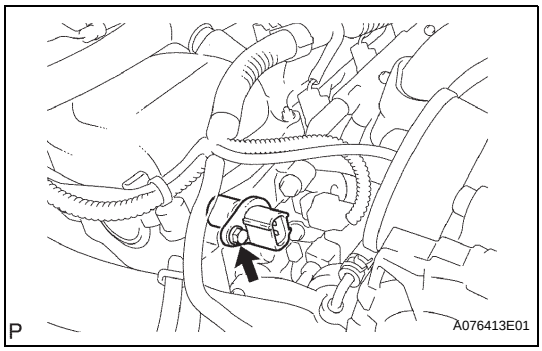

(b) LH bank side VVT sensor:

(1) Disconnect the water by-pass hoses No. 4 and No. 5 .

(2) Disconnect the VVT sensor connector.

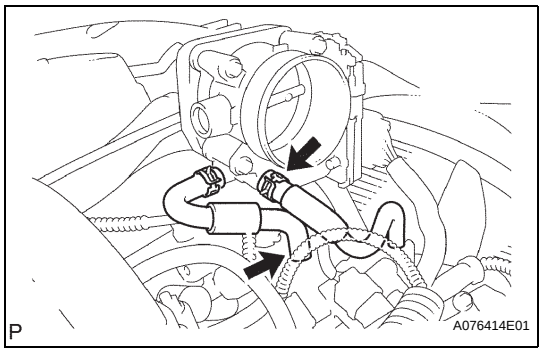

(3) Remove the bolt and VVT sensor.

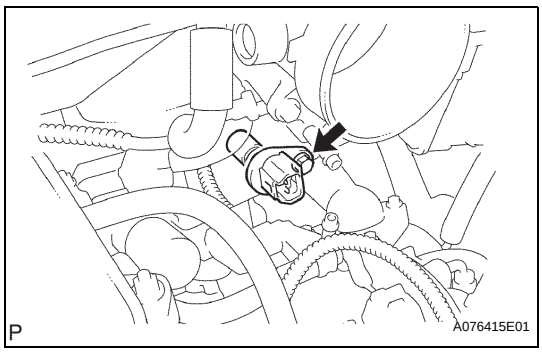

INSTALLATION

1. **INSTALL VVT SENSOR**
   (a) LH bank side VVT sensor:
      (1) Apply a light coat of engine oil to the O-ring of the VVT sensor.
      (2) Install the VVT sensor with the bolt.
      Torque: 8.0 N*m (82 kgf*cm, 71 in.*lbf)
      (3) Connect the VVT sensor connector.
      (4) Connect the water by-pass hoses No. 4 and No. 5.
   (b) RH bank side VVT sensor:
      (1) Apply a light coat of engine oil to the O-ring of the VVT sensor.
      (2) Install the VVT sensor with the bolt.
      Torque: 8.0 N*m (82 kgf*cm, 71 in.*lbf)
      (3) Connect the VVT sensor connector.
2. **INSTALL AIR CLEANER ASSEMBLY (See page ES-416)**
3. **CONNECT CABLE TO NEGATIVE BATTERY TERMINAL**
   Torque: 3.9 N*m (40 kgf*cm, 35 in.*lbf)
4. **ADD ENGINE COOLANT (See page CO-3)**
5. **CHECK FOR ENGINE COOLANT LEAKAGE (See page CO-4)**
6. **INSTALL V-BANK COVER**
   (a) Install the V-bank cover with the 2 nuts.
   Torque: 7.5 N*m (76 kgf*cm, 66 in.*lbf)

IGNITION SYSTEM

PARTS LOCATION

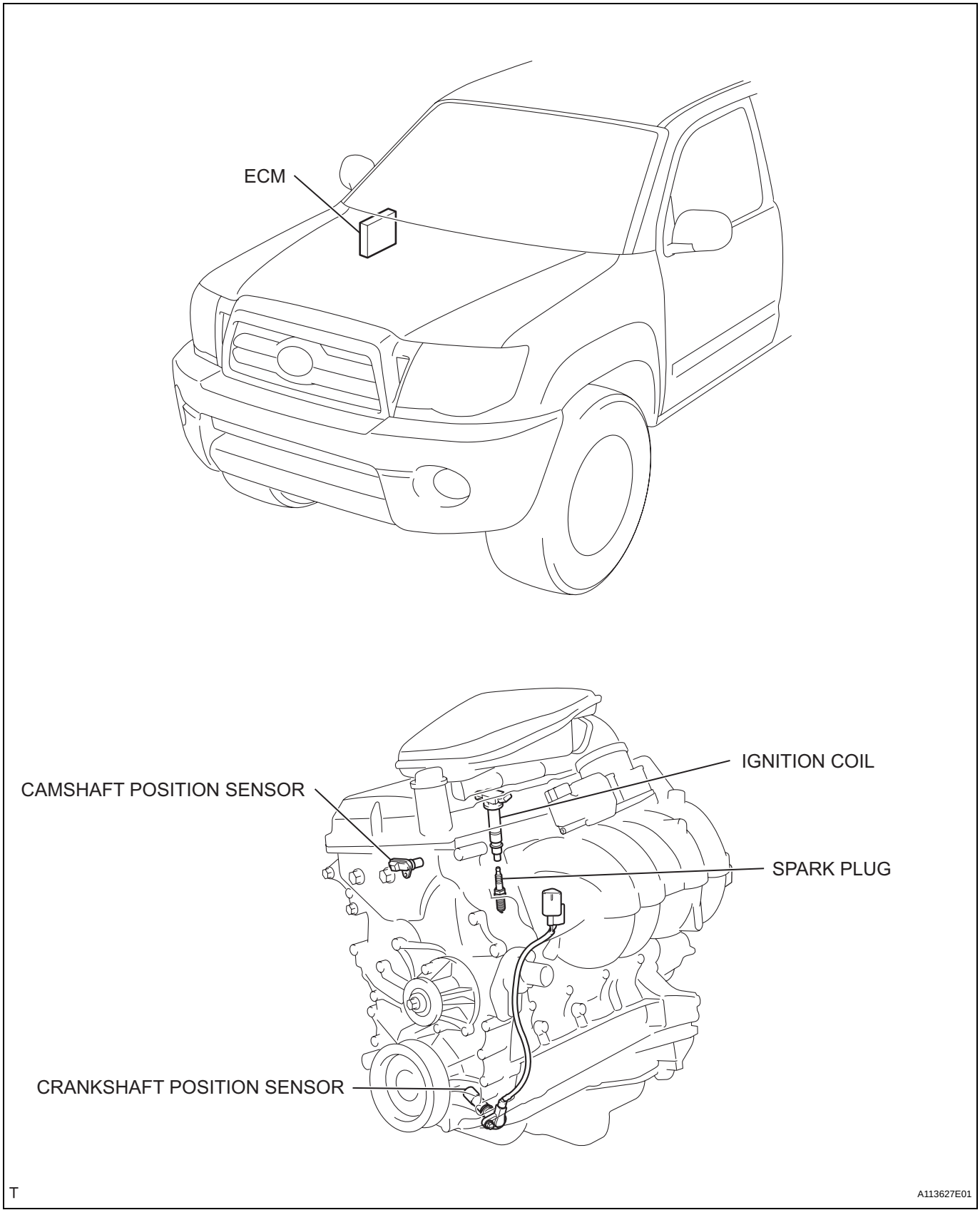

SYSTEM DIAGRAM

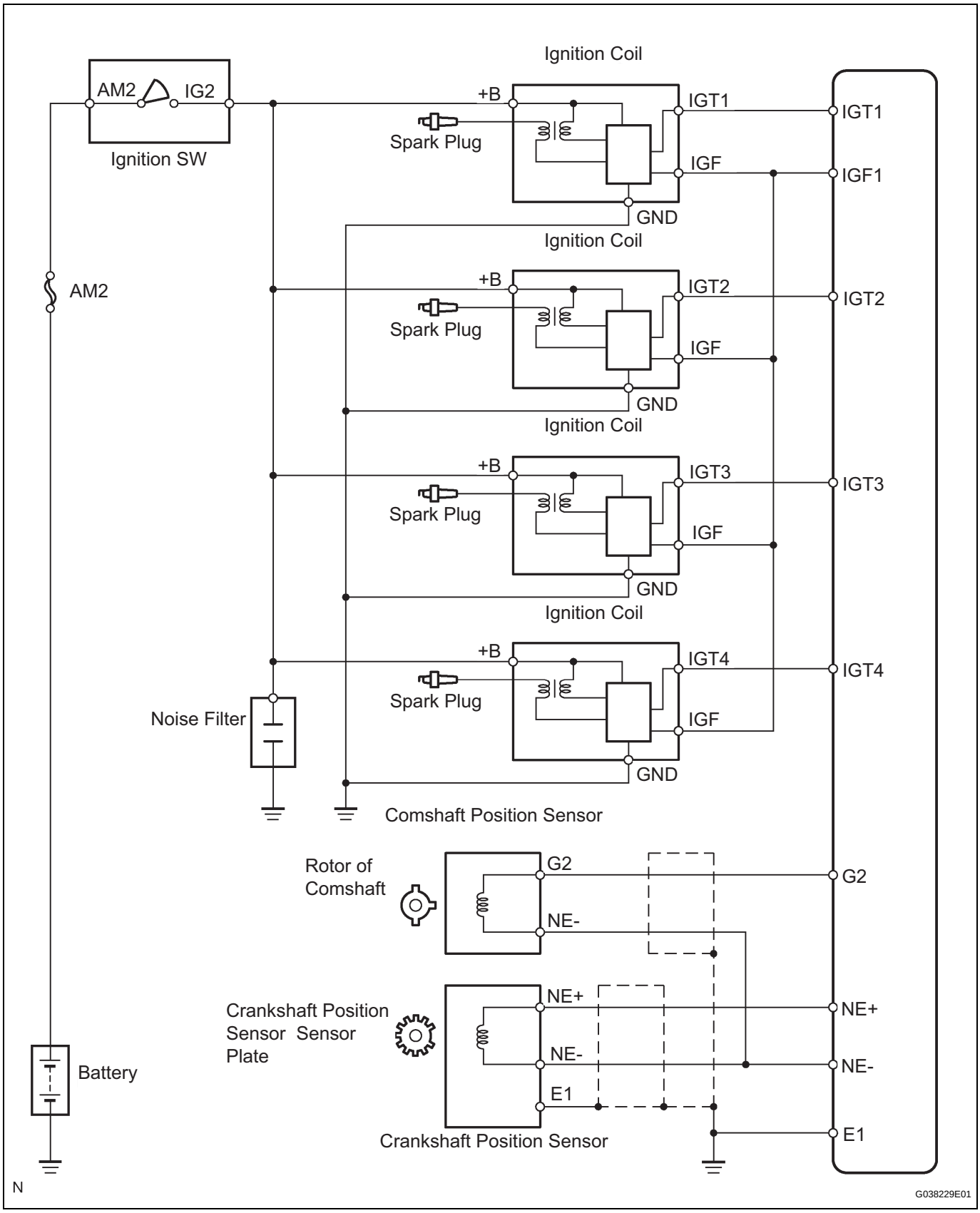

STARTING SYSTEM

PARTS LOCATION

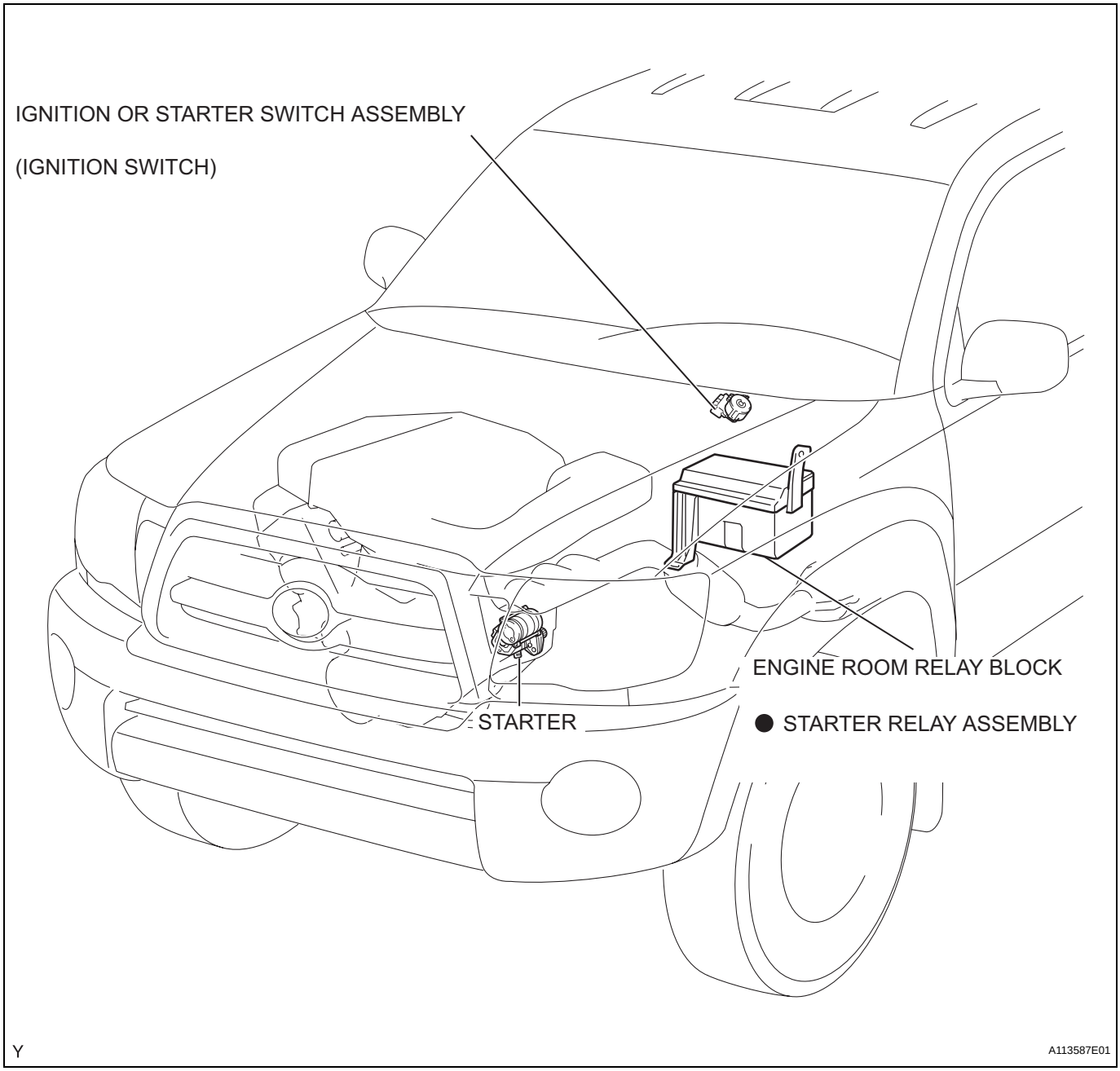

SYSTEM DIAGRAM

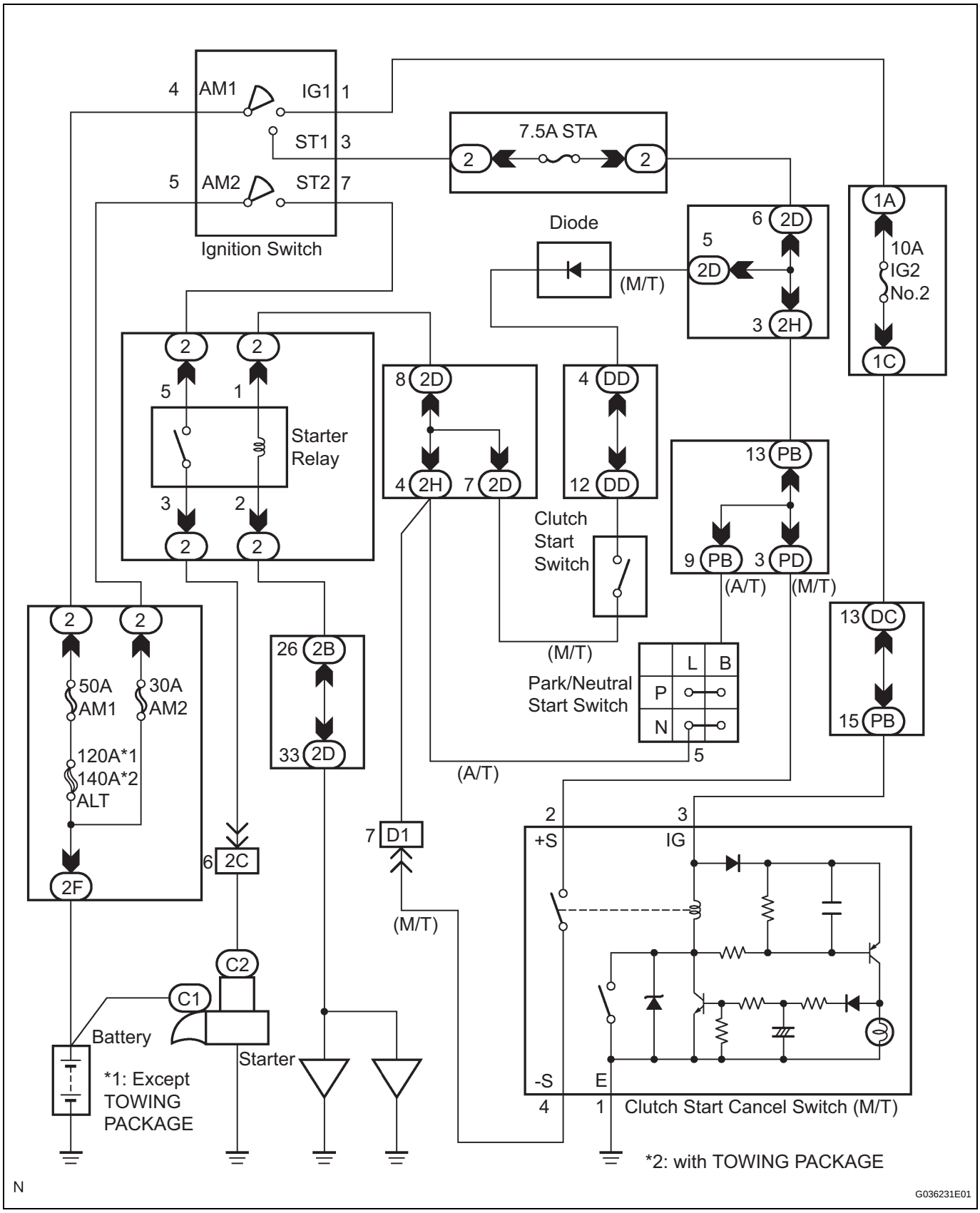

ST

INSPECTION

1. INSPECT STARTER ASSEMBLY

NOTICE:

These tests must be performed within 3 to 5 seconds to prevent burnout of the coil.

(a) Perform the pull-in test.

(1) Remove the nut, then disconnect the lead wire from terminal C.

(2) Connect the battery to the starter magnetic switch as shown in the illustration. Check that the clutch pinion gear is extended.

If the clutch pinion gear does not move, replace the magnet starter switch.

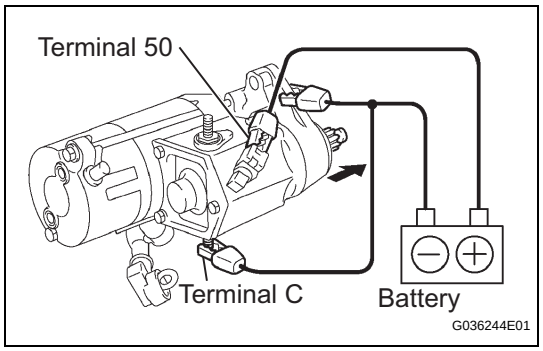

(b) Perform the hold-in test.

(1) Disconnect the negative (-) lead from terminal C. Check that the clutch pinion gear is extended.

If the clutch pinion gear returns inward, replace the starter magnet starter switch.

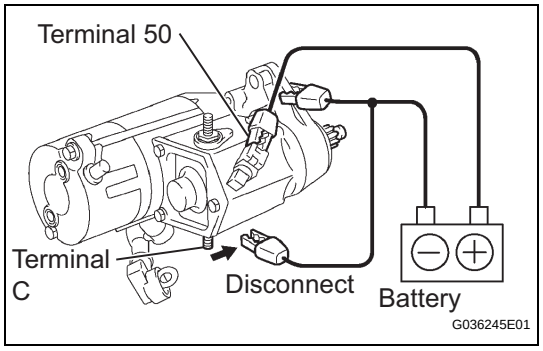

(c) Check the operation.

(1) Disconnect the negative (-) lead from the starter body. Check that the clutch pinion gear returns.

If the clutch pinion gear does not return inward, replace the magnet starter switch.

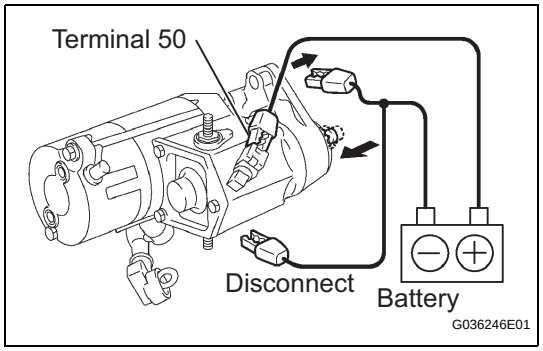

(d) Perform the no-load performance test.

(1) Connect the lead wire to terminal C. Make sure that the lead is not grounded.

Torque: 5.9 N*m (60 kgf*cm, 52 in.*lbf)

(2) Clamp the starter in a vise.

(3) Connect the battery and an ammeter to the starter as shown in the illustration.

(4) Check that the starter rotates smoothly and steadily with the clutch pinion gear extended. Check that the ammeter reads the specified current.

Standard:

100 A or less at 11.5 V

If the result is not as specified, replace the starter.

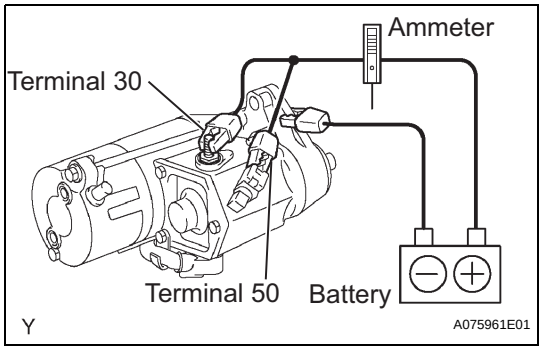

ST

STARTER (for 2WD and Pre-Runner)

COMPONENTS

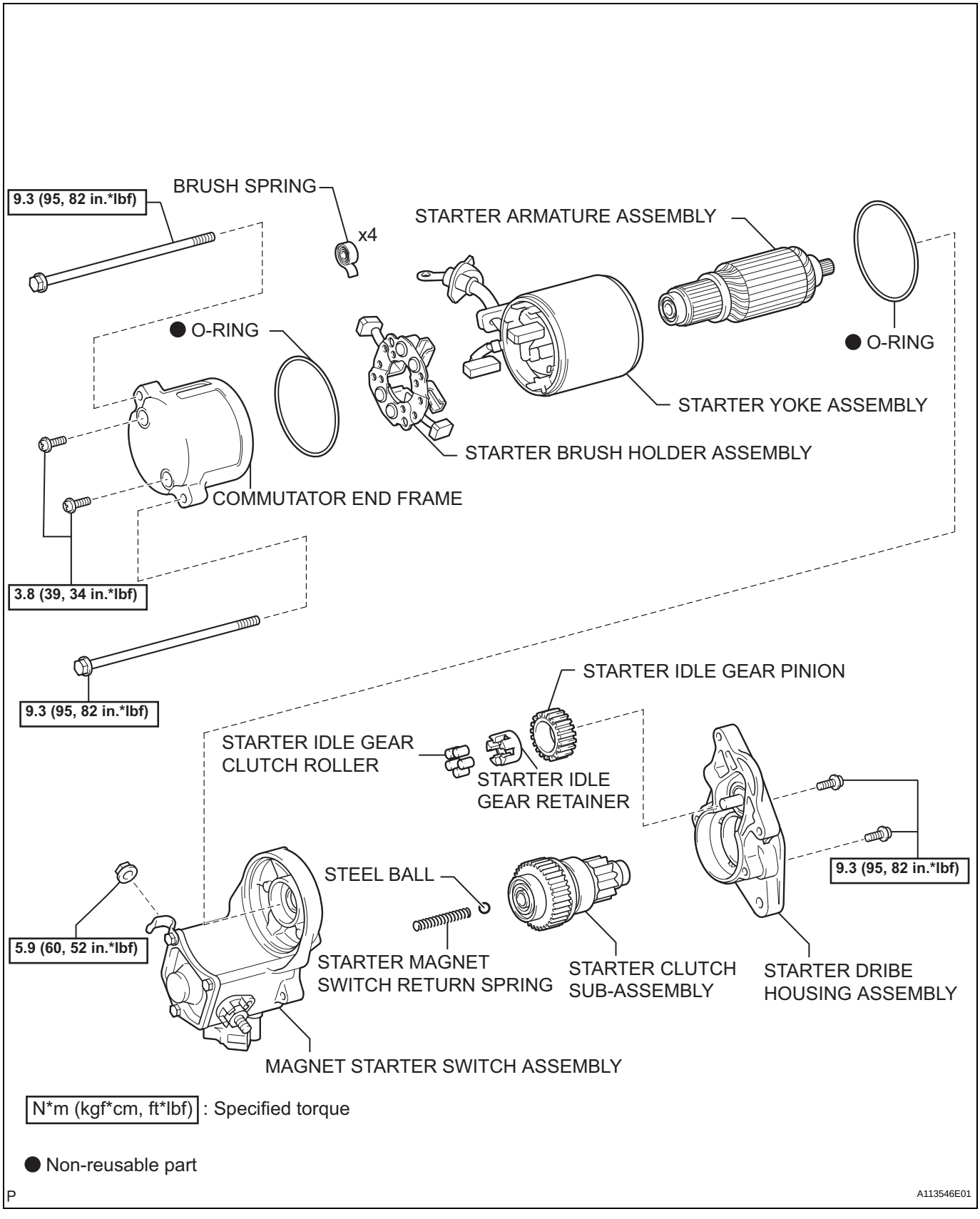

ST

REMOVAL

1. **DISCONNECT CABLE FROM NEGATIVE BATTERY TERMINAL**
2. **REMOVE NO.1 ENGINE UNDER COVER SUB-ASSEMBLY (for Off Road Package)**
   (a) Remove the 4 bolts, then remove the engine under cover.
3. **REMOVE NO.2 MANIFOLD STAY**
   (a) Remove the 3 bolts, then remove the manifold stay No. 2.
4. **SEPARATE WIRE HARNESS**
   (a) Remove the bolt, then separate the earth wire harness from the cylinder block.
5. **REMOVE STARTER ASSEMBLY**
   (a) Disconnect the terminal 50 connector from the starter assy.
   (b) Remove the nut, then disconnect the wire harness from terminal 30.
   (c) Remove the 2 bolts, then remove the starter assembly.

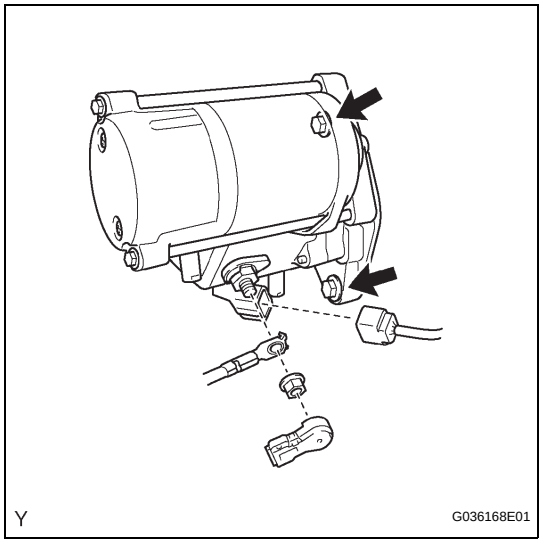

DISASSEMBLY

1. **REMOVE STARTER YOKE ASSEMBLY**
   (a) Remove the nut, then disconnect the lead wire from terminal C.
   (b) Remove the 2 through bolts.
   (c) Pull the starter yoke and the armature out together.
   (d) Remove the O-ring from the starter yoke.

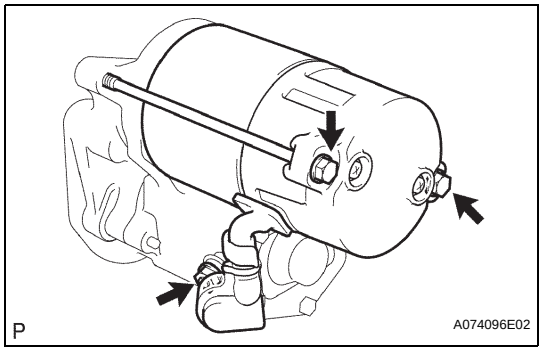

2. **REMOVE MAGNET STARTER SWITCH ASSEMBLY**
   (a) Remove the 2 screws, then remove the magnet starter switch.

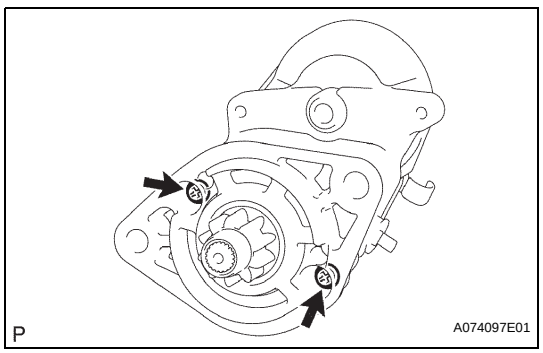

ST

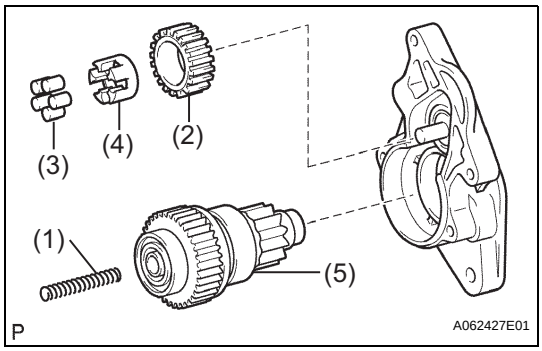

(b) Remove these parts from the starter drive housing.

(1)	Starter magnet switch return spring
(2)	Starter idle gear pinion
(3)	Starter idle gear clutch roller
(4)	Starter idle gear retainer
(5)	Starter clutch

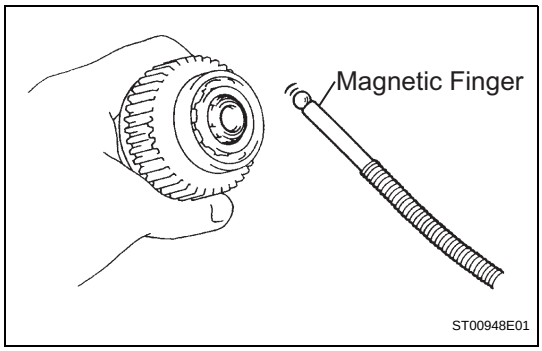

(c) Using a magnetic finger, remove the steel ball from the clutch shaft hole.

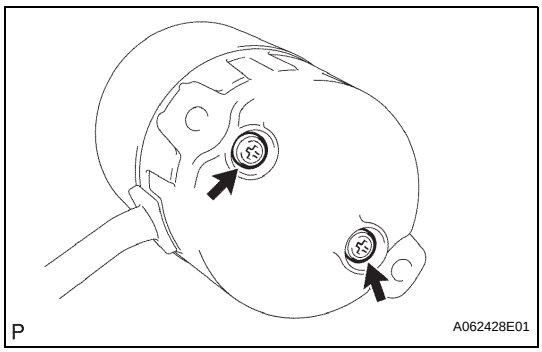

3. REMOVE STARTER BRUSH HOLDER ASSEMBLY

(a) Remove the 2 screws, then remove the end frame from the starter yoke.

(b) Remove the O-ring from the starter yoke.

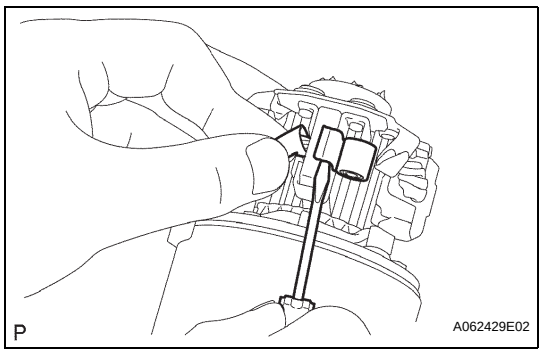

(c) Using a screwdriver, hold the spring back and disconnect the 4 brushes from the brush holder.

(d) Remove the brush holder from the armature.

4. REMOVE STARTER ARMATURE ASSEMBLY

ST

INSPECTION

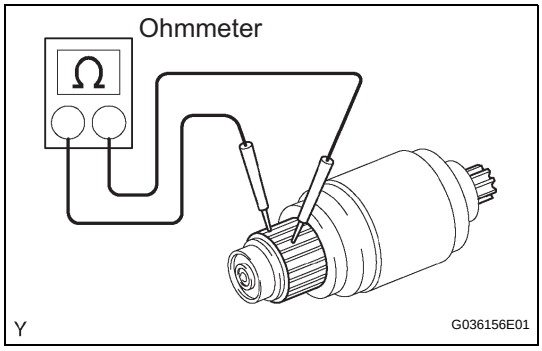

1. INSPECT STARTER ARMATURE ASSEMBLY

(a) Check the commutator for an open circuit.

(1) Using an ohmmeter, measure the resistance between the segments of the commutator.

Standard:

1 Ω or lower

If the result is not as specified, replace the starter armature.

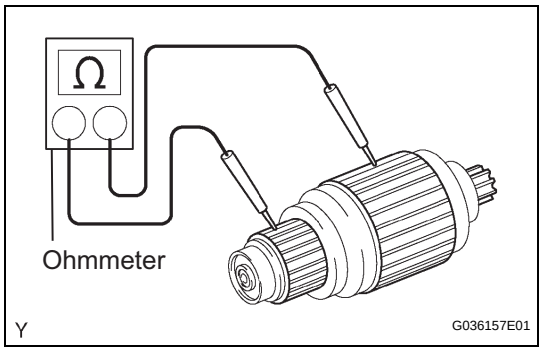

(b) Check the commutator for ground.
(1) Using an ohmmeter, measure the resistance between the commutator and armature coil core.
Standard:
10 kΩ or higher
If the result is not as specified, replace the starter armature.

(c) Check whether the commutator surface is dirty or burnt.
If necessary, clean it with sandpaper (No. 400) or a lathe.

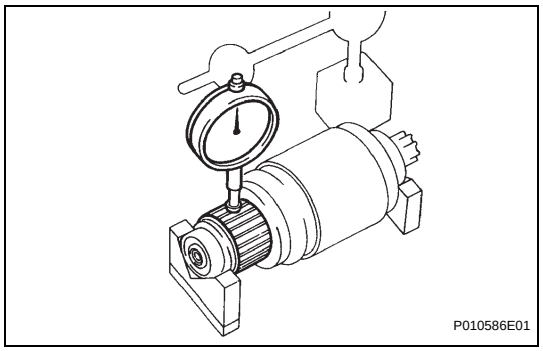

(d) Check the commutator for runout.
(1) Place the commutator on V-blocks.
(2) Using a dial gauge, measure the runout.
Maximum runout:
0.05 mm (0.0020 in.)
If the runout is greater than the maximum, correct it on a lathe.

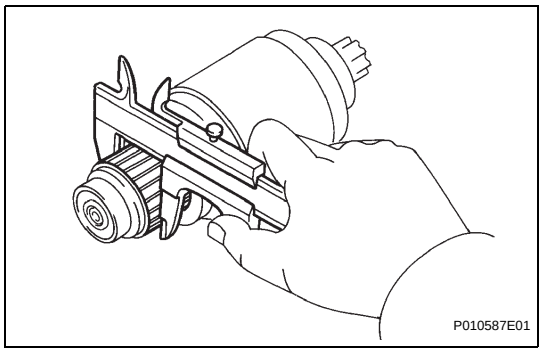

(e) Using vernier calipers, measure the commutator diameter.
Standard diameter:
35.0 mm (1.378 in.)
Minimum diameter:
34.0 mm (1.339 in.)
If the diameter is less than the minimum, replace the armature.

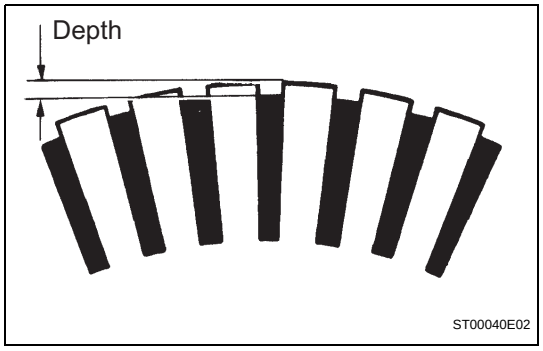

(f) Check that the undercut portion between the segments is free of foreign objects. Measure its depth.
Standard undercut depth:
0.7 mm (0.028 in.)
Minimum undercut depth:
0.2 mm (0.008 in.)
If the undercut depth is less than the minimum, correct it with a hacksaw blade.

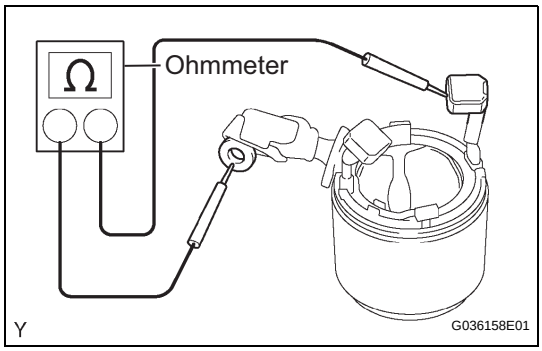

2. INSPECT STARTER YOKE ASSEMBLY

(a) Check the starter yoke for an open circuit.

(1) Using an ohmmeter, measure the resistance between the lead wire and brushes.

Standard:

1 Ω or lower

If the result is not as specified, replace the starter yoke.

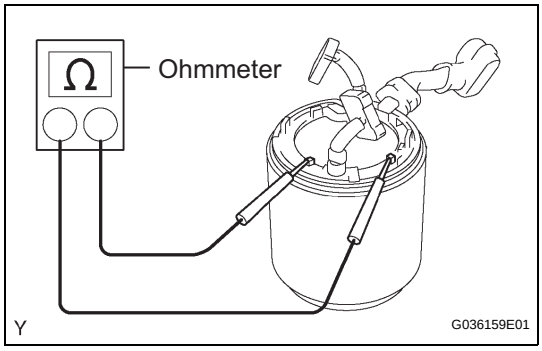

(b) Check the shunt coil for an open circuit.

(1) Using an ohmmeter, measure the resistance between shunt coil terminals A and B.

Standard:

1.5 to 1.9 Ω at 20°C (68°F)

If the result is not as specified, replace the starter yoke.

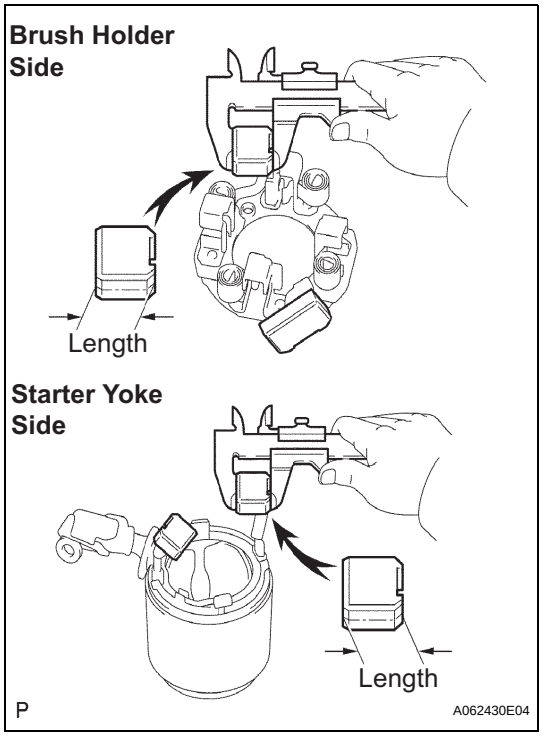

3. INSPECT BRUSH

(a) Check the brush length.

(1) Using vernier calipers, measure the brush length.

Standard length:

15.0 mm (0.591 in.)

Minimum length:

9.0 mm (0.354 in.)

If the length is less than the minimum, replace the brush holder and starter yoke.

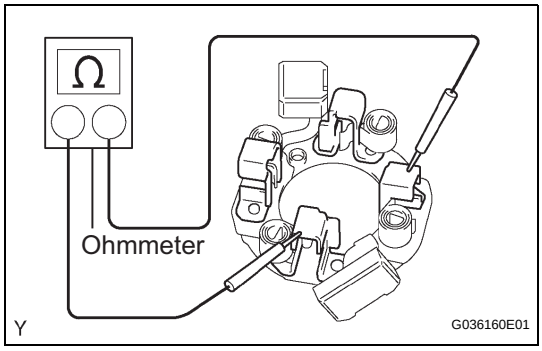

4. INSPECT STARTER BRUSH HOLDER ASSEMBLY

(a) Check the blush holder insulation.

(1) Using an ohmmeter, measure the resistance between the positive (+) and negative (-) brush holders.

Standard:

10 kΩ or higher

If the result is not as specified, replace the brush holder.

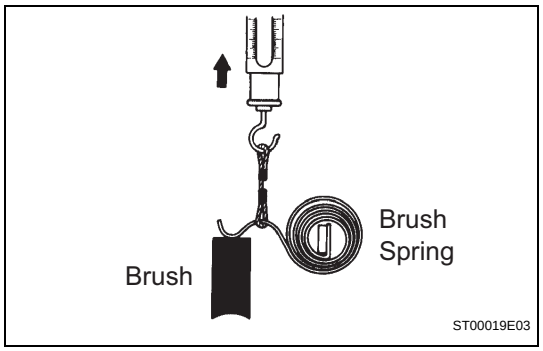

(b) Check the brush spring load.
(1) Take the pull scale reading as soon as the brush spring separates from the brush.
Standard spring load:
21.5 to 27.5 N (2.2 to 2.8 kgf, 4.8 to 6.2 lbf)
Minimum spring load:
12.7 N (1.3 kgf, 2.9 lbf)
If the spring load is less than the minimum, replace the brush holder.

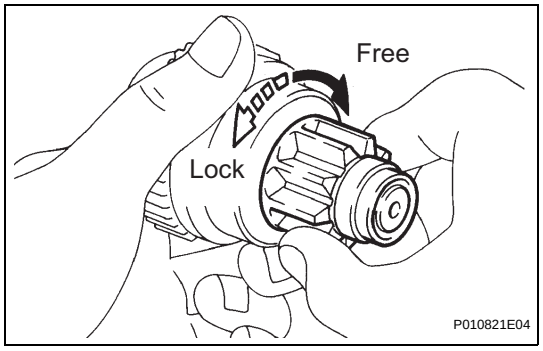

5. INSPECT STARTER CLUTCH SUB-ASSEMBLY
(a) Check the clutch pinion gear.
(1) Hold the starter clutch, rotate the pinion gear clockwise and check that it turns freely.
(2) Try to rotate the pinion gear counterclockwise and check that it locks.
If necessary, replace the starter clutch.

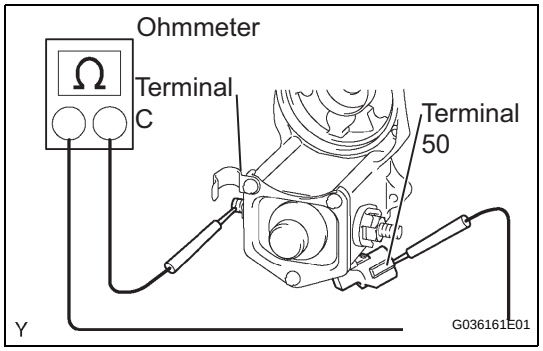

6. INSPECT MAGNET STARTER SWITCH ASSEMBLY
(a) Check the pull-in coil for an open circuit.
(1) Using an ohmmeter, measure the resistance between terminals 50 and C.
Standard:
1 Ω or lower
If the result is not as specified, replace the magnet starter switch.

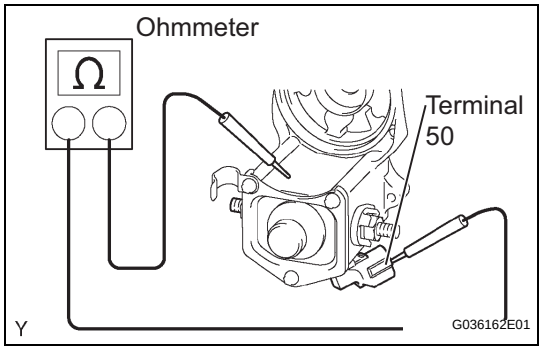

(b) Check the holding coil for an open circuit.
(1) Using an ohmmeter, measure the resistance between terminal 50 and the switch body.
Standard:
2 Ω or lower
If the result is not as specified, replace the magnet starter switch.

STARTER (for 4WD)

COMPONENTS

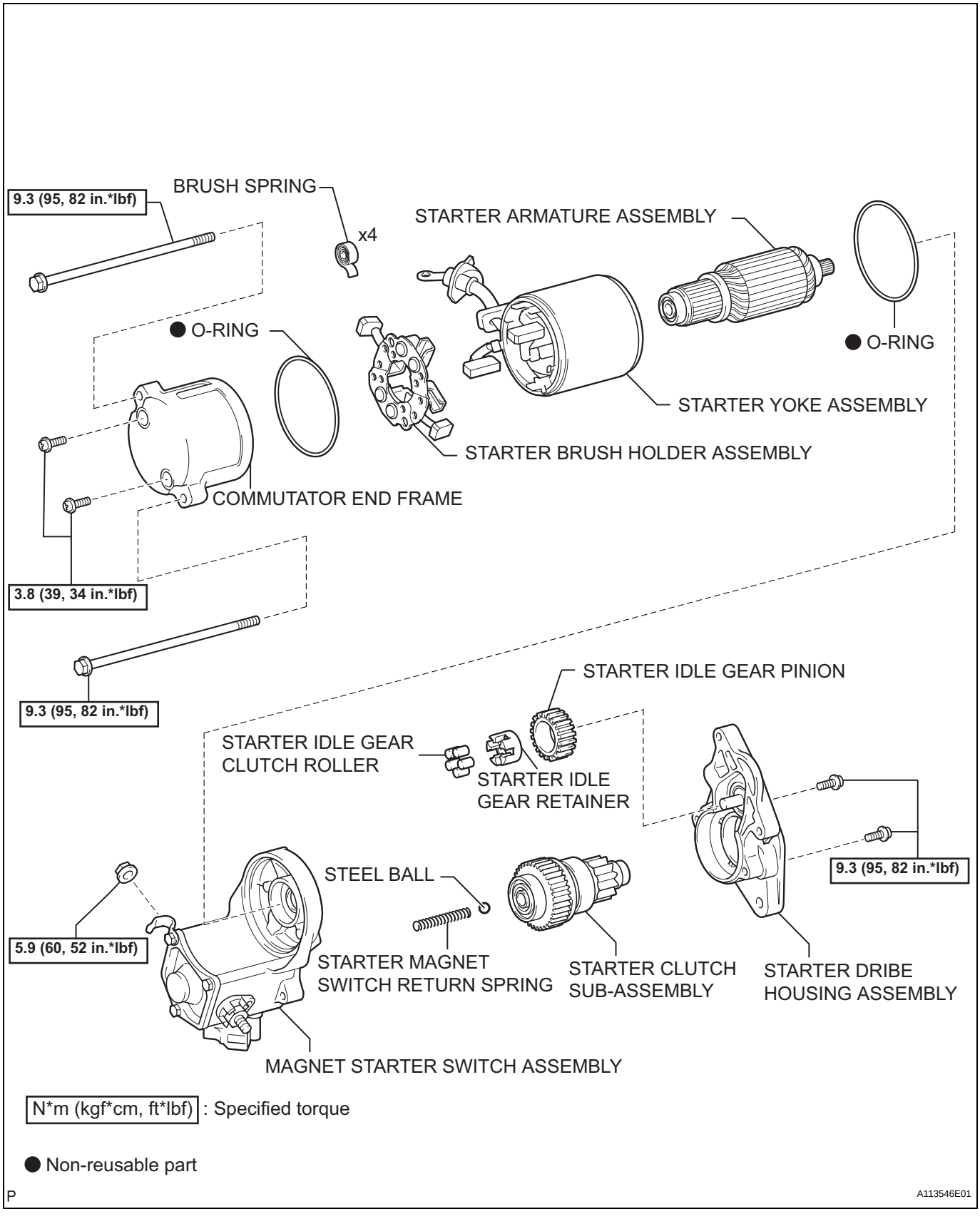

ST

REMOVAL

1. **DISCONNECT CABLE FROM NEGATIVE BATTERY TERMINAL**

2. **REMOVE NO.1 ENGINE UNDER COVER SUB-ASSEMBLY**
   (a) Remove the 4 bolts, then remove the engine under cover.

3. **REMOVE NO.2 EXHAUST FRONT PIPE ASSEMBLY**
   (See page EX-3)

4. **REMOVE FRONT FENDER SEAL LH**
   (a) Remove the 5 clips, then remove the front fender splash shield rear LH.

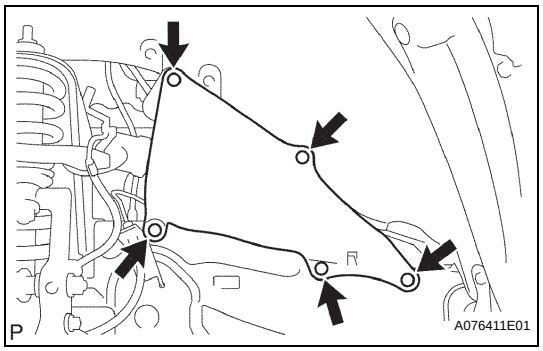

5. **REMOVE NO.2 STEERING INTERMEDIATE SHAFT**
   (a) Loosen bolt A and remove bolt B, then separate the steering intermediate shaft No. 2

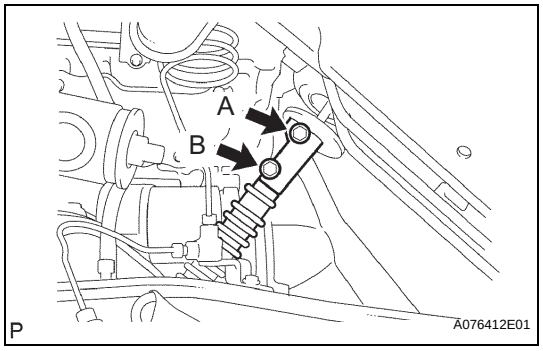

6. **REMOVE STARTER ASSEMBLY**
   (a) Disconnect the terminal 50 connector from the starter assembly.
   (b) Remove the nut, then remove the wire harness from terminal 30.
   (c) Remove the 2 bolts, then remove the starter assembly.

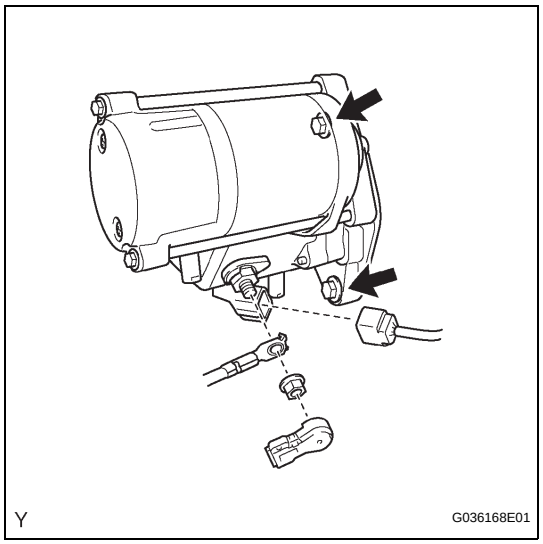

ST

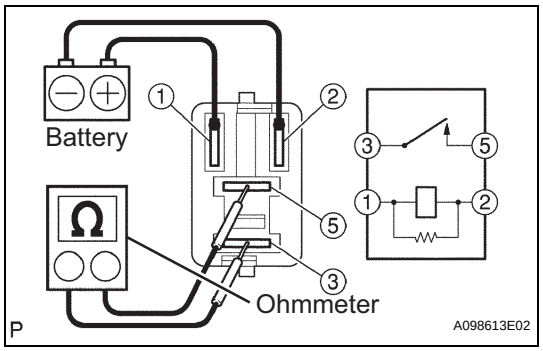

STARTER RELAY

INSPECTION

1. INSPECT STARTER RELAY

(a) Check the resistance.

(1) Using an ohmmeter, measure the resistance between the terminals.

Tester Connection	Specified Condition
3 - 5	10 kΩ or higher
3 - 5	Below 1 Ω (Apply battery voltage to terminals 1 and 2)

If the result is not as specified, replace the starter relay.

IGNITION SWITCH

REMOVAL

1. DISCONNECT CABLE FROM NEGATIVE BATTERY TERMINAL

2. REMOVE STEERING COLUMN COVER LWR

(a) Remove the 2 screws.

(b) Disengage the 2 claws and remove the steering column cover LWR.

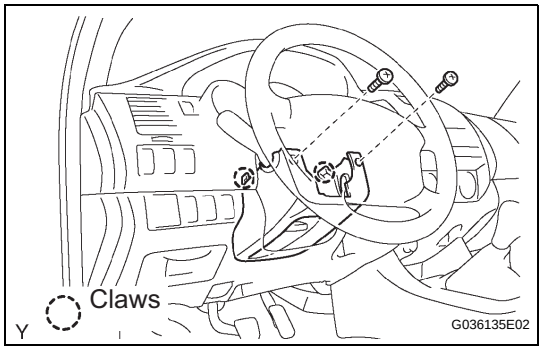

3. REMOVE IGNITION SWITCH

(a) Disconnect the connector.

(b) Disengage the 2 clamps, then remove the ignition switch.

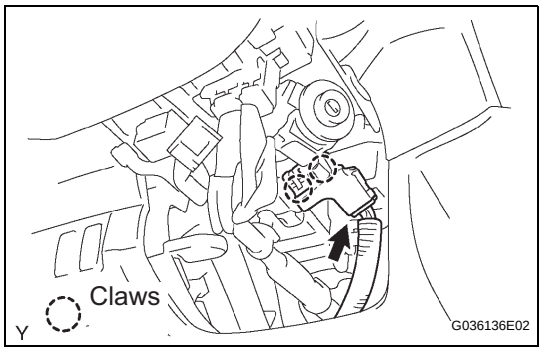

INSPECTION

1. INSPECT IGNITION SWITCH

(a) Check the resistance.

(1) Using an ohmmeter, measure the resistance between the terminals.

Standard

Switch Condition	Switch Condition	Specified Condition
LOCK	-	10 kΩ or higher
ACC	1 (AM1)-3 (ACC)	Below 1 Ω
ON	1 (AM1) - 3 (ACC) - 4 (IG1) 7 (IG2) - 8 (AM2)	Below 1 Ω
START	1 (AM1) - 2 (ST1) - 4 (IG1) 6 (ST2) - 7 (IG2) - 8 (AM2)	Below 1 Ω

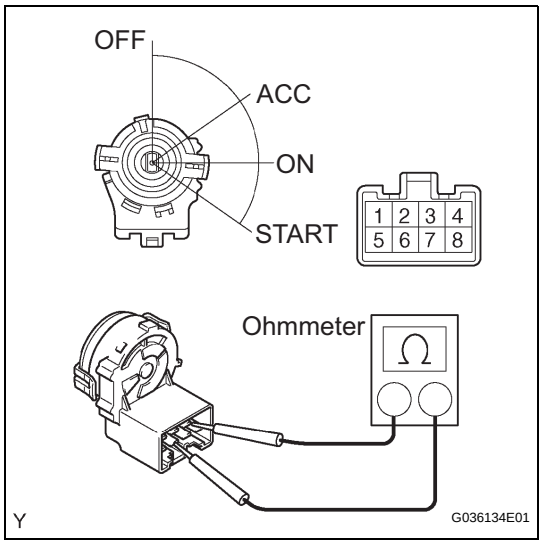

If the result is not as specified, replace the ignition switch.

INSTALLATION

1. **INSTALL IGNITION SWITCH**
2. **INSTALL STEERING COLUMN COVER LWR**
3. **CONNECT CABLE TO NEGATIVE BATTERY TERMINAL**
   Torque: 3.9 N*m (40 kgf*cm, 35 in.*lbf)

STARTING SYSTEM

PARTS LOCATION

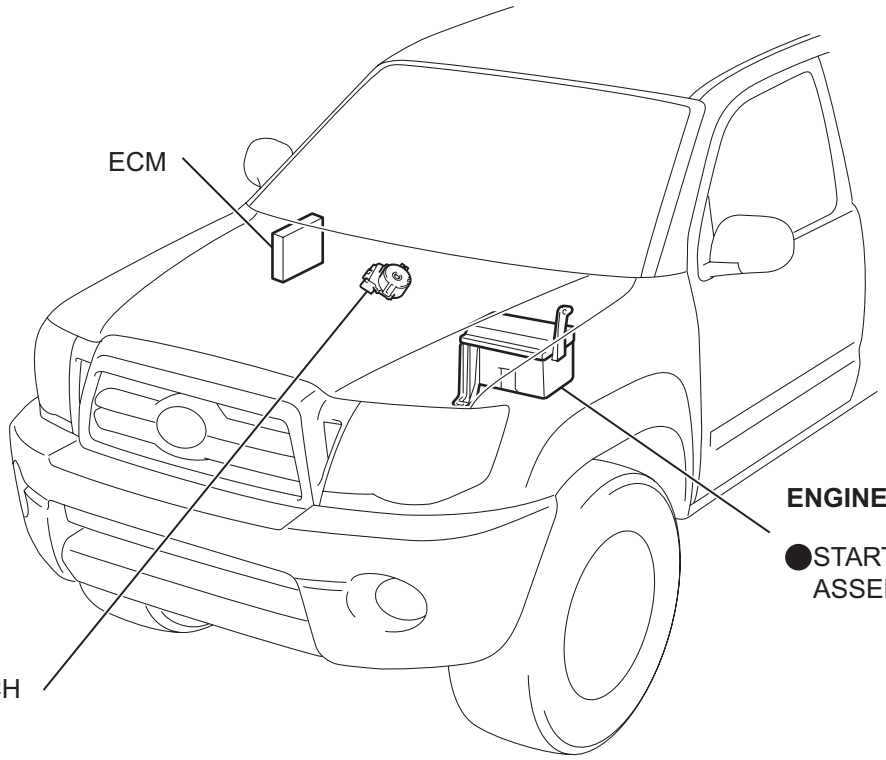

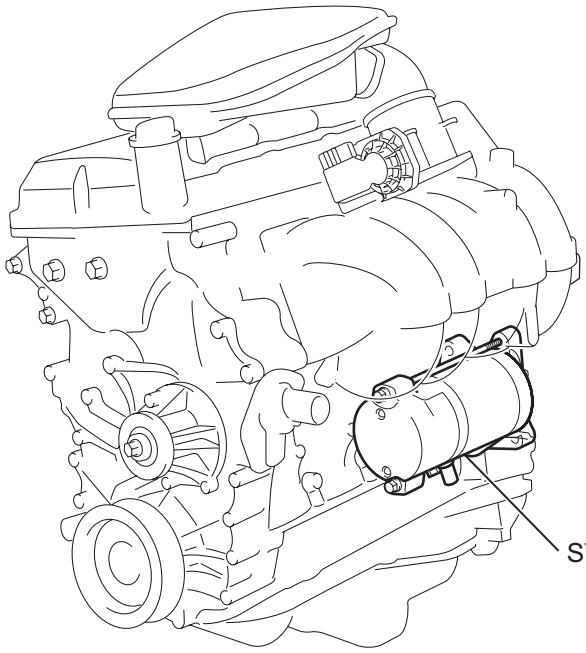

T

A113629E01

SYSTEM DIAGRAM

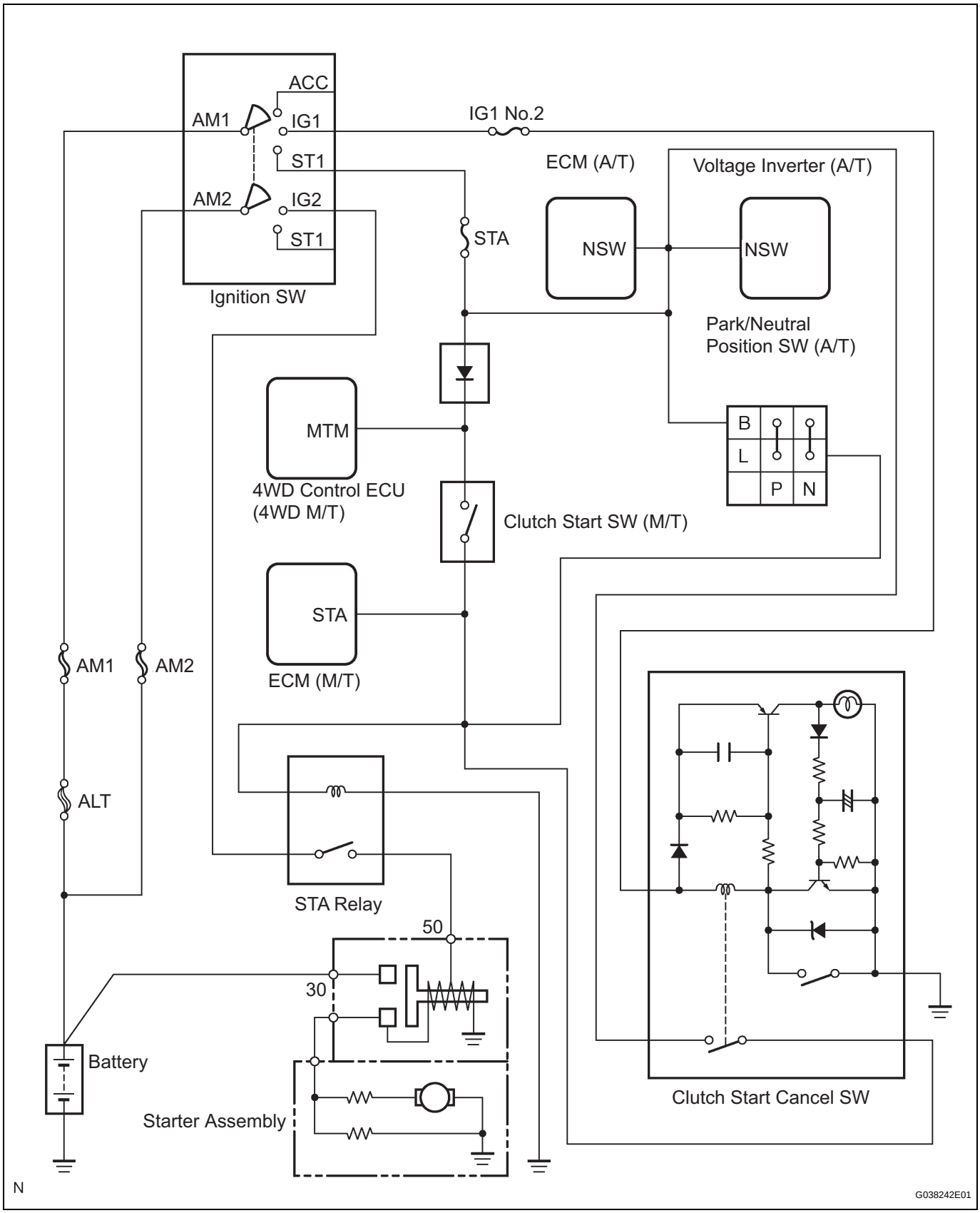

ST

INSPECTION

1. INSPECT STARTER ASSEMBLY

NOTICE:

These tests must be performed within 3 to 5 seconds to avoid burning out the coil.

(a) Perform the pull-in test.

(1) Disconnect the field coil lead wire from terminal C.

(2) Connect the battery to the magnetic switch as shown in the illustration. Check that the clutch pinion gear protrudes.

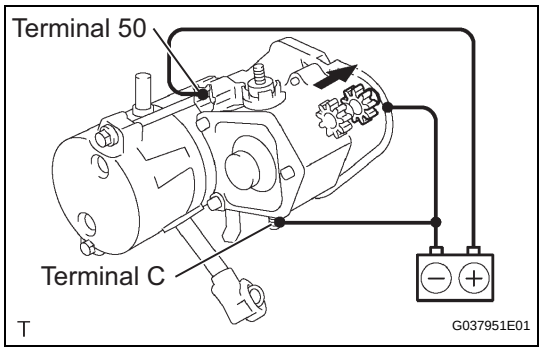

(b) Perform the hold-in test.

(1) Disconnect the negative (-) lead from terminal C with the above condition (a) being sustained. Check that the pinion gear remains extended.

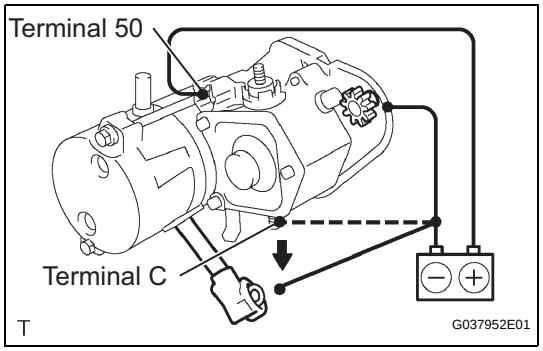

(c) Check the operation.

(1) Disconnect the negative (-) lead from the starter body. Check that the clutch pinion gear returns inward.

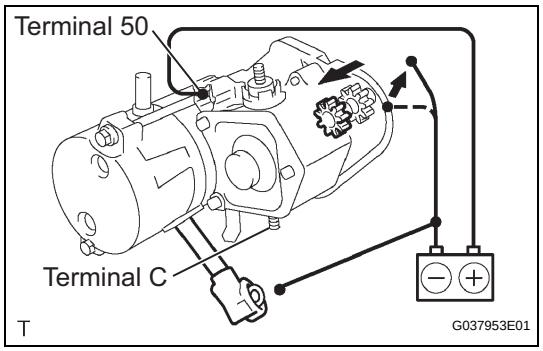

(d) Perform the operation test without any load.

(1) Connect the field coil lead wire to terminal C.
Torque: 5.9 N*m (60 kgf*cm, 52 in.*lbf)

(2) Clamp the starter in a vise.

(3) Connect the battery and ammeter to the starter as shown in the illustration.

(4) Check that the ammeter indicates the specified current.
Specified current:
100 A or less at 11.5 V

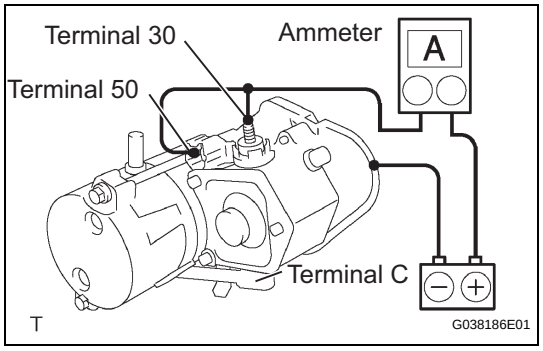

ST

STARTER

COMPONENTS

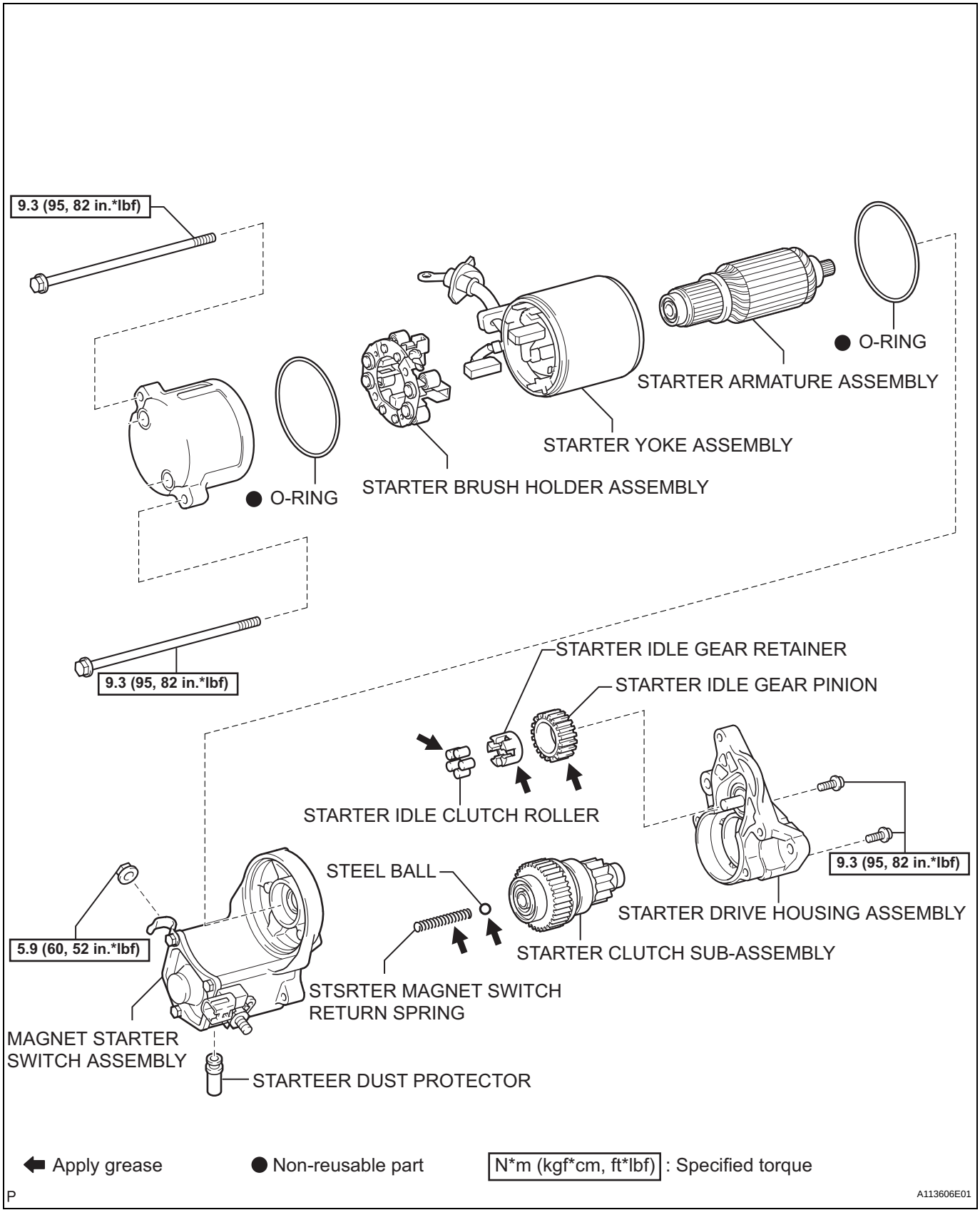

ST

REMOVAL

1. DISCONNECT CABLE FROM NEGATIVE BATTERY TERMINAL

2. REMOVE STARTER ASSEMBLY

(a) Remove the terminal cap.

(b) Remove the nut, then remove the starter wire harness.

(c) Disconnect the starter connector.

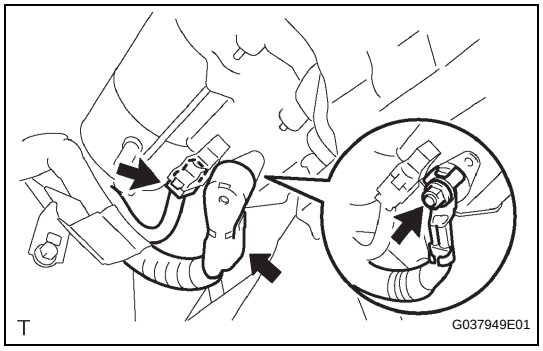

(d) Remove the 2 bolts, then remove the starter.

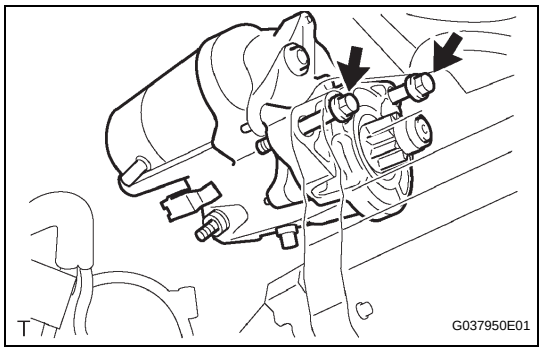

DISASSEMBLY

1. REMOVE STARTER YOKE ASSEMBLY

(a) Remove the nut, then disconnect the lead wire from terminal C.

(b) Remove the 2 through bolts, then pull the starter yoke and starter commutator end frame out together.

(c) Remove the O-ring from the starter yoke.

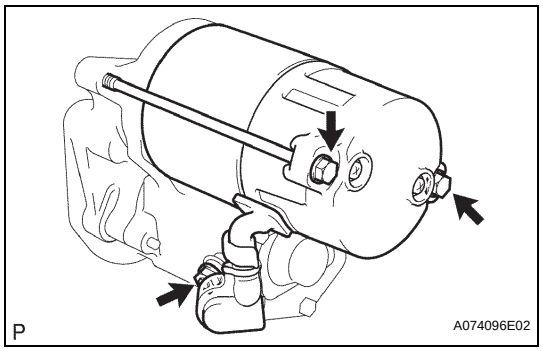

2. REMOVE STARTER BRUSH HOLDER ASSEMBLY

(a) Remove the 2 screws, then remove the end cover from the starter yoke.

(b) Remove the O-ring from the starter yoke.

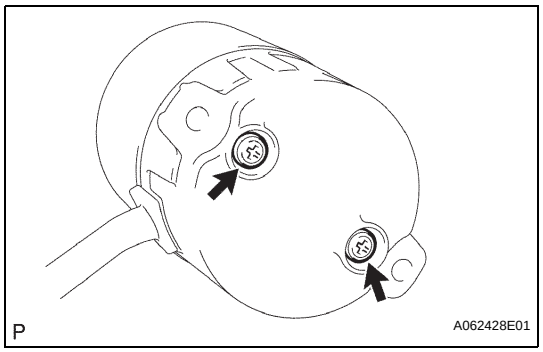

ST

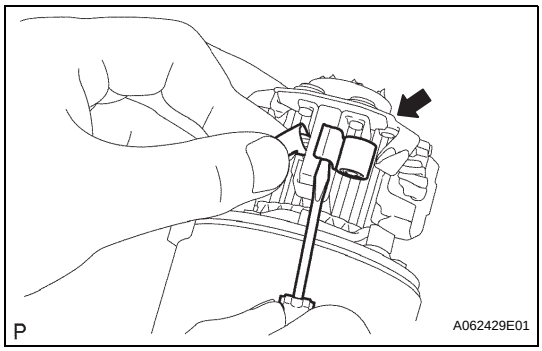

(c) Using a screwdriver, hold the spring back and disconnect the 4 brushes from the brush holder.
(d) Remove the brush holder from the starter yoke.

3. REMOVE STARTER ARMATURE ASSEMBLY
NOTICE:
Turn the armature and check that it turns freely.

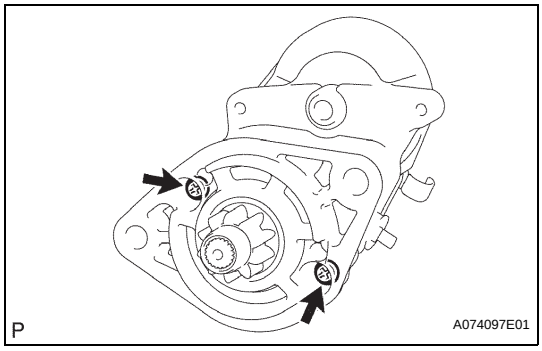

4. REMOVE STARTER CLUTCH SUB-ASSEMBLY
(a) Remove the 2 screws, then remove the starter drive housing.
NOTICE:
Do not drop the starter idle gear pinion, starter idle gear retainer or starter idle gear clutch roller.

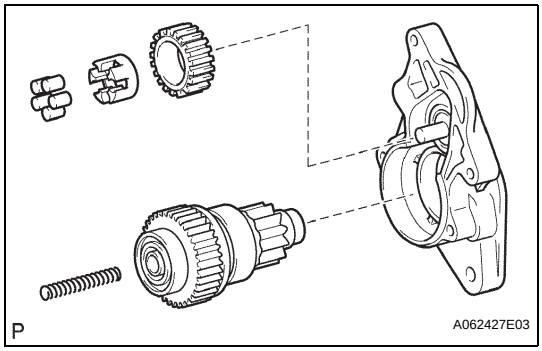

(b) Remove the starter idle gear pinion from the starter drive housing.
(c) Remove the starter idle gear retainer from the starter drive housing.
(d) Remove the starter idle gear clutch roller from the starter drive housing.
(e) Remove the starter clutch from the starter drive housing.
(f) Remove the starter magnet switch return spring from the starter drive housing.

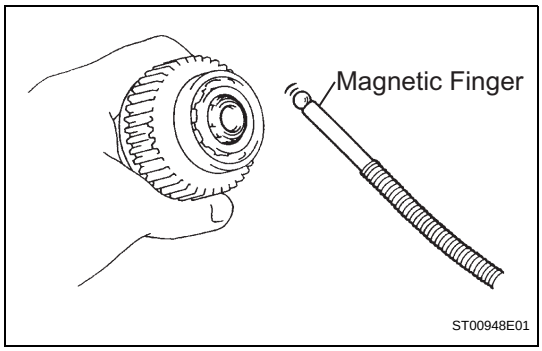

(g) Using a magnetic finger, remove the steel ball from the clutch shaft hole.

ST

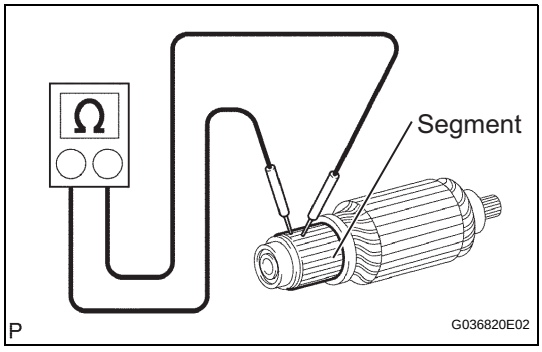

INSPECTION

1. INSPECT STARTER ARMATURE ASSEMBLY
(a) Check the resistance.
(1) Using an ohmmeter, check the resistance between the segments of the commutator.
Standard:
1Ω or lower
If the result is not as specified, replace the starter armature.

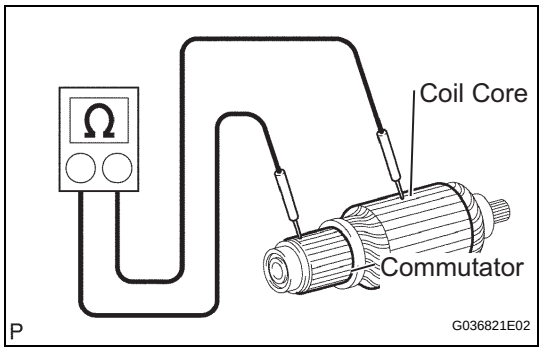

(b) Check the resistance.
(1) Using an ohmmeter, check the resistance between the commutator and armature coil core.
Standard:
10 kΩor higher
If the result is not as specified, replace the starter armature.

(c) Check the commutator surface for dirt and burn.
If the surface is dirty or burnt, smooth the surface with 400- grit sandpaper or a lathe.

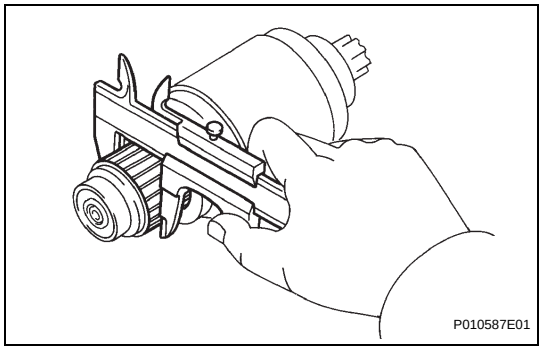

(d) Check the commutator diameter.
(1) Using vernier calipers, measure the commutator diameter.
Standard diameter:
35.0 mm (1.378in.)
Minimum diameter:
34.0 mm (1.339in.)
If the diameter is less than the minimum, replace the armature.

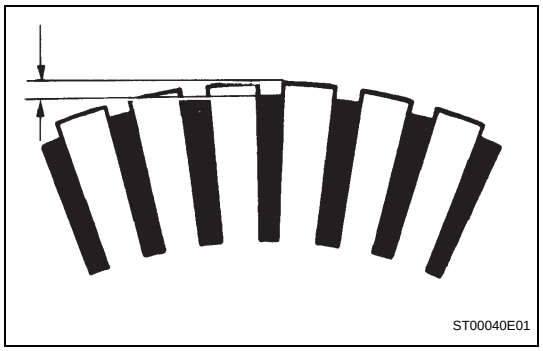

(e) Check the undercut depth.
(1) Check that the undercut portion between the segments is free of foreign objects and measure its depth.
Standard undercut depth:
0.7 mm (0.028in.)
Minimum undercut depth:
0.2 mm (0.008in.)
If the undercut depth is less than the minimum, correct it with a hacksaw blade.

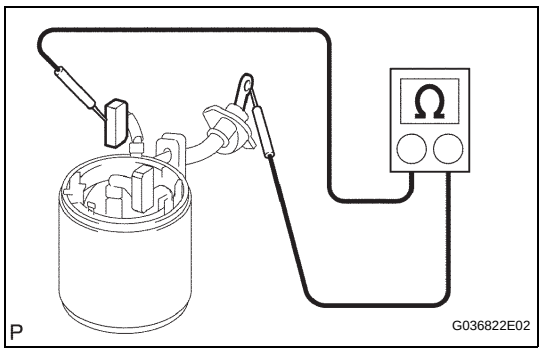

2. INSPECT STARTER YOKE ASSEMBLY

(a) Check the resistance.
(1) Using an ohmmeter, check the resistance between the lead wire and brushes.
Standard:
1 Ωor lower
If the result is not as specified, replace the starter yoke.

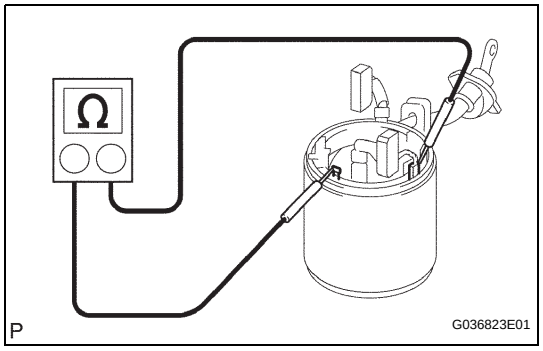

(b) Check the resistance.
(1) Using an ohmmeter, check the resistance between shunt coil terminals (A) and (B).
Standard:
1.5 to 1.9 Ωat 20°C(68°F)
If the result is not as specified, replace the starter yoke.

ST

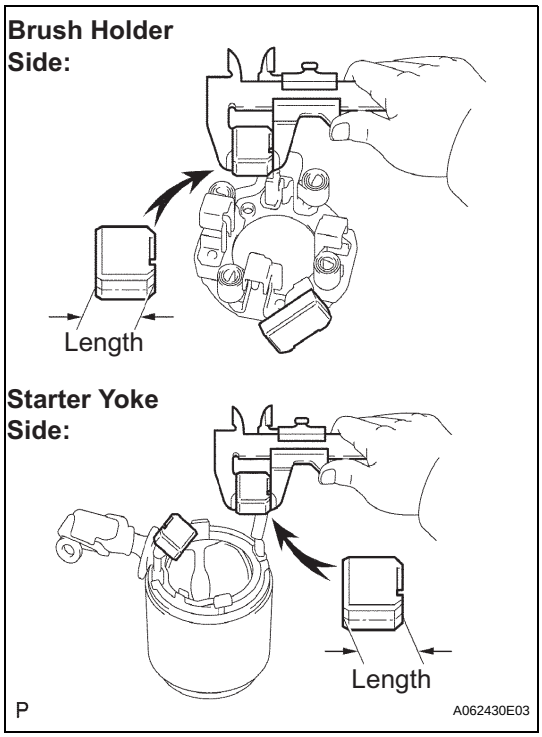

3. INSPECT BRUSH

(a) Check the brush length.

(1) Using vernier calipers, measure the brush length

Standard length:
15.0 mm (0.591in.)
Minimum length:
9.0 mm (0.354in.)

If the length is less than the minimum, replace the brush holder and starter yoke.

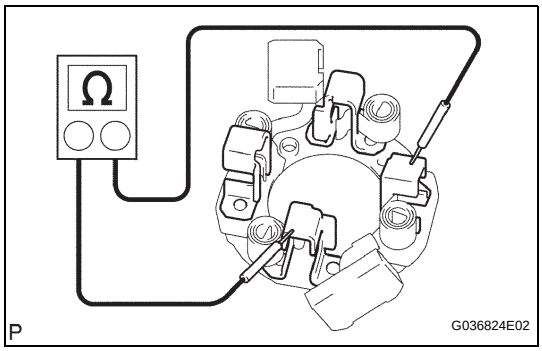

4. INSPECT STARTER BRUSH HOLDER ASSEMBLY

(a) Check the resistance.

(1) Using an ohmmeter, measure the resistance between the positive (+) and negative (-) brush holders.

Standard:
10 kΩ or higher

If the result is not as specified, repair or replace the brush holder assy.

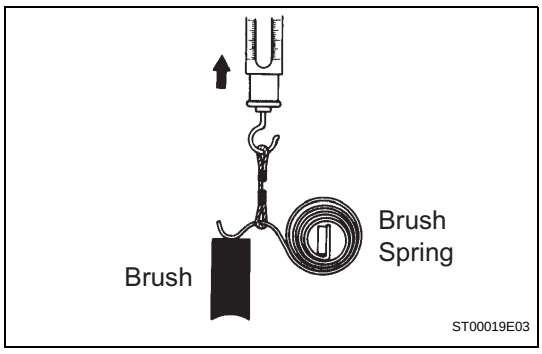

(b) Check the brush spring load.

(1) Check the pull scale reading as soon as the brush spring is separated from the brush.

Standard spring load:
21.5 to 27.5 N (2.2 to 2.8kgf,4.8 to 6.2lbf)
Minimum spring load:
12.7N(1.3kgf,2.9lbf)

If the spring load is less than the minimum, replace the brush holder assy.

ST

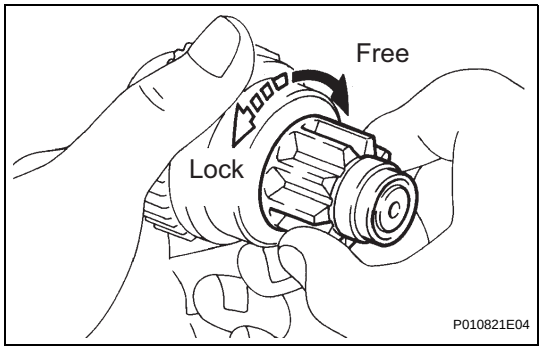

5. INSPECT STARTER CLUTCH SUB-ASSEMBLY

(a) Check the operation.

(1) Turn the clutch pinion gear clockwise and check that it turns freely. Try to rotate the clutch pinion gear counterclockwise and check that it locks.

If necessary, replace the starter clutch.

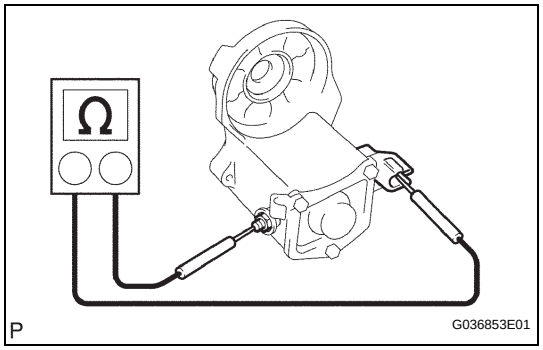

6. INSPECT MAGNET STARTER SWITCH ASSEMBLY

(a) Check the resistance.

(1) Using an ohmmeter, measure the resistance between terminals 50 and C.

Standard:

1Ωor lower

If the result is not as specified, replace the magnet switch

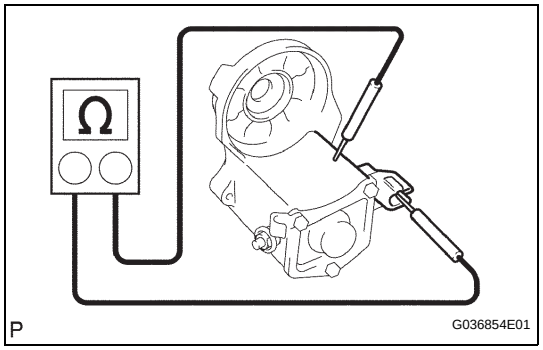

(b) Check the resistance.

(1) Using an ohmmeter, measure the resistance between terminal 50 and the switch body.

Standard:

2.0Ωor lower

If the result is not as specified, replace the magnet switch.

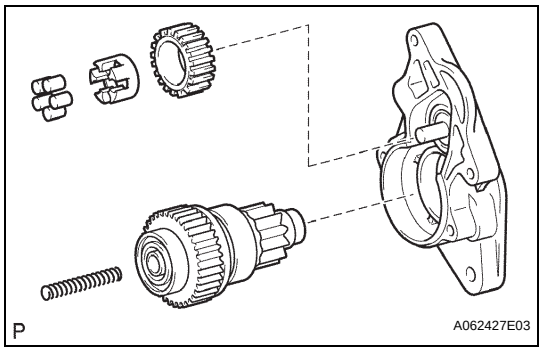

REASSEMBLY

1. INSTALL STARTER CLUTCH SUB-ASSEMBLY

(a) Apply grease to the steel ball and install it onto the starter drive housing.

(b) Apply grease to the magnet switch return spring and install it onto the starter drive housing.

(c) Apply grease to the starter clutch, and install it onto the starter drive housing.

(d) Apply grease to the starter idle gear clutch roller and install it onto the starter idle gear retainer.

(e) Apply grease to the starter idle gear retainer and install it onto the starter idle gear pinion.

(f) Apply grease to the starter idle gear pinion and install it onto the starter drive housing.

(g) Install the starter drive housing with the 2 screws.

Torque: 9.3 N*m (95 kgf*cm, 82 in.*lbf)

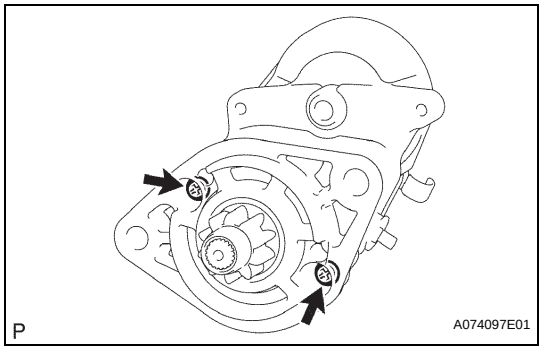

2. INSTALL STARTER ARMATURE ASSEMBLY

(a) Apply grease to the bearings and install it onto the starter yoke.

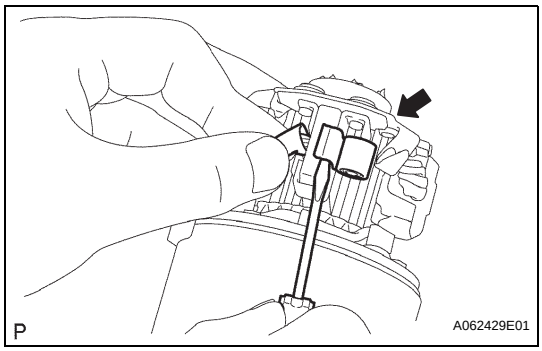

3. INSTALL STARTER BRUSH HOLDER ASSEMBLY

(a) Place the brush holder assy on the starter yoke.
(b) Using a screwdriver, install the 4 brushes.
(c) Install a new O-ring onto the groove of the field frame.

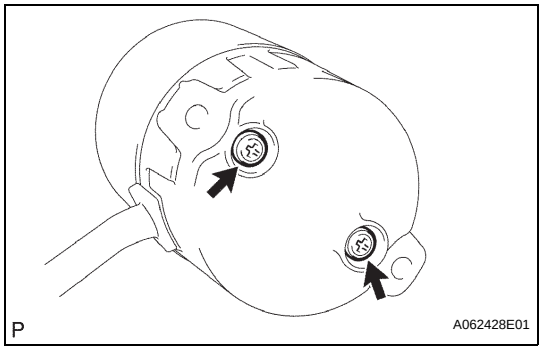

(d) Install the end frame with the 2 screws.

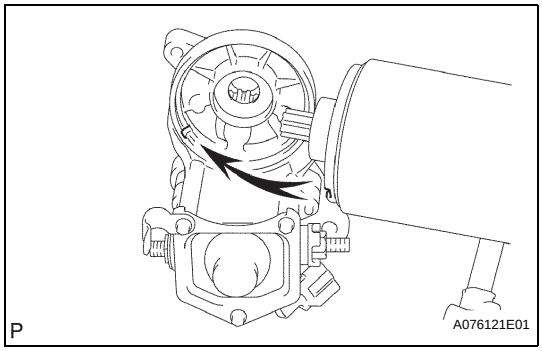

4. INSTALL STARTER YOKE ASSEMBLY

(a) Install a new O-ring onto the groove of the starter yoke.
(b) Align the key of the starter yoke with the groove of the magnet starter switch.

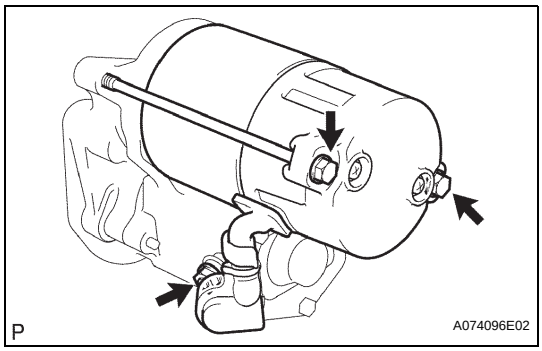

(c) Tighten the 2 through bolts.
Torque: 9.3 N*m (95 kgf*cm, 82 in.*lbf)
(d) Connect the lead wire to terminal C with the nut.
Torque: 5.9 N*m (60 kgf*cm, 52 in.*lbf)

ST

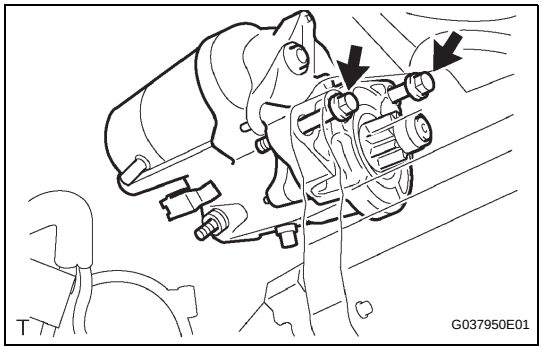

INSTALLATION

1. INSTALL STARTER ASSEMBLY

(a) Install the starter with the 2 bolts.
Torque: 37 N*m (377 kgf*cm, 27 ft.*lbf)

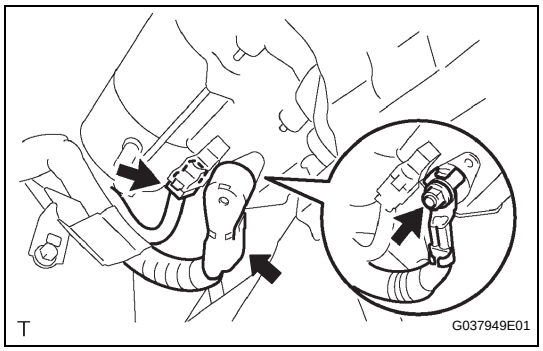

(b) Connect the starter connector.
(c) Install the starter wire harness with the nut.
Torque: 9.8 N*m (100 kgf*cm, 7 ft.*lbf)
(d) Install the terminal cap.

2. CONNECT CABLE TO NEGATIVE BATTERY TERMINAL
Torque: 3.9 N*m (40 kgf*cm, 35 in.*lbf)

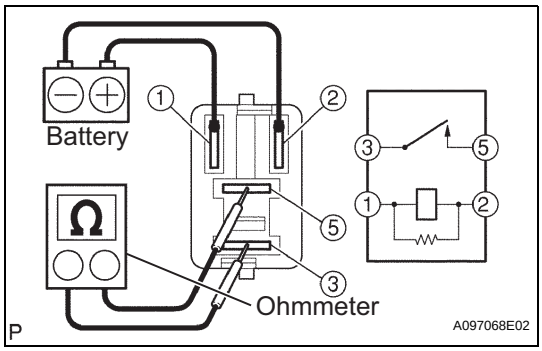

STARTER RELAY

INSPECTION

1. INSPECT STARTER RELAY

(a) Check the resistance.

(1) Using an ohmmeter, measure the resistance between the terminals.

Standard

Tester Connection	Specified Condition
3-5	10kΩor higher
3-5	Below 1Ω(Apply battery voltage to terminals 1 and 2)

If the result is not as specified, replace the starter relay.

IGNITION SWITCH

REMOVAL

1. DISCONNECT CABLE FROM NEGATIVE BATTERY TERMINAL

2. REMOVE STEERING COLUMN COVER LWR

(a) Remove the 2 screws.

(b) Disengage the 2 claws and remove the steering column cover LWR.

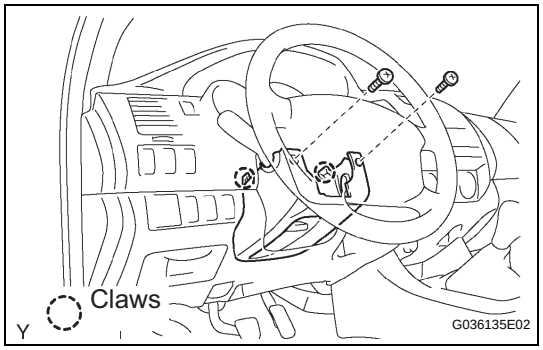

3. REMOVE IGNITION SWITCH

(a) Disconnect the connector.

(b) Disengage the 2 clamps, then remove the ignition or starter switch.

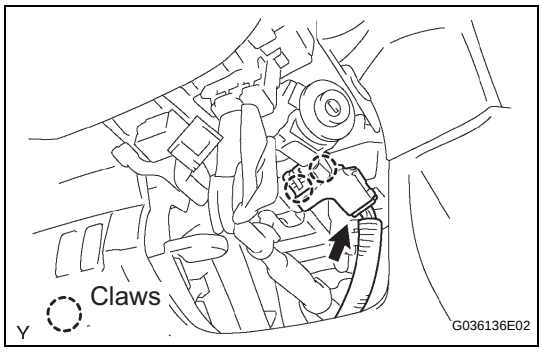

INSPECTION

1. INSPECT IGNITION SWITCH

(a) Check the resistance.

(1) Using an ohmmeter, measure the resistance between the terminals.

Standard

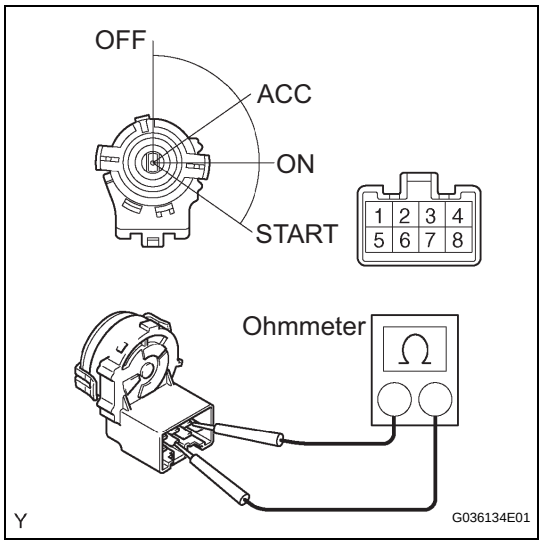

Switch Condition	Tester Connection	Specified Condition
LOCK	-	10 kΩor higher
ACC	1 (AM1) -3 (ACC)	Below 1Ω
ON	1 (AM1) -3 (ACC) -4 (IG1) 7 (IG2) -8 (AM2)	Below 1Ω
START	1 (AM1) -2 (ST1) -4 (IG1) 6 (ST2) -7 (IG2) -8 (AM2)	Below 1Ω

If the result is not as specified, replace the ignition switch.

INSTALLATION

1. **INSTALL IGNITION SWITCH**
2. **INSTALL STEERING COLUMN COVER LWR**
3. **CONNECT CABLE TO NEGATIVE BATTERY TERMINAL**
   Torque: 3.9 N*m (40 kgf*cm, 35 in.*lbf)

CHARGING SYSTEM

PRECAUTION

1. PRECAUTION

(a) Check that the battery cables are connected to the correct terminals.
(b) Disconnect the battery cables if the battery is charged quickly.
(c) Do not perform tests using a high voltage insulation resistance tester.
(d) Never disconnect the cable from the battery while the engine is running.
(e) Check that the charging cables are tightly connected to terminals B of the generator and the fuse box.
(f) Do not check whether the generator generates current or not while terminal F is connected to the other terminals.

PARTS LOCATION

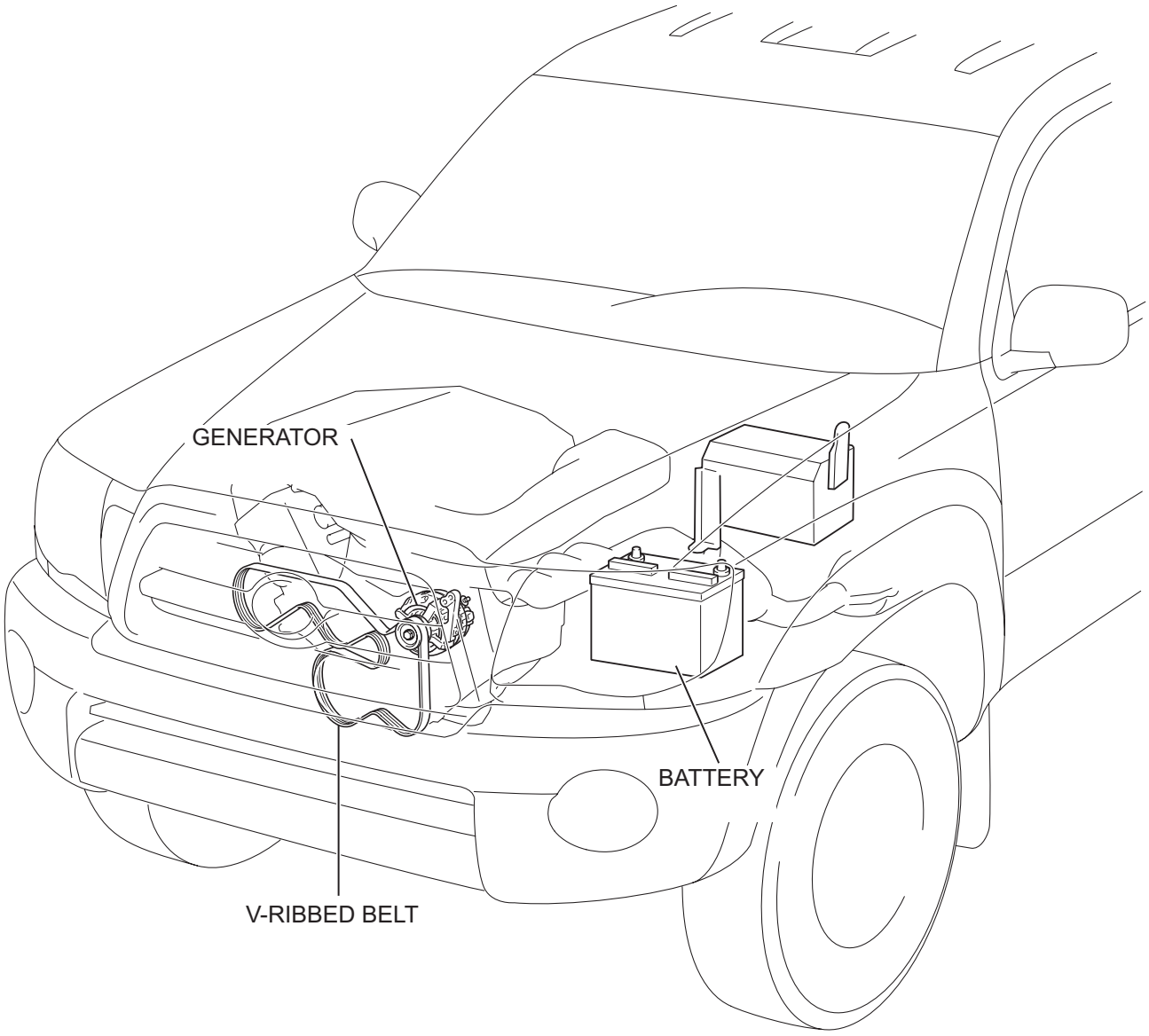

GENERATOR (for DENSO Made)

COMPONENTS

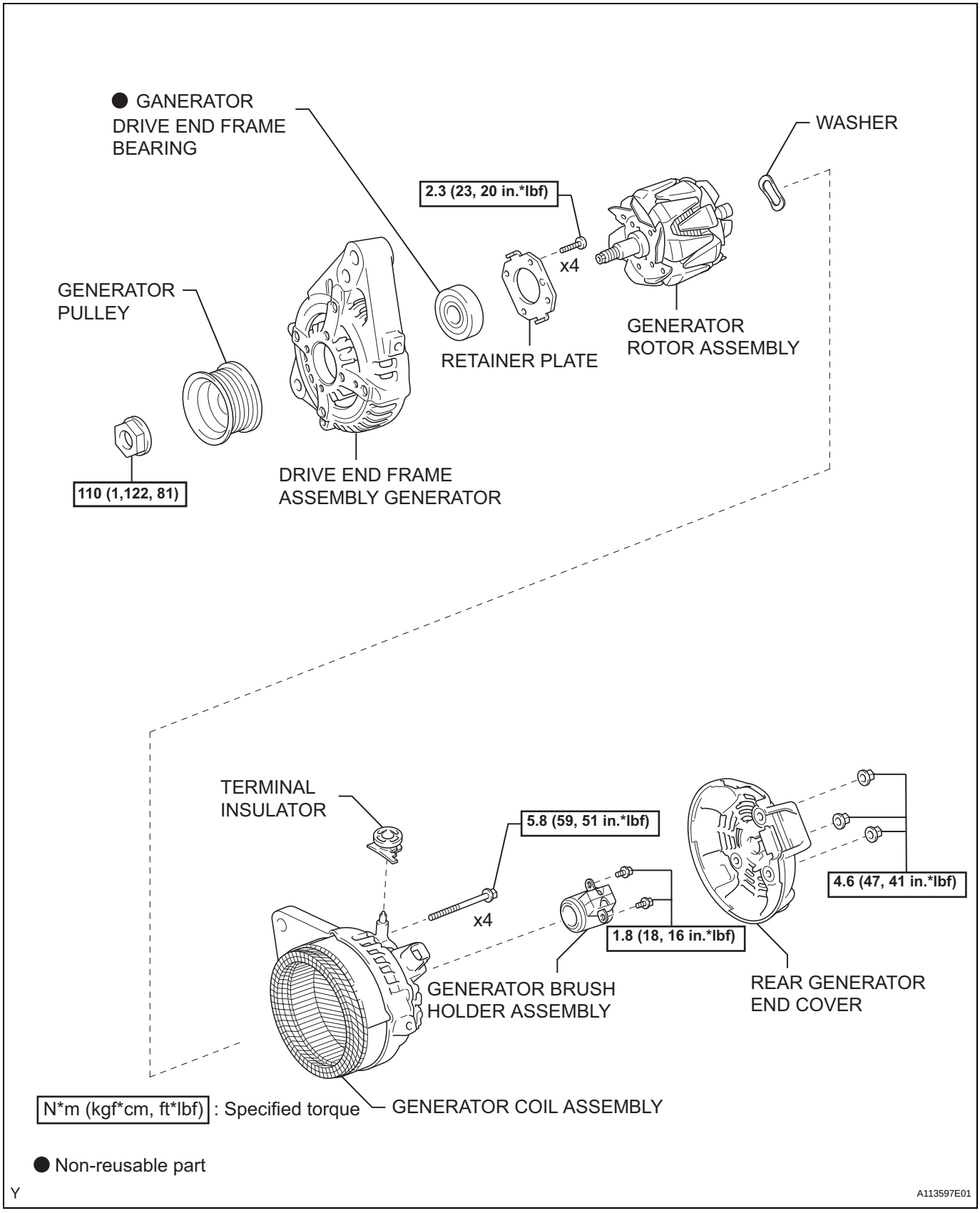

CH

REMOVAL

1. **DISCONNECT CABLE FROM NEGATIVE BATTERY TERMINAL**
2. **REMOVE V-BANK COVER (See page ES-414)**
3. **REMOVE RADIATOR SUPPORT TO FRAME SEAL LH (See page CO-15)**
4. **REMOVE FAN SHROUD (See page CO-15)**
5. **REMOVE GENERATOR ASSEMBLY**
   (a) Disconnect the wire harness.
   (1) Remove the bolt and wire harness stay.
   (2) Disconnect the connector from the generator assembly.
   (3) Remove the terminal cap and nut.
   (4) Disconnect the wire harness from terminal B.

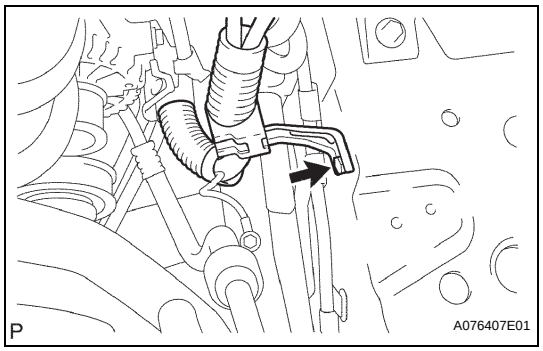

(b) Remove the 2 bolts, then separate the wire harness clamp bracket from the generator assembly.

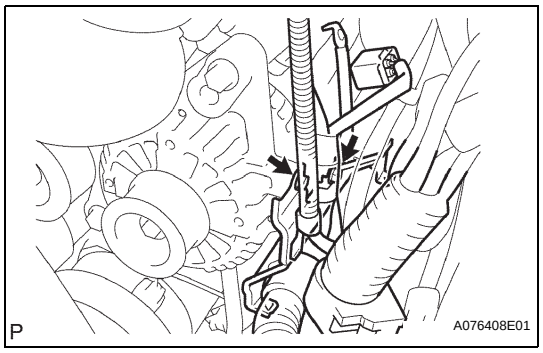

(c) Remove the 2 bolts, then remove the generator assembly.

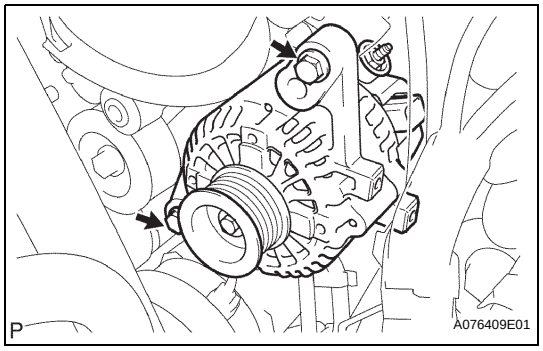

DISASSEMBLY

1. **REMOVE GENERATOR PULLEY**
   SST 09820-63010 (09820-06010, 09820-06020)
   HINT:

SST 1-A and B	09820-06010
SST 2	09820-06020

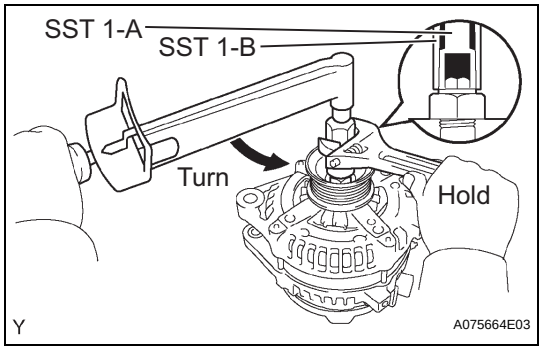

(a) Hold SST 1-A with a torque wrench, and tighten SST 1-B clockwise to the specified torque.
Torque: 39 N*m (400 kgf*cm, 29 ft.*lbf)
NOTICE:
Check that SST is secured on the rotor shaft.

CH

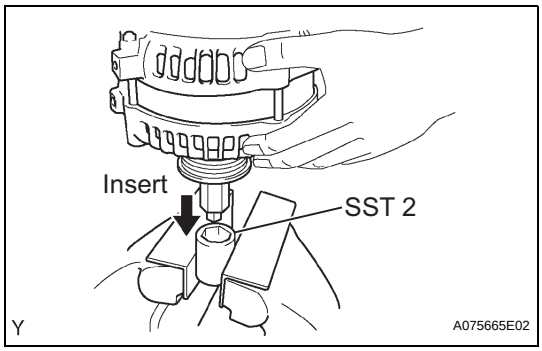

(b) Mount SST 2 in a vise.
(c) Insert SST 1-A and B into SST 2, and attach the pulley nut to SST 2.

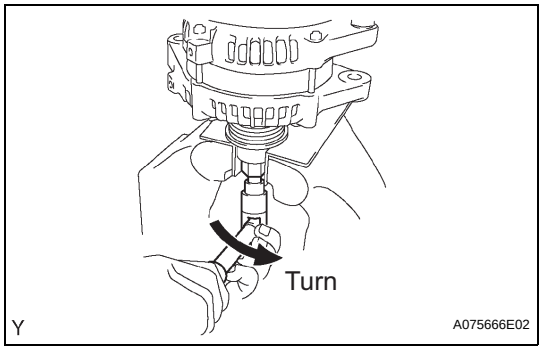

(d) To loosen the pulley nut, turn SST 1-A in the direction shown in the illustration.
NOTICE:
To prevent damage to the rotor shaft, do not loosen the pulley nut more than one-half turn.
(e) Remove the generator from SST 2.

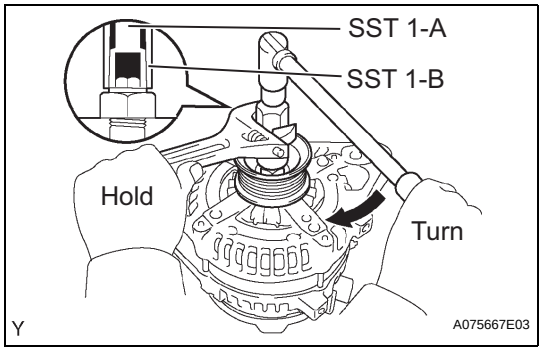

(f) Turn SST 1-B, and remove SST 1-A and B.
(g) Remove the pulley nut and pulley.

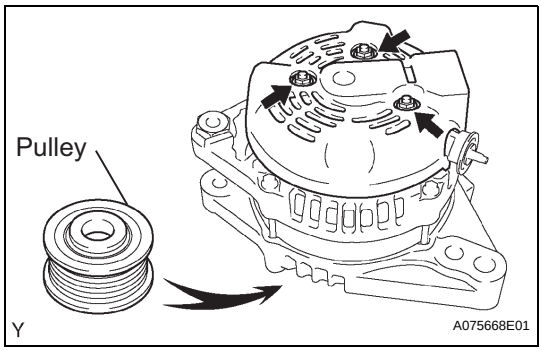

2. REMOVE REAR GENERATOR END COVER
(a) Place the generator on the pulley.
(b) Remove the 3 nuts, then remove the rear end cover.

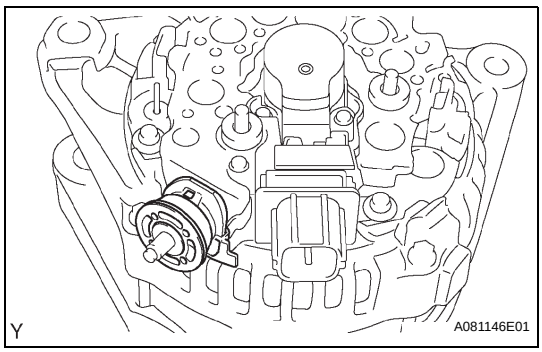

3. REMOVE TERMINAL INSULATOR

CH

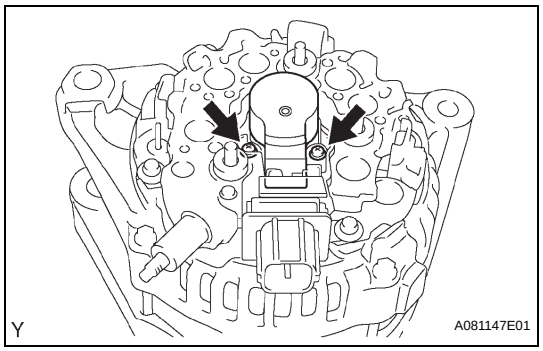

4. REMOVE GENERATOR BRUSH HOLDER ASSEMBLY

(a) Remove the plate seal.

(b) Remove the 2 nuts, then remove the brush holder.

(c) Remove the plate seal.

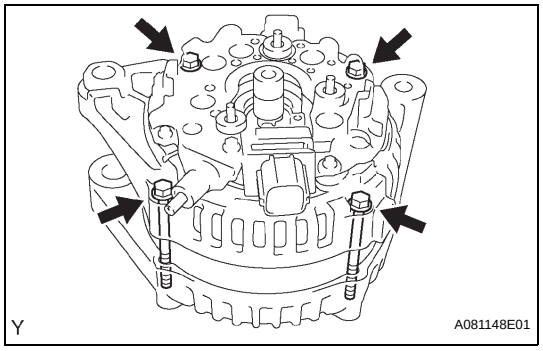

5. REMOVE GENERATOR COIL ASSEMBLY

(a) Remove the 4 bolts.

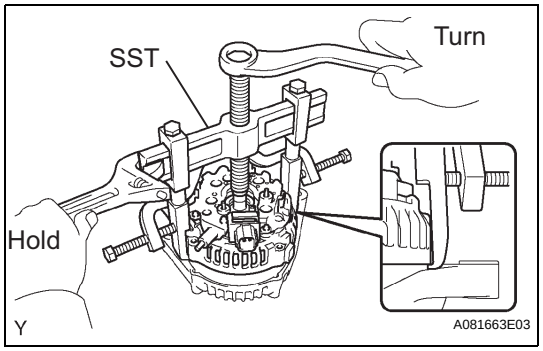

(b) Using SST, remove the coil.

SST 09950-40011 (09951-04020, 09952-04010, 09953-04020, 09954-04010, 09955-04071, 09957-04010, 09958-04011)

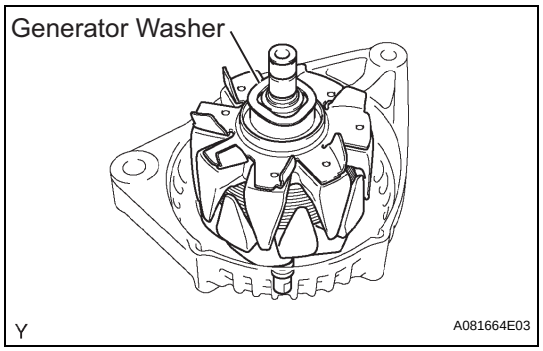

6. REMOVE GENERATOR ROTOR ASSEMBLY

(a) Remove the generator washer and the generator rotor.

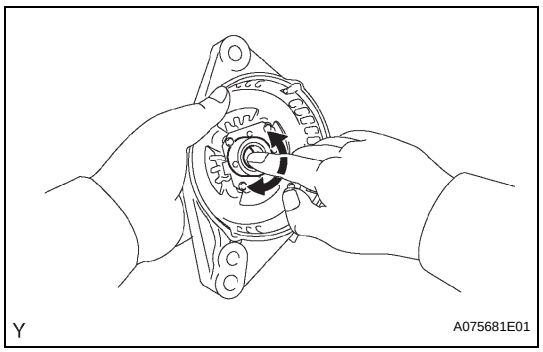

7. REMOVE GENERATOR DRIVE END FRAME BEARING

(a) Check the bearing whether it is rough or worn. If necessary, replace the bearing.

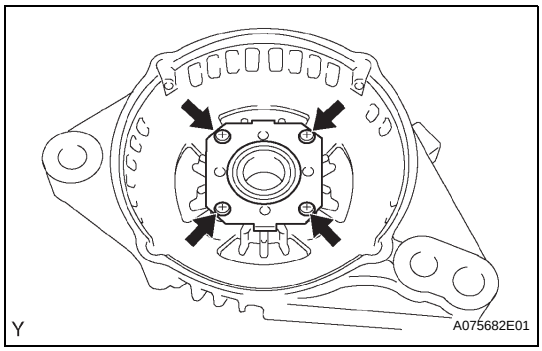

(b) Remove the 4 screws, then remove the retainer plate.

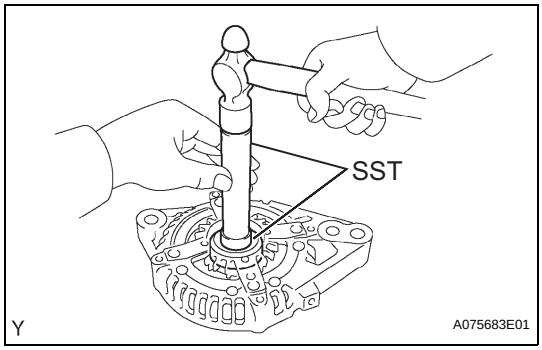

(c) Using SST, tap out the bearing.
SST 09950-60010 (09951-00250), 09950-70010 (09951-07100)

INSPECTION

1. INSPECT GENERATOR BRUSH HOLDER ASSEMBLY

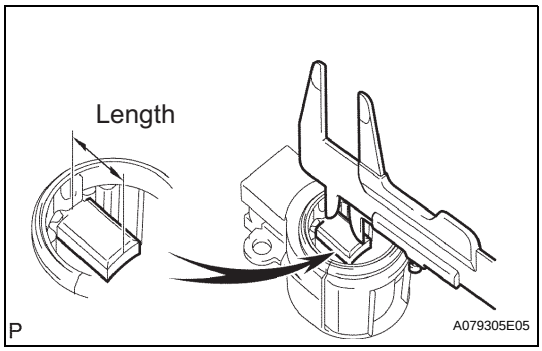

(a) Using vernier calipers, measure the exposed brush length.
Standard exposed brush length:
10.5 mm (0.413 in.)
Minimum exposed brush length:
4.5 mm (0.177 in.)
If the exposed brush length is less than the minimum, replace the brush holder.

2. INSPECT GENERATOR ROTOR ASSEMBLY

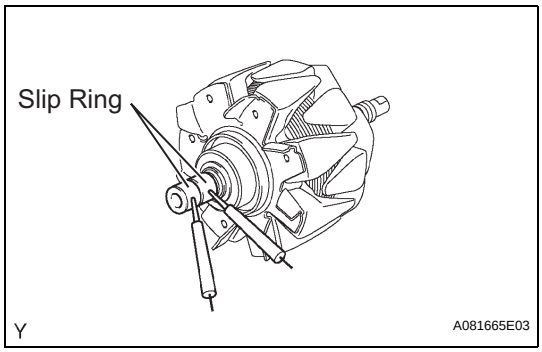

(a) Check the rotor for an open circuit.
(1) Using an ohmmeter, measure the resistance between the slip rings.
Standard:
2.3 to 2.7Ω at 20°C(68°F)
If the result is not as specified, replace the rotor.

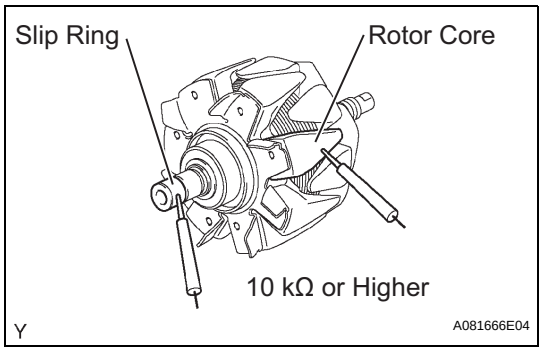

(b) Check the rotor for ground.
(1) Using an ohmmeter, measure the resistance between the slip ring and rotor.
Standard:
10 kΩ or higher
If the result is not as specified, replace the rotor.

(c) Inspect the slip rings.
(1) Check that the slip rings are not rough or scored. If rough or scored, replace the rotor.

CH

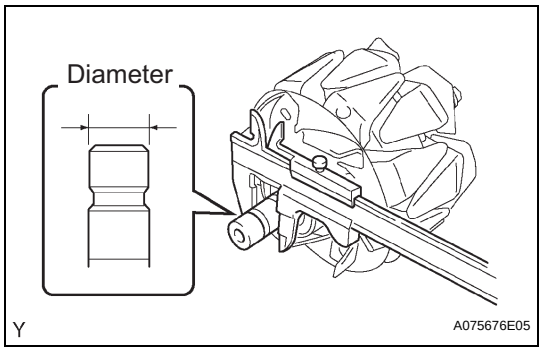

(2) Using vernier calipers, measure the slip ring diameter.
Standard diameter:
14.2 to 14.4 mm (0.559 to 0.567 in.)
Minimum diameter:
14.0 mm (0.551 in.)
If the diameter is less than the minimum, replace the rotor.

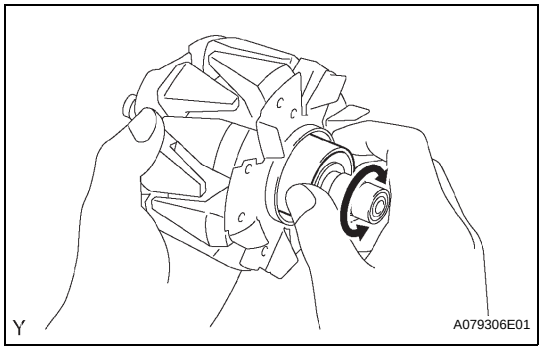

3. INSPECT GENERATOR ROTOR BEARING
(a) Check the bearing whether it is rough or worn. If necessary, replace the generator rotor.

REASSEMBLY

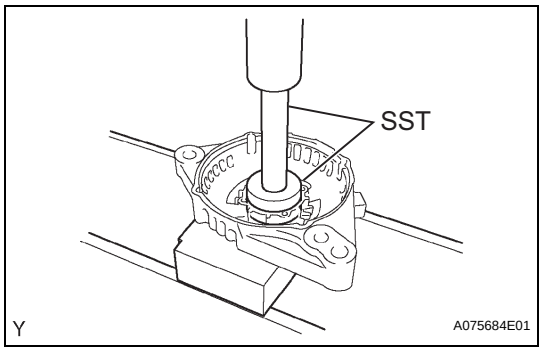

1. INSTALL GENERATOR DRIVE END FRAME BEARING
(a) Using SST and a press, press in a new bearing.
SST 09950-60010 (09951-00250), 09950-70010 (09951-07100)
(b) Install the retainer plate with the 4 screws.
Torque: 2.2 N*m (22 kgf*cm, 19 in.*lbf)

2. INSTALL GENERATOR ROTOR ASSEMBLY
(a) Place the drive end frame on the rotor.
(b) Install the rotor and washer.

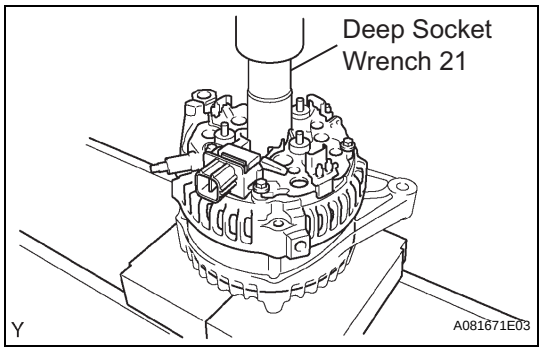

3. INSTALL GENERATOR COIL ASSEMBLY
(a) Using a deep socket wrench 21 and a press, in the generator rectifier end frame carefully.

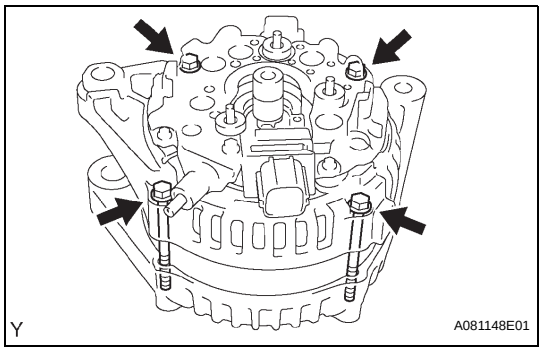

(b) Install the 4 bolts.
Torque: 5.8 N*m (59 kgf*cm, 51 in.*lbf)

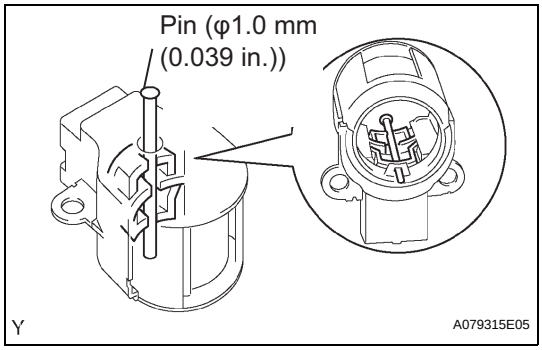

4. INSTALL GENERATOR BRUSH HOLDER ASSEMBLY

(a) While pushing the 2 brushes to inside the brush holder, insert a pin (ϕ1.0 mm (0.039 in.)) into the brush holder hole.

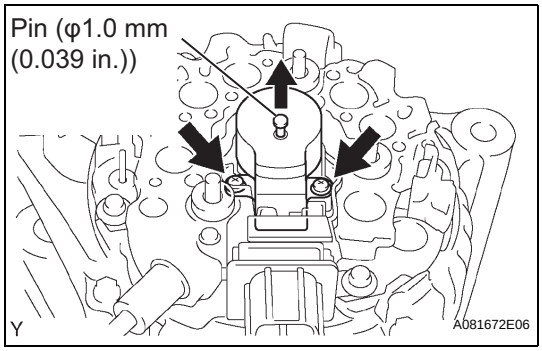

(b) Install the generator brush holder with the 2 screws.
Torque: 1.8 N*m (18 kgf*cm, 16 in.*lbf)

(c) Pull out the pin (ϕ1.0 mm (0.039 in.)) from the generator brush hold.

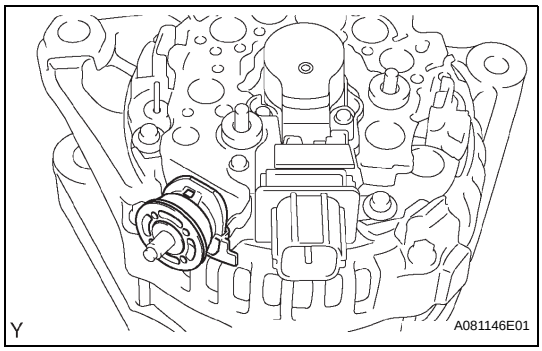

5. INSTALL TERMINAL INSULATOR

(a) Install the terminal insulator to the generator rectifier end frame.
NOTICE:
Pay attention the mounting orientation of the terminal insulator.

6. INSTALL REAR GENERATOR END COVER

(a) Install the rear end cover with the 3 nuts.
Torque: 4.6 N*m (47 kgf*cm, 41 in.*lbf)

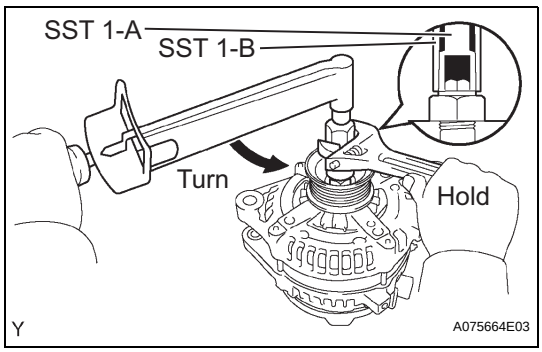

7. INSTALL GENERATOR PULLEY
SST 09820-63010 (09820-06010, 09820-06020)
HINT:

SST 1-A and B	09820-06010
SST 2	09820-06020

(a) Install the pulley onto the rotor shaft by tightening the pulley nut by hand.

(b) Hold SST 1-A with a torque wrench, and tighten SST 1-B clockwise to the specified torque.
Torque: 39 N*m (400 kgf*cm, 29 ft.*lbf)

CH

NOTICE:
Check that SST is secured to the rotor shaft.

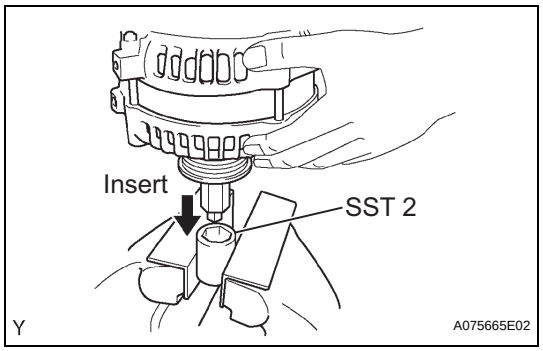

(c) Mount SST 2 in a vise.
(d) Insert SST 1-A and B into SST 2, and attach the pulley nut to SST 2.

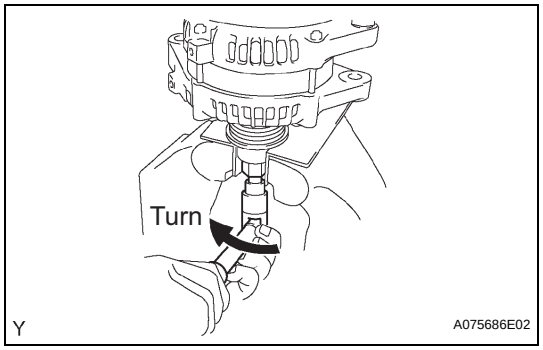

(e) Tighten the pulley nut by turning SST 1-A in the direction shown in the illustration.
Torque: 111 N*m (1,125 kgf*cm, 81 ft.*lbf)
(f) Remove the generator from SST 2.

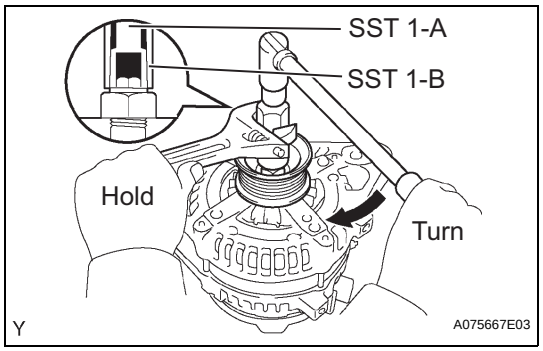

(g) Turn SST 1-B, and remove SST 1-A and B.
(h) Turn the pulley and check that the pulley moves smoothly.

GENERATOR (for BOSCH Made)

COMPONENTS

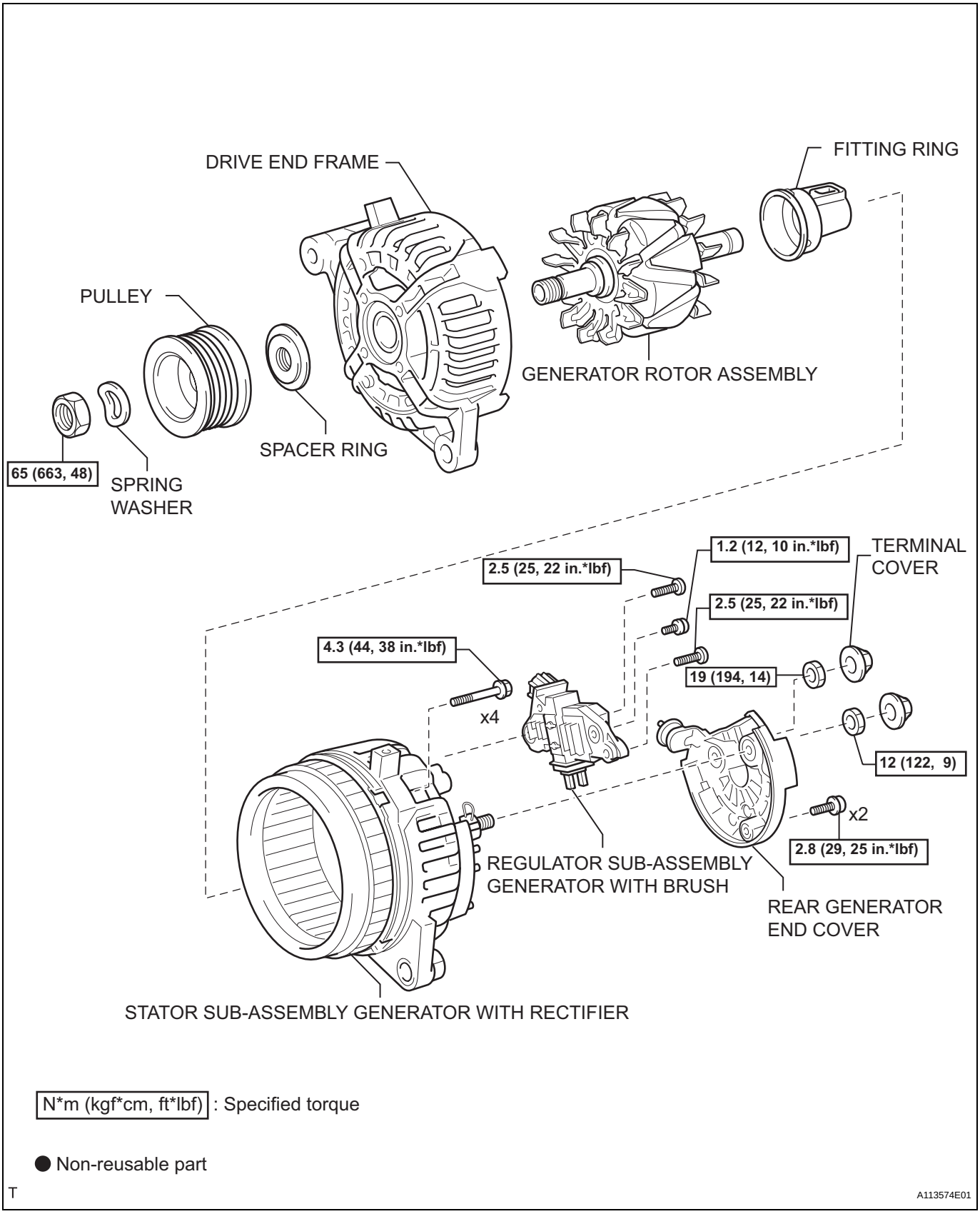

CH

N*m (kgf*cm, ft*lbf) : Specified torque

● Non-reusable part

T

A113574E01

REMOVAL

1. **DISCONNECT CABLE FROM NEGATIVE BATTERY TERMINAL**
2. **REMOVE V-BANK COVER (See page ES-414)**
3. **REMOVE RADIATOR SUPPORT TO FRAME SEAL LH (See page CO-15)**
4. **REMOVE FAN SHROUD (See page CO-15)**
5. **REMOVE GENERATOR ASSEMBLY**
   (a) Disconnect the wire harness.
      (1) Remove the bolt and wire harness stay.
      (2) Disconnect the connector from the generator assembly.
      (3) Remove the terminal cap and nut.
      (4) Disconnect the wire harness from terminal B.

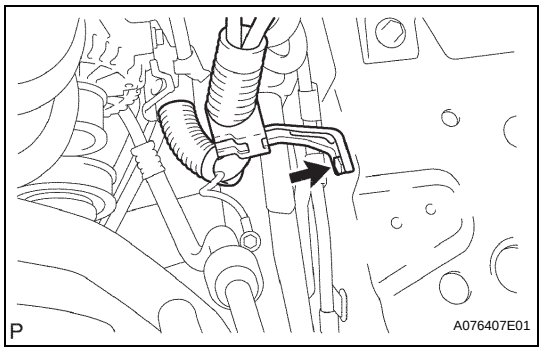

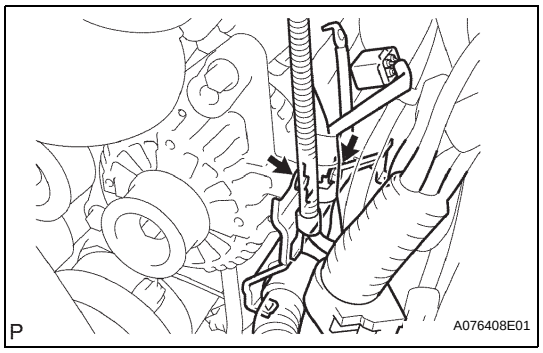

   (b) Remove the 2 bolts, then separate the wire harness clamp bracket from the generator assembly.

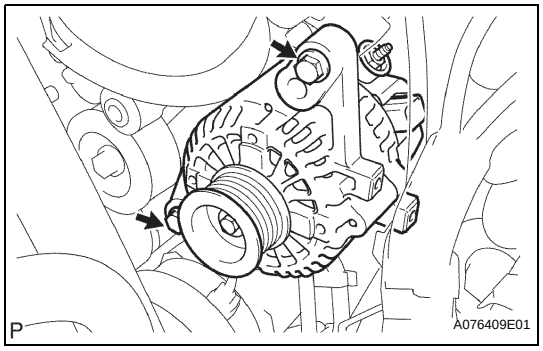

   (c) Remove the 2 bolts, then remove the generator assembly.

DISASSEMBLY

1. **REMOVE REAR GENERATOR END COVER**
   (a) Remove the 2 terminal covers by turning them counterclockwise.

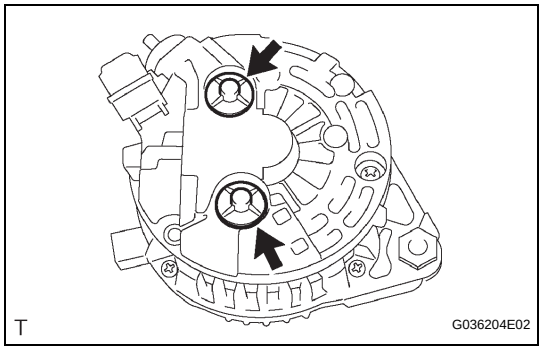

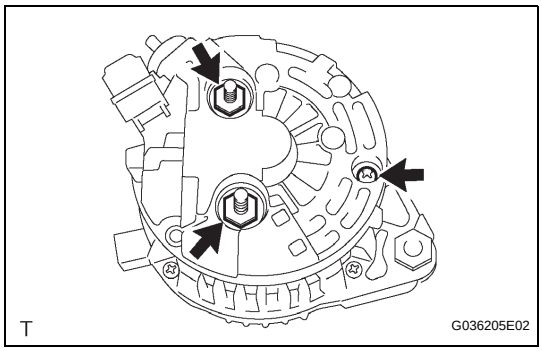

(b) Using a 15 mm socket wrench, remove the 2 nuts from the generator rear end cover.
(c) Remove the screw, then remove the generator rear end cover.

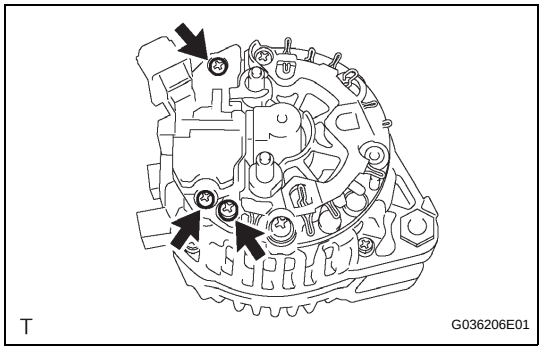

2. REMOVE REGULATOR SUB-ASSEMBLY GENERATOR W/BRUSH

(a) Remove the 3 screws, then remove the regulator generator with brush.

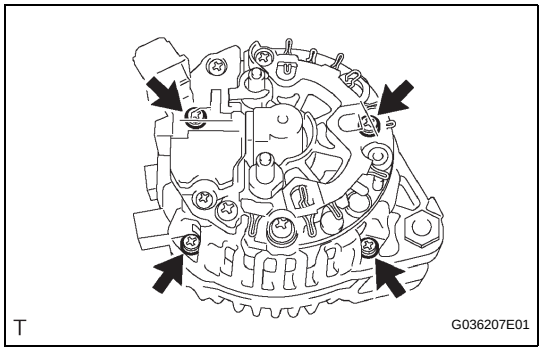

3. REMOVE STATOR SUB-ASSEMBLY GENERATOR W/ RECTIFIER

(a) Remove the 4 screws.

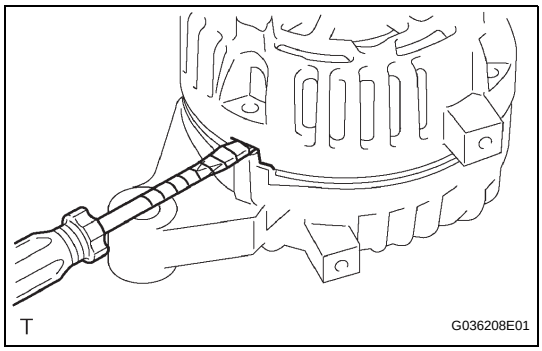

(b) Using a screwdriver, pry out the stator generator with rectifier.

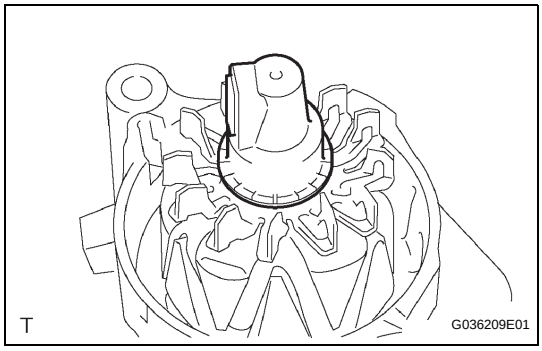

4. REMOVE BEARING SET GENERATOR

5. REMOVE PULLEY SET GENERATOR

(a) Clamp the swivel arm in a vise.
NOTICE:
Do not clamp the generator rotor in a vise.

CH

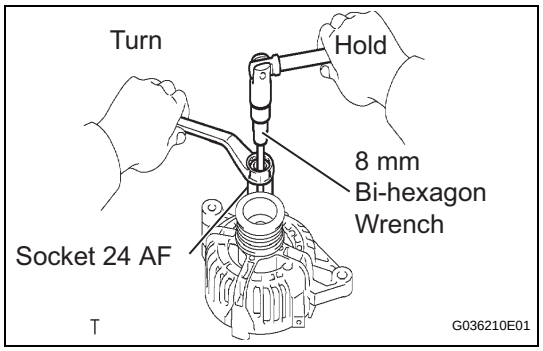

(b) Using a socket 24 AF and 8 mm bi-hexagon wrench, remove the nut and spring washer, then detach the pulley.

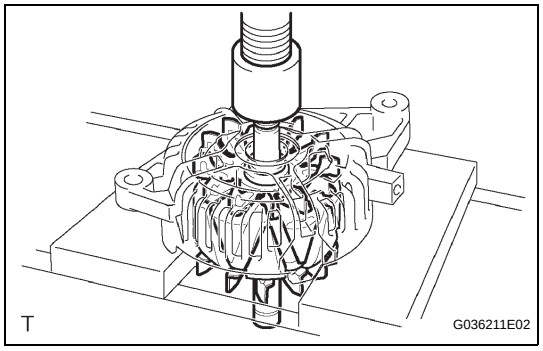

6. REMOVE GENERATOR ROTOR ASSEMBLY

(a) Using a press, press out the generator rotor assembly and spacer ring.

INSPECTION

1. INSPECT GENERATOR ROTOR ASSEMBLY

(a) Inspect the generator rotor assembly for an open circuit.

(1) Using an ohmmeter, measure the resistance between the slip rings.

Standard:

1.8 to 2.8 Ω at 20°C(68°F)

If the result is not as specified, replace the generator rotor.

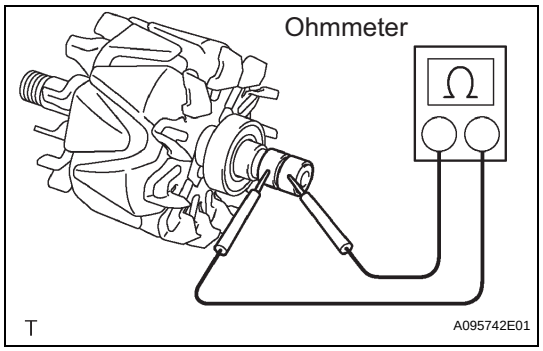

(b) Inspect the generator rotor assembly for ground.

(1) Using an ohmmeter, measure the resistance between the slip ring and generator rotor assembly.

Standard:

10 kΩ or higher

If the result is not as specified, replace the generator rotor.

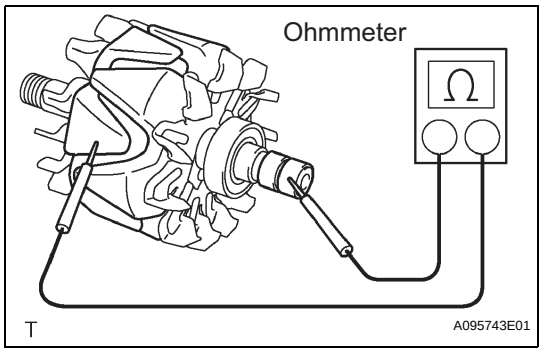

(c) Check the appearance.

(1) Check that the slip rings are not rough or scored.

If rough or scored, replace the generator rotor.

(2) Using vernier calipers, measure the slip ring diameter.

Standard diameter:

15.3 to 15.5 mm (0.602 to 0.610 in.)

Minimum diameter:

14.9 mm (0.587 in.)

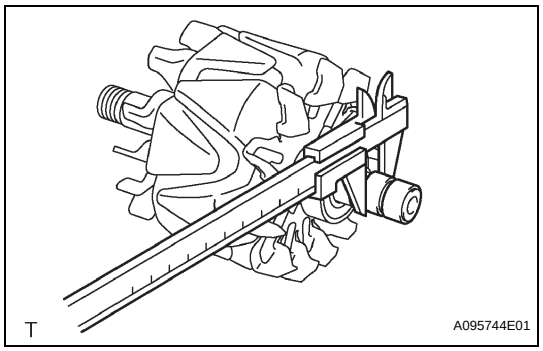

If the diameter is less than the minimum, replace the generator rotor.

2. INSPECT STATOR SUB-ASSEMBLY GENERATOR WITH RECTIFIER

HINT:
For terminal positions of the stator generator, refer to the illustration below.

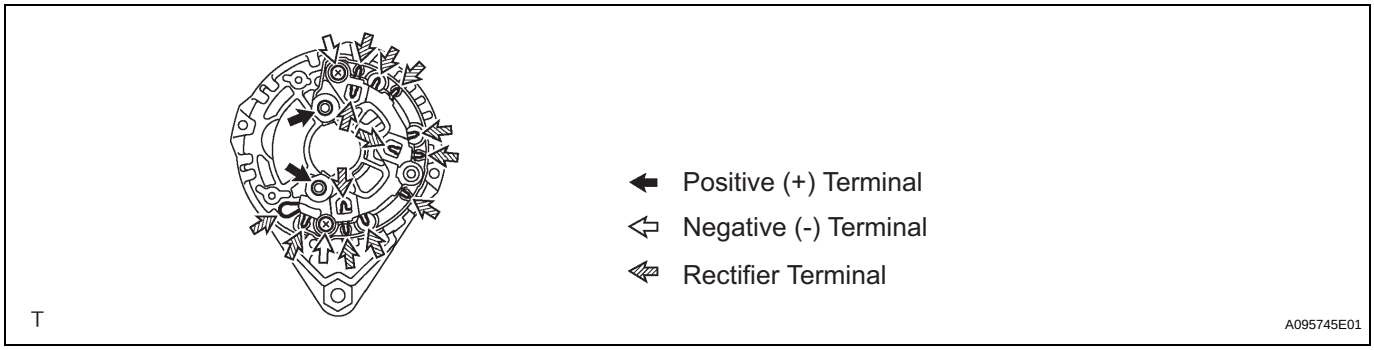

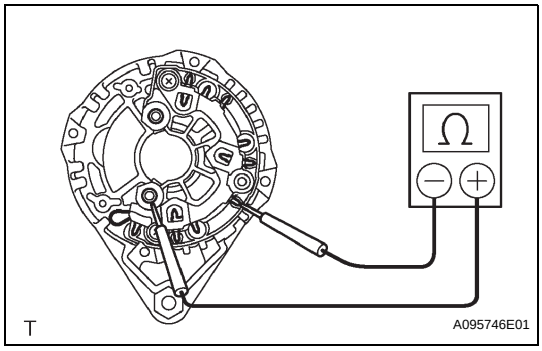

(a) Inspect the positive (+) rectifier.
HINT:
Inspect the positive terminal after pulling it up.
(1) Using an ohmmeter, connect the positive (+) tester probe to the positive (+) terminal and the negative (-) tester probe to each rectifier terminal.
(2) Measure the resistance between the positive (+) terminal and rectifier terminal.
Standard:
Below 1 Ω
If the result is not as specified, replace the stator generator.
(3) Reverse the polarity of the tester probes and repeat step (1).
(4) Measure the resistance between the positive (+) terminal and rectifier terminal.
Standard:
10 kΩ or higher
If the result is not as specified, replace the stator generator.

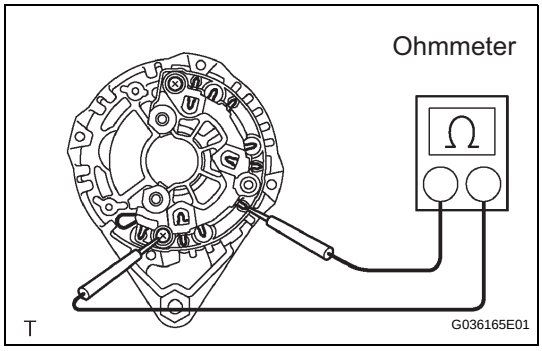

(b) Inspect the negative (-) rectifier.
(1) Using an ohmmeter, connect the positive (+) tester probe to each negative (-) terminal and the negative (-) tester prove to each rectifier terminal.
(2) Measure the resistance between the negative (-) terminal and rectifier terminal.
Standard:
10 kΩ or higher
If the result is not as specified, replace the stator generator.
(3) Reverse the polarity of the tester probes and repeat step (1).

(4) Measure the resistance between the negative (-) terminal and rectifier terminal.
Standard:
Below 1 Ω
If the result is not as specified, replace the stator generator.

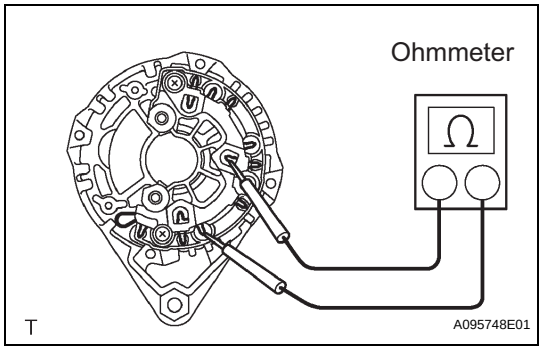

(c) Inspect the stator for an open circuit.
(1) Using an ohmmeter, measure the resistance between the rectifier terminals.
Standard:
Below 1 Ω
If the result is not as specified, replace the stator generator.

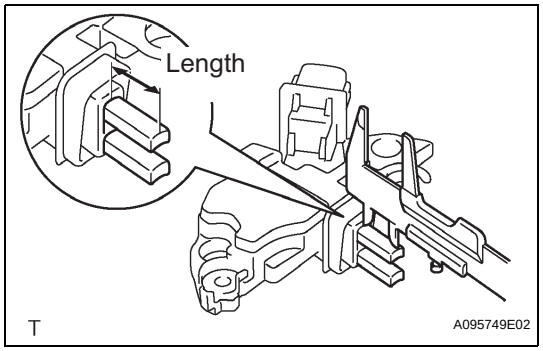

3. INSPECT BRUSH
(a) Using vernier calipers, measure the brush length.
Exposed length on new brush:
13.2 mm (0.520 in.)
Minimum exposed length:
6 mm (0.236 in.)
If the exposed length is less than the minimum, replace the voltage regulator and brush assembly.

REASSEMBLY

1. INSTALL GENERATOR ROTOR ASSEMBLY
(a) Using SST and a press, press in the generator rotor assembly.
SST 09285-76010
NOTICE:
Avoid misalignment during pressing.

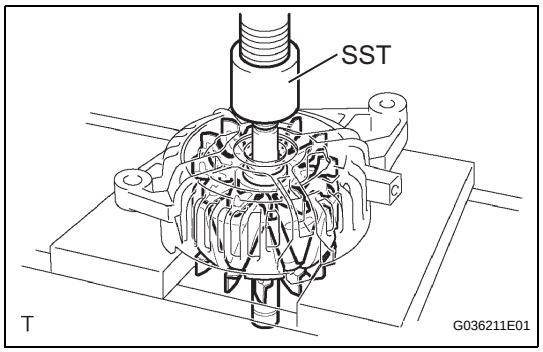

2. INSTALL PULLEY SET GENERATOR
(a) Install the spacer ring.

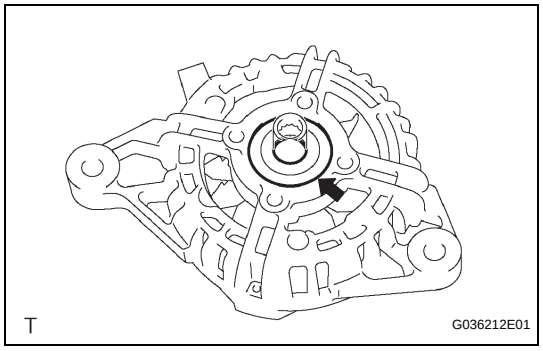

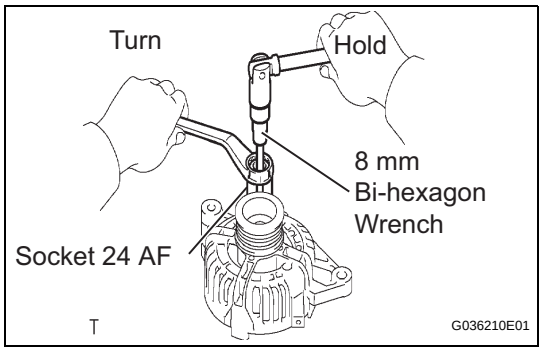

(b) Using a socket 24 AF and 8 mm bi-hexagon wrench, install the pulley with the spring washer and nut.
Torque: 65 N*m (663 kgf*cm, 48 ft.*lbf)

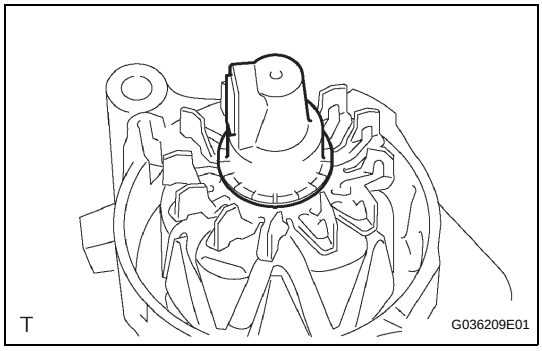

3. INSTALL BEARING SET GENERATOR

(a) Align the 3 cutouts of the bearing set generator with the stator generator with rectifier.

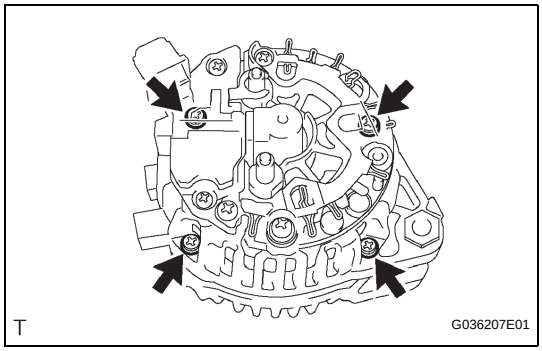

4. INSTALL STATOR SUB-ASSEMBLY GENERATOR WITH RECTIFIER

(a) Align the key of the drive end frame with the keyway of the stator sub-assembly generator with rectifier.
(b) Install the stator generator with rectifier with the 4 bolts.
Torque: 4.3 N*m (44 kgf*cm, 38 in.*lbf)

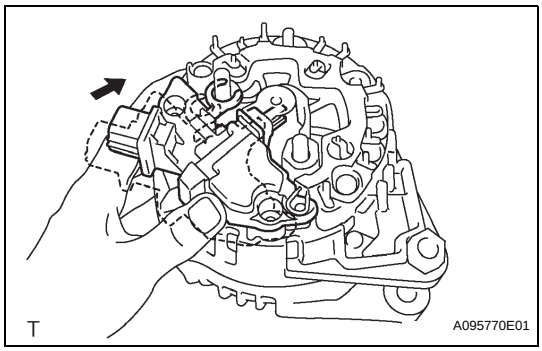

5. INSTALL REGULATOR SUB-ASSEMBLY GENERATOR WITH BRUSH

(a) Attach the brushes and terminals to the rectifier end frame of the regulator generator with brush.
(b) Install the regulator generator with brush with the 3 screws.
HINT:
Install the screw B into the position shown in the illustration.

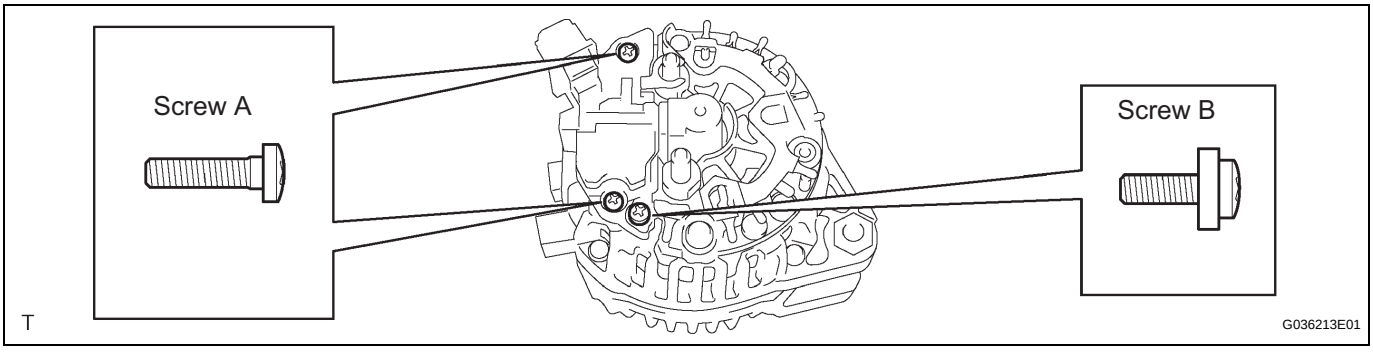

CH

Torque: 2.5 N*m (25 kgf*cm, 22 in.*lbf) for screw A
1.2 N*m (12 kgf*cm, 11 in.*lbf) for screw B

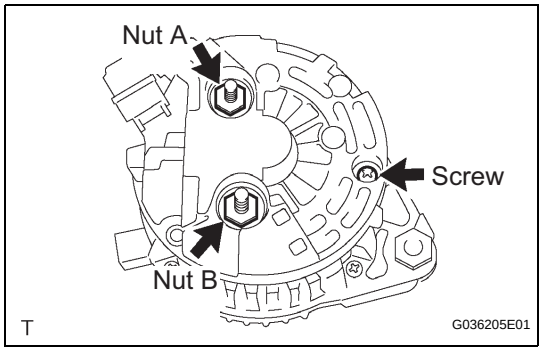

6. INSTALL REAR GENERATOR END COVER

(a) Install the generator rear end cover with the 2 nuts and screw.

Torque: 19 N*m (194 kgf*cm, 14 ft.*lbf) for nut A
12 N*m (122 kgf*cm, 9 ft.*lbf) for nut B
2.8 N*m (29 kgf*cm, 25 in.*lbf) for screw

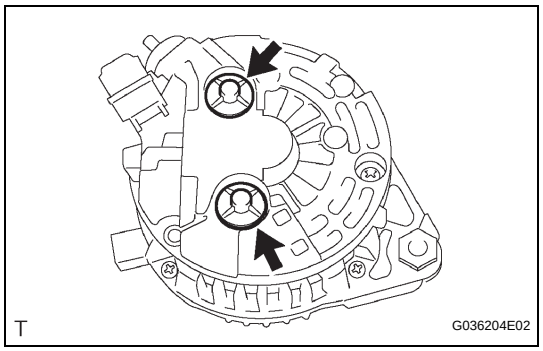

(b) Install the 2 terminal covers by turning them clockwise.

CHARGING SYSTEM

PRECAUTION

1. PRECAUTION

(a) Check that the battery cables are connected to the correct terminals.
(b) Disconnect the battery cables if the battery is charged quickly.
(c) Do not perform tests using a high voltage insulation resistance tester.
(d) Never disconnect any cable from the battery while the engine is running.
(e) Check that the charging cables are tightly connected to terminal B of the generator and the fuse box.
(f) Do not check whether the generator generates current or not while terminal F is connected to the other terminals.

PARTS LOCATION

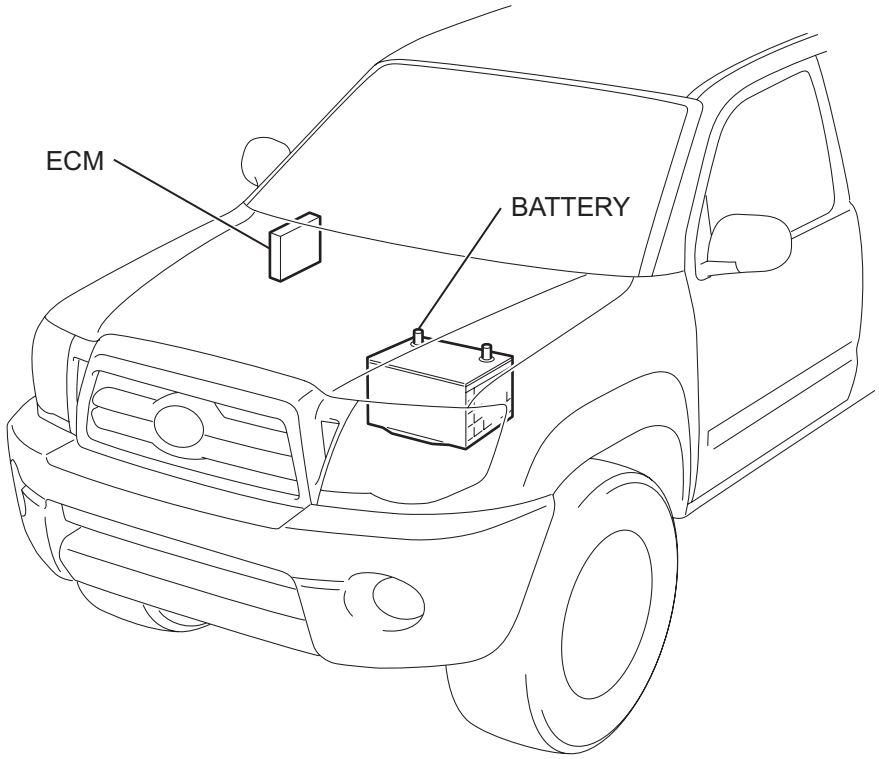

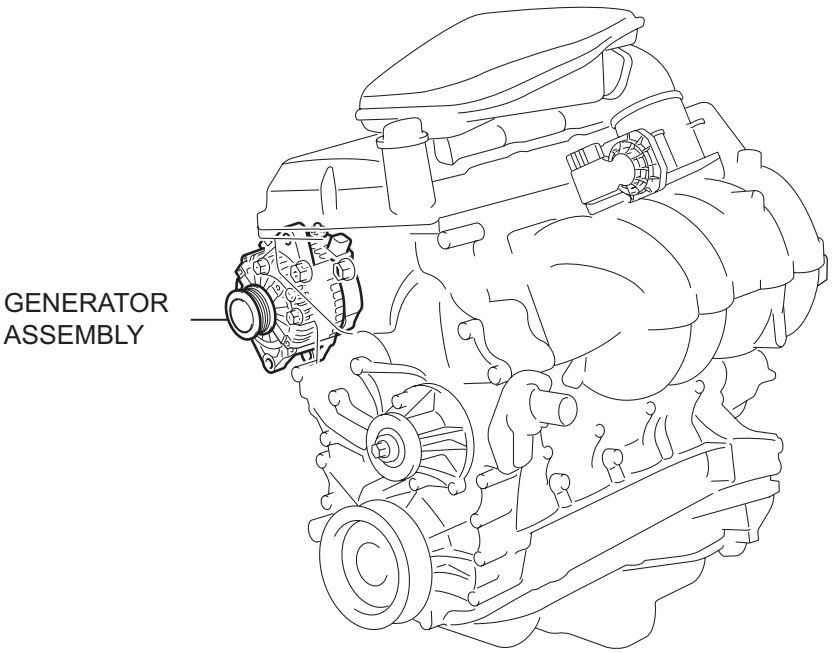

T

A113630E01

GENERATOR

COMPONENTS

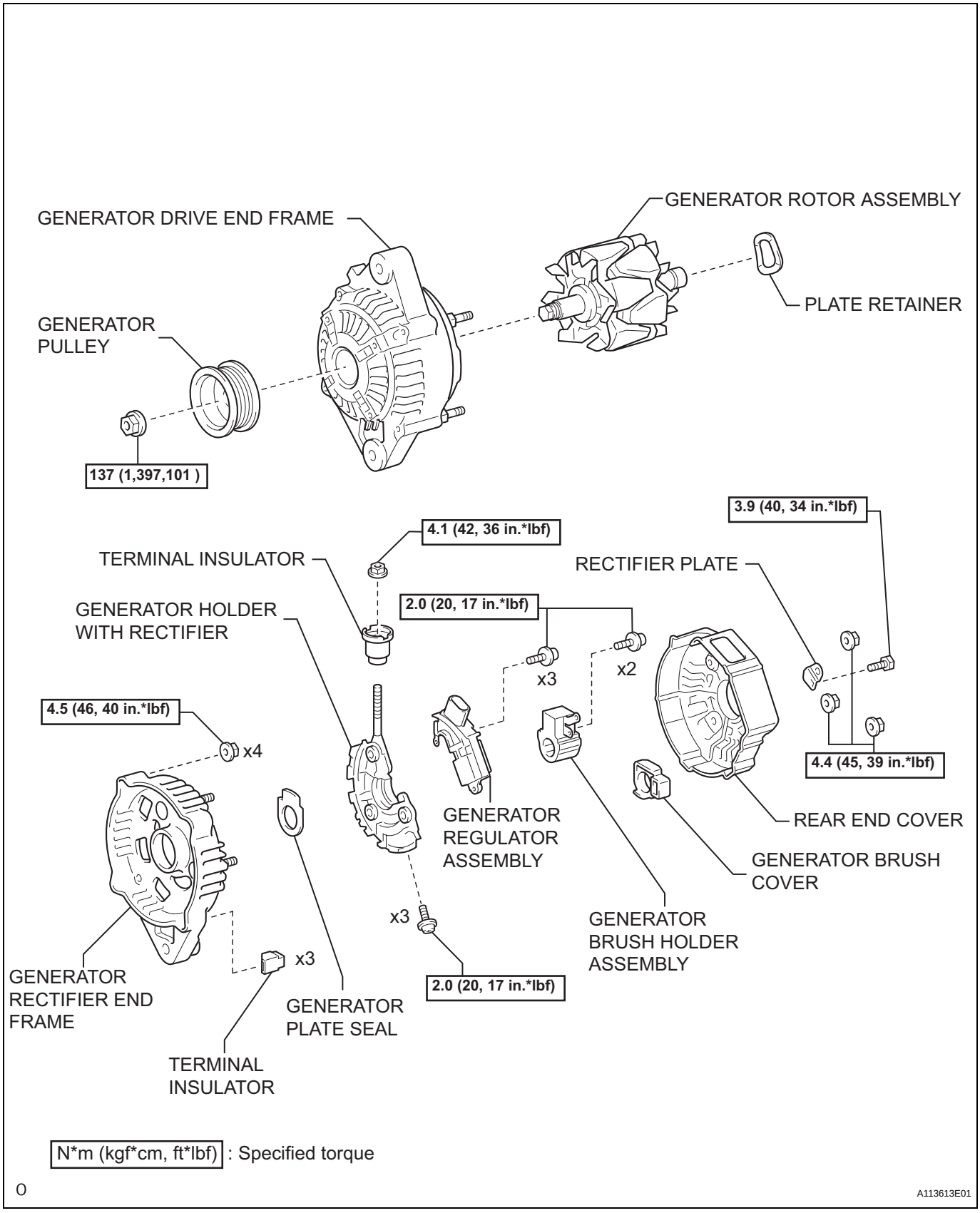

CH

REMOVAL

1. **DISCONNECT CABLE FROM NEGATIVE BATTERY TERMINAL**
2. **REMOVE FAN AND GENERATOR V BELT (See page EM-5)**
3. **REMOVE GENERATOR ASSEMBLY**
   (a) Remove the terminal cap.
   (b) Remove the nut, then remove the generator wire.
   (c) Disconnect the generator connector.

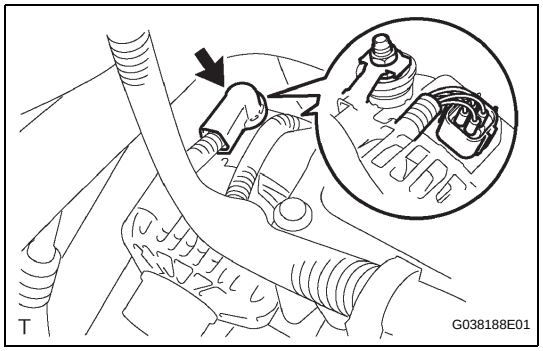

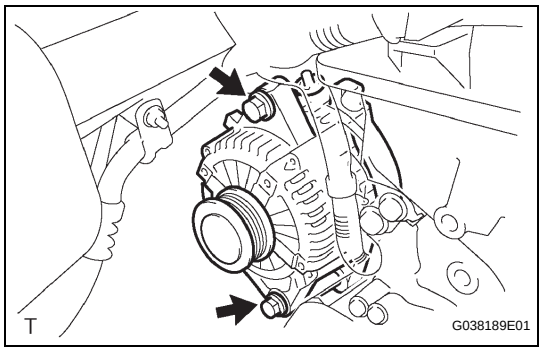

   (d) Remove the 2 bolts, then remove the generator.

DISASSEMBLY

1. **REMOVE GENERATOR PULLEY**
   SST 09820-63010 (09820-06010, 09820-06020)
   HINT:

SST 1-A and B	09820-06010
SST 2	09820-06020

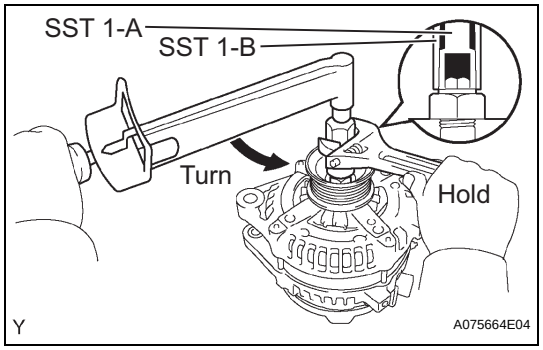

   (a) Hold SST 1-A with a torque wrench, and tighten SST 1-B clockwise with the specified torque.
   Torque: 39 N*m (400 kgf*cm, 29 ft.*lbf)
   NOTICE:
   Check that the SST is secured to the generator rotor shaft.
   (b) Mount SST 2 in a vise.
   (c) Insert SST 1-A and B into SST 2, and attach the generator pulley nut to SST 2.

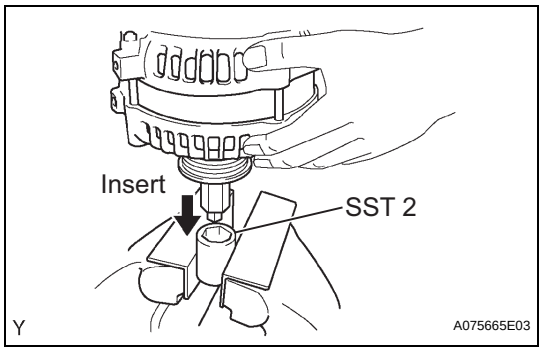

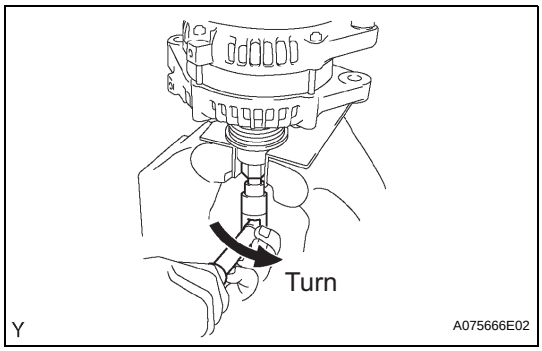

(d) To loosen the generator pulley nut, turn SST 1-A in the direction shown in the illustration.
NOTICE:
To prevent damage to the rotor shaft, do not loosen the generator pulley nut more than one-half turn.
(e) Remove the generator from SST 2.

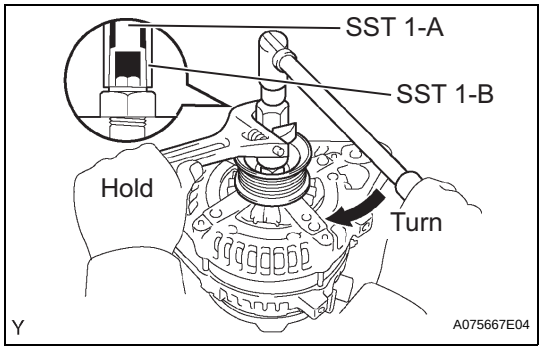

(f) Turn SST 1-B, and remove SST 1-A and B.
(g) Remove the generator pulley nut and generator pulley.

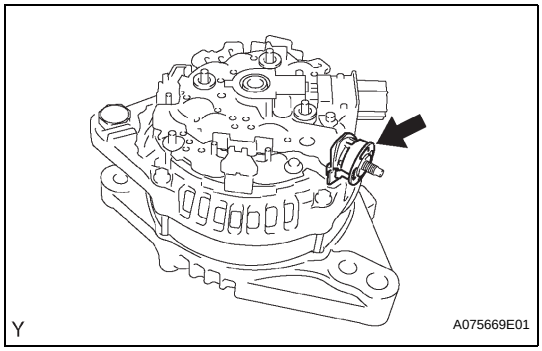

2. REMOVE GENERATOR BRUSH HOLDER ASSEMBLY
(a) Remove the nut and terminal insulator.
(b) Remove the nut, screw and rectifier plate.
(c) Remove the 2 nuts and rear end cover.

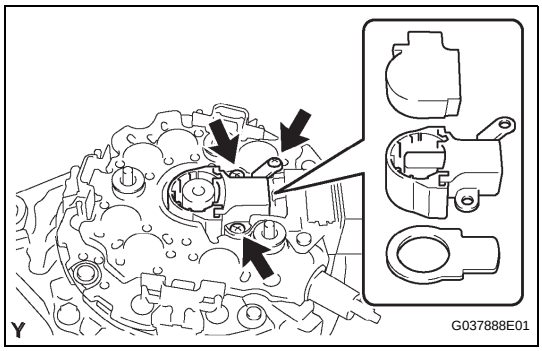

(d) Remove the brush cover from the generator brush holder assembly.
(e) Remove the 3 screws and generator brush holder assembly.
(f) Remove the plate seal.

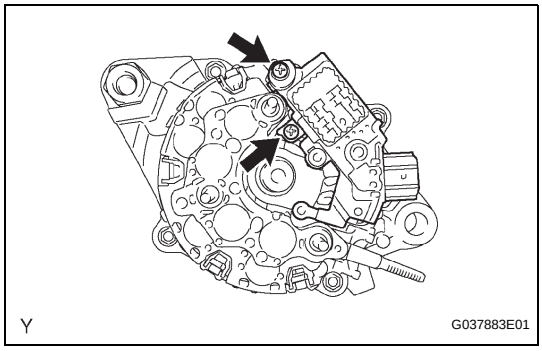

3. REMOVE GENERATOR REGULATOR ASSEMBLY
(a) Remove the 2 screws and generator regulator assembly.

CH

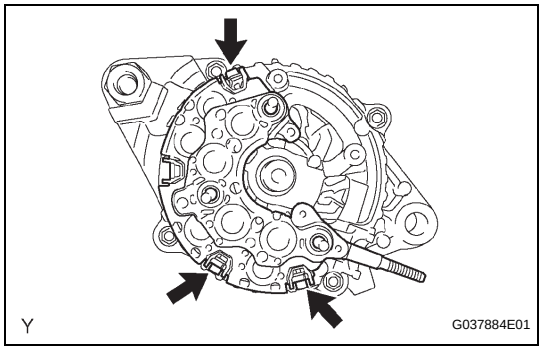

4. REMOVE GENERATOR HOLDER WITH RECTIFIER

(a) Remove the 3 screws and generator rectifier holder.

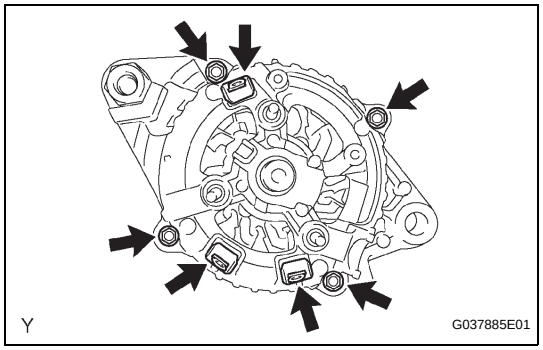

5. REMOVE GENERATOR ROTOR ASSEMBLY

(a) Remove the 3 terminal insulators from the rectifier end frame.

(b) Remove the 4 nuts.

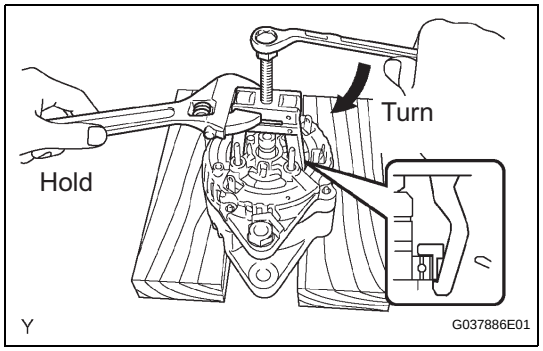

(c) Using SST, remove the rectifier end frame.
SST 09286-46011

(d) Remove the plate retainer.

(e) Remove the generator rotor assembly from the drive end frame.
NOTICE:
Do not drop the generator rotor assembly.
HINT:
If the generator rotor is engaged too firmly, lightly tap the generator rotor shaft to remove it using a plastic hammer.

INSPECTION

1. INSPECT GENERATOR BRUSH HOLDER ASSEMBLY

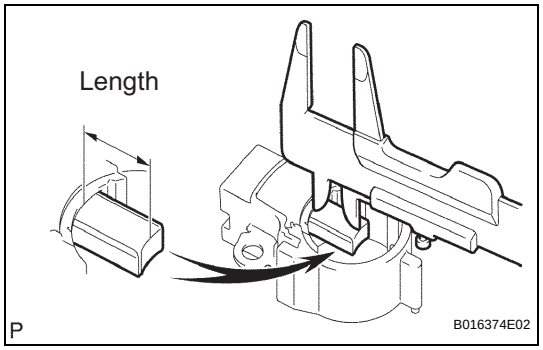

(a) Using vernier calipers, measure the exposed brush length.
Standard exposed length:
9.5 to 11.5 mm (0.374 to 0.453 in.)
Minimum exposed length:
4.5 mm (0.177 in.)
If the exposed length is less than the minimum, replace the generator brush holder assembly.

2. INSPECT GENERATOR REGULATOR ASSEMBLY

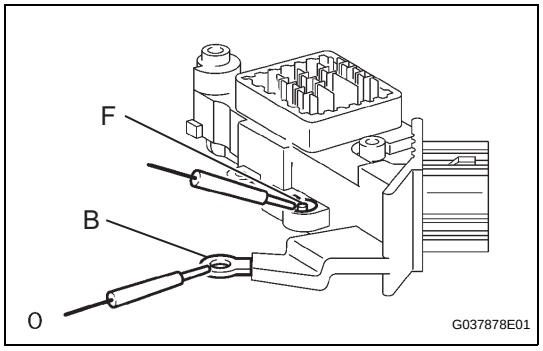

(a) Using an ohmmeter, check the continuity between terminals F and B.
Standard:
When the positive and negative poles between terminals F and B are exchanged, there is continuity in one way but no continuity in another way.
If the continuity is not specified, replace the generator regulator assembly.

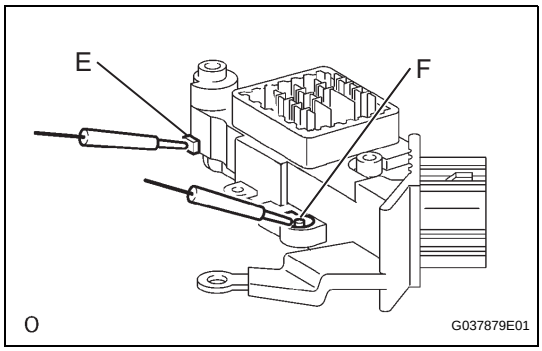

(b) Using an ohmmeter, check the continuity between terminals F and E.

Standard:

When the positive and negative poles between terminals F and B are exchanged, there is continuity in one way but no continuity in another way.

If the continuity is not specified, replace the generator regulator assembly.

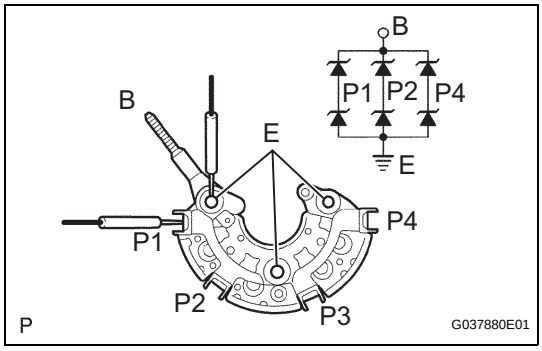

3. INSPECT GENERATOR HOLDER WITH RECTIFIER

(a) Using an ohmmeter, check the continuity between terminals P1, P2, P3, P4 and B, and between P1, P2, P3, P4 and E.

Standard

Terminals	Specified Condition
P1, P2, P3, P4 and B	Continuity in one direction but no continuity in the other direction
P1, P2, P3, P4 and E	Continuity in one direction but no continuity in the other direction

If the continuity is not as specified, replace the generator rectifier holder.

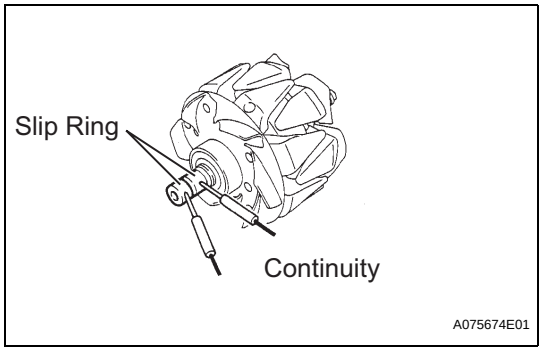

4. INSPECT GENERATOR ROTOR ASSEMBLY

(a) Check for open in the generator rotor circuit.

(1) Using an ohmmeter, measure the resistance between the slip rings.

Standard resistance:

1.7 to 2.1 Ω at 20°C(68°F)

If the resistance is not as specified, replace the generator rotor assembly.

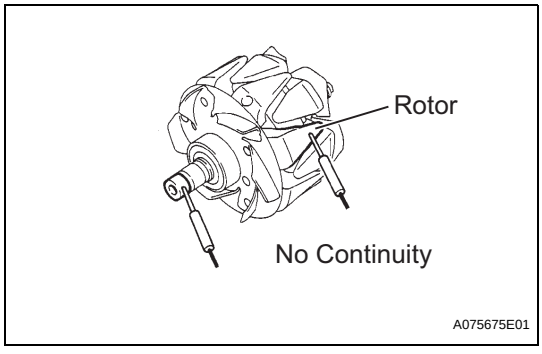

(b) Check for short in the generator rotor circuit.

(1) Using an ohmmeter, check that there is no continuity between the slip ring and generator rotor assembly.

If there is continuity, replace the generator rotor assembly.

(c) Inspect slip rings.

(1) Check that the slip rings are not rough or scored.

If rough or scored, replace the generator rotor assembly.

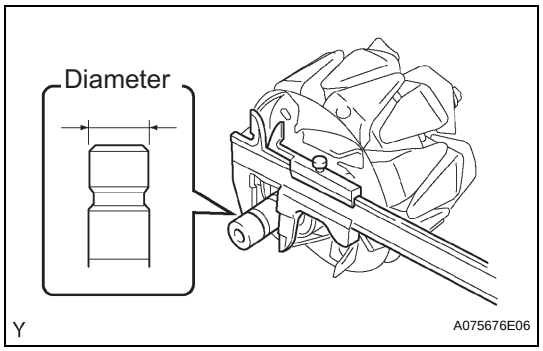

(2) Using vernier calipers, measure the slip ring diameter.

Standard diameter:

14.2 to 14.4 mm (0.559 to 0.567 in)

Minimum diameter:

14.0 mm (0.551 in)

If the diameter is less than the minimum, replace the generator rotor assembly.

AUTOMATIC TRANSMISSION SYSTEM

PRECAUTION

1. **INITIALIZATION**
   NOTICE:
   - **Perform the AT initialization when replacing the automatic transmission assembly, engine assembly or ECM.**
   - **Perform the REGISTRATION (VIN registration) when replacing the ECM. (See page ES-16).**

   HINT:
   Initialization can be completed by only disconnecting the battery terminal.
2. **FOR USING INTELLIGENT TESTER**
   CAUTION:
   Observe the following instructions for safety reasons:
   - **Read its instruction books before using the tester.**
   - **Prevent the tester cable from being caught on the pedals, shift lever and steering wheel when driving with the tester connected to the vehicle.**
   - **When driving the vehicle for testing purposes using the tester, two persons are required. One is for driving the vehicle, and the other operates the tester.**
3. **CONNECT BATTERY NEGATIVE TERMINAL**
   (a) Connect the battery negative terminal to the cable and run the engine at no less than 2,000 rpm for 1 minute.
   NOTICE:
   If the engine exceeds 2,000 rpm, the clutch is automatically disengaged by the compressor protection control system.
4. **DISASSEMBLY AND REASSEMBLY**
   CAUTION:
   When using compressed air, always aim away from yourself to prevent Automatic Transmission Fluid (ATF) or kerosene from spraying on your face.
   NOTICE:
   - **The automatic transmission is composed of precision-made parts, necessitating careful inspection before reassembly because even a small nick could cause fluid leakage or affect performance.**
   - **The procedures are organized so that you work on only one component group at a time. This will help avoid confusion with similar-looking parts of different sub-assemblies being on your workbench at the same time.**
   - **The component groups are inspected and repaired from the converter housing side.**

- **Whenever possible, complete the inspection, repair and reassembly before proceeding to the next component group. If a defect is found in a certain component group during reassembly, inspect and repair this group immediately. If a component group cannot be assembled because parts are being ordered, be sure to keep all parts of the group in a separate container while proceeding with disassembly, inspection, repair and reassembly of other component groups.**
- **When changing the automatic transmission fluid, use only "Toyota Genuine ATF Type T- IV" (ATF JWS3309 or NWS6500)**
- **All disassembled parts should be washed clean, and compressed air should be blown through any fluid passages and holes.**
- **Dry all parts with compressed air. Never use cloth.**
- **The recommended ATF or kerosene should be used for cleaning.**
- **After cleaning, the parts should be arranged in the order they were removed for efficient inspection, repairs, and reassembly.**
- **When disassembling a valve body, be sue to match each valve with its corresponding spring.**
- **New discs for the brakes and clutches that will be used for replacement must be soaked in ATF for at least 15 minutes before reassembly.**
- **All oil seal rings, clutch discs, clutch plates, rotating parts, and sliding surfaces should be coated with ATF prior to reassembly.**
- **All old gaskets and rubber O-rings must be replaced.**
- **Do not apply adhesive cement to gaskets and similar parts.**
- **Make sure that the ends of the snap rings are not aligned with any cutouts. Also make sure that snap rings are correctly installed into the grooves.**
- **If a worn bushing is to be replaced, the sub-assembly containing the bushing must also be replaced.**
- **Check the thrust bearings and races for wear or damage. Replace if necessary.**
- **Use petroleum jelly to keep parts in place.**

- **When working with FIPG material, perform the following:**
  Using a razor blade and gasket scraper, remove all old FIPG material from the gasket surface.
  Clean all components thoroughly to remove all foreign matter.
  Clean both sealing surfaces with a non-residue solvent.
  Apply FIPG material in a continuous line approximately 1 mm (0.04 in.) in diameter on the sealing surface.
  Reassemble parts within 10 minutes of applying FIPG material. Failing to do so will require the FIPG material to be removed and reapplied.

AUTOMATIC TRANSMISSION FLUID

ON-VEHICLE INSPECTION

1. CHECK THE FLUID LEVEL

HINT:

Drive the vehicle until the engine and transmission are at normal operating temperature.

Fluid temperature:

70 to 80 °C (158 to 176 °F)

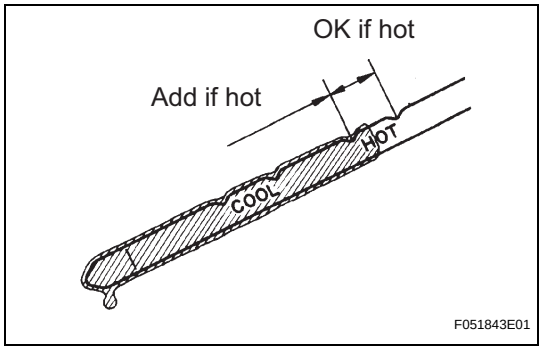

(a) Park the vehicle on a level surface and engage the parking brake.

(b) With the engine idling and the brake pedal depressed, shift the shift lever into all positions from P to L, and then return it to the P position.

(c) Pull out the oil level gage and wipe it clean.

(d) Push it back fully into the pipe.

(e) Pull it out and check that the fluid level is within the HOT range.

If there is any leakage, repair or replace O-rings, FIPGs, oil seals, plugs or other parts.

EXTENSION HOUSING REAR OIL SEAL

REMOVAL

1. **REMOVE PROPELLER SHAFT ASSEMBLY (for Regular Cab) (See page PR-3)**
2. **REMOVE PROPELLER WITH CENTER BEARING SHAFT ASSEMBLY (for Except Regular Cab) (See page PR-27)**
3. **DRAIN AUTOMATIC TRANSMISSION FLUID**
   (a) Remove the drain plug, gasket and drain ATF.
   (b) Install a new gasket and drain plug.
   Torque: 20 N*m (205 kgf*cm, 15 ft.*lbf)
4. **REMOVE AUTOMATIC TRANSMISSION EXTENSION HOUSING OIL SEAL**
   (a) Using SST, remove the oil seal.
   SST 09308-00010

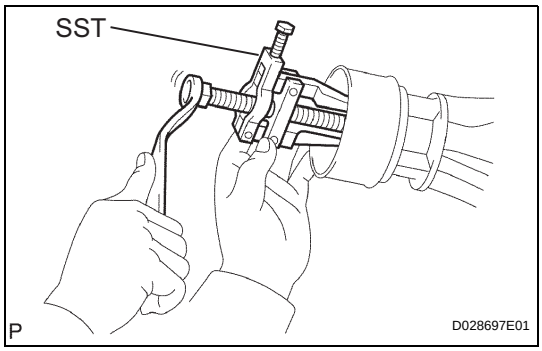

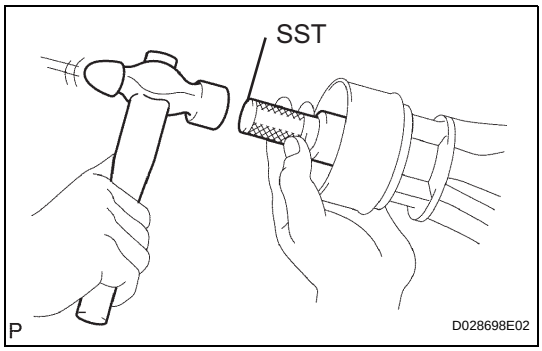

INSTALLATION

1. **INSTALL AUTOMATIC TRANSMISSION EXTENSION HOUSING OIL SEAL**
   (a) Using SST and a hammer, carefully tap a new oil seal in until it is flush with the automatic transmission extension housing oil seal.
   SST 09325-40010
   Oil seal depth from flat end:
   5.8 to 6.2 mm (0.228 to 0.244 in.)
   (b) Coat the oil seal lip with MP grease.
2. **INSTALL PROPELLER WITH CENTER BEARING SHAFT ASSEMBLY (for Except Regular Cab) (See page PR-32)**
3. **INSTALL PROPELLER SHAFT ASSEMBLY (for Regular Cab) (See page PR-6)**
4. **ADD AUTOMATIC TRANSMISSION FLUID**
5. **INSPECT AUTOMATIC TRANSMISSION FLUID (See page AT-85)**

SPEED SENSOR

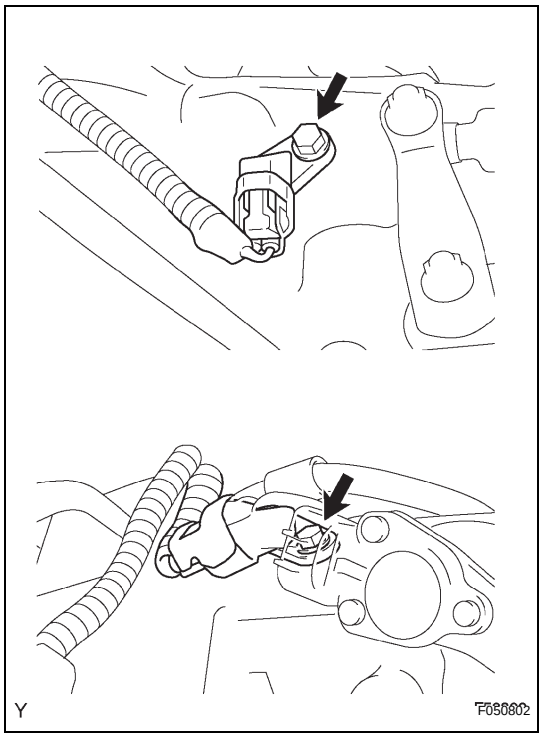

REMOVAL

1. REMOVE SPEED SENSOR

(a) Disconnect the speed sensor connector.
(b) Remove the bolt and speed sensor.
(c) Remove the O-ring from the speed sensor.

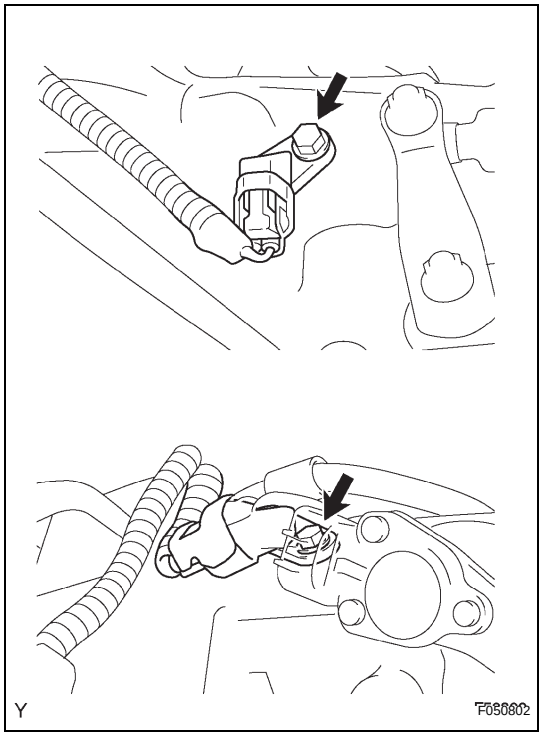

INSTALLATION

1. INSTALL SPEED SENSOR

(a) Coat a new O-ring with ATF.
(b) Install the speed sensor with the bolt.
Torque: 5.4 N*m (55 kgf*cm, 48 in.*lbf)
(c) Connect the speed sensor connector.

TRANSMISSION WIRE

REMOVAL

CAUTION:
When working with FIPG material, you must observe the following guidelines.

- Using a razor blade and gasket scraper, remove all the old FIPG material from the gasket surfaces.
- Thoroughly clean all components to remove all loose material.
- Clean both sealing surfaces with a non-residue solvent.
- Apply FIPG in an approximately 1 mm (0.04 in.) wide bead along the sealing surface.
- Parts must be assembled within 10 minutes of application. Otherwise, the FIPG material must be removed and reapplied.

1. **DISCONNECT CABLE FROM NEGATIVE BATTERY TERMINAL**

2. **DRAIN AUTOMATIC TRANSMISSION FLUID**
   (a) Remove the drain plug, gasket and drain ATF.
   (b) Install a new gasket and drain plug.
   Torque: 20 N*m (204 kgf*cm, 15 ft.*lbf)

3. **REMOVE TRANSMISSION OIL FILLER TUBE SUB-ASSEMBLY (See page AT-110)**

4. **REMOVE AUTOMATIC TRANSMISSION OIL PAN SUB-ASSEMBLY (See page AT-94)**

5. **REMOVE VALVE BODY OIL STRAINER ASSEMBLY (See page AT-95)**

6. **REMOVE TRANSMISSION WIRE**
   (a) Disconnect the 4 connectors from each shift solenoid valve.

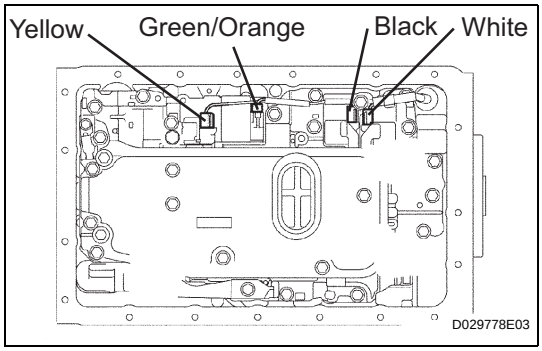

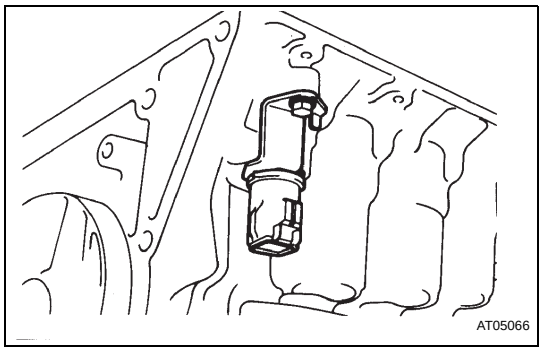

   (b) Remove the bolt and the stopper plate from the case.
   (c) Pull the solenoid wiring out of the transmission case.
   (d) Remove the O-ring from the solenoid wiring.

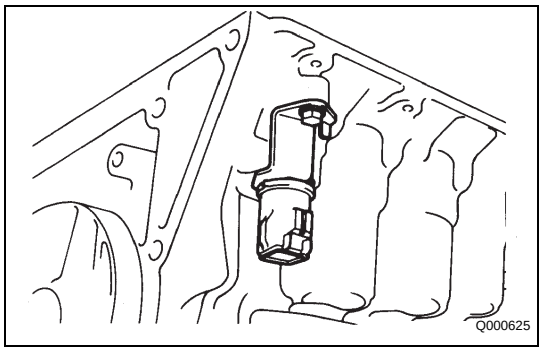

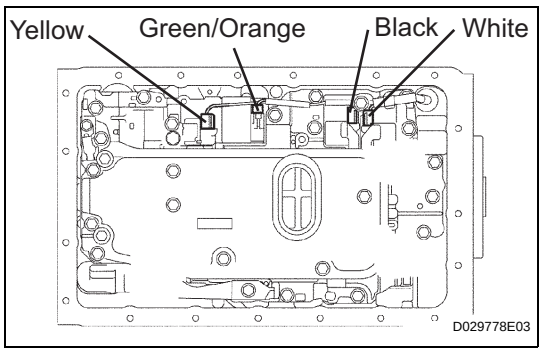

INSTALLATION

1. **INSTALL TRANSMISSION WIRE**
   (a) Coat a new O-ring with ATF, and install it onto the solenoid wiring.
   (b) Install the solenoid wiring onto the case, and install the stopper plate.
   Torque: 5.4 N*m (55 kgf*cm, 48 in.*lbf)
   (c) Connect the connectors to each shift solenoid valve.
2. **INSTALL VALVE BODY OIL STRAINER ASSEMBLY (See page AT-96)**
3. **INSTALL AUTOMATIC TRANSMISSION OIL PAN SUB-ASSEMBLY (See page AT-97)**
4. **INSTALL TRANSMISSION OIL FILLER TUBE SUB-ASSEMBLY (See page AT-116)**
5. **CONNECT CABLE TO NEGATIVE BATTERY TERMINAL**
   Torque: 3.9 N*m (40 kgf*cm, 35 in.*lbf)
6. **ADD AUTOMATIC TRANSMISSION FLUID**
7. **INSPECT AUTOMATIC TRANSMISSION FLUID (See page AT-85)**

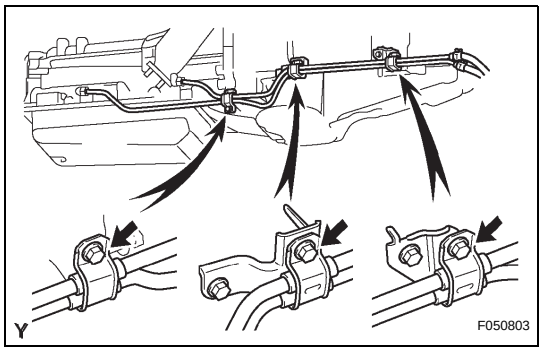

ATF TEMPERATURE SENSOR

REMOVAL

1. DISCONNECT NO. 1 OIL COOLER INLET TUBE

(a) Remove the 3 bolts and 3 clamps.

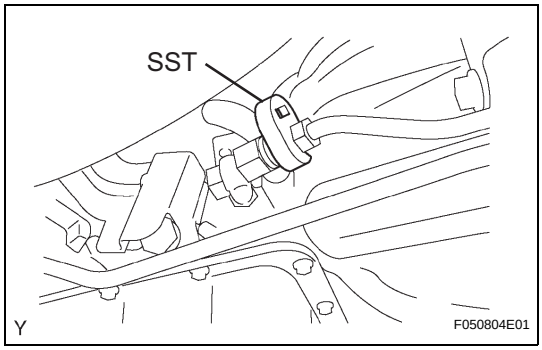

(b) Using SST, disconnect the oil cooler inlet tube No. 1.

SST 09023-12701

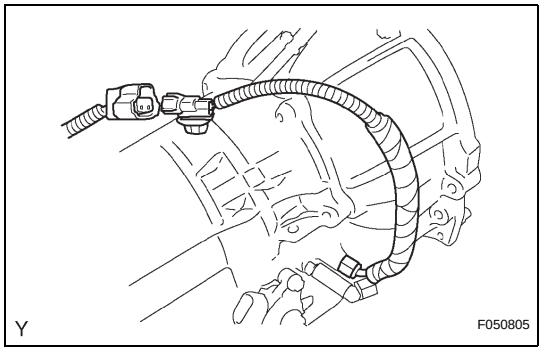

2. REMOVE TEMPERATURE SENSOR

(a) Disconnect the temperature sensor connector.

(b) Remove the temperature sensor.

(c) Remove the O-ring from the temperature sensor.

INSTALLATION

1. INSTALL TEMPERATURE SENSOR

(a) Coat a new O-ring with ATF and install it onto the temperature sensor.

(b) Install the temperature sensor.
Torque: 29 N*m (300 kgf*cm, 22 ft.*lbf)

(c) Connect the temperature sensor connector.

2. CONNECT NO. 1 OIL COOLER INLET TUBE

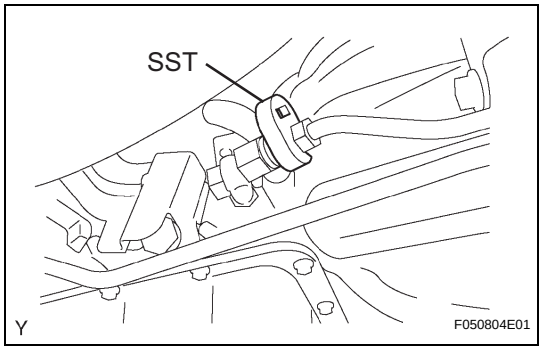

(a) Using SST, tighten oil cooler inlet tube No. 1.
SST 09023-12701
Torque: 34 N*m (350 kgf*cm, 25 ft.*lbf)

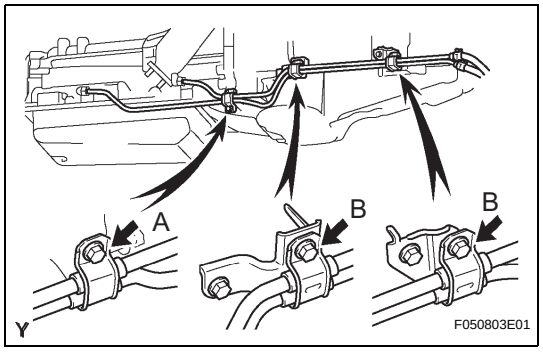

(b) Install the 3 clamps and 3 bolts.
Torque: 12 N*m (122 kgf*cm, 8.9 ft.*lbf) for bolt A
5.0 N*m (51 kgf*cm, 44 in.*lbf) for bolt B

3. INSPECT AUTOMATIC TRANSMISSION FLUID (See page AT-85)

PARK / NEUTRAL POSITION SWITCH

REMOVAL

1. **DISCONNECT CABLE FROM NEGATIVE BATTERY TERMINAL**
2. **DISCONNECT PARK/NEUTRAL POSITION SWITCH CONNECTOR**
3. **REMOVE PARK/NEUTRAL POSITION SWITCH ASSEMBLY**
   (a) Using a screwdriver, unstake the lock washer.
   (b) Remove the nut, lock washer and grommet.
   (c) Remove the bolt and park/neutral position switch.

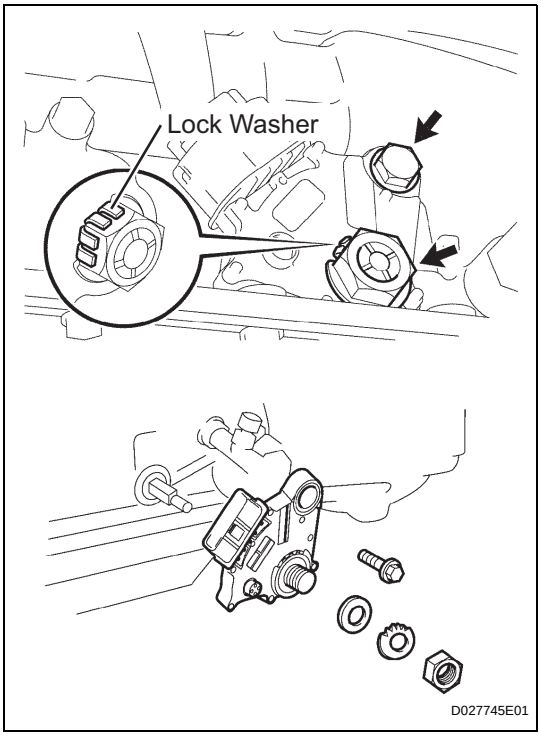

ADJUSTMENT

1. INSPECT PARK/NEUTRAL POSITION SWITCH ASSEMBLY

(a) Apply the parking brake and turn the ignition switch to ON.

(b) Depress the brake pedal and check that the engine starts only when the shift lever is set in the N or P position and that it does not start in any other positions.

(c) Check that the back-up light comes on and the reverse warning buzzer sounds only when the shift lever is set in the R position and not in other positions.

If any failure is found, check the park/neutral position switch for continuity.

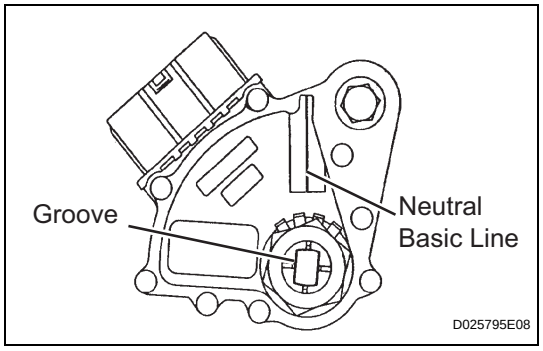

2. ADJUST PARK/NEUTRAL POSITION SWITCH ASSEMBLY

(a) Loosen the bolt of the park/neutral position switch and set the shift lever to the N position.

(b) Align the groove and the neutral basic line.

(c) Hold the switch in position and tighten the bolt.

Torque: 13 N*m (130 kgf*cm, 9 ft.*lbf)

(d) After making an adjustment, perform the inspection described in step 1.

INSTALLATION

1. INSTALL PARK/NEUTRAL POSITION SWITCH ASSEMBLY

(a) Install the park/neutral position switch onto the manual valve lever shaft and provisionally tighten the adjusting bolt.

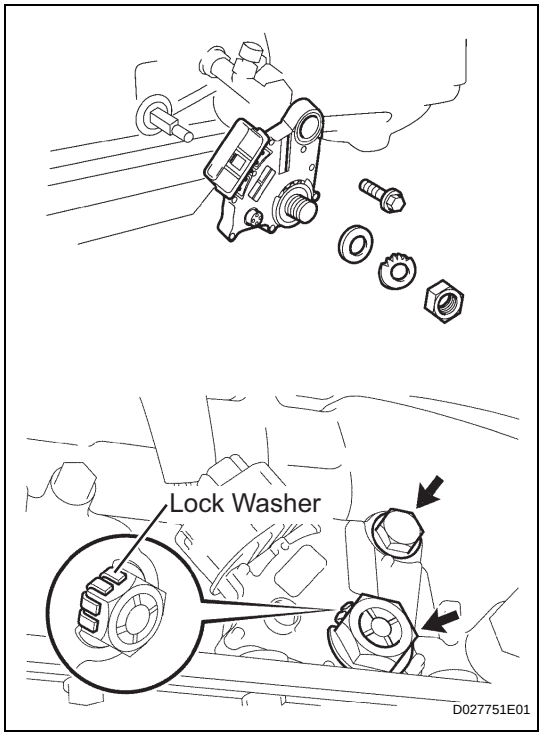

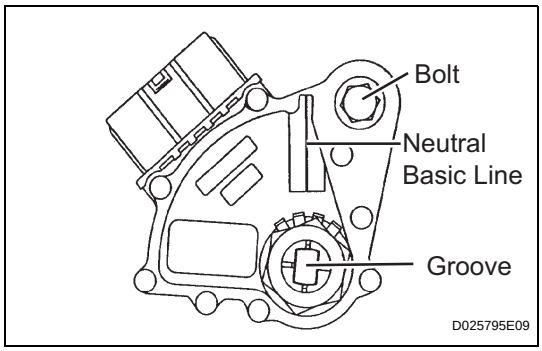

(b) Install the grommet, a new lock washer and the nut.
Torque: 6.9 N*m (70 kgf*cm, 61 in.*lbf)
(c) Install the manual valve lever shaft onto the groove and turn it 2 notches counterclockwise to the neutral position.
(d) Align the neutral basic line with the switch groove and tighten the adjusting bolt.
Torque: 13 N*m (130 kgf*cm, 9 ft.*lbf)
(e) Bend the tabs of the lock washer.
HINT:
Bend at least 2 of the lock washer tabs.

2. CONNECT PARK/NEUTRAL POSITION SWITCH CONNECTOR

3. CONNECT CABLE TO NEGATIVE BATTERY TERMINAL
Torque: 3.9 N*m (40 kgf*cm, 35 in.*lbf)

4. INSPECT PARK/NEUTRAL POSITION SWITCH ASSEMBLY (See page AT-92)

5. ADJUST PARK/NEUTRAL POSITION SWITCH ASSEMBLY (See page AT-92)

6. ADJUST SHIFT LEVER POSITION (See page AT-105)

7. INSPECT SHIFT LEVER POSITION (See page AT-105)

VALVE BODY ASSEMBLY

REMOVAL

CAUTION:
When working with FIPG material, you must observe the following guidelines.

- Using a razor blade and gasket scraper, remove all the old FIPG material from the gasket surfaces.
- Thoroughly clean all components to remove all loose material.
- Clean both sealing surfaces with a non-residue solvent.
- Apply FIPG in an approximately 1 mm (0.04 in.) wide bead along the sealing surface.
- Parts must be assembled within 10 minutes of application. Otherwise, the FIPG material must be removed and reapplied.

1. DISCONNECT CABLE FROM NEGATIVE BATTERY TERMINAL

2. DRAIN AUTOMATIC TRANSMISSION FLUID

(a) Remove the drain plug, gasket and drain ATF.

(b) Install a new gasket and drain plug.
Torque: 20 N*m (204 kgf*cm, 15 ft.*lbf)

3. REMOVE TRANSMISSION OIL FILLER TUBE SUB-ASSEMBLY (See page AT-110)

4. REMOVE AUTOMATIC TRANSMISSION OIL PAN SUB-ASSEMBLY
NOTICE:
Some fluid will remain in the oil pan.

(a) Remove the 19 bolts and oil pan sub-assembly.

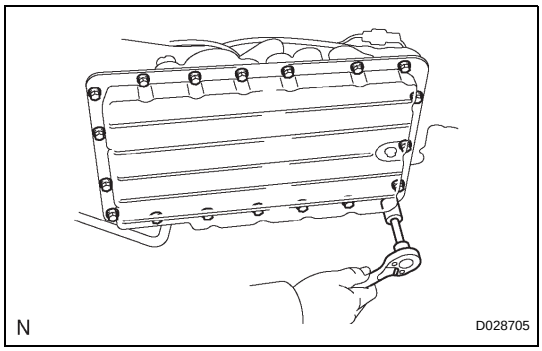

(b) Insert the blade of SST between the transmission case and oil pan, cut off applied sealer and remove the oil pan.
SST 09032-00100
NOTICE:
When removing the oil pan, be careful not to damage the oil pan flange.

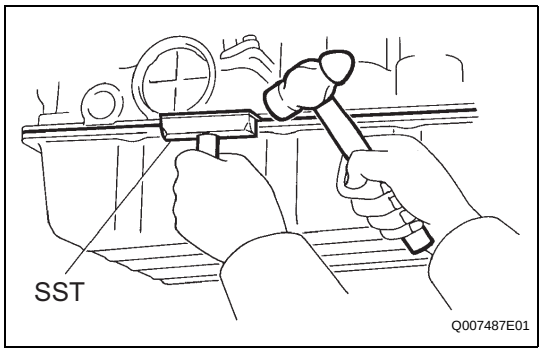

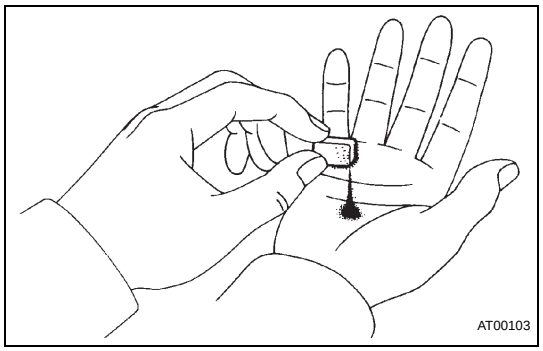

(c) Examine the particles in the pan.
  (1) Remove the magnets and use them to collect steel particles. Carefully inspect the foreign matter and particles in the pan and on the magnets to anticipate the type of wear you will find in the transmission.
  Steel (magnetic) ... bearing, gear and clutch plate wear
  Brass (non-magnetic) ... bushing wear

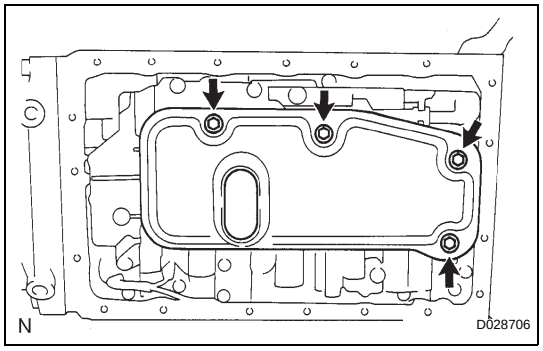

5. REMOVE VALVE BODY OIL STRAINER ASSEMBLY

(a) Remove the 4 bolts and oil strainer.
NOTICE:
Be careful as some fluid will come out of the oil strainer.

(b) Remove the 5 gaskets from the oil strainer.

6. REMOVE TRANSMISSION WIRE (See page AT-88)

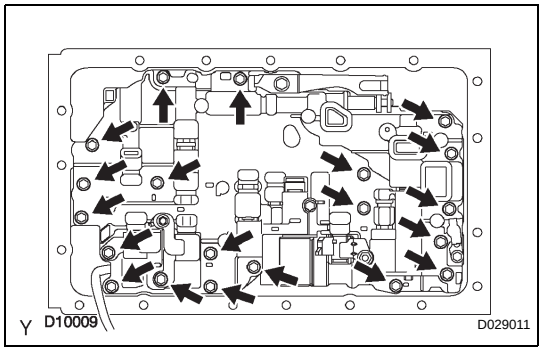

7. REMOVE TRANSMISSION VALVE BODY ASSEMBLY

(a) Remove the 20 bolts and valve body assembly.

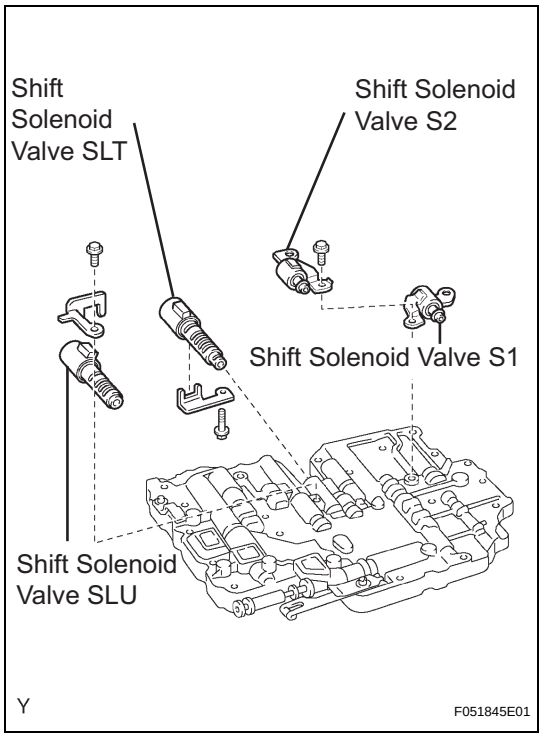

(b) Remove the bolt and shift solenoid valves S1 and S2.

(c) Remove the bolt and shift solenoid valve SLU.

(d) Remove the bolt and shift solenoid valve SLT.

SHIFT LOCK SYSTEM

ON-VEHICLE INSPECTION

1. CHECK SHIFT LOCK OPERATION

(a) Shift the shift lever to the P position.
(b) Turn the ignition switch to LOCK.
(c) Check that the shift lever cannot be shifted to any positions other than P.
(d) Turn the ignition switch to ON, depress the brake pedal, and check that the shift lever can be shifted to other positions.

2. CHECK SHIFT LOCK RELEASE LINK OPERATION

(a) Using a small screwdriver, remove the shift lever cap.
(b) When operating the shift lever with the shift lock release link pressed, check that the lever can be shifted to any positions other than P.

3. CHECK KEY INTERLOCK OPERATION

(a) Turn the ignition switch to ON.
(b) Depress the brake pedal and shift the shift lever to any positions other than P.
(c) Check that the ignition key cannot be turned to LOCK.
(d) Shift the shift lever to the P position, turn the ignition key to LOCK, and check that the ignition key can be removed.

4. INSPECT SHIFT LOCK CONTROL ECU SUB-ASSEMBLY

(a) Using a voltmeter, measure the voltage at each terminal.
HINT:
Do not disconnect the shift lock control ECU connector.

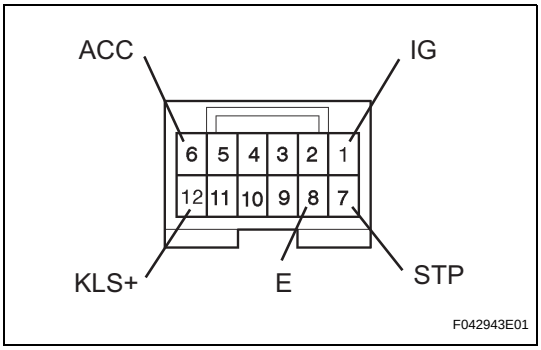

Terminal	Measuring Condition	Voltage (V)
1 (KLS+) - 8 (E)	(1) Ignition switch ACC and P position (2) Ignition switch ACC and except P position (3) Ignition switch ACC and except P position (After approx. 1 second)	0 7.5 to 11 6 to 9
4 (ACC) - 8 (E)	Ignition switch ON	10 to 14
	Ignition switch ACC	10 to 14
	Ignition switch OFF	0
9 (STP) - 8 (E)	Depress brake pedal	10 to 14
	Release brake pedal	0
5 (IG) - 8 (E)	Ignition switch ON	10 to 14
	Ignition switch OFF	0

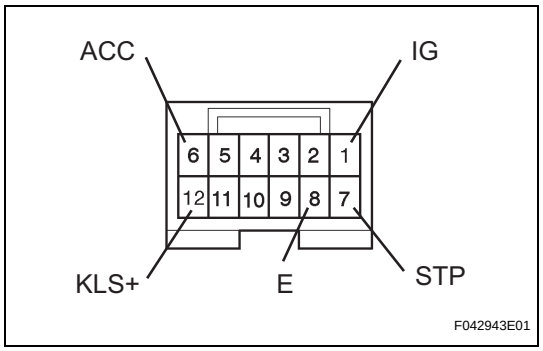

(b) Using an ohmmeter, measure the resistance at terminal E (8) and body ground.
HINT:
Do not disconnect the shift lock control ECU connector.

Terminal	Measuring Condition	Specified Value
8 (E) - Body ground	Always	Below 1 Ω

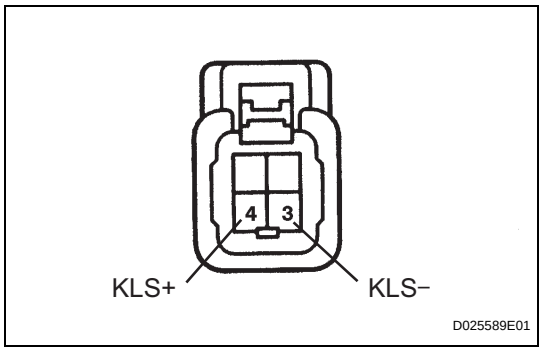

5. INSPECT KEY INTER LOCK SOLENOID

(a) Disconnect the solenoid connector.
(b) Connect KLS+ (4) terminal to the battery positive (+) terminal, and KLS- (3) terminal to the battery negative (-) terminal, and apply about 12V between KLS+ and KLS- terminals.
Check that operation noise can be heard from the solenoid.
If the solenoid does not operate, replace the solenoid.

FLOOR SHIFT ASSEMBLY

COMPONENTS

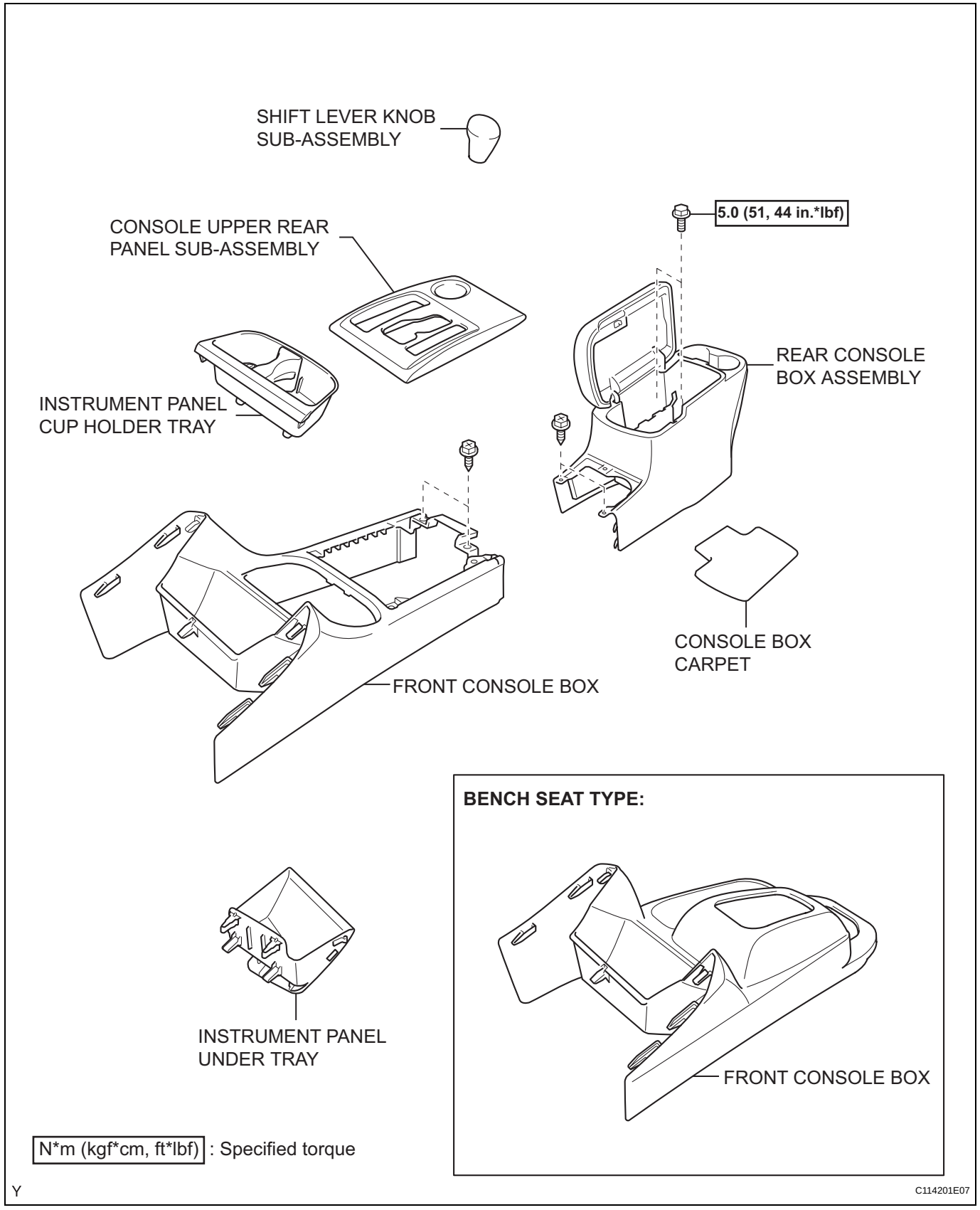

CABLE TYPE:

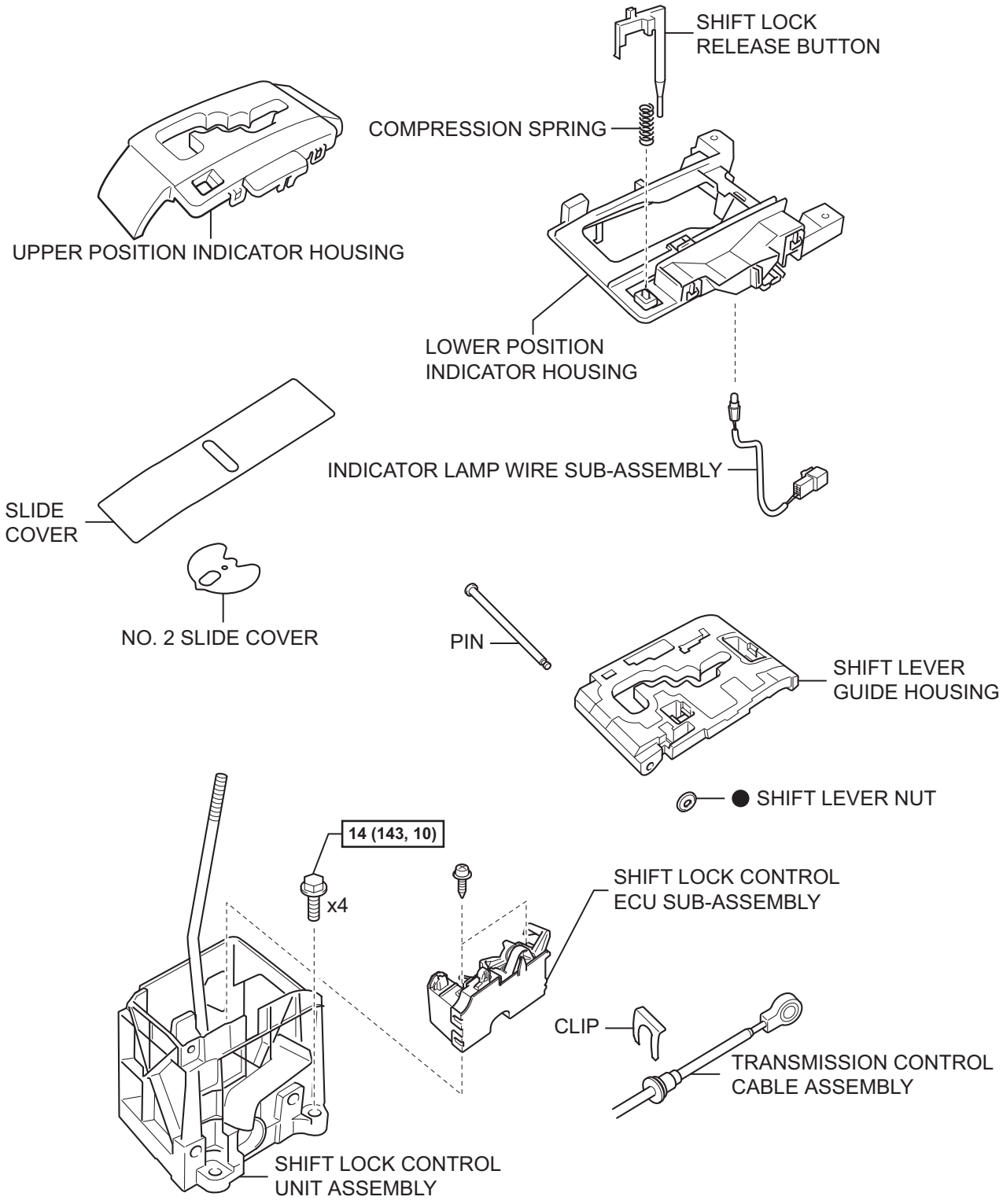

N*m (kgf*cm, ft*lbf) : Specified torque

● Non-reusable part

Y

C114202E04

AT

ROD TYPE:

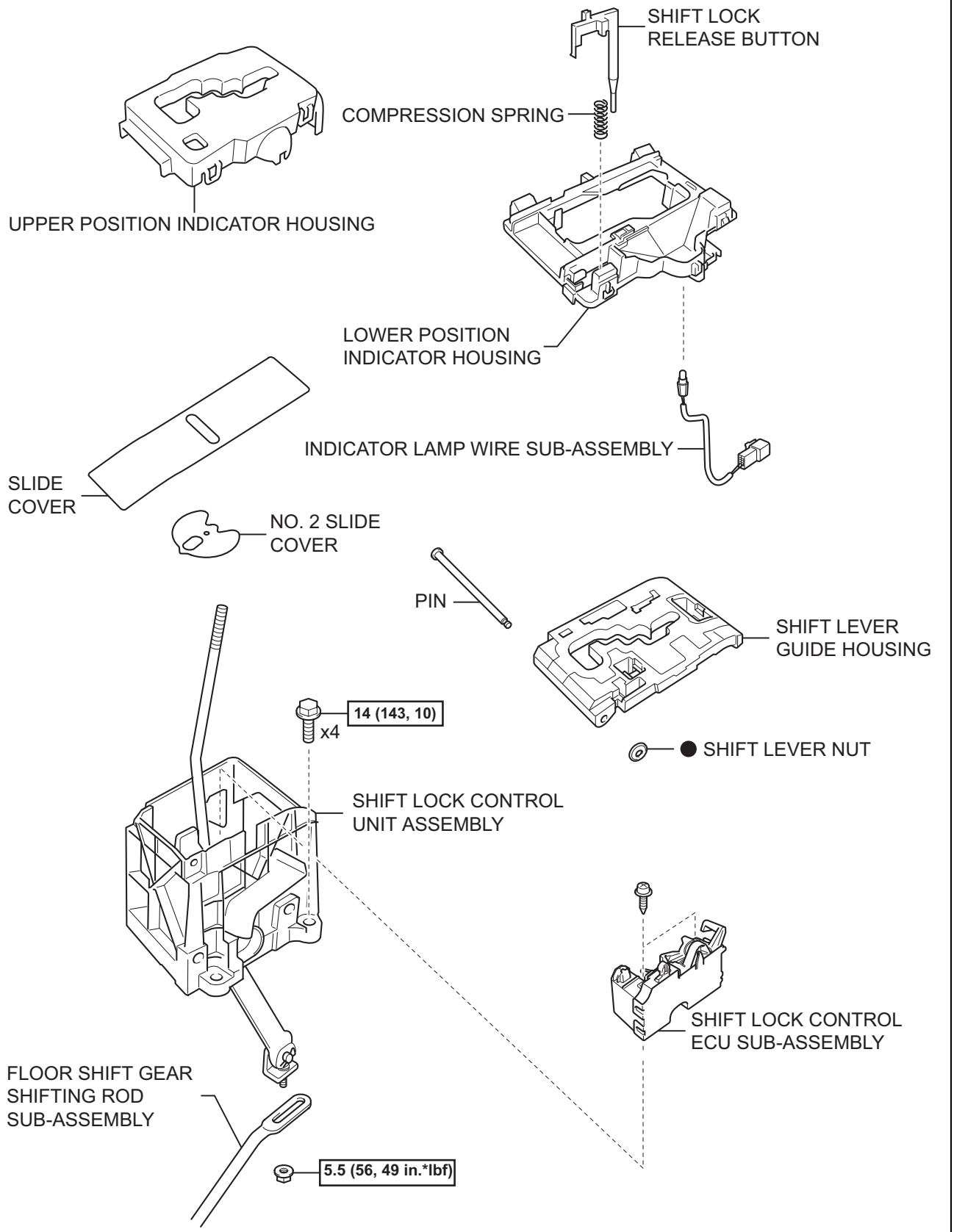

AT

N*m (kgf*cm, ft*lbf) : Specified torque ● Non-reusable part

Y

C114203E03

AUTOMATIC TRANSMISSION ASSEMBLY

COMPONENTS

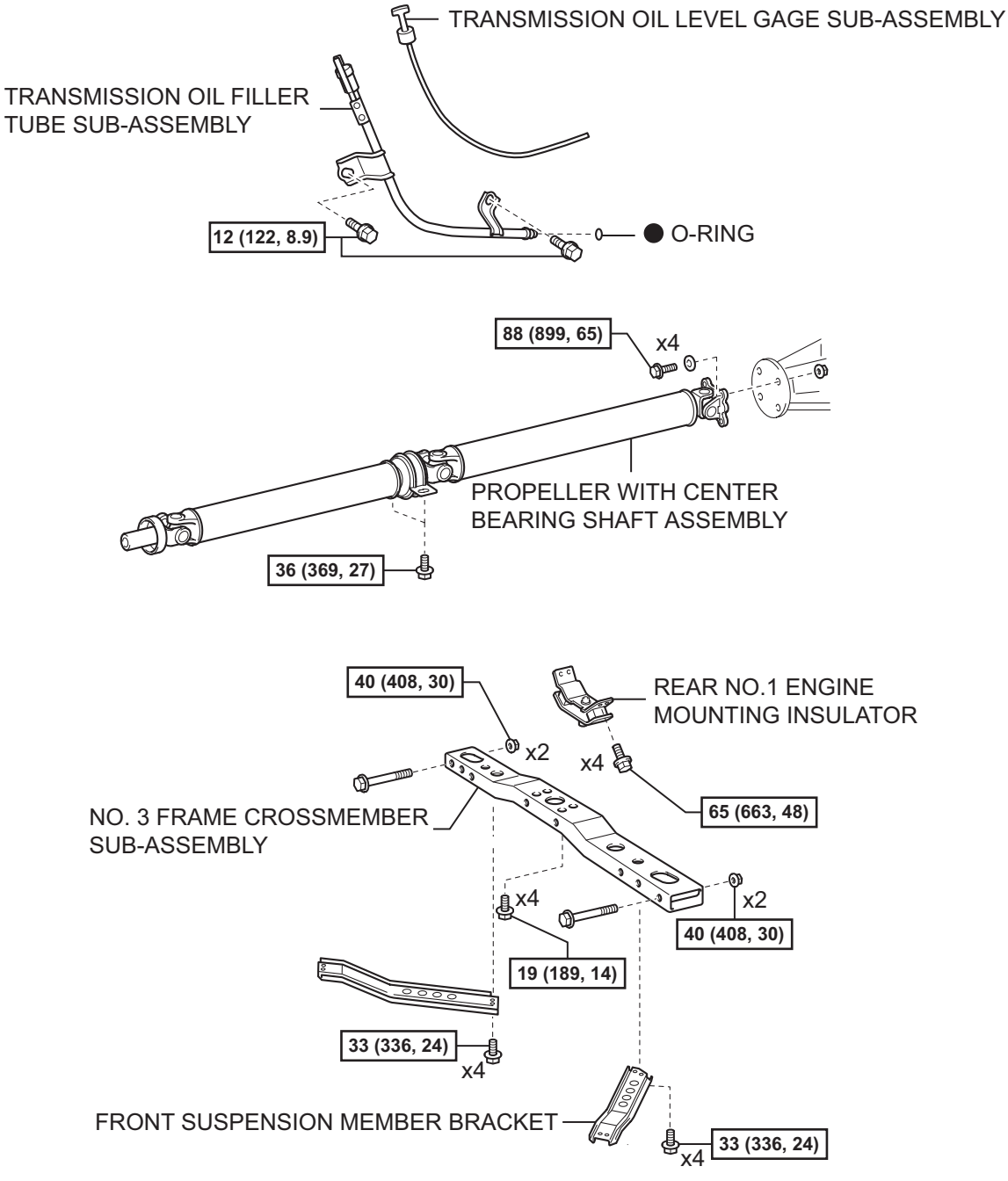

AT

N*m (kgf*cm, ft*lbf) : Specified torque ● Non-reusable part

Y

C125236E03

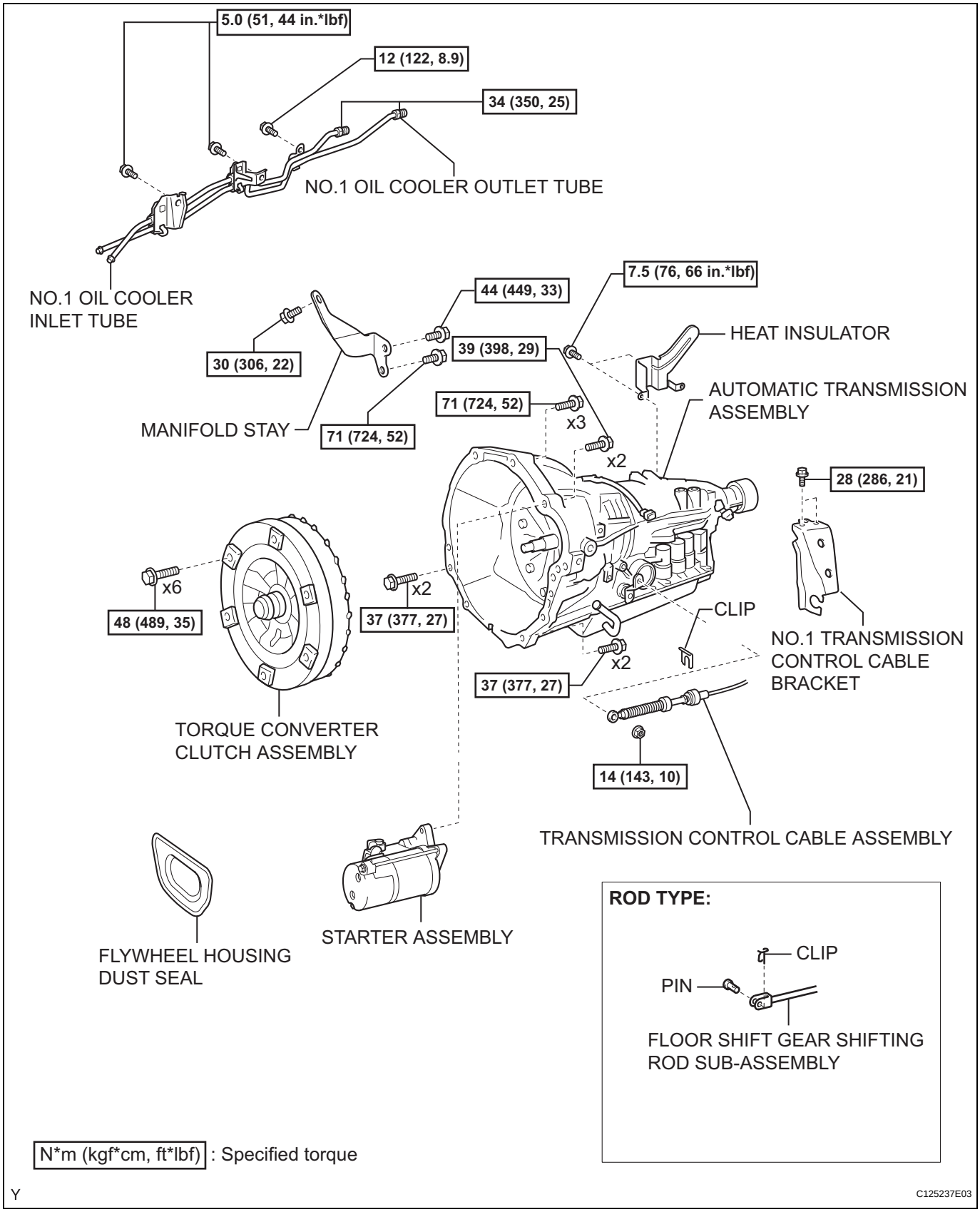
5.0 (51, 44 in.*lbf)
12 (122, 8.9)
34 (350, 25)
NO.1 OIL COOLER OUTLET TUBE
NO.1 OIL COOLER INLET TUBE
44 (449, 33)
7.5 (76, 66 in.*lbf)
HEAT INSULATOR
30 (306, 22)
39 (398, 29)
AUTOMATIC TRANSMISSION ASSEMBLY
71 (724, 52)
x3
MANIFOLD STAY
71 (724, 52)
x2
28 (286, 21)
x6
48 (489, 35)
x2
37 (377, 27)
CLIP
NO.1 TRANSMISSION CONTROL CABLE BRACKET
x2
37 (377, 27)
TORQUE CONVERTER CLUTCH ASSEMBLY
14 (143, 10)
TRANSMISSION CONTROL CABLE ASSEMBLY
FLYWHEEL HOUSING DUST SEAL
STARTER ASSEMBLY
ROD TYPE:
CLIP
PIN
FLOOR SHIFT GEAR SHIFTING ROD SUB-ASSEMBLY
N*m (kgf*cm, ft*lbf) : Specified torque
Y
C125237E03

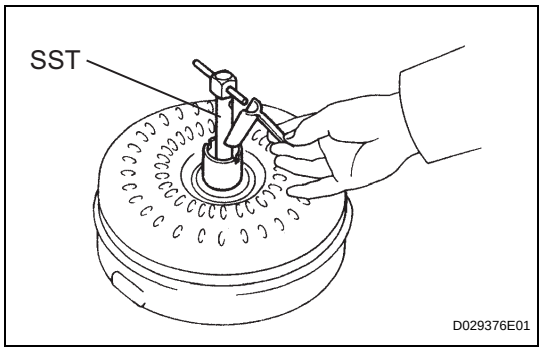

TORQUE CONVERTER CLUTCH AND DRIVE PLATE

INSPECTION

1. INSPECT TORQUE CONVERTER CLUTCH ASSEMBLY

(a) Inspect the one-way clutch.

(1) Install SST into the inner race of the one-way clutch.

SST 09350-32014 (09351-32010)

(2) Set SST so that it fits in the notch of the converter hub and outer race of the one-way clutch.

SST 09350-32014 (09351-32020)

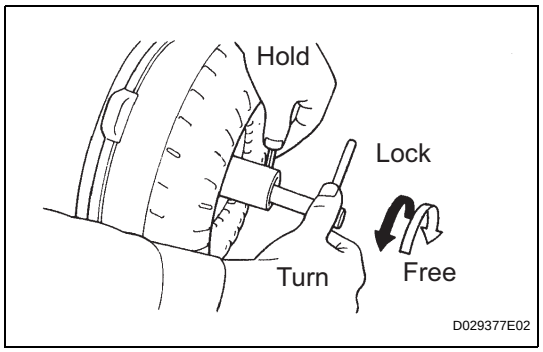

(3) With the torque converter standing on its side, check that the clutch locks when turned counterclockwise and rotates freely and smoothly clockwise.

If necessary, clean the converter and check the one-way clutch again.

Replace the converter if the one-way clutch still doesn't operate as specified.

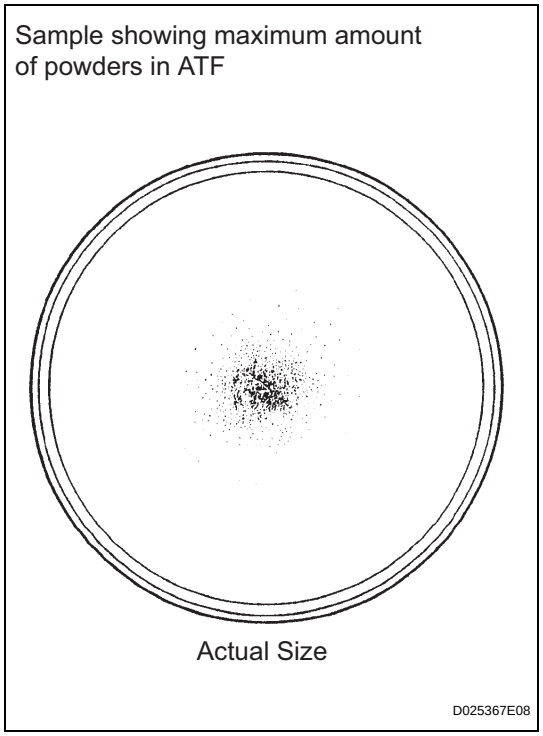

(b) Check the condition of the torque converter clutch assembly.

(1) If the inspection result of the torque converter clutch assembly matches any of the cases mentioned below, replace the torque converter clutch.

Malfunction item:

Any metallic sound is heard from the torque converter clutch during stall test or when the shift lever is in the neutral position.

One-way clutch is free or locked in both directions. Fine powders exceeding the sample limit are identified in ATF. (See the sample.)

HINT:

The sample shows the auto fluid of approximately 0.25 liters (0.26 US qts, 0.22 Imp. qts) that is taken out from the removed torque converter clutch.

(c) Replace the ATF in the torque converter clutch.

(1) If the ATF is discolored and/or has a foul odor, completely stir the ATF in the torque converter clutch and drain it with the installation surface facing up.

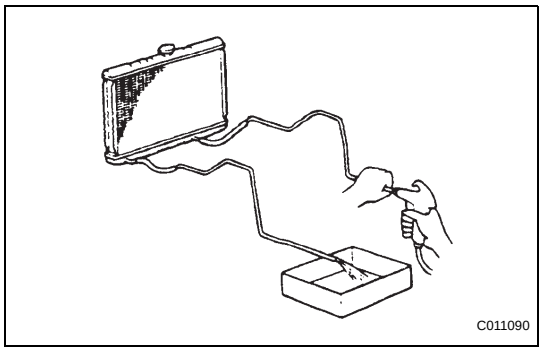

(d) Clean and then check the oil cooler and oil pipe line.
  (1) If inspecting the torque converter clutch or exchanging the ATF, clean the oil cooler and oil pipe line.
  HINT:
  - Apply compressed air of 196 kPa (2 kgf/ cm2, 28 psi) from the inlet hose.
  - If plenty of fine powders are identified in the ATF, add new ATF using a bucket pump and clean the ATF again.

  (2) If the ATF is cloudy, inspect the oil cooler (radiator).

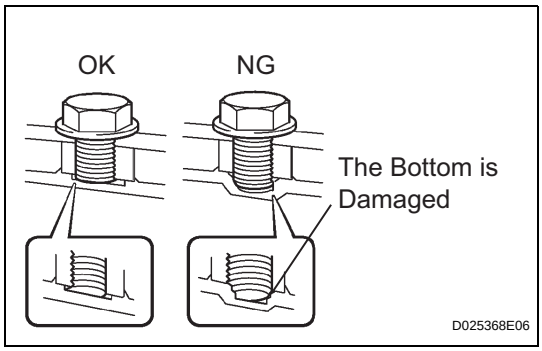

(e) Be careful not to deform the torque converter clutch or damage the oil pump gear.
  (1) When any marks due to interference are found on the end of the bolt on the torque converter clutch and on the bottom of the bolt hole, replace the bolt and the torque the converter clutch.
  (2) All the bolts should be the same length.
  (3) Do not lose any spring washers.

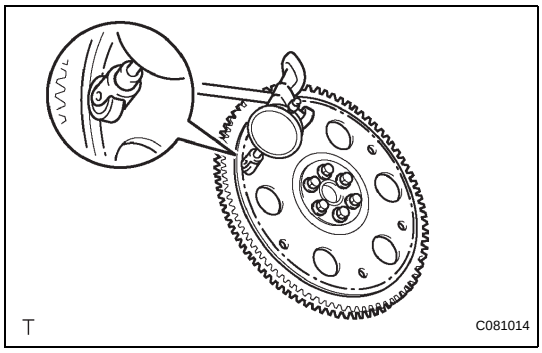

2. INSPECT RUNOUT OF DRIVE PLATE AND RING GEAR SUB-ASSEMBLY

(a) Set up a dial indicator and measure the drive plate runout.

(b) Check the ring gear for damage.
Maximum runout:
0.20 mm (0.0079 in.)
If the runout is not within the specification or the ring gear is damaged, replace the drive plate.

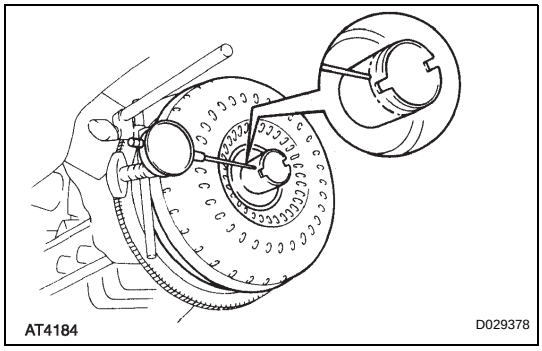

3. INSPECT RUNOUT OF TORQUE CONVERTER CLUTCH ASSEMBLY

(a) Provisionally mount the torque converter onto the drive plate, set up a dial indicator, and measure the torque converter sleeve runout.
Maximum runout:
0.30 mm (0.0118 in.)
If the runout is not within the specification, try to correct it by reinstalling the converter to the correct orientation.
HINT:
Mark the position of the converter to ensure correct installation.

TRANSMISSION CONTROL CABLE

REMOVAL

1. **REMOVE CONSOLE UPPER REAR PANEL SUB-ASSEMBLY (See page IP-9)**
2. **REMOVE CONSOLE BOX ASSEMBLY REAR (See page IP-10)**
3. **REMOVE INSTRUMENT PANEL CUP HOLDER TRAY (See page IP-10)**
4. **REMOVE CONSOLE BOX FRONT (See page IP-10)**
5. **REMOVE VOLTAGE INVERTER ASSEMBLY (w/ Voltage Inverter) (See page AV-104)**
6. **REMOVE TRANSMISSION CONTROL CABLE ASSEMBLY**
   (a) Disconnect the transmission control cable assembly from the shift lever assembly.
   (b) Remove the clip and disconnect the transmission control cable.

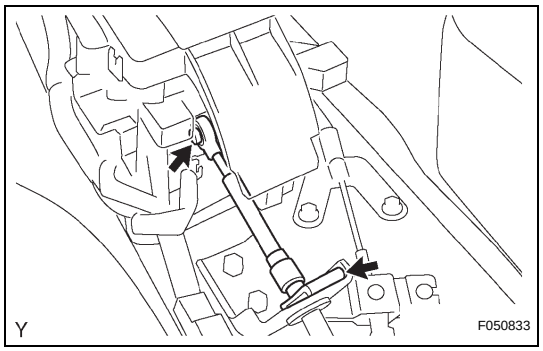

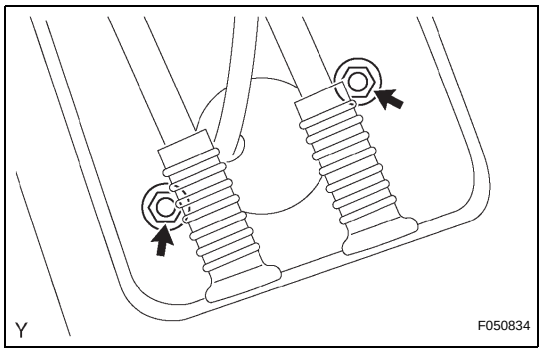

   (c) Remove the 2 nuts and disconnect the transmission control cable assembly from the body.

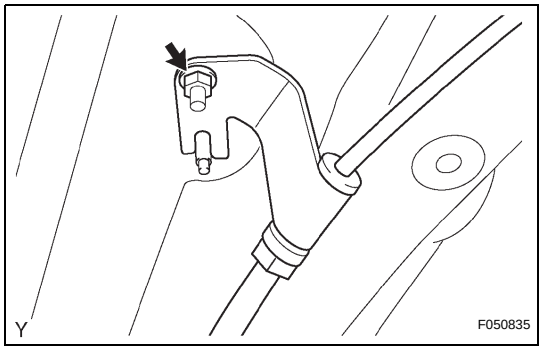

   (d) Remove the nut and disconnect the transmission control cable assembly from the body.

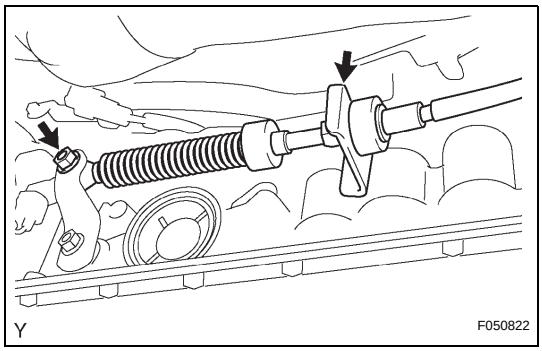

(e) Remove the clip and transmission control cable bracket.
(f) Remove the nut and transmission control cable assembly.

INSTALLATION

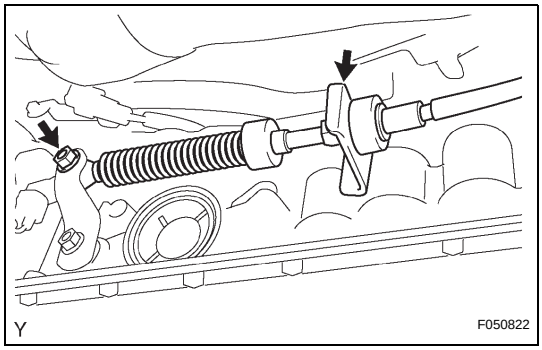

1. INSTALL TRANSMISSION CONTROL CABLE ASSEMBLY

(a) Install the transmission control cable assembly with the nut.
Torque: 14 N*m (143 kgf*cm, 10 ft.*lbf)
(b) Install the transmission control cable bracket and lock plate.

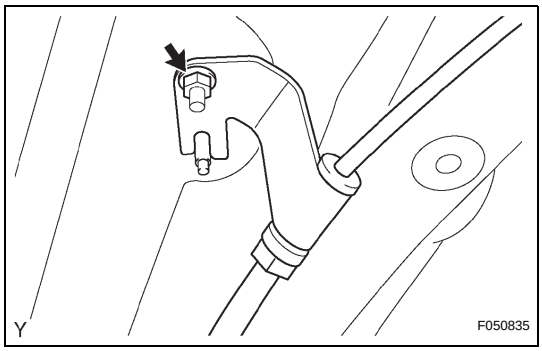

(c) Connect the transmission control cable with the nut to the body.
Torque: 5.5 N*m (56 kgf*cm, 49 in.*lbf)

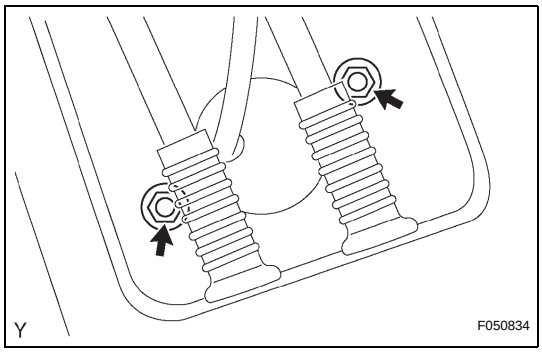

(d) Connect the transmission control cable with the 2 nuts to the body.
Torque: 5.5 N*m (56 kgf*cm, 49 in.*lbf)

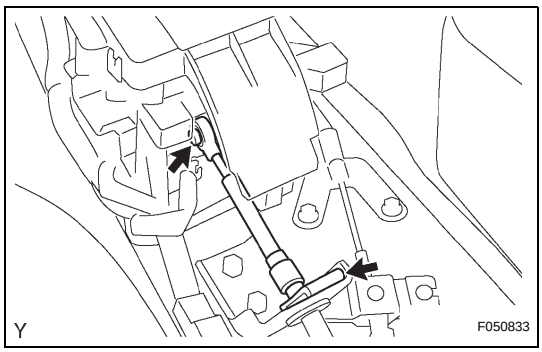

(e) Connect the transmission control cable with the lock plate to the floor shift assembly.
(f) Install the transmission control cable onto the floor shift assembly.

2. INSTALL VOLTAGE INVERTER ASSEMBLY (w/ Voltage Inverter) (See page AV-105)

3. INSTALL CONSOLE BOX FRONT (See page IP-24)

4. INSTALL INSTRUMENT PANEL CUP HOLDER TRAY (See page IP-24)

5. **INSTALL CONSOLE BOX ASSEMBLY REAR (See page IP-24)**
6. **INSTALL CONSOLE UPPER REAR PANEL SUB-ASSEMBLY (See page IP-25)**
7. **ADJUST SHIFT LEVER POSITION (See page AT-105)**
8. **INSPECT SHIFT LEVER POSITION (See page AT-105)**

AUTOMATIC TRANSMISSION SYSTEM

PRECAUTION

1. **PRECAUTION**
   NOTICE:
   - **Perform the RESET MEMORY (AT initialization) when replacing the automatic transmission assembly, engine assembly or ECM (See page AT-17).**
   - **Perform the REGISTRATION (VIN registration) when replacing the ECM (See page ES-14).**

   HINT:
   RESET MEMORY cannot be completed by only disconnecting the negative cable from the battery.
2. **CONNECT BATTERY NEGATIVE TERMINAL**
   (a) Connect the battery negative terminal to the cable and run the engine at no less than 2,000 rpm for 1 minute.
   NOTICE:
   If the engine exceeds 2,000 rpm, the clutch is automatically disengaged by the compressor protection control system.
3. **PRECAUTION FOR DISASSEMBLY AND REASSEMBLY**
   CAUTION:
   When using compressed air, always aim away from yourself to prevent Automatic Transmission Fluid (ATF) or kerosene from spraying on your face.
   NOTICE:
   - **The automatic transaxle is composed of precision-made parts, necessitating careful inspection before reassembly because even a small nick could cause fluid leakage or affect performance.**
   - **The procedures are organized so that you work on only one component group at a time. This will help avoid confusion with similar-looking parts of different sub-assemblies being on your workbench at the same time.**
   - **The component groups are inspected and repaired from the converter housing side.**
   - **Whenever possible, complete the inspection, repair and reassembly before proceeding to the next component group. If a defect is found in a certain component group during reassembly, inspect and repair this group immediately. If a component group cannot be assembled because parts are being ordered, be sure to keep all parts of the group in a separate container while proceeding with disassembly, inspection, repair and reassembly of other component groups.**

- **When changing the automatic transmission fluid, use only "Toyota Genuine ATF WS" (ATF JWS3324 or NWS9638).**
- **All disassembled parts should be washed clean, and compressed air should be blown through any fluid passages and holes.**
- **Dry all parts with compressed air. Never use cloth.**
- **The recommended ATF or kerosene should be used for cleaning.**
- **After cleaning, the parts should be arranged in the order they were removed for efficient inspection, repairs, and reassembly.**
- **When disassembling a valve body, be sue to match each valve with its corresponding spring.**
- **New discs for the brakes and clutches that will be used for replacement must be soaked in ATF for at least 15 minutes before reassembly.**
- **All oil seal rings, clutch discs, clutch plates, rotating parts, and sliding surfaces should be coated with ATF prior to reassembly.**
- **All old gaskets and rubber O-rings must be replaced.**
- **Do not apply adhesive cement to gaskets and similar parts.**
- **Make sure that the ends of the snap rings are not aligned with any cutouts. Also make sure that snap rings are correctly installed into the grooves.**
- **If a worn bushing is to be replaced, the sub-assembly containing the bushing must also be replaced.**
- **Check the thrust bearings and races for wear or damage. Replace if necessary.**
- **Use petroleum jelly to keep parts in place.**
- **When working with FIPG material, perform the following:**
  Using a razor blade and gasket scraper, remove all old FIPG material from the gasket surface.
  Clean all components thoroughly to remove all foreign matter.
  Clean both sealing surfaces with a non-residue solvent.
  Apply FIPG material in a continuous line approximately 1 mm (0.04 in.) in diameter on the sealing surface.
  Reassemble parts within 10 minutes of applying FIPG material. Failing to do so will require the FIPG material to be removed and reapplied.

AUTOMATIC TRANSMISSION FLUID

ADJUSTMENT

1. BEFORE FILLING TRANSMISSION

- This transmission requires Toyota Genuine ATF WS.
- It is necessary to refill the transmission with the correct amount of fluid.
- The vehicle must remain level while adjusting the transmission fluid level.
- On vehicles equipped with active suspension, turn the suspension control switch OFF if it is necessary to jack up the vehicle with the engine running.

2. TRANSMISSION PAN FILL

(a) Remove the refill plug and overflow plug.

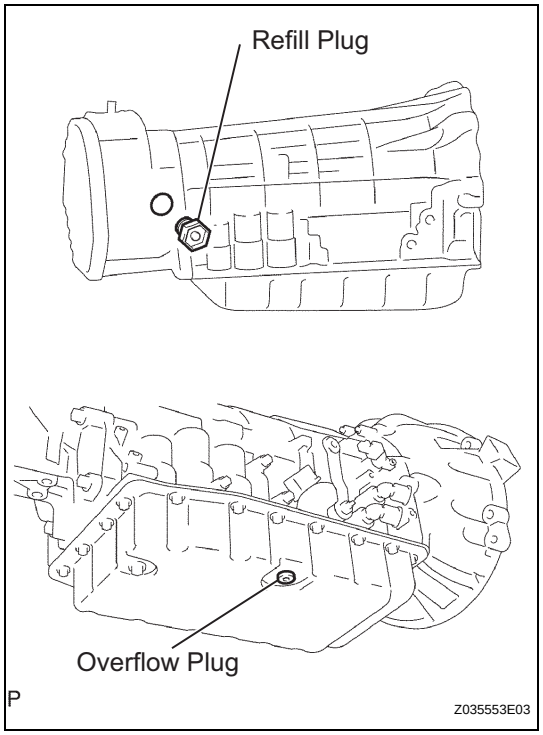

(b) Fill the transmission through the refill hole until fluid begins to trickle out of the overflow tube.

(c) Reinstall the overflow plug.

3. TRANSMISSION FILL

(a) Fill the transmission with the correct amount of fluid as listed in the table below.

(b) Reinstall the refill plug to avoid fluid splash.

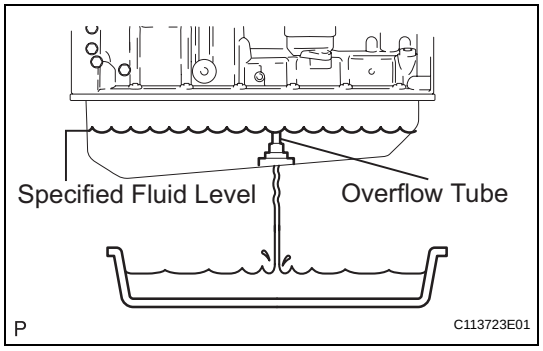

Repair	Fill Amount
Transmission pan and drain plug removal	1.3 L (1.37 US qts, 1.14 lmp qts)
Transmission valve body removal	3.9 L (4.12 US qts, 3.43 lmp qts)
Torque converter removal	5.3 L (5.60 US qts, 4.66 lmp qts)
Entire transmission assembly	5.3 L (5.60 US qts, 4.66 lmp qts)

HINT:

If you cannot add the listed amount of fluid, do the following:

- Install the refill plug.
- Allow the engine to idle with the air conditioning OFF.
- Move the shift lever through entire gear range to circulate fluid.
- Wait for 30 seconds with the engine idling.
- Stop the engine.
- Remove the refill plug and add fluid.
- Reinstall the refill plug.

4. FLUID CIRCULATION

(a) Allow the engine to idle with the air conditioning OFF.

(b) Move the shift lever through entire gear range to circulate fluid.

5. FLUID TEMPERATURE CHECK

NOTICE:

The fluid temperature should be less then 30°C (86°F) before beginning the fluid temperature check.

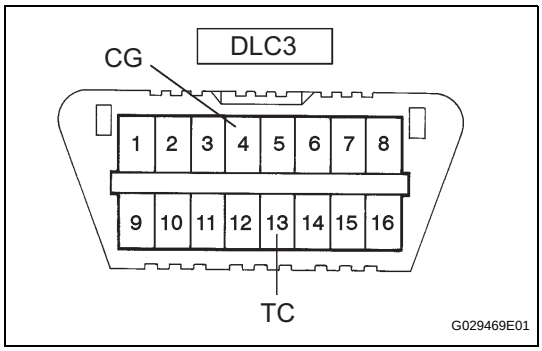

(a) With intelligent tester

(1) Connect the intelligent tester to the DLC3.

(2) Select the tester menus: OBD/MOBD, ENGINE, DATA LIST and A/T.

(3) Check A/T OIL TEMP.

(4) Allow the engine to idle until the fluid temperature reaches 46°C (115°F).

(b) Without intelligent tester (Using A/T OIL TEMP indicator)

(1) Connect terminals between CG (4) and TC (13) of the DLC3 using SST (09843-18040).

(2) Move the shift lever back and forth between N and D every 1.5 seconds for six seconds.

(3) The D shift indicator on the combination meter comes on for two seconds. This indicates that the fluid temperature check mode has been started.

(4) The D shift indicator will come on again when the fluid temperature reaches 46°C (115°F) and will blink when it exceeds 56°C (130°F).

(5) Allow the engine to idle until the fluid temperature reaches 46°C (115°F).

6. FLUID LEVEL CHECK

NOTICE:

The fluid temperature must be between 46°C (115°F) and 56°C (130°F) to accurately check the fluid level.

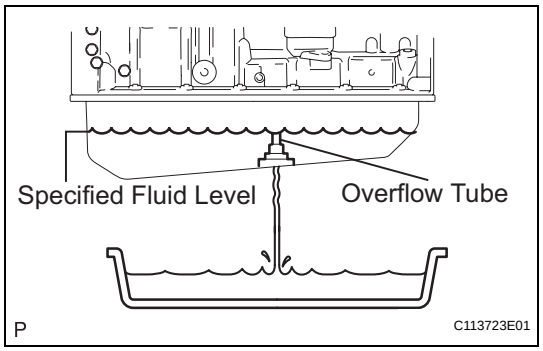

(a) Remove the overflow plug with the engine idling.
(b) Check that the fluid comes out of the overflow tube.
If fluid does not come out, proceed to step 7.
If fluid comes out, wait until the overflow slows to a trickle and proceed to step 8.

7. TRANSMISSION REFILL

(a) Install the overflow plug.
(b) Stop the engine.
(c) Remove the refill plug.
(d) Add 0.4 liters (0.42 US qts, 0.35 lmp qts) of fluid.
(e) Allow the engine to idle and wait for 10 seconds.
(f) Proceed to step 6.

8. COMPLETE

(a) Install the overflow plug with a new gasket.
(b) Stop the engine.
(c) Install the refill plug with a new gasket.
Torque: 20 N*m (205 kgf*cm, 15 ft.*lbf) for overflow plug
39 N*m (400 kgf*cm, 29 ft.*lbf) for refill plug

EXTENSION HOUSING REAR OIL SEAL

REMOVAL

1. **REMOVE PROPELLER WITH/CENTER BEARING SHAFT ASSEMBLY (See page PR-27)**
2. **DRAIN AUTOMATIC TRANSMISSION FLUID**
   (a) Remove the drain plug, gasket and drain ATF.
   (b) Install a new gasket and drain plug.
   Torque: 28 N*m (285 kgf*cm, 21 ft.*lbf)
3. **REMOVE AUTOMATIC TRANSMISSION EXTENSION HOUSING OIL SEAL**
   (a) Using SST, remove the oil seal.
   SST 09308-00010

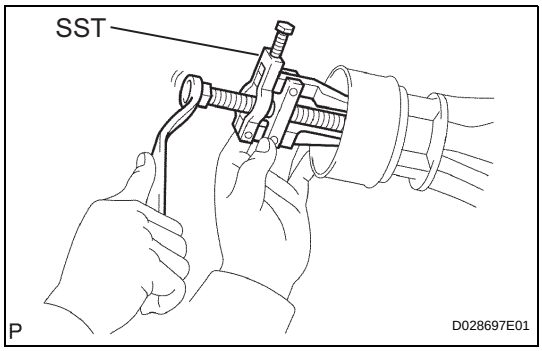

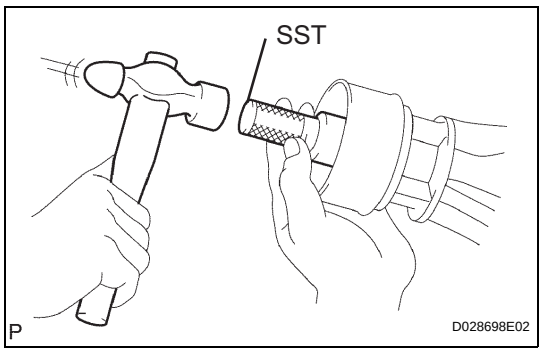

INSTALLATION

1. **INSTALL AUTOMATIC TRANSMISSION EXTENSION HOUSING OIL SEAL**
   (a) Using SST and a hammer, carefully tap in a new oil seal until it is flush with the automatic transmission extension housing.
   SST 09316-60011 (09316-00011, 09316-00051)
   Oil seal depth from flat end:
   5.4 to 5.8 mm (0.213 to 0.228 in.)
   (b) Coat the oil seal lip with MP grease.
2. **INSTALL PROPELLER WITH/CENTER BEARING SHAFT ASSEMBLY (See page PR-32)**
3. **ADD AUTOMATIC TRANSMISSION FLUID**
   (See page AT-135)

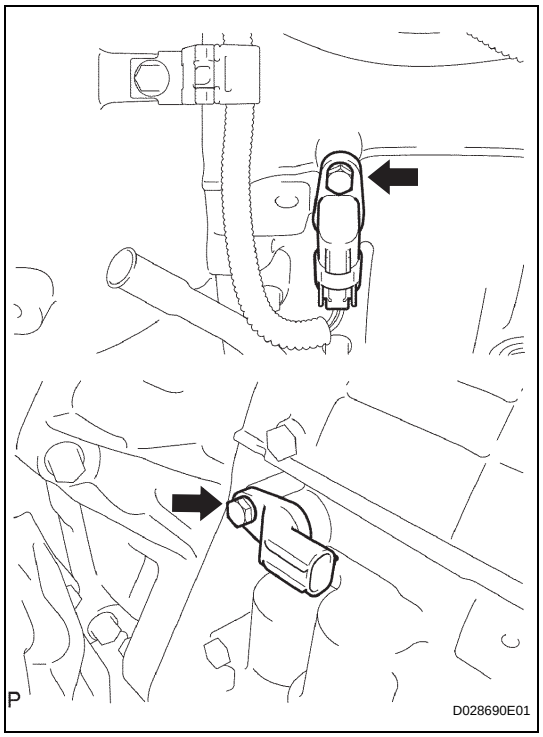

SPEED SENSOR

REMOVAL

1. REMOVE TRANSMISSION REVOLUTION SENSOR

(a) Disconnect the connector.

(b) Remove the bolt and speed sensor.

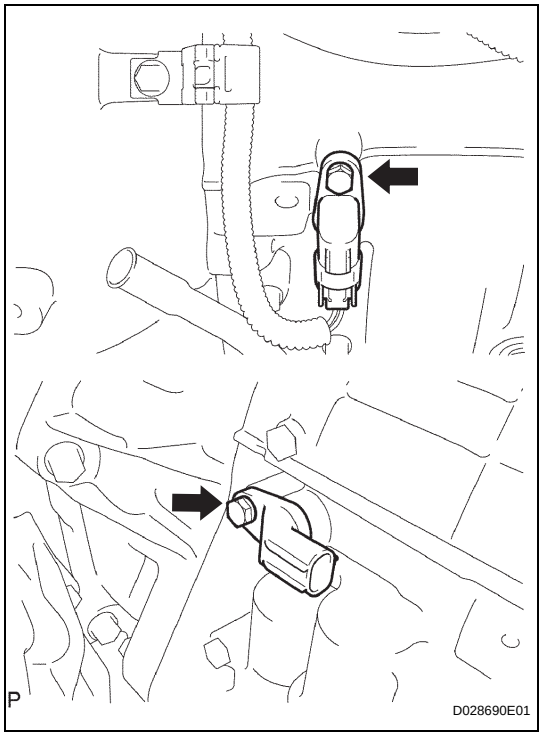

INSTALLATION

1. INSTALL TRANSMISSION REVOLUTION SENSOR

(a) Coat a new O-ring with ATF.

(b) Install the speed sensor with the bolt.
Torque: 5.4 N*m (55 kgf*cm, 48 in.*lbf)

(c) Connect the connector.

TRANSMISSION WIRE

REMOVAL

CAUTION:
When working with FIPG material, you must observe the following guidelines.

- **Using a razor blade and gasket scraper, remove all the old FIPG material from the gasket surfaces.**
- **Thoroughly clean all components to remove all loose material.**
- **Clean both sealing surfaces with a non-residue solvent.**
- **Apply FIPG in an approximately 1 mm (0.04 in.) wide bead along the sealing surface.**
- **Parts must be assembled within 10 minutes of application. Otherwise, the FIPG material must be removed and reapplied.**

1. **DISCONNECT CABLE FROM NEGATIVE BATTERY TERMINAL**

2. **DRAIN AUTOMATIC TRANSMISSION FLUID**
   (a) Remove the drain plug, gasket and drain ATF.
   (b) Install a new gasket and drain plug.
   Torque: 28 N*m (285 kgf*cm, 21 ft.*lbf)

3. **REMOVE AUTOMATIC TRANSMISSION OIL PAN SUB-ASSEMBLY (See page AT-144)**

4. **REMOVE VALVE BODY OIL STRAINER ASSEMBLY (See page AT-145)**

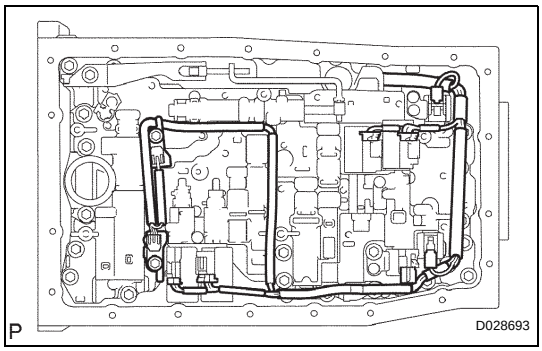

5. **SEPARATE TRANSMISSION WIRE**
   (a) Remove the bolt and clamp.
   (b) Disconnect the ATF temperature sensor.
   (c) Disconnect the 7 connectors from the solenoid valves.

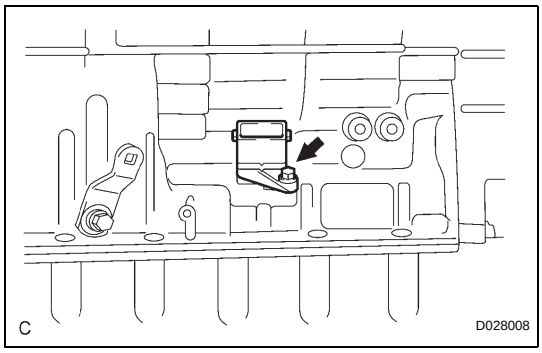

6. **REMOVE TRANSMISSION WIRE**
   (a) Disconnect the transmission wire connector.
   (b) Remove the bolt and pull out the transmission wire.

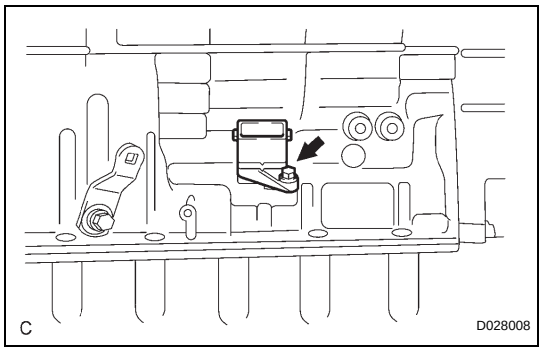

INSTALLATION

1. **INSTALL TRANSMISSION WIRE**
   (a) Install the transmission wire with the bolt.
   Torque: 5.4 N*m (55 kgf*cm, 48 in.*lbf)
   (b) Connect the transmission wire connector.

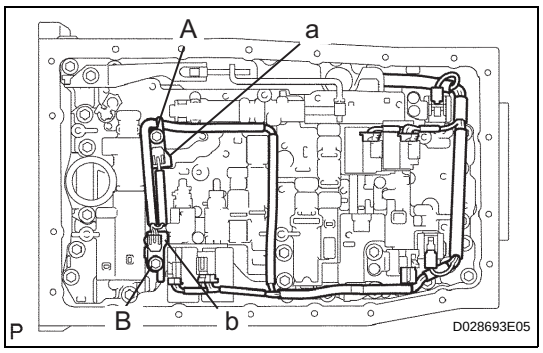

2. **CONNECT TRANSMISSION WIRE**
   (a) Connect the 7 connectors to the solenoid valves.
   (b) Install the clamp with the bolt.
   Torque: A
   10 N*m (100 kgf*cm, 7 in.*lbf)
   B
   11 N*m (110 kgf*cm, 8 in.*lbf)
   (c) Connect the ATF temperature sensor.
   Wiring color:
   a: Orange
   b: Blue

3. **INSTALL VALVE BODY OIL STRAINER ASSEMBLY (See page AT-146)**

4. **INSTALL AUTOMATIC TRANSMISSION OIL PAN SUB-ASSEMBLY (See page AT-146)**

5. **CONNECT CABLE TO NEGATIVE BATTERY TERMINAL**
   Torque: 3.9 N*m (40 kgf*cm, 35 in.*lbf)

6. **PERFORM INITIALIZATION**
   (See page AT-17)

7. **ADD AUTOMATIC TRANSMISSION FLUID**
   (See page AT-135)

PARK / NEUTRAL POSITION SWITCH

REMOVAL

1. **DISCONNECT CABLE FROM NEGATIVE BATTERY TERMINAL**
2. **DISCONNECT PARK/NEUTRAL POSITION SWITCH CONNECTOR**
3. **REMOVE PARK/NEUTRAL POSITION SWITCH ASSEMBLY**
   (a) Using a screwdriver, unstake the lock washer.
   (b) Remove the nut, lock washer and grommet.
   (c) Remove the bolt and park/neutral position switch.

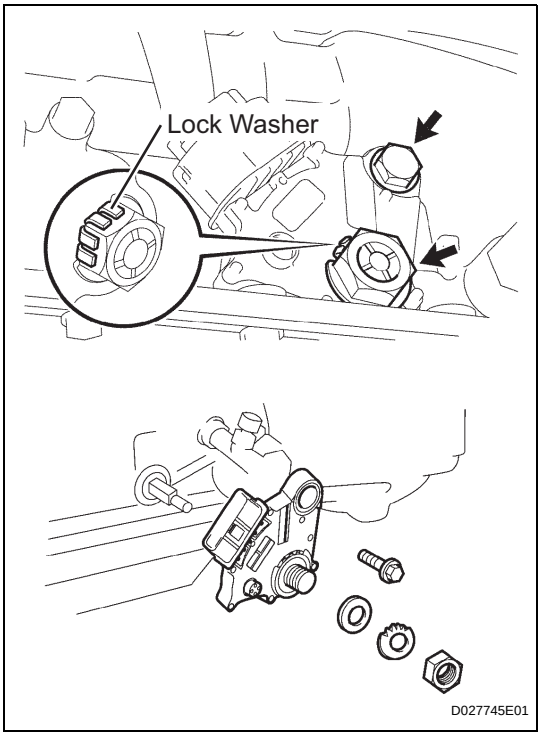

ADJUSTMENT

1. INSPECT PARK/NEUTRAL POSITION SWITCH ASSEMBLY

(a) Apply the parking brake and turn the ignition switch to ON.

(b) Depress the brake pedal and check that the engine starts only when the shift lever is set in the N or P position and that it does not start in any other positions.

(c) Check that the back-up light comes on and the reverse warning buzzer sounds only when the shift lever is set in the R position and not in other positions.

If any failure is found, check the park/neutral position switch for continuity.

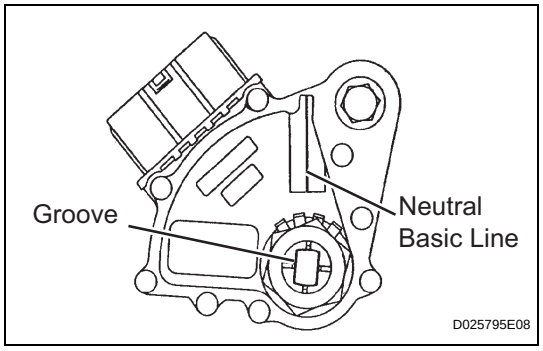

2. ADJUST PARK/NEUTRAL POSITION SWITCH ASSEMBLY

(a) Loosen the bolt of the park/neutral position switch and set the shift lever to the N position.

(b) Align the groove and the neutral basic line.

(c) Hold the switch in position and tighten the bolt.

Torque: 13 N*m (130 kgf*cm, 9 ft.*lbf)

(d) After making an adjustment, perform the inspection described in step 1.

INSTALLATION

1. INSTALL PARK/NEUTRAL POSITION SWITCH ASSEMBLY

(a) Install the park/neutral position switch onto the manual valve lever shaft and provisionally tighten the adjusting bolt.

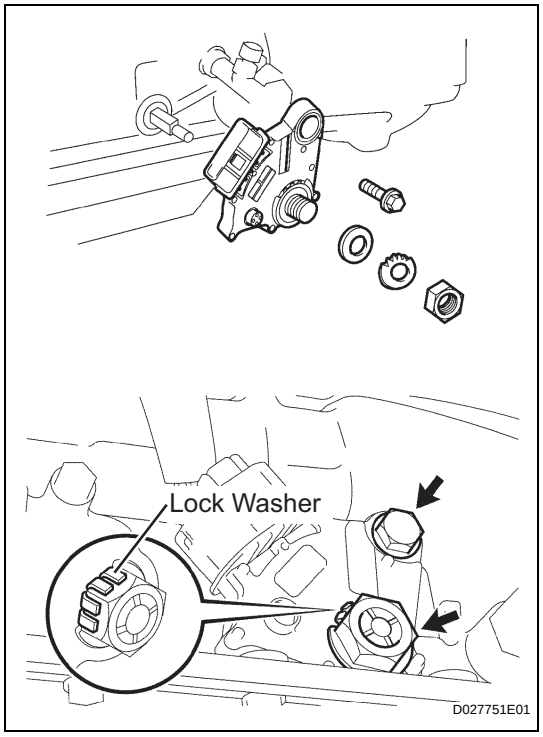

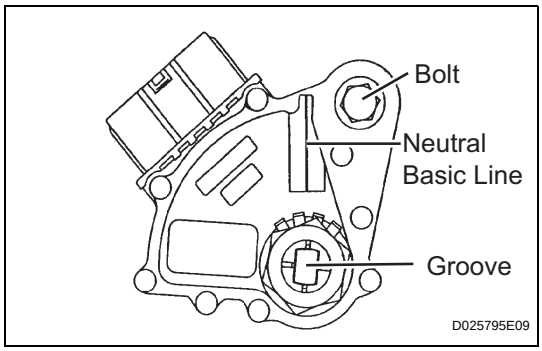

(b) Install the grommet, a new lock washer and the nut.
Torque: 6.9 N*m (70 kgf*cm, 61 in.*lbf)
(c) Install the manual valve lever shaft onto the groove and turn it 2 notches counterclockwise to the neutral position.
(d) Align the neutral basic line with the switch groove and tighten the adjusting bolt.
Torque: 13 N*m (130 kgf*cm, 9 ft.*lbf)
(e) Bend the tabs of the lock washer.
HINT:
Bend at least 2 of the lock washer tabs.

2. **CONNECT PARK/NEUTRAL POSITION SWITCH CONNECTOR**
3. **CONNECT CABLE TO NEGATIVE BATTERY TERMINAL**
Torque: 3.9 N*m (40 kgf*cm, 35 in.*lbf)
4. **INSPECT PARK/NEUTRAL POSITION SWITCH ASSEMBLY (See page AT-142)**
5. **ADJUST PARK/NEUTRAL POSITION SWITCH ASSEMBLY (See page AT-142)**
6. **ADJUST SHIFT LEVER POSITION (See page AT-155)**
7. **INSPECT SHIFT LEVER POSITION (See page AT-155)**

VALVE BODY ASSEMBLY

REMOVAL

CAUTION:
When working with FIPG material, you must observe the following guidelines.

- **Using a razor blade and gasket scraper, remove all the old FIPG material from the gasket surfaces.**
- **Thoroughly clean all components to remove all loose material.**
- **Clean both sealing surfaces with a non-residue solvent.**
- **Apply FIPG in an approximately 1 mm (0.04 in.) wide bead along the sealing surface.**
- **Parts must be assembled within 10 minutes of application. Otherwise, the FIPG material must be removed and reapplied.**

1. DISCONNECT CABLE FROM NEGATIVE BATTERY TERMINAL

2. DRAIN AUTOMATIC TRANSMISSION FLUID

(a) Remove the drain plug, gasket and drain ATF.

(b) Install a new gasket and drain plug.
Torque: 28 N*m (285 kgf*cm, 21 ft.*lbf)

3. REMOVE AUTOMATIC TRANSMISSION OIL PAN SUB-ASSEMBLY

NOTICE:
Some fluid will remain in the oil pan.

(a) Remove the 20 bolts, gasket and oil pan sub-assembly.

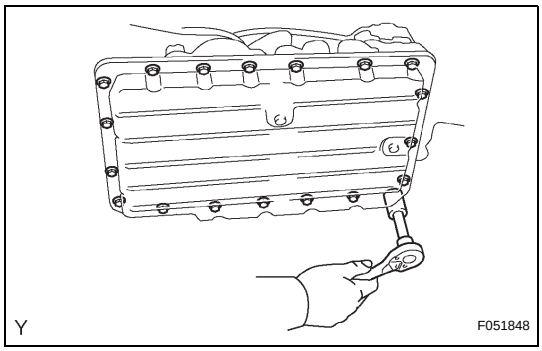

(b) Examine the particles in the pan.

(1) Remove the magnets and use them to collect steel particles. Carefully inspect the foreign matter and particles in the pan and on the magnets to anticipate the type of wear you will find in the transmission.
Steel (magnetic) ... bearing, gear and clutch plate wear
Brass (non-magnetic) ... bushing wear

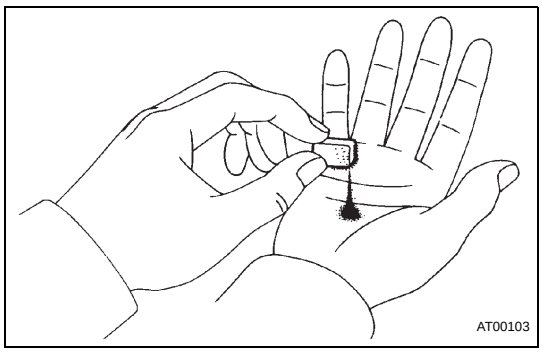

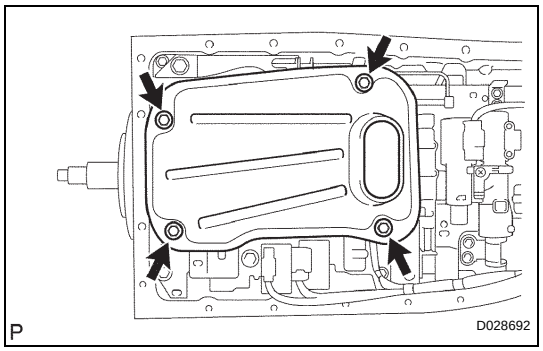

4. REMOVE VALVE BODY OIL STRAINER ASSEMBLY

(a) Remove the 4 bolts, oil strainer and O-ring.

NOTICE:

Be careful as some fluid will come out of the oil strainer.

5. SEPARATE TRANSMISSION WIRE (See page AT-140)

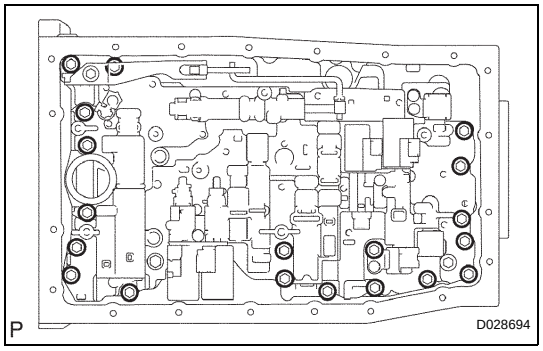

6. REMOVE TRANSMISSION VALVE BODY ASSEMBLY

(a) Remove the 19 bolts and valve body.

(b) Remove the 3 drum seal gaskets.

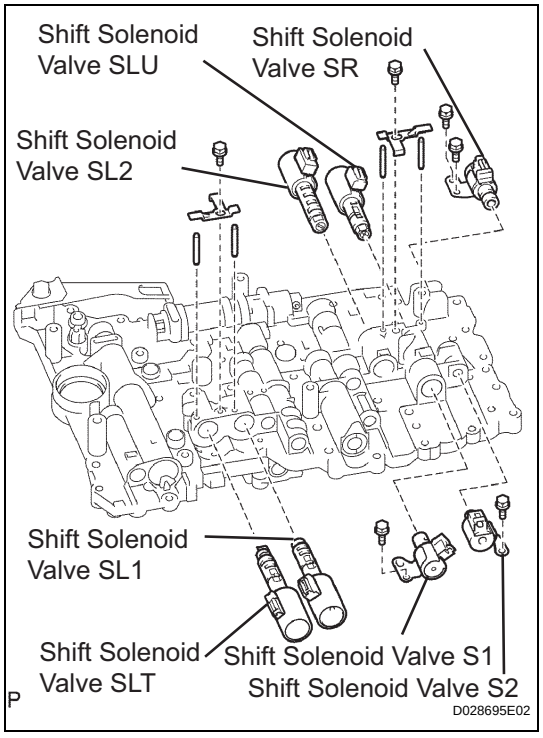

(c) Remove the bolt, lock plate, pin and shift solenoid valves SLT and SL1.

(d) Remove the bolt, lock plate, pin and shift solenoid valves SLU and SL2.

(e) Remove the 2 bolts and shift solenoid valve SR.

(f) Remove the bolt and shift solenoid valve S1.

(g) Remove the bolt and shift solenoid valve S2.

SHIFT LOCK SYSTEM

ON-VEHICLE INSPECTION

1. CHECK SHIFT LOCK OPERATION

(a) Shift the shift lever to the P position.
(b) Turn the ignition switch to LOCK.
(c) Check that the shift lever cannot be shifted to any positions other than P.
(d) Turn the ignition switch to ON, depress the brake pedal, and check that the shift lever can be shifted to other positions.

2. CHECK SHIFT LOCK RELEASE LINK OPERATION

(a) Using a small screwdriver, remove the shift lever cap.
(b) When operating the shift lever with the shift lock release link pressed, check that the lever can be shifted to any positions other than P.

3. CHECK KEY INTERLOCK OPERATION

(a) Turn the ignition switch to ON.
(b) Depress the brake pedal and shift the shift lever to any positions other than P.
(c) Check that the ignition key cannot be turned to LOCK.
(d) Shift the shift lever to the P position, turn the ignition key to LOCK, and check that the ignition key can be removed.

4. INSPECT SHIFT LOCK CONTROL ECU SUB-ASSEMBLY

(a) Using a voltmeter, measure the voltage at each terminal.
HINT:
Do not disconnect the shift lock control ECU connector.

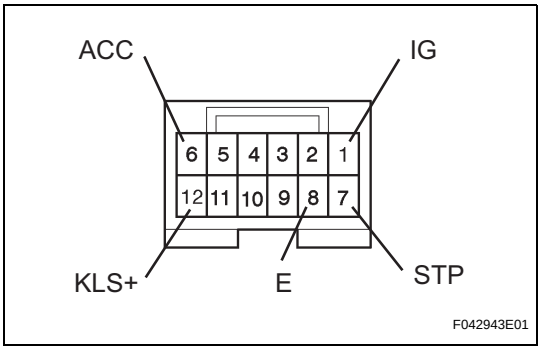

Terminal	Measuring Condition	Voltage (V)
1 (KLS+) - 8 (E)	(1) Ignition switch ACC and P position (2) Ignition switch ACC and except P position (3) Ignition switch ACC and except P position (After approx. 1 second)	0 7.5 to 11 6 to 9
4 (ACC) - 8 (E)	Ignition switch ON	10 to 14
	Ignition switch ACC	10 to 14
	Ignition switch OFF	0
9 (STP) - 8 (E)	Depress brake pedal	10 to 14
	Release brake pedal	0
5 (IG) - 8 (E)	Ignition switch ON	10 to 14
	Ignition switch OFF	0

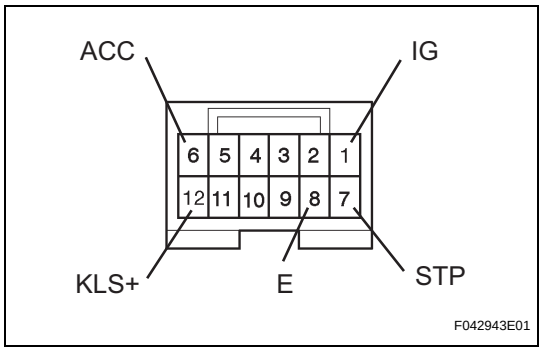

(b) Using an ohmmeter, measure the resistance at terminal E (8) and body ground.
HINT:
Do not disconnect the shift lock control ECU connector.

Terminal	Measuring Condition	Specified Value
8 (E) - Body ground	Always	Below 1 Ω

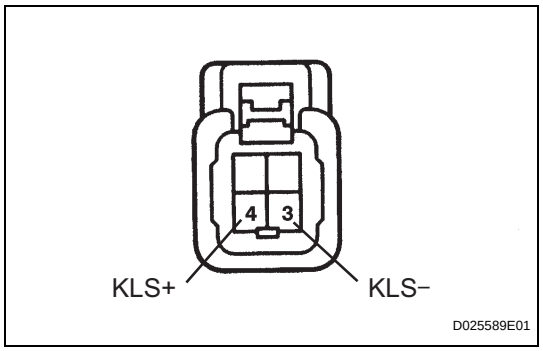

5. INSPECT KEY INTER LOCK SOLENOID

(a) Disconnect the solenoid connector.
(b) Connect KLS+ (4) terminal to the battery positive (+) terminal, and KLS- (3) terminal to the battery negative (-) terminal, and apply about 12V between KLS+ and KLS- terminals.
Check that operation noise can be heard from the solenoid.
If the solenoid does not operate, replace the solenoid.

AIR COOLED OIL COOLER

REMOVAL

1. **REMOVE RADIATOR GRILLE (See page ET-4)**
2. **DRAIN AUTOMATIC TRANSMISSION FLUID**
   (a) Remove the drain plug, gasket and drain ATF.
   (b) Install a new gasket and drain plug.
   Torque: 28 N*m (285 kgf*cm, 21 ft.*lbf)
3. **REMOVE OIL COOLER WITH HOSE ASSEMBLY**
   (a) Loosen the 2 clips and disconnect the 2 oil cooler hoses.
   (b) Remove the 4 bolts and the oil cooler with hose assembly.

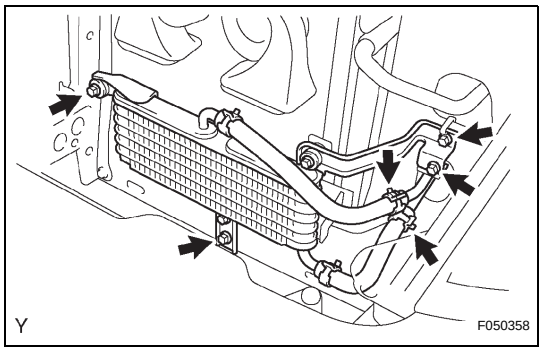

INSTALLATION

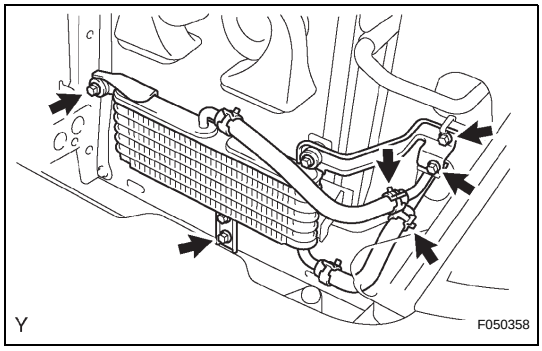

1. **INSTALL OIL COOLER WITH HOSE ASSEMBLY**
   (a) Install the oil cooler with hose assembly with the 4 bolts.
   Torque: 5.0 N*m (51 kgf*cm, 44 in.*lbf)
   (b) Install the 2 oil cooler hoses and 2 clips.
2. **ADD AUTOMATIC TRANSMISSION FLUID**
   (See page AT-135)
3. **INSTALL RADIATOR GRILLE (See page ET-11)**

FLOOR SHIFT ASSEMBLY

COMPONENTS

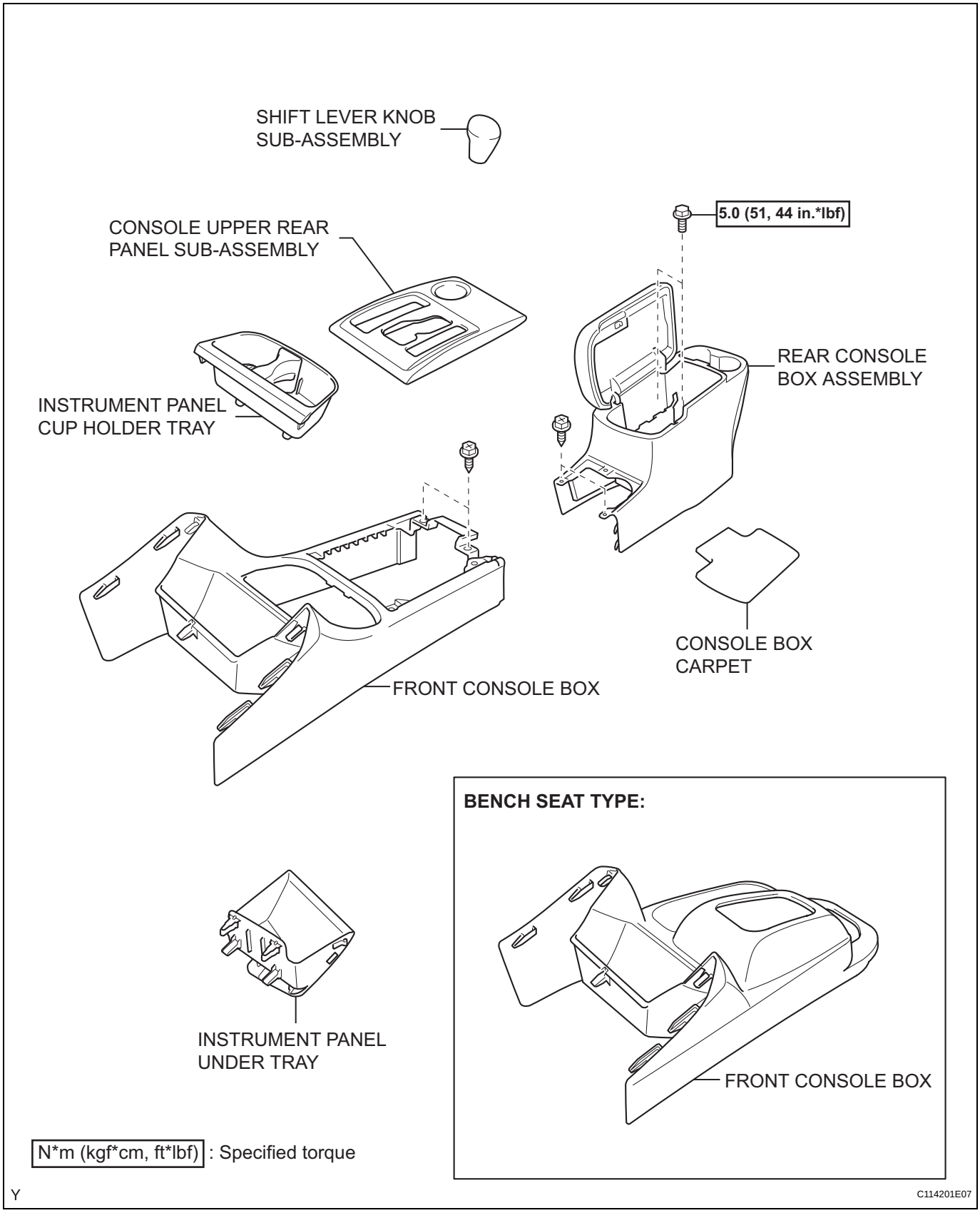

CABLE TYPE:

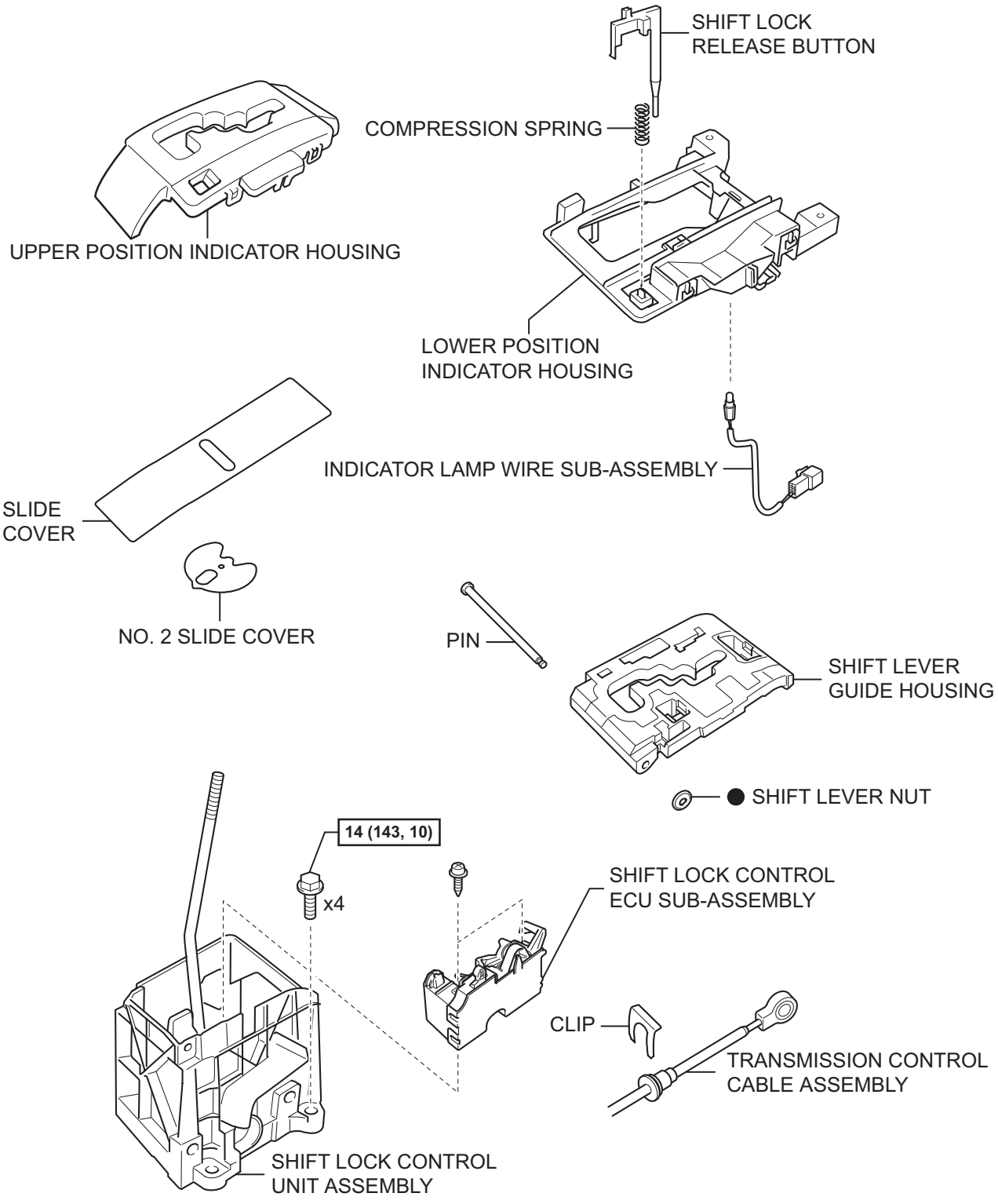

N*m (kgf*cm, ft*lbf) : Specified torque

● Non-reusable part

AT

Y

C114202E04

AUTOMATIC TRANSMISSION ASSEMBLY

COMPONENTS

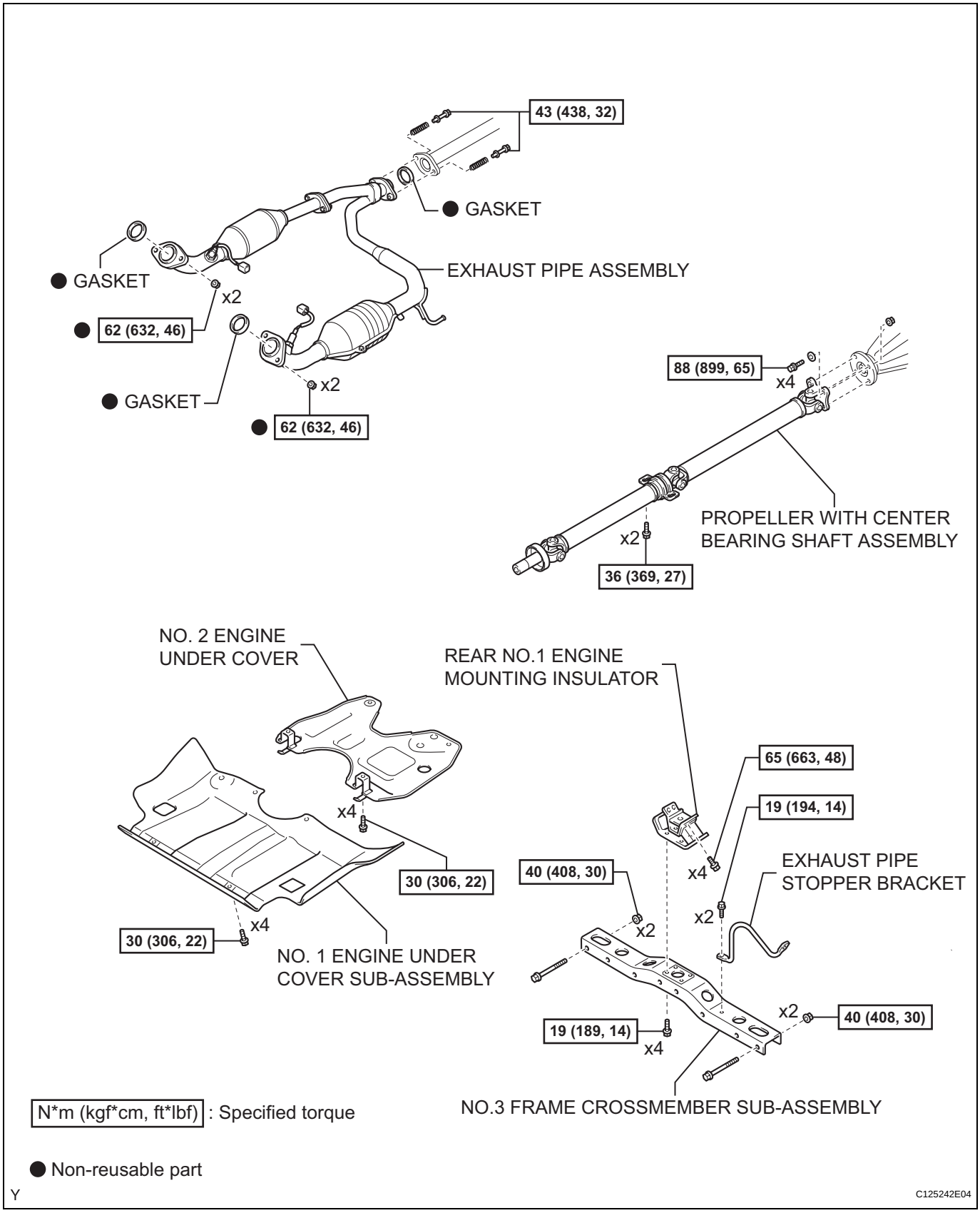

AT

Y

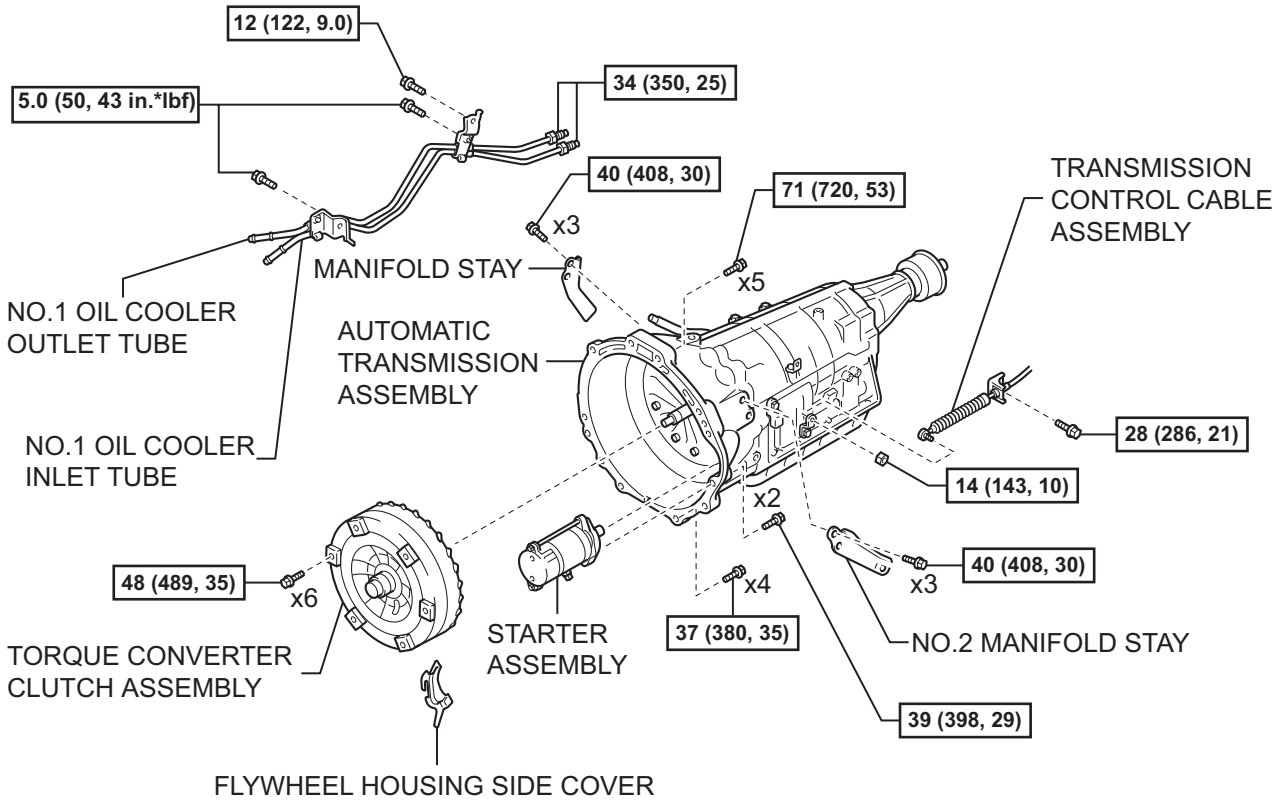

N*m (kgf*cm, ft*lbf) : Specified torque

Y

C125234E03

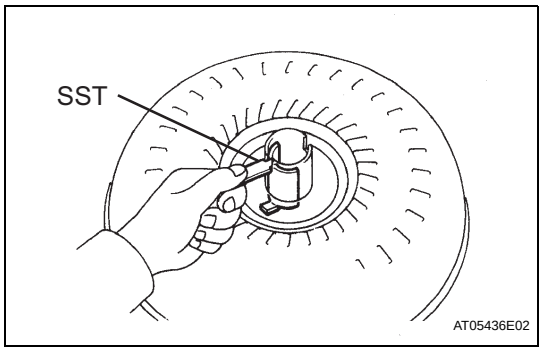

TORQUE CONVERTER CLUTCH AND DRIVE PLATE

INSPECTION

1. INSPECT TORQUE CONVERTER CLUTCH ASSEMBLY

(a) Inspect the one-way clutch.

(1) Install SST so that it fits in the notch of the converter hub and outer race of the one-way clutch.
SST 09350-32014 (09351-32020)

(2) Press on the serrations of the starter with a finger and rotate it.
Check if it rotates smoothly when turned clockwise and locks up when turned counterclockwise.
If necessary, clean the converter and check the one-way clutch again.
Replace the converter if the one-way clutch still won't operate as specified.

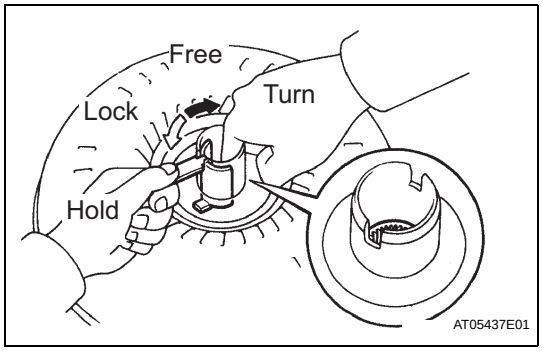

(b) Check the condition of the torque converter clutch assembly.

(1) If the inspection result of the torque converter clutch assembly meets any of the cases mentioned below, replace the torque converter clutch.
Malfunction item:
Any metallic sound is heard from the torque converter clutch during stall test or when the shift lever is in the neutral position.
One-way clutch is free or locked in both directions. Fine powders exceeding the sample limit are identified in ATF. (See the sample.)
HINT:
The sample shows the auto fluid of approximately 0.25 liters (0.26 US qts, 0.22 Imp. qts) that is taken out from the removed torque converter clutch.

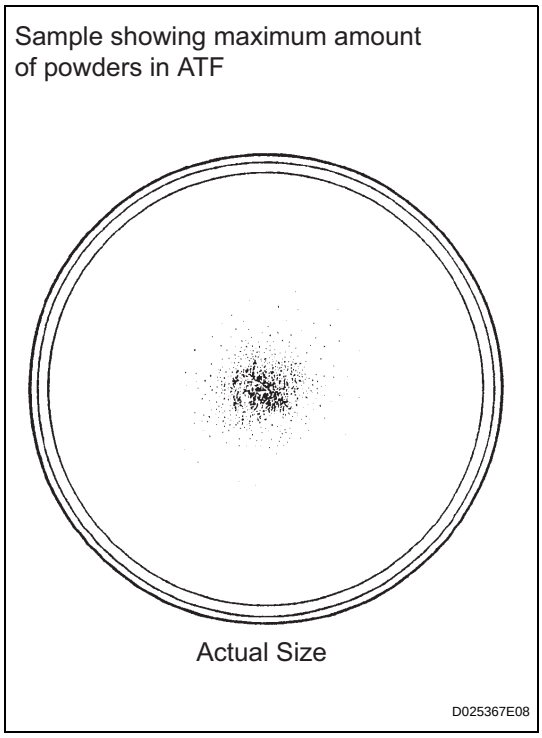

(c) Replace the ATF in the torque converter clutch.

(1) If the ATF is discolored and/or has a foul odor, completely stir the ATF in the torque converter clutch and drain it with the installation surface facing up.

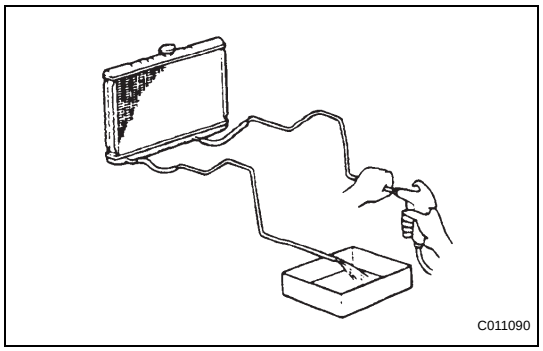

(d) Clean and then check the oil cooler and oil pipe line.
  (1) If inspecting the torque converter clutch or exchanging the ATF, clean the oil cooler and oil pipe line.
  HINT:
  - Apply compressed air of 196 kPa (2 kgf/ cm2, 28 psi) from the inlet hose.
  - If plenty of fine powders are identified in the ATF, add new ATF using a bucket pump and clean the ATF again.

  (2) If the ATF is cloudy, inspect the oil cooler (radiator).

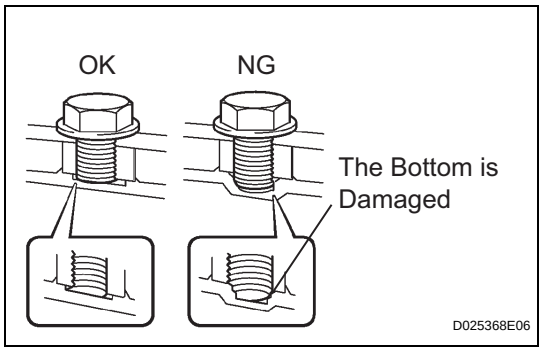

(e) Be careful not to deform the torque converter clutch or damage the oil pump gear.
  (1) When any marks due to interference are found on the end of the bolt to the torque converter clutch or on the bottom of the bolt hole, replace the bolt and the torque converter clutch.
  (2) All the bolts should be the same length.
  (3) Do not lose any spring washers.

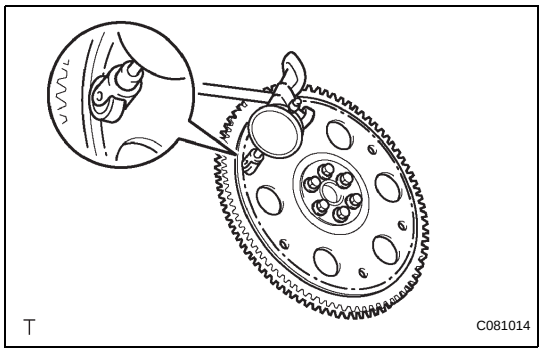

2. INSPECT DRIVE PLATE AND RING GEAR SUB-ASSEMBLY

(a) Set up a dial indicator and measure the drive plate runout.
Maximum runout:
0.20 mm (0.0079 in.)

(b) Check the ring gear for damage.
If the runout is not within the specification or the ring gear is damaged, replace the drive plate.

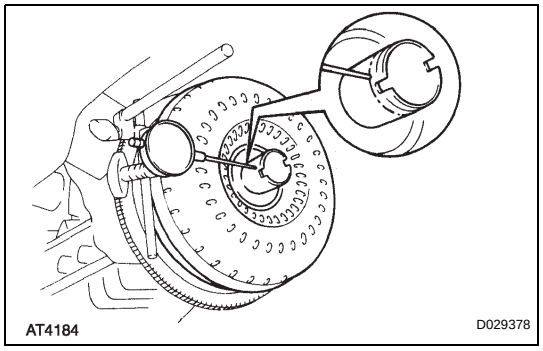

3. INSPECT RUNOUT OF TORQUE CONVERTER CLUTCH ASSEMBLY

(a) Provisionally mount the torque converter onto the drive plate, set up a dial indicator, and measure the torque converter sleeve runout.
Maximum runout:
0.30 mm (0.0118 in.)
If the runout is not within the specification, try to correct it by reinstalling the converter to the correct orientation.
HINT:
Mark the position of the converter to ensure correct installation.

TRANSMISSION CONTROL CABLE

REMOVAL

1. **REMOVE CONSOLE UPPER REAR PANEL SUB-ASSEMBLY (See page IP-9)**
2. **REMOVE CONSOLE BOX ASSEMBLY REAR (See page IP-10)**
3. **REMOVE INSTRUMENT PANEL CUP HOLDER TRAY (See page IP-10)**
4. **REMOVE CONSOLE BOX FRONT (See page IP-10)**
5. **REMOVE VOLTAGE INVERTER ASSEMBLY (w/ Voltage Inverter) (See page AV-104)**
6. **REMOVE TRANSMISSION CONTROL CABLE ASSEMBLY**
   (a) Disconnect the transmission control cable assembly from the shift lever assembly.
   (b) Remove the clip and disconnect the transmission control cable.

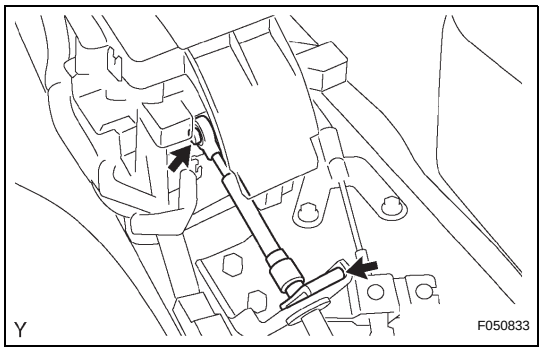

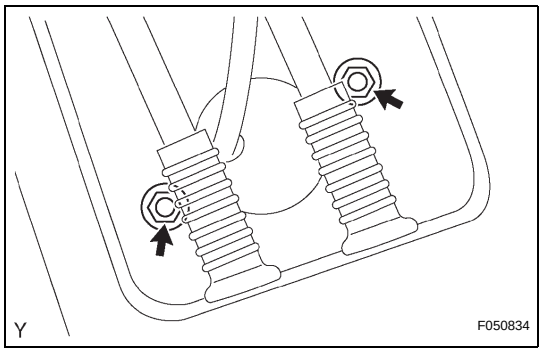

   (c) Remove the 2 nuts and disconnect the transmission control cable assembly from the body.

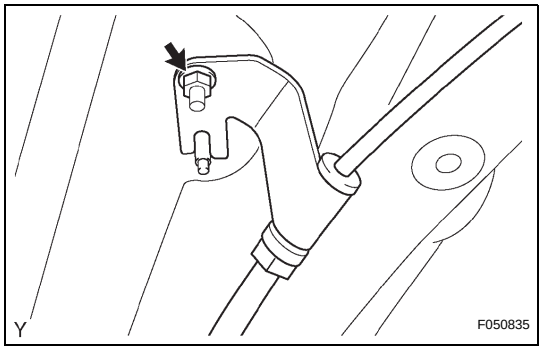

   (d) Remove the nut and disconnect the transmission control cable assembly from the body.

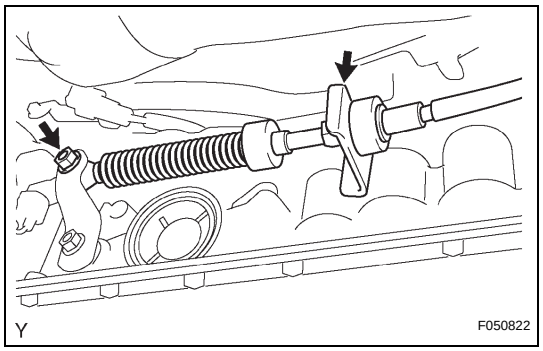

(e) Remove the clip and transmission control cable bracket.
(f) Remove the nut and transmission control cable assembly.

INSTALLATION

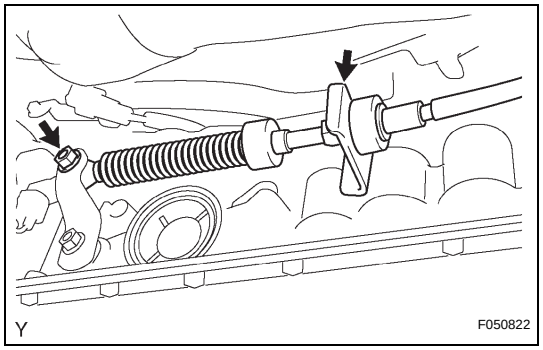

1. INSTALL TRANSMISSION CONTROL CABLE ASSEMBLY

(a) Install the transmission control cable assembly with the nut.
Torque: 14 N*m (143 kgf*cm, 10 ft.*lbf)
(b) Install the transmission control cable bracket and lock plate.

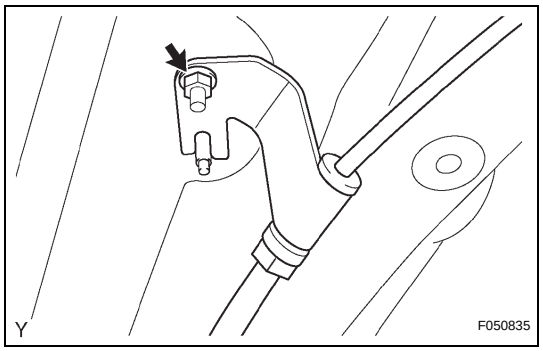

(c) Connect the transmission control cable with the nut to the body.
Torque: 5.5 N*m (56 kgf*cm, 49 in.*lbf)

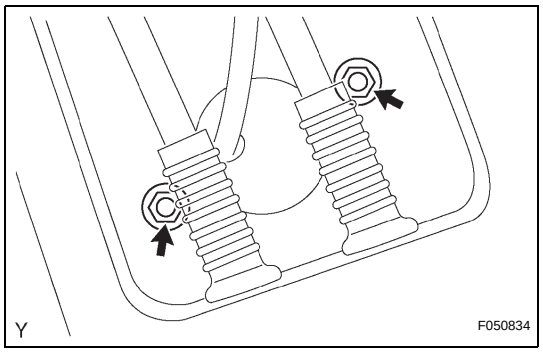

(d) Connect the transmission control cable with the 2 nuts to the body.
Torque: 5.5 N*m (56 kgf*cm, 49 in.*lbf)

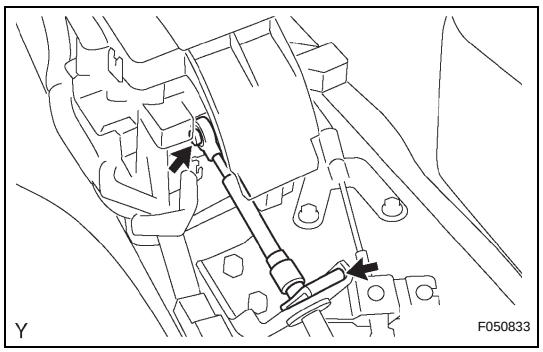

(e) Connect the transmission control cable with the lock plate to the floor shift assembly.
(f) Install the transmission control cable onto the floor shift assembly.

2. INSTALL VOLTAGE INVERTER ASSEMBLY (w/ Voltage Inverter) (See page AV-105)

3. INSTALL CONSOLE BOX FRONT (See page IP-24)

4. INSTALL INSTRUMENT PANEL CUP HOLDER TRAY (See page IP-24)

5. **INSTALL CONSOLE BOX ASSEMBLY REAR (See page IP-24)**
6. **INSTALL CONSOLE UPPER REAR PANEL SUB-ASSEMBLY (See page IP-25)**
7. **ADJUST SHIFT LEVER POSITION (See page AT-105)**
8. **INSPECT SHIFT LEVER POSITION (See page AT-105)**

AUTOMATIC TRANSMISSION SYSTEM

PRECAUTION

1. **PRECAUTION**

   NOTICE:

   - **Perform the RESET MEMORY (AT initialization) when replacing the automatic transmission assembly, engine assembly or ECM (See page AT-17).**
   - **Perform the REGISTRATION (VIN registration) when replacing the ECM (See page ES-14).**
   - **Re-set the function of the ATF (Automatic Transmission Fluid) temperature warning light, if the ECM has been replaced or RESET MEMORY (AT initialization) has been performed (See page AT-17).**

   HINT:

   RESET MEMORY cannot be completed by only disconnecting the negative cable from the battery.

2. **CONNECT BATTERY NEGATIVE TERMINAL**

   (a) Connect the battery negative terminal to the cable and run the engine at no less than 2,000 rpm for 1 minute.

   NOTICE:

   If the engine exceeds 2,000 rpm, the clutch is automatically disengaged by the compressor protection control system.

3. **PRECAUTION FOR DISASSEMBLY AND REASSEMBLY**

   CAUTION:

   When using compressed air, always aim away from yourself to prevent Automatic Transmission Fluid (ATF) or kerosene from spraying on your face.

   NOTICE:

   - **The automatic transaxle is composed of precision-made parts, necessitating careful inspection before reassembly because even a small nick could cause fluid leakage or affect performance.**
   - **The procedures are organized so that you work on only one component group at a time. This will help avoid confusion with similar-looking parts of different sub-assemblies being on your workbench at the same time.**
   - **The component groups are inspected and repaired from the converter housing side.**

AT

- **Whenever possible, complete the inspection, repair and reassembly before proceeding to the next component group. If a defect is found in a certain component group during reassembly, inspect and repair this group immediately. If a component group cannot be assembled because parts are being ordered, be sure to keep all parts of the group in a separate container while proceeding with disassembly, inspection, repair and reassembly of other component groups.**
- **When changing the automatic transmission fluid, use only "Toyota Genuine ATF WS" (ATF JWS3324 or NWS9638).**
- **All disassembled parts should be washed clean, and compressed air should be blown through any fluid passages and holes.**
- **Dry all parts with compressed air. Never use cloth.**
- **The recommended ATF or kerosene should be used for cleaning.**
- **After cleaning, the parts should be arranged in the order they were removed for efficient inspection, repairs, and reassembly.**
- **When disassembling a valve body, be sue to match each valve with its corresponding spring.**
- **New discs for the brakes and clutches that will be used for replacement must be soaked in ATF for at least 15 minutes before reassembly.**
- **All oil seal rings, clutch discs, clutch plates, rotating parts, and sliding surfaces should be coated with ATF prior to reassembly.**
- **All old gaskets and rubber O-rings must be replaced.**
- **Do not apply adhesive cement to gaskets and similar parts.**
- **Make sure that the ends of the snap rings are not aligned with any cutouts. Also make sure that snap rings are correctly installed into the grooves.**
- **If a worn bushing is to be replaced, the sub-assembly containing the bushing must also be replaced.**
- **Check the thrust bearings and races for wear or damage. Replace if necessary.**
- **Use petroleum jelly to keep parts in place.**

- **When working with FIPG material, perform the following:**
  Using a razor blade and gasket scraper, remove all old FIPG material from the gasket surface.
  Clean all components thoroughly to remove all foreign matter.
  Clean both sealing surfaces with a non-residue solvent.
  Apply FIPG material in a continuous line approximately 1 mm (0.04 in.) in diameter on the sealing surface.
  Reassemble parts within 10 minutes of applying FIPG material. Failing to do so will require the FIPG material to be removed and reapplied.

AUTOMATIC TRANSMISSION FLUID

ADJUSTMENT

AT

1. BEFORE REFILL TRANSMISSION

- This transmission requires Toyota Genuine ATF WS.
- It is necessary to refill the transmission with the correct amount of fluid.
- The vehicle must remain level while adjusting the transmission fluid level.
- On vehicles equipped with active suspension, turn the suspension control switch OFF if it is necessary to jack up the vehicle with the engine running.

2. TRANSMISSION PAN FILL

(a) Remove the refill plug and overflow plug.

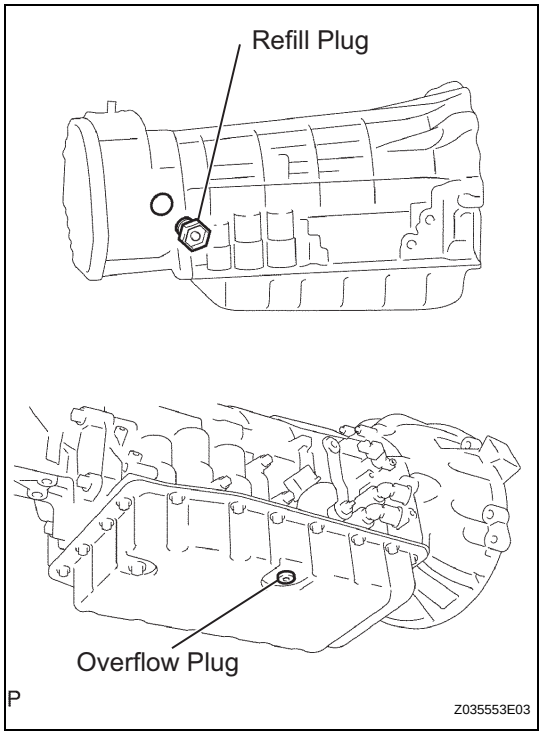

(b) Fill the transmission through the refill hole until fluid begins to trickle out of the overflow tube.

(c) Reinstall the overflow plug.

3. TRANSMISSION FILL

(a) Fill the transmission with the correct amount of fluid as listed in the table below.

(b) Reinstall the refill plug to avoid fluid splash.

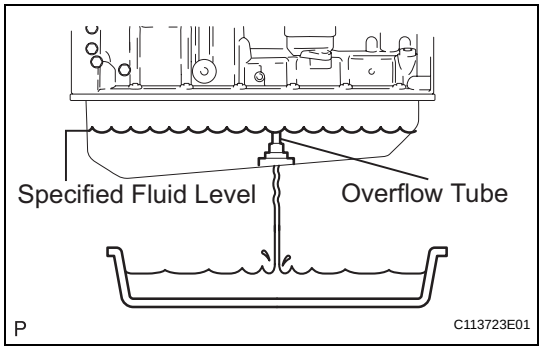

Repair	Fill Amount
Transmission pan and drain plug removal	1.3 L (1.37 US qts, 1.14 lmp qts)
Transmission valve body removal	3.9 L (4.12 US qts, 3.43 lmp qts)
Torque converter removal	5.3 L (5.60 US qts, 4.66 lmp qts)
Entire transmission assembly	5.3 L (5.60 US qts, 4.66 lmp qts)

HINT:

If you cannot add the listed amount of fluid, do the following:

AT

- Install the refill plug.
- Allow the engine to idle with the air conditioning OFF.
- Move the shift lever through entire gear range to circulate fluid.
- Wait for 30 seconds with the engine idling.
- Stop the engine.
- Remove the refill plug and add fluid.
- Reinstall the refill plug.

4. FLUID CIRCULATION

(a) Allow the engine to idle with the air conditioning OFF.

(b) Move the shift lever through entire gear range to circulate fluid.

5. FLUID TEMPERATURE CHECK

NOTICE:

The fluid temperature should be less than 30°C (86°F) before beginning the fluid temperature check.

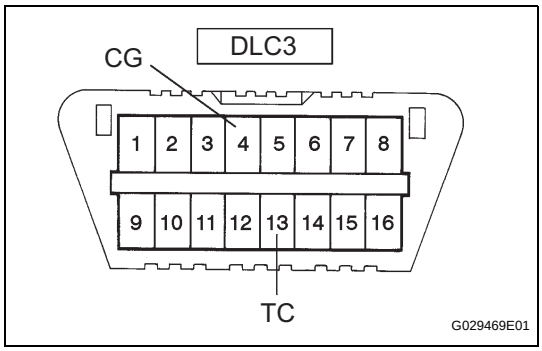

(a) With intelligent tester

(1) Connect the intelligent tester to the DLC3.

(2) Select the tester menus: OBD/MOBD, ENGINE, DATA LIST and A/T.

(3) Check A/T OIL TEMP.

(4) Allow the engine to idle until the fluid temperature reaches 46°C (115°F).

(b) Without intelligent tester (Using A/T OIL TEMP indicator)

(1) Create a terminals between CG (4) and TC (13) of the DLC3 using SST (09843-18040).

(2) Move the shift lever back and forth between N and D every 1.5 seconds for six seconds.

(3) The D shift indicator on the combination meter comes on for two seconds. This indicates that the fluid temperature check mode has been started.

(4) The D shift indicator will come on again when the fluid temperature reaches 46°C (115°F) and will blink when it exceeds 56°C (130°F).

(5) Allow the engine to idle until the fluid temperature reaches 46°C (115°F).

6. FLUID LEVEL CHECK

NOTICE:

The fluid temperature must be between 46°C (115°F) and 56°C (130°F) to accurately check the fluid level.

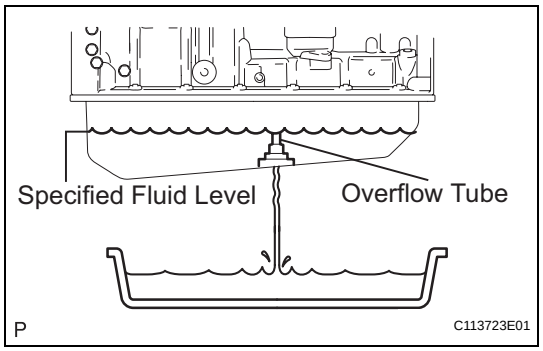

(a) Remove the overflow plug with the engine idling.
(b) Check that the fluid comes out of the overflow tube.
If fluid does not come out, proceed to step 7.
If fluid comes out, wait until the overflow slows to a trickle and proceed to step 8.

7. TRANSMISSION REFILL

(a) Install the overflow plug.
(b) Stop the engine.
(c) Remove the refill plug.
(d) Add 0.4 liters (0.42 US qts, 0.35 lmp qts) of fluid.
(e) Allow the engine to idle and wait for 10 seconds.
(f) Proceed to step 6.

8. COMPLETE

(a) Install the overflow plug with a new gasket.
(b) Stop the engine.
(c) Install the refill plug with a new gasket.
Torque: 20 N*m (205 kgf*cm, 15 ft.*lbf) for overflow plug
39 N*m (400 kgf*cm, 29 ft.*lbf) for refill plug

AT

AT

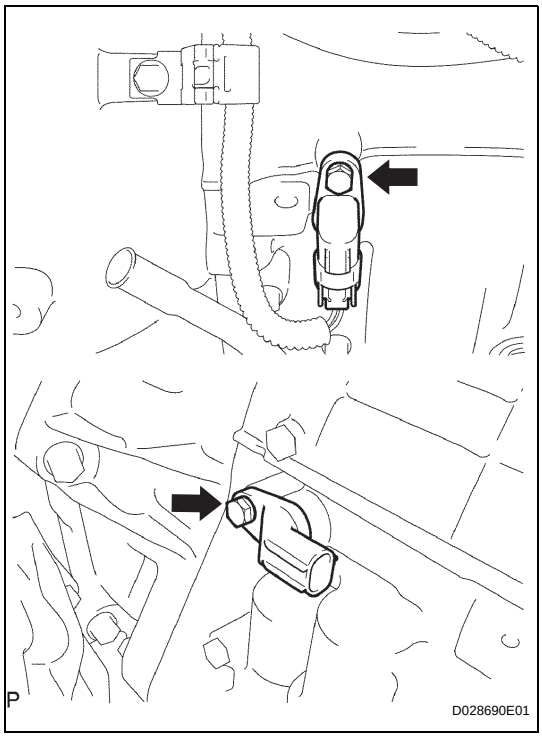

SPEED SENSOR

REMOVAL

1. REMOVE TRANSMISSION REVOLUTION SENSOR

(a) Disconnect the connector.

(b) Remove the bolt and speed sensor.

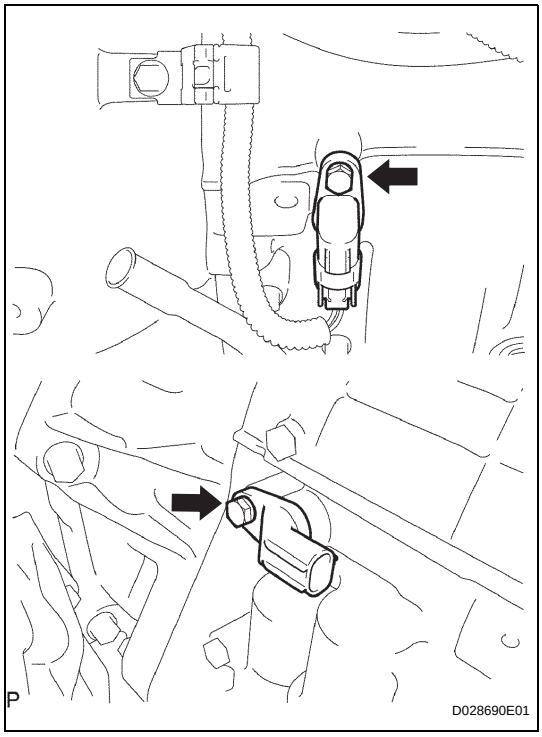

INSTALLATION

1. INSTALL TRANSMISSION REVOLUTION SENSOR

(a) Coat a new O-ring with ATF.

(b) Install the speed sensor with the bolt.
Torque: 5.4 N*m (55 kgf*cm, 48 in.*lbf)

(c) Connect the connector.

TRANSMISSION WIRE

REMOVAL

CAUTION:
When working with FIPG material, you must observe the following guidelines.

- Using a razor blade and gasket scraper, remove all the old FIPG material from the gasket surfaces.
- Thoroughly clean all components to remove all loose material.
- Clean both sealing surfaces with a non-residue solvent.
- Apply FIPG in an approximately 1 mm (0.04 in.) wide bead along the sealing surface.
- Parts must be assembled within 10 minutes of application. Otherwise, the FIPG material must be removed and reapplied.

1. DISCONNECT CABLE FROM NEGATIVE BATTERY TERMINAL

2. DRAIN AUTOMATIC TRANSMISSION FLUID
(a) Remove the drain plug, gasket and drain ATF.
(b) Install a new gasket and drain plug.
Torque: 28 N*m (285 kgf*cm, 21 ft.*lbf)

3. REMOVE AUTOMATIC TRANSMISSION OIL PAN SUB-ASSEMBLY (See page AT-147)

4. REMOVE VALVE BODY OIL STRAINER ASSEMBLY (See page AT-148)

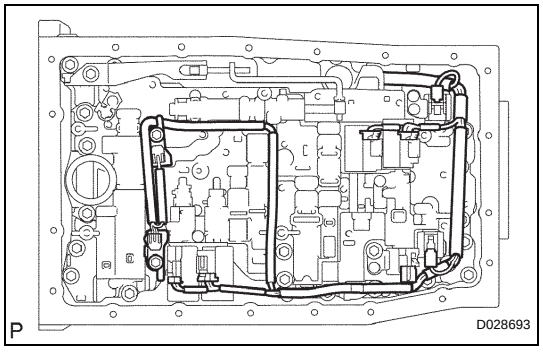

5. SEPARATE TRANSMISSION WIRE
(a) Remove the bolt and clamp.
(b) Disconnect the ATF temperature sensor.
(c) Disconnect the 7 connectors from the solenoid valves.

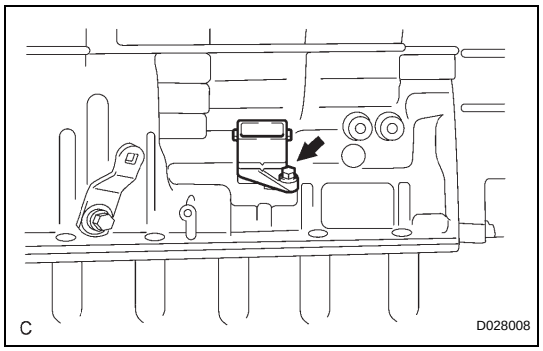

6. REMOVE TRANSMISSION WIRE
(a) Disconnect the transmission wire connector.
(b) Remove the bolt and pull out the transmission wire.

AT

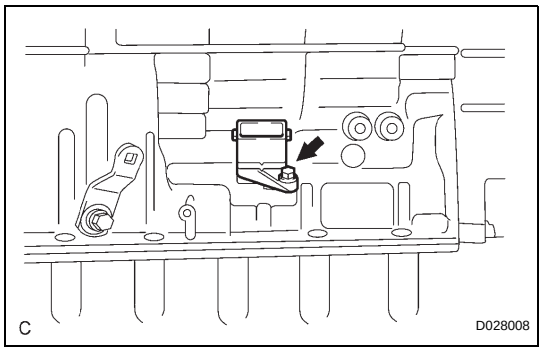

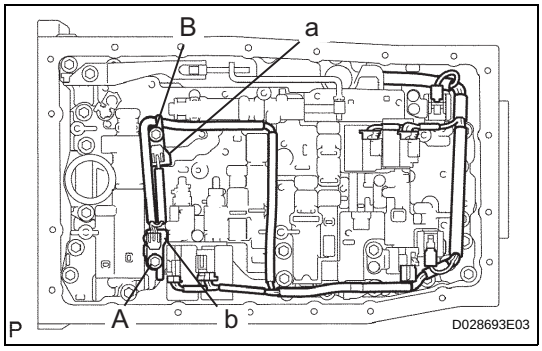

INSTALLATION

1. **INSTALL TRANSMISSION WIRE**
   (a) Install the transmission wire with the bolt.
   Torque: 5.4 N*m (55 kgf*cm, 48 in.*lbf)
   (b) Connect the transmission wire connector.

2. **CONNECT TRANSMISSION WIRE**
   (a) Connect the 7 connectors to the solenoid valves.
   (b) Install the clamp with the bolt.
   Torque: A
   10 N*m (100 kgf*cm, 7 in.*lbf)
   B
   11 N*m (110 kgf*cm, 8 in.*lbf)
   (c) Connect the ATF temperature sensor.
   Wiring color:
   a: Orange
   b: Blue

3. **INSTALL VALVE BODY OIL STRAINER ASSEMBLY (See page AT-149)**

4. **INSTALL AUTOMATIC TRANSMISSION OIL PAN SUB-ASSEMBLY (See page AT-149)**

5. **CONNECT CABLE TO NEGATIVE BATTERY TERMINAL**
   Torque: 3.9 N*m (40 kgf*cm, 35 in.*lbf)

6. **PERFORM INITIALIZATION**
   (See page AT-17)

7. **ADD AUTOMATIC TRANSMISSION FLUID**
   (See page AT-139)

PARK / NEUTRAL POSITION SWITCH

REMOVAL

1. **DISCONNECT CABLE FROM NEGATIVE BATTERY TERMINAL**
2. **DISCONNECT PARK/NEUTRAL POSITION SWITCH CONNECTOR**
3. **REMOVE PARK/NEUTRAL POSITION SWITCH ASSEMBLY**
   (a) Using a screwdriver, unstake the lock washer.
   (b) Remove the nut, lock washer and grommet.
   (c) Remove the bolt and park/neutral position switch.

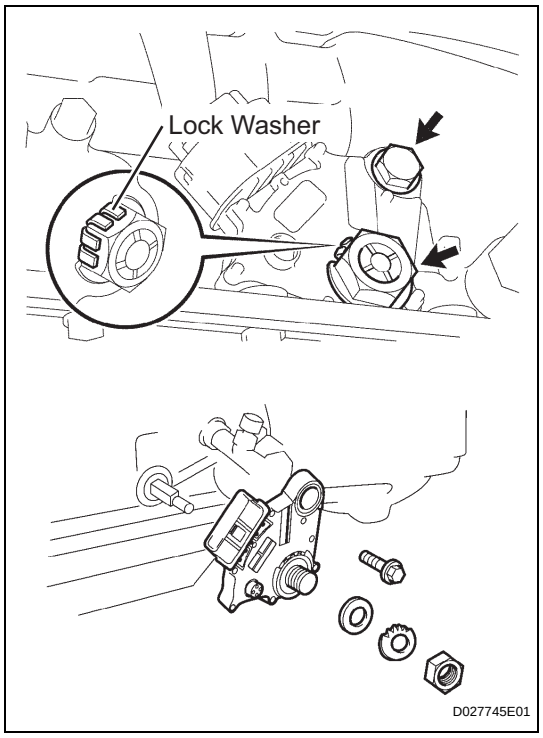

AT

ADJUSTMENT

1. INSPECT PARK/NEUTRAL POSITION SWITCH ASSEMBLY

(a) Apply the parking brake and turn the ignition switch to ON.

(b) Depress the brake pedal and check that the engine starts only when the shift lever is set in the N or P position and that it does not start in any other positions.

(c) Check that the back-up light comes on and the reverse warning buzzer sounds only when the shift lever is set in the R position and not in other positions.

If any failure is found, check the park/neutral position switch for continuity.

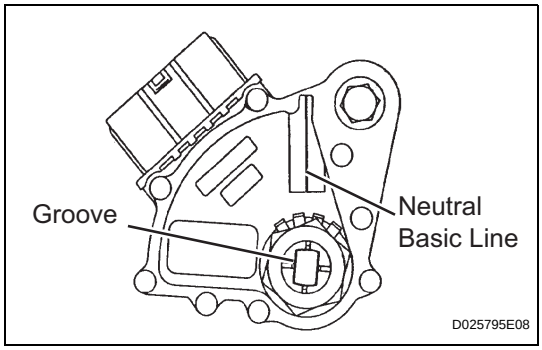

2. ADJUST PARK/NEUTRAL POSITION SWITCH ASSEMBLY

(a) Loosen the bolt of the park/neutral position switch and set the shift lever to the N position.

(b) Align the groove and the neutral basic line.

(c) Hold the switch in position and tighten the bolt.
Torque: 13 N*m (130 kgf*cm, 9 ft.*lbf)

(d) After making an adjustment, perform the inspection described in step 1.

INSTALLATION

1. INSTALL PARK/NEUTRAL POSITION SWITCH ASSEMBLY

(a) Install the park/neutral position switch onto the manual valve lever shaft and provisionally tighten the adjusting bolt.

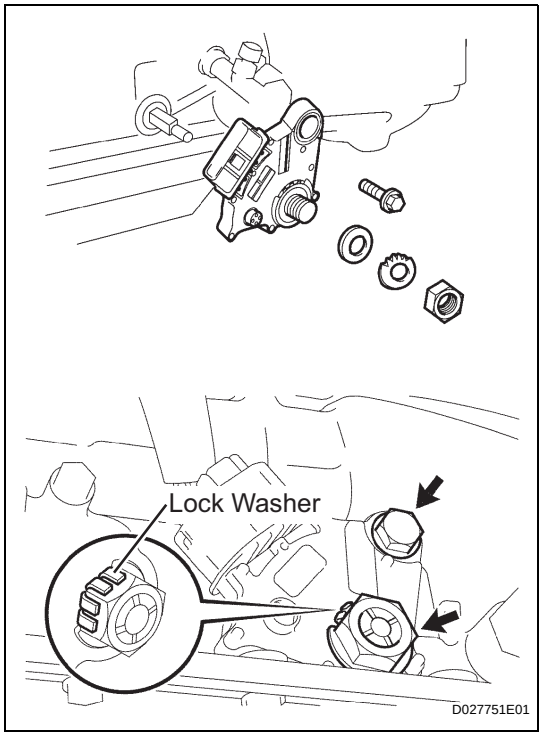

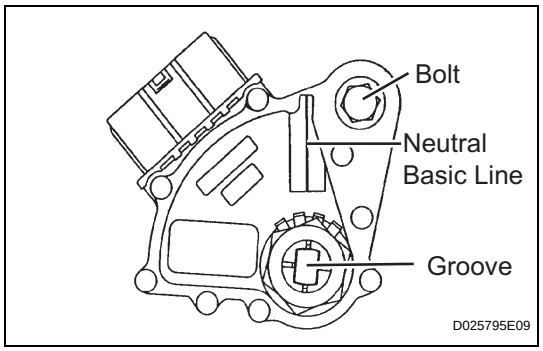

(b) Install the grommet, a new lock washer and the nut.
Torque: 6.9 N*m (70 kgf*cm, 61 in.*lbf)

(c) Install the manual valve lever shaft onto the groove and turn it 2 notches counterclockwise to the neutral position.

(d) Align the neutral basic line with the switch groove and tighten the adjusting bolt.
Torque: 13 N*m (133 kgf*cm, 10 ft.*lbf)

(e) Bend the tabs of the lock washer.
HINT:
Bend at least 2 of the lock washer tabs.

2. CONNECT PARK/NEUTRAL POSITION SWITCH CONNECTOR

3. CONNECT CABLE TO NEGATIVE BATTERY TERMINAL
Torque: 3.9 N*m (40 kgf*cm, 35 in.*lbf)

4. INSPECT PARK/NEUTRAL POSITION SWITCH ASSEMBLY (See page AT-145)

5. ADJUST PARK/NEUTRAL POSITION SWITCH ASSEMBLY (See page AT-145)

6. ADJUST SHIFT LEVER POSITION (See page AT-158)

7. INSPECT SHIFT LEVER POSITION (See page AT-158)

VALVE BODY ASSEMBLY

REMOVAL

CAUTION:
When working with FIPG material, you must observe the following guidelines.

- **Using a razor blade and gasket scraper, remove all the old FIPG material from the gasket surfaces.**
- **Thoroughly clean all components to remove all loose material.**
- **Clean both sealing surfaces with a non-residue solvent.**
- **Apply FIPG in an approximately 1 mm (0.04 in.) wide bead along the sealing surface.**
- **Parts must be assembled within 10 minutes of application. Otherwise, the FIPG material must be removed and reapplied.**

1. DISCONNECT CABLE FROM NEGATIVE BATTERY TERMINAL

2. DRAIN AUTOMATIC TRANSMISSION FLUID

(a) Remove the drain plug, gasket and drain ATF.

(b) Install a new gasket and drain plug.
Torque: 28 N*m (285 kgf*cm, 21 ft.*lbf)

3. REMOVE AUTOMATIC TRANSMISSION OIL PAN SUB-ASSEMBLY
NOTICE:
Some fluid will remain in the oil pan.

(a) Remove the 20 bolts, gasket and oil pan sub-assembly.

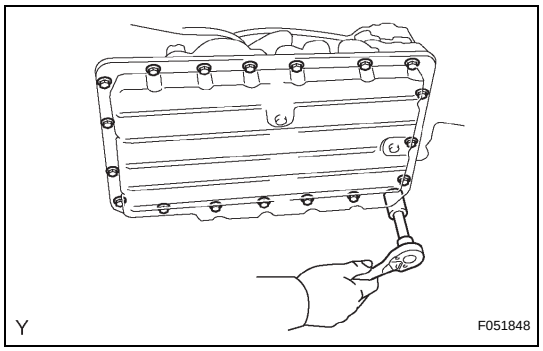

(b) Examine the particles in the pan.

(1) Remove the magnets and use them to collect steel particles. Carefully inspect the foreign matter and particles in the pan and on the magnets to anticipate the type of wear you will find in the transmission.
Steel (magnetic) ... bearing, gear and clutch plate wear
Brass (non-magnetic) ... bushing wear

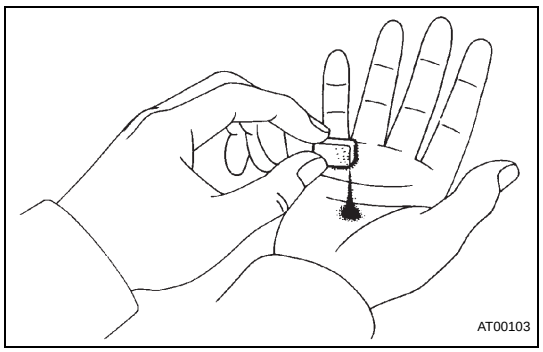

AT

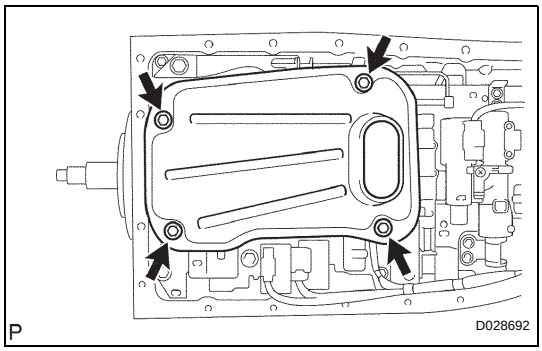

4. REMOVE VALVE BODY OIL STRAINER ASSEMBLY

(a) Remove the 4 bolts, oil strainer and O-ring.

NOTICE:

Be careful as some fluid will come out of the oil strainer.

5. SEPARATE TRANSMISSION WIRE (See page AT-143)

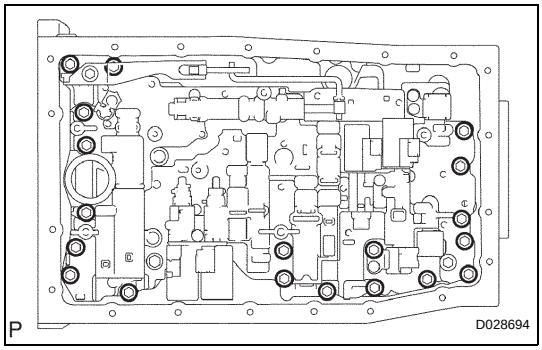

6. REMOVE TRANSMISSION VALVE BODY ASSEMBLY

(a) Remove the 19 bolts and valve body.

(b) Remove the 3 drum seal gaskets.

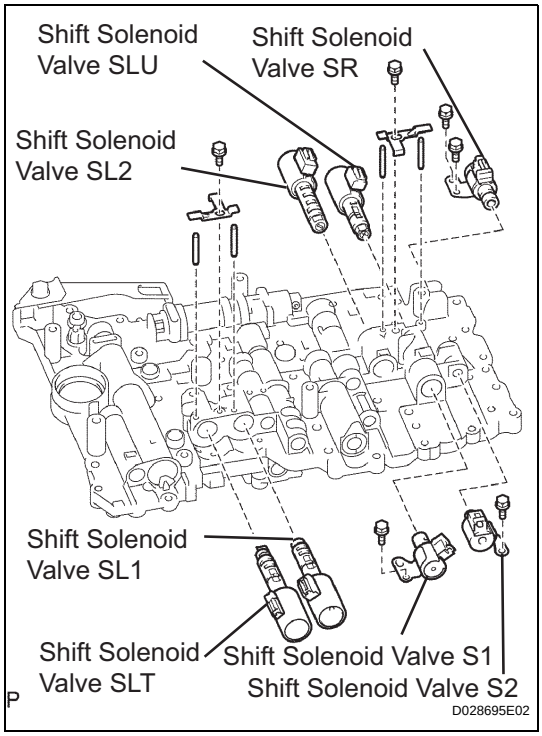

(c) Remove the bolt, lock plate, pin and shift solenoid valves SLT and SL1.

(d) Remove the bolt, lock plate, pin and shift solenoid valves SLU and SL2.

(e) Remove the 2 bolts and shift solenoid valve SR.

(f) Remove the bolt and shift solenoid valve S1.

(g) Remove the bolt and shift solenoid valve S2.

SHIFT LOCK SYSTEM

ON-VEHICLE INSPECTION

1. CHECK SHIFT LOCK OPERATION

(a) Shift the shift lever to the P position.
(b) Turn the ignition switch to LOCK.
(c) Check that the shift lever cannot be shifted to any positions other than P.
(d) Turn the ignition switch to ON, depress the brake pedal, and check that the shift lever can be shifted to other positions.

2. CHECK SHIFT LOCK RELEASE LINK OPERATION

(a) Using a small screwdriver, remove the shift lever cap.
(b) When operating the shift lever with the shift lock release link pressed, check that the lever can be shifted to any positions other than P.

3. CHECK KEY INTERLOCK OPERATION

(a) Turn the ignition switch to ON.
(b) Depress the brake pedal and shift the shift lever to any positions other than P.
(c) Check that the ignition key cannot be turned to LOCK.
(d) Shift the shift lever to the P position, turn the ignition key to LOCK, and check that the ignition key can be removed.

4. INSPECT SHIFT LOCK CONTROL ECU SUB-ASSEMBLY

(a) Using a voltmeter, measure the voltage at each terminal.
HINT:
Do not disconnect the shift lock control ECU connector.

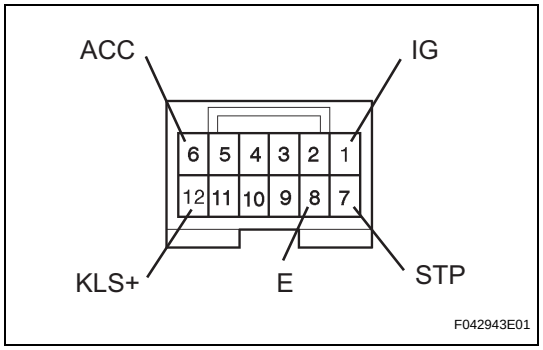

Terminal	Measuring Condition	Voltage (V)
1 (KLS+) - 8 (E)	(1) Ignition switch ACC and P position (2) Ignition switch ACC and except P position (3) Ignition switch ACC and except P position (After approx. 1 second)	0 7.5 to 11 6 to 9
4 (ACC) - 8 (E)	Ignition switch ON	10 to 14
	Ignition switch ACC	10 to 14
	Ignition switch OFF	0
9 (STP) - 8 (E)	Depress brake pedal	10 to 14
	Release brake pedal	0
5 (IG) - 8 (E)	Ignition switch ON	10 to 14
	Ignition switch OFF	0

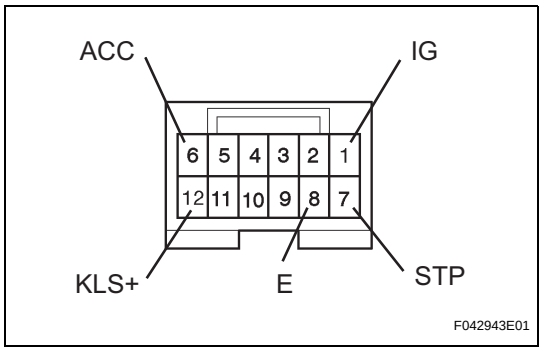

(b) Using an ohmmeter, measure the resistance at terminal E (8) and body ground.
HINT:
Do not disconnect the shift lock control ECU connector.

Terminal	Measuring Condition	Specified Value
8 (E) - Body ground	Always	Below 1 Ω

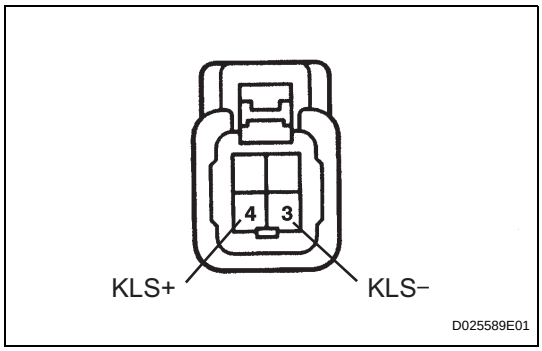

5. INSPECT KEY INTER LOCK SOLENOID

(a) Disconnect the solenoid connector.

(b) Connect KLS+ (4) terminal to the battery positive (+) terminal, and KLS- (3) terminal to the battery negative (-) terminal, and apply about 12V between KLS+ and KLS- terminals.
Check that operation noise can be heard from the solenoid.
If the solenoid does not operate, replace the solenoid.

AIR COOLED OIL COOLER

REMOVAL

1. **REMOVE RADIATOR GRILLE (See page ET-4)**
2. **DRAIN AUTOMATIC TRANSMISSION FLUID**
   (a) Remove the drain plug, gasket and drain ATF.
   (b) Install a new gasket and drain plug.
   Torque: 28 N*m (285 kgf*cm, 21 ft.*lbf)
3. **REMOVE OIL COOLER WITH HOSE ASSEMBLY**
   (a) Loosen the 2 clips and disconnect the 2 oil cooler hoses.
   (b) Remove the 4 bolts and the oil cooler with hose assembly.

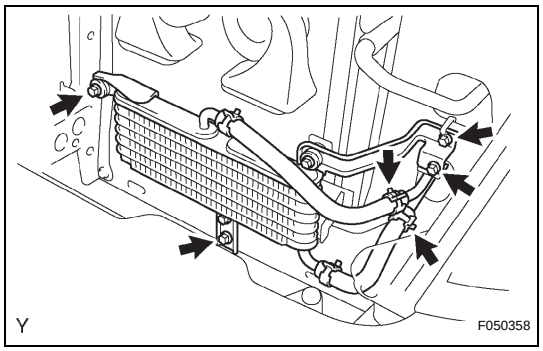

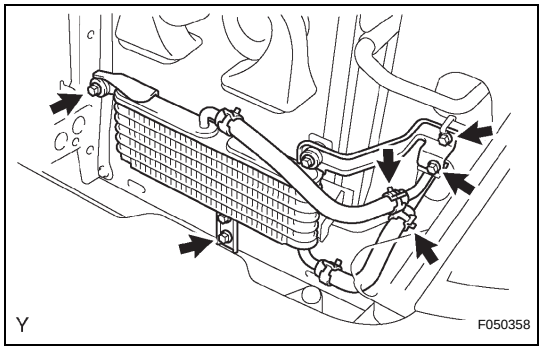

INSTALLATION

1. **INSTALL OIL COOLER WITH HOSE ASSEMBLY**
   (a) Install the oil cooler with hose assembly with the 4 bolts.
   Torque: 5.0 N*m (51 kgf*cm, 44 in.*lbf)
   (b) Install the 2 oil cooler hoses and 2 clips.
2. **ADD AUTOMATIC TRANSMISSION FLUID**
   (See page AT-139)
3. **INSTALL RADIATOR GRILLE (See page ET-11)**

FLOOR SHIFT ASSEMBLY

COMPONENTS

AT

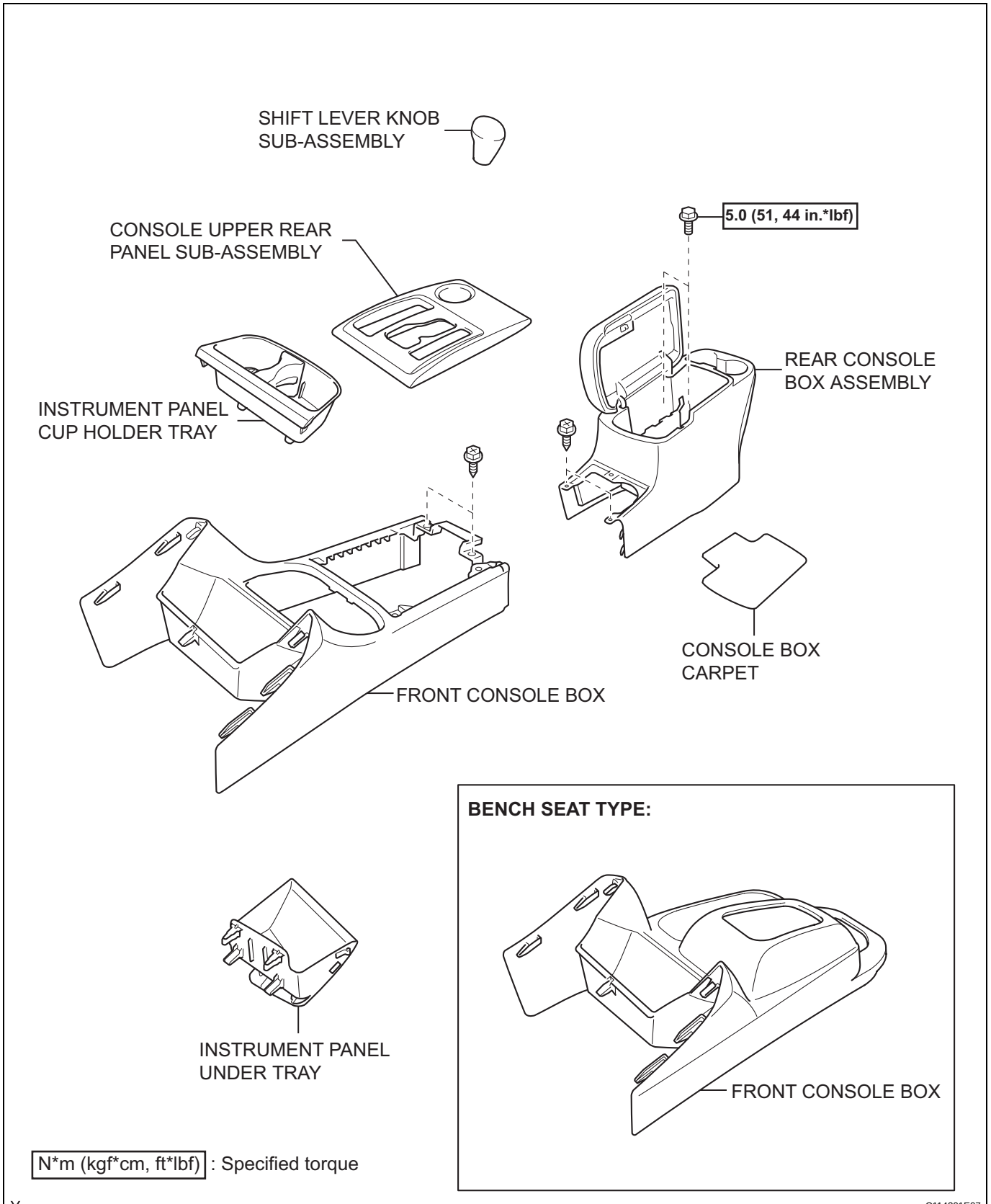

CABLE TYPE:

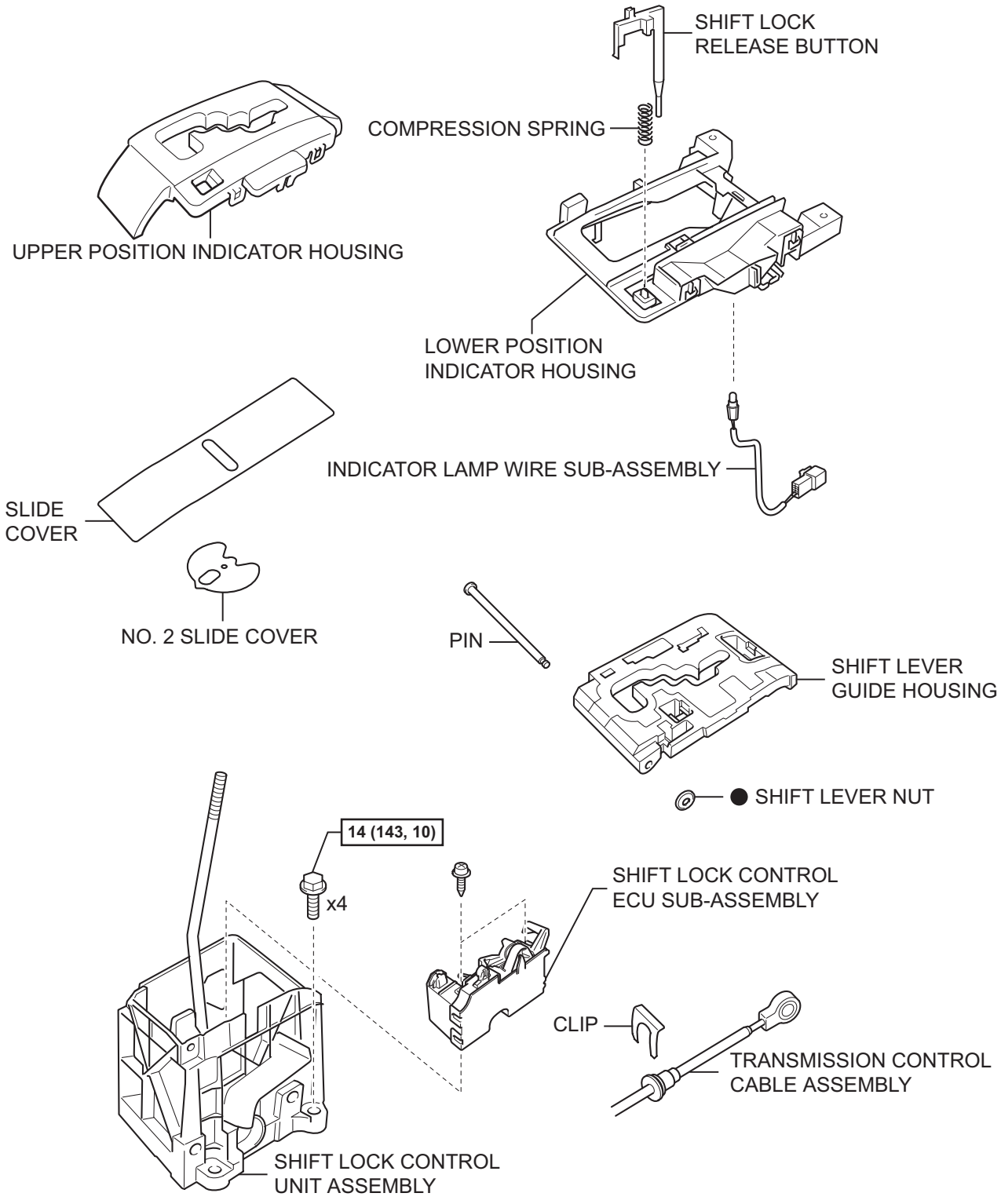

N*m (kgf*cm, ft*lbf) : Specified torque

● Non-reusable part

Y

C114202E04

AUTOMATIC TRANSMISSION ASSEMBLY

COMPONENTS

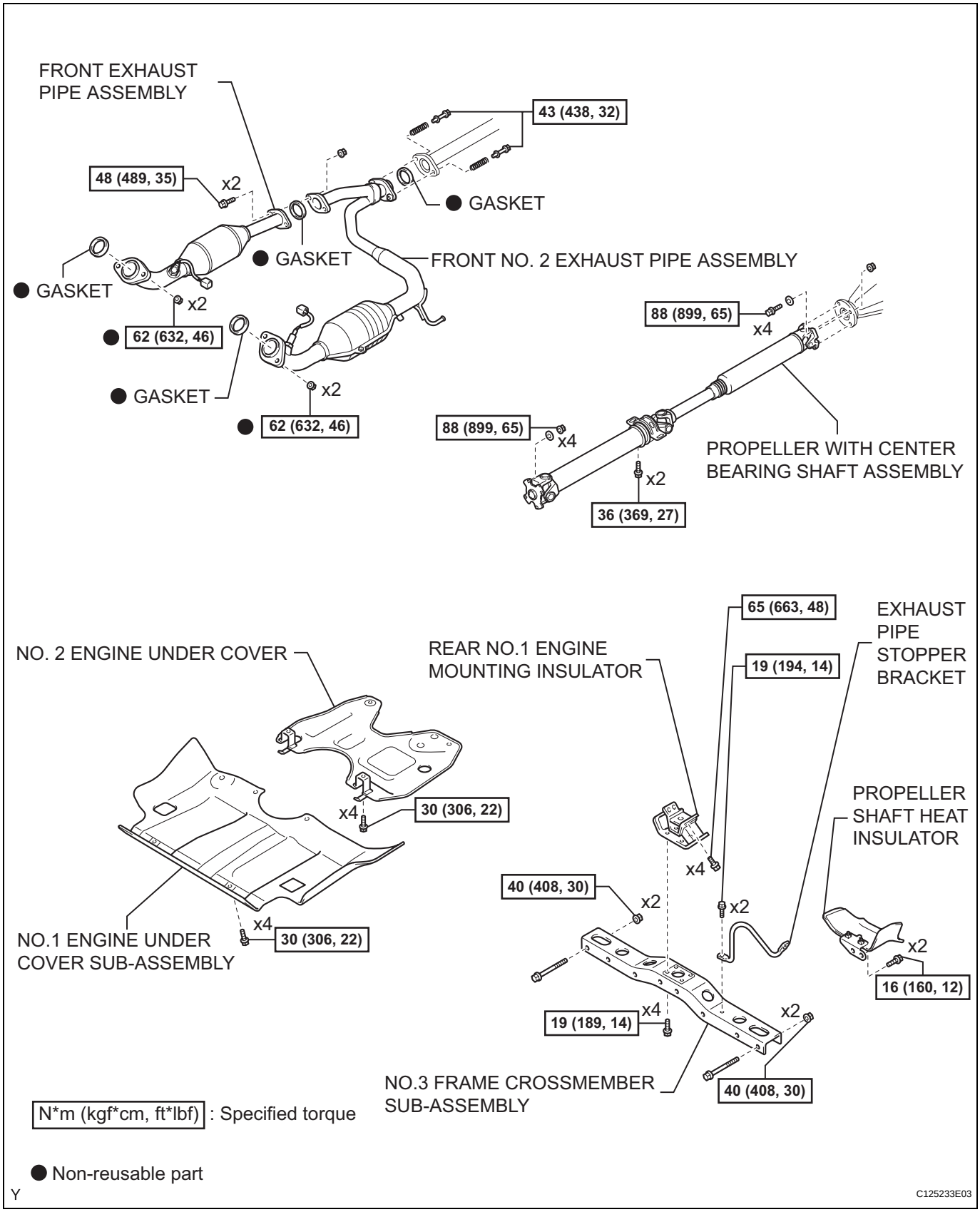

AT

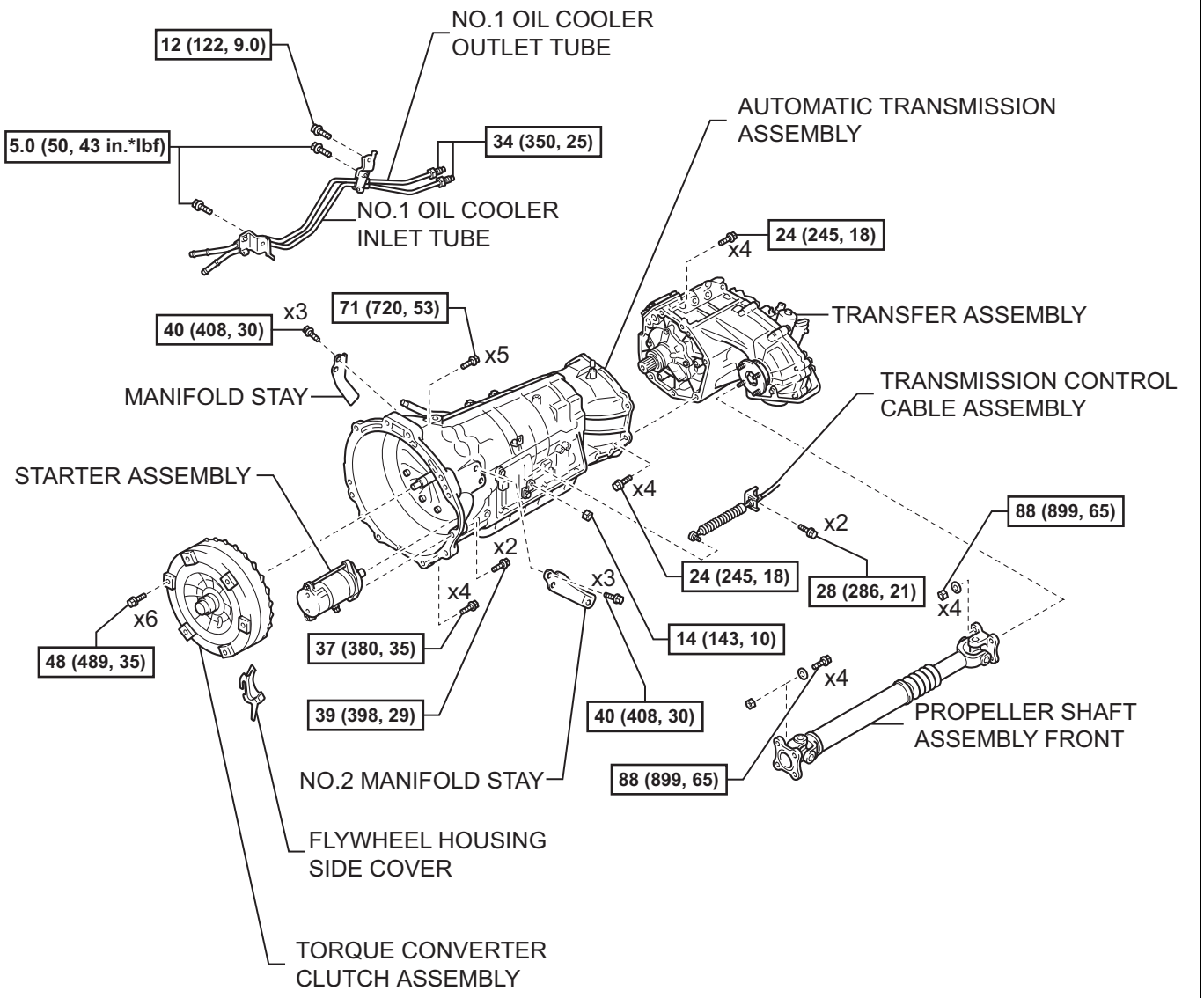

N*m (kgf*cm, ft*lbf) : Specified torque

Y

C125235E03

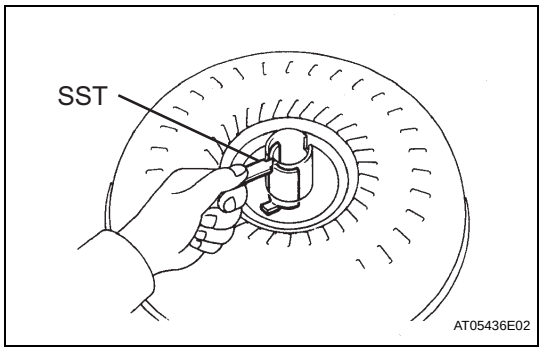

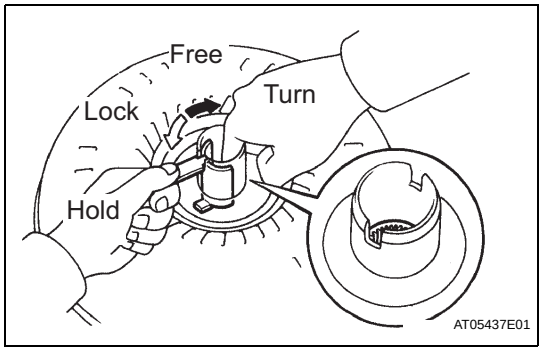

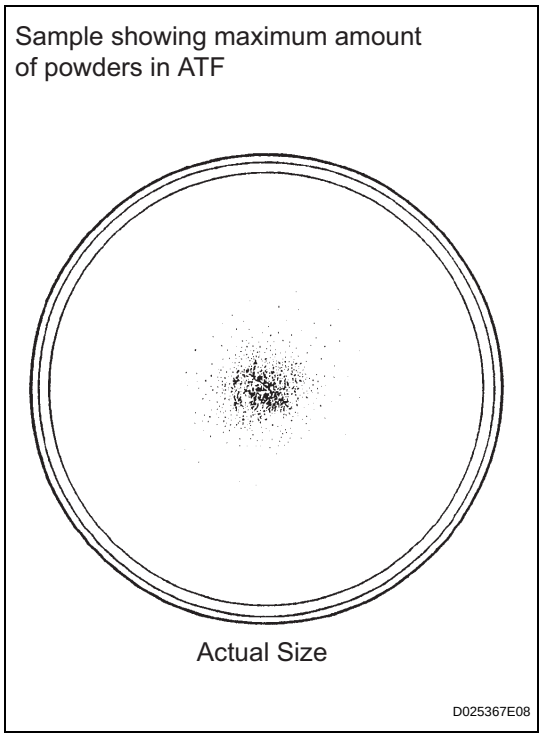

TORQUE CONVERTER CLUTCH AND DRIVE PLATE

INSPECTION

AT

1. INSPECT TORQUE CONVERTER CLUTCH ASSEMBLY

(a) Inspect the one-way clutch.

(1) Install SST so that it fits in the notch of the converter hub and outer race of the one-way clutch.
SST 09350-32014 (09351-32020)

(2) Press on the serrations of the starter with a finger and rotate it.
Check if it rotates smoothly when turned clockwise and locks up when turned counterclockwise.
If necessary, clean the converter and check the one-way clutch again.
Replace the converter if the one-way clutch still won't operate as specified.

(b) Check the condition of the torque converter clutch assembly.

(1) If the inspection result of the torque converter clutch assembly meets any of the cases mentioned below, replace the torque converter clutch.
Malfunction item:
Any metallic sound is heard from the torque converter clutch during stall test or when the shift lever is in the neutral position.
One-way clutch is free or locked in both directions. Fine powders exceeding the sample limit are identified in ATF. (See the sample.)
HINT:
The sample shows the auto fluid of approximately 0.25 liters (0.26 US qts, 0.22 Imp. qts) that is taken out from the removed torque converter clutch.

(c) Replace the ATF in the torque converter clutch.

(1) If the ATF is discolored and/or has a foul odor, completely stir the ATF in the torque converter clutch and drain it with the installation surface facing up.

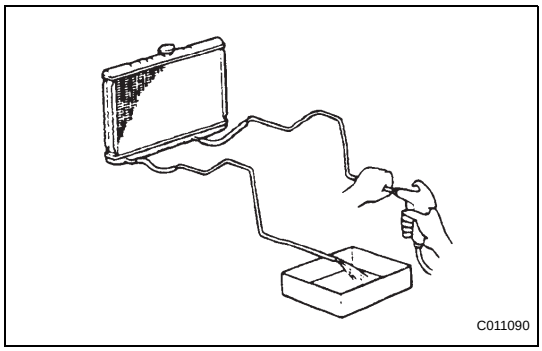

(d) Clean and then check the oil cooler and oil pipe line.
  (1) If inspecting the torque converter clutch or exchanging the ATF, clean the oil cooler and oil pipe line.
  HINT:
  - Apply compressed air of 196 kPa (2 kgf/ cm2, 28 psi) from the inlet hose.
  - If plenty of fine powders are identified in the ATF, add new ATF using a bucket pump and clean the ATF again.

  (2) If the ATF is cloudy, inspect the oil cooler (radiator).

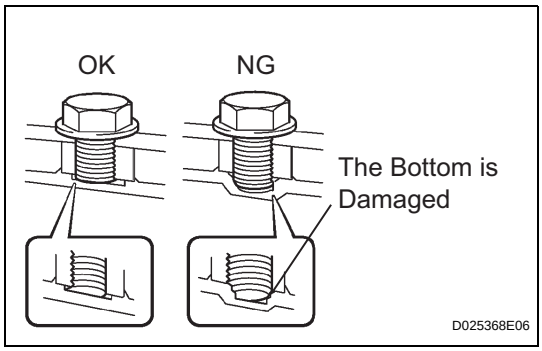

(e) Be careful not to deform the torque converter clutch or damage the oil pump gear.
  (1) When any marks due to interference are found on the end of the bolt to the torque converter clutch or on the bottom of the bolt hole, replace the bolt and the torque converter clutch.
  (2) All the bolts should be the same length.
  (3) Do not lose any spring washers.

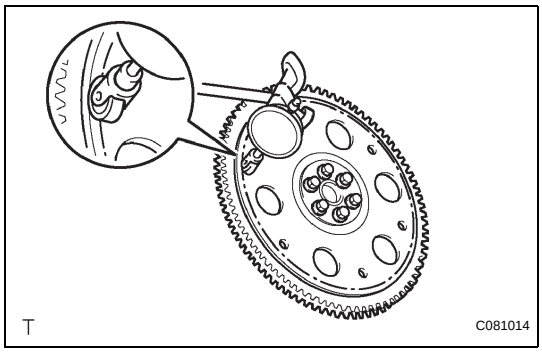

2. INSPECT DRIVE PLATE AND RING GEAR SUB-ASSEMBLY

(a) Set up a dial indicator and measure the drive plate runout.
Maximum runout:
0.20 mm (0.0079 in.)

(b) Check the ring gear for damage.
If the runout is not within the specification or the ring gear is damaged, replace the drive plate.

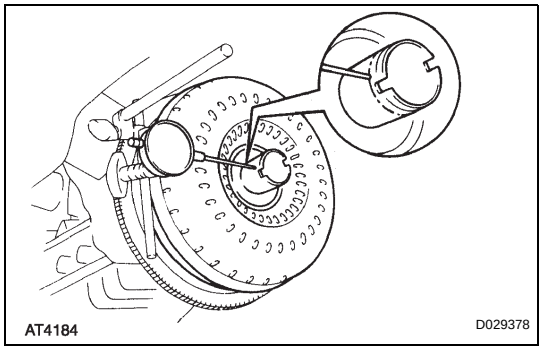

3. INSPECT RUNOUT OF TORQUE CONVERTER CLUTCH ASSEMBLY

(a) Provisionally mount the torque converter onto the drive plate, set up a dial indicator, and measure the torque converter sleeve runout.
Maximum runout:
0.30 mm (0.0118 in.)
If the runout is not within the specification, try to correct it by reinstalling the converter to the correct orientation.
HINT:
Mark the position of the converter to ensure correct installation.

TRANSMISSION CONTROL CABLE

REMOVAL

1. **REMOVE CONSOLE UPPER REAR PANEL SUB-ASSEMBLY (See page IP-9)**
2. **REMOVE CONSOLE BOX ASSEMBLY REAR (See page IP-10)**
3. **REMOVE INSTRUMENT PANEL CUP HOLDER TRAY (See page IP-10)**
4. **REMOVE CONSOLE BOX FRONT (See page IP-10)**
5. **REMOVE VOLTAGE INVERTER ASSEMBLY (w/ Voltage Inverter) (See page AV-104)**
6. **REMOVE TRANSMISSION CONTROL CABLE ASSEMBLY**
   (a) Disconnect the transmission control cable assembly from the shift lever assembly.
   (b) Remove the clip and disconnect the transmission control cable.

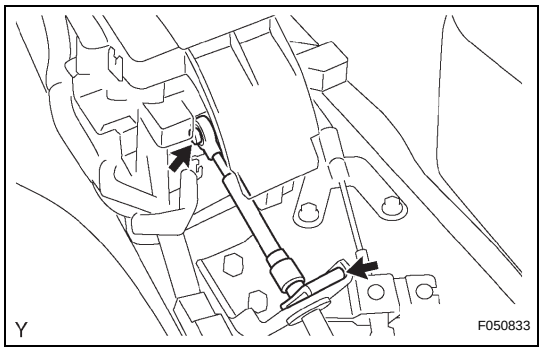

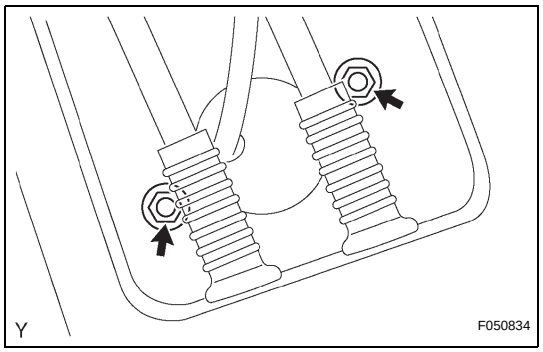

   (c) Remove the 2 nuts and disconnect the transmission control cable assembly from the body.

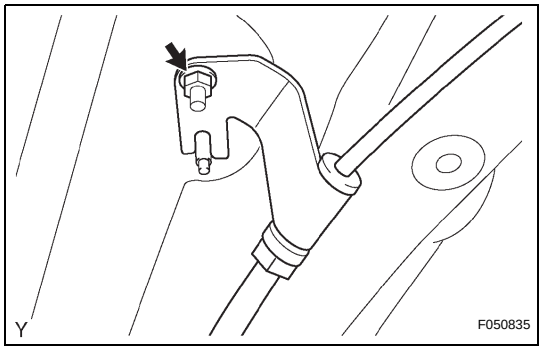

   (d) Remove the nut and disconnect the transmission control cable assembly from the body.

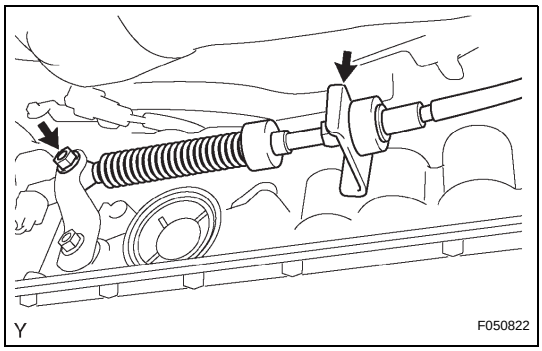

(e) Remove the clip and transmission control cable bracket.
(f) Remove the nut and transmission control cable assembly.

INSTALLATION

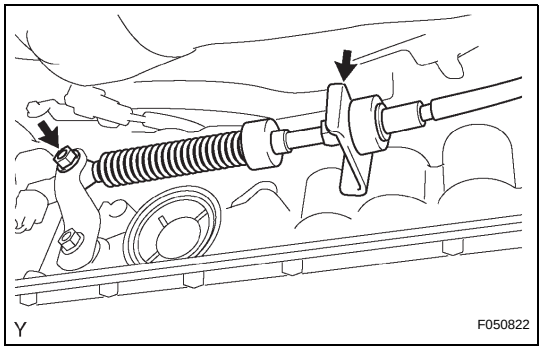

1. INSTALL TRANSMISSION CONTROL CABLE ASSEMBLY

(a) Install the transmission control cable assembly with the nut.
Torque: 14 N*m (143 kgf*cm, 10 ft.*lbf)
(b) Install the transmission control cable bracket and lock plate.

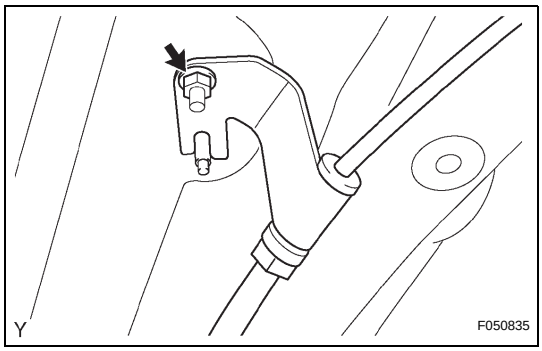

(c) Connect the transmission control cable with the nut to the body.
Torque: 5.5 N*m (56 kgf*cm, 49 in.*lbf)

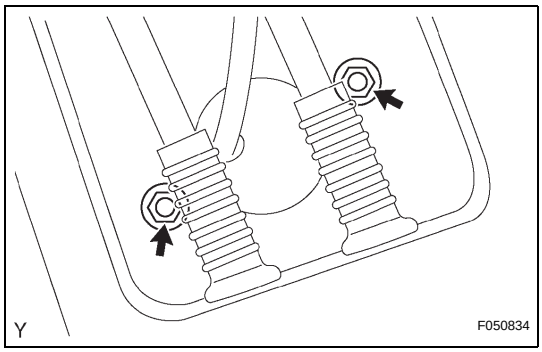

(d) Connect the transmission control cable with the 2 nuts to the body.
Torque: 5.5 N*m (56 kgf*cm, 49 in.*lbf)

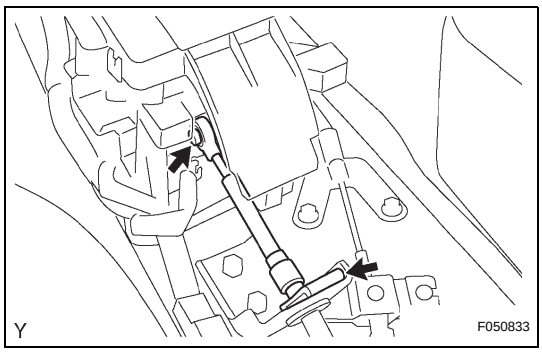

(e) Connect the transmission control cable with the lock plate to the floor shift assembly.
(f) Install the transmission control cable onto the floor shift assembly.

2. INSTALL VOLTAGE INVERTER ASSEMBLY (w/ Voltage Inverter) (See page AV-105)

3. INSTALL CONSOLE BOX FRONT (See page IP-24)

4. INSTALL INSTRUMENT PANEL CUP HOLDER TRAY (See page IP-24)

5. **INSTALL CONSOLE BOX ASSEMBLY REAR (See page IP-24)**
6. **INSTALL CONSOLE UPPER REAR PANEL SUB-ASSEMBLY (See page IP-25)**
7. **ADJUST SHIFT LEVER POSITION (See page AT-105)**
8. **INSPECT SHIFT LEVER POSITION (See page AT-105)**

CLUTCH SYSTEM (for R155)

PROBLEM SYMPTOMS TABLE

Use the table below to help you find the cause of the problem. The numbers indicate the ranked order of probability of each of the possible causes. Check each part in the order suggested. If necessary, replace these parts.

Symptom	Suspected area	See page
Clutch grabs/chatters	1. Engine mounting (Loose)	-
	2. Clutch disc (Excessive runout)	CL-31
	3. Clutch disc (Oily)	CL-31
	4. Clutch disc (Worn out)	CL-31
	5. Clutch disc torsion rubber (Damaged)	CL-31
	6. Clutch disc (Glazed)	CL-31
	7. Diaphragm spring (Tip out of alignment)	CL-31
Clutch pedal spongy	1. Clutch line (Air in line)	-
	2. Release cylinder rubber (Damaged)	CL-15
Clutch noisy	1. Release bearing (Worn, dirty or damaged)	CL-31
	2. Clutch disc torsion rubber (Damaged)	CL-31
Clutch slips	1. Clutch pedal (Free play out of adjustment)	CL-6
	2. Clutch disc (Oily)	CL-31
	3. Clutch disc (Worn out)	CL-31
	4. Diaphragm spring (Damaged)	CL-31
	5. Flywheel (Distorted)	CL-31
Clutch does not disengage	1. Clutch pedal (Free play out of adjustment)	CL-6
	2. Clutch line (Air in line)	-
	3. Release cylinder cup (Damaged)	CL-15
	4. Clutch disc (Out of line)	CL-31
	5. Clutch disc (Runout excessive)	CL-31
	6. Clutch disc (Lining broken)	CL-31
	7. Clutch disc (Dirty or burned)	CL-31
	8. Clutch disc (Oily)	CL-31
	9. Clutch disc (Lack of spline grease)	CL-31

CLUTCH SYSTEM (for R155F)

PROBLEM SYMPTOMS TABLE

Use the table below to help you find the cause of the problem. The numbers indicate the ranked order of probability of each of the possible causes. Check each part in the order suggested. If necessary, replace these parts.

Symptom	Suspected area	See page
Clutch grabs/chatters	1. Engine mounting (Loose)	-
	2. Clutch disc (Excessive runout)	CL-36
	3. Clutch disc (Oily)	CL-36
	4. Clutch disc (Worn out)	CL-36
	5. Clutch disc torsion rubber (Damaged)	CL-36
	6. Clutch disc (Glazed)	CL-36
	7. Diaphragm spring (Tip out of alignment)	CL-36
Clutch pedal spongy	1. Clutch line (Air in line)	-
	2. Release cylinder rubber (Damaged)	CL-18
Clutch noisy	1. Release bearing (Worn, dirty or damaged)	CL-36
	2. Clutch disc torsion rubber (Damaged)	CL-36
Clutch slips	1. Clutch pedal (Free play out of adjustment)	CL-6
	2. Clutch disc (Oily)	CL-36
	3. Clutch disc (Worn out)	CL-36
	4. Diaphragm spring (Damaged)	CL-36
	5. Flywheel (Distorted)	CL-36
Clutch does not disengage	1. Clutch pedal (Free play out of adjustment)	CL-6
	2. Clutch line (Air in line)	-
	3. Release cylinder cup (Damaged)	CL-18
	4. Clutch disc (Out of line)	CL-36
	5. Clutch disc (Runout excessive)	CL-36
	6. Clutch disc (Lining broken)	CL-36
	7. Clutch disc (Dirty or burned)	CL-36
	8. Clutch disc (Oily)	CL-36
	9. Clutch disc (Lack of spline grease)	CL-36

CLUTCH SYSTEM (for RA60)

PROBLEM SYMPTOMS TABLE

Use the table below to help you find the cause of the problem. The numbers indicate the ranked order of probability of each of the possible causes. Check each part in the order suggested. If necessary, replace these parts.

Symptom	Suspected area	See page
Clutch grabs/chatters	1. Engine mounting (Loose)	-
	2. Clutch disc (Excessive runout)	CL-41
	3. Clutch disc (Oily)	CL-41
	4. Clutch disc (Worn out)	CL-41
	5. Clutch disc torsion rubber (Damaged)	CL-41
	6. Clutch disc (Glazed)	CL-41
	7. Diaphragm spring (Tip out of alignment)	CL-41
Clutch pedal spongy	1. Clutch line (Air in line)	-
	2. Release cylinder rubber (Damaged)	CL-21
Clutch noisy	1. Release bearing (Worn, dirty or damaged)	CL-41
	2. Clutch disc torsion rubber (Damaged)	CL-41
Clutch slips	1. Clutch pedal (Free play out of adjustment)	CL-6
	2. Clutch disc (Oily)	CL-41
	3. Clutch disc (Worn out)	CL-41
	4. Diaphragm spring (Damaged)	CL-41
	5. Flywheel (Distorted)	CL-41
Clutch does not disengage	1. Clutch pedal (Free play out of adjustment)	CL-6
	2. Clutch line (Air in line)	-
	3. Release cylinder cup (Damaged)	CL-21
	4. Clutch disc (Out of line)	CL-41
	5. Clutch disc (Runout excessive)	CL-41
	6. Clutch disc (Lining broken)	CL-41
	7. Clutch disc (Dirty or burned)	CL-41
	8. Clutch disc (Oily)	CL-41
	9. Clutch disc (Lack of spline grease)	CL-41

CLUTCH SYSTEM (for RA60F)

PROBLEM SYMPTOMS TABLE

Use the table below to help you find the cause of the problem. The numbers indicate the ranked order of probability of each of the possible causes. Check each part in the order suggested. If necessary, replace these parts.

Symptom	Suspected area	See page
Clutch grabs/chatters	1. Engine mounting (Loose)	-
	2. Clutch disc (Excessive runout)	CL-45
	3. Clutch disc (Oily)	CL-45
	4. Clutch disc (Worn out)	CL-45
	5. Clutch disc torsion rubber (Damaged)	CL-45
	6. Clutch disc (Glazed)	CL-45
	7. Diaphragm spring (Tip out of alignment)	CL-45
Clutch pedal spongy	1. Clutch line (Air in line)	-
	2. Release cylinder rubber (Damaged)	CL-24
Clutch noisy	1. Release bearing (Worn, dirty or damaged)	CL-45
	2. Clutch disc torsion rubber (Damaged)	CL-45
Clutch slips	1. Clutch pedal (Free play out of adjustment)	CL-6
	2. Clutch disc (Oily)	CL-45
	3. Clutch disc (Worn out)	CL-45
	4. Diaphragm spring (Damaged)	CL-45
	5. Flywheel (Distorted)	CL-45
Clutch does not disengage	1. Clutch pedal (Free play out of adjustment)	CL-6
	2. Clutch line (Air in line)	-
	3. Release cylinder cup (Damaged)	CL-24
	4. Clutch disc (Out of line)	CL-45
	5. Clutch disc (Runout excessive)	CL-45
	6. Clutch disc (Lining broken)	CL-45
	7. Clutch disc (Dirty or burned)	CL-45
	8. Clutch disc (Oily)	CL-45
	9. Clutch disc (Lack of spline grease)	CL-45

CLUTCH PEDAL

COMPONENTS

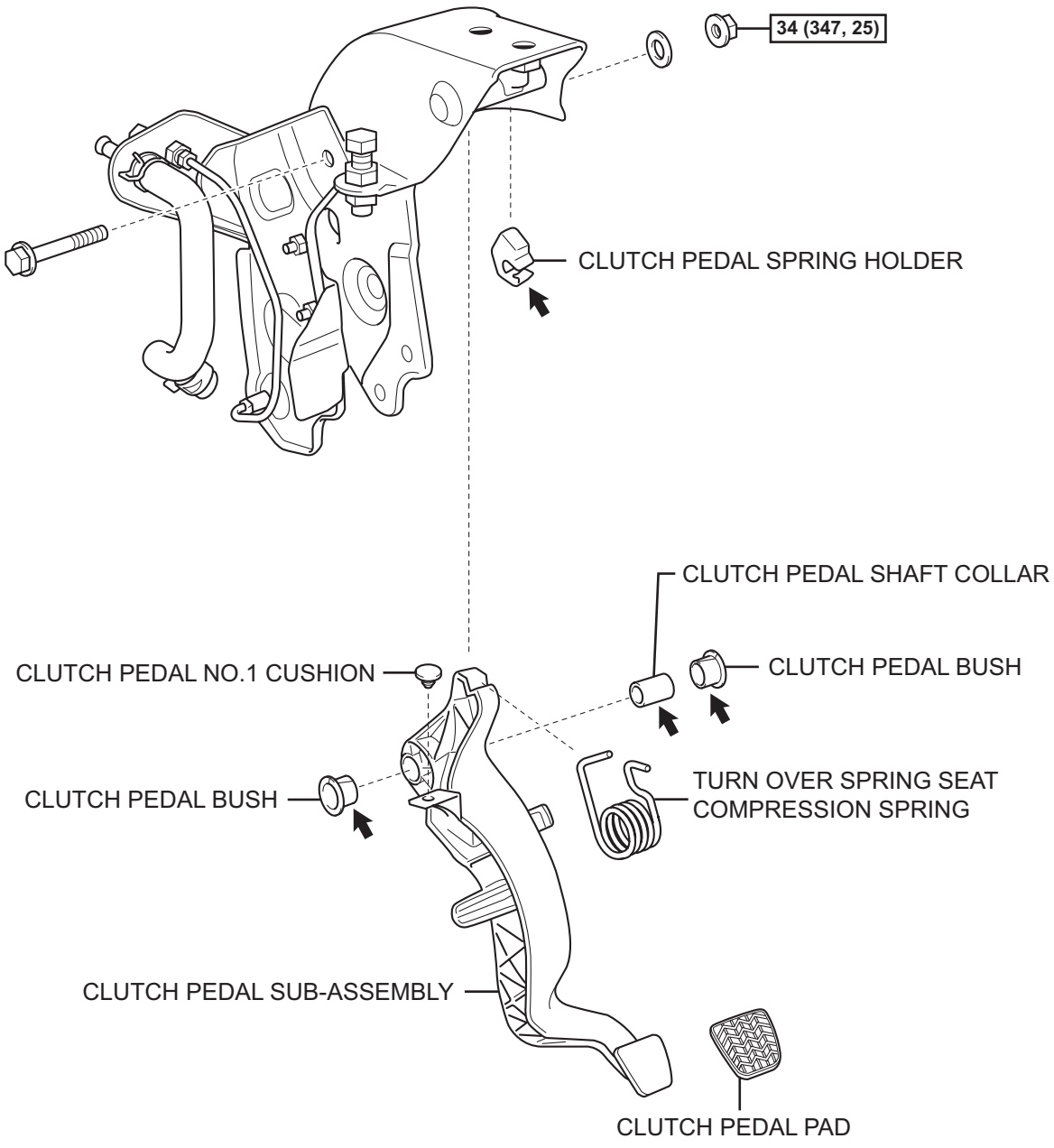

N*m (kgf*cm, ft*lbf) :Specified torque

Apply MP grease

Y

C114211E01

ON-VEHICLE INSPECTION

1. INSPECT AND ADJUST CLUTCH PEDAL SUB-ASSEMBLY

(a) Lift the floor carpet.

(b) Check that the pedal height is correct.
Pedal height from asphalt sheet:
168.5 to 178.5 mm (6.634 to 7.028 in.)

(c) Adjust the pedal height.
(1) Loosen the lock nut and turn the stopper bolt until the height is correct. Tighten the lock nut.
Torque: 25 N*m (250 kgf*cm, 18 ft.*lbf)

(d) Check that the pedal free play and push rod play are correct.
(1) Depress the pedal until the clutch resistance begins to be felt.
Pedal free play:
5.0 to 15.0 mm (0.197 to 0.591 in.)
(2) Gently depress the pedal until the resistance begins to increase a little.
Push rod play at pedal top:
1.0 to 5.0 mm (0.039 to 0.197 in.)

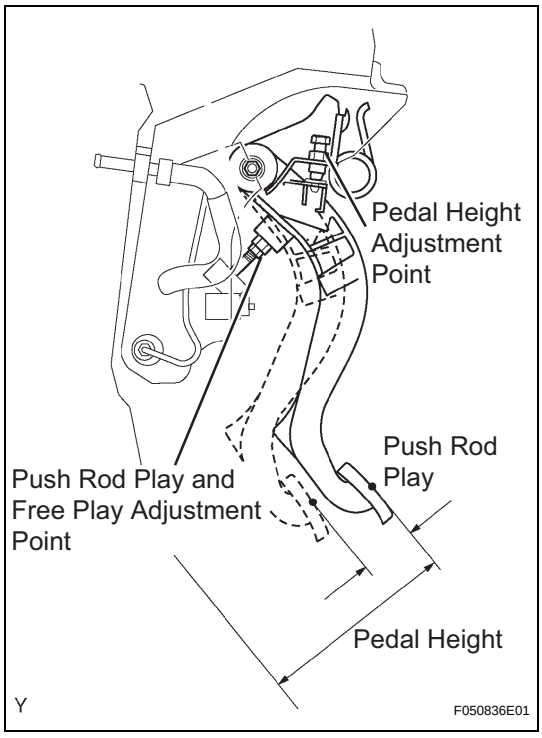

(e) Adjust the pedal free play and push rod play.
(1) Loosen the lock nut and turn the push rod until the free play and push rod play are correct.
(2) Tighten the lock nut.
(3) After adjusting the pedal free play, check the pedal height.
(4) Connect the air duct and install the lower finish panel.

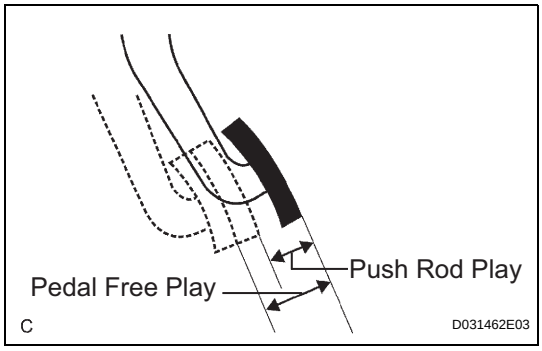

(f) Check the clutch release point.
(1) Pull the parking brake lever and use wheel chocks.
(2) Start the engine and allow it to idle.
(3) Without depressing the clutch pedal, slowly move the shift lever into the reverse position until the gears engage.
(4) Gradually depress the clutch pedal and measure the stroke distance from the point that the gear noise stops (release point) up to the full stroke end position.
Standard distance:
25 mm (0.984 in.) or more
(From pedal stroke end position to release point)
If the distance is not as specified, perform the following operations.

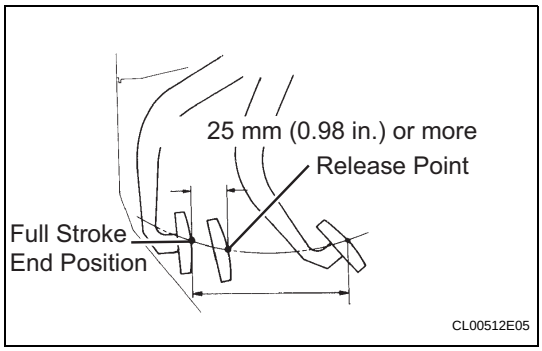

- Check the pedal height.
- Check the push rod play and pedal free play.
- Bleed the clutch line.
- Check the clutch cover assembly and disc assembly.

CLUTCH MASTER CYLINDER

COMPONENTS

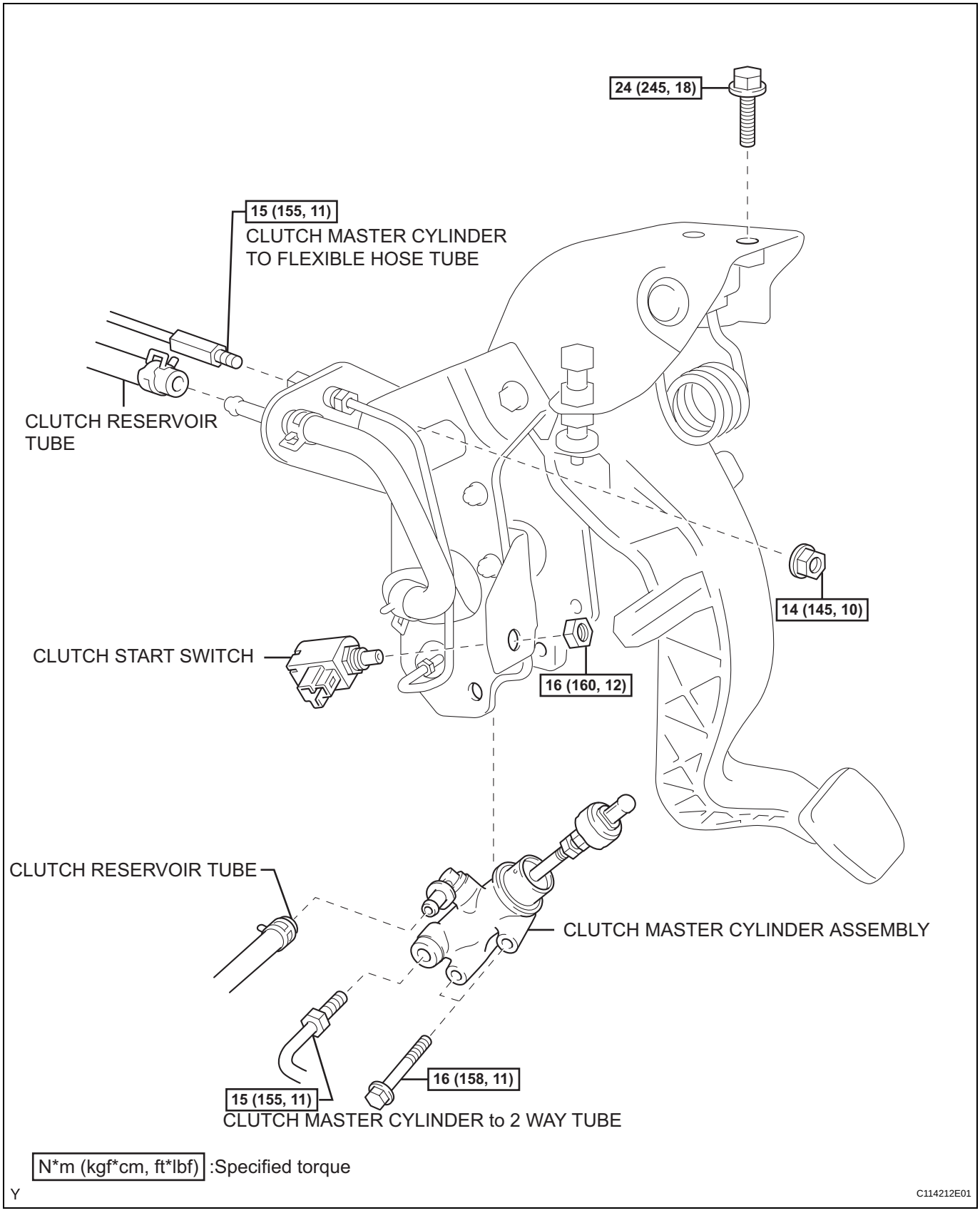

REMOVAL

1. **DRAIN CLUTCH FLUID**
2. **DISCONNECT CLUTCH RESERVOIR TUBE**
3. **DISCONNECT CLUTCH MASTER CYLINDER TO FLEXIBLE HOSE TUBE**
   (a) Using SST, disconnect the flexible hose tube.
   SST 09023-00101

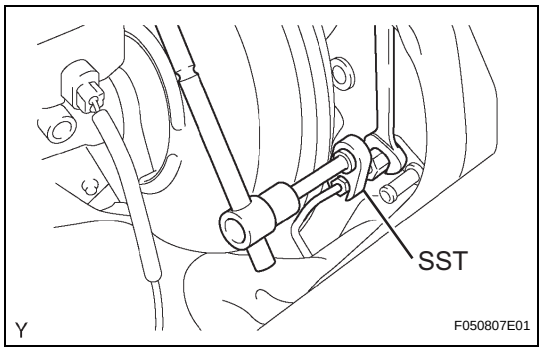

4. **REMOVE FRONT DOOR SCUFF PLATE LH**
5. **REMOVE COWL SIDE TRIM BOARD LH**
6. **REMOVE LOWER NO. 1 INSTRUMNT PANEL FINISH PANEL (See page IP-12)**
7. **SEPARATE DRIVER SIDE JUNCTION BLOCK**
8. **REMOVE CLUTCH PEDAL WITH CLUTCH MASTER CYLINDER**
   (a) Disconnect the clutch start switch connector.
   (b) Remove the 2 nuts and bolt, then remove the clutch pedal with clutch master cylinder.

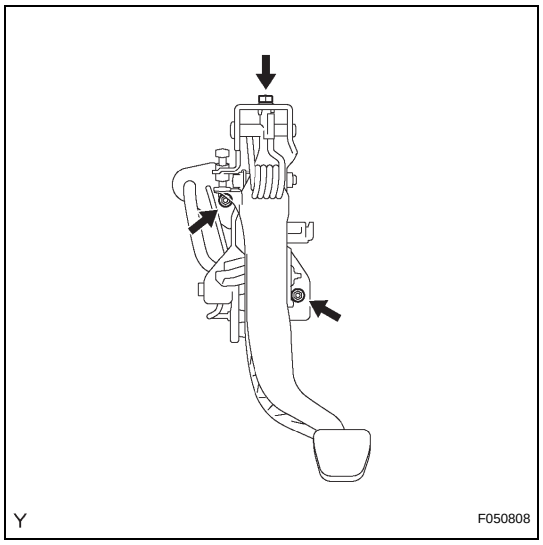

9. **REMOVE CLUTCH MASTER CYLINDER ASSEMBLY**
   (a) Disconnect the clutch reservoir tube.
   (b) Using SST, disconnect the 2 way tube from the clutch master cylinder.
   SST 09023-00101

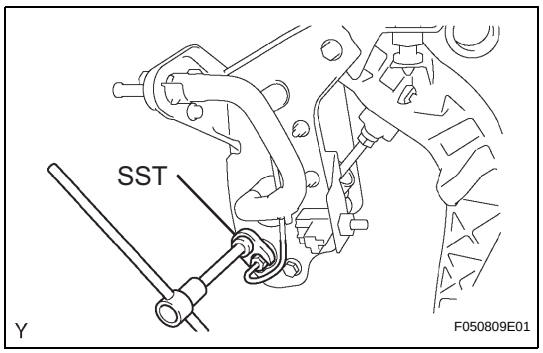

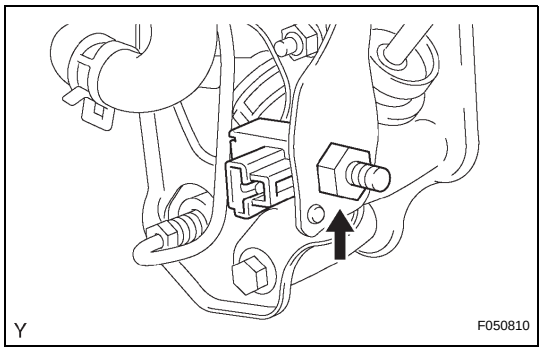

(c) Remove the nut and clutch start switch from the clutch pedal support.

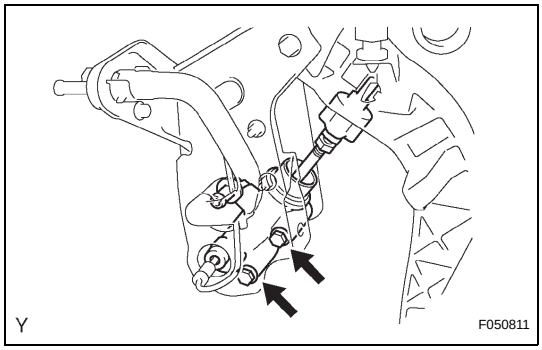

(d) Remove the 2 bolts, then remove the clutch master cylinder.

INSTALLATION

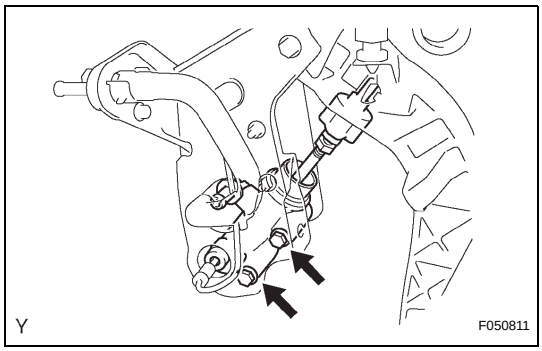

1. INSTALL CLUTCH MASTER CYLINDER ASSEMBLY

(a) Install the clutch master cylinder with the 2 bolts.
Torque: 16 N*m (158 kgf*cm, 11 ft.*lbf)

(b) Install the clutch start switch with the nut.
Torque: 16 N*m (160 kgf*cm, 12 ft.*lbf)

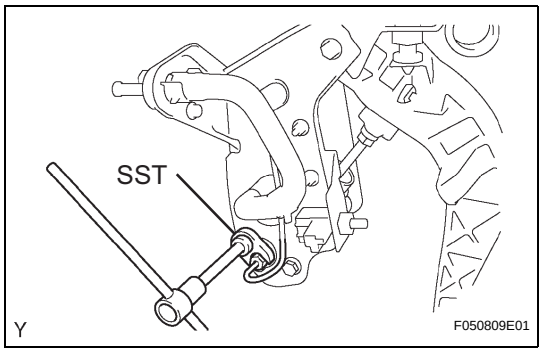

(c) Using SST, connect the clutch master cylinder to 2 way tube.
SST 09023-00101
Torque: 15 N*m (155 kgf*cm, 11 ft.*lbf)

(d) Connect the clutch reservoir tube.

CLUTCH RELEASE CYLINDER (for R155)

COMPONENTS

CL

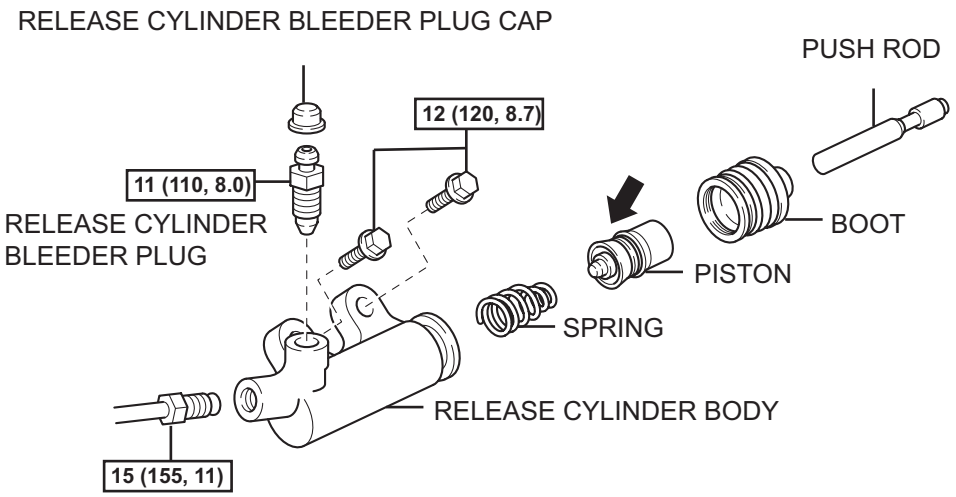

CLUTCH RELEASE CYLINDER TO FLEXIBLE HOSE TUBE

N*m (kgf*cm, ft*lbf) :Specified torque

Lithium soap base glycol grease

Y

C114063E01

REMOVAL

1. DRAIN CLUTCH FLUID

2. DISCONNECT CLUTCH RELEASE CYLINDER TO FLEXIBLE HOSE TUBE

(a) Using SST, disconnect the flexible hose tube.
SST 09023-00101

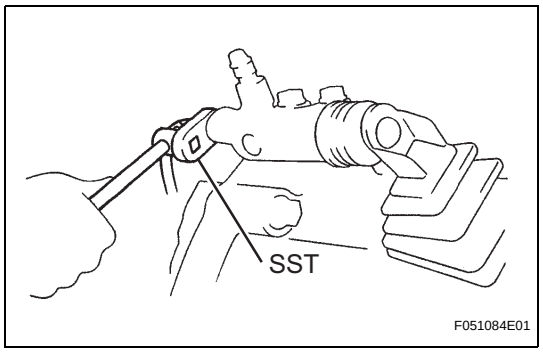

3. REMOVE CLUTCH RELEASE CYLINDER ASSEMBLY

(a) Remove the 2 bolts and pull out the clutch release cylinder.

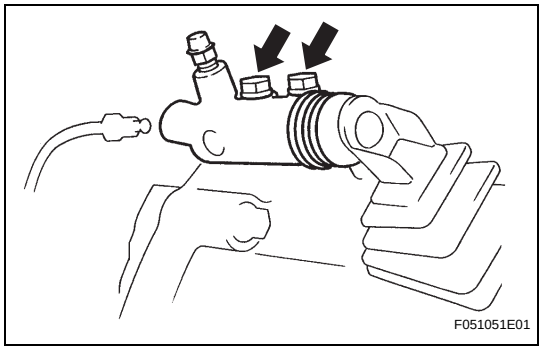

CLUTCH RELEASE CYLINDER (for R155F)

COMPONENTS

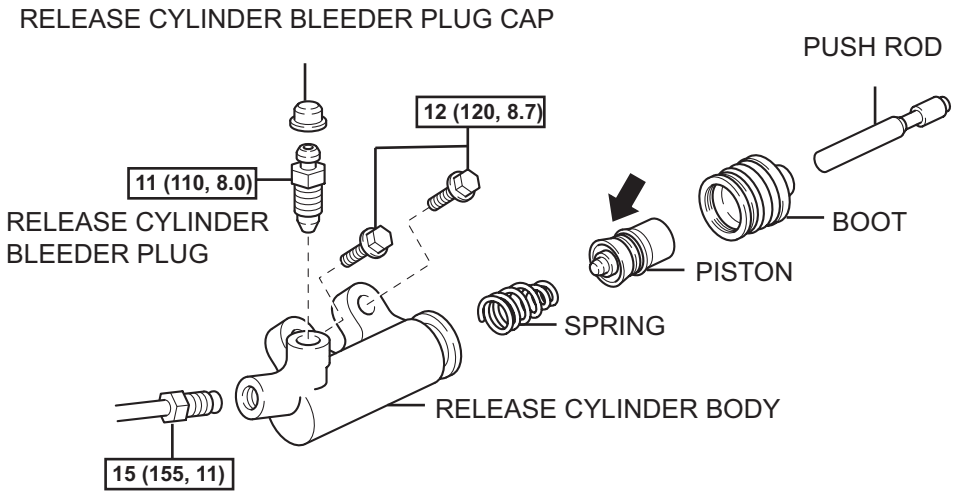

CLUTCH RELEASE CYLINDER TO FLEXIBLE HOSE TUBE

N*m (kgf*cm, ft*lbf) :Specified torque

Lithium soap base glycol grease

Y

C114063E01

CL

REMOVAL

1. DRAIN CLUTCH FLUID

2. DISCONNECT CLUTCH RELEASE CYLINDER TO FLEXIBLE HOSE TUBE

(a) Using SST, disconnect the flexible hose tube.
SST 09023-00101

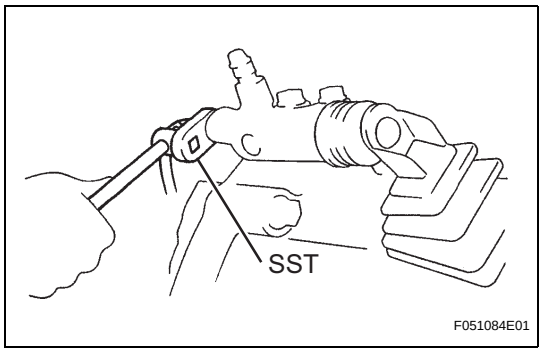

3. REMOVE CLUTCH RELEASE CYLINDER ASSEMBLY

(a) Remove the 2 bolts and pull out the clutch release cylinder.

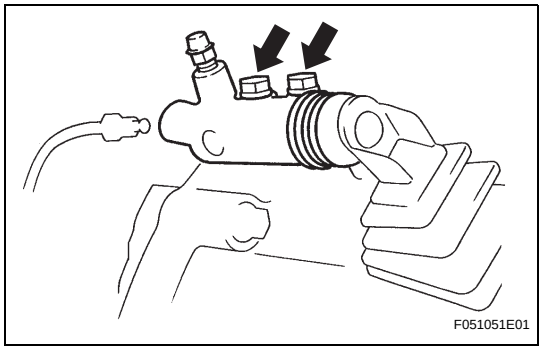

CLUTCH RELEASE CYLINDER (for RA60)

COMPONENTS

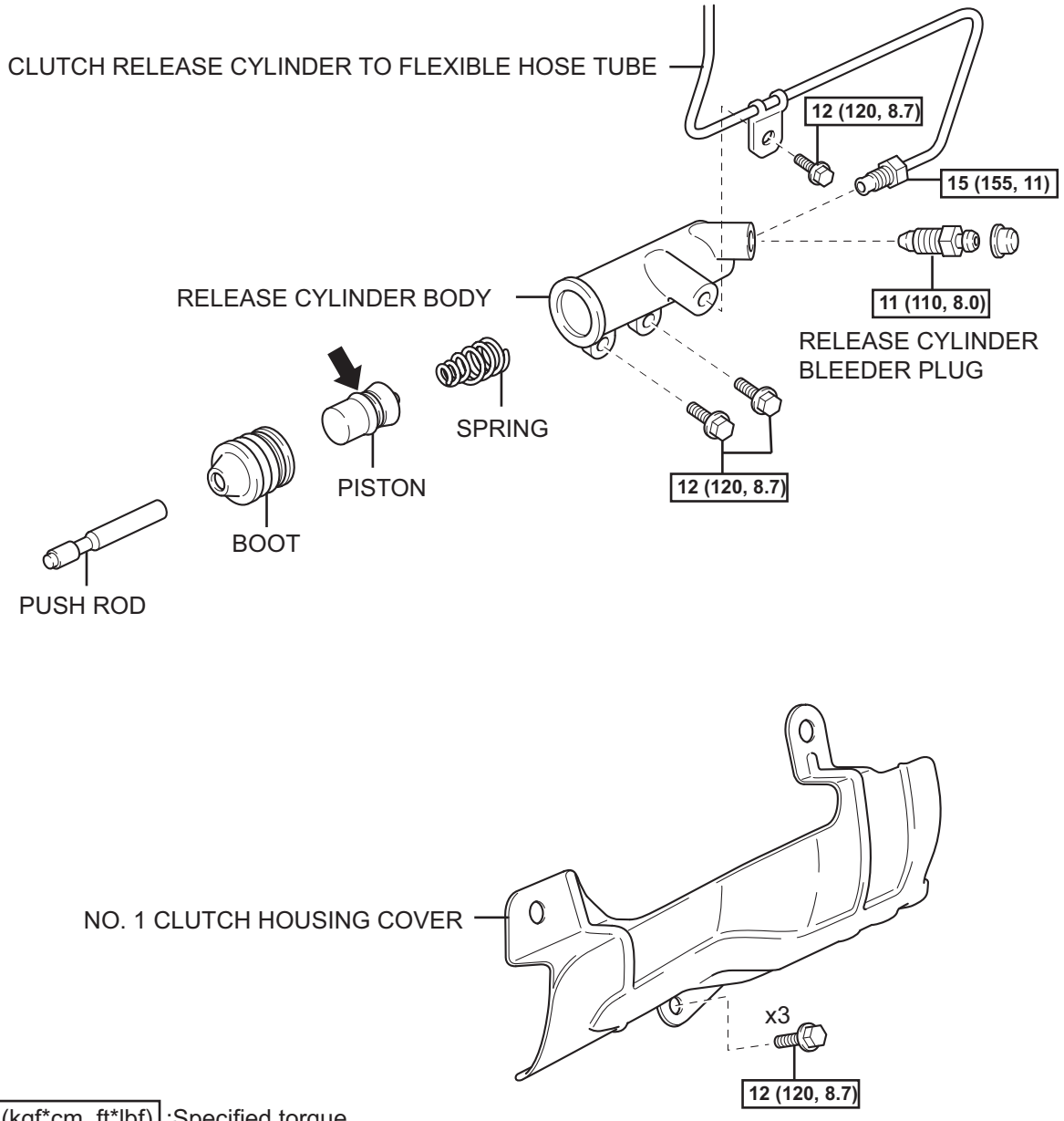

REMOVAL

1. DRAIN CLUTCH FLUID

2. REMOVE NO. 1 CLUTCH HOUSING COVER

(a) Remove the 3 bolts and clutch housing cover No. 1.

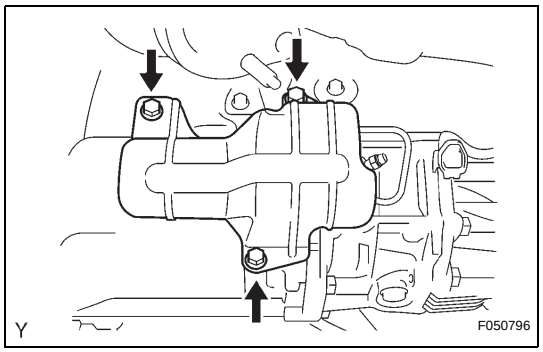

3. DISCONNECT CLUTCH RELEASE CYLINDER TO FLEXIBLE HOSE TUBE

(a) Using SST, disconnect the flexible hose tube.
SST 09023-00101

(b) Remove the bolt and clutch line bracket.
HINT:
Use a container to catch the fluid.

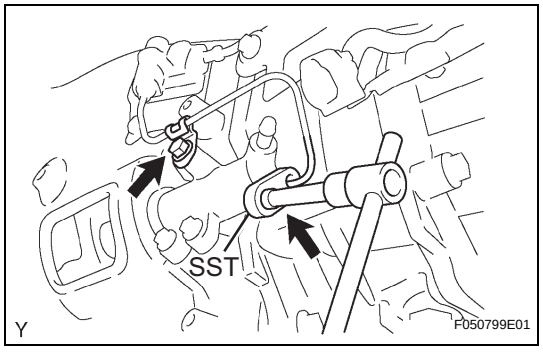

4. REMOVE CLUTCH RELEASE CYLINDER ASSEMBLY

(a) Remove the 2 bolts and pull out the clutch release cylinder.

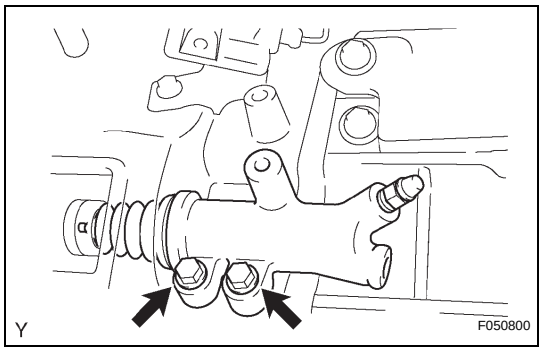

CLUTCH RELEASE CYLINDER (for RA60F)

COMPONENTS

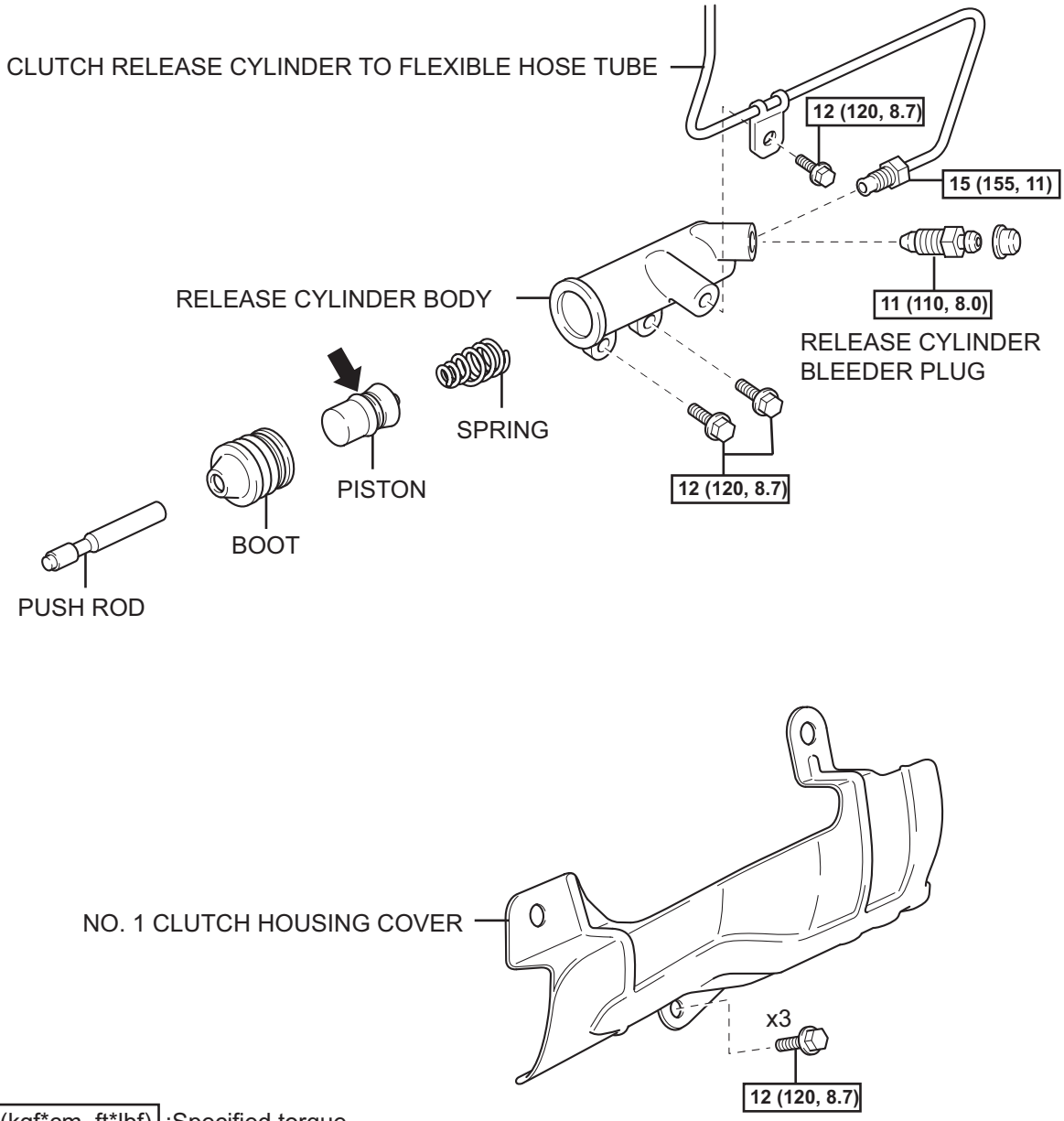

CL

REMOVAL

1. DRAIN CLUTCH FLUID

2. REMOVE NO. 1 CLUTCH HOUSING COVER

(a) Remove the 3 bolts and clutch housing cover No. 1.

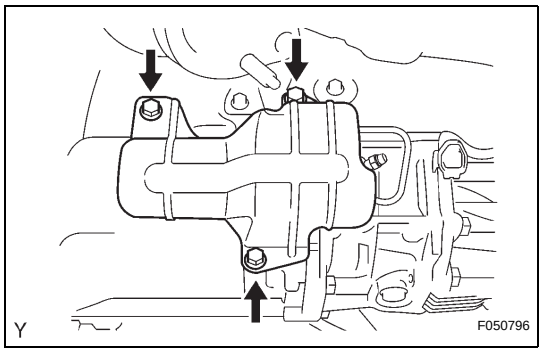

3. DISCONNECT CLUTCH RELEASE CYLINDER TO FLEXIBLE HOSE TUBE

(a) Using SST, disconnect the flexible hose tube.
SST 09023-00101

(b) Remove the bolt and clutch line bracket.
HINT:
Use a container to catch the fluid.

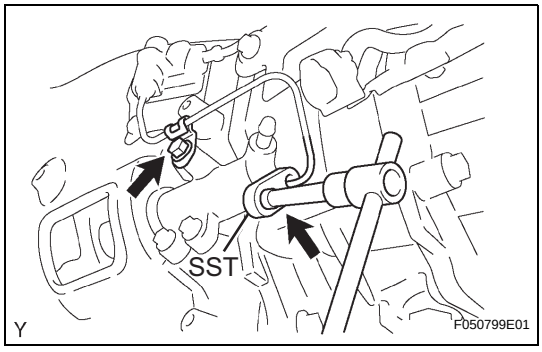

4. REMOVE CLUTCH RELEASE CYLINDER ASSEMBLY

(a) Remove the 2 bolts and pull out the clutch release cylinder.

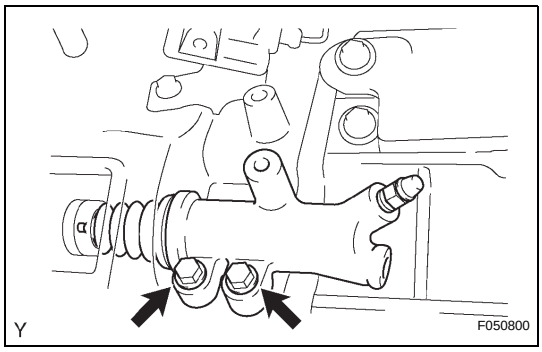

CLUTCH ACCUMULATOR (for RA60)

REMOVAL

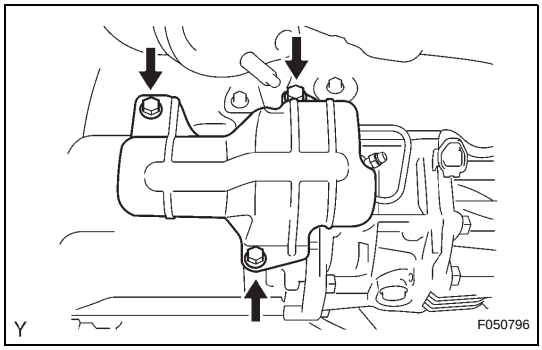

1. REMOVE NO. 1 CLUTCH HOUSING COVER

(a) Remove the 3 bolts and clutch housing cover No. 1.

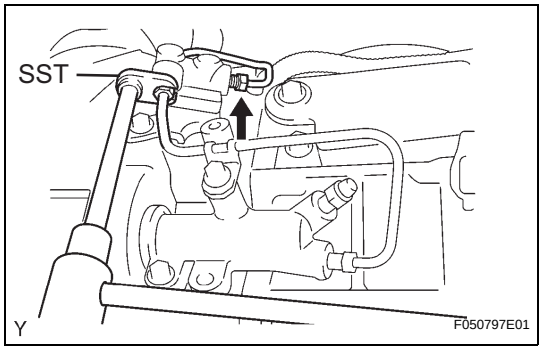

2. REMOVE CLUTCH ACCUMULATOR ASSEMBLY

(a) Using SST, disconnect the 2 flexible hose tubes from the clutch accumulator.
SST 09023-00101
HINT:
Use a container to catch the fluid.

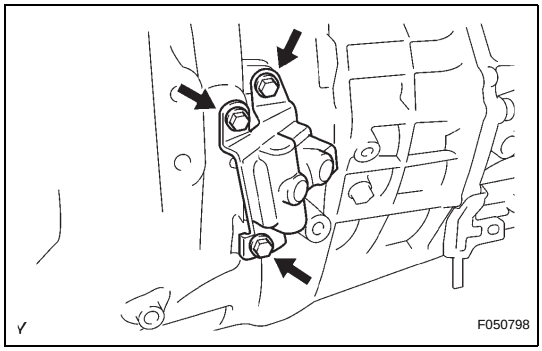

(b) Remove the 3 bolts and clutch accumulator.

INSTALLATION

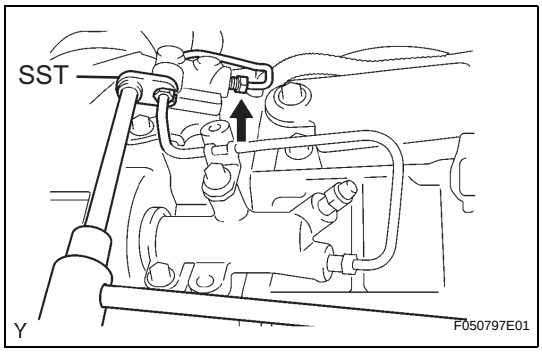

1. INSTALL CLUTCH ACCUMULATOR ASSEMBLY

(a) Using SST, connect the 2 flexible hose tubes to the clutch accumulator.
SST 09023-00101

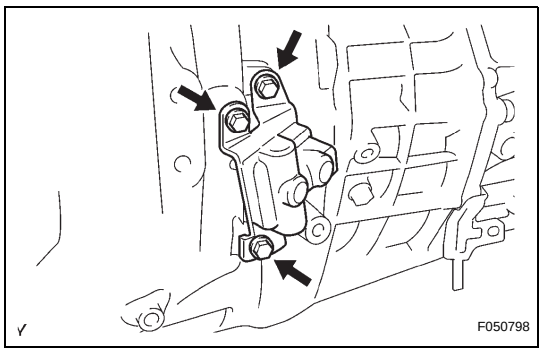

(b) Install the clutch accumulator with the 3 bolts.
Torque: 12 N*m (120 kgf*cm, 8.7 ft.*lbf)

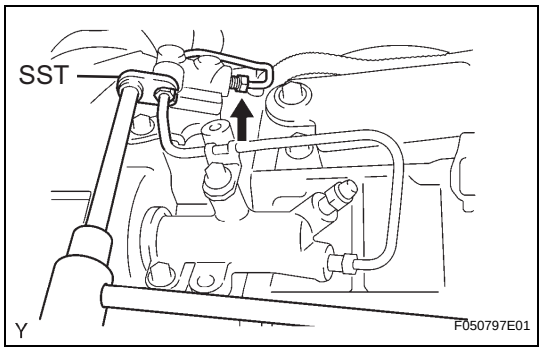

(c) Using SST, tighten the 2 flexible hose tubes.
SST 09023-00101
Torque: 15 N*m (155 kgf*cm, 11 ft.*lbf)

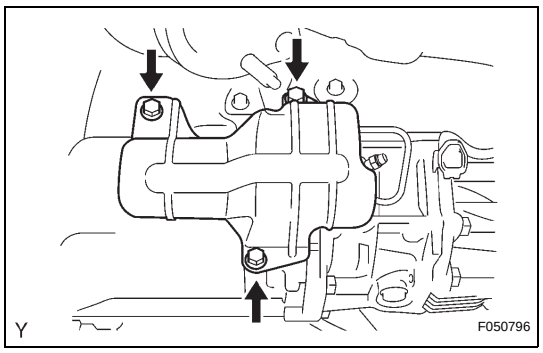

2. INSTALL NO. 1 CLUTCH HOUSING COVER

(a) Install the clutch housing cover No. 1 with the 3 bolts.
Torque: 12 N*m (120 kgf*cm, 8.7 ft.*lbf)

3. BLEED CLUTCH PIPE LINE

(a) Fill the brake reservoir tank with the brake fluid and bleed the clutch system.
Torque: 11 N*m (110 kgf*cm, 8.0 ft.*lbf)

4. CHECK FOR CLUTCH FLUID LEAKAGE

CLUTCH ACCUMULATOR (for RA60F)

REMOVAL

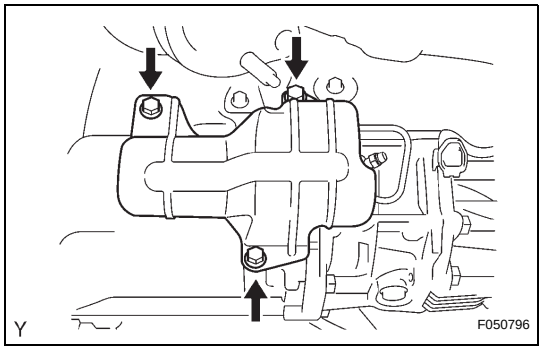

1. REMOVE NO. 1 CLUTCH HOUSING COVER

(a) Remove the 3 bolts and clutch housing cover No. 1.

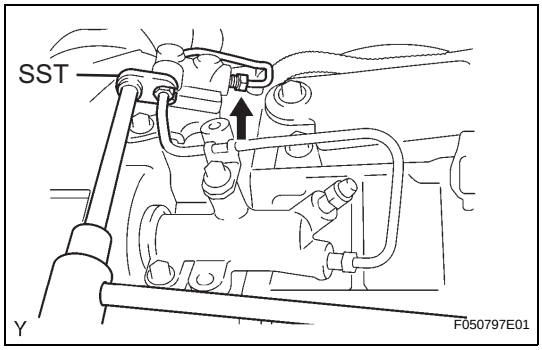

2. REMOVE CLUTCH ACCUMULATOR ASSEMBLY

(a) Using SST, disconnect the 2 flexible hose tubes from the clutch accumulator.
SST 09023-00101
HINT:
Use a container to catch the fluid.

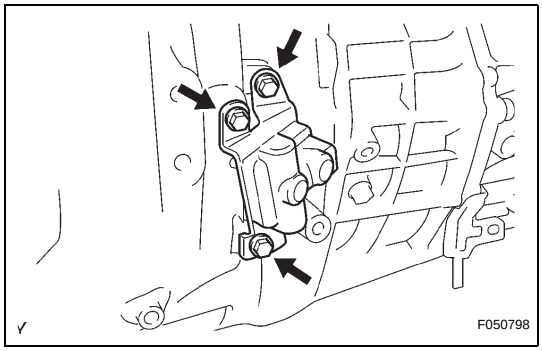

(b) Remove the 3 bolts and clutch accumulator.

INSTALLATION

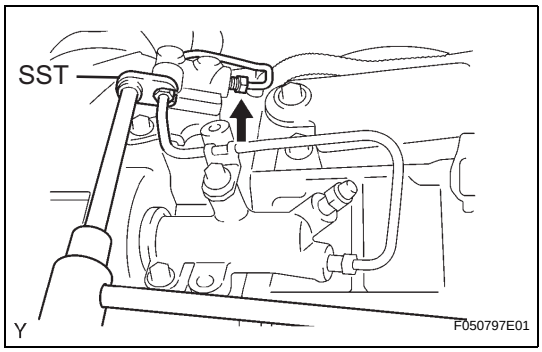

1. INSTALL CLUTCH ACCUMULATOR ASSEMBLY

(a) Using SST, connect the 2 flexible hose tubes to the clutch accumulator.
SST 09023-00101

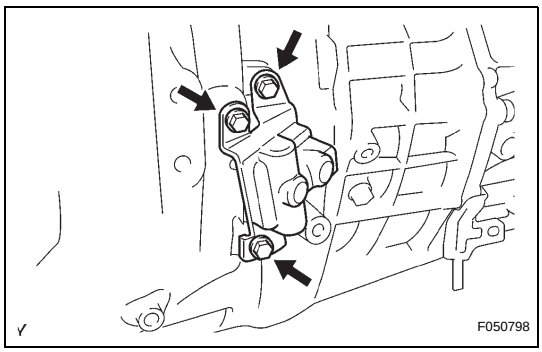

(b) Install the clutch accumulator with the 3 bolts.
Torque: 12 N*m (120 kgf*cm, 8.7 ft.*lbf)

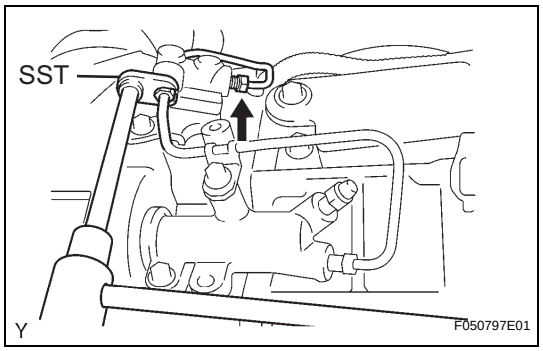

(c) Using SST, tighten the 2 flexible hose tubes.
SST 09023-00101
Torque: 15 N*m (155 kgf*cm, 11 ft.*lbf)

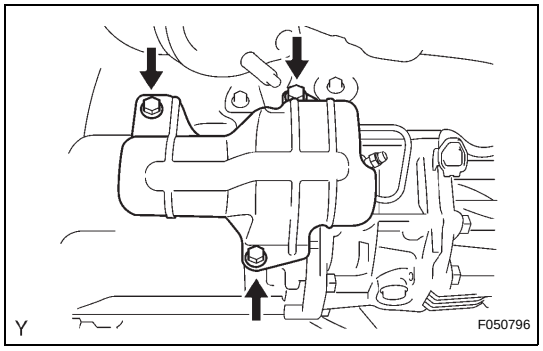

2. INSTALL NO. 1 CLUTCH HOUSING COVER

(a) Install the clutch housing cover No. 1 with the 3 bolts.
Torque: 12 N*m (120 kgf*cm, 8.7 ft.*lbf)

3. BLEED CLUTCH PIPE LINE

(a) Fill the brake reservoir tank with the brake fluid and bleed the clutch system.
Torque: 11 N*m (110 kgf*cm, 8.0 ft.*lbf)

4. CHECK FOR CLUTCH FLUID LEAKAGE

CLUTCH UNIT (for R155)

COMPONENTS

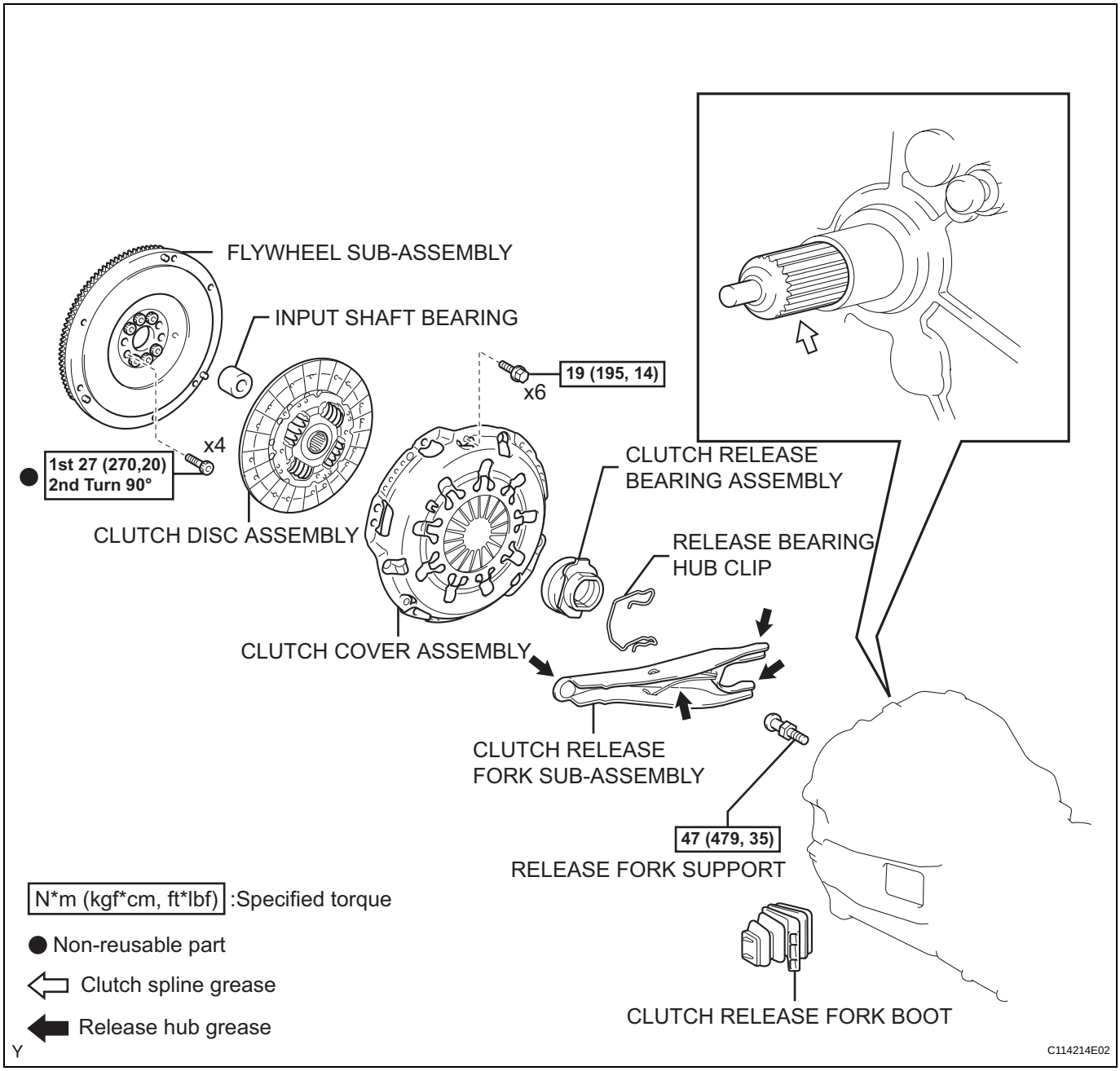

REMOVAL

1. **REMOVE MANUAL TRANSMISSION UNIT ASSEMBLY**
   (See page MT-6)

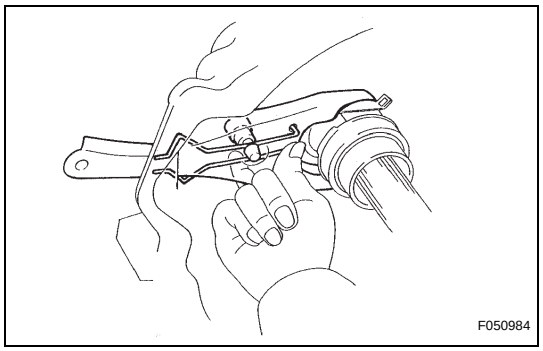

2. **REMOVE CLUTCH RELEASE FORK SUB-ASSEMBLY**
   (a) Remove the clutch release fork together with the clutch release bearing from the transmission assembly.

3. **REMOVE CLUTCH RELEASE BEARING ASSEMBLY**
   (a) Remove the clutch release bearing assembly from the clutch release fork.

4. **REMOVE RELEASE FORK SUPPORT**
   (a) Remove the release fork support from the transaxle assembly.

5. **REMOVE RELEASE BEARING HUB CLIP**

6. **REMOVE CLUTCH RELEASE FORK BOOT**

7. **REMOVE CLUTCH COVER ASSEMBLY**
   (a) Align the matchmark on the clutch cover assembly with the one on the flywheel sub-assembly.
   (b) Loosen each set bolt one turn at a time until the spring tension is released.
   (c) Remove the 6 bolts and clutch cover assembly.
   NOTICE:
   Do not drop the clutch disc assembly.

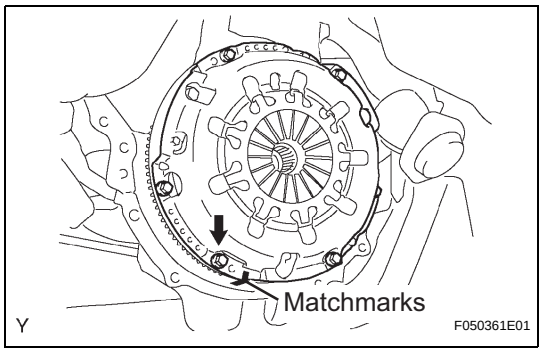

8. **REMOVE CLUTCH DISC ASSEMBLY**
   NOTICE:
   Keep the lining part of the clutch disc assembly, pressure plate and surface of the flywheel sub-assembly free from oil and foreign matter.

9. **REMOVE INPUT SHAFT BEARING**
   (a) Remove the 4 bolts at diametrically opposite points.
   (b) Using SST, remove the pilot bearing.
   SST 09303-35011

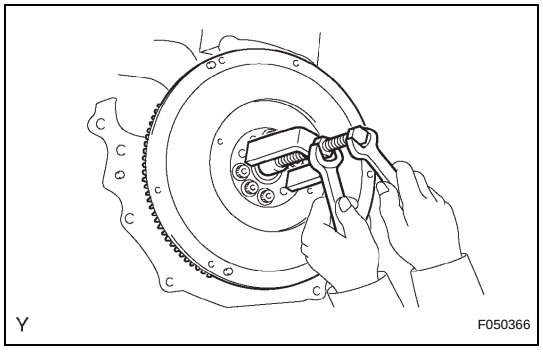

INSPECTION

1. **INSPECT CLUTCH DISC ASSEMBLY**
   (a) Using vernier calipers, measure the rivet head depth.
   Maximum rivet depth:
   0.3 mm (0.012 in.)
   If necessary, replace the clutch disc assembly.

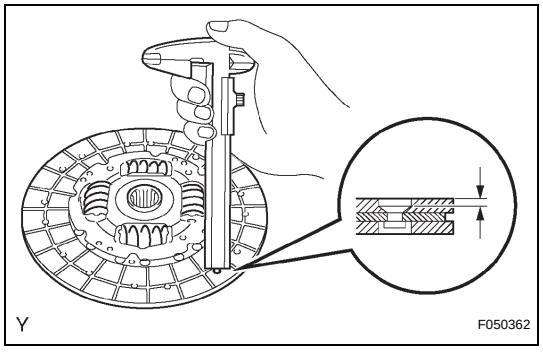

(b) Install the clutch disc assembly onto the transaxle assembly.
NOTICE:
Take care not to insert the clutch disc assembly in the wrong orientation.

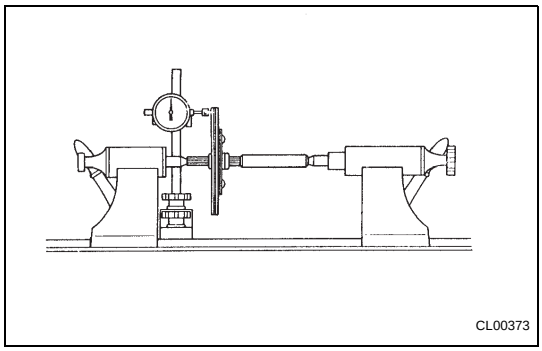

(c) Using a dial indicator, check the clutch disc assembly runout.
Minimum runout:
0.8 mm (0.031 in.)
If necessary, replace the clutch disc assembly.

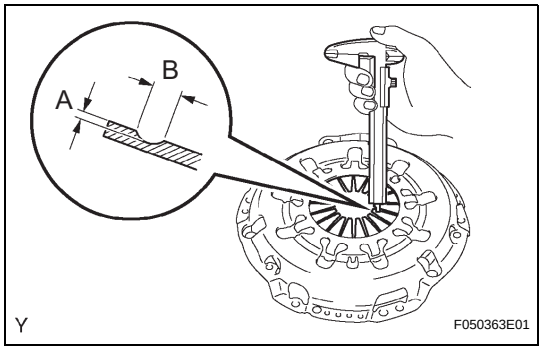

2. INSPECT CLUTCH COVER ASSEMBLY

(a) Using vernier calipers, inspect the depth and width of wear of the diaphragm spring.
Minimum:
A (Depth): 0.5 mm (0.020 in.)
B (Width): 6.0 mm (0.236 in.)
If necessary, replace the clutch cover assembly.

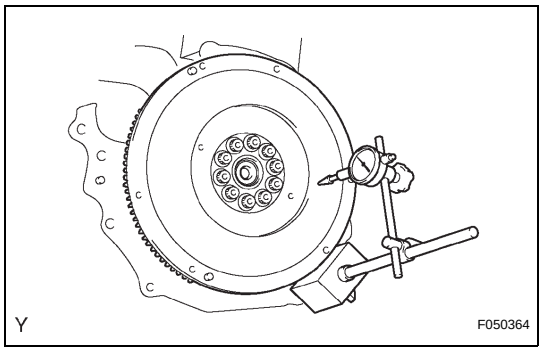

3. INSPECT FLYWHEEL SUB-ASSEMBLY

(a) Using a dial indicator, inspect the flywheel sub-assembly runout.
Maximum runout:
0.1 mm (0.004 in.)
If necessary, replace the flywheel sub-assembly.

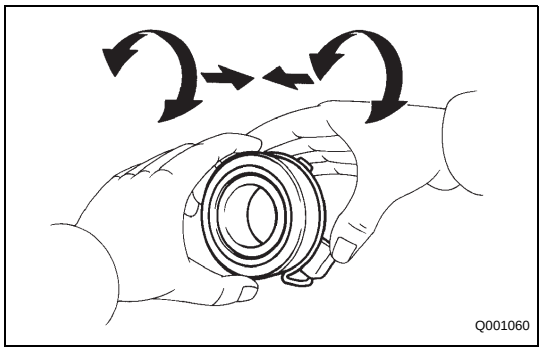

4. INSPECT CLUTCH RELEASE BEARING ASSEMBLY

(a) Turn the release bearing by hand while applying force in the axial direction.
HINT:
The bearing is permanently lubricated and requires no cleaning or lubrication.
If necessary, replace the release bearing assembly.

CLUTCH UNIT (for R155F)

COMPONENTS

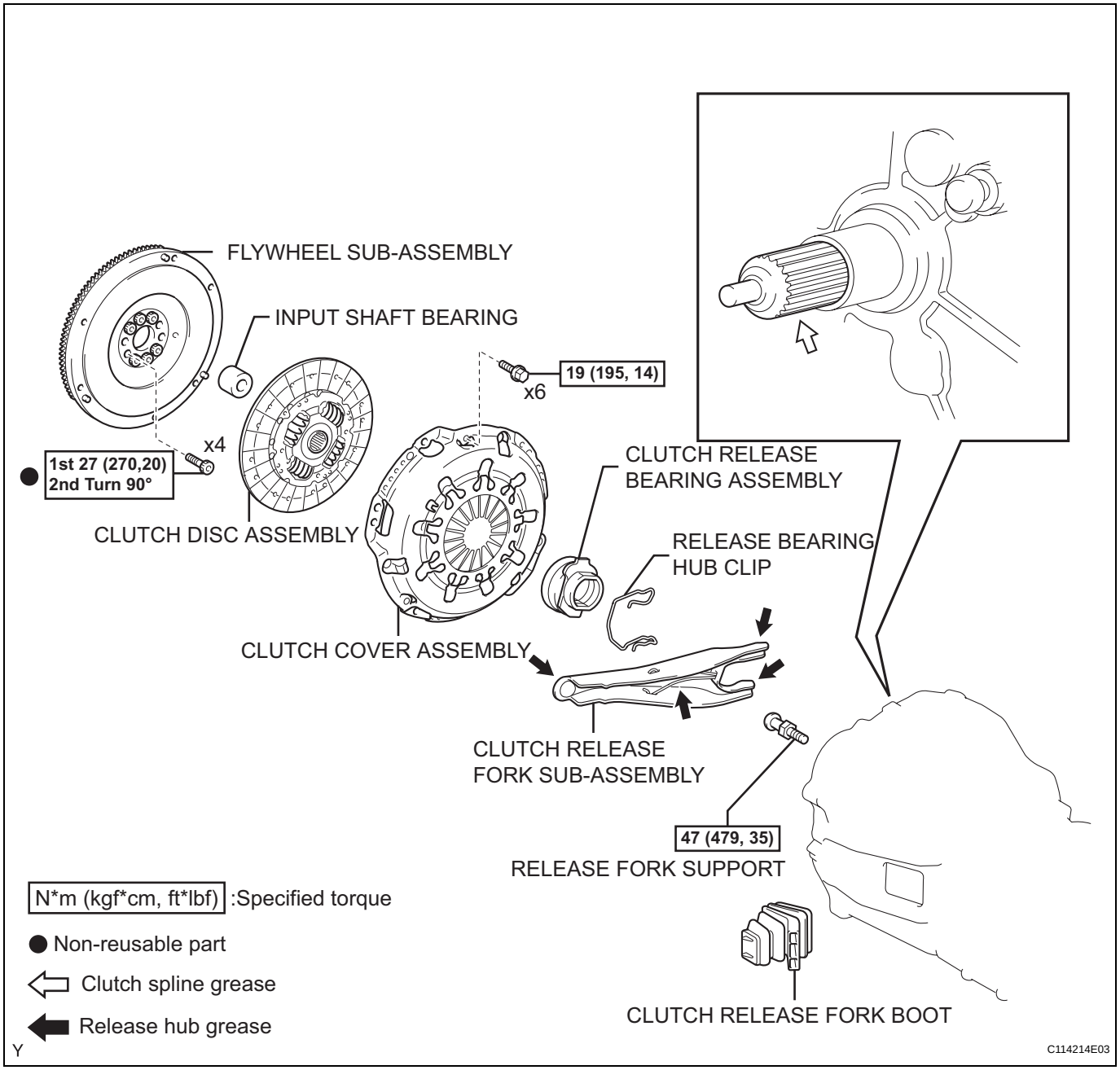

CL

REMOVAL

1. **REMOVE MANUAL TRANSMISSION UNIT ASSEMBLY**
   (See page MT-8)

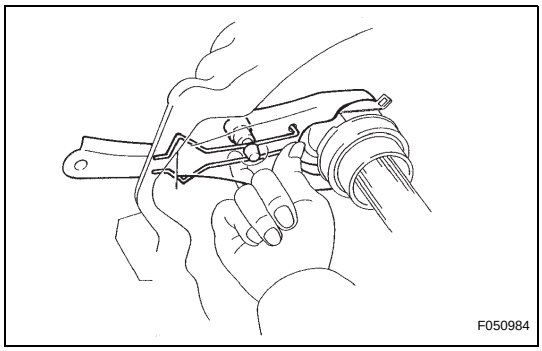

2. **REMOVE CLUTCH RELEASE FORK SUB-ASSEMBLY**
   (a) Remove the clutch release fork together with the clutch release bearing from the transmission assembly.
3. **REMOVE CLUTCH RELEASE BEARING ASSEMBLY**
   (a) Remove the clutch release bearing assembly from the clutch release fork.
4. **REMOVE RELEASE FORK SUPPORT**
   (a) Remove the release fork support from the transaxle assembly.
5. **REMOVE RELEASE BEARING HUB CLIP**
6. **REMOVE CLUTCH RELEASE FORK BOOT**
7. **REMOVE CLUTCH COVER ASSEMBLY**
   (a) Align the matchmark on the clutch cover assembly with the one on the flywheel sub-assembly.
   (b) Loosen each set bolt one turn at a time until the spring tension is released.
   (c) Remove the 6 bolts and clutch cover assembly.
   NOTICE:
   Do not drop the clutch disc assembly.

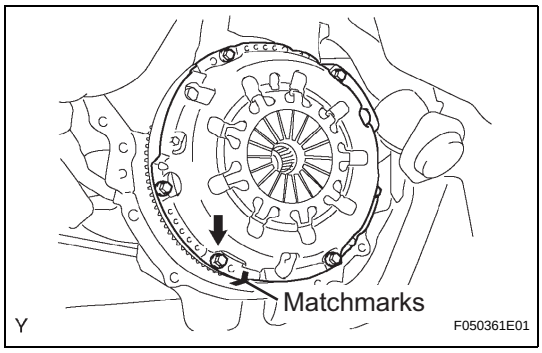

8. **REMOVE CLUTCH DISC ASSEMBLY**
   NOTICE:
   Keep the lining part of the clutch disc assembly, pressure plate and surface of the flywheel sub-assembly free from oil and foreign matter.
9. **REMOVE INPUT SHAFT BEARING**
   (a) Remove the 4 bolts at diametrically opposite points.
   (b) Using SST, remove the pilot bearing.
   SST 09303-35011

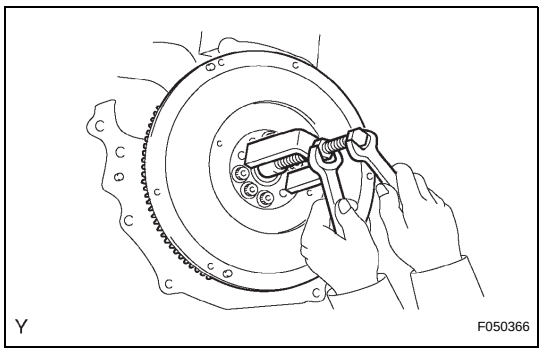

INSPECTION

1. **INSPECT CLUTCH DISC ASSEMBLY**
   (a) Using vernier calipers, measure the rivet head depth.
   Maximum rivet depth:
   0.3 mm (0.012 in.)
   If necessary, replace the clutch disc assembly.

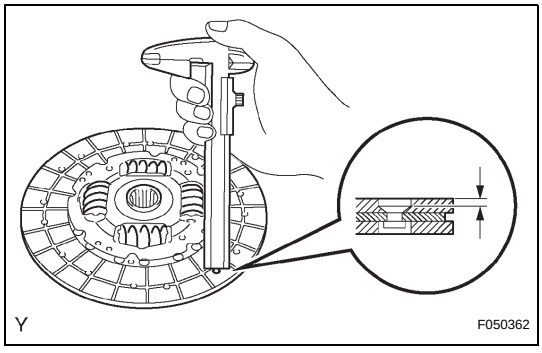

(b) Install the clutch disc assembly onto the transaxle assembly.
NOTICE:
Take care not to insert the clutch disc assembly in the wrong orientation.

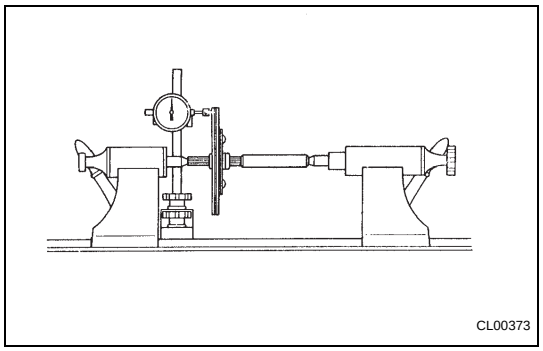

(c) Using a dial indicator, check the clutch disc assembly runout.
Minimum runout:
0.8 mm (0.031 in.)
If necessary, replace the clutch disc assembly.

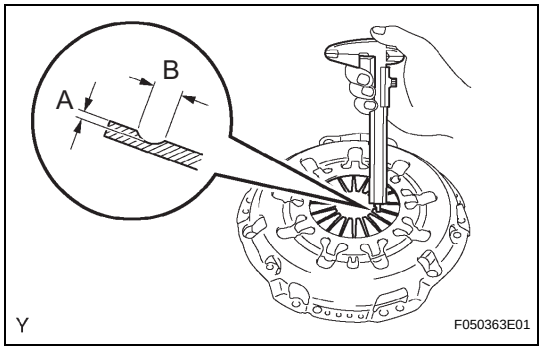

2. INSPECT CLUTCH COVER ASSEMBLY

(a) Using vernier calipers, inspect the depth and width of wear of the diaphragm spring.
Minimum:
A (Depth): 0.5 mm (0.020 in.)
B (Width): 6.0 mm (0.236 in.)
If necessary, replace the clutch cover assembly.

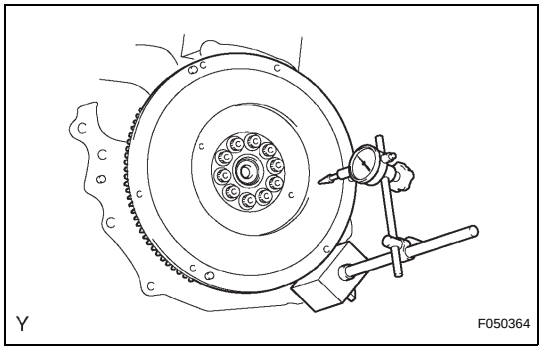

3. INSPECT FLYWHEEL SUB-ASSEMBLY

(a) Using a dial indicator, inspect the flywheel sub-assembly runout.
Maximum runout:
0.1 mm (0.004 in.)
If necessary, replace the flywheel sub-assembly.

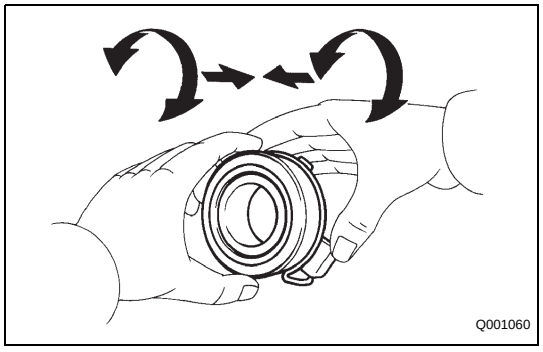

4. INSPECT CLUTCH RELEASE BEARING ASSEMBLY

(a) Turn the release bearing by hand while applying force in the axial direction.
HINT:
The bearing is permanently lubricated and requires no cleaning or lubrication.
If necessary, replace the release bearing assembly.

CLUTCH UNIT (for RA60)

COMPONENTS

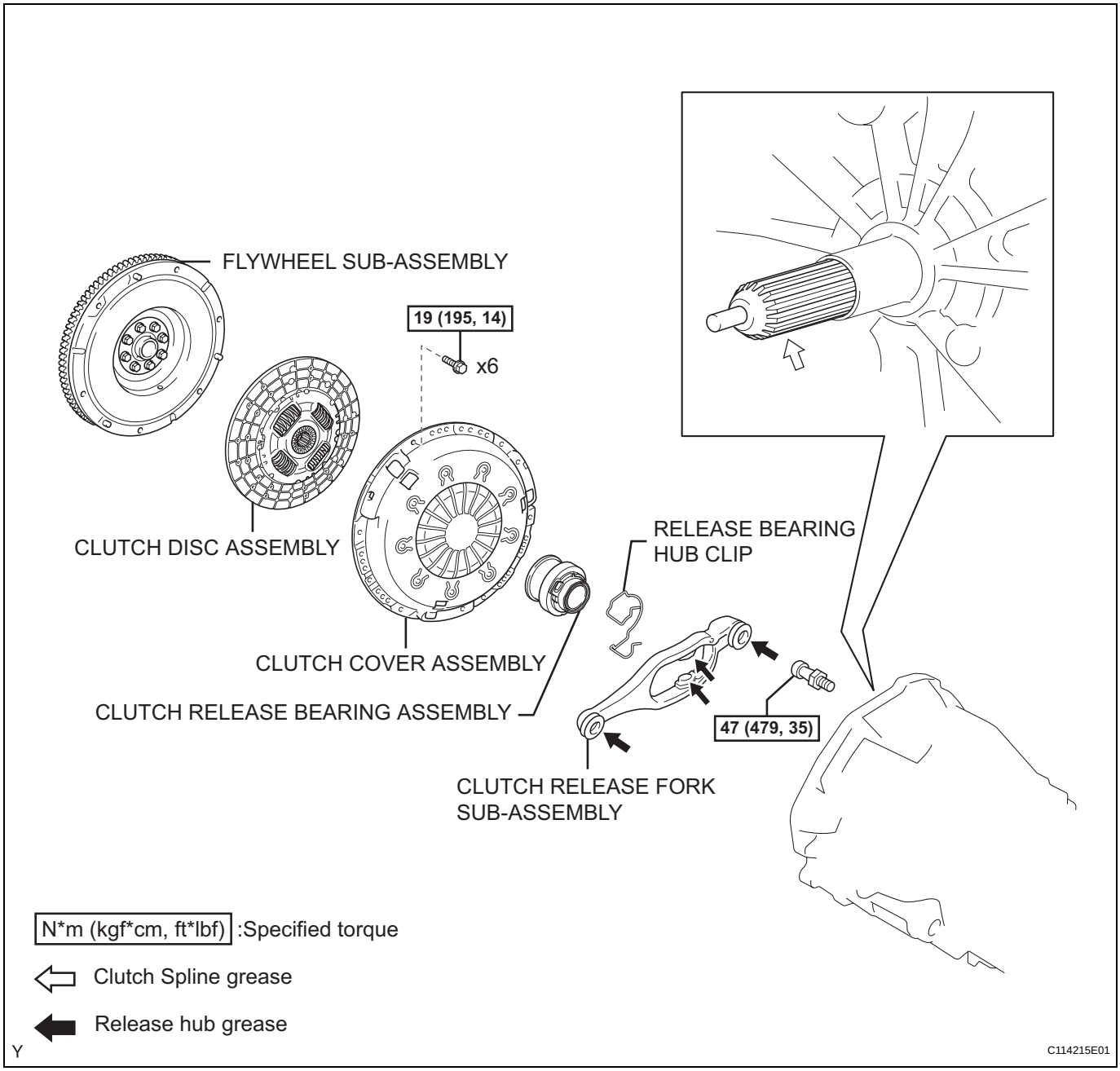

REMOVAL

1. **REMOVE MANUAL TRANSMISSION UNIT ASSEMBLY**
   (See page MT-7)

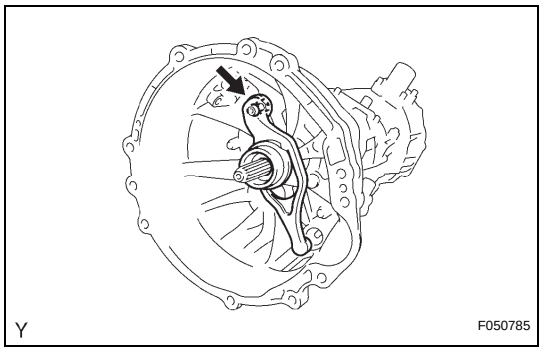

2. **REMOVE CLUTCH RELEASE FORK SUB-ASSEMBLY**
   (a) Remove the clutch release fork together with the clutch release bearing from the transmission assembly.

3. **REMOVE CLUTCH RELEASE BEARING ASSEMBLY**
   (a) Remove the clutch release bearing assembly from the clutch release fork.

4. **REMOVE RELEASE FORK SUPPORT**
   (a) Remove the release fork support from the transaxle assembly.

5. **REMOVE RELEASE BEARING HUB CLIP**

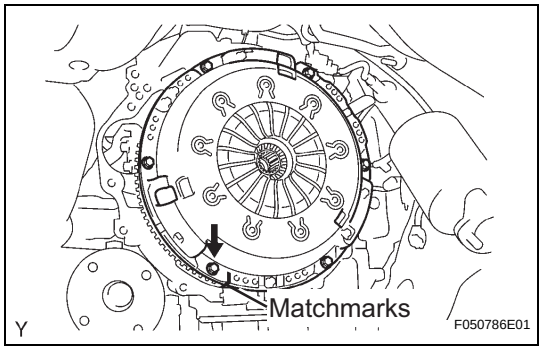

6. **REMOVE CLUTCH COVER ASSEMBLY**
   (a) Align the matchmark on the clutch cover assembly with the one on the flywheel sub-assembly.
   (b) Loosen each set bolt one turn at a time until the spring tension is released.
   (c) Remove the 6 bolts and clutch cover assembly.
   NOTICE:
   Do not drop the clutch disc assembly.

7. **REMOVE CLUTCH DISC ASSEMBLY**
   NOTICE:
   Keep the lining part of the clutch disc assembly, pressure plate and surface of the flywheel sub-assembly free from oil and foreign matter.

INSPECTION

1. **INSPECT CLUTCH DISC ASSEMBLY**
   (a) Using vernier calipers, measure the rivet head depth.
   Maximum rivet depth:
   0.3 mm (0.012 in.)
   If necessary, replace the clutch disc assembly.

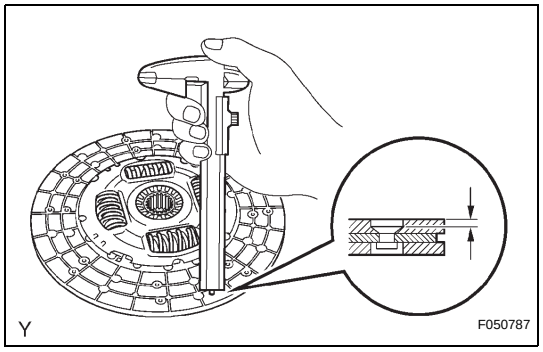

   (b) Install the clutch disc assembly onto the transaxle assembly.
   NOTICE:
   Take care not to insert the clutch disc assembly in the wrong orientation.

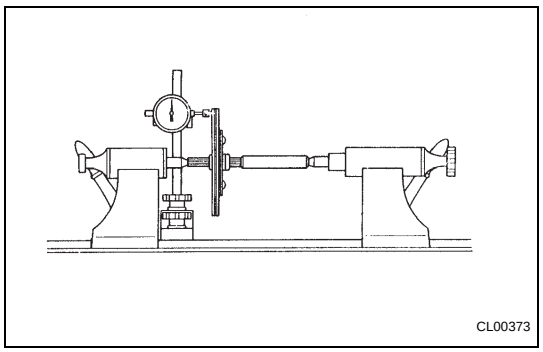

   (c) Using a dial indicator, check the clutch disc assembly runout.
   Minimum runout:
   1.0 mm (0.039 in.)
   If necessary, replace the clutch disc assembly.

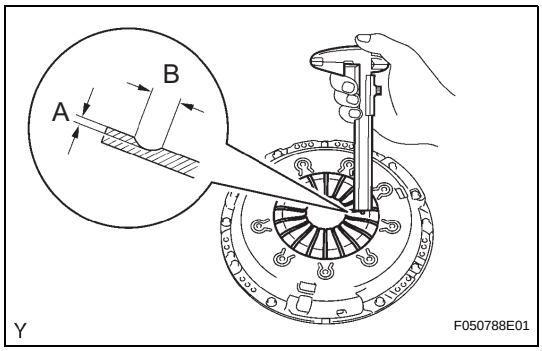

2. INSPECT CLUTCH COVER ASSEMBLY

(a) Using vernier calipers, inspect the depth and width of wear of the diaphragm spring.

Minimum:

A (Depth): 0.5 mm (0.020 in.)

B (Width): 6.0 mm (0.236 in.)

If necessary, replace the clutch cover assembly.

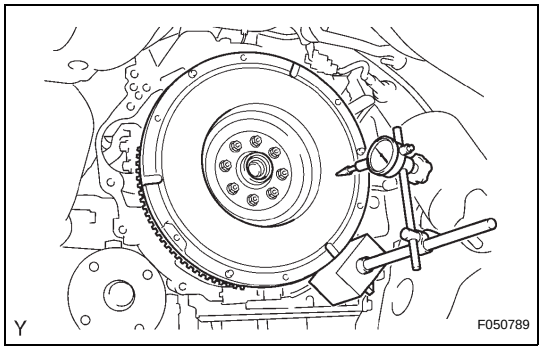

3. INSPECT FLYWHEEL SUB-ASSEMBLY

(a) Using a dial indicator, inspect the flywheel sub-assembly runout.

Maximum runout:

0.1 mm (0.004 in.)

If necessary, replace the flywheel sub-assembly.

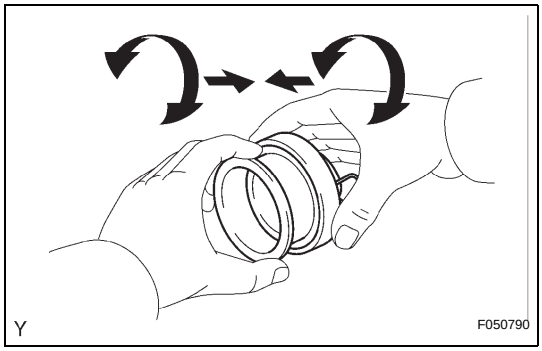

4. INSPECT CLUTCH RELEASE BEARING ASSEMBLY

(a) Turn the release bearing by hand while applying force in the axial direction.

HINT:

The bearing is permanently lubricated and requires no cleaning or lubrication.

If necessary, replace the release bearing assembly.

INSTALLATION

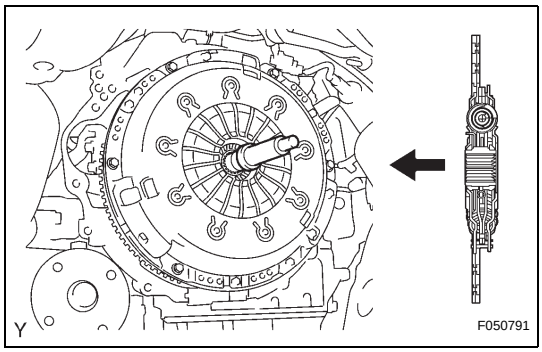

1. INSTALL CLUTCH DISC ASSEMBLY

(a) Insert SST into the clutch disc assembly, then insert them into the flywheel sub-assembly.

SST 09301-00220

NOTICE:

Take care not to insert the clutch disc assembl in the wrong orientation.

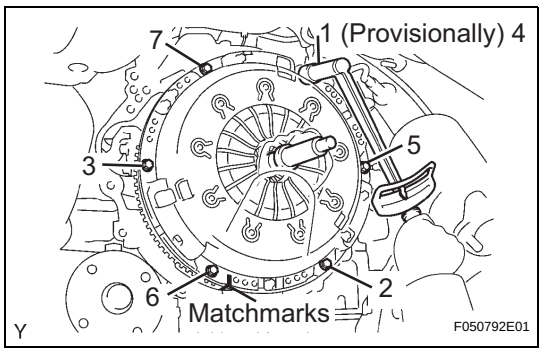

2. INSTALL CLUTCH COVER ASSEMBLY

(a) Align the matchmarks on the clutch cover assembly and flywheel sub-assembly.

(b) Following the procedures shown in the illustration, tighten the 6 bolts, in the order starting with the bolt located near the knock pin on the top.

Torque: 19 N*m (195 kgf*cm, 14 ft.*lbf)

HINT:

- Following the order in the illustration, uniformly tighten the bolts.

- Move SST up and down, right and left lightly, after checking that the disc is in the center, and tighten the bolts.

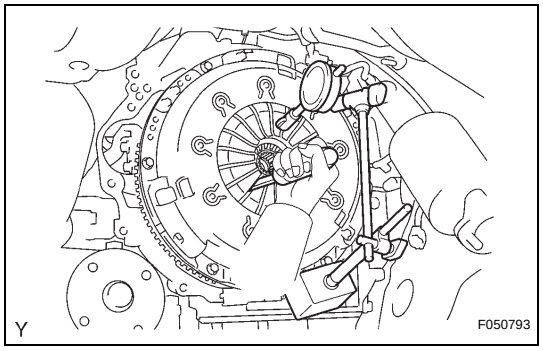

3. INSPECT AND ADJUST CLUTCH COVER ASSEMBLY

(a) Using a dial indicator with roller instrument, check the diaphragm spring tip alignment.
Maximum non-alignment:
0.5 mm (0.020 in.)
If the alignment is not as specified, adjust the diaphragm spring tip alignment using SST.
SST 09333-00013

4. INSTALL RELEASE FORK SUPPORT

(a) Install the release fork support onto the transaxle assembly.
Torque: 47 N*m (479 kgf*cm, 35 ft.*lbf)

5. INSTALL RELEASE BEARING HUB CLIP

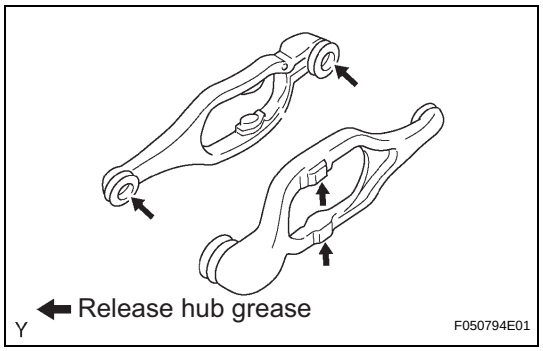

6. INSTALL CLUTCH RELEASE FORK SUB-ASSEMBLY

(a) Apply release hub grease to the release fork and release the bearing assembly contact surfaces, release fork and push rod contact surface and release fork pivot point.
Sealant:
Part No. 08887-01806, RELEASE HUB GREASE or equivalent

(b) Install the release fork onto the release bearing assembly.

7. INSTALL CLUTCH RELEASE BEARING ASSEMBLY

(a) Apply clutch spline grease to the input shaft spline.
Sealant:
Part No. 08887-01706, CLUTCH SPLINE GREASE or equivalent

(b) Install the bearing onto the release fork, and then install them onto the transaxle assembly.
NOTICE:
After installation, move the fork forward and backward to check that the release bearing slides smoothly.

8. INSTALL MANUAL TRANSMISSION UNIT ASSEMBLY
(See page MT-9)

CLUTCH UNIT (for RA60F)

COMPONENTS

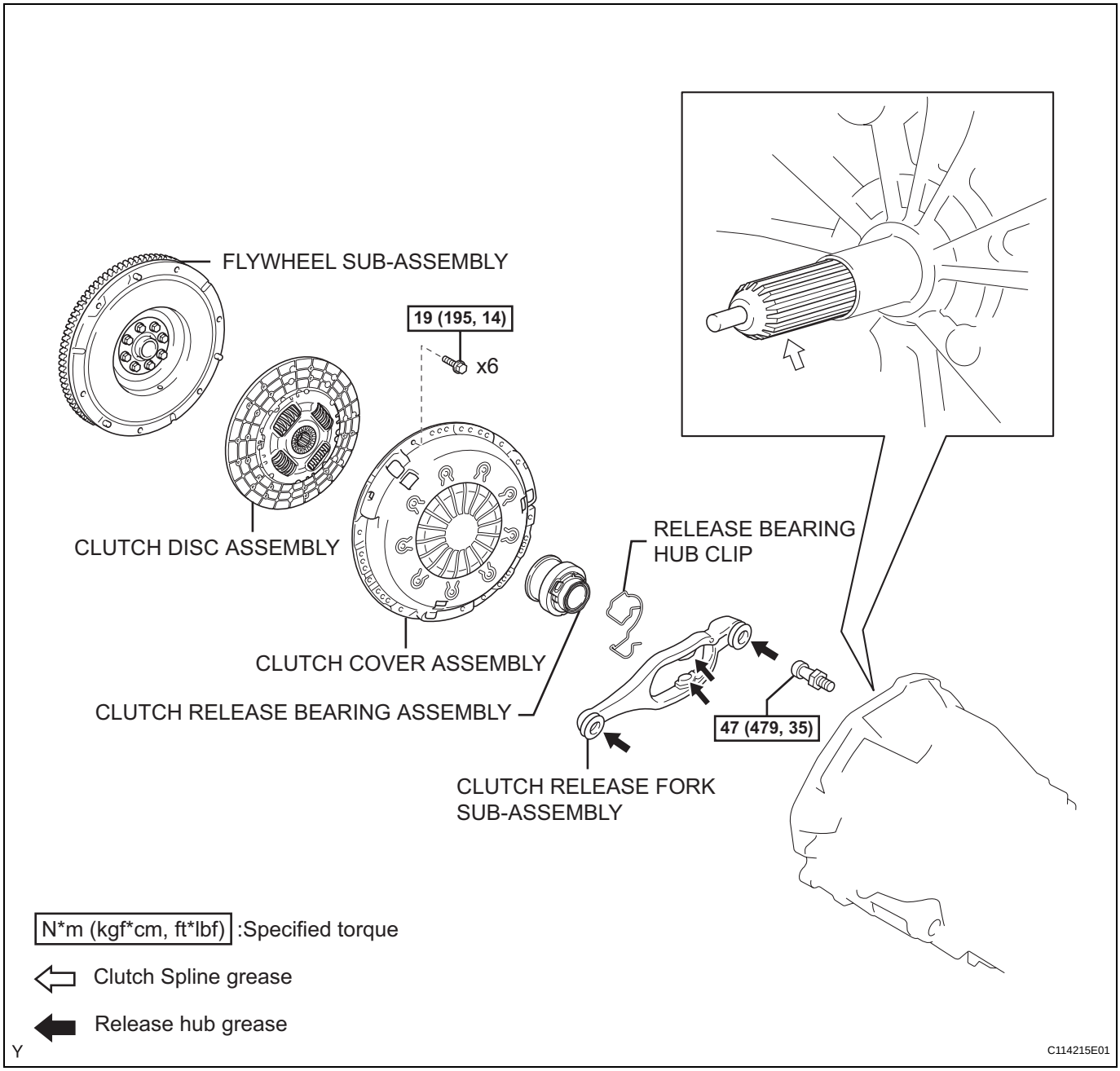

REMOVAL

1. **REMOVE MANUAL TRANSMISSION UNIT ASSEMBLY**
   (See page MT-6)

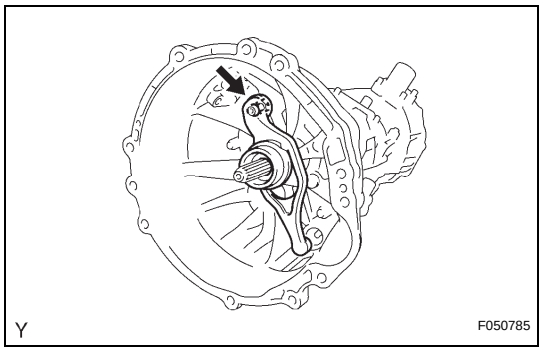

2. **REMOVE CLUTCH RELEASE FORK SUB-ASSEMBLY**
   (a) Remove the clutch release fork together with the clutch release bearing from the transmission assembly.

3. **REMOVE CLUTCH RELEASE BEARING ASSEMBLY**
   (a) Remove the clutch release bearing assembly from the clutch release fork.

4. **REMOVE RELEASE FORK SUPPORT**
   (a) Remove the release fork support from the transaxle assembly.

5. **REMOVE RELEASE BEARING HUB CLIP**

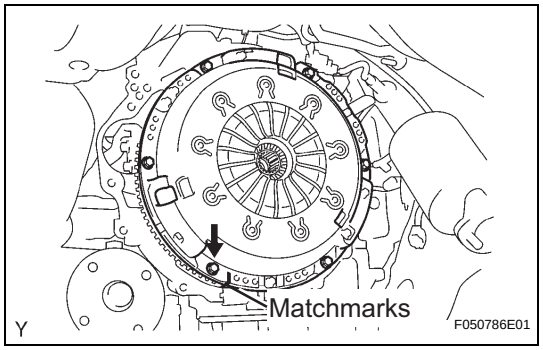

6. **REMOVE CLUTCH COVER ASSEMBLY**
   (a) Align the matchmark on the clutch cover assembly with the one on the flywheel sub-assembly.
   (b) Loosen each set bolt one turn at a time until the spring tension is released.
   (c) Remove the 6 bolts and clutch cover assembly.
   NOTICE:
   Do not drop the clutch disc assembly.

7. **REMOVE CLUTCH DISC ASSEMBLY**
   NOTICE:
   Keep the lining part of the clutch disc assembly, pressure plate and surface of the flywheel sub-assembly free from oil and foreign matter.

INSPECTION

1. **INSPECT CLUTCH DISC ASSEMBLY**
   (a) Using vernier calipers, measure the rivet head depth.
   Maximum rivet depth:
   0.3 mm (0.012 in.)
   If necessary, replace the clutch disc assembly.

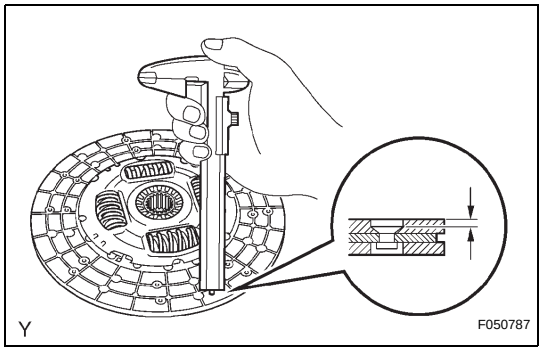

   (b) Install the clutch disc assembly onto the transaxle assembly.
   NOTICE:
   Take care not to insert the clutch disc assembly in the wrong orientation.

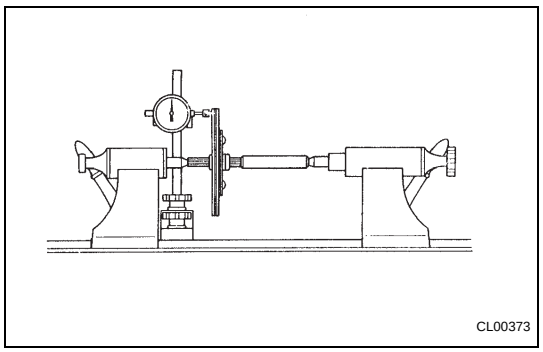

   (c) Using a dial indicator, check the clutch disc assembly runout.
   Minimum runout:
   1.0 mm (0.039 in.)
   If necessary, replace the clutch disc assembly.

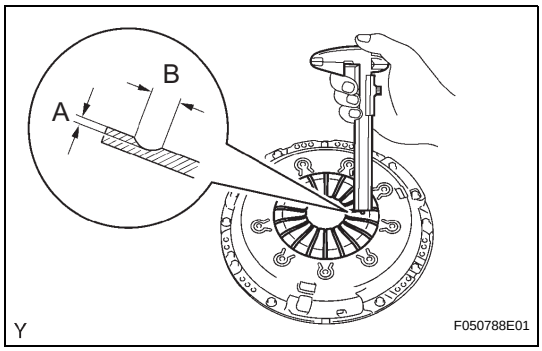

2. INSPECT CLUTCH COVER ASSEMBLY

(a) Using vernier calipers, inspect the depth and width of wear of the diaphragm spring.

Minimum:

A (Depth): 0.5 mm (0.020 in.)

B (Width): 6.0 mm (0.236 in.)

If necessary, replace the clutch cover assembly.

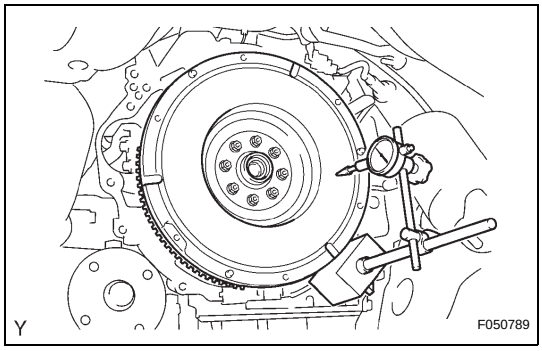

3. INSPECT FLYWHEEL SUB-ASSEMBLY

(a) Using a dial indicator, inspect the flywheel sub-assembly runout.

Maximum runout:

0.1 mm (0.004 in.)

If necessary, replace the flywheel sub-assembly.

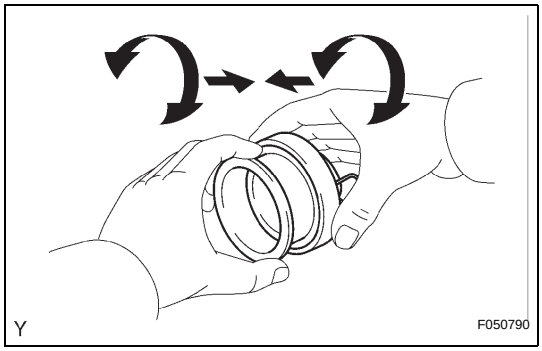

4. INSPECT CLUTCH RELEASE BEARING ASSEMBLY

(a) Turn the release bearing by hand while applying force in the axial direction.

HINT:

The bearing is permanently lubricated and requires no cleaning or lubrication.

If necessary, replace the release bearing assembly.

INSTALLATION

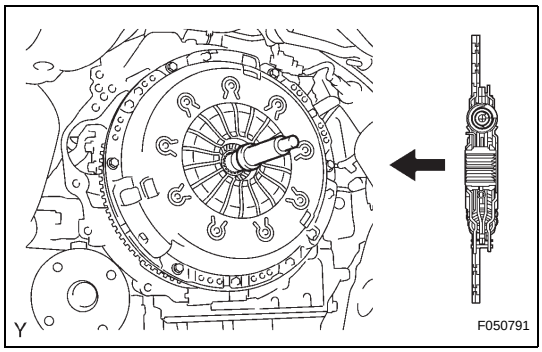

1. INSTALL CLUTCH DISC ASSEMBLY

(a) Insert SST into the clutch disc assembly, then insert them into the flywheel sub-assembly.

SST 09301-00220

NOTICE:

Take care not to insert the clutch disc assembly in the wrong orientation.

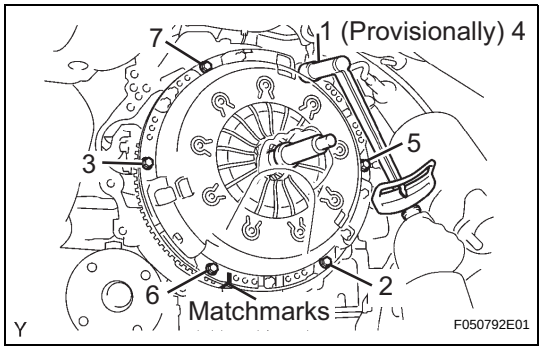

2. INSTALL CLUTCH COVER ASSEMBLY

(a) Align the matchmarks on the clutch cover assembly and flywheel sub-assembly.

(b) Following the procedures shown in the illustration, tighten the 6 bolts, in the order starting with the bolt located near the knock pin on the top.

Torque: 19 N*m (195 kgf*cm, 14 ft.*lbf)

HINT:

- Following the order in the illustration, uniformly tighten the bolts.

- Move SST up and down, right and left lightly, after checking that the disc is in the center, and tighten the bolts.

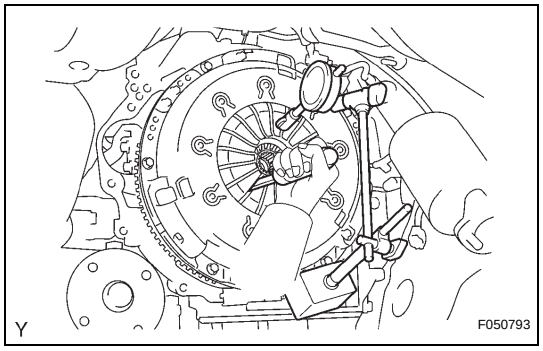

3. INSPECT AND ADJUST CLUTCH COVER ASSEMBLY

(a) Using a dial indicator with roller instrument, check the diaphragm spring tip alignment.
Maximum non-alignment:
0.5 mm (0.020 in.)
If the alignment is not as specified, adjust the diaphragm spring tip alignment using SST.
SST 09333-00013

4. INSTALL RELEASE FORK SUPPORT

(a) Install the release fork support onto the transaxle assembly.
Torque: 47 N*m (479 kgf*cm, 35 ft.*lbf)

5. INSTALL RELEASE BEARING HUB CLIP

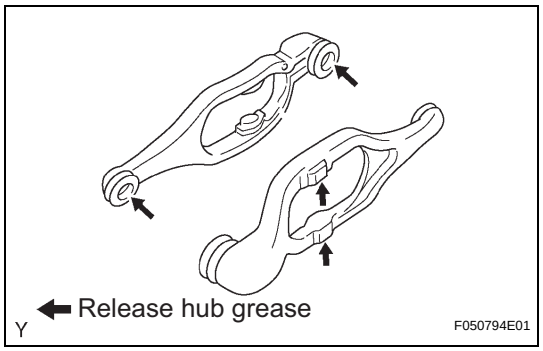

6. INSTALL CLUTCH RELEASE FORK SUB-ASSEMBLY

(a) Apply release hub grease to the release fork and release the bearing assembly contact surfaces, release fork and push rod contact surface and release fork pivot point.
Sealant:
Part No. 08887-01806, RELEASE HUB GREASE or equivalent

(b) Install the release fork onto the release bearing assembly.

7. INSTALL CLUTCH RELEASE BEARING ASSEMBLY

(a) Apply clutch spline grease to the input shaft spline.
Sealant:
Part No. 08887-01706, CLUTCH SPLINE GREASE or equivalent

(b) Install the bearing onto the release fork, and then install them onto the transaxle assembly.
NOTICE:
After installation, move the fork forward and backward to check that the release bearing slides smoothly.

8. INSTALL MANUAL TRANSMISSION UNIT ASSEMBLY

(See page MT-8)

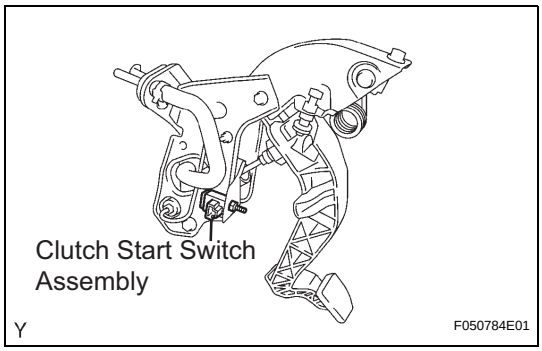

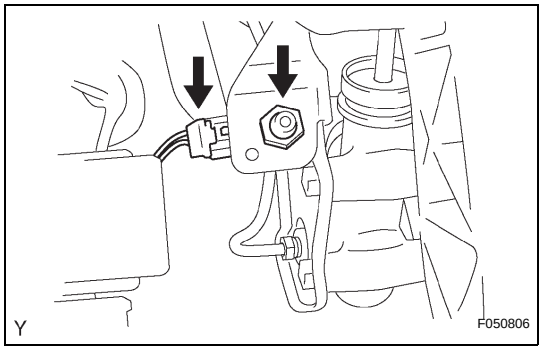

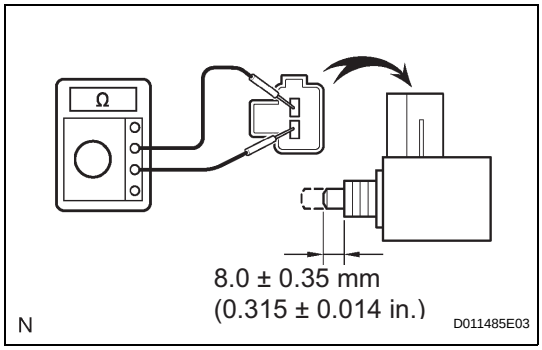

CLUTCH START SWITCH

ON-VEHICLE INSPECTION

1. CHECK CLUTCH START SYSTEM

(a) Check that the engine does not start when the clutch pedal is released.

(b) Check that the engine starts when the clutch pedal is fully depressed.
If necessary, replace the clutch start switch assembly.

REMOVAL

1. REMOVE CLUTCH START SWITCH ASSEMBLY

(a) Disconnect the clutch start switch assembly connector.

(b) Remove the nut and clutch start switch assembly from the clutch pedal support.

INSPECTION

1. INSPECT CLUTCH START SWITCH ASSEMBLY

(a) Measure the resistance between the terminals when the switch is ON and OFF.

Switch Position	Specified Condition
ON (pushed)	Below 1Ω
OFF (free)	10 kΩ or higher

INSTALLATION

1. **INSTALL CLUTCH START SWITCH ASSEMBLY**
   (a) Install the clutch start switch assembly with the nut.
   Torque: 16 N*m (160 kgf*cm, 12 ft.*lbf)
   (b) Connect the clutch start switch assembly connector.
2. **INSPECT CLUTCH START SWITCH ASSEMBLY (See page CL-48)**

CLUTCH START CANCEL SWITCH

INSPECTION

1. INSPECT CLUTCH START CANCEL SWITCH ASSEMBLY

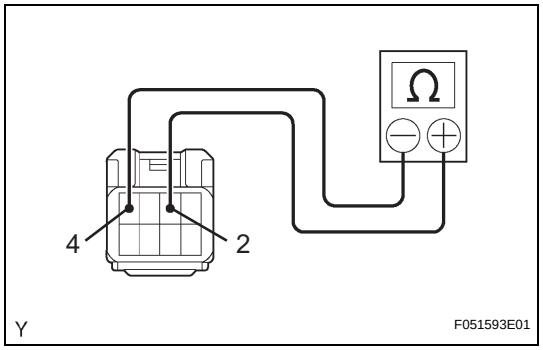

(a) Using an ohmmeter, check that there is resistance between terminals 2 and 4.

Standard:

10 kΩor higher

If the result is not as specified, replace the clutch start cancel switch.

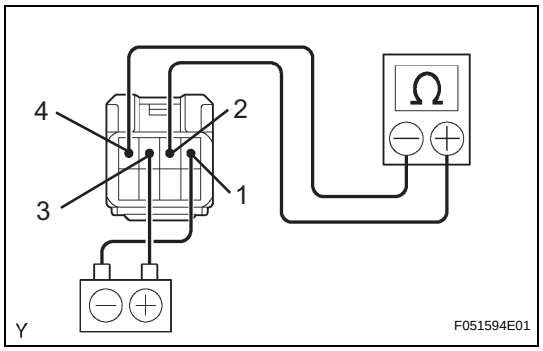

(b) Connect the positive (+) lead from the battery to terminal 3 and connect negative (-) lead to terminal 1.

(c) Using an ohmmeter, check that there is resistance between terminals 2 and 4.

Standard:

10 kΩor higher

If the result is not as specified, replace the clutch start cancel switch.

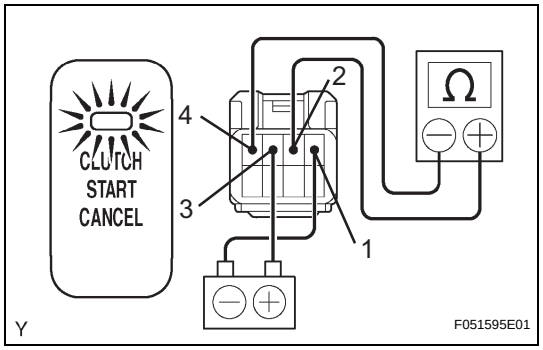

(d) Check that the indicator light comes on and there is resistance between terminals 2 and 4 when the switch is pressed.

Standard:

Blow 1 Ω

If the result is not as specified, replace the clutch start cancel switch.

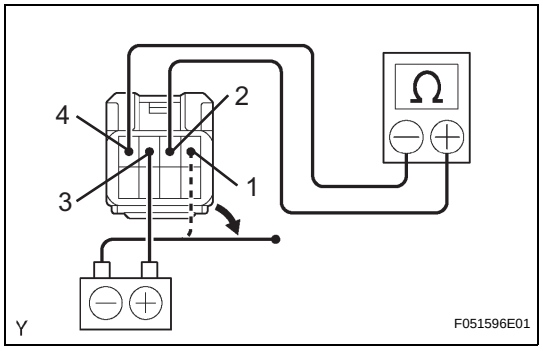

(e) Using an ohmmeter, check that there is resistance between terminals 2 and 4 when the battery lead is disconnected.

Standard:

10 kΩor higher

If the result is not as specified, replace the clutch start cancel switch.

MANUAL TRANSMISSION SYSTEM

PROBLEM SYMPTOMS TABLE

Use the table below to help determine the cause of the problems. The numbers indicate the ranked order of probability of each of the possible causes. Check each part in the order suggested. If necessary, replace the applicable parts.

Symptom	Suspected area	See page
Abnormal noise	1. Oil level (Low)	MT-2
	2. Oil (Wrong)	MT-2
	3. Gears (Worn or damaged)	-
	4. Bearings (Worn or damaged)	-
Oil leakage	1. Oil level (High)	MT-2
	2. Gasket (Damaged)	-
	3. Oil seal (Worn or damaged)	-
	4. O-Ring (Worn or damaged	-
Hard shifting or will not shift	1. Synchronizer ring (Worn or damaged)	-
	2. Shift key spring (Damaged)	-
Jumps out of gear	1. Locking ball spring (Damaged)	-
	2. Shift fork (Worn)	-
	3. Gears (Worn or damaged)	-
	4. Bearings (Worn or damaged)	-

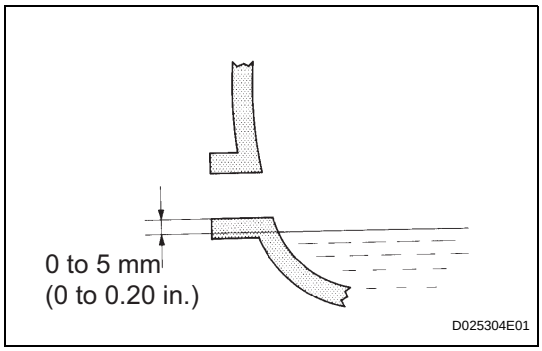

MANUAL TRANSMISSION OIL

ON-VEHICLE INSPECTION

1. INSPECT TRANSMISSION OIL

(a) Park the vehicle in a level place.

(b) Remove the transmission filler plug and gasket.

(c) Check that the oil surface is within 5 mm (0.20 in.) of the lowest point of the transmission filler plug opening.

NOTICE:

- **Problems may occur when the oil level is too high or low.**
- **After replacing the oil, drive the vehicle and check the oil level again.**

(d) Check for oil leakage when the oil level is low.

(e) Install the transmission filler plug and a new gasket.

Torque: 37 N*m (377 kgf*cm, 27 ft.*lbf)

MANUAL TRANSMISSION EXTENSION HOUSING OIL SEAL

REMOVAL

1. **REMOVE PROPELLER WITH CENTER BEARING SHAFT ASSEMBLY (for Access Cab) (See page PR-8)**
2. **REMOVE PROPELLER SHAFT ASSEMBLY (for Regular Cab) (See page PR-3)**
3. **REMOVE MANUAL TRANSMISSION EXTENSION HOUSING OIL SEAL**
   (a) Using SST, remove the oil seal.
   SST 09308-00010
   NOTICE:
   Do not damage the oil-seal-fitted surface of the extension housing.

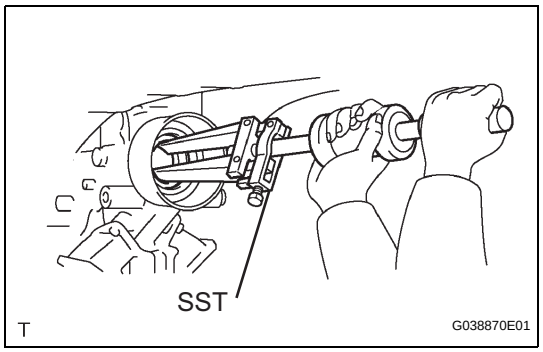

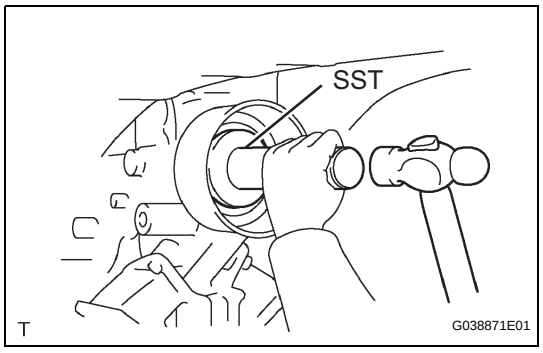

INSTALLATION

1. **INSTALL MANUAL TRANSMISSION EXTENSION HOUSING OIL SEAL**
   (a) Using SST and a hammer, tap in the new oil seal to the extension housing.
   SST 09223-00010
   Drive in depth:
   -0.5 to 0.5 mm (-0.020 to 0.020 in.)
   NOTICE:
   Be careful not to damage the oil seal rip
   (b) Coat the lip of a new oil seal with MP grease.
2. **INSTALL PROPELLER WITH CENTER BEARING SHAFT ASSEMBLY (for Access Cab) (See page PR-13)**
3. **INSTALL PROPELLER SHAFT ASSEMBLY (for Regular Cab) (See page PR-6)**
4. **CHECK FOR MANUAL TRANSMISSION OIL LEAKAGE**

MANUAL TRANSMISSION ASSEMBLY

COMPONENTS

BENCH SEAT:

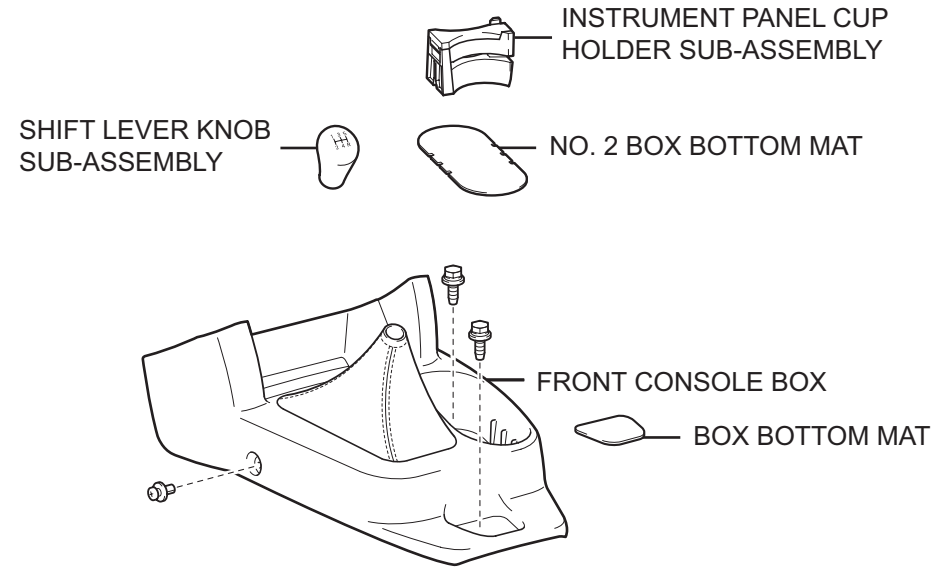

SEPARATE SEAT:

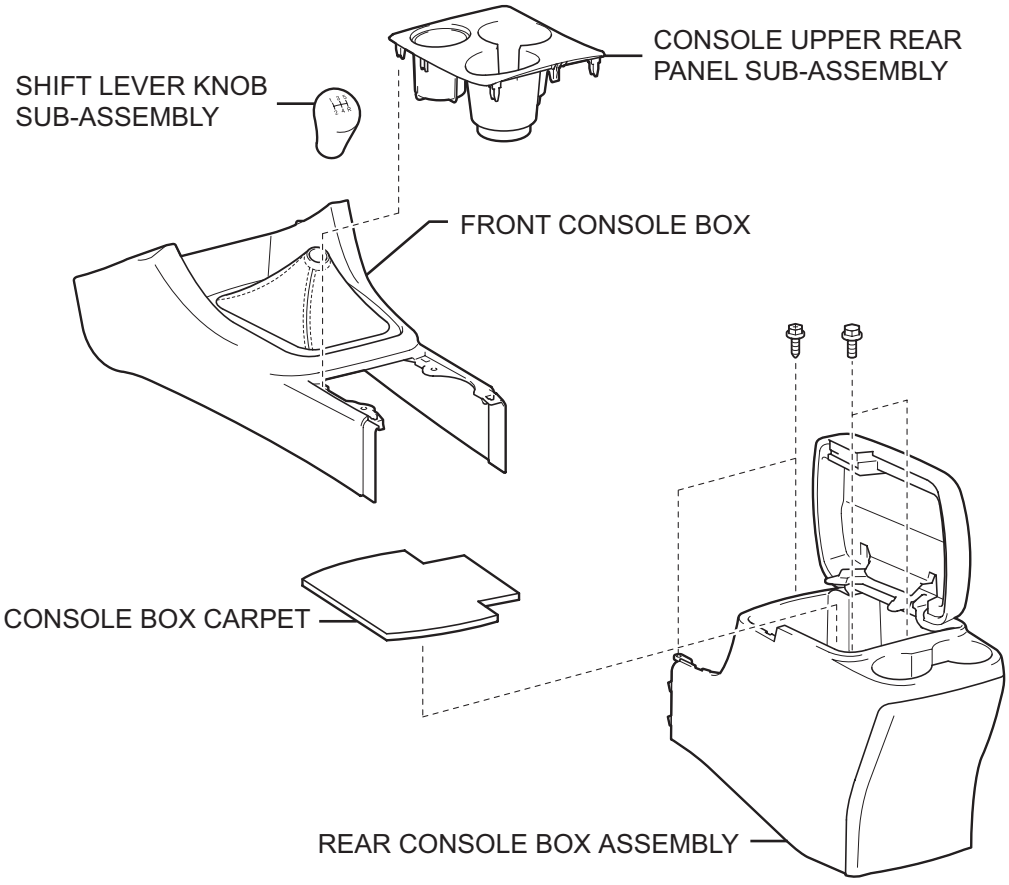

P

C114133E04

MT

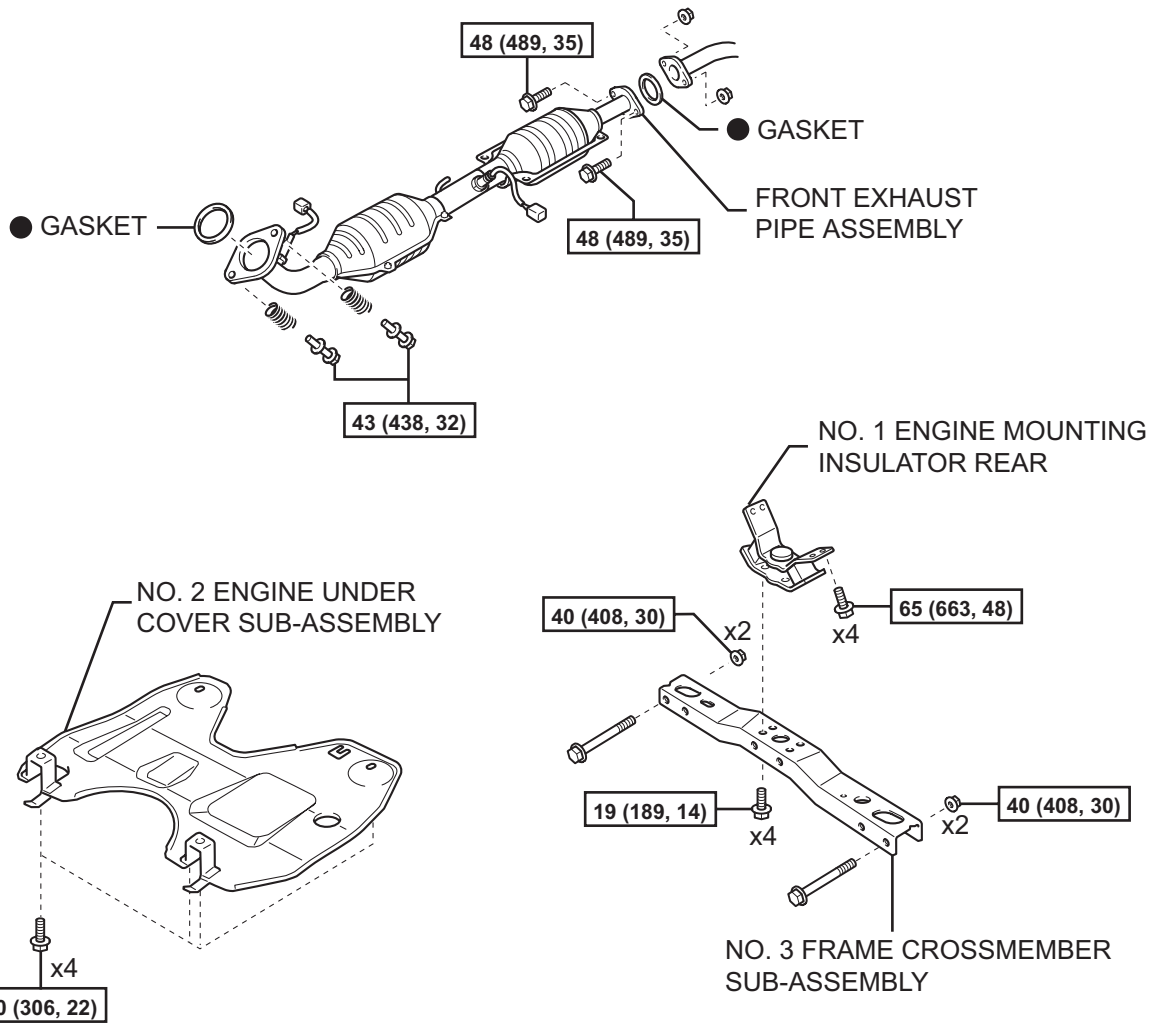

N*m (kgf*cm, ft.*lbf) : Specified torque

● Non-reusable part

Y

C114080E04

MT

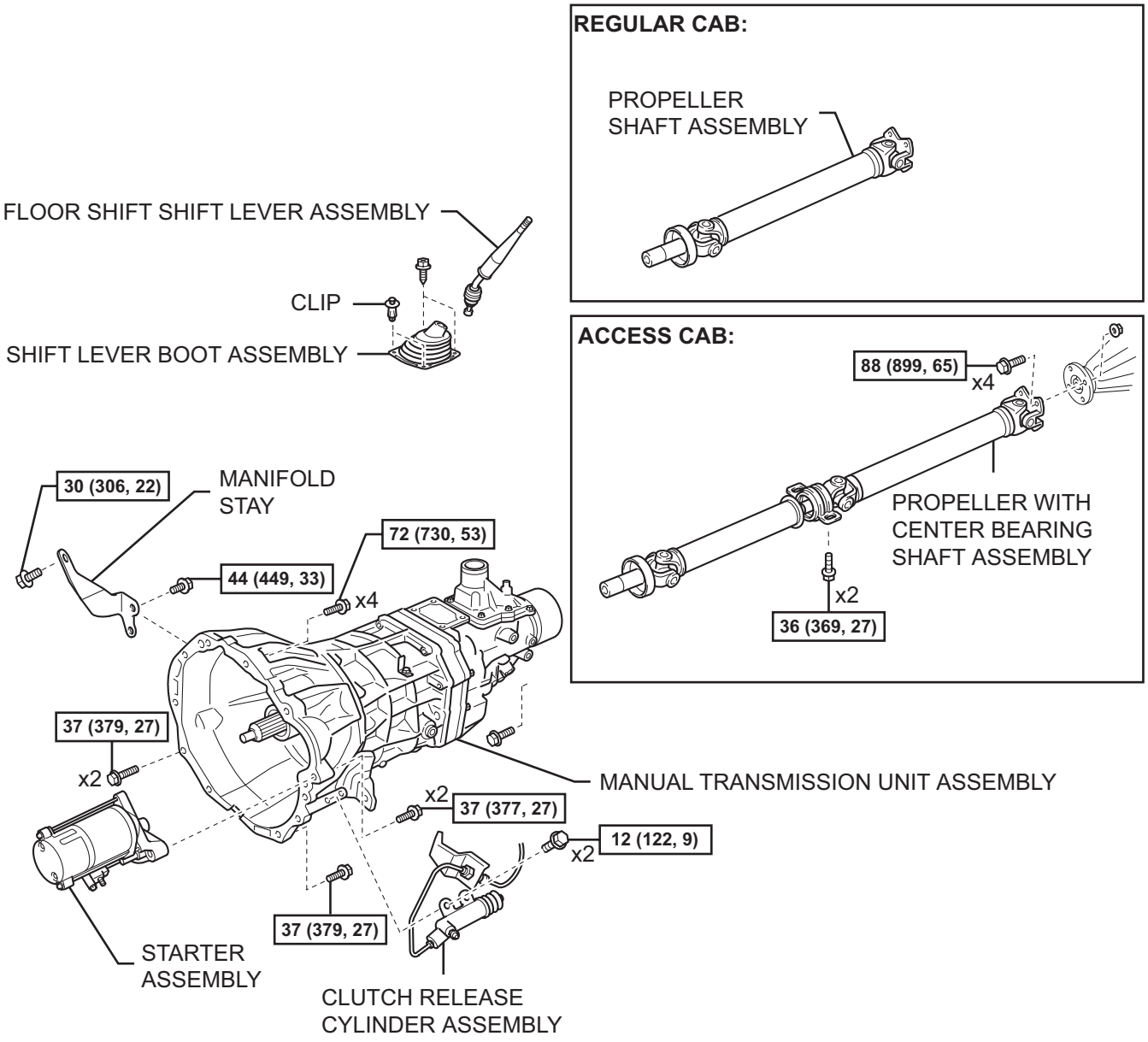

N*m (kgf*cm, ft*lbf) :Specified torque

Y

C114078E02

MANUAL TRANSMISSION UNIT

COMPONENTS

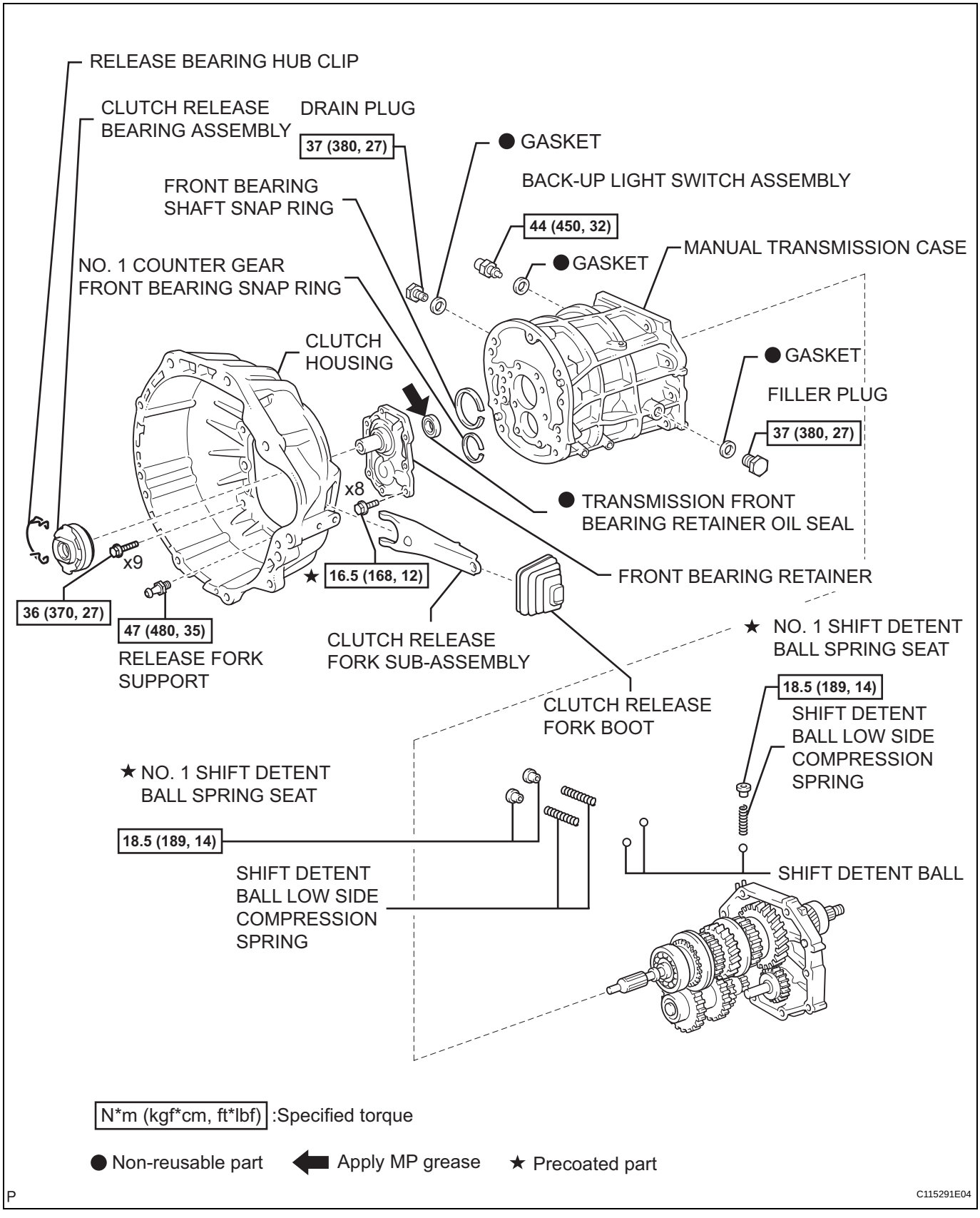

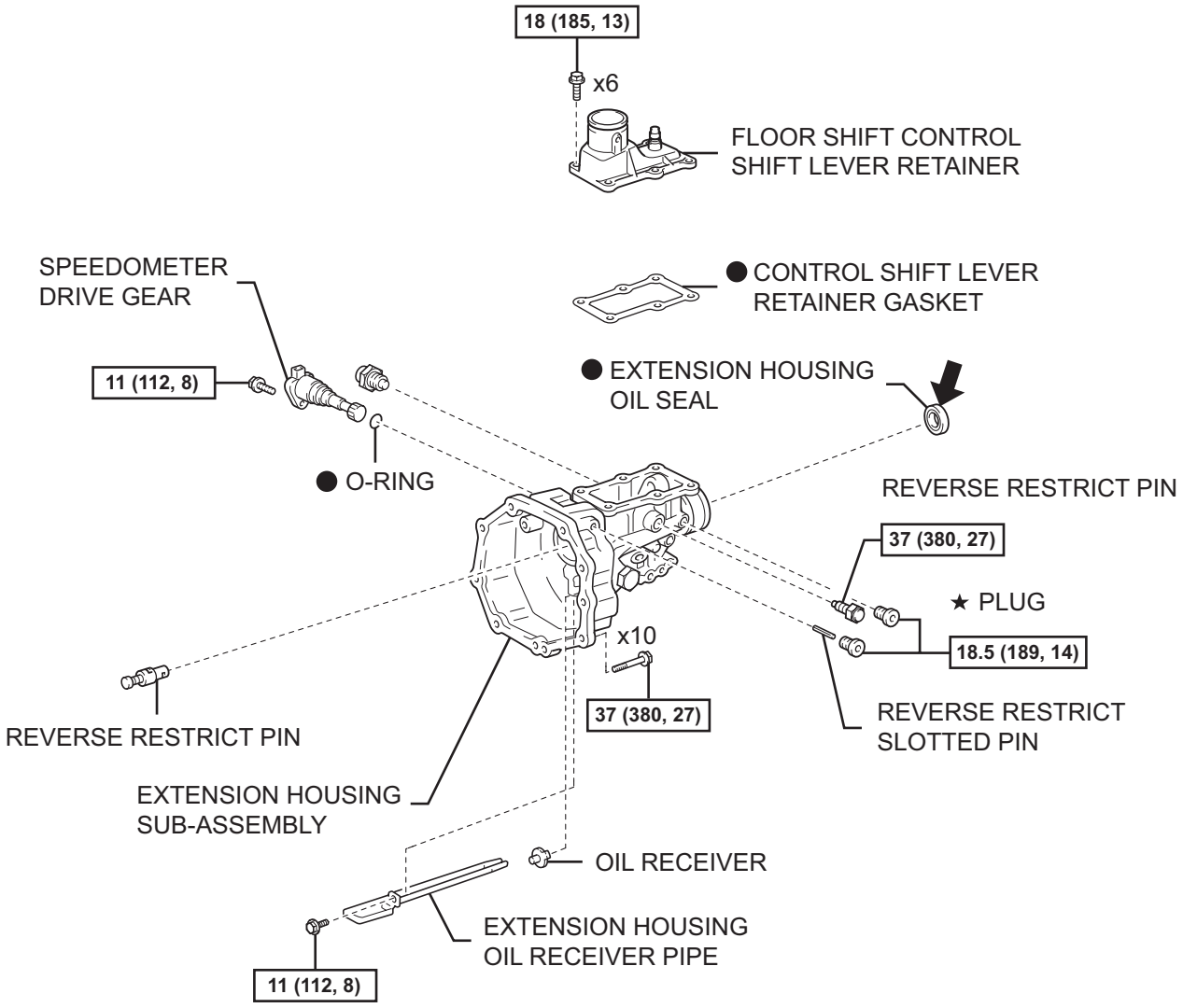

N*m (kgf*cm, ft.*lbf) : Specified torque

● Non-reusable part ★ Precoated part ⬅ Apply MP grease

P

C115292E02

MT

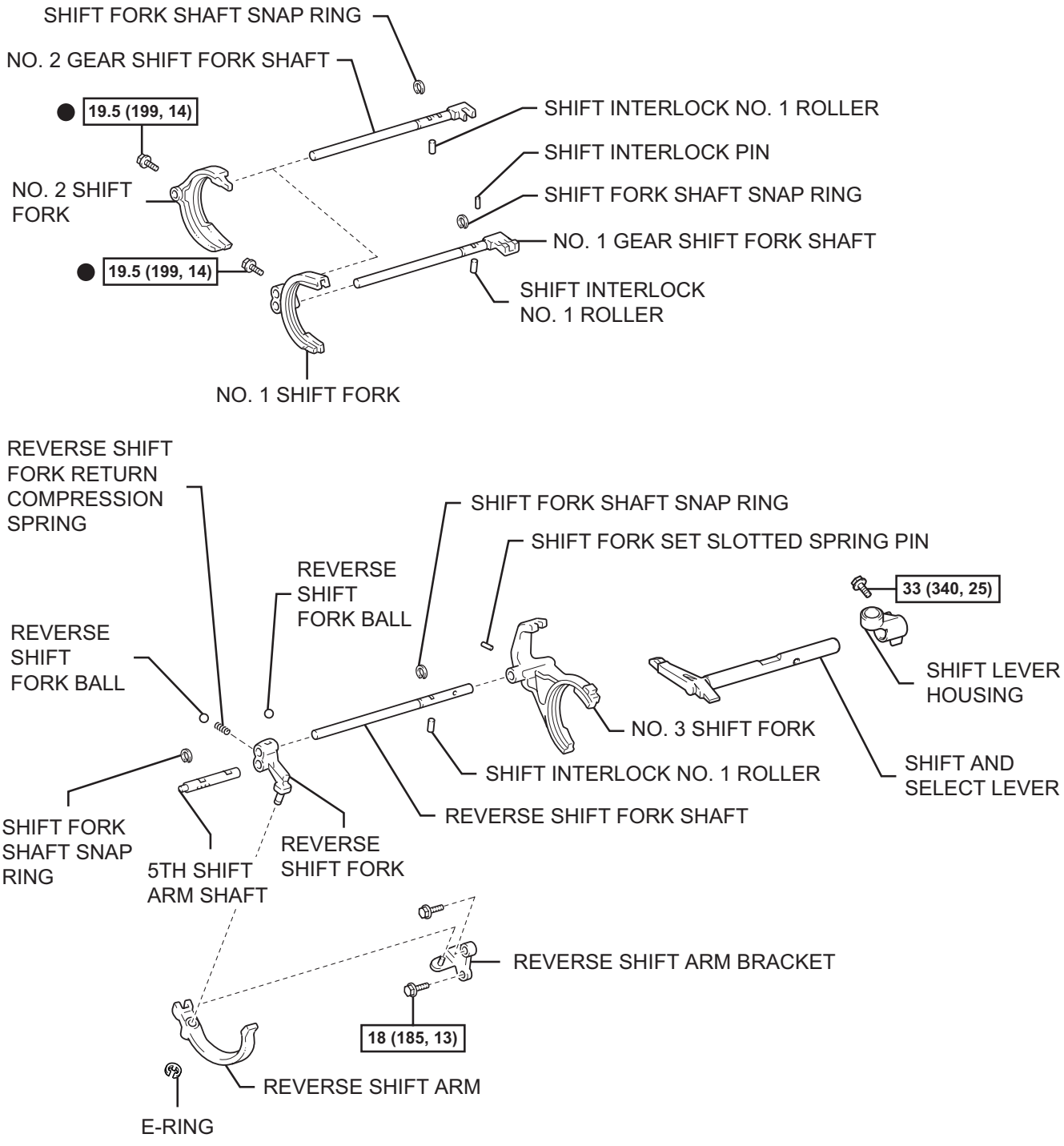

N*m (kgf*cm, ft.*lbf) : Specified torque

● Non-reusable part

P

C115289E02

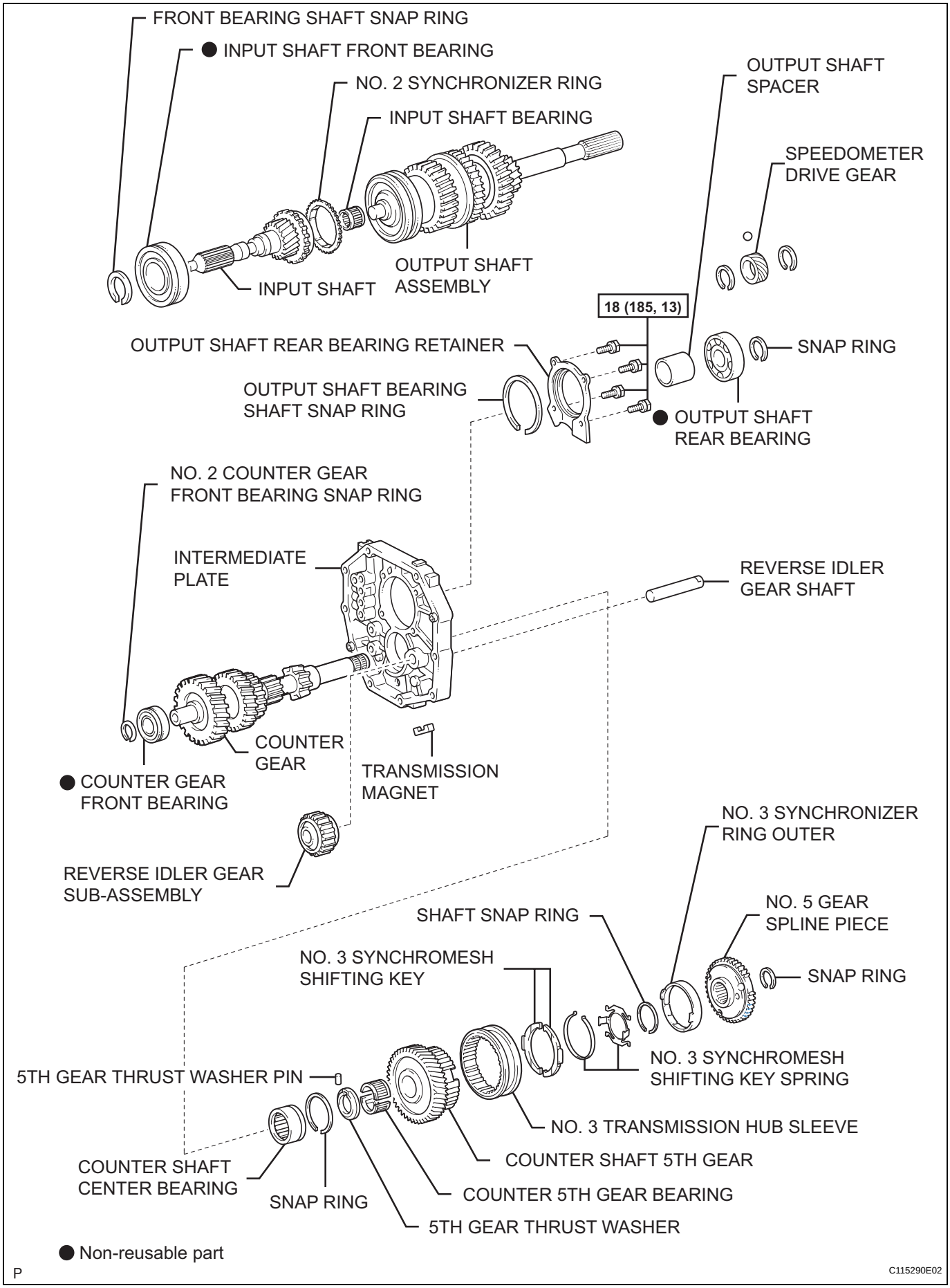
FRONT BEARING SHAFT SNAP RING
● INPUT SHAFT FRONT BEARING
NO. 2 SYNCHRONIZER RING
INPUT SHAFT BEARING
OUTPUT SHAFT SPACER
SPEEDOMETER DRIVE GEAR
INPUT SHAFT
OUTPUT SHAFT ASSEMBLY
18 (185, 13)
OUTPUT SHAFT REAR BEARING RETAINER
SNAP RING
OUTPUT SHAFT BEARING SHAFT SNAP RING
● OUTPUT SHAFT REAR BEARING
NO. 2 COUNTER GEAR FRONT BEARING SNAP RING
INTERMEDIATE PLATE
REVERSE IDLER GEAR SHAFT
COUNTER GEAR
● COUNTER GEAR FRONT BEARING
TRANSMISSION MAGNET
NO. 3 SYNCHRONIZER RING OUTER
REVERSE IDLER GEAR SUB-ASSEMBLY
SHAFT SNAP RING
NO. 5 GEAR SPLINE PIECE
NO. 3 SYNCHROMESH SHIFTING KEY
SNAP RING
NO. 3 SYNCHROMESH SHIFTING KEY SPRING
5TH GEAR THRUST WASHER PIN
NO. 3 TRANSMISSION HUB SLEEVE
COUNTER SHAFT 5TH GEAR
COUNTER SHAFT CENTER BEARING
COUNTER 5TH GEAR BEARING
SNAP RING
5TH GEAR THRUST WASHER
● Non-reusable part
P
C115290E02

DISASSEMBLY

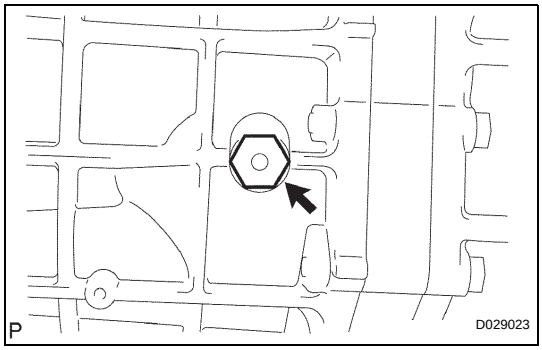

1. REMOVE MANUAL TRANSMISSION FILLER PLUG

(a) Remove the transmission filler plug and gasket from the transmission case.

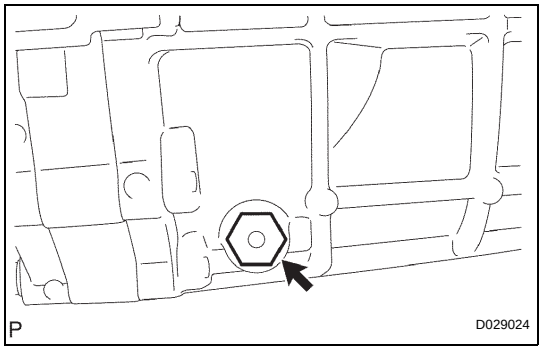

2. REMOVE DRAIN PLUG SUB-ASSEMBLY

(a) Remove the transmission drain plug and gasket from the transmission case.

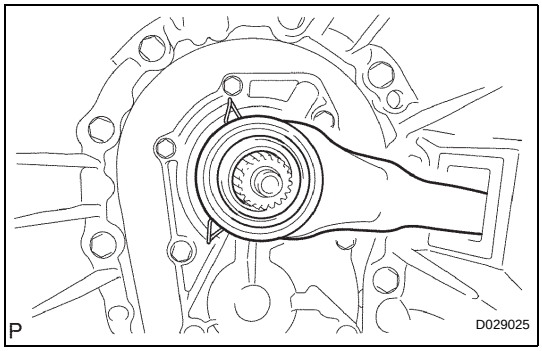

3. REMOVE CLUTCH RELEASE FORK SUB-ASSEMBLY

(a) Remove the clutch release fork and clutch release bearing from the clutch housing.

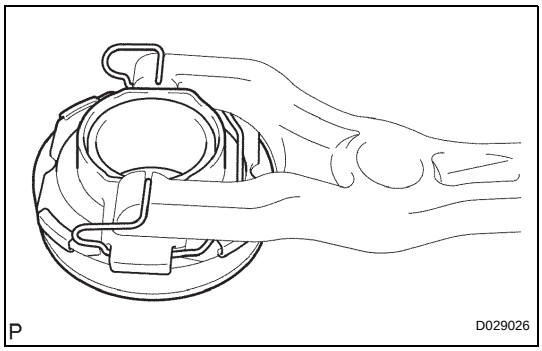

4. REMOVE CLUTCH RELEASE BEARING ASSEMBLY

(a) Remove the release bearing hub clip, and then remove the clutch release bearing from the clutch release fork.

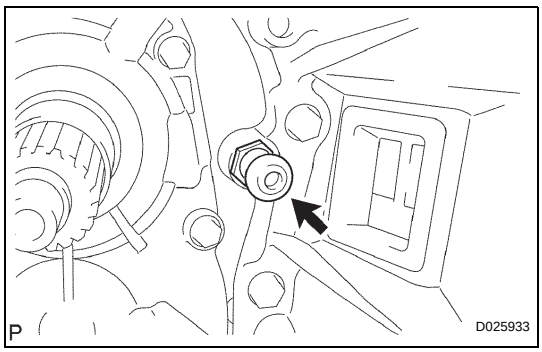

5. REMOVE RELEASE FORK SUPPORT

(a) Remove the release fork support from the clutch housing.

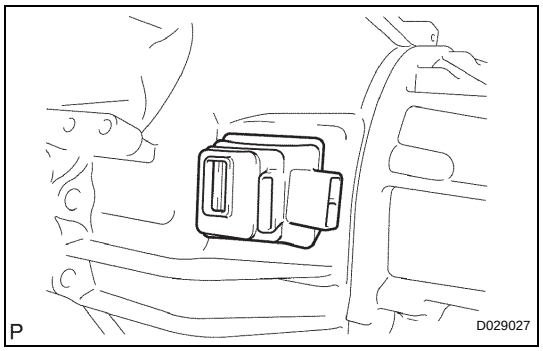

6. REMOVE CLUTCH RELEASE FORK BOOT

(a) Remove the clutch release fork boot from the clutch housing.

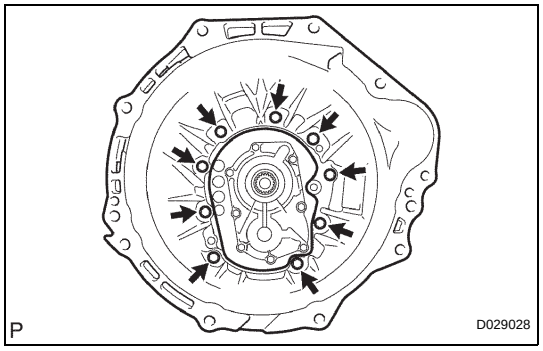

7. REMOVE CLUTCH HOUSING

(a) Remove the 9 bolts.

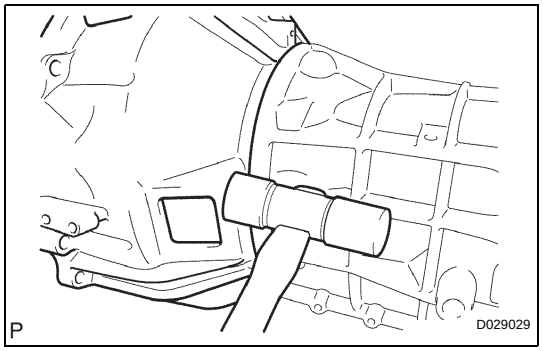

(b) Using a plastic hammer, remove the clutch housing from the transmission case.

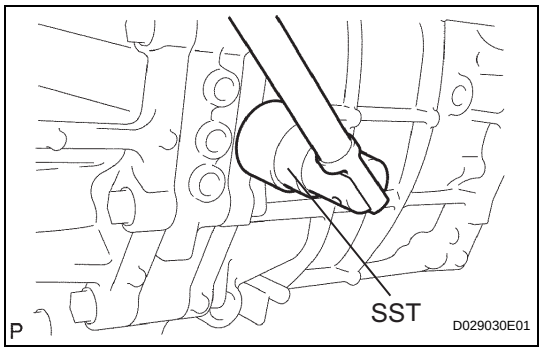

8. REMOVE BACK-UP LIGHT SWITCH ASSEMBLY

(a) Using SST, remove the back-up light switch assembly and the gasket from the transmission case.

SST 09817-16011

9. REMOVE SPEEDOMETER SENSOR

(a) Remove the bolt and speedometer sensor from the extension housing.

(b) Remove the O-ring from the speedometer sensor.

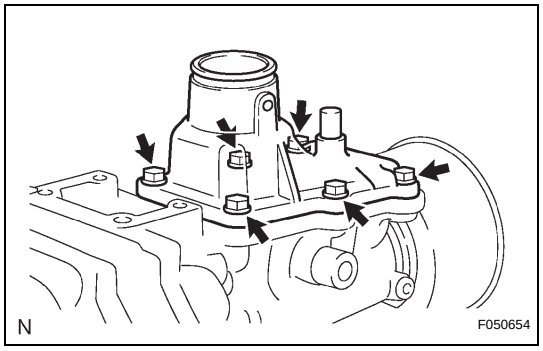

10. REMOVE FLOOR SHIFT CONTROL SHIFT LEVER RETAINER SUB-ASSEMBLY

(a) Remove the 6 bolts.

(b) Remove the floor shift control shift lever retainer gasket from the extension housing.

(c) Remove the control shift lever retainer gasket from the extension housing.

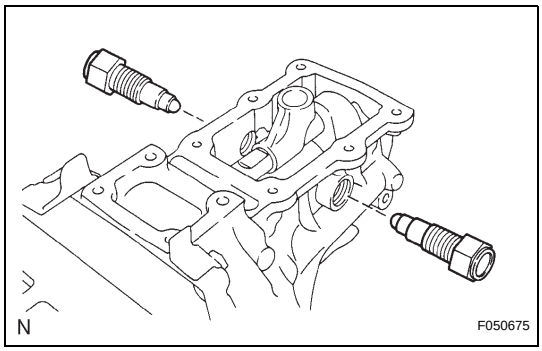

11. REMOVE REVERSE RESTRICT PIN

(a) Remove the 2 reverse restrict pins from the extension housing or transfer adapter.

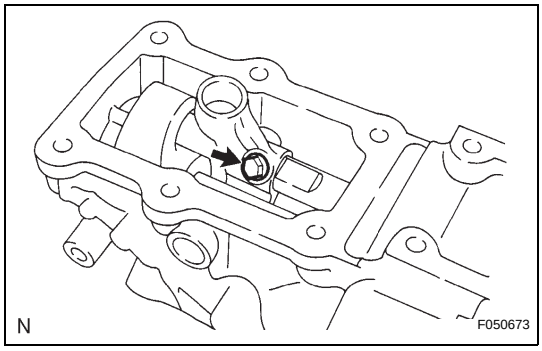

12. REMOVE EXTENSION HOUSING SUB-ASSEMBLY

(a) Remove the shift lever housing set bolt from the shift lever housing.

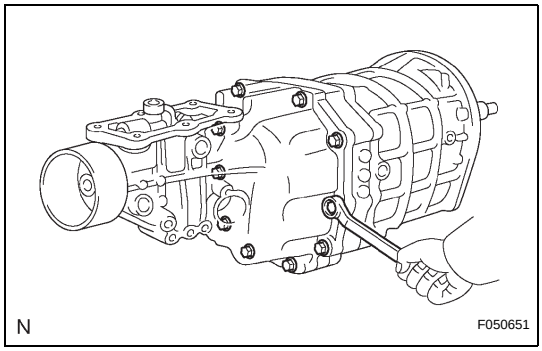

(b) Remove the 10 bolts.

(c) Using a plastic hammer, remove the extension housing, shift lever housing and shift and select lever.

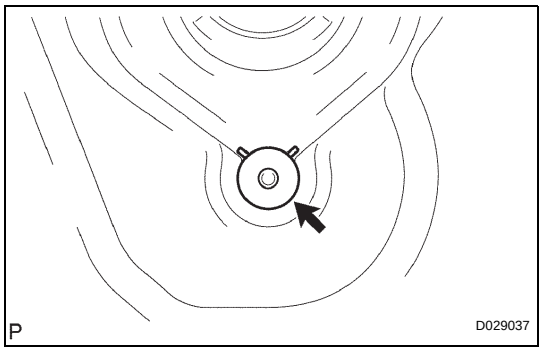

13. REMOVE OIL RECEIVER

(a) Remove the oil receiver from the extension housing.

14. REMOVE EXTENSION HOUSING OIL RECEIVER PIPE

(a) Remove the bolt and oil receiver pipe from the extension housing.

15. REMOVE REVERSE RESTRICT PIN ASSEMBLY

(a) Using a "Torx" socket wrench T40, remove the reverse restrict pin plug from the transfer adapter.

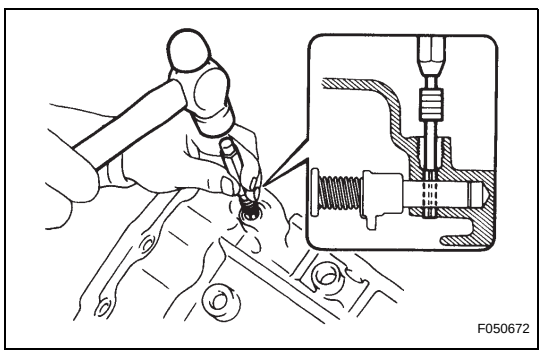

(b) Using a pin punch (5 mm) and a hammer, remove the reverse restrict pin slotted from the transfer adapter or extension housing.

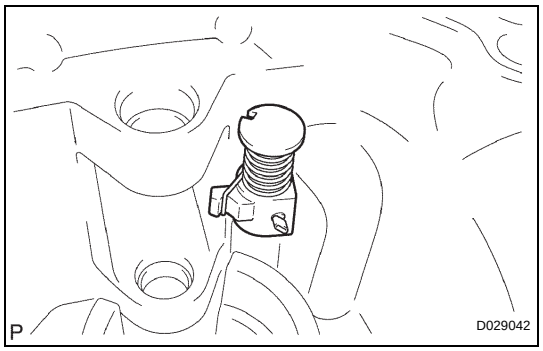

(c) Remove the reverse restrict pin from the transfer adapter or extension housing.

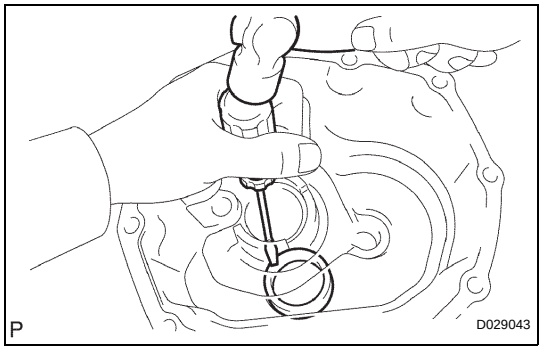

16. REMOVE MANUAL TRANSMISSION EXTENSION HOUSING OIL SEAL

(a) Using a screwdriver, remove the extension housing oil seal from the extension housing.

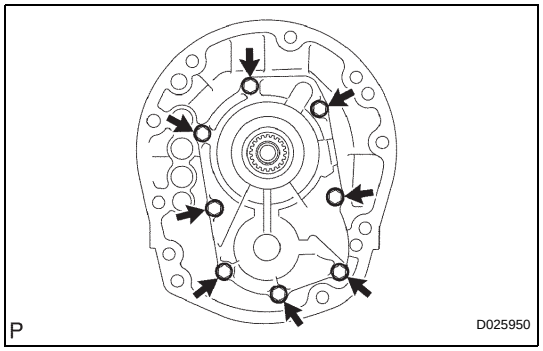

17. REMOVE FRONT BEARING RETAINER

(a) Remove the 8 bolts.

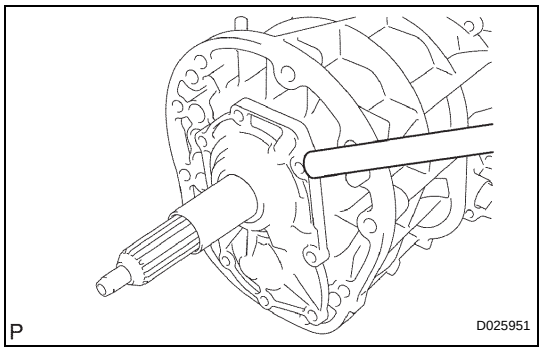

(b) Using a brass bar and a hammer, remove the front bearing retainer from the transmission case.

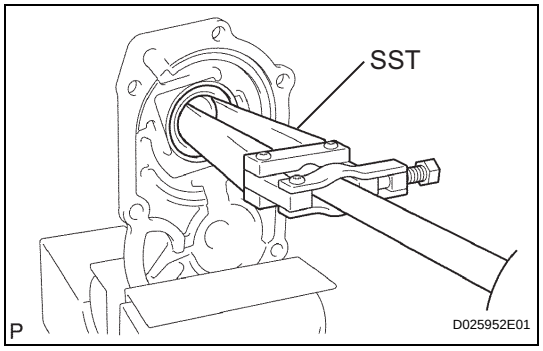

18. REMOVE TRANSMISSION FRONT BEARING RETAINER OIL SEAL

(a) Fix the front bearing retainer in a vise, between aluminum plate.

(b) Using SST, remove the transmission front bearing retainer oil seal.

SST 09308-00010

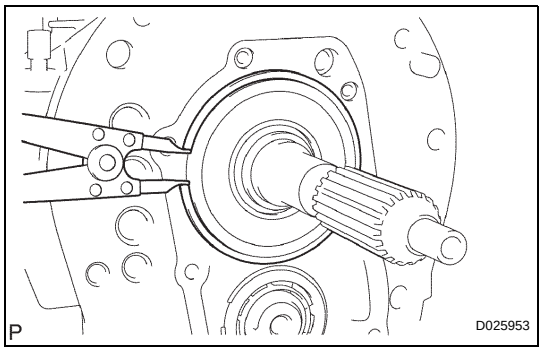

19. REMOVE FRONT BEARING SHAFT SNAP RING

(a) Using a snap ring expander, remove the front bearing shaft snap ring from the transmission case.

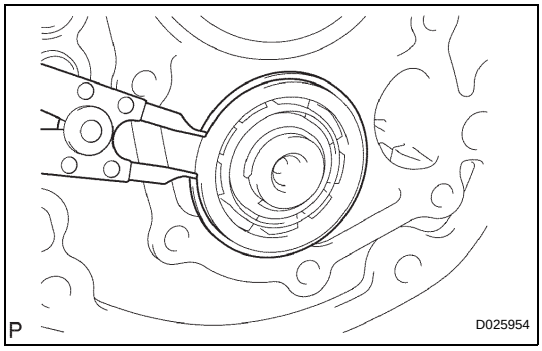

20. REMOVE NO. 1 COUNTER GEAR FRONT BEARING SNAP RING

(a) Using a snap ring expander, remove the counter gear front bearing snap ring No. 1 from the transmission case.

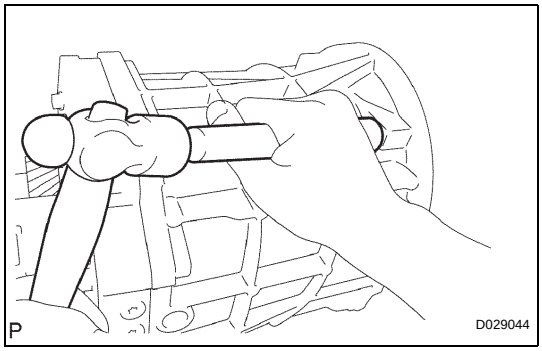

21. REMOVE MANUAL TRANSMISSION CASE

(a) Using a brass bar and a hammer, remove the transmission case from the intermediate plate.

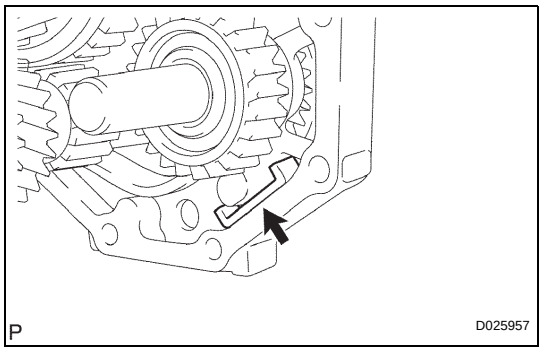

22. REMOVE TRANSMISSION MAGNET

(a) Remove the transmission magnet from the intermediate plate.

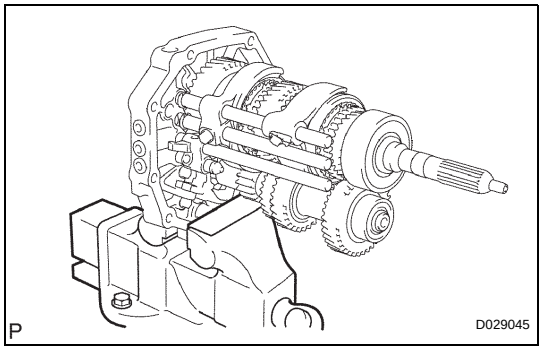

23. FIX INTERMEDIATE PLATE

(a) Fix the intermediate plate in a vice between aluminum plates.

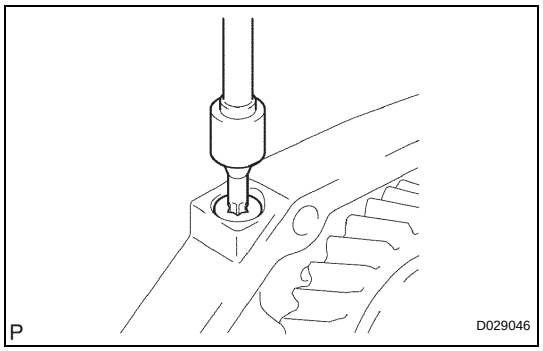

24. REMOVE NO. 1 SHIFT DETENT BALL SPRING SEAT

(a) Using a "Torx" socket wrench T40, remove the shift detent ball spring seat No. 1 from the intermediate plate.

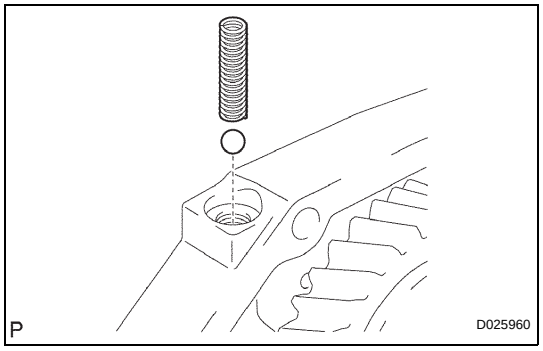

(b) Using a magnetic finger, remove the shift detent ball low side compression spring and the shift detent ball from the intermediate plate.

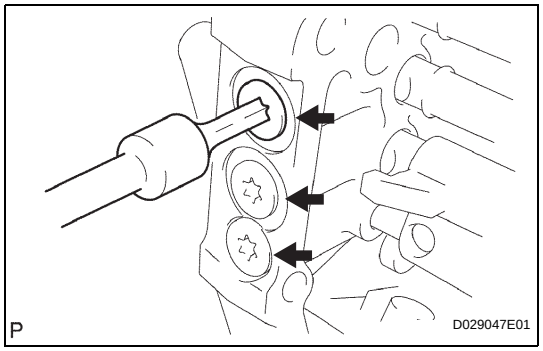

(c) Using a "Torx" socket wrench T40, remove the 3 shift detent ball spring seats No. 1 from the intermediate plate.

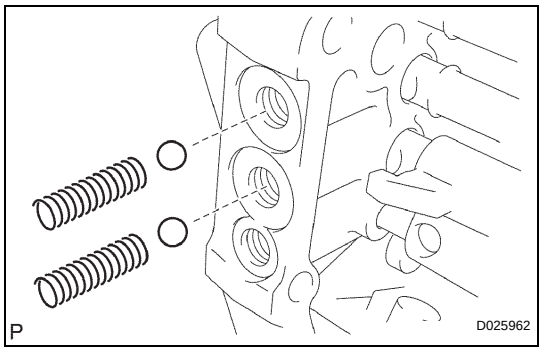

(d) Using a magnetic finger, remove the 2 shift detent ball low side compression springs and the 2 shift detent balls from the intermediate plate.

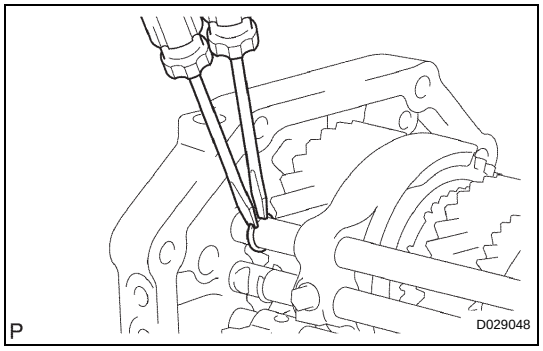

25. REMOVE NO. 2 GEAR SHIFT FORK SHAFT

(a) Using 2 screwdrivers and a hammer, remove the shift fork shaft snap ring from the gear shift fork shaft No. 2.

NOTICE:

Use a shop rag to prevent the snap ring from flying off.

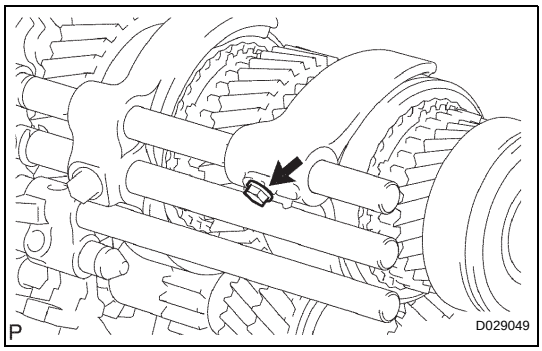

(b) Remove the shift fork set bolt from the gear shift fork No. 2.

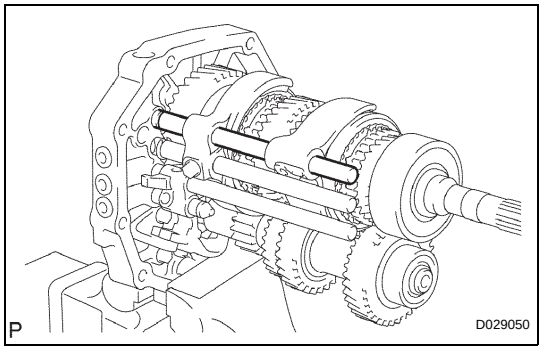

(c) Remove the gear shift fork shaft No. 2 from the intermediate plate.

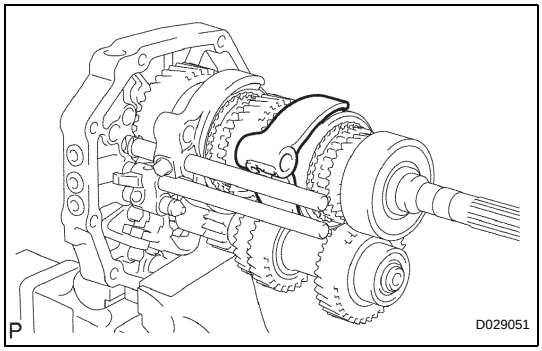

(d) Remove the gear shift fork No. 2 from the transmission hub sleeve No. 2.

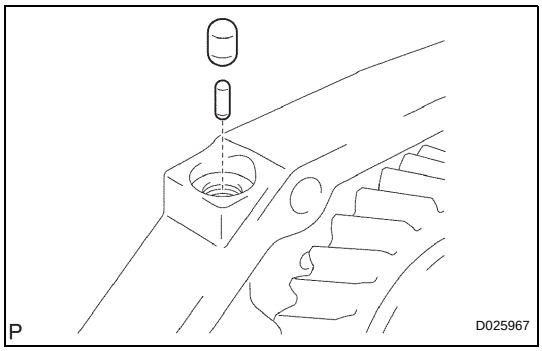

(e) Using a magnetic finger, remove the shift interlock No. 1 roller and the shift interlock pin (ball) from the intermediate plate.

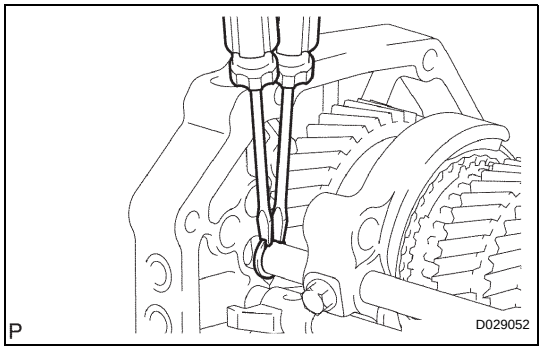

26. REMOVE NO. 1 GEAR SHIFT FORK SHAFT

(a) Using 2 screwdrivers and a hammer, remove the shift fork shaft snap ring from the gear shift fork shaft No. 1.

NOTICE:

Use a shop rag to prevent the snap ring from flying off.

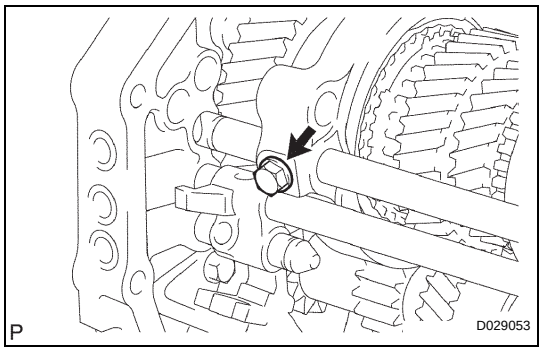

(b) Remove the shift fork set bolt from the gear shift fork No. 1.

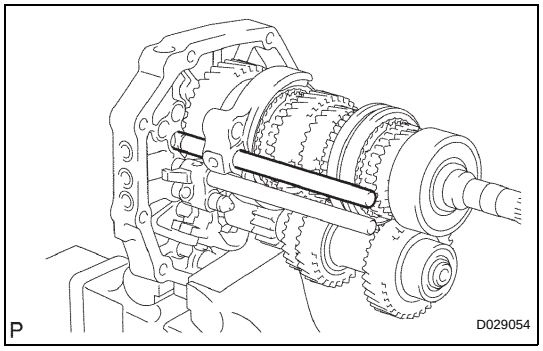

(c) Remove the gear shift fork shaft No. 1 from the intermediate plate.

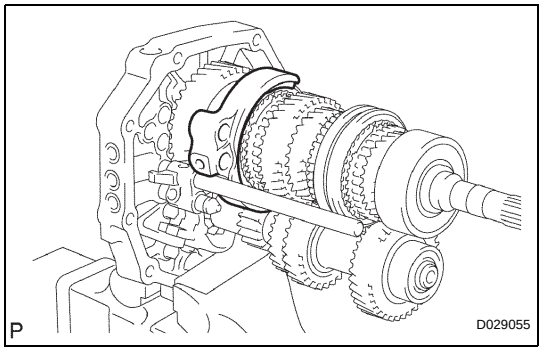

(d) Remove the gear shift fork No. 1 from the reverse gear.

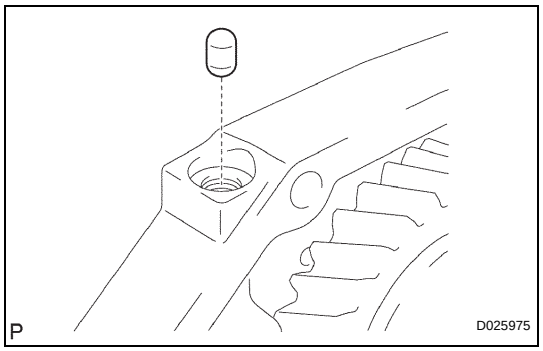

(e) Using a magnetic finger, remove the shift interlock No. 1 roller from the intermediate plate.

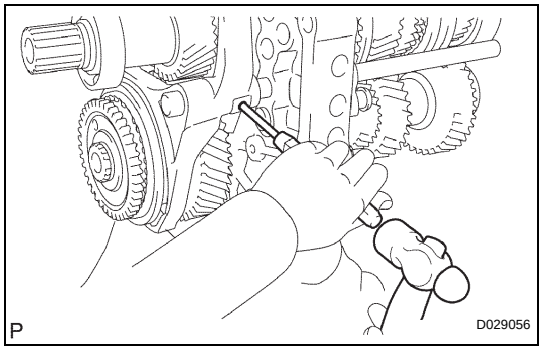

27. REMOVE REVERSE SHIFT FORK SHAFT

(a) Using a pin punch (5 mm) and a hammer, remove the shift fork set slotted spring pin from the gear shift fork No. 3.

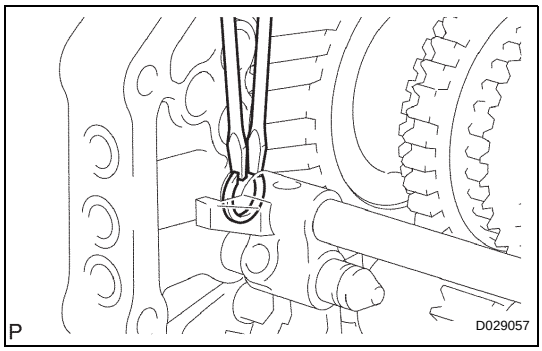

(b) Using 2 screwdrivers and a hammer, remove the shift fork shaft snap ring from the reverse shift fork shaft.
NOTICE:
Use a shop rag to prevent the snap ring from flying off.

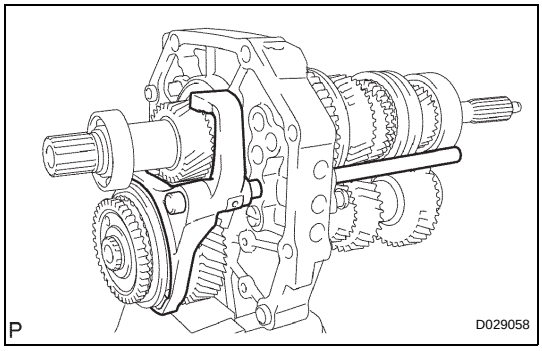

(c) Remove the gear shift fork No. 3 and reverse shift fork shaft from the intermediate plate.

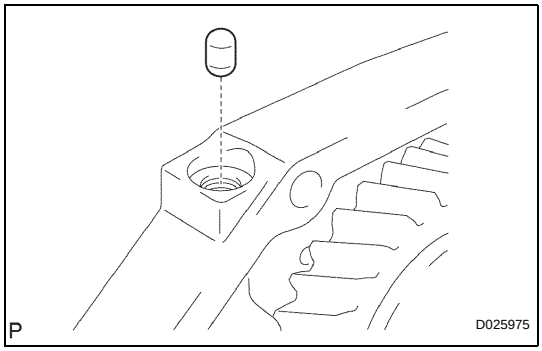

(d) Using a magnetic finger, remove the shift interlock No. 1 roller from the intermediate plate.

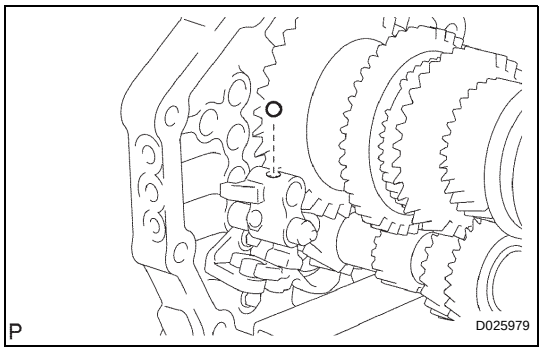

(e) Using a magnetic finger, remove the reverse shift fork ball from the reverse shift fork.

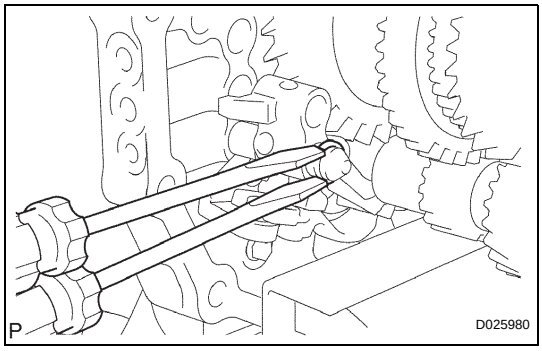

28. REMOVE 5TH SHIFT ARM SHAFT

(a) Using 2 screwdrivers and a hammer, remove the shift fork shaft snap ring from the 5th shift arm shaft.
NOTICE:
Use a shop rag to prevent the snap ring from flying off.

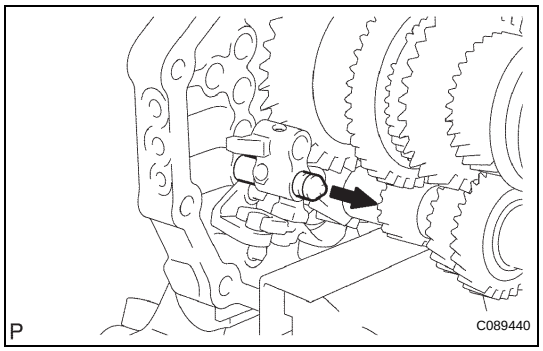

(b) Remove the 5th shift arm shaft from the intermediate plate.
NOTICE:
Cover the hole with a shop rag to prevent the reverse shift fork ball from popping out.

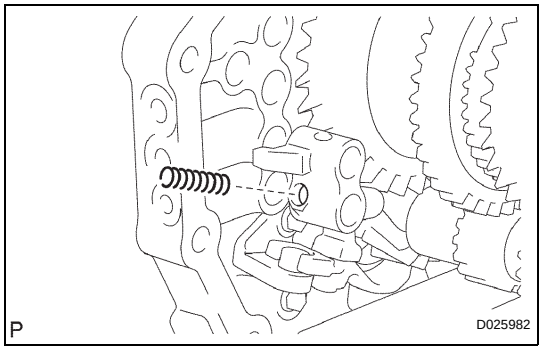

(c) Using a magnetic finger, remove the reverse shift fork return compression spring from the reverse shift fork.

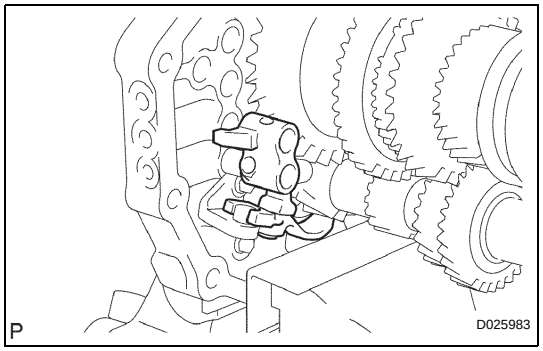

29. REMOVE REVERSE SHIFT FORK

(a) Remove the reverse shift fork together with the reverse shift arm from the intermediate plate.

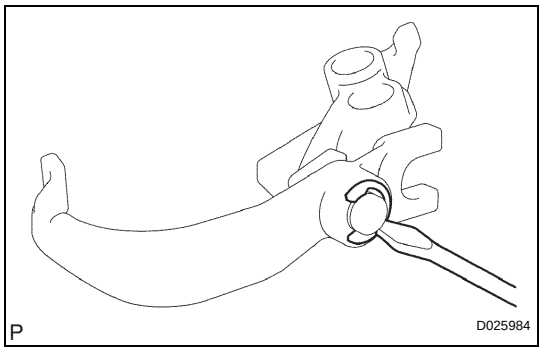

(b) Using a screwdriver, remove the reverse shift arm end shaft ring and the reverse shift fork from the reverse shift arm.

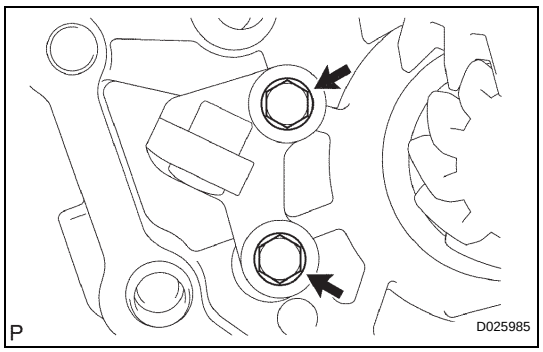

30. REMOVE REVERSE SHIFT ARM BRACKET

(a) Remove the 2 bolts and reverse shift arm bracket from the intermediate plate.

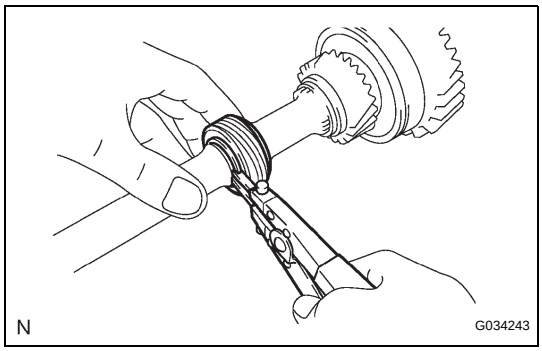

31. REMOVE SPEEDOMETER DRIVE GEAR

(a) Using snap ring pliers, remove the snap ring.
(b) Remove the speedometer driver gear and ball.
(c) Using a magnetic finger, remove the steel ball.
(d) Using snap ring pliers, remove the snap ring.

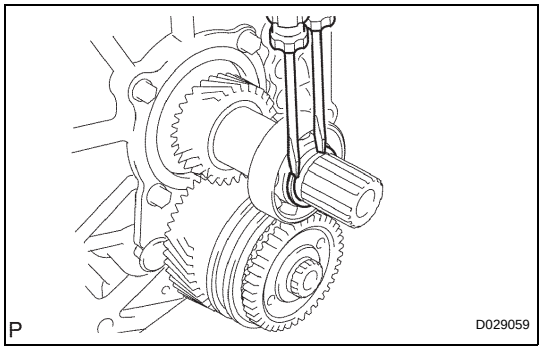

32. REMOVE OUTPUT SHAFT BEARING SHAFT SNAP RING

(a) Using 2 screwdrivers and a hammer, remove the output shaft bearing shaft snap ring from the output shaft.

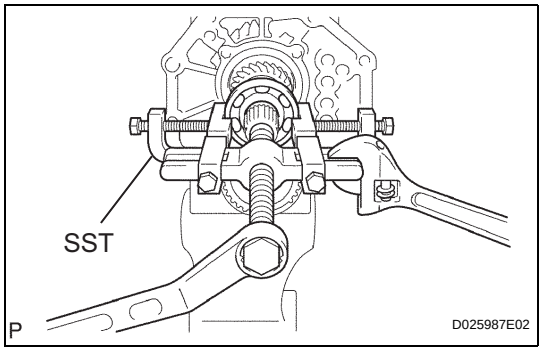

33. REMOVE OUTPUT SHAFT REAR BEARING

(a) Using SST, remove the output shaft rear bearing and output shaft spacer from the output shaft.
SST 09950-40011 (09951-04010, 09952-04010, 09953-04020, 09954-04010, 09955-04051, 09957-04010, 09958-04011)

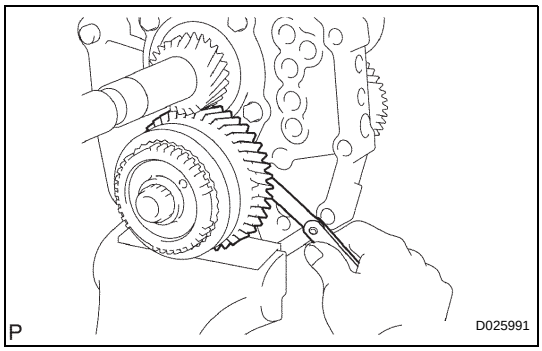

34. INSPECT COUNTER SHAFT 5TH GEAR THRUST CLEARANCE

(a) Using a feeler gauge, measure the counter shaft 5th gear thrust clearance.
Standard clearance:
0.10 to 0.35 mm (0.0039 to 0.0138 in.)

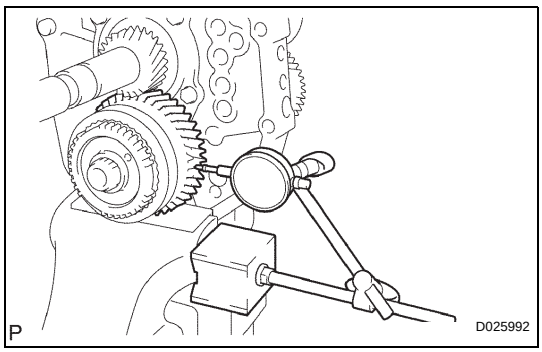

35. INSPECT COUNTER SHAFT 5TH GEAR RADIAL CLEARANCE

(a) Using a dial indicator, measure the radial clearance of the counter shaft 5th gear.
Standard clearance:
0.015 to 0.068 mm (0.0059 to 0.0027 in.)
If the clearance is not within the specified values, replace the counter 5th gear bearing with a new one.

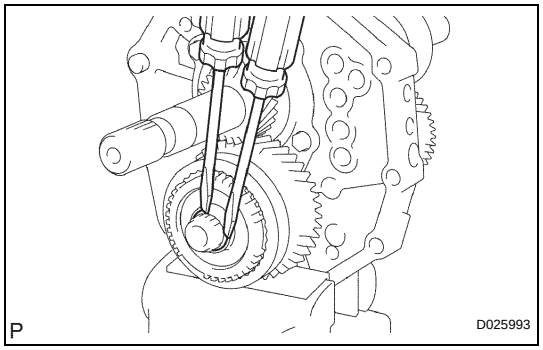

36. REMOVE COUNTER GEAR REAR SHAFT SNAP RING

(a) Using 2 screwdrivers and a hammer, remove the counter gear rear shaft snap ring from the counter gear.

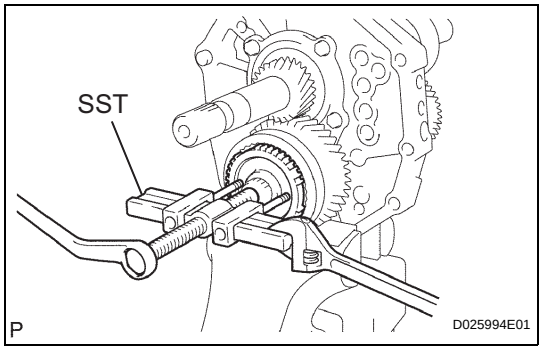

37. REMOVE NO. 5 GEAR SPLINE PIECE

(a) Using SST, remove the gear spline piece No. 5 from the counter gear.

SST 09950-50013 (09951-05010, 09952-05010, 09953-05020, 09954-05021, 09957-04010)

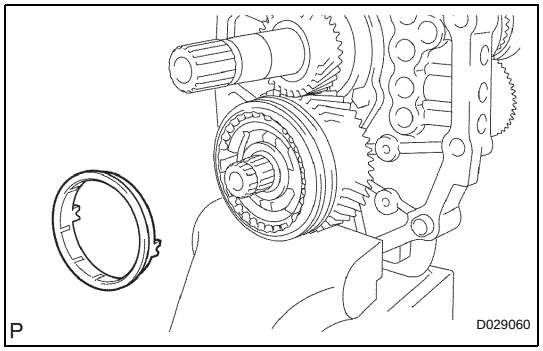

38. REMOVE NO. 3 SYNCHRONIZER RING OUTER

(a) Remove the synchronizer ring outer No. 3 from the counter gear.

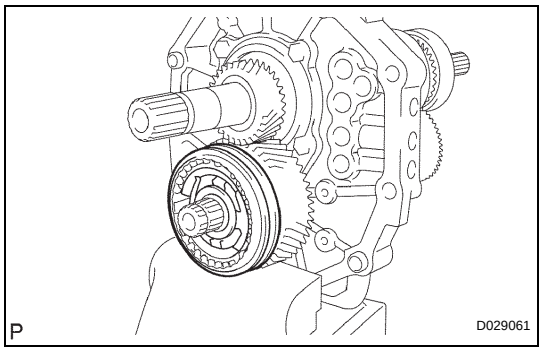

39. REMOVE COUNTER SHAFT 5TH GEAR

(a) Remove the counter shaft 5th gear and transmission hub sleeve No. 3 assembly from the counter gear.

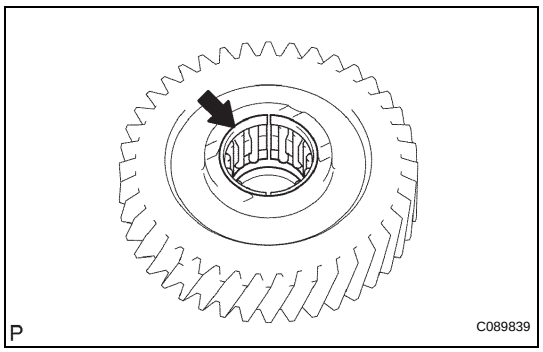

40. REMOVE COUNTER 5TH GEAR BEARING

(a) Remove the counter 5th gear bearing from the counter 5th gear.

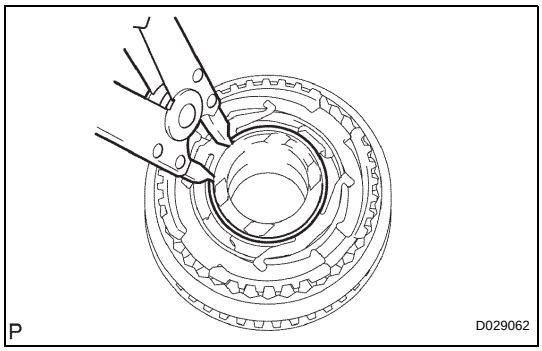

41. REMOVE NO. 3 TRANSMISSION HUB SLEEVE

(a) Using a snap ring expander, remove the snap ring.

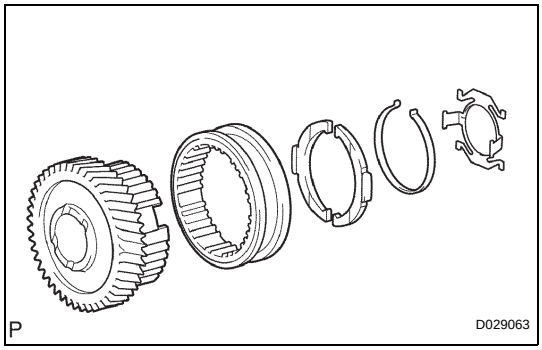

(b) Remove the transmission hub sleeve No. 3, 2 synchromesh shifting keys No. 3 and 2 synchromesh shifting key springs No. 3 from the counter shaft 5th gear.

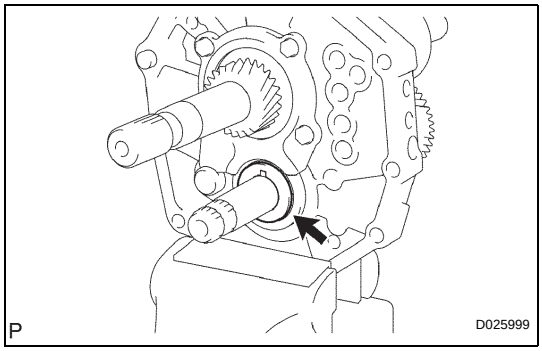

42. REMOVE 5TH GEAR THRUST WASHER

(a) Remove the 5th gear thrust washer from the counter gear.

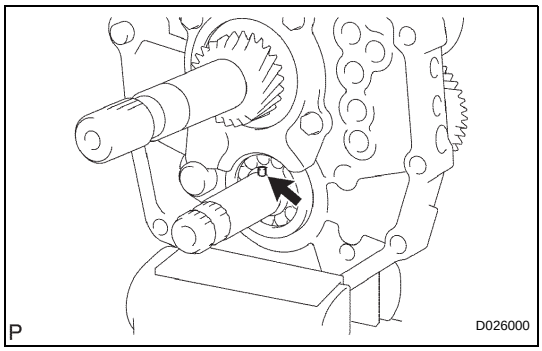

43. REMOVE 5TH GEAR THRUST WASHER PIN

(a) Remove the 5th gear thrust washer pin from the counter gear.

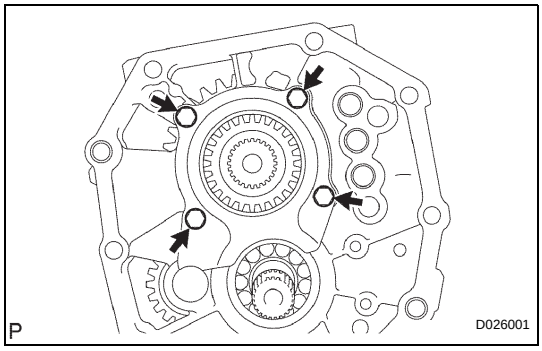

44. REMOVE OUTPUT SHAFT REAR BEARING RETAINER

(a) Remove the 4 bolts and output shaft rear bearing retainer from the intermediate plate.

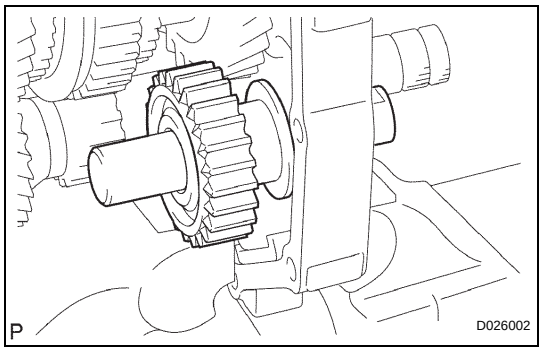

45. REMOVE REVERSE IDLER GEAR SUB-ASSEMBLY

(a) Pull out the reverse idler gear shaft to the rear side and remove the reverse idler gear from the intermediate plate.

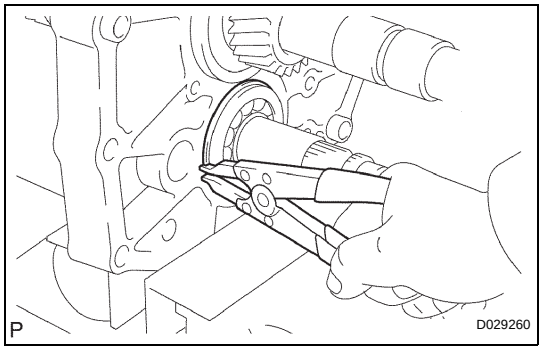

46. REMOVE COUNTER SHAFT CENTER BEARING

(a) Using a snap ring expander, remove the snap ring.

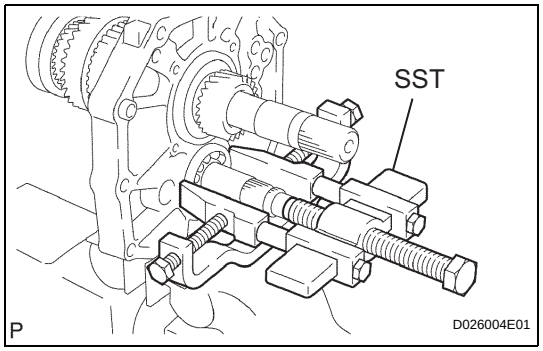

(b) Using SST, remove the counter shaft center bearing from the intermediate plate.

SST 09950-40011 (09951-04010, 09952-04010, 09953-04020, 09954-04010, 09955-04011, 09957-04010, 09958-04011)

HINT:

Remove the bearing while tapping the tip of the counter gear so that the counter gear assembly is not pushed forward into the side wall of the output shaft gear.

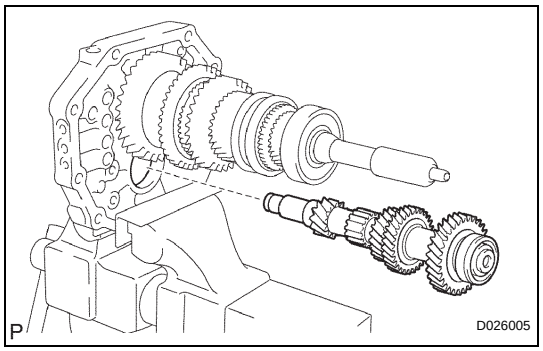

47. REMOVE COUNTER GEAR

(a) Remove the counter gear assembly from the intermediate plate.

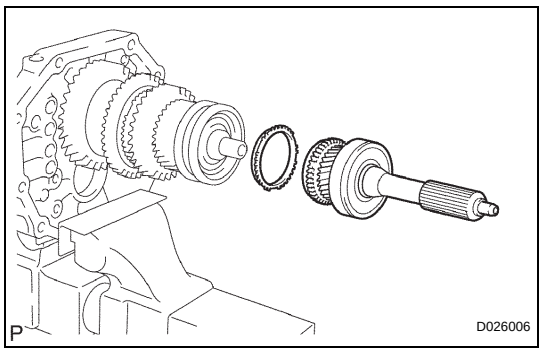

48. REMOVE INPUT SHAFT ASSEMBLY

(a) Remove the input shaft assembly and synchronizer ring No. 2 from the output shaft.

NOTICE:

Do not drop the input shaft bearing and synchronizer ring No. 2.

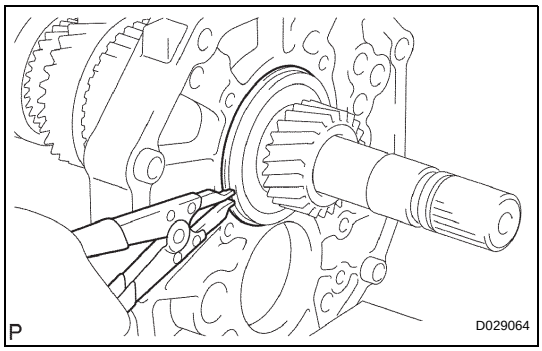

49. REMOVE OUTPUT SHAFT BEARING SHAFT SNAP RING

(a) Using a snap ring expander, remove the output shaft bearing shaft snap ring from the output shaft.

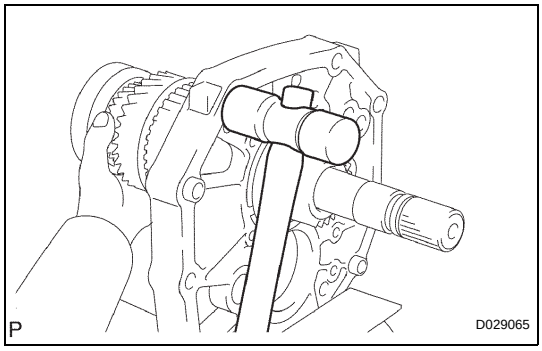

50. REMOVE OUTPUT SHAFT ASSEMBLY

(a) Using a plastic hammer, remove the output shaft assembly by tapping the intermediate plate.

INSPECTION

1. INSPECT NO. 3 SYNCHRONIZER RING OUTER

(a) Apply gear oil to the cone part of gear spline piece No. 5, and check that it does not turn in both directions while pushing the synchronizer ring outer No. 3 to the gear spline piece No. 5.
If it turns, replace the synchronizer ring.

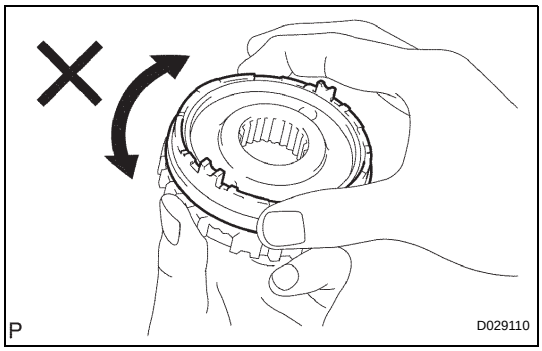

(b) Measure the clearance between the synchronizer ring outer No. 3 and gear spline piece No. 5 while pushing the synchronizer ring outer No. 3 to the cone part of the gear spline piece No. 5.
Standard clearance:
0.68 to 1.32 mm (0.0267 to 0.0610 in.)
If the clearance is not within the specified values, replace synchronizer ring outer No. 3 with a new one.

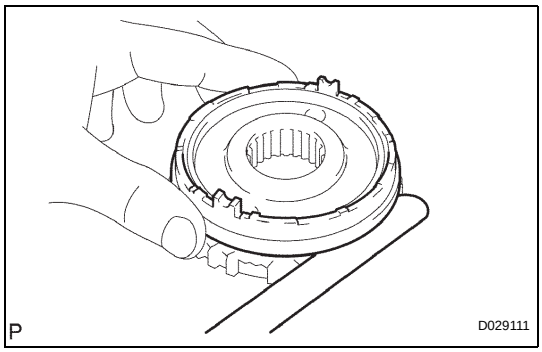

2. INSPECT NO. 3 TRANSMISSION HUB SLEEVE

(a) Check that the counter shaft 5th gear and transmission hub sleeve No. 3 slide smoothly each other.

(b) Check the tip of the spline gear of the transmission hub sleeve No. 3 for wear.
If there are any detects, replace the transmission hub sleeve No. 3.

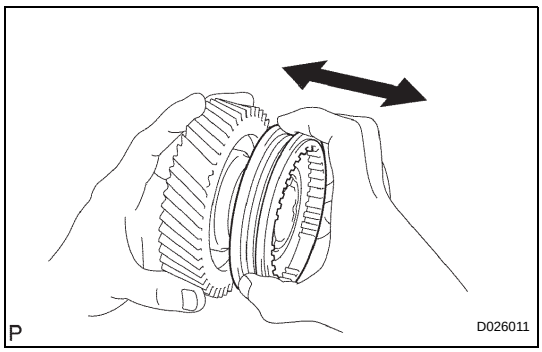

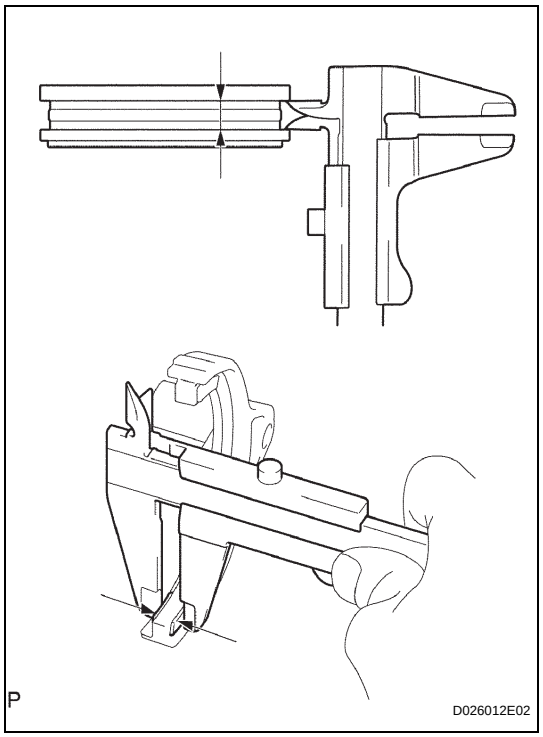

(c) Using vernier calipers, measure the transmission hub sleeve No. 3 groove and the thickness of the claw part of the shift fork No. 3 to calculate the clearance.

Standard clearance:

0.26 to 0.84 mm (0.0102 to 0.0331 in.)

If the clearance is not within the specified values, replace the transmission hub sleeve No. 3 and shift fork No. 3 with new ones.

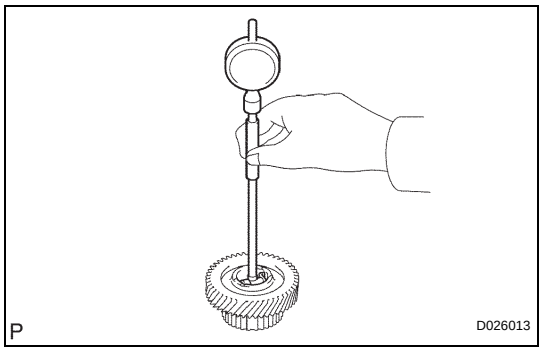

3. INSPECT COUNTERSHAFT 5TH GEAR

(a) Using a cylinder gauge, measure the inner diameter of the counter 5th gear.

Standard diameter:

38.015 to 38.040 mm (1.4967 to 1.4976 in.)

Maximum diameter:

38.040 mm (1.4976 in.)

If the diameter greater than the maximum, replace the counter shaft 5th gear with a new one.

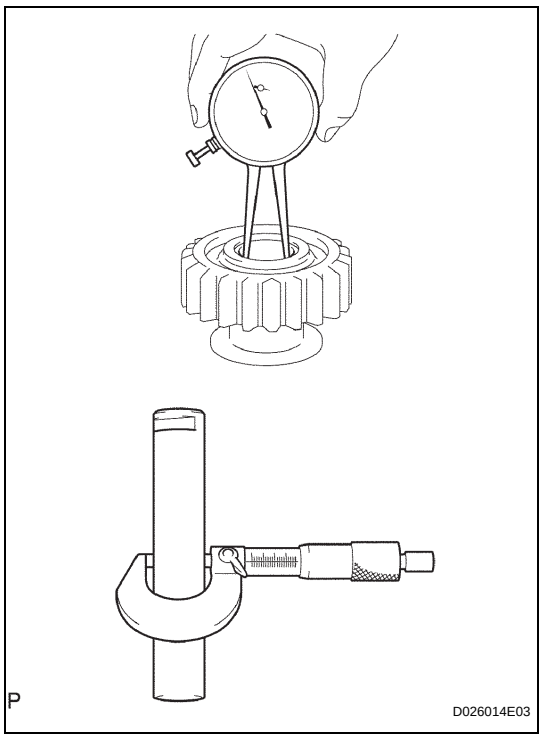

4. INSPECT REVERSE IDLER GEAR SUB-ASSY

(a) Using a caliper gauge, measure the inner diameter of the reverse idler gear.

Standard diameter:

24.040 to 24.061 mm (0.9465 to 0.9473 in.)

Maximum diameter:

24.061 mm (0.9473 in.)

If the clearance is greater than the maximum, replace the reverse idler gear with a new one.

(b) Using a micrometer, measure the outer diameter of the sliding part of the reverse idler gear on the reverse idler gear shaft.

Standard diameter:

23.979 to 24.000 mm (0.9441 to 0.9449 in.)

Minimum diameter:

23.979 mm (0.9441 in.)

If the diameter is outside the specification, replace the reverse idler gear shaft with a new one.

(c) Subtract the reverse idler gear shaft inside diameter measurement from the reverse idler gear diameter clearance.
Standard clearance:
0.040 to 0.082 mm (0.0016 to 0.0032 in.)
If the clearance is not as specified, replace the reverse idler gear or reverse idler gear shaft.

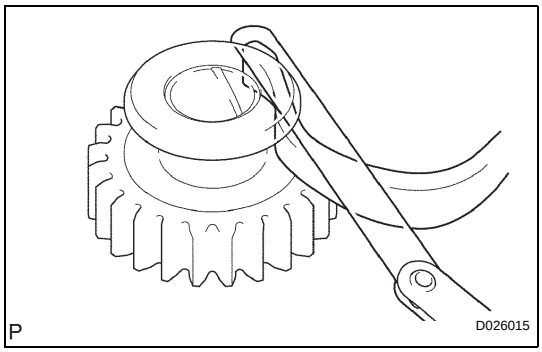

(d) Using a feeler gauge, measure the thrust clearance of the shoe part between the reverse idler gear and the reverse shift arm.
Standard clearance:
0.05 to 0.35 mm (0.0020 to 0.0138 in.)
If the clearance is outside the specification, replace the idler gear and reverse shift arm with new ones.

REASSEMBLY

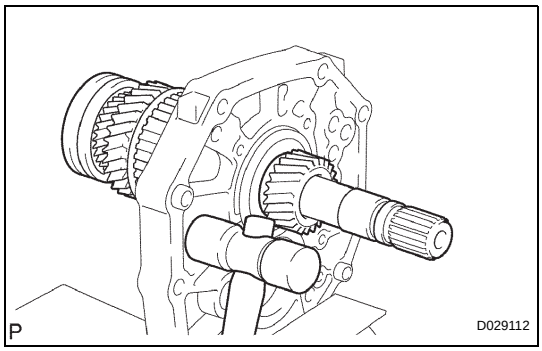

1. INSTALL OUTPUT SHAFT ASSEMBLY

(a) Apply gear oil to the sliding part of the output assembly.

(b) Using a plastic hammer, install the output shaft assembly by tapping the intermediate plate.

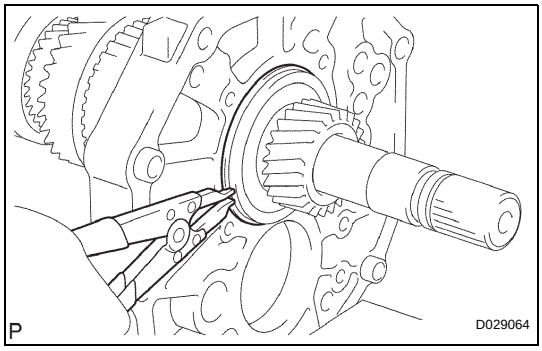

2. INSTALL OUTPUT SHAFT BEARING SHAFT SNAP RING

(a) Using a snap ring expander, install the output shaft bearing shaft snap ring onto the output shaft.

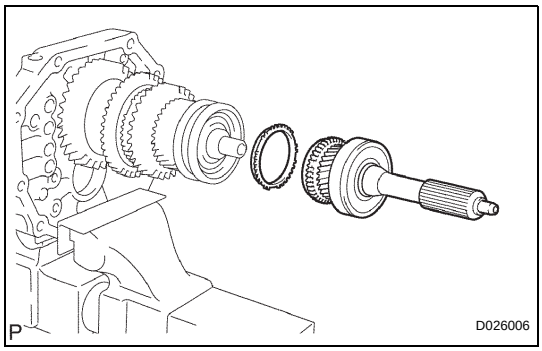

3. INSTALL INPUT SHAFT ASSEMBLY

(a) Apply gear oil to the input shaft assembly and synchronizer ring No. 2, and install them onto the output shaft.
NOTICE:
- **Install the synchronizer ring No. 2 so that its groove fits into the synchromesh shifting key No. 2.**
- **Check that the input shaft assembly rotates smoothly.**

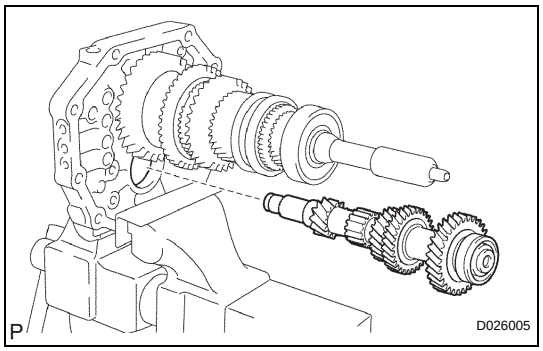

4. INSTALL COUNTER GEAR

(a) Provisionally install the counter gear assembly onto the intermediate plate.

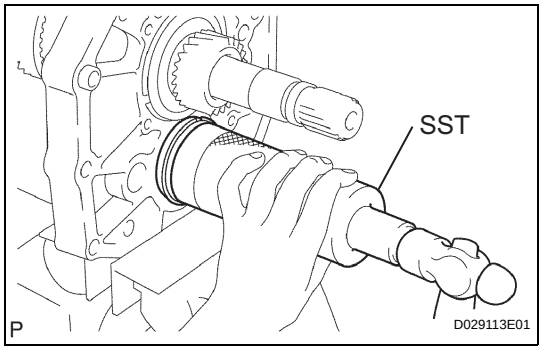

5. INSTALL COUNTER SHAFT CENTER BEARING

(a) Using SST and a hammer, install the new counter shaft center bearing onto the intermediate plate.
SST 09316-60011 (09316-00011)
HINT:
Remove the bearing while tapping the tip of the counter gear so that the counter gear assembly is not pushed forward into the side wall of the output shaft gear.

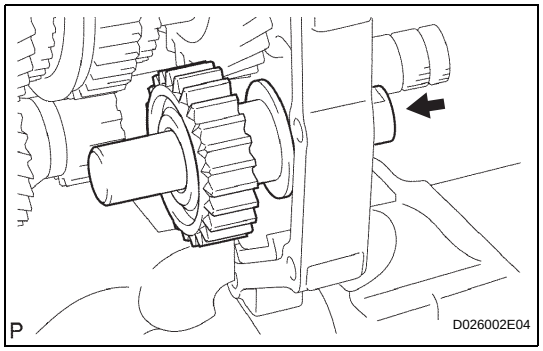

6. INSTALL REVERSE IDLER GEAR SUB-ASSEMBLY

(a) Apply gear oil to each sliding part of the reverse idler gear and the reverse idler gear shaft, and install them onto the intermediate plate.
NOTICE:
Orient the groove side of the reverse idler shaft to the rear side and install it from the rear side.

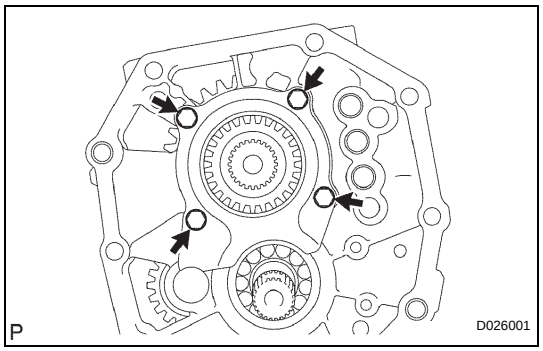

7. INSTALL OUTPUT SHAFT REAR BEARING RETAINER

(a) Install the output shaft rear bearing retainer into the groove of the reverse idler gear shaft with the 4 bolts.
Torque: 18 N*m (185 kgf*cm, 13 ft.*lbf)

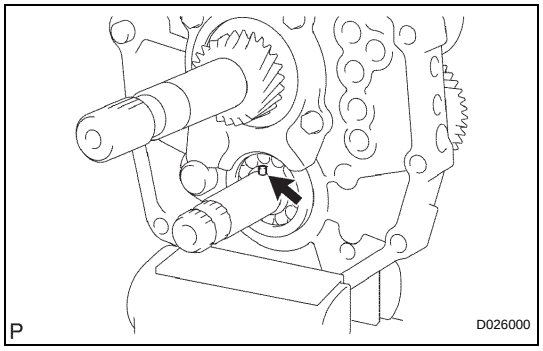

8. INSTALL 5TH GEAR THRUST WASHER PIN

(a) Apply MP grease to the 5th gear thrust washer pin, and install it onto the counter gear.

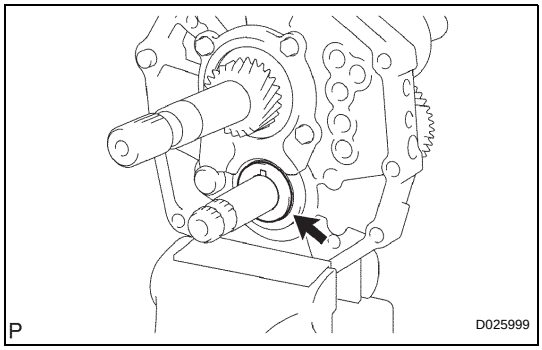

9. INSTALL 5TH GEAR THRUST WASHER

(a) Apply gear oil to the 5th gear thrust washer, and install it onto the counter gear.

NOTICE:
Install the thrust washer so that its chamfer side faces to the front side.

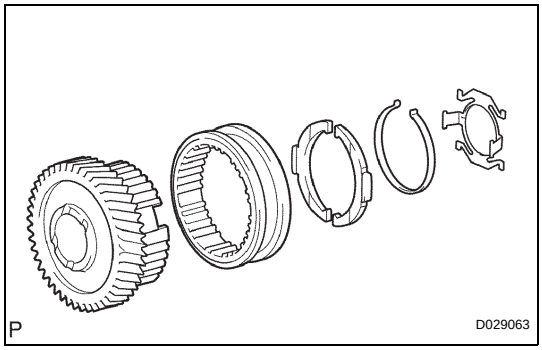

10. INSTALL NO. 3 TRANSMISSION HUB SLEEVE

(a) Apply gear oil to the sliding part of transmission hub sleeve No. 3, and install it onto the counter shaft 5th gear.

NOTICE:
Make sure that the transmission hub sleeve No. 3 and counter 5th gear are oriented in the correct direction.

(b) Install the 2 synchromesh shifting keys No. 3 and the 2 synchromesh shifting key springs onto the counter shaft 5th gear.

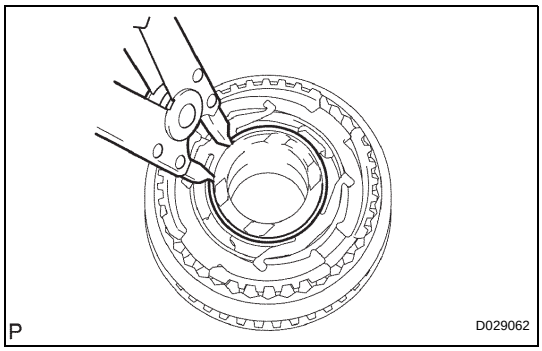

(c) Using a snap ring expander, install the bearing shaft snap ring onto the counter 5th gear.

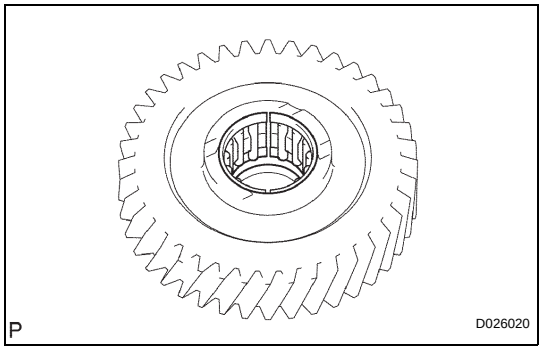

11. INSTALL COUNTER 5TH GEAR BEARING

(a) Apply gear oil to the counter 5th gear bearing and install it onto the counter 5th gear.

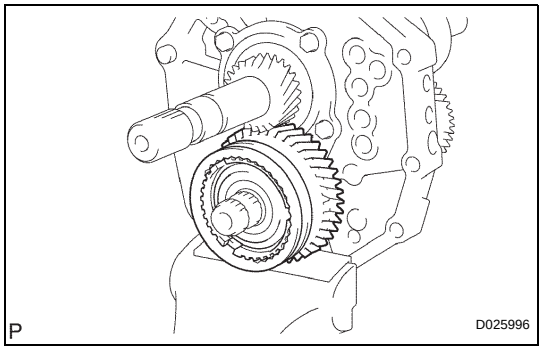

12. INSTALL COUNTER SHAFT 5TH GEAR

(a) Apply gear oil to the counter 5th gear and transmission hub sleeve No. 3 assembly, and install them onto the counter gear.

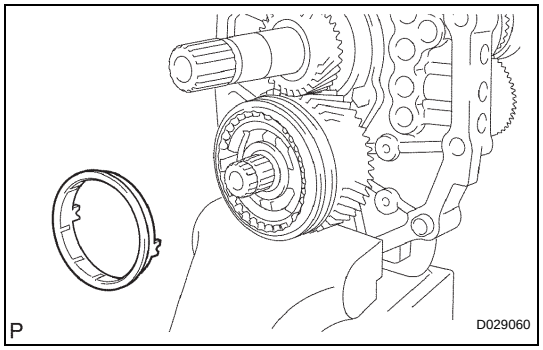

13. INSTALL NO. 3 SYNCHRONIZER RING OUTER

(a) Apply gear oil to the synchronizer ring outer No. 3, and install it onto the counter gear.

NOTICE:

Install the synchronizer ring outer No. 3 so that its groove fits into the synchromesh shifting key No. 3.

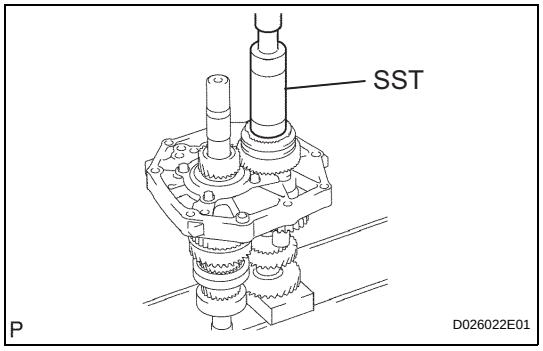

14. INSTALL NO. 5 GEAR SPLINE PIECE

(a) Using SST and a press, install the gear spline piece No. 5 onto the counter gear.

SST 09316-60011 (09316-00011)

NOTICE:

Check that the gear rotates smoothly.

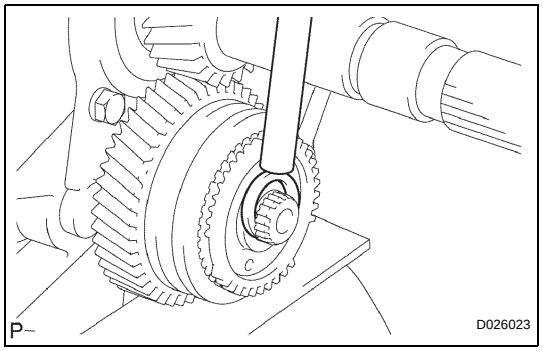

15. INSTALL COUNTER GEAR REAR SHAFT SNAP RING

(a) Select the counter gear rear shaft snap ring so that the thrust gap between gear spline piece No. 5 and counter gear rear shaft snap ring is within the specified values, and using a brass bar and a hammer, install it onto the counter gear.

Standard clearance:

0.1 mm (0.0039 in.) or less

Mark	Thickness mm (in.)
A	2.80 to 2.85 (0.1102 to 0.1122)
B	2.85 to 2.90 (0.1122 to 0.1141)
C	2.90 to 2.95 (0.1141 to 0.1160)
D	2.95 to 3.00 (0.1160 to 0.1181)
E	3.00 to 3.05 (0.1181 to 0.1200)
F	3.05 to 3.10 (0.1200 to 0.1220)
G	3.10 to 3.15 (0.1220 to 0.1240)

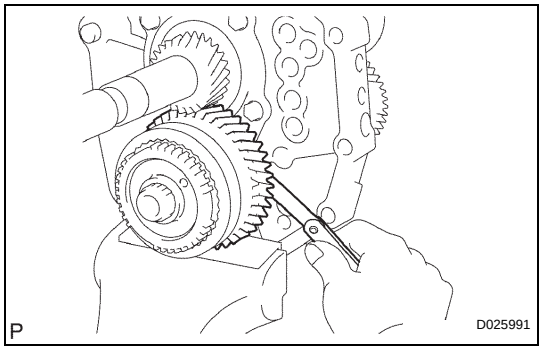

16. INSPECT COUNTER SHAFT 5TH GEAR THRUST CLEARANCE

(a) Using a feeler gauge, check the thrust clearance of the counter 5th gear.

Standard clearance:

0.10 to 0.35 mm (0.0039 to 0.0138 in.)

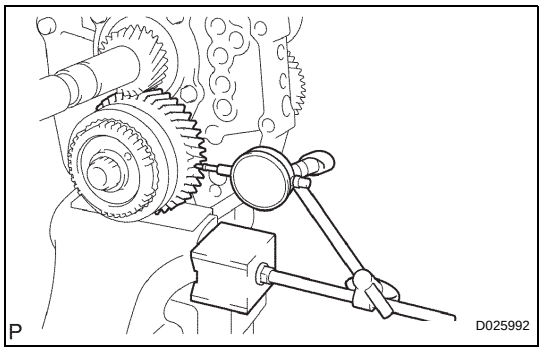

17. INSPECT COUNTER SHAFT 5TH GEAR RADIAL CLEARANCE

(a) Using a dial indicator, check the counter 5th gear radial clearance.

Standard clearance:

0.015 to 0.068 mm (0.0006 to 0.0027 in.)

If the clearance is out of specification the counter 5th gear bearing.

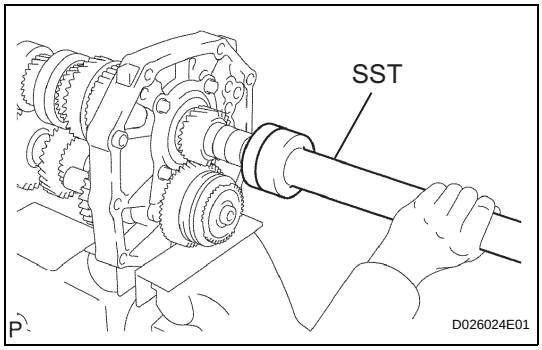

18. INSTALL OUTPUT SHAFT REAR BEARING

(a) Using SST and a press, install the new spacer and output shaft rear bearing onto the output shaft.

SST 09309-35010

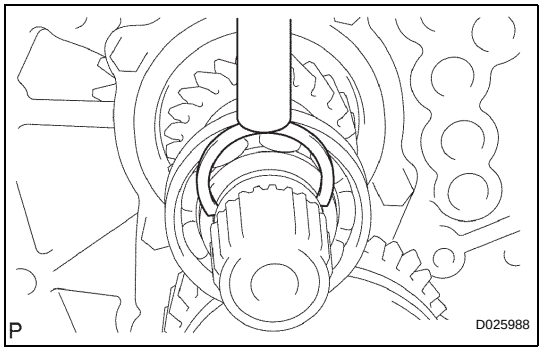

19. INSTALL OUTPUT SHAFT BEARING SHAFT SNAP RING

(a) Select an output shaft bearing shaft snap ring so the thrust gap between the snap ring and the bearing is within the specified values. Use a brass bar and hammer to install it onto the output shaft.

Standard clearance:

0.1 mm (0.0039 in.) or less

Mark	Thickness mm (in.)
A	2.65 to 2.70 (0.1043 to 0.1063)
B	2.70 to 2.75 (0.1063 to 0.1083)
C	2.75 to 2.80 (0.1083 to 0.1102)
D	2.80 to 2.85 (0.1102 to 0.1122)
E	2.85 to 2.90 (0.1122 to 0.1141)
F	2.90 to 2.95 (0.1141 to 0.1160)
G	2.95 to 3.00 (0.1160 to 0.1181)
H	3.00 to 3.05 (0.1181 to 0.1200)
J	3.05 to 3.10 (0.1200 to 0.1220)
K	3.10 to 3.15 (0.1220 to 0.1240)
L	3.15 to 3.20 (0.1240 to 0.1260)
M	3.20 to 3.25 (0.1260 to 0.1280)
N	3.25 to 3.30 (0.1280 to 0.1299)
P	3.30 to 3.35 (0.1299 to 0.1319)
Q	3.35 to 3.40 (0.1319 to 0.1339)
R	3.40 to 3.45 (0.1339 to 0.1358)
S	3.45 to 3.50 (0.1358 to 0.1378)

20. INSTALL SPEEDOMETER DRIVE GEAR

(a) Install output shaft spacer.

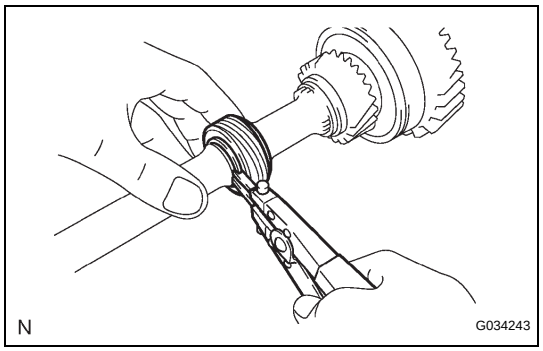

(b) Using snap ring pliers, install the snap ring.
(c) Install the ball and drive gear.
(d) Using snap ring pliers, install the snap ring.

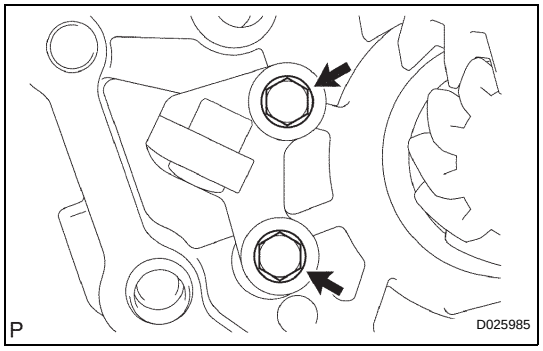

21. INSTALL REVERSE SHIFT ARM BRACKET

(a) Install the reverse shift arm bracket onto the intermediate plate with the 2 bolts.
Torque: 18 N*m (185 kgf*cm, 13 ft.*lbf)

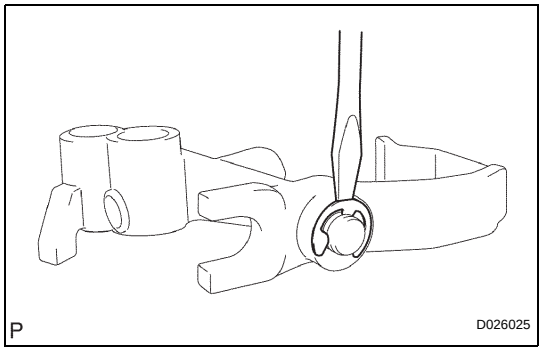

22. INSTALL REVERSE SHIFT FORK

(a) Install the reverse shift arm onto the reverse shift fork. Using a screwdriver and a hammer, install the new reverse shift arm end shaft ring.

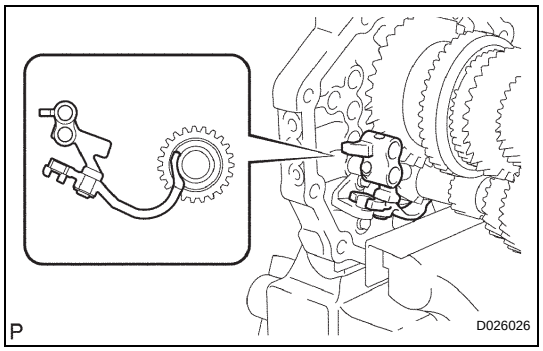

(b) Install the tip of the reverse shift arm onto the reverse idler gear. Align the cut end of the reverse shift arm with the reverse shift arm bracket pin, and install them.

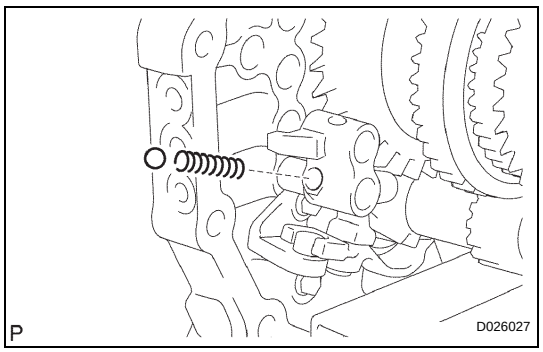

23. INSTALL 5TH SHIFT ARM SHAFT

(a) Install the reverse shift fork return compression spring and the reverse shift fork ball into the reverse shift fork.

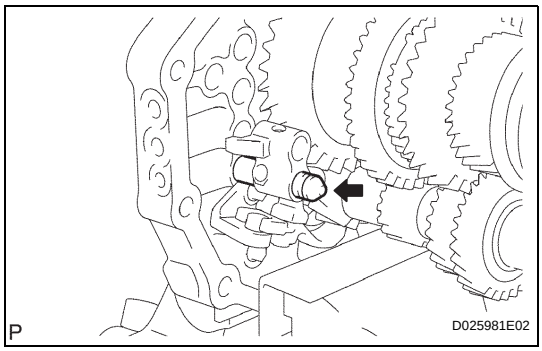

(b) Apply gear oil to the sliding part of the 5th shift arm shaft.
(c) Using a screwdriver, install the 5th shift arm shaft by pushing the reverse shift fork ball gently.

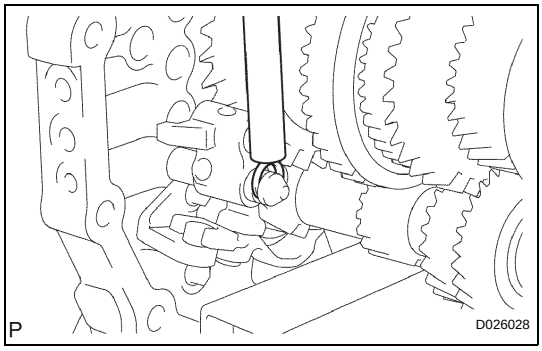

(d) Using a brass bar and a hammer, install the shift fork shaft snap ring onto the 5th shift arm shaft.

24. INSTALL REVERSE SHIFT FORK SHAFT

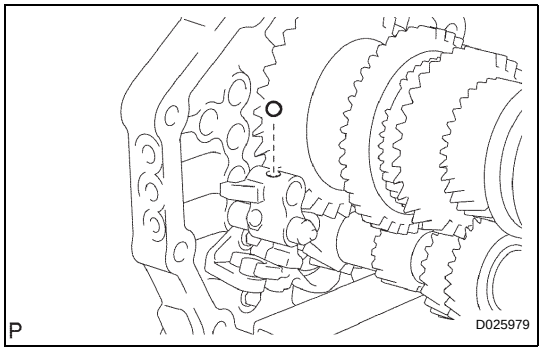

(a) Install the reverse shift fork ball into the reverse shift fork.

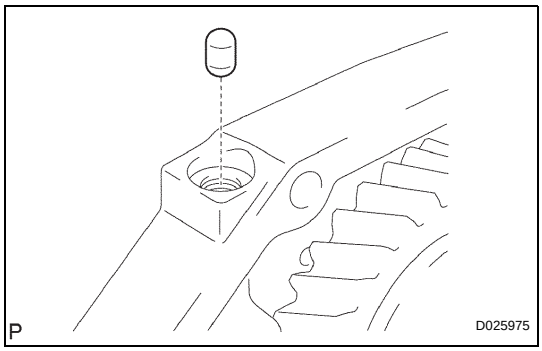

(b) Install the shift interlock No. 1 roller onto the intermediate plate.

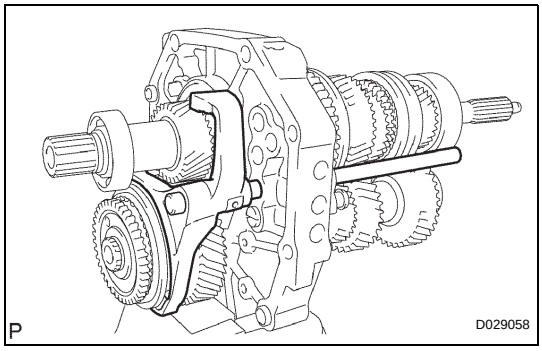

(c) Install the shift fork No. 3 onto the transmission hub sleeve No. 3 and the reverse shift fork shaft onto the intermediate plate from the front side.

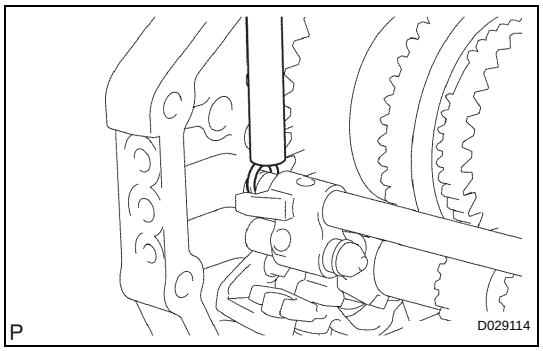

(d) Using a brass bar and a hammer, install the shift fork shaft snap ring onto the reverse shift fork shaft.

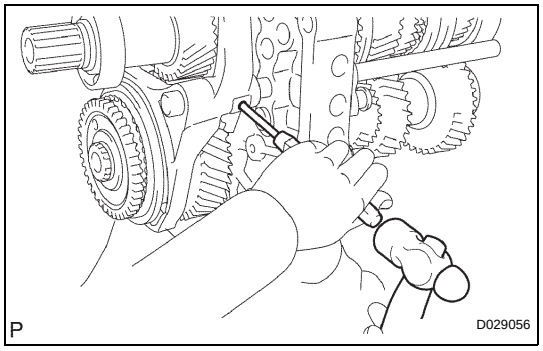

(e) Using a pin punch (5 mm) and a hammer, install the shift fork set slotted spring pin into the gear shift fork No. 3.

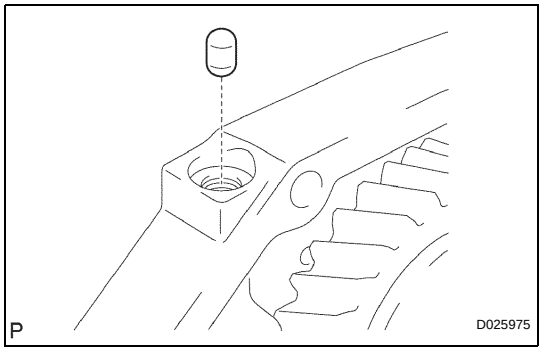

25. INSTALL NO. 1 GEAR SHIFT FORK SHAFT

(a) Install the shift interlock No. 1 roller onto the intermediate plate.

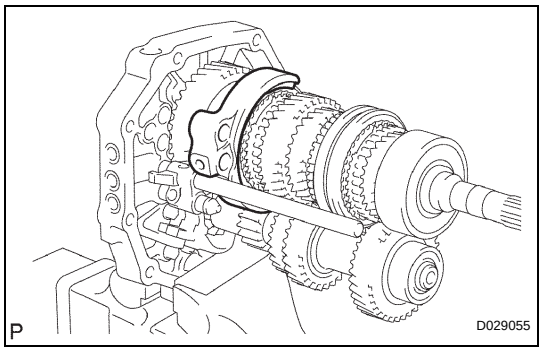

(b) Install the gear shift fork No. 1 onto the reverse gear.

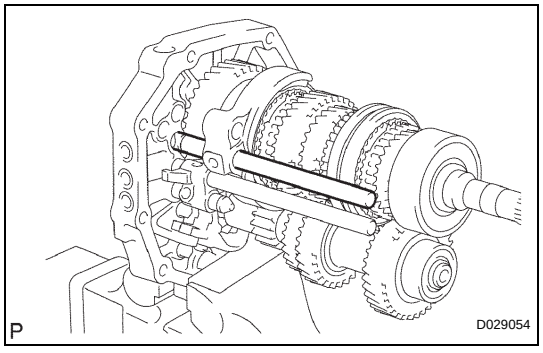

(c) Install the gear shift fork shaft No. 1 onto the intermediate plate from the rear side.

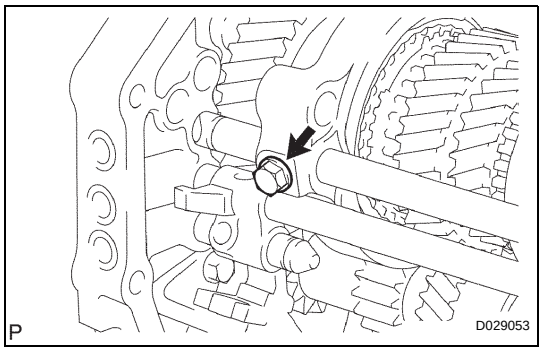

(d) Install the new shift fork set bolt onto the gear shift fork No. 1.
Torque: 19.5 N*m (199 kgf*cm, 14 ft.*lbf)

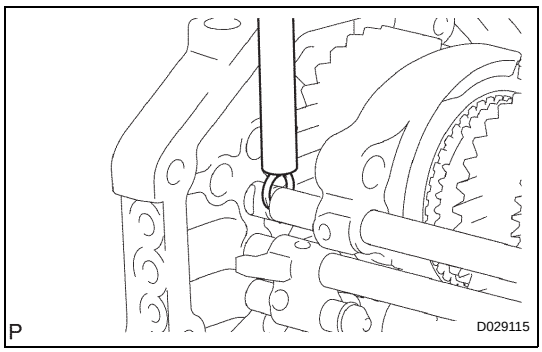

(e) Using a brass bar and a hammer, install the shift fork shaft snap ring onto the gear shift fork shaft No. 1.

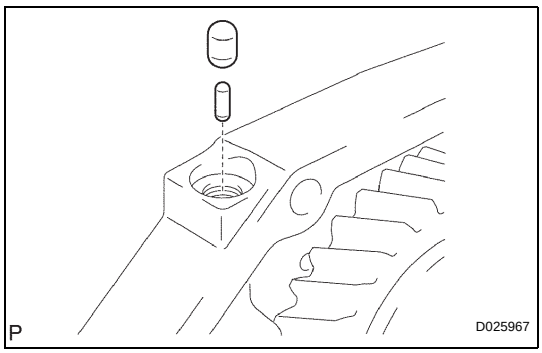

26. INSTALL NO. 2 GEAR SHIFT FORK SHAFT

(a) Install the shift interlock pin (ball) and shift interlock No. 1 roller into the intermediate plate.

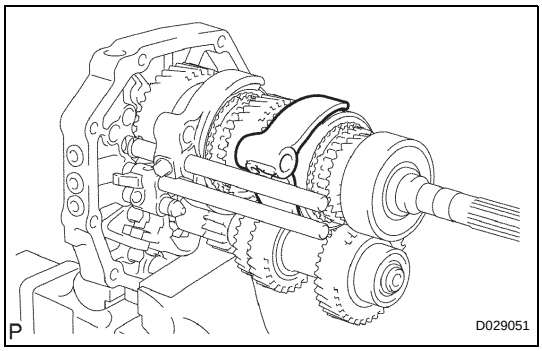

(b) Install the gear shift fork No. 2 onto the transmission hub sleeve No. 2.

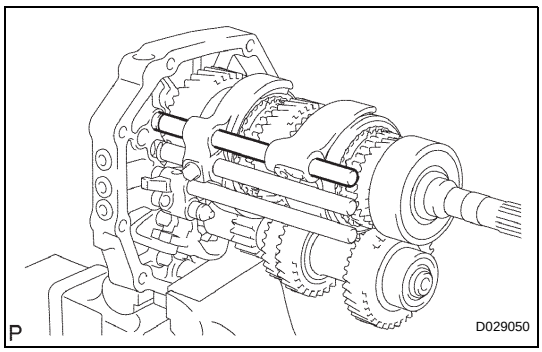

(c) Apply gear oil to the gear shift fork shaft No. 2, and install it onto the intermediate plate from the rear side.

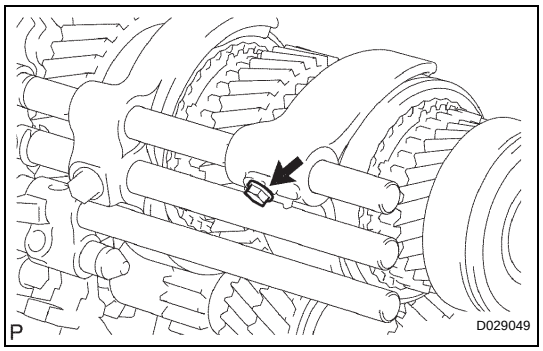

(d) Install the new shift fork set bolt onto the gear shift fork No. 2.
Torque: 19.5 N*m (199 kgf*cm, 14 ft.*lbf)

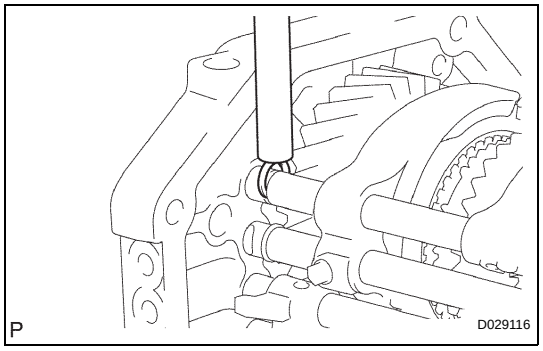

(e) Using a brass bar and a hammer, install the shift fork shaft snap ring onto the gear shift fork shaft No. 2.

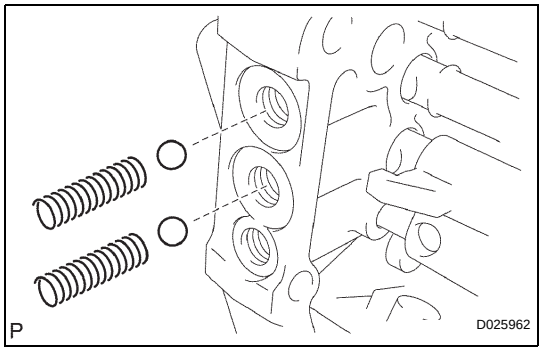

27. INSTALL NO. 1 SHIFT DETENT BALL SPRING SEAT

(a) Install the 2 shift detent ball low side compression springs and 2 shift detent balls into the intermediate plate.

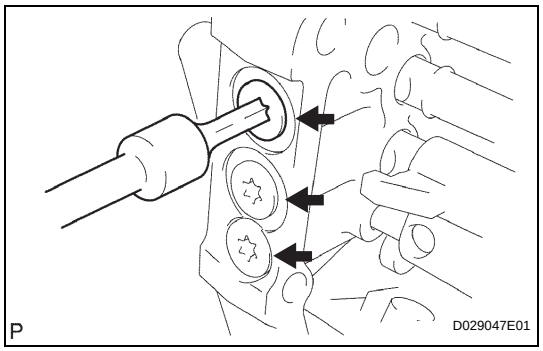

(b) Using a "Torx" socket wrench T40, install the 3 shift detent ball spring seats No. 1 onto the intermediate plate.
Torque: 18.5 N*m (189 kgf*cm, 14 ft.*lbf)

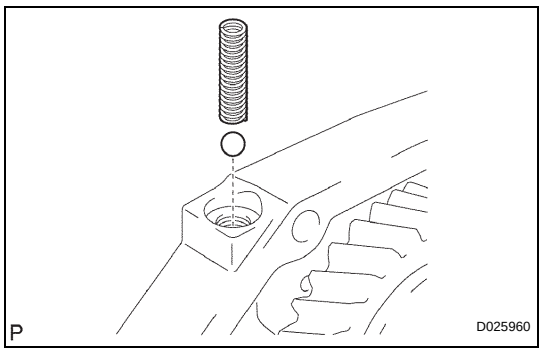

(c) Install the shift detent ball and the shift detent ball low side compression spring into the intermediate plate.

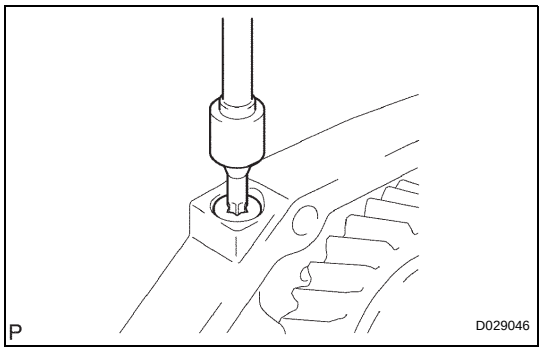

(d) Using a "Torx" socket wrench T40, install the shift detent ball spring seat No. 1 onto the intermediate plate.
Torque: 18.5 N*m (189 kgf*cm, 14 ft.*lbf)

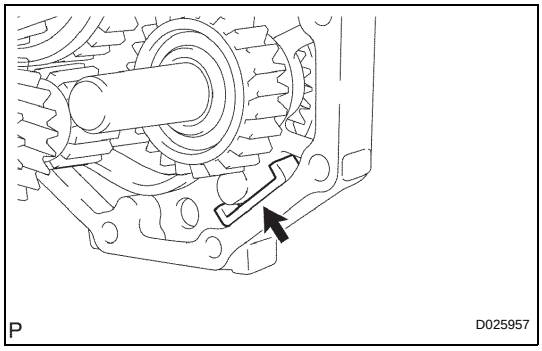

28. INSTALL TRANSMISSION MAGNET

(a) Clean the transmission magnet, and install it onto the intermediate plate.

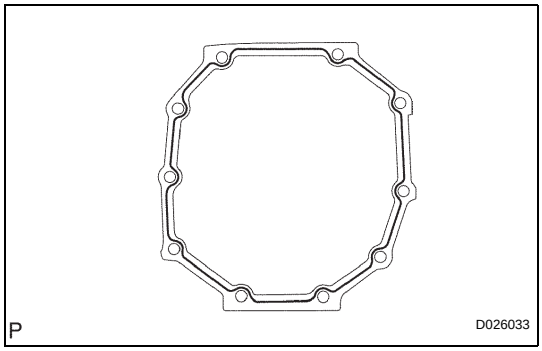

29. INSTALL MANUAL TRANSMISSION CASE

(a) Apply seal packing to the manual transmission case as shown in the illustration.
Seal packing:
Part No.08826-00090, THREE BOND 1281 or equivalent.

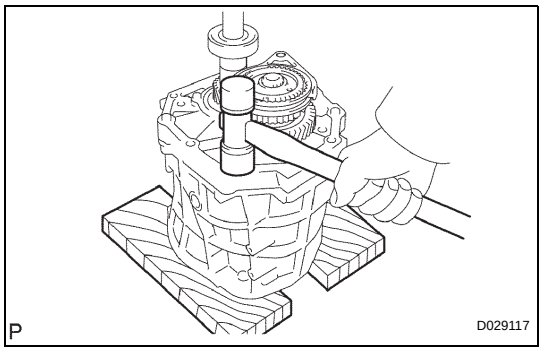

(b) Using a plastic hammer, tap the manual transmission case to attach it to the intermediate plate.

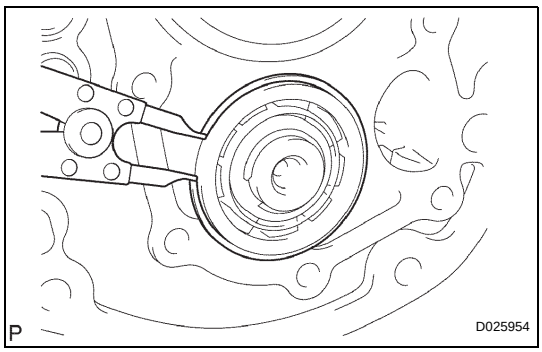

30. INSTALL NO. 1 COUNTER GEAR FRONT BEARING SNAP RING

(a) Using a snap ring expander, install the counter gear front bearing snap ring No. 1 onto the transmission case.

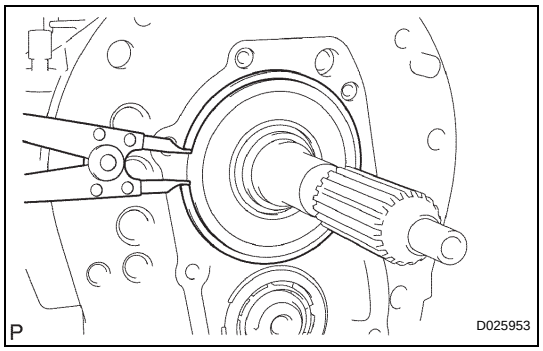

31. INSTALL FRONT BEARING SHAFT SNAP RING

(a) Using a snap ring expander, install the front bearing shaft snap ring onto the transmission case.

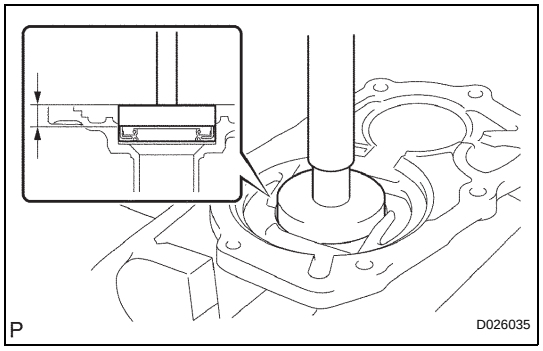

32. INSTALL TRANSMISSION FRONT BEARING RETAINER OIL SEAL

(a) Using SST and a hammer, install the new transmission front bearing retainer oil seal onto the transmission front bearing retainer.

SST 09950-60010 (09951-00300, 09951-00520, 09952-06010), 09950-70010 (09951-07100)

Drive in depth:

11.2 to 12.2 mm (0.4409 to 0.4803 in.)

(b) Coat the lip of the oil seal with MP grease.

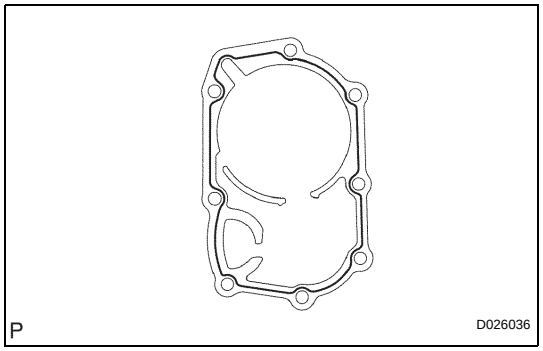

33. INSTALL FRONT BEARING RETAINER

(a) Apply seal packing to the bearing retainer front as shown in the illustration.

Seal packing:

Part No.08826-00090, THREE BOND 1281 or equivalent.

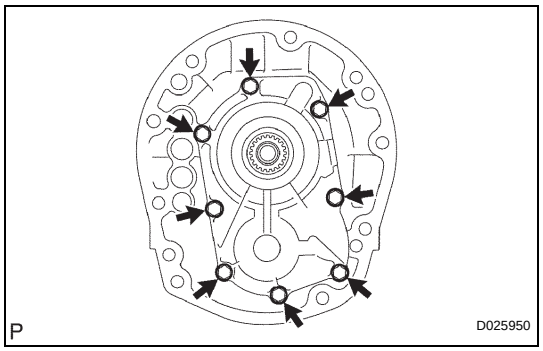

(b) Install the front bearing retainer onto the transmission case with the 8 bolts.

Torque: 16.5 N*m (168 kgf*cm, 12 ft.*lbf)

(c) Check that the input shaft and output shaft rotate smoothly.

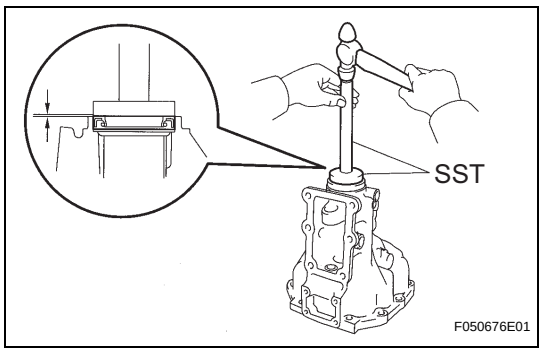

34. INSTALL MANUAL TRANSMISSION EXTENSION HOUSING OIL SEAL

(a) Using SST and a hammer, install the new extension housing oil seal onto the extension housing.

SST 09710-30050, 09950-70010 (09951-07100)

Drive in depth:

-0.5 to 0.5 mm (-0.020 to 0.020 in.)

NOTICE:

Be careful not to damage the oil seal lip.

(b) Lightly apply MP grease to the tip of the oil seal.

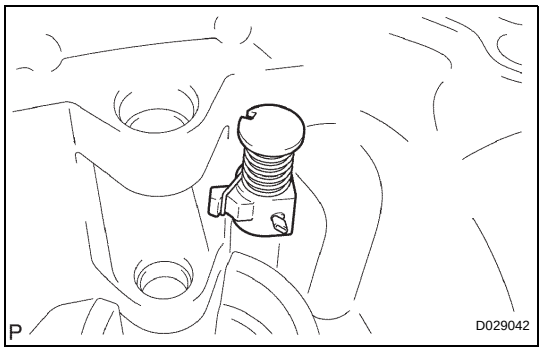

35. INSTALL REVERSE RESTRICT PIN ASSEMBLY

(a) Install the reverse restrict pin into the extension housing.

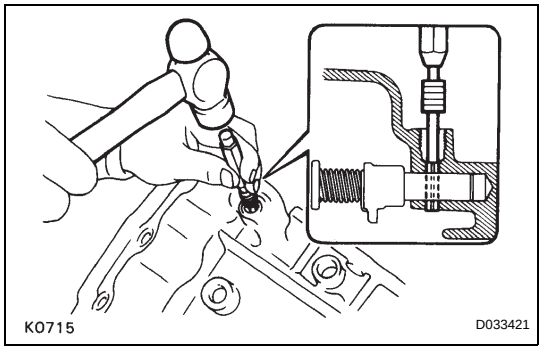

(b) Using a pin punch (5 mm) and a hammer, install the reverse restrict slotted pin into the extension housing.

(c) Using a "Torx" socket wrench T40, install the reverse restrict pin plug onto the extension housing.
Torque: 18.5 N*m (189 kgf*cm, 14 ft.*lbf)

36. INSTALL EXTENSION HOUSING OIL RECEIVER PIPE

(a) Install the oil receiver pipe with the bolt.

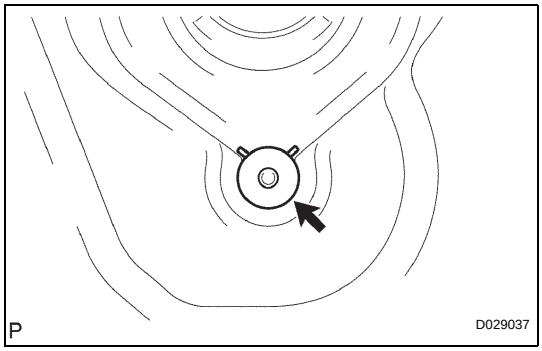

37. INSTALL OIL RECEIVER

(a) Install the oil receiver onto the extension housing.

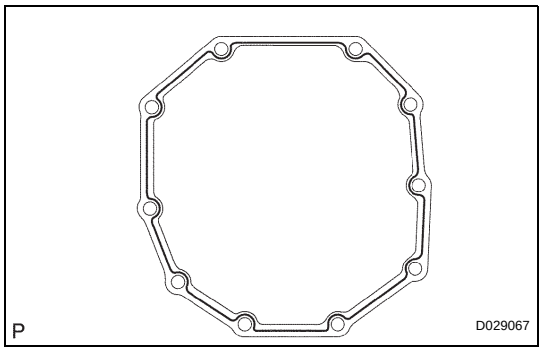

38. INSTALL EXTENSION HOUSING SUB-ASSEMBLY

(a) Apply seal packing to the extension housing as shown in the illustration.
Seal packing:
Part No. 08826-00090, THREE BOND 1218 or equivalent

(b) Insert the shift and select lever to the extension housing.

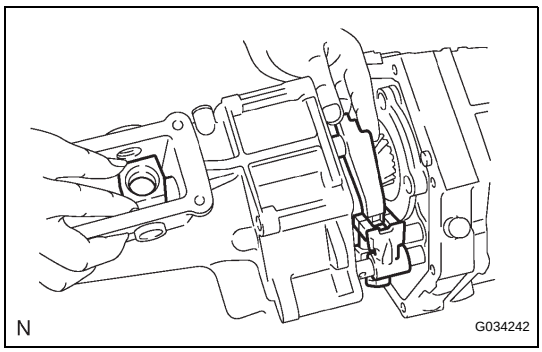

(c) Connect the shift and select lever to the fork shaft and put in the shift lever housing.

(d) Align shift and select lever to the extension housing installation hole and push in the extension housing.

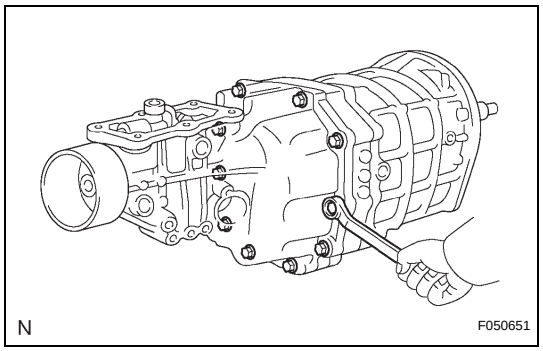

(e) Install the extension housing, onto the transmission case with the 10 bolts.
Torque: 37 N*m (380 kgf*cm, 27 ft.*lbf)

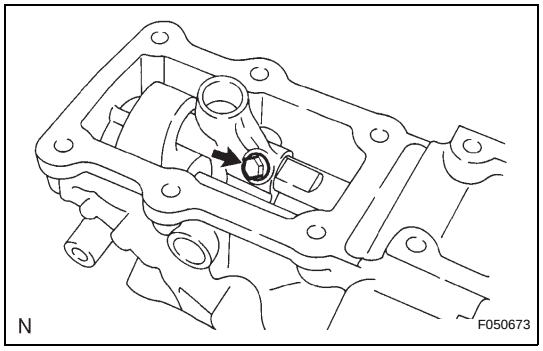

(f) Install the shift lever housing set bolt.
Torque: 33 N*m (340 kgf*cm, 25 ft.*lbf)

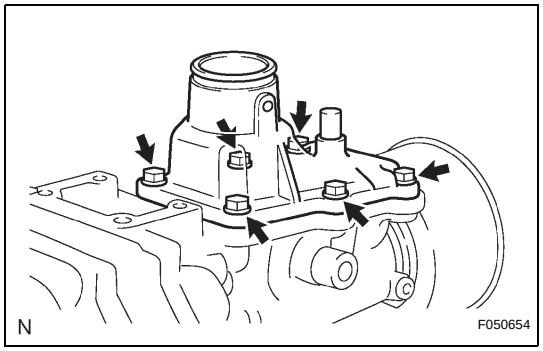

39. INSTALL FLOOR SHIFT CONTROL SHIFT LEVER RETAINER SUB-ASSEMBLY

(a) Install the floor shift control shift lever retainer and the extension housing oil deflector onto the transfer adapter with the 6 bolts.
Torque: 18 N*m (185 kgf*cm, 13 ft.*lbf)

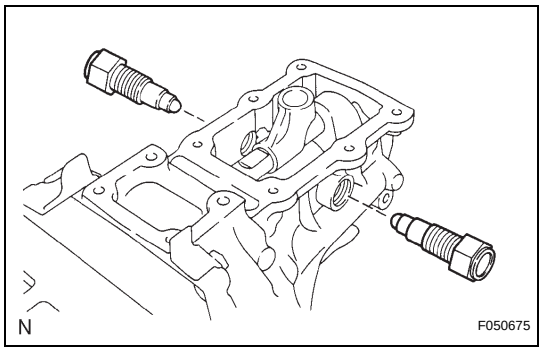

40. INSTALL REVERSE RESTRICT PIN ASSEMBLY

(a) Install the 2 reverse restrict pins into the extension housing or transfer adapter.
Torque: 37 N*m (380 kgf*cm, 27 ft.*lbf)

41. INSTALL SPEEDOMETER SENSOR

(a) Install a new O-ring onto the speedometer sensor.
(b) Install the speedometer sensor with the bolt.
Torque: 11.5 N*m (117 kgf*cm, 8 ft.*lbf)

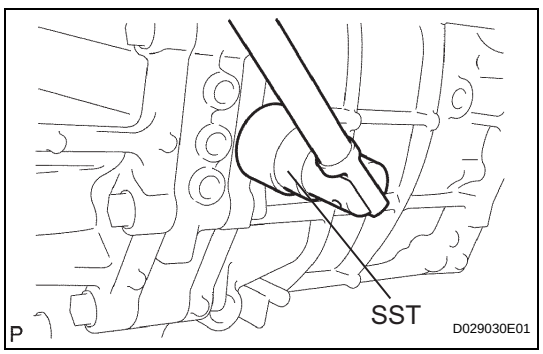

42. INSTALL BACK-UP LIGHT SWITCH ASSEMBLY

(a) Using SST, install the back-up light switch assembly and the gasket onto the transmission case.
SST 09817-16011
Torque: 44 N*m (450 kgf*cm, 32 ft.*lbf)

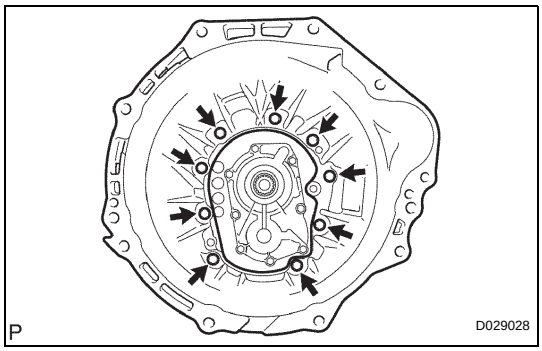

43. INSTALL CLUTCH HOUSING

(a) Install the clutch housing onto the transmission case with the 9 bolts.
Torque: 36 N*m (370 kgf*cm, 27 ft.*lbf)

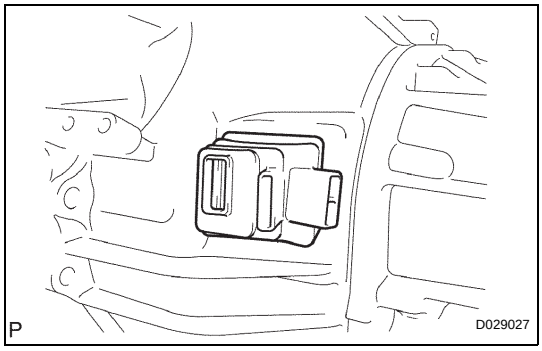

44. INSTALL CLUTCH RELEASE FORK BOOT

(a) Install the clutch release fork boot onto the clutch housing.

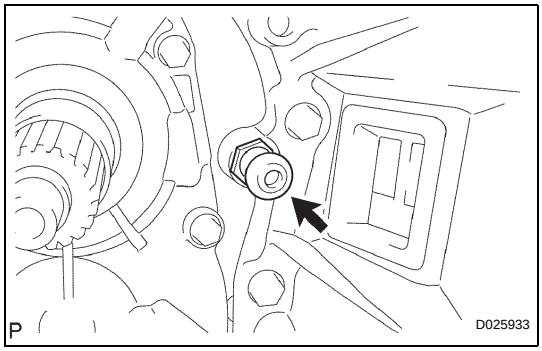

45. INSTALL RELEASE FORK SUPPORT

(a) Install the clutch release fork support onto the clutch housing.
Torque: 47 N*m (480 kgf*cm, 35 ft.*lbf)

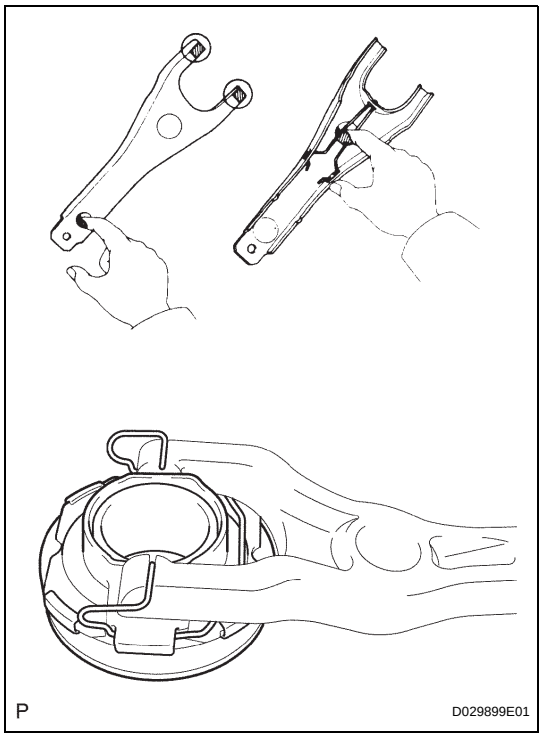

46. INSTALL CLUTCH RELEASE BEARING ASSEMBLY

(a) Apply clutch release hub grease to the clutch release bearing, and install it onto the clutch release fork.

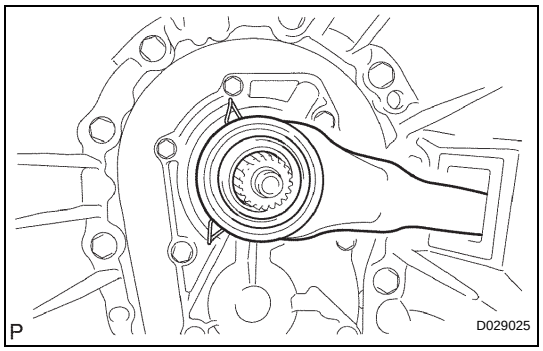

47. INSTALL CLUTCH RELEASE FORK SUB-ASSEMBLY

(a) Install the clutch release fork.

(b) Apply the clutch spline grease to the spline of the input shaft.

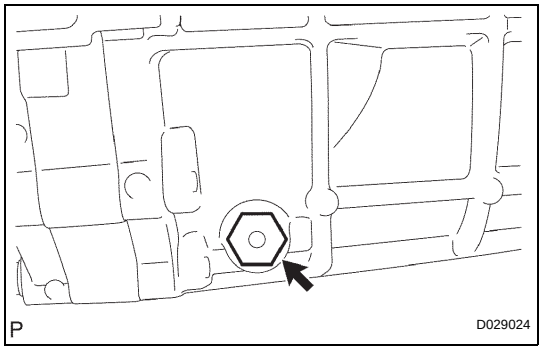

48. INSTALL DRAIN PLUG SUB-ASSEMBLY

(a) Install the drain plug onto the transmission case through a new gasket.
Torque: 37 N*m (380 kgf*cm, 27 ft.*lbf)

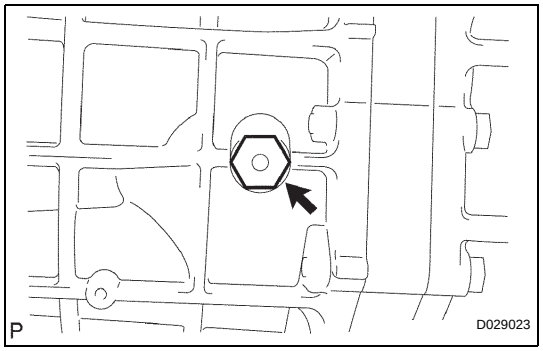

49. INSTALL MANUAL TRANSMISSION FILLER PLUG

(a) Install the filler plug onto the transmission case through a new gasket.
Torque: 37 N*m (380 kgf*cm, 27 ft.*lbf)

INPUT SHAFT

COMPONENTS

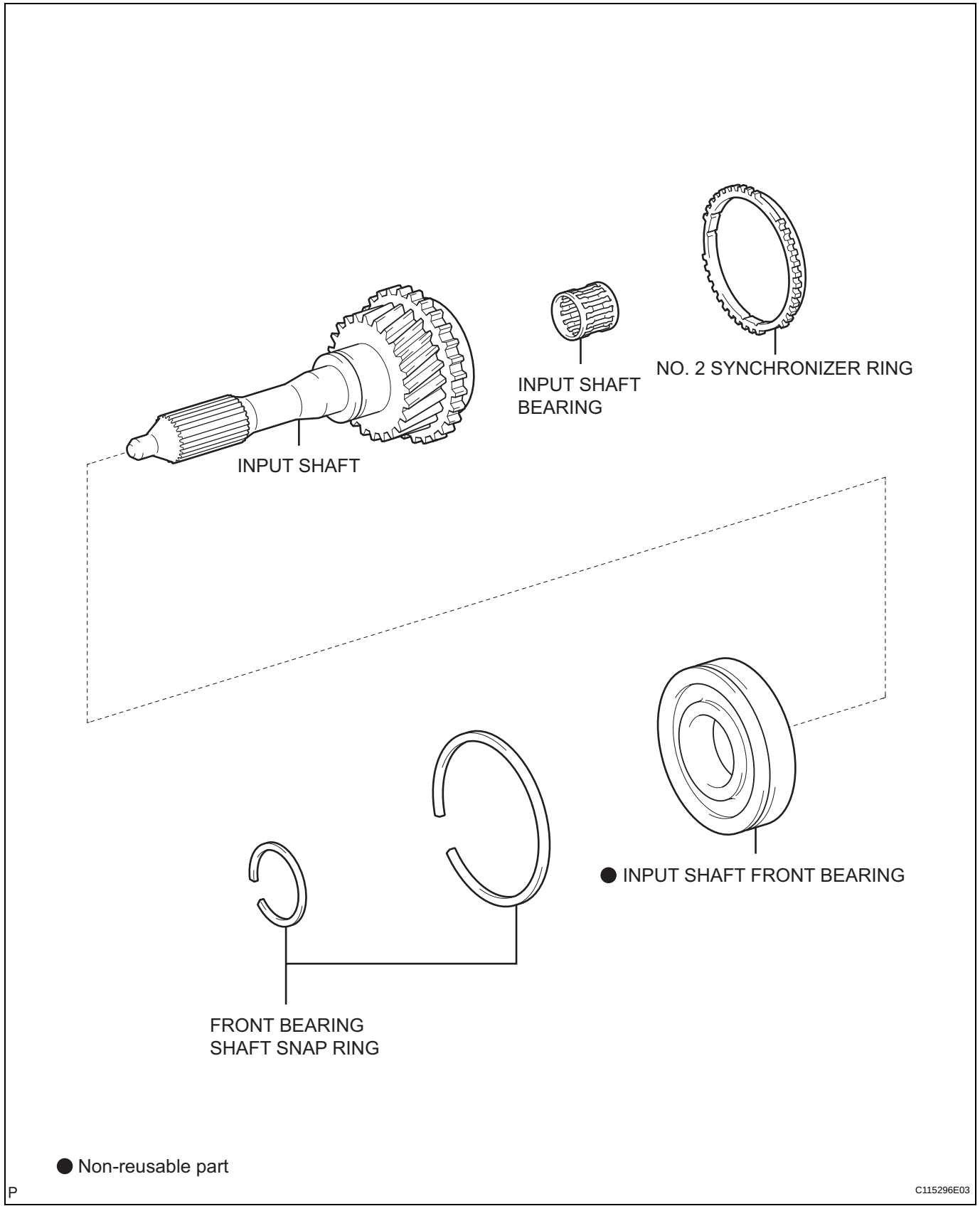

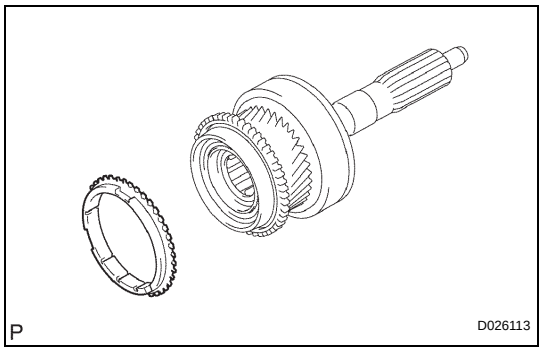

DISASSEMBLY

1. REMOVE NO. 2 SYNCHRONIZER RING

(a) Remove synchronizer ring No. 2 from the input shaft.

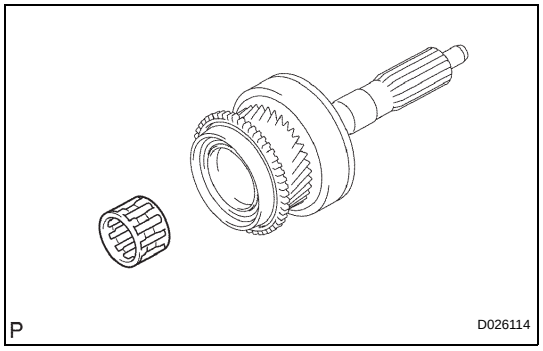

2. REMOVE INPUT SHAFT BEARING

(a) Remove the input shaft bearing from the input shaft.

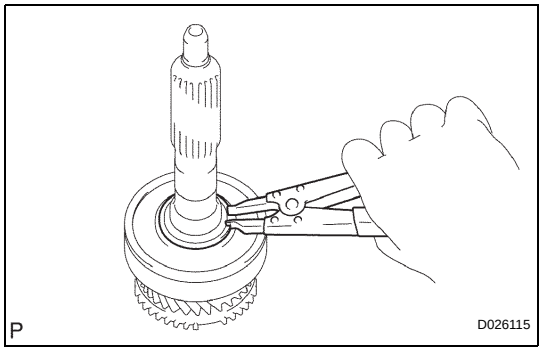

3. REMOVE FRONT BEARING SHAFT SNAP RING

(a) Using a snap ring expander, remove the front bearing shaft snap ring from the input shaft.

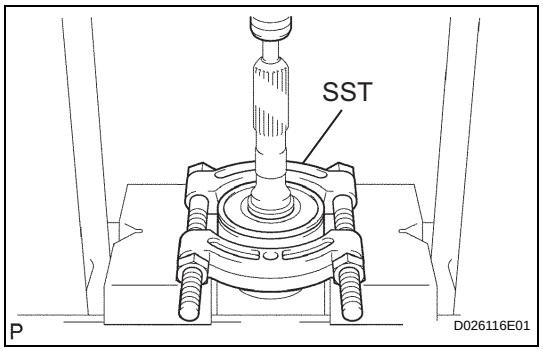

4. REMOVE INPUT SHAFT FRONT BEARING

(a) Using SST and a press, remove the input shaft front bearing FR from the input shaft.
SST 09950-00020

INSPECTION

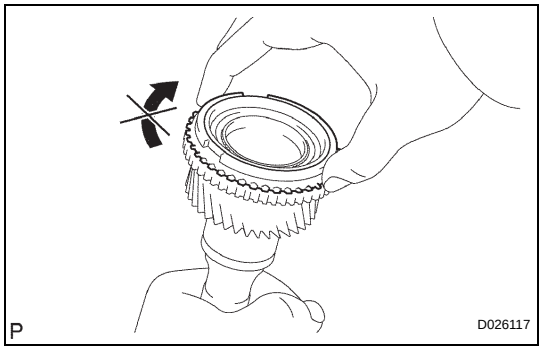

1. INSPECT NO. 2 SYNCHRONIZER RING

(a) Apply gear oil to the cone of the input shaft, and check that it does not turn in the both directions while pushing the synchronizer ring No. 2.

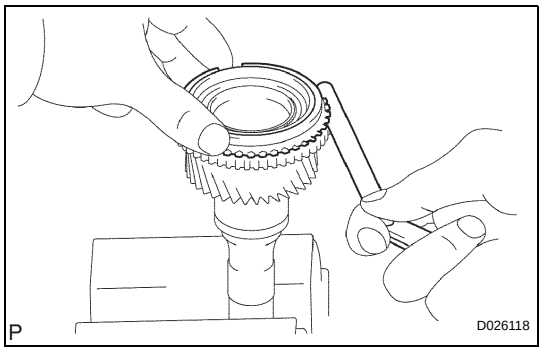

(b) Check the clearance between the synchronizer ring No. 2 and input shaft while pushing the synchronizer ring No. 2 to the cone of the input shaft.
Standard clearance:
0.70 to 1.70 mm (0.0276 to 0.0669 in.)
If the clearance is not within the specified values, replace synchronizer ring No. 2 with a new one.

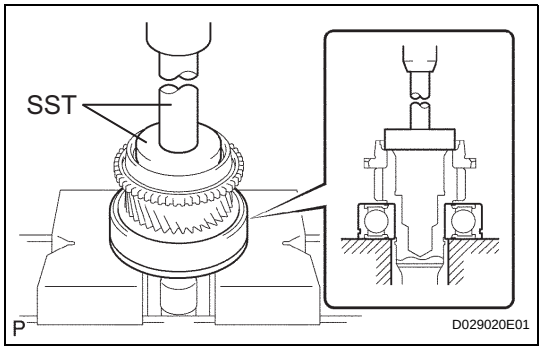

REASSEMBLY

1. INSTALL INPUT SHAFT FRONT BEARING

(a) Using SST and a press, install a new input shaft front bearing FR onto the input shaft.
SST 09950-60010 (09951-00570), 09950-70010 (09951-07100)
NOTICE:
Install the input shaft front bearing with the snap ring groove facing to the front.

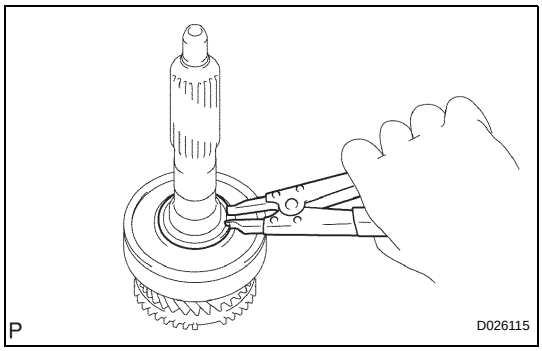

2. INSTALL FRONT BEARING SHAFT SNAP RING

(a) Select the correct input shaft front bearing snap ring so that the clearance between the input shaft and input shaft front bearing is within the specified values.
Standard clearance:
0.1 mm (0.0039 in.) or less

Mark	Thickness mm (in.)
A	2.10 to 2.15 (0.0827 to 0.0846)
B	2.15 to 2.20 (0.0846 to 0.0866)
C	2.20 to 2.25 (0.0866 to 0.0886)
D	2.25 to 2.30 (0.0886 to 0.0906)
E	2.30 to 2.35 (0.0906 to 0.0925)
F	2.35 to 2.40 (0.0925 to 0.0945)
G	2.40 to 2.45 (0.0945 to 0.0965)

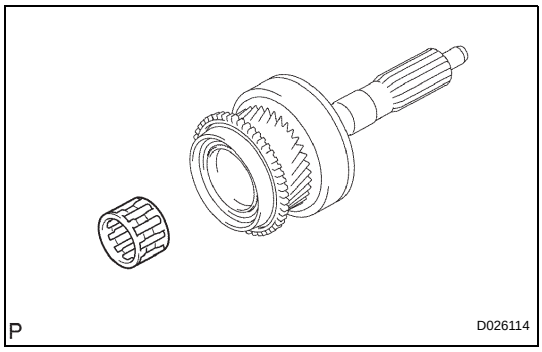

3. INSTALL INPUT SHAFT BEARING

(a) Apply gear oil to the input shaft bearing and install it onto the input shaft.

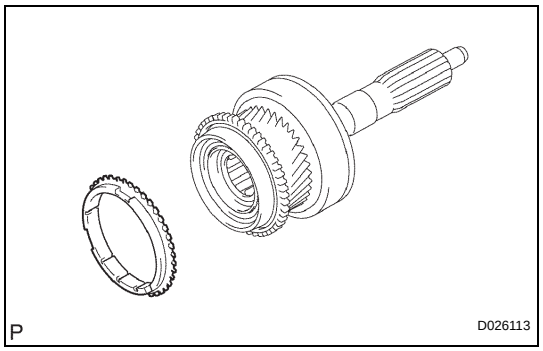

4. INSTALL NO. 2 SYNCHRONIZER RING

(a) Apply gear oil to synchronizer ring No. 2, and install it onto the input shaft.

OUTPUT SHAFT

COMPONENTS

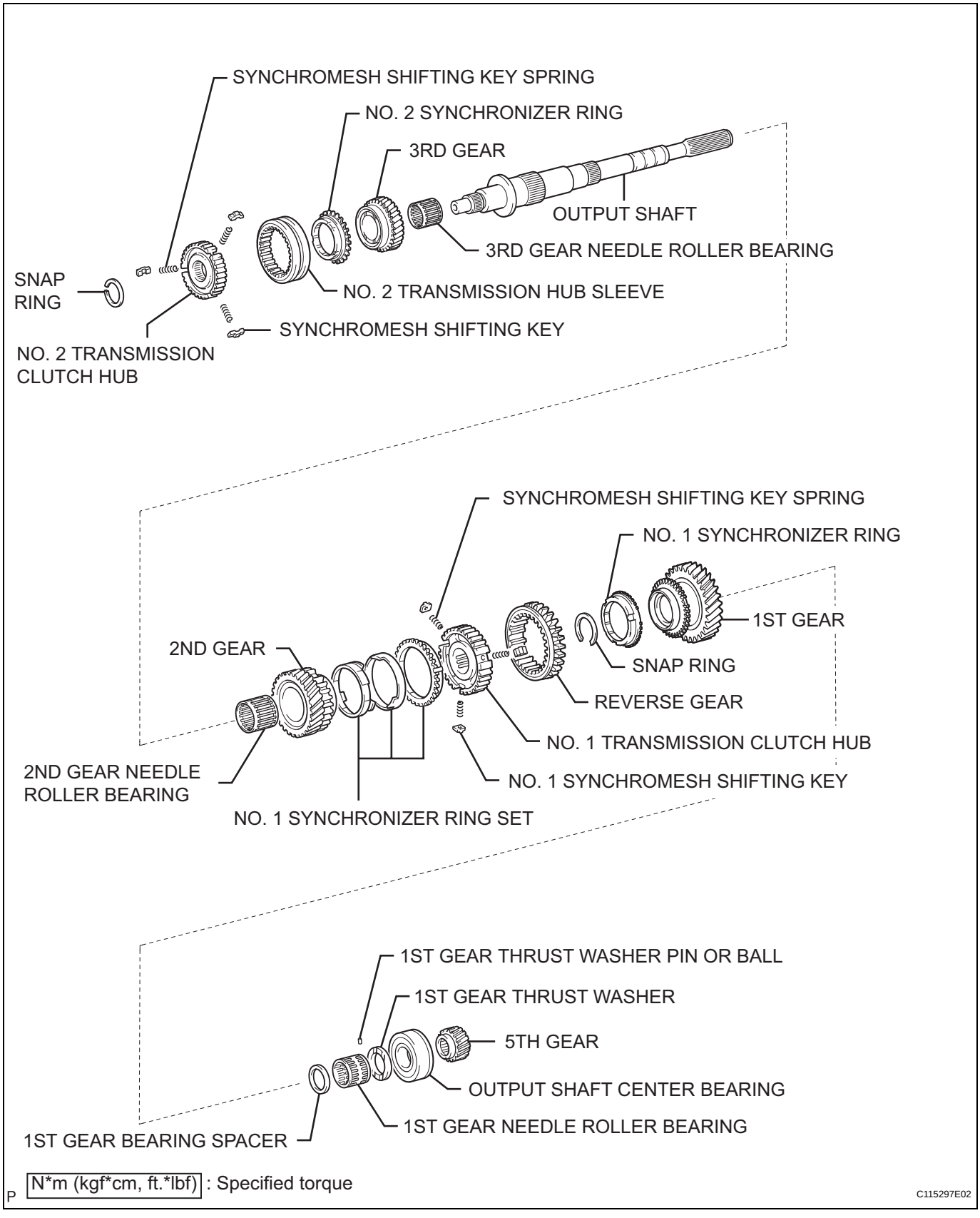

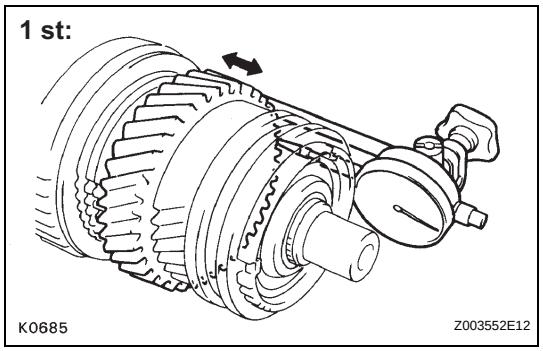

DISASSEMBLY

1. INSPECT 1ST GEAR THRUST CLEARANCE

(a) Using a dial indicator measure the thrust clearance of the 1st gear.

Standard clearance:

0.20 to 0.45 mm(0.0079 to 0.0177 in.)

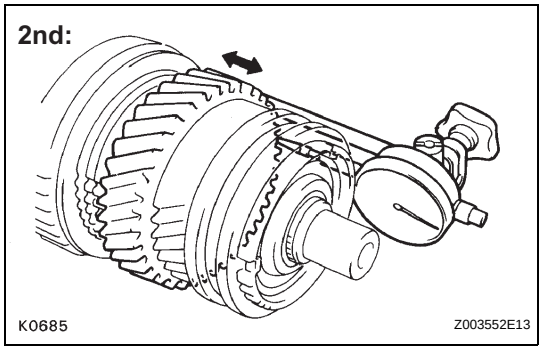

2. INSPECT 2ND GEAR THRUST CLEARANCE

(a) Using a dial indicator measure the thrust clearance of the 2nd gear.

Standard clearance:

0.10 to 0.25 mm (0.0039 to 0.0098 in.)

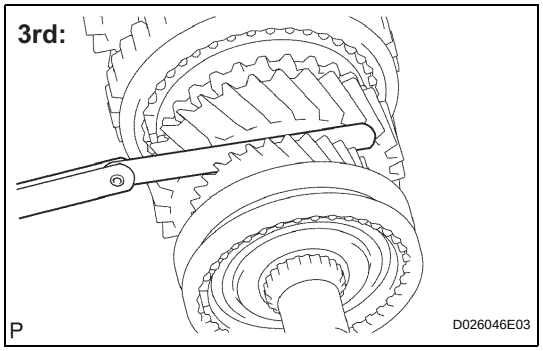

3. INSPECT 3RD GEAR THRUST CLEARANCE

(a) Using a feeler gauge, measure the thrust clearance of the 3rd gear.

Standard clearance:

0.10 to 0.25 mm (0.0039 to 0.0098 in.)

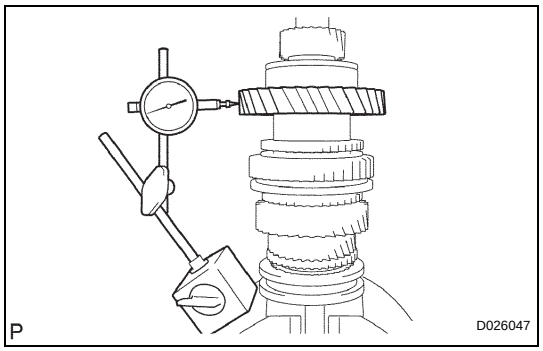

4. INSPECT 1ST GEAR RADIAL CLEARANCE

(a) Using a dial indicator, measure the radial clearance of the 1st gear.

Standard clearance:

0.020 to 0.073 mm (0.0008 to 0.0029 in.)

If the clearance is not within the specified values, replace the 1st gear needle roller bearing with a new one.

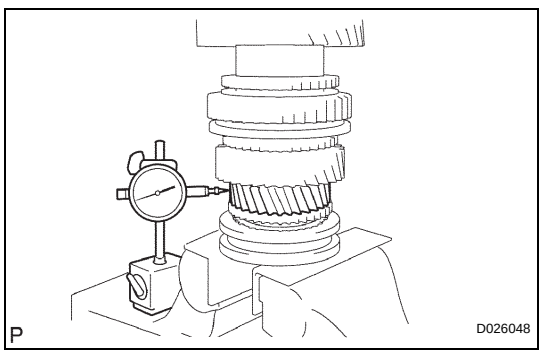

5. INSPECT 2ND GEAR RADIAL CLEARANCE

(a) Using a dial indicator, measure the radial clearance of the 2nd gear.

Standard clearance:

0.015 to 0.068mm (0.0006 to 0.0027 in.)

If the clearance is not within the specified values, replace the 2nd gear needle roller bearing with a new one.

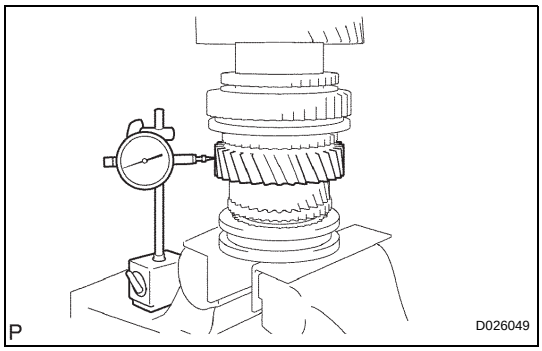

6. INSPECT 3RD GEAR RADIAL CLEARANCE

(a) Using a dial indicator, measure the radial clearance of the 3rd gear.

Standard clearance:

0.015 to 0.068 mm (0.0006 to 0.0027 in.)

If the clearance is not within the specified values, replace the 3rd gear needle roller bearing with a new one.

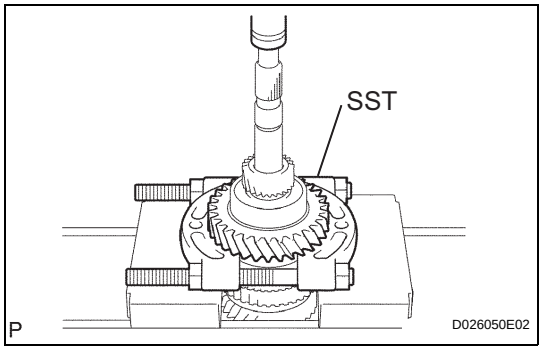

7. REMOVE 1ST GEAR

(a) Using SST and a press, remove the 5th gear, output shaft center bearing, 1st gear thrust washer and 1st gear from the output shaft.

SST 09950-00020

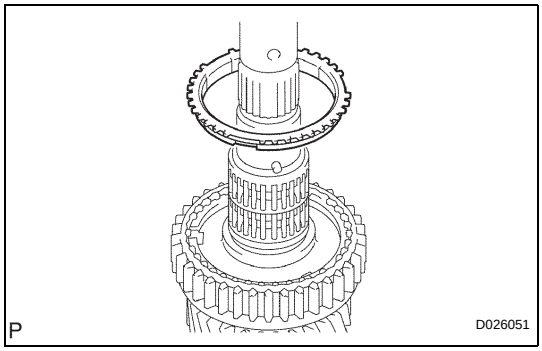

8. REMOVE NO. 1 SYNCHRONIZER RING

(a) Remove synchronizer ring No. 1 (for the 1st gear) from the output shaft.

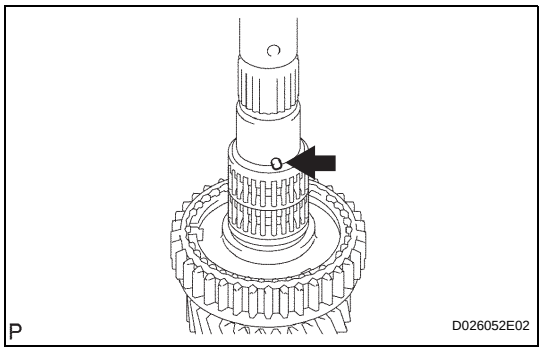

9. REMOVE 1ST GEAR THRUST WASHER PIN OR BALL

(a) Remove the 1st gear thrust washer pin from the output shaft.

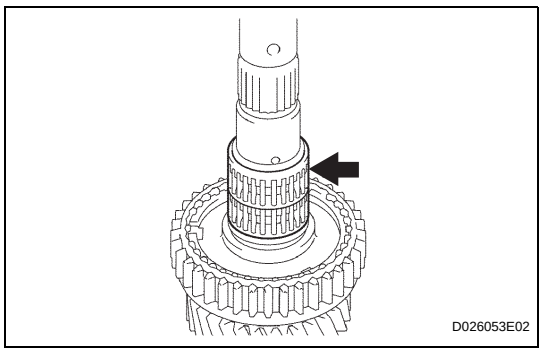

10. REMOVE 1ST GEAR NEEDLE ROLLER BEARING

(a) Remove the 1st gear needle roller bearing from the output shaft.

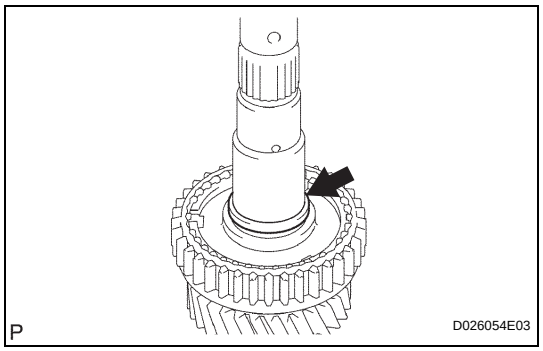

11. REMOVE 1ST GEAR BEARING SPACER

(a) Remove the 1st gear bearing spacer from the output shaft.

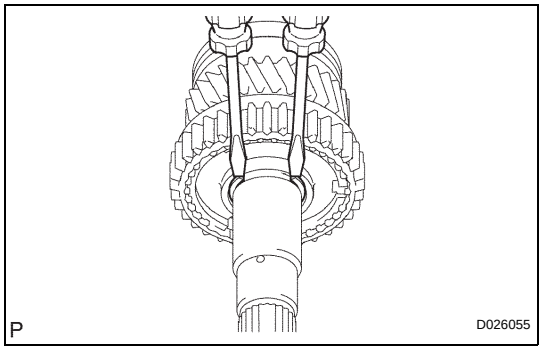

12. REMOVE BEARING SHAFT SNAP RING

(a) Using 2 screwdrivers and a hammer, remove the bearing shaft snap ring from the output shaft.
NOTICE:
Use a shop rag to prevent the snap ring from flying off.

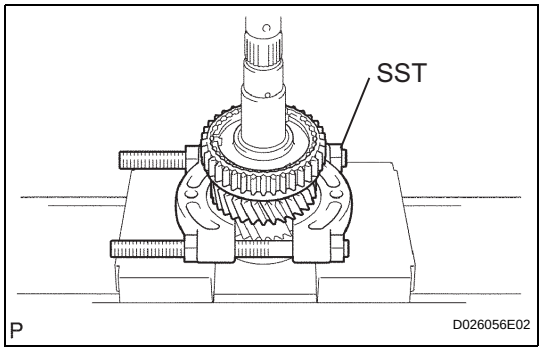

13. REMOVE 2ND GEAR

(a) Using SST and a press, remove the transmission clutch hub No. 1, reverse gear, synchronizer ring No. 1 and 2nd gear from the output shaft.
SST 09950-00020

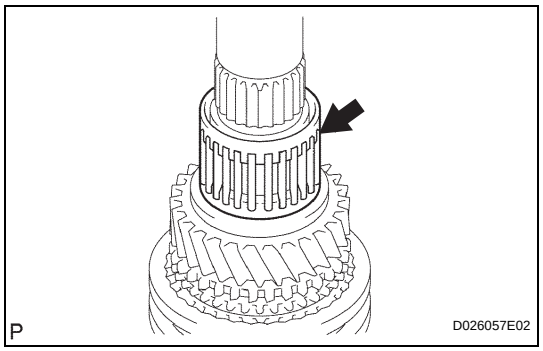

14. REMOVE 2ND GEAR NEEDLE ROLLER BEARING

(a) Remove the 2nd gear needle roller bearing from the output shaft.

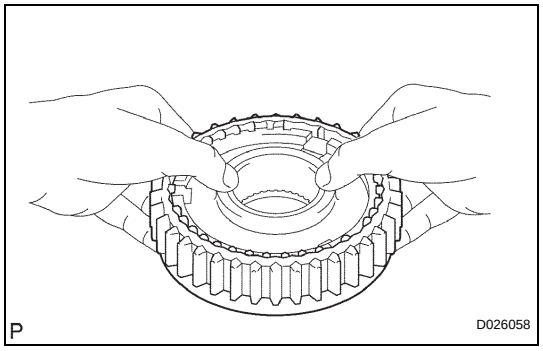

15. REMOVE REVERSE GEAR

(a) Remove the reverse gear, 3 synchromesh shifting keys No. 1 and 3 synchromesh shifting key springs. Use a shop rag to prevent the shifting key and the shifting spring from popping out.

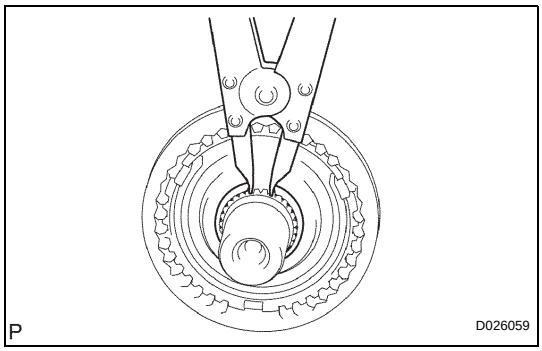

16. REMOVE CLUTCH HUB SET SHAFT SNAP RING

(a) Using snap ring pliers, remove the clutch hub set shaft snap ring from the output shaft.

NOTICE:

Do not damage the sliding surface of the bearing.

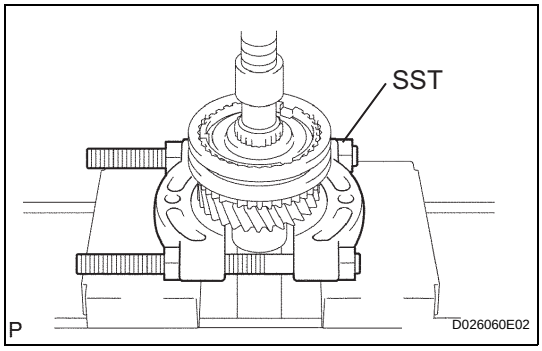

17. REMOVE 3RD GEAR

(a) Using SST and a press, remove the clutch hub No. 2 with the hub sleeve No. 2, synchronizer ring No. 2 and 3rd gear from the output shaft.

SST 09950-00020

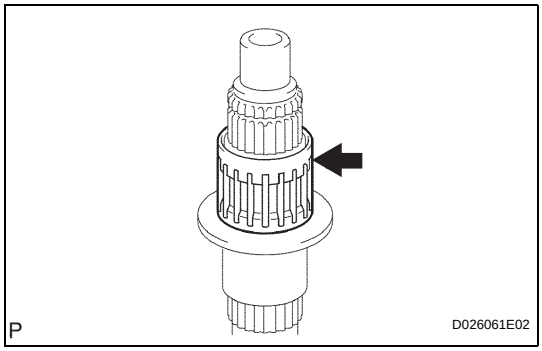

18. REMOVE 3RD GEAR NEEDLE ROLLER BEARING

(a) Remove the 3rd gear needle roller bearing from the output shaft.

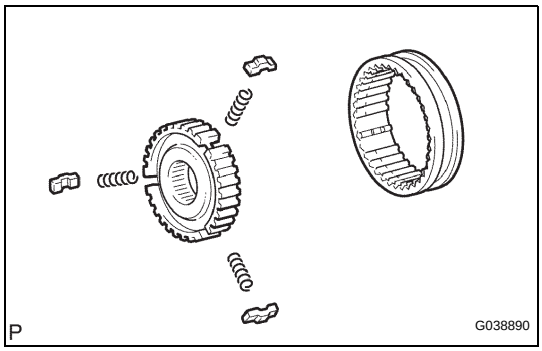

19. REMOVE NO. 2 TRANSMISSION HUB SLEEVE

(a) Remove the transmission hub sleeve No. 2, 3 synchromesh shifting key springs and 3 synchromesh shifting keys No. 2 from the transmission clutch hub No. 2.

INSPECTION

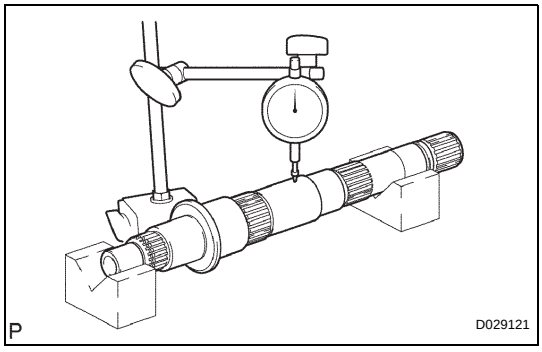

1. INSPECT OUTPUT SHAFT

(a) Using a dial indicator, measure the circle runout of the output shaft.

Maximum circle runout:

0.03 mm (0.0012 in.)

If the circle runout is greater than the maximum, replace the output shaft with a new one.

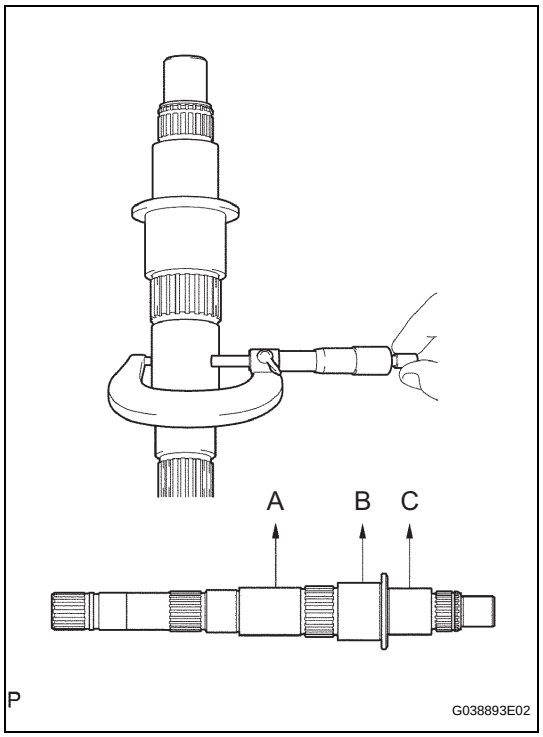

(b) Using a micrometer, measure the outer diameter of the output shaft at A, B and C.

Standard diameter:

38.979 to 38.995 mm (1.5334 to 1.5352 in.) for A
46.984 to 47.000 mm (1.8498 to 1.8504 in.) for B
37.984 to 38.000 mm (1.4954 to 1.4961 in.) for C

Minimum diameter:

38.979 mm (1.5334 in.) for A
46.984 mm (1.8498 in.) for B
37.984 mm (1.4954 in.) for C

If the outer diameter is less than the minimum, replace the output shaft with a new one.

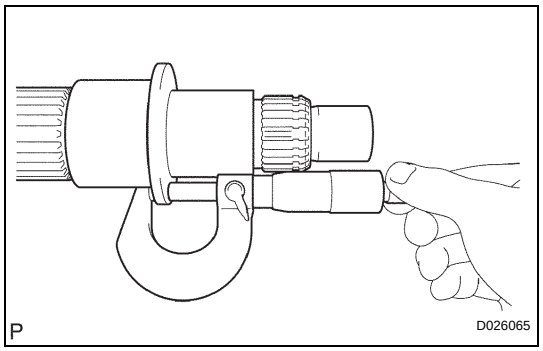

(c) Using a micrometer, measure the thickness of the output shaft flange as shown in the illustration.

Standard thickness:

4.8 to 5.2 mm (0.1890 to 0.2047 in.)

If the thickness is not within the specified values, replace the output shaft.

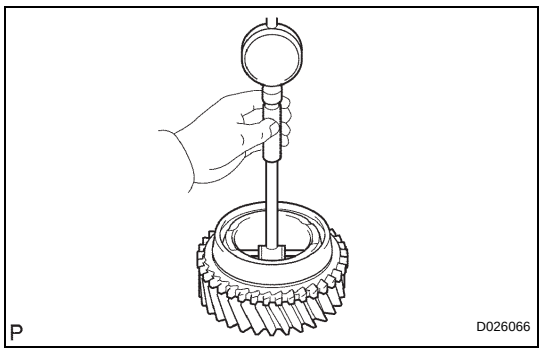

2. INSPECT 3RD GEAR

(a) Using a cylinder gauge, measure the inner diameter of the 3rd gear.

Standard diameter:

44.015 to 44.040 mm (1.7329 to 1.7339 in.)

Maximum diameter:

44.040 mm (1.7339 in.)

If the inner diameter is greater than the maximum, replace the 3rd gear with a new one.

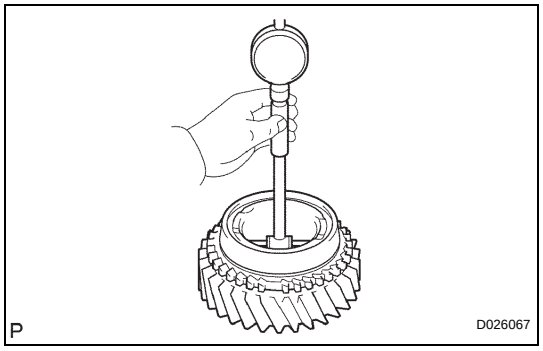

3. INSPECT 2ND GEAR

(a) Using a cylinder gauge, measure the inner diameter of the 2nd gear.

Standard diameter:

53.015 to 53.040 mm (2.0872 to 2.0881 in.)

Maximum diameter:

53.040 mm(2.0881 in.)

If the inner diameter is greater than the maximum, replace the 2nd gear with a new one.

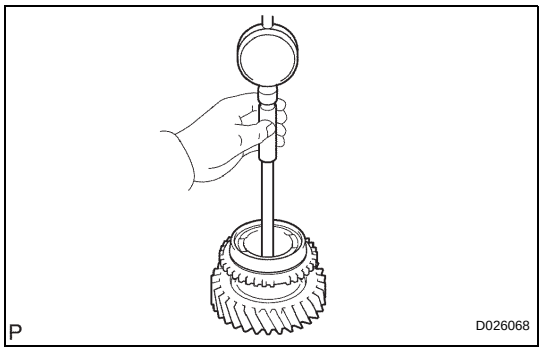

4. INSPECT 1ST GEAR

(a) Using a cylinder gauge, measure the inner diameter of the 1st gear.

Standard diameter:
46.015 to 46.040 mm (1.812 to 1.8126 in.)
Maximum diameter:
46.040 mm (1.8126 in.)

If the inner diameter is greater than the maximum, replace the 1st gear with a new one.

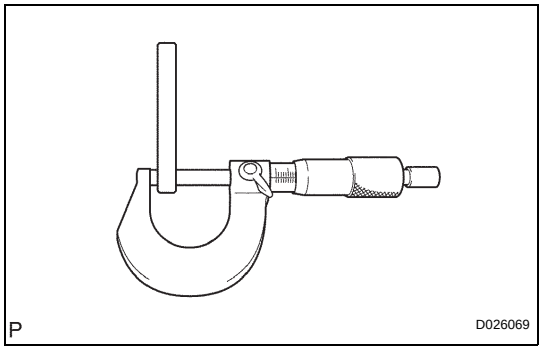

5. INSPECT 1ST GEAR THRUST WASHER

(a) Using a micrometer, measure the thickness of the 1st gear thrust washer.

Standard thickness:
5.95 to 6.05 mm (0.2346 to 0.2382 in.)
Minimum thickness:
5.96 mm (0.2346 in.)

If the thickness is out of specification, replace the 1st gear thrust washer.

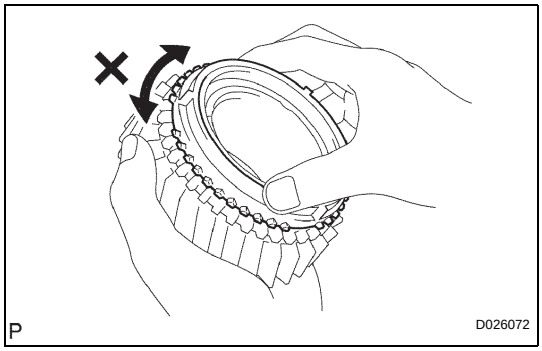

6. INSPECT NO. 1 SYNCHRONIZER RING

(a) Apply gear oil to the cone of the 1st gear, and check that it does not turn in both directions while pushing the synchronizer ring No. 1 (for the 1st gear).
If it turns, replace the synchronizer ring No. 1.

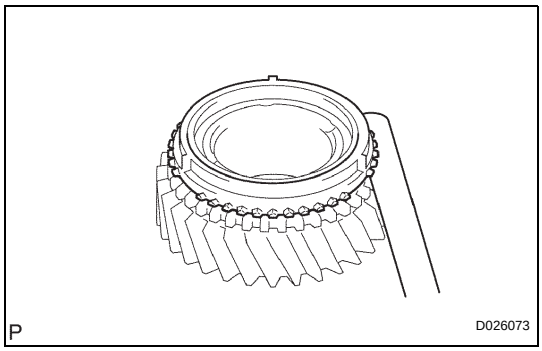

(b) Measure the clearance between the synchronizer ring No. 1 and the 1st gear while pushing the synchronizer ring No. 1 to the cone of the 1st gear.

Standard clearance:
0.75 to 1.65 mm (0.0295 to 0.0649 in.)

If the clearance is not within the specified values, replace the synchronizer ring No. 1 with a new one.

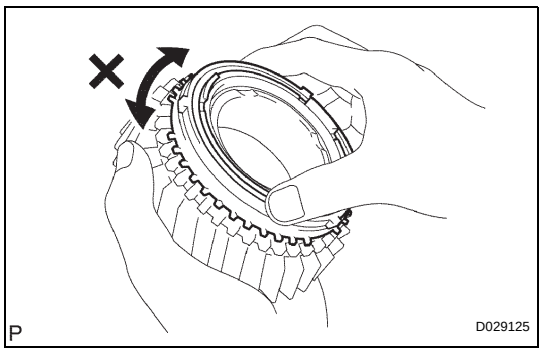

7. INSPECT NO. 1 SYNCHRONIZER RING SET

(a) Apply gear oil to the cone of the 2nd gear, and check that it does not turn in both directions while pushing the synchronizer ring set No. 1 (for the 2nd synchronizer ring).
If it turns, replace the synchronizer ring set No. 1.

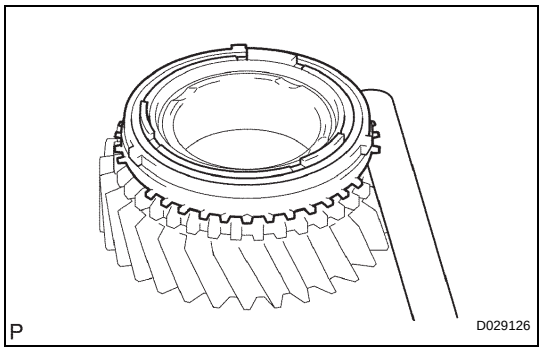

(b) Measure the clearance between the synchronizer ring set No. 1 (for the 2nd synchronizer ring) and 2nd gear while pushing the synchronizer ring set No. 1 to the cone of the 2nd gear.
Standard clearance:
0.65 to 1.75 mm (0.0256 to 0.0689 in.)
If the clearance is not within the specified values, replace the synchronizer ring set No. 1 (for the 2nd synchronizer ring) with a new one.

MT

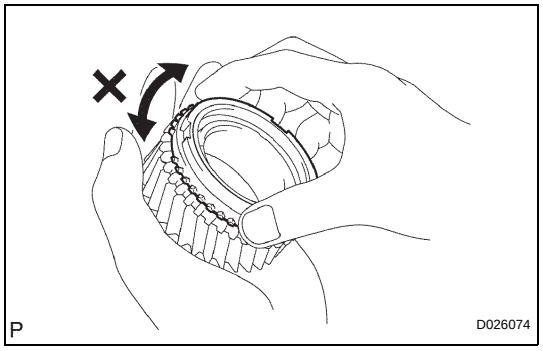

8. INSPECT NO. 2 SYNCHRONIZER RING

(a) Apply gear oil to the cone of the 3rd gear, and check that it does not turn in both directions while pushing the synchronizer ring No. 2 (for the 3rd synchronizer ring).
If it turns, replace the synchronizer ring No. 2.

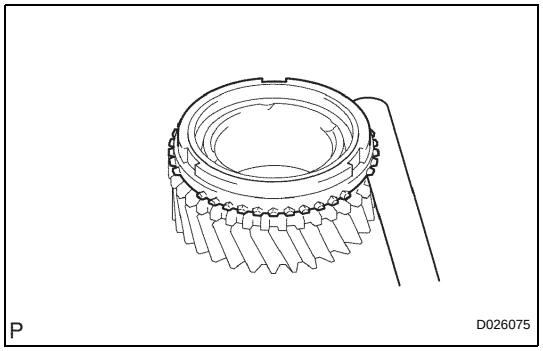

(b) Check the clearance between the synchronizer ring No. 2 (for the 3rd synchronizer ring) and 3rd gear while pushing the synchronizer ring No. 2 (for the 2nd synchronizer ring) to the cone of the 3rd gear.
Standard clearance:
0.75 to 1.65 mm (0.0295 to 0.0650 in.)
If the clearance is not within the specified values, replace the synchronizer ring No. 2 (for the 3rd synchronizer ring) with a new one.

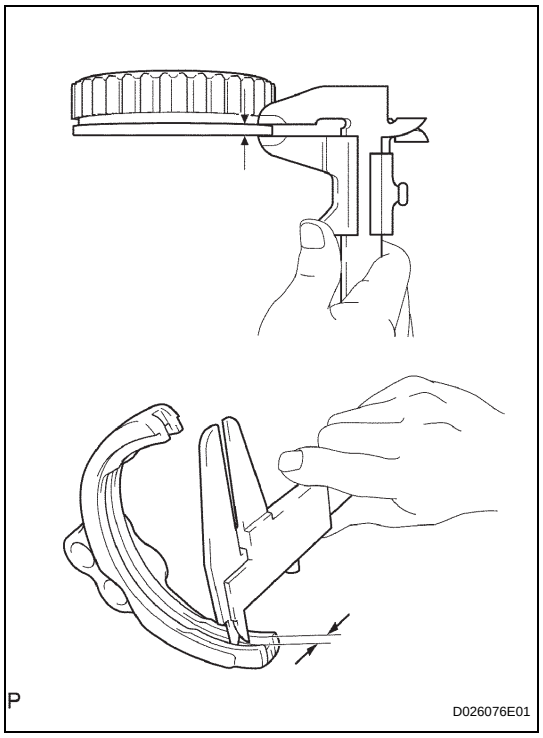

9. INSPECT REVERSE GEAR

(a) Using vernier calipers, measure the reverse gear groove and the thickness of the gear shift fork claw No. 1 clearance.
Standard clearance:
0.15 to 0.41 mm (0.0060 to 0.0161 in.)
If the clearance is not within the specified values, replace the reverse gear and the shift fork No. 1 with new ones.

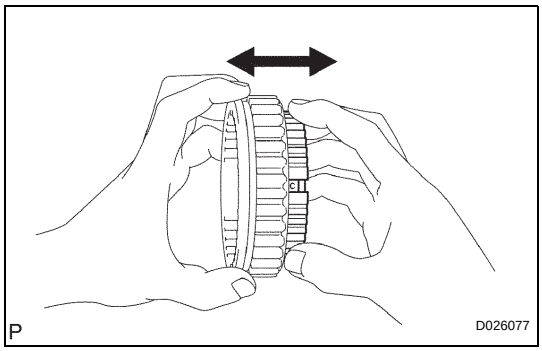

10. INSPECT NO. 1 TRANSMISSION CLUTCH HUB

(a) Check that the transmission clutch hub No. 1 and reverse gear slide smoothly each other.

(b) Check the tip of the spline gear sleeve of the reverse gear for wear.
If there are any defects, replace the transmission clutch hub No. 1.

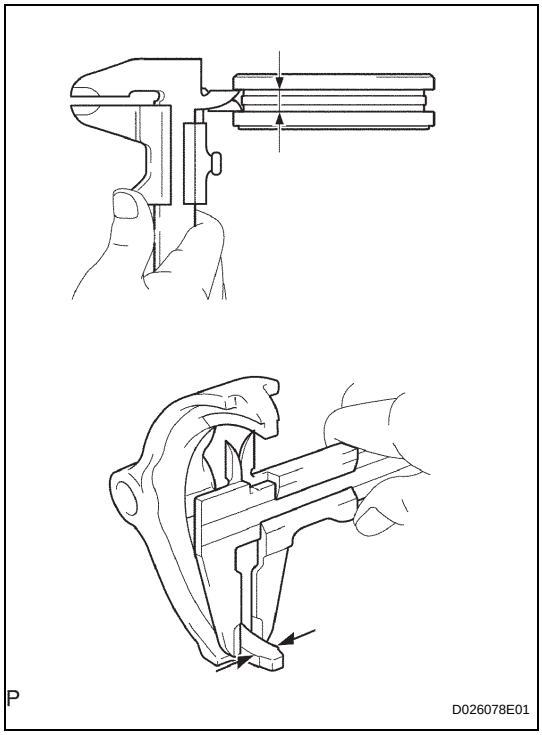

11. INSPECT NO. 2 TRANSMISSION HUB SLEEVE

(a) Using vernier calipers, measure the clearance between the transmission hub No. 2 groove and claw of the gear shift fork No. 2.
Standard clearance:
0.15 to 0.35 mm (0.0059 to 0.0138 in.)
If the clearance is not within the specified values, replace the No. 2 transmission hub sleeve No. 2 and the shift fork No. 2 with the new ones.

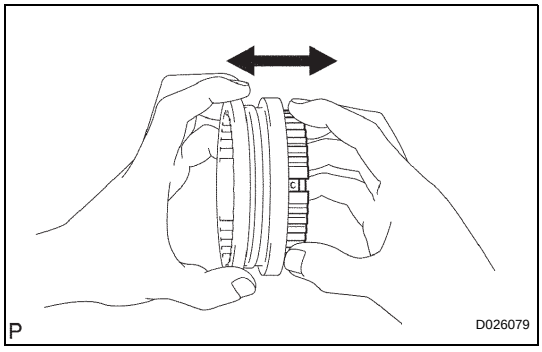

12. INSPECT NO. 2 TRANSMISSION CLUTCH HUB

(a) Check the sliding condition between the transmission clutch hub No. 2 and the transmission hub sleeve No. 2.

(b) Check the tip of the spline gear of the sleeve of the reverse gear for wear.

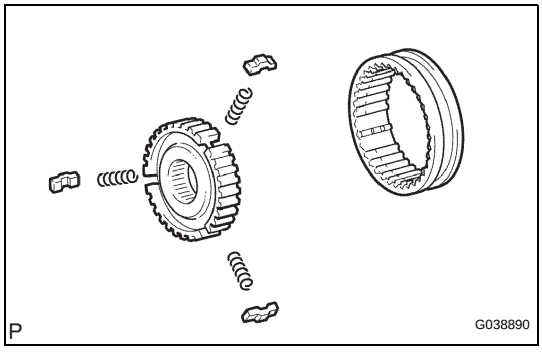

REASSEMBLY

1. INSTALL NO. 2 TRANSMISSION HUB SLEEVE

(a) Install the 3 synchromesh shifting key springs No. 2 and the 3 synchro-mesh shifting key No. 2 to the transmission clutch hub No. 2.
NOTICE:
Make sure that the transmission hub sleeve No. 2 and transmission clutch hub No. 2 are oriented in the correct direction.

(b) Apply gear oil to the sliding part of the transmission hub sleeve No. 2, and install it onto the transmission clutch hub No. 2.

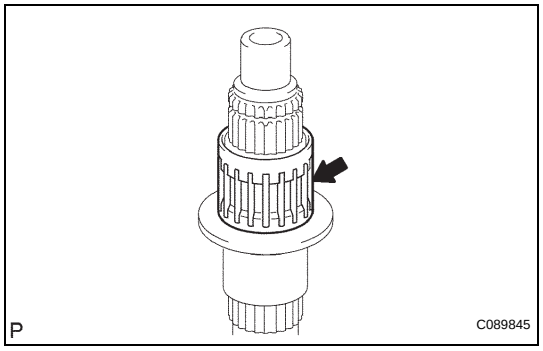

2. INSTALL 3RD GEAR NEEDLE ROLLER BEARING

(a) Apply gear oil to the 3rd gear needle roller bearing, and install it onto the output shaft.

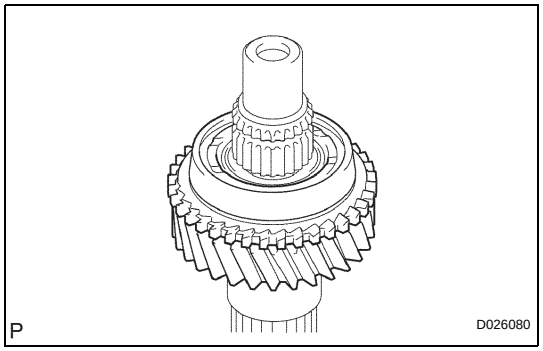

3. INSTALL 3RD GEAR

(a) Apply gear oil to the 3rd gear, and install it onto the output shaft.

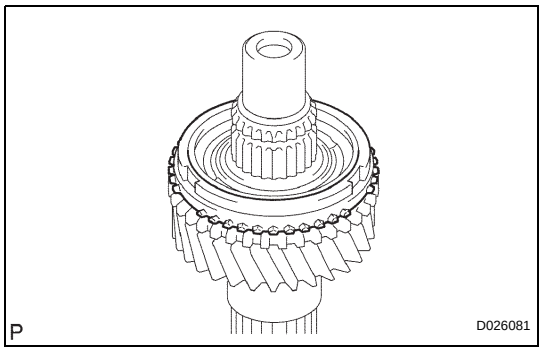

4. INSTALL NO. 2 SYNCHRONIZER RING

(a) Apply gear oil to the synchronizer ring No. 2, and install it onto the 3rd gear.

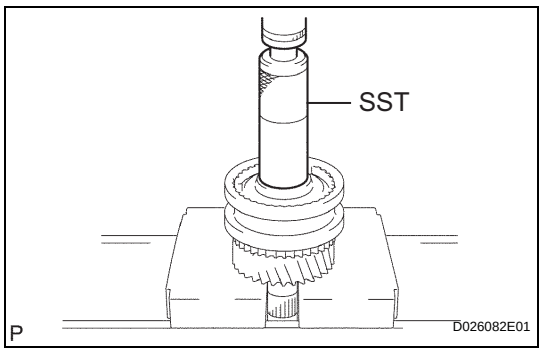

5. INSTALL NO. 2 TRANSMISSION CLUTCH HUB

(a) Using SST, install the transmission clutch hub No. 2 onto the output shaft.

SST 09608-06041

NOTICE:

- **Install it with the synchronizer ring key No. 2 groove aligned with the shifting key position.**
- **Make sure that the 3rd gear rotates smoothly.**

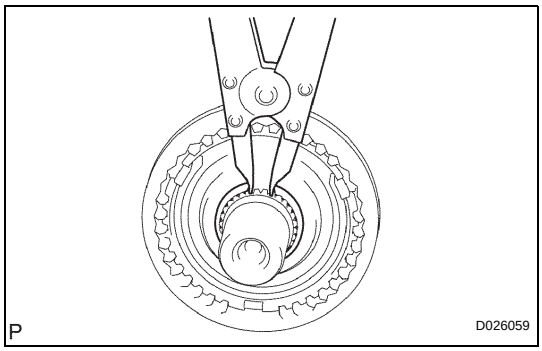

MT

(b) Select the correct clutch hub shaft snap ring so that the clearance between the transmission clutch hub No. 2 and shaft snap ring thrust is within the specified values. Then install it onto the output shaft.

Standard clearance:
0.1 mm or less

NOTICE:
Do not damage the sliding surface of the bearing.

Mark	Thickness mm (in.)
A	1.80 to 1.85 (0.0709 to 0.0728)
B	1.85 to 1.90 (0.0728 to 0.0748)
C	1.90 to 1.95 (0.0748 to 0.0768)
D	1.95 to 2.00 (0.0768 to 0.0787)
E	2.00 to 2.05 (0.0787 to 0.0807)
F	2.05 to 2.10 (0.0807 to 0.0827)
G	2.10 to 2.15 (0.0827 to 0.0846)

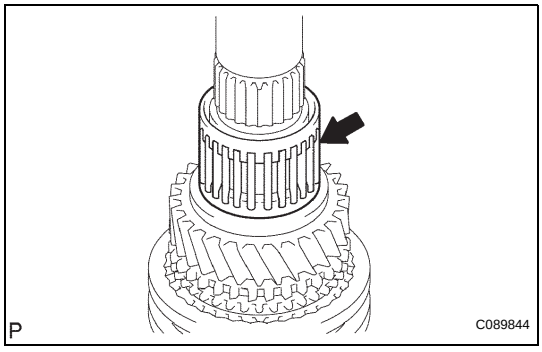

6. INSTALL 2ND GEAR NEEDLE ROLLER BEARING

(a) Apply gear oil to the 2nd gear needle roller bearing, and install it onto the output shaft.

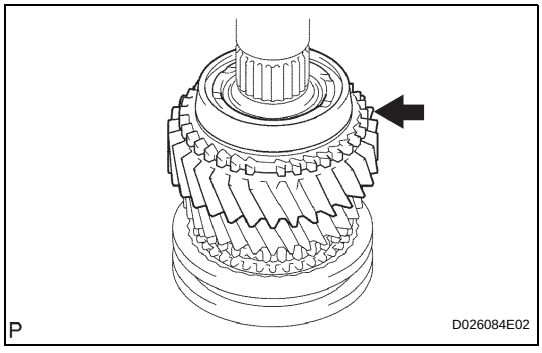

7. INSTALL 2ND GEAR

(a) Apply gear oil to the 2nd gear, and install it onto the output shaft.

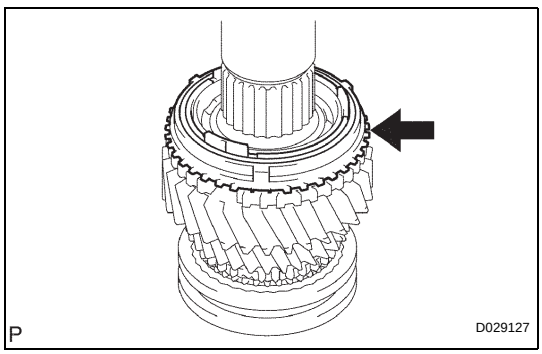

8. INSTALL NO. 1 SYNCHRONIZER RING SET

(a) Apply gear oil to the synchronizer ring set No. 1, and install it onto the 2nd gear.

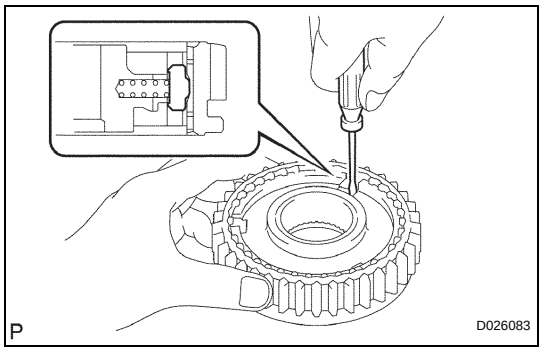

9. INSTALL REVERSE GEAR

(a) Using a screwdriver, install the 3 synchromesh shifting key springs and 3 synchromesh shifting key No.1 onto the transmission clutch hub No. 1.

(b) Apply gear oil to the revers gear, and install it onto the transmission clutch hub No. 1

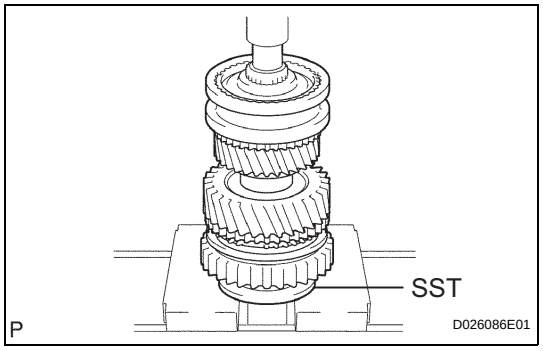

10. INSTALL NO. 1 TRANSMISSION CLUTCH HUB

(a) Using SST and a press, install transmission clutch hub No. 1 onto the output shaft.

SST 09316-60011 (09316-00041)

NOTICE:

- **Perform installation making sure that the synchronizer ring key No. 1 groove and synchro-mesh shifting key No. 1 are in place.**
- **Make sure that the 1st gear rotates smoothly.**

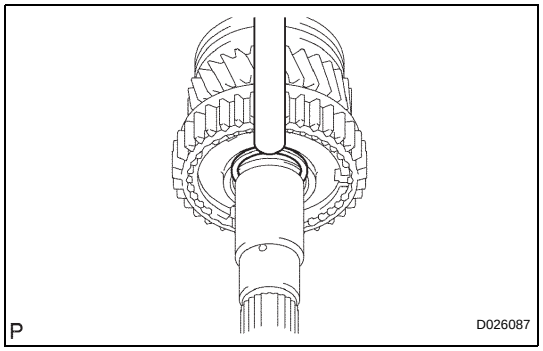

(b) Select the correct bearing shaft snap ring so that the clearance between the transmission clutch hub No. 1 and bearing shaft snap ring is within the specified values. Then install it onto the output shaft.

Standard clearance:

0.1mm (0.039 in.) or less

NOTICE:

Do not damage the sliding surface of the bearing.

Mark	Thickness mm (in.)
A	2.30 to 2.35 (0.0906 to 0.0925)
B	2.35 to 2.40 (0.0925 to 0.0945)
C	2.40 to 2.45 (0.0945 to 0.0965)
D	2.45 to 2.50 (0.0965 to 0.0984)
E	2.50 to 2.55 (0.0984 to 0.1004)
F	2.55 to 2.60 (0.1004 to 0.1024)
G	2.60 to 2.65 (0.1024 to 0.1043)

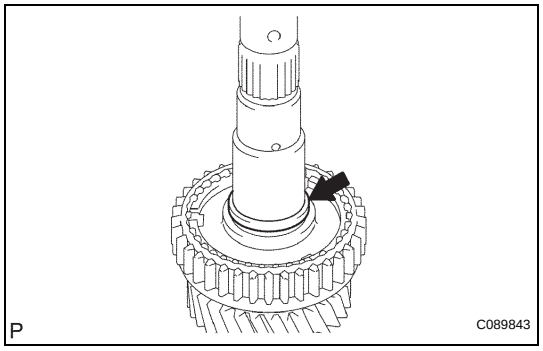

11. INSTALL 1ST GEAR BEARING SPACER

(a) Apply gear oil to the 1st gear bearing spacer, and install it onto the output shaft.

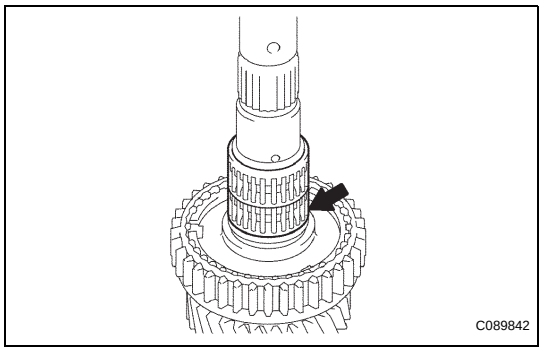

12. INSTALL 1ST GEAR NEEDLE ROLLER BEARING

(a) Apply gear oil to the 1st gear needle roller bearing, and install it onto the output shaft.

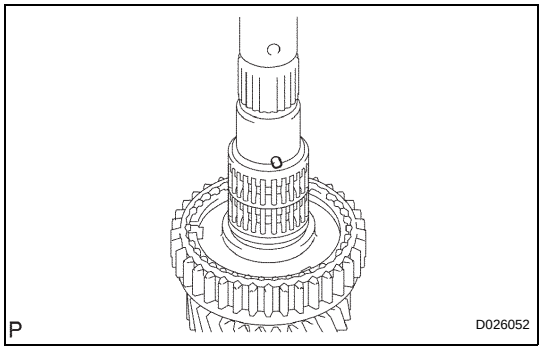

13. INSTALL 1ST GEAR THRUST WASHER PIN OR BALL

(a) Install the 1st gear thrust washer pin onto the output shaft.

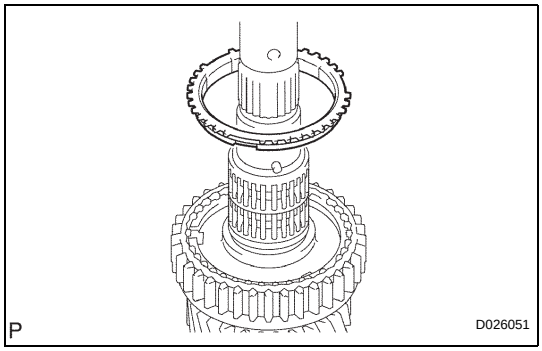

14. INSTALL NO. 1 SYNCHRONIZER RING

(a) Apply gear oil to the synchronizer ring No. 1, and install it onto the output shaft.

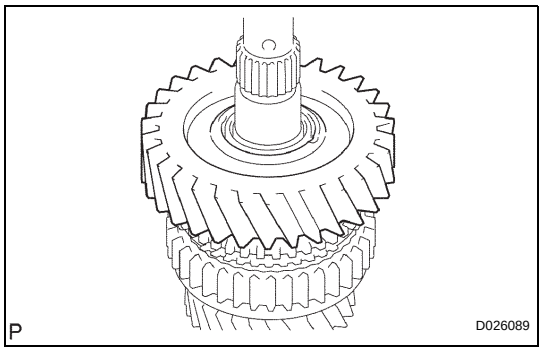

15. INSTALL 1ST GEAR

(a) Apply gear oil to the 1st gear, and install it onto the output shaft.

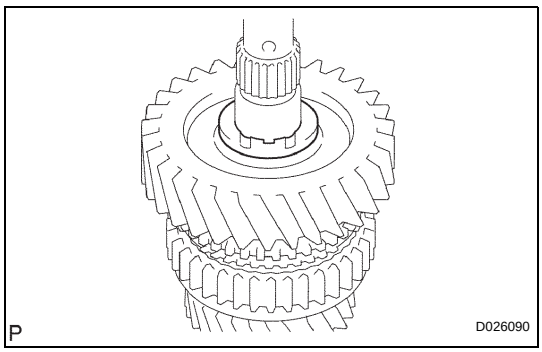

16. INSTALL 1ST GEAR THRUST WASHER

(a) Apply gear oil to the 1st gear thrust washer, and install it onto the output shaft.

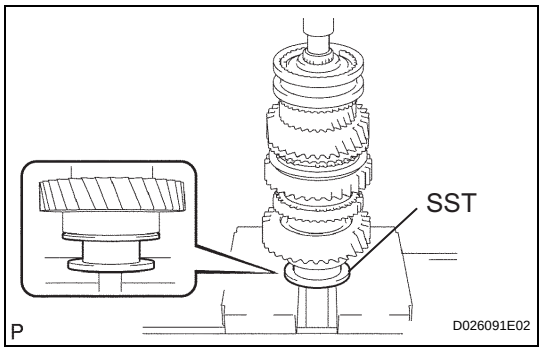

17. INSTALL OUTPUT SHAFT CENTER BEARING

(a) Using SST and a press, install a new output shaft center bearing onto the output shaft.

SST 09316-60011 (09316-00031)

NOTICE:

Install it with the snap ring groove of the bearing facing to the rear side.

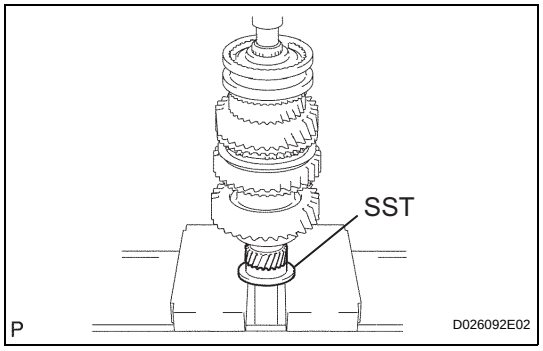

18. INSTALL 5TH GEAR

(a) Using SST and a press, install the 5th gear onto the output shaft.

SST 09316-60011 (09316-00031)

NOTICE:

- **Check that the 5th gear is fitted into the spline of the output shaft before installing.**
- **Face the convex part of the gear to the front side.**

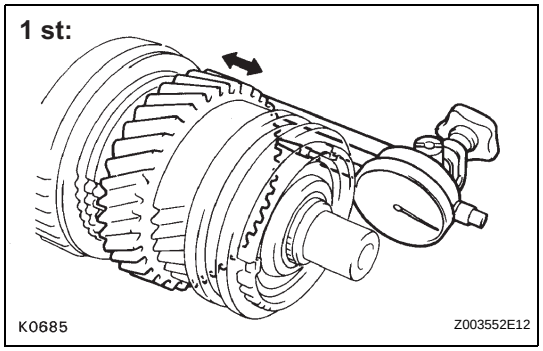

19. INSPECT 1ST GEAR THRUST CLEARANCE

(a) Using a dial indicator, measure the 1st gear thrust clearance.

Standard clearance:

0.20 to 0.45 mm (0.0079 to 0.0177 in.)

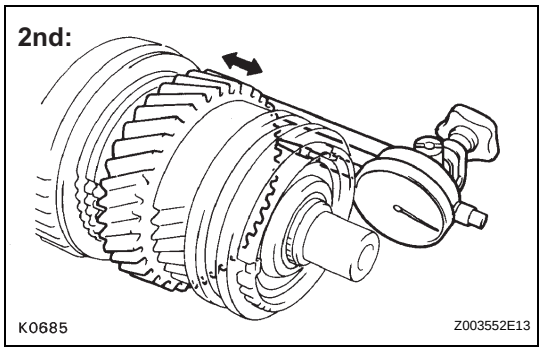

20. INSPECT 2ND GEAR THRUST CLEARANCE

(a) Using a dial indicator, measure the 2nd gear thrust clearance.

Standard clearance:

0.10 to 0.25 mm (0.0039 to 0.0098 in.)

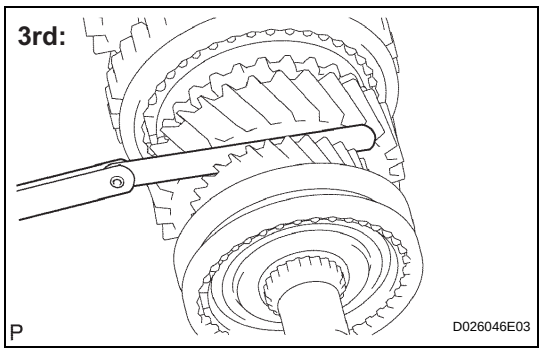

21. INSPECT 3RD GEAR THRUST CLEARANCE

(a) Using a feeler gauge, measure the 3rd gear thrust clearance.

Standard clearance:

0.10 to 0.25 mm (0.0039 to 0.0098 in.)

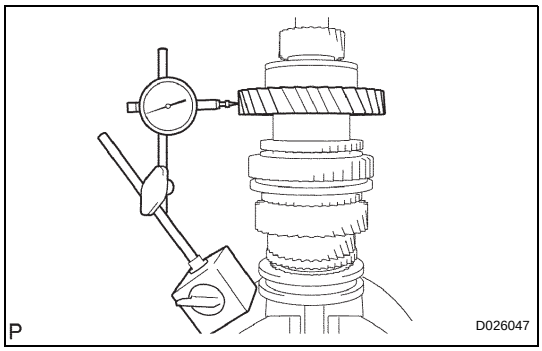

22. INSPECT 1ST GEAR RADIAL CLEARANCE

(a) Using a dial indicator, measure the 1st gear radial clearance.

Standard clearance:

0.020 to 0.073 mm (0.0008 to 0.0029 in)

If the clearance is not within the specified values, replace the 1st gear needle roller bearing with a new one.

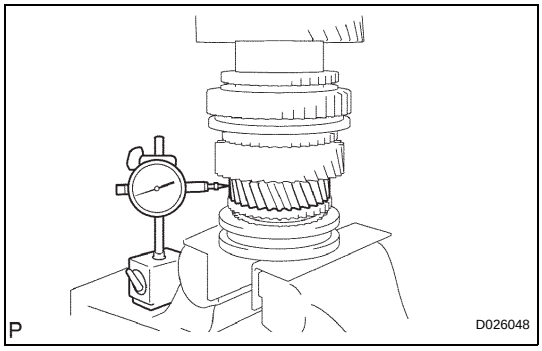

23. INSPECT 2ND GEAR RADIAL CLEARANCE

(a) Using a dial indicator, measure the 2nd gear radial clearance.

Standard clearance:

0.015 to 0.068 mm (0.0006 to 0.0027 in.)

If the clearance is not within the specified values, replace the 2nd gear needle roller bearing with a new one.

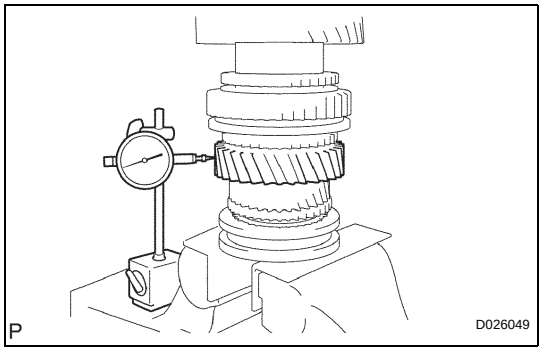

24. INSPECT 3RD GEAR RADIAL CLEARANCE

(a) Using a dial indicator, measure the 3rd gear radial clearance.

Standard clearance:

0.015 to 0.068 mm (0.0006 to 0.0027 in.)

If the clearance is not within the specified values, replace the 3rd gear needle roller bearing with a new one.

COUNTER GEAR AND REVERSE IDLER GEAR

COMPONENTS

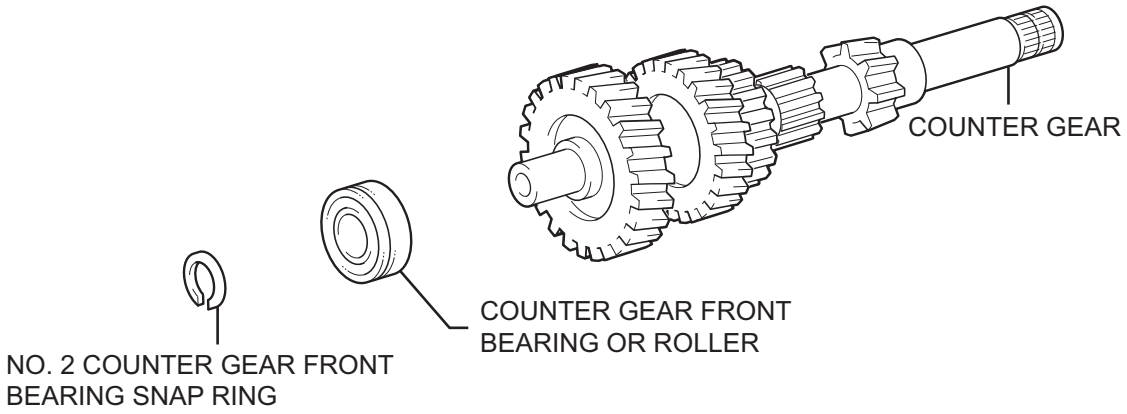

P

C115299E03

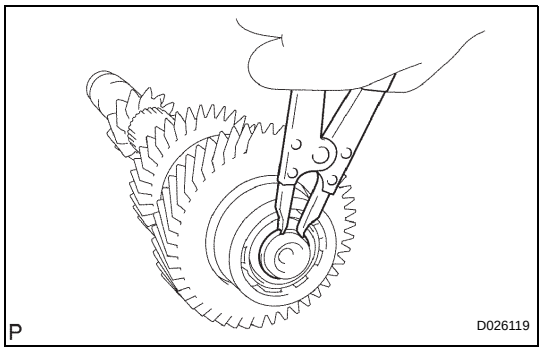

DISASSEMBLY

1. REMOVE NO. 2 COUNTER GEAR FRONT BEARING SNAP RING

(a) Using a snap ring expander, remove the No. 2 counter gear front bearing snap ring from the counter gear.

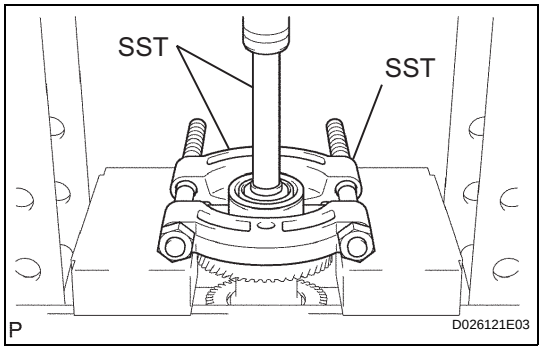

2. REMOVE COUNTER GEAR FRONT BEARING OR ROLLER

(a) Using SST and a press, remove the counter gear front bearing from the counter gear.

SST 09950-00020, 09950-60010 (09951-00220), 09950-70010 (09951-07100)

INSPECTION

1. INSPECT COUNTER GEAR

(a) Using a micrometer, measure the outer diameter of the counter gear as shown in the diagram.

Standard diameter:
29.984 to 30.000 mm(1.1805 to 1.1811 in.)
Minimum diameter:
29.984 mm (1.1805 in.)

If the outer diameter is less than the minimum, replace the counter gear with a new one.

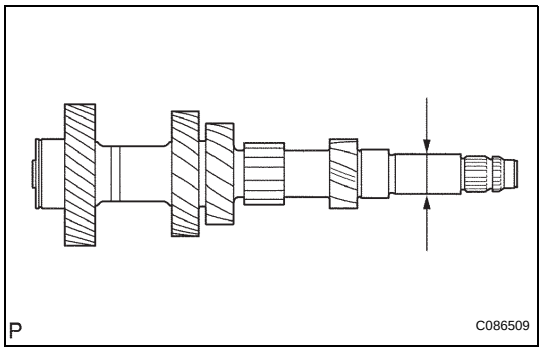

REASSEMBLY

1. INSTALL COUNTER GEAR FRONT BEARING OR ROLLER

(a) Using SST and a press, install the counter gear front bearing onto the counter gear.

SST 09515-10010

Install it so that the snap ring groove of the bearing faces to the front side.

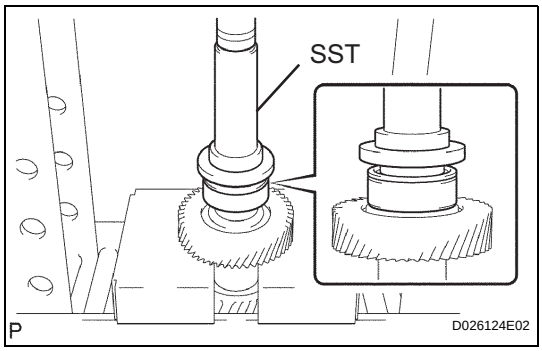

2. INSTALL NO. 2 COUNTER GEAR FRONT BEARING SNAP RING

(a) Select the correct counter gear front bearing No. 2 snap ring so that the clearance between the counter gear and No. 2 counter gear front bearing snap ring No. 2 is within the specified values. Using a brass bar and a hammer, install it onto the counter gear.

Standard clearance:
0.1 mm (0.0039 in.) or less

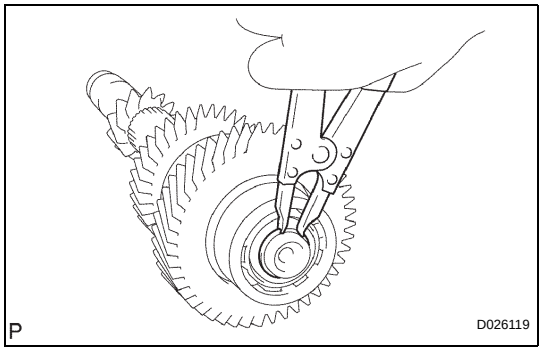

Mark	Thickness mm (in.)
A	2.05 to 2.10 (0.0807 to 0.0827)

Mark	Thickness mm (in.)
B	2.10 to 2.15 (0.0827 to 0.0846)
C	2.15 to 2.20 (0.0846 to 0.0866)
D	2.20 to 2.25 (0.0866 to 0.0886)
E	2.25 to 2.30 (0.0886 to 0.0906)
F	2.30 to 2.35 (0.0906 to 0.0925)

MANUAL TRANSMISSION SYSTEM

PROBLEM SYMPTOMS TABLE

Use the table below to help determine the cause of the problems. The numbers indicate the ranked order of probability of each of the possible causes. Check each part in the order suggested. If necessary, replace the applicable parts.

Symptom	Suspected area	See page
Abnormal noise	1. Oil level (Low)	MT-2
	2. Oil (Wrong)	MT-2
	3. Gears (Worn or damaged)	-
	4. Bearings (Worn or damaged)	-
Oil leakage	1. Oil level (High)	MT-2
	2. Gasket (Damaged)	-
	3. Oil seal (Worn or damaged)	-
	4. O-ing (Worn or damaged)	-
Hard shifting or will not shift	1. Synchronizer ring (Worn or damaged)	-
	2. Shift key spring (Damaged)	-
Jumps out of gear	1. Locking ball spring (Damaged)	-
	2. Shift fork (Worn)	-
	3. Gears (Worn or damaged)	-
	4. Bearings (Worn or damaged)	-

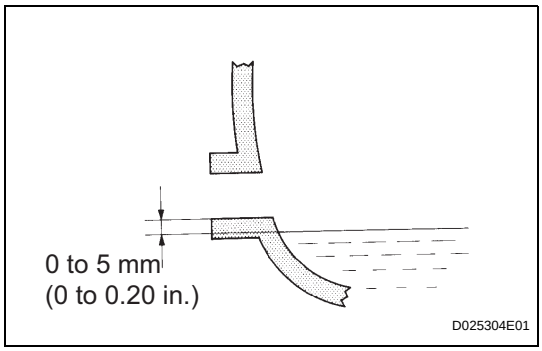

MT

MANUAL TRANSMISSION OIL

ON-VEHICLE INSPECTION

1. INSPECT TRANSMISSION OIL

(a) Park the vehicle in a level place.

(b) Remove the transmission filler plug and gasket.

(c) Check that the oil surface is within 5 mm (0.20 in.) of the lowest point of the transmission filler plug opening.

NOTICE:

- **Problems may occur when the oil level is too high or low.**
- **After replacing the oil, drive the vehicle and check the oil level again.**

(d) Check for oil leakage when the oil level is low.

(e) Install the transmission filler plug and a new gasket.

Torque: 37 N*m (377 kgf*cm, 27 ft.*lbf)

TRANSFER ADAPTOR OIL SEAL

REMOVAL

1. DISCONNECT CABLE FROM NEGATIVE BATTERY TERMINAL
2. REMOVE CONSOLE UPPER REAR PANEL SUB-ASSEMBLY (for Separate Seat Type) (See page IP-9)
3. REMOVE REAR CONSOLE BOX ASSEMBLY (for Separate Seat Type) (See page IP-10)
4. REMOVE FRONT CONSOLE BOX (for Separate Seat Type) (See page IP-11)
5. REMOVE FRONT CONSOLE BOX (for Bench Seat Type) (See page IP-11)
6. REMOVE SHIFT LEVER BOOT ASSEMBLY (See page MT-9)
7. REMOVE FLOOR SHIFT SHIFT LEVER ASSEMBLY (See page MT-9)
8. REMOVE NO. 2 ENGINE UNDER COVER SUB-ASSEMBLY (See page MT-9)
9. DRAIN MANUAL TRANSMISSION OIL (See page MT-9)
10. REMOVE FRONT EXHAUST PIPE ASSEMBLY (See page EX-2)
11. REMOVE FRONT PROPELLER SHAFT ASSEMBLY
12. REMOVE PROPELLER WITH CENTER BEARING SHAFT ASSEMBLY (for Access Cab)
13. REMOVE PROPELLER SHAFT ASSEMBLY (for Regular Cab)
14. REMOVE MANIFOLD STAY (See page MT-9)
15. REMOVE STARTER ASSEMBLY (See page ST-5)
16. REMOVE CLUTCH RELEASE CYLINDER ASSEMBLY (See page MT-10)
17. REMOVE NO. 3 FRAME CROSSMEMBER SUB-ASSEMBLY (See page MT-10)
18. REMOVE NO. 1 ENGINE MOUNTING INSULATOR REAR (See page MT-10)
19. DISCONNECT WIRE HARNESS (See page MT-11)
20. REMOVE MANUAL TRANSMISSION WITH TRANSFER (See page MT-11)
21. REMOVE TRANSFER ASSEMBLY (See page TF-14)

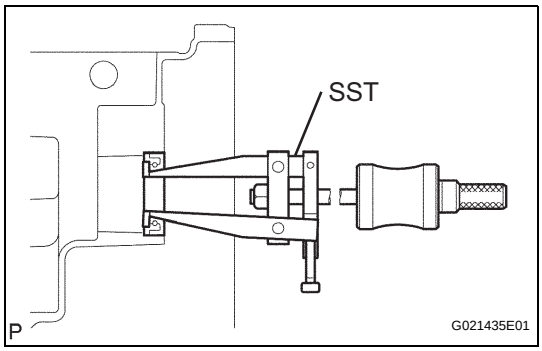

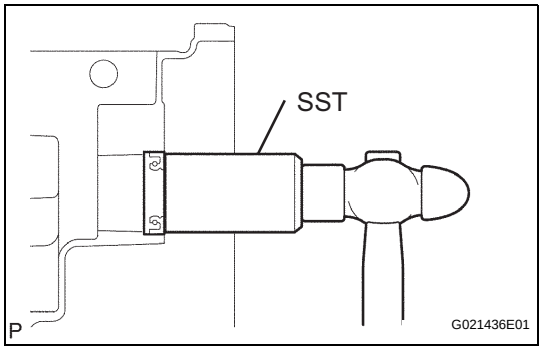

22. REMOVE TRANSFER ADAPTER OIL SEAL

(a) Using SST, remove the transfer adapter oil seal.

SST 09308-00010

NOTICE:

Do not damage the oil seal fitted surface of the transfer adapter.

MT

INSTALLATION

1. INSTALL TRANSFER ADAPTER OIL SEAL

(a) Using SST and a hammer, tap in a new oil seal.

SST 09223-00010

Drive in depth:

45.4 to 46.4 mm (1.787 to 1.827 in.)

NOTICE:

Be careful not to damage the oil seal.

(b) Coat the lip of the oil seal with MP grease.

2. INSTALL TRANSFER ASSEMBLY (See page TF-38)

3. INSTALL MANUAL TRANSMISSION WITH TRANSFER (See page MT-11)

4. CONNECT WIRE HARNESS (See page MT-11)

5. INSTALL NO. 1 ENGINE MOUNTING INSULATOR REAR (See page MT-11)

6. INSTALL NO. 3 FRAME CROSSMEMBER SUB-ASSEMBLY (See page MT-12)

7. INSTALL CLUTCH RELEASE CYLINDER ASSEMBLY (See page MT-12)

8. INSTALL STARTER ASSEMBLY (See page ST-10)

9. INSTALL MANIFOLD STAY (See page MT-12)

10. INSTALL PROPELLER WITH CENTER BEARING SHAFT ASSEMBLY (for Access Cab)

11. INSTALL PROPELLER SHAFT ASSEMBLY (for Regular Cab)

12. INSTALL FRONT PROPELLER SHAFT ASSEMBLY

13. INSTALL FRONT EXHAUST PIPE ASSEMBLY (See page EX-2)

14. ADD MANUAL TRANSMISSION OIL

15. ADJUST MANUAL TRANSMISSION OIL (See page MT-2)

16. INSTALL NO.2 ENGINE UNDER COVER SUB-ASSEMBLY (See page MT-13)

17. INSTALL FLOOR SHIFT SHIFT LEVER ASSEMBLY (See page MT-13)

18. **INSTALL SHIFT LEVER BOOT ASSEMBLY (See page MT-13)**
19. **INSTALL FRONT CONSOLE BOX (for Bench Seat Type) (See page IP-22)**
20. **INSTALL FRONT CONSOLE BOX (for Separate Seat Type) (See page IP-23)**
21. **INSTALL REAR CONSOLE BOX ASSEMBLY (for Separate Seat Type) (See page IP-24)**
22. **INSTALL CONSOLE UPPER REAR PANEL SUB-ASSEMBLY (for Separate Seat Type) (See page IP-25)**
23. **CONNECT CABLE TO NEGATIVE BATTERY TERMINAL**
    Torque: 3.9 N*m (40 kgf*cm, 35 in.*lbf)
24. **CHECK FOR MANUAL TRANSMISSION OIL LEAKAGE**

MANUAL TRANSMISSION ASSEMBLY

COMPONENTS

BENCH SEAT:

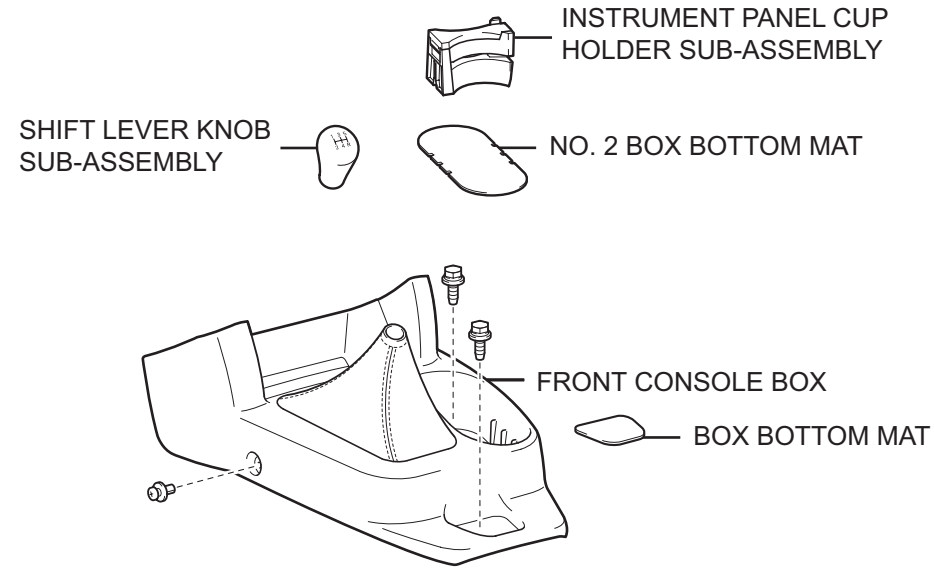

SEPARATE SEAT:

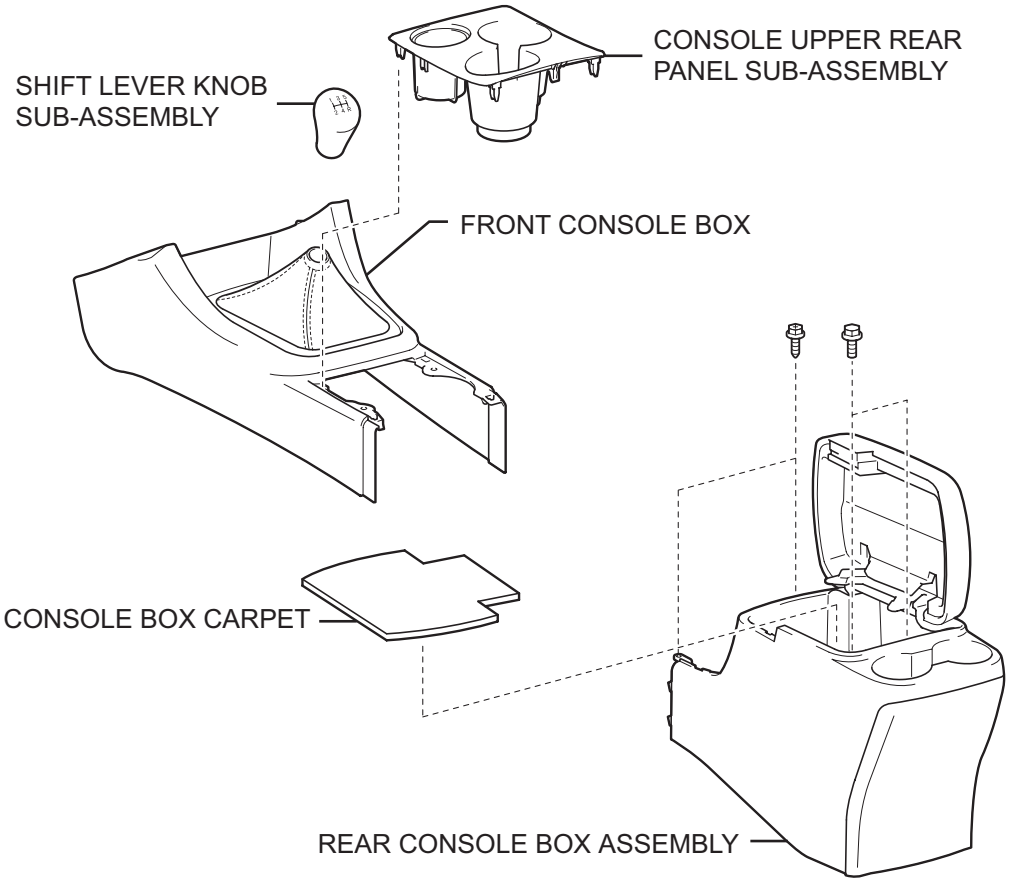

P

C114133E04

MT

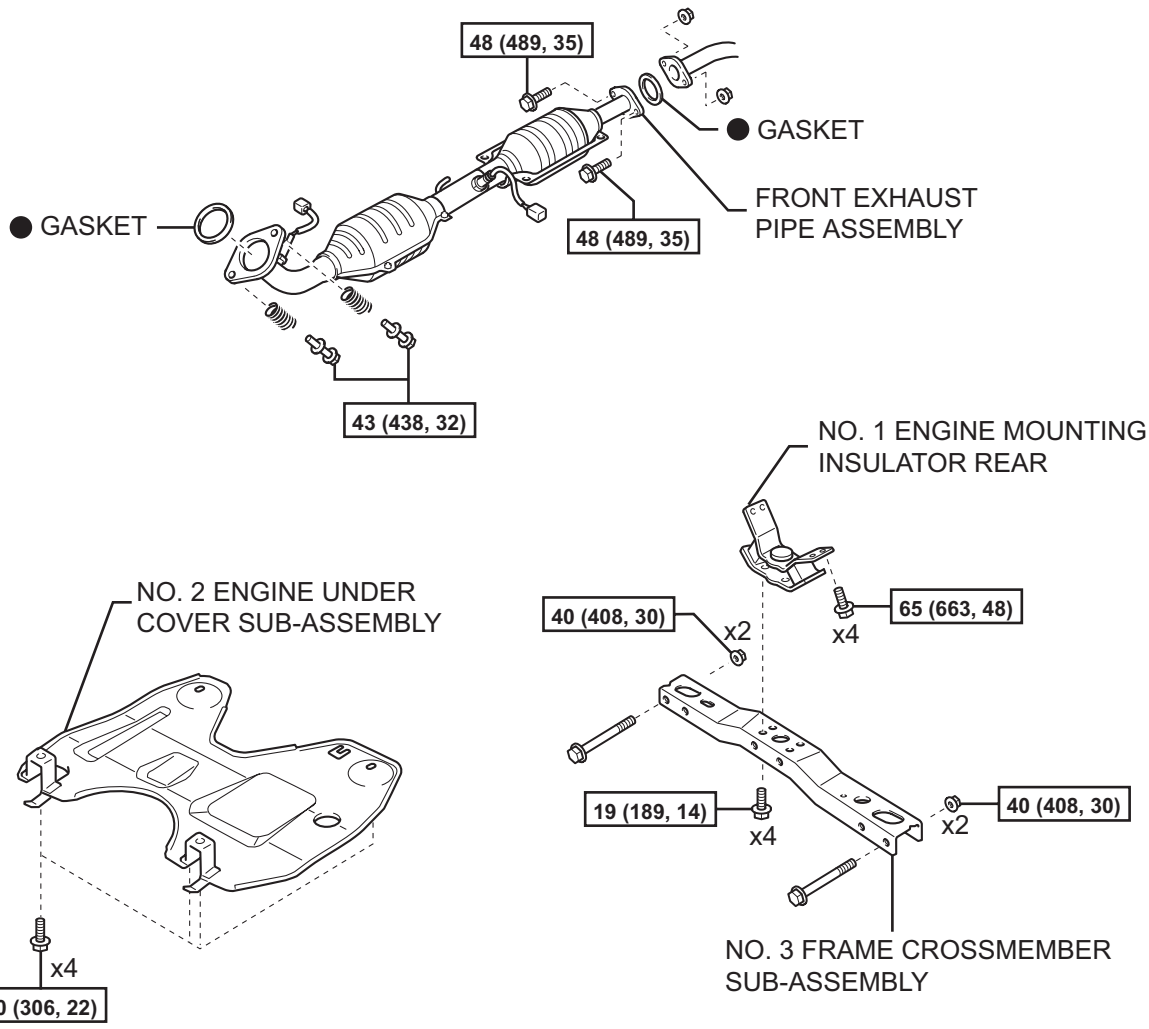

N*m (kgf*cm, ft.*lbf) : Specified torque

● Non-reusable part

Y

C114080E04

MT

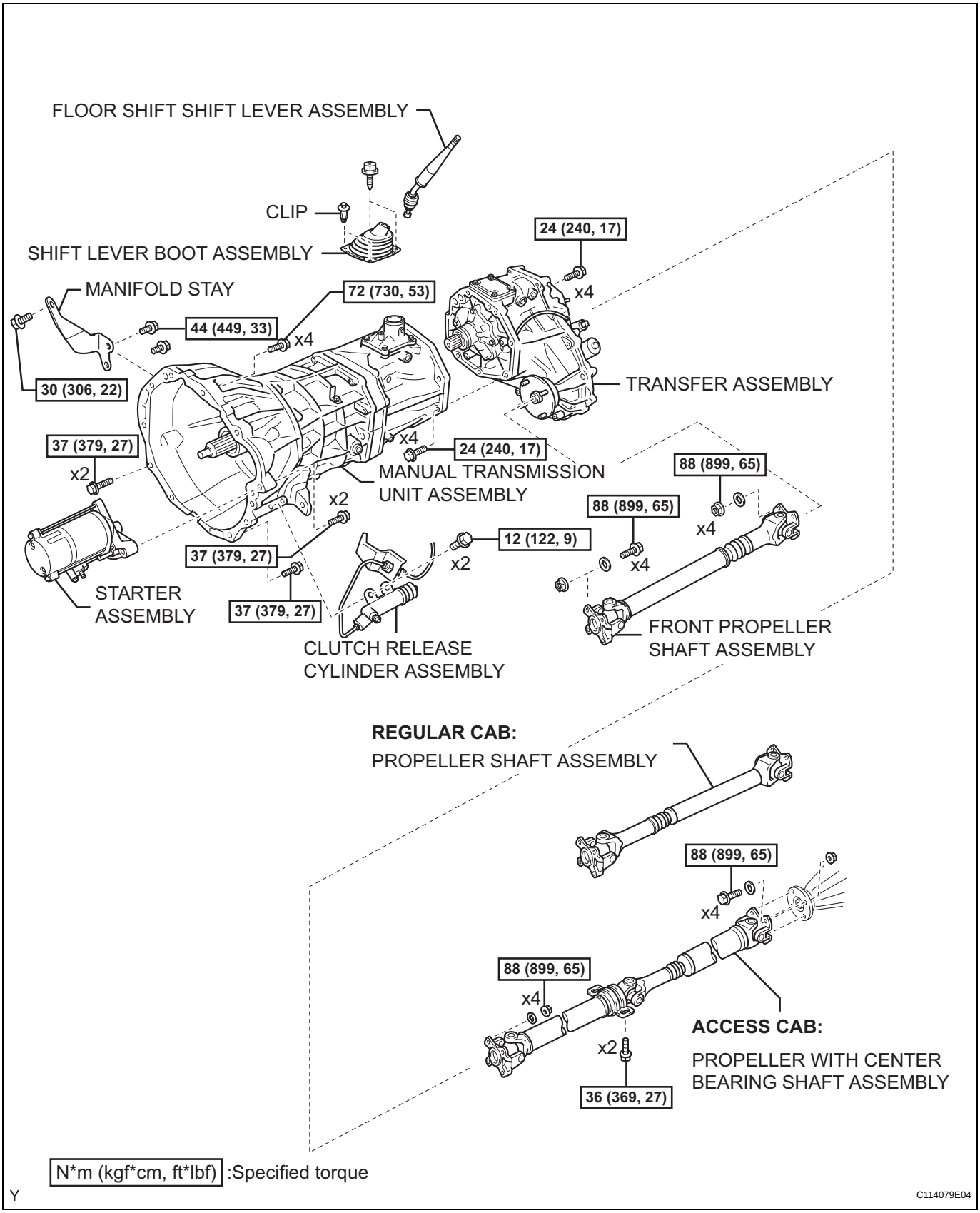
FLOOR SHIFT SHIFT LEVER ASSEMBLY
CLIP
SHIFT LEVER BOOT ASSEMBLY
MANIFOLD STAY
72 (730, 53)
44 (449, 33)
x4
30 (306, 22)
24 (240, 17)
x4
TRANSFER ASSEMBLY
37 (379, 27)
x2
x4
24 (240, 17)
MANUAL TRANSMISSION
UNIT ASSEMBLY
x2
88 (899, 65)
88 (899, 65)
x4
x4
12 (122, 9)
x2
37 (379, 27)
37 (379, 27)
STARTER
ASSEMBLY
CLUTCH RELEASE
CYLINDER ASSEMBLY
FRONT PROPELLER
SHAFT ASSEMBLY
REGULAR CAB:
PROPELLER SHAFT ASSEMBLY
88 (899, 65)
x4
88 (899, 65)
x4
ACCESS CAB:
PROPELLER WITH CENTER
BEARING SHAFT ASSEMBLY
x2
36 (369, 27)
N*m (kgf*cm, ft*lbf) :Specified torque
Y
C114079E04

MANUAL TRANSMISSION UNIT

COMPONENTS

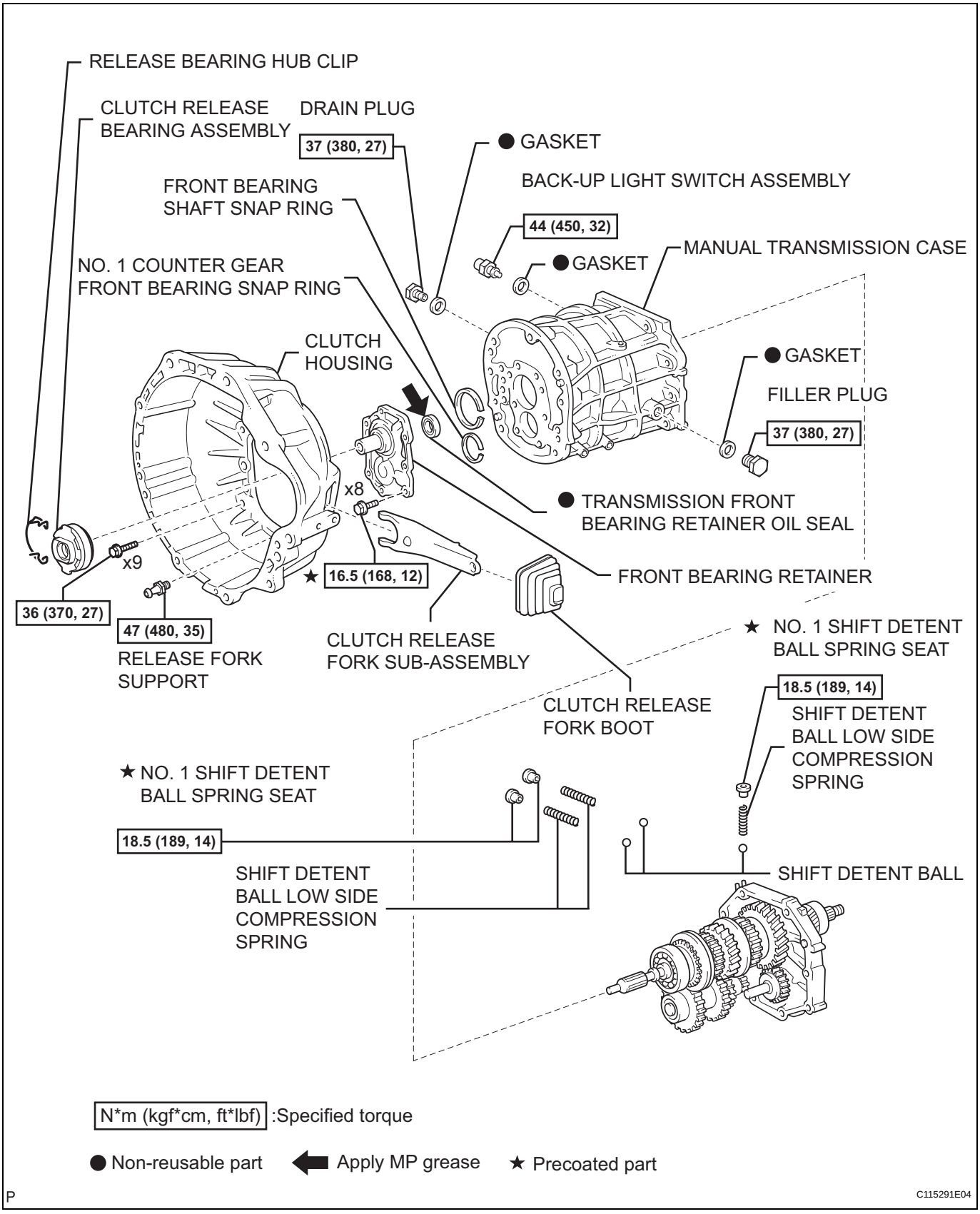

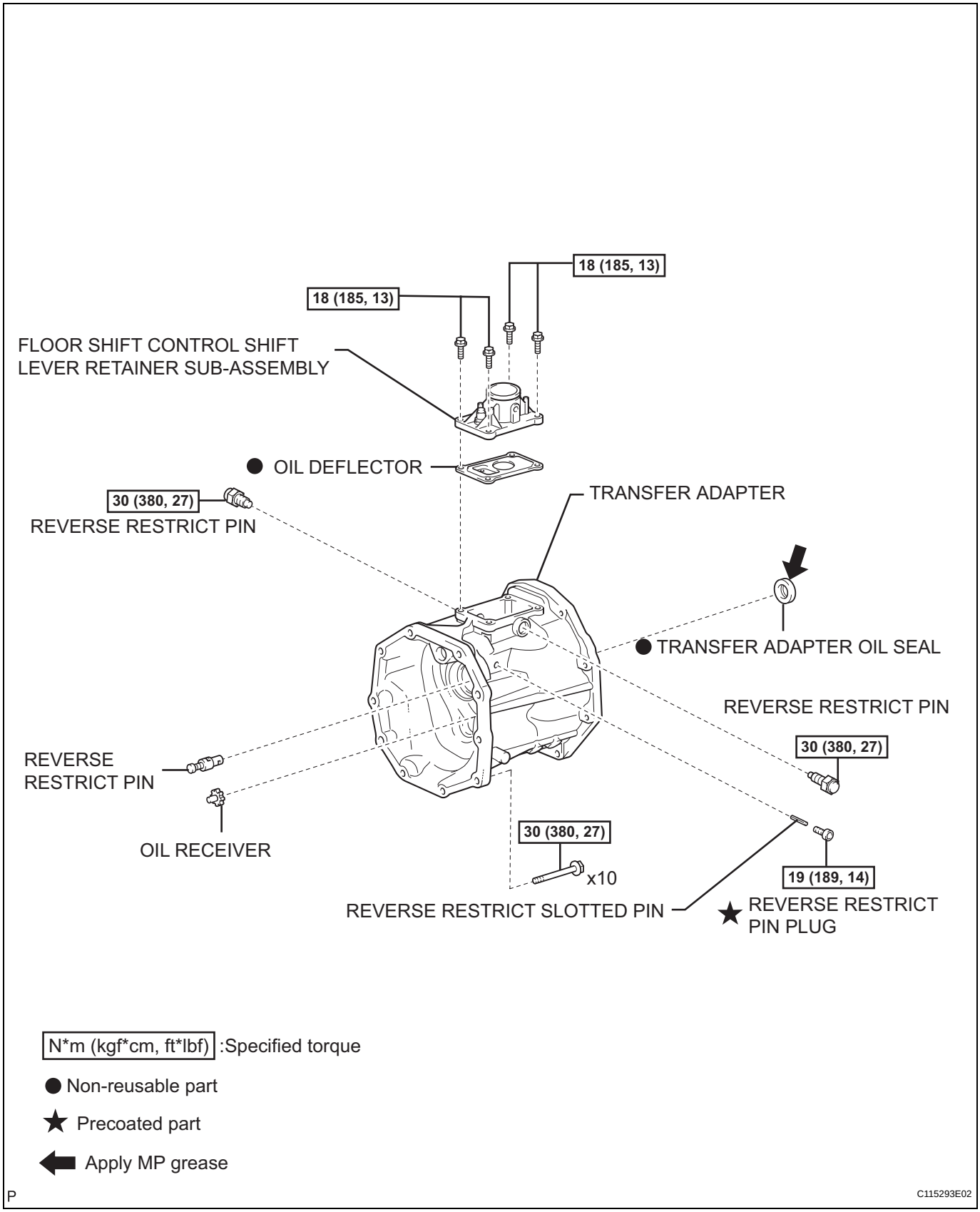
18 (185, 13)
18 (185, 13)
FLOOR SHIFT CONTROL SHIFT LEVER RETAINER SUB-ASSEMBLY
● OIL DEFLECTOR
30 (380, 27)
REVERSE RESTRICT PIN
TRANSFER ADAPTER
● TRANSFER ADAPTER OIL SEAL
REVERSE RESTRICT PIN
30 (380, 27)
REVERSE RESTRICT PIN
OIL RECEIVER
30 (380, 27)
x10
19 (189, 14)
REVERSE RESTRICT SLOTTED PIN
★ REVERSE RESTRICT PIN PLUG
N*m (kgf*cm, ft*lbf) :Specified torque
● Non-reusable part
★ Precoated part
Apply MP grease
P
C115293E02

MT

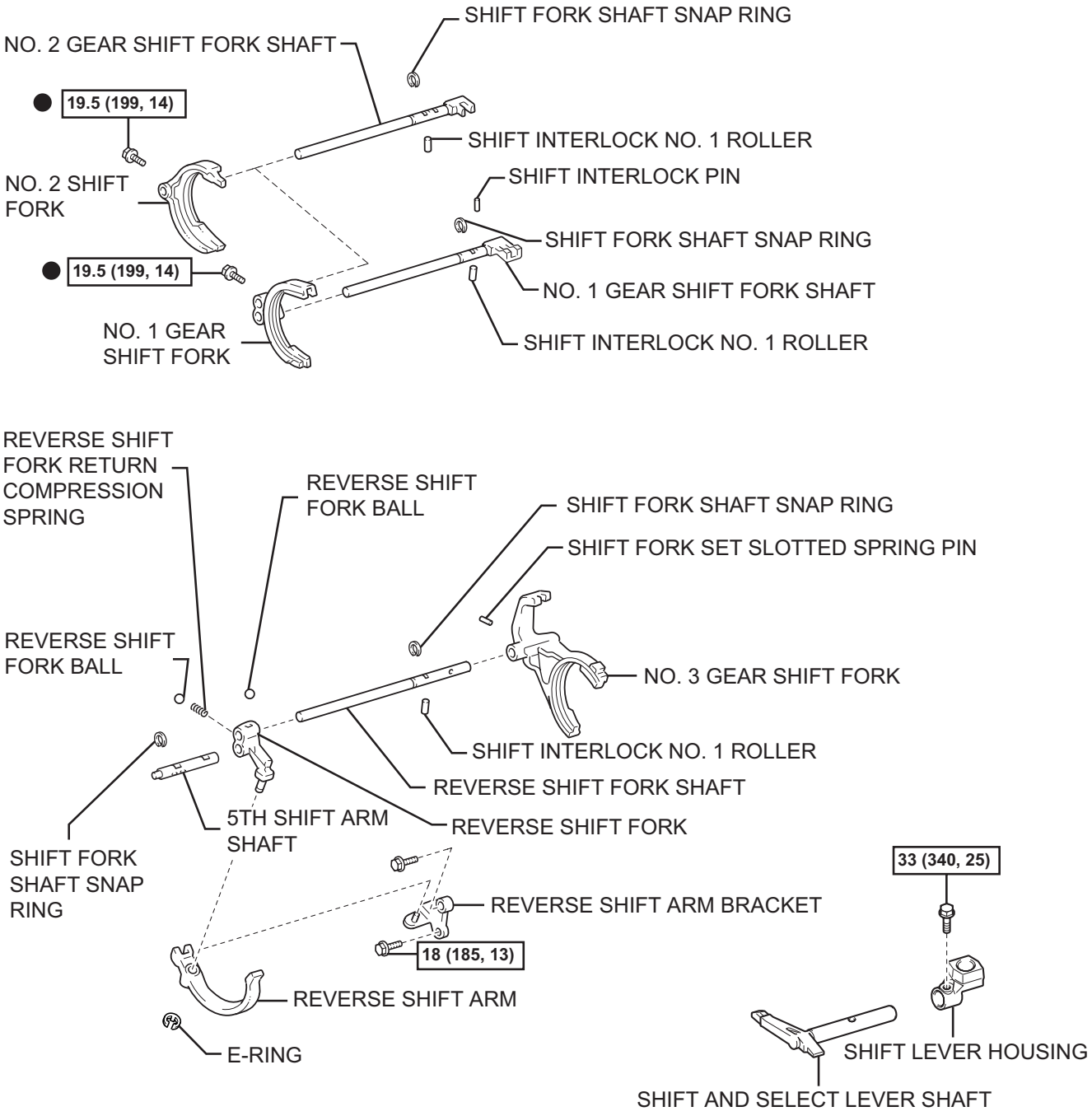

N*m (kgf*cm, ft.*lbf) : Specified torque

● Non-reusable part

P

C115295E02

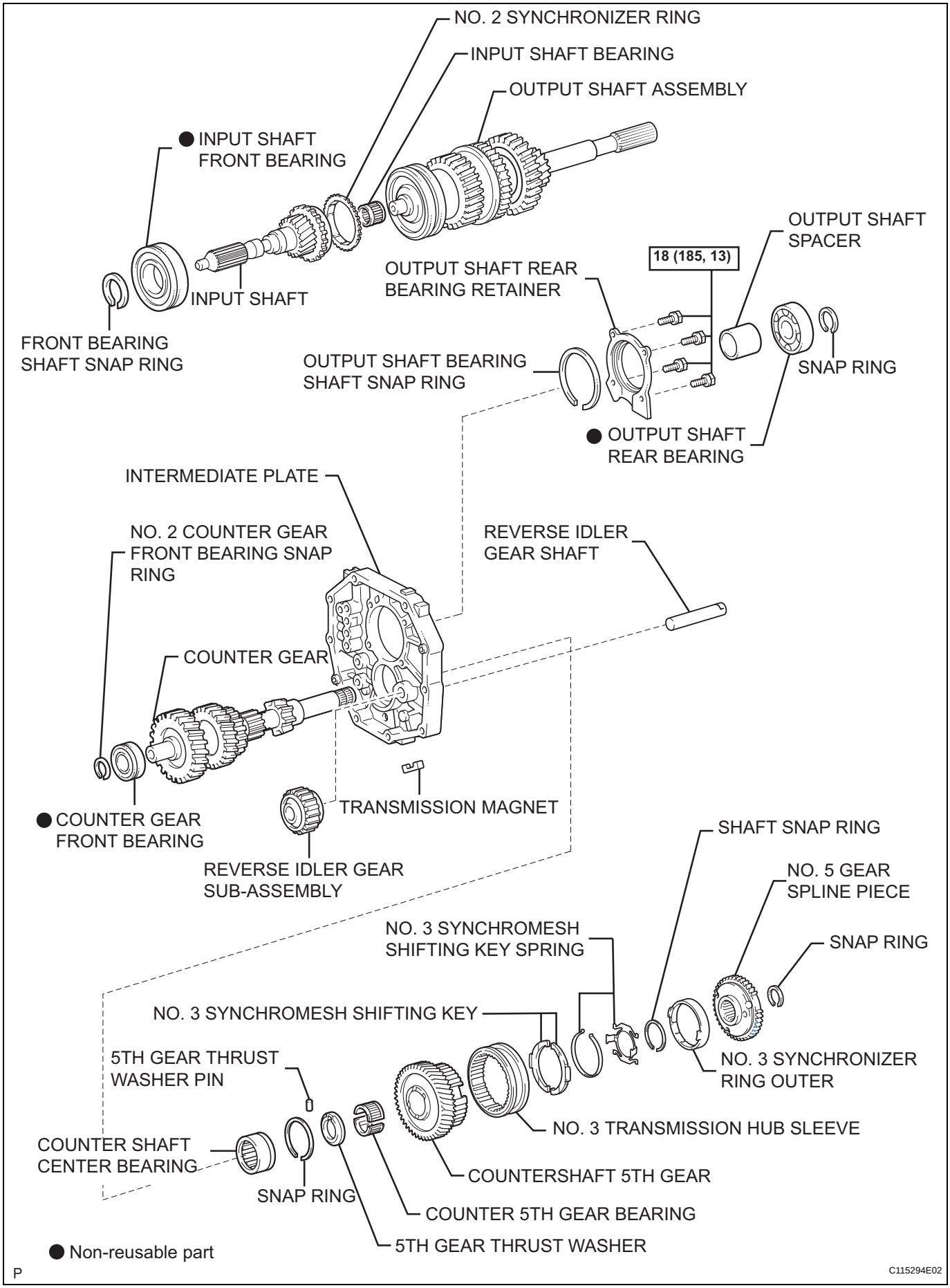
NO. 2 SYNCHRONIZER RING
INPUT SHAFT BEARING
OUTPUT SHAFT ASSEMBLY
● INPUT SHAFT FRONT BEARING
INPUT SHAFT
FRONT BEARING SHAFT SNAP RING
OUTPUT SHAFT REAR BEARING RETAINER
18 (185, 13)
OUTPUT SHAFT SPACER
OUTPUT SHAFT BEARING SHAFT SNAP RING
SNAP RING
● OUTPUT SHAFT REAR BEARING
INTERMEDIATE PLATE
NO. 2 COUNTER GEAR FRONT BEARING SNAP RING
REVERSE IDLER GEAR SHAFT
COUNTER GEAR
● COUNTER GEAR FRONT BEARING
TRANSMISSION MAGNET
REVERSE IDLER GEAR SUB-ASSEMBLY
SHAFT SNAP RING
NO. 5 GEAR SPLINE PIECE
NO. 3 SYNCHROMESH SHIFTING KEY SPRING
SNAP RING
NO. 3 SYNCHROMESH SHIFTING KEY
5TH GEAR THRUST WASHER PIN
NO. 3 SYNCHRONIZER RING OUTER
NO. 3 TRANSMISSION HUB SLEEVE
COUNTER SHAFT CENTER BEARING
COUNTERSHAFT 5TH GEAR
SNAP RING
COUNTER 5TH GEAR BEARING
5TH GEAR THRUST WASHER
● Non-reusable part
P
C115294E02

DISASSEMBLY

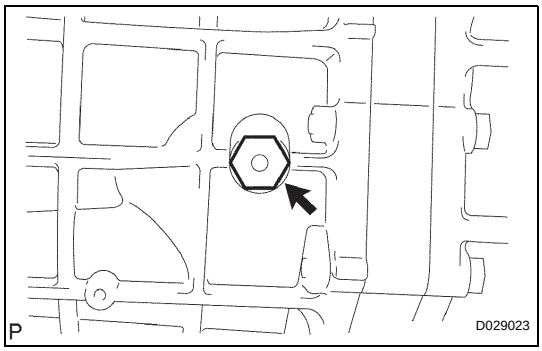

1. REMOVE MANUAL TRANSMISSION FILLER PLUG

(a) Remove the transmission filler plug and gasket from the transmission case.

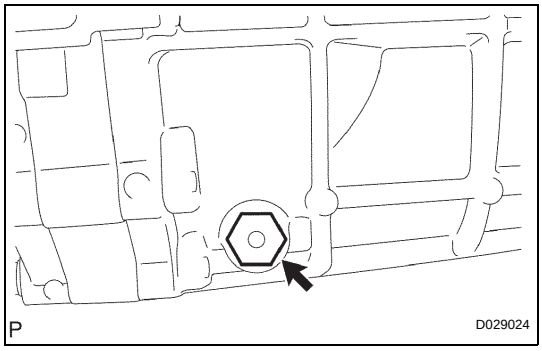

2. REMOVE DRAIN PLUG SUB-ASSEMBLY

(a) Remove the transmission drain plug and gasket from the transmission case.

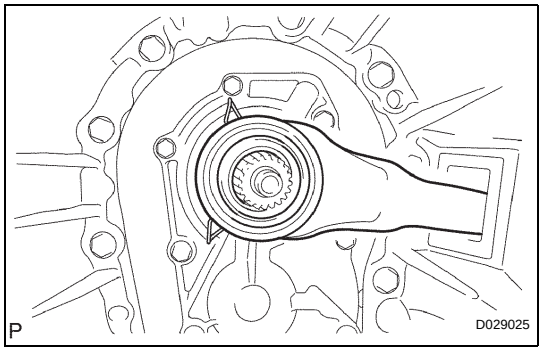

3. REMOVE CLUTCH RELEASE FORK SUB-ASSEMBLY

(a) Remove the clutch release fork and clutch release bearing from the clutch housing.

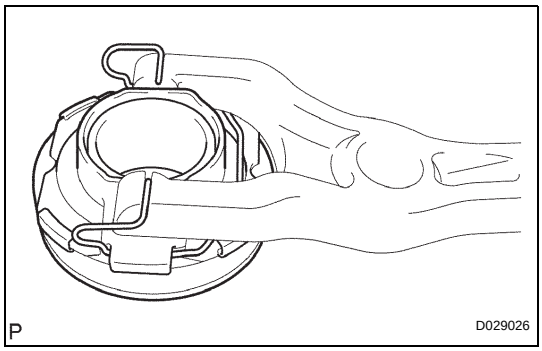

4. REMOVE CLUTCH RELEASE BEARING ASSEMBLY

(a) Remove the release bearing hub clip, and then remove the clutch release bearing from the clutch release fork.

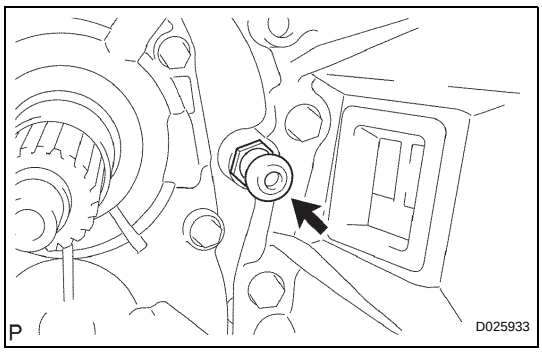

5. REMOVE RELEASE FORK SUPPORT

(a) Remove the release fork support from the clutch housing.

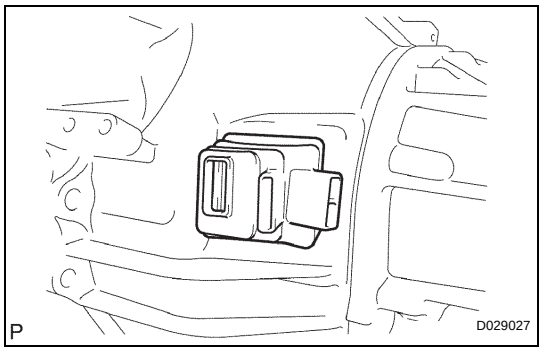

6. REMOVE CLUTCH RELEASE FORK BOOT

(a) Remove the clutch release fork boot from the clutch housing.

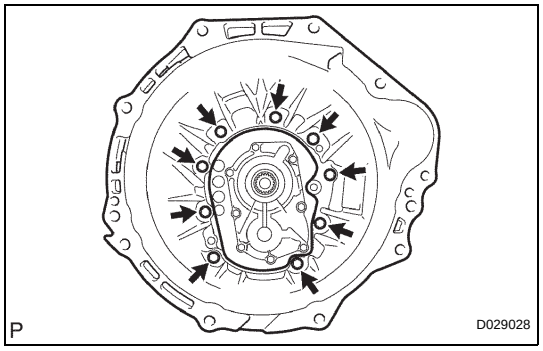

7. REMOVE CLUTCH HOUSING

(a) Remove the 9 bolts.

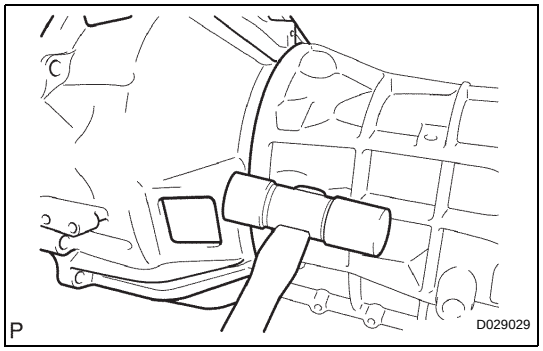

(b) Using a plastic hammer, remove the clutch housing from the transmission case.

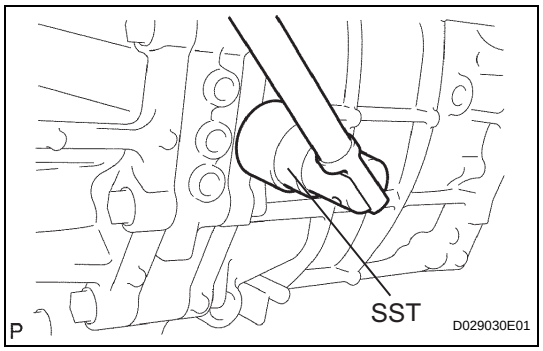

8. REMOVE BACK-UP LIGHT SWITCH ASSEMBLY

(a) Using SST, remove the back-up light switch assembly and the gasket from the transmission case.

SST 09817-16011

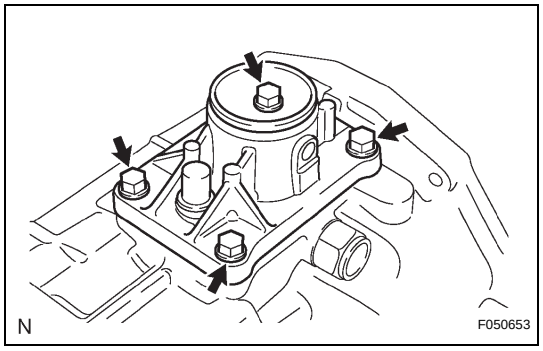

9. REMOVE FLOOR SHIFT CONTROL SHIFT LEVER RETAINER SUB-ASSEMBLY

(a) Remove the 4 bolts.

(b) Remove the floor shift control shift lever retainer from the transfer adapter.

(c) Remove the oil deflector from the transfer adapter.

MT

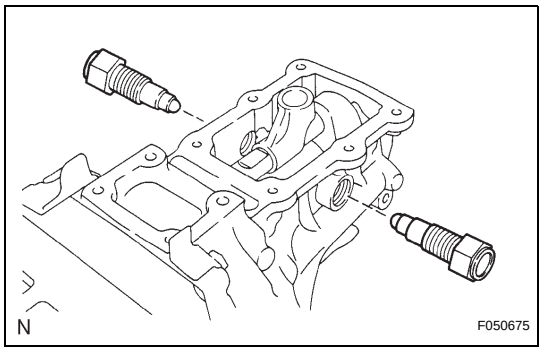

10. REMOVE REVERSE RESTRICT PIN

(a) Remove the 2 reverse restrict pins from the extension housing or transfer adapter.

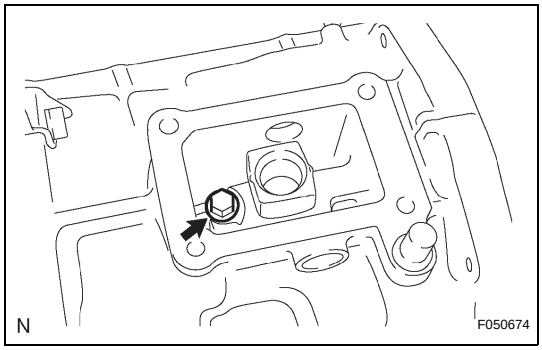

11. REMOVE TRANSFER ADAPTER

(a) Remove the shift lever housing set bolt.

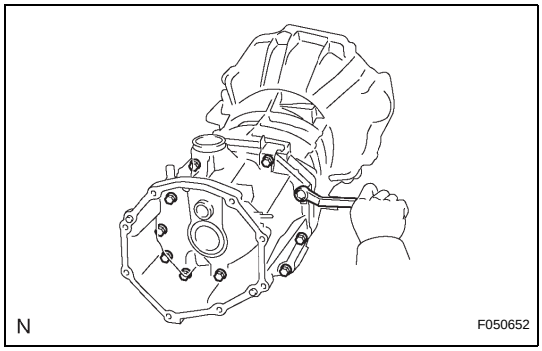

(b) Remove the 10 bolts.

(c) Using a plastic hammer, remove the adapter, shift lever housing and shift and select lever from the transmission case.

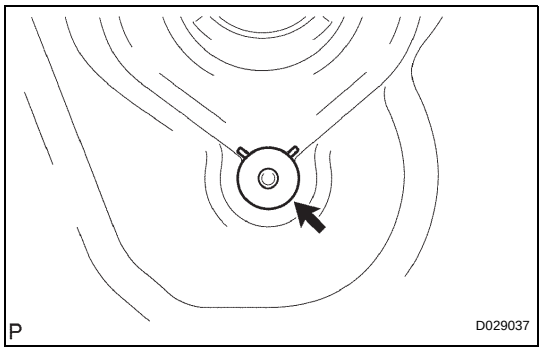

12. REMOVE OIL RECEIVER

(a) Remove the oil receiver from the transfer adapter.

13. REMOVE REVERSE RESTRICT PIN ASSEMBLY

(a) Using a "Torx" socket wrench T40, remove the reverse restrict pin plug from the transfer adapter.

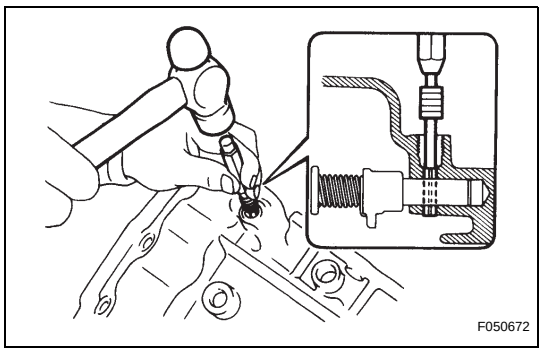

(b) Using a pin punch (5 mm) and a hammer, remove the reverse restrict pin slotted from the transfer adapter or extension housing.

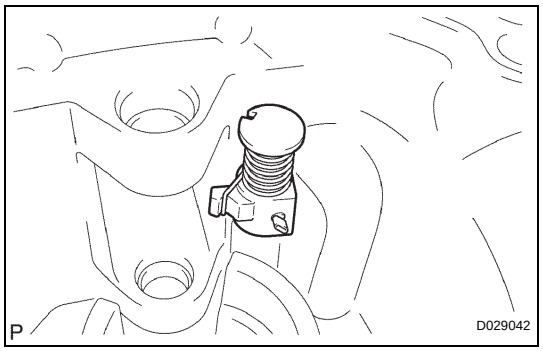

(c) Remove the reverse restrict pin from the transfer adapter or extension housing.

14. REMOVE TRANSFER ADAPTER OIL SEAL

(a) Using a screwdriver, remove the transfer adapter oil seal from the transfer adapter.

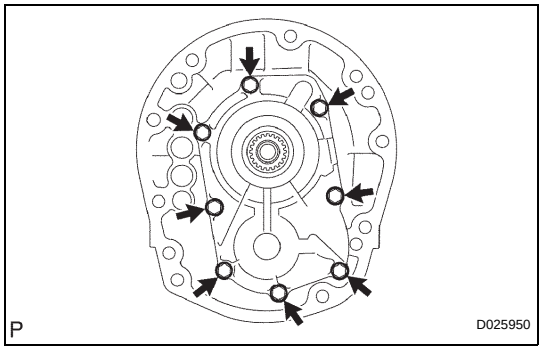

15. REMOVE FRONT BEARING RETAINER

(a) Remove the 8 bolts.

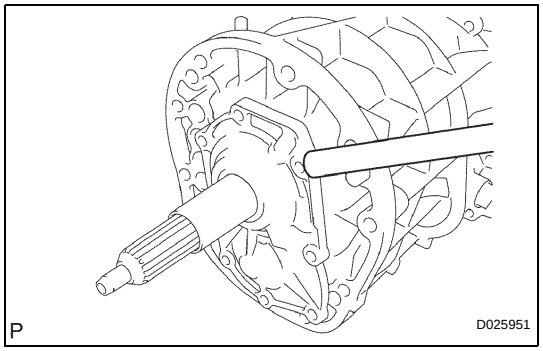

(b) Using a brass bar and a hammer, remove the front bearing retainer from the transmission case.

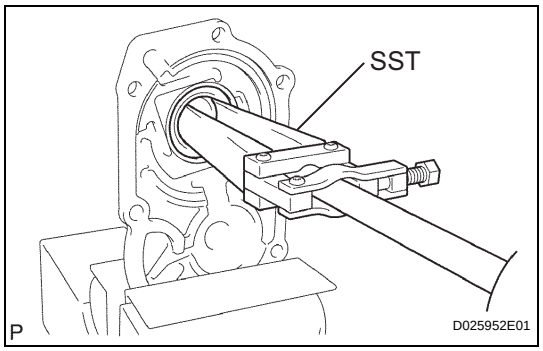

16. REMOVE TRANSMISSION FRONT BEARING RETAINER OIL SEAL

(a) Fix the front bearing retainer in a vise, between aluminum plate.

(b) Using SST, remove the transmission front bearing retainer oil seal.

SST 09308-00010

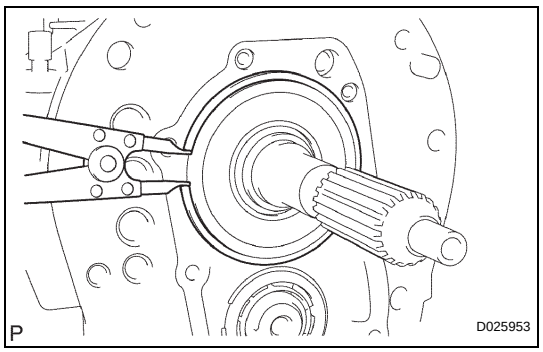

17. REMOVE FRONT BEARING SHAFT SNAP RING

(a) Using a snap ring expander, remove the front bearing shaft snap ring from the transmission case.

MT

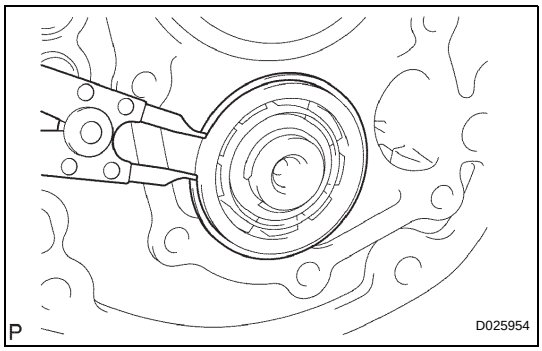

18. REMOVE NO. 1 COUNTER GEAR FRONT BEARING SNAP RING

(a) Using a snap ring expander, remove the counter gear front bearing snap ring No. 1 from the transmission case.

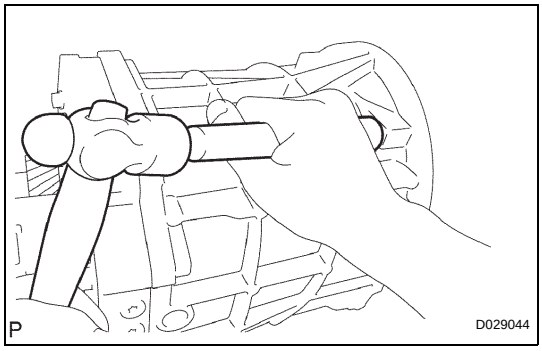

19. REMOVE MANUAL TRANSMISSION CASE

(a) Using a brass bar and a hammer, remove the transmission case from the intermediate plate.

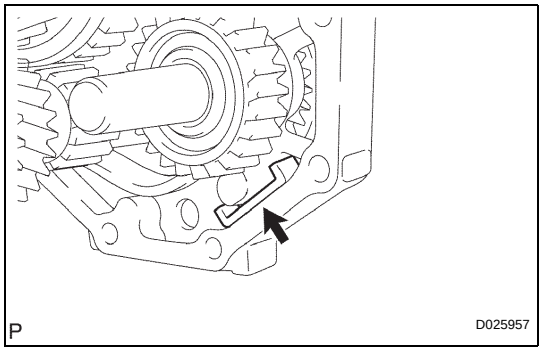

20. REMOVE TRANSMISSION MAGNET

(a) Remove the transmission magnet from the intermediate plate.

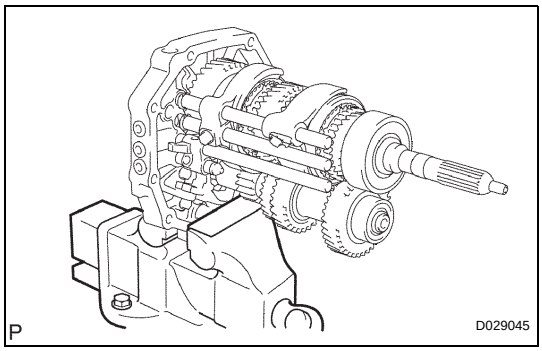

21. FIX INTERMEDIATE PLATE

(a) Fix the intermediate plate in a vice between aluminum plates.

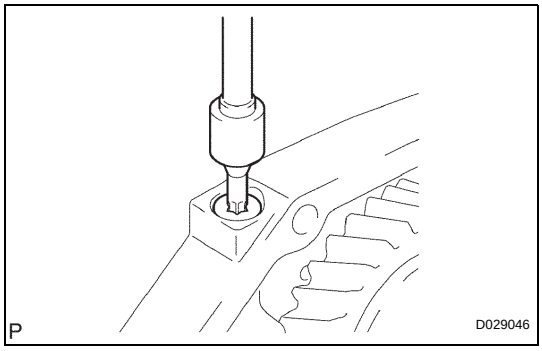

22. REMOVE NO. 1 SHIFT DETENT BALL SPRING SEAT

(a) Using a "Torx" socket wrench T40, remove the shift detent ball spring seat No. 1 from the intermediate plate.

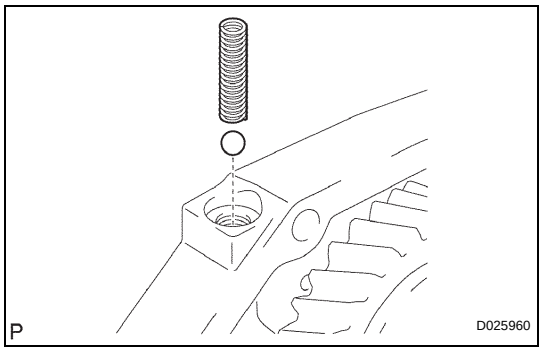

(b) Using a magnetic finger, remove the shift detent ball low side compression spring and the shift detent ball from the intermediate plate.

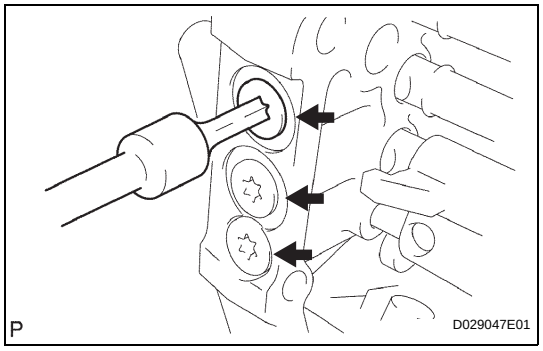

(c) Using a "Torx" socket wrench T40, remove the 3 shift detent ball spring seats No. 1 from the intermediate plate.

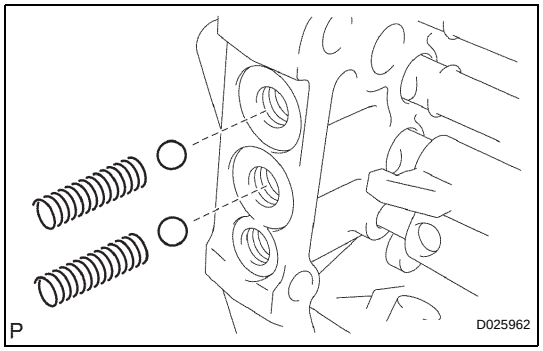

(d) Using a magnetic finger, remove the 2 shift detent ball low side compression springs and the 2 shift detent balls from the intermediate plate.

23. REMOVE NO. 2 GEAR SHIFT FORK SHAFT

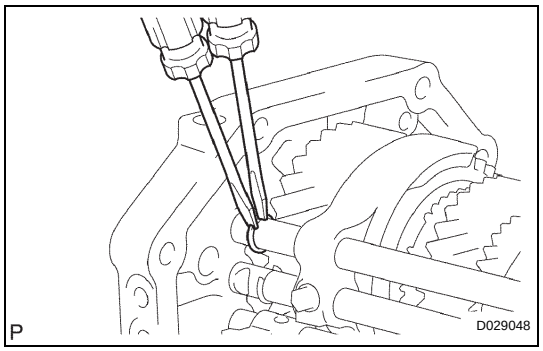

(a) Using 2 screwdrivers and a hammer, remove the shift fork shaft snap ring from the gear shift fork shaft No. 2.

NOTICE:
Use a shop rag to prevent the snap ring from flying off.

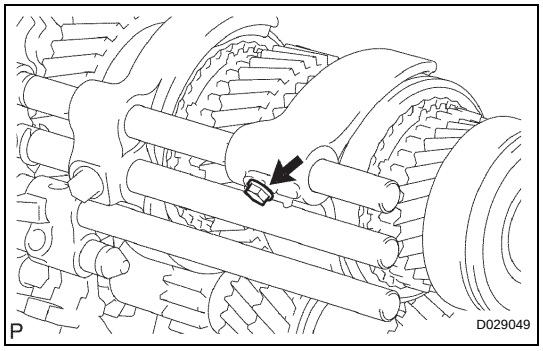

(b) Remove the shift fork set bolt from the gear shift fork No. 2.

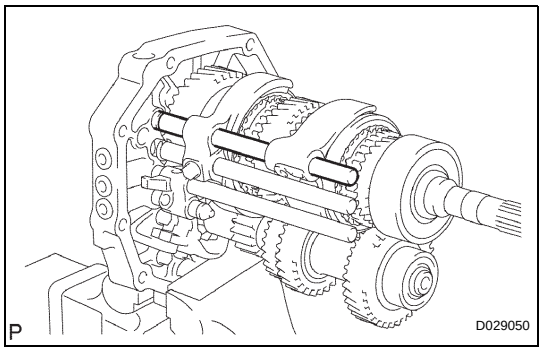

(c) Remove the gear shift fork shaft No. 2 from the intermediate plate.

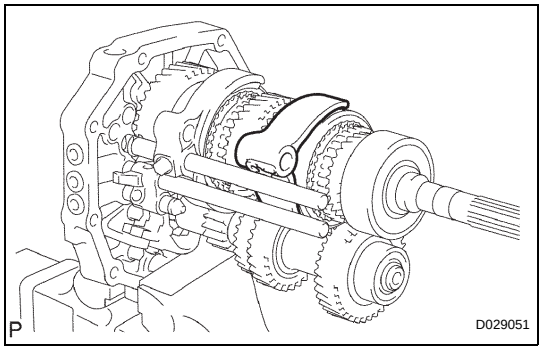

(d) Remove the gear shift fork No. 2 from the transmission hub sleeve No. 2.

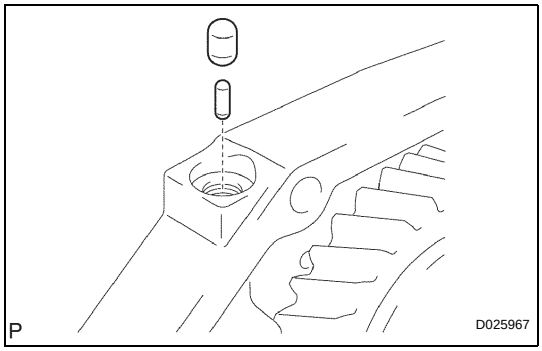

(e) Using a magnetic finger, remove the shift interlock No. 1 roller and the shift interlock pin (ball) from the intermediate plate.

24. REMOVE NO. 1 GEAR SHIFT FORK SHAFT

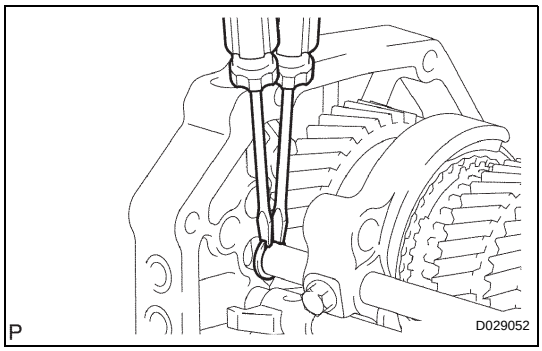

(a) Using 2 screwdrivers and a hammer, remove the shift fork shaft snap ring from the gear shift fork shaft No. 1.

NOTICE:
Use a shop rag to prevent the snap ring from flying off.

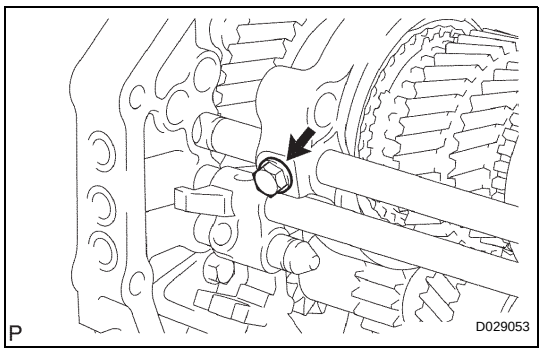

(b) Remove the shift fork set bolt from the gear shift fork No. 1.

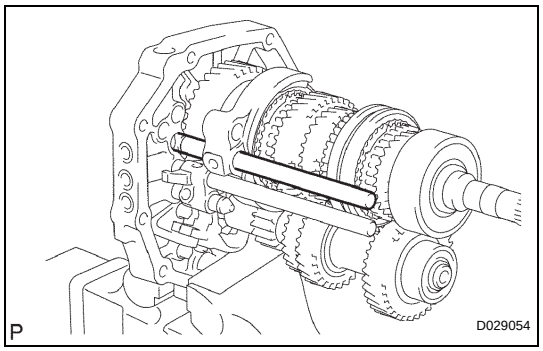

(c) Remove the gear shift fork shaft No. 1 from the intermediate plate.

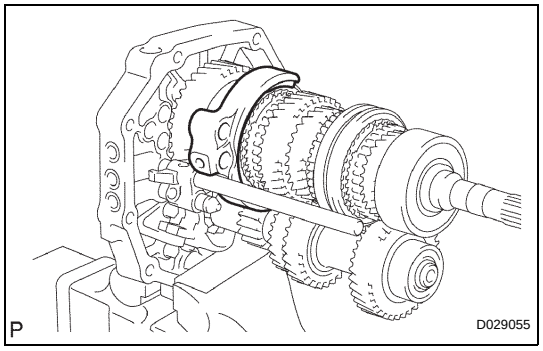

(d) Remove the gear shift fork No. 1 from the reverse gear.

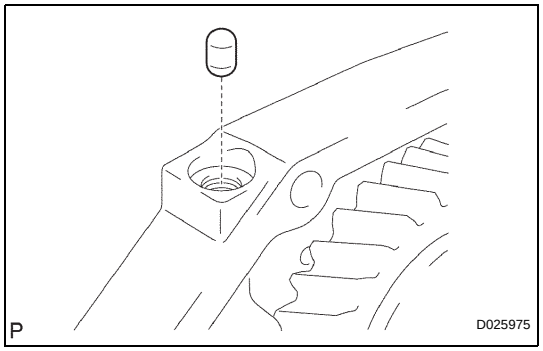

(e) Using a magnetic finger, remove the shift interlock No. 1 roller from the intermediate plate.

25. REMOVE REVERSE SHIFT FORK SHAFT

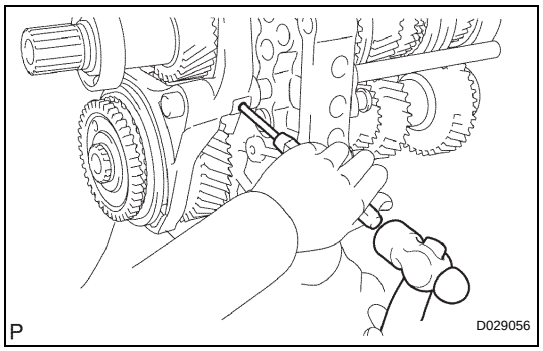

(a) Using a pin punch (5 mm) and a hammer, remove the shift fork set slotted spring pin from the gear shift fork No. 3.

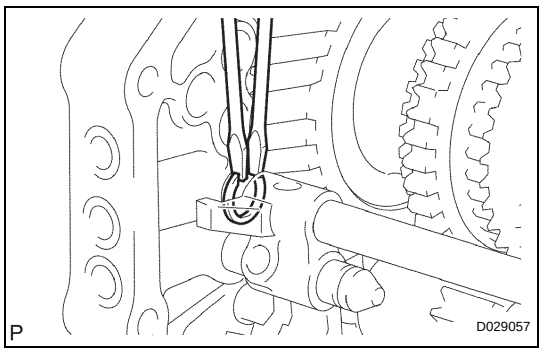

(b) Using 2 screwdrivers and a hammer, remove the shift fork shaft snap ring from the reverse shift fork shaft.

NOTICE:
Use a shop rag to prevent the snap ring from flying off.

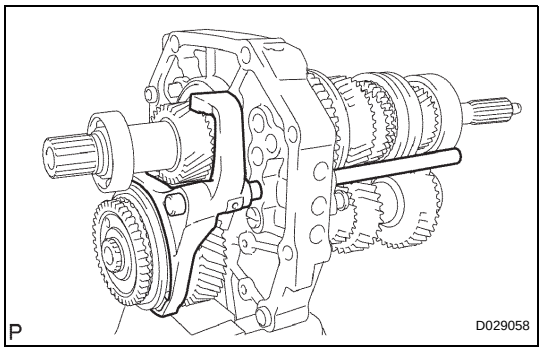

(c) Remove the gear shift fork No. 3 and reverse shift fork shaft from the intermediate plate.

MT

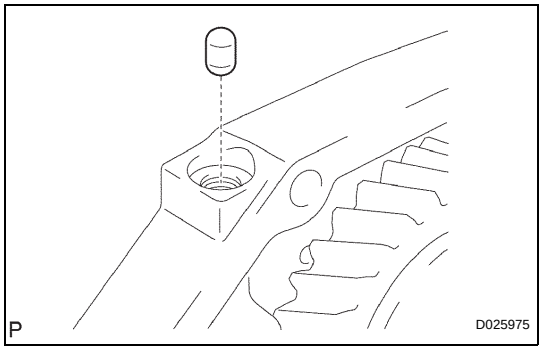

(d) Using a magnetic finger, remove the shift interlock No. 1 roller from the intermediate plate.

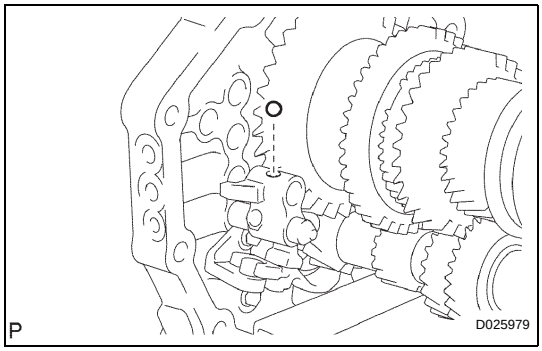

(e) Using a magnetic finger, remove the reverse shift fork ball from the reverse shift fork.

26. REMOVE 5TH SHIFT ARM SHAFT

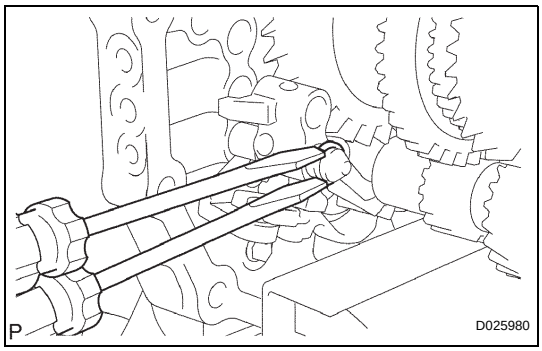

(a) Using 2 screwdrivers and a hammer, remove the shift fork shaft snap ring from the 5th shift arm shaft.
NOTICE:
Use a shop rag to prevent the snap ring from flying off.

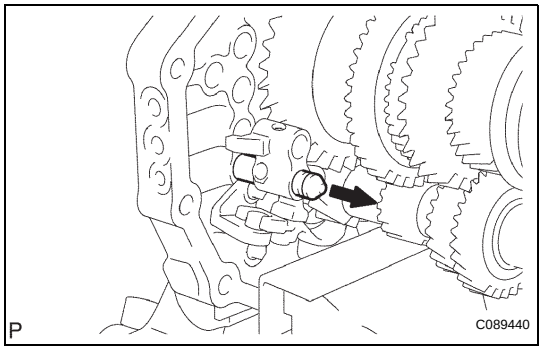

(b) Remove the 5th shift arm shaft from the intermediate plate.
NOTICE:
Cover the hole with a shop rag to prevent the reverse shift fork ball from popping out.

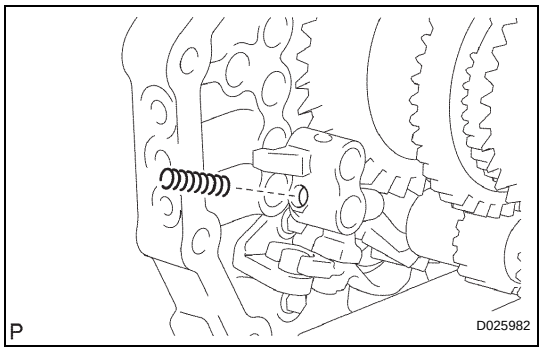

(c) Using a magnetic finger, remove the reverse shift fork return compression spring from the reverse shift fork.

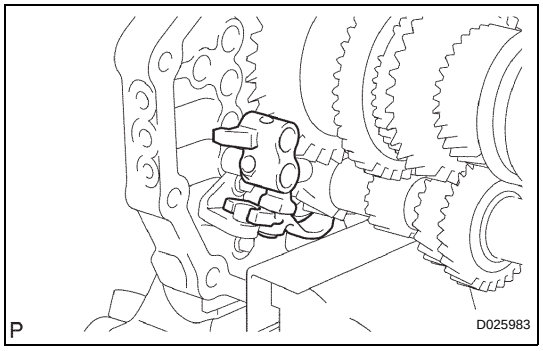

27. REMOVE REVERSE SHIFT FORK

(a) Remove the reverse shift fork together with the reverse shift arm from the intermediate plate.

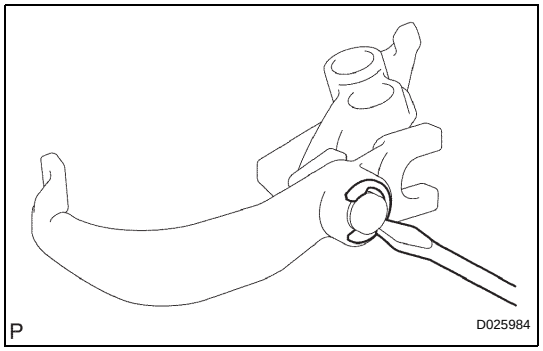

(b) Using a screwdriver, remove the reverse shift arm end shaft ring and the reverse shift fork from the reverse shift arm.

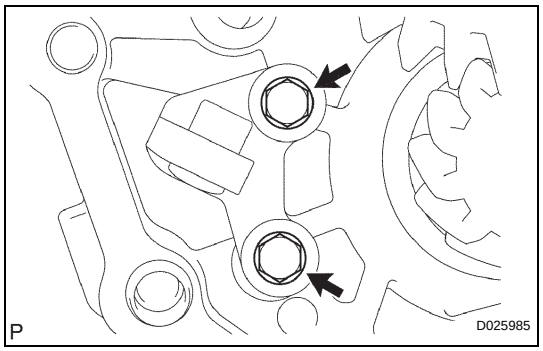

28. REMOVE REVERSE SHIFT ARM BRACKET

(a) Remove the 2 bolts and reverse shift arm bracket from the intermediate plate.

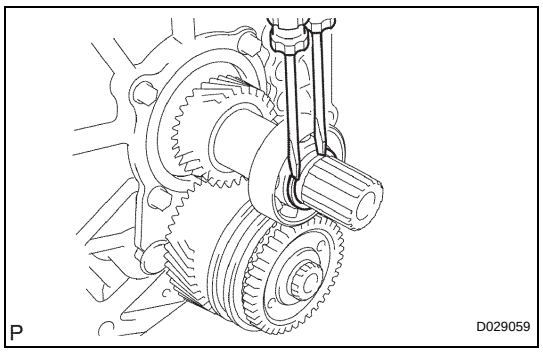

29. REMOVE OUTPUT SHAFT BEARING SHAFT SNAP RING

(a) Using 2 screwdrivers and a hammer, remove the output shaft bearing shaft snap ring from the output shaft.

MT

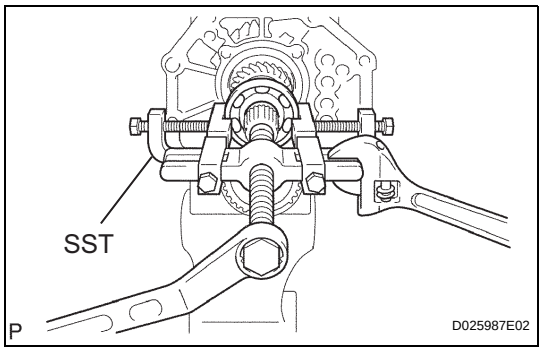

30. REMOVE OUTPUT SHAFT REAR BEARING

(a) Using SST, remove the output shaft rear bearing and output shaft spacer from the output shaft.

SST 09950-40011 (09951-04010, 09952-04010, 09953-04020, 09954-04010, 09955-04051, 09957-04010, 09958-04011)

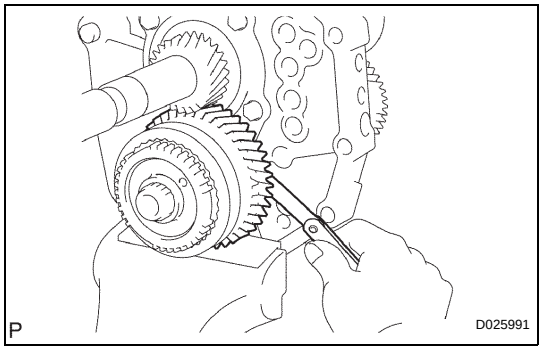

31. INSPECT COUNTER SHAFT 5TH GEAR THRUST CLEARANCE

(a) Using a feeler gauge, measure the counter shaft 5th gear thrust clearance.

Standard clearance:
0.10 to 0.35 mm (0.0039 to 0.0138 in.)

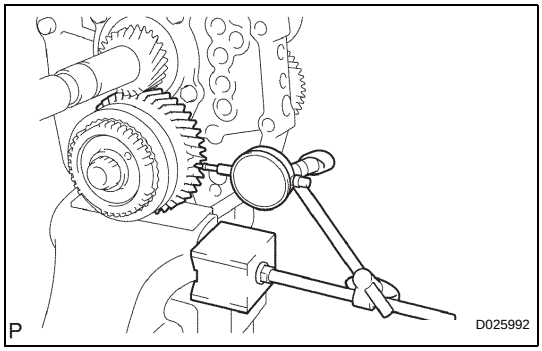

32. INSPECT COUNTER SHAFT 5TH GEAR RADIAL CLEARANCE

(a) Using a dial indicator, measure the radial clearance of the counter shaft 5th gear.

Standard clearance:
0.015 to 0.068 mm (0.0059 to 0.0027 in.)

If the clearance is not within the specified values, replace the counter 5th gear bearing with a new one.

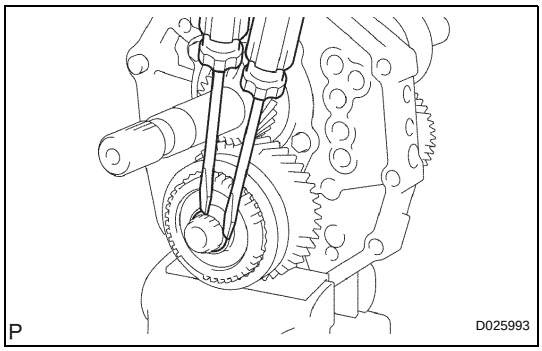

33. REMOVE COUNTER GEAR REAR SHAFT SNAP RING

(a) Using 2 screwdrivers and a hammer, remove the counter gear rear shaft snap ring from the counter gear.

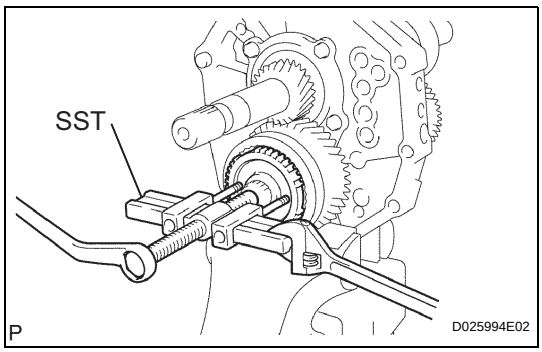

34. REMOVE NO. 5 GEAR SPLINE PIECE

(a) Using SST, remove the gear spline piece No. 5 from the counter gear.

SST 09950-50013 (09951-05010, 09952-05010, 09953-05020, 09954-05021, 09957-04010)

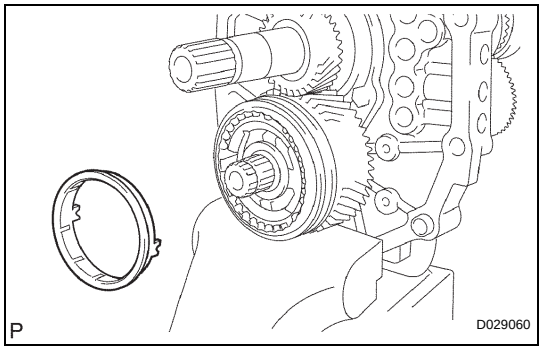

35. REMOVE NO. 3 SYNCHRONIZER RING OUTER

(a) Remove the synchronizer ring outer No. 3 from the counter gear.

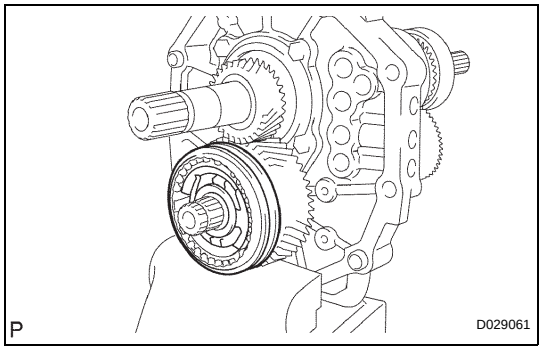

36. REMOVE COUNTER SHAFT 5TH GEAR

(a) Remove the counter shaft 5th gear and transmission hub sleeve No. 3 assembly from the counter gear.

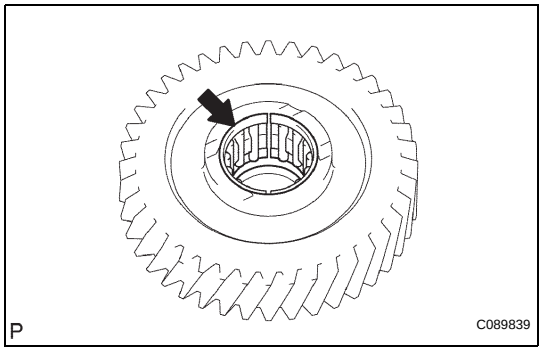

37. REMOVE COUNTER 5TH GEAR BEARING

(a) Remove the counter 5th gear bearing from the counter 5th gear.

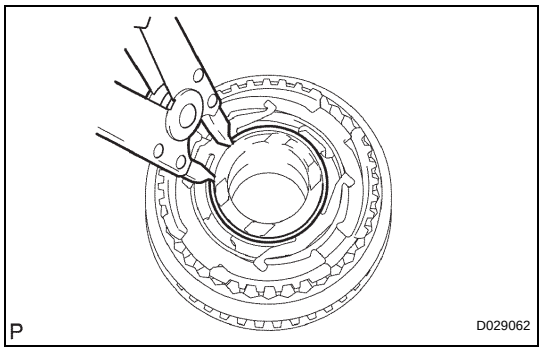

38. REMOVE NO. 3 TRANSMISSION HUB SLEEVE

(a) Using a snap ring expander, remove the snap ring.

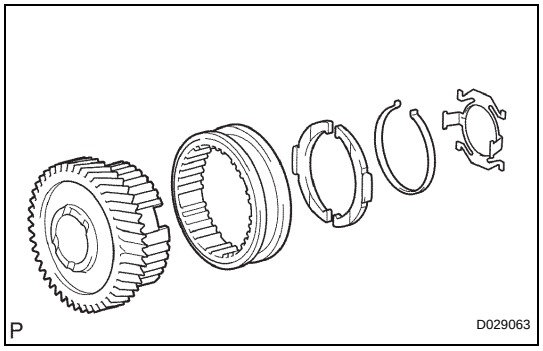

(b) Remove the transmission hub sleeve No. 3, 2 synchromesh shifting keys No. 3 and 2 synchromesh shifting key springs No. 3 from the counter shaft 5th gear.

MT

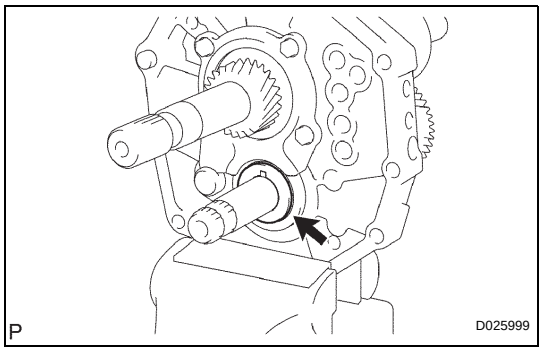

39. REMOVE 5TH GEAR THRUST WASHER

(a) Remove the 5th gear thrust washer from the counter gear.

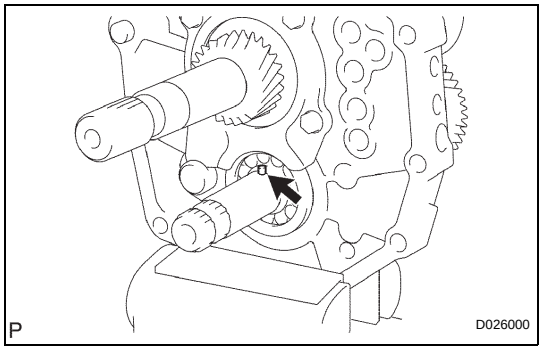

40. REMOVE 5TH GEAR THRUST WASHER PIN

(a) Remove the 5th gear thrust washer pin from the counter gear.

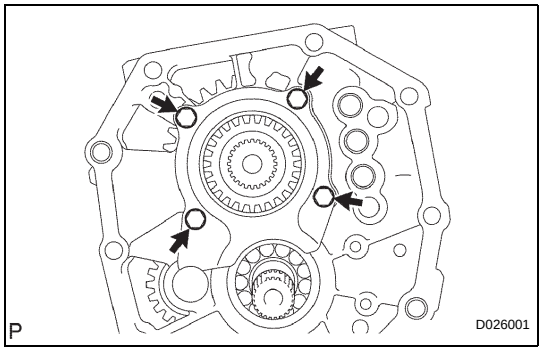

41. REMOVE OUTPUT SHAFT REAR BEARING RETAINER

(a) Remove the 4 bolts and output shaft rear bearing retainer from the intermediate plate.

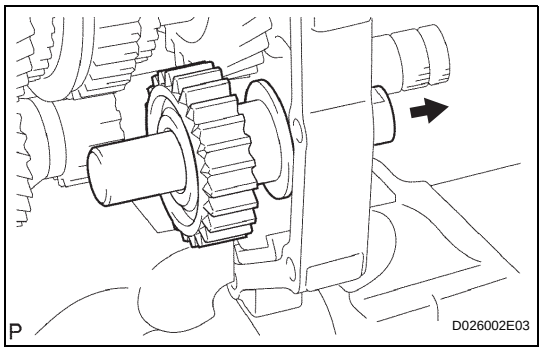

42. REMOVE REVERSE IDLER GEAR SUB-ASSEMBLY

(a) Pull out the reverse idler gear shaft to the rear side and remove the reverse idler gear from the intermediate plate.

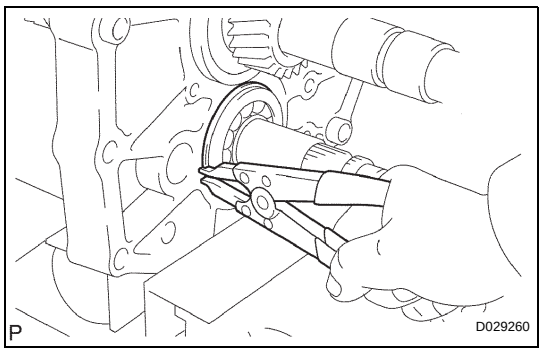

43. REMOVE COUNTER SHAFT CENTER BEARING

(a) Using a snap ring expander, remove the snap ring.

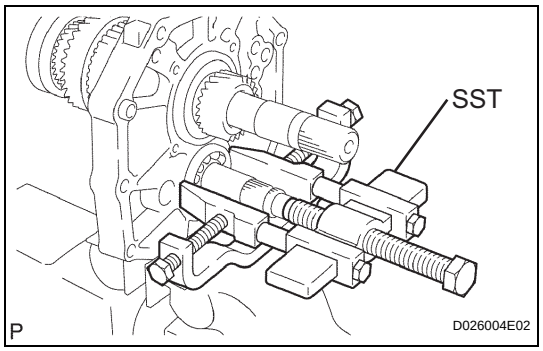

(b) Using SST, remove the counter shaft center bearing from the intermediate plate.

SST 09950-40011 (09951-04010, 09952-04010, 09953-04020, 09954-04010, 09955-04011, 09957-04010, 09958-04011)

HINT:

Remove the bearing while tapping the tip of the counter gear so that the counter gear assembly is not pushed forward into the side wall of the output shaft gear.

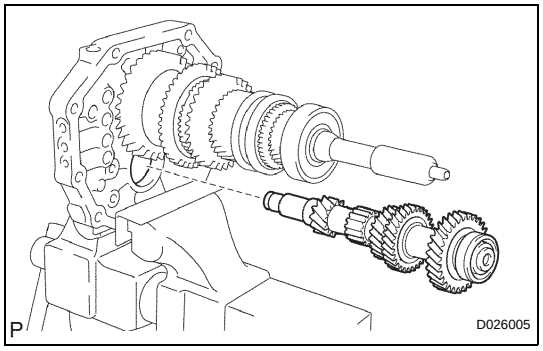

44. REMOVE COUNTER GEAR

(a) Remove the counter gear assembly from the intermediate plate.

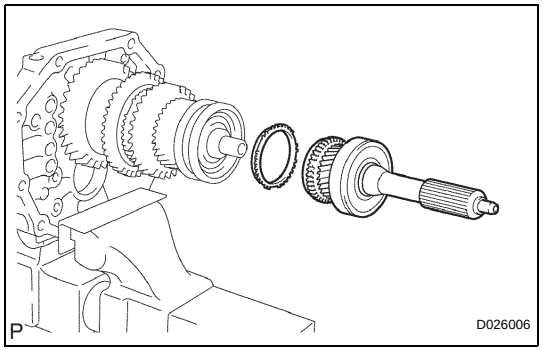

45. REMOVE INPUT SHAFT ASSEMBLY

(a) Remove the input shaft assembly and synchronizer ring No. 2 from the output shaft.

NOTICE:

Do not drop the input shaft bearing and synchronizer ring No. 2.

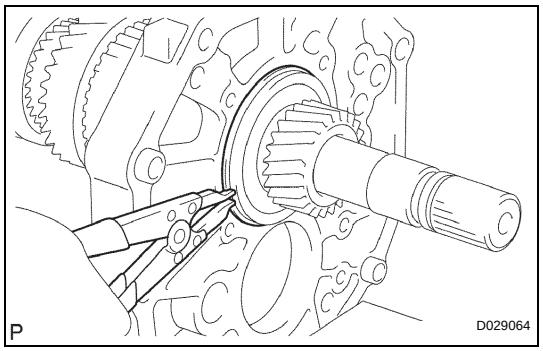

46. REMOVE OUTPUT SHAFT BEARING SHAFT SNAP RING

(a) Using a snap ring expander, remove the output shaft bearing shaft snap ring from the output shaft.

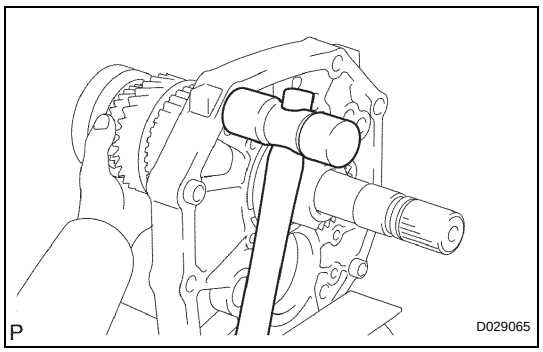

47. REMOVE OUTPUT SHAFT ASSEMBLY

(a) Using a plastic hammer, remove the output shaft assembly by tapping the intermediate plate.

MT

INPUT SHAFT

COMPONENTS

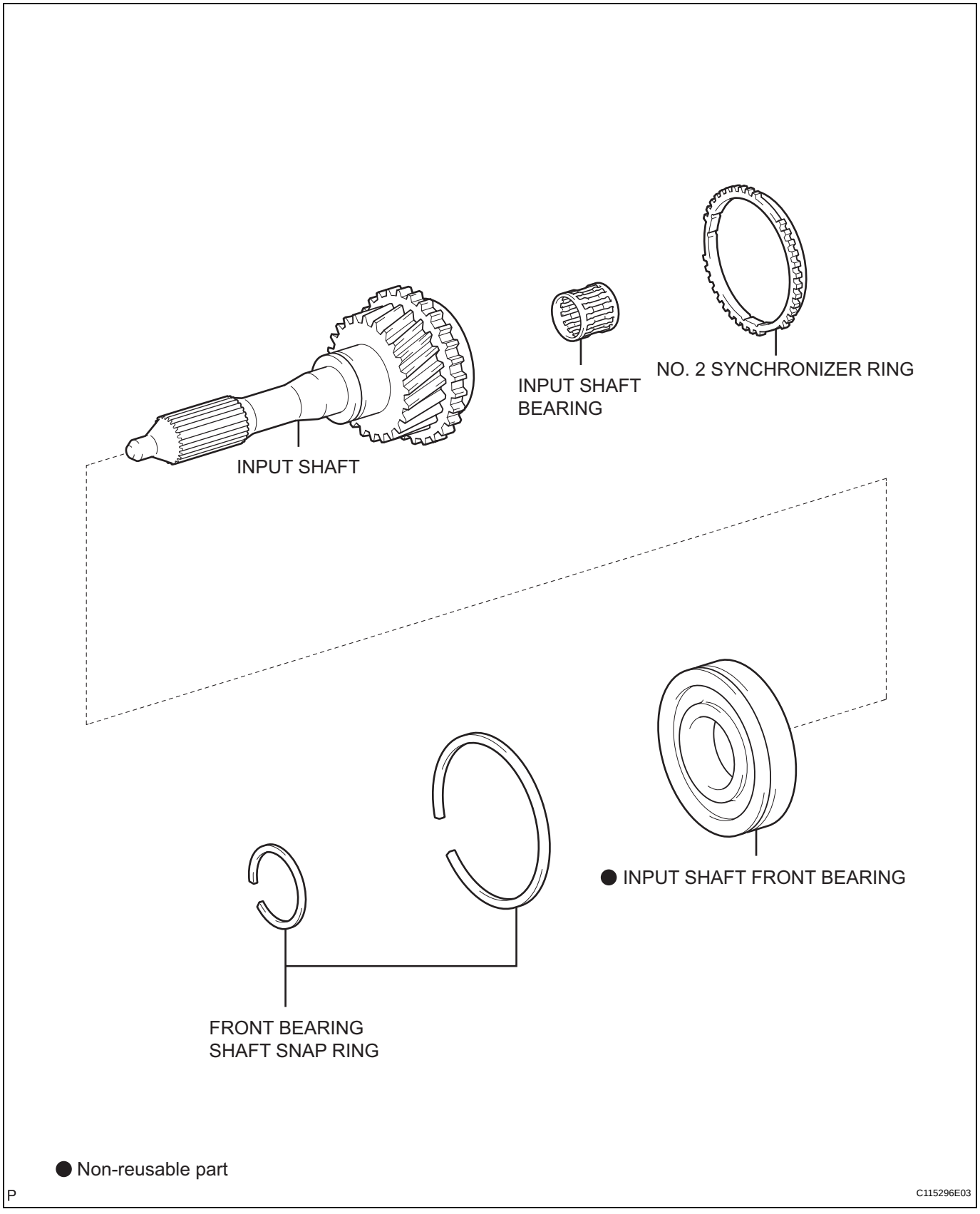

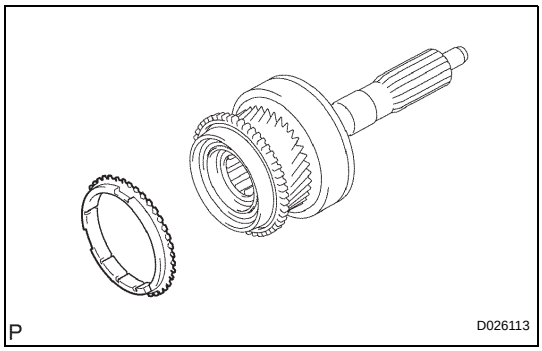

DISASSEMBLY

1. REMOVE NO. 2 SYNCHRONIZER RING

(a) Remove synchronizer ring No. 2 from the input shaft.

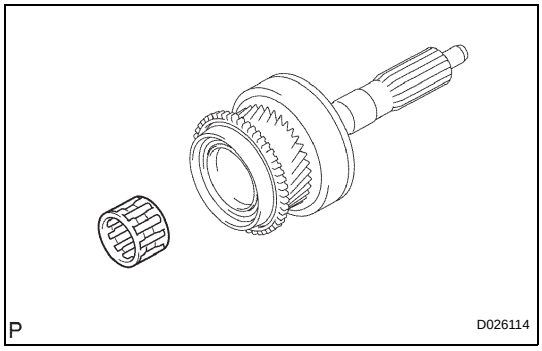

2. REMOVE INPUT SHAFT BEARING

(a) Remove the input shaft bearing from the input shaft.

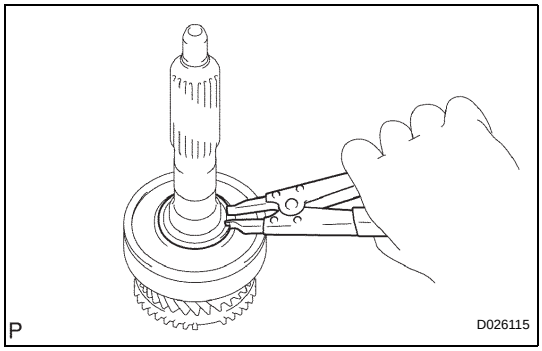

3. REMOVE FRONT BEARING SHAFT SNAP RING

(a) Using a snap ring expander, remove the front bearing shaft snap ring from the input shaft.

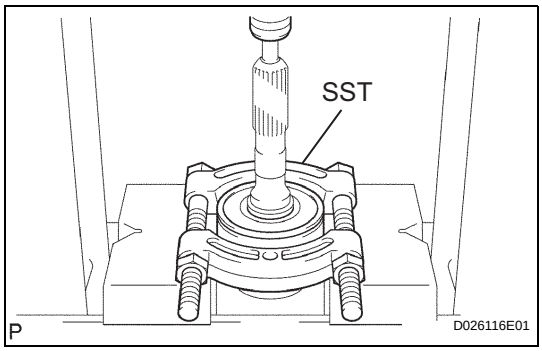

4. REMOVE INPUT SHAFT FRONT BEARING

(a) Using SST and a press, remove the input shaft front bearing FR from the input shaft.
SST 09950-00020

INSPECTION

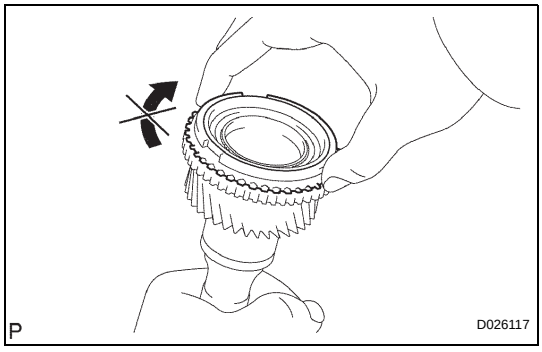

1. INSPECT NO. 2 SYNCHRONIZER RING

(a) Apply gear oil to the cone of the input shaft, and check that it does not turn in the both directions while pushing the synchronizer ring No. 2.

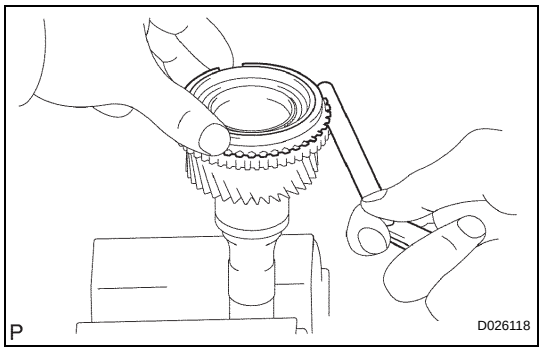

(b) Check the clearance between the synchronizer ring No. 2 and input shaft while pushing the synchronizer ring No. 2 to the cone of the input shaft.
Standard clearance:
0.70 to 1.70 mm (0.0276 to 0.0669 in.)
If the clearance is not within the specified values, replace synchronizer ring No. 2 with a new one.

REASSEMBLY

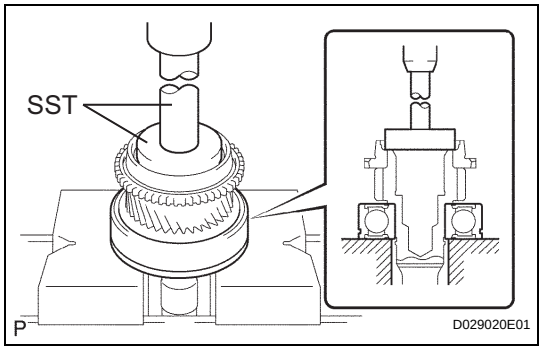

1. INSTALL INPUT SHAFT FRONT BEARING

(a) Using SST and a press, install a new input shaft front bearing FR onto the input shaft.
SST 09950-60010 (09951-00570), 09950-70010 (09951-07100)
NOTICE:
Install the input shaft front bearing with the snap ring groove facing to the front.

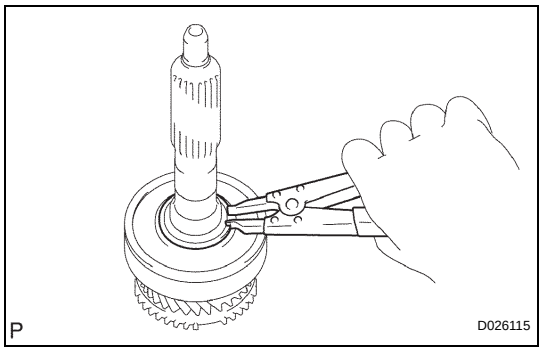

2. INSTALL FRONT BEARING SHAFT SNAP RING

(a) Select the correct input shaft front bearing snap ring so that the clearance between the input shaft and input shaft front bearing is within the specified values.
Standard clearance:
0.1 mm (0.0039 in.) or less

Mark	Thickness mm (in.)
A	2.10 to 2.15 (0.0827 to 0.0846)
B	2.15 to 2.20 (0.0846 to 0.0866)
C	2.20 to 2.25 (0.0866 to 0.0886)
D	2.25 to 2.30 (0.0886 to 0.0906)
E	2.30 to 2.35 (0.0906 to 0.0925)
F	2.35 to 2.40 (0.0925 to 0.0945)
G	2.40 to 2.45 (0.0945 to 0.0965)

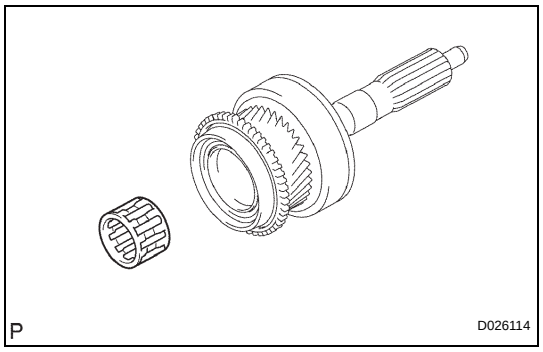

3. INSTALL INPUT SHAFT BEARING

(a) Apply gear oil to the input shaft bearing and install it onto the input shaft.

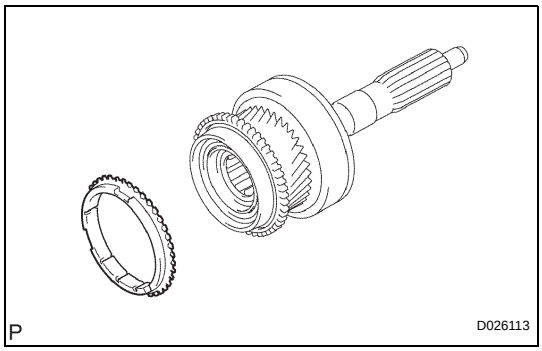

4. INSTALL NO. 2 SYNCHRONIZER RING

(a) Apply gear oil to synchronizer ring No. 2, and install it onto the input shaft.

OUTPUT SHAFT

COMPONENTS

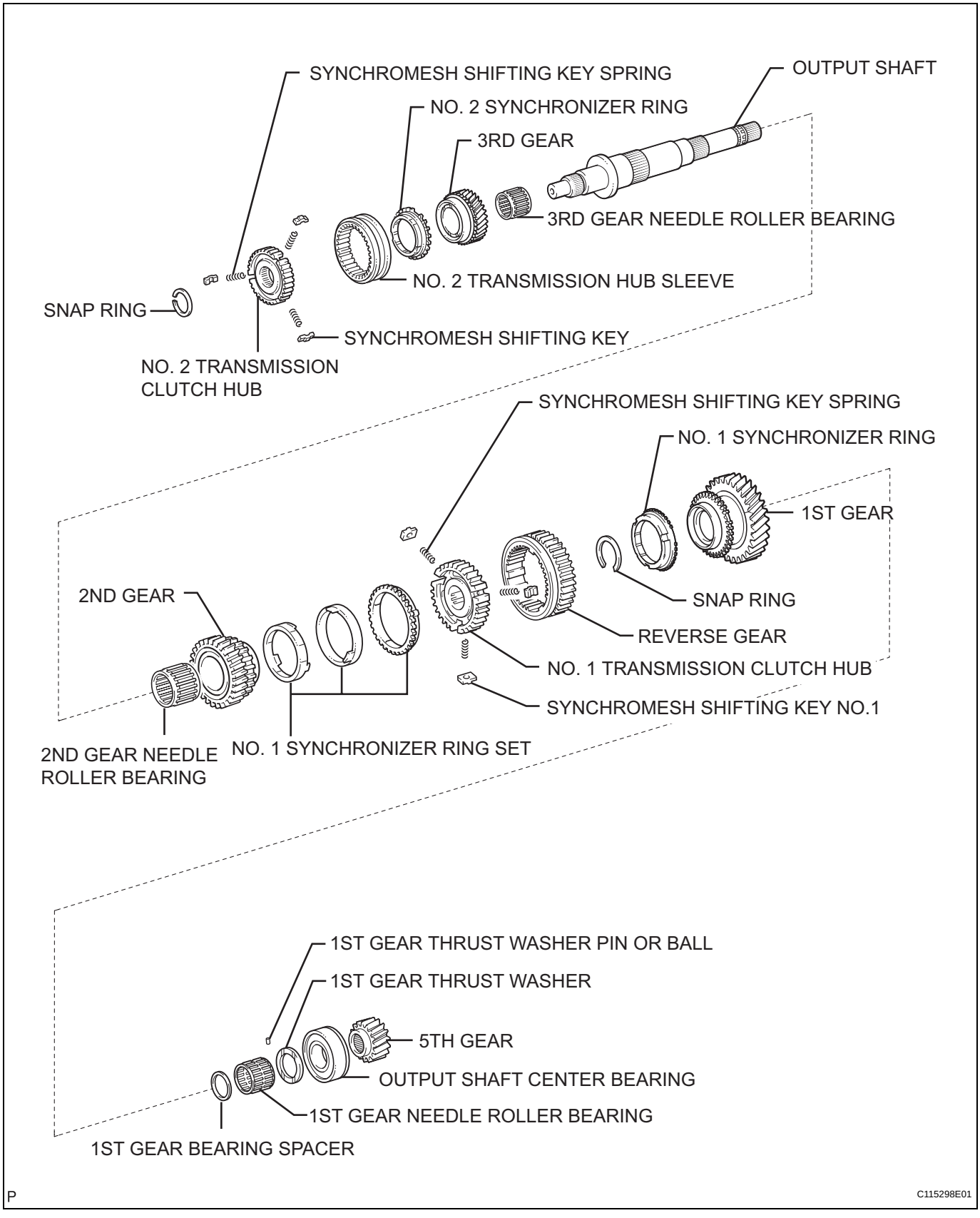

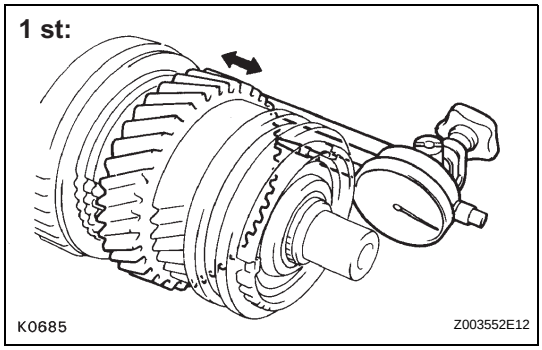

DISASSEMBLY

1. INSPECT 1ST GEAR THRUST CLEARANCE

(a) Using a dial indicator measure the thrust clearance of the 1st gear.

Standard clearance:

0.20 to 0.45 mm(0.0079 to 0.0177 in.)

MT

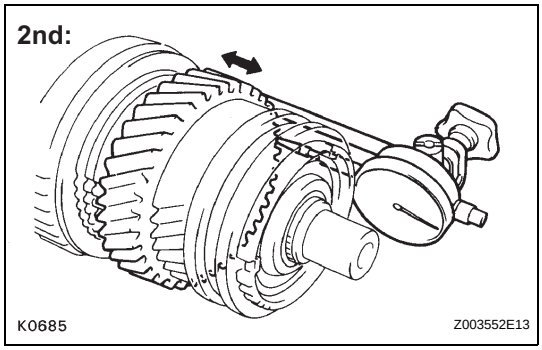

2. INSPECT 2ND GEAR THRUST CLEARANCE

(a) Using a dial indicator measure the thrust clearance of the 2nd gear.

Standard clearance:

0.10 to 0.25 mm (0.0039 to 0.0098 in.)

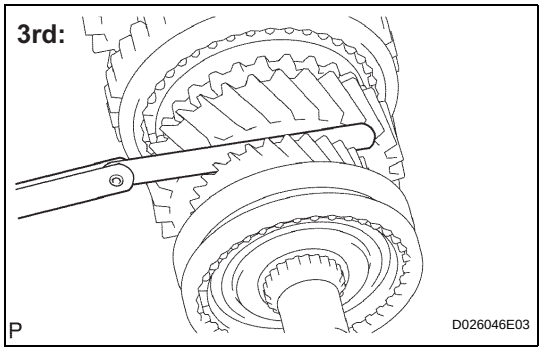

3. INSPECT 3RD GEAR THRUST CLEARANCE

(a) Using a feeler gauge, measure the thrust clearance of the 3rd gear.

Standard clearance:

0.10 to 0.25 mm (0.0039 to 0.0098 in.)

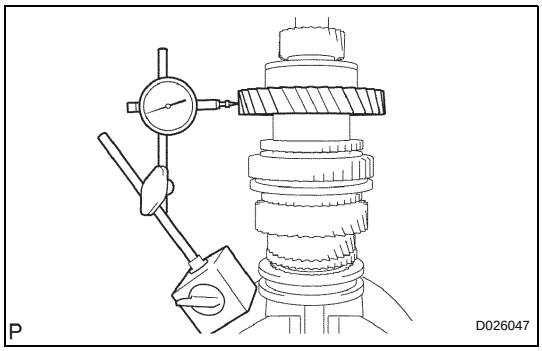

4. INSPECT 1ST GEAR RADIAL CLEARANCE

(a) Using a dial indicator, measure the radial clearance of the 1st gear.

Standard clearance:

0.020 to 0.073 mm (0.0008 to 0.0029 in.)

If the clearance is not within the specified values, replace the 1st gear needle roller bearing with a new one.

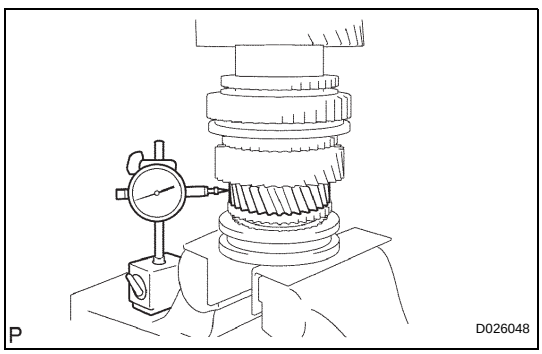

5. INSPECT 2ND GEAR RADIAL CLEARANCE

(a) Using a dial indicator, measure the radial clearance of the 2nd gear.

Standard clearance:

0.015 to 0.068mm (0.0006 to 0.0027 in.)

If the clearance is not within the specified values, replace the 2nd gear needle roller bearing with a new one.

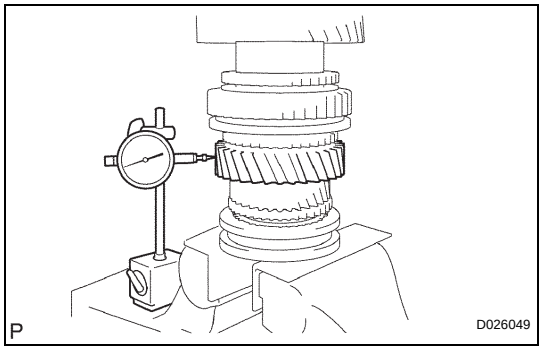

6. INSPECT 3RD GEAR RADIAL CLEARANCE

(a) Using a dial indicator, measure the radial clearance of the 3rd gear.

Standard clearance:

0.015 to 0.068 mm (0.0006 to 0.0027 in.)

If the clearance is not within the specified values, replace the 3rd gear needle roller bearing with a new one.

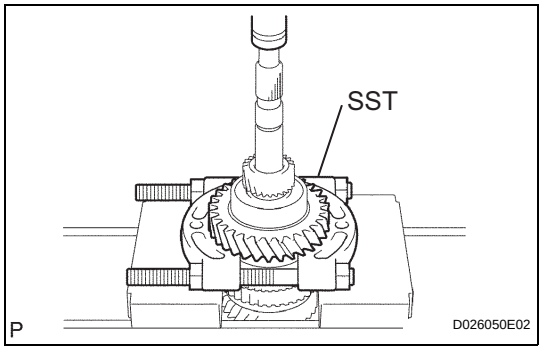

7. REMOVE 1ST GEAR

(a) Using SST and a press, remove the 5th gear, output shaft center bearing, 1st gear thrust washer and 1st gear from the output shaft.

SST 09950-00020

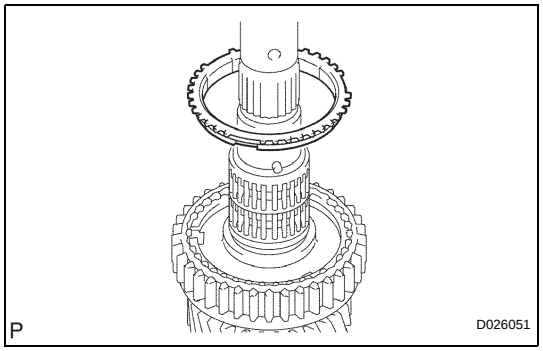

8. REMOVE NO. 1 SYNCHRONIZER RING

(a) Remove synchronizer ring No. 1 (for the 1st gear) from the output shaft.

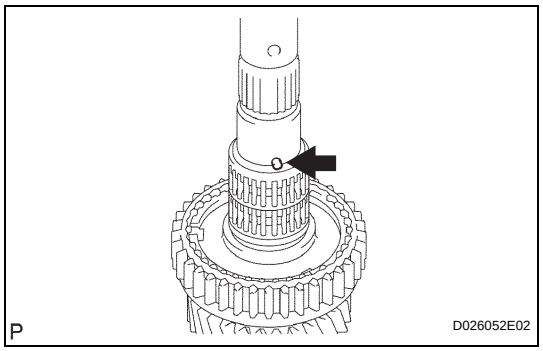

9. REMOVE 1ST GEAR THRUST WASHER PIN OR BALL

(a) Remove the 1st gear thrust washer pin from the output shaft.

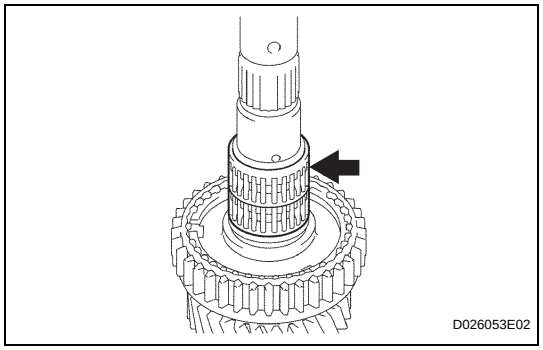

10. REMOVE 1ST GEAR NEEDLE ROLLER BEARING

(a) Remove the 1st gear needle roller bearing from the output shaft.

MT

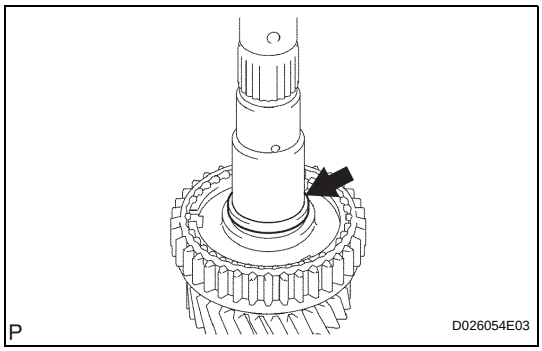

11. REMOVE 1ST GEAR BEARING SPACER

(a) Remove the 1st gear bearing spacer from the output shaft.

MT

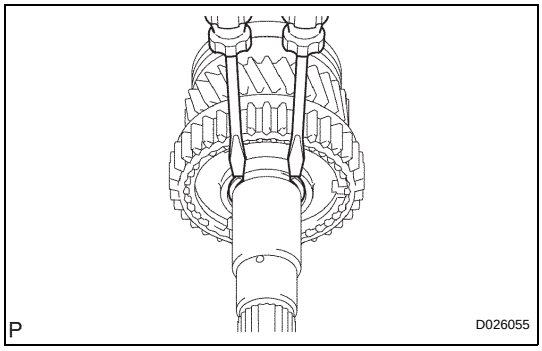

12. REMOVE BEARING SHAFT SNAP RING

(a) Using 2 screwdrivers and a hammer, remove the bearing shaft snap ring from the output shaft.
NOTICE:
Use a shop rag to prevent the snap ring from flying off.

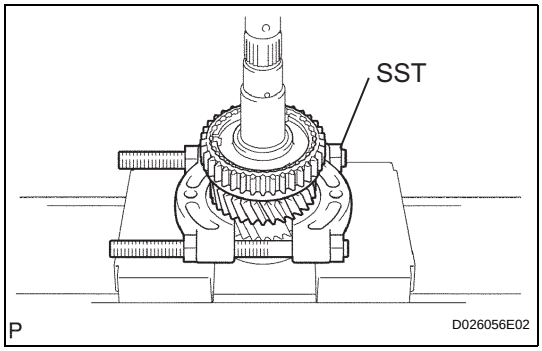

13. REMOVE 2ND GEAR

(a) Using SST and a press, remove the transmission clutch hub No. 1, reverse gear, synchronizer ring No. 1 and 2nd gear from the output shaft.
SST 09950-00020

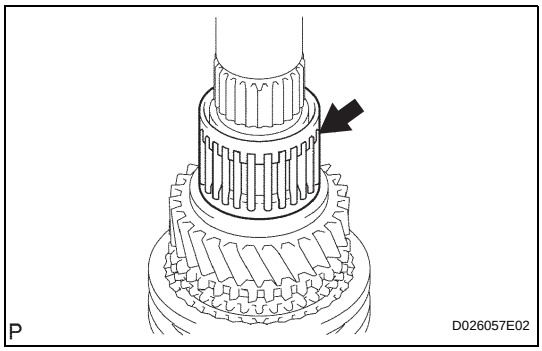

14. REMOVE 2ND GEAR NEEDLE ROLLER BEARING

(a) Remove the 2nd gear needle roller bearing from the output shaft.

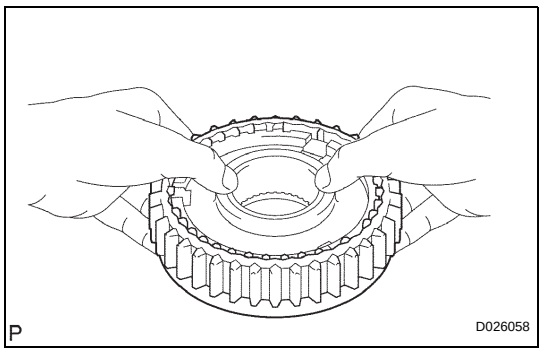

15. REMOVE REVERSE GEAR

(a) Remove the reverse gear, 3 synchromesh shifting keys No. 1 and 3 synchromesh shifting key springs. Use a shop rag to prevent the shifting key and the shifting spring from popping out.

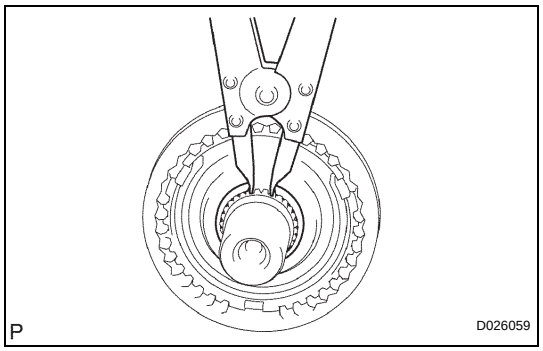

16. REMOVE CLUTCH HUB SET SHAFT SNAP RING

(a) Using snap ring pliers, remove the clutch hub set shaft snap ring from the output shaft.

NOTICE:

Do not damage the sliding surface of the bearing.

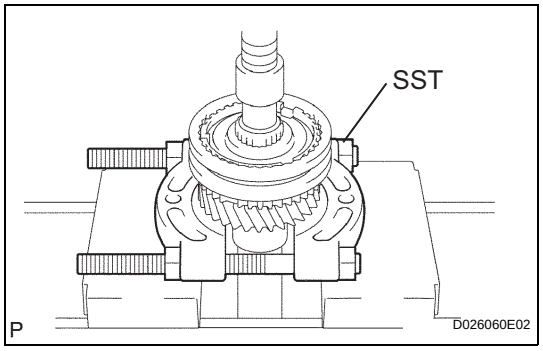

17. REMOVE 3RD GEAR

(a) Using SST and a press, remove the clutch hub No. 2 with the hub sleeve No. 2, synchronizer ring No. 2 and 3rd gear from the output shaft.

SST 09950-00020

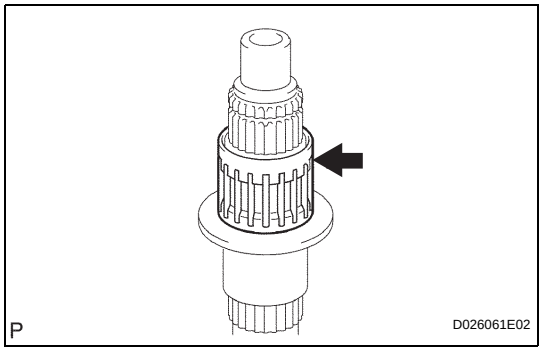

18. REMOVE 3RD GEAR NEEDLE ROLLER BEARING

(a) Remove the 3rd gear needle roller bearing from the output shaft.

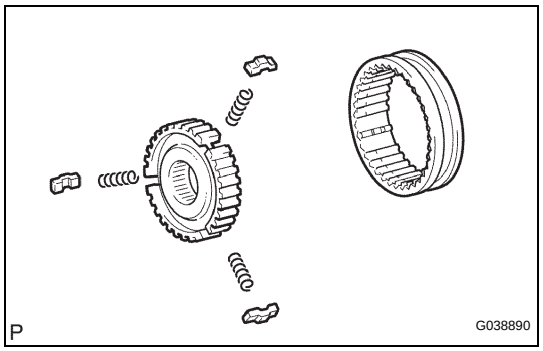

19. REMOVE NO. 2 TRANSMISSION HUB SLEEVE

(a) Remove the transmission hub sleeve No. 2, 3 synchromesh shifting key springs and 3 synchromesh shifting keys No. 2 from the transmission clutch hub No. 2.

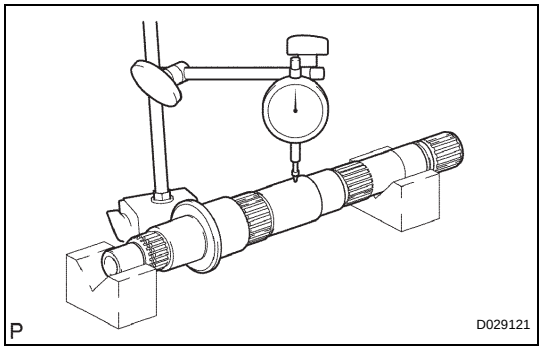

INSPECTION

1. INSPECT OUTPUT SHAFT

(a) Using a dial indicator, measure the circle runout of the output shaft.

Maximum circle runout:

0.03 mm (0.0012 in.)

If the circle runout is greater than the maximum, replace the output shaft with a new one.

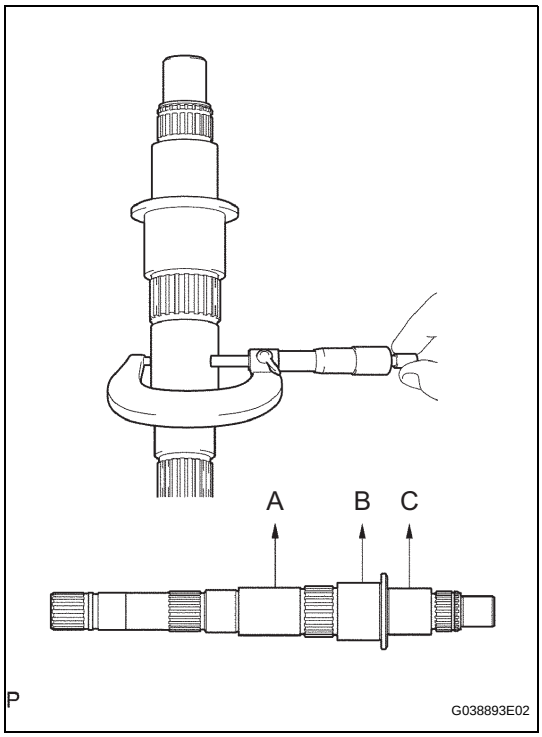

(b) Using a micrometer, measure the outer diameter of the output shaft at A, B and C.
Standard diameter:
38.979 to 38.995 mm (1.5334 to 1.5352 in.) for A
46.984 to 47.000 mm (1.8498 to 1.8504 in.) for B
37.984 to 38.000 mm (1.4954 to 1.4961 in.) for C
Minimum diameter:
38.979 mm (1.5334 in.) for A
46.984 mm (1.8498 in.) for B
37.984 mm (1.4954 in.) for C
If the outer diameter is less than the minimum, replace the output shaft with a new one.

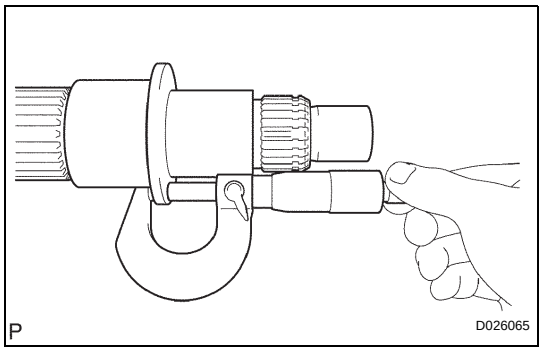

(c) Using a micrometer, measure the thickness of the output shaft flange as shown in the illustration.
Standard thickness:
4.8 to 5.2 mm (0.1890 to 0.2047 in.)
If the thickness is not within the specified values, replace the output shaft.

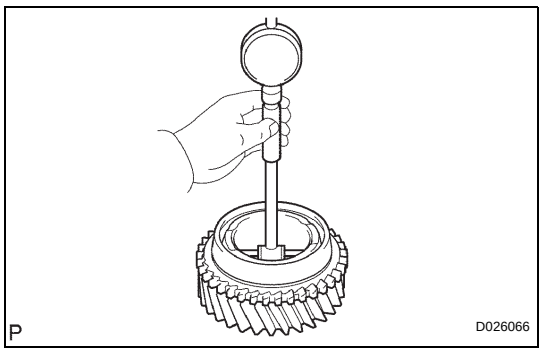

2. INSPECT 3RD GEAR
(a) Using a cylinder gauge, measure the inner diameter of the 3rd gear.
Standard diameter:
44.015 to 44.040 mm (1.7329 to 1.7339 in.)
Maximum diameter:
44.040 mm (1.7339 in.)
If the inner diameter is greater than the maximum, replace the 3rd gear with a new one.

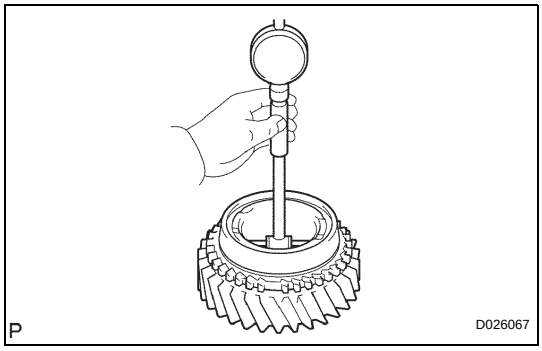

3. INSPECT 2ND GEAR
(a) Using a cylinder gauge, measure the inner diameter of the 2nd gear.
Standard diameter:
53.015 to 53.040 mm (2.0872 to 2.0881 in.)
Maximum diameter:
53.040 mm(2.0881 in.)
If the inner diameter is greater than the maximum, replace the 2nd gear with a new one.

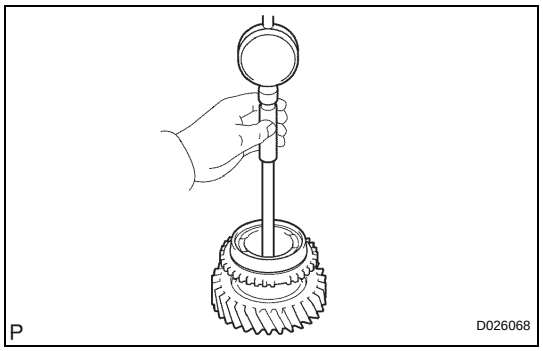

4. INSPECT 1ST GEAR

(a) Using a cylinder gauge, measure the inner diameter of the 1st gear.

Standard diameter:
46.015 to 46.040 mm (1.812 to 1.8126 in.)
Maximum diameter:
46.040 mm (1.8126 in.)

If the inner diameter is greater than the maximum, replace the 1st gear with a new one.

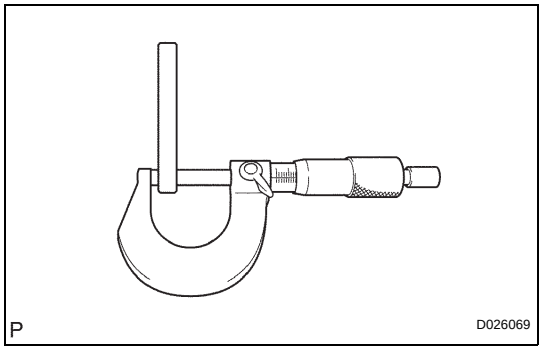

5. INSPECT 1ST GEAR THRUST WASHER

(a) Using a micrometer, measure the thickness of the 1st gear thrust washer.

Standard thickness:
5.95 to 6.05 mm (0.2346 to 0.2382 in.)
Minimum thickness:
5.96 mm (0.2346 in.)

If the thickness is out of specification, replace the 1st gear thrust washer.

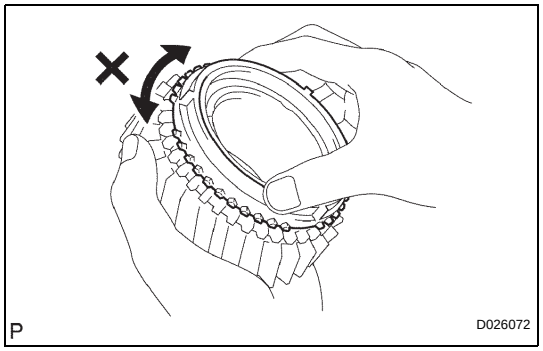

6. INSPECT NO. 1 SYNCHRONIZER RING

(a) Apply gear oil to the cone of the 1st gear, and check that it does not turn in both directions while pushing the synchronizer ring No. 1 (for the 1st gear).
If it turns, replace the synchronizer ring No. 1.

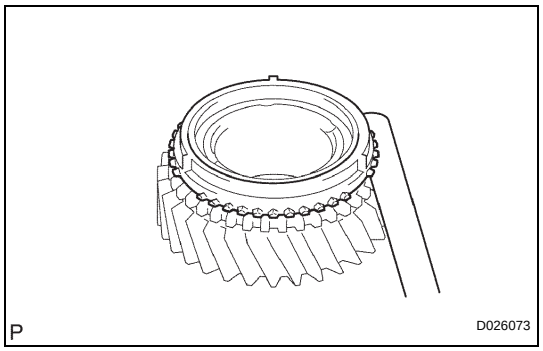

(b) Measure the clearance between the synchronizer ring No. 1 and the 1st gear while pushing the synchronizer ring No. 1 to the cone of the 1st gear.

Standard clearance:
0.75 to 1.65 mm (0.0295 to 0.0649 in.)

If the clearance is not within the specified values, replace the synchronizer ring No. 1 with a new one.

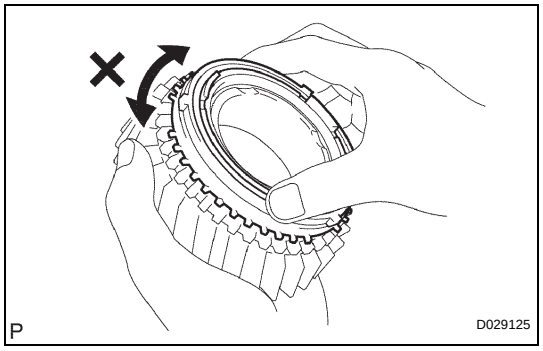

7. INSPECT NO. 1 SYNCHRONIZER RING SET

(a) Apply gear oil to the cone of the 2nd gear, and check that it does not turn in both directions while pushing the synchronizer ring set No. 1 (for the 2nd synchronizer ring).
If it turns, replace the synchronizer ring set No. 1.

MT

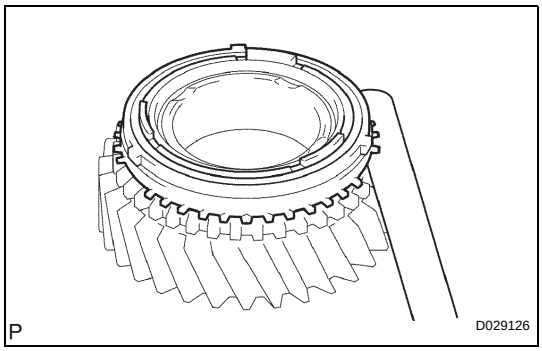

(b) Measure the clearance between the synchronizer ring set No. 1 (for the 2nd synchronizer ring) and 2nd gear while pushing the synchronizer ring set No. 1 to the cone of the 2nd gear.
Standard clearance:
0.65 to 1.75 mm (0.0256 to 0.0689 in.)
If the clearance is not within the specified values, replace the synchronizer ring set No. 1 (for the 2nd synchronizer ring) with a new one.

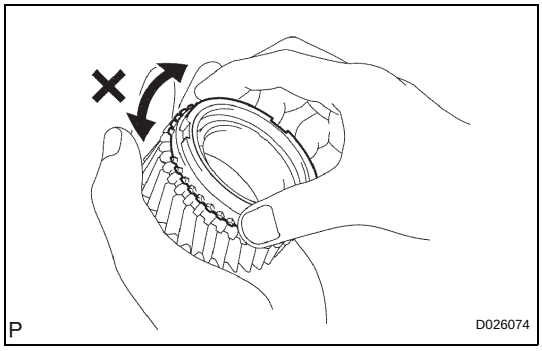

8. INSPECT NO. 2 SYNCHRONIZER RING

(a) Apply gear oil to the cone of the 3rd gear, and check that it does not turn in both directions while pushing the synchronizer ring No. 2 (for the 3rd synchronizer ring).
If it turns, replace the synchronizer ring No. 2.

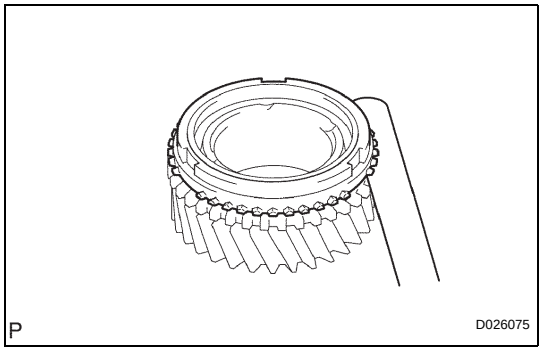

(b) Check the clearance between the synchronizer ring No. 2 (for the 3rd synchronizer ring) and 3rd gear while pushing the synchronizer ring No. 2 (for the 2nd synchronizer ring) to the cone of the 3rd gear.
Standard clearance:
0.75 to 1.65 mm (0.0295 to 0.0650 in.)
If the clearance is not within the specified values, replace the synchronizer ring No. 2 (for the 3rd synchronizer ring) with a new one.

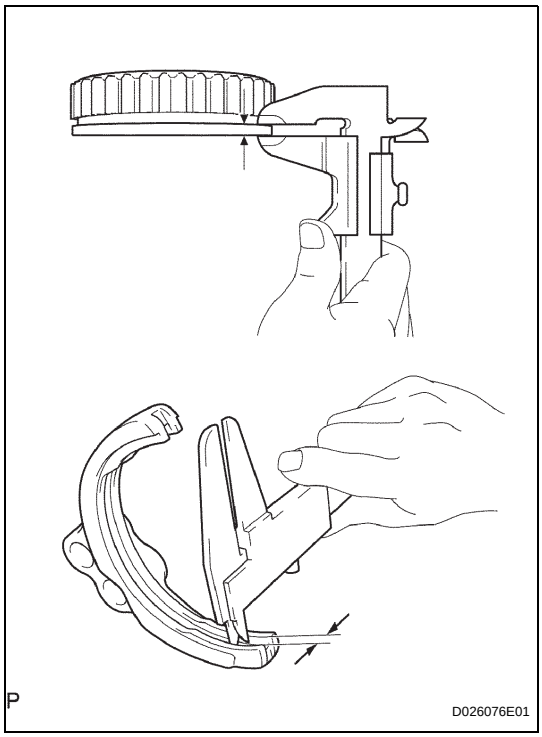

9. INSPECT REVERSE GEAR

(a) Using vernier calipers, measure the reverse gear groove and the thickness of the gear shift fork claw No. 1 clearance.
Standard clearance:
0.15 to 0.41 mm (0.0060 to 0.0161 in.)
If the clearance is not within the specified values, replace the reverse gear and the shift fork No. 1 with new ones.

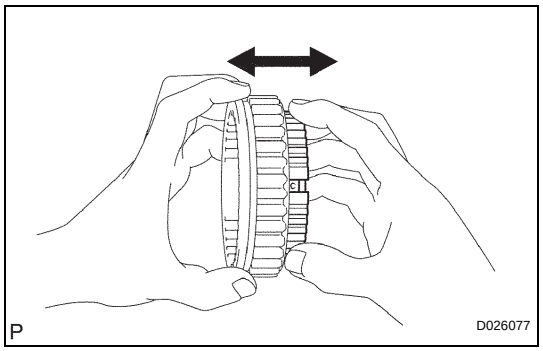

10. INSPECT NO. 1 TRANSMISSION CLUTCH HUB

(a) Check that the transmission clutch hub No. 1 and reverse gear slide smoothly each other.

(b) Check the tip of the spline gear sleeve of the reverse gear for wear.
If there are any defects, replace the transmission clutch hub No. 1.

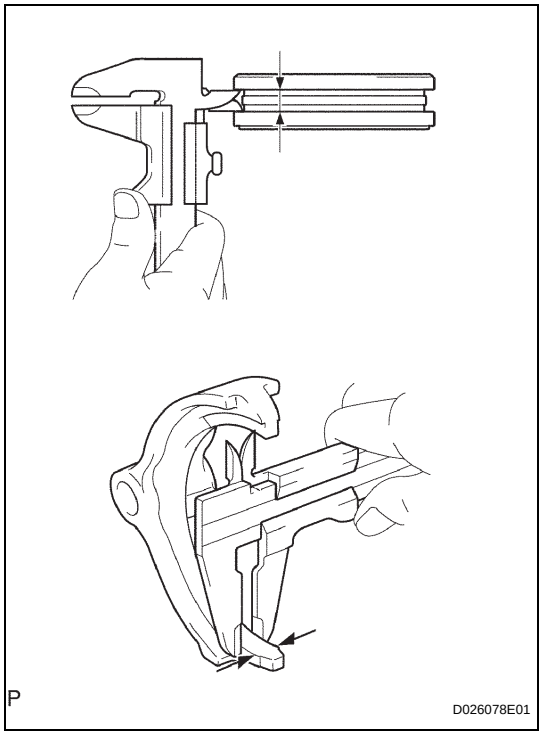

11. INSPECT NO. 2 TRANSMISSION HUB SLEEVE

(a) Using vernier calipers, measure the clearance between the transmission hub No. 2 groove and claw of the gear shift fork No. 2.
Standard clearance:
0.15 to 0.35 mm (0.0059 to 0.0138 in.)
If the clearance is not within the specified values, replace the No. 2 transmission hub sleeve No. 2 and the shift fork No. 2 with the new ones.

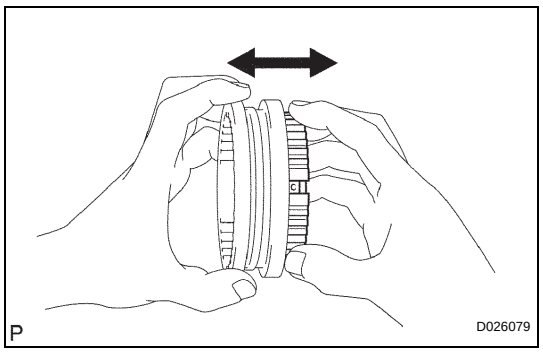

12. INSPECT NO. 2 TRANSMISSION CLUTCH HUB

(a) Check the sliding condition between the transmission clutch hub No. 2 and the transmission hub sleeve No. 2.

(b) Check the tip of the spline gear of the sleeve of the reverse gear for wear.

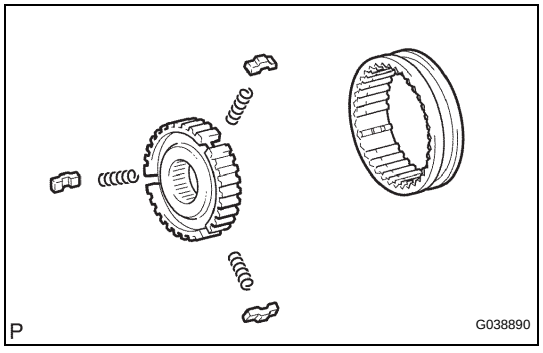

REASSEMBLY

1. INSTALL NO. 2 TRANSMISSION HUB SLEEVE

(a) Install the 3 synchromesh shifting key springs No. 2 and the 3 synchro-mesh shifting key No. 2 to the transmission clutch hub No. 2.
NOTICE:
Make sure that the transmission hub sleeve No. 2 and transmission clutch hub No. 2 are oriented in the correct direction.

(b) Apply gear oil to the sliding part of the transmission hub sleeve No. 2, and install it onto the transmission clutch hub No. 2.

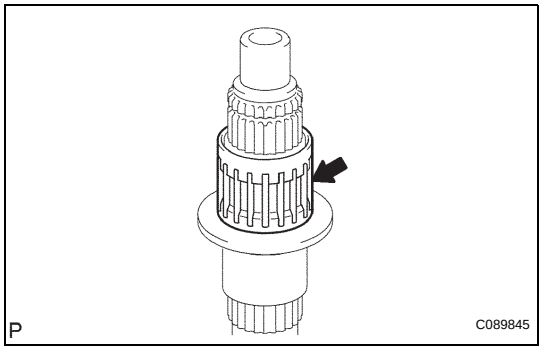

2. INSTALL 3RD GEAR NEEDLE ROLLER BEARING

(a) Apply gear oil to the 3rd gear needle roller bearing, and install it onto the output shaft.

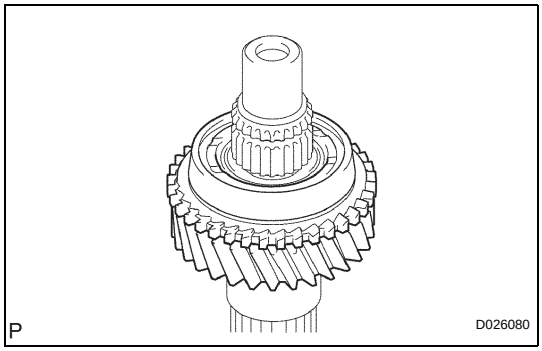

3. INSTALL 3RD GEAR

(a) Apply gear oil to the 3rd gear, and install it onto the output shaft.

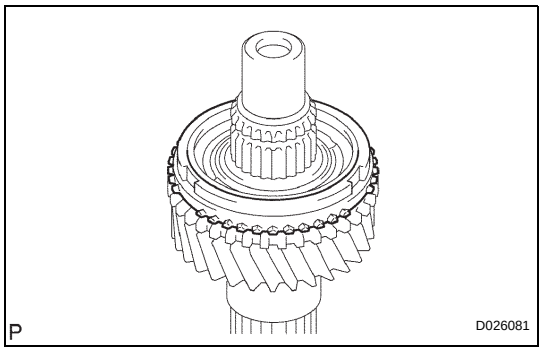

4. INSTALL NO. 2 SYNCHRONIZER RING

(a) Apply gear oil to the synchronizer ring No. 2, and install it onto the 3rd gear.

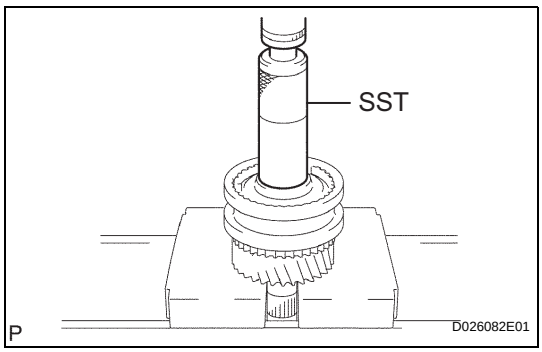

5. INSTALL NO. 2 TRANSMISSION CLUTCH HUB

(a) Using SST, install the transmission clutch hub No. 2 onto the output shaft.

SST 09608-06041

NOTICE:

- **Install it with the synchronizer ring key No. 2 groove aligned with the shifting key position.**
- **Make sure that the 3rd gear rotates smoothly.**

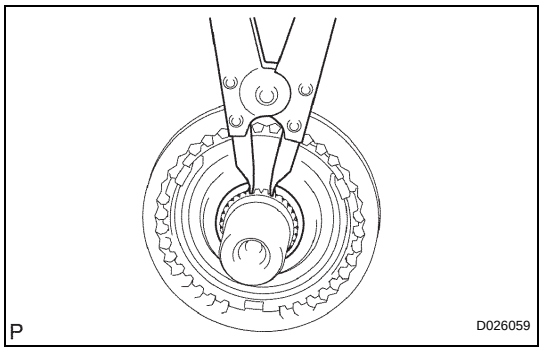

(b) Select the correct clutch hub shaft snap ring so that the clearance between the transmission clutch hub No. 2 and shaft snap ring thrust is within the specified values. Then install it onto the output shaft.

Standard clearance:
0.1 mm or less

NOTICE:
Do not damage the sliding surface of the bearing.

Mark	Thickness mm (in.)
A	1.80 to 1.85 (0.0709 to 0.0728)
B	1.85 to 1.90 (0.0728 to 0.0748)
C	1.90 to 1.95 (0.0748 to 0.0768)
D	1.95 to 2.00 (0.0768 to 0.0787)
E	2.00 to 2.05 (0.0787 to 0.0807)
F	2.05 to 2.10 (0.0807 to 0.0827)
G	2.10 to 2.15 (0.0827 to 0.0846)

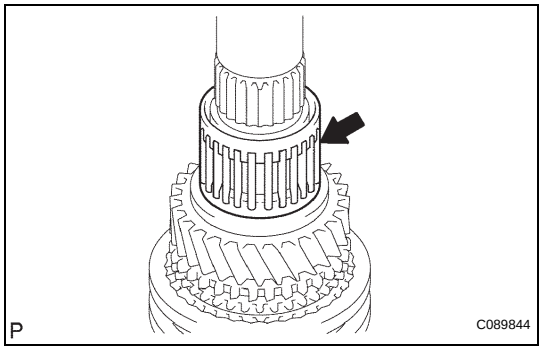

6. INSTALL 2ND GEAR NEEDLE ROLLER BEARING

(a) Apply gear oil to the 2nd gear needle roller bearing, and install it onto the output shaft.

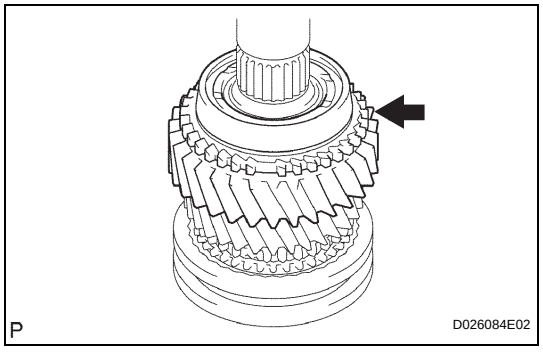

7. INSTALL 2ND GEAR

(a) Apply gear oil to the 2nd gear, and install it onto the output shaft.

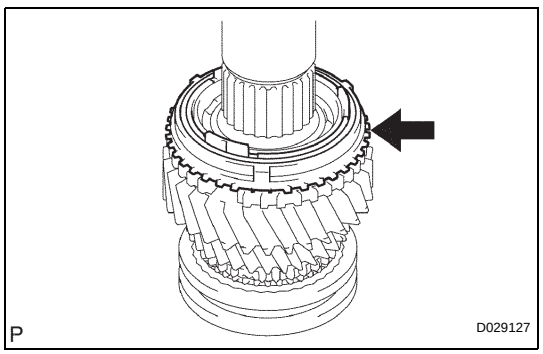

8. INSTALL NO. 1 SYNCHRONIZER RING SET

(a) Apply gear oil to the synchronizer ring set No. 1, and install it onto the 2nd gear.

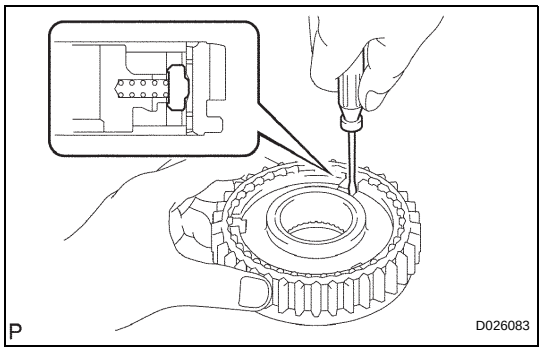

9. INSTALL REVERSE GEAR

(a) Using a screwdriver, install the 3 synchromesh shifting key springs and 3 synchromesh shifting key No.1 onto the transmission clutch hub No. 1.

(b) Apply gear oil to the revers gear, and install it onto the transmission clutch hub No. 1

MT

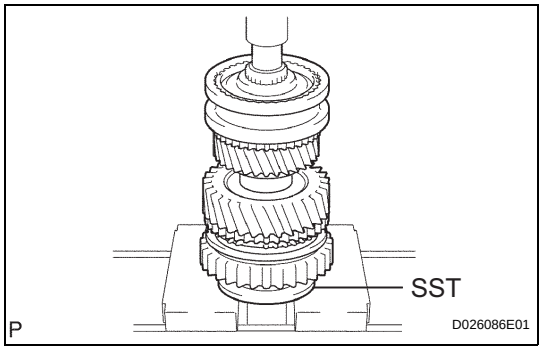

10. INSTALL NO. 1 TRANSMISSION CLUTCH HUB

(a) Using SST and a press, install transmission clutch hub No. 1 onto the output shaft.

SST 09316-60011 (09316-00041)

NOTICE:

- **Perform installation making sure that the synchronizer ring key No. 1 groove and synchro-mesh shifting key No. 1 are in place.**
- **Make sure that the 1st gear rotates smoothly.**

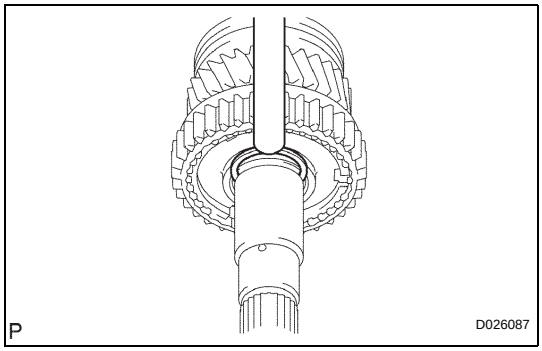

(b) Select the correct bearing shaft snap ring so that the clearance between the transmission clutch hub No. 1 and bearing shaft snap ring is within the specified values. Then install it onto the output shaft.

Standard clearance:

0.1mm (0.039 in.) or less

NOTICE:

Do not damage the sliding surface of the bearing.

Mark	Thickness mm (in.)
A	2.30 to 2.35 (0.0906 to 0.0925)
B	2.35 to 2.40 (0.0925 to 0.0945)
C	2.40 to 2.45 (0.0945 to 0.0965)
D	2.45 to 2.50 (0.0965 to 0.0984)
E	2.50 to 2.55 (0.0984 to 0.1004)
F	2.55 to 2.60 (0.1004 to 0.1024)
G	2.60 to 2.65 (0.1024 to 0.1043)

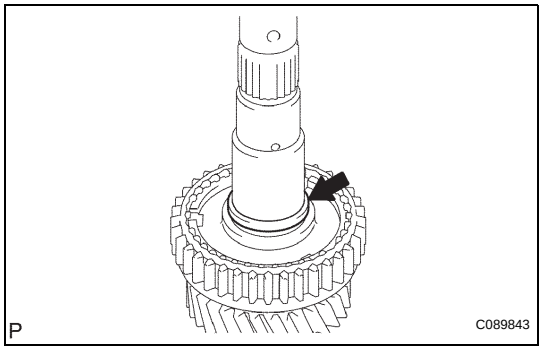

11. INSTALL 1ST GEAR BEARING SPACER

(a) Apply gear oil to the 1st gear bearing spacer, and install it onto the output shaft.

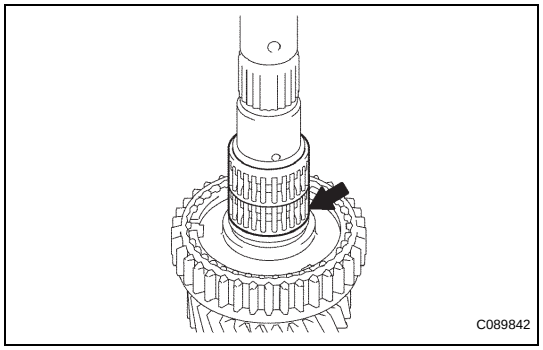

12. INSTALL 1ST GEAR NEEDLE ROLLER BEARING

(a) Apply gear oil to the 1st gear needle roller bearing, and install it onto the output shaft.

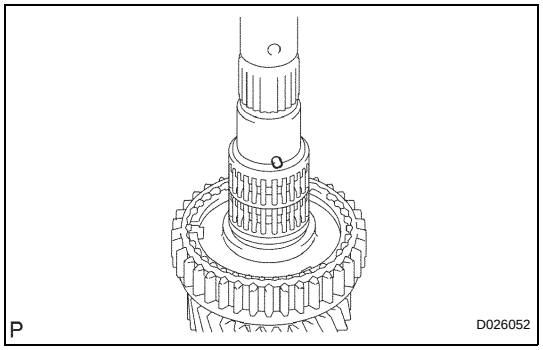

13. INSTALL 1ST GEAR THRUST WASHER PIN OR BALL

(a) Install the 1st gear thrust washer pin onto the output shaft.

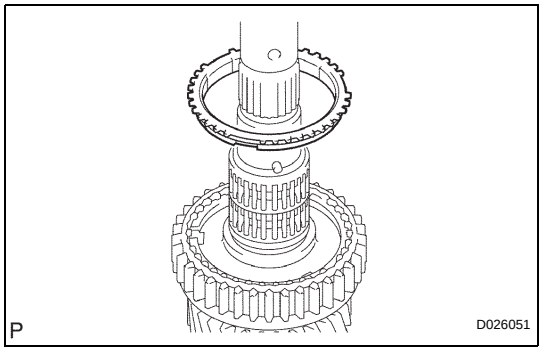

14. INSTALL NO. 1 SYNCHRONIZER RING

(a) Apply gear oil to the synchronizer ring No. 1, and install it onto the output shaft.

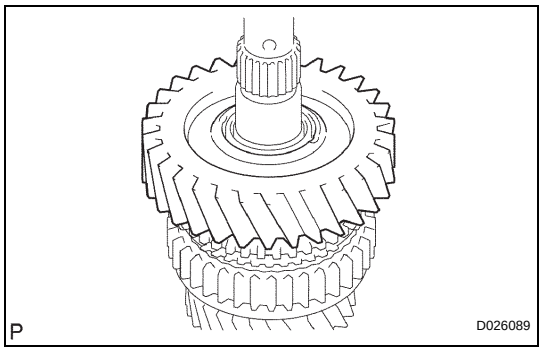

15. INSTALL 1ST GEAR

(a) Apply gear oil to the 1st gear, and install it onto the output shaft.

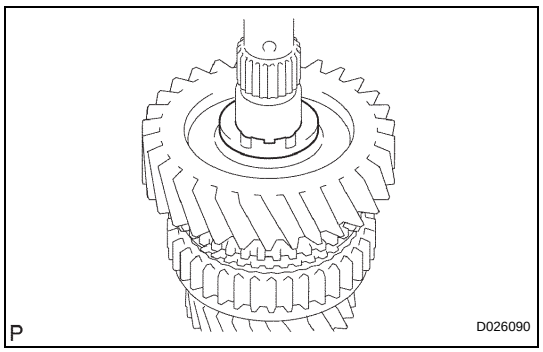

16. INSTALL 1ST GEAR THRUST WASHER

(a) Apply gear oil to the 1st gear thrust washer, and install it onto the output shaft.

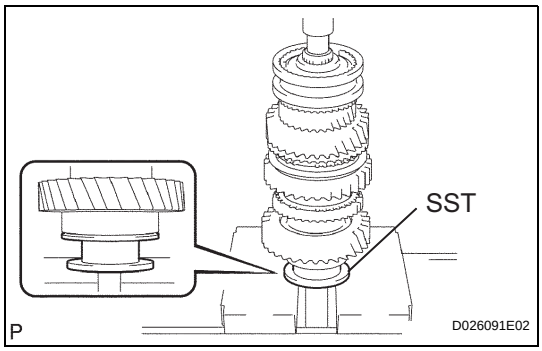

17. INSTALL OUTPUT SHAFT CENTER BEARING

(a) Using SST and a press, install a new output shaft center bearing onto the output shaft.

SST 09316-60011 (09316-00031)

NOTICE:

Install it with the snap ring groove of the bearing facing to the rear side.

MT

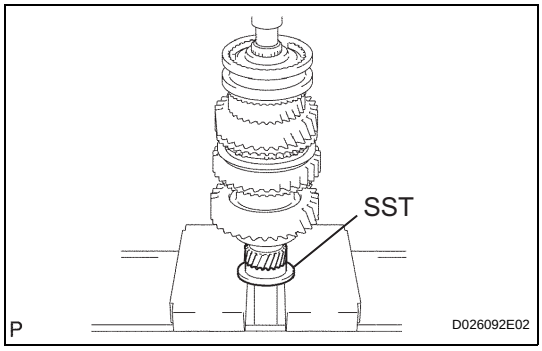

18. INSTALL 5TH GEAR

(a) Using SST and a press, install the 5th gear onto the output shaft.

SST 09316-60011 (09316-00031)

NOTICE:

- **Check that the 5th gear is fitted into the spline of the output shaft before installing.**
- **Face the convex part of the gear to the front side.**

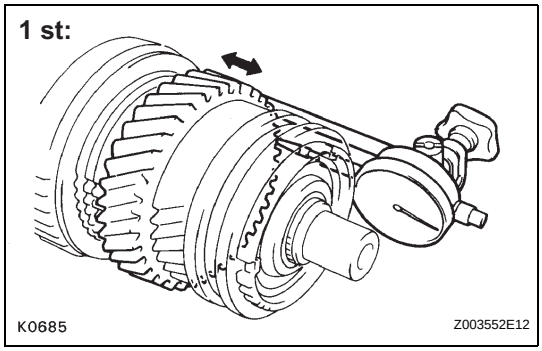

19. INSPECT 1ST GEAR THRUST CLEARANCE

(a) Using a dial indicator, measure the 1st gear thrust clearance.

Standard clearance:

0.20 to 0.45 mm (0.0079 to 0.0177 in.)

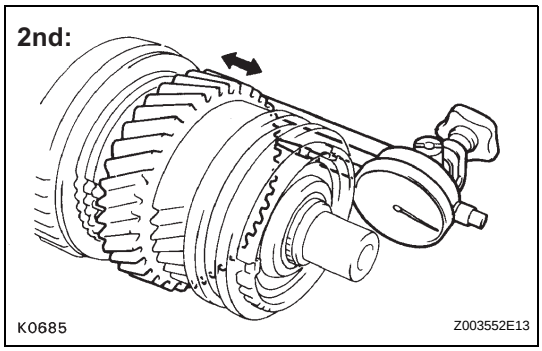

20. INSPECT 2ND GEAR THRUST CLEARANCE

(a) Using a dial indicator, measure the 2nd gear thrust clearance.

Standard clearance:

0.10 to 0.25 mm (0.0039 to 0.0098 in.)

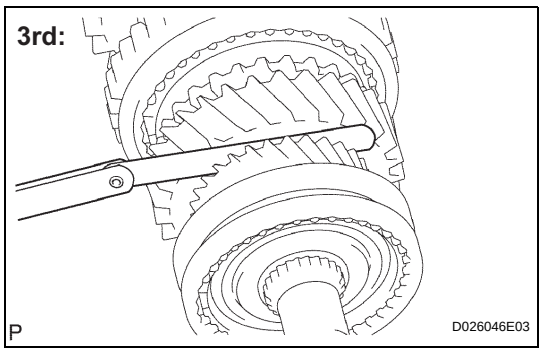

21. INSPECT 3RD GEAR THRUST CLEARANCE

(a) Using a feeler gauge, measure the 3rd gear thrust clearance.

Standard clearance:

0.10 to 0.25 mm (0.0039 to 0.0098 in.)

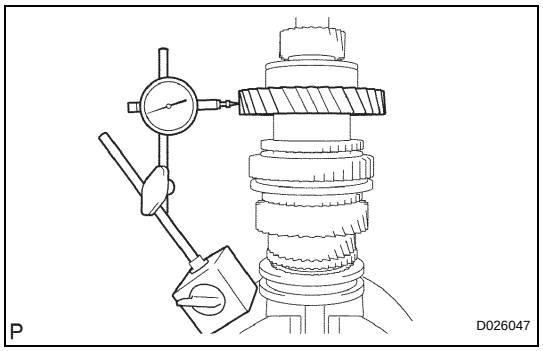

22. INSPECT 1ST GEAR RADIAL CLEARANCE

(a) Using a dial indicator, measure the 1st gear radial clearance.

Standard clearance:

0.020 to 0.073 mm (0.0008 to 0.0029 in)

If the clearance is not within the specified values, replace the 1st gear needle roller bearing with a new one.

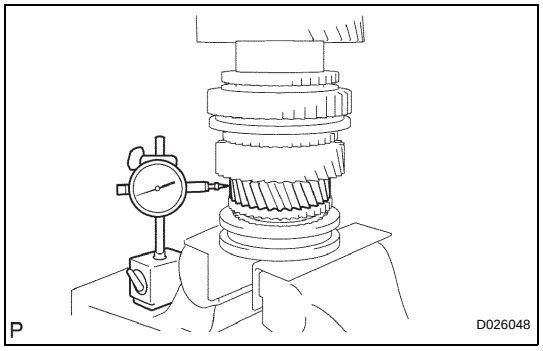

23. INSPECT 2ND GEAR RADIAL CLEARANCE

(a) Using a dial indicator, measure the 2nd gear radial clearance.

Standard clearance:

0.015 to 0.068 mm (0.0006 to 0.0027 in.)

If the clearance is not within the specified values, replace the 2nd gear needle roller bearing with a new one.

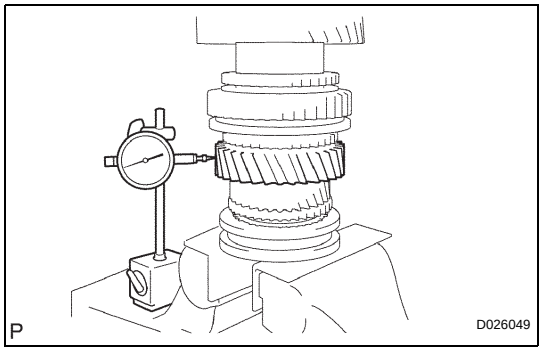

24. INSPECT 3RD GEAR RADIAL CLEARANCE

(a) Using a dial indicator, measure the 3rd gear radial clearance.

Standard clearance:

0.015 to 0.068 mm (0.0006 to 0.0027 in.)

If the clearance is not within the specified values, replace the 3rd gear needle roller bearing with a new one.

COUNTER GEAR AND REVERSE IDLER GEAR

COMPONENTS

MT

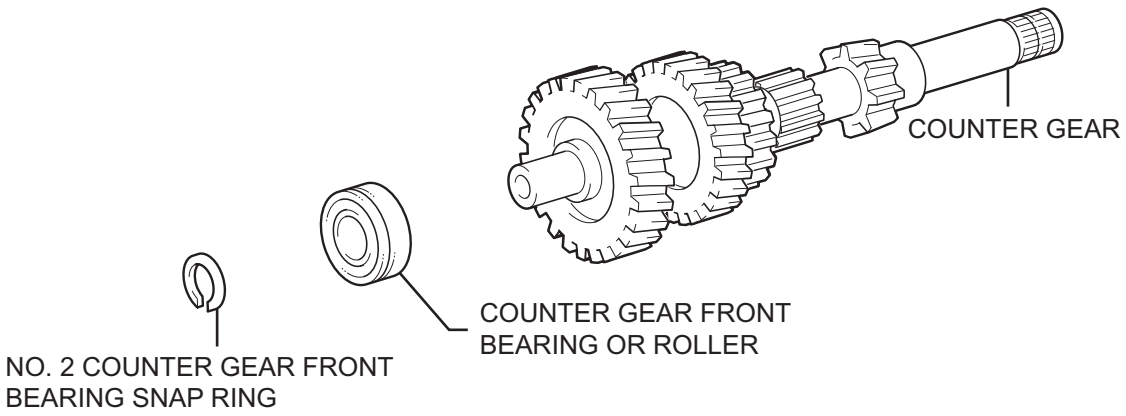

P

C115299E03

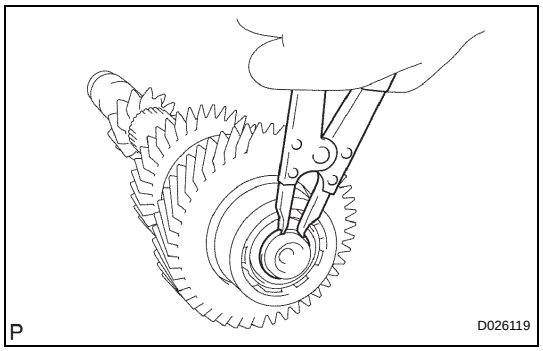

DISASSEMBLY

1. REMOVE NO. 2 COUNTER GEAR FRONT BEARING SNAP RING

(a) Using a snap ring expander, remove the No. 2 counter gear front bearing snap ring from the counter gear.

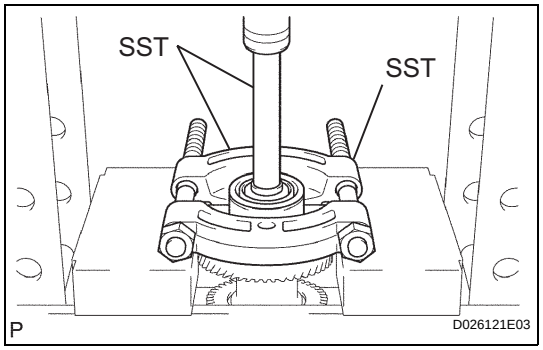

2. REMOVE COUNTER GEAR FRONT BEARING OR ROLLER

(a) Using SST and a press, remove the counter gear front bearing from the counter gear.

SST 09950-00020, 09950-60010 (09951-00220), 09950-70010 (09951-07100)

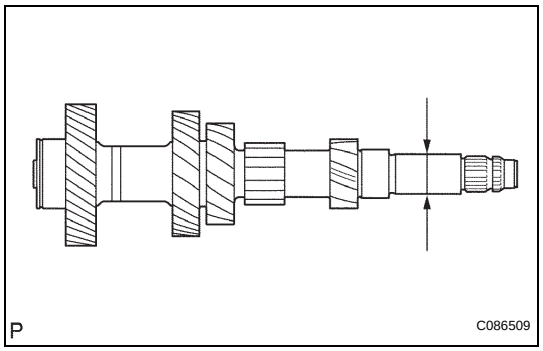

INSPECTION

1. INSPECT COUNTER GEAR

(a) Using a micrometer, measure the outer diameter of the counter gear as shown in the diagram.

Standard diameter:
29.984 to 30.000 mm(1.1805 to 1.1811 in.)
Minimum diameter:
29.984 mm (1.1805 in.)

If the outer diameter is less than the minimum, replace the counter gear with a new one.

REASSEMBLY

1. INSTALL COUNTER GEAR FRONT BEARING OR ROLLER

(a) Using SST and a press, install the counter gear front bearing onto the counter gear.

SST 09515-10010

Install it so that the snap ring groove of the bearing faces to the front side.

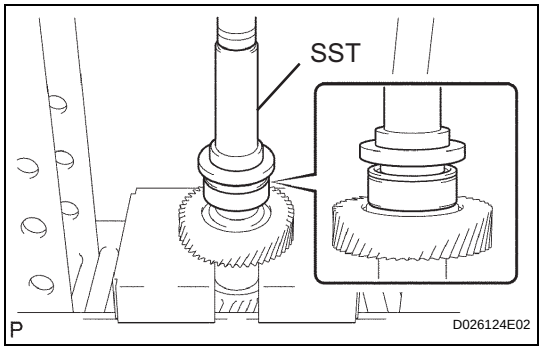

2. INSTALL NO. 2 COUNTER GEAR FRONT BEARING SNAP RING

(a) Select the correct counter gear front bearing No. 2 snap ring so that the clearance between the counter gear and No. 2 counter gear front bearing snap ring No. 2 is within the specified values. Using a brass bar and a hammer, install it onto the counter gear.

Standard clearance:
0.1 mm (0.0039 in.) or less

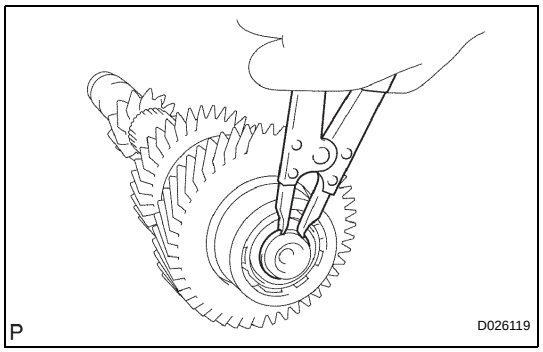

Mark	Thickness mm (in.)
A	2.05 to 2.10 (0.0807 to 0.0827)

MT

Mark	Thickness mm (in.)
B	2.10 to 2.15 (0.0827 to 0.0846)
C	2.15 to 2.20 (0.0846 to 0.0866)
D	2.20 to 2.25 (0.0866 to 0.0886)
E	2.25 to 2.30 (0.0886 to 0.0906)
F	2.30 to 2.35 (0.0906 to 0.0925)

MANUAL TRANSMISSION SYSTEM

PROBLEM SYMPTOMS TABLE

Use the table below to help determine the cause of the problems. The numbers indicate the ranked order of probability of each of the possible causes. Check each part in the order suggested. If necessary, replace the applicable parts.

Symptom	Suspected area	See page
Abnormal noise	1. Oil level (Low)	MT-2
	2. Oil (Wrong)	MT-2
	3. Gears (Worn or damaged)	-
	4. Bearings (Worn or damaged)	-
Oil leakage	1. Oil level (High)	MT-2
	2. Gasket (Damaged)	-
	3. Oil seal (Worn or damaged)	-
	4. O-ing (Worn or damaged)	-
Hard shifting or will not shift	1. Synchronizer ring (Worn or damaged)	-
	2. Shift key spring (Damaged)	-
Jumps out of gear	1. Locking ball spring (Damaged)	-
	2. Shift fork (Worn)	-
	3. Gears (Worn or damaged)	-
	4. Bearings (Worn or damaged)	-

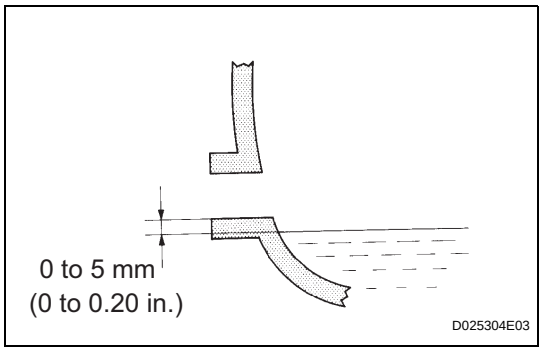

MANUAL TRANSMISSION OIL

ON-VEHICLE INSPECTION

1. INSPECT TRANSMISSION OIL

(a) Park the vehicle in a level place.

(b) Remove the transmission filler plug and gasket.

(c) Check that the oil surface is within 5 mm (0.20 in.) of the lowest point of the transmission filler plug opening.

NOTICE:

- **Problems may occur when the oil level is too high or low.**
- **After replacing the oil, drive the vehicle and check the oil level again.**

(d) Check for oil leakage when the oil level is low.

(e) Install the transmission filler plug and a new gasket.
Torque: 37 N*m (377 kgf*cm, 27 ft.*lbf)

MT

MANUAL TRANSMISSION EXTENSION HOUSING OIL SEAL

REMOVAL

1. **REMOVE PROPELLER WITH CENTER BEARING SHAFT ASSEMBLY (See page PR-8)**
2. **REMOVE EXTENSION HOUSING DUST DEFLECTOR**
   (a) Using a plastic hammer, remove the extension housing dust deflector.
3. **REMOVE MANUAL TRANSMISSION EXTENSION HOUSING OIL SEAL**
   (a) Using SST, remove the transmission extension housing oil seal.
   SST 09308-00010

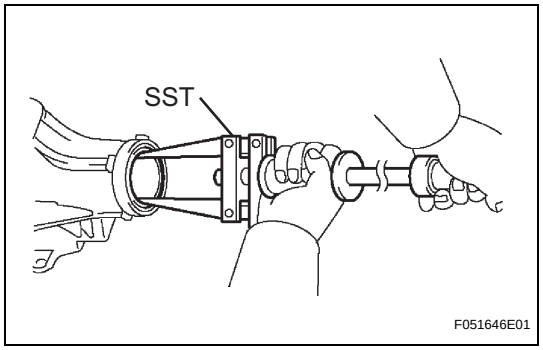

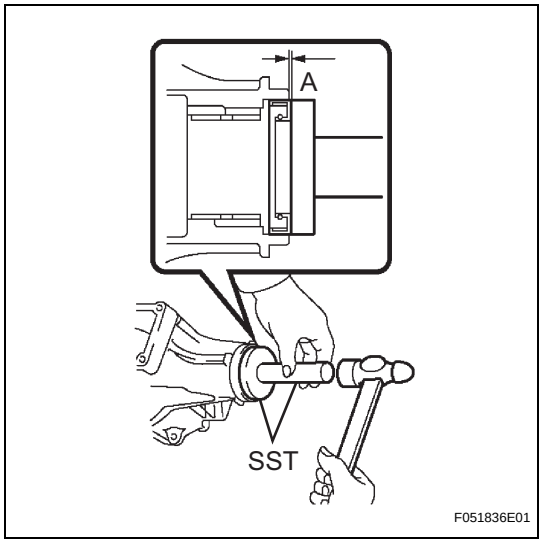

INSTALLATION

1. **INSTALL MANUAL TRANSMISSION EXTENSION HOUSING OIL SEAL**
   (a) Using SST and hammer, tap a new oil seal into the extension housing in accordance with the dimension specified in the illustration.
   SST 09950-60020 (09951-00640), 09950-70010 (09951-07100)
   Dimension A:
   -0.5 to 0.5 mm (-0.197 to 0.197 in.)
   (b) Apply gear oil to the lip of the oil seal.
2. **INSTALL EXTENSION HOUSING DUST DEFLECTOR**
   (a) Using a plastic hammer, install the extension housing dust deflector.
3. **INSTALL PROPELLER WITH CENTER BEARING SHAFT ASSEMBLY (See page PR-13)**
4. **INSPECT MANUAL TRANSMISSION OIL**

MANUAL TRANSMISSION ASSEMBLY

COMPONENTS

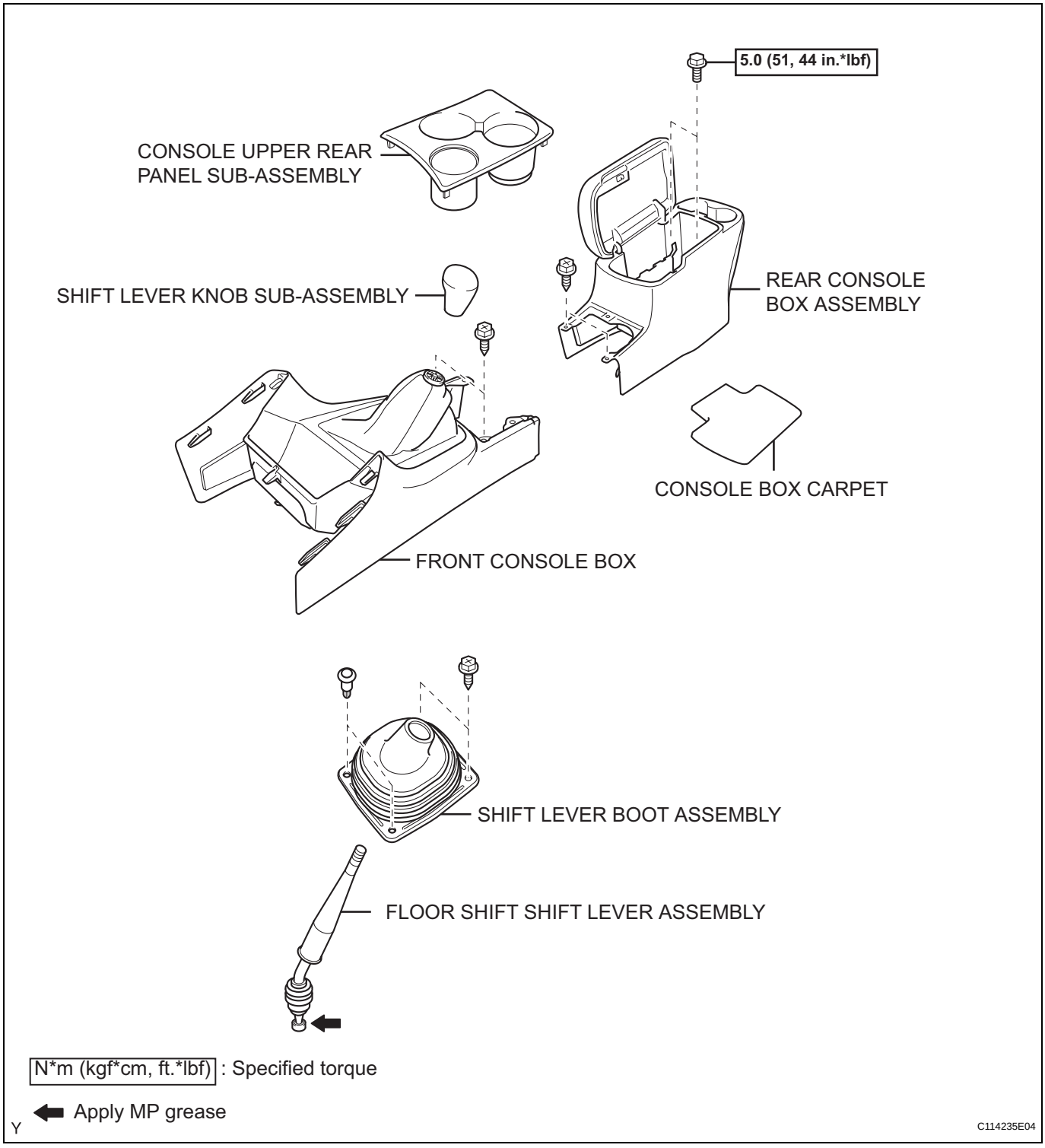

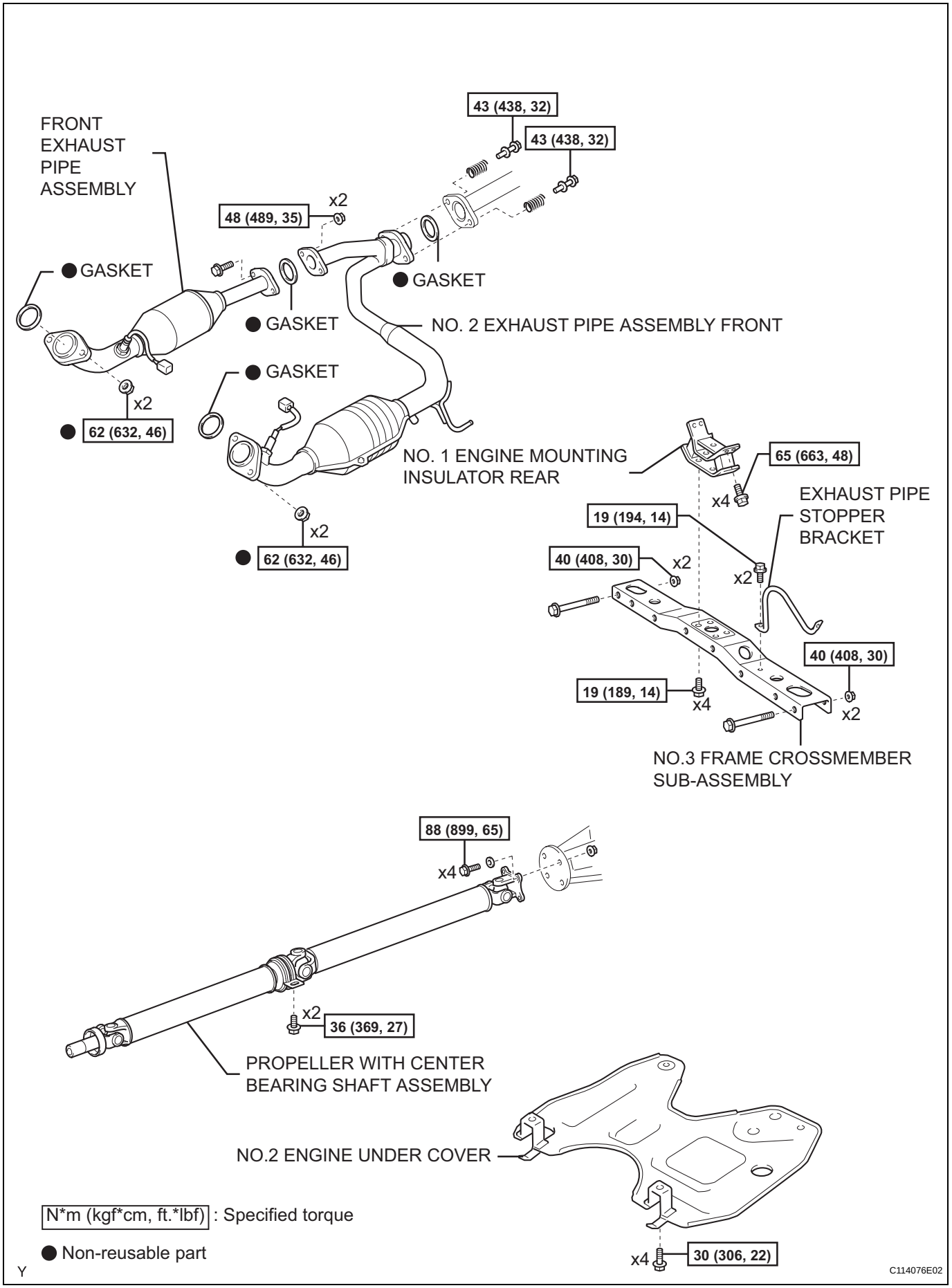
FRONT EXHAUST PIPE ASSEMBLY
43 (438, 32)
43 (438, 32)
48 (489, 35)
x2
GASKET
GASKET
GASKET
GASKET
NO. 2 EXHAUST PIPE ASSEMBLY FRONT
x2
62 (632, 46)
x2
62 (632, 46)
NO. 1 ENGINE MOUNTING INSULATOR REAR
65 (663, 48)
x4
EXHAUST PIPE STOPPER BRACKET
19 (194, 14)
40 (408, 30)
x2
x2
40 (408, 30)
19 (189, 14)
x4
x2
NO.3 FRAME CROSSMEMBER SUB-ASSEMBLY
88 (899, 65)
x4
x2
36 (369, 27)
PROPELLER WITH CENTER BEARING SHAFT ASSEMBLY
NO.2 ENGINE UNDER COVER
x4
30 (306, 22)
N*m (kgf*cm, ft.*lbf) : Specified torque
Non-reusable part
Y
C114076E02

MT

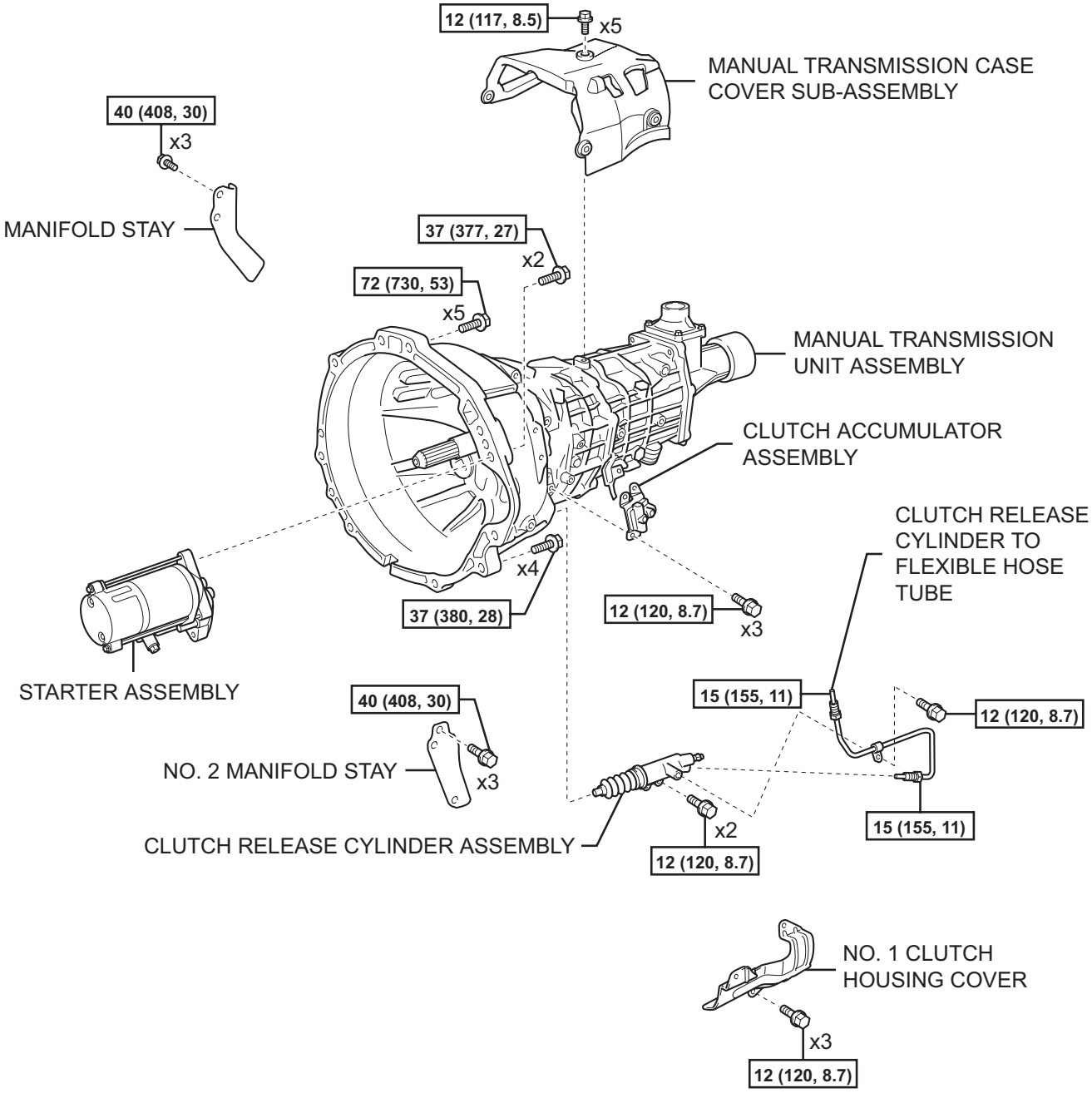

N*m (kgf*cm, ft*lbf) :Specified torque

Y

C114077E02

MANUAL TRANSMISSION UNIT

COMPONENTS

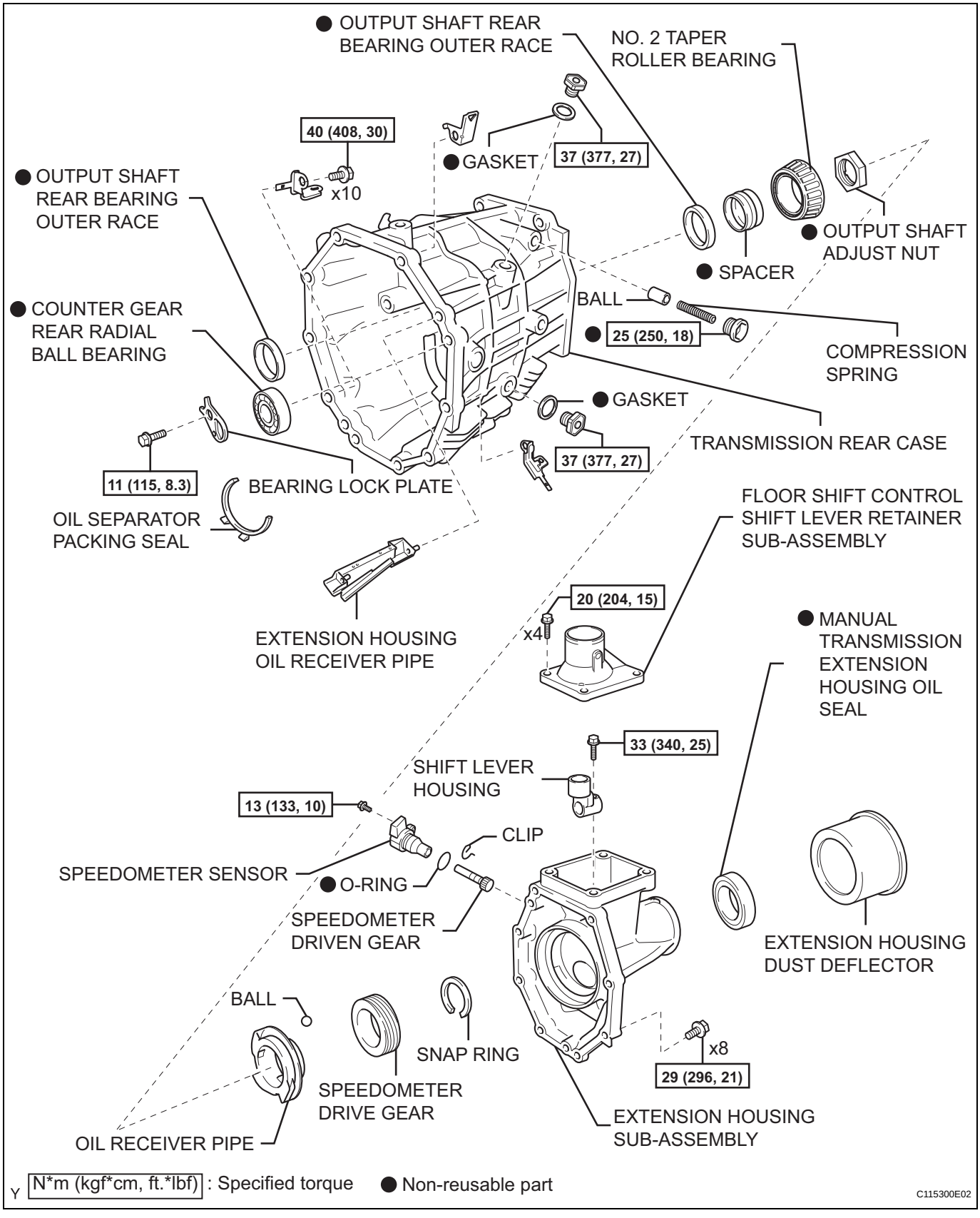

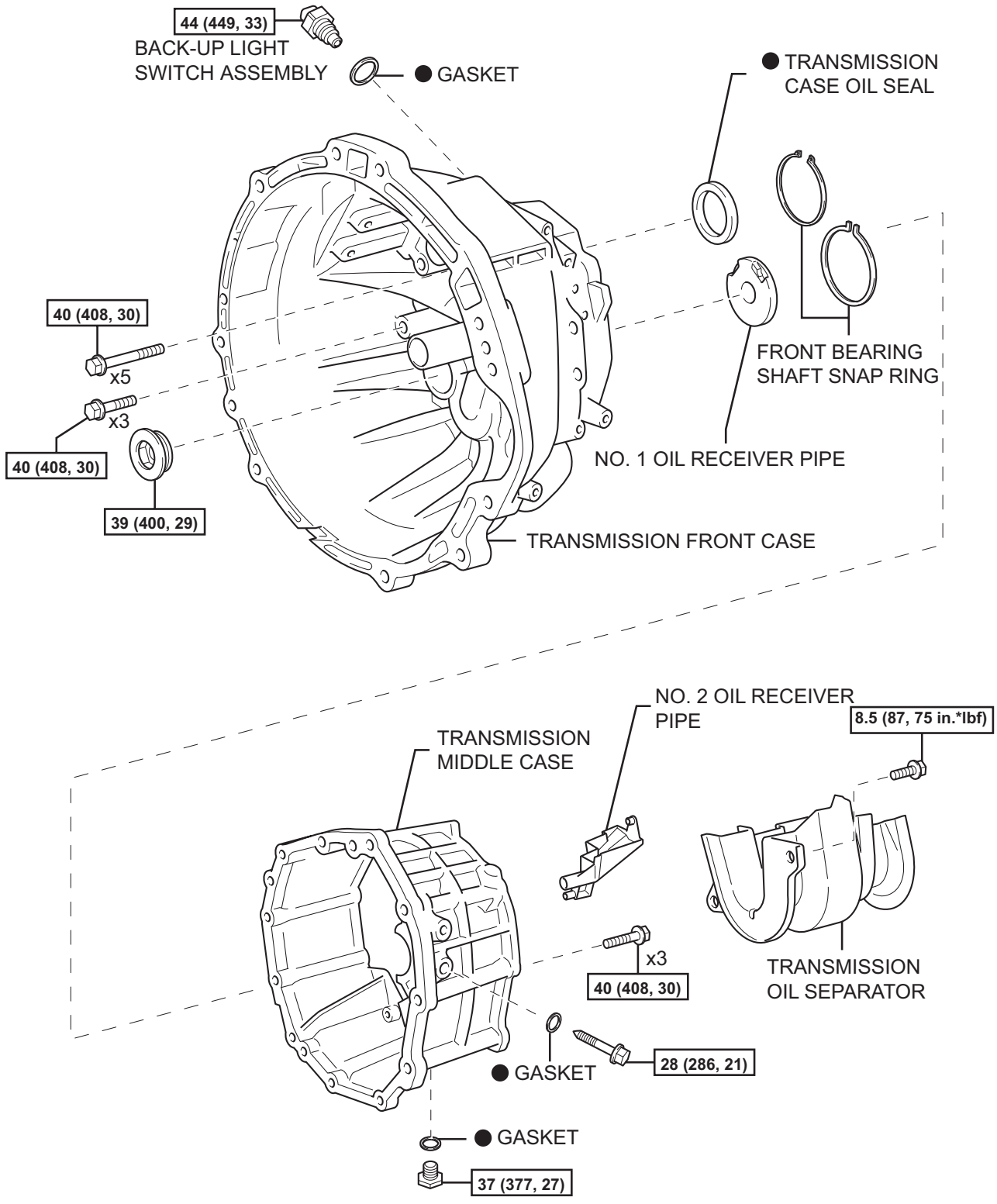

N*m (kgf*cm, ft.*lbf) : Specified torque

● Non-reusable part

Y

C114219E04

MT

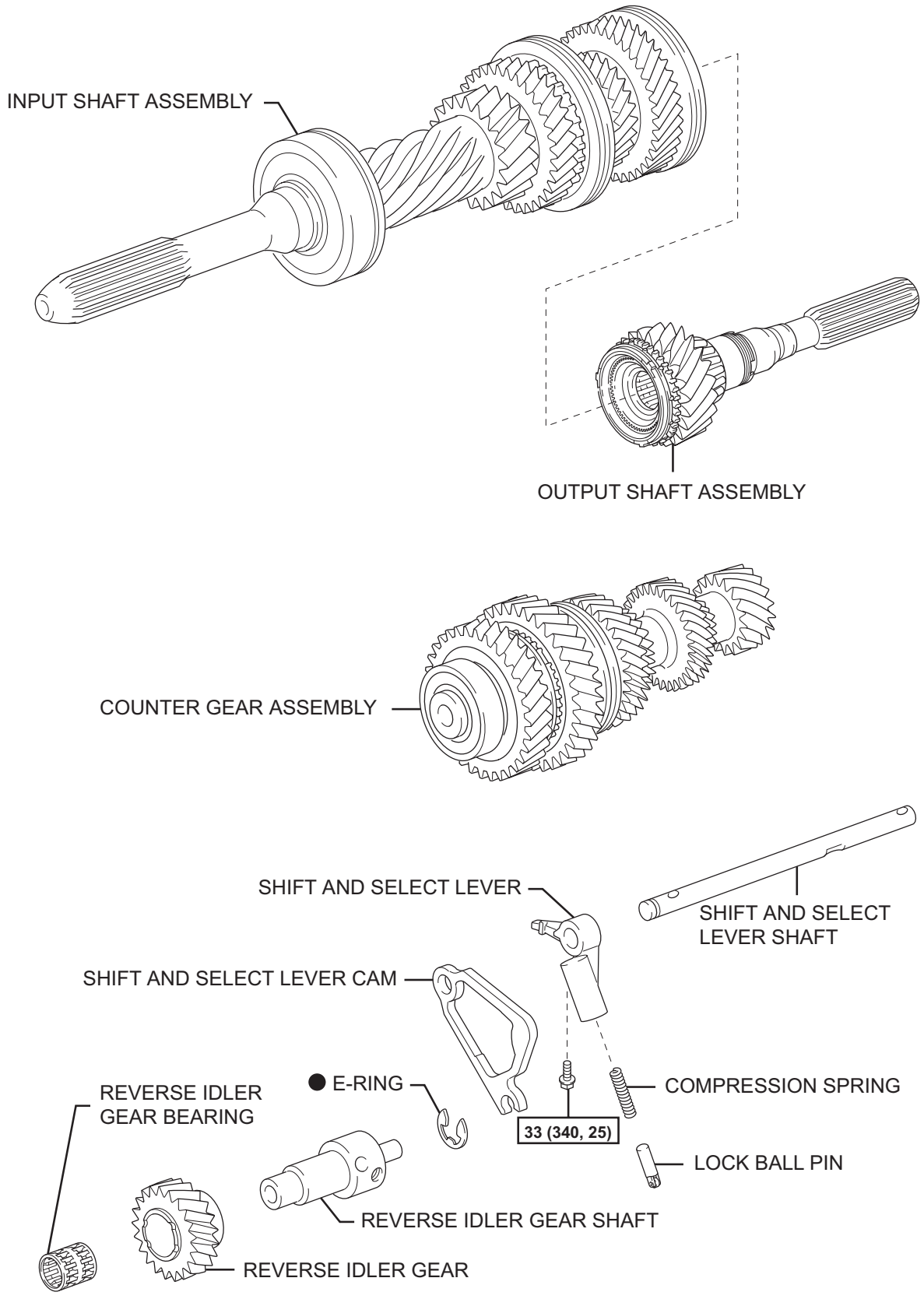

Y N*m (kgf*cm, ft.*lbf) : Specified torque ● Non-reusable part

C114069E02

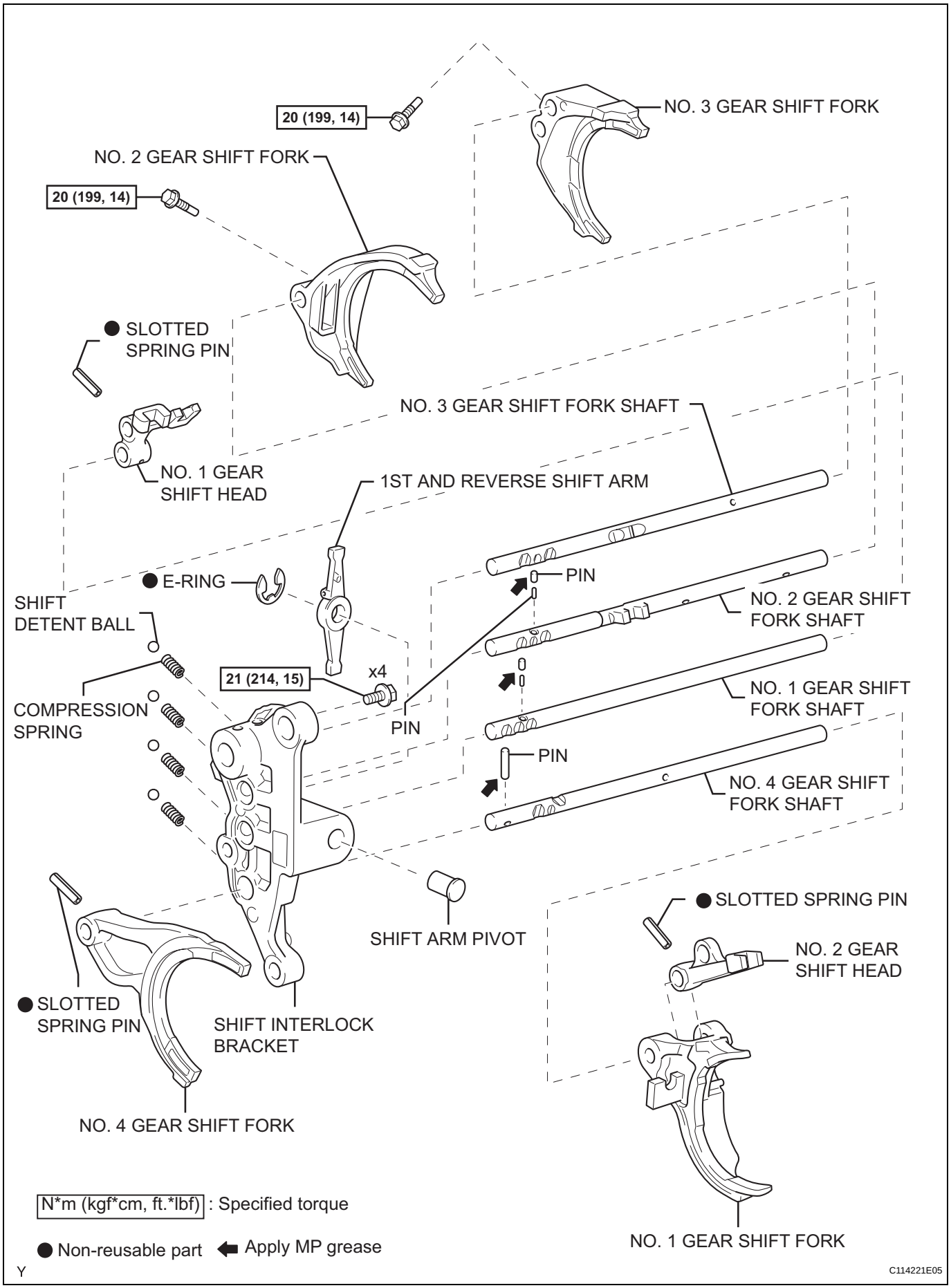
20 (199, 14)
NO. 3 GEAR SHIFT FORK
NO. 2 GEAR SHIFT FORK
20 (199, 14)
● SLOTTED SPRING PIN
NO. 3 GEAR SHIFT FORK SHAFT
NO. 1 GEAR SHIFT HEAD
1ST AND REVERSE SHIFT ARM
● E-RING
PIN
SHIFT DETENT BALL
NO. 2 GEAR SHIFT FORK SHAFT
21 (214, 15)
x4
COMPRESSION SPRING
PIN
NO. 1 GEAR SHIFT FORK SHAFT
PIN
NO. 4 GEAR SHIFT FORK SHAFT
● SLOTTED SPRING PIN
SHIFT ARM PIVOT
NO. 2 GEAR SHIFT HEAD
● SLOTTED SPRING PIN
SHIFT INTERLOCK BRACKET
NO. 4 GEAR SHIFT FORK
NO. 1 GEAR SHIFT FORK
N*m (kgf*cm, ft.*lbf) : Specified torque
● Non-reusable part
Apply MP grease
Y
C114221E05

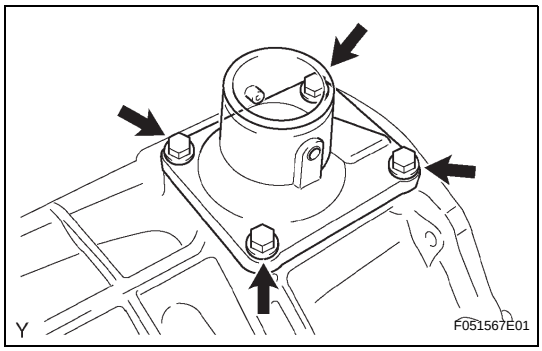

DISASSEMBLY

1. REMOVE FLOOR SHIFT CONTROL SHIFT LEVER RETAINER SUB-ASSEMBLY

(a) Remove the 4 bolts, then remove the floor shift control shift lever retainer.

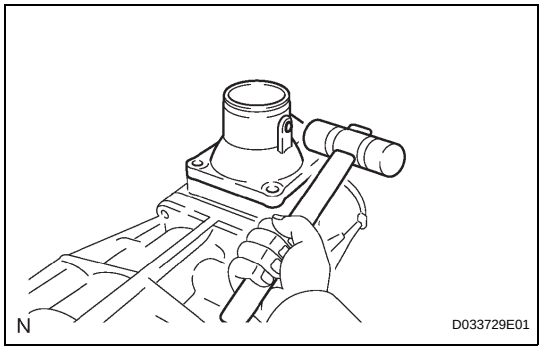

(b) Using a plastic hammer, remove the floor shift control shift lever retainer.

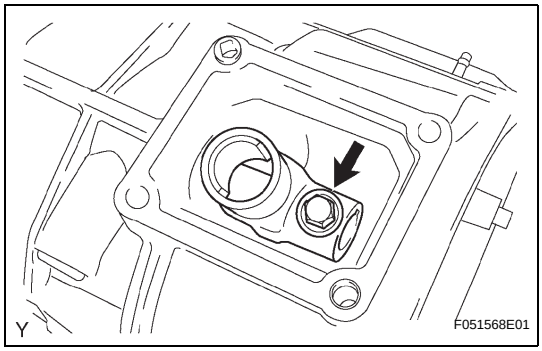

2. REMOVE SHIFT LEVER HOUSING

(a) Remove the bolt, then separate the shift lever housing.

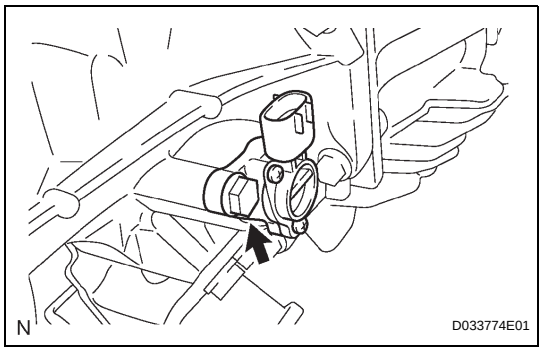

3. REMOVE SPEEDOMETER SENSOR

(a) Remove the bolt and speedometer sensor.

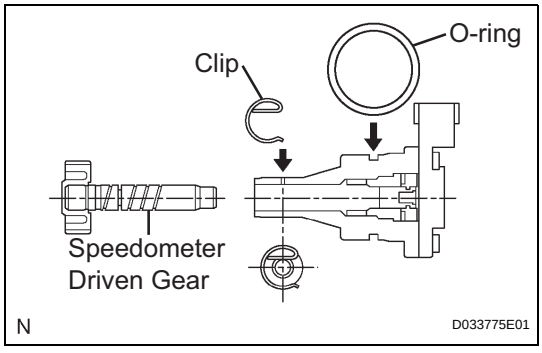

(b) Remove the clip from the speedometer sensor.
(c) Remove the driven gear from the speedometer sensor.
(d) Remove the O-ring from the speedometer sensor.
(e) Check the speedometer driven gear teeth.
If the driven gear is damaged, replace it.

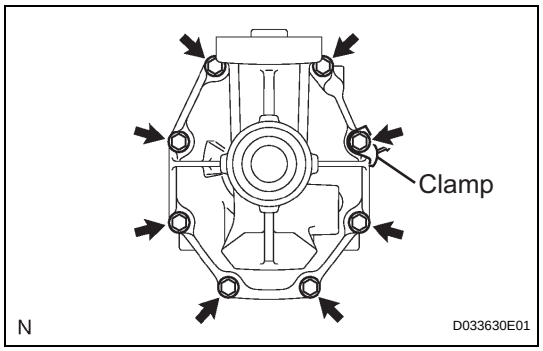

4. REMOVE EXTENSION HOUSING SUB-ASSEMBLY

(a) Remove the 8 bolts and clamp, then remove the extension housing sub-assembly.

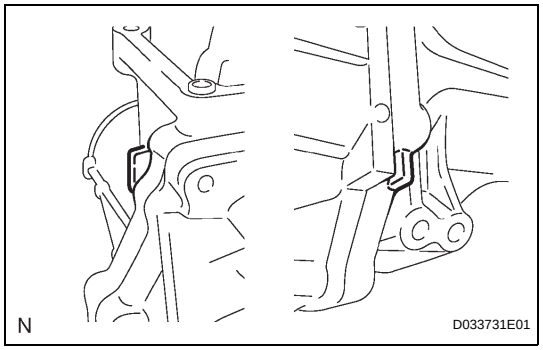

(b) Using a plastic hammer, carefully tap out the extension housing.

(c) Remove the shift lever housing.

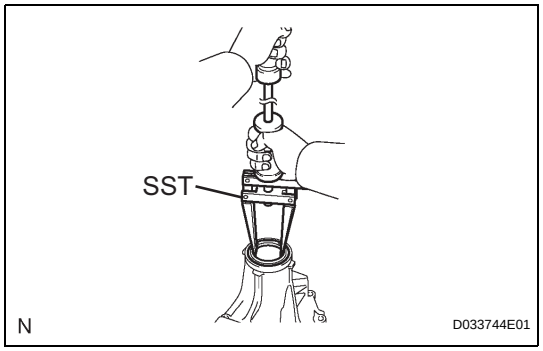

5. REMOVE MANUAL TRANSMISSION EXTENSION HOUSING OIL SEAL

(a) Using SST, remove the extension housing oil seal.
SST 09308-00010

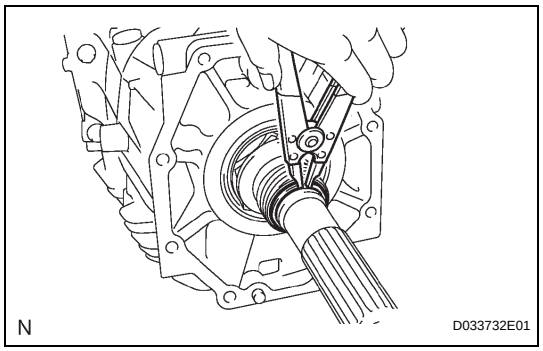

6. REMOVE SPEEDOMETER DRIVE GEAR

(a) Using a snap ring expander, remove the snap ring.

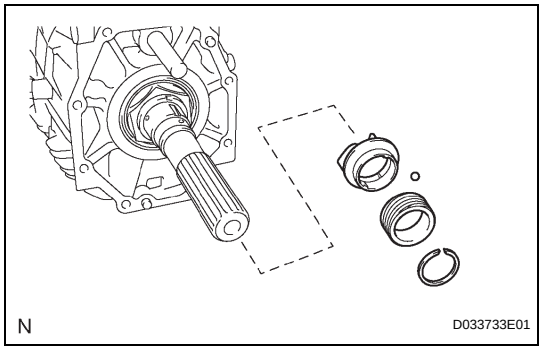

(b) Remove the speedometer drive gear, ball and oil receiver pipe.

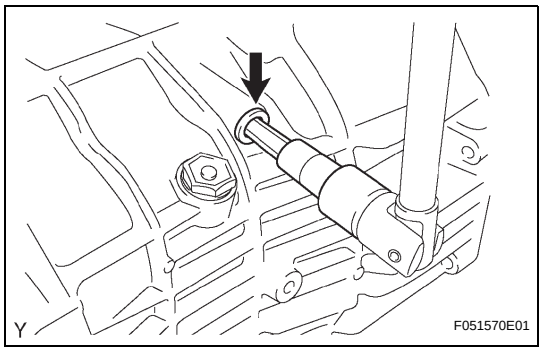

7. REMOVE SHIFT DETENT BALL PLUG

(a) Using a socket hexagon wrench (10 mm), remove the shift detent ball plug from the transmission rear case.

(b) Remove the ball and compression spring from the transmission rear case.

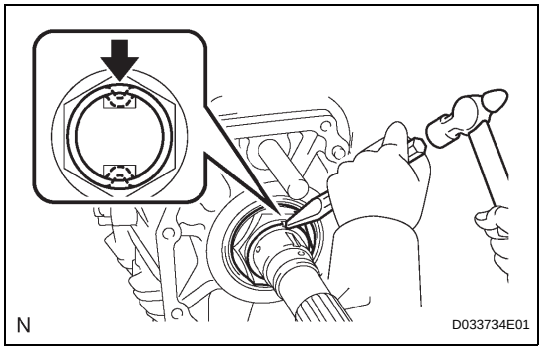

8. REMOVE OUTPUT SHAFT ADJUST NUT

(a) Using a chisel and hammer, unstake the nut.

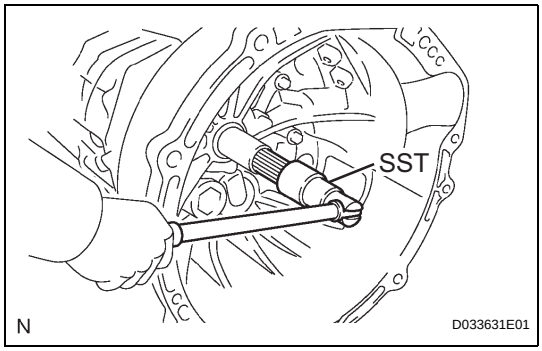

(b) Place the gearshift into 5th gear, and then fix the input shaft using SST.
SST 09556-16030

(c) Using a belt and wooden block, fasten the transmission to the workbench.

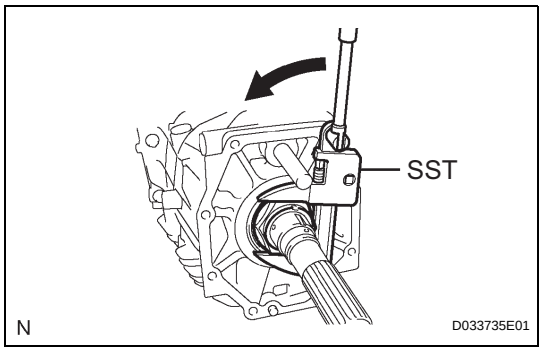

(d) Using SST, remove the nut from the output shaft.
SST 09922-10010

(e) Remove the belt and wooden block from the transmission.

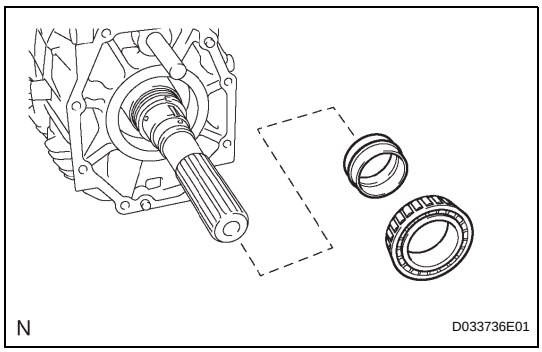

(f) Remove the taper roller bearing No. 2 and spacer.

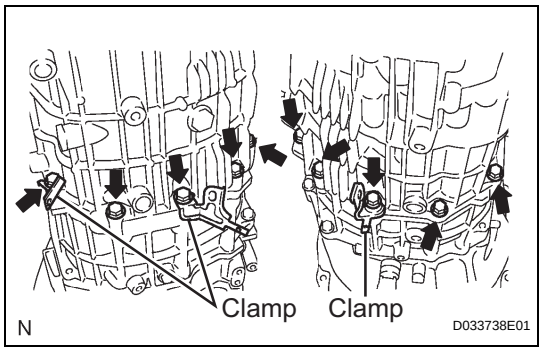

9. REMOVE TRANSMISSION REAR CASE

(a) Remove the 10 bolts and 3 clamps.

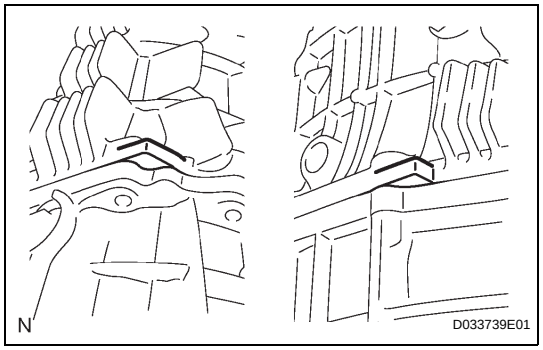

(b) Using a plastic hammer, carefully tap out the rear case.

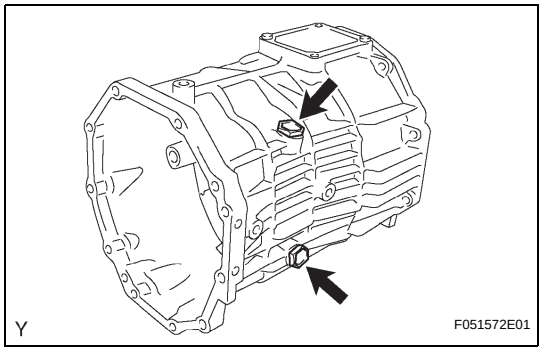

10. REMOVE MANUAL TRANSMISSION FILLER PLUG

(a) Remove the 2 transmission filler plugs and 2 gaskets from the transmission rear case.

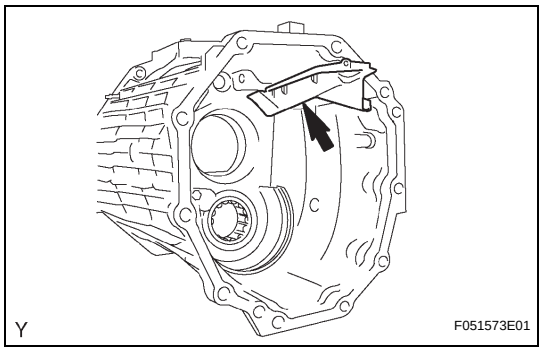

11. REMOVE EXTENSION HOUSING OIL RECEIVER PIPE

(a) Remove the extension housing oil receiver pipe from the transmission rear case.

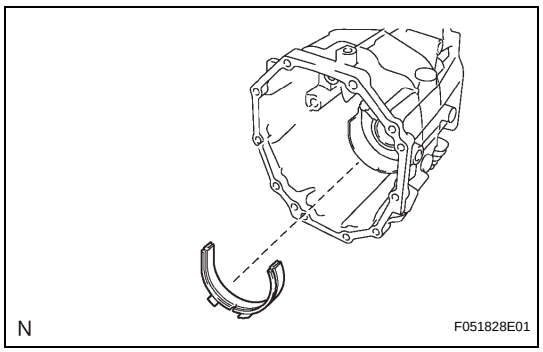

12. REMOVE OIL SEPARATOR PACKING SEAL

(a) Remove the oil separator packing seal from the transmission rear case.

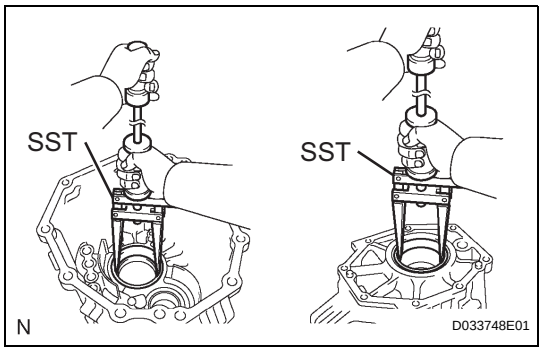

13. REMOVE OUTPUT SHAFT REAR BEARING OUTER RACE

(a) Using SST, remove the 2 bearing outer races.
SST 09308-00010

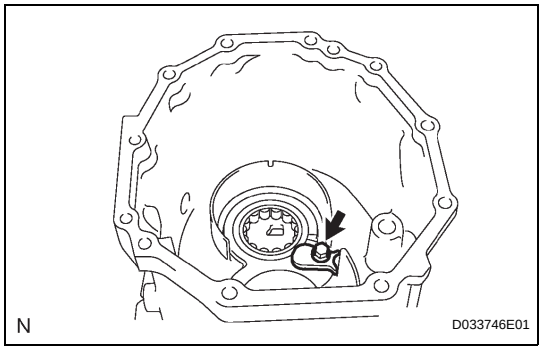

14. REMOVE COUNTER GEAR REAR RADIAL BALL BEARING

(a) Remove the bolt, then remove the bearing lock plate.

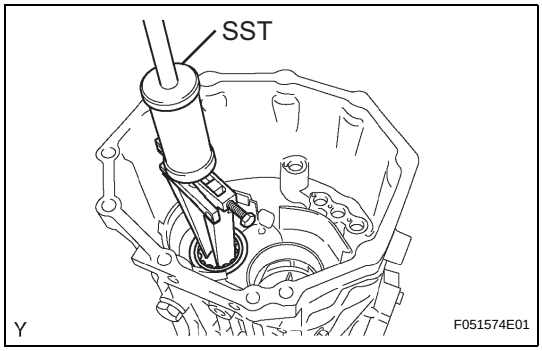

(b) Using SST, remove the counter gear rear radial ball bearing from the transmission rear case.
SST 09308-00010

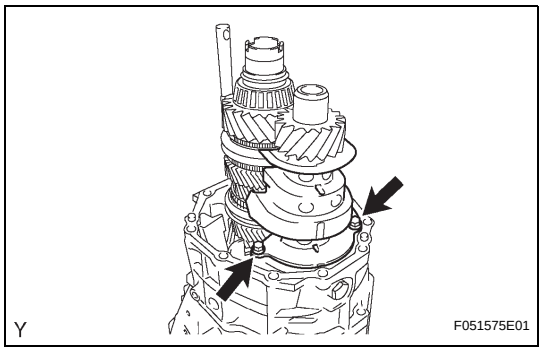

15. REMOVE TRANSMISSION OIL SEPARATOR

(a) Remove the 2 bolts, then remove the oil separator.

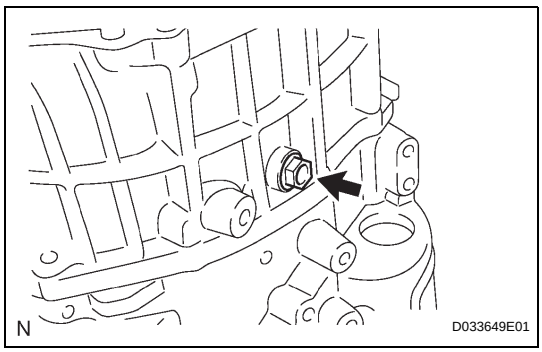

16. REMOVE REVERSE IDLER GEAR SHAFT BOLT

(a) Remove the reverse idler gear shaft bolt from the transmission middle case.

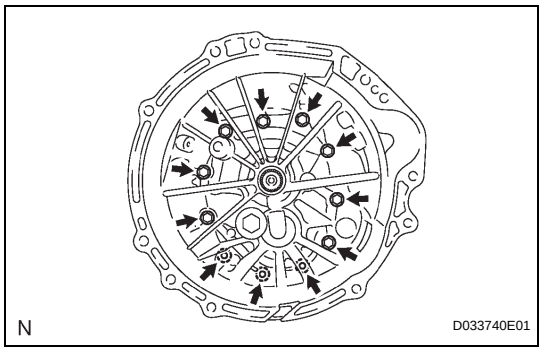

17. REMOVE TRANSMISSION MIDDLE CASE

(a) Remove the 11 bolts, then remove the transmission middle case.

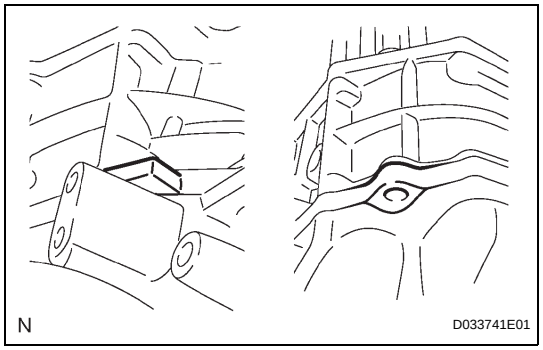

(b) Using a plastic hammer, carefully tap out the middle case.

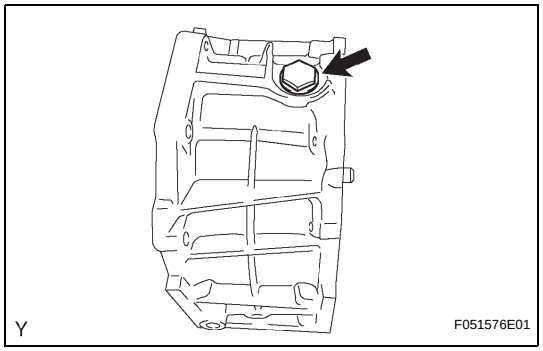

18. REMOVE DRAIN PLUG SUB-ASSEMBLY

(a) Remove the drain plug and gasket from the transmission middle case.

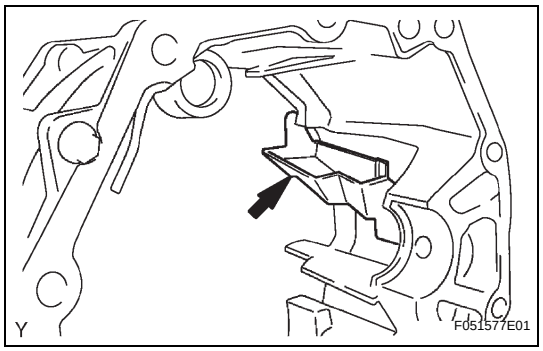

19. REMOVE NO. 2 OIL RECEIVER PIPE

(a) Remove the oil receiver pipe No. 2 from the transmission middle case.

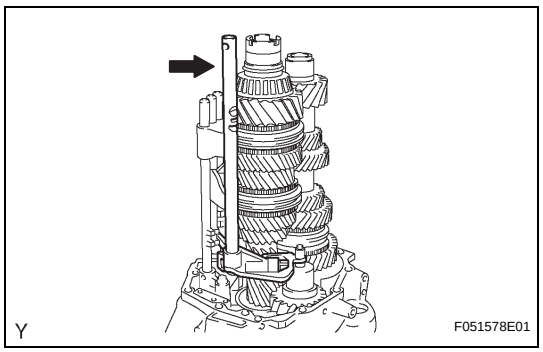

20. REMOVE SHIFT AND SELECT LEVER SHAFT

(a) Remove the shift and select lever shaft from the reverse gear shaft.

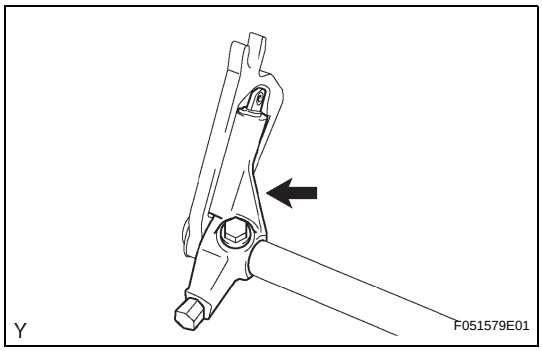

21. REMOVE SHIFT AND SELECT LEVER

(a) Remove the bolt, then remove the shift and select lever.

(b) Remove the lock ball pin and spring from the shift and select lever.

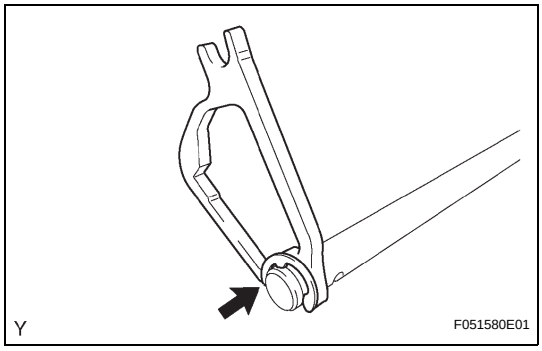

22. REMOVE SHIFT AND SELECT LEVER CAM

(a) Using a screwdriver, remove the E ring and the shift and select lever cam from the shift and select lever shaft.

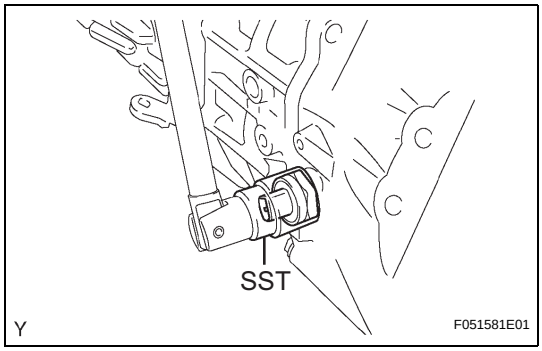

23. REMOVE BACK-UP LIGHT SWITCH ASSEMBLY

(a) Using SST, remove the back-up light switch and gasket.

SST 09817-16011

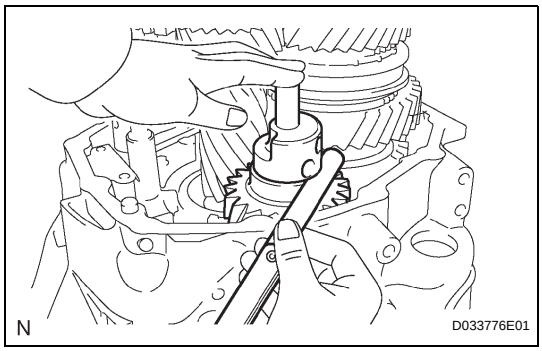

24. INSPECT REVERSE IDLER GEAR THRUST CLEARANCE

(a) Using a feeler gauge, measure the thrust clearance.

Standard clearance:
0.10 to 0.55 mm (0.0039 to 0.0217 in.)
Maximum clearance:
0.55 to (0.0217 in.)

If the clearance is exceeds the maximum, replace the reverse idler gear shaft.

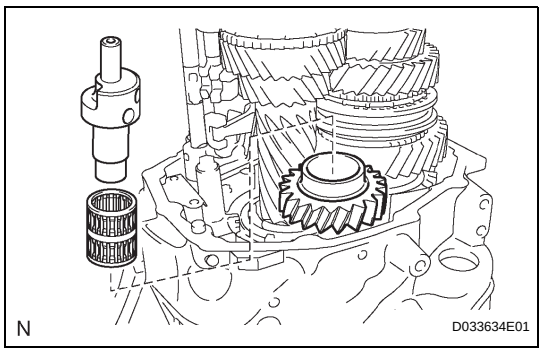

25. REMOVE REVERSE IDLER GEAR

(a) Remove the reverse idle gear shaft, needle roller bearing and reverse idler gear.

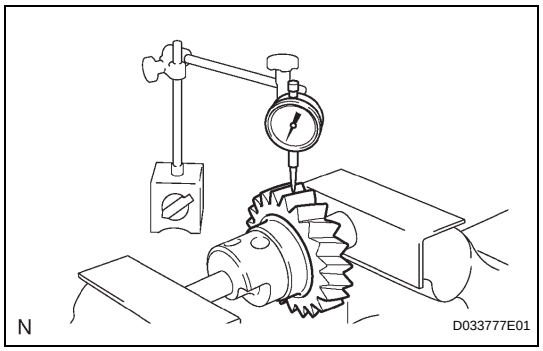

26. INSPECT REVERSE IDLER GEAR RADIAL CLEARANCE

(a) Using a dial indicator, measure the radial clearance.

Standard clearance:
0.015 to 0.050 mm (0.0006 to 0.0020 in.)
Maximum clearance:
0.050 mm (0.0020 in.)

If the clearance exceeds the maximum, replace the needle roller bearing.

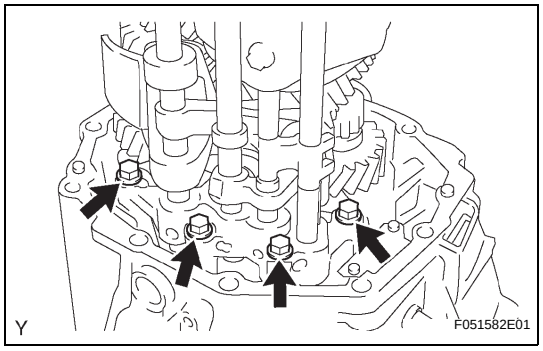

27. REMOVE TRANSMISSION FRONT CASE

(a) Remove the 4 bolts from the interlock bracket.

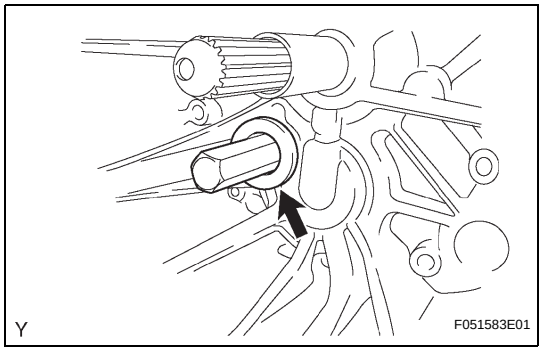

(b) Using a hexagon wrench (24 mm), remove the plug.

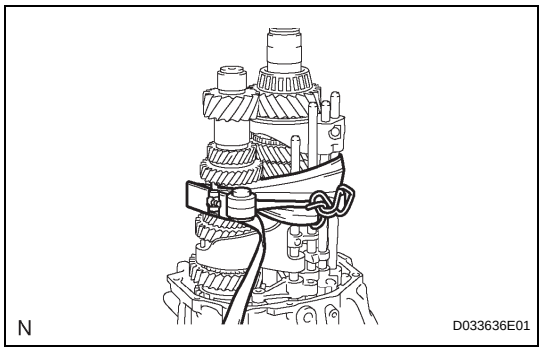

(c) Tie the input shaft, counter gear and control assembly with a rope or string.

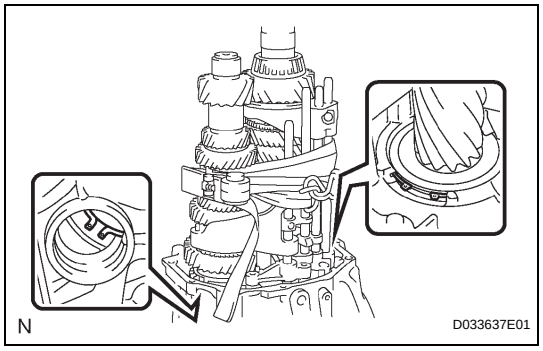

(d) Expand the 2 snap rings, and lift up the output shaft, input shaft, counter gear and control assembly.

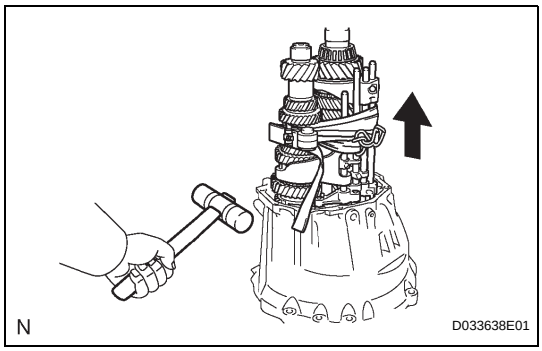

(e) Remove the output shaft, input shaft, counter gear shaft and control assembly while gently tapping the clutch housing with a plastic hammer.
NOTICE:
Take care not to subject the output shaft, input shaft, counter gear shaft and control assembly to any impact. This could cause the ball and spring to come out.
(f) Separate the output shaft, input shaft, counter gear shaft and control assembly.

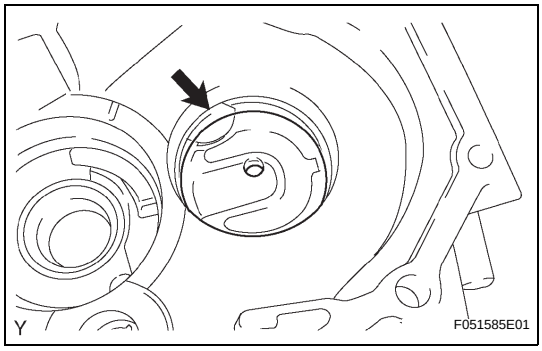

28. REMOVE NO. 1 OIL RECEIVER PIPE
(a) Remove the oil receiver pipe No. 1 from the transmission front case.

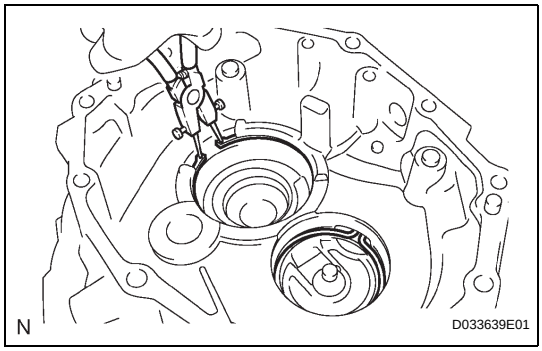

29. REMOVE FRONT BEARING SHAFT SNAP RING
(a) Using a snap ring plier, remove the 2 snap rings.

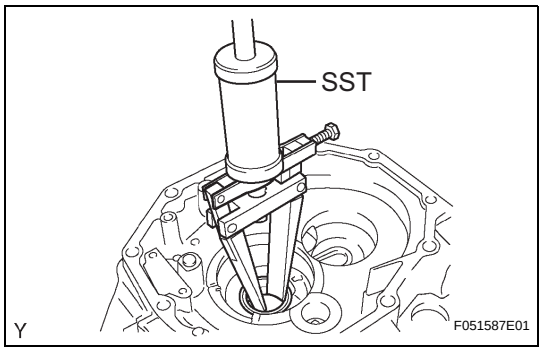

30. REMOVE TRANSMISSION CASE OIL SEAL
(a) Using SST, remove the transmission case oil seal from the transmission front case.
SST 09308-00010

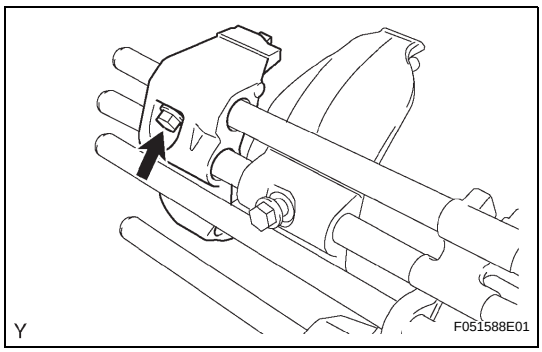

31. REMOVE NO. 3 GEAR SHIFT FORK
(a) Remove the bolt, then remove the gear shift fork No. 3.

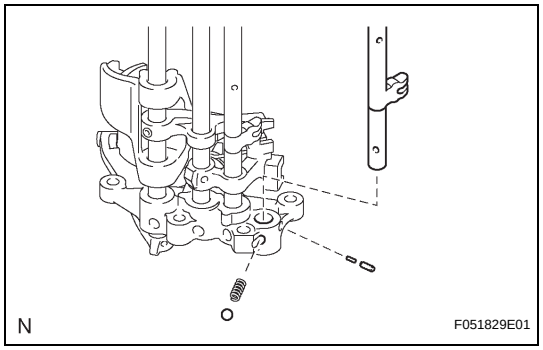

32. REMOVE NO. 3 GEAR SHIFT FORK SHAFT

(a) Remove the shift fork shaft No. 3, boll, spring, interlock pin No. 2 and interlock pin No. 3.

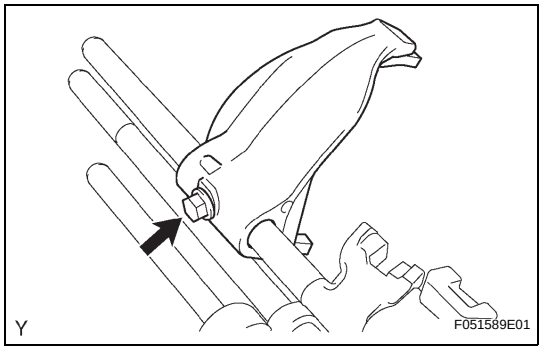

33. REMOVE NO. 2 GEAR SHIFT FORK

(a) Remove the bolt, then remove the gear shift fork No. 2.

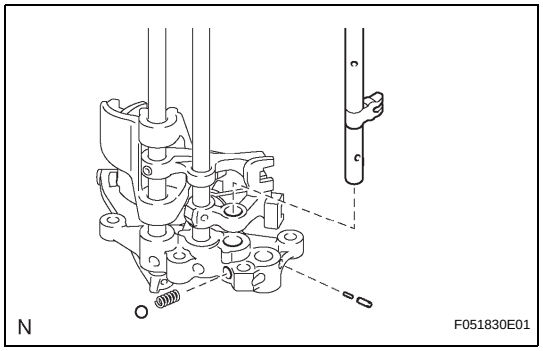

34. REMOVE NO. 2 GEAR SHIFT FORK SHAFT

(a) Remove the shift fork shaft No. 2, ball, spring, interlock pin No. 2 and interlock pin No. 3.

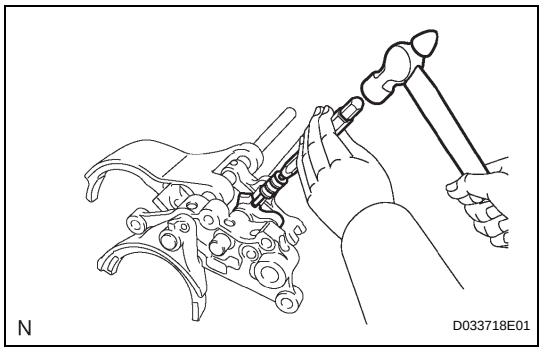

35. REMOVE NO. 1 GEAR SHIFT HEAD

(a) Using a pin punch (5 mm (0.20 in.)) and hammer, tap out the slotted pin.

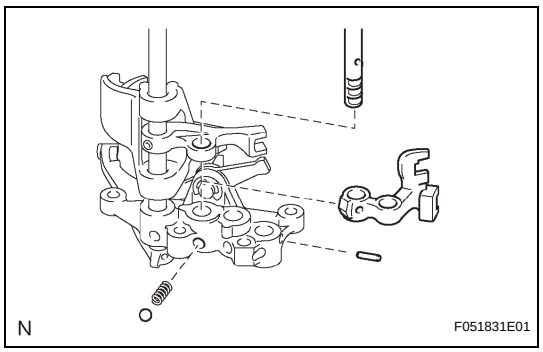

36. REMOVE NO. 1 GEAR SHIFT FORK SHAFT

(a) Remove the shift fork shaft No. 1, ball, spring, shift head No. 1 and interlock pin No. 1.

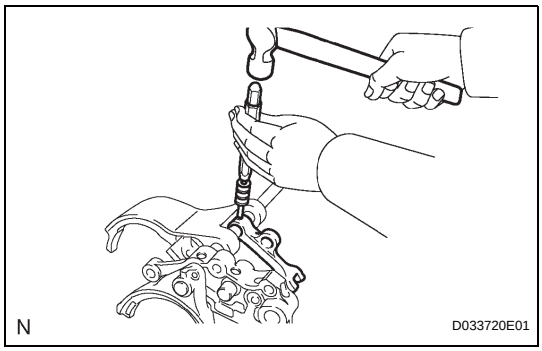

37. REMOVE NO. 1 GEAR SHIFT FORK

(a) Using a pin punch (5 mm (0.20 in.)) and hammer, tap out the slotted pin.

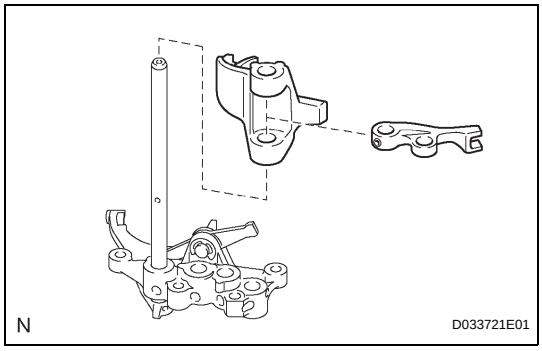

(b) Remove the shift head No. 2 and shift fork No. 1.

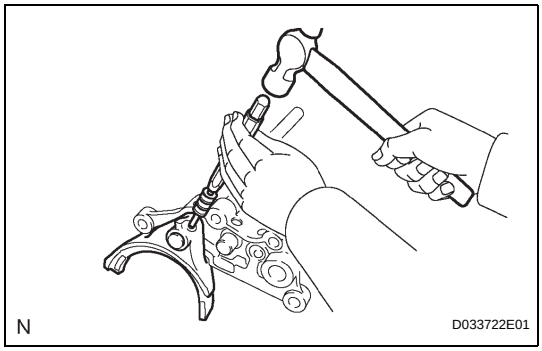

38. REMOVE NO. 4 GEAR SHIFT FORK

(a) Using a pin punch (5 mm (0.20 in.)) and hammer, tap out the slotted pin.

(b) Remove the shift fork No. 4.

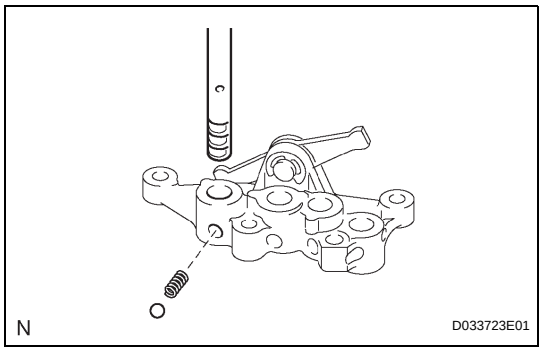

39. REMOVE NO. 4 GEAR SHIFT FORK SHAFT

(a) Remove the shift fork shaft No. 4, ball and spring.

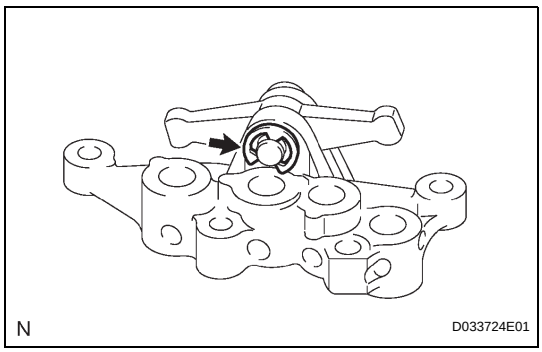

40. REMOVE 1ST AND REVERSE SHIFT ARM

(a) Using a screwdriver, remove the E-ring.

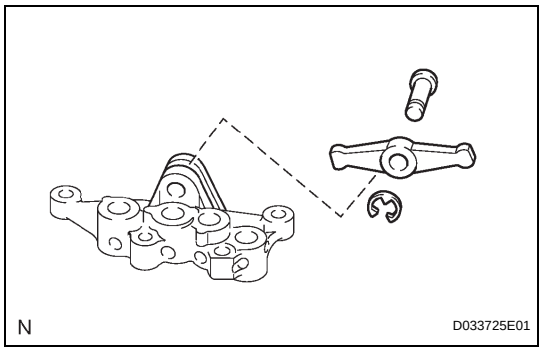

(b) Remove the shift arm pivot and shift arm.

REASSEMBLY

1. INSTALL 1ST AND REVERSE SHIFT ARM

(a) Install the shift arm and shift arm pivot onto the interlock bracket.

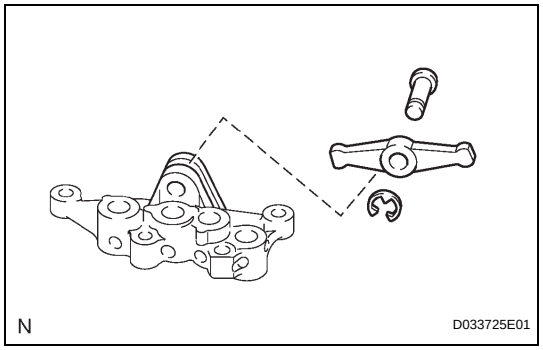

(b) Install a new E-ring onto the shift arm pivot.

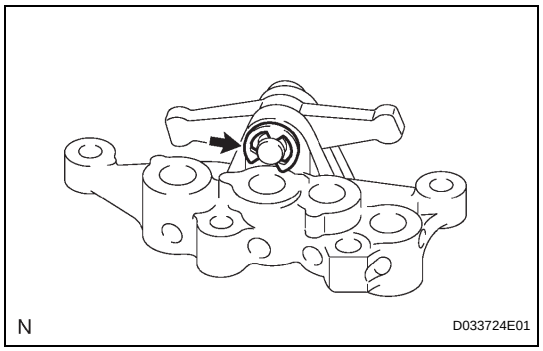

2. INSTALL NO. 4 GEAR SHIFT FORK SHAFT

(a) Install the spring and ball onto the interlock bracket.

(b) Install the shift fork shaft No. 4.

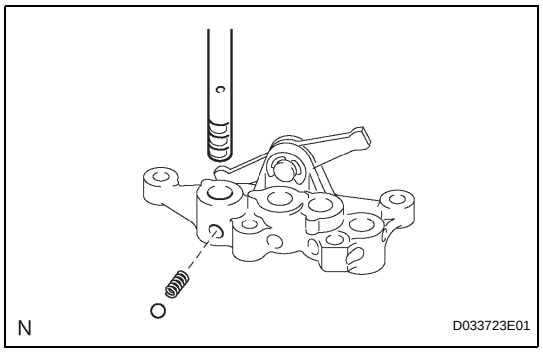

3. INSTALL NO. 4 GEAR SHIFT FORK

(a) Install the shift fork No. 4 onto the shift fork shaft No. 4.

(b) Using a pin punch (5 mm (0.20 in.)) and hammer, tap the new slotted pin into the shaft fork No. 4 and shift fork shaft No. 4.

Drive in depth:

0 to 0.5 mm (0 to 0.050 in.)

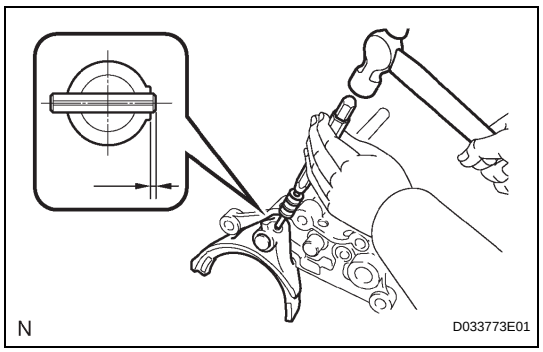

INPUT SHAFT

COMPONENTS

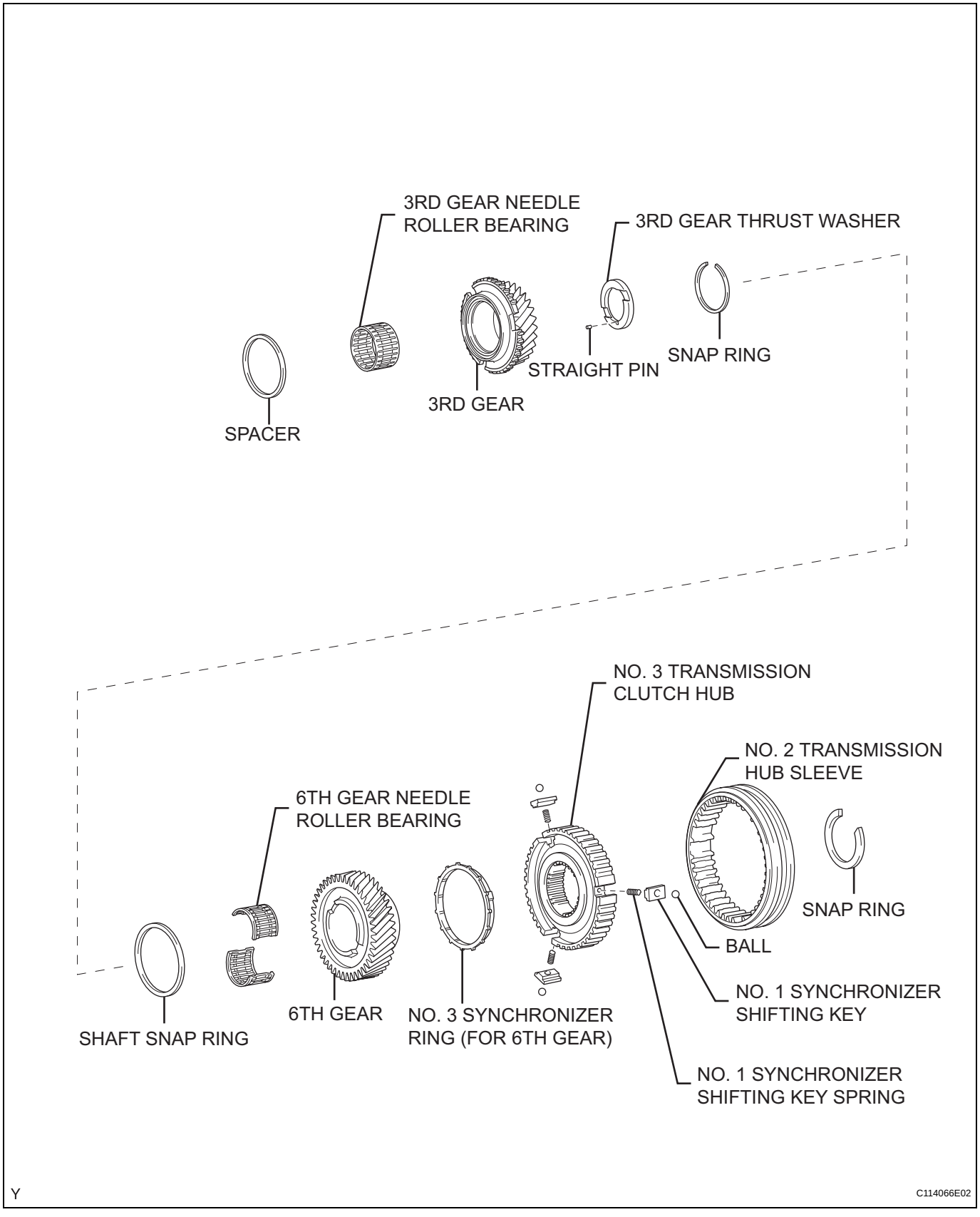

MT

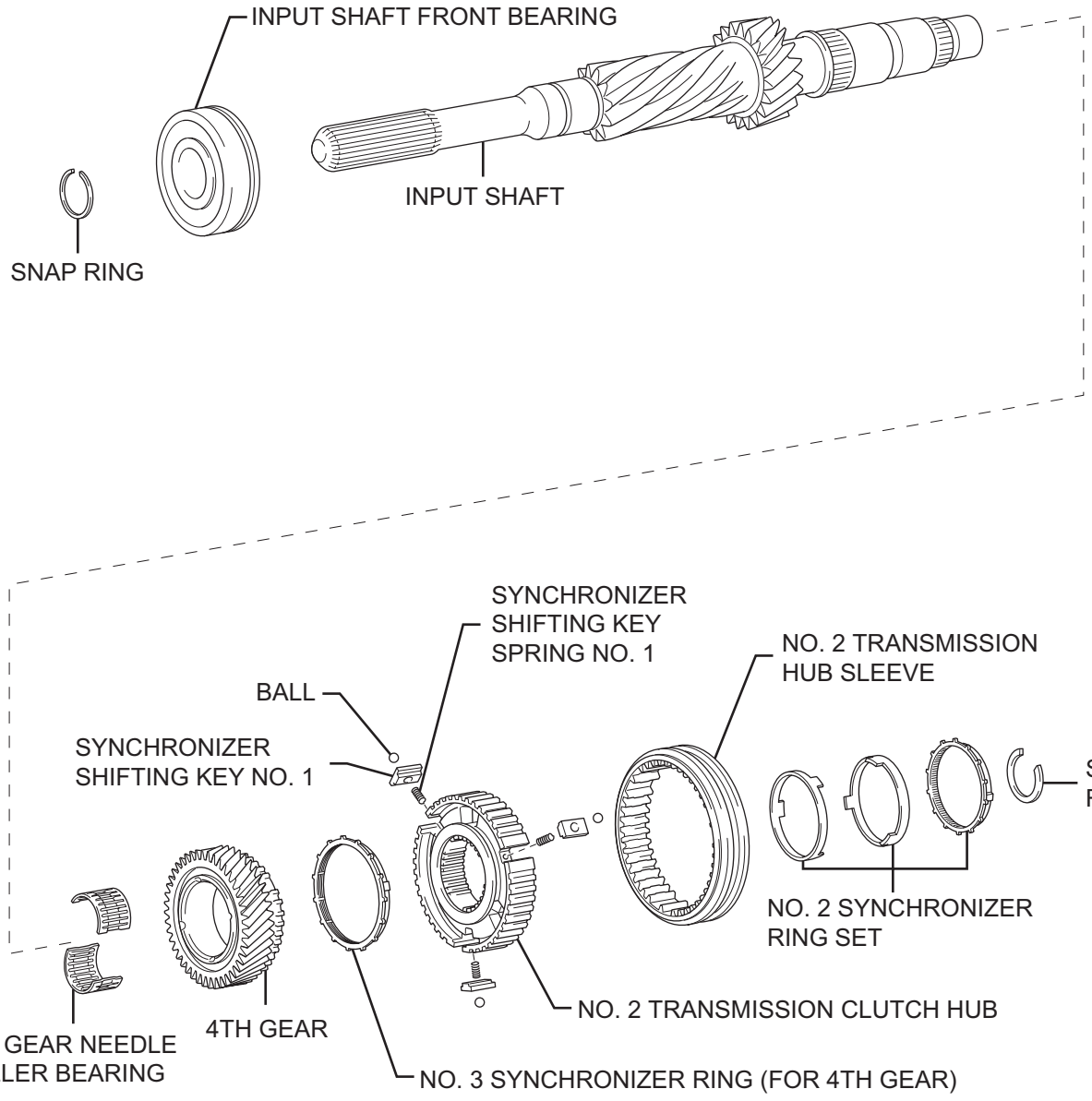

Y

C114065E03

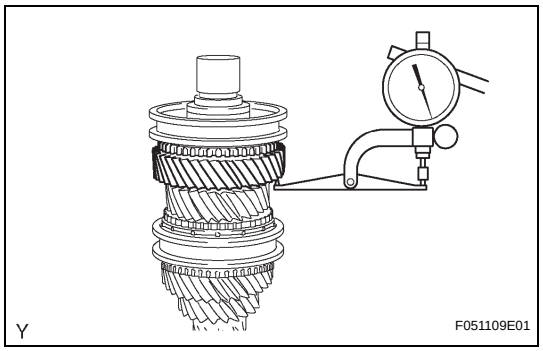

DISASSEMBLY

1. INSPECT 6TH GEAR THRUST CLEARANCE

(a) Using a dial indicator, measure the 6th gear thrust clearance.

Standard clearance:

0.20 to 0.49 mm (0.0079 to 0.0193 in.)

If the clearance is outside the specification, replace the synchronizer ring No. 3.

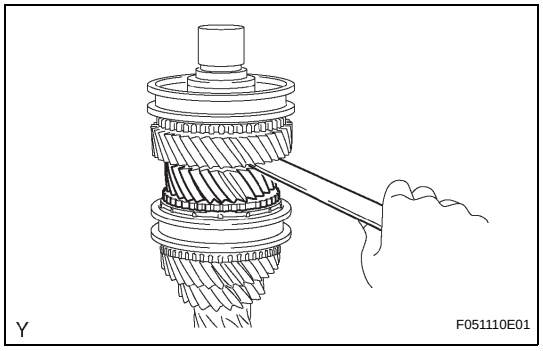

2. INSPECT 3RD GEAR THRUST CLEARANCE

(a) Using a feeler gauge, measure the 3rd gear thrust clearance.

Standard clearance:

0.09 to 0.52 mm (0.0035 to 0.0205 in.)

If the clearance is outside the specification, replace the synchronizer ring set No. 2.

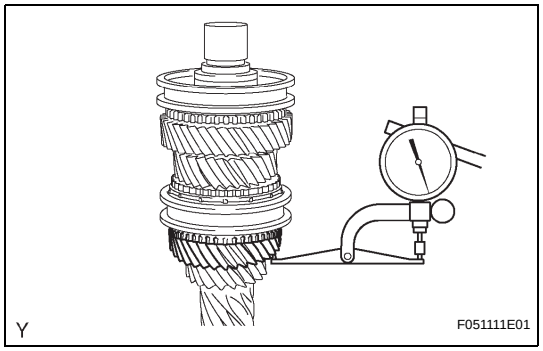

3. INSPECT 4TH GEAR THRUST CLEARANCE

(a) Using a dial indicator, measure the 4th gear thrust clearance.

Standard clearance:

0.12 to 0.38 mm (0.0047 to 0.0150 in.)

If the clearance is outside the specification, replace the synchronizer ring No. 3.

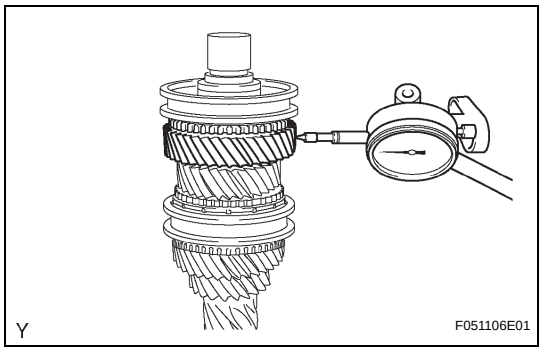

4. INSPECT 6TH GEAR RADIAL CLEARANCE

(a) Using a dial indicator, measure the 6th gear radial clearance.

Standard clearance:

0.015 to 0.065 mm (0.0006 to 0.0026 in.)

If the clearance is outside the specification, replace the defective gear, needle roller bearing or shaft.

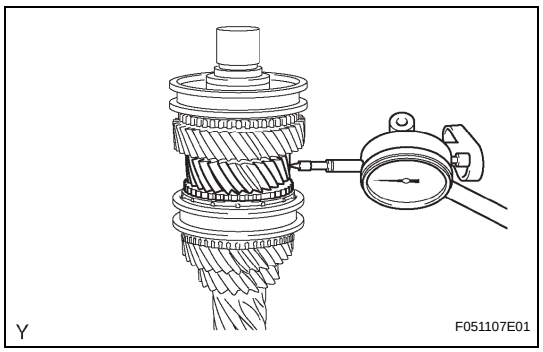

5. INSPECT 3RD GEAR RADIAL CLEARANCE

(a) Using a dial indicator, measure the 3rd gear radial clearance.

Standard clearance:

0.015 to 0.067 mm (0.0006 to 0.0026 in.)

If the clearance is outside the specification, replace the defective gear, needle roller bearing or shaft.

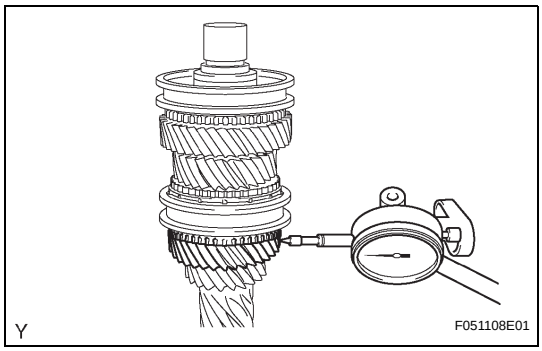

6. INSPECT 4TH GEAR RADIAL CLEARANCE

(a) Using a dial indicator, measure the 4th gear radial clearance.

Standard clearance:

0.015 to 0.067 mm (0.0006 to 0.0026 in.)

If the clearance is outside the specification, replace the defective gear, needle roller bearing or shaft.

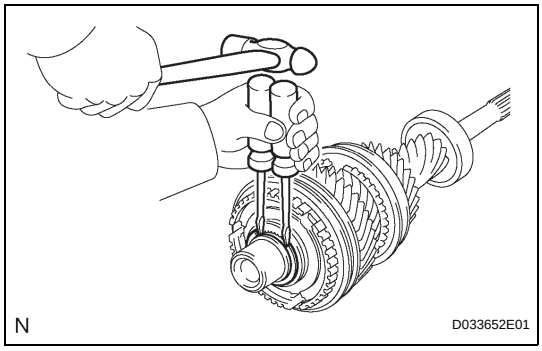

7. REMOVE TRANSMISSION CLUTCH HUB NO.3 SHAFT SNAP RING

(a) Using 2 screwdrivers and a hammer, tap out the snap ring.

HINT:

Use a shop rag to prevent the snap ring from flying off.

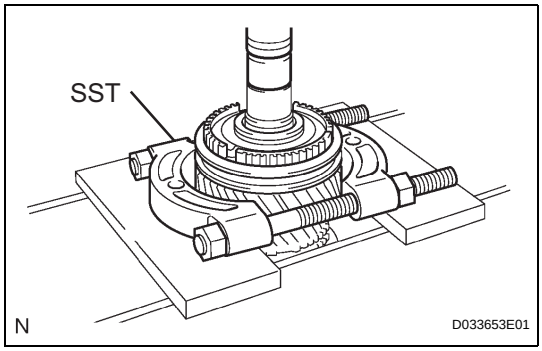

8. REMOVE 6TH GEAR

(a) Using SST and a press, remove the transmission clutch hub No. 3, hub sleeve, synchronizer ring and 6th gear from the input shaft.

SST 09950-00020, 09950-70010 (09951-07200), 09950-60010 (09951-00300)

NOTICE:

- **Do not tighten SST excessively.**
- **Support the input shaft by hand so that it does not fall off.**

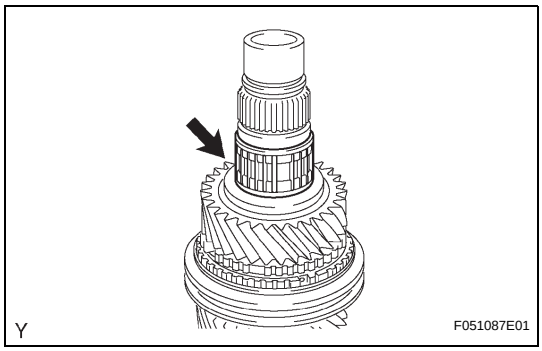

9. REMOVE 6TH GEAR NEEDLE ROLLER BEARING

(a) Remove the 6th gear needle roller bearing from the input shaft.

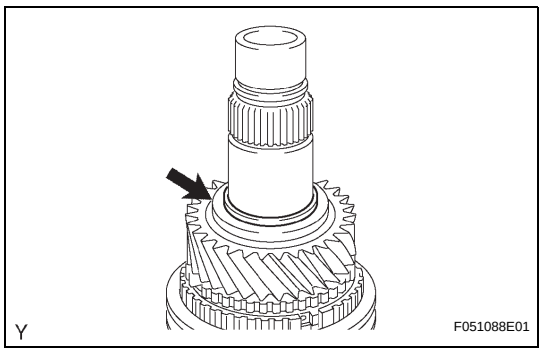

10. REMOVE SHAFT SNAP RING

(a) Remove the shaft snap ring from the input shaft.

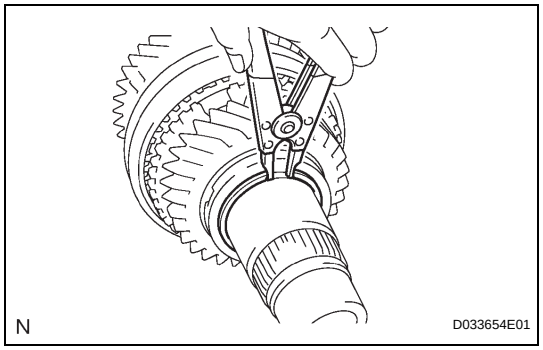

11. REMOVE GEAR THRUST WASHER SHAFT SNAP RING

(a) Using a snap ring expander, remove the snap ring from the input shaft.

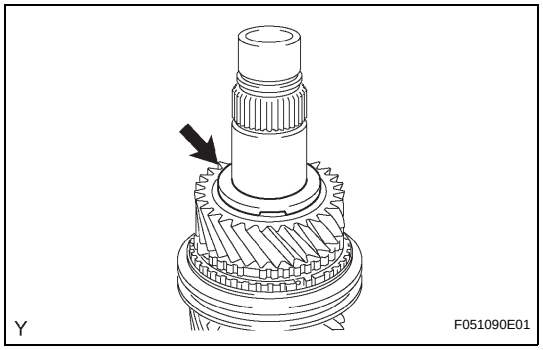

12. REMOVE 3RD GEAR THRUST WASHER

(a) Remove the 3rd gear thrust washer from the input shaft.

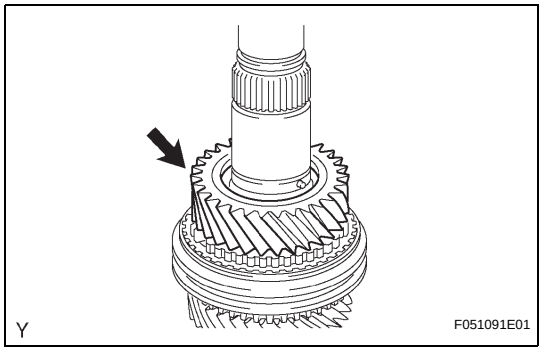

13. REMOVE 3RD GEAR

(a) Remove the 3rd gear from the input shaft.

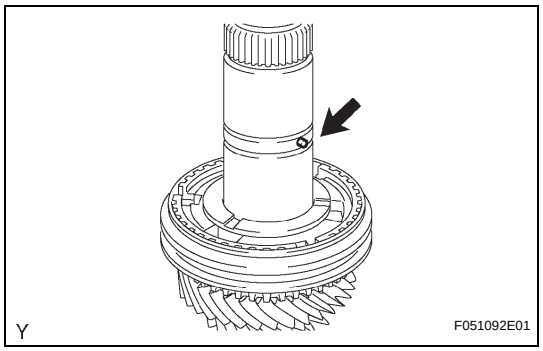

14. REMOVE STRAIGHT PIN

(a) Remove the straight pin from the input shaft.

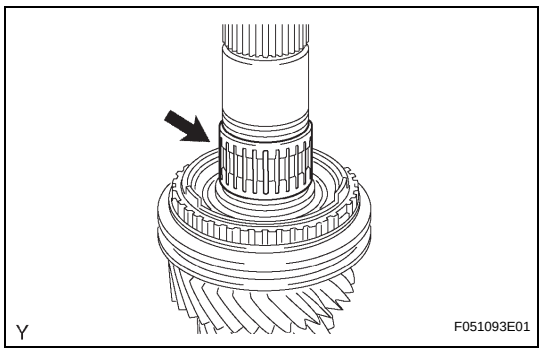

15. REMOVE 3RD GEAR NEEDLE ROLLER BEARING

(a) Remove the 3rd gear needle roller bearing from the input shaft.

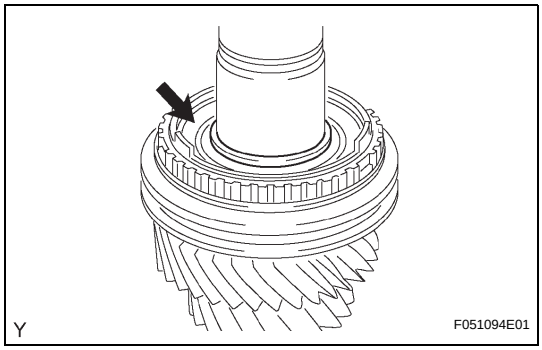

16. REMOVE SPACER

(a) Remove the spacer from the input shaft.

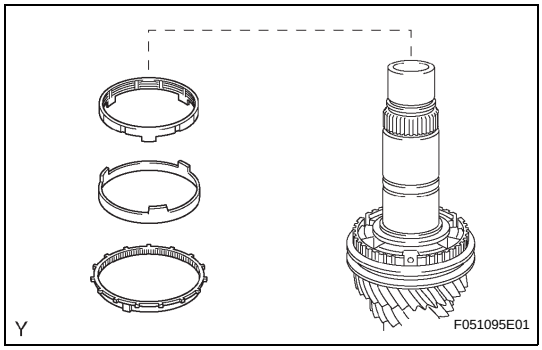

17. REMOVE NO. 2 SYNCHRONIZER RING SET

(a) Remove the synchronizer ring set No. 2 from the input shaft.

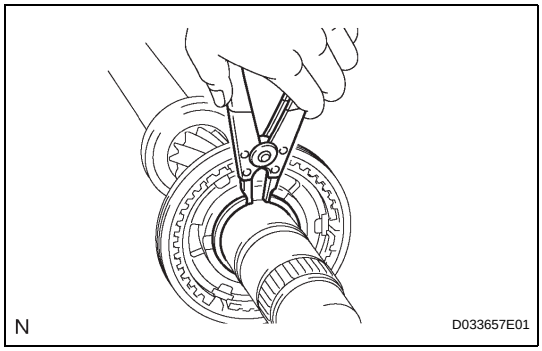

18. REMOVE CLUTCH HUB NO.2 SETTING SHAFT SNAP RING

(a) Using a snap ring expander, remove the snap ring from the input shaft.

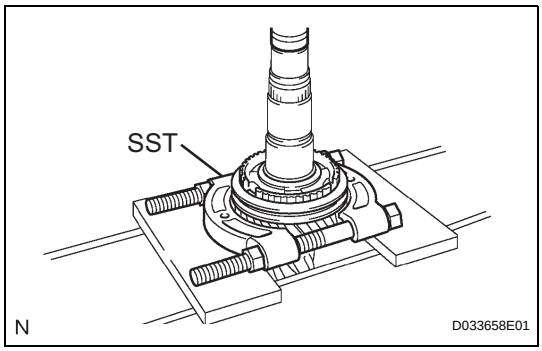

19. REMOVE 4TH GEAR

(a) Using SST and a press, remove the transmission clutch hub No. 2, hub sleeve, synchronizer ring and 4th gear from the input shaft.
SST 09950-00020
NOTICE:
Support the input shaft by hand so that it does not fall off.

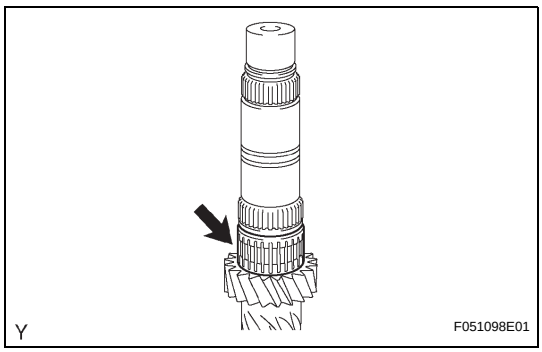

20. REMOVE 4TH GEAR NEEDLE ROLLER BEARING

(a) Remove the 4th gear needle roller bearing from the input shaft.

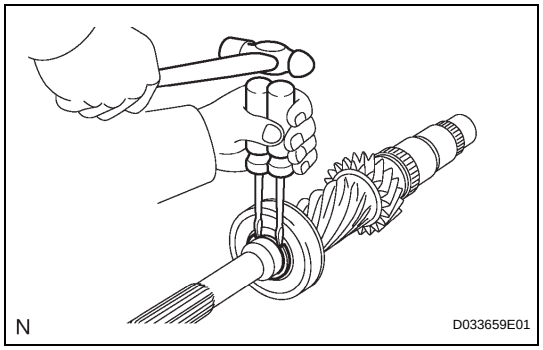

21. REMOVE INPUT SHAFT FRONT BEARING SNAP RING

(a) Using 2 screwdrivers and a hammer, tap out the snap ring.
HINT:
Use a shop rag to prevent the snap ring from flying off.

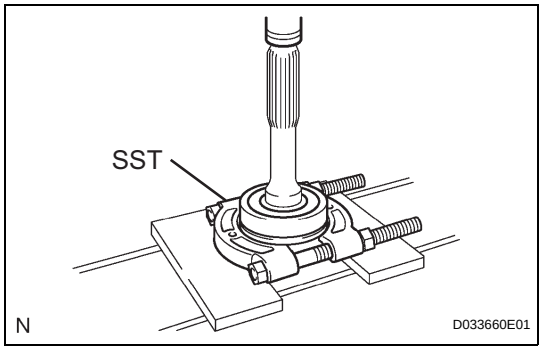

22. REMOVE INPUT SHAFT FRONT BEARING

(a) Using SST and a press, remove the input shaft front bearing from the input shaft.
SST 09950-00020
NOTICE:
Support the input shaft by hand so that it does not fall off.

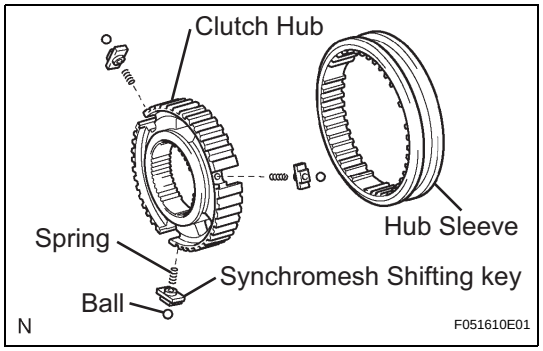

23. REMOVE NO. 2 TRANSMISSION CLUTCH HUB

(a) Remove the clutch hub, 3 synchromesh shifting keys, 3 balls and 3 springs from the hub sleeve.
HINT:
Use a shop rag to prevent the ball and spring from flying off.

24. REMOVE NO. 3 TRANSMISSION CLUTCH HUB

(a) Perform the same procedures as for clutch hub No. 2.

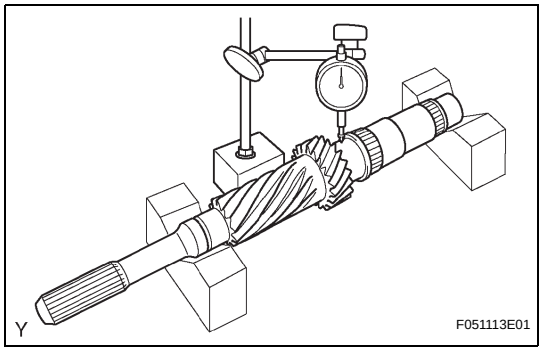

INSPECTION

1. INSPECT INPUT SHAFT

(a) Using a dial indicator and 2 V-blocks, measure the shaft runout.
Maximum runout:
0.03 mm (0.0012 in.)
If the runout exceeds the maximum, replace the input shaft.

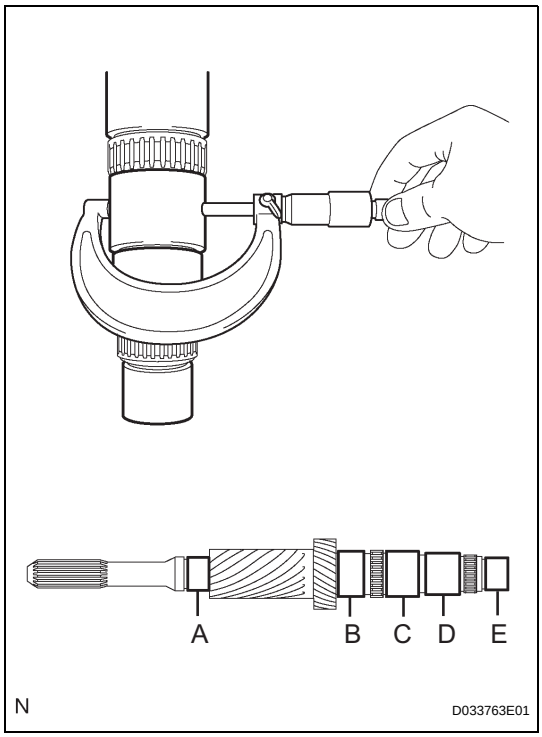

(b) Using a micrometer, measure the outer diameter of the input shaft journal surface.

Standard

Part	Outer diameter mm (in.)
A	34.002 to 34.015 (1.3387 to 1.3392)
B	44.985 to 45.000 (1.7711 to 1.7717)
C	44.985 to 45.000 (1.7711 to 1.7717)
D	41.985 to 42.000 (1.6530 to 1.6535)
E	32.967 to 32.980 (1.2979 to 1.2984)

Minimum

Part	Outer diameter mm (in.)
A	34.002 (1.3387)
B	44.985 (1.7711)
C	44.985 (1.7711)
D	41.985 (1.6530)
E	32.967 (1.2979)

If the outer diameter is less than the minimum, replace the input shaft.

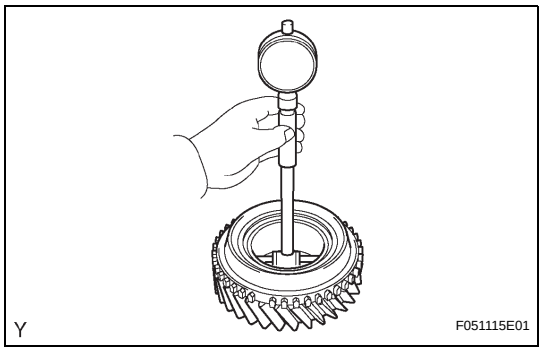

2. INSPECT 6TH GEAR

(a) Using a cylinder gauge, measure the inside diameter of the 6th gear.

Standard inside diameter:
51.015 to 51.040 mm (2.0085 to 2.0095 in.)
Maximum inside diameter:
51.040 mm (2.0095 in.)

If the inside diameter exceeds the maximum, replace the 4th gear.

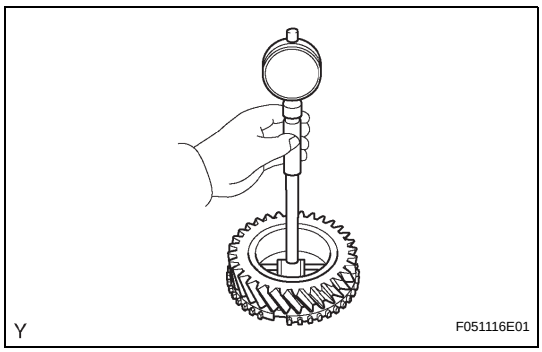

3. INSPECT 3RD GEAR

(a) Using a cylinder gauge, measure the inside diameter of the 3rd gear.

Standard inside diameter:
51.015 to 51.040 mm (2.0085 to 2.0095 in.)
Maximum inside diameter:
51.040 mm (2.0095 in.)

If the inside diameter exceeds the maximum, replace the 3rd gear.

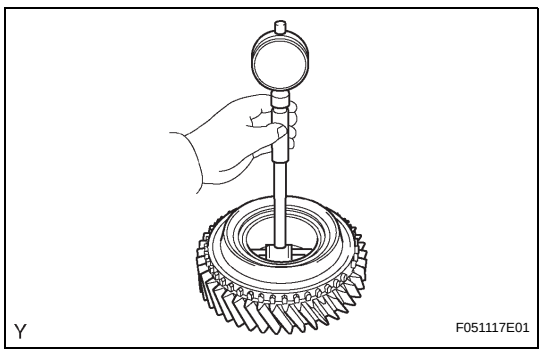

4. INSPECT 4TH GEAR

(a) Using a cylinder gauge, measure the inside diameter of the 4th gear.

Standard inside diameter:
51.015 to 51.040 mm (2.0085 to 2.0095 in.)
Maximum inside diameter:
51.040 mm (2.0095 in.)

If the inside diameter exceeds the maximum, replace the 4th gear.

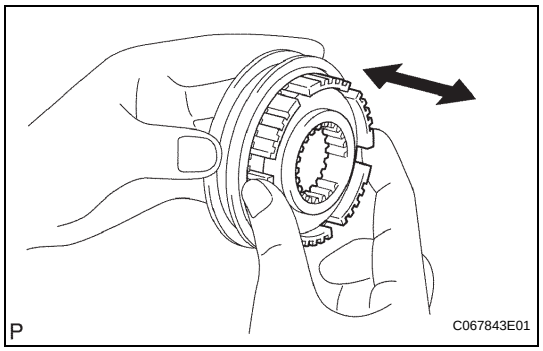

5. INSPECT NO. 2 TRANSMISSION HUB SLEEVE

(a) Check the sliding condition between the transmission hub No. 2 and transmission hub sleeve No. 2.

(b) Check that the spline gear teeth of the transmission hub sleeve No. 2 are not worn.

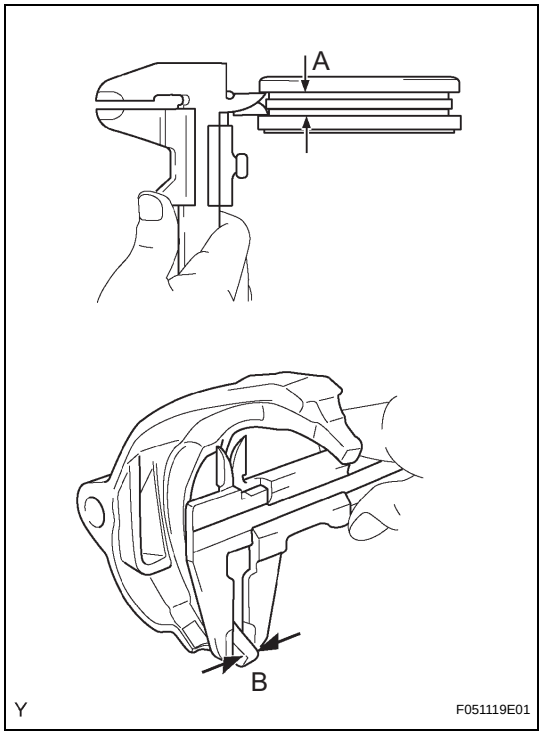

(c) Using vernier calipers, measure the width of the transmission hub sleeve No. 2 groove (A) and the thickness of the claw part on the gear shift forks No. 2 or No. 3 (B), and calculate the clearance.
Standard clearance:
(A - B);
0.26 to 0.84 mm (0.0102 to 0.0331 in.)
If the clearance is outside the specification, replace the transmission hub sleeve No. 2 and gear shift fork.

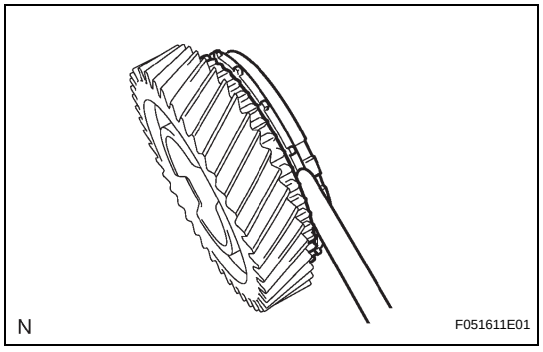

6. INSPECT NO. 3 SYNCHRONIZER RING (FOR 6TH GEAR)

(a) Using a feeler gauge, measure the clearance between the synchronizer ring and the 6th gear.
Standard clearance:
0.70 to 1.50 mm (0.0276 to 0.0591 in.)
Minimum clearance:
0.70 mm (0.0276 in.)
If the clearance is less than the minimum, replace the synchronizer ring.

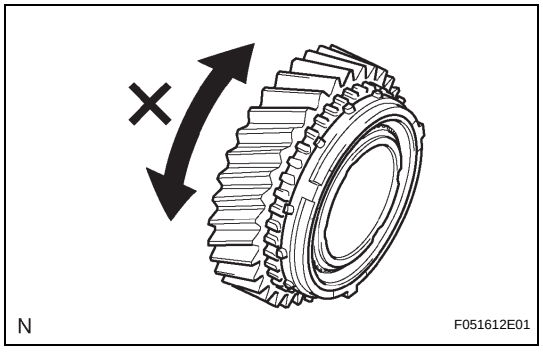

(b) Coat the 6th gear cone with gear oil. Check the braking effect of the synchronizer ring. Turn the synchronizer ring in one direction while pushing it to the 6th gear cone. Check that the ring locks.

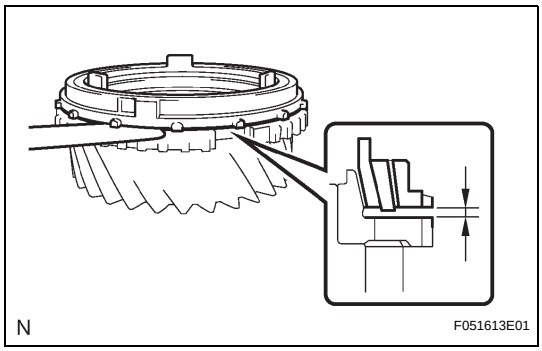

7. INSPECT NO. 2 SYNCHRONIZER RING SET

(a) Using a feeler gauge, measure the clearance between the synchronizer ring and the 3rd gear.

Standard clearance:
Inner:
1.20 to 2.20 mm (0.0472 to 0.0866 in.)
Middle:
0.60 to 1.80 mm (0.0236 to 0.0709 in.)
Outer:
0.80 to 1.80 mm (0.0315 to 0.0709 in.)
Minimum clearance:
Inner:
1.20 mm (0.0472 in.)
Middle:
0.60 mm (0.0236 in.)
Outer:
0.80 mm (0.0315 in.)

If the clearance is less than the minimum, replace the synchronizer ring.

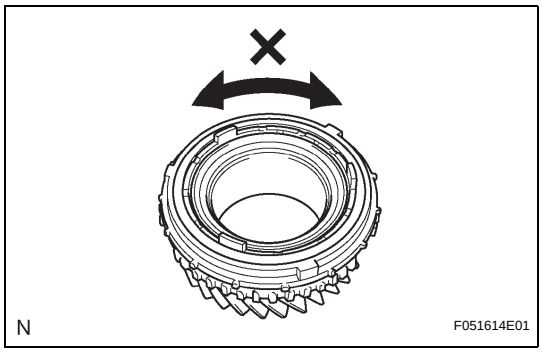

(b) Coat the 3rd gear cone with gear oil. Check the braking effect of the synchronizer ring. Turn the synchronizer ring in one direction while pushing it to the 3rd gear cone. Check that the ring locks.

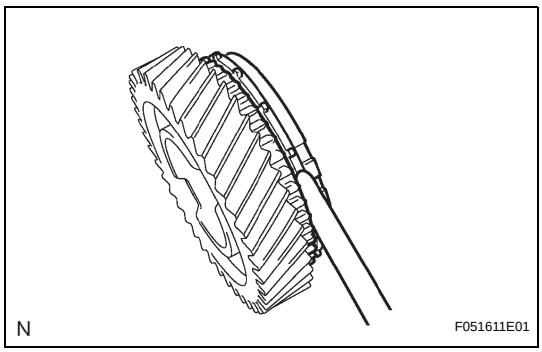

8. INSPECT NO. 3 SYNCHRONIZER RING (FOR 4TH GEAR)

(a) Using a feeler gauge, measure the clearance between the synchronizer ring and 4th gear.

Standard clearance:
0.70 to 1.50 mm (0.0276 to 0.0591 in.)
Minimum clearance:
0.70 mm (0.0276 in.)

If the clearance is less than the minimum, replace the synchronizer ring.

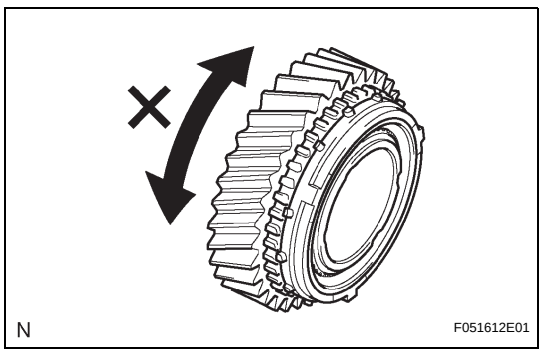

(b) Coat the 4th gear cone with gear oil. Check the braking effect of the synchronizer ring. Turn the synchronizer ring in one direction while pushing it to the 4th gear cone. Check that the ring locks.

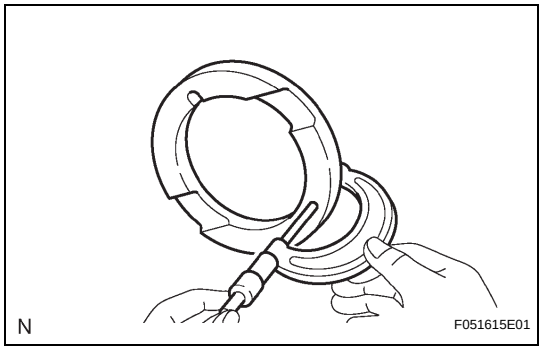

9. INSPECT 3RD GEAR THRUST WASHER

(a) Using a micrometer, measure the thrust washer thickness.

Standard thickness:
7.12 to 7.18 mm (0.2803 to 0.2827 in.)
Minimum thickness:
7.12 mm (0.2803 in.)

If the thickness is less than the minimum, replace the thrust washer.

REASSEMBLY

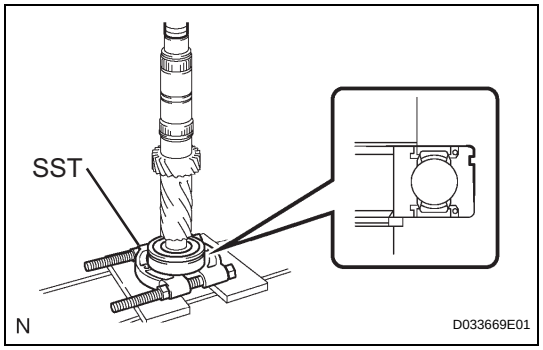

1. INSTALL INPUT SHAFT FRONT BEARING

(a) Using SST and a press, install the input shaft front bearing onto the input shaft.

SST 09950-00020

HINT:

Make sure that the groove of the bearing faces the correct direction as shown in the illustration.

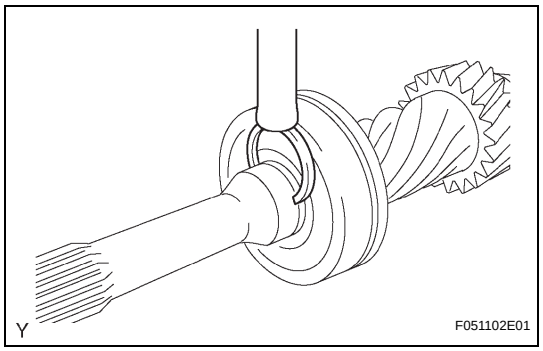

2. INSTALL INPUT SHAFT FRONT BEARING SNAP RING

(a) Select a snap ring that will allow minimum axial play.

Standard clearance:
0.1 mm (0.004 in.) or less
Snap ring thickness

Part No.	Thickness: mm (in.)	Mark
90520-31026	2.65 to 2.70 (0.1043 to 0.1063)	A
90520-31027	2.70 to 2.75 (0.1063 to 0.1083)	B
90520-31028	2.75 to 2.80 (0.1083 to 0.1102)	C
90520-31029	2.80 to 2.85 (0.1102 to 0.1122)	D
90520-31030	2.85 to 2.90 (0.1122 to 0.1142)	E
90520-31031	2.90 to 2.95 (0.1142 to 0.1161)	F

(b) Using a brass bar and hammer, install the snap ring onto the input shaft.

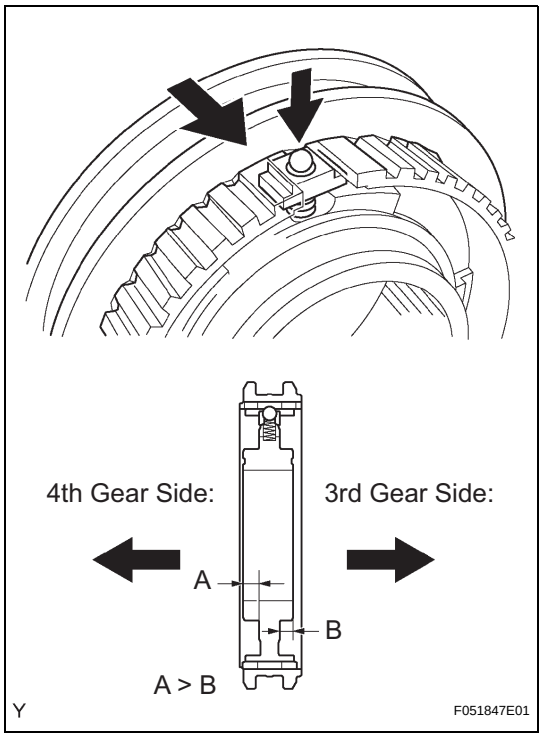

3. INSTALL NO. 2 TRANSMISSION CLUTCH HUB

(a) Apply a light coat of gear oil to the sleeve and hub.
(b) Install the clutch hub sleeve onto the clutch hub No. 2.
(c) Install the 3 shifting keys onto the clutch hub.
(d) Install the 3 shifting key springs onto the clutch hub.
(e) Place the ball in the hole of the shifting key, and install the hub sleeve while pushing in the ball.

NOTICE:

Take care to prevent the ball from flying off.

HINT:

Make sure that the clutch hub No. 2 faces the correct direction as shown in the illustration.

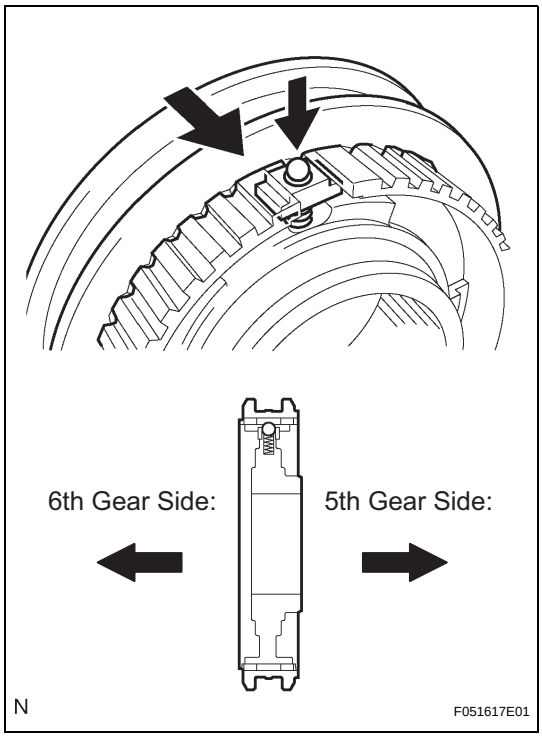

4. INSTALL NO. 3 TRANSMISSION CLUTCH HUB

(a) Apply a light coat of gear oil to the sleeve and hub.
(b) Install the clutch hub sleeve onto the clutch hub No. 3.
(c) Install the 3 shifting keys onto the clutch hub.
(d) Install the 3 shifting key springs onto the clutch hub.
(e) Place the ball in the hole of the shifting key, and install the hub sleeve while pushing in the ball.

NOTICE:

Take care to prevent the ball from flying off.

HINT:

Make sure that the clutch hub No. 3 faces the correct direction as shown in the illustration.

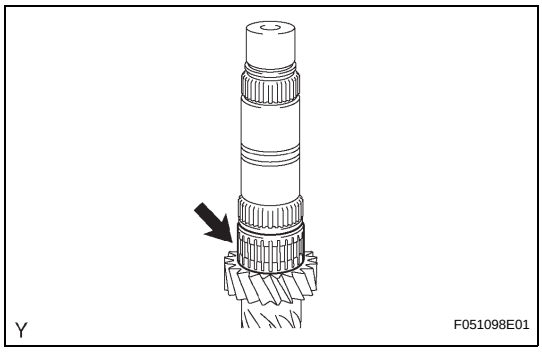

5. INSTALL 4TH GEAR NEEDLE ROLLER BEARING

(a) Coat the 4th gear needle roller bearing with gear oil, then install it onto the input shaft.

6. INSTALL 4TH GEAR

(a) Coat the 4th gear and synchronizer ring No. 3 with gear oil, then install them onto the input shaft.

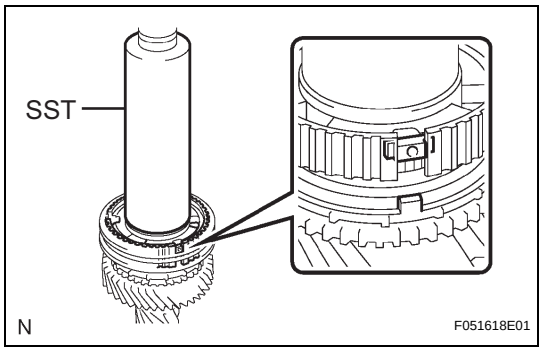

(b) Using SST and a press, install the clutch hub No. 2 onto the input shaft.
SST 09308-14010
HINT:
Align the convex portion of the synchronizer ring with the groove of the clutch hub.

(c) Install the clutch hub and confirm that the gear and synchronizer ring move smoothly.

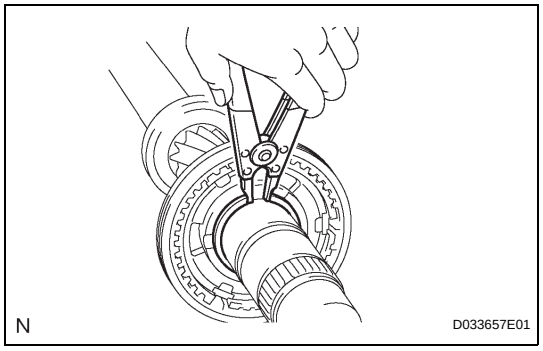

7. INSTALL CLUTCH HUB NO.2 SETTING SHAFT SNAP RING

(a) Select a snap ring that will allow minimum axial play.
Standard clearance:
0.1 mm (0.004 in.) or less
Snap ring thickness

Part No.	Thickness: mm (in.)	Mark
90520-42012	1.77 to 1.82 (0.0697 to 0.0717)	A
90520-42013	1.82 to 1.87 (0.0717 to 0.0736)	B
90520-42014	1.87 to 1.92 (0.0736 to 0.0756)	C
90520-42015	1.92 to 1.97 (0.0756 to 0.0776)	D
90520-42016	1.97 to 2.02 (0.0776 to 0.0795)	E
90520-42017	2.02 to 2.07 (0.0795 to 0.0815)	F
90520-42018	2.07 to 2.12 (0.0815 to 0.0835)	G

(b) Using a snap ring expander, install the snap ring onto the input shaft.

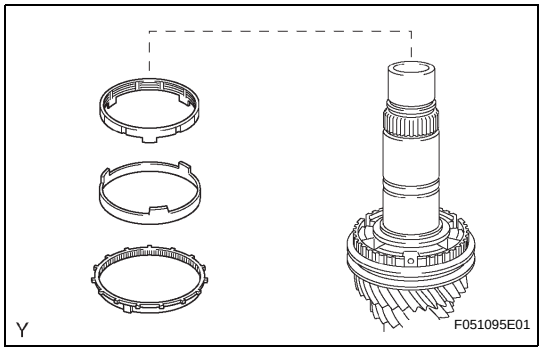

8. INSTALL NO. 2 SYNCHRONIZER RING SET

(a) Coat the synchronizer ring set No. 2 with gear oil, then install it onto the input shaft.

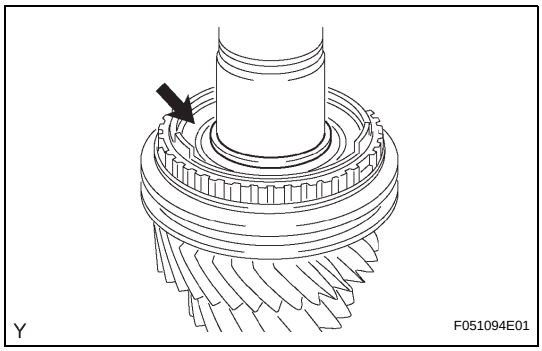

9. INSTALL SPACER

(a) Coat the spacer with gear oil, and install it onto the input shaft.

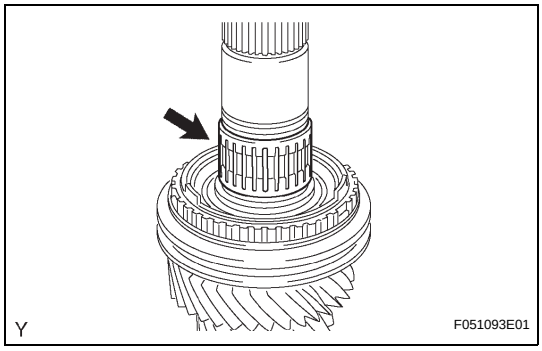

10. INSTALL 3RD GEAR NEEDLE ROLLER BEARING

(a) Coat the 3rd gear needle roller bearing with gear oil, and install it onto the input shaft.

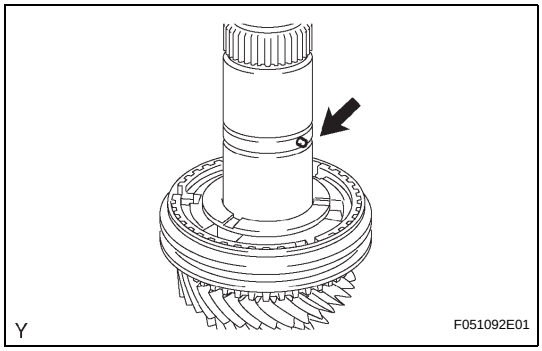

11. INSTALL STRAIGHT PIN

(a) Install the straight pin onto the input shaft.

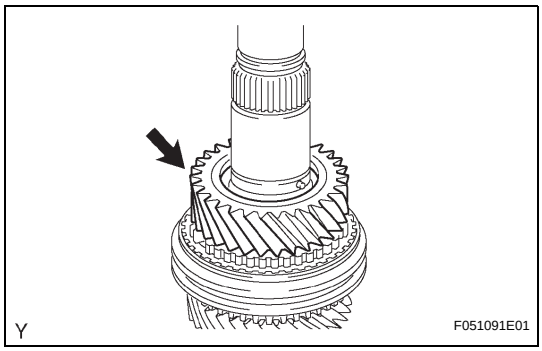

12. INSTALL 3RD GEAR

(a) Coat the 3rd gear with gear oil, and install it onto the input shaft.

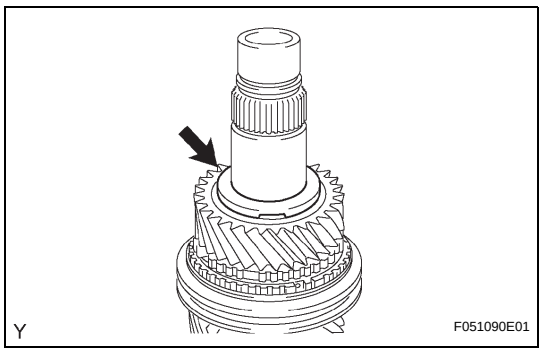

13. INSTALL 3RD GEAR THRUST WASHER

(a) Coat the 3rd gear thrust washer with gear oil, and install it onto the input shaft.
HINT:
Align the straight pin with the groove of the gear thrust washer and install it.

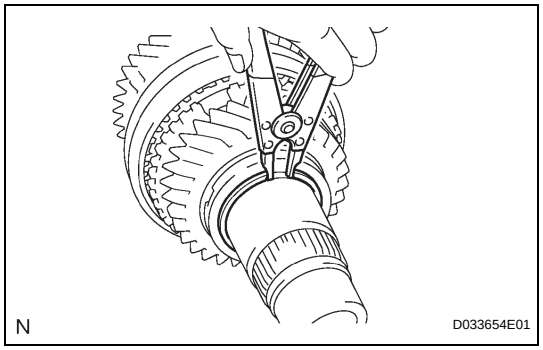

14. INSTALL GEAR THRUST WASHER SHAFT SNAP RING

(a) Select a snap ring that will allow minimum axial play.

Standard clearance:
0.1 mm (0.004 in.) or less

Snap ring thickness

Part No.	Thickness: mm (in.)	Mark
90520-39026	2.07 to 2.12 (0.0815 to 0.0835)	A
90520-39027	2.12 to 2.17 (0.0835 to 0.0854)	B
90520-39028	2.17 to 2.22 (0.0854 to 0.0874)	C
90520-39029	2.22 to 2.27 (0.0874 to 0.0894)	D
90520-39030	2.27 to 2.32 (0.0894 to 0.0913)	E
90520-39031	2.32 to 2.37 (0.0913 to 0.0933)	F

(b) Using a snap ring expander, install the snap ring onto the input shaft.

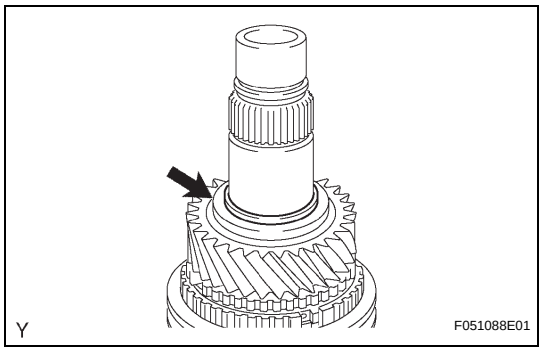

15. INSTALL SHAFT SNAP RING

(a) Coat the shaft snap ring with gear oil, and install it onto the input shaft.

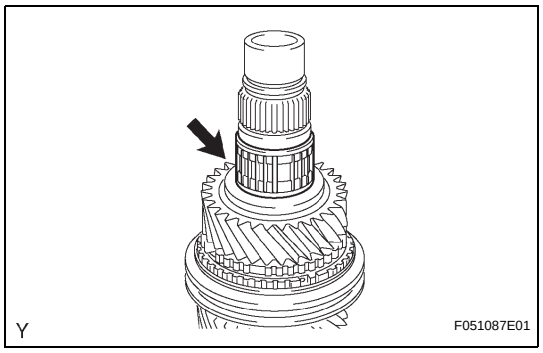

16. INSTALL 6TH GEAR NEEDLE ROLLER BEARING

(a) Coat the 6th gear needle roller bearing with gear oil, and install it onto the input shaft.

MT

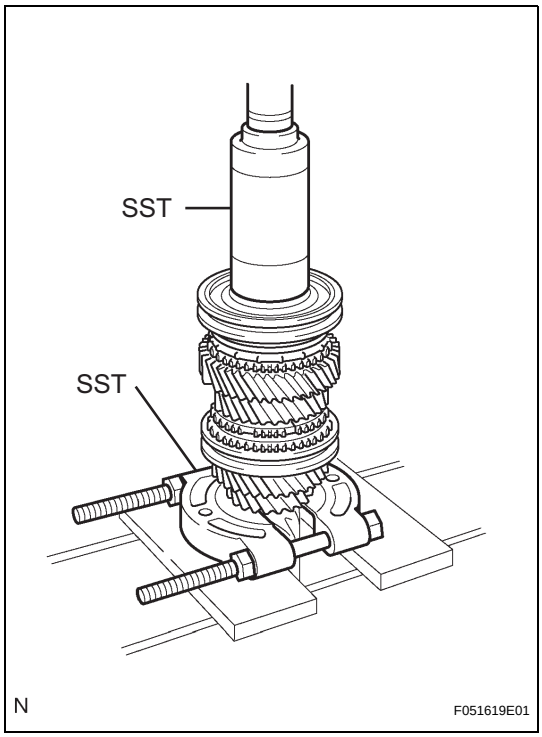

17. INSTALL 6TH GEAR

(a) Install the 6th gear onto the input shaft.
(b) Install the synchronizer ring onto the input shaft.
(c) Using SST and a press, install the clutch hub onto the input shaft.
SST 09309-37010, 09950-00020
(d) Install the clutch hub and confirm that the gear and synchronizer ring move smoothly.

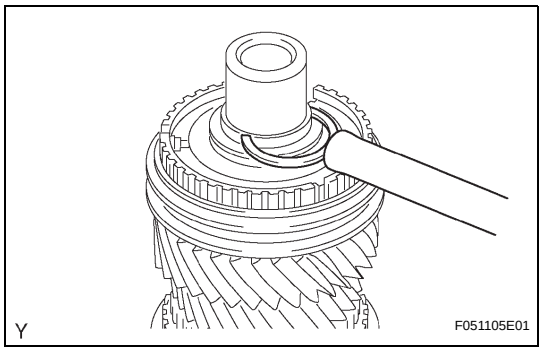

18. INSTALL TRANSMISSION CLUTCH HUB NO.3 SHAFT SNAP RING

(a) Select a snap ring that will allow minimum axial play.
Standard clearance:
0.1 mm (0.004 in.) or less
Snap ring thickness

Part No.	Thickness: mm (in.)	Mark
90520-33022	2.10 to 2.15 (0.0827 to 0.0847)	A
90520-33023	2.15 to 2.20 (0.0847 to 0.0866)	B
90520-33024	2.20 to 2.25 (0.0866 to 0.0886)	C
90520-33025	2.25 to 2.30 (0.0886 to 0.0906)	D
90520-33026	2.30 to 2.35 (0.0906 to 0.0925)	E
90520-33027	2.35 to 2.40 (0.0925 to 0.0945)	F
90520-33028	2.40 to 2.45 (0.0945 to 0.0965)	G

(b) Using a brass bar and a hammer, install the snap ring onto the input shaft.

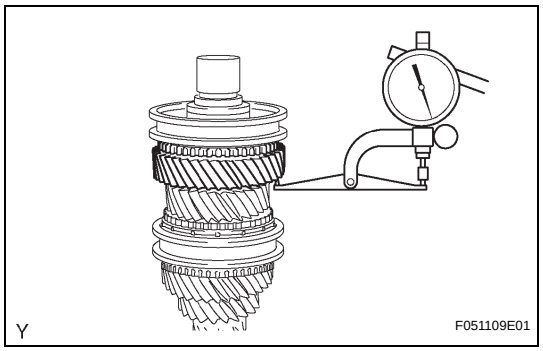

19. INSPECT 6TH GEAR THRUST CLEARANCE

(a) Using a dial indicator, measure the 6th gear thrust clearance.

Standard clearance:

0.20 to 0.49 mm (0.0079 to 0.0193 in.)

If the clearance is outside the specification, replace the synchronizer ring No. 3.

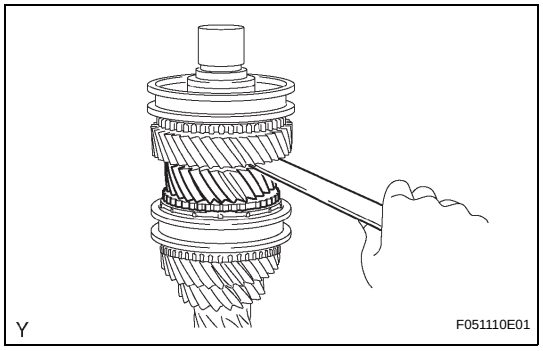

20. INSPECT 3RD GEAR THRUST CLEARANCE

(a) Using a feeler gauge, measure the 3rd gear thrust clearance.

Standard clearance:

0.09 to 0.52 mm (0.0035 to 0.0205 in.)

If the clearance is outside the specification, replace the synchronizer ring set No. 2.

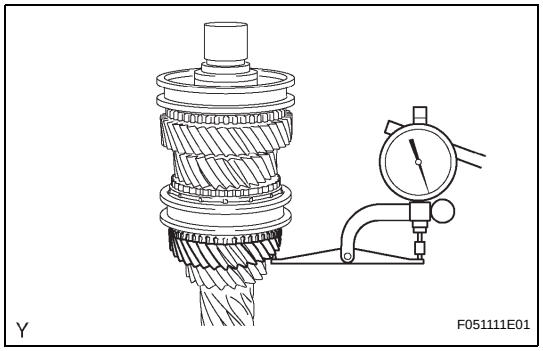

21. INSPECT 4TH GEAR THRUST CLEARANCE

(a) Using a dial indicator, measure the 4th gear thrust clearance.

Standard clearance:

0.12 to 0.38 mm (0.0047 to 0.0150 in.)

If the clearance is outside the specification, replace the synchronizer ring No. 3.

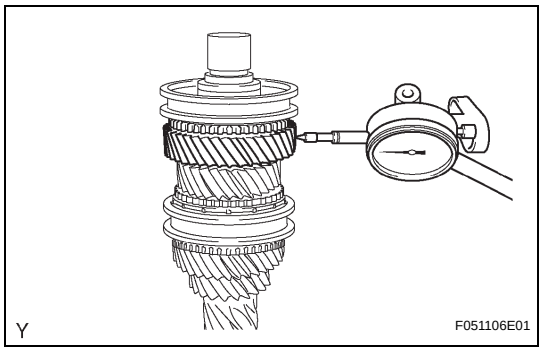

22. INSPECT 6TH GEAR RADIAL CLEARANCE

(a) Using a dial indicator, measure the 6th gear radial clearance.

Standard clearance:

0.015 to 0.065 mm (0.0006 to 0.0026 in.)

If the clearance is outside the specification, replace the defective gear, needle roller bearing or shaft.

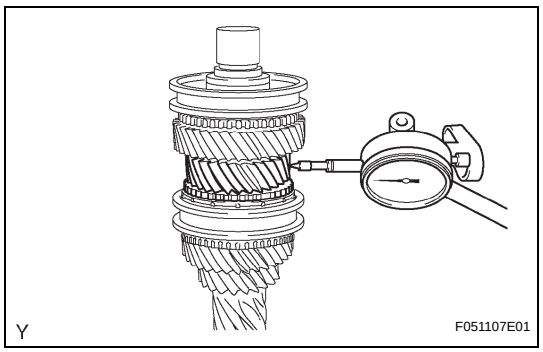

23. INSPECT 3RD GEAR RADIAL CLEARANCE

(a) Using a dial indicator, measure the 3rd gear radial clearance.

Standard clearance:

0.015 to 0.067 mm (0.0006 to 0.0026 in.)

If the clearance is outside the specification, replace the defective gear, needle roller bearing or shaft.

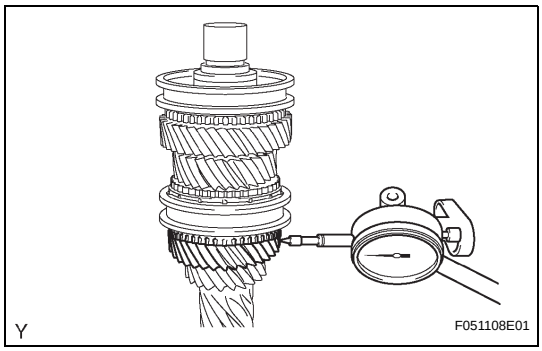

24. INSPECT 4TH GEAR RADIAL CLEARANCE

(a) Using a dial indicator, measure the 4th gear radial clearance.

Standard clearance:

0.015 to 0.067 mm (0.0006 to 0.0026 in.)

If the clearance is outside the specification, replace the defective gear, needle roller bearing or shaft.

OUTPUT SHAFT

COMPONENTS

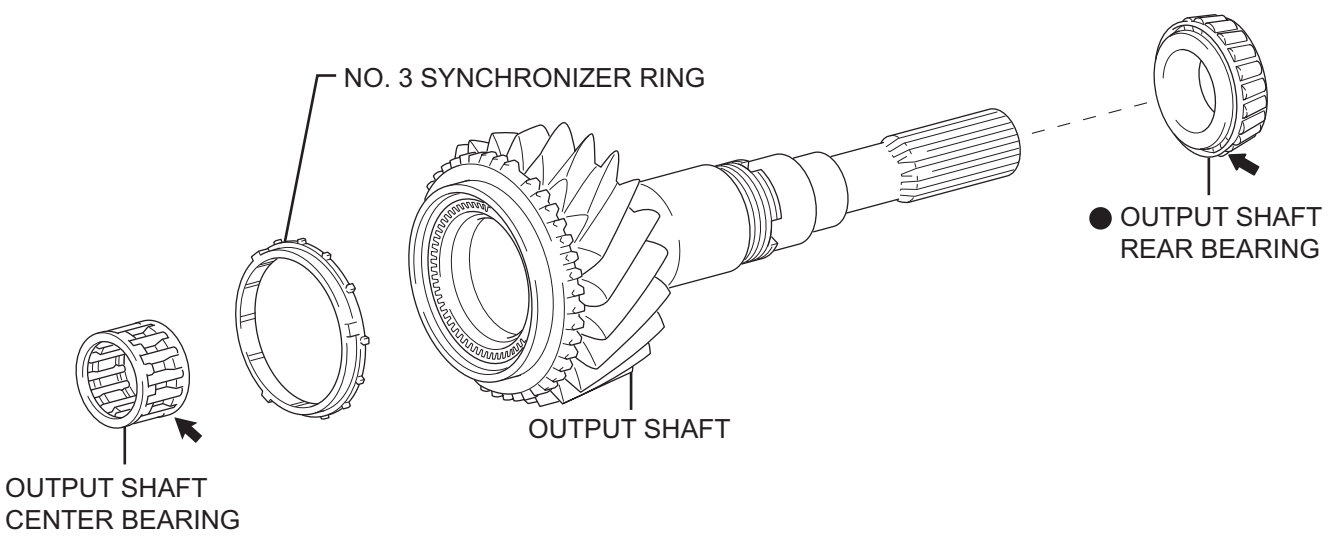

● Non-reusable part

⬅ Apply MP grease

Y

C114067E02

MT

MT

DISASSEMBLY

1. REMOVE NO. 3 SYNCHRONIZER RING

(a) Remove synchronizer ring No. 3 from the output shaft.

2. REMOVE OUTPUT SHAFT CENTER BEARING

(a) Remove the output shaft center bearing from the output shaft.

3. REMOVE OUTPUT SHAFT REAR BEARING

(a) Using SST and a press, remove the output shaft bearing.
SST 09950-00020

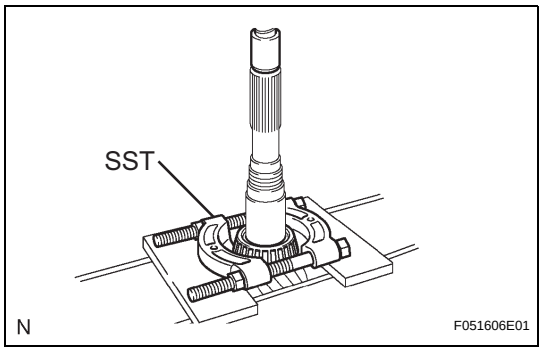

INSPECTION

1. INSPECT OUTPUT SHAFT

(a) Using a cylinder gauge, measure the inside diameter of the output shaft.
Standard inside diameter:
45.009 to 45.025 mm (1.7720 to 1.7726 in.)
Maximum inside diameter:
45.025 mm (1.7726 in.)
If the diameter exceeds the maximum, replace the output shaft.

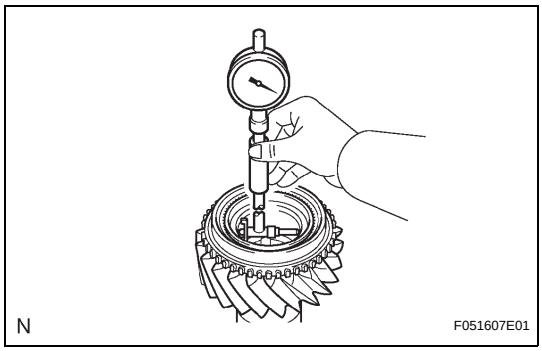

2. INSPECT NO. 3 SYNCHRONIZER RING

(a) Using a feeler gauge, measure the clearance between the synchronizer ring and gear spline.
Standard clearance:
0.70 to 1.50 mm (0.0276 to 0.0591 in.)
Minimum clearance:
0.70 mm (0.0276 in.)
If the clearance is less than the minimum, replace the synchronizer ring.

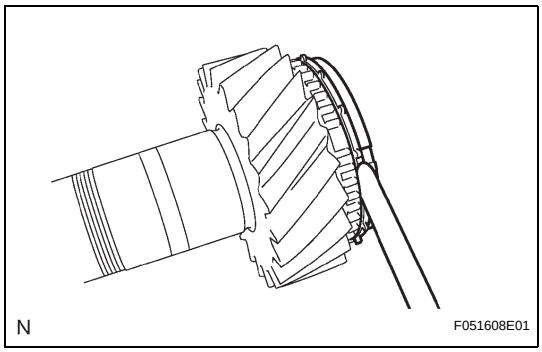

(b) Coat the output shaft and synchronizer ring cone with gear oil. Check the braking effect of the synchronizer ring. Turn the synchronizer ring in one direction while pushing it to the gear cone. Check that the ring locks.

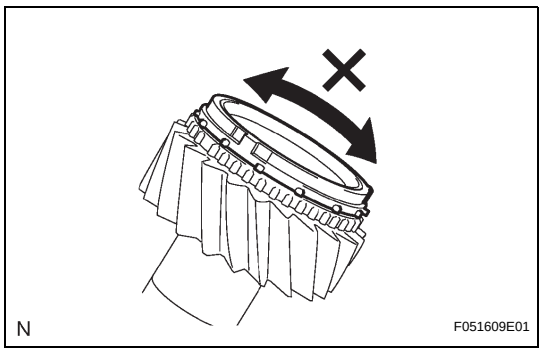

COUNTER GEAR AND REVERSE IDLER GEAR

COMPONENTS

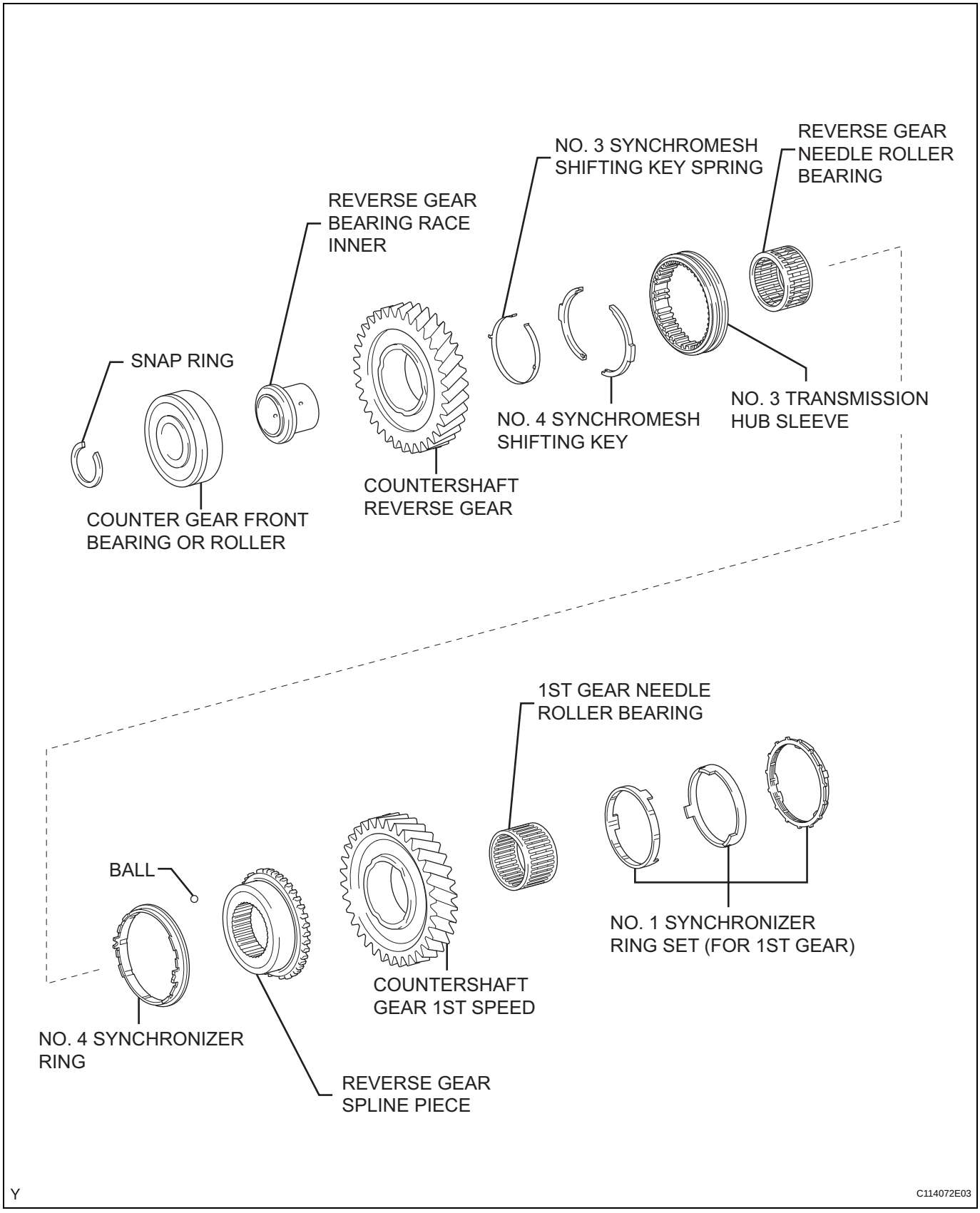

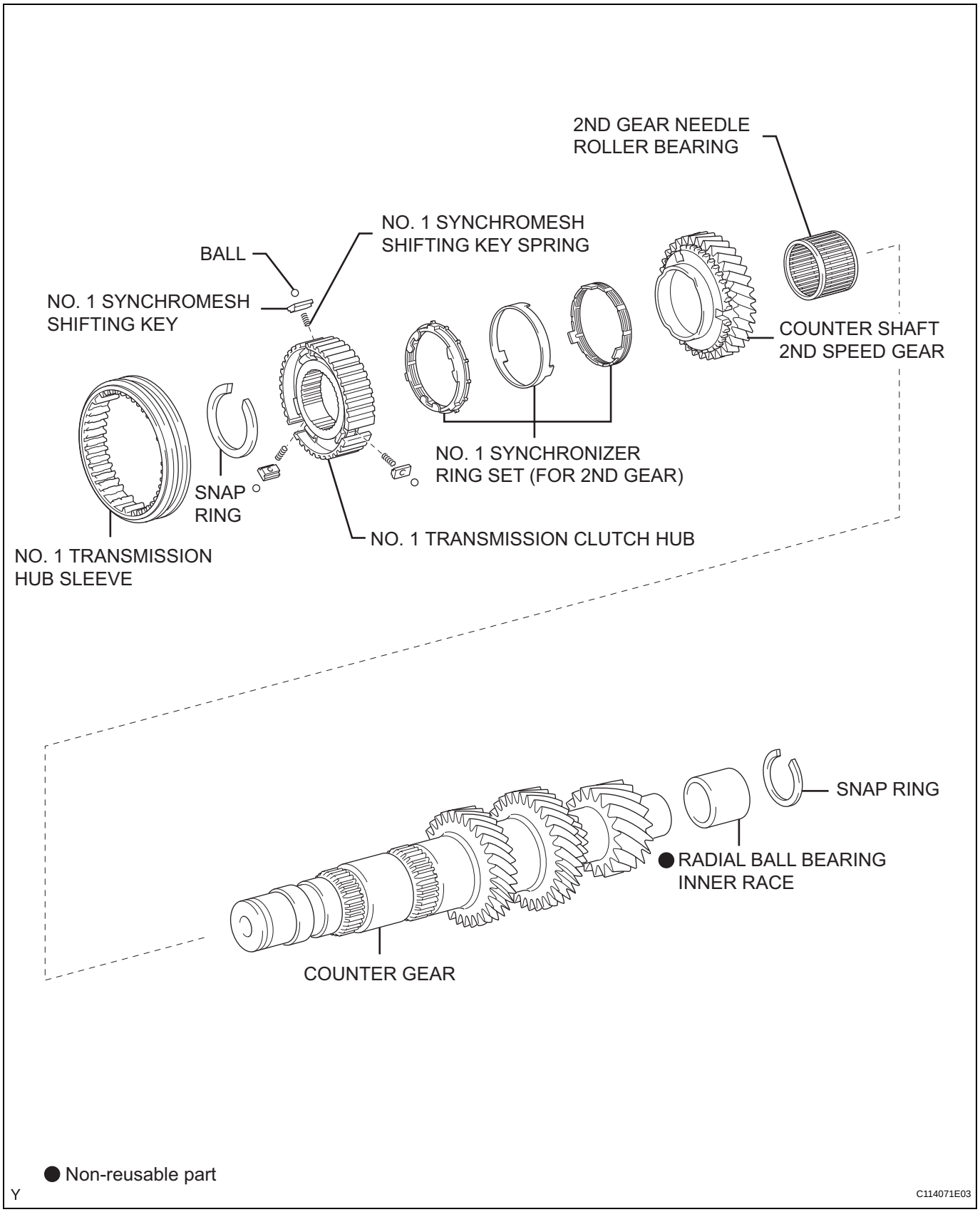
2ND GEAR NEEDLE ROLLER BEARING
NO. 1 SYNCHROMESH SHIFTING KEY SPRING
BALL
NO. 1 SYNCHROMESH SHIFTING KEY
COUNTER SHAFT 2ND SPEED GEAR
NO. 1 SYNCHRONIZER RING SET (FOR 2ND GEAR)
SNAP RING
NO. 1 TRANSMISSION CLUTCH HUB
NO. 1 TRANSMISSION HUB SLEEVE
SNAP RING
● RADIAL BALL BEARING INNER RACE
COUNTER GEAR
● Non-reusable part
Y
C114071E03

MT

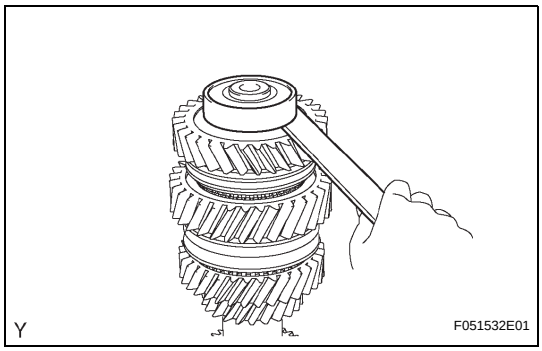

DISASSEMBLY

1. INSPECT REVERSE GEAR THRUST CLEARANCE

(a) Using a feeler gauge, measure the reverse gear thrust clearance.

Standard clearance:

0.12 to 0.37 mm (0.0047 to 0.0146 in.)

If the clearance is outside the specification, replace the synchronizer ring No. 4.

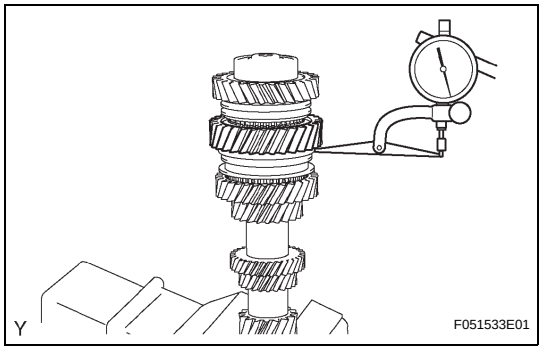

2. INSPECT 1ST GEAR THRUST CLEARANCE

(a) Using a dial indicator, measure the 1st gear thrust clearance.

Standard clearance:

0.10 to 0.43 mm (0.0039 to 0.0169 in.)

If the clearance is outside the specification, replace the synchronizer ring set No. 1.

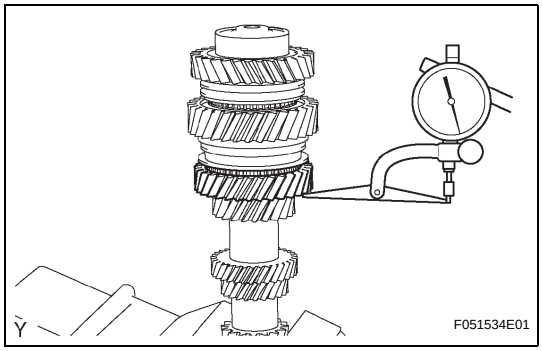

3. INSPECT 2ND GEAR THRUST CLEARANCE

(a) Using a dial indicator, measure the 2nd gear thrust clearance.

Standard clearance:

0.10 to 0.43 mm (0.0039 to 0.0169 in.)

If the clearance is outside the specification, replace the synchronizer ring set No. 1.

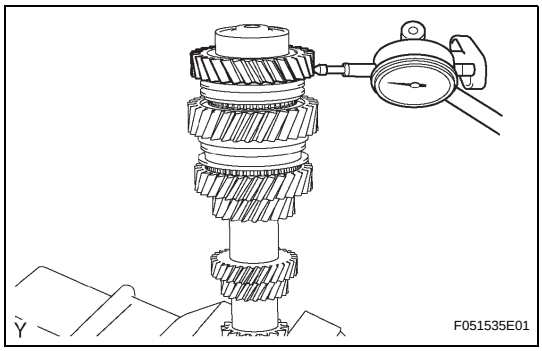

4. INSPECT REVERSE GEAR RADIAL CLEARANCE

(a) Using a dial indicator, measure the reverse gear radial clearance.

Standard clearance:

0.015 to 0.065 mm (0.0006 to 0.0026 in.)

If the clearance is outside the specification, replace the reverse gear needle roller bearing or shaft.

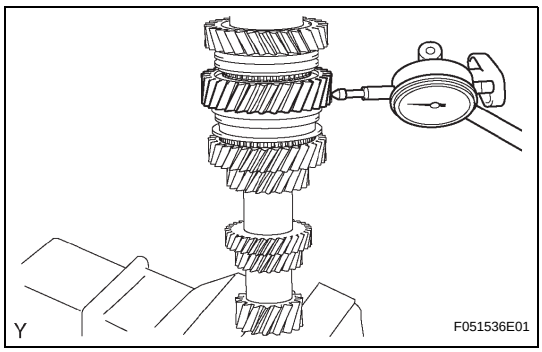

5. INSPECT 1ST GEAR RADIAL CLEARANCE

(a) Using a dial indicator, measure the 1st gear radial clearance.

Standard clearance:

0.015 to 0.067 mm (0.0006 to 0.0026 in.)

If the clearance is outside the specification, replace the 1st gear needle roller bearing or shaft.

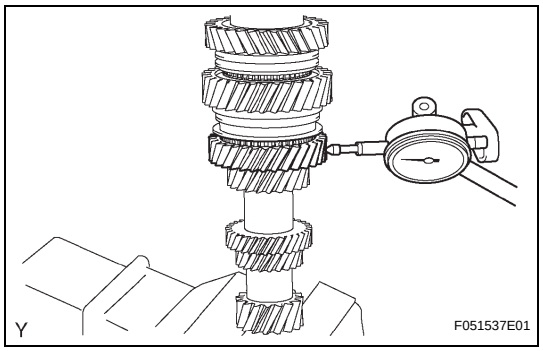

6. INSPECT 2ND GEAR RADIAL CLEARANCE

(a) Using a dial indicator, measure the 2nd gear radial clearance.

Standard clearance:

0.015 to 0.067 mm (0.0006 to 0.0026 in.)

If the clearance is outside the specification, replace the 2nd gear needle roller bearing or shaft.

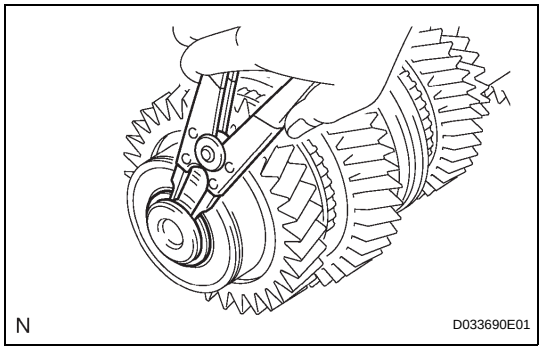

7. REMOVE NO. 1 COUNTER GEAR FRONT BEARING SNAP RING

(a) Using a snap ring expander, remove the snap ring from the counter gear.

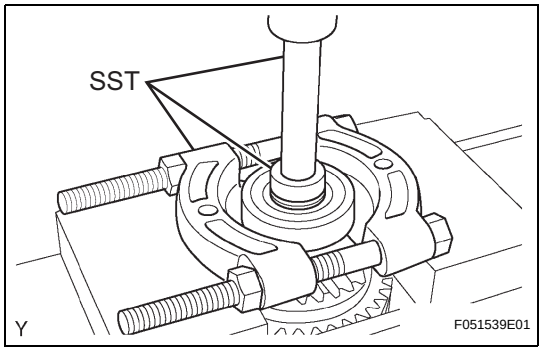

8. REMOVE COUNTER GEAR FRONT BEARING OR ROLLER

(a) Using SST and a press, remove the counter gear front bearing or roller from the counter gear.

SST 09950-00020, 09950-70010 (09951-07100), 09950-60010 (09951-00320)

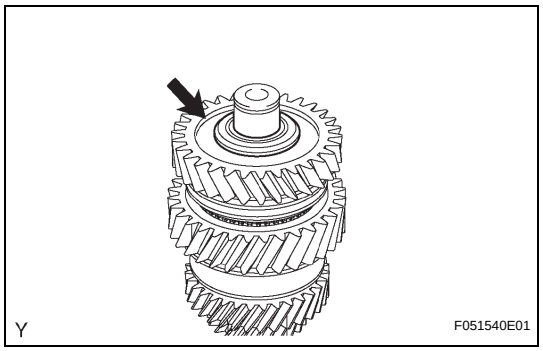

9. REMOVE REVERSE GEAR BEARING RACE INNER

(a) Remove the reverse gear bearing race inner from the counter gear.

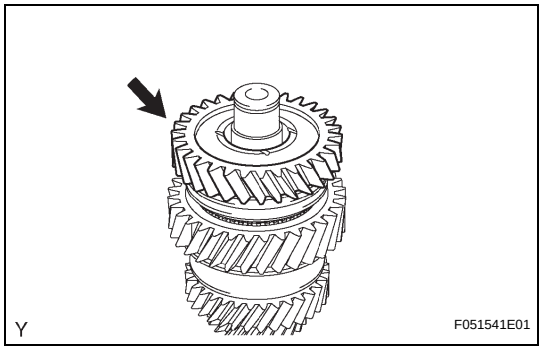

10. REMOVE COUNTERSHAFT REVERSE GEAR

(a) Remove the countershaft reverse gear from the counter gear.

(b) Remove the hub sleeve, 2 shifting keys and key spring from the countershaft reverse gear.

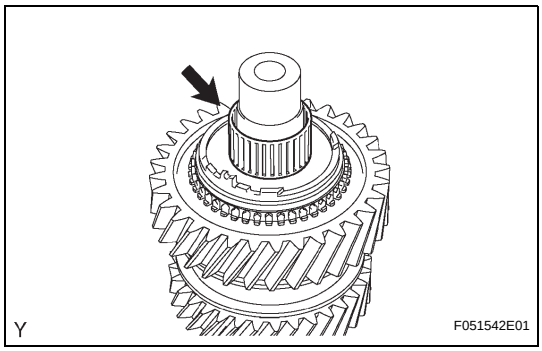

11. REMOVE REVERSE GEAR NEEDLE ROLLER BEARING

(a) Remove the reverse gear needle roller bearing from the counter gear.

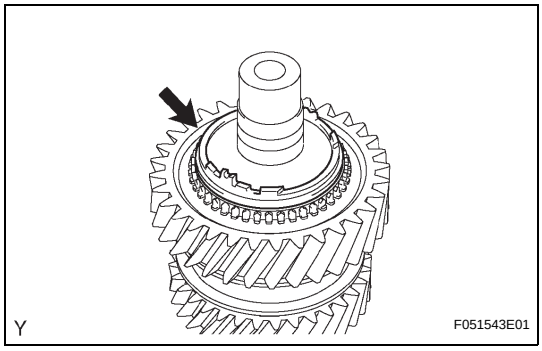

12. REMOVE NO. 4 SYNCHRONIZER RING

(a) Remove the synchronizer ring No. 4 from the counter gear.

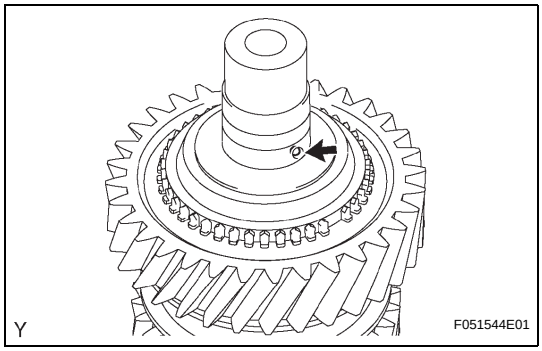

13. REMOVE BALL

(a) Remove the ball from the counter gear.

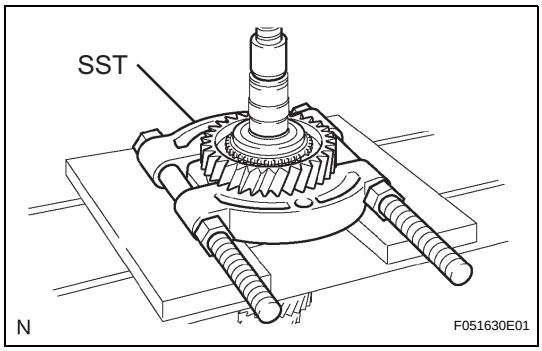

14. REMOVE COUNTERSHAFT GEAR 1ST SPEED

(a) Using a press, remove the countershaft gear 1st speed together with reverse gear spline piece from the counter gear.
SST 09950-00020

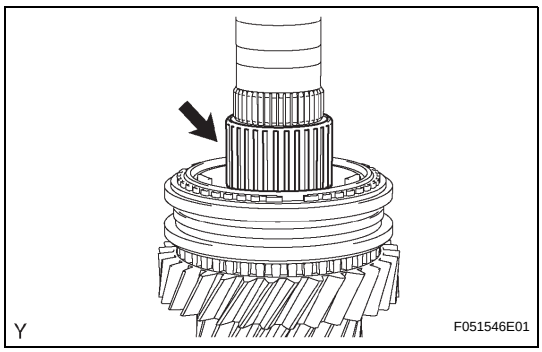

15. REMOVE 1ST GEAR NEEDLE ROLLER BEARING

(a) Remove the 1st gear needle roller bearing from the counter gear.

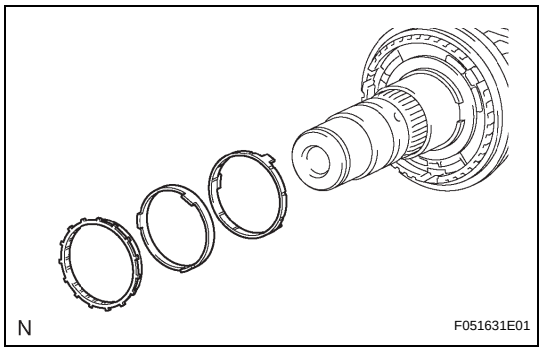

16. REMOVE NO. 1 SYNCHRONIZER RING SET (FOR 1ST GEAR)

(a) Remove the synchronizer ring set No. 1 from the counter gear.

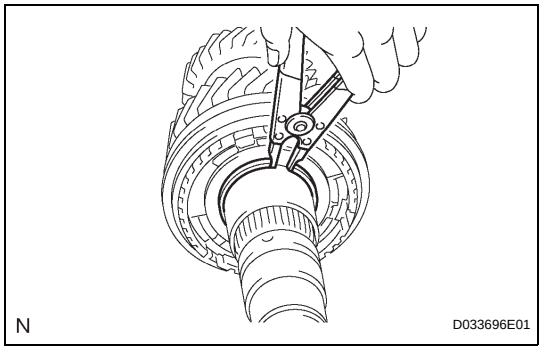

17. REMOVE CLUTCH HUB NO.1 SHAFT SNAP RING

(a) Using a snap ring expander, remove the snap ring from the counter gear.

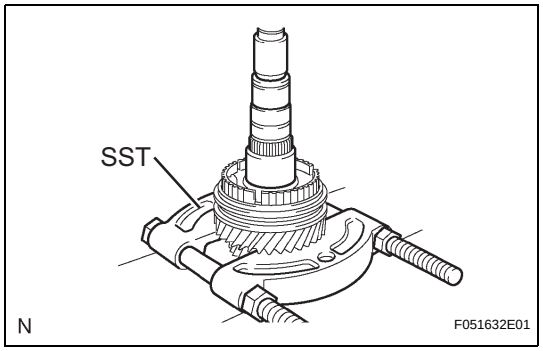

18. REMOVE COUNTER SHAFT 2ND SPEED GEAR

(a) Using a press, remove the counter shaft 2nd speed gear together with transmission clutch hub No. 1 from the counter gear.
SST 09950-00020

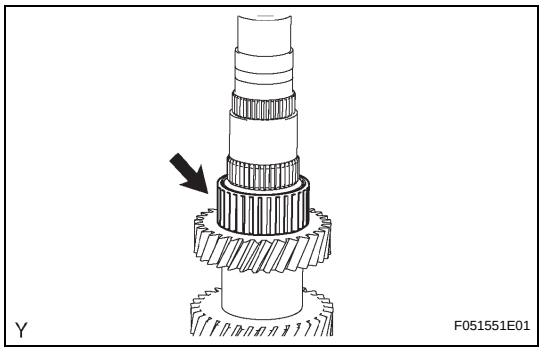

19. REMOVE 2ND GEAR NEEDLE ROLLER BEARING

(a) Remove the 2nd needle roller bearing from the counter gear.

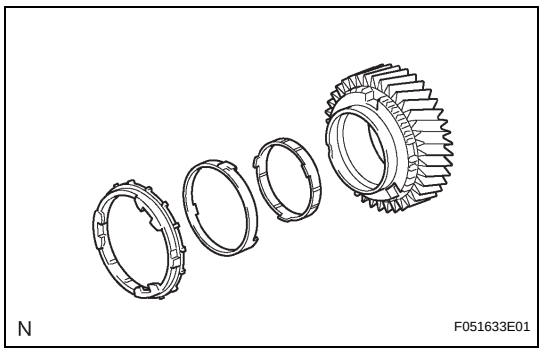

20. REMOVE NO. 1 SYNCHRONIZER RING SET (FOR 2ND GEAR)

(a) Remove the synchronizer ring set No. 1 from the 2nd gear.

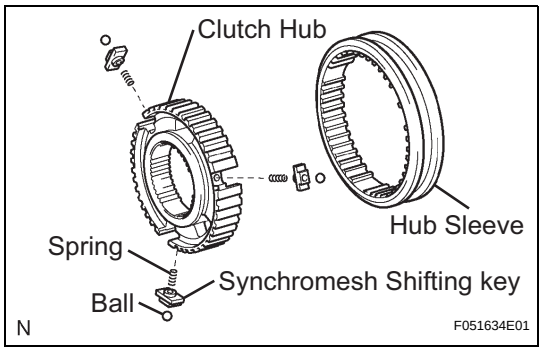

21. REMOVE NO. 1 TRANSMISSION CLUTCH HUB

(a) Remove the hub sleeve, 3 synchromesh shifting keys, 3 balls and 3 springs from the clutch hub.
HINT:
Use a shop rag to prevent the ball and spring from flying off.

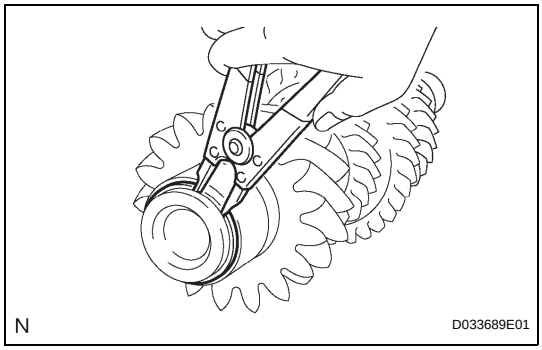

22. REMOVE SNAP RING COUNTER GEAR REAR BEARING

(a) Using a snap ring expander, remove the snap ring from the counter gear.

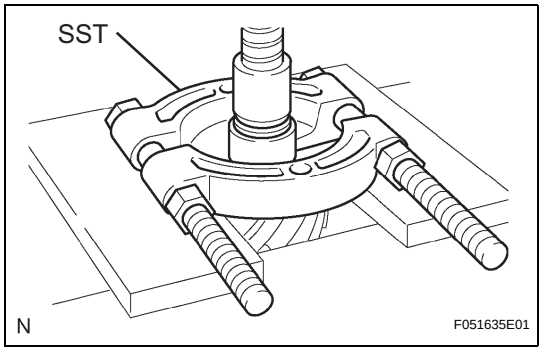

23. REMOVE RADIAL BALL BEARING INNER RACE

(a) Using SST and a press, remove the needle roller bearing inner race.
SST 09950-00020

INSPECTION

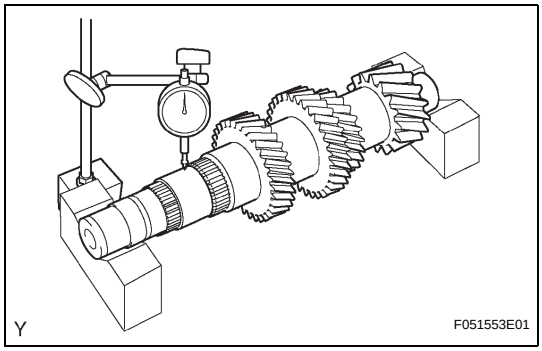

1. INSPECT COUNTER GEAR

(a) Using a dial indicator and 2 V-blocks, measure the shaft runout.
Maximum runout:
0.03 mm (0.0012 in.)
If the runout exceeds the maximum, replace the counter gear.

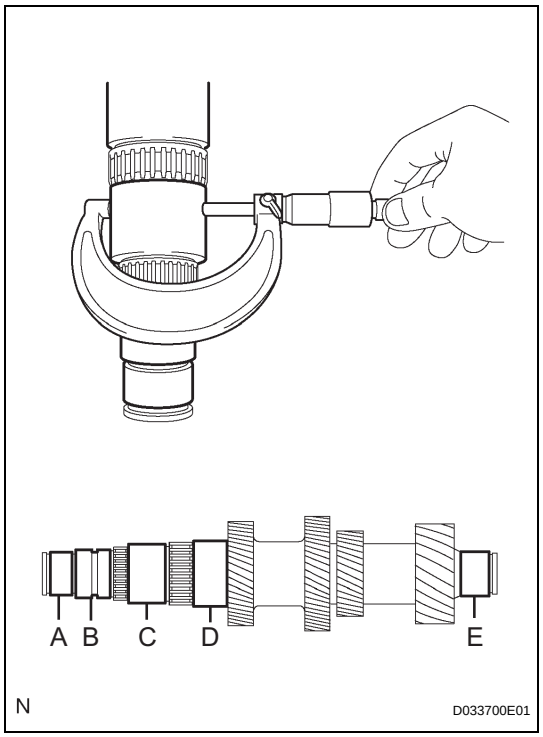

(b) Using a micrometer, measure the outer diameter of the input shaft journal surface.

Standard

Part	Outer diameter mm (in.)
A	34.002 to 34.015 (1.3387 to 1.3392)
B	36.985 to 37.000 (1.4561 to 1.4567)
C	47.985 to 48.000 (1.8892 to 1.8898)
D	53.985 to 54.000 (2.1254 to 2.1260)
E	34.002 to 34.015 (1.3387 to 1.3392)

Minimum

Part	Outer diameter mm (in.)
A	34.002 (1.3387)
B	36.985 (1.4561)
C	47.985 (1.8892)
D	53.985 (2.1254)
E	34.002 (1.3387)

If the diameter is less than the minimum, replace the counter gear shaft.

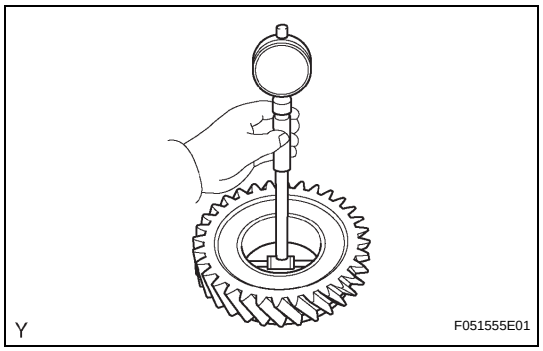

2. INSPECT COUNTERSHAFT REVERSE GEAR

(a) Using cylinder gauge, measure the inside diameter of the reverse gear.

Standard inside diameter:
51.015 to 51.040 mm (2.0085 to 2.0095 in.)
Maximum inside diameter:
51.040 mm (2.0095 in.)

If the inside diameter exceeds the maximum, replace the reverse gear.

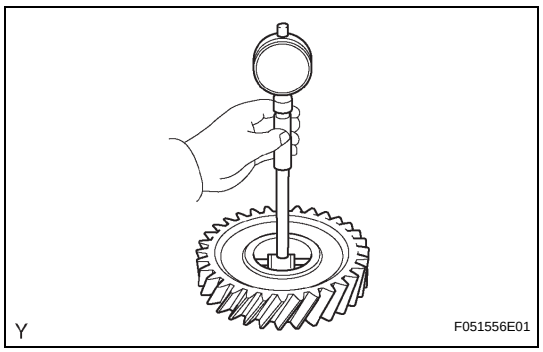

3. INSPECT COUNTERSHAFT GEAR 1ST SPEED

(a) Using cylinder gauge, measure the inside diameter of the 1st gear.

Standard inside diameter:
54.015 to 54.040 mm (2.1266 to 2.1276 in.)
Maximum inside diameter:
54.040 mm (2.1276 in.)

If the inside diameter exceeds the maximum, replace the 1st gear.

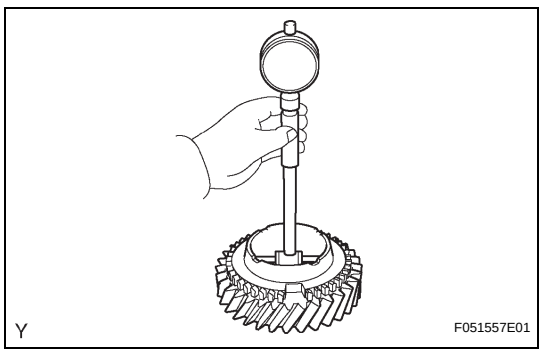

4. INSPECT COUNTER SHAFT 2ND SPEED GEAR

(a) Using cylinder gauge, measure the inside diameter of the 2nd gear.

Standard inside diameter:
60.015 to 60.040 mm (2.3628 to 2.3638 in.)
Maximum inside diameter:
60.040 mm (2.3638 in.)

If the inside diameter exceeds the maximum, replace the 2nd gear.

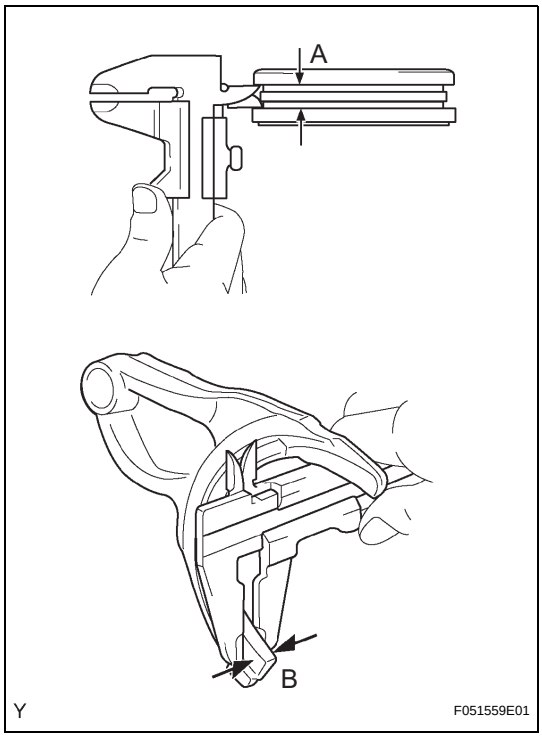

5. INSPECT NO. 3 TRANSMISSION HUB SLEEVE

(a) Using vernier calipers, measure the width of the transmission hub sleeve No. 3 groove (A) and the thickness of the claw part on the gear shift fork No. 4 (B), and calculate the clearance.

Standard clearance (A - B):

0.26 to 0.84 mm (0.0102 to 0.0331 in.)

If the clearance is outside the specification, replace the transmission hub sleeve No. 3 and gear shift fork No. 4.

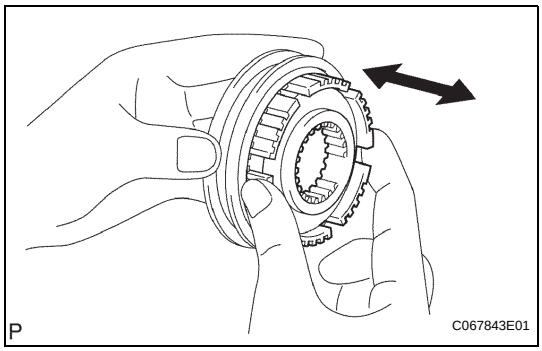

6. INSPECT NO. 1 TRANSMISSION HUB SLEEVE

(a) Check the sliding condition between the transmission hub No. 1 and transmission hub sleeve No. 1.

(b) Check that the spline gear teeth of the transmission hub sleeve No. 1 are not worn.

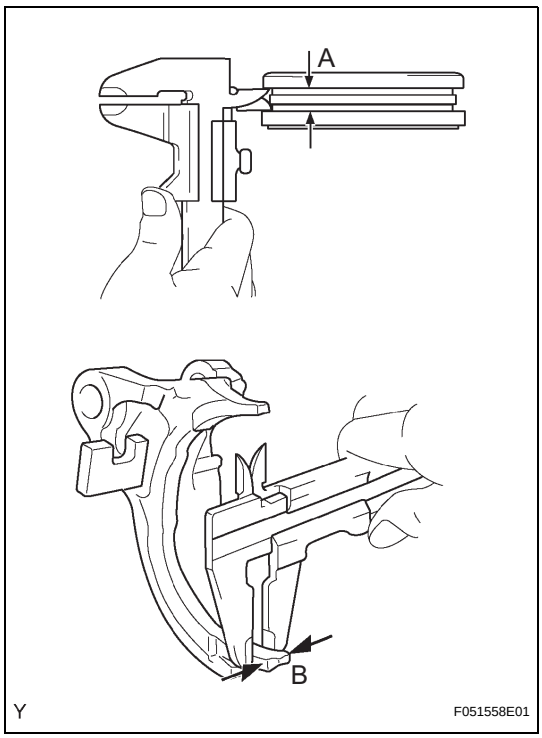

(c) Using vernier calipers, measure the width of the transmission hub sleeve No. 1 groove (A) and the thickness of the claw part on the gear shift fork No. 1 (B), and calculate the clearance.

Standard clearance (A - B):

0.15 to 0.35 mm (0.0059 to 0.0138 in.)

If the clearance is outside the specification, replace the transmission hub sleeve No. 1 and gear shift fork No. 1.

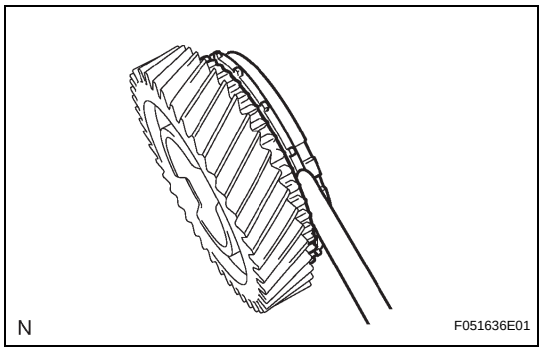

7. INSPECT NO. 4 SYNCHRONIZER RING

(a) Using a feeler gauge, measure the clearance between the synchronizer ring and reverse gear.

Standard clearance:
0.70 to 1.30 mm (0.0276 to 0.0512 in.)
Minimum clearance:
0.70 mm (0.0276 in.)

If the clearance is less than the minimum, replace the synchronizer ring.

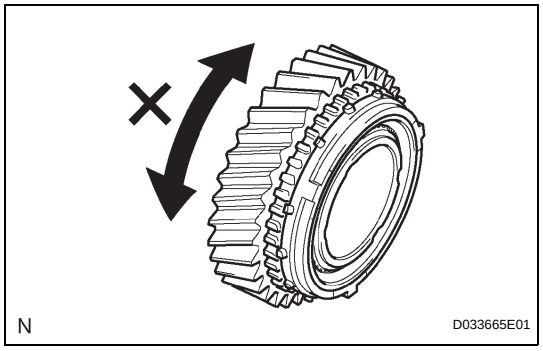

(b) Coat the reverse gear cone with gear oil. Check the braking effect of the synchronizer ring. Turn the synchronizer ring in one direction while pushing it to the reverse gear cone. Check that the ring locks.

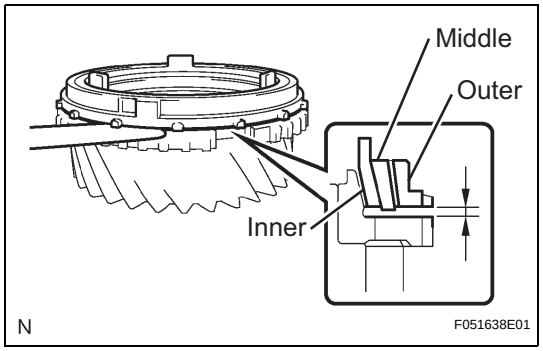

8. INSPECT NO. 1 SYNCHRONIZER RING SET (FOR 1ST GEAR)

(a) Using a feeler gauge, measure the clearance between the synchronizer ring and 1st gear.

Standard clearance:
Inner:
1.48 to 2.12 mm (0.0583 to 0.0835 in.)
Middle:
0.68 to 1.92 mm (0.0268 to 0.0756 in.)
Outer:
0.88 to 1.72 mm (0.0346 to 0.0677 in.)
Minimum clearance:
Inner:
1.48 mm (0.0583 in.)
Middle:
0.68 mm (0.0268 in.)
Outer:
0.88 mm (0.0346 in.)

If the clearance is less than the minimum, replace the synchronizer ring.

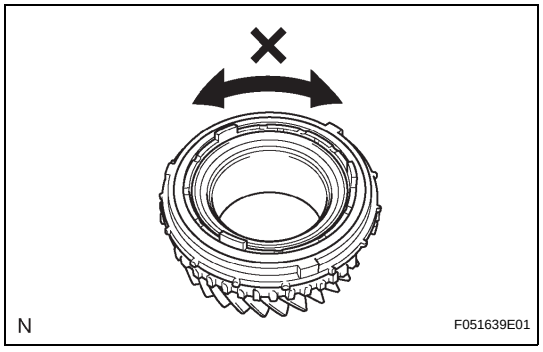

(b) Coat the 1st gear cone with gear oil. Check the braking effect of the synchronizer ring. Turn the synchronizer ring in one direction while pushing it to the 1st gear cone. Check that the ring locks.

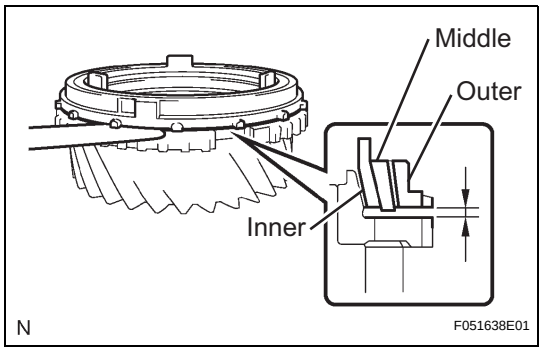

9. INSPECT NO. 1 SYNCHRONIZER RING SET (FOR 2ND GEAR)

(a) Using a feeler gauge, measure the clearance between the synchronizer ring and 2nd gear.

Standard clearance:
Inner:
1.48 to 2.12 mm (0.0583 to 0.0835 in.)
Middle:
0.68 to 1.92 mm (0.0268 to 0.0756 in.)
Outer:
0.88 to 1.72 mm (0.0346 to 0.0677 in.)
Minimum clearance:
Inner:
1.48 mm (0.0583 in.)
Middle:
0.68 mm (0.0268 in.)
Outer:
0.88 mm (0.0346 in.)

If the clearance is less than the minimum, replace the synchronizer ring.

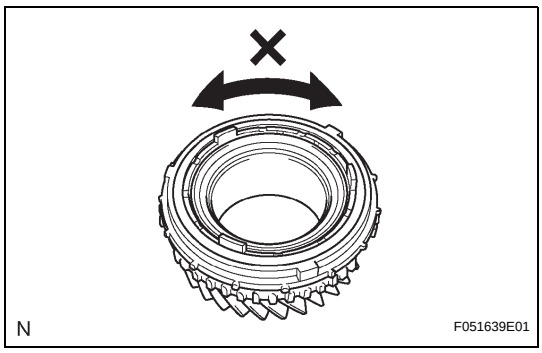

(b) Coat the 2nd gear cone with gear oil. Check the braking effect of the synchronizer ring. Turn the synchronizer ring in one direction while pushing it to the 2nd gear cone. Check that the ring locks.

REASSEMBLY

1. INSTALL RADIAL BALL BEARING INNER RACE

(a) Using SST and a press, install a new needle roller bearing inner race.

SST 09950-60010 (09951-00540)

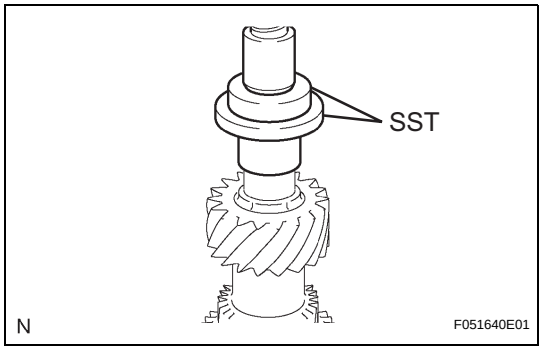

2. INSTALL SNAP RING COUNTER GEAR REAR BEARING

(a) Select a snap ring that will allow minimum axial play.

Standard clearance:
0.1 mm (0.004 in.) or less
Snap ring thickness

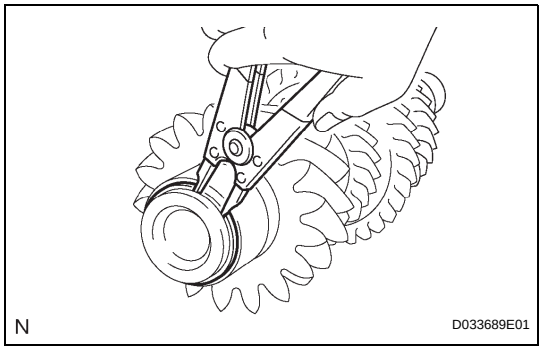

Part No.	Thickness: mm (in.)	Mark
90520-31015	2.35 to 2.40 (0.0925 to 0.0945)	A
90520-31016	2.40 to 2.45 (0.0945 to 0.0965)	B
90520-31017	2.45 to 2.50 (0.0965 to 0.0984)	C

Part No.	Thickness: mm (in.)	Mark
90520-31018	2.50 to 2.55 (0.0984 to 0.1004)	D
90520-31019	2.55 to 2.60 (0.1004 to 0.1024)	E
90520-31020	2.60 to 2.65 (0.1024 to 0.1043)	F
90520-31021	2.65 to 2.70 (0.1043 to 0.1063)	G
90520-31022	2.70 to 2.75 (0.1063 to 0.1083)	H
90520-31023	2.75 to 2.80 (0.1083 to 0.1102)	J
90520-31024	2.80 to 2.85 (0.1102 to 0.1122)	K
90520-31025	2.85 to 2.90 (0.1122 to 0.1142)	L
90520-31033	2.90 to 2.95 (0.1142 to 0.1161)	M

(b) Using a snap ring expander, install the snap ring onto the counter gear.

3. INSTALL NO. 1 TRANSMISSION CLUTCH HUB

(a) Apply a light coat of gear oil to the sleeve and hub.
(b) Install the clutch hub sleeve onto the clutch hub.
(c) Install the 3 shifting keys onto the clutch hub.
(d) Install the 3 shifting key springs onto the clutch hub.
(e) Place the ball in the hole of the shifting key, and install the hub sleeve while pushing in the ball.
NOTICE:
Take care to prevent the ball from flying off.

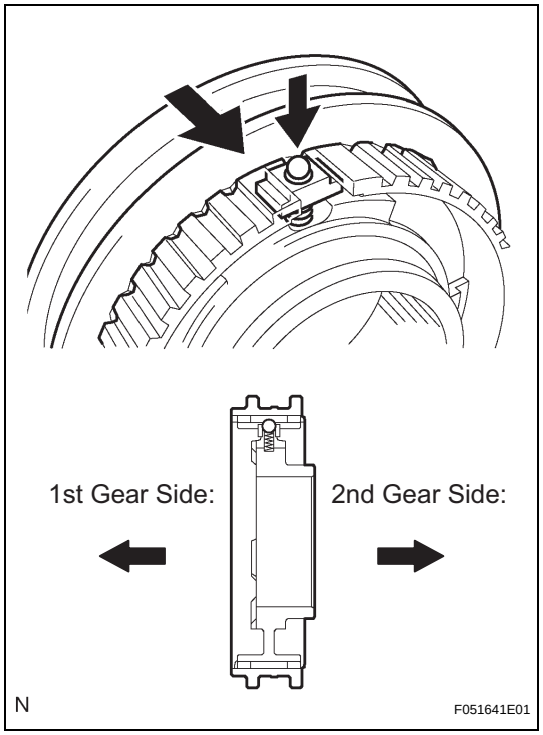

4. INSTALL 2ND GEAR NEEDLE ROLLER BEARING

(a) Coat the 2nd gear needle roller bearing with gear oil, then install it onto the counter gear.

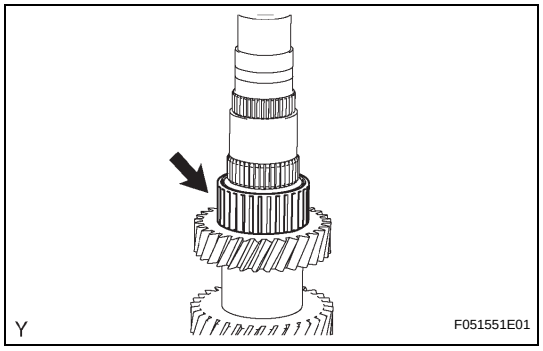

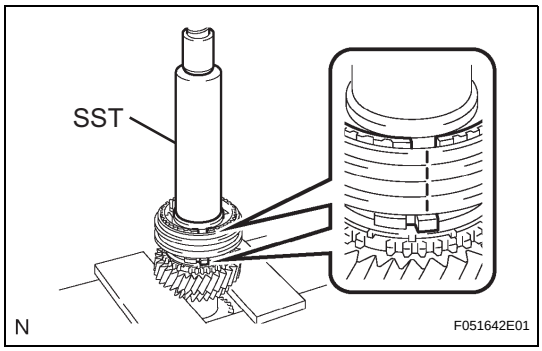

5. INSTALL COUNTER SHAFT 2ND SPEED GEAR

(a) Coat the countershaft 2nd speed gear with gear oil, then install it onto the counter gear.

(b) Coat the synchronizer ring set No. 1 with gear oil, then install it onto the counter gear.

(c) Using SST and a press, install the transmission clutch hub No. 1 onto the counter gear.

SST 09308-14010

HINT:

Align the convex portion of the synchronizer ring with the groove of the clutch hub.

(d) Install the clutch hub and confirm that the gear and synchronizer ring move smoothly.

MT

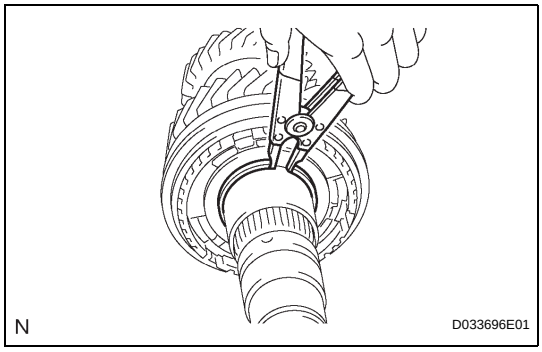

6. INSTALL CLUTCH HUB NO.1 SHAFT SNAP RING

(a) Select a snap ring that will allow minimum axial play.

Standard clearance:

0.1 mm (0.004 in.) or less

Snap ring thickness

Part No.	Thickness: mm (in.)	Mark
90520-45013	2.28 to 2.33 (0.0898 to 0.0917)	A
90520-45014	2.33 to 2.38 (0.0917 to 0.0937)	B
90520-45015	2.38 to 2.43 (0.0937 to 0.0957)	C
90520-45016	2.43 to 2.48 (0.0957 to 0.0976)	D
90520-45017	2.48 to 2.53 (0.0976 to 0.0996)	E
90520-45018	2.53 to 2.58 (0.0996 to 0.1016)	F
90520-45019	2.58 to 2.63 (0.1016 to 0.1035)	G

(b) Using a snap ring expander, install the snap ring onto the counter gear.

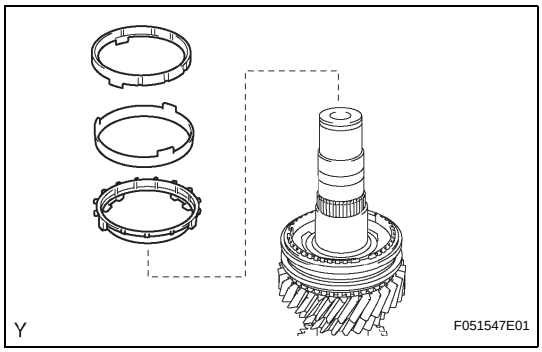

7. INSTALL NO. 1 SYNCHRONIZER RING SET

(a) Coat the synchronizer ring set No. 1 with gear oil, then install it onto the counter gear.

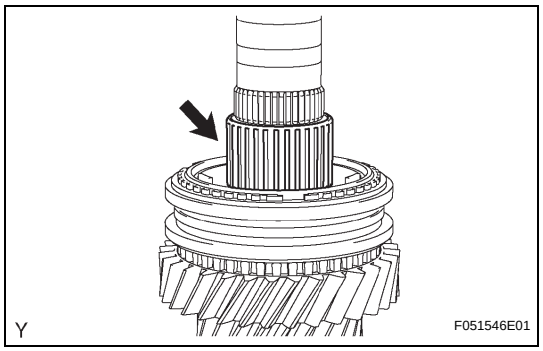

8. INSTALL 1ST GEAR NEEDLE ROLLER BEARING

(a) Coat the 1st gear needle roller bearing with gear oil, then install it onto the counter gear.

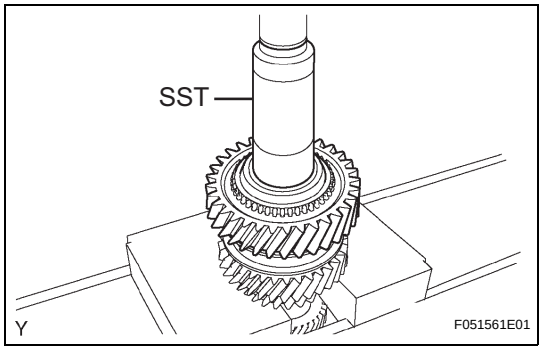

9. INSTALL COUNTERSHAFT GEAR 1ST SPEED

(a) Coat the countershaft gear 1st speed with gear oil, and install it onto the counter gear.

(b) Using SST and a press, install the reverse gear spline piece.

SST 09309-37010

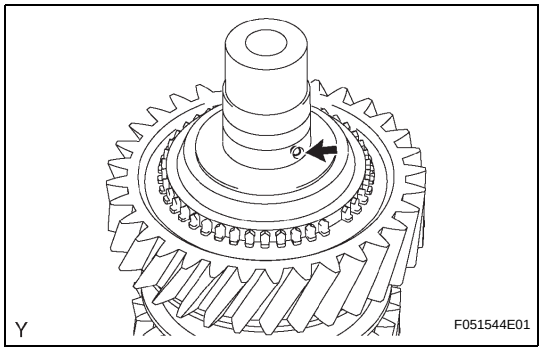

10. INSTALL BALL

(a) Install the ball into the counter gear.

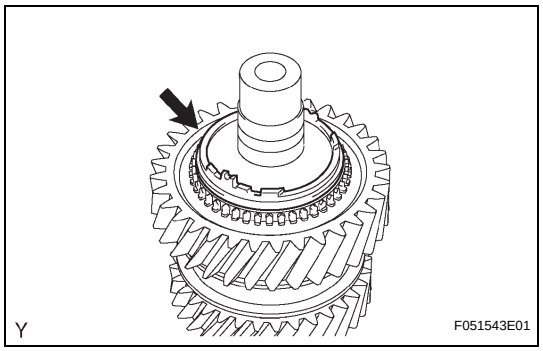

11. INSTALL NO. 4 SYNCHRONIZER RING

(a) Coat the synchronizer ring No. 4 with gear oil, and install it onto the counter gear.

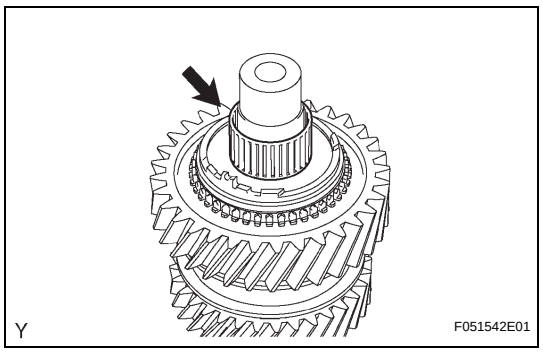

12. INSTALL REVERSE GEAR NEEDLE ROLLER BEARING

(a) Coat the reverse gear needle roller bearing with gear oil, and install it onto the counter gear.

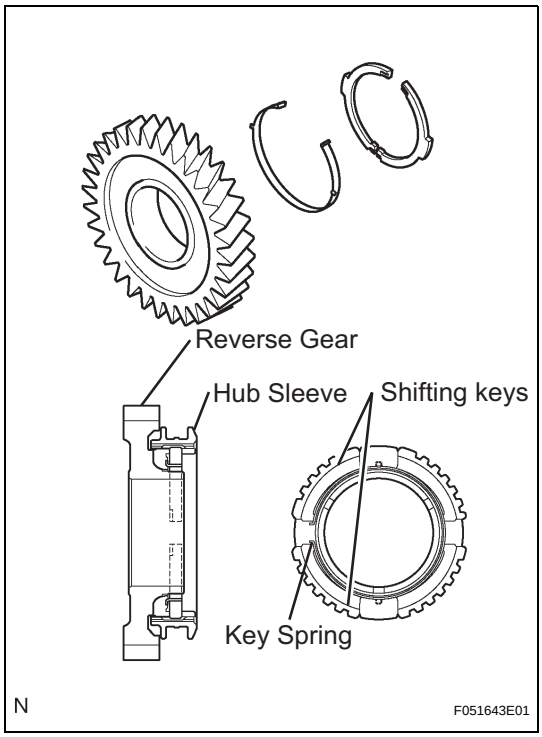

13. INSTALL COUNTERSHAFT REVERSE GEAR

(a) Install the key spring and 2 shifting keys onto the reverse gear.
HINT:
- Install the shifting key with its groove on the reverse gear side.
- Install the key spring with its claw on the reverse gear side.
- Refer to the illustration when installing the key spring.

(b) Install the hub sleeve onto the reverse gear.

(c) Coat the countershaft reverse gear with gear oil, then install it onto the counter gear.

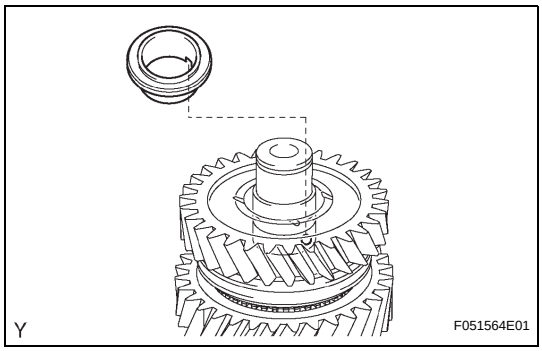

14. INSTALL REVERSE GEAR BEARING RACE INNER

(a) Align the groove of the reverse gear bearing race inner with the ball, and install them.

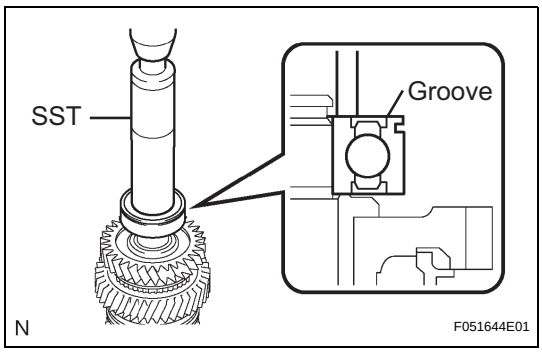

15. INSTALL COUNTER GEAR FRONT BEARING OR ROLLER

(a) Using SST and a press, install counter gear front bearing or roller onto the counter gear.
SST 09608-06041
HINT:
Make sure that the groove of the bearing faces the correct direction as shown in the illustration.

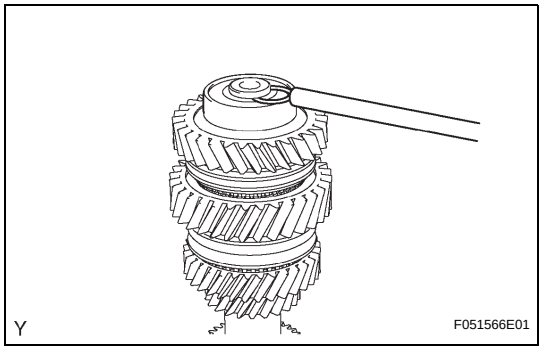

16. REMOVE NO. 1 COUNTER GEAR FRONT BEARING SNAP RING

(a) Select a snap ring that will allow minimum axial play.
Standard clearance:
0.1 mm (0.004 in.) or less
Snap ring thickness

Part No.	Thickness: mm (in.)	Mark
90520-31015	2.35 to 2.40 (0.0925 to 0.0945)	A

Part No.	Thickness: mm (in.)	Mark
90520-31016	2.40 to 2.45 (0.0945 to 0.0965)	B
90520-31017	2.45 to 2.50 (0.0965 to 0.0984)	C
90520-31018	2.50 to 2.55 (0.0984 to 0.1004)	D
90520-31019	2.55 to 2.60 (0.1004 to 0.1024)	E
90520-31020	2.60 to 2.65 (0.1024 to 0.1043)	F
90520-31021	2.65 to 2.70 (0.1043 to 0.1063)	G
90520-31022	2.70 to 2.75 (0.1063 to 0.1083)	H
90520-31023	2.75 to 2.80 (0.1083 to 0.1102)	J
90520-31024	2.80 to 2.85 (0.1102 to 0.1122)	K
90520-31025	2.85 to 2.90 (0.1122 to 0.1142)	L
0520-31033	2.90 to 2.95 (0.1142 to 0.1161)	M

(b) Using a snap ring expander, install the snap ring onto the counter gear.

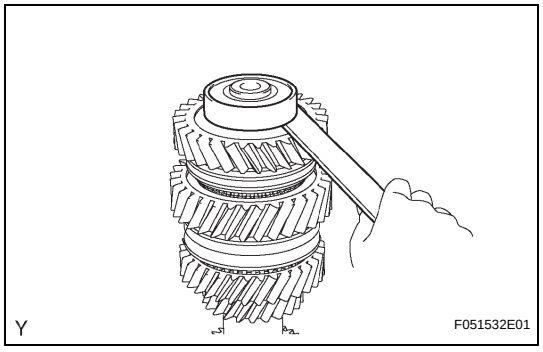

17. INSPECT REVERSE GEAR THRUST CLEARANCE

(a) Using a feeler gauge, measure the reverse gear thrust clearance.

Standard clearance:

0.12 to 0.37 mm (0.0047 to 0.0146 in.)

If the clearance is outside the specification, replace the synchronizer ring No. 4.

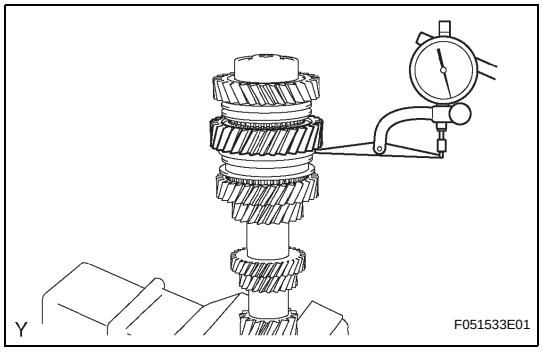

18. INSPECT 1ST GEAR THRUST CLEARANCE

(a) Using a dial indicator, measure the 1st gear thrust clearance.

Standard clearance:

0.10 to 0.43 mm (0.0039 to 0.0169 in.)

If the clearance is outside the specification, replace the synchronizer ring set No. 1.

MT

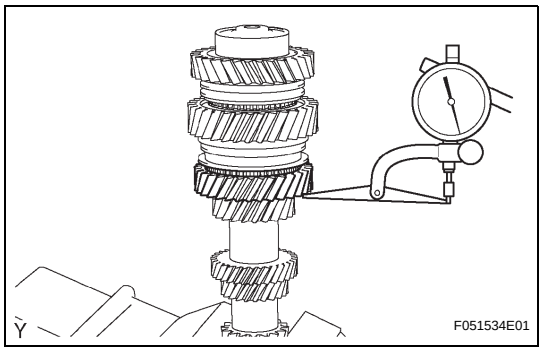

19. INSPECT 2ND GEAR THRUST CLEARANCE

(a) Using a dial indicator, measure the 2nd gear thrust clearance.

Standard clearance:

0.10 to 0.43 mm (0.0039 to 0.0169 in.)

If the clearance is outside the specification, replace the synchronizer ring set No. 1.

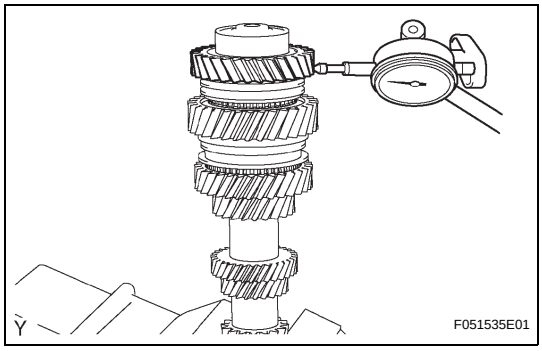

20. INSPECT REVERSE GEAR RADIAL CLEARANCE

(a) Using a dial indicator, measure the reverse gear radial clearance.

Standard clearance:

0.015 to 0.065 mm (0.0006 to 0.0026 in.)

If the clearance is outside the specification, replace the reverse gear needle roller bearing or shaft.

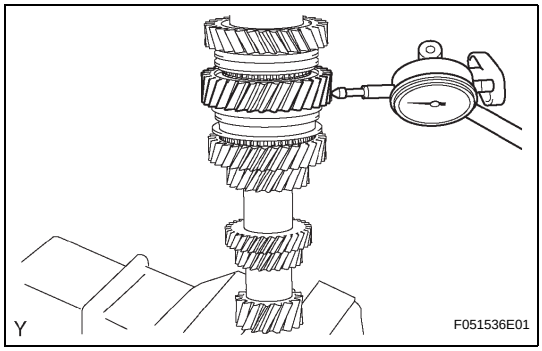

21. INSPECT 1ST GEAR RADIAL CLEARANCE

(a) Using a dial indicator, measure the 1st gear radial clearance.

Standard clearance:

0.015 to 0.067 mm (0.0006 to 0.0026 in.)

If the clearance is outside the specification, replace the 1st gear needle roller bearing or shaft.

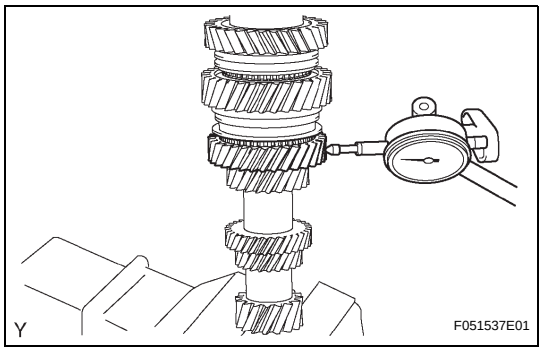

22. INSPECT 2ND GEAR RADIAL CLEARANCE

(a) Using a dial indicator, measure the 2nd gear radial clearance.

Standard clearance:

0.015 to 0.067 mm (0.0006 to 0.0026 in.)

If the clearance is outside the specification, replace the 2nd gear needle roller bearing or shaft.

MANUAL TRANSMISSION SYSTEM

PROBLEM SYMPTOMS TABLE

Use the table below to help determine the cause of the problems. The numbers indicate the ranked order of probability of each of the possible causes. Check each part in the order suggested. If necessary, replace the applicable parts.

Symptom	Suspected area	See page
Abnormal noise	1. Oil level (Low)	MT-2
	2. Oil (Wrong)	MT-2
	3. Gears (Worn or damaged)	-
	4. Bearings (Worn or damaged)	-
Oil leakage	1. Oil level (High)	MT-2
	2. Gasket (Damaged)	-
	3. Oil seal (Worn or damaged)	-
	4. O-Ring (Worn or damaged)	-
Hard shifting or will not shift	1. Synchronizer ring (Worn or damaged)	-
	2. Shift key spring (Damaged)	-
Jumps out of gear	1. Locking ball spring (Damaged)	-
	2. Shift fork (Worn)	-
	3. Gears (Worn or damaged)	-
	4. Bearings (Worn or damaged)	-

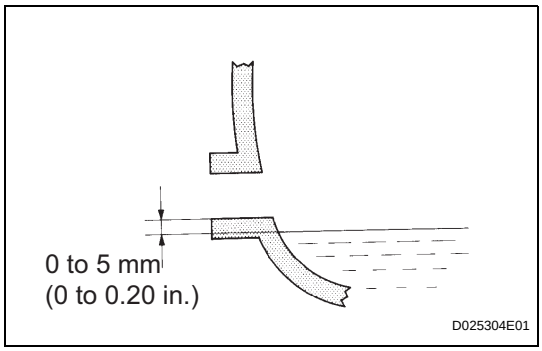

MANUAL TRANSMISSION OIL

ON-VEHICLE INSPECTION

1. INSPECT TRANSMISSION OIL

(a) Park the vehicle in a level place.

(b) Remove the transmission filler plug and gasket.

(c) Check that the oil surface is within 5 mm (0.20 in.) of the lowest point of the transmission filler plug opening.

NOTICE:

- **Problems may occur when the oil level is too high or low.**
- **After replacing the oil, drive the vehicle and check the oil level again.**

(d) Check for oil leakage when the oil level is low.

(e) Install the transmission filler plug and a new gasket.

Torque: 37 N*m (377 kgf*cm, 27 ft.*lbf)

MT

MANUAL TRANSMISSION ASSEMBLY

COMPONENTS

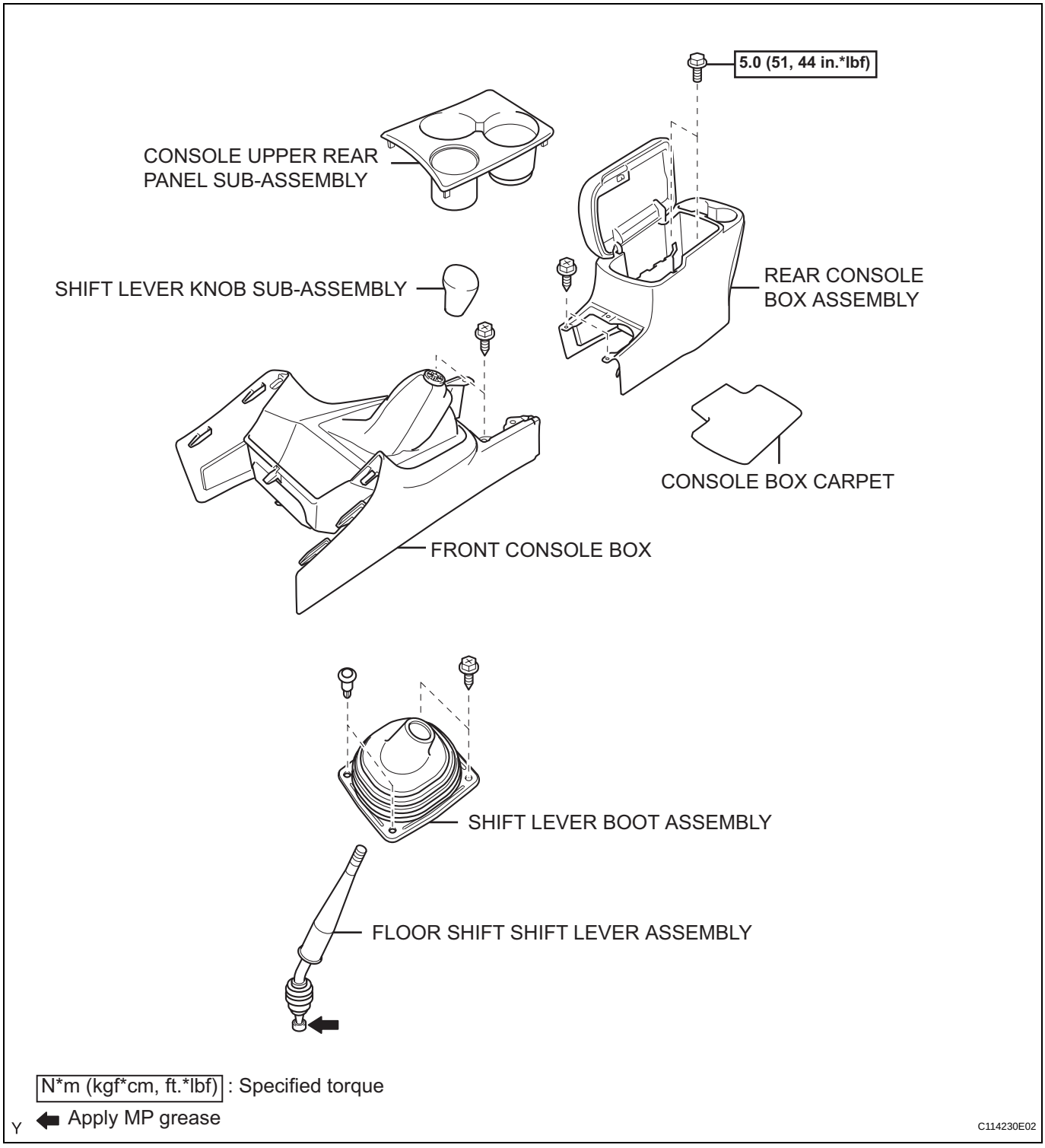

MT

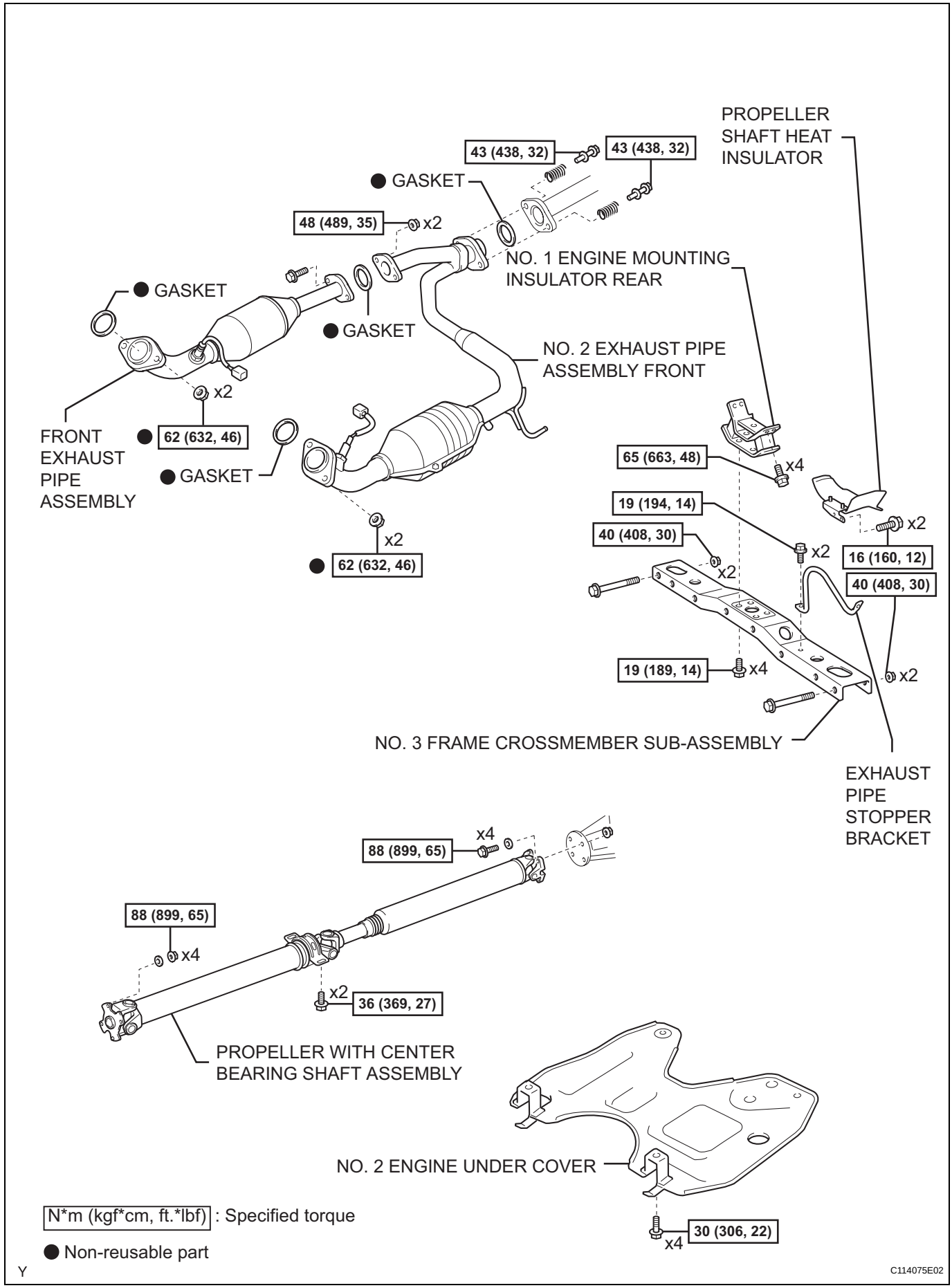
PROPELLER SHAFT HEAT INSULATOR
43 (438, 32)
43 (438, 32)
GASKET
48 (489, 35)
x2
NO. 1 ENGINE MOUNTING INSULATOR REAR
GASKET
GASKET
NO. 2 EXHAUST PIPE ASSEMBLY FRONT
x2
FRONT EXHAUST PIPE ASSEMBLY
62 (632, 46)
GASKET
65 (663, 48)
x4
19 (194, 14)
x2
40 (408, 30)
x2
16 (160, 12)
40 (408, 30)
x2
x2
62 (632, 46)
19 (189, 14)
x4
x2
NO. 3 FRAME CROSSMEMBER SUB-ASSEMBLY
EXHAUST PIPE STOPPER BRACKET
x4
88 (899, 65)
88 (899, 65)
x4
x2
36 (369, 27)
PROPELLER WITH CENTER BEARING SHAFT ASSEMBLY
NO. 2 ENGINE UNDER COVER
30 (306, 22)
x4
N*m (kgf*cm, ft.*lbf) : Specified torque
Non-reusable part
Y
C114075E02

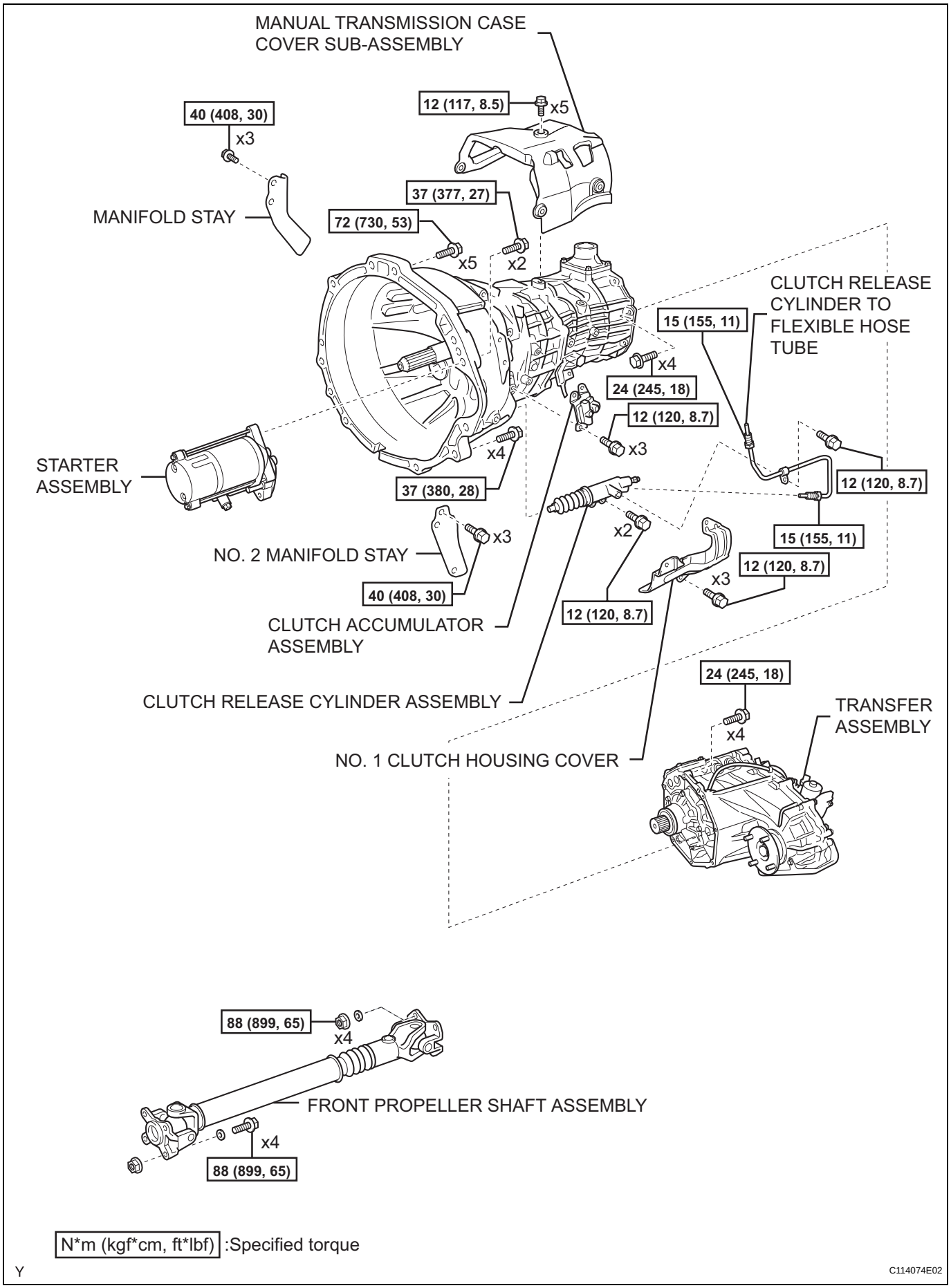

N*m (kgf*cm, ft*lbf) :Specified torque

Y

C114074E02

MT

MANUAL TRANSMISSION UNIT

COMPONENTS

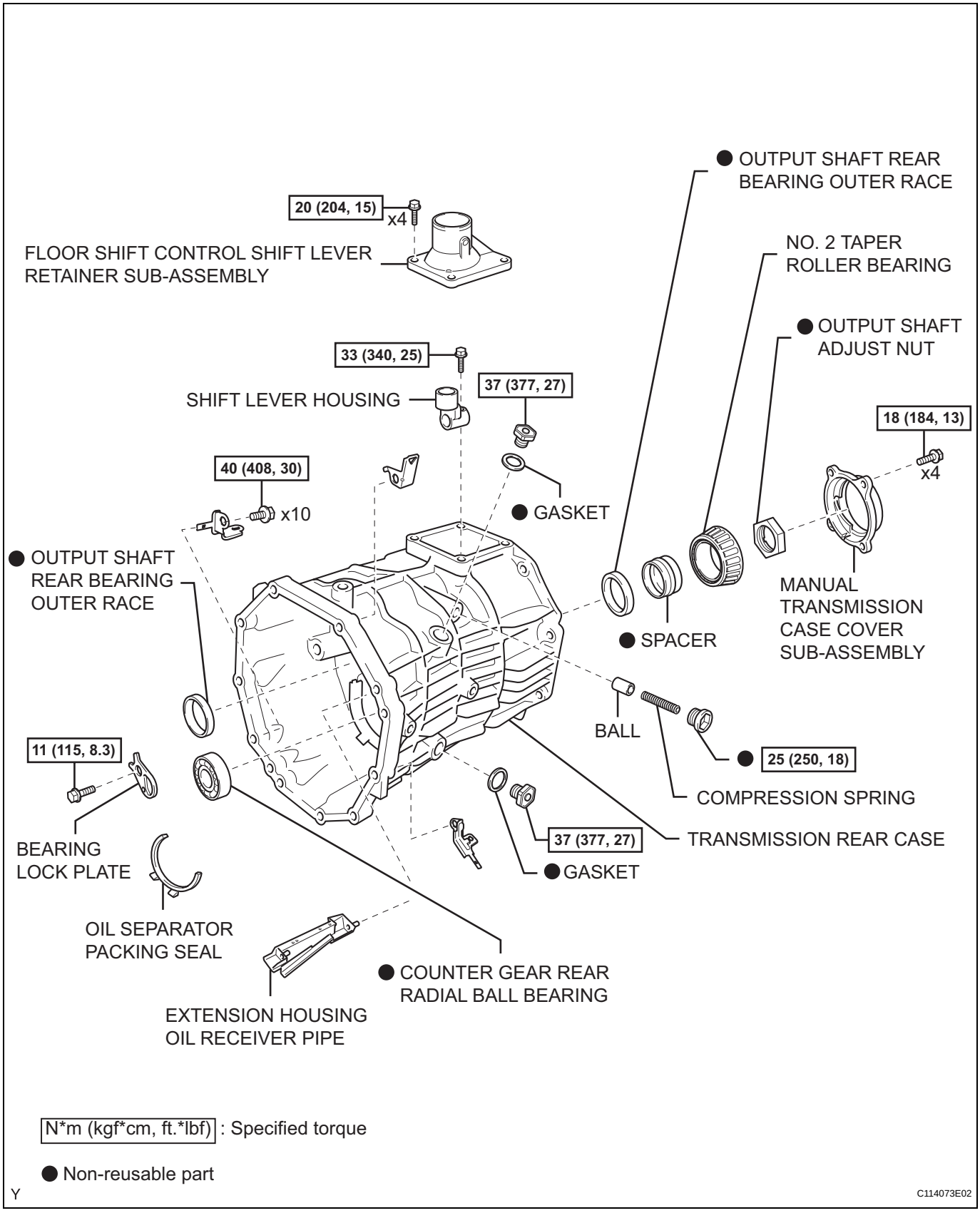

MT

MT

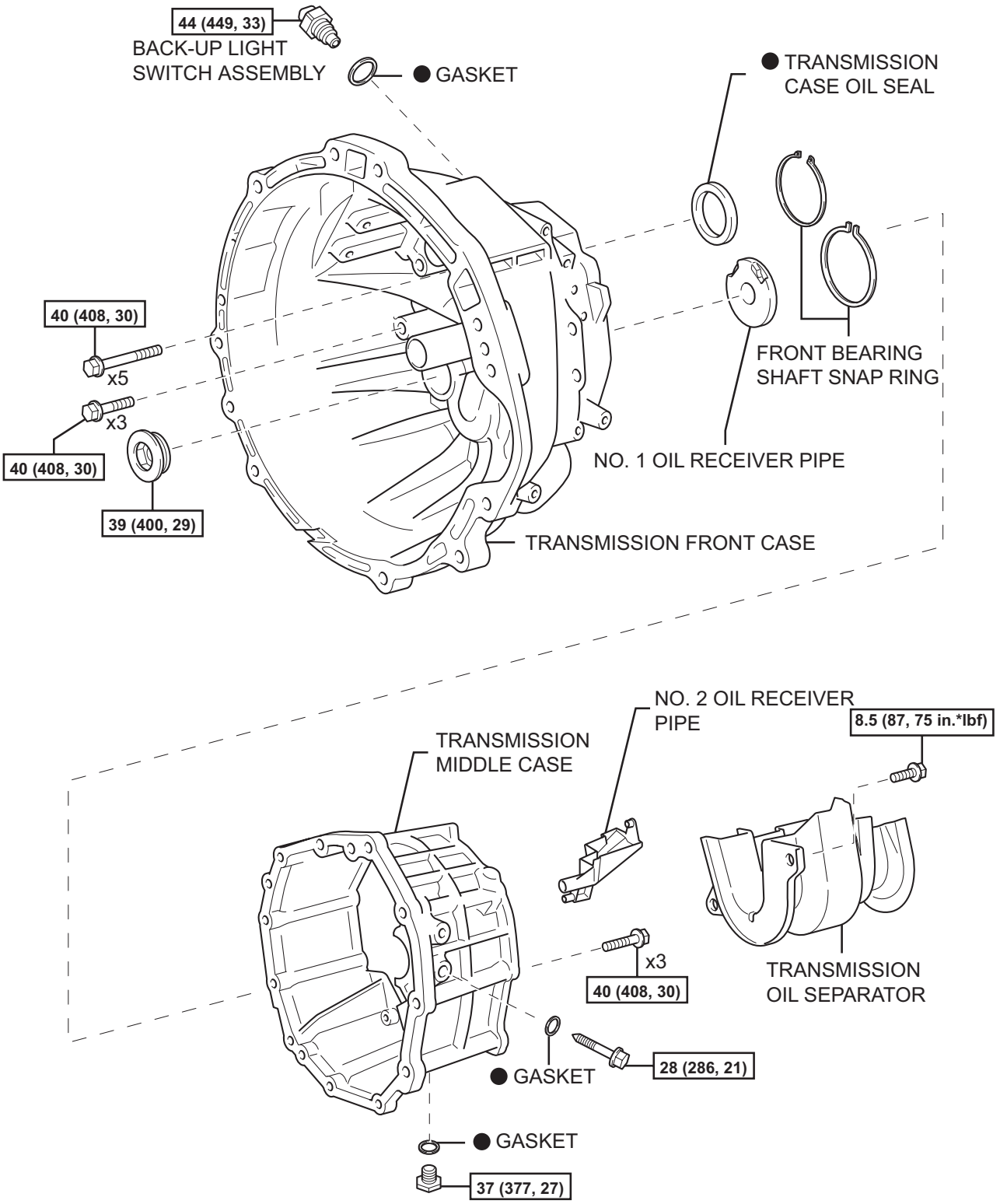

N*m (kgf*cm, ft.*lbf) : Specified torque

● Non-reusable part

Y

C114219E04

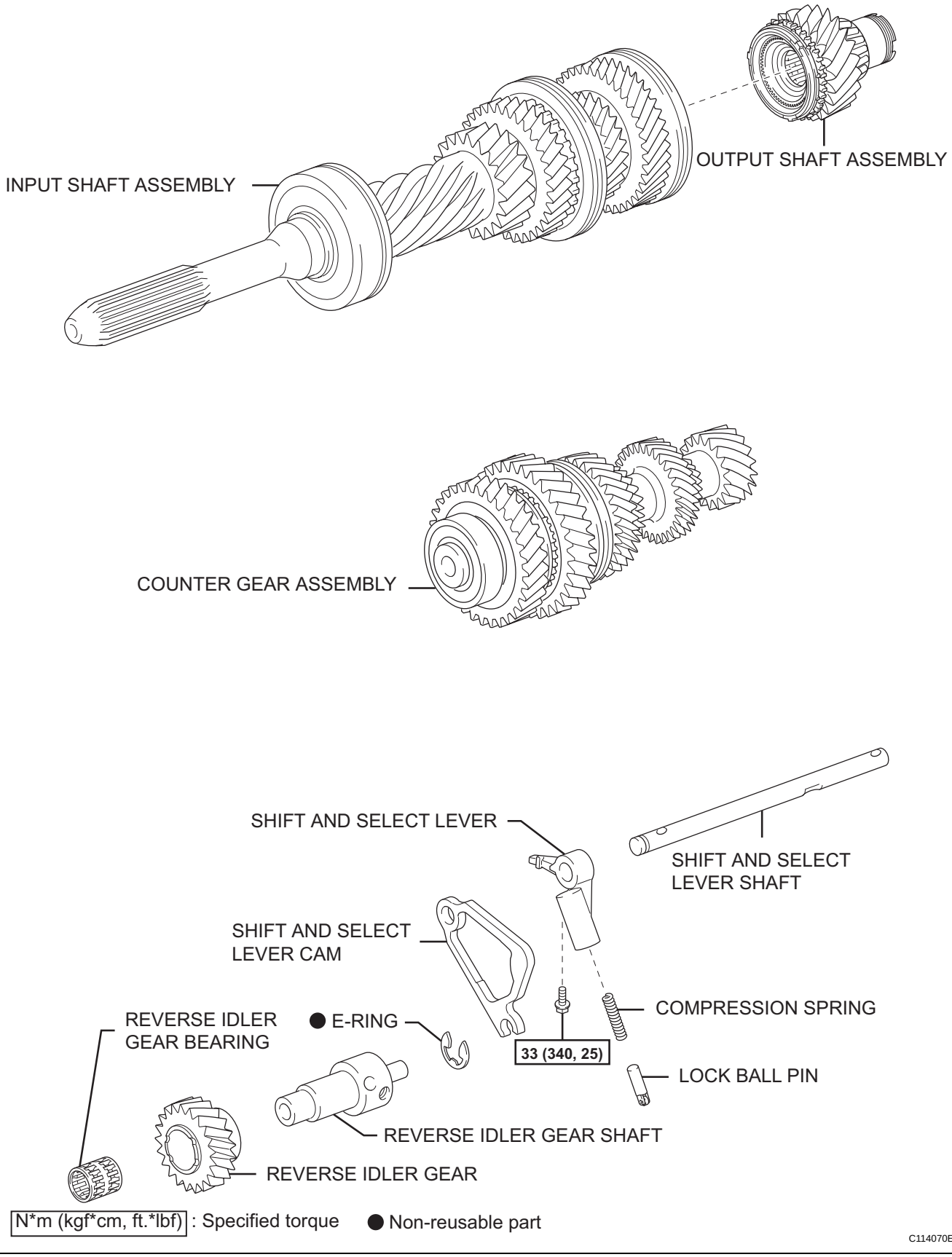
INPUT SHAFT ASSEMBLY
OUTPUT SHAFT ASSEMBLY
COUNTER GEAR ASSEMBLY
SHIFT AND SELECT LEVER
SHIFT AND SELECT LEVER SHAFT
SHIFT AND SELECT LEVER CAM
COMPRESSION SPRING
REVERSE IDLER GEAR BEARING
E-RING
33 (340, 25)
LOCK BALL PIN
REVERSE IDLER GEAR SHAFT
REVERSE IDLER GEAR
N*m (kgf*cm, ft.*lbf) : Specified torque
Non-reusable part
Y
C114070E02

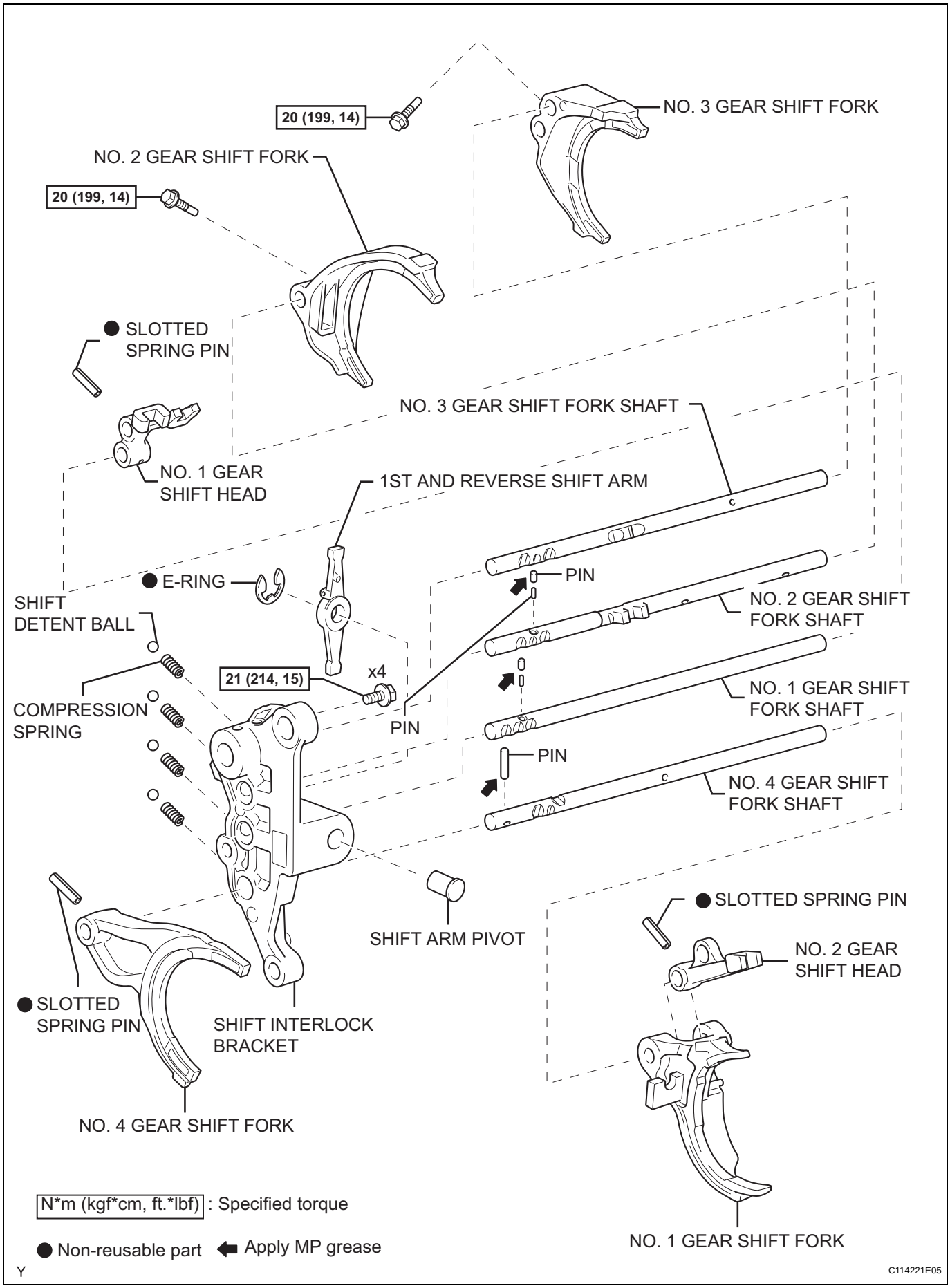
20 (199, 14)
NO. 3 GEAR SHIFT FORK
NO. 2 GEAR SHIFT FORK
20 (199, 14)
● SLOTTED SPRING PIN
NO. 3 GEAR SHIFT FORK SHAFT
NO. 1 GEAR SHIFT HEAD
1ST AND REVERSE SHIFT ARM
● E-RING
PIN
SHIFT DETENT BALL
NO. 2 GEAR SHIFT FORK SHAFT
21 (214, 15)
x4
COMPRESSION SPRING
PIN
NO. 1 GEAR SHIFT FORK SHAFT
PIN
NO. 4 GEAR SHIFT FORK SHAFT
● SLOTTED SPRING PIN
SHIFT ARM PIVOT
NO. 2 GEAR SHIFT HEAD
● SLOTTED SPRING PIN
SHIFT INTERLOCK BRACKET
NO. 4 GEAR SHIFT FORK
NO. 1 GEAR SHIFT FORK
N*m (kgf*cm, ft.*lbf) : Specified torque
● Non-reusable part
Apply MP grease
Y
C114221E05

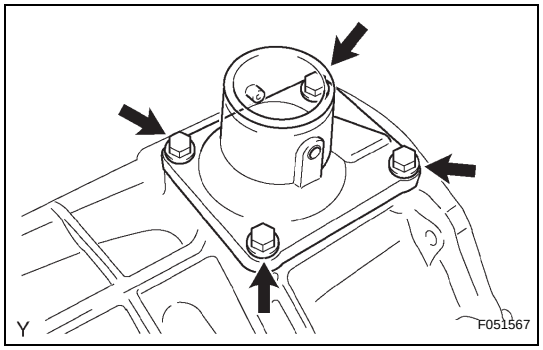

DISASSEMBLY

1. REMOVE FLOOR SHIFT CONTROL SHIFT LEVER RETAINER SUB-ASSEMBLY

(a) Remove the 4 bolts, then remove the floor shift control shift lever retainer.

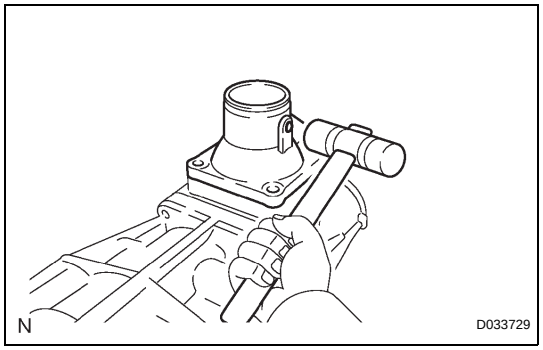

(b) Using a plastic hammer, remove the floor shift control shift lever retainer.

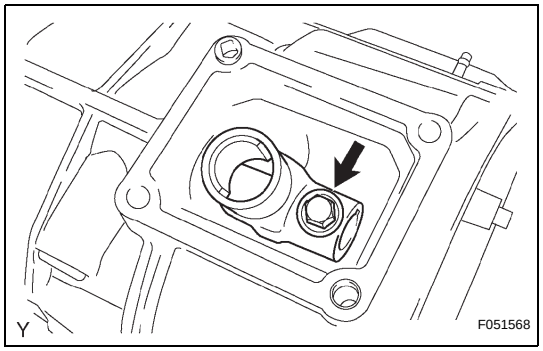

2. REMOVE SHIFT LEVER HOUSING

(a) Remove the bolt, then separate the shift lever housing.

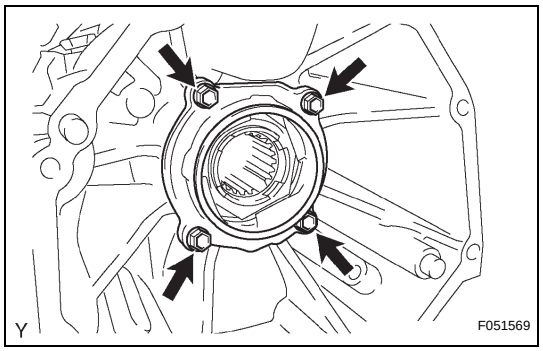

3. REMOVE MANUAL TRANSMISSION CASE COVER SUB-ASSEMBLY

(a) Remove the 4 bolts, then remove the transmission case cover.

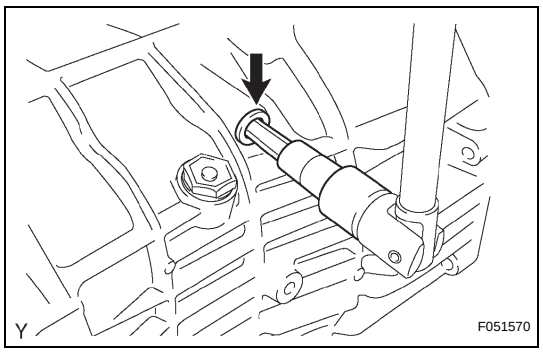

4. REMOVE SHIFT DETENT BALL PLUG

(a) Using a socket hexagon wrench (10 mm), remove the shift detent ball plug from the transmission rear case.

(b) Remove the ball and compression spring from the transmission rear case.

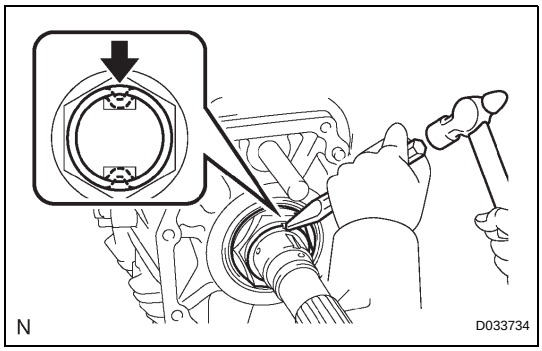

5. REMOVE OUTPUT SHAFT ADJUST NUT

(a) Using a chisel and hammer, unstake the nut.

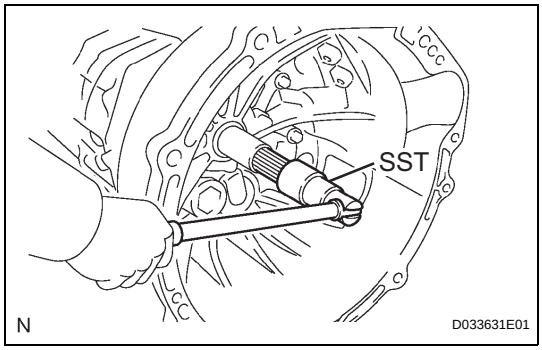

(b) Place the gearshift into 5th gear, and then fix the input shaft using SST.
SST 09556-16030

(c) Using a belt and wooden block, fasten the transmission to the workbench.

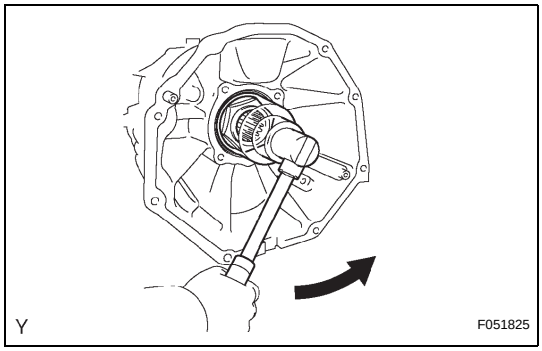

(d) Using a socket wrench (60 mm), remove the nut from the transmission rear case.

(e) Remove the belt and wooden block from the transmission.

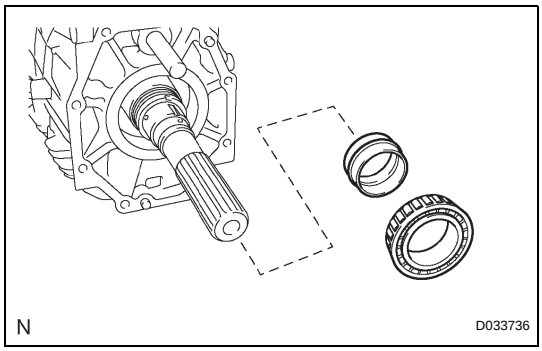

(f) Remove the taper roller bearing No. 2 and spacer.

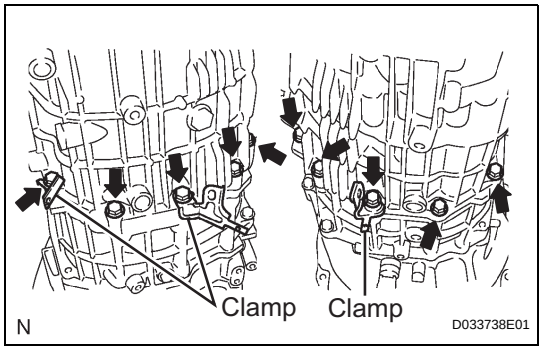

6. REMOVE TRANSMISSION REAR CASE

(a) Remove the 10 bolts and 3 clamps.

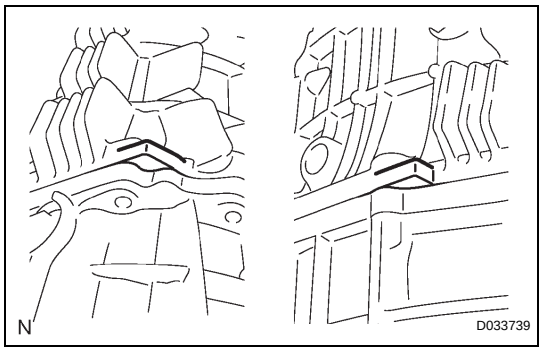

(b) Using a plastic hammer, carefully tap out the rear case.

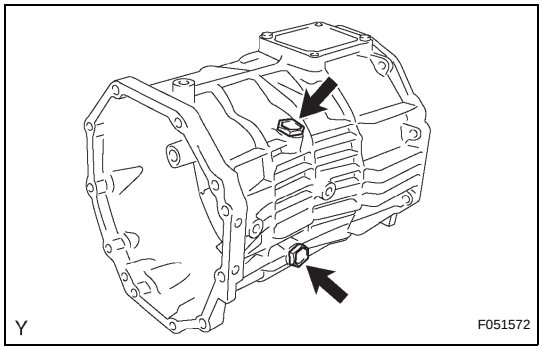

7. REMOVE MANUAL TRANSMISSION FILLER PLUG

(a) Remove the 2 transmission filler plugs and 2 gaskets from the transmission rear case.

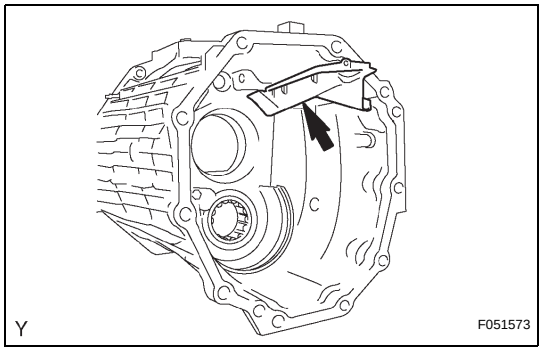

8. REMOVE EXTENSION HOUSING OIL RECEIVER PIPE

(a) Remove the extension housing oil receiver pipe from the transmission rear case.

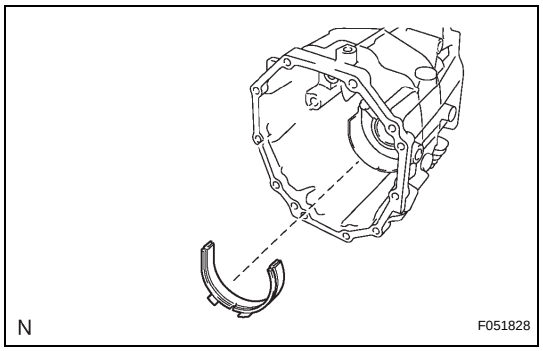

9. REMOVE OIL SEPARATOR PACKING SEAL

(a) Remove the oil separator packing seal from the transmission rear case.

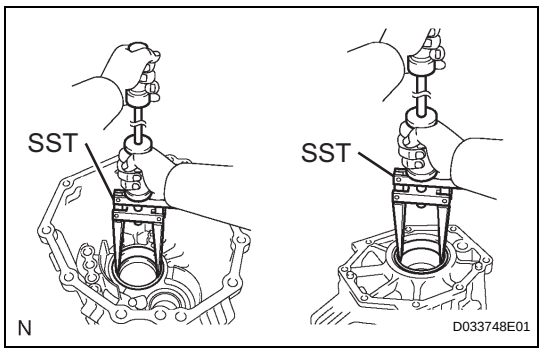

10. REMOVE OUTPUT SHAFT REAR BEARING OUTER RACE

(a) Using SST, remove the 2 bearing outer races.
SST 09308-00010

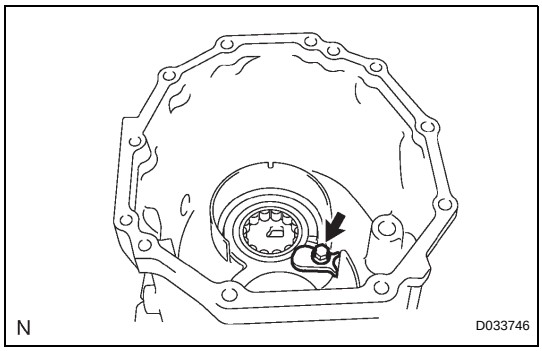

11. REMOVE COUNTER GEAR REAR RADIAL BALL BEARING

(a) Remove the bolt, then remove the bearing lock plate.

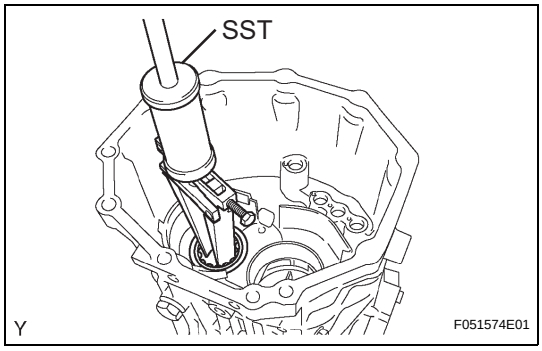

(b) Using SST, remove the counter gear rear radial ball bearing from the transmission rear case.
SST 09308-00010

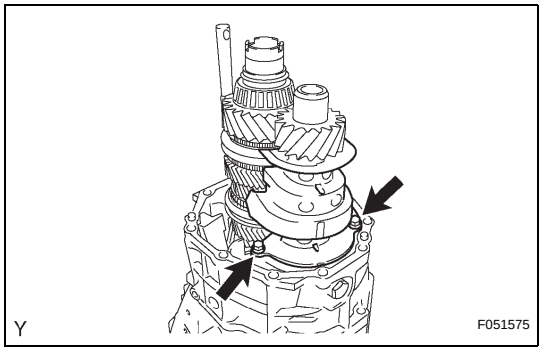

12. REMOVE TRANSMISSION OIL SEPARATOR

(a) Remove the 2 bolts, then remove the oil separator.

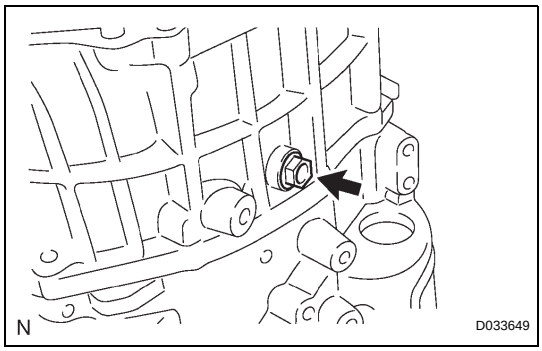

13. REMOVE REVERSE IDLER GEAR SHAFT BOLT

(a) Remove the reverse idler gear shaft bolt from the transmission middle case.

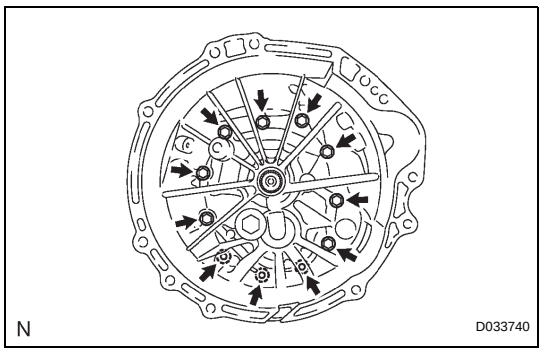

14. REMOVE TRANSMISSION MIDDLE CASE

(a) Remove the 11 bolts, then remove the transmission middle case.

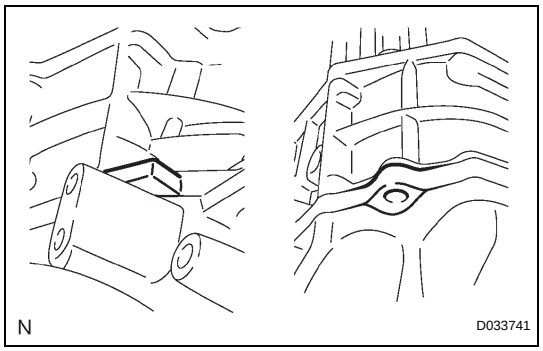

(b) Using a plastic hammer, carefully tap out the middle case.

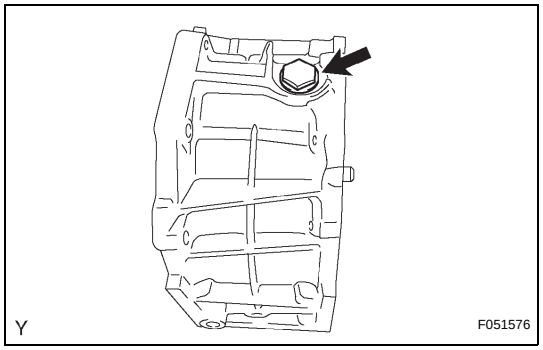

15. REMOVE DRAIN PLUG SUB-ASSEMBLY

(a) Remove the drain plug and gasket from the transmission middle case.

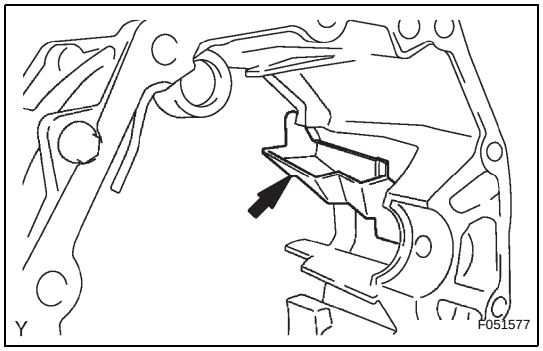

16. REMOVE NO. 2 OIL RECEIVER PIPE

(a) Remove the oil receiver pipe No. 2 from the transmission middle case.

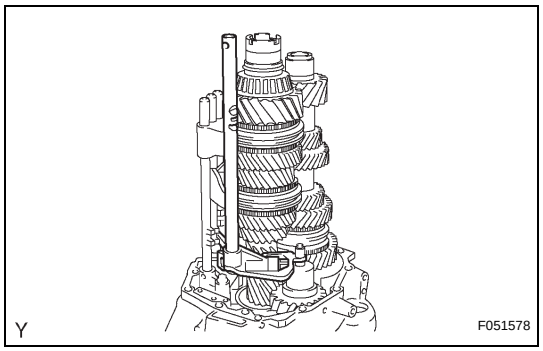

17. REMOVE SHIFT AND SELECT LEVER SHAFT

(a) Remove the shift and select lever shaft from the reverse gear shaft.

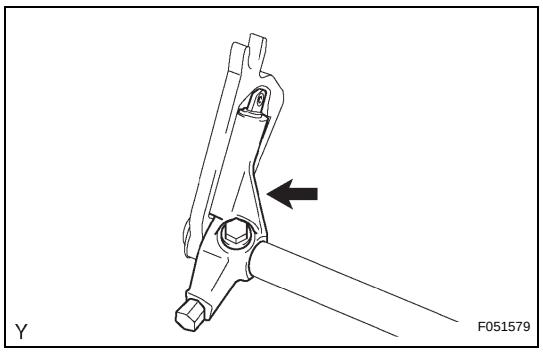

18. REMOVE SHIFT AND SELECT LEVER

(a) Remove the bolt, then remove the shift and select lever.

(b) Remove the lock ball pin and spring from the shift and select lever.

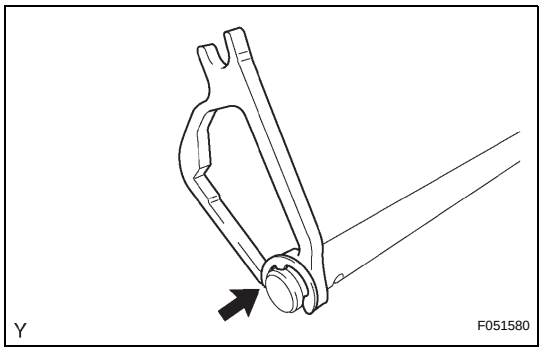

19. REMOVE SHIFT AND SELECT LEVER CAM

(a) Using a screwdriver, remove the E ring and the shift and select lever cam from the shift and select lever shaft.

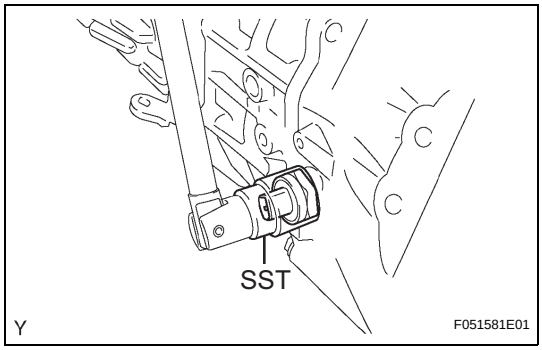

20. REMOVE BACK-UP LIGHT SWITCH ASSEMBLY

(a) Using SST, remove the back-up light switch and gasket.
SST 09817-16011

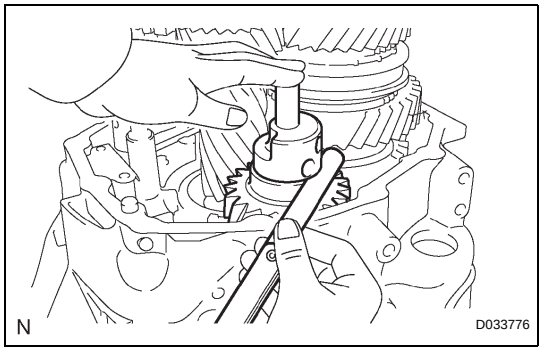

21. INSPECT REVERSE IDLER GEAR THRUST CLEARANCE

(a) Using a feeler gauge, measure the thrust clearance.
Standard clearance:
0.10 to 0.55 mm (0.0039 to 0.0217 in.)
Maximum clearance:
0.55 to (0.0217 in.)
If the clearance is exceeds the maximum, replace the reverse idler gear shaft.

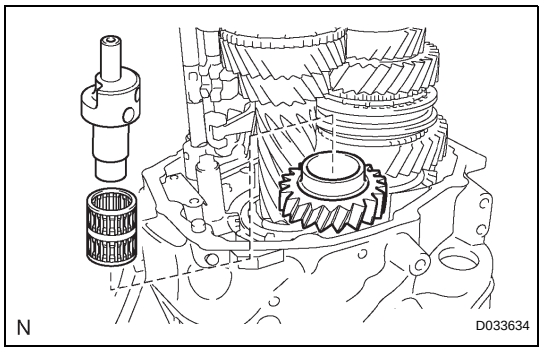

22. REMOVE REVERSE IDLER GEAR

(a) Remove the reverse idle gear shaft, needle roller bearing and reverse idler gear.

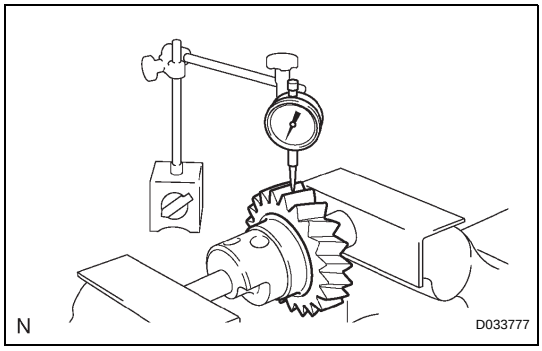

23. INSPECT REVERSE IDLER GEAR RADIAL CLEARANCE

(a) Using a dial indicator, measure the radial clearance.
Standard clearance:
0.015 to 0.050 mm (0.0006 to 0.0020 in.)
Maximum clearance:
0.050 mm (0.0020 in.)
If the clearance exceeds the maximum, replace the needle roller bearing.

MT

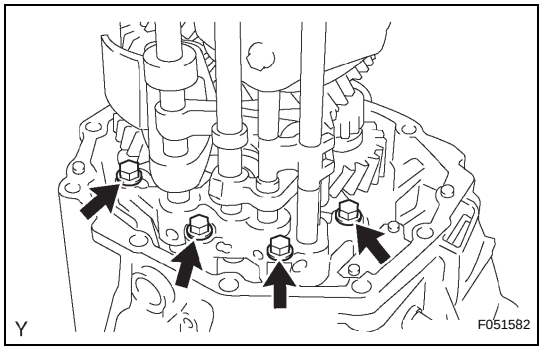

24. REMOVE TRANSMISSION FRONT CASE

(a) Remove the 4 bolts from the interlock bracket.

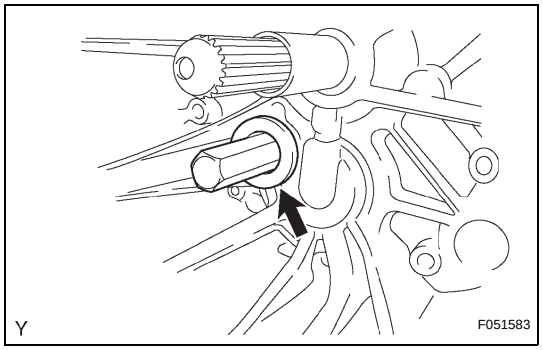

(b) Using a hexagon wrench (24 mm), remove the plug.

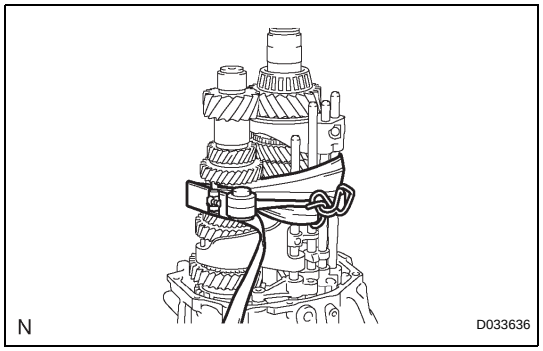

(c) Tie the input shaft, counter gear and control assembly with a rope or string.

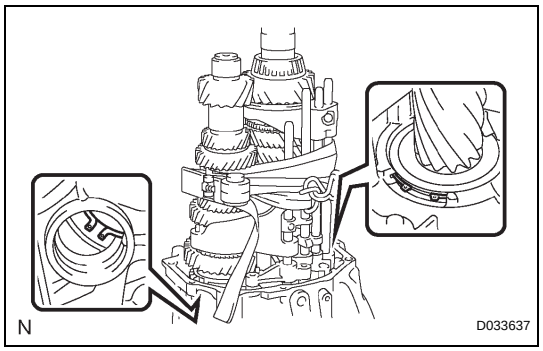

(d) Expand the 2 snap rings, and lift up the output shaft, input shaft, counter gear and control assembly.

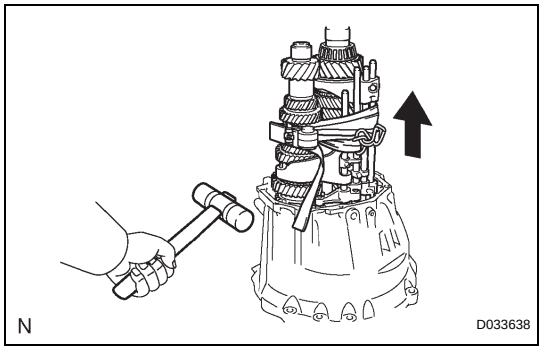

(e) Remove the output shaft, input shaft, counter gear shaft and control assembly while gently tapping the clutch housing with a plastic hammer.

NOTICE:

Take care not to subject the output shaft, input shaft, counter gear shaft and control assembly to any impact. This could cause the ball and spring to come out.

(f) Separate the output shaft, input shaft, counter gear shaft and control assembly.

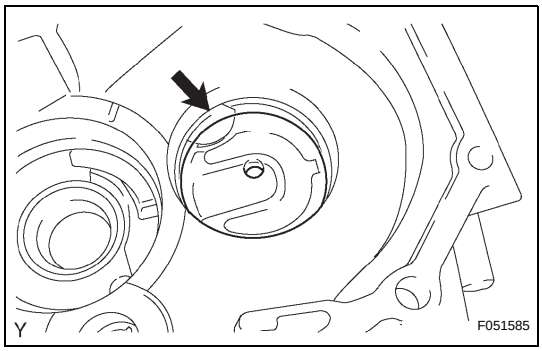

25. REMOVE NO. 1 OIL RECEIVER PIPE

(a) Remove the oil receiver pipe No. 1 from the transmission front case.

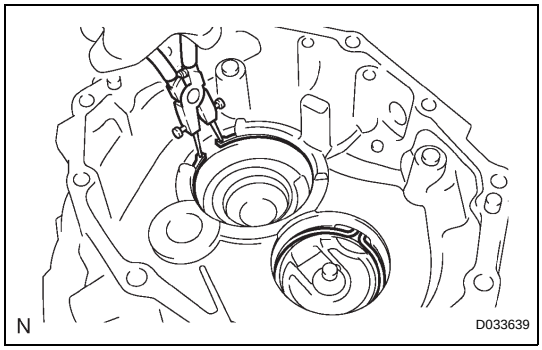

26. REMOVE FRONT BEARING SHAFT SNAP RING

(a) Using a snap ring plier, remove the 2 snap rings.

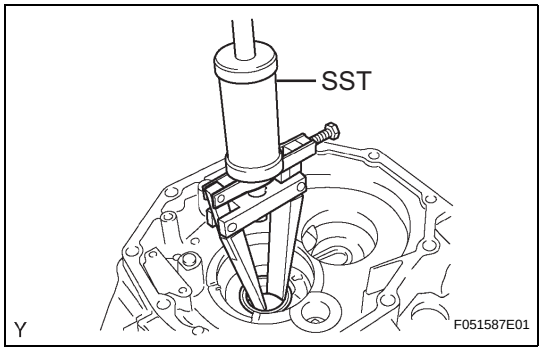

27. REMOVE TRANSMISSION CASE OIL SEAL

(a) Using SST, remove the transmission case oil seal from the transmission front case.
SST 09308-00010

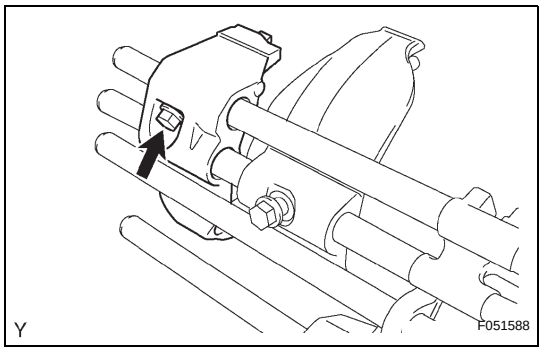

28. REMOVE NO. 3 GEAR SHIFT FORK

(a) Remove the bolt, then remove the gear shift fork No. 3.

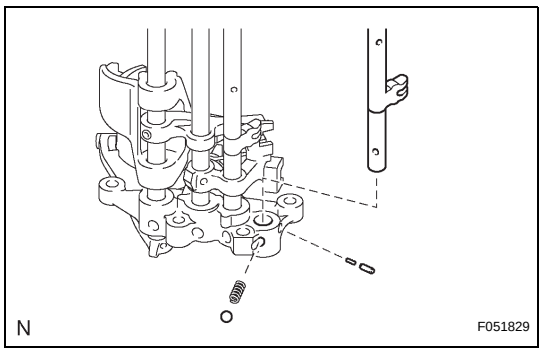

29. REMOVE NO. 3 GEAR SHIFT FORK SHAFT

(a) Remove the shift fork shaft No. 3, boll, spring, interlock pin No. 2 and interlock pin No. 3.

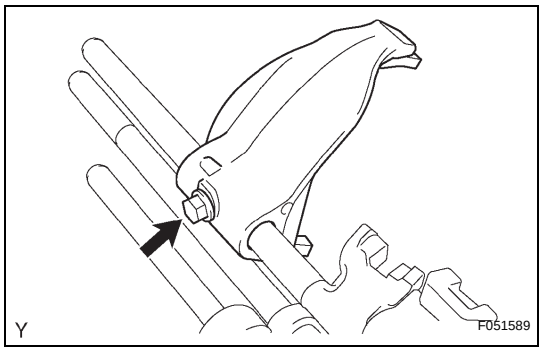

30. REMOVE NO. 2 GEAR SHIFT FORK

(a) Remove the bolt, then remove the gear shift fork No. 2.

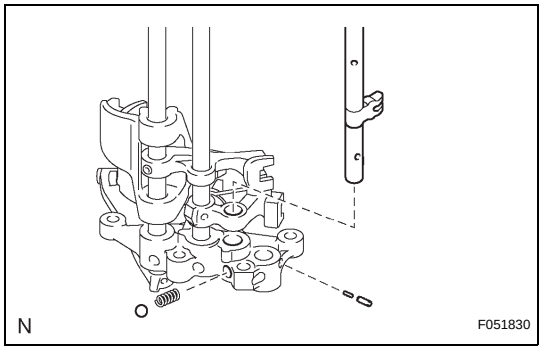

31. REMOVE NO. 2 GEAR SHIFT FORK SHAFT

(a) Remove the shift fork shaft No. 2, ball, spring, interlock pin No. 2 and interlock pin No. 3.

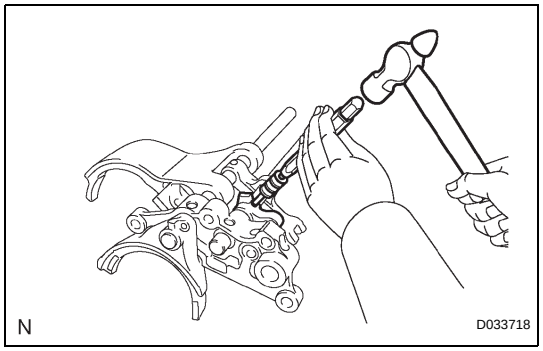

32. REMOVE NO. 1 GEAR SHIFT HEAD

(a) Using a pin punch (5 mm (0.20 in.)) and hammer, tap out the slotted pin.

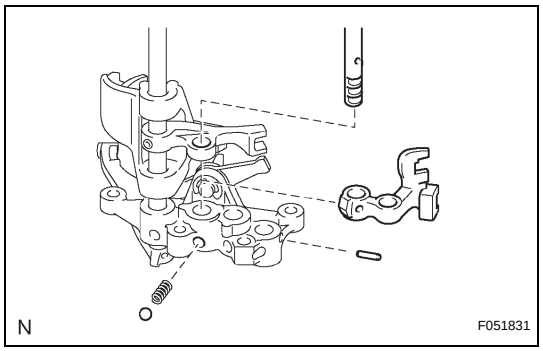

33. REMOVE NO. 1 GEAR SHIFT FORK SHAFT

(a) Remove the shift fork shaft No. 1, ball, spring, shift head No. 1 and interlock pin No. 1.

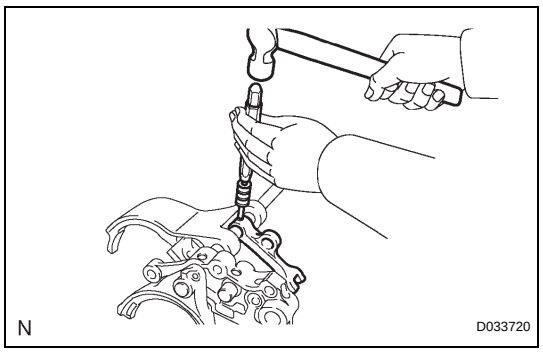

34. REMOVE NO. 1 GEAR SHIFT FORK

(a) Using a pin punch (5 mm (0.20 in.)) and hammer, tap out the slotted pin.

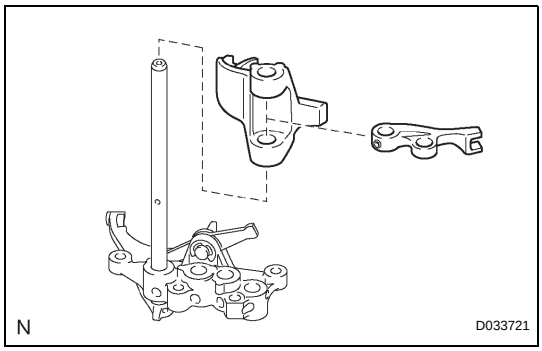

(b) Remove the shift head No. 2 and shift fork No. 1.

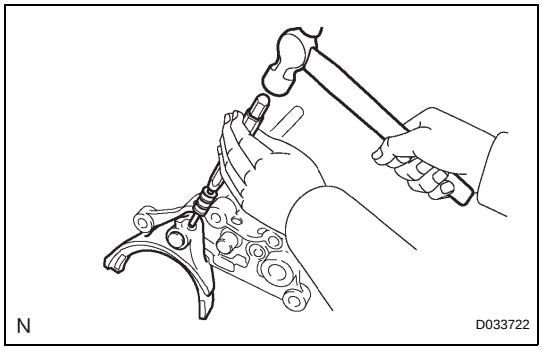

35. REMOVE NO. 4 GEAR SHIFT FORK

(a) Using a pin punch (5 mm (0.20 in.)) and hammer, tap out the slotted pin.

(b) Remove the shift fork No. 4.

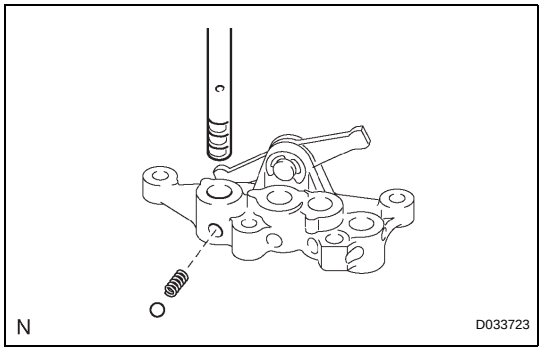

36. REMOVE NO. 4 GEAR SHIFT FORK SHAFT

(a) Remove the shift fork shaft No. 4, ball and spring.

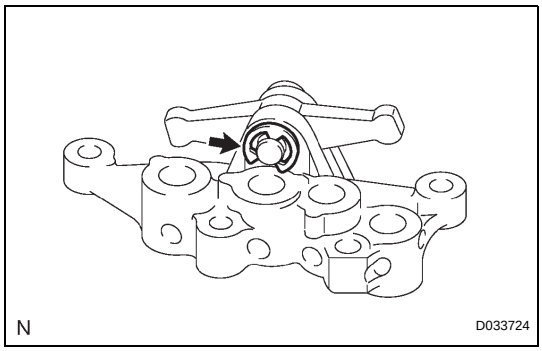

37. REMOVE 1ST AND REVERSE SHIFT ARM

(a) Using a screwdriver, remove the E-ring.

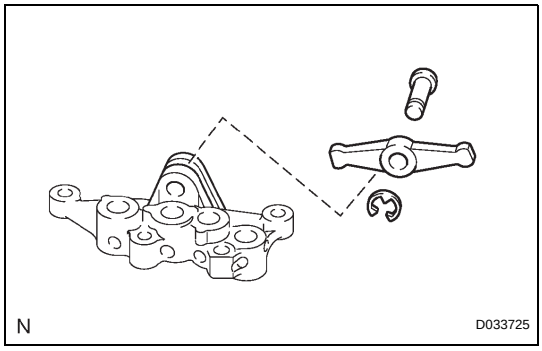

(b) Remove the shift arm pivot and shift arm.

INPUT SHAFT

COMPONENTS

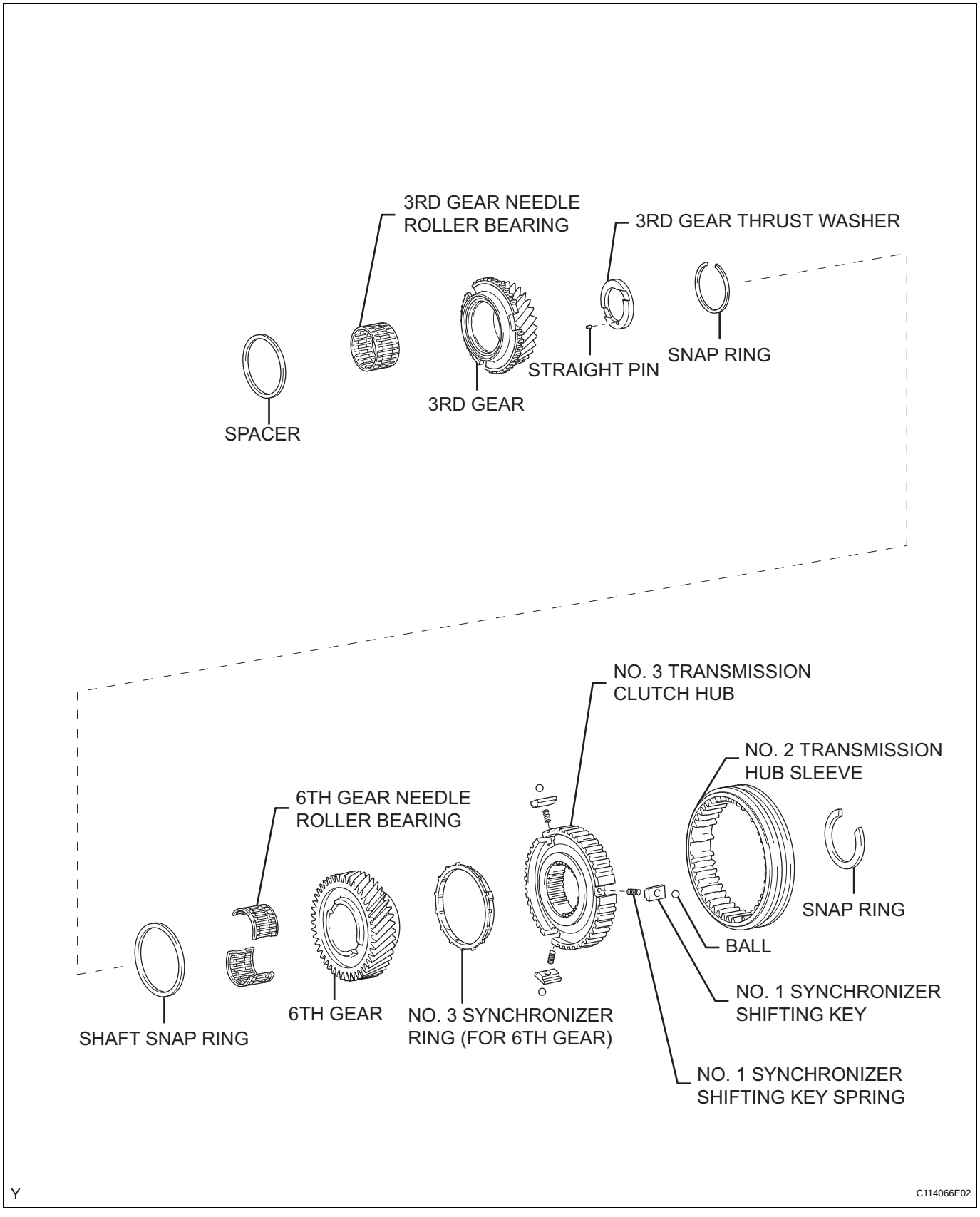

MT

MT

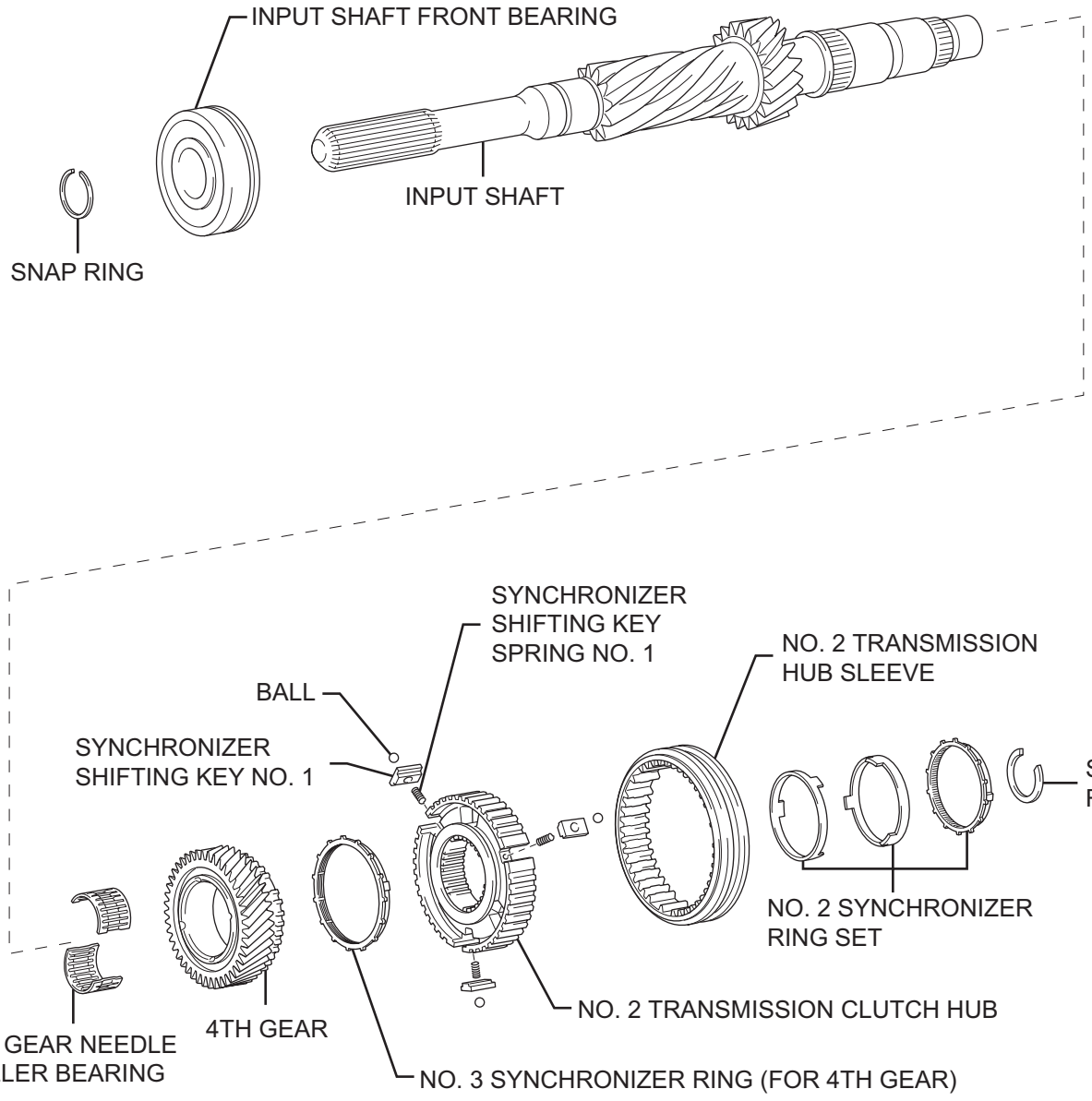

Y

C114065E03

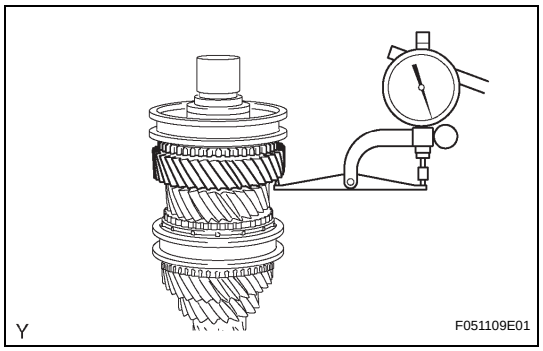

DISASSEMBLY

1. INSPECT 6TH GEAR THRUST CLEARANCE

(a) Using a dial indicator, measure the 6th gear thrust clearance.

Standard clearance:

0.20 to 0.49 mm (0.0079 to 0.0193 in.)

If the clearance is outside the specification, replace the synchronizer ring No. 3.

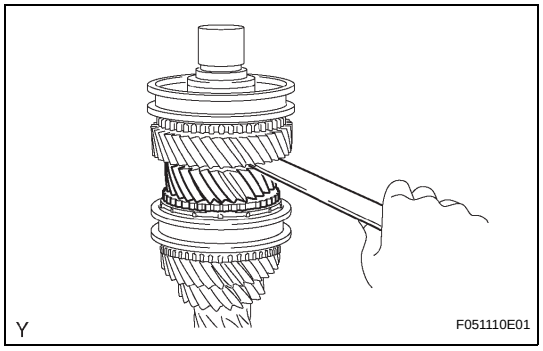

2. INSPECT 3RD GEAR THRUST CLEARANCE

(a) Using a feeler gauge, measure the 3rd gear thrust clearance.

Standard clearance:

0.09 to 0.52 mm (0.0035 to 0.0205 in.)

If the clearance is outside the specification, replace the synchronizer ring set No. 2.

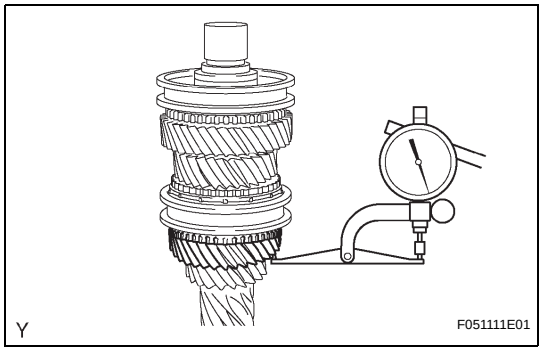

3. INSPECT 4TH GEAR THRUST CLEARANCE

(a) Using a dial indicator, measure the 4th gear thrust clearance.

Standard clearance:

0.12 to 0.38 mm (0.0047 to 0.0150 in.)

If the clearance is outside the specification, replace the synchronizer ring No. 3.

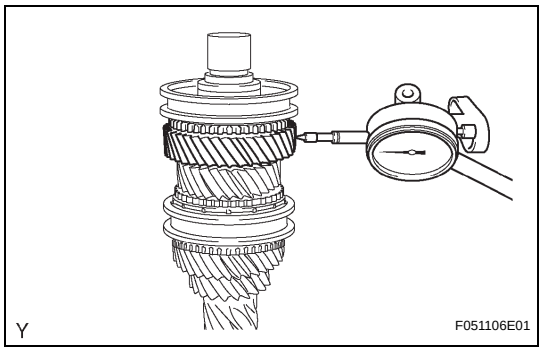

4. INSPECT 6TH GEAR RADIAL CLEARANCE

(a) Using a dial indicator, measure the 6th gear radial clearance.

Standard clearance:

0.015 to 0.065 mm (0.0006 to 0.0026 in.)

If the clearance is outside the specification, replace the defective gear, needle roller bearing or shaft.

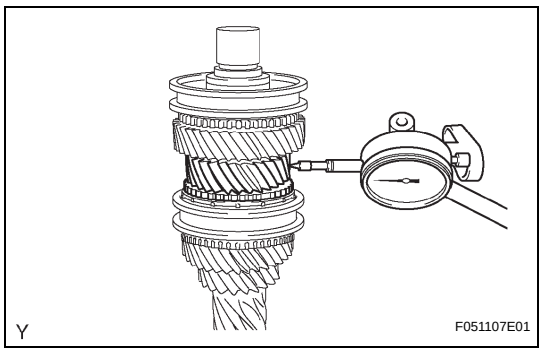

5. INSPECT 3RD GEAR RADIAL CLEARANCE

(a) Using a dial indicator, measure the 3rd gear radial clearance.

Standard clearance:

0.015 to 0.067 mm (0.0006 to 0.0026 in.)

If the clearance is outside the specification, replace the defective gear, needle roller bearing or shaft.

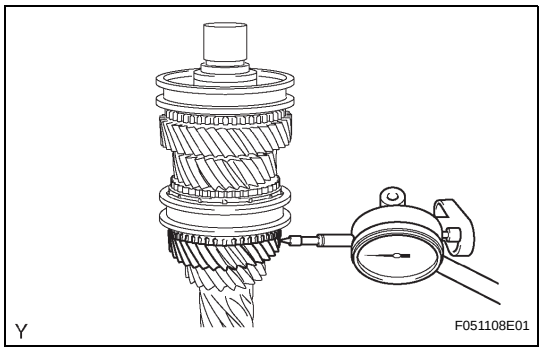

6. INSPECT 4TH GEAR RADIAL CLEARANCE

(a) Using a dial indicator, measure the 4th gear radial clearance.

Standard clearance:

0.015 to 0.067 mm (0.0006 to 0.0026 in.)

If the clearance is outside the specification, replace the defective gear, needle roller bearing or shaft.

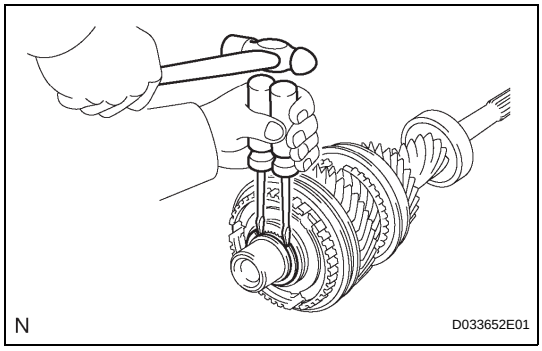

7. REMOVE TRANSMISSION CLUTCH HUB NO.3 SHAFT SNAP RING

(a) Using 2 screwdrivers and a hammer, tap out the snap ring.

HINT:

Use a shop rag to prevent the snap ring from flying off.

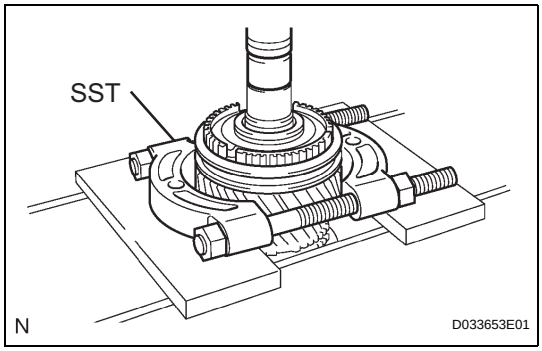

8. REMOVE 6TH GEAR

(a) Using SST and a press, remove the transmission clutch hub No. 3, hub sleeve, synchronizer ring and 6th gear from the input shaft.

SST 09950-00020, 09950-70010 (09951-07200), 09950-60010 (09951-00300)

NOTICE:

- **Do not tighten SST excessively.**
- **Support the input shaft by hand so that it does not fall off.**

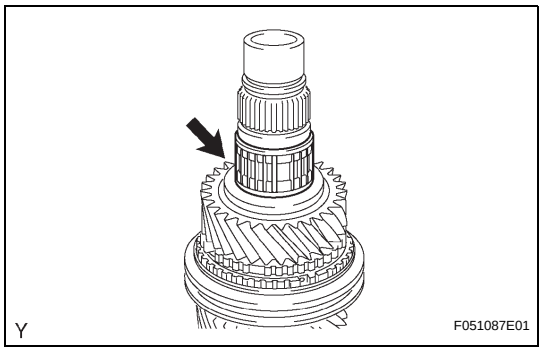

9. REMOVE 6TH GEAR NEEDLE ROLLER BEARING

(a) Remove the 6th gear needle roller bearing from the input shaft.

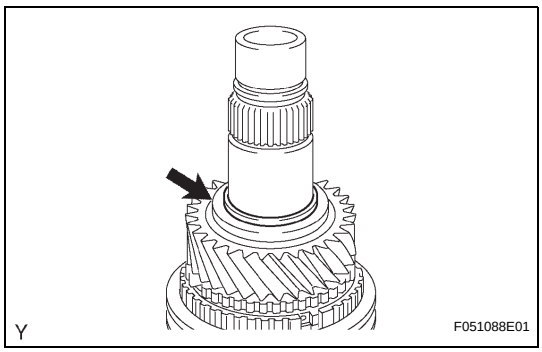

10. REMOVE SHAFT SNAP RING

(a) Remove the shaft snap ring from the input shaft.

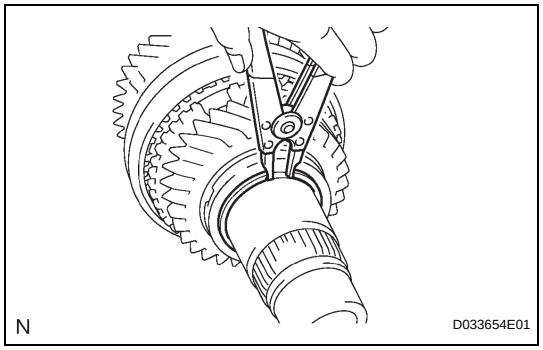

11. REMOVE GEAR THRUST WASHER SHAFT SNAP RING

(a) Using a snap ring expander, remove the snap ring from the input shaft.

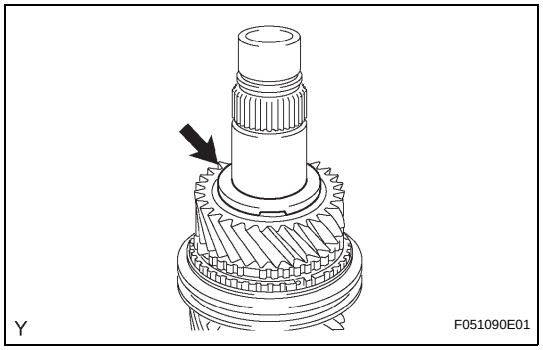

12. REMOVE 3RD GEAR THRUST WASHER

(a) Remove the 3rd gear thrust washer from the input shaft.

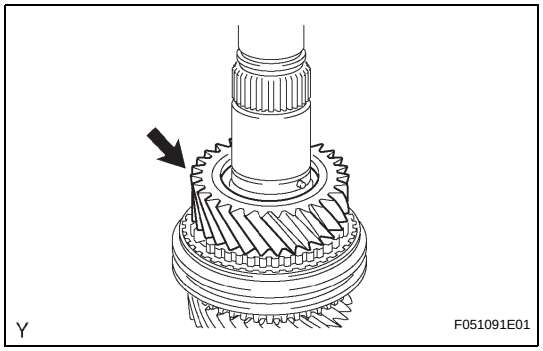

13. REMOVE 3RD GEAR

(a) Remove the 3rd gear from the input shaft.

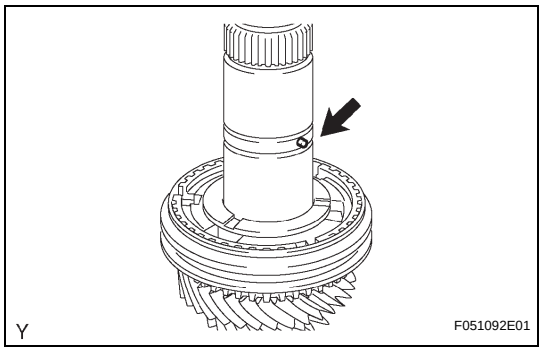

14. REMOVE STRAIGHT PIN

(a) Remove the straight pin from the input shaft.

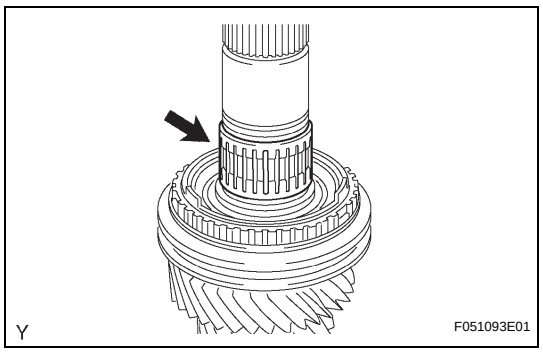

15. REMOVE 3RD GEAR NEEDLE ROLLER BEARING

(a) Remove the 3rd gear needle roller bearing from the input shaft.

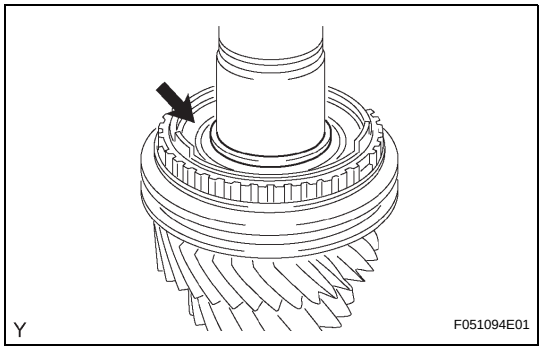

16. REMOVE SPACER

(a) Remove the spacer from the input shaft.

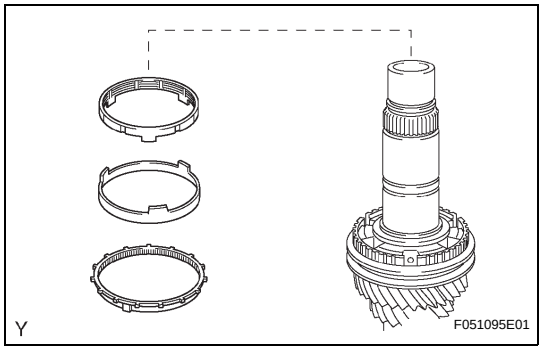

17. REMOVE NO. 2 SYNCHRONIZER RING SET

(a) Remove the synchronizer ring set No. 2 from the input shaft.

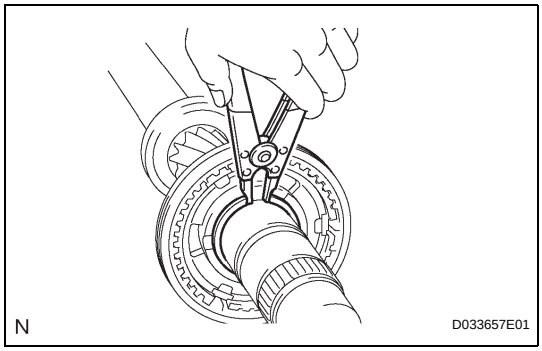

18. REMOVE CLUTCH HUB NO.2 SETTING SHAFT SNAP RING

(a) Using a snap ring expander, remove the snap ring from the input shaft.

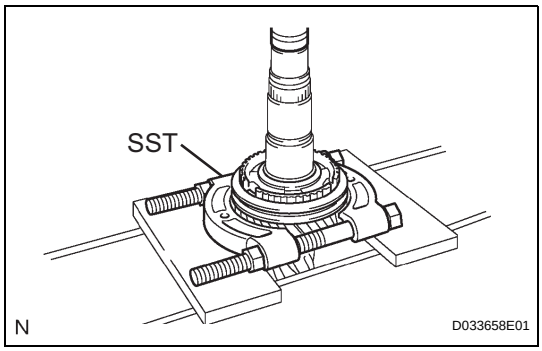

19. REMOVE 4TH GEAR

(a) Using SST and a press, remove the transmission clutch hub No. 2, hub sleeve, synchronizer ring and 4th gear from the input shaft.
SST 09950-00020
NOTICE:
Support the input shaft by hand so that it does not fall off.

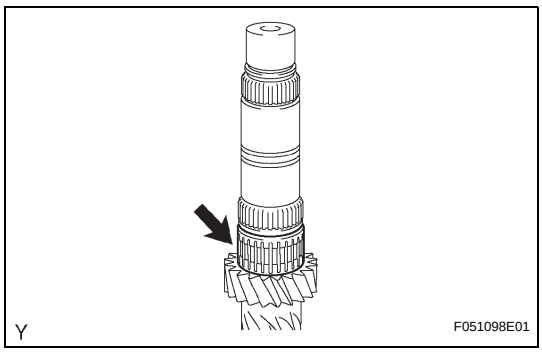

20. REMOVE 4TH GEAR NEEDLE ROLLER BEARING

(a) Remove the 4th gear needle roller bearing from the input shaft.

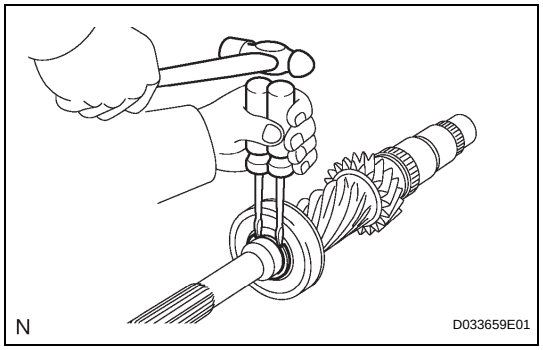

21. REMOVE INPUT SHAFT FRONT BEARING SNAP RING

(a) Using 2 screwdrivers and a hammer, tap out the snap ring.
HINT:
Use a shop rag to prevent the snap ring from flying off.

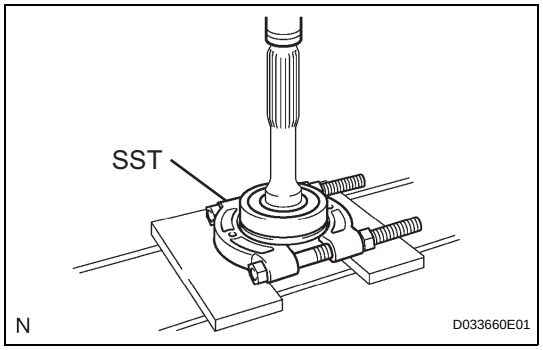

22. REMOVE INPUT SHAFT FRONT BEARING

(a) Using SST and a press, remove the input shaft front bearing from the input shaft.
SST 09950-00020
NOTICE:
Support the input shaft by hand so that it does not fall off.

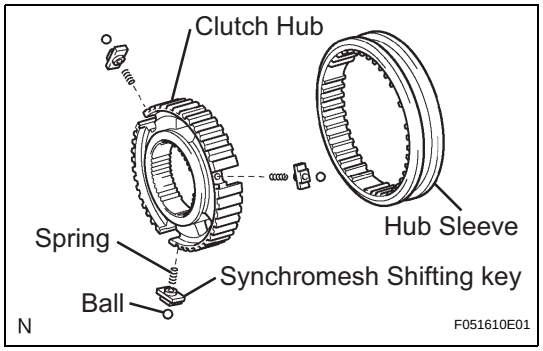

23. REMOVE NO. 2 TRANSMISSION CLUTCH HUB

(a) Remove the clutch hub, 3 synchromesh shifting keys, 3 balls and 3 springs from the hub sleeve.
HINT:
Use a shop rag to prevent the ball and spring from flying off.

24. REMOVE NO. 3 TRANSMISSION CLUTCH HUB

(a) Perform the same procedures as for clutch hub No. 2.

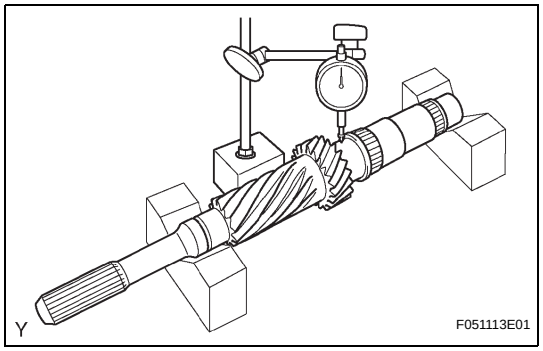

INSPECTION

1. INSPECT INPUT SHAFT

(a) Using a dial indicator and 2 V-blocks, measure the shaft runout.
Maximum runout:
0.03 mm (0.0012 in.)
If the runout exceeds the maximum, replace the input shaft.

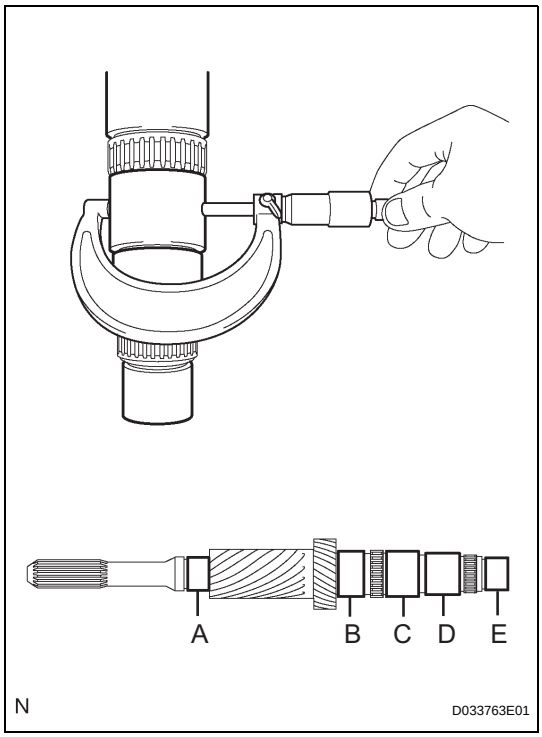

(b) Using a micrometer, measure the outer diameter of the input shaft journal surface.

Standard

Part	Outer diameter mm (in.)
A	34.002 to 34.015 (1.3387 to 1.3392)
B	44.985 to 45.000 (1.7711 to 1.7717)
C	44.985 to 45.000 (1.7711 to 1.7717)
D	41.985 to 42.000 (1.6530 to 1.6535)
E	32.967 to 32.980 (1.2979 to 1.2984)

Minimum

Part	Outer diameter mm (in.)
A	34.002 (1.3387)
B	44.985 (1.7711)
C	44.985 (1.7711)
D	41.985 (1.6530)
E	32.967 (1.2979)

If the outer diameter is less than the minimum, replace the input shaft.

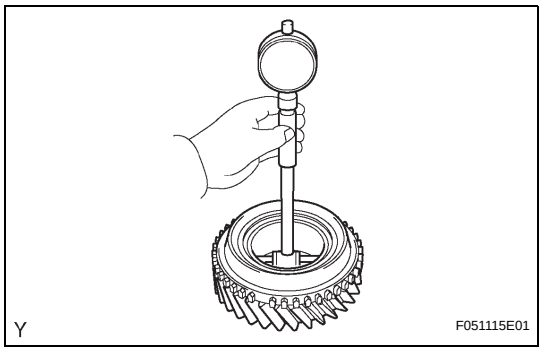

2. INSPECT 6TH GEAR

(a) Using a cylinder gauge, measure the inside diameter of the 6th gear.

Standard inside diameter:
51.015 to 51.040 mm (2.0085 to 2.0095 in.)
Maximum inside diameter:
51.040 mm (2.0095 in.)

If the inside diameter exceeds the maximum, replace the 4th gear.

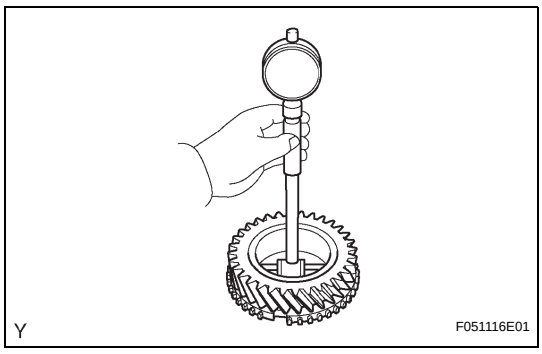

3. INSPECT 3RD GEAR

(a) Using a cylinder gauge, measure the inside diameter of the 3rd gear.

Standard inside diameter:
51.015 to 51.040 mm (2.0085 to 2.0095 in.)
Maximum inside diameter:
51.040 mm (2.0095 in.)

If the inside diameter exceeds the maximum, replace the 3rd gear.

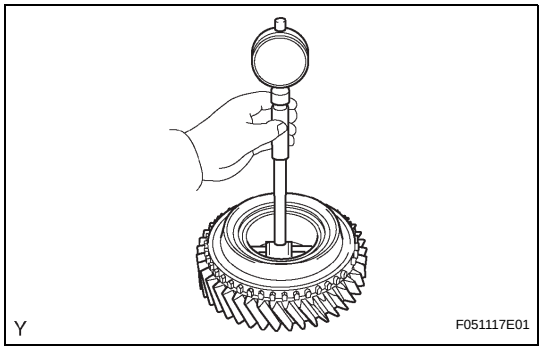

4. INSPECT 4TH GEAR

(a) Using a cylinder gauge, measure the inside diameter of the 4th gear.

Standard inside diameter:
51.015 to 51.040 mm (2.0085 to 2.0095 in.)
Maximum inside diameter:
51.040 mm (2.0095 in.)

If the inside diameter exceeds the maximum, replace the 4th gear.

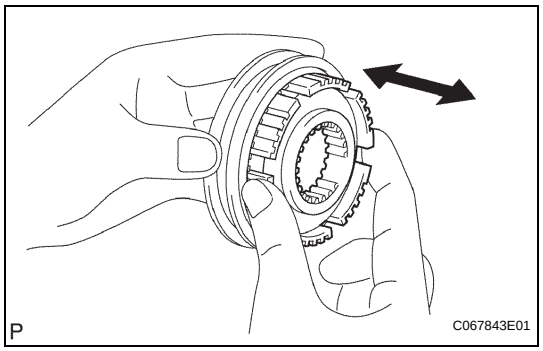

5. INSPECT NO. 2 TRANSMISSION HUB SLEEVE

(a) Check the sliding condition between the transmission hub No. 2 and transmission hub sleeve No. 2.

(b) Check that the spline gear teeth of the transmission hub sleeve No. 2 are not worn.

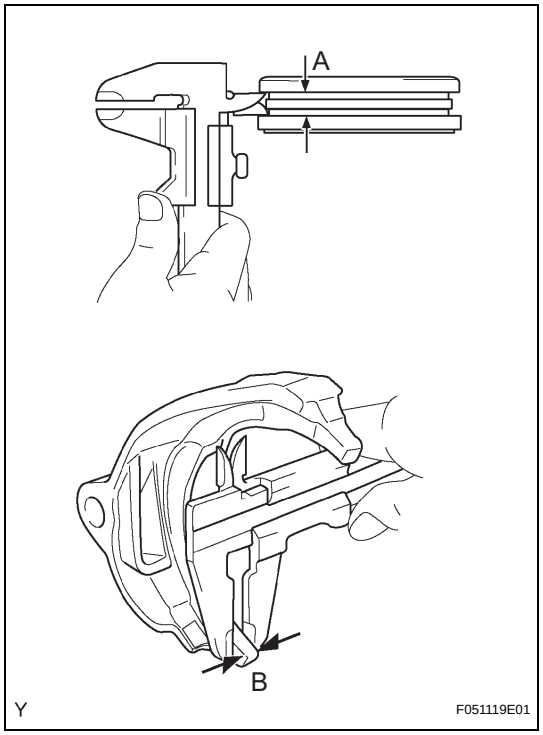

(c) Using vernier calipers, measure the width of the transmission hub sleeve No. 2 groove (A) and the thickness of the claw part on the gear shift forks No. 2 or No. 3 (B), and calculate the clearance.

Standard clearance:

(A - B);

0.26 to 0.84 mm (0.0102 to 0.0331 in.)

If the clearance is outside the specification, replace the transmission hub sleeve No. 2 and gear shift fork.

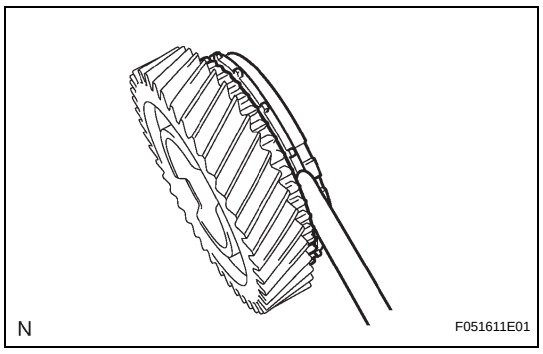

6. INSPECT NO. 3 SYNCHRONIZER RING (FOR 6TH GEAR)

(a) Using a feeler gauge, measure the clearance between the synchronizer ring and the 6th gear.

Standard clearance:

0.70 to 1.50 mm (0.0276 to 0.0591 in.)

Minimum clearance:

0.70 mm (0.0276 in.)

If the clearance is less than the minimum, replace the synchronizer ring.

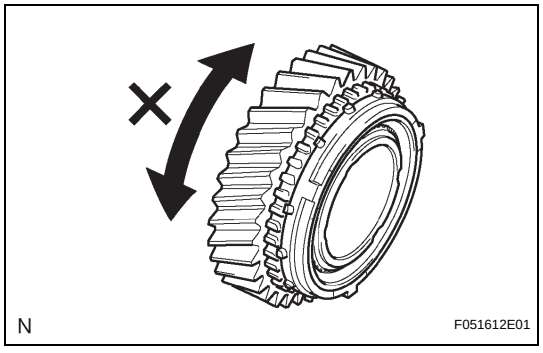

(b) Coat the 6th gear cone with gear oil. Check the braking effect of the synchronizer ring. Turn the synchronizer ring in one direction while pushing it to the 6th gear cone. Check that the ring locks.

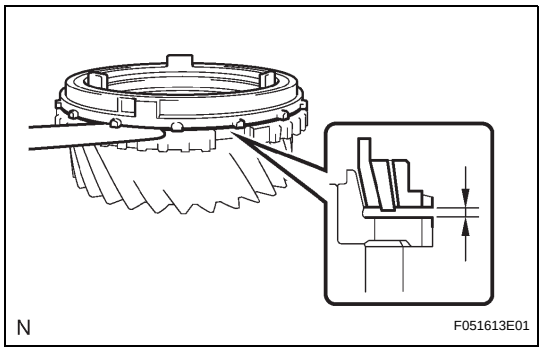

7. INSPECT NO. 2 SYNCHRONIZER RING SET

(a) Using a feeler gauge, measure the clearance between the synchronizer ring and the 3rd gear.

Standard clearance:
Inner:
1.20 to 2.20 mm (0.0472 to 0.0866 in.)
Middle:
0.60 to 1.80 mm (0.0236 to 0.0709 in.)
Outer:
0.80 to 1.80 mm (0.0315 to 0.0709 in.)
Minimum clearance:
Inner:
1.20 mm (0.0472 in.)
Middle:
0.60 mm (0.0236 in.)
Outer:
0.80 mm (0.0315 in.)

If the clearance is less than the minimum, replace the synchronizer ring.

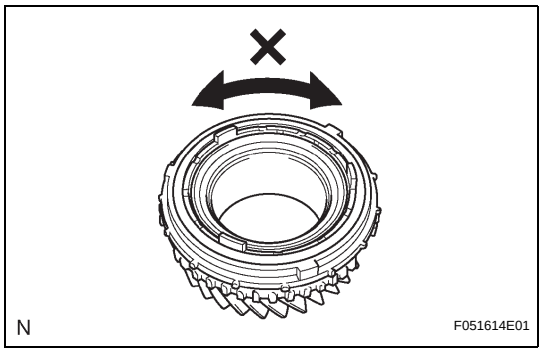

(b) Coat the 3rd gear cone with gear oil. Check the braking effect of the synchronizer ring. Turn the synchronizer ring in one direction while pushing it to the 3rd gear cone. Check that the ring locks.

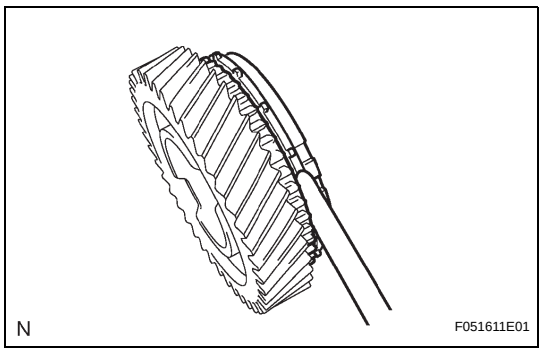

8. INSPECT NO. 3 SYNCHRONIZER RING (FOR 4TH GEAR)

(a) Using a feeler gauge, measure the clearance between the synchronizer ring and 4th gear.

Standard clearance:
0.70 to 1.50 mm (0.0276 to 0.0591 in.)
Minimum clearance:
0.70 mm (0.0276 in.)

If the clearance is less than the minimum, replace the synchronizer ring.

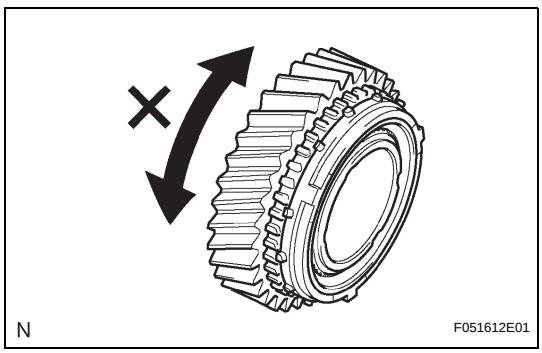

(b) Coat the 4th gear cone with gear oil. Check the braking effect of the synchronizer ring. Turn the synchronizer ring in one direction while pushing it to the 4th gear cone. Check that the ring locks.

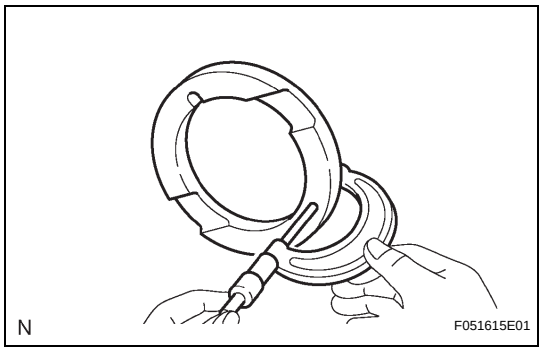

9. INSPECT 3RD GEAR THRUST WASHER

(a) Using a micrometer, measure the thrust washer thickness.

Standard thickness:
7.12 to 7.18 mm (0.2803 to 0.2827 in.)
Minimum thickness:
7.12 mm (0.2803 in.)

If the thickness is less than the minimum, replace the thrust washer.

REASSEMBLY

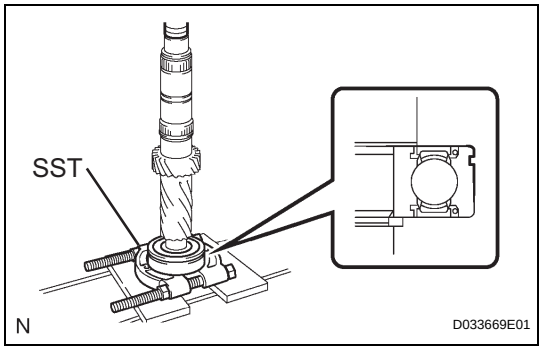

1. INSTALL INPUT SHAFT FRONT BEARING

(a) Using SST and a press, install the input shaft front bearing onto the input shaft.

SST 09950-00020

HINT:

Make sure that the groove of the bearing faces the correct direction as shown in the illustration.

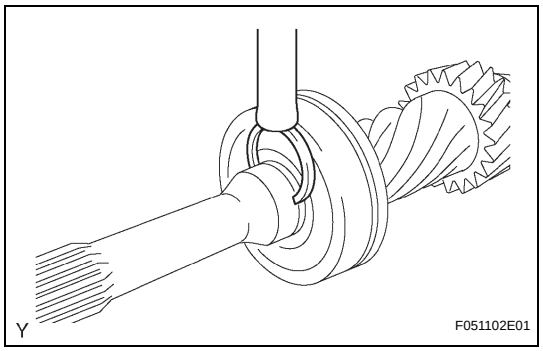

2. INSTALL INPUT SHAFT FRONT BEARING SNAP RING

(a) Select a snap ring that will allow minimum axial play.

Standard clearance:
0.1 mm (0.004 in.) or less
Snap ring thickness

Part No.	Thickness: mm (in.)	Mark
90520-31026	2.65 to 2.70 (0.1043 to 0.1063)	A
90520-31027	2.70 to 2.75 (0.1063 to 0.1083)	B
90520-31028	2.75 to 2.80 (0.1083 to 0.1102)	C
90520-31029	2.80 to 2.85 (0.1102 to 0.1122)	D
90520-31030	2.85 to 2.90 (0.1122 to 0.1142)	E
90520-31031	2.90 to 2.95 (0.1142 to 0.1161)	F

(b) Using a brass bar and hammer, install the snap ring onto the input shaft.

MT

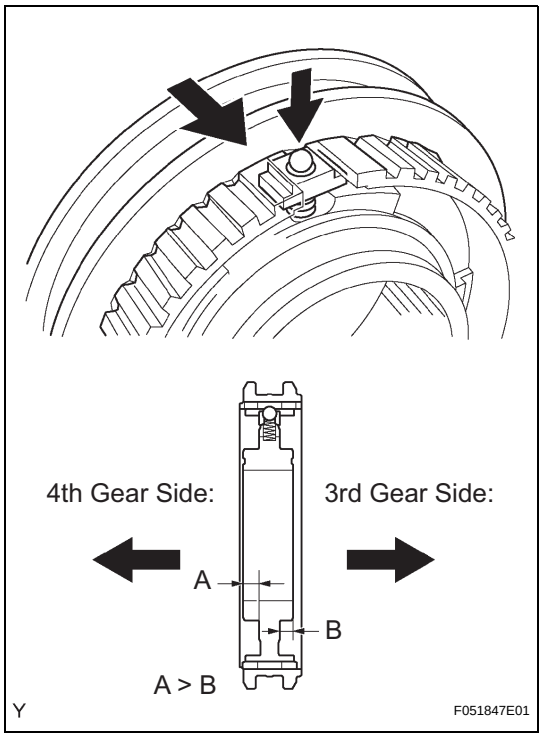

3. INSTALL NO. 2 TRANSMISSION CLUTCH HUB

(a) Apply a light coat of gear oil to the sleeve and hub.
(b) Install the clutch hub sleeve onto the clutch hub No. 2.
(c) Install the 3 shifting keys onto the clutch hub.
(d) Install the 3 shifting key springs onto the clutch hub.
(e) Place the ball in the hole of the shifting key, and install the hub sleeve while pushing in the ball.

NOTICE:

Take care to prevent the ball from flying off.

HINT:

Make sure that the clutch hub No. 2 faces the correct direction as shown in the illustration.

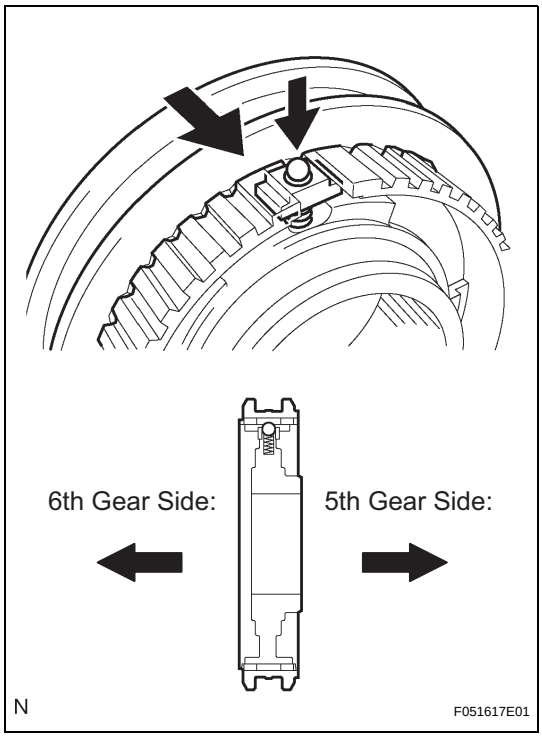

4. INSTALL NO. 3 TRANSMISSION CLUTCH HUB

(a) Apply a light coat of gear oil to the sleeve and hub.
(b) Install the clutch hub sleeve onto the clutch hub No. 3.
(c) Install the 3 shifting keys onto the clutch hub.
(d) Install the 3 shifting key springs onto the clutch hub.
(e) Place the ball in the hole of the shifting key, and install the hub sleeve while pushing in the ball.

NOTICE:

Take care to prevent the ball from flying off.

HINT:

Make sure that the clutch hub No. 3 faces the correct direction as shown in the illustration.

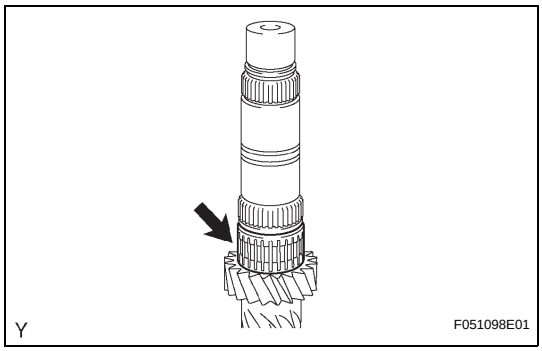

5. INSTALL 4TH GEAR NEEDLE ROLLER BEARING

(a) Coat the 4th gear needle roller bearing with gear oil, then install it onto the input shaft.

6. INSTALL 4TH GEAR

(a) Coat the 4th gear and synchronizer ring No. 3 with gear oil, then install them onto the input shaft.

MT

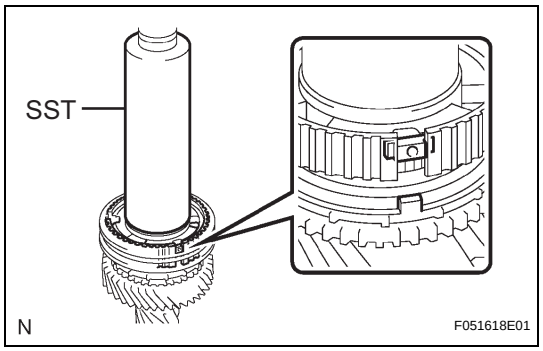

(b) Using SST and a press, install the clutch hub No. 2 onto the input shaft.
SST 09308-14010
HINT:
Align the convex portion of the synchronizer ring with the groove of the clutch hub.

(c) Install the clutch hub and confirm that the gear and synchronizer ring move smoothly.

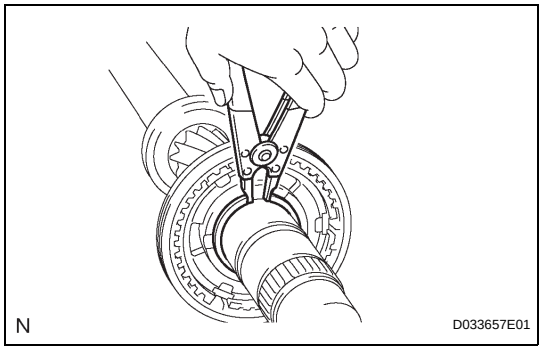

7. INSTALL CLUTCH HUB NO.2 SETTING SHAFT SNAP RING

(a) Select a snap ring that will allow minimum axial play.
Standard clearance:
0.1 mm (0.004 in.) or less
Snap ring thickness

Part No.	Thickness: mm (in.)	Mark
90520-42012	1.77 to 1.82 (0.0697 to 0.0717)	A
90520-42013	1.82 to 1.87 (0.0717 to 0.0736)	B
90520-42014	1.87 to 1.92 (0.0736 to 0.0756)	C
90520-42015	1.92 to 1.97 (0.0756 to 0.0776)	D
90520-42016	1.97 to 2.02 (0.0776 to 0.0795)	E
90520-42017	2.02 to 2.07 (0.0795 to 0.0815)	F
90520-42018	2.07 to 2.12 (0.0815 to 0.0835)	G

(b) Using a snap ring expander, install the snap ring onto the input shaft.

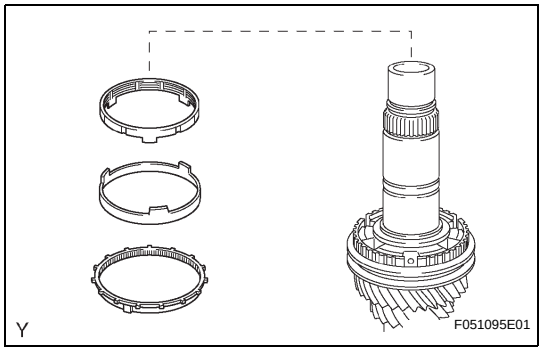

8. INSTALL NO. 2 SYNCHRONIZER RING SET

(a) Coat the synchronizer ring set No. 2 with gear oil, then install it onto the input shaft.

MT

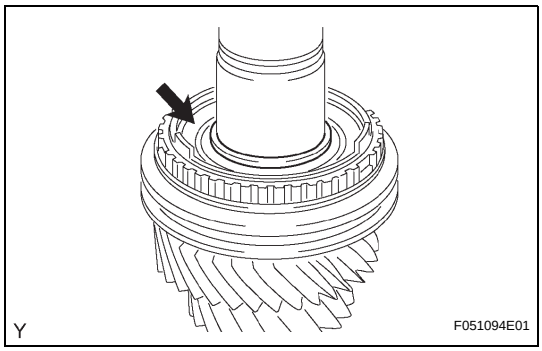

9. INSTALL SPACER

(a) Coat the spacer with gear oil, and install it onto the input shaft.

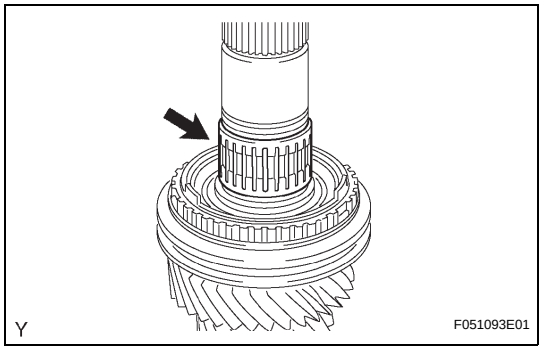

10. INSTALL 3RD GEAR NEEDLE ROLLER BEARING

(a) Coat the 3rd gear needle roller bearing with gear oil, and install it onto the input shaft.

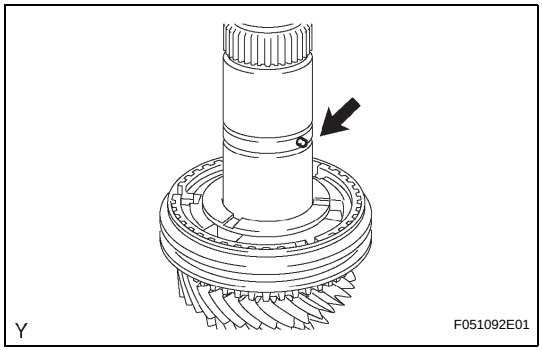

11. INSTALL STRAIGHT PIN

(a) Install the straight pin onto the input shaft.

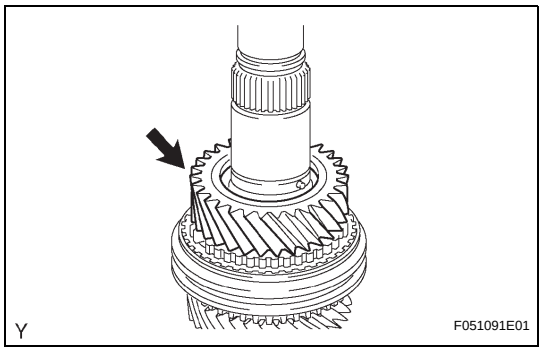

12. INSTALL 3RD GEAR

(a) Coat the 3rd gear with gear oil, and install it onto the input shaft.

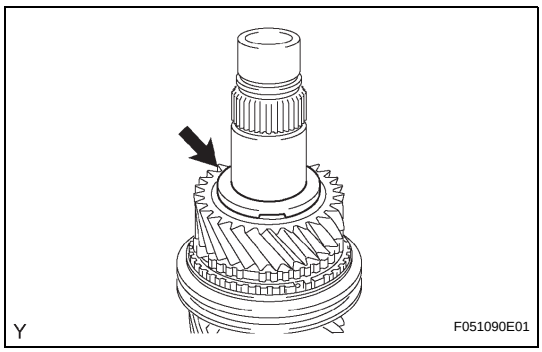

13. INSTALL 3RD GEAR THRUST WASHER

(a) Coat the 3rd gear thrust washer with gear oil, and install it onto the input shaft.
HINT:
Align the straight pin with the groove of the gear thrust washer and install it.

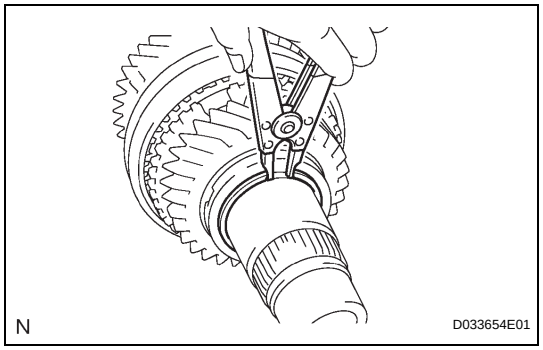

14. INSTALL GEAR THRUST WASHER SHAFT SNAP RING

(a) Select a snap ring that will allow minimum axial play.

Standard clearance:
0.1 mm (0.004 in.) or less
Snap ring thickness

Part No.	Thickness: mm (in.)	Mark
90520-39026	2.07 to 2.12 (0.0815 to 0.0835)	A
90520-39027	2.12 to 2.17 (0.0835 to 0.0854)	B
90520-39028	2.17 to 2.22 (0.0854 to 0.0874)	C
90520-39029	2.22 to 2.27 (0.0874 to 0.0894)	D
90520-39030	2.27 to 2.32 (0.0894 to 0.0913)	E
90520-39031	2.32 to 2.37 (0.0913 to 0.0933)	F

(b) Using a snap ring expander, install the snap ring onto the input shaft.

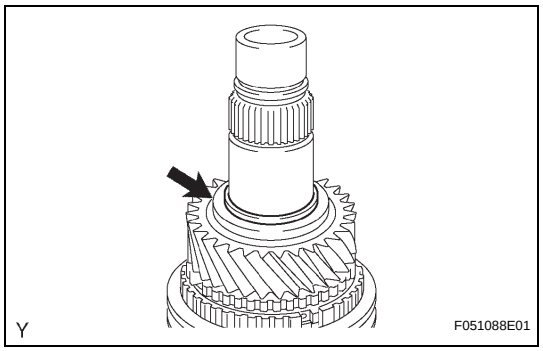

15. INSTALL SHAFT SNAP RING

(a) Coat the shaft snap ring with gear oil, and install it onto the input shaft.

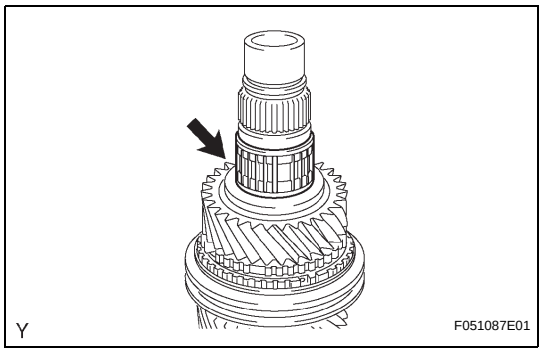

16. INSTALL 6TH GEAR NEEDLE ROLLER BEARING

(a) Coat the 6th gear needle roller bearing with gear oil, and install it onto the input shaft.

MT

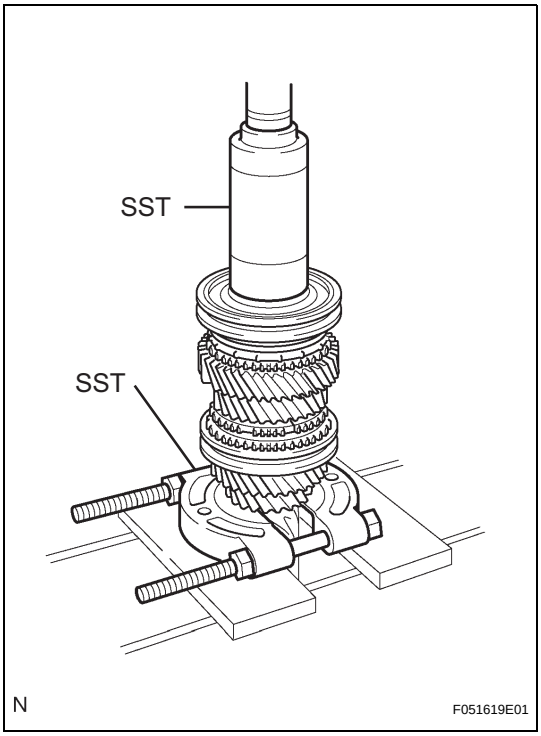

17. INSTALL 6TH GEAR

(a) Install the 6th gear onto the input shaft.
(b) Install the synchronizer ring onto the input shaft.
(c) Using SST and a press, install the clutch hub onto the input shaft.
SST 09309-37010, 09950-00020
(d) Install the clutch hub and confirm that the gear and synchronizer ring move smoothly.

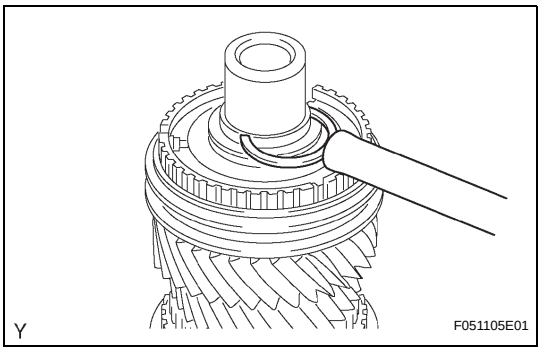

18. INSTALL TRANSMISSION CLUTCH HUB NO.3 SHAFT SNAP RING

(a) Select a snap ring that will allow minimum axial play.
Standard clearance:
0.1 mm (0.004 in.) or less
Snap ring thickness

Part No.	Thickness: mm (in.)	Mark
90520-33022	2.10 to 2.15 (0.0827 to 0.0847)	A
90520-33023	2.15 to 2.20 (0.0847 to 0.0866)	B
90520-33024	2.20 to 2.25 (0.0866 to 0.0886)	C
90520-33025	2.25 to 2.30 (0.0886 to 0.0906)	D
90520-33026	2.30 to 2.35 (0.0906 to 0.0925)	E
90520-33027	2.35 to 2.40 (0.0925 to 0.0945)	F
90520-33028	2.40 to 2.45 (0.0945 to 0.0965)	G

(b) Using a brass bar and a hammer, install the snap ring onto the input shaft.

MT

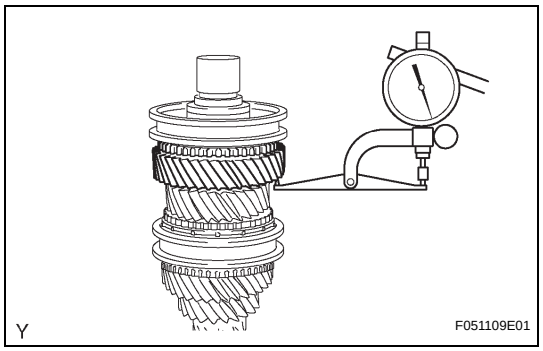

19. INSPECT 6TH GEAR THRUST CLEARANCE

(a) Using a dial indicator, measure the 6th gear thrust clearance.

Standard clearance:

0.20 to 0.49 mm (0.0079 to 0.0193 in.)

If the clearance is outside the specification, replace the synchronizer ring No. 3.

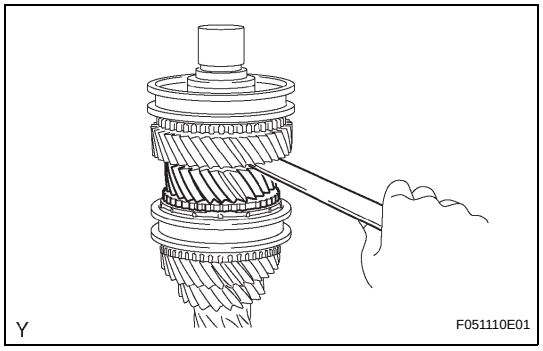

20. INSPECT 3RD GEAR THRUST CLEARANCE

(a) Using a feeler gauge, measure the 3rd gear thrust clearance.

Standard clearance:

0.09 to 0.52 mm (0.0035 to 0.0205 in.)

If the clearance is outside the specification, replace the synchronizer ring set No. 2.

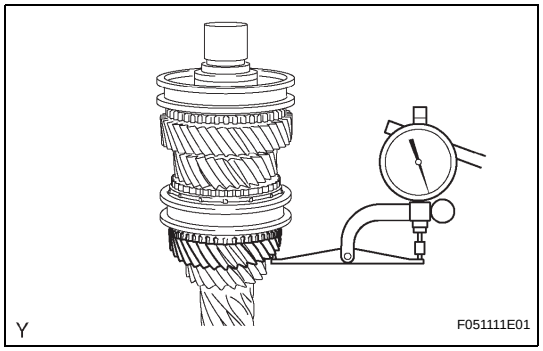

21. INSPECT 4TH GEAR THRUST CLEARANCE

(a) Using a dial indicator, measure the 4th gear thrust clearance.

Standard clearance:

0.12 to 0.38 mm (0.0047 to 0.0150 in.)

If the clearance is outside the specification, replace the synchronizer ring No. 3.

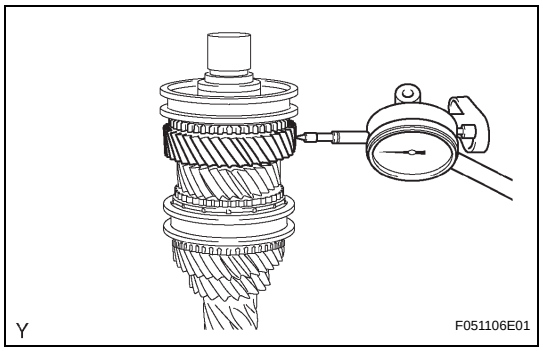

22. INSPECT 6TH GEAR RADIAL CLEARANCE

(a) Using a dial indicator, measure the 6th gear radial clearance.

Standard clearance:

0.015 to 0.065 mm (0.0006 to 0.0026 in.)

If the clearance is outside the specification, replace the defective gear, needle roller bearing or shaft.

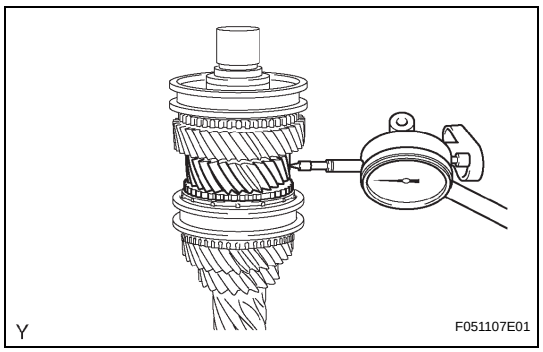

23. INSPECT 3RD GEAR RADIAL CLEARANCE

(a) Using a dial indicator, measure the 3rd gear radial clearance.

Standard clearance:

0.015 to 0.067 mm (0.0006 to 0.0026 in.)

If the clearance is outside the specification, replace the defective gear, needle roller bearing or shaft.

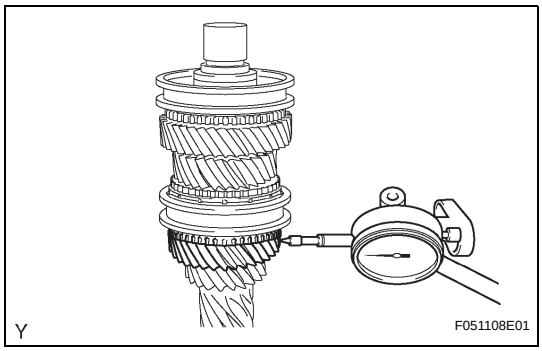

24. INSPECT 4TH GEAR RADIAL CLEARANCE

(a) Using a dial indicator, measure the 4th gear radial clearance.

Standard clearance:

0.015 to 0.067 mm (0.0006 to 0.0026 in.)

If the clearance is outside the specification, replace the defective gear, needle roller bearing or shaft.

OUTPUT SHAFT

COMPONENTS

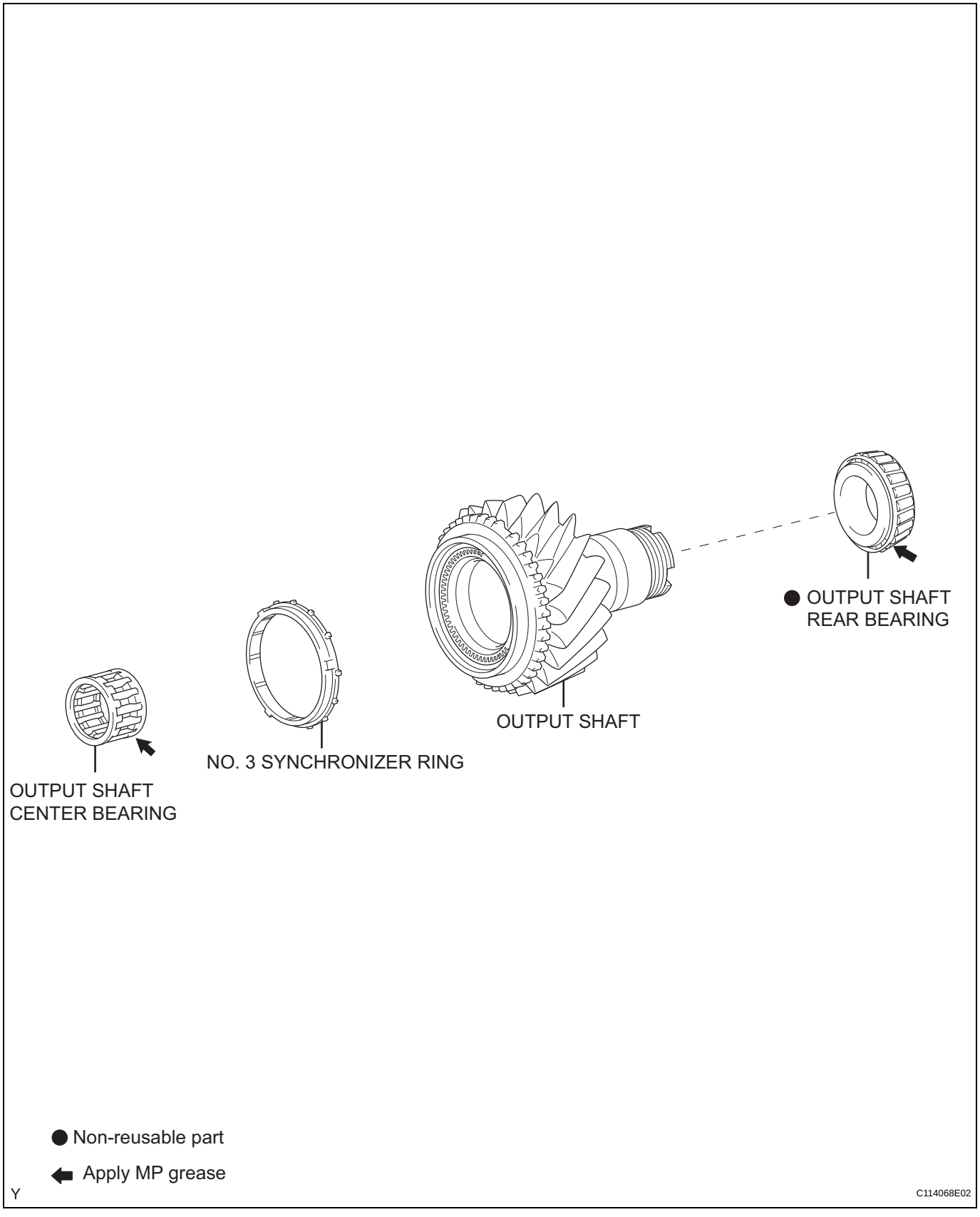

MT

DISASSEMBLY

1. REMOVE NO. 3 SYNCHRONIZER RING

(a) Remove synchronizer ring No. 3 from the output shaft.

2. REMOVE OUTPUT SHAFT CENTER BEARING

(a) Remove the output shaft center bearing from the output shaft.

3. REMOVE OUTPUT SHAFT REAR BEARING

(a) Using SST and a press, remove the output shaft rear bearing from the output shaft.

SST 09950-00020, 09950-70010 (09951-07100), 09950-60010 (09951-00510)

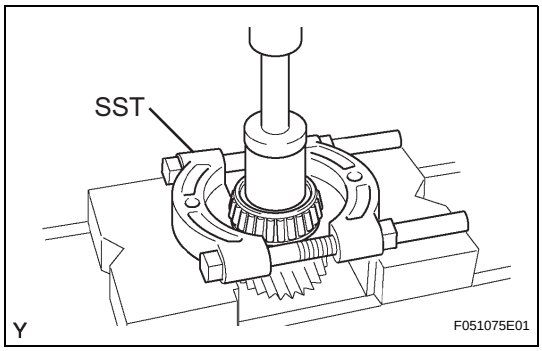

INSPECTION

1. INSPECT OUTPUT SHAFT

(a) Using a cylinder gauge, measure the inside diameter of the output shaft.

Standard inside diameter:
45.009 to 45.025 mm (1.7720 to 1.7726 in.)
Maximum inside diameter:
45.025 mm (1.7726 in.)

If the diameter exceeds the maximum, replace the output shaft.

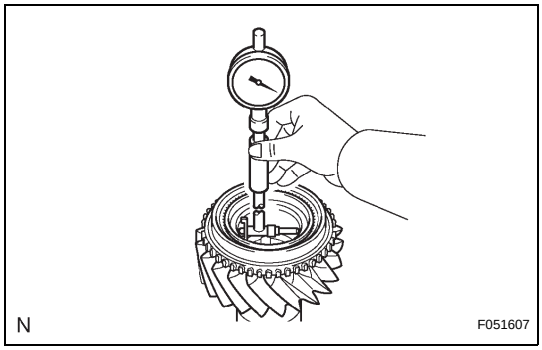

2. INSPECT NO. 3 SYNCHRONIZER RING

(a) Using a feeler gauge, measure the clearance between the synchronizer ring and gear spline.

Standard clearance:
0.70 to 1.50 mm (0.0276 to 0.0591 in.)
Minimum clearance:
0.70 mm (0.0276 in.)

If the clearance is less than the minimum, replace the synchronizer ring.

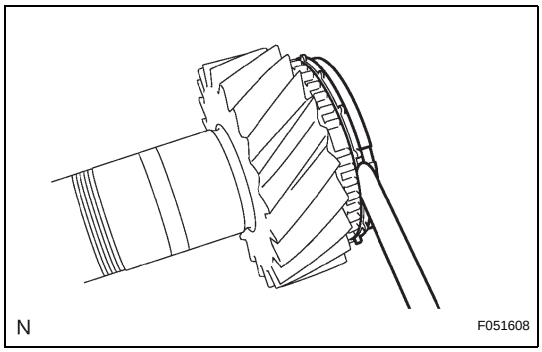

(b) Coat the output shaft and synchronizer ring cone with gear oil. Check the braking effect of the synchronizer ring. Turn the synchronizer ring in one direction while pushing it to the gear cone. Check that the ring locks.

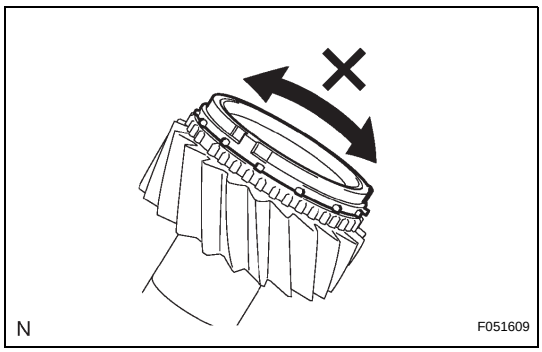

COUNTER GEAR AND REVERSE IDLER GEAR

COMPONENTS

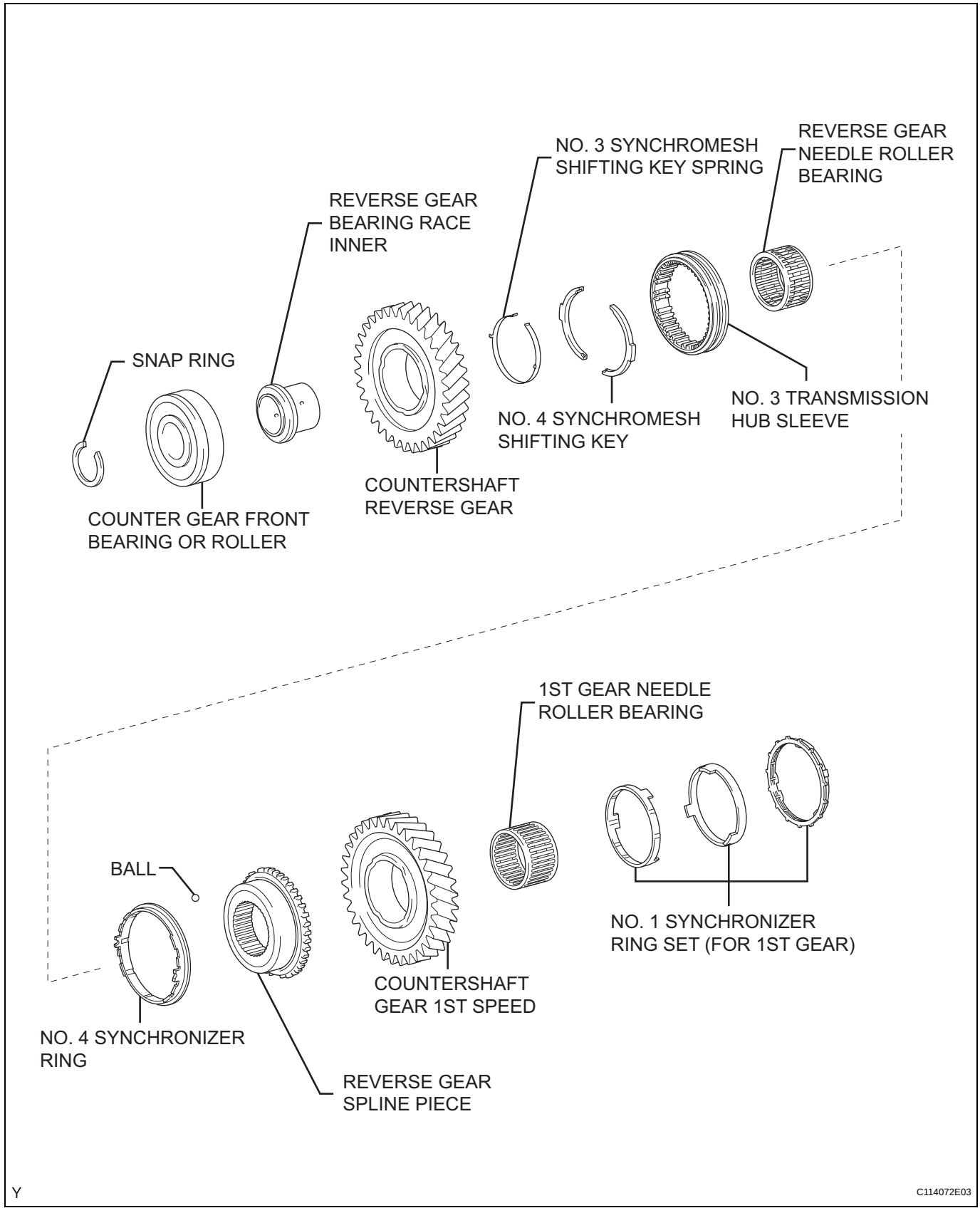

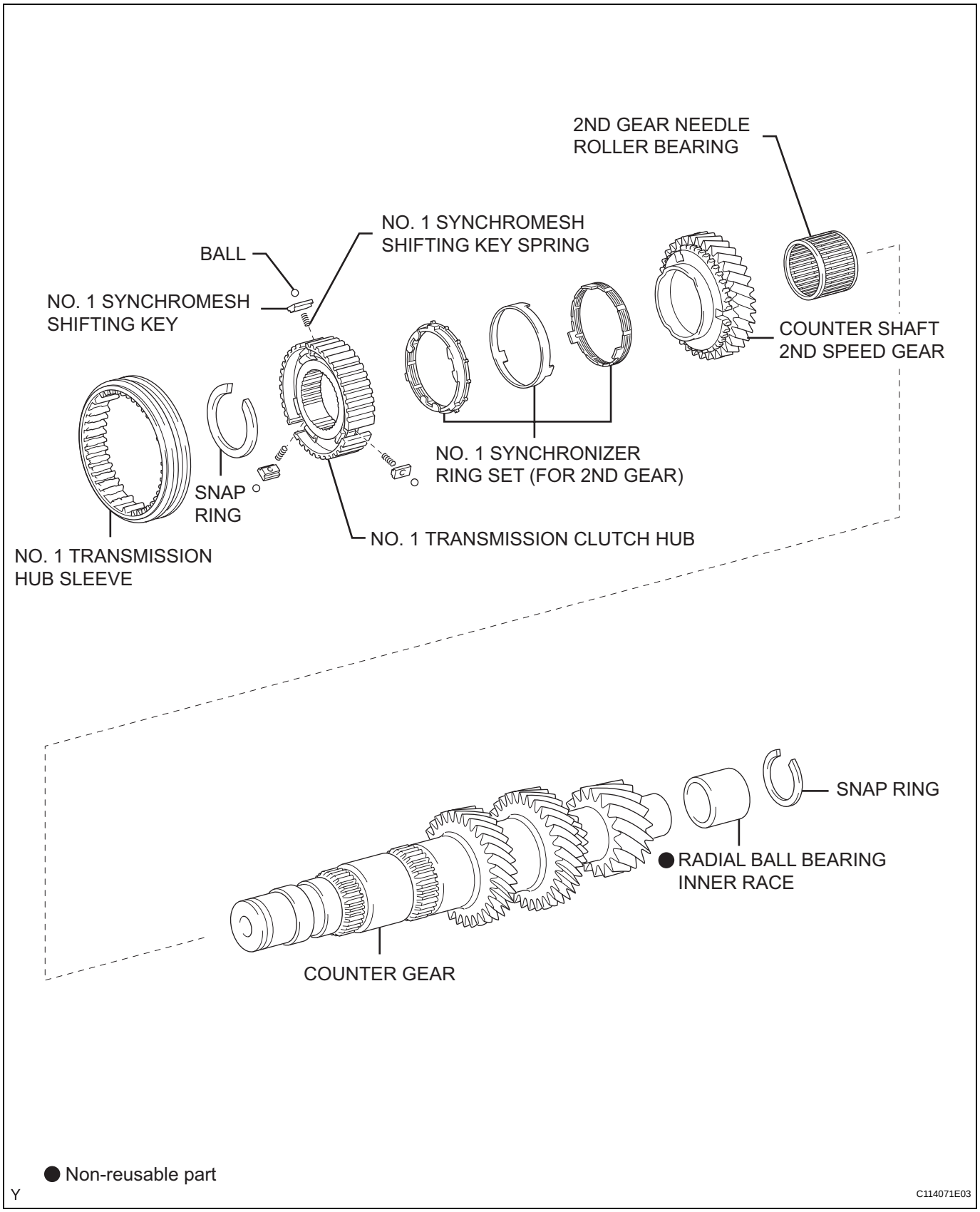
2ND GEAR NEEDLE ROLLER BEARING
NO. 1 SYNCHROMESH SHIFTING KEY SPRING
BALL
NO. 1 SYNCHROMESH SHIFTING KEY
COUNTER SHAFT 2ND SPEED GEAR
NO. 1 SYNCHRONIZER RING SET (FOR 2ND GEAR)
SNAP RING
NO. 1 TRANSMISSION CLUTCH HUB
NO. 1 TRANSMISSION HUB SLEEVE
SNAP RING
● RADIAL BALL BEARING INNER RACE
COUNTER GEAR
● Non-reusable part
Y
C114071E03

MT

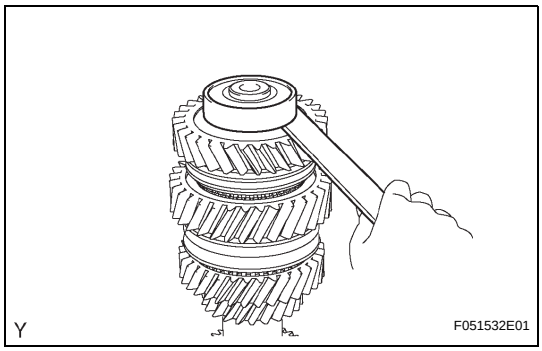

DISASSEMBLY

1. INSPECT REVERSE GEAR THRUST CLEARANCE

(a) Using a feeler gauge, measure the reverse gear thrust clearance.

Standard clearance:

0.12 to 0.37 mm (0.0047 to 0.0146 in.)

If the clearance is outside the specification, replace the synchronizer ring No. 4.

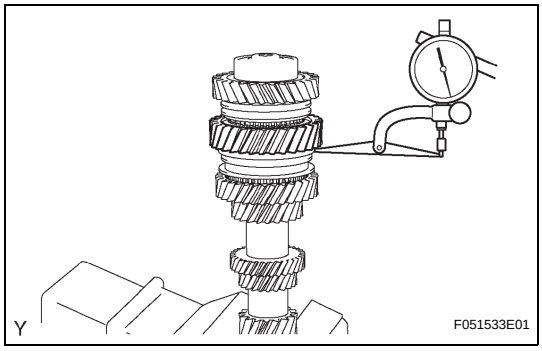

2. INSPECT 1ST GEAR THRUST CLEARANCE

(a) Using a dial indicator, measure the 1st gear thrust clearance.

Standard clearance:

0.10 to 0.43 mm (0.0039 to 0.0169 in.)

If the clearance is outside the specification, replace the synchronizer ring set No. 1.

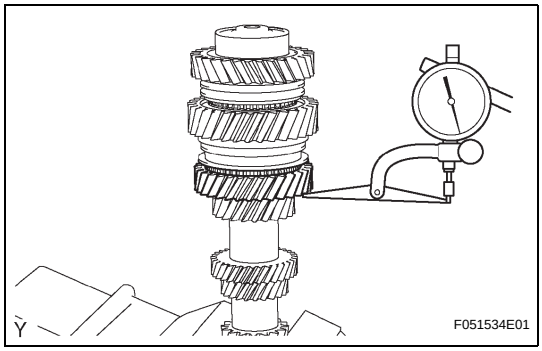

3. INSPECT 2ND GEAR THRUST CLEARANCE

(a) Using a dial indicator, measure the 2nd gear thrust clearance.

Standard clearance:

0.10 to 0.43 mm (0.0039 to 0.0169 in.)

If the clearance is outside the specification, replace the synchronizer ring set No. 1.

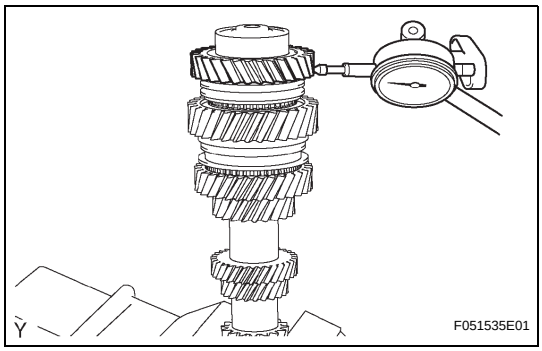

4. INSPECT REVERSE GEAR RADIAL CLEARANCE

(a) Using a dial indicator, measure the reverse gear radial clearance.

Standard clearance:

0.015 to 0.065 mm (0.0006 to 0.0026 in.)

If the clearance is outside the specification, replace the reverse gear needle roller bearing or shaft.

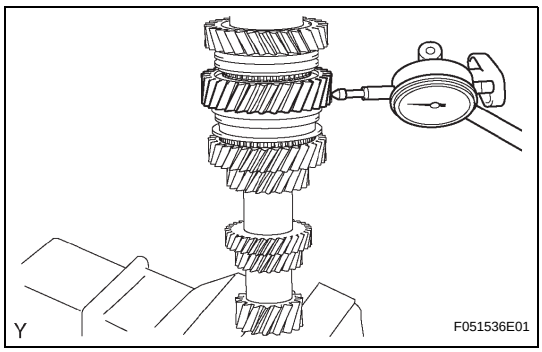

5. INSPECT 1ST GEAR RADIAL CLEARANCE

(a) Using a dial indicator, measure the 1st gear radial clearance.

Standard clearance:

0.015 to 0.067 mm (0.0006 to 0.0026 in.)

If the clearance is outside the specification, replace the 1st gear needle roller bearing or shaft.

MT

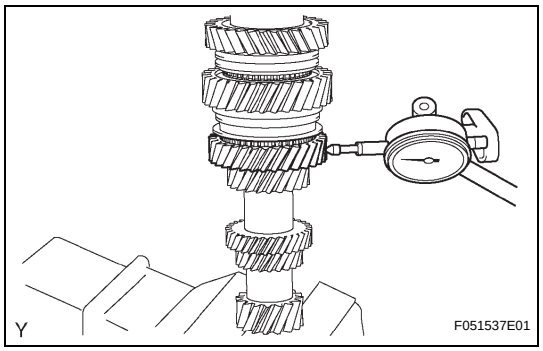

6. INSPECT 2ND GEAR RADIAL CLEARANCE

(a) Using a dial indicator, measure the 2nd gear radial clearance.

Standard clearance:

0.015 to 0.067 mm (0.0006 to 0.0026 in.)

If the clearance is outside the specification, replace the 2nd gear needle roller bearing or shaft.

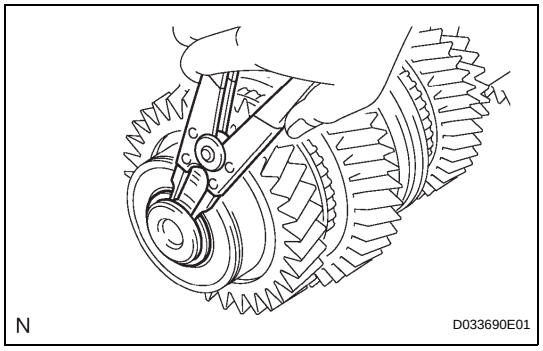

7. REMOVE COUNTER GEAR FRONT BEARING SNAP RING NO.1

(a) Using a snap ring expander, remove the snap ring from the counter gear.

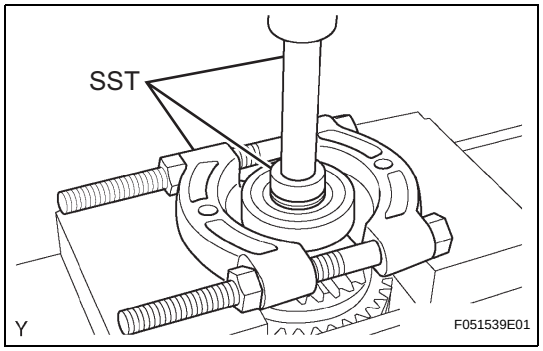

8. REMOVE COUNTER GEAR FRONT BEARING OR ROLLER

(a) Using SST and a press, remove the counter gear front bearing or roller from the counter gear.

SST 09950-00020, 09950-70010 (09951-07100), 09950-60010 (09951-00320)

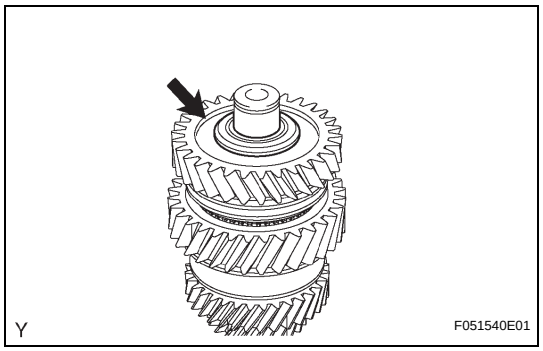

9. REMOVE REVERSE GEAR BEARING RACE INNER

(a) Remove the reverse gear bearing race inner from the counter gear.

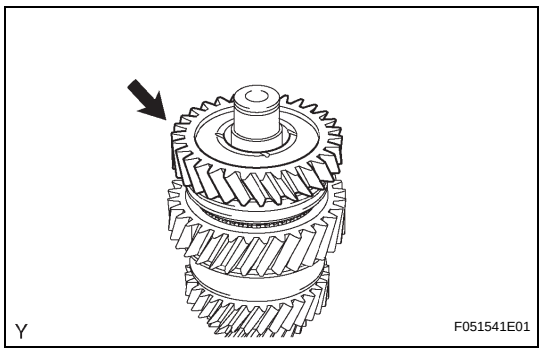

10. REMOVE COUNTERSHAFT REVERSE GEAR

(a) Remove the countershaft reverse gear from the counter gear.

(b) Remove the hub sleeve, 2 shifting keys and key spring from the countershaft reverse gear.

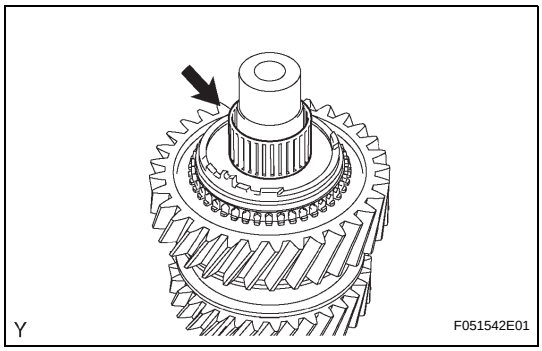

11. REMOVE REVERSE GEAR NEEDLE ROLLER BEARING

(a) Remove the reverse gear needle roller bearing from the counter gear.

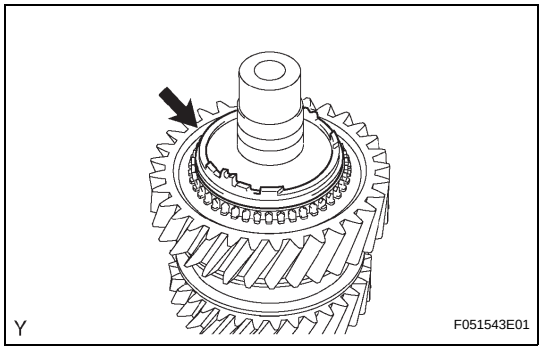

12. REMOVE NO. 4 SYNCHRONIZER RING

(a) Remove the synchronizer ring No. 4 from the counter gear.

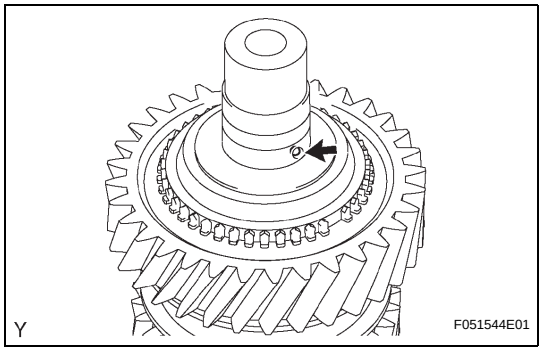

13. REMOVE BALL

(a) Remove the ball from the counter gear.

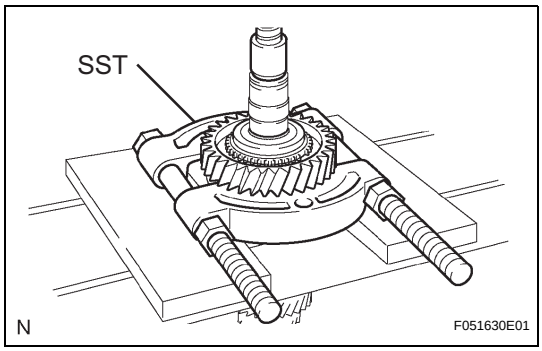

14. REMOVE COUNTERSHAFT GEAR 1ST SPEED

(a) Using a press, remove the countershaft gear 1st speed together with reverse gear spline piece from the counter gear.
SST 09950-00020

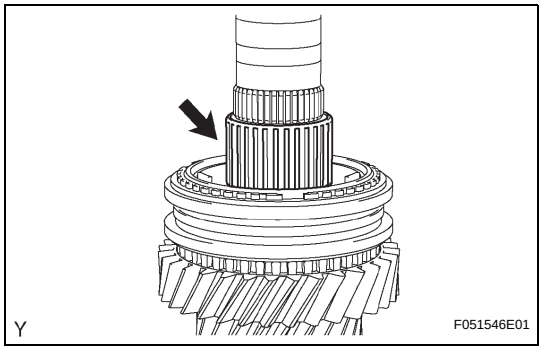

15. REMOVE 1ST GEAR NEEDLE ROLLER BEARING

(a) Remove the 1st gear needle roller bearing from the counter gear.

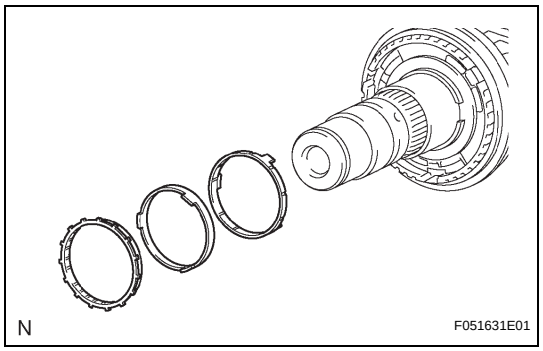

16. REMOVE NO. 1 SYNCHRONIZER RING SET (FOR 1ST GEAR)

(a) Remove the synchronizer ring set No. 1 from the counter gear.

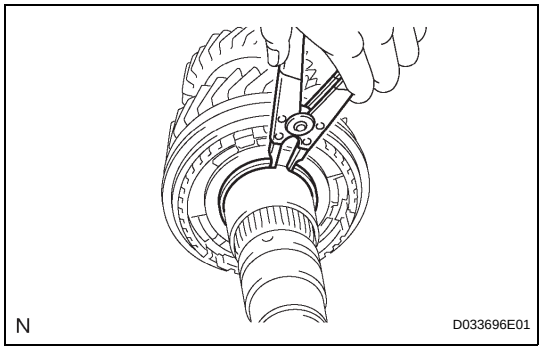

17. REMOVE CLUTCH HUB NO.1 SHAFT SNAP RING

(a) Using a snap ring expander, remove the snap ring from the counter gear.

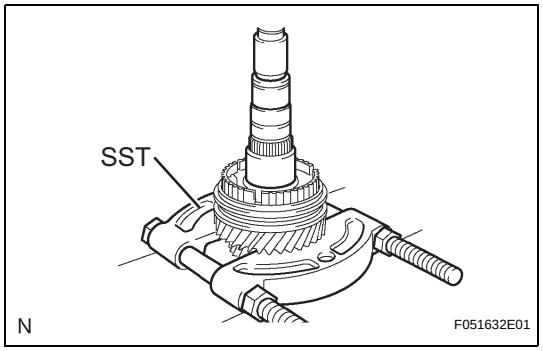

18. REMOVE COUNTER SHAFT 2ND SPEED GEAR

(a) Using a press, remove the counter shaft 2nd speed gear together with transmission clutch hub No. 1 from the counter gear.
SST 09950-00020

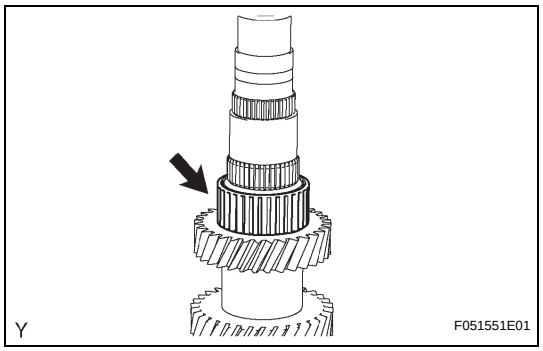

19. REMOVE 2ND GEAR NEEDLE ROLLER BEARING

(a) Remove the 2nd needle roller bearing from the counter gear.

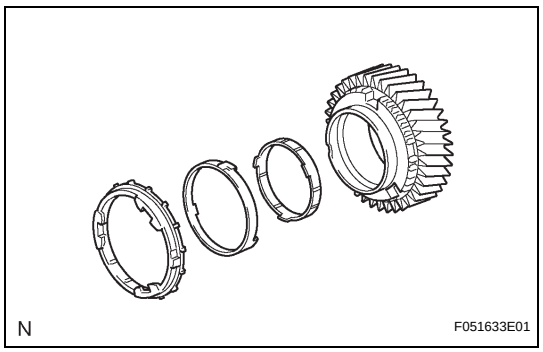

20. REMOVE NO. 1 SYNCHRONIZER RING SET (FOR 2ND GEAR)

(a) Remove the synchronizer ring set No. 1 from the 2nd gear.

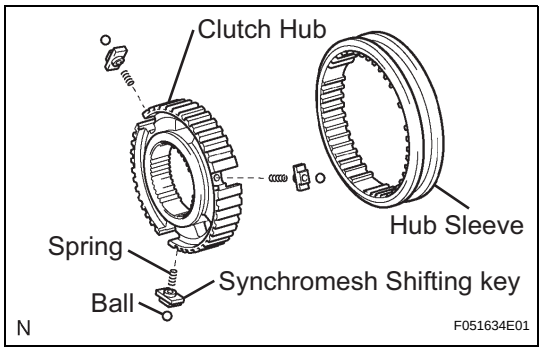

21. REMOVE NO. 1 TRANSMISSION CLUTCH HUB

(a) Remove the hub sleeve, 3 synchromesh shifting keys, 3 balls and 3 springs from the clutch hub.
HINT:
Use a shop rag to prevent the ball and spring from flying off.

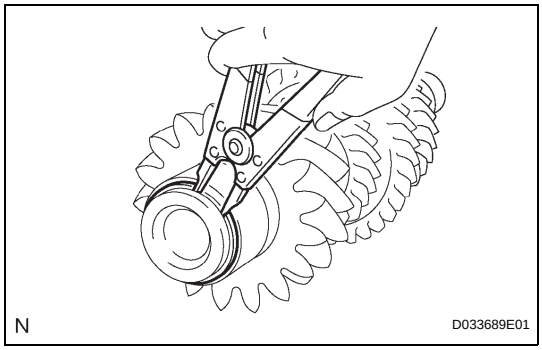

22. REMOVE SNAP RING COUNTER GEAR REAR BEARING

(a) Using a snap ring expander, remove the snap ring from the counter gear.

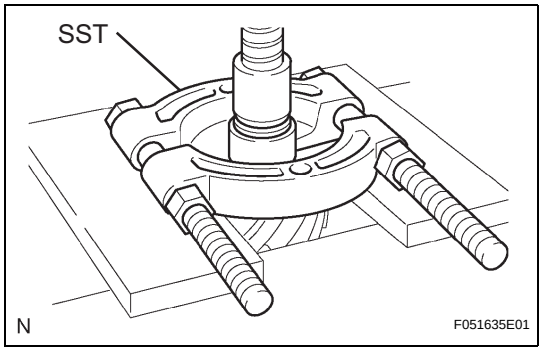

23. REMOVE RADIAL BALL BEARING INNER RACE

(a) Using SST and a press, remove the needle roller bearing inner race.
SST 09950-00020

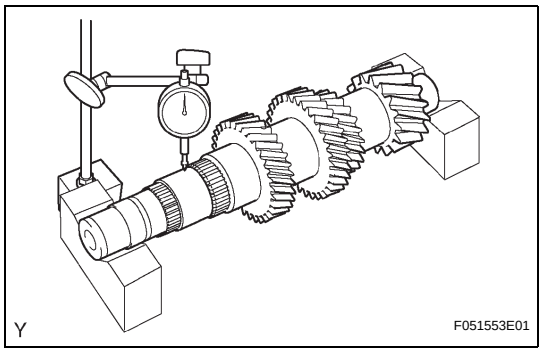

INSPECTION

1. INSPECT COUNTER GEAR

(a) Using a dial indicator and 2 V-blocks, measure the shaft runout.
Maximum runout:
0.03 mm (0.0012 in.)
If the runout exceeds the maximum, replace the counter gear.

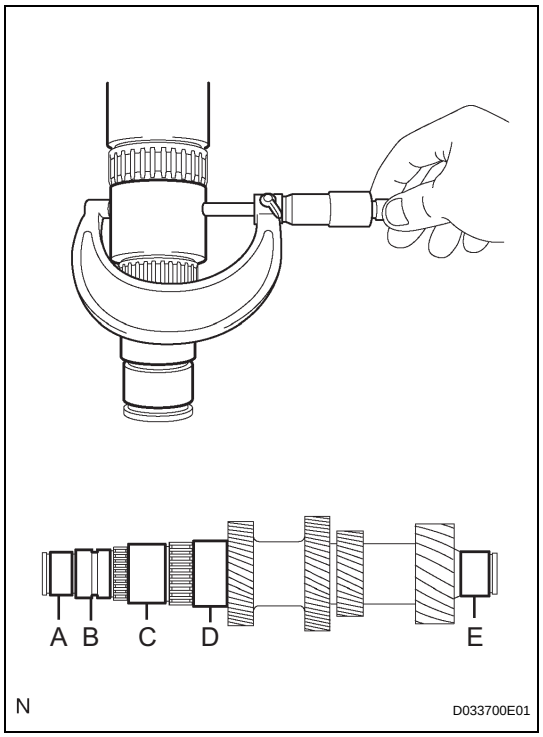

(b) Using a micrometer, measure the outer diameter of the input shaft journal surface.

Standard

Part	Outer diameter mm (in.)
A	34.002 to 34.015 (1.3387 to 1.3392)
B	36.985 to 37.000 (1.4561 to 1.4567)
C	47.985 to 48.000 (1.8892 to 1.8898)
D	53.985 to 54.000 (2.1254 to 2.1260)
E	34.002 to 34.015 (1.3387 to 1.3392)

Minimum

Part	Outer diameter mm (in.)
A	34.002 (1.3387)
B	36.985 (1.4561)
C	47.985 (1.8892)
D	53.985 (2.1254)
E	34.002 (1.3387)

If the diameter is less than the minimum, replace the counter gear shaft.

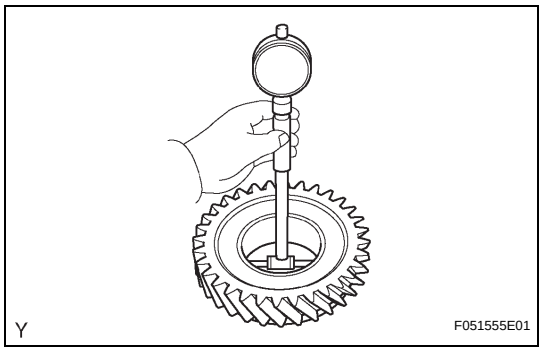

2. INSPECT COUNTERSHAFT REVERSE GEAR

(a) Using cylinder gauge, measure the inside diameter of the reverse gear.

Standard inside diameter:
51.015 to 51.040 mm (2.0085 to 2.0095 in.)
Maximum inside diameter:
51.040 mm (2.0095 in.)

If the inside diameter exceeds the maximum, replace the reverse gear.

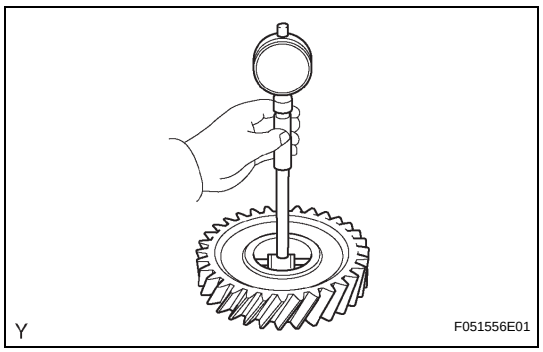

3. INSPECT COUNTERSHAFT GEAR 1ST SPEED

(a) Using cylinder gauge, measure the inside diameter of the 1st gear.

Standard inside diameter:
54.015 to 54.040 mm (2.1266 to 2.1276 in.)
Maximum inside diameter:
54.040 mm (2.1276 in.)

If the inside diameter exceeds the maximum, replace the 1st gear.

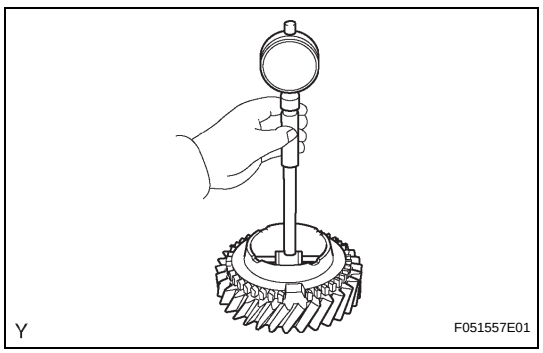

4. INSPECT COUNTER SHAFT 2ND SPEED GEAR

(a) Using cylinder gauge, measure the inside diameter of the 2nd gear.

Standard inside diameter:
60.015 to 60.040 mm (2.3628 to 2.3638 in.)
Maximum inside diameter:
60.040 mm (2.3638 in.)

If the inside diameter exceeds the maximum, replace the 2nd gear.

MT

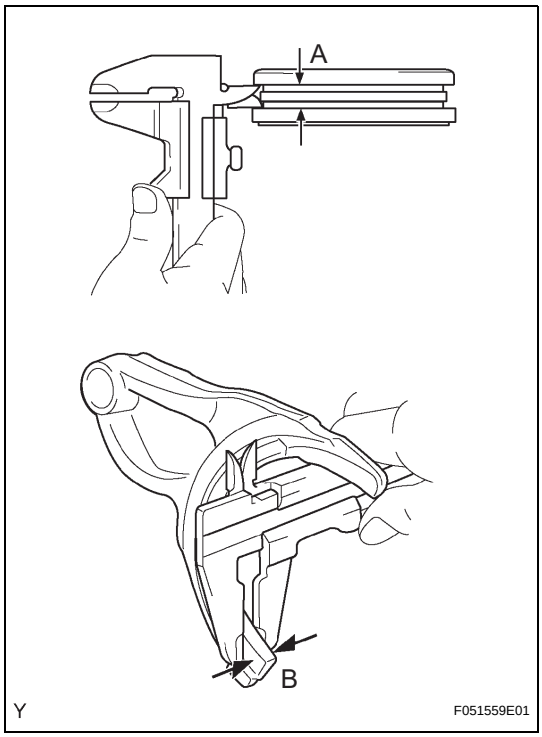

5. INSPECT NO. 3 TRANSMISSION HUB SLEEVE

(a) Using vernier calipers, measure the width of the transmission hub sleeve No. 3 groove (A) and the thickness of the claw part on the gear shift fork No. 4 (B), and calculate the clearance.

Standard clearance (A - B):

0.26 to 0.84 mm (0.0102 to 0.0331 in.)

If the clearance is outside the specification, replace the transmission hub sleeve No. 3 and gear shift fork No. 4.

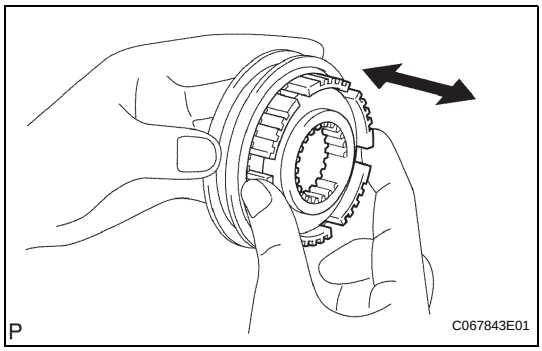

6. INSPECT NO. 1 TRANSMISSION HUB SLEEVE

(a) Check the sliding condition between the transmission hub No. 1 and transmission hub sleeve No. 1.

(b) Check that the spline gear teeth of the transmission hub sleeve No. 1 are not worn.

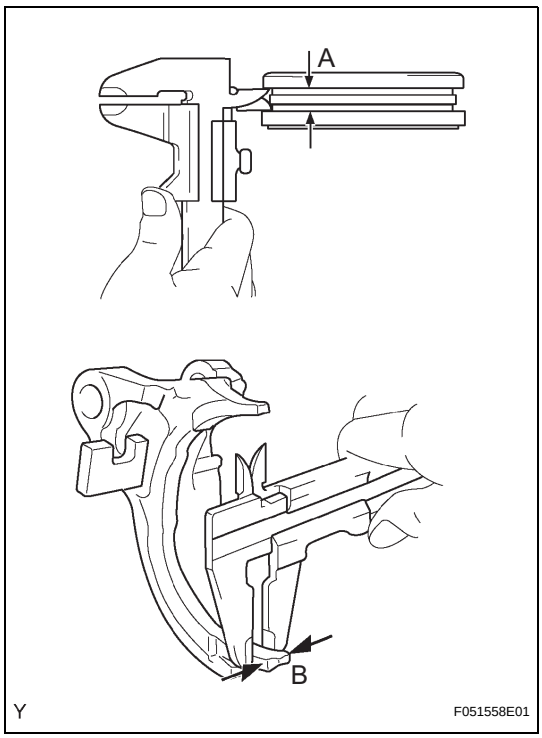

(c) Using vernier calipers, measure the width of the transmission hub sleeve No. 1 groove (A) and the thickness of the claw part on the gear shift fork No. 1 (B), and calculate the clearance.

Standard clearance (A - B):

0.15 to 0.35 mm (0.0059 to 0.0138 in.)

If the clearance is outside the specification, replace the transmission hub sleeve No. 1 and gear shift fork No. 1.

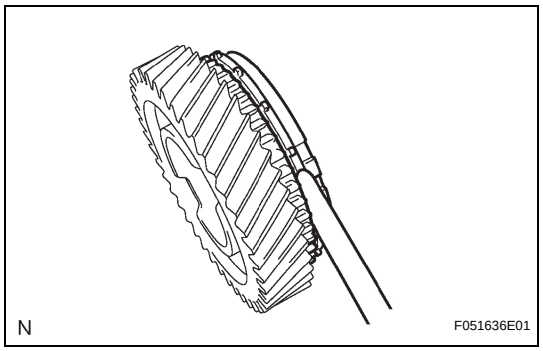

7. INSPECT NO. 4 SYNCHRONIZER RING

(a) Using a feeler gauge, measure the clearance between the synchronizer ring and reverse gear.

Standard clearance:
0.70 to 1.30 mm (0.0276 to 0.0512 in.)
Minimum clearance:
0.70 mm (0.0276 in.)

If the clearance is less than the minimum, replace the synchronizer ring.

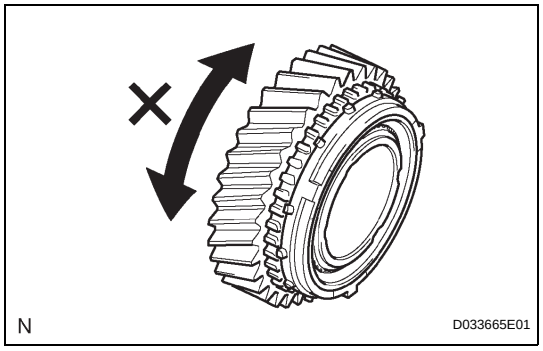

(b) Coat the reverse gear cone with gear oil. Check the braking effect of the synchronizer ring. Turn the synchronizer ring in one direction while pushing it to the reverse gear cone. Check that the ring locks.

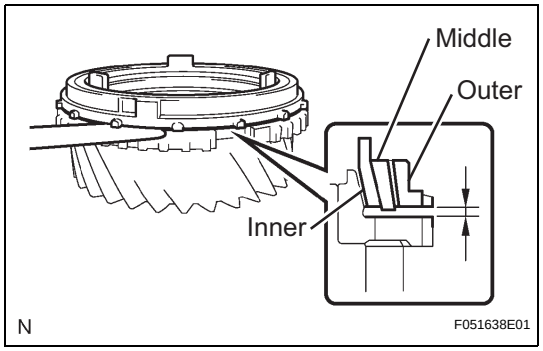

8. INSPECT NO. 1 SYNCHRONIZER RING SET (FOR 1ST GEAR)

(a) Using a feeler gauge, measure the clearance between the synchronizer ring and 1st gear.

Standard clearance:
Inner:
1.48 to 2.12 mm (0.0583 to 0.0835 in.)
Middle:
0.68 to 1.92 mm (0.0268 to 0.0756 in.)
Outer:
0.88 to 1.72 mm (0.0346 to 0.0677 in.)
Minimum clearance:
Inner:
1.48 mm (0.0583 in.)
Middle:
0.68 mm (0.0268 in.)
Outer:
0.88 mm (0.0346 in.)

If the clearance is less than the minimum, replace the synchronizer ring.

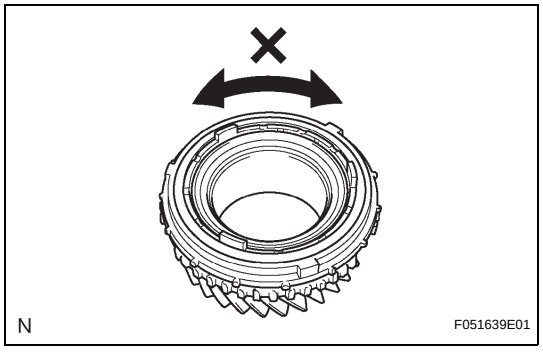

(b) Coat the 1st gear cone with gear oil. Check the braking effect of the synchronizer ring. Turn the synchronizer ring in one direction while pushing it to the 1st gear cone. Check that the ring locks.

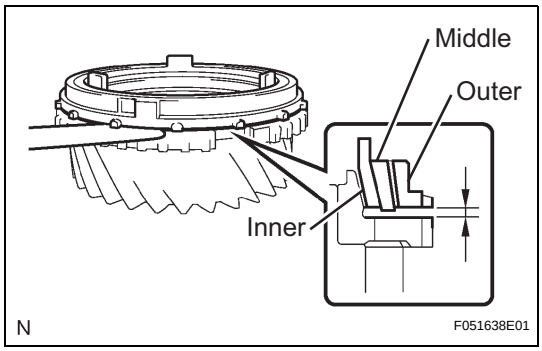

9. INSPECT NO. 1 SYNCHRONIZER RING SET (FOR 2ND GEAR)

(a) Using a feeler gauge, measure the clearance between the synchronizer ring and 2nd gear.

Standard clearance:
Inner:
1.48 to 2.12 mm (0.0583 to 0.0835 in.)
Middle:
0.68 to 1.92 mm (0.0268 to 0.0756 in.)
Outer:
0.88 to 1.72 mm (0.0346 to 0.0677 in.)
Minimum clearance:
Inner:
1.48 mm (0.0583 in.)
Middle:
0.68 mm (0.0268 in.)
Outer:
0.88 mm (0.0346 in.)

If the clearance is less than the minimum, replace the synchronizer ring.

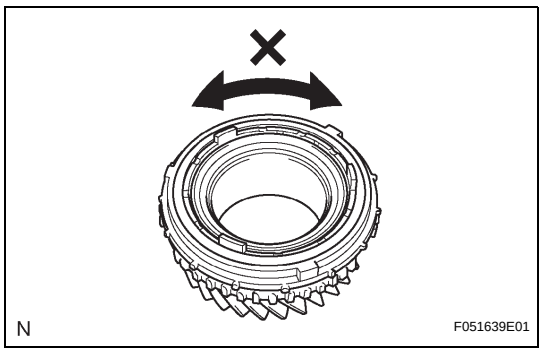

(b) Coat the 2nd gear cone with gear oil. Check the braking effect of the synchronizer ring. Turn the synchronizer ring in one direction while pushing it to the 2nd gear cone. Check that the ring locks.

REASSEMBLY

1. INSTALL RADIAL BALL BEARING INNER RACE

(a) Using SST and a press, install a new needle roller bearing inner race.

SST 09950-60010 (09951-00540)

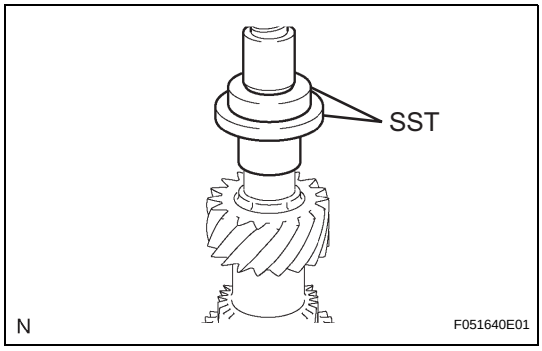

2. INSTALL SNAP RING COUNTER GEAR REAR BEARING

(a) Select a snap ring that will allow minimum axial play.

Standard clearance:
0.1 mm (0.004 in.) or less
Snap ring thickness

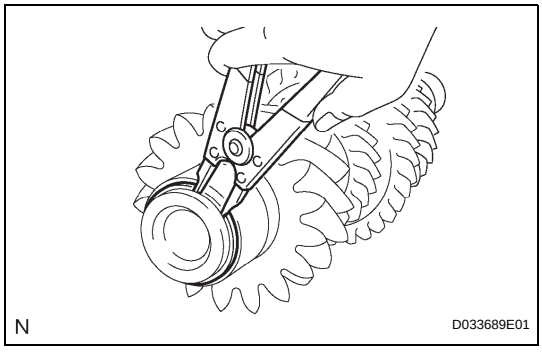

Part No.	Thickness: mm (in.)	Mark
90520-31015	2.35 to 2.40 (0.0925 to 0.0945)	A
90520-31016	2.40 to 2.45 (0.0945 to 0.0965)	B
90520-31017	2.45 to 2.50 (0.0965 to 0.0984)	C

Part No.	Thickness: mm (in.)	Mark
90520-31018	2.50 to 2.55 (0.0984 to 0.1004)	D
90520-31019	2.55 to 2.60 (0.1004 to 0.1024)	E
90520-31020	2.60 to 2.65 (0.1024 to 0.1043)	F
90520-31021	2.65 to 2.70 (0.1043 to 0.1063)	G
90520-31022	2.70 to 2.75 (0.1063 to 0.1083)	H
90520-31023	2.75 to 2.80 (0.1083 to 0.1102)	J
90520-31024	2.80 to 2.85 (0.1102 to 0.1122)	K
90520-31025	2.85 to 2.90 (0.1122 to 0.1142)	L
90520-31033	2.90 to 2.95 (0.1142 to 0.1161)	M

(b) Using a snap ring expander, install the snap ring onto the counter gear.

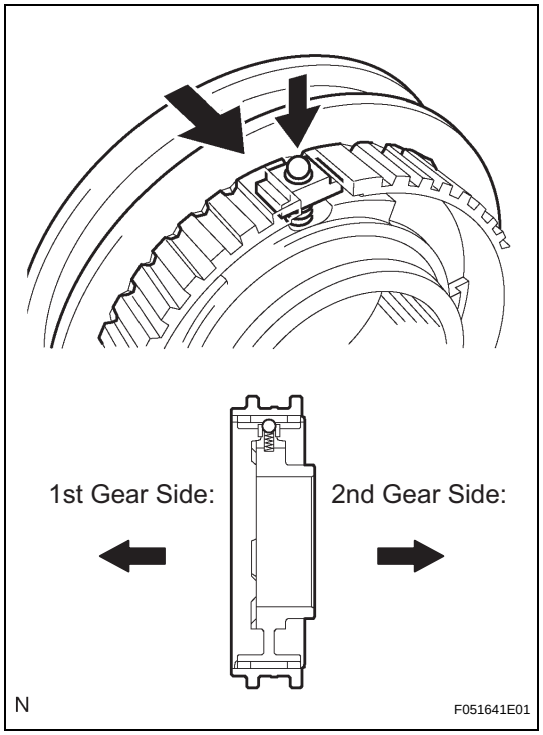

3. INSTALL NO. 1 TRANSMISSION CLUTCH HUB

(a) Apply a light coat of gear oil to the sleeve and hub.
(b) Install the clutch hub sleeve onto the clutch hub.
(c) Install the 3 shifting keys onto the clutch hub.
(d) Install the 3 shifting key springs onto the clutch hub.
(e) Place the ball in the hole of the shifting key, and install the hub sleeve while pushing in the ball.
NOTICE:
Take care to prevent the ball from flying off.

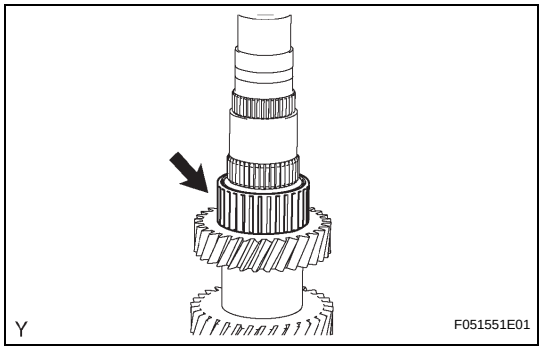

4. INSTALL 2ND GEAR NEEDLE ROLLER BEARING

(a) Coat the 2nd gear needle roller bearing with gear oil, then install it onto the counter gear.

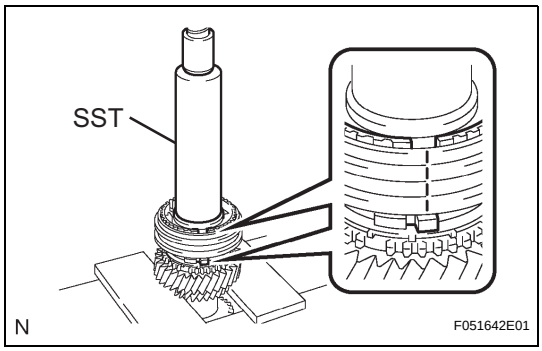

5. INSTALL COUNTER SHAFT 2ND SPEED GEAR

(a) Coat the countershaft 2nd speed gear with gear oil, then install it onto the counter gear.

(b) Coat the synchronizer ring set No. 1 with gear oil, then install it onto the counter gear.

(c) Using SST and a press, install the transmission clutch hub No. 1 onto the counter gear.

SST 09308-14010

HINT:

Align the convex portion of the synchronizer ring with the groove of the clutch hub.

(d) Install the clutch hub and confirm that the gear and synchronizer ring move smoothly.

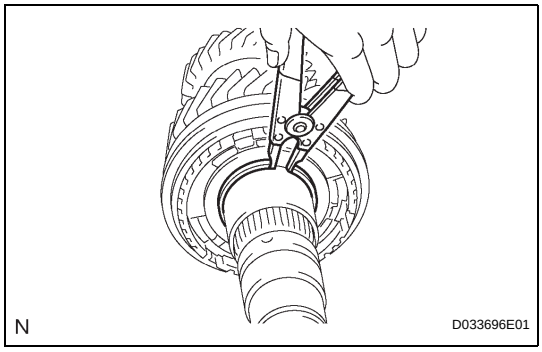

6. INSTALL CLUTCH HUB NO.1 SHAFT SNAP RING

(a) Select a snap ring that will allow minimum axial play.

Standard clearance:

0.1 mm (0.004 in.) or less

Snap ring thickness

Part No.	Thickness: mm (in.)	Mark
90520-45013	2.28 to 2.33 (0.0898 to 0.0917)	A
90520-45014	2.33 to 2.38 (0.0917 to 0.0937)	B
90520-45015	2.38 to 2.43 (0.0937 to 0.0957)	C
90520-45016	2.43 to 2.48 (0.0957 to 0.0976)	D
90520-45017	2.48 to 2.53 (0.0976 to 0.0996)	E
90520-45018	2.53 to 2.58 (0.0996 to 0.1016)	F
90520-45019	2.58 to 2.63 (0.1016 to 0.1035)	G

(b) Using a snap ring expander, install the snap ring onto the counter gear.

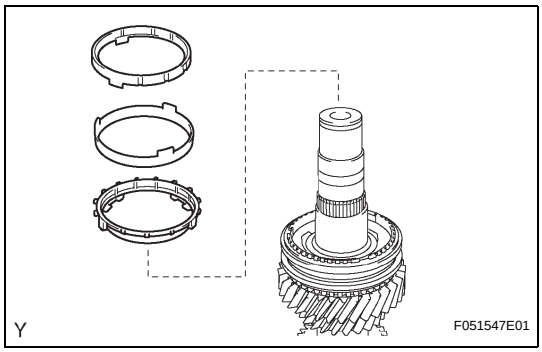

7. INSTALL NO. 1 SYNCHRONIZER RING SET (FOR 1ST GEAR)

(a) Coat the synchronizer ring set No. 1 with gear oil, then install it onto the counter gear.

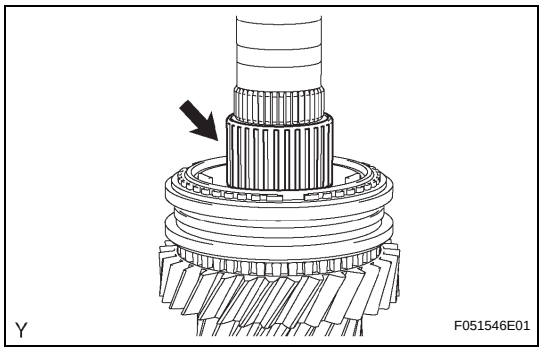

8. INSTALL 1ST GEAR NEEDLE ROLLER BEARING

(a) Coat the 1st gear needle roller bearing with gear oil, then install it onto the counter gear.

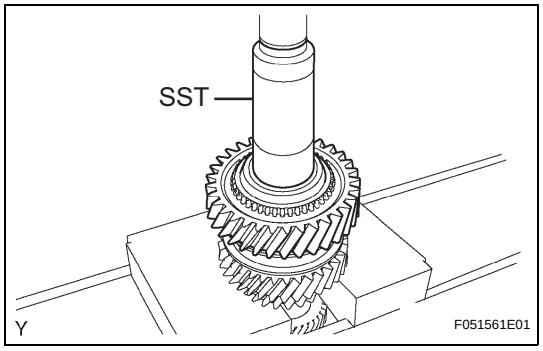

9. INSTALL COUNTERSHAFT GEAR 1ST SPEED

(a) Coat the countershaft gear 1st speed with gear oil, and install it onto the counter gear.

(b) Using SST and a press, install the reverse gear spline piece.

SST 09309-37010

MT

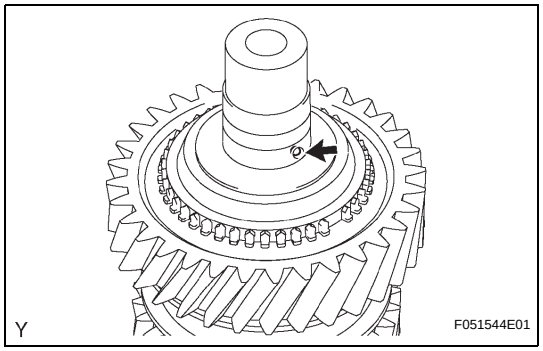

10. INSTALL BALL

(a) Install the ball into the counter gear.

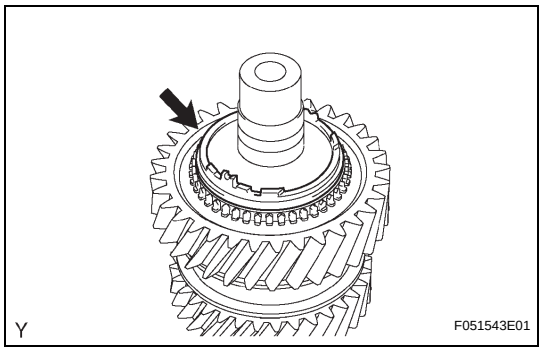

11. INSTALL NO. 4 SYNCHRONIZER RING

(a) Coat the synchronizer ring No. 4 with gear oil, and install it onto the counter gear.

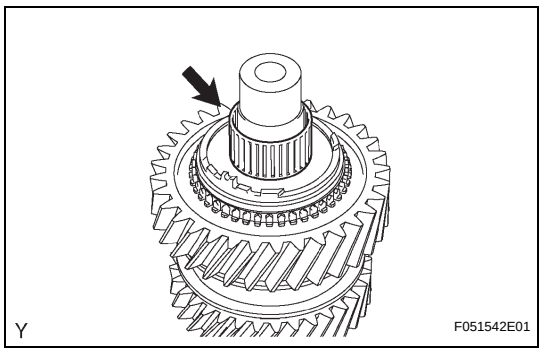

12. INSTALL REVERSE GEAR NEEDLE ROLLER BEARING

(a) Coat the reverse gear needle roller bearing with gear oil, and install it onto the counter gear.

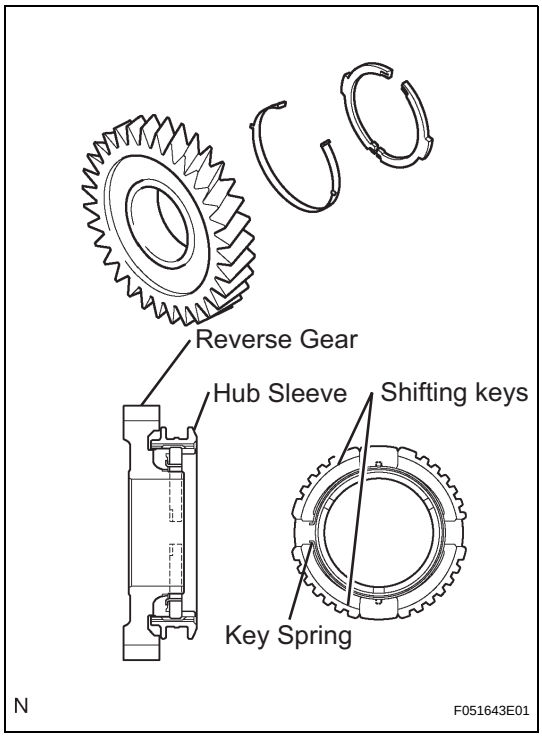

13. INSTALL COUNTERSHAFT REVERSE GEAR

(a) Install the key spring and 2 shifting keys onto the reverse gear.
HINT:
- Install the shifting key with its groove on the reverse gear side.
- Install the key spring with its claw on the reverse gear side.
- Refer to the illustration when installing the key spring.

(b) Install the hub sleeve onto the reverse gear.

(c) Coat the countershaft reverse gear with gear oil, then install it onto the counter gear.

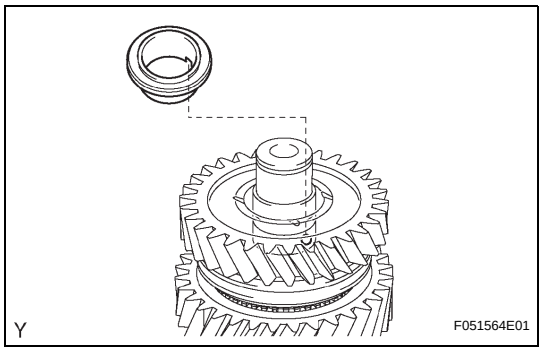

14. INSTALL REVERSE GEAR BEARING RACE INNER

(a) Align the groove of the reverse gear bearing race inner with the ball, and install them.

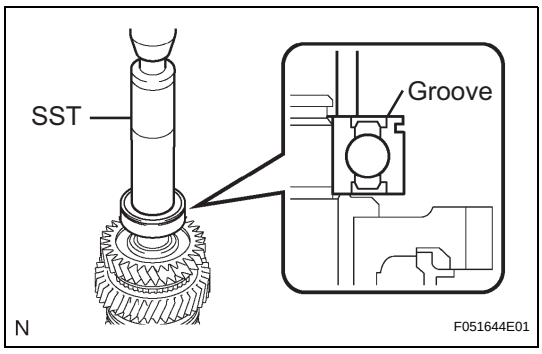

15. INSTALL COUNTER GEAR FRONT BEARING OR ROLLER

(a) Using SST and a press, install counter gear front bearing or roller onto the counter gear.
SST 09608-06041
HINT:
Make sure that the groove of the bearing faces the correct direction as shown in the illustration.

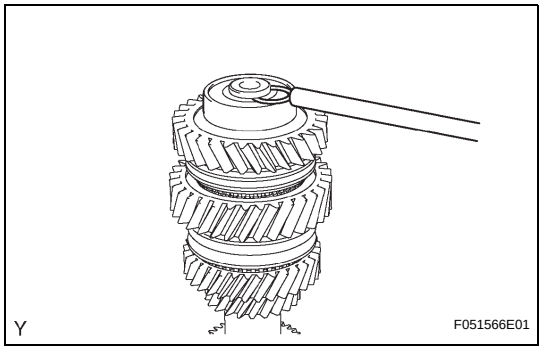

16. REMOVE NO. 1 COUNTER GEAR FRONT BEARING SNAP RING

(a) Select a snap ring that will allow minimum axial play.
Standard clearance:
0.1 mm (0.004 in.) or less
Snap ring thickness

Part No.	Thickness: mm (in.)	Mark
90520-31015	2.35 to 2.40 (0.0925 to 0.0945)	A

Part No.	Thickness: mm (in.)	Mark
90520-31016	2.40 to 2.45 (0.0945 to 0.0965)	B
90520-31017	2.45 to 2.50 (0.0965 to 0.0984)	C
90520-31018	2.50 to 2.55 (0.0984 to 0.1004)	D
90520-31019	2.55 to 2.60 (0.1004 to 0.1024)	E
90520-31020	2.60 to 2.65 (0.1024 to 0.1043)	F
90520-31021	2.65 to 2.70 (0.1043 to 0.1063)	G
90520-31022	2.70 to 2.75 (0.1063 to 0.1083)	H
90520-31023	2.75 to 2.80 (0.1083 to 0.1102)	J
90520-31024	2.80 to 2.85 (0.1102 to 0.1122)	K
90520-31025	2.85 to 2.90 (0.1122 to 0.1142)	L
0520-31033	2.90 to 2.95 (0.1142 to 0.1161)	M

(b) Using a snap ring expander, install the snap ring onto the counter gear.

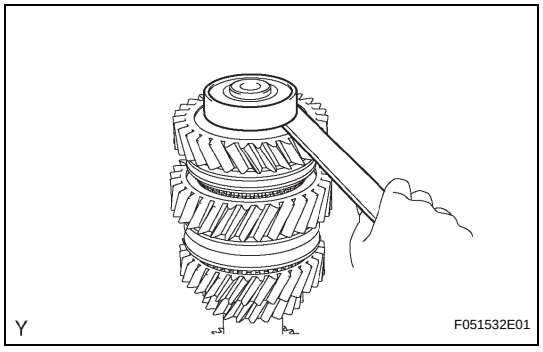

17. INSPECT REVERSE GEAR THRUST CLEARANCE

(a) Using a feeler gauge, measure the reverse gear thrust clearance.

Standard clearance:

0.12 to 0.37 mm (0.0047 to 0.0146 in.)

If the clearance is outside the specification, replace the synchronizer ring No. 4.

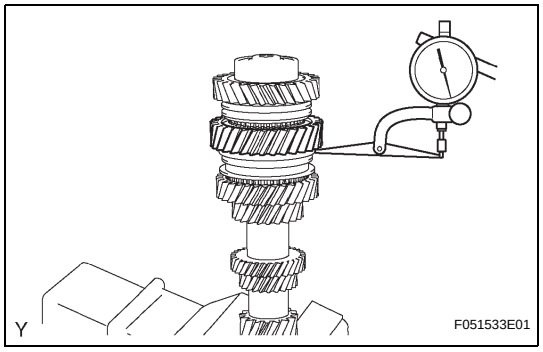

18. INSPECT 1ST GEAR THRUST CLEARANCE

(a) Using a dial indicator, measure the 1st gear thrust clearance.

Standard clearance:

0.10 to 0.43 mm (0.0039 to 0.0169 in.)

If the clearance is outside the specification, replace the synchronizer ring set No. 1.

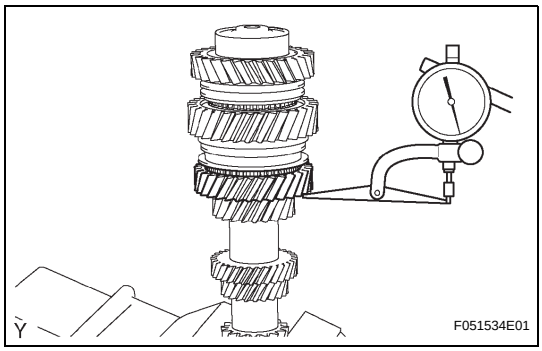

19. INSPECT 2ND GEAR THRUST CLEARANCE

(a) Using a dial indicator, measure the 2nd gear thrust clearance.

Standard clearance:

0.10 to 0.43 mm (0.0039 to 0.0169 in.)

If the clearance is outside the specification, replace the synchronizer ring set No. 1.

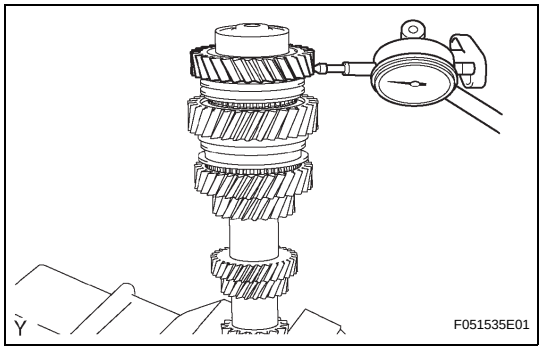

20. INSPECT REVERSE GEAR RADIAL CLEARANCE

(a) Using a dial indicator, measure the reverse gear radial clearance.

Standard clearance:

0.015 to 0.065 mm (0.0006 to 0.0026 in.)

If the clearance is outside the specification, replace the reverse gear needle roller bearing or shaft.

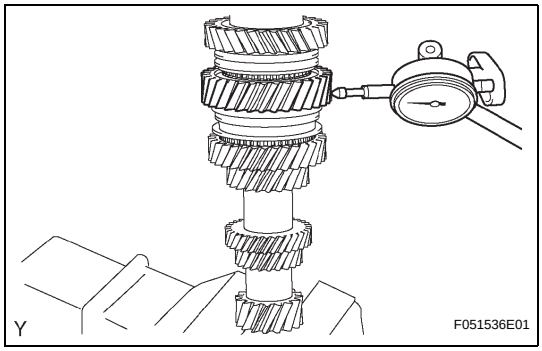

21. INSPECT 1ST GEAR RADIAL CLEARANCE

(a) Using a dial indicator, measure the 1st gear radial clearance.

Standard clearance:

0.015 to 0.067 mm (0.0006 to 0.0026 in.)

If the clearance is outside the specification, replace the 1st gear needle roller bearing or shaft.

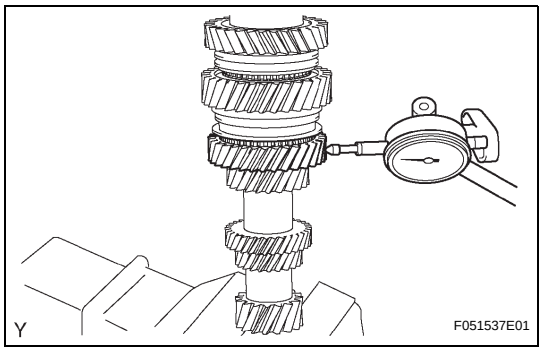

22. INSPECT 2ND GEAR RADIAL CLEARANCE

(a) Using a dial indicator, measure the 2nd gear radial clearance.

Standard clearance:

0.015 to 0.067 mm (0.0006 to 0.0026 in.)

If the clearance is outside the specification, replace the 2nd gear needle roller bearing or shaft.

TRANSFER SYSTEM

PRECAUTION

- Before disassembly, clean the transfer assembly and remove any deposited sand and mud to prevent it from entering the transfer during disassembly and assembly.
- When removing any light alloy parts such as the transfer covers, do not pry them off with a tool like a screwdriver, but tap them out with a plastic hammer.
- Always organize the removed parts properly and protect them from dust.
- After cleaning and drying the transfer completely before installation, apply hypoid gear oil to each part. Do not use alkaline chemicals when cleansing aluminum or rubber parts or ring gear set bolts. Also, do not use any cleansing oil (ex. white gasoline) to clean rubber parts such as oil seals.
- Apply sufficient hypoid gear oil to all sliding surfaces and rotating parts.
- Do not directly hold any parts in a vise. Be sure to put an aluminum sheet between them.
- Replace any damaged or deformed snap rings with new ones.
- If the mating surface of the case is scratched, it could cause oil leakage. Therefore, handle with care to prevent such damage.
- Using a razor blade and gasket scraper, remove old FIPG from the seal surface.
- Clean all the components to remove the redundant FIPG completely.
- Clean the sealing surface with solvent so that no residue remains on the seal surface.
- Apply a line of FIPG approximately 1.2 mm (0.047 in.) diameter of bead state along the sealing surface.
- Be sure to assemble parts within 10 minutes of application. Otherwise, the FIPG must be removed and reapplied.
- Do not pour in oil immediately after installing sealed parts. Leave it for at least an hour.
- Scratches on the contact surface with an oil seal or gasket could cause oil leakage. Handle with care to prevent such damage.
- When press-fitting an oil seal, take care to prevent the oil seal lip and its periphery from being damaged.

PROBLEM SYMPTOMS TABLE

Use the table below to help you find the cause of the problem.
The numbers indicate the ranked order of probability of each of the possible causes.
Check each part in order.
Replace the applicable parts as necessary.

Symptom	Suspected area	See page
Noise	1. Oil (Level low)	TF-3
	2. Oil (Wrong)	TF-3
	3. Transfer faulty	TF-14
Oil leakage	1. Oil (Level too high)	TF-3
	2. Gasket (Damaged)	TF-14
	3. Oil seal (Worn or damaged)	TF-14
	4. O-ring (Worn or damaged)	TF-14
Tight corner braking	1. Transfer faulty	TF-14
Shift from 4WD (H4) to 4WD (L4) impossible	1. Four wheel drive control switch	TF-41
	2. Wire harness	-
	3. Four wheel drive control ECU	TF-41
Shift from 4WD (L4) to 4WD (H4) impossible	1. Four wheel drive control switch	TF-41
	2. Wire harness	-
	3. Four wheel drive control ECU	TF-41

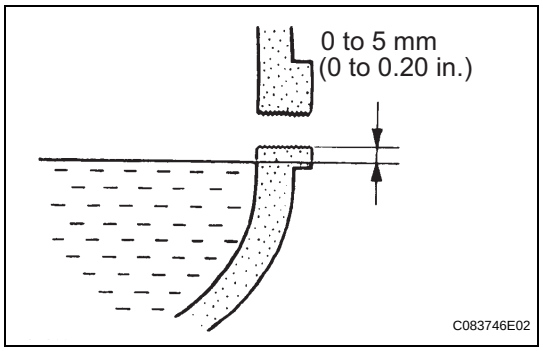

TRANSFER OIL

ADJUSTMENT

1. INSPECT TRANSFER OIL

(a) Remove the filler plug and gasket.

(b) Check that the oil level is within 5 mm (0.20 in.) of the bottom of the filler plug hole.

NOTICE:

- **When replacing the oil, recheck the oil level after driving.**
- **Excessively large or small quantities of oil may cause troubles.**

(c) When the oil level is too low, check for oil leakage.

(d) Tighten the filler plug with a new gasket.

Torque: 37 N*m (377 kgf*cm, 27 ft.*lbf)

2. ADJUST TRANSFER OIL

(a) Remove the filler plug and gasket then supply oil.

NOTICE:

- **When supplying oil, pour slowly.**
- **Pour the oil in several stages allowing several minutes between each step.**

HINT:

The oil level should be within 5 mm (0.20 in.) of the bottom of the oil filler plug hole.

(b) After leaving it alone for 5 minutes, check the oil level again.

(c) Tighten the filler plug with a new gasket.

Torque: 37 N*m (377 kgf*cm, 27 ft.*lbf)

TRANSFER CASE OIL SEAL

REMOVAL

1. **DISCONNECT CABLE FROM NEGATIVE BATTERY TERMINAL (for 1GR-FE)**
2. **DRAIN TRANSFER OIL**
3. **REMOVE EXHAUST FRONT PIPE ASSEMBLY NO. 2 (for 1GR-FE) (See page EX-3)**
4. **REMOVE PROPELLER SHAFT HEAT INSULATOR BRACKET SUB-ASSEMBLY (for 1GR-FE) (See page PR-16)**
5. **REMOVE PROPELLER SHAFT ASSEMBLY FRONT (See page PR-16)**
6. **REMOVE OUTPUT SHAFT COMPANION FLANGE SUB-ASSEMBLY (See page TF-14)**
7. **REMOVE TRANSFER CASE OIL SEAL**
   (a) Using SST, remove the oil seal.
   SST 09308-00010
   NOTICE:
   Do not damage the oil-seal-fitted surface of the case.

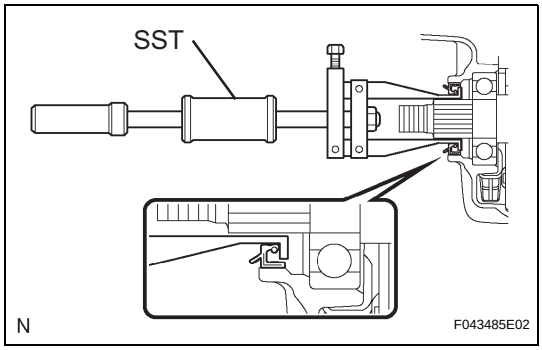

INSTALLATION

1. **INSTALL TRANSFER CASE OIL SEAL**
   (a) Coat the lip of a new oil seal with MP grease.
   (b) Using SST and a hammer, tap in the oil seal until its surface is flush with the case upper surface.
   SST 09316-60011 (09316-00011)
2. **INSTALL OUTPUT SHAFT COMPANION FLANGE SUB-ASSEMBLY (See page TF-37)**
3. **INSTALL PROPELLER SHAFT ASSEMBLY FRONT (See page PR-19)**
4. **INSTALL PROPELLER SHAFT HEAT INSULATOR BRACKET SUB-ASSEMBLY (for 1GR-FE) (See page PR-20)**
5. **INSTALL EXHAUST FRONT PIPE ASSEMBLY NO. 2 (for 1GR-FE) (See page EX-3)**
6. **ADD TRANSFER OIL**
7. **INSPECT TRANSFER OIL (See page TF-3)**
8. **CONNECT CABLE TO NEGATIVE BATTERY TERMINAL (for 1GR-FE)**
   Torque: 3.9 N*m (40 kgf*cm, 35 in.*lbf)
9. **CHECK FOR EXHAUST GAS LEAKAGE**

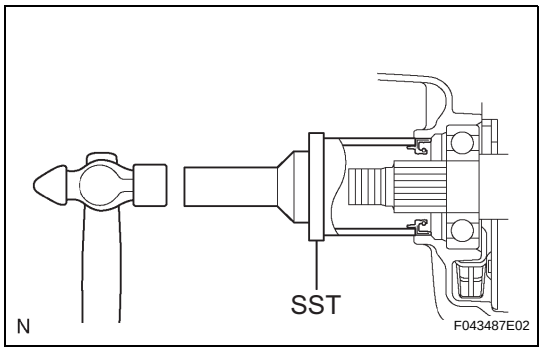

10. CHECK FRO TRANSFER OIL LEAKAGE

EXTENSION HOUSING OIL SEAL

REMOVAL

1. **DRAIN TRANSFER OIL**
2. **REMOVE PROPELLER SHAFT ASSEMBLY (for Regular Cab) (See page PR-22)**
3. **REMOVE PROPELLER WITH CENTER BEARING SHAFT ASSEMBLY (for Except Regular Cab) (See page PR-8)**
4. **REMOVE OUTPUT SHAFT COMPANION FLANGE SUB-ASSEMBLY (See page TF-15)**
5. **REMOVE TRANSFER EXTENSION HOUSING TYPE T OIL SEAL**
   (a) Using SST, remove the oil seal.
   SST 09308-00010
   NOTICE:
   Do not damage the oil-seal-fitted surface of the extension housing sub-assembly rear.

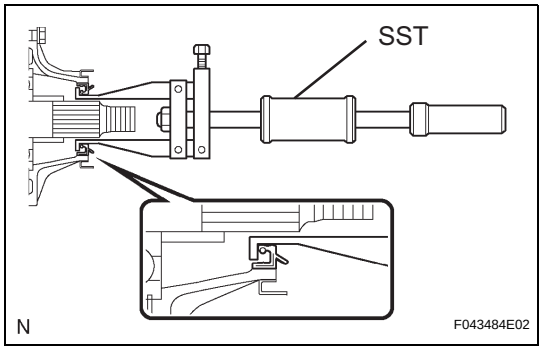

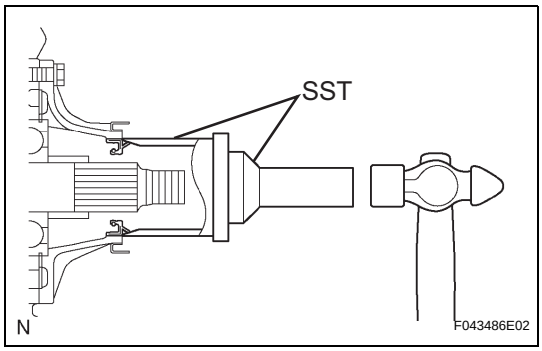

INSTALLATION

1. **INSTALL TRANSFER EXTENSION HOUSING TYPE T OIL SEAL**
   (a) Coat the lip of a new oil seal with MP grease.
   (b) Using SST and a hammer, tap in the oil seal until its surface is flush with the housing upper surface.
   SST 09223-46011, 09631-32020
2. **INSTALL OUTPUT SHAFT COMPANION FLANGE SUB-ASSEMBLY (See page TF-37)**
3. **INSTALL PROPELLER WITH CENTER BEARING SHAFT ASSEMBLY (for Except Regular Cab) (See page PR-13)**
4. **INSTALL PROPELLER SHAFT ASSEMBLY (for Regular Cab) (See page PR-25)**
5. **ADD TRANSFER OIL**
6. **INSPECT TRANSFER OIL (See page TF-3)**
7. **CHECK FOR TRANSFER OIL LEAKAGE**

TRANSFER ASSEMBLY

COMPONENTS

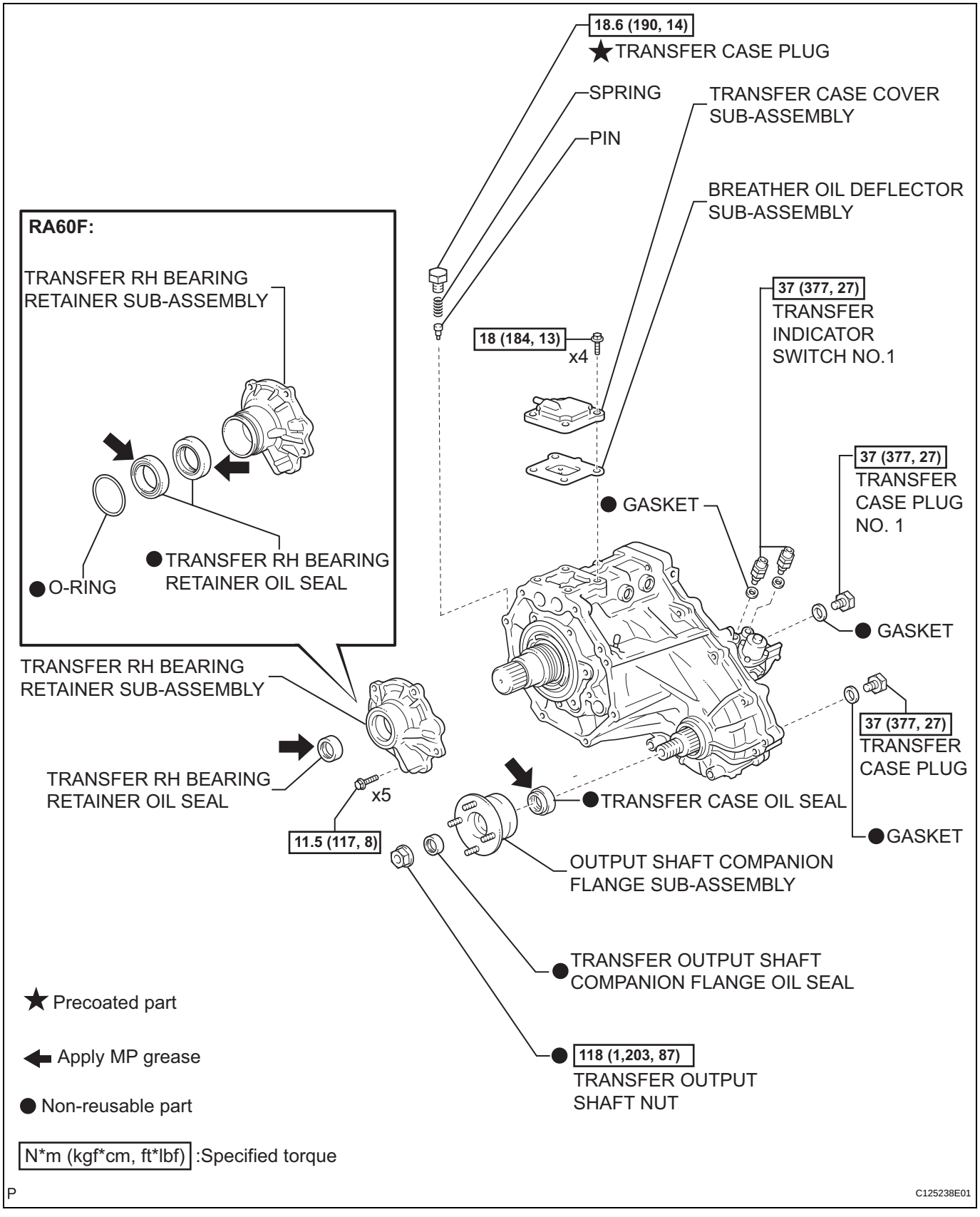

TF

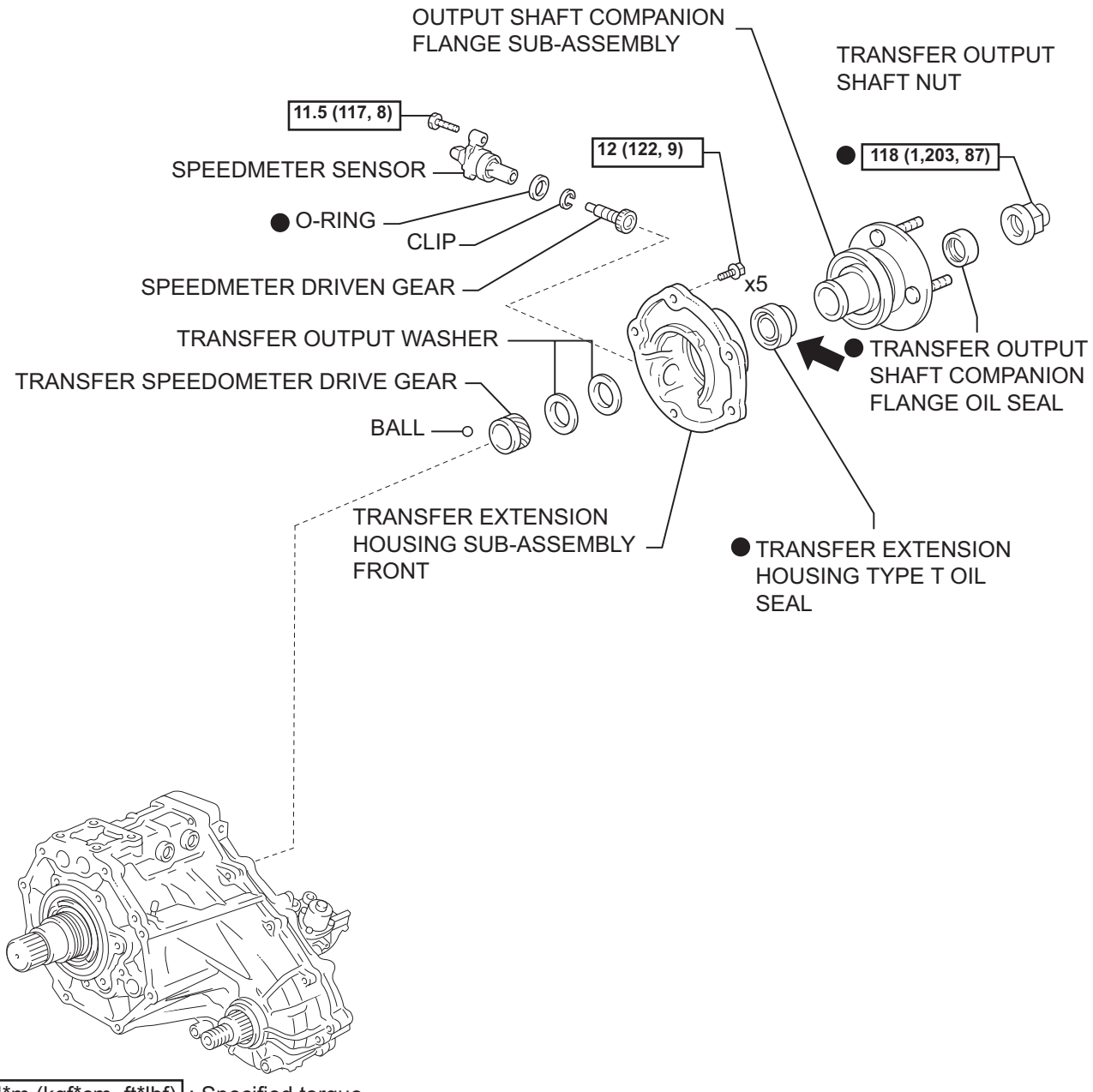

N*m (kgf*cm, ft*lbf) : Specified torque

● Non-reusable part

⬅ Apply MP grease

P

C125239E02

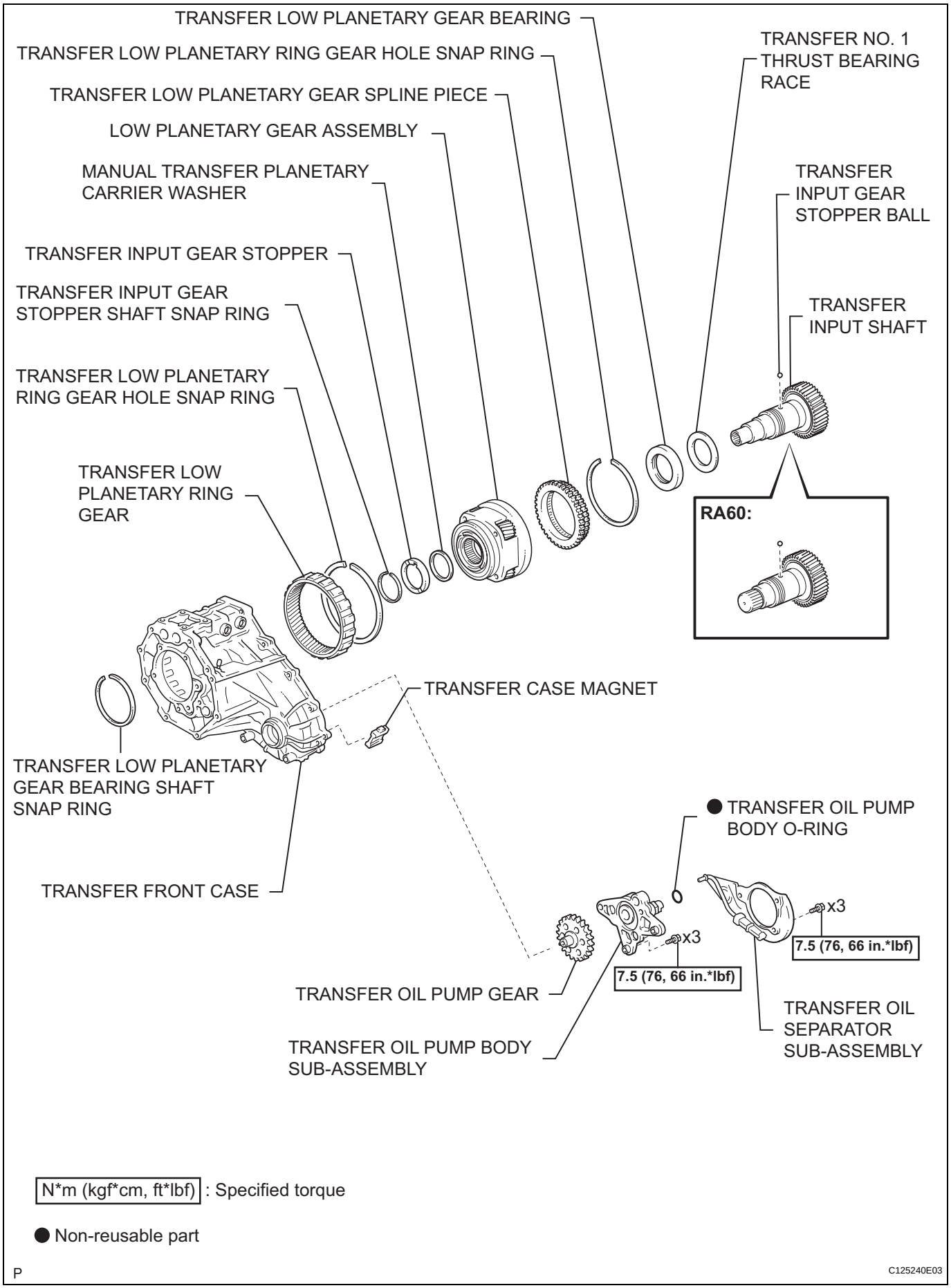
TRANSFER LOW PLANETARY GEAR BEARING
TRANSFER LOW PLANETARY RING GEAR HOLE SNAP RING
TRANSFER LOW PLANETARY GEAR SPLINE PIECE
LOW PLANETARY GEAR ASSEMBLY
MANUAL TRANSFER PLANETARY CARRIER WASHER
TRANSFER INPUT GEAR STOPPER
TRANSFER INPUT GEAR STOPPER SHAFT SNAP RING
TRANSFER LOW PLANETARY RING GEAR HOLE SNAP RING
TRANSFER LOW PLANETARY RING GEAR
TRANSFER NO. 1 THRUST BEARING RACE
TRANSFER INPUT GEAR STOPPER BALL
TRANSFER INPUT SHAFT
RA60:
TRANSFER CASE MAGNET
TRANSFER LOW PLANETARY GEAR BEARING SHAFT SNAP RING
TRANSFER FRONT CASE
● TRANSFER OIL PUMP BODY O-RING
x3
7.5 (76, 66 in.*lbf)
x3
7.5 (76, 66 in.*lbf)
TRANSFER OIL PUMP GEAR
TRANSFER OIL PUMP BODY SUB-ASSEMBLY
TRANSFER OIL SEPARATOR SUB-ASSEMBLY
N*m (kgf*cm, ft*lbf) : Specified torque
● Non-reusable part
P
C125240E03

TF

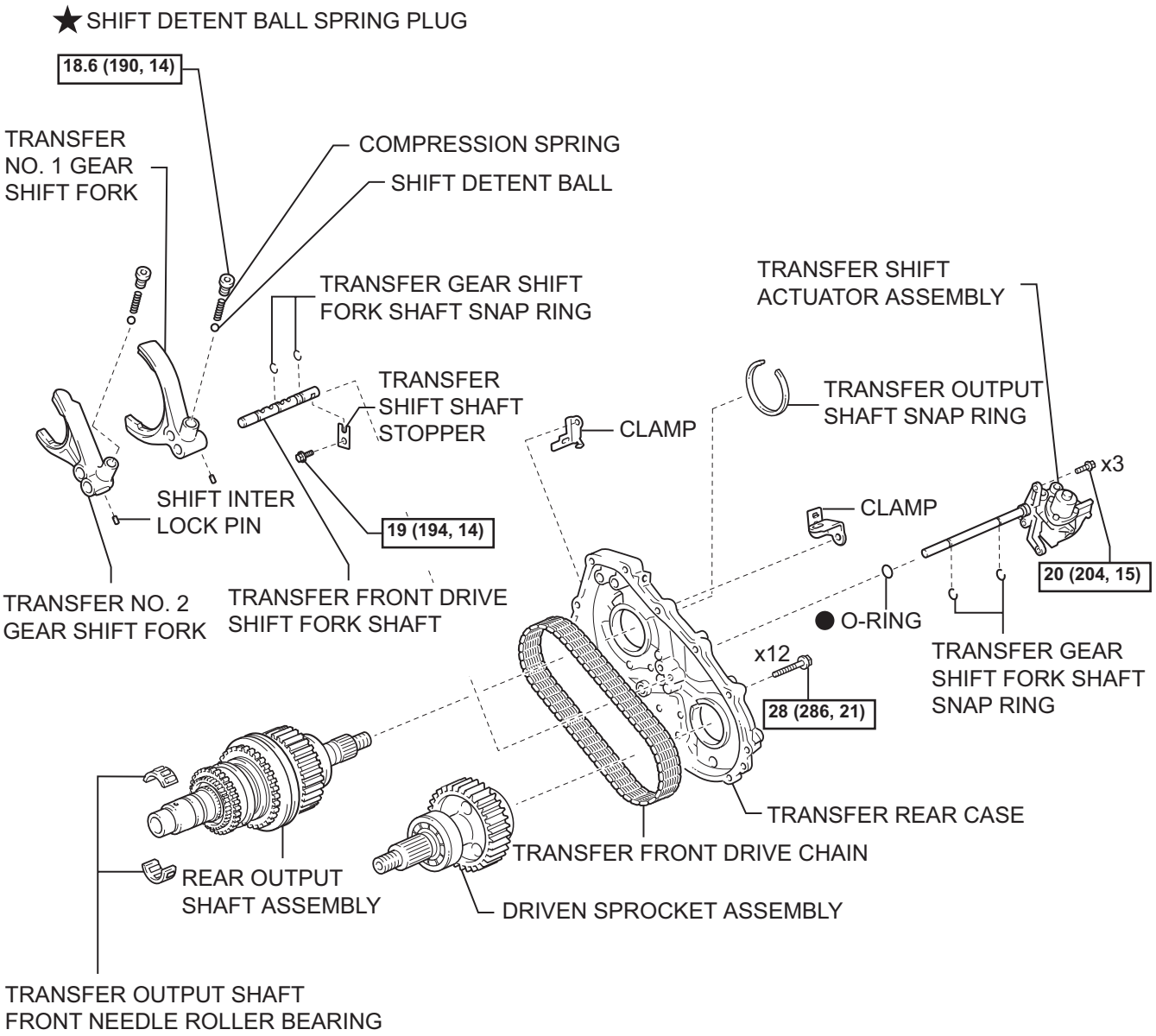

N*m (kgf*cm, ft*lbf) : Specified torque

● Non-reusable part

★ Precoated part

P

C125241E03

REAR OUTPUT SHAFT ASSEMBLY:

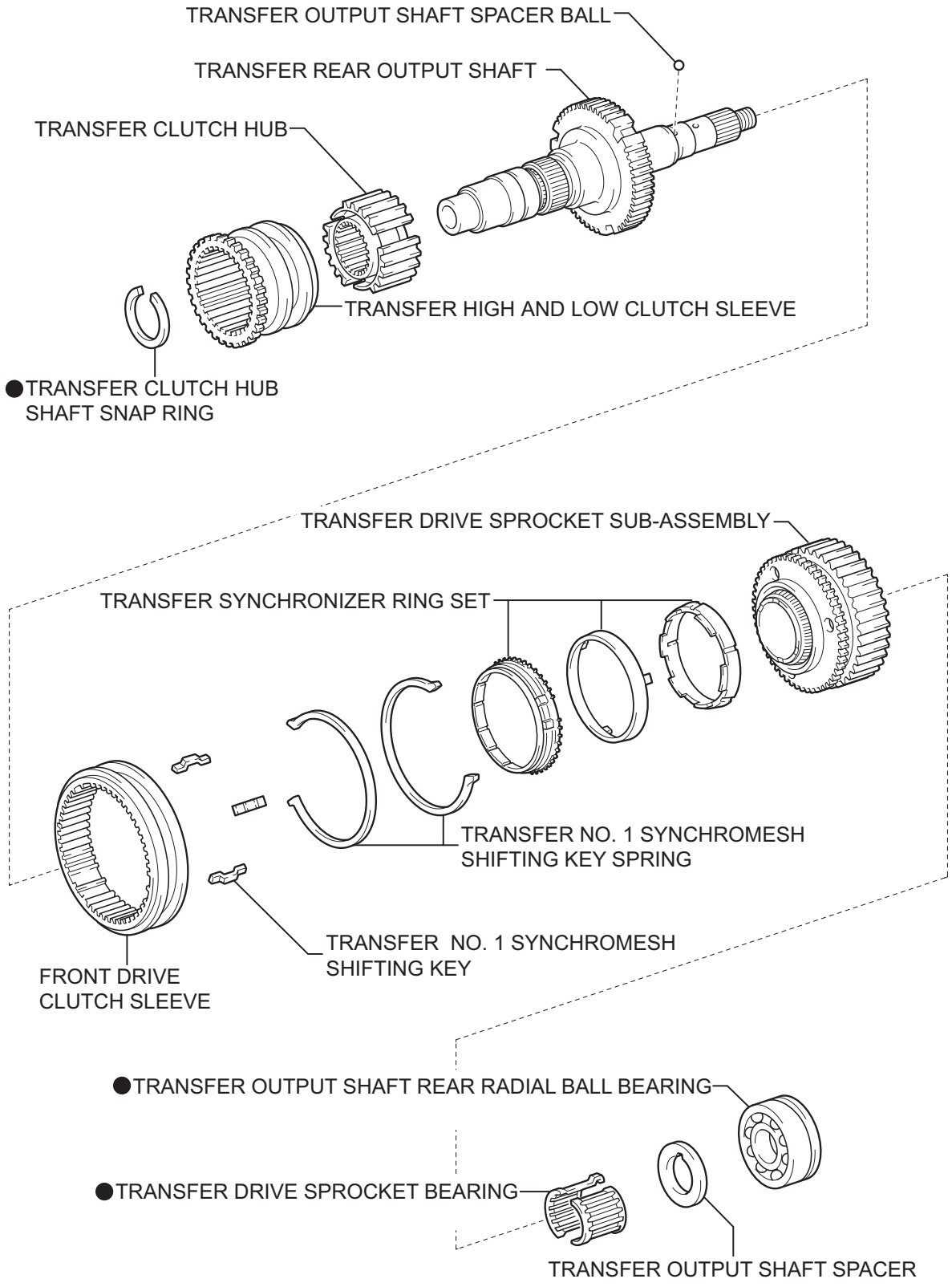

● Non-reusable part

P

C114122E02

TF

INPUT SHAFT ASSEMBLY:

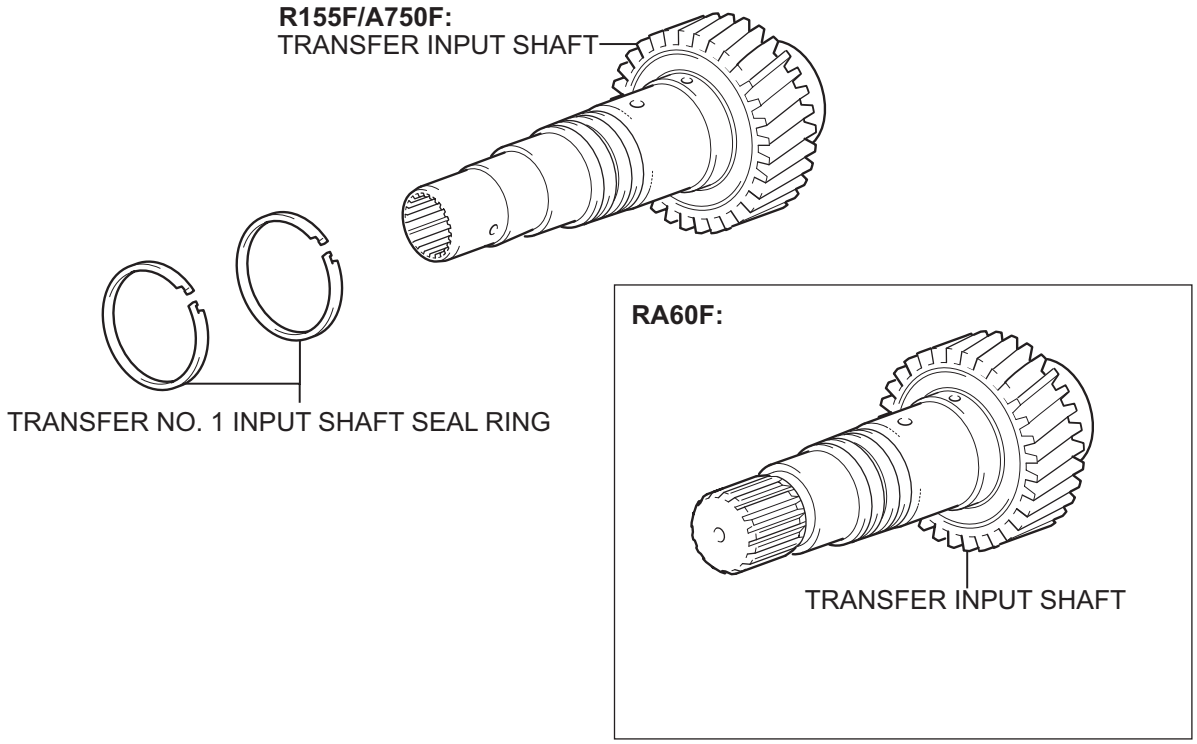

P C125243E01

DRIVEN SPROCKET ASSEMBLY:

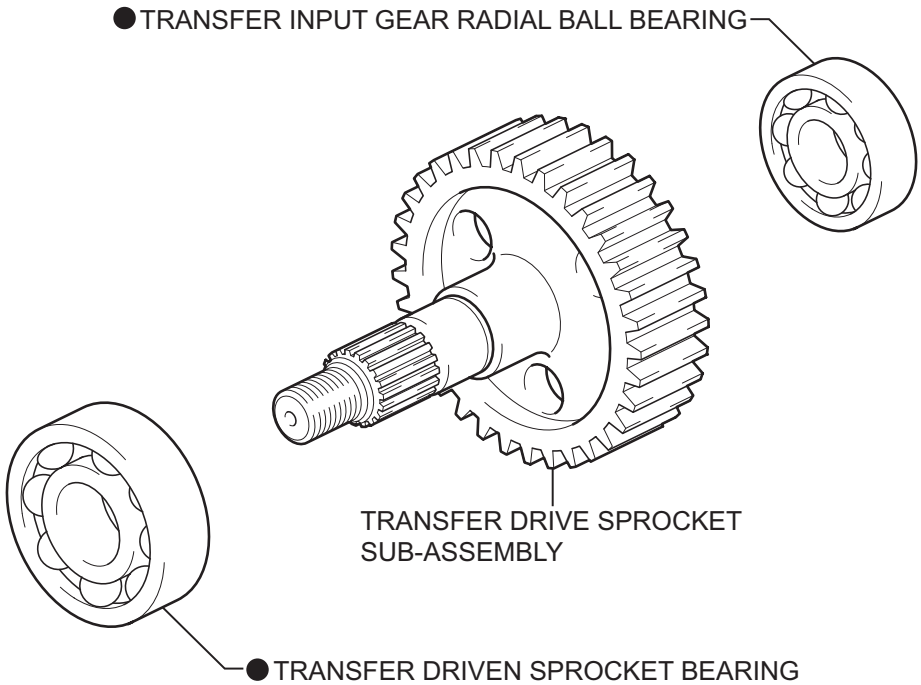

● Non-reusable part

P C125244E01

LOW PLANETARY GEAR ASSEMBLY:

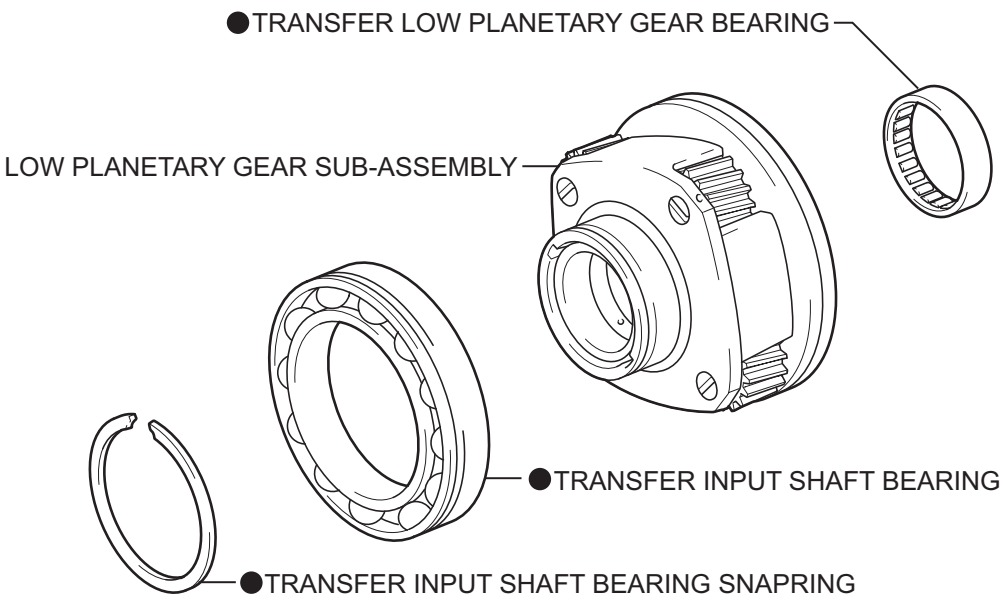

● Non-reusable part

P

C125245E01

TF

TOUCH SELECT 2-4 AND HIGH-LOW SYSTEM

PARTS LOCATION

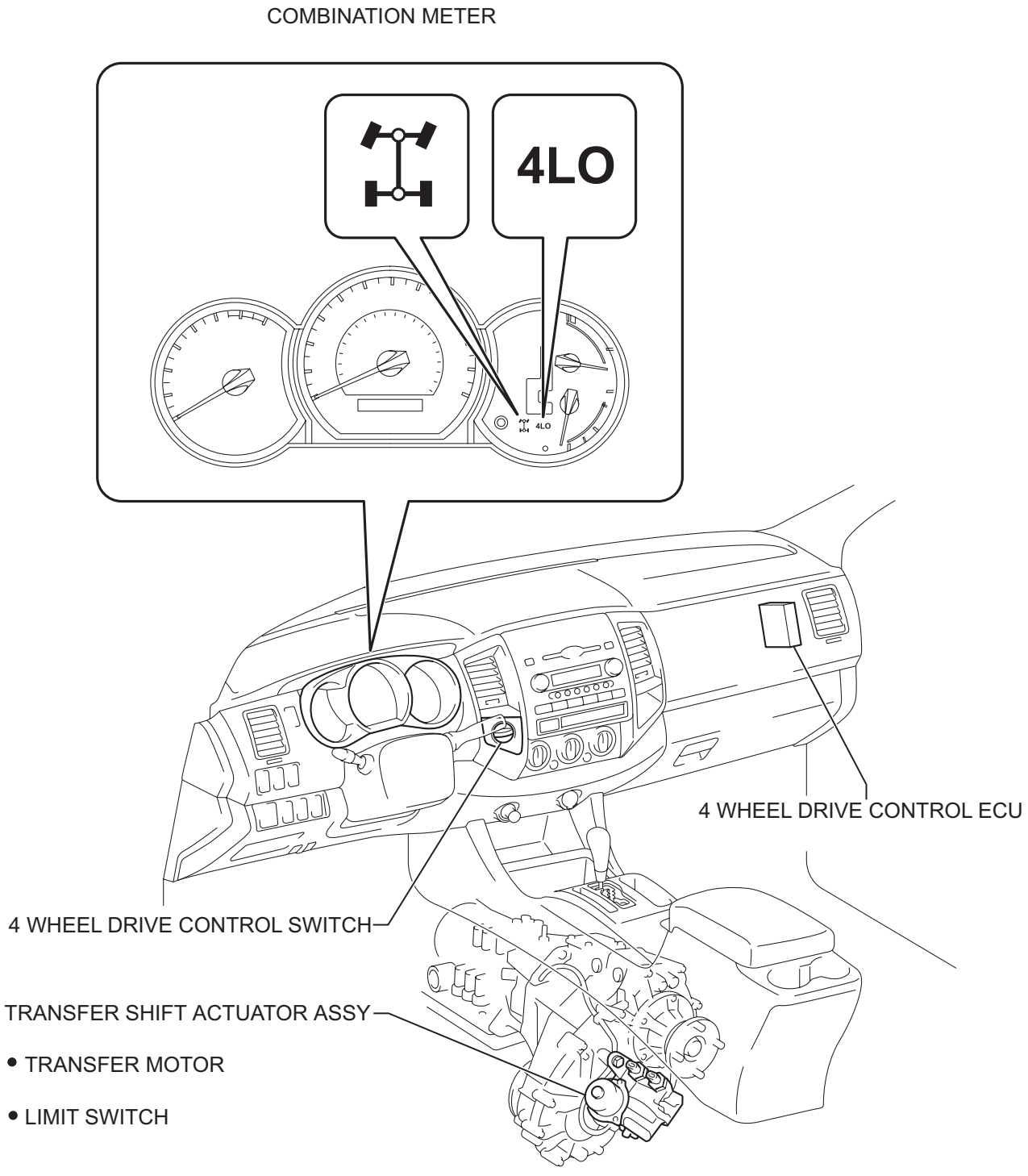

SYSTEM DIAGRAM

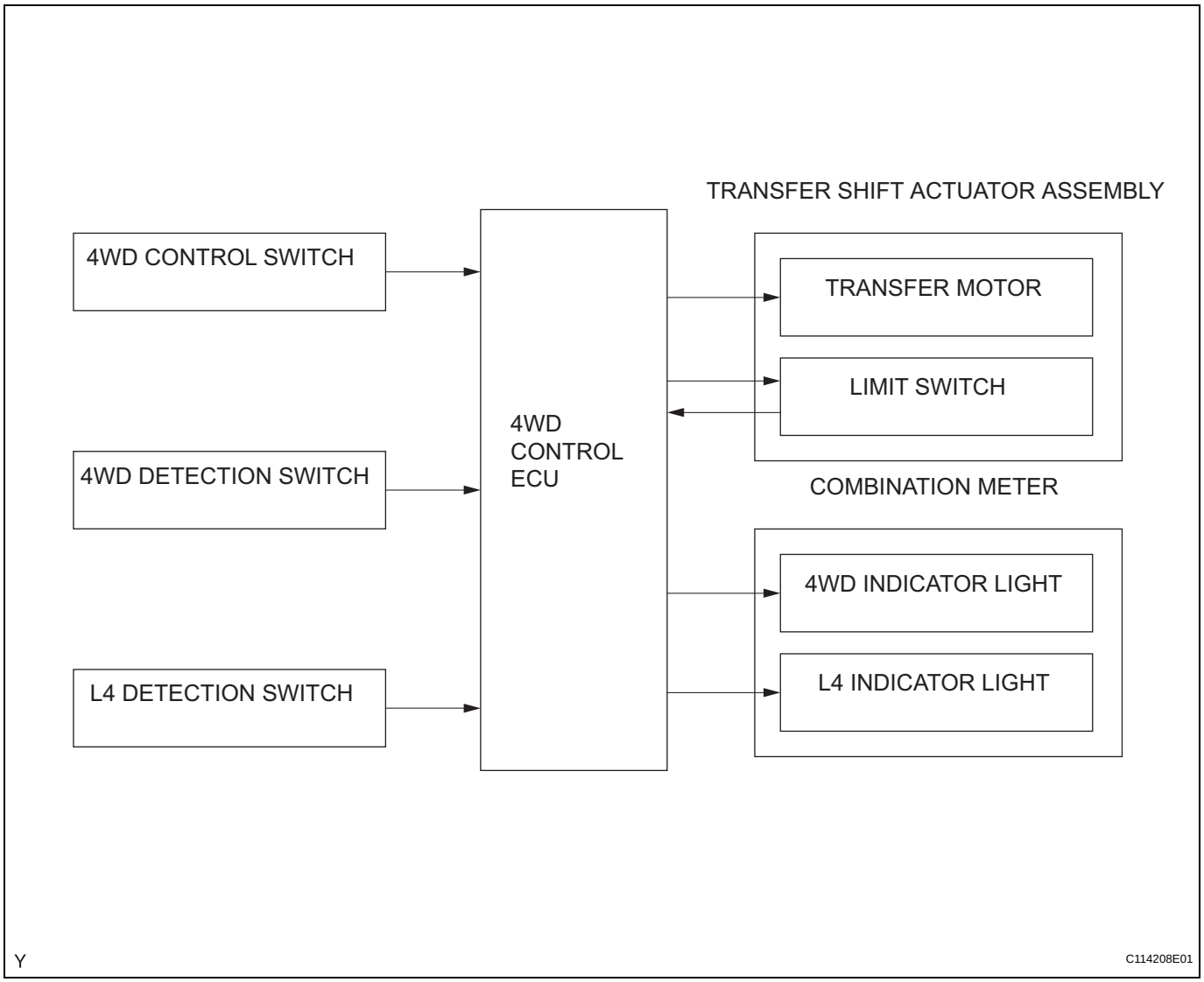

TF

PROPELLER SHAFT SYSTEM

PROBLEM SYMPTOMS TABLE

HINT:
Use the table below to help you find the cause of the problem. The numbers indicate the ranked order of probability of each of the possible causes. Check each part in order. If necessary, replace these parts.

Symptom	Suspected area	See page
Noise	1. Propeller shaft universal joint spider bearing (Regular Cab 2WD)	PR-3
	2. Propeller shaft universal joint spider bearing (Access Cab 2WD and Double Cab 2WD)	PR-8
	3. Front propeller shaft universal joint spider bearing (4WD)	PR-16
	4. Propeller shaft universal joint spider bearing (Regular Cab 4WD)	PR-22
	5. Propeller shaft universal joint spider bearing (Access Cab 4WD and Double Cab 4WD)	PR-27
Vibration	1. Propeller shaft (Runout) (Regular Cab 2WD)	PR-4
	2. Propeller shaft (Runout) (Access Cab 2WD and Double Cab 2WD)	PR-11
	3. Front propeller shaft (Runout) (4WD)	PR-18
	4. Rear propeller shaft (Runout) (Regular Cab 4WD)	PR-23
	5. Rear propeller shaft (Runout) (Access Cab 4WD and Double Cab 4WD)	PR-29
	6. Propeller shaft (Imbalance)	-

PROPELLER SHAFT ASSEMBLY (for Regular Cab 2WD)

COMPONENTS

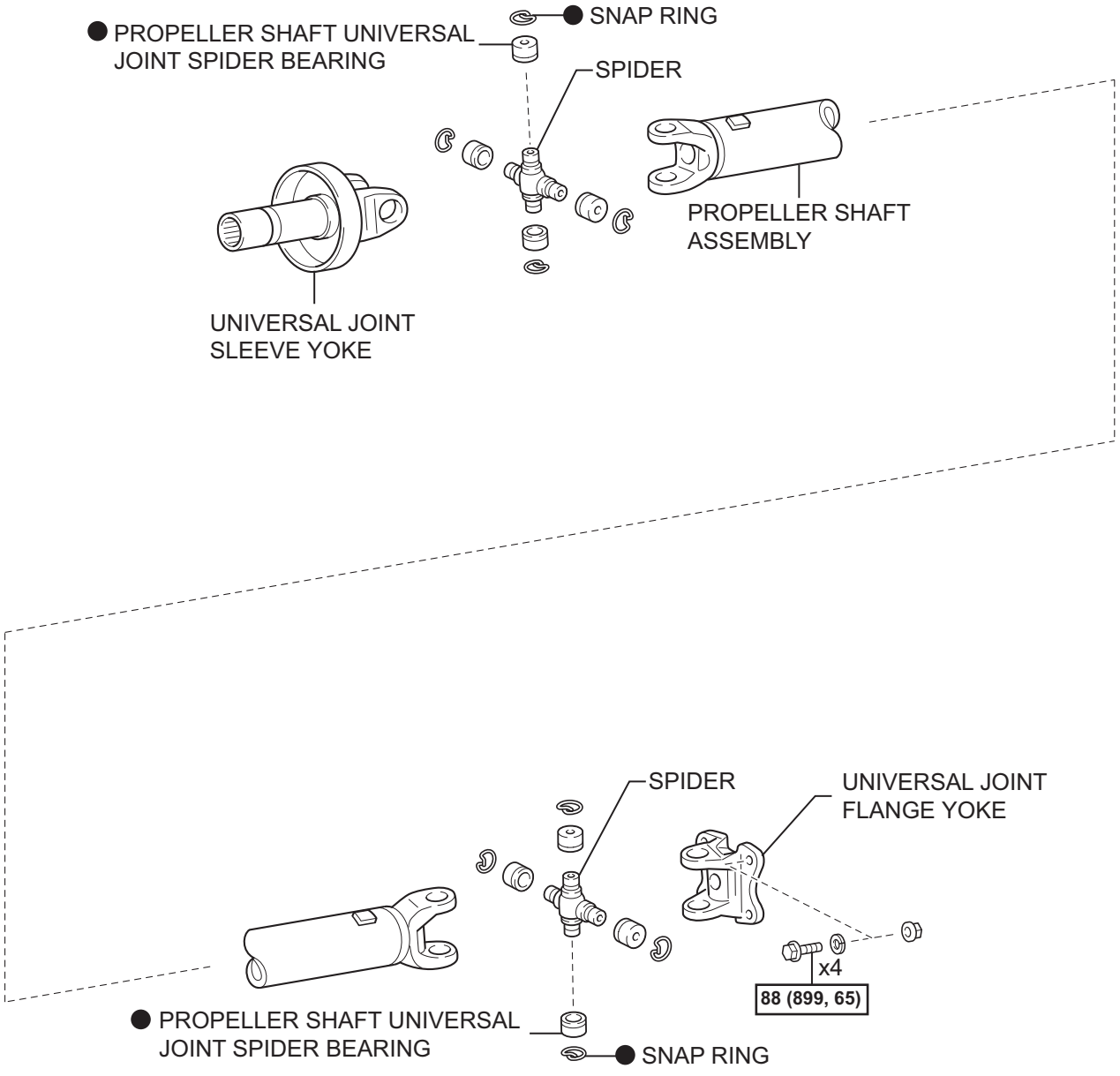

N*m (kgf*cm, ft*lbf) : Specified torque

● Non-reusable part

N

C114109E02

PR

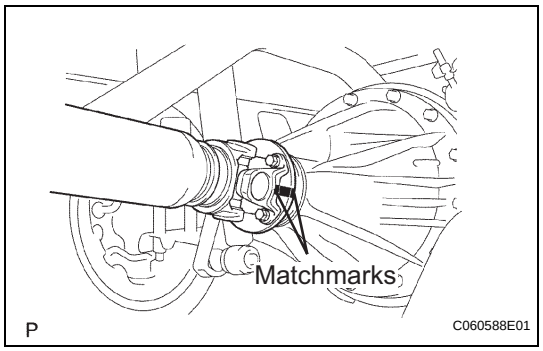

REMOVAL

1. REMOVE PROPELLER SHAFT ASSEMBLY

(a) Place matchmarks on the propeller shaft flange and differential flange.

(b) Remove the 4 nuts, 4 bolts, 4 washers and front propeller shaft.

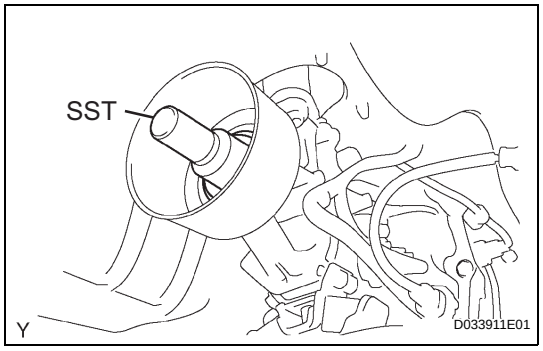

(c) Remove the propeller shaft.

(d) Insert SST into the transmission to prevent oil leakage.
SST 09325-40010

PROPELLER SHAFT ASSEMBLY (for Access Cab 2WD and Double Cab 2WD)

COMPONENTS

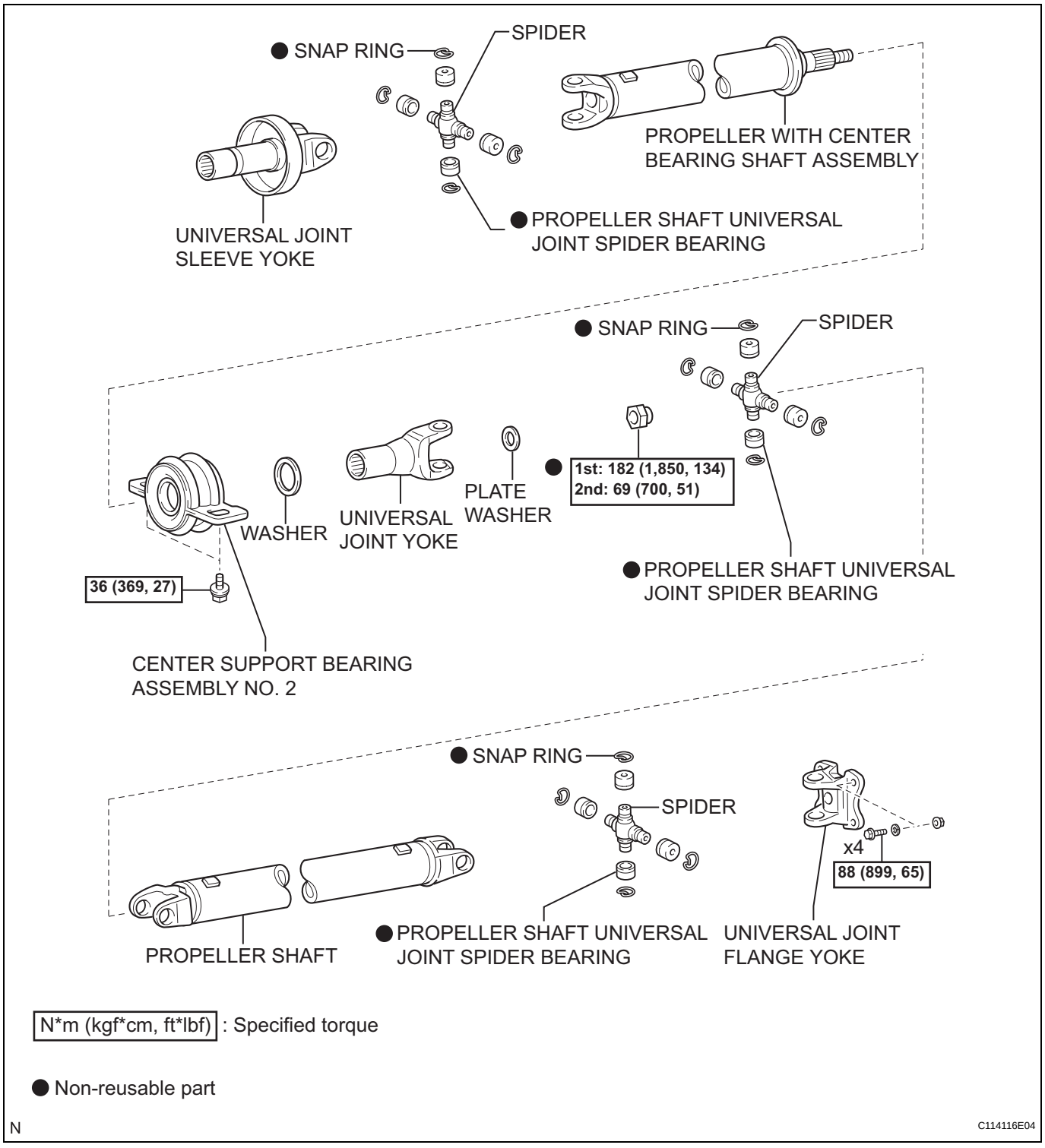

N*m (kgf*cm, ft*lbf) : Specified torque

● Non-reusable part

N

C114116E04

PR

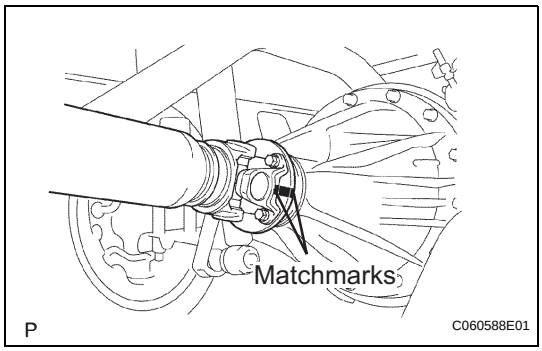

REMOVAL

1. REMOVE PROPELLER WITH CENTER BEARING SHAFT ASSEMBLY

(a) Place matchmarks on the propeller shaft flange and differential flange.

(b) Remove the 4 nuts, 4 bolts and 4 washers, and remove the propeller shaft.

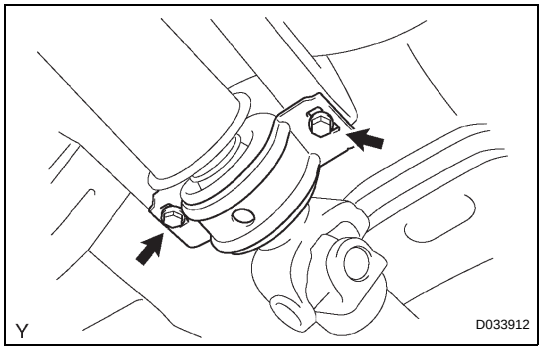

(c) Remove the 2 center support bearing bolts from the frame crossmember.

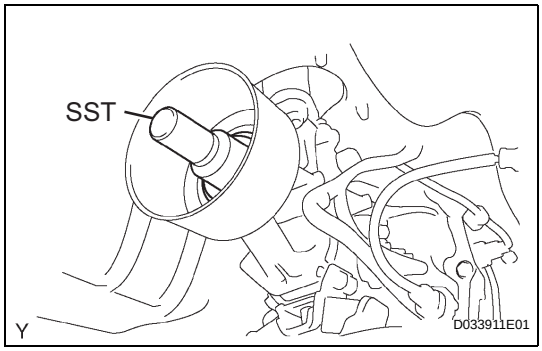

(d) Pull out the propeller shaft.

(e) Insert SST into the transmission to prevent oil leakage.

SST 09325-40010

PR

FRONT PROPELLER SHAFT ASSEMBLY (for 4WD)

COMPONENTS

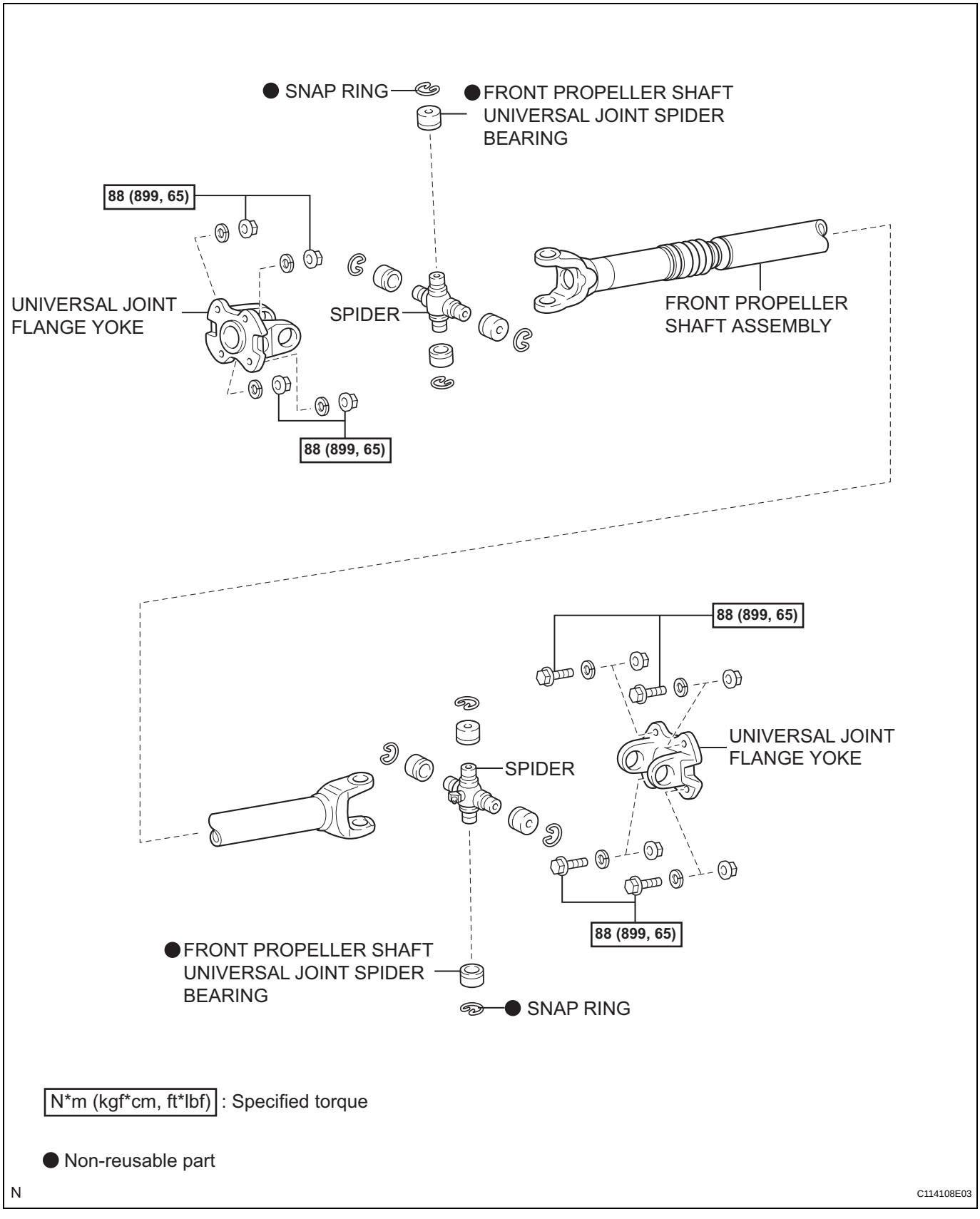

N*m (kgf*cm, ft*lbf) : Specified torque

● Non-reusable part

N

C114108E03

PR

REMOVAL

1. REMOVE EXHAUST FRONT PIPE ASSEMBLY NO. 2 (for 1GR-FE) (See page EX-3)

2. REMOVE PROPELLER SHAFT HEAT INSULATOR BRACKET SUB-ASSEMBLY

(a) Remove the 2 bolts and propeller shaft heat insulator bracket.

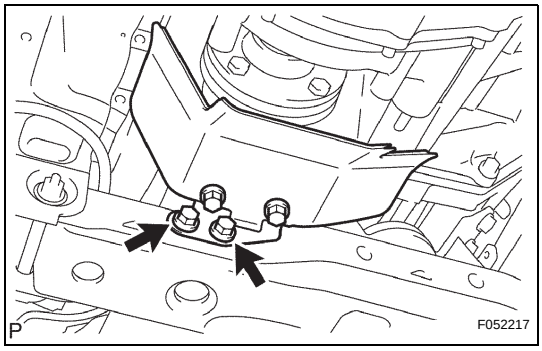

3. REMOVE FRONT PROPELLER SHAFT ASSEMBLY

(a) Place matchmarks on the propeller shaft flange and differential flange.

(b) Remove the 4 nuts, 4 bolts, 4 washers and front propeller shaft.

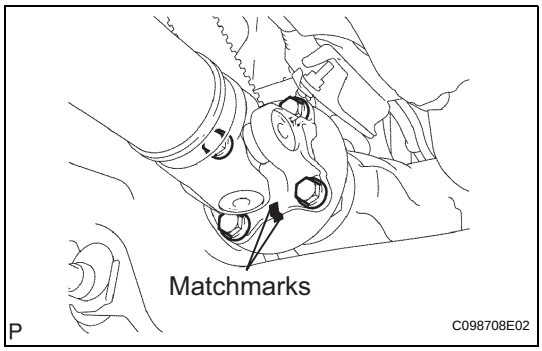

(c) Place matchmarks on the propeller shaft flange and transfer flange.

(d) Remove the 4 nuts, 4 washers and front propeller shaft.

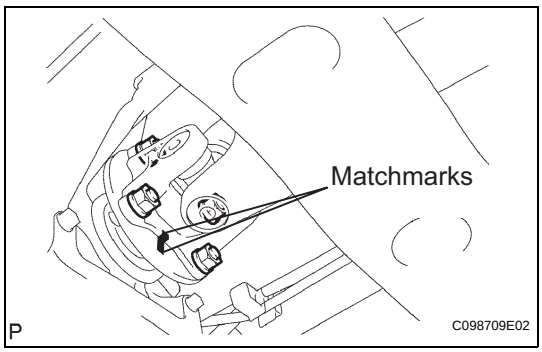

PR

REAR PROPELLER SHAFT ASSEMBLY (for Regular Cab 4WD)

COMPONENTS

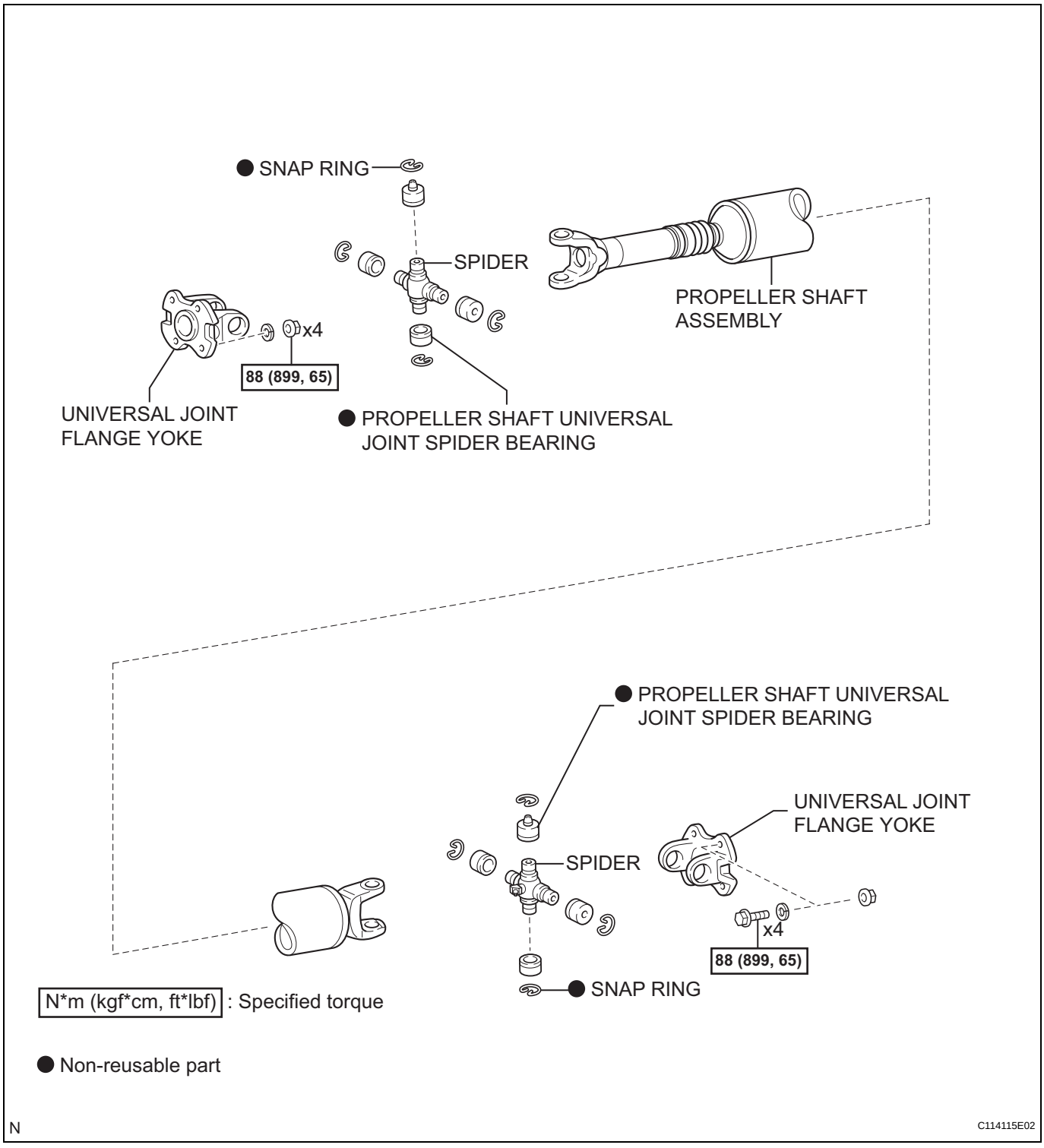

PR

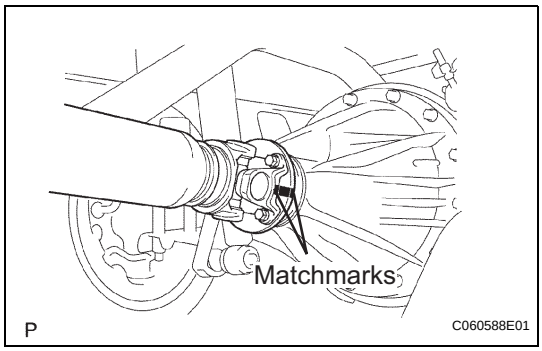

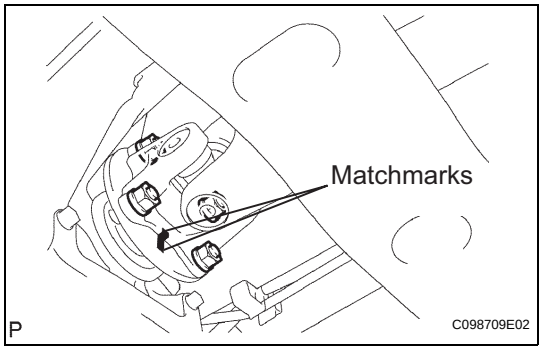

REMOVAL

1. REMOVE PROPELLER SHAFT ASSEMBLY

(a) Place matchmarks on the propeller shaft flange and differential flange.

(b) Remove the 4 nuts, 4 bolts, 4 washers and front propeller shaft.

(c) Place matchmarks on the propeller shaft flange and transfer flange.

(d) Remove the 4 nuts, 4 washers and front propeller shaft.

REAR PROPELLER SHAFT ASSEMBLY (for Access Cab 4WD and Double Cab 4WD)

COMPONENTS

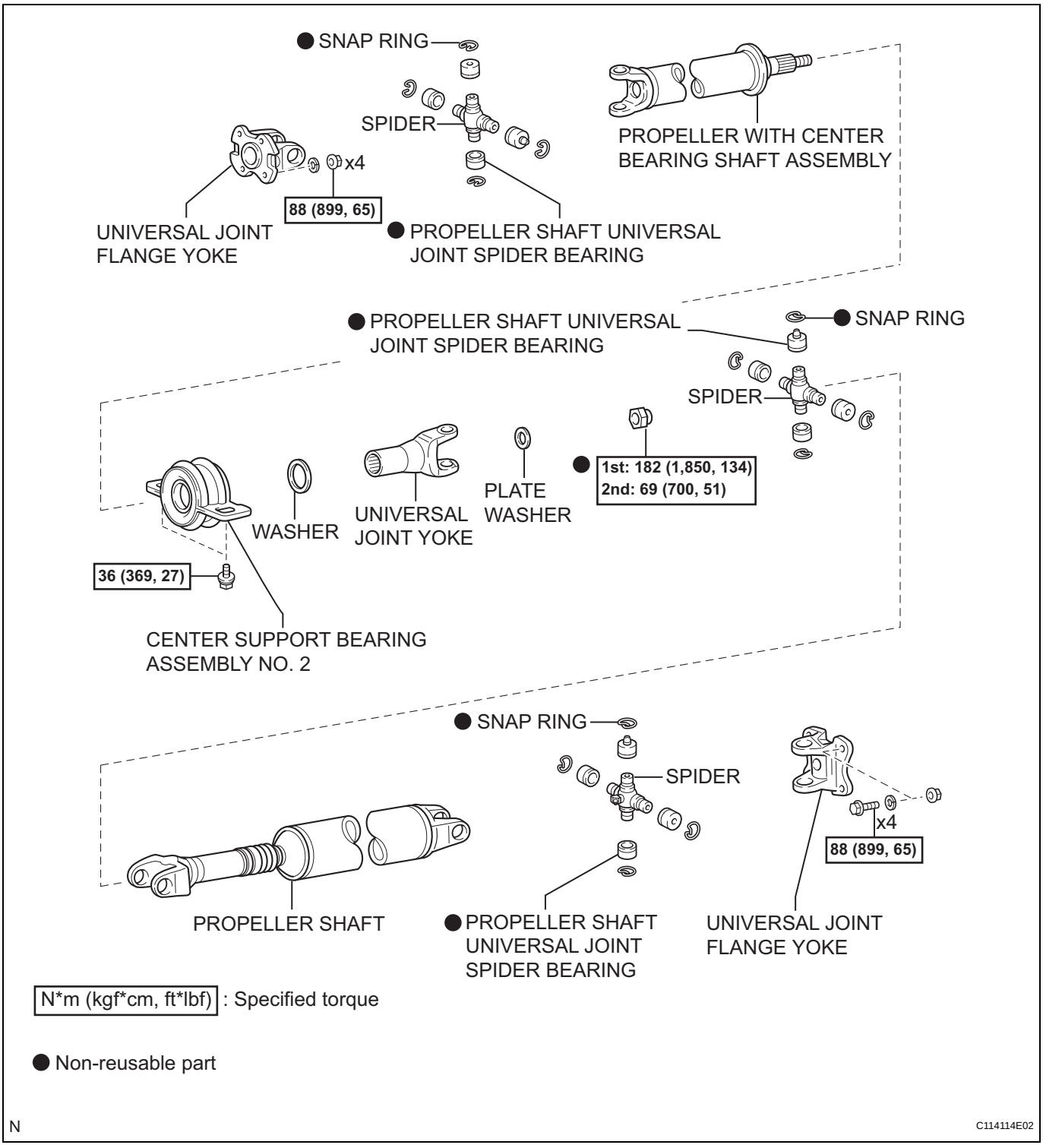

PR

N*m (kgf*cm, ft*lbf) : Specified torque

● Non-reusable part

N

C114114E02

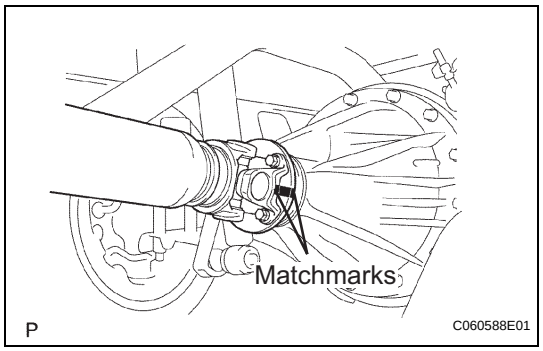

REMOVAL

1. REMOVE PROPELLER WITH CENTER BEARING SHAFT ASSEMBLY

(a) Place matchmarks on the propeller shaft flange and differential.

(b) Remove the 4 nuts, 4 bolts, 4 washers and front propeller shaft.

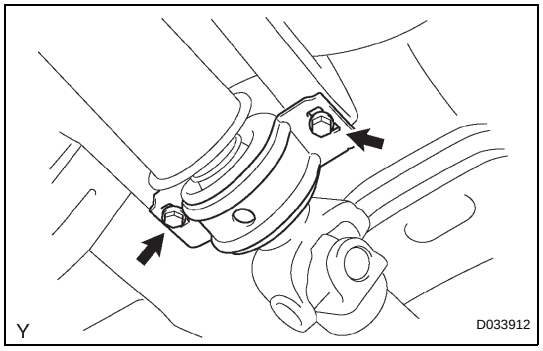

(c) Remove the 2 center support bearing bolts from the frame crossmember.

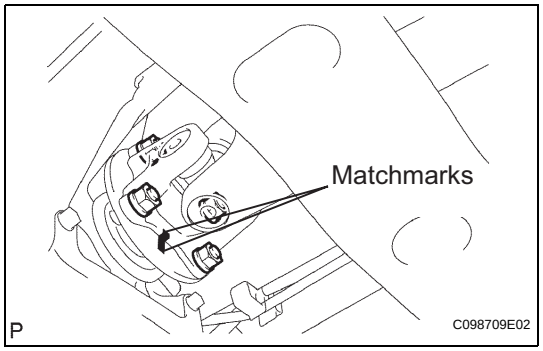

(d) Place matchmarks on the propeller shaft flange and transfer flange.

(e) Remove the 4 nuts, 4 washers and front propeller shaft.

FRONT DRIVE SHAFT (for 4WD)

COMPONENTS

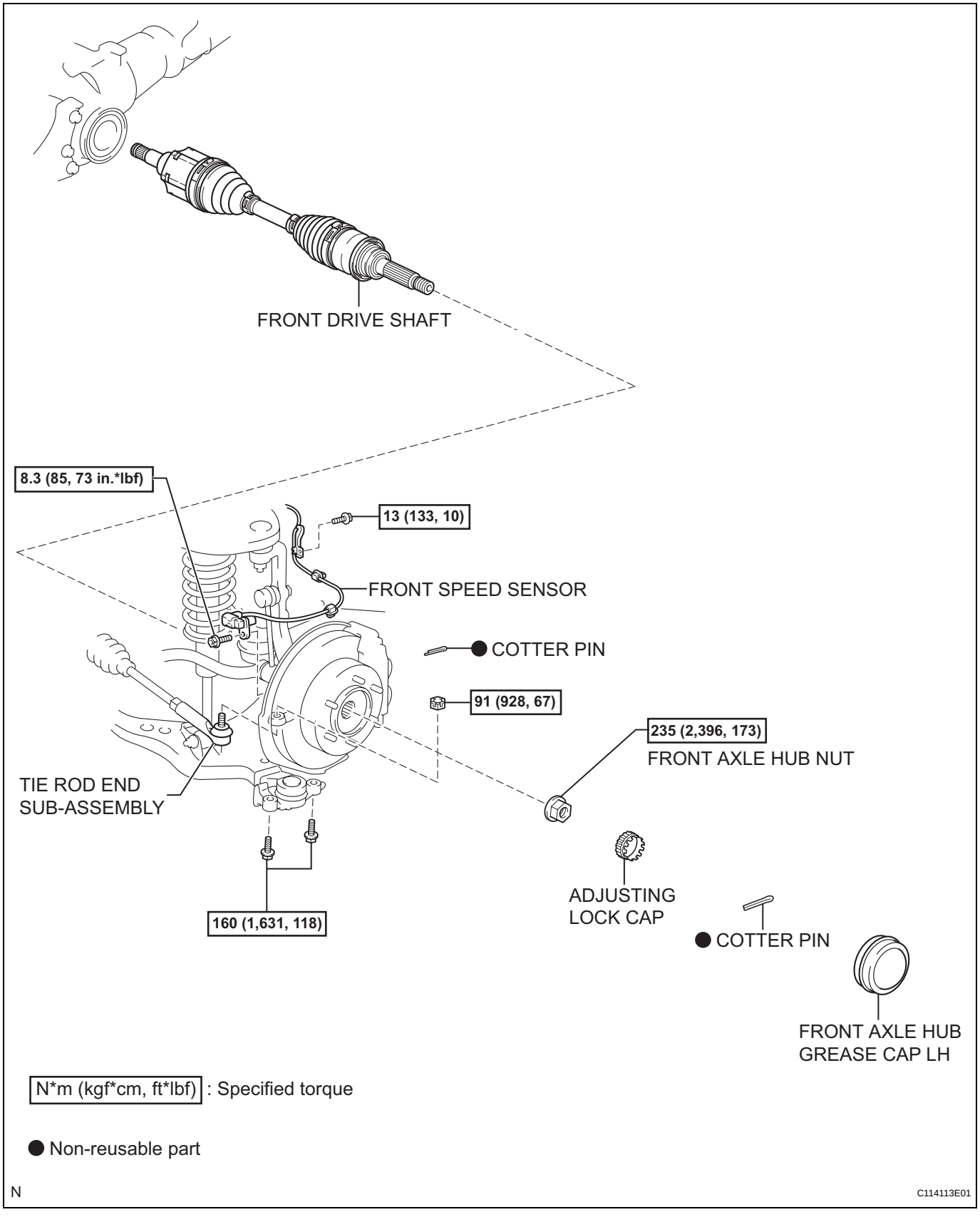

DS

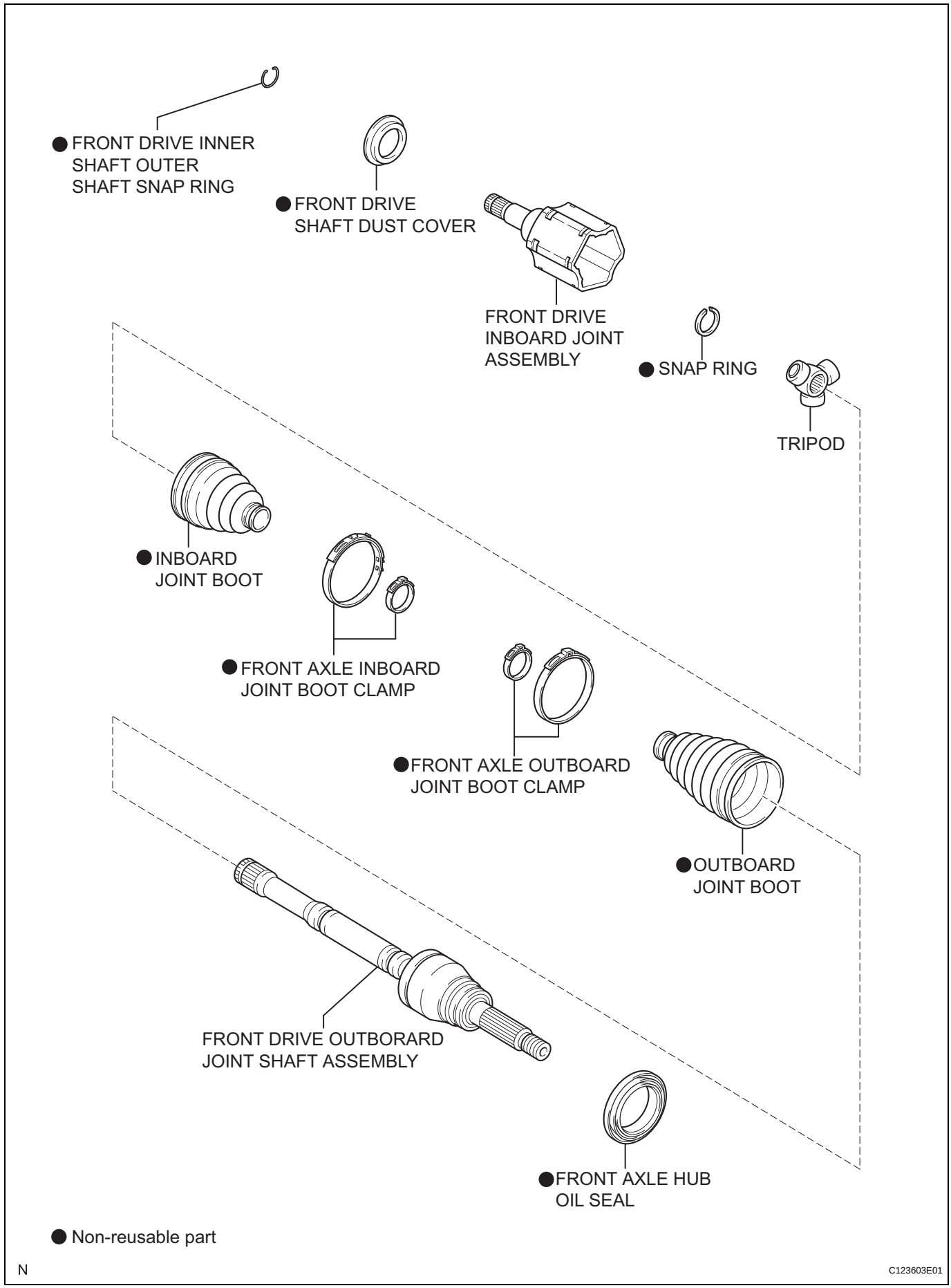
● FRONT DRIVE INNER SHAFT OUTER SHAFT SNAP RING
● FRONT DRIVE SHAFT DUST COVER
FRONT DRIVE INBOARD JOINT ASSEMBLY
● SNAP RING
TRIPOD
● INBOARD JOINT BOOT
● FRONT AXLE INBOARD JOINT BOOT CLAMP
● FRONT AXLE OUTBOARD JOINT BOOT CLAMP
● OUTBOARD JOINT BOOT
FRONT DRIVE OUTBORARD JOINT SHAFT ASSEMBLY
● FRONT AXLE HUB OIL SEAL
● Non-reusable part
N
C123603E01

DS

DIFFERENTIAL SYSTEM

PRECAUTION

1. **Before disassembly, clean the outside of the front and rear differential assembly and remove any sand and mud to prevent it from entering the assembly during disassembly and installation.**
2. **When removing connected parts made of a light alloy, such as front and rear differential carrier covers, tap them off with a plastic hammer. Do not attempt to pry them off with a screwdriver.**
3. **Always arrange disassembled parts in order and protect them from dust.**
4. **Before installation, thoroughly clean and dry each part and then apply hypoid gear oil LSD to it. Do not use alkaline cleaner for aluminum or rubber parts and ring gear set bolts. Also, do not clean rubber parts such as O-rings or oil seals with white gasoline.**
5. **Coat all sliding surfaces and rotating parts with hypoid gear oil LSD.**
6. **When holding components in a vice, be sure to place an aluminum sheet under the M part. Do not put them directly in the vice.**
7. **Be careful not to damage the contact surfaces of the case. Such damage could cause oil leakage.**
8. **Before applying sealant, remove any deposited oil sealant and clean the part to be sealed using white gasoline.**
9. **Do not supply oil immediately after installing sealed parts. Leave them for at least an hour.**
10. **Damage to the surfaces in direct contact with oil seals, O-rings or gaskets could cause oil leakage. Special attention should be paid.**
11. **When press-fitting an oil seal, be careful not to damage the oil seal lip and outside periphery.**
12. **When replacing a bearing, replace the inner and outer races as a set.**

PARTS LOCATION

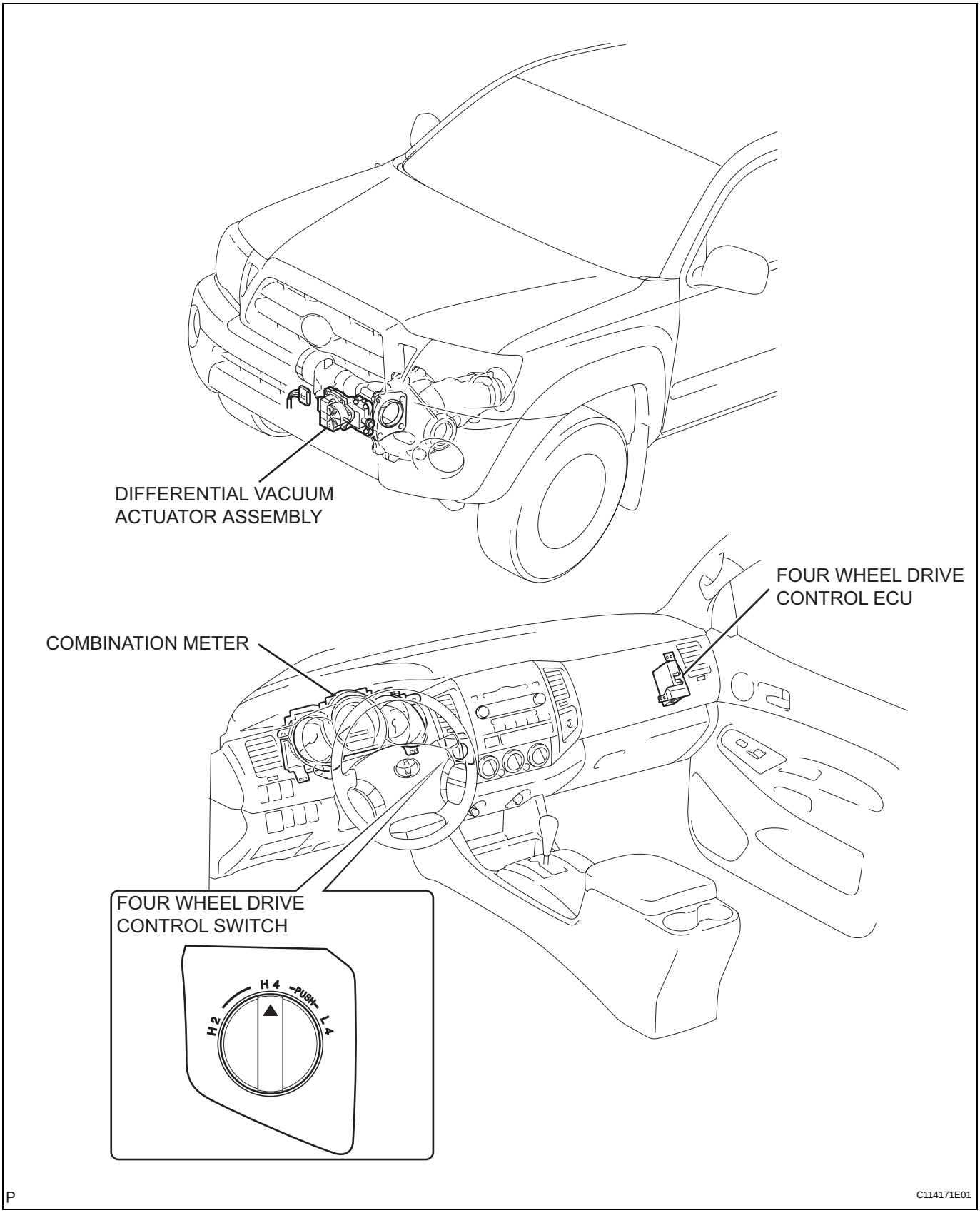

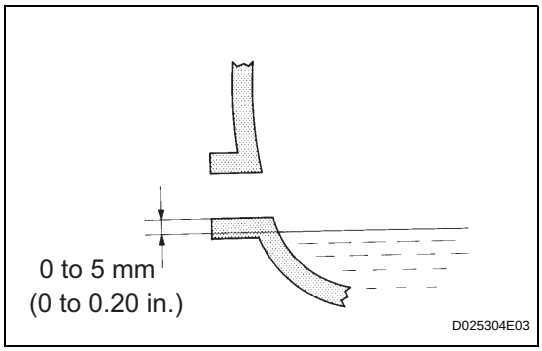

DIFFERENTIAL OIL

ADJUSTMENT

1. INSPECT DIFFERENTIAL OIL

(a) Stop the vehicle on a level place.

(b) Remove the differential filler plug and gasket.

(c) Check that the oil level is within 5mm (0 to 0.20 in.) of the bottom of the filler plug opening.

NOTICE:

- **Excessively large or small quantities of oil may cause problems.**
- **After replacing the oil, drive the vehicle and check the oil level again.**

HINT:

If necessary, fill the rear differential carrier assembly with hypoid gear oil.

Oil grade:

Hypoid gear oil API GL-5
Recommended viscosity:
Above -18°C (0°F) SAE 90
Below -18°C (0°F) SAE 80W or 80W-90

Capacity:

Differential carrier assembly front:
1.45 to 1.55 litters
(1.54 to 1.64 US qts, 1.28 to 1.36 lmp. qts)
Rear differential carrier assembly:
2WD: 3.26 to 3.36 litters
(3.45 to 3.55 US qts, 2.87 to 2.95 lmp. qts)
Pre, 4WD: 2.75 to 2.85 litters
(2.91 to 3.01 US qts, 2.42 to 2.50 lmp. qts)

(d) Check for oil leakage if the oil level is low.

(e) Install the differential filler plug and a new gasket.

Torque: Front differential carrier assembly
39 N*m (398 kgf*cm, 29 ft.*lbf)
Rear differential carrier assembly
49 N*m (500 kgf*cm, 36 ft.*lbf)

DF

REAR DIFFERENTIAL CARRIER OIL SEAL

REMOVAL

1. **DRAIN DIFFERENTIAL OIL**
2. **REMOVE PROPELLER SHAFT ASSEMBLY (for 2WD on, Regular Cab) (See page PR-3)**
3. **REMOVE PROPELLER WITH CENTER BEARING SHAFT ASSEMBLY (for 2WD on, Except Regular Cab) (See page PR-8)**
4. **REMOVE PROPELLER SHAFT ASSEMBLY (for 4WD on, Regular Cab) (See page PR-16)**
5. **REMOVE PROPELLER WITH CENTER BEARING SHAFT ASSEMBLY (for 4WD on, Regular Cab) (See page PR-27)**
6. **REMOVE REAR DRIVE PINION NUT**
   (a) Using SST and a hammer, unstake the nut.
   SST 09930-00010

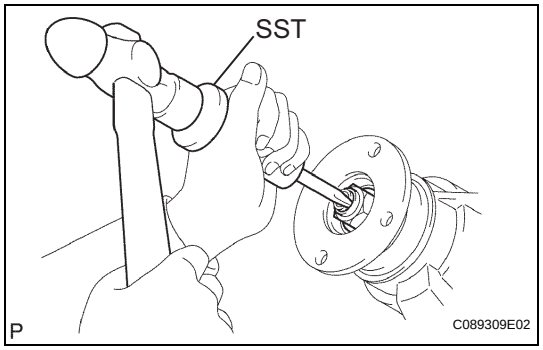

   (b) Using SST to hold the companion flange, remove the nut.
   SST 09330-00021

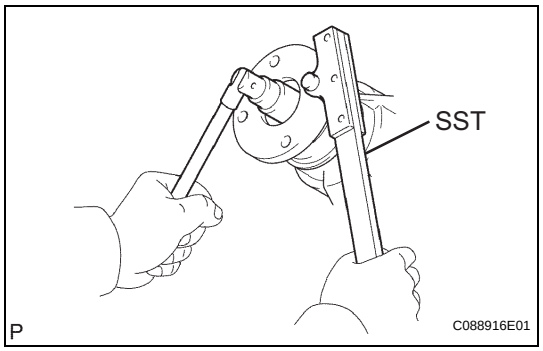

7. **REMOVE REAR DRIVE PINION COMPANION FLANGE SUB-ASSEMBLY REAR**
   (a) Using SST, remove the companion flange.
   SST 09950-30012 (09951-03010, 09953-03010, 09954-03010, 09955-03030, 09956-03030)

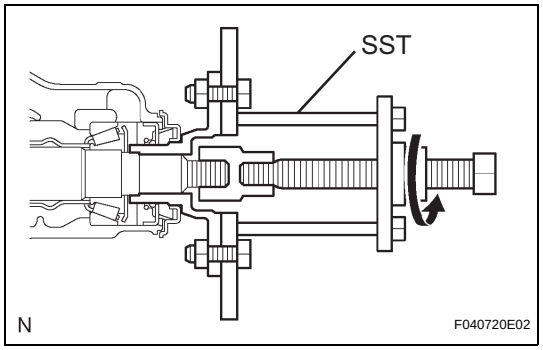

DF

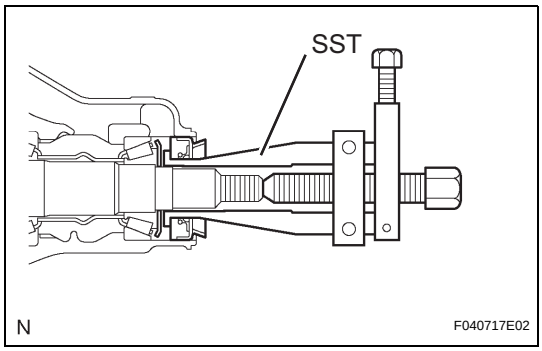

8. REMOVE REAR DIFFERENTIAL CARRIER OIL SEAL

(a) Using SST, remove the oil seal.
SST 09308-10010

9. REMOVE REAR DIFFERENTIAL DRIVE PINION OIL SLINGER (w/ Differential Lock)

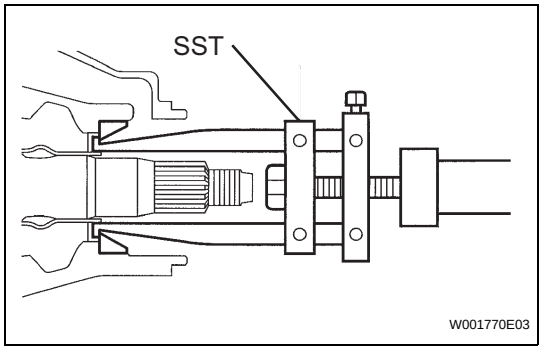

10. REMOVE REAR DRIVE PINION FRONT TAPERED ROLLER BEARING

(a) Using SST, remove the front bearing.
SST 09556-22010

(b) Using SST, remove the front bearing outer race.
SST 09308-00010

(c) Using a screwdriver, bend the oil storage ring and remove it.

11. REMOVE REAR DIFFERENTIAL DRIVE PINION BEARING SPACER

DIFFERENTIAL SIDE GEAR SHAFT OIL SEAL (for 4WD)

REMOVAL

1. **DISCONNECT CABLE FROM NEGATIVE BATTERY TERMINAL**
2. **REMOVE FRONT WHEELS**
3. **REMOVE NO. 1 ENGINE UNDER COVER SUB-ASSEMBLY**
   (a) Remove the 4 bolts and No. 1 engine under cover sub-assembly.
4. **REMOVE NO. 2 ENGINE UNDER COVER SUB-ASSEMBLY (w/ Engine Under Cover No, 2)**
   (a) Remove the 4 bolts and No. 2 engine under cover sub-assembly.
5. **DRAIN DIFFERENTIAL OIL**
6. **REMOVE FRONT AXLE HUB LH NUT (See page DS-3)**
7. **REMOVE FRONT AXLE HUB RH NUT**
   HINT:
   Use the same procedure as for the LH side.
8. **SEPARATE FRONT STABILIZER LINK ASSEMBLY LH (See page SP-50)**
9. **SEPARATE FRONT STABILIZER LINK ASSEMBLY RH (See page SP-50)**
10. **SEPARATE FRONT SPEED SENSOR LH (See page BC-303)**
11. **SEPARATE FRONT SPEED SENSOR RH**
    HINT:
    Use the same procedure as for the LH side.
12. **SEPARATE TIE ROD END SUB-ASSEMBLY LH (See page PS-54)**
13. **SEPARATE TIE ROD END SUB-ASSEMBLY RH (See page PS-54)**
14. **REMOVE FRONT SUSPENSION LOWER ARM LH (See page DS-4)**
15. **REMOVE FRONT SUSPENSION LOWER ARM RH**
    HINT:
    Use the same procedure as for the LH side.
16. **REMOVE FRONT DRIVE SHAFT ASSEMBLY LH (See page DS-4)**
17. **REMOVE FRONT DRIVE SHAFT ASSEMBLY RH**
    HINT:
    Use the same procedure as for the LH side.

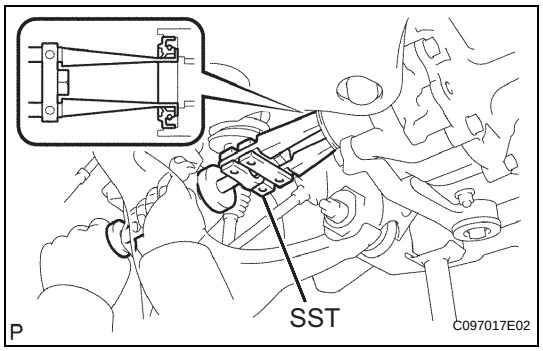

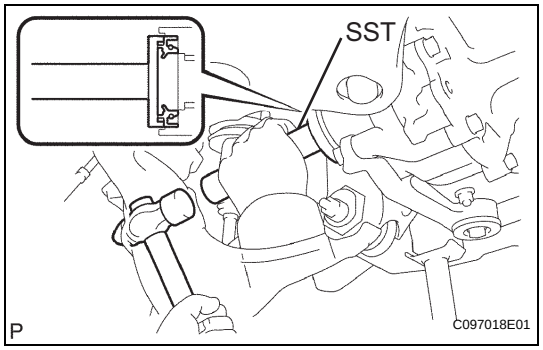

18. **REMOVE DIFFERENTIAL SIDE GEAR SHAFT OIL SEAL**
    (a) Using SST, remove the oil seal.
    SST 09308-00010

INSTALLATION

1. **INSTALL DIFFERENTIAL SIDE GEAR SHAFT OIL SEAL**
    (a) Using SST and a hammer, install a new oil seal.
    SST 09554-30011
    (b) Coat the oil seal lip with MP grease.
2. **INSTALL FRONT DRIVE SHAFT ASSEMBLY LH (See page DS-9)**
3. **INSTALL FRONT DRIVE SHAFT ASSEMBLY RH**
    HINT:
    Use the same procedure as for the LH side.
4. **INSTALL FRONT SUSPENSION LOWER ARM LH (See page DS-9)**
5. **INSTALL FRONT SUSPENSION LOWER ARM RH**
    HINT:
    Use the same procedure as for the LH side.
6. **INSTALL TIE ROD END SUB-ASSEMBLY LH (See page PS-68)**
7. **INSTALL TIE ROD END SUB-ASSEMBLY RH (See page PS-68)**
8. **INSTALL FRONT SPEED SENSOR LH (See page DS-10)**
9. **INSTALL FRONT SPEED SENSOR RH**
    HINT:
    Use the same procedure as for the LH side.
10. **INSTALL FRONT STABILIZER LINK ASSEMBLY LH (See page SP-51)**
11. **INSTALL FRONT STABILIZER LINK ASSEMBLY RH (See page SP-51)**
12. **INSTALL FRONT AXLE HUB LH NUT (See page AH-20)**
13. **INSTALL FRONT AXLE HUB RH NUT**
    HINT:
    Use the same procedure as for the LH side.
14. **ADD DIFFERENTIAL OIL (See page DF-8)**
15. **INSPECT DIFFERENTIAL OIL (See page DF-8)**

16. **INSTALL NO. 1 ENGINE UNDER COVER SUB-ASSEMBLY**
    (a) Install the No. 1 engine under cover sub-assembly with the 4 bolts.
    Torque: 30 N*m (306 kgf*cm, 22 ft.*lbf)

17. **INSTALL NO. 2 ENGINE UNDER COVER SUB-ASSEMBLY (w/ Engine Under Cover No, 2)**
    (a) Install the No. 2 engine under cover sub-assembly with the 4 bolts.
    Torque: 30 N*m (306 kgf*cm, 22 ft.*lbf)

18. **INSTALL FRONT WHEELS**
    Torque: 113 N*m (1,152 kgf*cm, 83 ft.*lbf)

19. **INSPECT AND ADJUST FRONT WHEEL ALIGNMENT**
    HINT:
    (See page SP-7)

20. **CONNECT CABLE TO NEGATIVE BATTERY TERMINAL**
    Torque: 3.9 N*m (40 kgf*cm, 35 in.*lbf)

21. **CHECK VSC SENSOR SIGNAL (w/ VSC)**
    HINT:
    (See page BC-103)

22. **CHECK ABS SENSOR SIGNAL (w/o VSC)**
    HINT:
    (See page BC-7)

FRONT DIFFERENTIAL CARRIER ASSEMBLY (for 4WD)

COMPONENTS

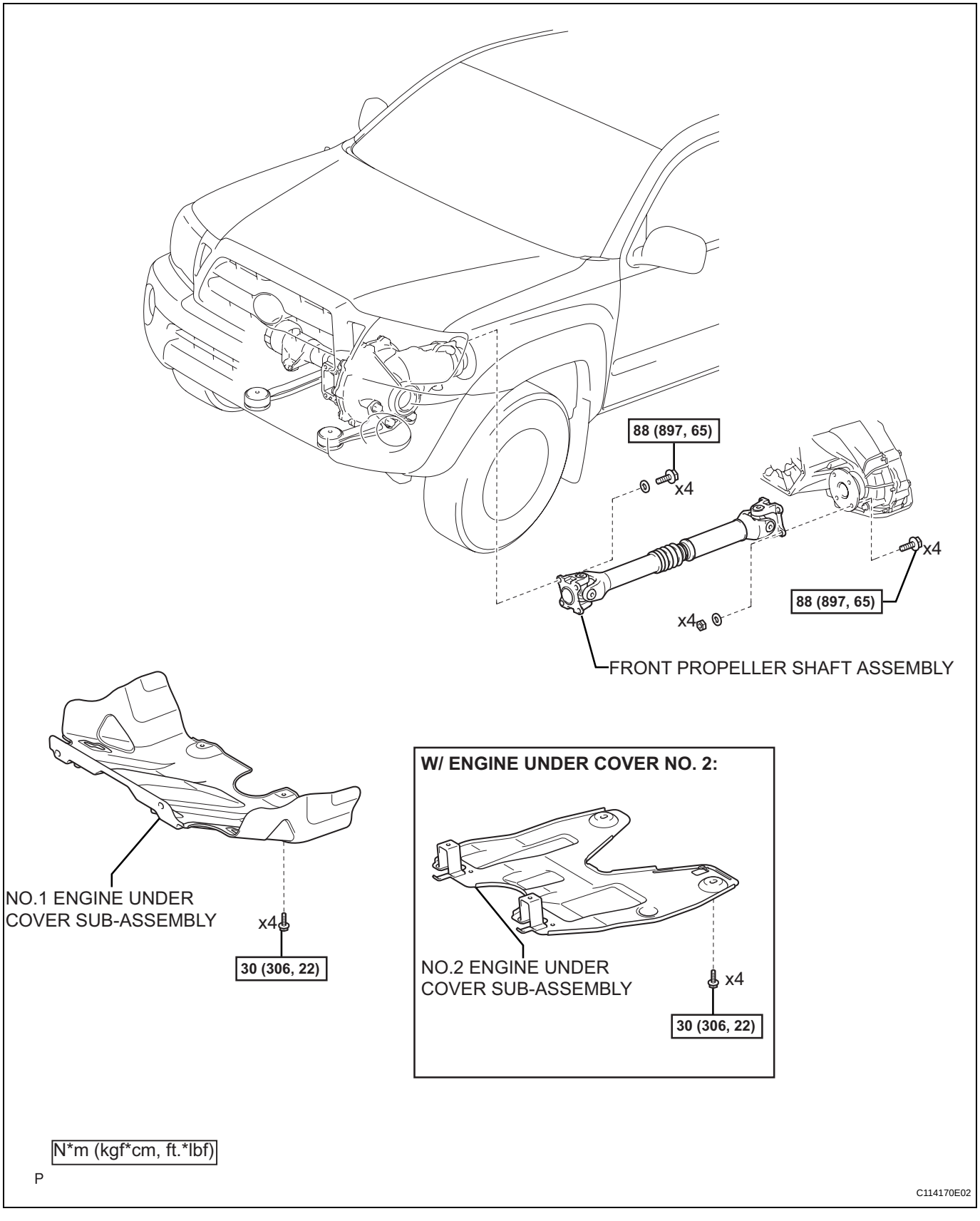

DF

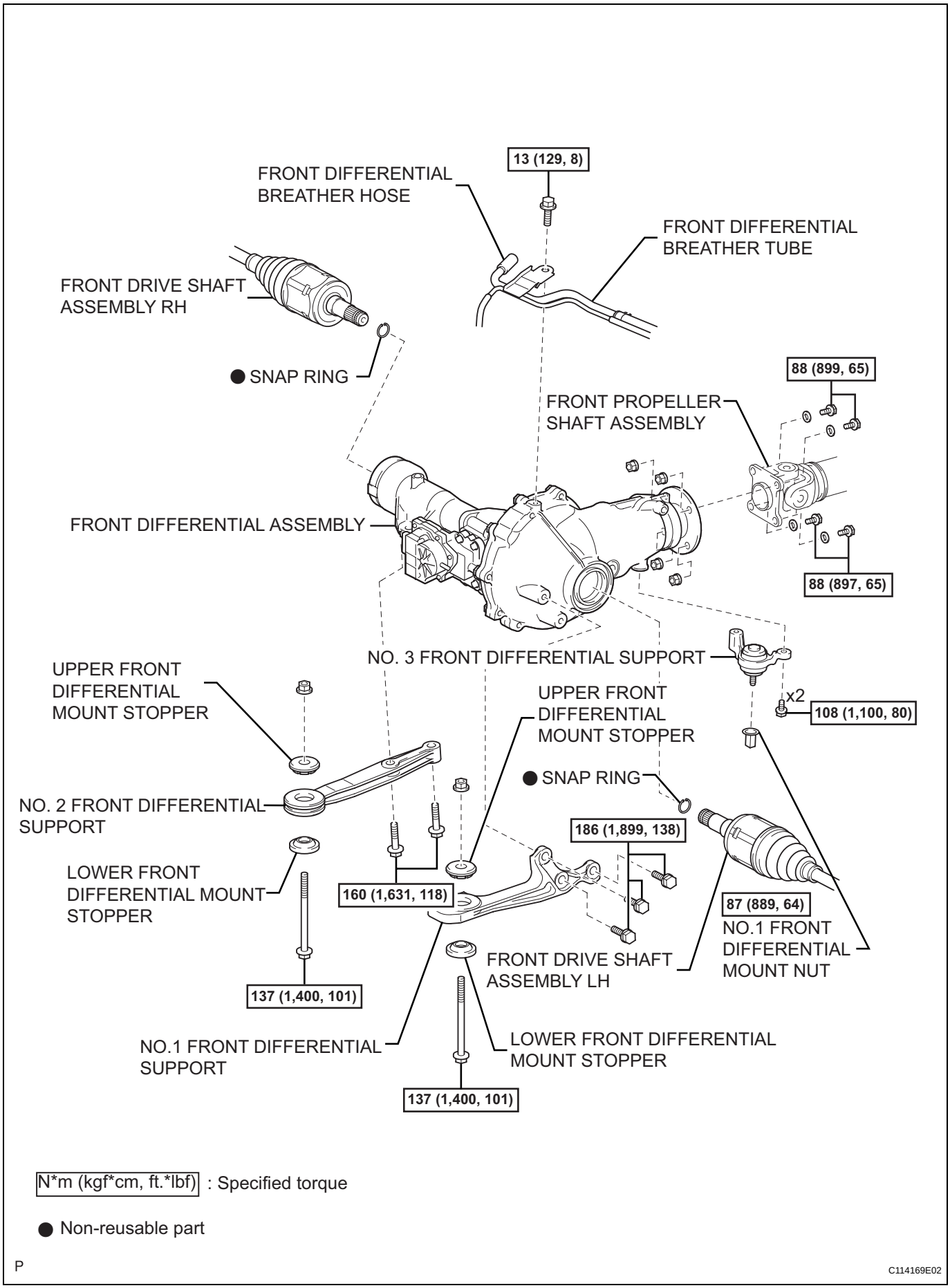

N*m (kgf*cm, ft.*lbf) : Specified torque

● Non-reusable part

P

C114169E02

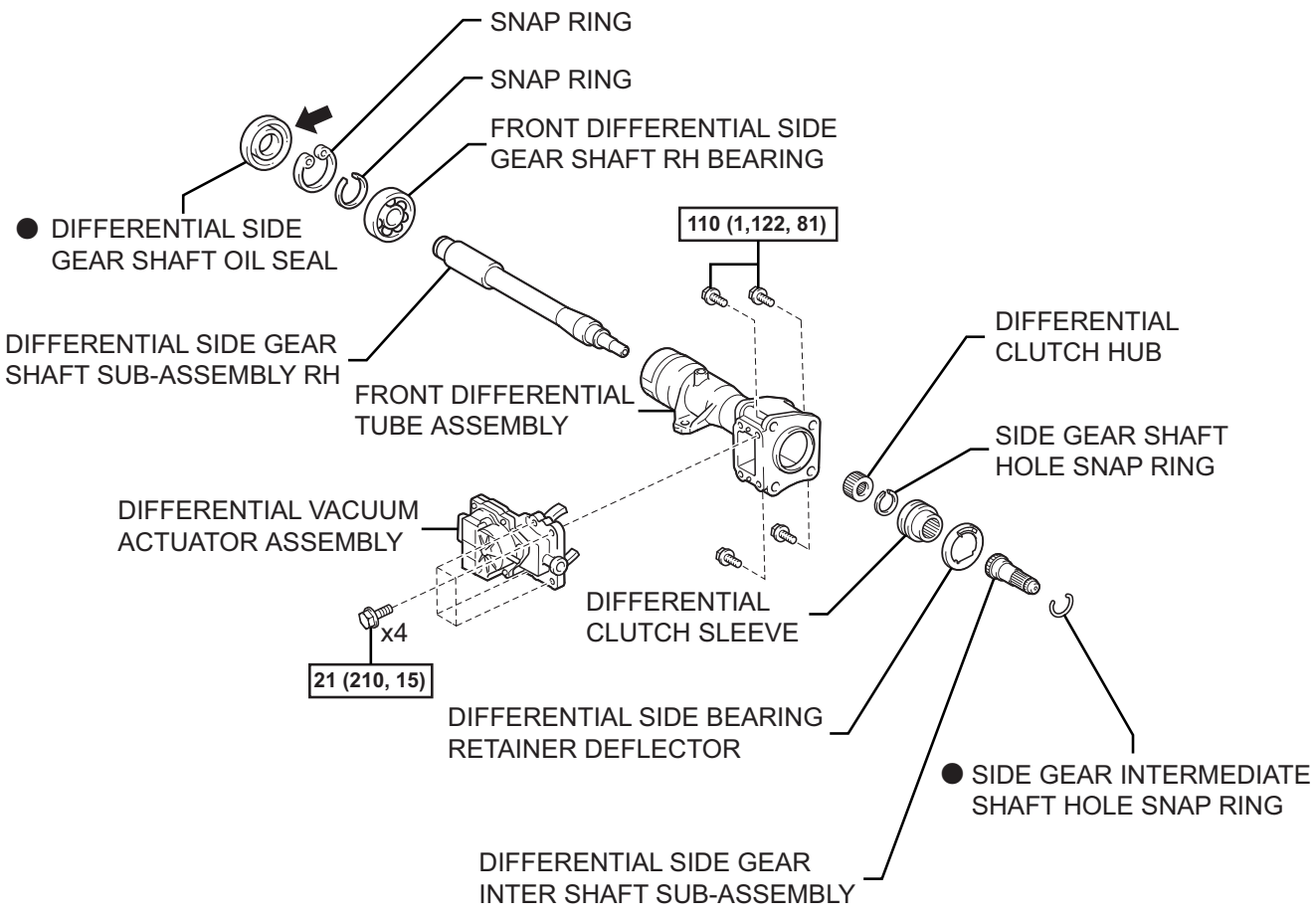

N*m (kgf*cm, ft.*lbf) : Specified torque

● Non-reusable part ⬅ Apply MP grease

P

C116183E01

DF

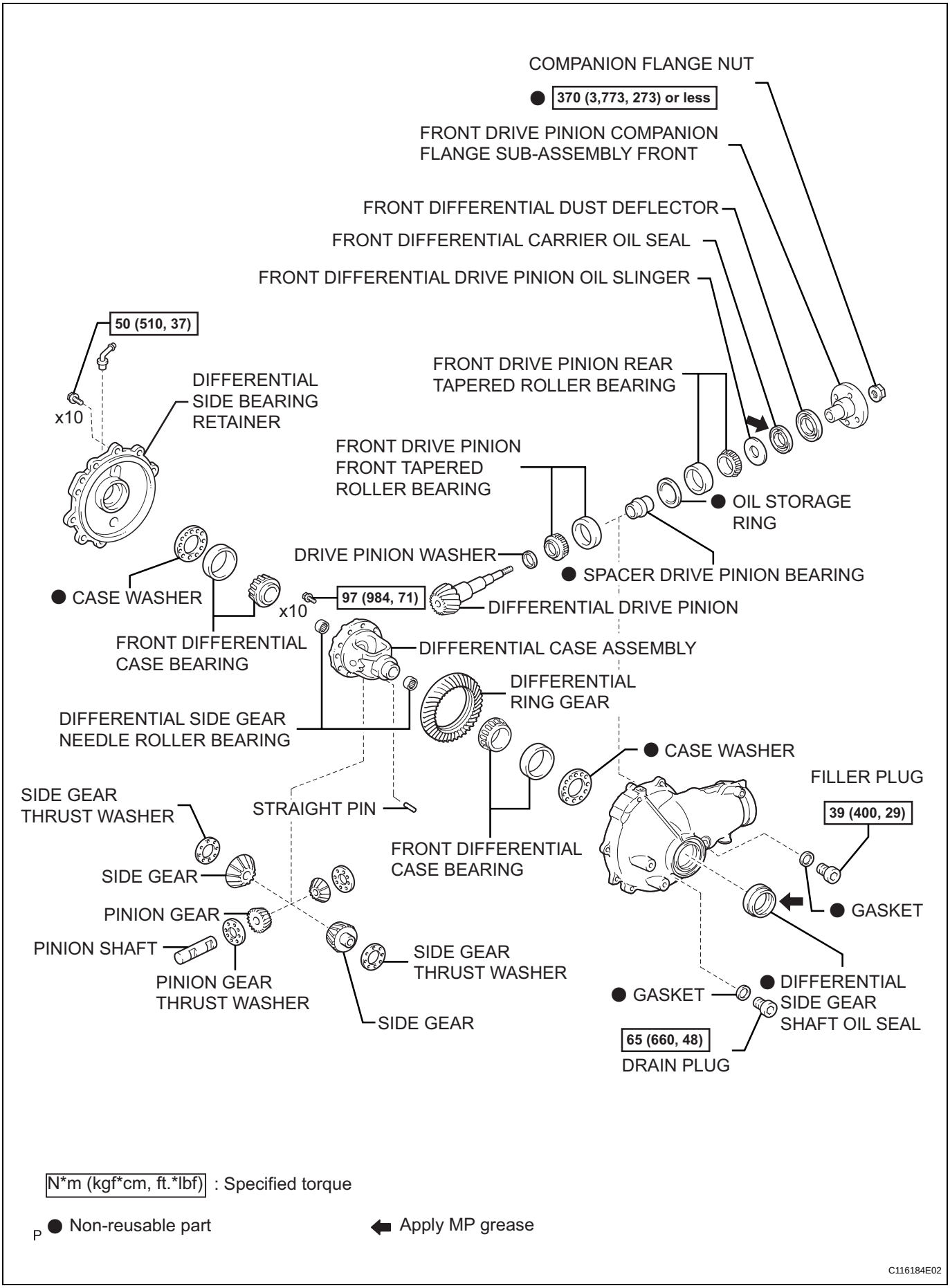
COMPANION FLANGE NUT
● 370 (3,773, 273) or less
FRONT DRIVE PINION COMPANION FLANGE SUB-ASSEMBLY FRONT
FRONT DIFFERENTIAL DUST DEFLECTOR
FRONT DIFFERENTIAL CARRIER OIL SEAL
FRONT DIFFERENTIAL DRIVE PINION OIL SLINGER
50 (510, 37)
x10
DIFFERENTIAL SIDE BEARING RETAINER
FRONT DRIVE PINION REAR TAPERED ROLLER BEARING
FRONT DRIVE PINION FRONT TAPERED ROLLER BEARING
● OIL STORAGE RING
DRIVE PINION WASHER
● SPACER DRIVE PINION BEARING
● CASE WASHER
x10
97 (984, 71)
DIFFERENTIAL DRIVE PINION
FRONT DIFFERENTIAL CASE BEARING
DIFFERENTIAL CASE ASSEMBLY
DIFFERENTIAL RING GEAR
DIFFERENTIAL SIDE GEAR NEEDLE ROLLER BEARING
● CASE WASHER
FILLER PLUG
39 (400, 29)
SIDE GEAR THRUST WASHER
STRAIGHT PIN
FRONT DIFFERENTIAL CASE BEARING
SIDE GEAR
PINION GEAR
PINION SHAFT
PINION GEAR THRUST WASHER
SIDE GEAR THRUST WASHER
SIDE GEAR
● GASKET
● GASKET
● DIFFERENTIAL SIDE GEAR SHAFT OIL SEAL
65 (660, 48)
DRAIN PLUG
N*m (kgf*cm, ft.*lbf) : Specified torque
● Non-reusable part
Apply MP grease
C116184E02

REAR DIFFERENTIAL CARRIER ASSEMBLY

COMPONENTS

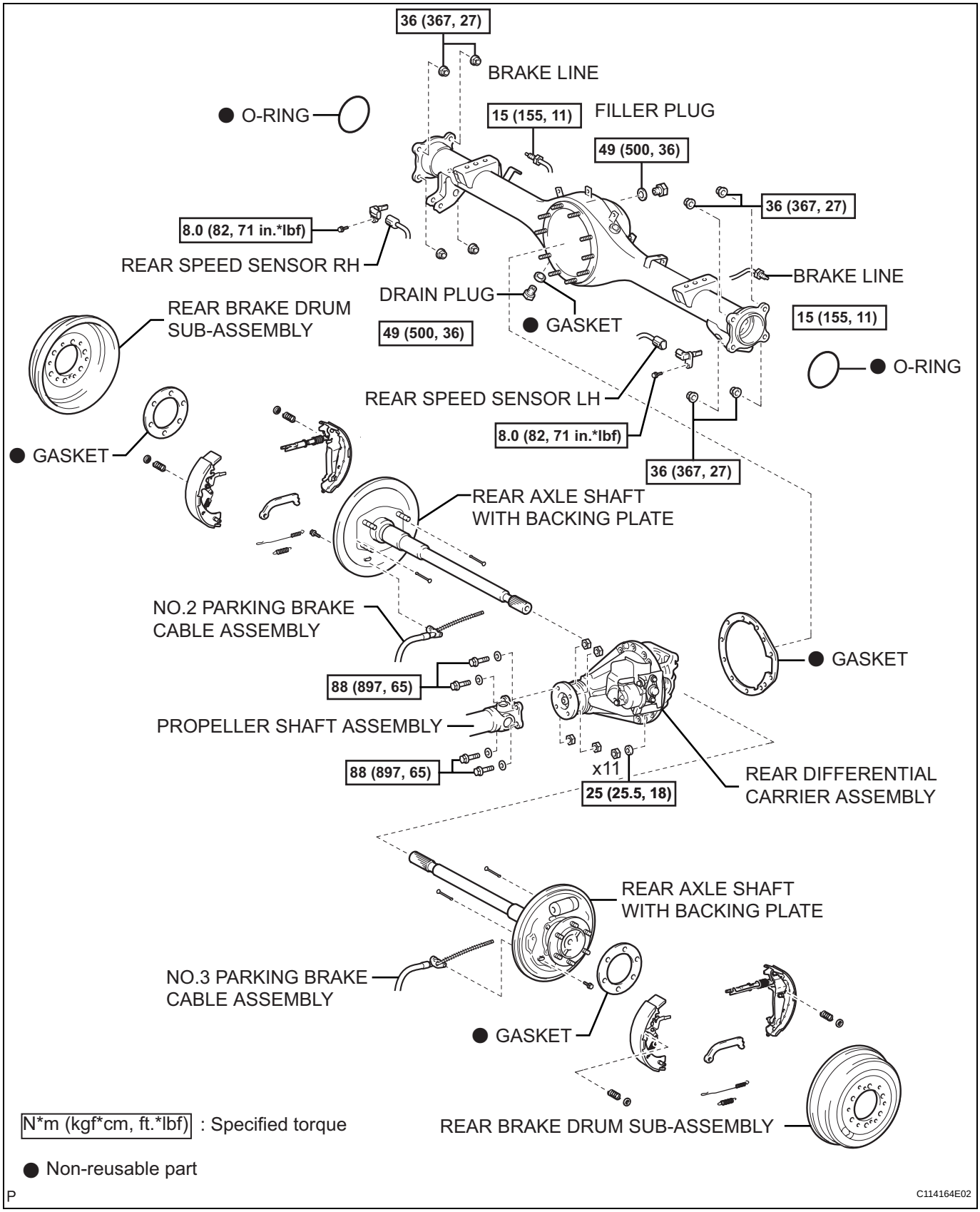

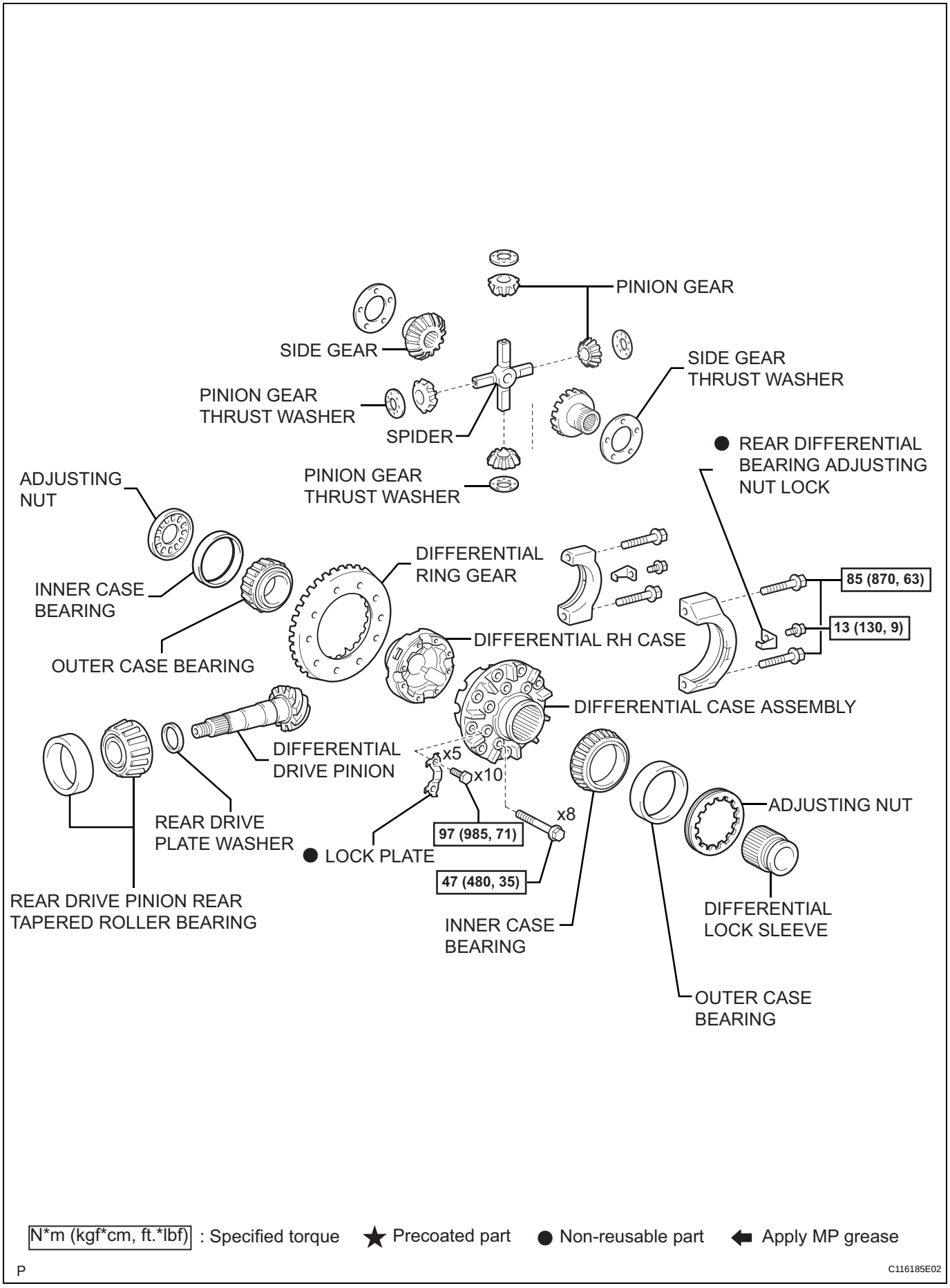

N*m (kgf*cm, ft.*lbf) : Specified torque ★ Precoated part ● Non-reusable part ⬅ Apply MP grease

P

C116185E02

DF

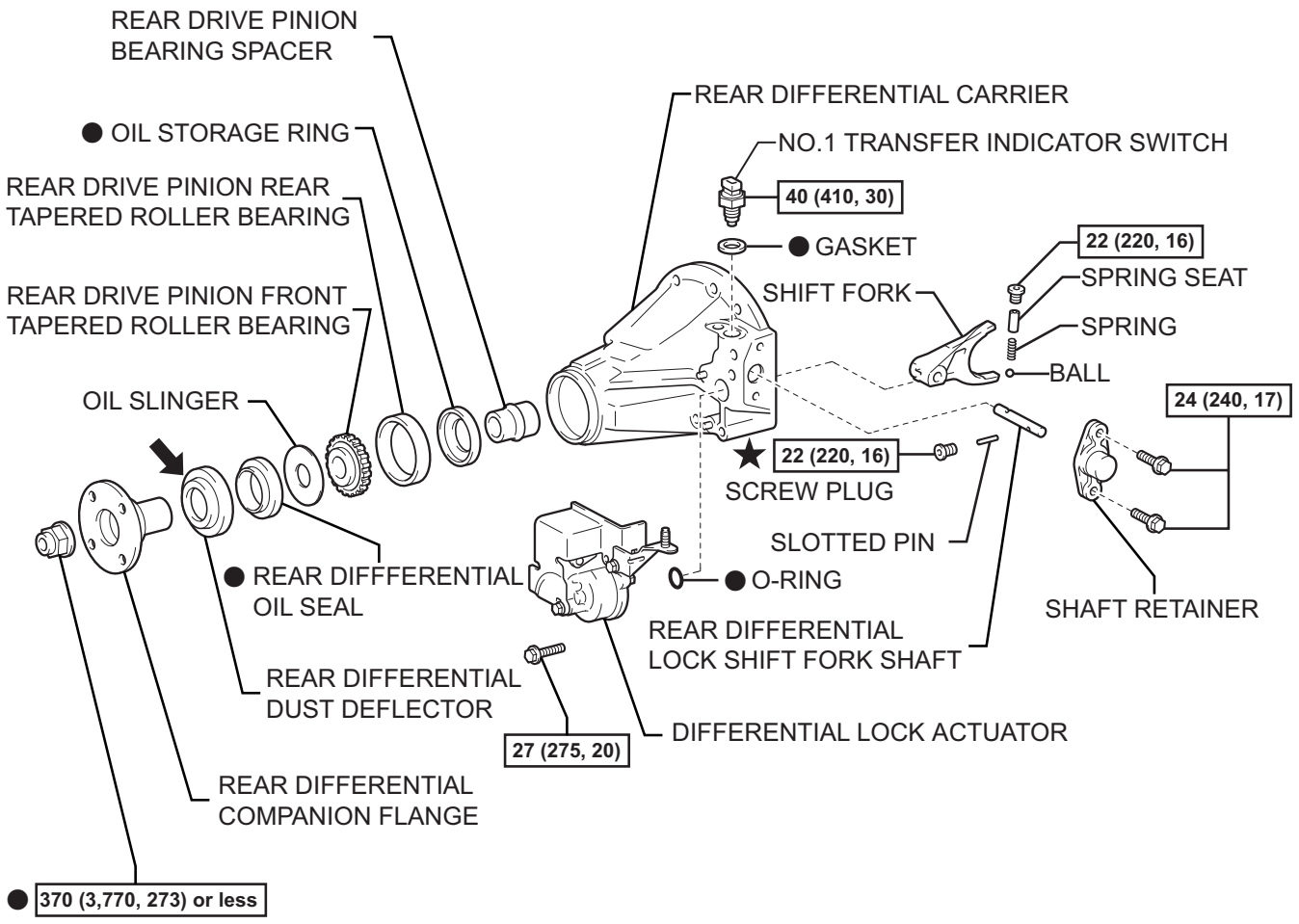

N*m (kgf*cm, ft.*lbf) : Specified torque ★ Precoated part ● Non-reusable part ⬅ Apply MP grease

P

C116186E02

REAR DIFFERENTIAL CARRIER ASSEMBLY (w/ Differential Lock)

COMPONENTS

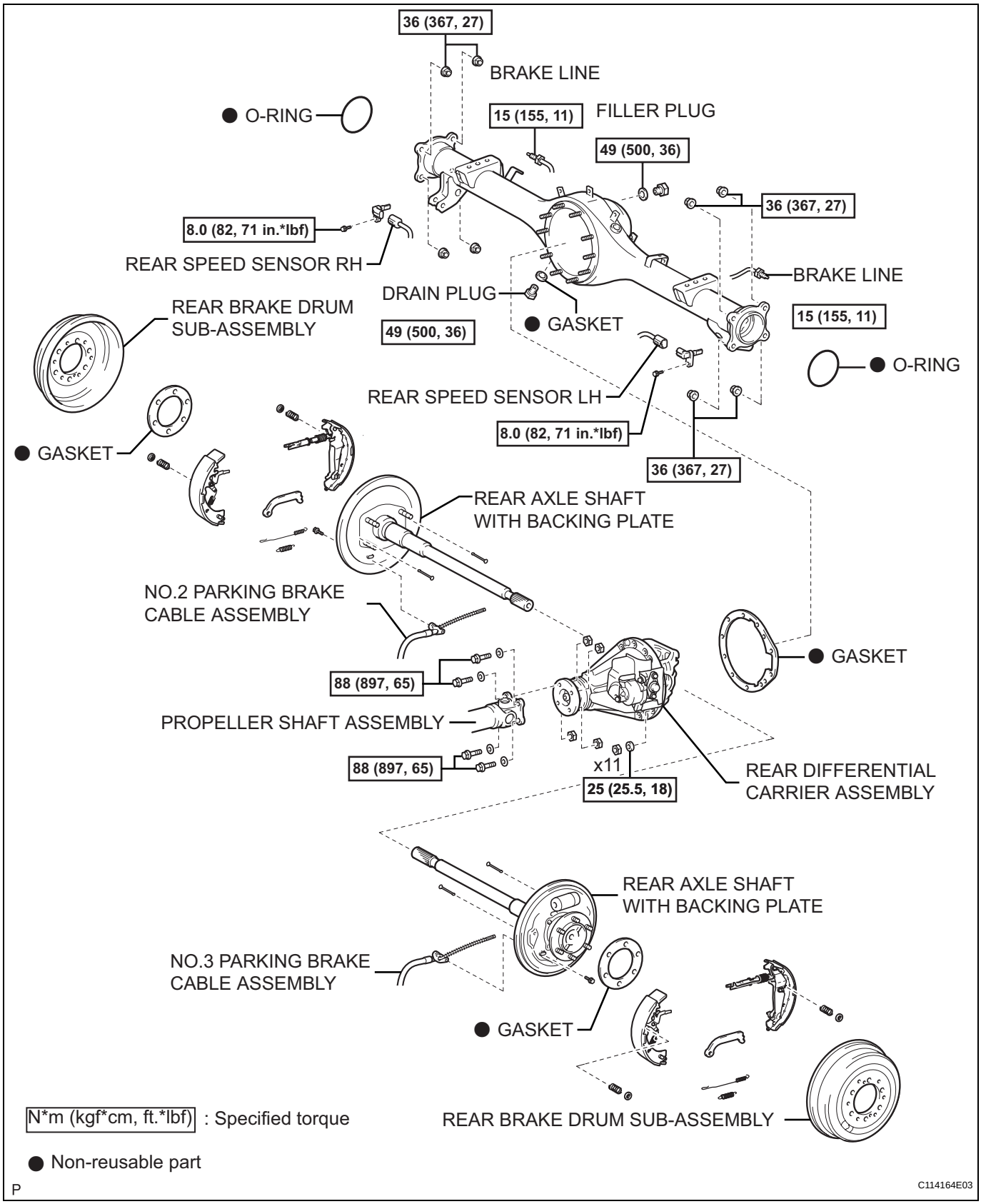

DF

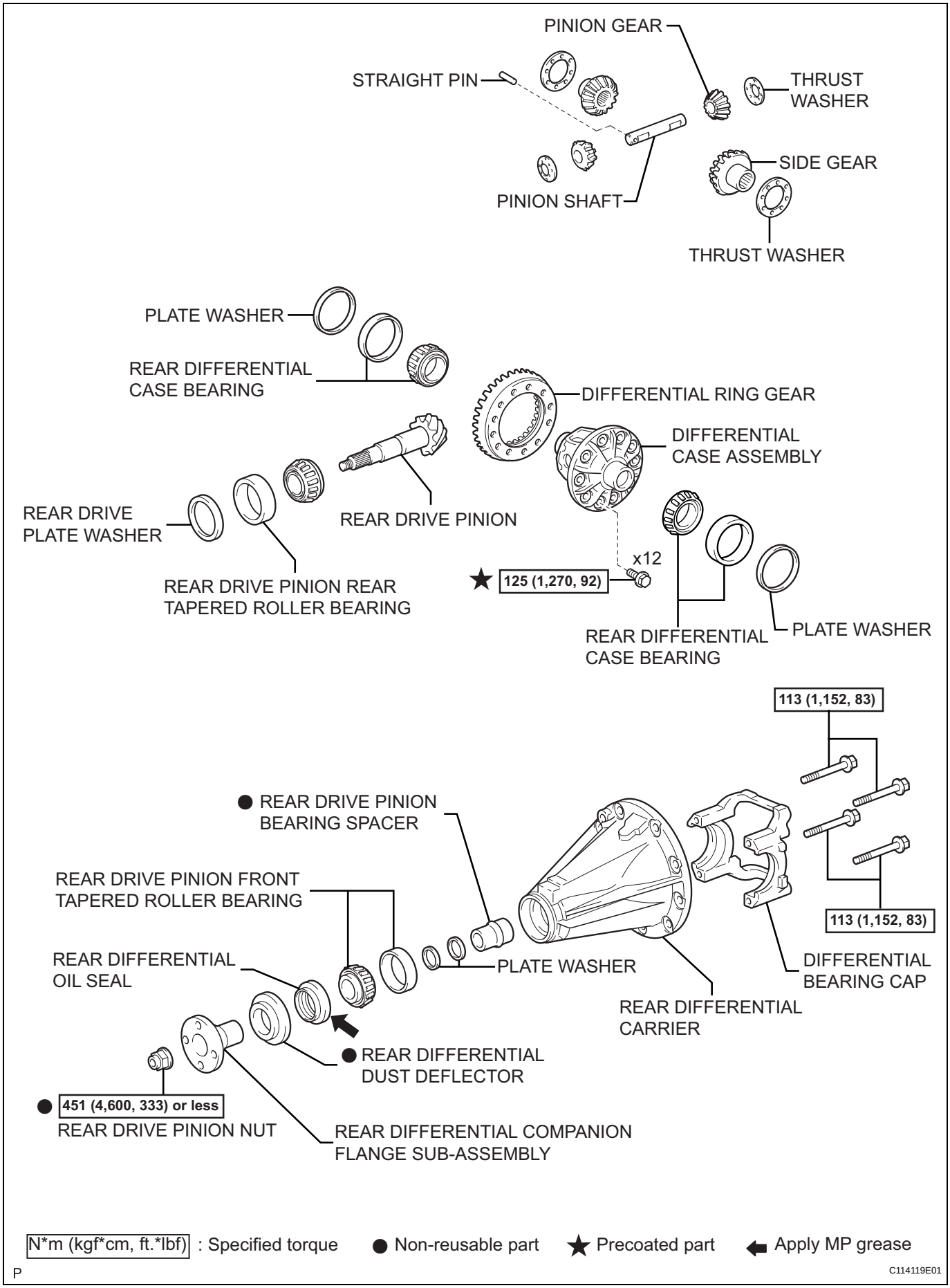

P

C114119E01

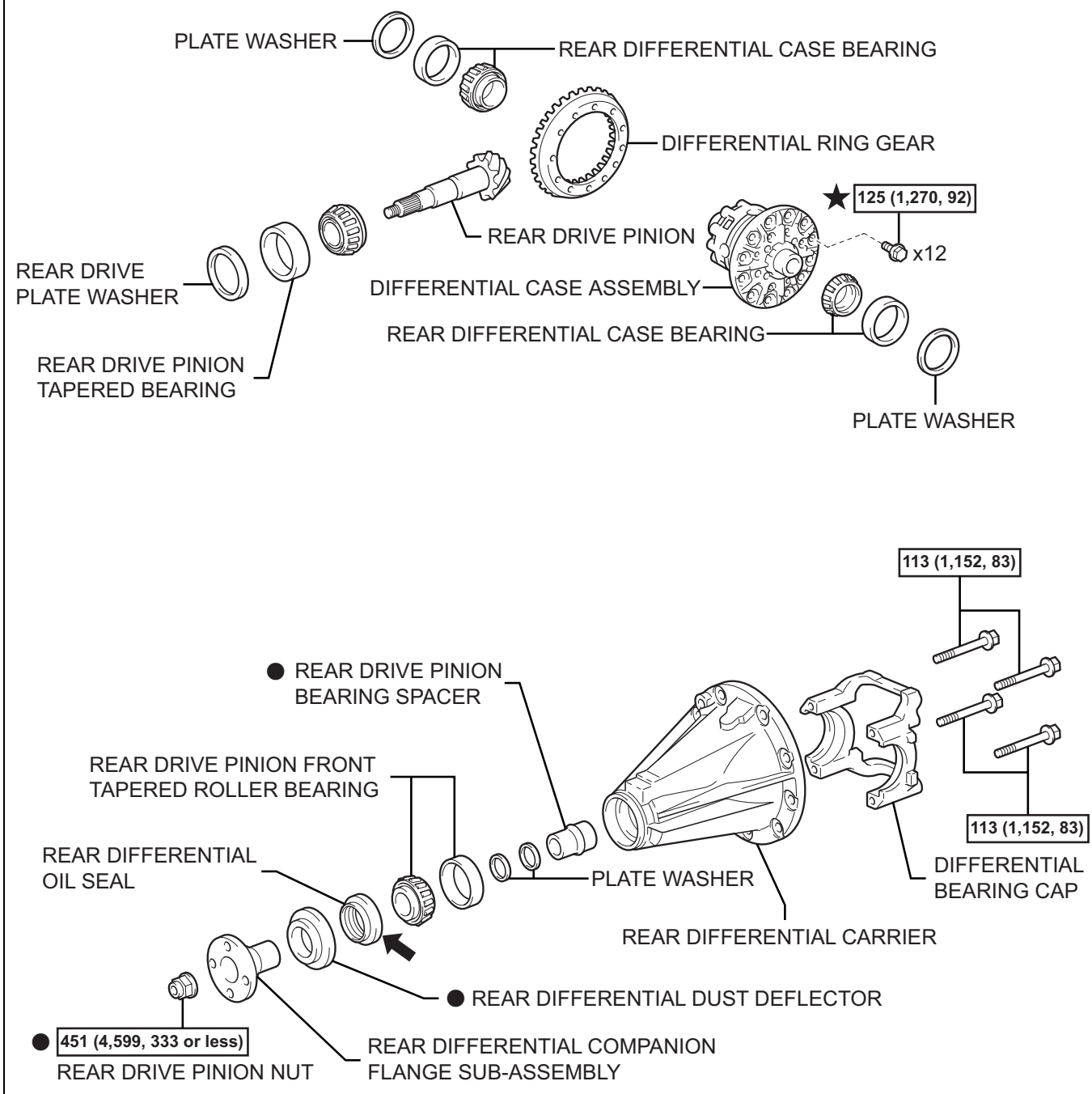

N*m (kgf*cm, ft.*lbf) : Specified torque ● Non-reusable part ★ Precoated part ⬅ Apply MP grease

P

C114150E01

DF

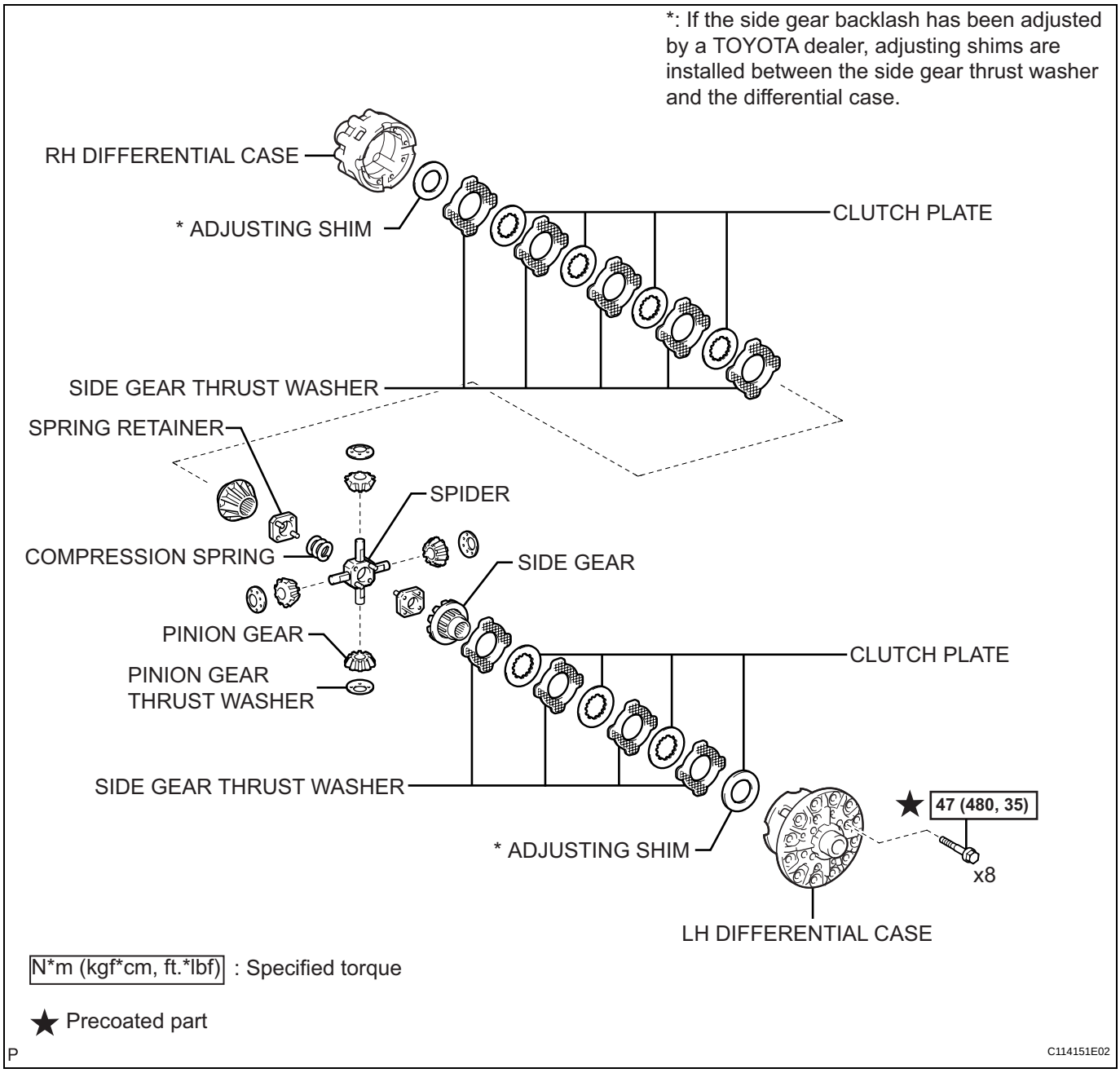
*: If the side gear backlash has been adjusted by a TOYOTA dealer, adjusting shims are installed between the side gear thrust washer and the differential case.
RH DIFFERENTIAL CASE
* ADJUSTING SHIM
CLUTCH PLATE
SIDE GEAR THRUST WASHER
SPRING RETAINER
SPIDER
COMPRESSION SPRING
SIDE GEAR
PINION GEAR
PINION GEAR THRUST WASHER
CLUTCH PLATE
SIDE GEAR THRUST WASHER
* ADJUSTING SHIM
★ 47 (480, 35)
x8
LH DIFFERENTIAL CASE
N*m (kgf*cm, ft.*lbf) : Specified torque
★ Precoated part
P
C114151E02

DF

DIFFERENTIAL LOCK SYSTEM

PARTS LOCATION

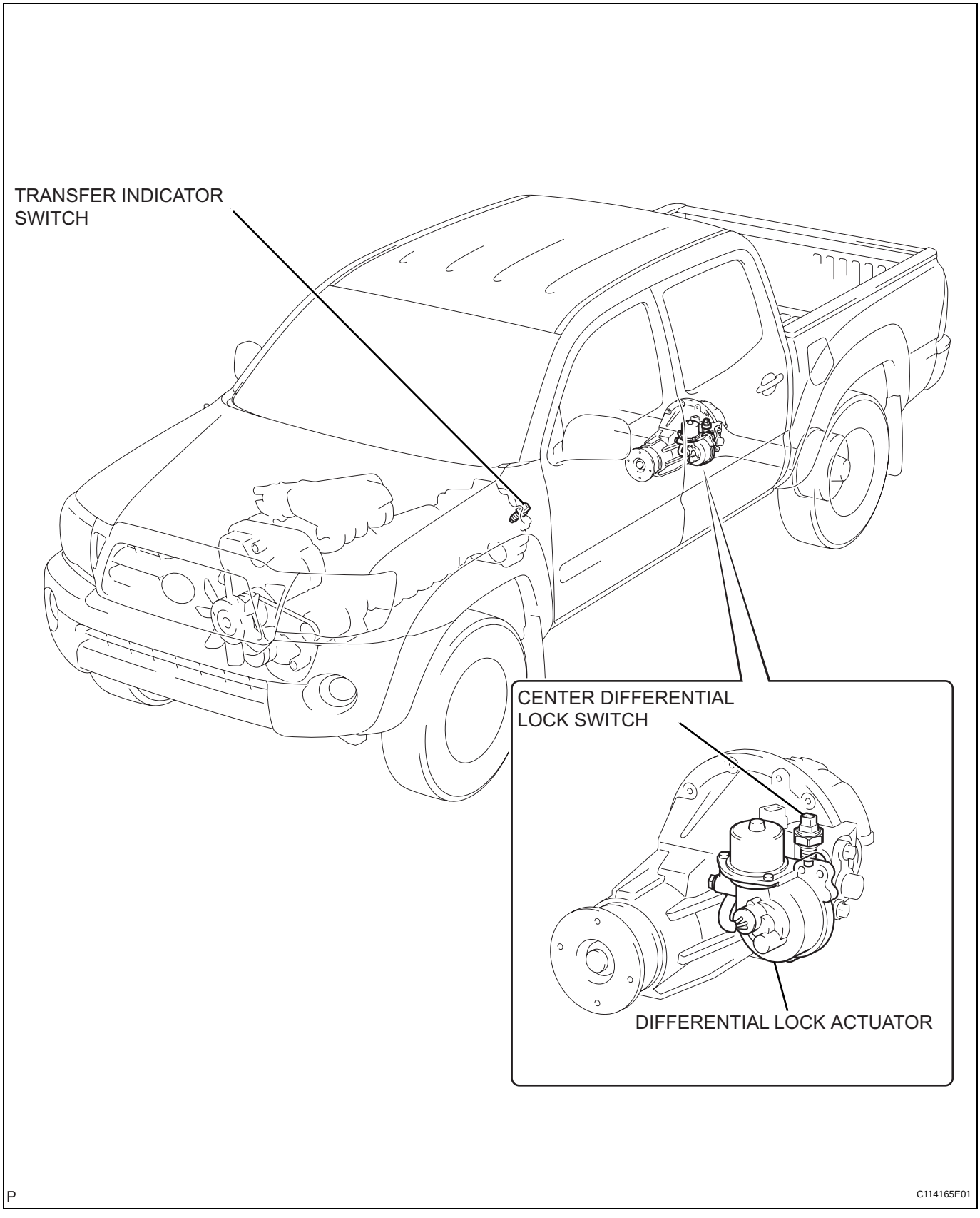

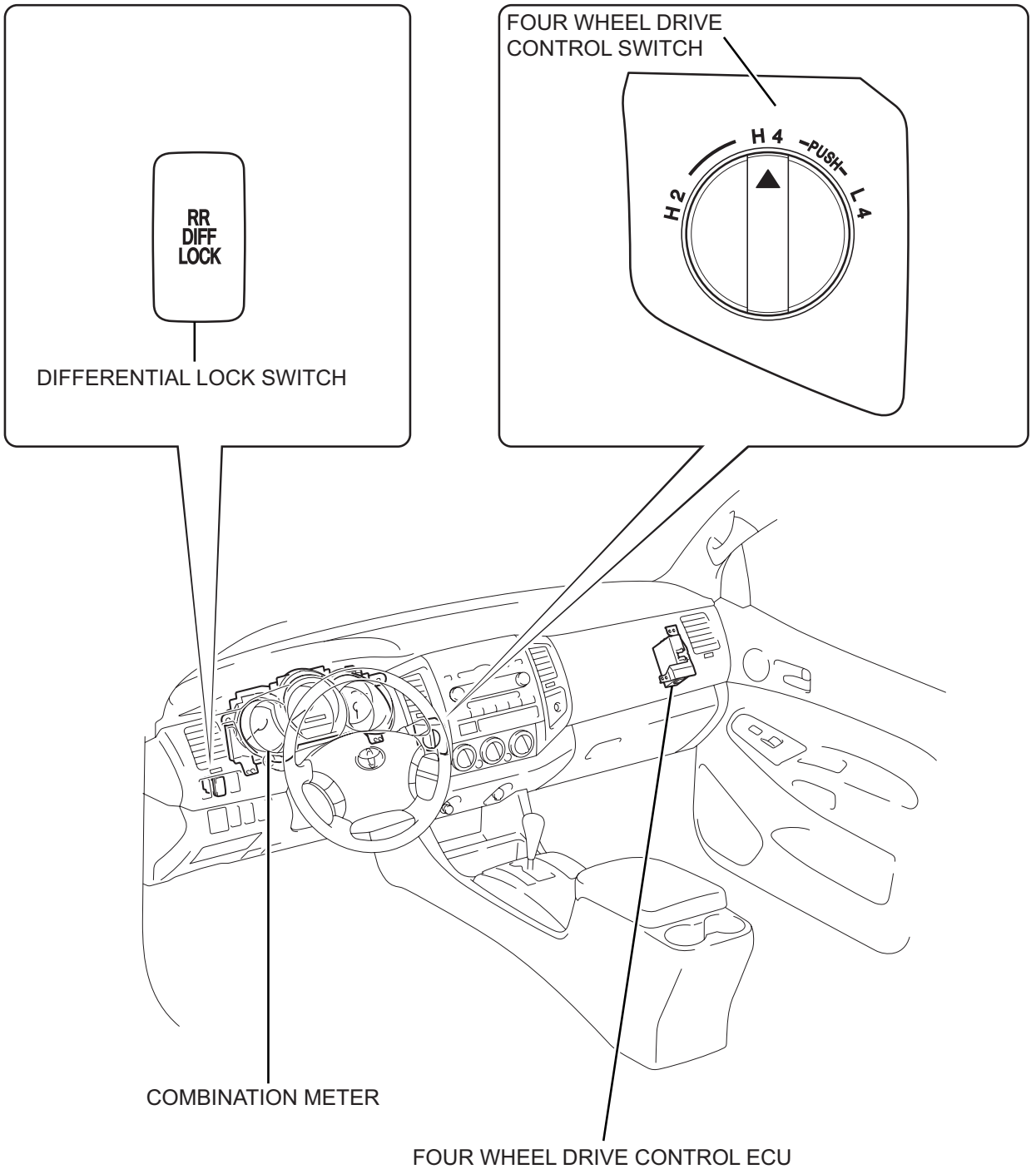

DF

P

C114166E01

AXLE SYSTEM

PROBLEM SYMPTOMS TABLE

HINT:
Use the table below to help you find the cause of the problem. The numbers indicate the ranked order of probability of each of the possible causes. Check each part in order. If necessary, replace these parts.

Symptom	Suspected area	See page
Wander/pulls	1. Tires (Worn or improperly inflated)	TW-1
	2. Front wheel alignment (Incorrect) (2WD)	SP-2
	3. Front wheel alignment (Incorrect) (4WD and Pre-Runner)	SP-7
	4. Hub bearings (Loosen or worn)	AH-1
	5. Steering gear (Out of adjustment or broken)	-
Front wheel shimmy	1. Tires (Worn or improperly inflated)	TW-1
	2. Wheels (Out of balance)	TW-1
	3. Front shock absorber (Worn out) (2WD)	SP-16
	4. Front shock absorber (Worn out) (4WD and Pre-Runner)	SP-22
	5. Front wheel alignment (Incorrect) (2WD)	SP-2
	6. Front wheel alignment (Incorrect) (4WD and Pre-Runner)	SP-7
	7. Upper ball joints (Worn) (2WD)	SP-27
	8. Upper ball joints (Worn) (4WD and Pre-Runner)	SP-31
	9. Lower ball joints (Worn) (2WD)	SP-36
	10. Lower ball joints (Worn) (4WD and Pre-Runner)	SP-43
	11. Hub bearings (Loosen or worn)	AH-1
	12. Steering gear (Out of adjustment or broken)	-
Rear wheel shimmy	1. Tires (Worn or improperly inflated)	TW-1
	2. Wheels (Out of balance)	TW-1
	3. Rear shock absorber (Worn out)	SP-60
	4. Hub bearings (Loosen or worn)	AH-2

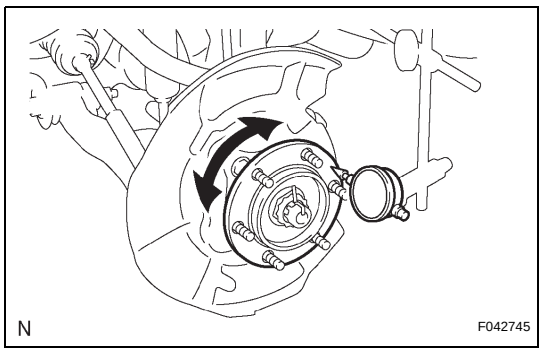

ON-VEHICLE INSPECTION

1. INSPECT FRONT AXLE HUB BEARING

(a) Remove the front wheel.
(b) for 4WD:
  (1) Remove the front axle hub grease cap (See page AH-16).
(c) for 2WD:
  (1) Remove the front disc brake caliper (See page AH-7).
(d) for 4WD and Pre-Runner
  (1) Remove the front disc brake caliper (See page AH-15).
(e) Remove the front disc.
(f) Inspect the axle hub backlash.
  (1) Using a dial indicator, check the backlash near the center of the axle hub.
  Maximum:
  0.05 mm (0.0020 in.)
  If the backlash exceeds the maximum, replace the bearing.

AH

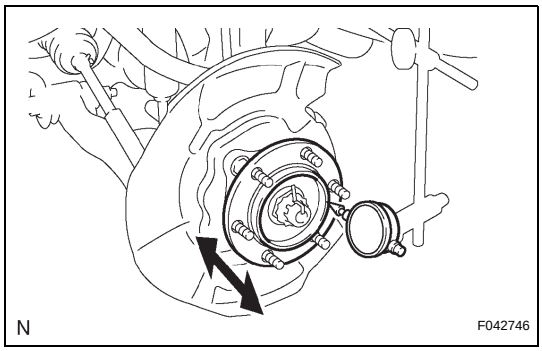

(g) Inspect the axle hub deviation.
(1) Using a dial indicator, check the distortion of the surface of the axle hub.
Maximum:
0.05 mm (0.0020 in.)
If the deviation exceeds the maximum, replace the bearing.

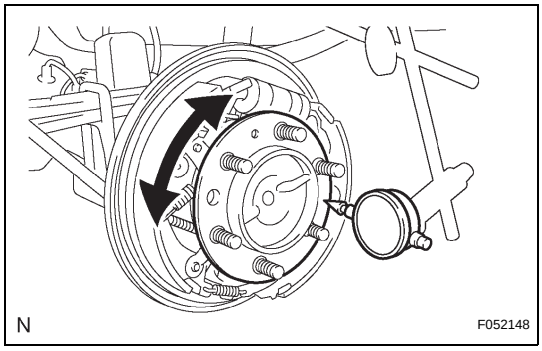

2. INSPECT REAR AXLE HUB BEARING
(a) Remove the rear wheel.
(b) Remove the rear brake drum (See page BR-68).
(c) Inspect the axle shaft backlash.
(1) Using a dial indicator, check the backlash near the center of the axle shaft.
Maximum:
0.05 mm (0.0020 in.)
If the backlash exceeds the maximum, replace the bearing.

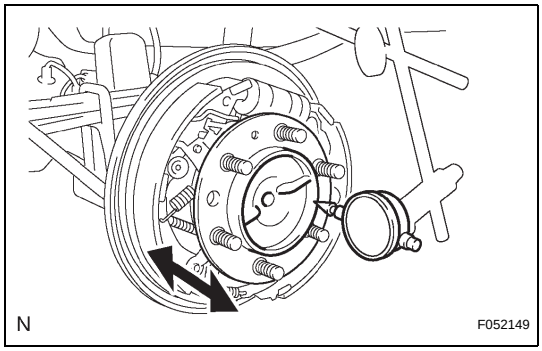

(d) Inspect the axle shaft deviation.
(1) Using a dial indicator, check the distortion of the surface of the axle shaft.
Maximum:
0.05 mm (0.0020 in.)
If the deviation exceeds the maximum, replace the bearing.

FRONT AXLE HUB BOLT

REMOVAL

1. **DISCONNECT CABLE FROM NEGATIVE BATTERY TERMINAL**
2. **REMOVE FRONT WHEEL**
3. **DRAIN BRAKE FLUID**
   NOTICE:
   Immediately wash off any brake fluid that comes into contact with painted surfaces.
4. **REMOVE FRONT DISC BRAKE CALIPER ASSEMBLY (for 2WD) (See page AH-7)**
5. **REMOVE FRONT DISC BRAKE CALIPER ASSEMBLY (for 4WD and Pre-Runner) (See page AH-15)**
6. **REMOVE FRONT DISC**
7. **REMOVE FRONT AXLE HUB BOLT**
   (a) Using SST and a screwdriver, remove the hub bolt.
   SST 09611-12010

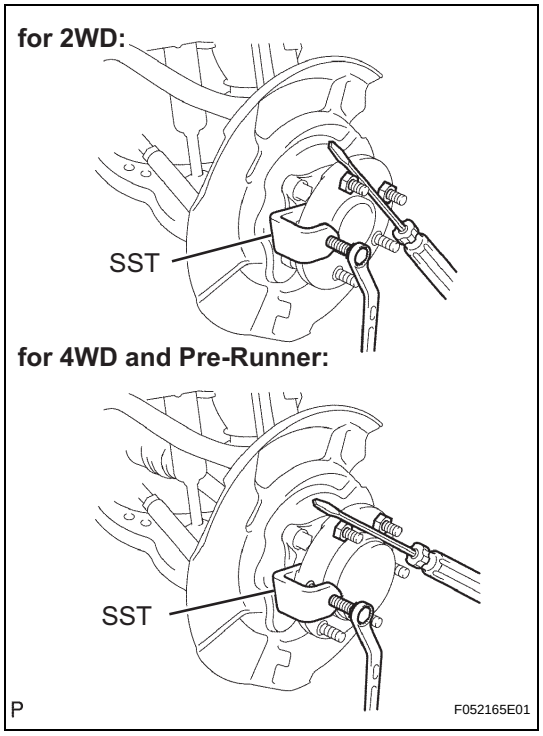

AH

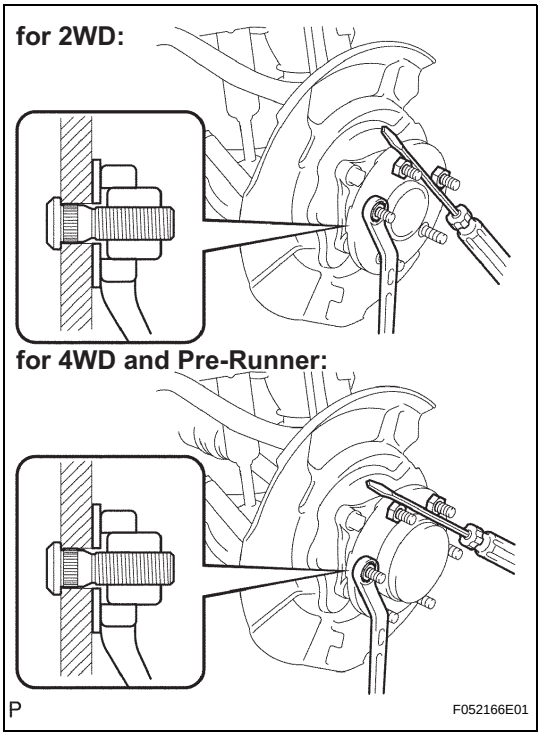

INSTALLATION

1. **INSTALL FRONT AXLE HUB BOLT**
   (a) Install a new hub bolt through the axle hub.
   (b) Install the washer plate, as shown in the illustration, through the hub bolt, and install the hub bolt by tightening the hub nut.
2. **INSTALL FRONT DISC**
3. **INSTALL FRONT DISC BRAKE CALIPER ASSEMBLY (for 2WD) (See page AH-11)**
4. **INSTALL FRONT DISC BRAKE CALIPER ASSEMBLY (for 4WD and Pre-Runner) (See page AH-21)**
5. **INSTALL FRONT WHEEL**
   Torque: 113 N*m (1,152 kgf*cm, 83 ft.*lbf)
6. **CONNECT CABLE TO NEGATIVE BATTERY TERMINAL**
   Torque: 3.9 N*m (40 kgf*cm, 35 in.*lbf)
   (See page IN-5)
7. **FILL RESERVOIR WITH BRAKE FLUID (w/ VSC) (See page BR-4)**
8. **FILL RESERVOIR WITH BRAKE FLUID (w/o VSC) (See page BR-7)**
9. **BLEED MASTER CYLINDER (w/o VSC) (See page BR-7)**
10. **BLEED BRAKE LINE (w/ VSC) (See page BR-4)**
11. **BLEED BRAKE LINE (w/o VSC) (See page BR-7)**
12. **CHECK FLUID LEVEL IN RESERVOIR (w/ VSC) (See page BR-6)**
13. **CHECK FLUID LEVEL IN RESERVOIR (w/o VSC) (See page BR-8)**
14. **CHECK FOR BRAKE FLUID LEAKAGE**

FRONT AXLE HUB (for 2WD)

COMPONENTS

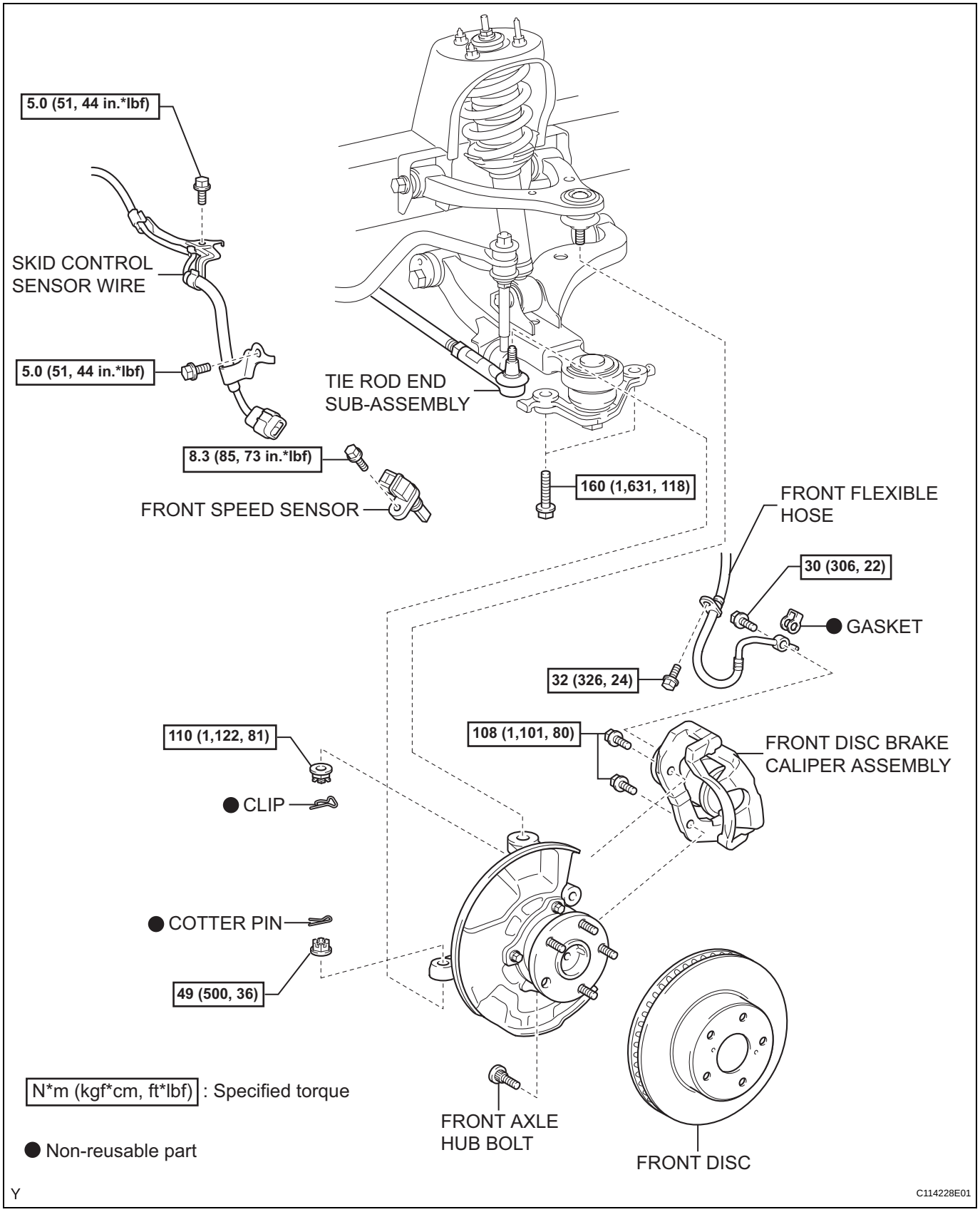

AH

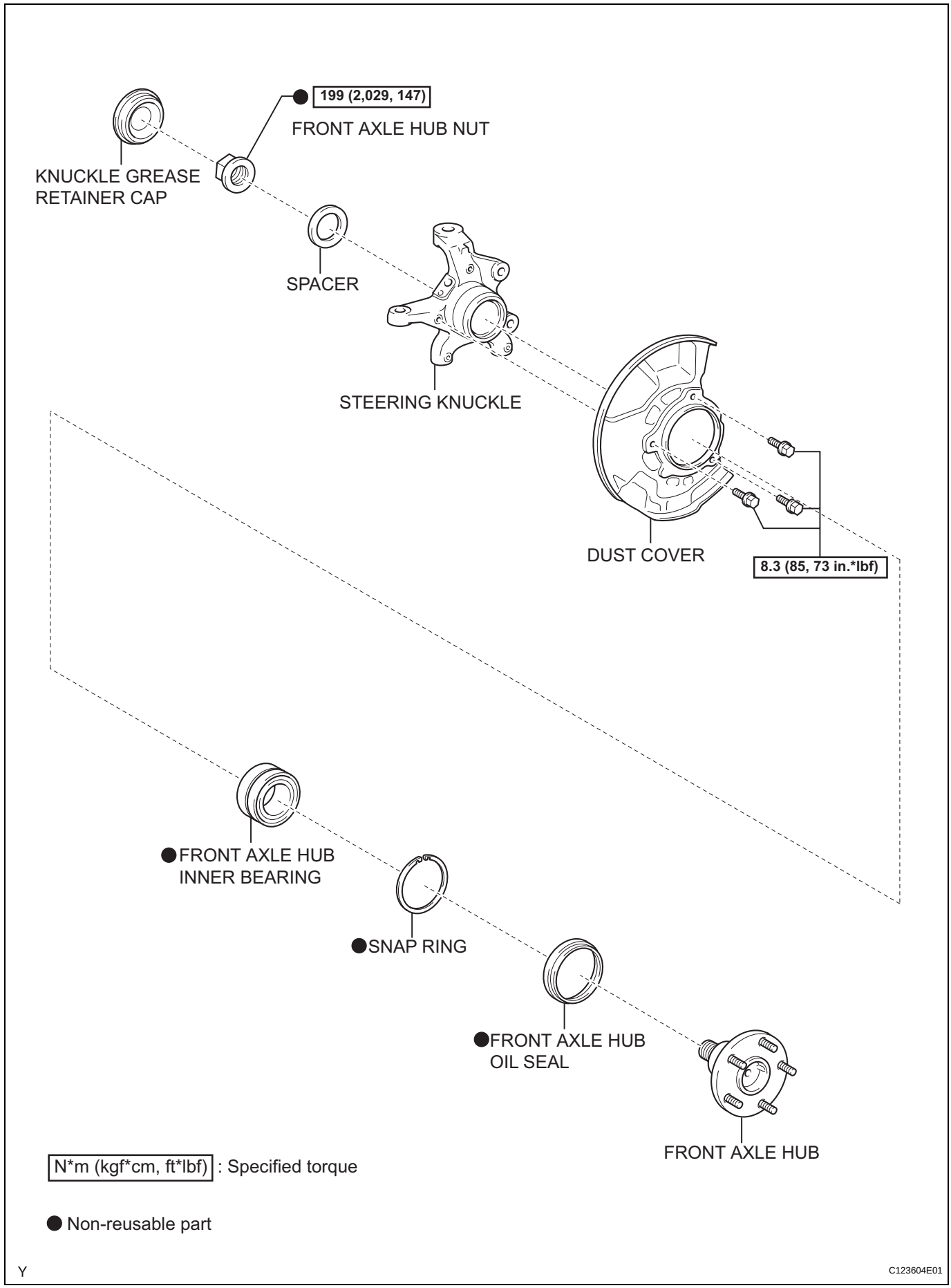
199 (2,029, 147)
FRONT AXLE HUB NUT
KNUCKLE GREASE RETAINER CAP
SPACER
STEERING KNUCKLE
DUST COVER
8.3 (85, 73 in.*lbf)
●FRONT AXLE HUB INNER BEARING
●SNAP RING
●FRONT AXLE HUB OIL SEAL
FRONT AXLE HUB
N*m (kgf*cm, ft*lbf) : Specified torque
● Non-reusable part
Y
C123604E01

AH

FRONT AXLE HUB (for 4WD and Pre-Runner)

COMPONENTS

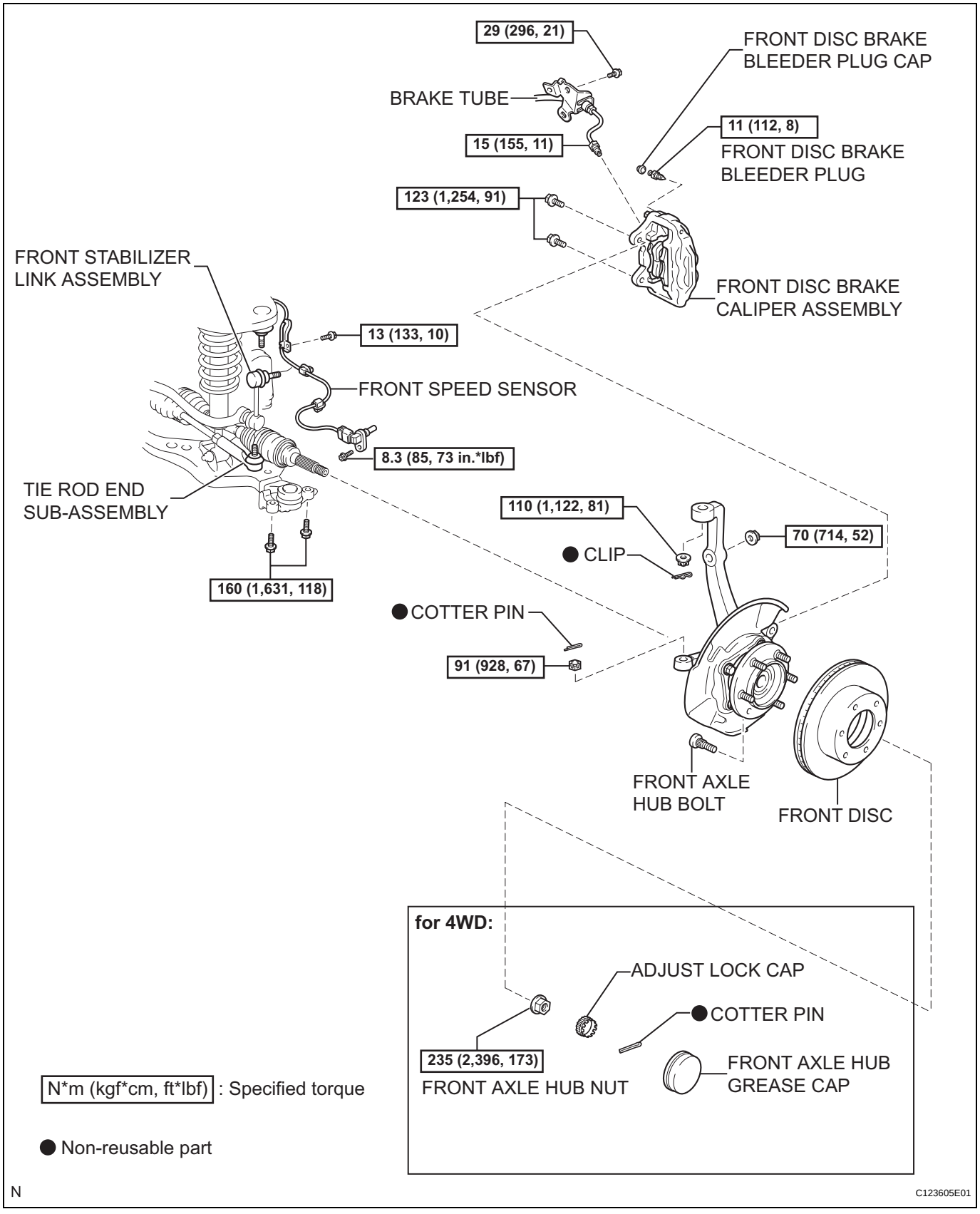

AH

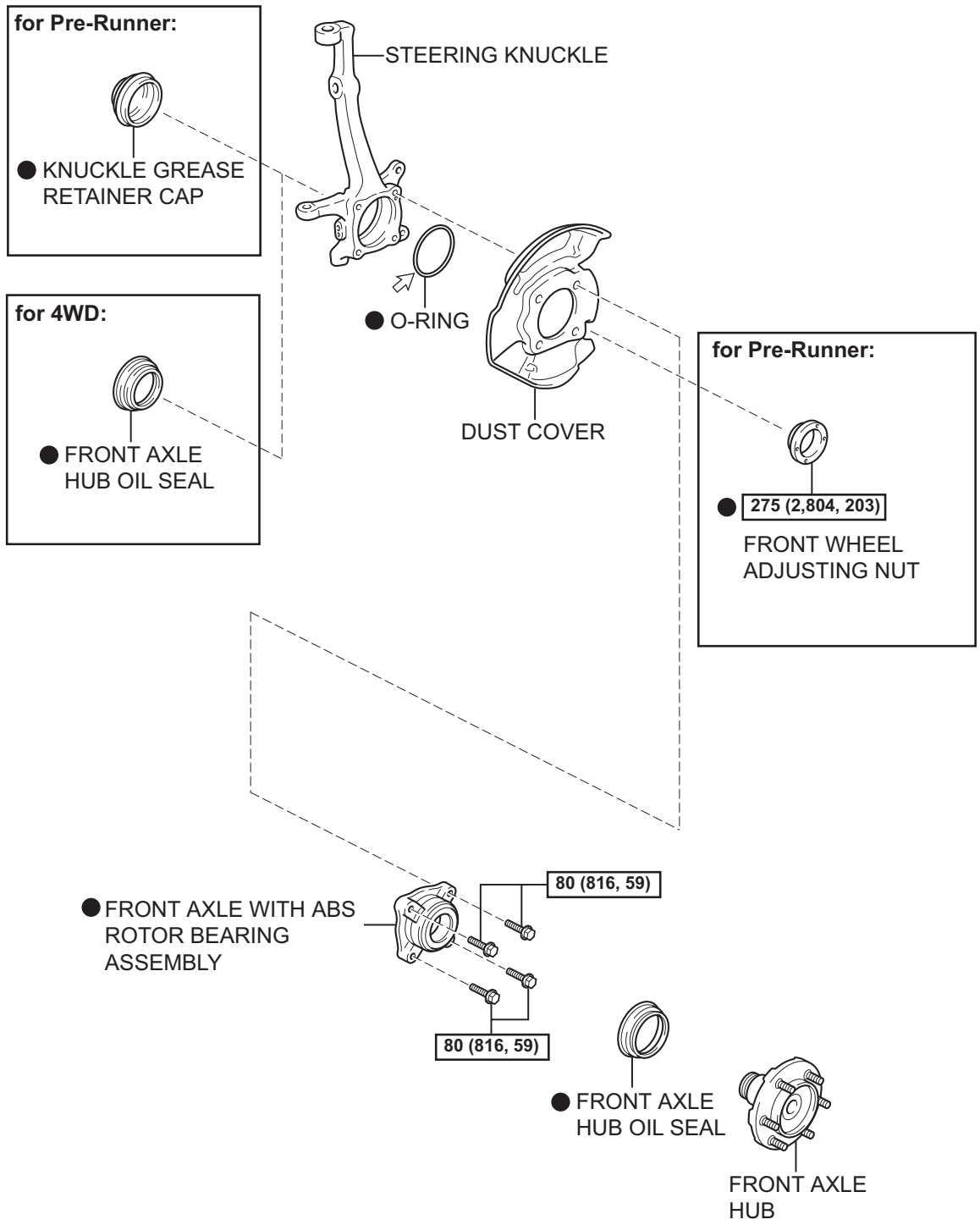

AH

N*m (kgf*cm, ft*lbf) : Specified torque

● Non-reusable part

⇦ MP Grease

N

C114110E01

REAR AXLE HUB BOLT

REMOVAL

1. **REMOVE REAR WHEEL**
2. **REMOVE REAR BRAKE DRUM SUB-ASSEMBLY (See page BR-68)**
3. **REMOVE FRONT BRAKE SHOE (See page BR-68)**
4. **REMOVE REAR BRAKE SHOE (See page BR-69)**
5. **REMOVE REAR AXLE HUB BOLT**
   (a) Using SST, remove the hub bolt.
   SST 09650-17011

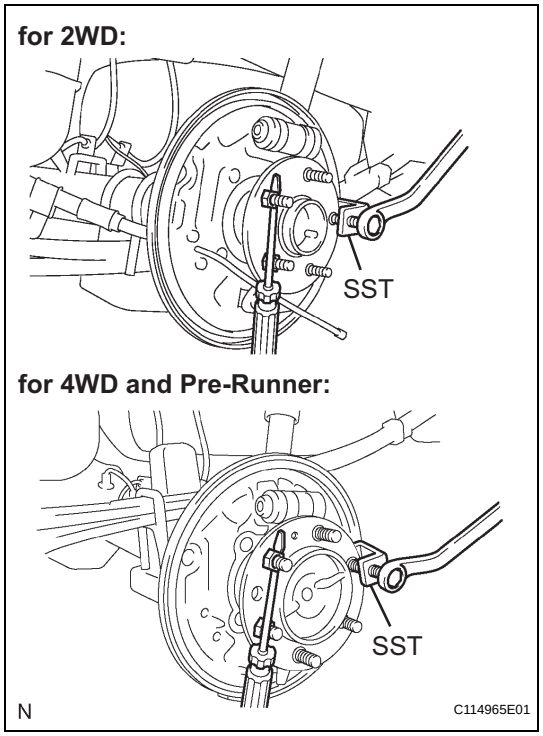

INSTALLATION

1. **INSTALL REAR AXLE HUB BOLT**
   (a) Install a new hub bolt through the axle hub.
   (b) Install the washer plate, as shown in the illustration, through the hub bolt, and install the hub bolt by tightening the hub nut.
2. **APPLY HIGH TEMPERATURE GREASE (See page BR-71)**
3. **INSTALL REAR BRAKE SHOE (See page BR-71)**
4. **INSTALL FRONT BRAKE SHOE (See page BR-72)**
5. **INSPECT REAR DRUM BRAKE INSTALLATION (See page BR-73)**
6. **INSTALL REAR BRAKE DRUM SUB-ASSEMBLY (See page BR-73)**
7. **ADJUST REAR DRUM BRAKE SHOE CLEARANCE (See page BR-74)**
8. **INSTALL REAR WHEEL**
   Torque: 113 N*m (1,152 kgf*cm, 83 ft.*lbf)

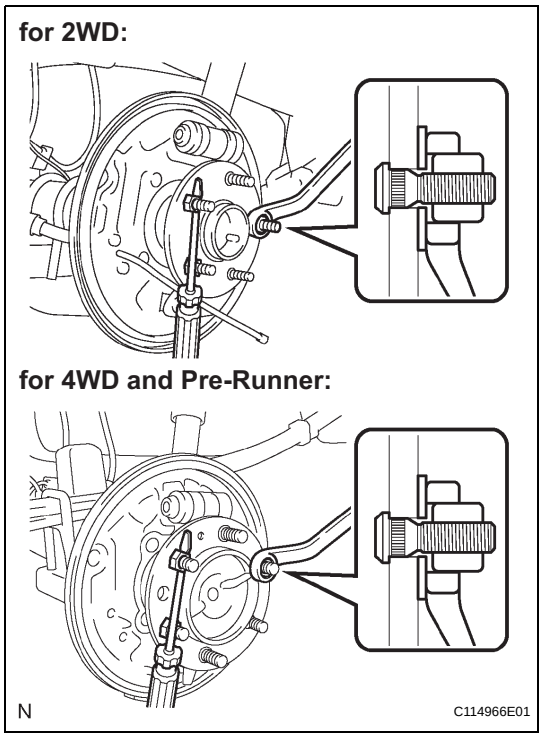

AH

9. **INSPECT PARKING BRAKE PEDAL TRAVEL (for Automatic Transmission) (See page PB-1)**
10. **INSPECT PARKING BRAKE LEVER TRAVEL (for Manual Transmission) (See page PB-1)**
11. **ADJUST PARKING BRAKE PEDAL TRAVEL (for Automatic Transmission) (See page PB-2)**
12. **ADJUST PARKING BRAKE LEVER TRAVEL (for Manual Transmission) (See page PB-2)**

REAR AXLE SHAFT

COMPONENTS

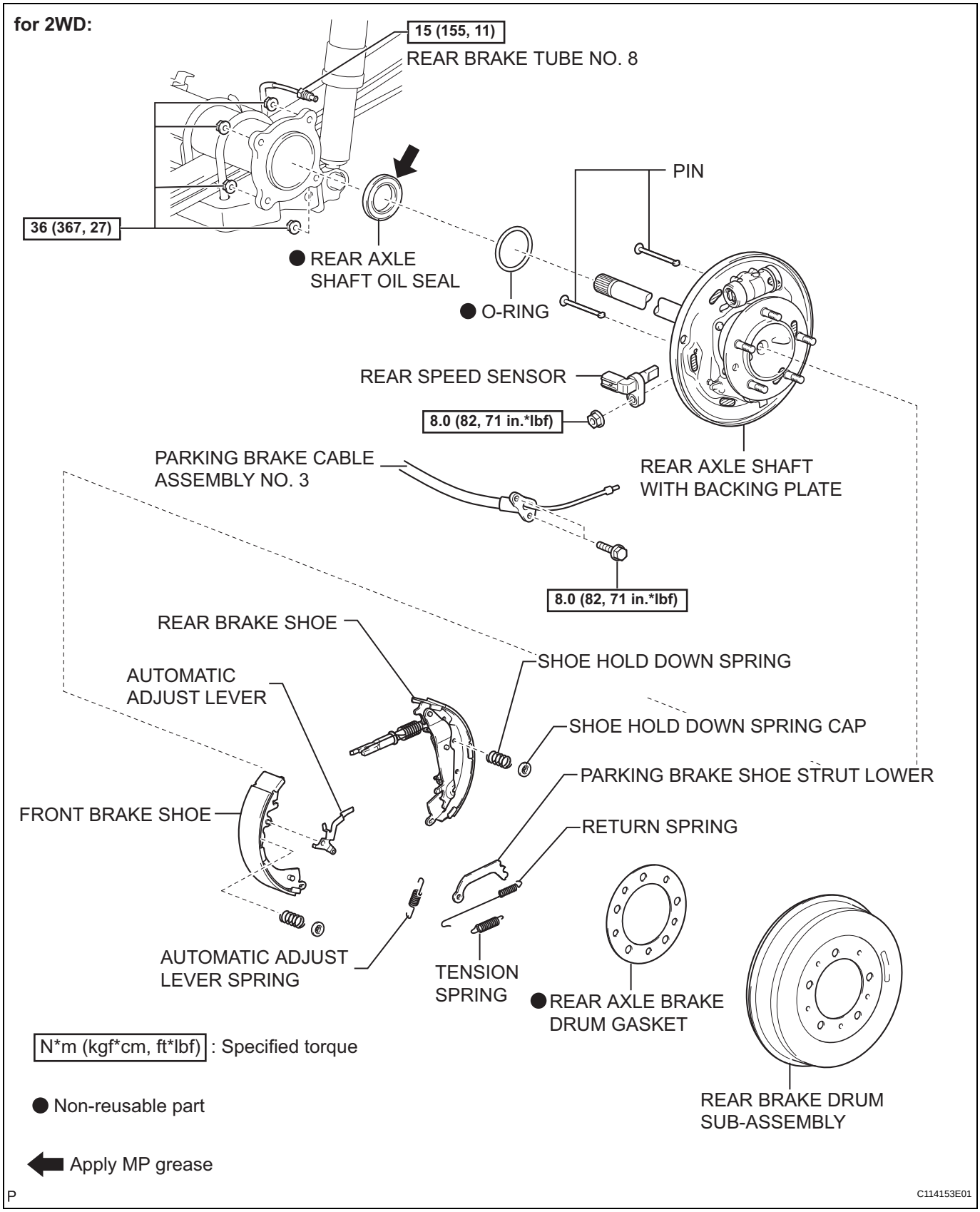

AH

for 2WD:

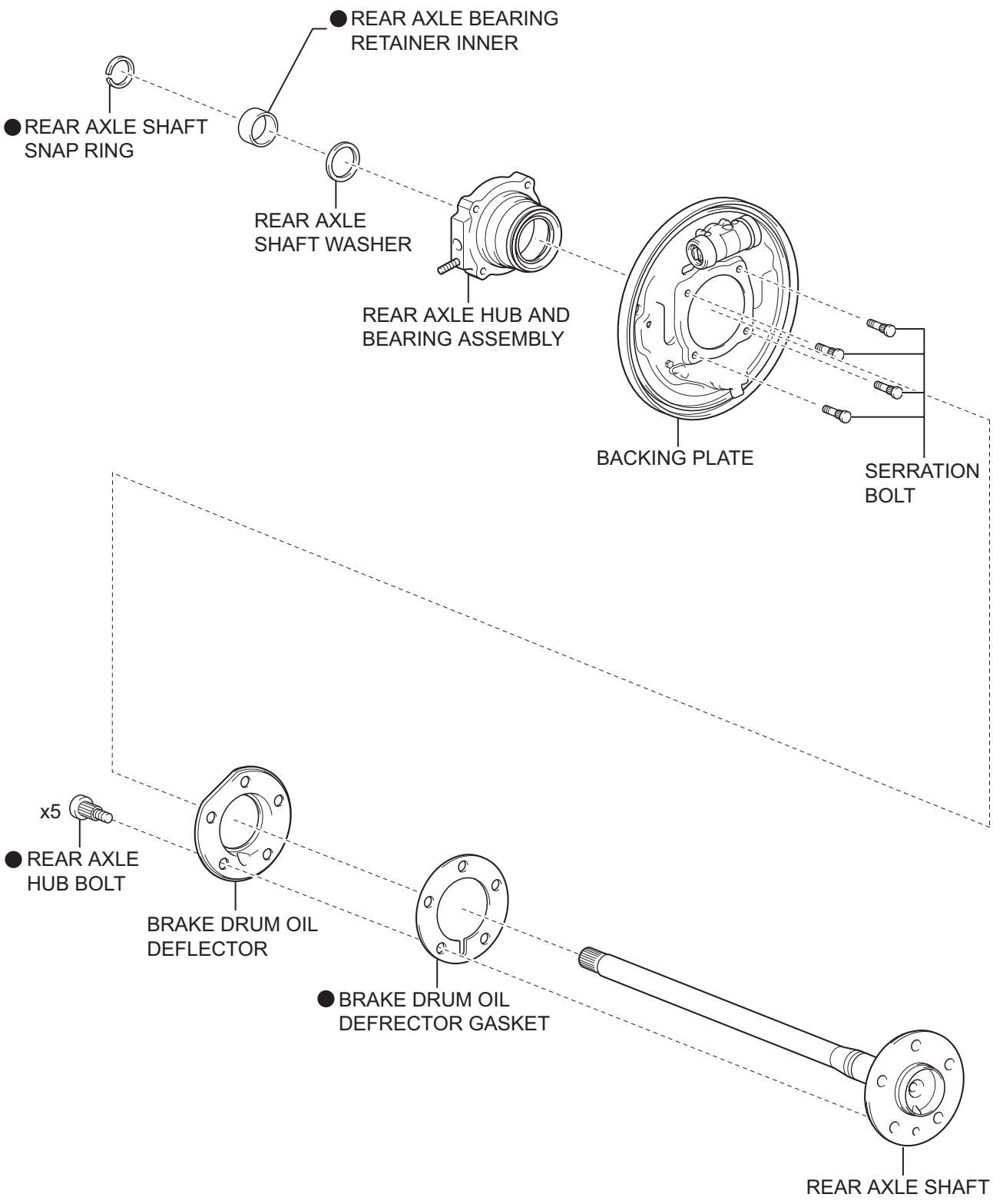

● Non-reusable part

P

C123607E01

AH

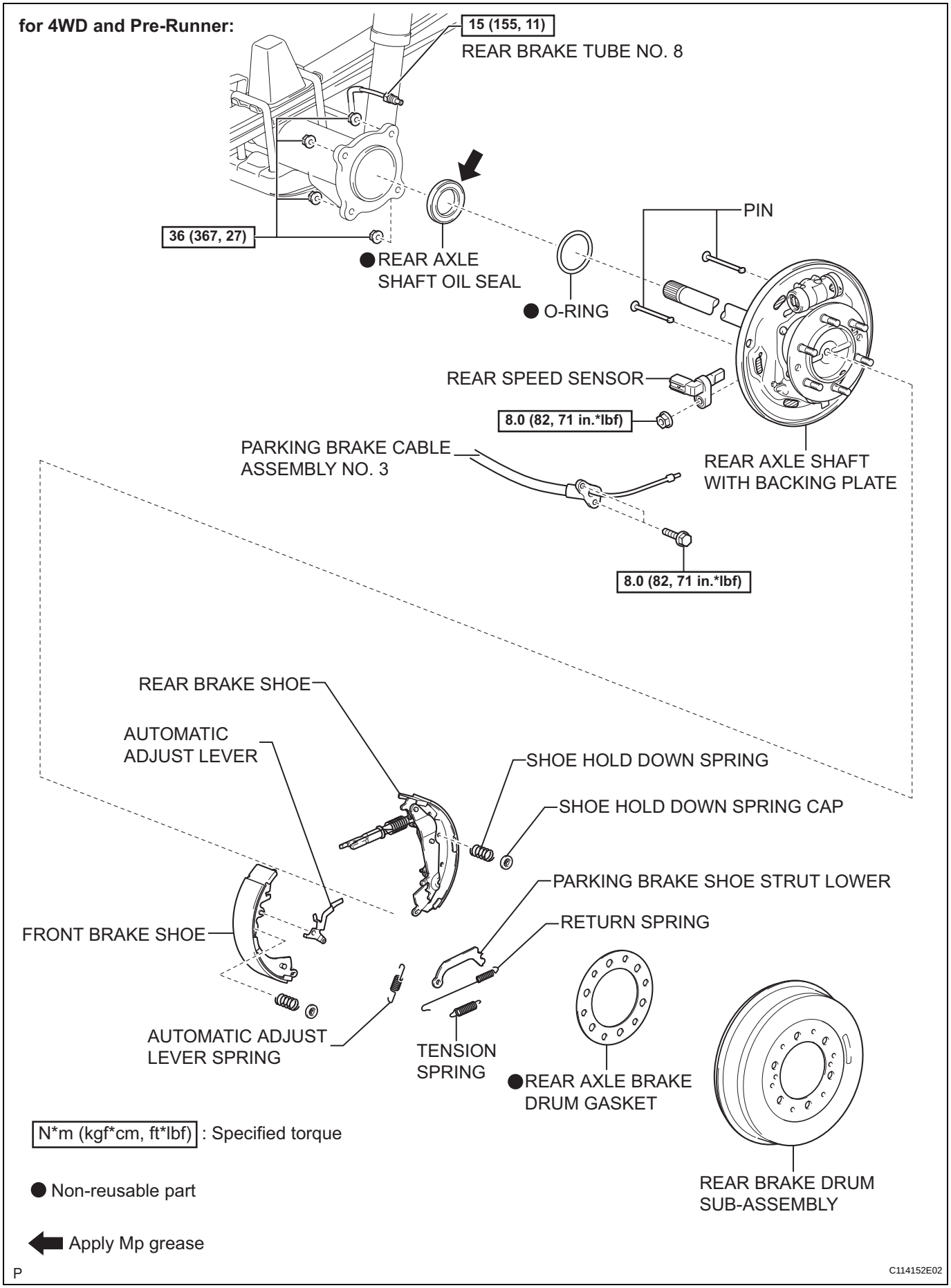
for 4WD and Pre-Runner:
15 (155, 11)
REAR BRAKE TUBE NO. 8
36 (367, 27)
● REAR AXLE SHAFT OIL SEAL
● O-RING
PIN
REAR SPEED SENSOR
8.0 (82, 71 in.*lbf)
PARKING BRAKE CABLE ASSEMBLY NO. 3
REAR AXLE SHAFT WITH BACKING PLATE
8.0 (82, 71 in.*lbf)
REAR BRAKE SHOE
AUTOMATIC ADJUST LEVER
SHOE HOLD DOWN SPRING
SHOE HOLD DOWN SPRING CAP
PARKING BRAKE SHOE STRUT LOWER
RETURN SPRING
FRONT BRAKE SHOE
AUTOMATIC ADJUST LEVER SPRING
TENSION SPRING
● REAR AXLE BRAKE DRUM GASKET
REAR BRAKE DRUM SUB-ASSEMBLY
N*m (kgf*cm, ft*lbf) : Specified torque
● Non-reusable part
Apply Mp grease
P
C114152E02

AH

for 4WD and Pre-Runner

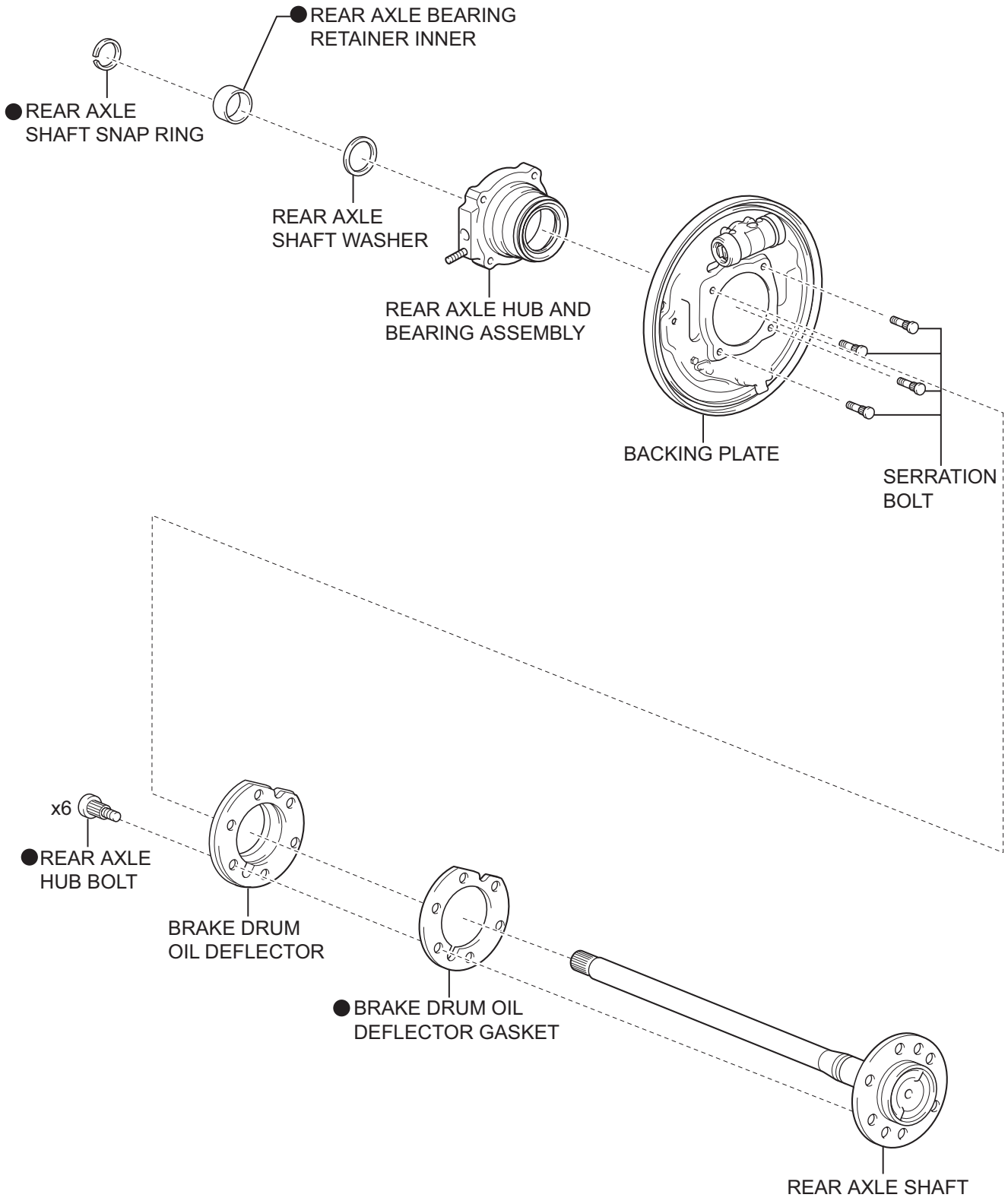

● Non-reusable part

P

C123606E01

AH

SUSPENSION SYSTEM

PROBLEM SYMPTOMS TABLE

HINT:
Use the table below to help you find the cause of the problem. The numbers indicate the ranked order of probability of each of the possible causes. Check each part in the order suggested. If necessary, replace these applicable parts.

Symptom	Suspected area	See page
Bottoming	1. Vehicle (Overloaded)	-
	2. Front coil spring (Weak) (2WD)	SP-15
	3. Front coil spring (Weak) (4WD and Pre-Runner)	SP-22
	4. Rear leaf spring	SP-54
	5. Front shock absorber (Worn) (2WD)	SP-16
	6. Front shock absorber (Worn) (4WD and Pre-Runner)	SP-22
	7. Rear shock absorber (Worn)	SP-60
Swaying/pitching	1. Tire (Worn or improperly inflated)	TW-1
	2. Front stabilizer bar (Bent or broken) (2WD)	SP-47
	3. Front stabilizer bar (Bent or broken) (4WD and Pre-Runner)	SP-50
	4. Rear stabilizer bar (Bent or broken) (Sport Suspension Package)	SP-63
	5. Front shock absorber (Worn) (2WD)	SP-16
	6. Front shock absorber (Worn) (4WD and Pre-Runner)	SP-22
	7. Rear shock absorber (Worn)	SP-60
Front wheel shimmy	1. Tire (Worn or improperly inflated)	TW-1
	2. Wheel (Out of balance)	TW-1
	3. Front shock absorber (Worn) (2WD)	SP-16
	4. Front shock absorber (Worn) (4WD and Pre-Runner)	SP-22
	5. Wheel alignment (Incorrect) (2WD)	SP-2
	6. Wheel alignment (Incorrect) (4WD and Pre-Runner)	SP-7
	7. Upper ball joint (Worn) (2WD)	SP-27
	8. Upper ball joint (Worn) (4WD and Pre-Runner)	SP-31
	9. Lower ball joint (Worn) (2WD)	SP-36
	10. Lower ball joint (Worn) (4WD and Pre-Runner)	SP-43
	11. Hub bearing (Worn)	AH-1
	12. Steering linkage (Loose or worn)	-
Rear wheel shimmy	1. Tire (Worn or improperly inflated)	TW-1
	2. Wheel (Out of balance)	TW-1
	3. Rear shock absorber (Worn)	SP-60
	4. Wheel alignment (Incorrect) (2WD)	SP-2
	5. Wheel alignment (Incorrect) (4WD and Pre-Runner)	SP-7
	6. Hub bearing (Worn)	AH-2
Abnormal tire wear	1. Tire (Worn or improperly inflated)	TW-1
	2. Wheel alignment (Incorrect) (2WD)	SP-2
	3. Wheel alignment (Incorrect) (4WD and Pre-Runner)	SP-7
	4. Front shock absorber (Worn) (2WD)	SP-16
	5. Front shock absorber (Worn) (4WD and Pre-Runner)	SP-22
	6. Rear shock absorber (Worn)	SP-60
	7. Suspension parts (Worn)	-

FRONT WHEEL ALIGNMENT (for 2WD)

ADJUSTMENT

1. **INSPECT TIRES (See page TW-1)**
2. **MEASURE VEHICLE HEIGHT**

Front:

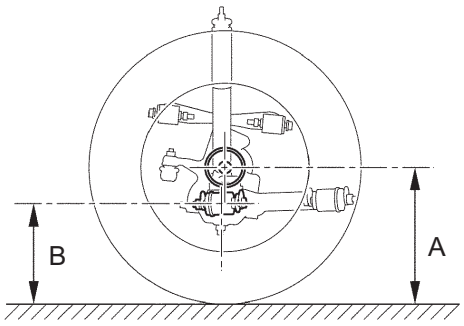

Rear:

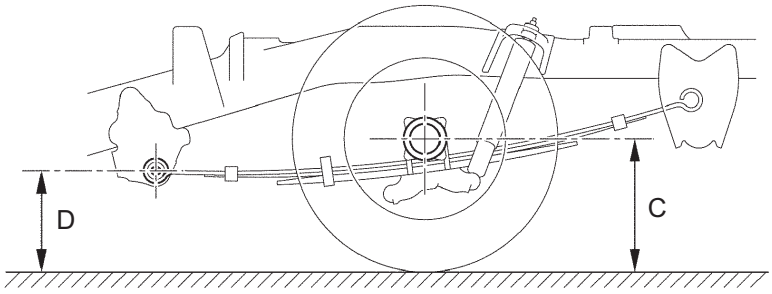

P

F051670E01

SP

Vehicle height:

Vehicle Model	Tire Size	A - B	C - D
TRN220L-TRMDKA	P215/70R15	87 mm (3.43 in.)	48 mm (1.89 in.)
TRN220L-TRPDKA	P215/70R15	88 mm (3.46 in.)	48 mm (1.89 in.)
TRN225L-CRMDKA	P215/70R15	86 mm (3.39 in.)	50 mm (1.97 in.)
TRN225L-CRPDKA	P215/70R15	87 mm (3.43 in.)	50 mm (1.97 in.)
GRN225L-CRFDKA	P255/45R18	118 mm (4.65 in.)	85 mm (3.35 in.)

Measuring points:

A:
Ground clearance of front wheel center

B:
Ground clearance of adjustment cam bolt center (front side)

C:
Ground clearance of rear wheel center

D:
Ground clearance of rear leaf spring front side bush center

NOTICE:

Before inspecting the wheel alignment, check the vehicle height.

Bounce the vehicle up and down at the corners to stabilize the suspension before inspecting the vehicle height.

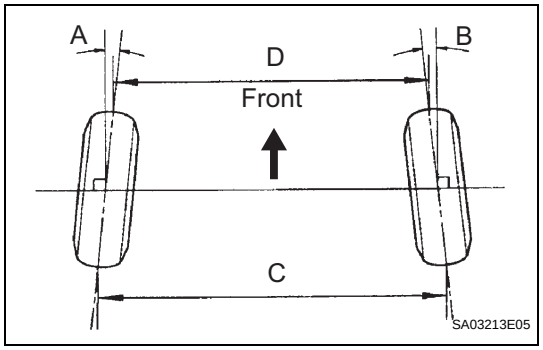

3. INSPECT TOE-IN

Toe-in

Vehicle Model	Tire Size	A + B	C - D
TRN220L-TRMDKA	P215/70R15	4.8' +- 6.5' (0.081° +- 0.108°)	0.96 +- 2 mm (0.038 +- 0.08 in.)
TRN220L-TRPDKA	P215/70R15	4.3' +- 6.5' (0.072° +- 0.108°)	0.86 +- 2 mm (0.034 +- 0.08 in.)
TRN225L-CRMDKA	P215/70R15	5.3' +- 6.5' (0.089° +- 0.108°)	1.06 +- 2 mm (0.042 +- 0.08 in.)
TRN225L-CRPDKA	P215/70R15	4.8' +- 6.5' (0.081° +- 0.108°)	0.96 +- 2 mm (0.038 +- 0.08 in.)
GRN225L-CRFDKA	P255/45R18	1.8' +- 6.5' (0.030° +- 0.108°)	0.36 +- 2 mm (0.014 +- 0.08 in.)

If the toe-in is not within the specified range, adjust it at the rack ends.

4. ADJUST TOE-IN

(a) Remove the rack boot set clips.
(b) Loosen the tie rod end lock nuts.
(c) Turn the right and left rack ends uniformly to adjust the toe-in.
HINT:
Try to adjust the toe-in to the middle of the specified range.

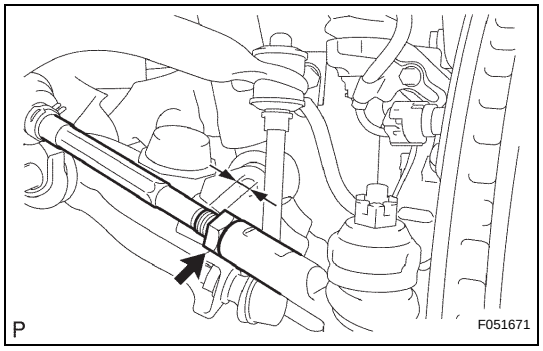

(d) Make sure that the lengths of the right and left rack ends are the same.
(e) Torque the tie rod end lock nuts.
Torque: 55.5 N*m (566 kgf*cm, 41 ft.*lbf)
(f) Install the boots onto the seats with the clips.
HINT:
Make sure that the boots are not twisted.

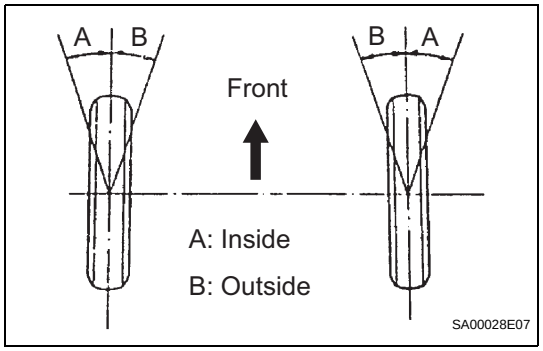

5. INSPECT WHEEL TURNING ANGLE

(a) Turn the steering wheel fully, and measure the turning angle.
Wheel turning angle

Inside wheel	Outside wheel (Reference)
38°48' (36°48' to 39°48') 38.80° (36.80° to 39.80°)	32°30' (30°30' to 33°30') 32.50° (30.50° to 33.50°)

If the right and left turning angles of the inside and outside wheels are not within the specified ranges, check the right and left rack end lengths.

SP

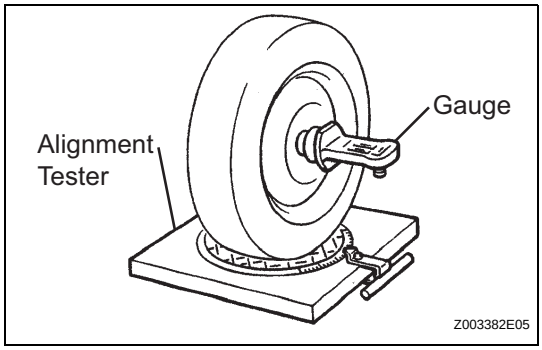

6. INSPECT CAMBER, CASTER AND STEERING AXIS INCLINATION

(a) Install the camber-caster-kingpin gauge and position the front wheel on the wheel alignment tester.

(b) Inspect the camber, caster and steering axis inclination.

Camber, caster and steering axis inclination

Vehicle Model	Tire Size	Camber	Caster	Steering Axis Inclination
TRN220L-TRMDKA	P215/70R15	0°13' +- 45' (0.22° +- 0.75°)	3°52' +- 45' (3.86° +- 0.75°)	10°42' +- 45' (10.70° +- 0.75°)
TRN220L-TRPDKA	P215/70R15	0°12' +- 45' (0.20° +- 0.75°)	3°52' +- 45' (3.86° +- 0.75°)	10°44' +- 45' (10.73° +- 0.75°)
TRN225L-CRMDKA	P215/70R15	0°14' +- 45' (0.24° +- 0.75°)	4°01' +- 45' (4.01° +- 0.75°)	10°41' +- 45' (10.69° +- 0.75°)
TRN225L-CRPDKA	P215/70R15	0°13' +- 45' (0.22° +- 0.75°)	4°01' +- 45' (4.02° +- 0.75°)	10°42' +- 45' (10.70° +- 0.75°)
GRN225L-CRFDKA	P255/45R18	-0°40' +- 45' (-0.66° +- 0.75°)	5°09' +- 45' (5.15° +- 0.75°)	11°34' +- 45' (11.56° +- 0.75°)

NOTICE:

- **Perform the inspection while the vehicle is empty (without spare tires or tools on board).**
- **The tolerance for the difference between the left and right wheels is 30' (0.50°) or less for both the camber and caster.**

If the steering axis inclination is not as specified after the camber and caster have been correctly adjusted, recheck the steering knuckle and front wheel for distortion and slack.

7. ADJUST CAMBER AND CASTER

NOTICE:

Inspect the toe-in after the camber has been adjusted.

(a) Loosen the 2 nuts.

(b) Turn the camber adjust cam and adjust the camber and caster.

HINT:

Try to adjust the camber and caster to the central value.

SP

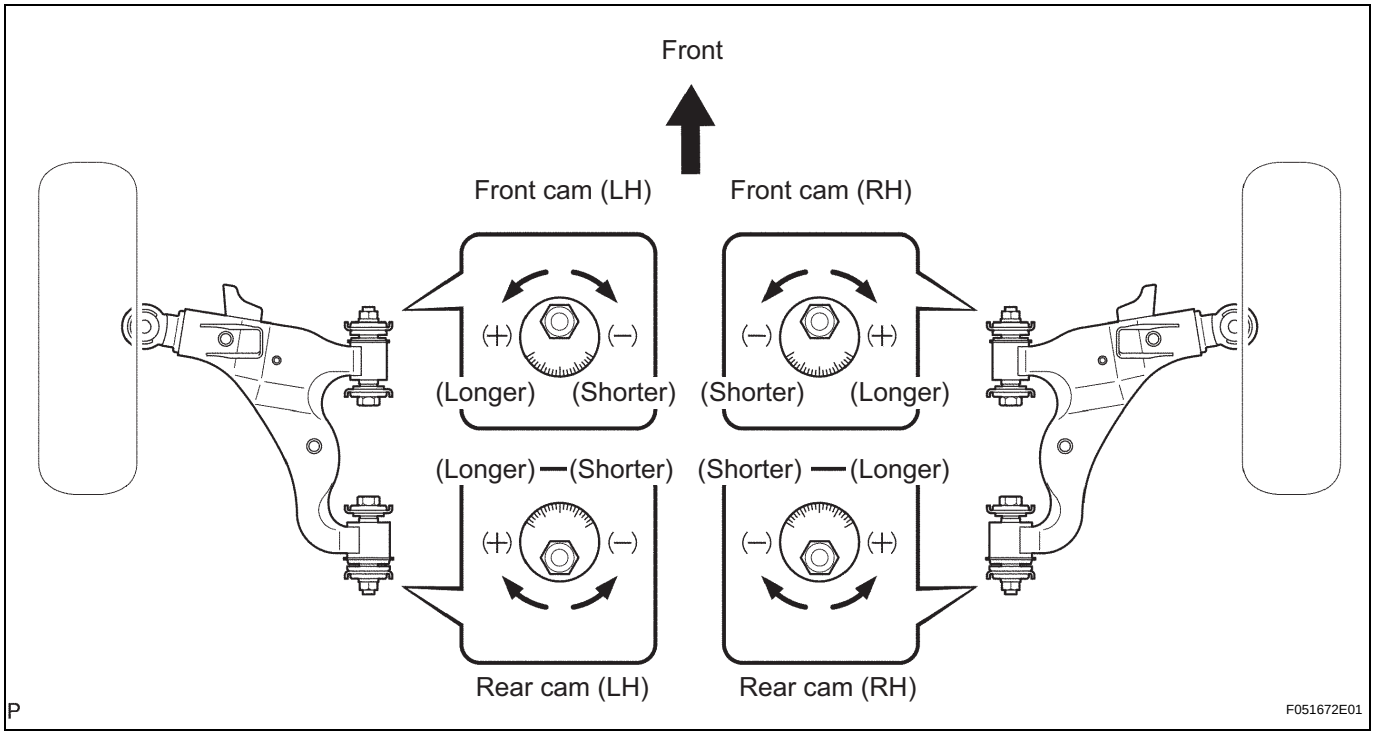

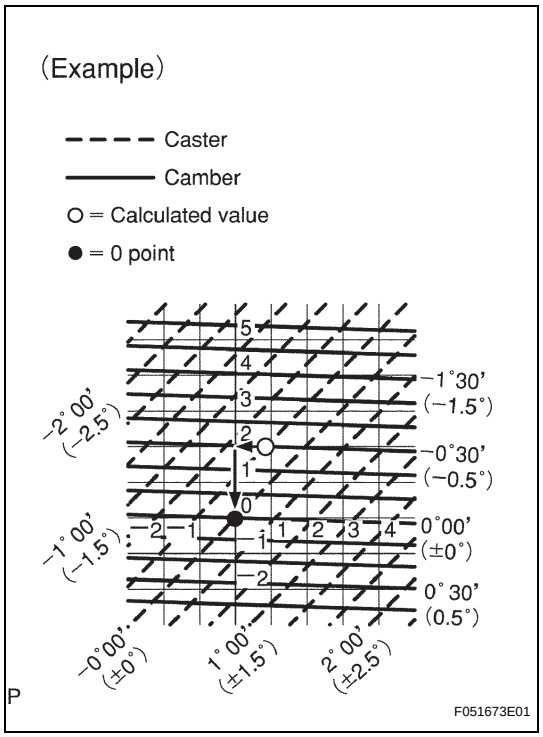

(c) How to read the adjustment chart (using examples).

(1) Measure the present alignment.

Camber:
-0°17' (0.28°)
Caster:
3°30' (3.50°)

(2) Calculate the difference between the standard value (A) and the measured value (B) on the adjustment chart.

Standard value:
Camber:
0°13' (0.22°)
Caster:
3°50' (3.84°)
Formula:
B - A = C
Camber:
-0°17' - 0°13' = -0°30'
Caster:
3°30' - 3°50' = -0°20'

(3) As shown in the chart, read the distance from the marked point to 0 point, and adjust the front and/or rear adjusting cams accordingly.

Front adjust cam:
- (Shorter) 1.9
Rear adjust cam:
- (Shorter) 0.8

SP

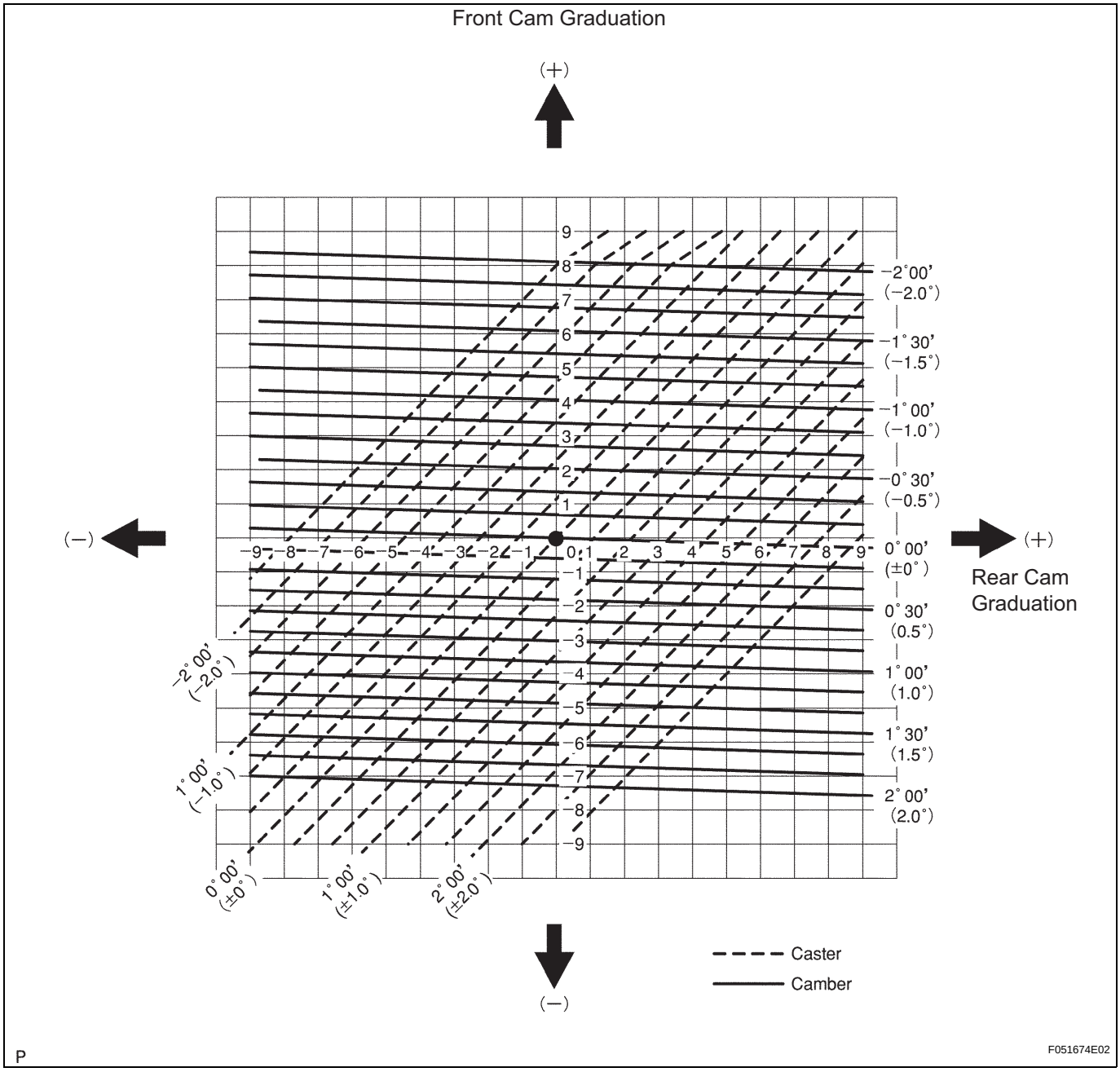
Front Cam Graduation
(+)
(−)
(−)
(+)
Rear Cam Graduation
9
8
7
6
5
4
3
2
1
0
−1
−2
−3
−4
−5
−6
−7
−8
−9
−2°00'
(−2.0°)
−1°30'
(−1.5°)
−1°00'
(−1.0°)
−0°30'
(−0.5°)
0°00'
(±0°)
0°30'
(0.5°)
1°00'
(1.0°)
1°30'
(1.5°)
2°00'
(2.0°)
−2°00'
(−2.0°)
1°00'
(−1.0°)
0°00'
(±0°)
1°00'
(±1.0°)
2°00'
(±2.0°)
Caster
Camber
P
F051674E02

SP

FRONT WHEEL ALIGNMENT (for 4WD and Pre-Runner)

ADJUSTMENT

1. **INSPECT TIRES (See page TW-1)**
2. **MEASURE VEHICLE HEIGHT**

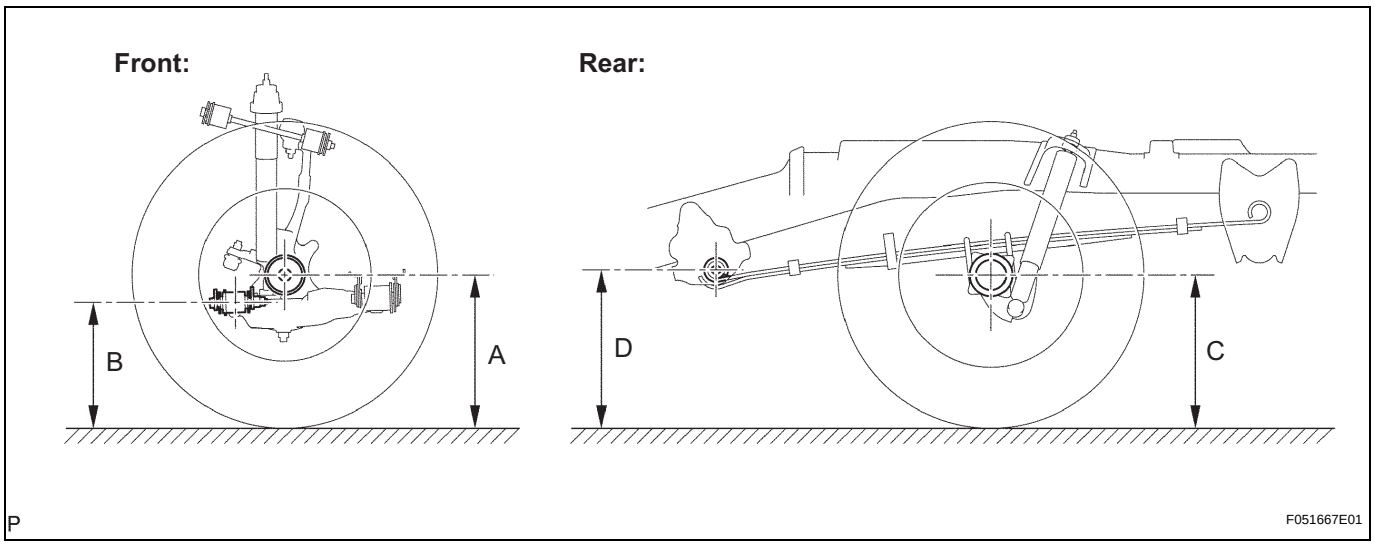

Vehicle height:
for Pre-Runner (North America)

Vehicle Model	Tire Size	A-B	C-D
TRN260L-TRMDKA	P245/75R16	62 mm (2.44 in.)	-47 mm (-1.85 in.)
TRN265L-CRMDKA	P245/75R16	60 mm (2.36 in.)	-47 mm (-1.85 in.)
GRN265L-CRFDKA	P245/75R16	66 mm (2.60 in.)	-44 mm (-1.73 in.)
GRN265L-CRFDKA	P265/70R16	69 mm (2.72 in.)	-46 mm (-1.81 in.)
GRN265L-CRFDKA	P265/65R17	66 mm (2.60 in.)	-44 mm (-1.73 in.)
GRN265L-CRADKA	P245/75R16	63 mm (2.48 in.)	-44 mm (-1.73 in.)
GRN265L-CRADKA	P265/70R16	70 mm (2.76 in.)	-45 mm (-1.77 in.)
GRN265L-CRADKA	P265/65R17	63 mm (2.48 in.)	-44 mm (-1.73 in.)
GRN265L-PRADKA	P245/75R16	64 mm (2.52 in.)	-39 mm (-1.54 in.)
GRN265L-PRADKA	P265/70R16	62 mm (2.44 in.)	-43 mm (-1.69 in.)
GRN265L-PRADKA	P265/65R17	64 mm (2.52 in.)	-39 mm (-1.54 in.)
GRN270L-PRADKA	P245/75R16	65 mm (2.56 in.)	-38 mm (-1.50 in.)
GRN270L-PRADKA	P265/65R17	65 mm (2.56 in.)	-38 mm (-1.50 in.)

for Pre-Runner (Mexico)

Vehicle Model	Tire Size	A-B	C-D
GRN265L-PRADKA	P245/75R16	53 mm (2.09 in.)	-51 mm (-2.01 in.)
GRN265L-PRADKA	P265/65R17	53 mm (2.09 in.)	-51 mm (-2.01 in.)

for 4WD

Vehicle Model	Tire Size	A-B	C-D
TRN240L-TRMDKA	P245/75R16	63 mm (2.48 in.)	-45 mm (-1.77 in.)
TRN245L-CRMDKA	P245/75R16	63 mm (2.48 in.)	-44 mm (-1.73 in.)
GRN245L-CRFDKA	P245/75R16	69 mm (2.72 in.)	-40 mm (-1.57 in.)
GRN245L-CRFDKA	P265/70R16	71 mm (2.80 in.)	-43 mm (-1.69 in.)

Vehicle Model	Tire Size	A-B	C-D
GRN245L-CRFDKA	P265/65R17	69 mm (2.72 in.)	-41 mm (-1.61 in.)
GRN245L-CRADKA	P245/75R16	65 mm (2.56 in.)	-41 mm (-1.61 in.)
GRN245L-CRADKA	P265/70R16	71 mm (2.80 in.)	-43 mm (-1.69 in.)
GRN245L-CRADKA	P265/65R17	65 mm (2.56 in.)	-41 mm (-1.61 in.)
GRN245L-PRFDKA	P245/75R16	64 mm (2.52 in.)	-38 mm (-1.50 in.)
GRN245L-PRFDKA	P265/70R16	69 mm (2.72 in.)	-39 mm (-1.54 in.)
GRN245L-PRFDKA	P265/65R17	64 mm (2.52 in.)	-38 mm (-1.50 in.)
GRN245L-PRADKA	P245/75R16	65 mm (2.56 in.)	-37 mm (-1.46 in.)
GRN245L-PRADKA	P265/70R16	70 mm (2.76 in.)	-38 mm (-1.50 in.)
GRN245L-PRADKA	P265/65R17	65 mm (2.56 in.)	-37 mm (-1.46 in.)
GRN250L-PRADKA	P245/75R16	66 mm (2.60 in.)	-35 mm (-1.38 in.)
GRN250L-PRADKA	P265/65R17	66 mm (2.60 in.)	-35 mm (-1.38 in.)

Measuring points:

A:
Ground clearance of front wheel center

B:
Ground clearance of adjustment cam bolt center (front side)

C:
Ground clearance of rear wheel center

D:
Ground clearance of rear leaf spring front side bush center

NOTICE:

Before inspecting the wheel alignment, check the vehicle height.

Bounce the vehicle up and down at the corners to stabilize the suspension before inspecting the vehicle height.

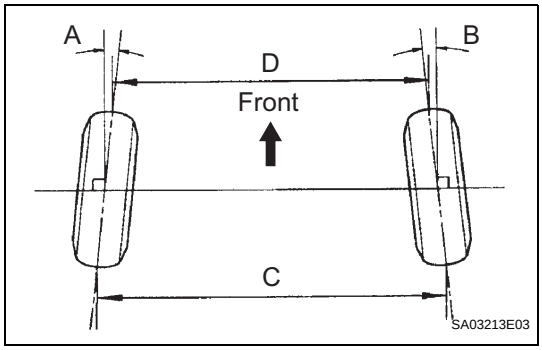

3. INSPECT TOE-IN

Toe-in:

for Pre-Runner (North America)

Vehicle Model	Tire Size	A+B	C-D
TRN260L-TRMDKA	P245/75R16	7.3' +- 6.5' (0.121° +- 0.108°)	1.64 +- 2 mm (0.065 +- 0.08 in.)
TRN265L-CRMDKA	P245/75R16	8.6' +- 6.5' (0.144° +- 0.108°)	1.94 +- 2 mm (0.076 +- 0.08 in.)
GRN265L-CRFDKA	P245/75R16	4.6' +- 6.5' (0.077° +- 0.108°)	1.04 +- 2 mm (0.041 +- 0.08 in.)
GRN265L-CRFDKA	P265/70R16	2.7' +- 6.5' (0.044° +- 0.108°)	0.60 +- 2 mm (0.024 +- 0.08 in.)
GRN265L-CRFDKA	P265/65R17	4.6' +- 6.5' (0.077° +- 0.108°)	1.05 +- 2 mm (0.041 +- 0.08 in.)
GRN265L-CRADKA	P245/75R16	6.6' +- 6.5' (0.110° +- 0.108°)	1.48 +- 2 mm (0.058 +- 0.08 in.)
GRN265L-CRADKA	P265/70R16	2.0' +- 6.5' (0.033° +- 0.108°)	0.45 +- 2 mm (0.018 +- 0.08 in.)
GRN265L-CRADKA	P265/65R17	6.6' +- 6.5' (0.111° +- 0.108°)	1.50 +- 2 mm (0.059 +- 0.08 in.)
GRN265L-PRADKA	P245/75R16	5.2' +- 6.5' (0.087° +- 0.108°)	1.18 +- 2 mm (0.046 +- 0.08 in.)
GRN265L-PRADKA	P265/70R16	6.6' +- 6.5' (0.110° +- 0.108°)	1.49 +- 2 mm (0.059 +- 0.08 in.)

Vehicle Model	Tire Size	A+B	C-D
GRN265L-PRADKA	P265/65R17	5.3' +- 6.5' (0.089° +- 0.108°)	1.20 +- 2 mm (0.047 +- 0.08 in.)
GRN270L-PRADKA	P245/75R16	4.6' +- 6.5' (0.077° +- 0.108°)	1.04 +- 2 mm (0.041 +- 0.08 in.)
GRN270L-PRADKA	P265/65R17	4.6' +- 6.5' (0.077° +- 0.108°)	1.05 +- 2 mm (0.041 +- 0.08 in.)

for Pre-Runner (Mexico)

Vehicle Model	Tire Size	A+B	C-D
GRN265L-PRADKA	P245/75R16	12.7' +- 6.5' (0.212° +- 0.108°)	2.87 +- 2 mm (0.113 +- 0.08 in.)
GRN265L-PRADKA	P265/65R17	12.9' +- 6.5' (0.215° +- 0.108°)	2.91 +- 2 mm (0.115 +- 0.08 in.)

for 4WD

Vehicle Model	Tire Size	A+B	C-D
TRN240L-TRMDKA	P245/75R16	6.6' +- 6.5' (0.110° +- 0.108°)	1.48 +- 2 mm (0.058 +- 0.08 in.)
TRN245L-CRMDKA	P245/75R16	6.6' +- 6.5' (0.110° +- 0.108°)	1.48 +- 2 mm (0.058 +- 0.08 in.)
GRN245L-CRFDKA	P245/75R16	2.6' +- 6.5' (0.044° +- 0.108°)	0.59 +- 2 mm (0.023 +- 0.08 in.)
GRN245L-CRFDKA	P265/70R16	1.3' +- 6.5' (0.022° +- 0.108°)	0.30 +- 2 mm (0.012 +- 0.08 in.)
GRN245L-CRFDKA	P265/65R17	2.7' +- 6.5' (0.044° +- 0.108°)	0.60 +- 2 mm (0.024 +- 0.08 in.)
GRN245L-CRADKA	P245/75R16	5.2' +- 6.5' (0.087° +- 0.108°)	1.18 +- 2 mm (0.046 +- 0.08 in.)
GRN245L-CRADKA	P265/70R16	1.3' +- 6.5' (0.022° +- 0.108°)	0.30 +- 2 mm (0.012 +- 0.08 in.)
GRN245L-CRADKA	P265/65R17	5.3' +- 6.5' (0.089° +- 0.108°)	1.20 +- 2 mm (0.047 +- 0.08 in.)
GRN245L-PRFDKA	P245/75R16	5.2' +- 6.5' (0.087° +- 0.108°)	1.18 +- 2 mm (0.046 +- 0.08 in.)
GRN245L-PRFDKA	P265/70R16	2.7' +- 6.5' (0.044° +- 0.108°)	0.60 +- 2 mm (0.024 +- 0.08 in.)
GRN245L-PRFDKA	P265/65R17	5.3' +- 6.5' (0.089° +- 0.108°)	1.20 +- 2 mm (0.047 +- 0.08 in.)
GRN245L-PRADKA	P245/75R16	4.6' +- 6.5' (0.077° +- 0.108°)	1.04 +- 2 mm (0.041 +- 0.08 in.)
GRN245L-PRADKA	P265/70R16	2.0' +- 6.5' (0.033° +- 0.108°)	0.45 +- 2 mm (0.018 +- 0.08 in.)
GRN245L-PRADKA	P265/65R17	4.6' +- 6.5' (0.077° +- 0.108°)	1.05 +- 2 mm (0.041 +- 0.08 in.)
GRN250L-PRADKA	P245/75R16	4.0' +- 6.5' (0.066° +- 0.108°)	0.89 +- 2 mm (0.035 +- 0.08 in.)
GRN250L-PRADKA	P265/65R17	4.0' +- 6.5' (0.066° +- 0.108°)	0.90 +- 2 mm (0.035 +- 0.08 in.)

If the toe-in is not within the specified range, adjust it at the rack ends.

4. ADJUST TOE-IN

(a) Remove the rack boot set clips.

(b) Loosen the tie rod end lock nuts.

(c) Turn the right and left rack ends uniformly to adjust the toe-in.
HINT:
Try to adjust the toe-in to the middle of the specified range.

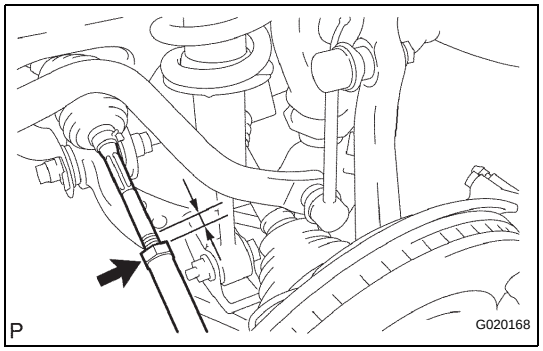

(d) Make sure that the lengths of the right and left rack ends are the same.

(e) Torque the tie rod end lock nuts.
Torque: 55.5 N*m (566 kgf*cm, 41 ft.*lbf)

(f) Place the boots on the seats and install the clips.
HINT:
Make sure that the boots are not twisted.

SP

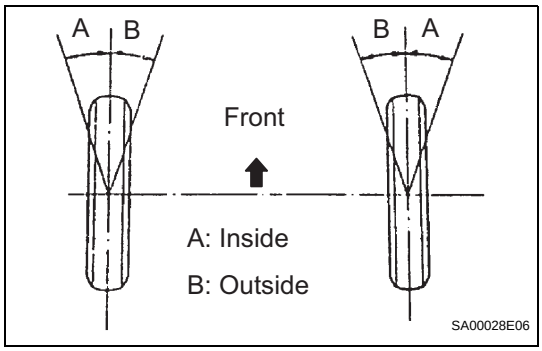

5. INSPECT WHEEL TURNING ANGLE

(a) Turn the steering wheel fully, and measure the turning angle.

Wheel turning angle

Inside wheel	Outside wheel (Reference)
40°18' (38°18' to 41°18') 40.30° (38.30° to 41.30°)	35°54' (33°54' to 36°54') 35.90° (33.90° to 36.90°)

If the right and left turning angles of the inside and outside wheels are not within the specified ranges, check the right and left rack end lengths.

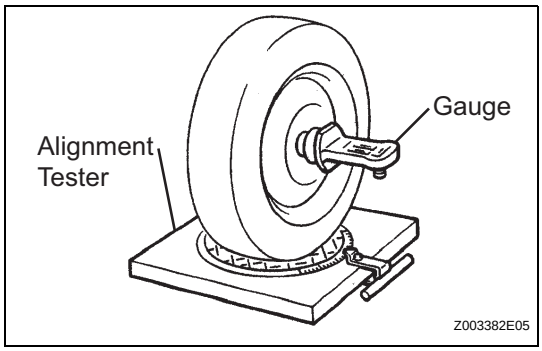

6. INSPECT CAMBER, CASTER AND STEERING AXIS INCLINATION

(a) Install the camber-caster-kingpin gauge and position the front wheel on the wheel alignment tester.

(b) Inspect the camber, caster and steering axis inclination.

Camber, caster and steering axis inclination: for Pre-Runner (North America)

Vehicle Model	Tire Size	Camber	Caster	Steering Axis Inclination
TRN260L-TRMDKA	P245/75R16	0°35' +- 45' (0.59° +- 0.75°)	1°41' +- 45' (1.68° +- 0.75°)	11°52' +- 45' (11.86° +- 0.75°)
TRN265L-CRMDKA	P245/75R16	0°37' +- 45' (0.62° +- 0.75°)	1°46' +- 45' (1.77° +- 0.75°)	11°50' +- 45' (11.83° +- 0.75°)
GRN265L-CRFDKA	P245/75R16	0°31' +- 45' (0.52° +- 0.75°)	1°55' +- 45' (1.92° +- 0.75°)	11°56' +- 45' (11.93° +- 0.75°)
GRN265L-CRFDKA	P265/70R16	0°28' +- 45' (0.47° +- 0.75°)	1°56' +- 45' (1.93° +- 0.75°)	11°59' +- 45' (11.99° +- 0.75°)
GRN265L-CRFDKA	P265/65R17	0°31' +- 45' (0.52° +- 0.75°)	1°56' +- 45' (1.94° +- 0.75°)	11°56' +- 45' (11.93° +- 0.75°)
GRN265L-CRADKA	P245/75R16	0°35' +- 45' (0.58° +- 0.75°)	1°53' +- 45' (1.89° +- 0.75°)	11°53' +- 45' (11.88° +- 0.75°)
GRN265L-CRADKA	P265/70R16	0°27' +- 45' (0.45° +- 0.75°)	1°59' +- 45' (1.98° +- 0.75°)	12°00' +- 45' (12.00° +- 0.75°)
GRN265L-CRADKA	P265/65R17	0°35' +- 45' (0.58° +- 0.75°)	1°53' +- 45' (1.89° +- 0.75°)	11°53' +- 45' (11.88° +- 0.75°)
GRN265L-PRADKA	P245/75R16	0°32' +- 45' (0.54° +- 0.75°)	2°01' +- 45' (2.01° +- 0.75°)	11°55' +- 45' (11.91° +- 0.75°)
GRN265L-PRADKA	P265/70R16	0°35' +- 45' (0.58° +- 0.75°)	1°58' +- 45' (1.96° +- 0.75°)	11°53' +- 45' (11.88° +- 0.75°)
GRN265L-PRADKA	P265/65R17	0°32' +- 45' (0.54° +- 0.75°)	2°01' +- 45' (2.01° +- 0.75°)	11°55' +- 45' (11.91° +- 0.75°)
GRN270L-PRADKA	P245/75R16	0°31' +- 45' (0.52° +- 0.75°)	2°07' +- 45' (2.11° +- 0.75°)	11°56' +- 45' (11.93° +- 0.75°)
GRN270L-PRADKA	P265/65R17	0°31' +- 45' (0.52° +- 0.75°)	2°08' +- 45' (2.13° +- 0.75°)	11°56' +- 45' (11.93° +- 0.75°)

for Pre-Runner (Mexico)

Vehicle Model	Tire Size	Camber	Caster	Steering Axis Inclination
GRN265L-PRADKA	P245/75R16	0°43' +- 45' (0.71° +- 0.75°)	1°38' +- 45' (1.64° +- 0.75°)	11°44' +- 45' (11.74° +- 0.75°)
GRN265L-PRADKA	P265/65R17	0°43' +- 45' (0.71° +- 0.75°)	1°38' +- 45' (1.64° +- 0.75°)	11°44' +- 45' (11.74° +- 0.75°)

SP

for 4WD

Vehicle Model	Tire Size	Camber	Caster	Steering Axis Inclination
TRN240L-TRMDKA	P245/75R16	0°35' +- 45' (0.58° +- 0.75°)	1°44' +- 45' (1.73 +- 0.75°)	11°52' +- 45' (11.86° +- 0.75°)
TRN245L-CRMDKA	P245/75R16	0°35' +- 45' (0.58° +- 0.75°)	1°51' +- 45' (1.85° +- 0.75°)	11°53' +- 45' (11.88° +- 0.75°)
GRN245L-CRFDKA	P245/75R16	0°28' +- 45' (0.47° +- 0.75°)	1°59' +- 45' (1.99° +- 0.75°)	11°59' +- 45' (11.99° +- 0.75°)
GRN245L-CRFDKA	P265/70R16	0°26' +- 45' (0.43° +- 0.75°)	2°00' +- 45' (2.00° +- 0.75°)	12°01' +- 45' (12.02° +- 0.75°)
GRN245L-CRFDKA	P265/65R17	0°28' +- 45' (0.47° +- 0.75°)	2°00' +- 45' (2.00° +- 0.75°)	11°59' +- 45' (11.99° +- 0.75°)
GRN245L-CRADKA	P245/75R16	0°32' +- 45' (0.54° +- 0.75°)	1°55' +- 45' (1.92° +- 0.75°)	11°55' +- 45' (11.91° +- 0.75°)
GRN245L-CRADKA	P265/70R16	0°26' +- 45' (0.43° +- 0.75°)	2°00' +- 45' (2.00° +- 0.75°)	12°01' +- 45' (12.02° +- 0.75°)
GRN245L-CRADKA	P265/65R17	0°32' +- 45' (0.54° +- 0.75°)	1°55' +- 45' (1.92° +- 0.75°)	11°55' +- 45' (11.91° +- 0.75°)
GRN245L-PRFDKA	P245/75R16	0°32' +- 45' (0.54° +- 0.75°)	2°02' +- 45' (2.03° +- 0.75°)	11°55' +- 45' (11.91° +- 0.75°)
GRN245L-PRFDKA	P265/70R16	0°28' +- 45' (0.47° +- 0.75°)	2°04' +- 45' (2.06° +- 0.75°)	11°59' +- 45' (11.99° +- 0.75°)
GRN245L-PRFDKA	P265/65R17	0°32' +- 45' (0.54° +- 0.75°)	2°02' +- 45' (2.03° +- 0.75°)	11°55' +- 45' (11.91° +- 0.75°)
GRN245L-PRADKA	P245/75R16	0°31' +- 45' (0.52° +- 0.75°)	2°04' +- 45' (2.06° +- 0.75°)	11°56' +- 45' (11.93° +- 0.75°)
GRN245L-PRADKA	P265/70R16	0°27' +- 45' (0.45° +- 0.75°)	2°05' +- 45' (2.09° +- 0.75°)	12°00' +- 45' (12.00° +- 0.75°)
GRN245L-PRADKA	P265/65R17	0°31' +- 45' (0.52° +- 0.75°)	2°04' +- 45' (2.06° +- 0.75°)	11°56' +- 45' (11.93° +- 0.75°)
GRN250L-PRADKA	P245/75R16	0°30' +- 45' (0.50° +- 0.75°)	2°08' +- 45' (2.14° +- 0.75°)	11°57' +- 45' (11.95° +- 0.75°)
GRN250L-PRADKA	P265/65R17	0°30' +- 45' (0.50° +- 0.75°)	2°10' +- 45' (2.16° +- 0.75°)	11°57' +- 45' (11.95° +- 0.75°)

NOTICE:

- **Perform the inspection while the vehicle is empty (without spare tires or tools on board).**
- **The tolerance for the difference between the left and right wheels is 30' (0.50°) or less for both the camber and caster.**

If the steering axis inclination is not as specified after the camber and caster have been correctly adjusted, recheck the steering knuckle and front wheel for distortion and slack.

7. ADJUST CAMBER AND CASTER

NOTICE:

Inspect the toe-in after the camber has been adjusted.

(a) Loosen the nut and bolt.

(b) Turn camber adjust cam No. 2 and the toe adjust cam and adjust the camber and the caster.

HINT:

Try to adjust the camber and caster to the central values.

SP

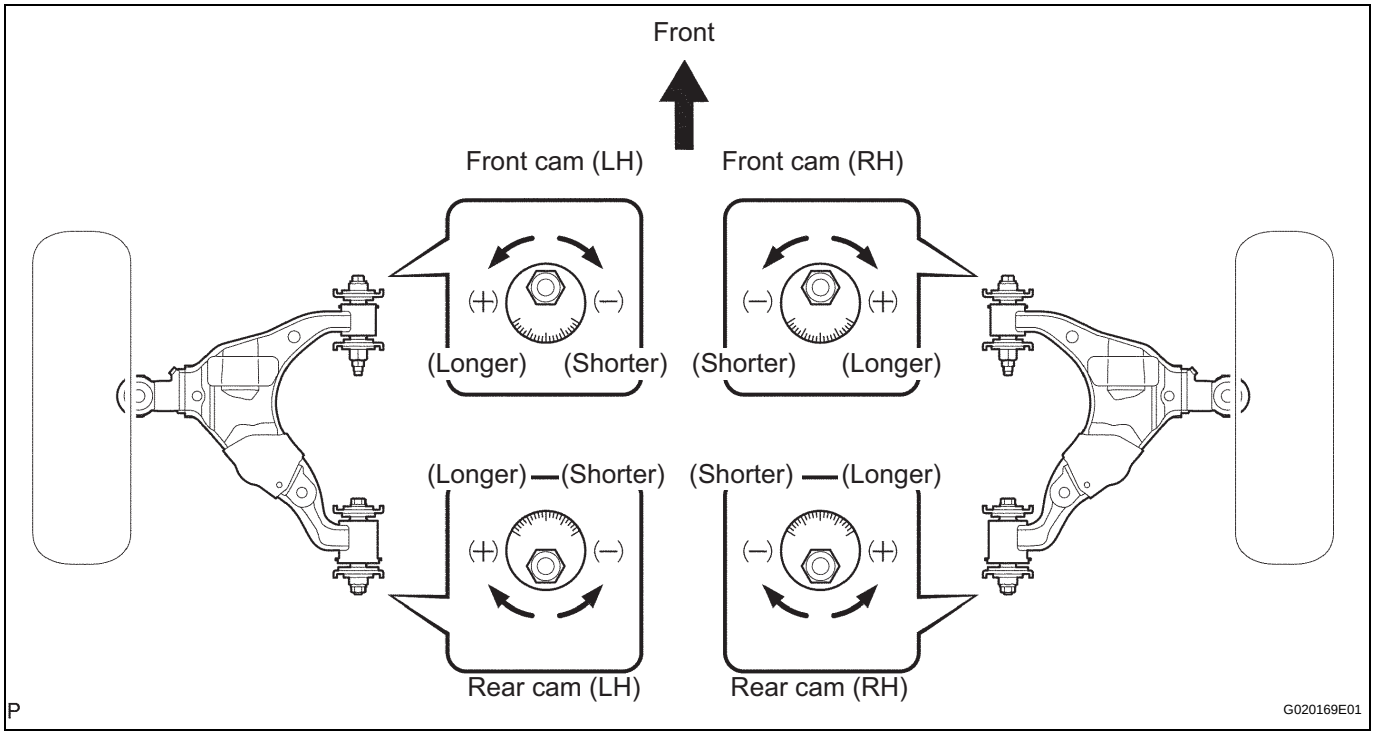

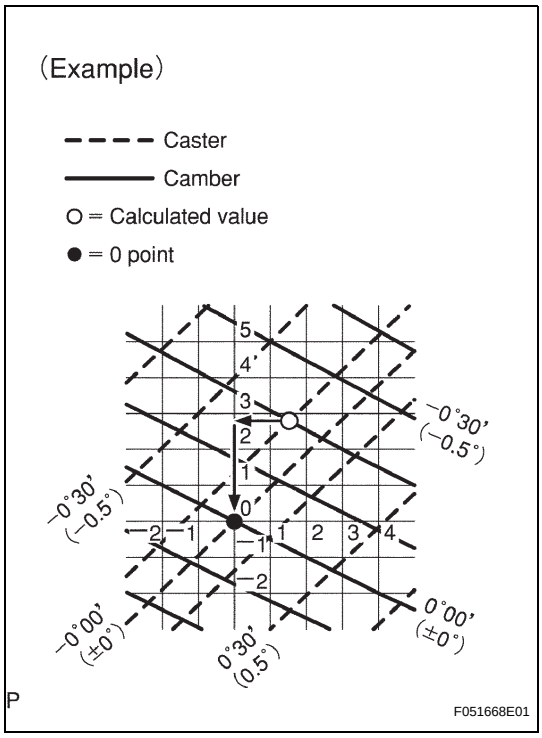

(c) How to read the adjustment chart (using examples).

(1) Measure the present alignment.

Camber:
0°17' (0.28°)
Caster:
1°28' (1.47°)

(2) Calculate the difference between the standard value (A) and the measured value (B) on the adjustment chart.

Standard value:
Camber:
0°37' (0.61°)
Caster:
1°38' (1.64°)
Formula:
B - A = C
Camber:
0°17' - (0°37') = -0°20'
Caster:
1°28' - (1°38') = -0°10'

(3) As shown in the chart, read the distance from the marked point to 0 point, and adjust the front and/or rear adjusting cams accordingly.

Toe adjust cam:
- (Shorter) 2.8
Camber adjust cam:
- (Shorter) 1.5

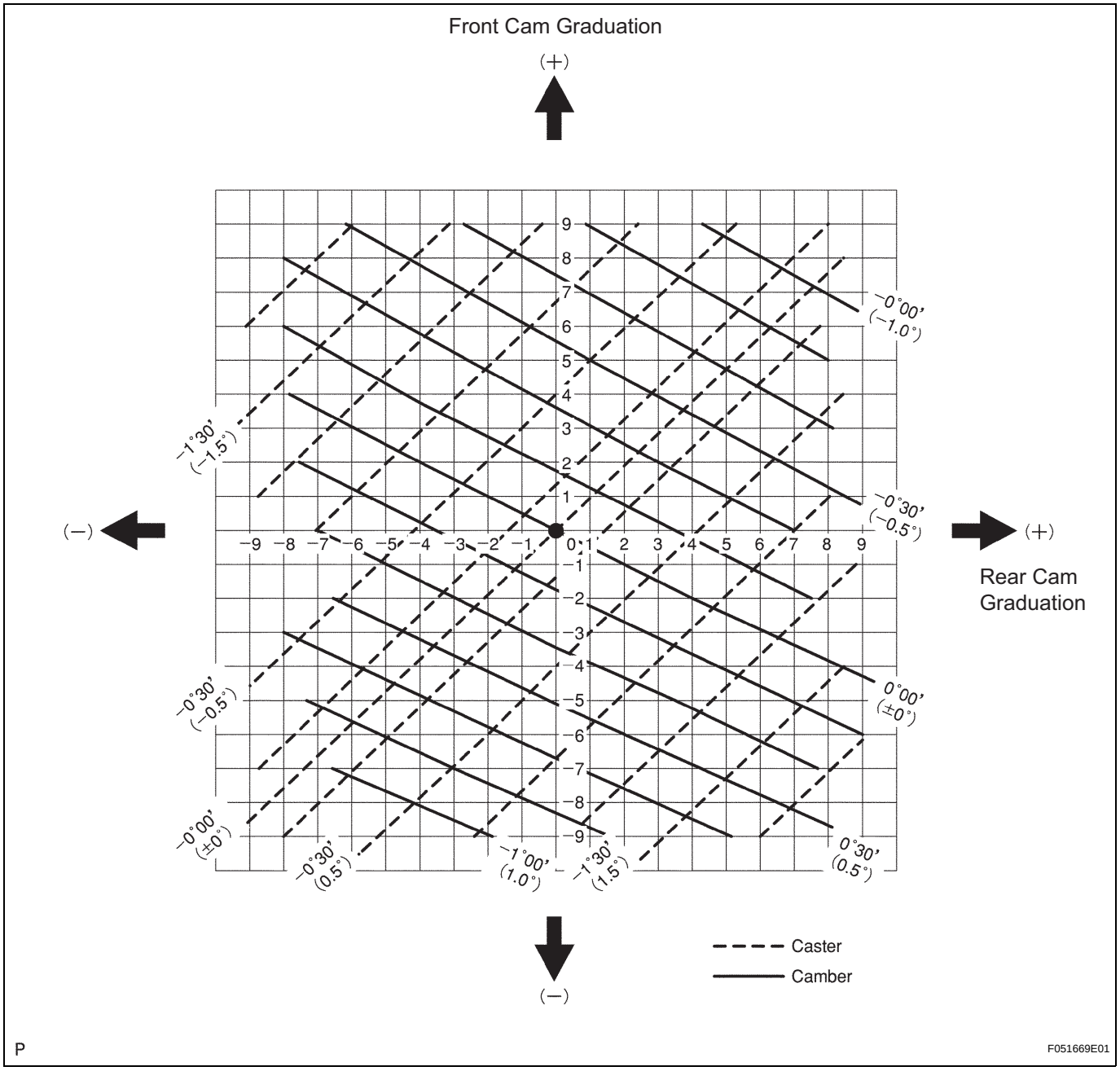
Front Cam Graduation
(+)
(−)
(−)
(+)
Rear Cam Graduation
9
8
7
6
5
4
3
2
1
−1
−2
−3
−4
−5
−6
−7
−8
−9
−9 −8 −7 −6 −5 −4 −3 −2 −1 0 1 2 3 4 5 6 7 8 9
−0°00' (−1.0°)
−0°30' (−0.5°)
0°00' (±0°)
0°30' (0.5°)
1°00' (1.0°)
1°30' (1.5°)
−1°30' (−1.5°)
−0°30' (−0.5°)
−0°00' (±0°)
−0°30' (0.5°)
−1°00' (1.0°)
−1°30' (1.5°)
Caster
Camber
P
F051669E01

SP

FRONT SHOCK ABSORBER WITH COIL SPRING (for 2WD)

COMPONENTS

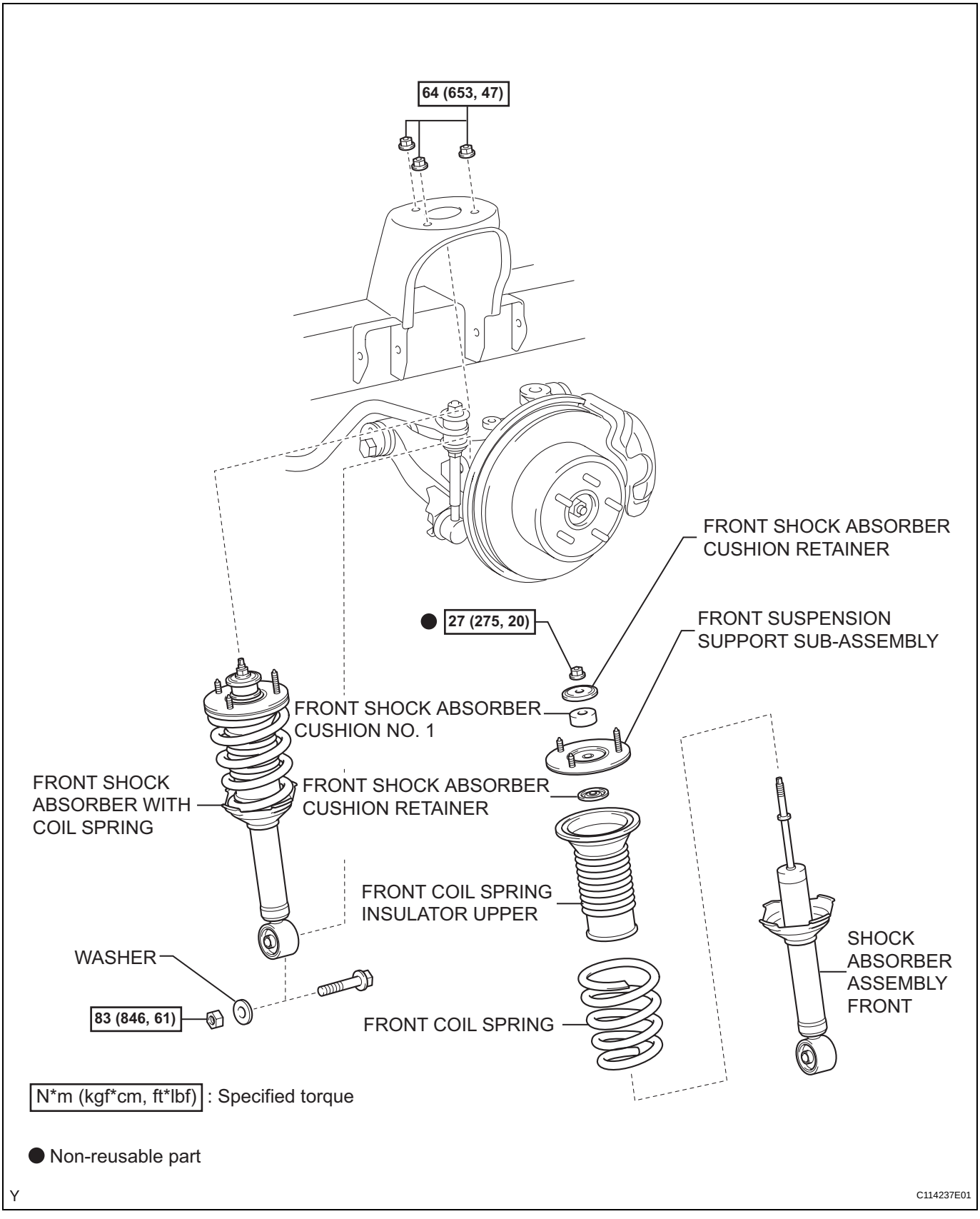

REMOVAL

1. **DISCONNECT CABLE FROM NEGATIVE BATTERY TERMINAL**
2. **REMOVE FRONT WHEEL**
3. **SEPARATE SKID CONTROL SENSOR WIRE (See page SP-26)**
4. **SEPARATE FRONT FLEXIBLE HOSE (See page SP-26)**
5. **REMOVE FRONT SUSPENSION UPPER ARM (See page SP-26)**
6. **REMOVE FRONT SHOCK ABSORBER WITH COIL SPRING**
   (a) Remove the bolt, nut and washer.

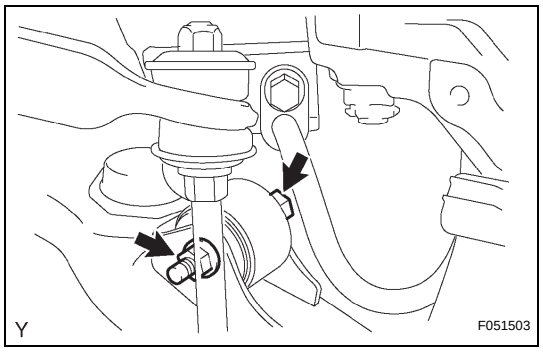

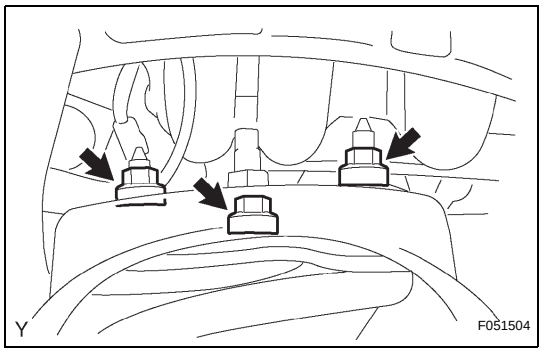

   (b) Remove the 3 nuts on the upper side of the front shock absorber with coil spring.
   (c) Remove the front shock absorber with coil spring.

SP

DISASSEMBLY

1. **REMOVE FRONT SUPPORT TO FRONT SHOCK ABSORBER NUT**
   (a) Using SST, compress the coil spring.
   SST 09727-30021 (09727-00010, 09727-00031), 09727-00060
   NOTICE:
   Do not use an impact wrench. It will damage SST.

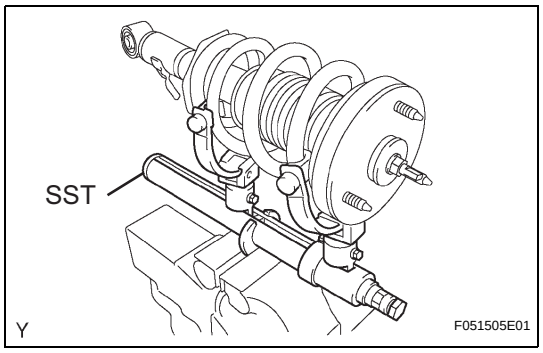

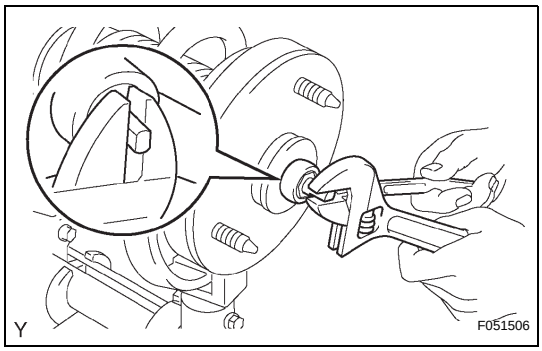

(b) While holding the shock absorber rod, remove the nut.
NOTICE:
Do not use an impact wrench. It will damage the shock absorber rod.

2. **REMOVE FRONT SHOCK ABSORBER CUSHION RETAINER**
3. **REMOVE FRONT SHOCK ABSORBER CUSHION NO. 1**
4. **REMOVE FRONT SUSPENSION SUPPORT SUB-ASSEMBLY**
5. **REMOVE FRONT COIL SPRING INSULATOR UPPER**
6. **REMOVE FRONT SHOCK ABSORBER CUSHION RETAINER**
7. **REMOVE FRONT COIL SPRING**

INSPECTION

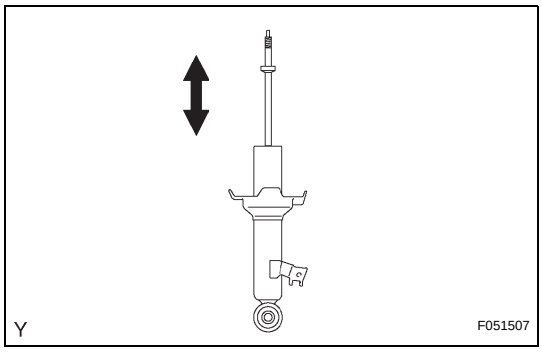

1. **INSPECT SHOCK ABSORBER ASSEMBLY FRONT**
   (a) Compress and extend the shock absorber rod and check that there is no abnormal resistance or unusual sound during operation.
   If there is any abnormality, replace the shock absorber front with a new one.
   NOTICE:
   When disposing of the shock absorber front, see DISPOSAL on page SP-18.

REASSEMBLY

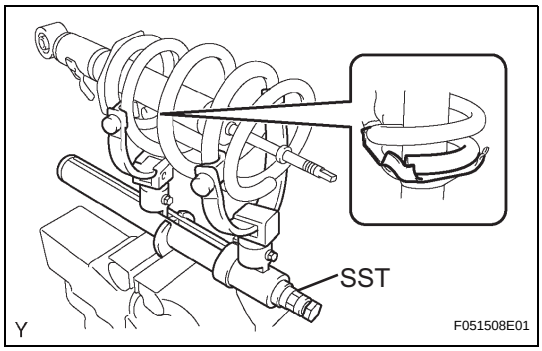

1. **INSTALL FRONT COIL SPRING**
   (a) Using SST, compress the front coil spring LH.
   SST 09727-30021 (09727-00010, 09727-00031), 09727-00060
   NOTICE:
   Do not use an impact wrench. It will damage SST.
   (b) Install the front coil spring onto the shock absorber front.
   HINT:
   Fit the lower end of the front coil spring into the gap of the spring lower seat.
2. **INSTALL FRONT SHOCK ABSORBER CUSHION RETAINER**
3. **INSTALL FRONT COIL SPRING INSULATOR UPPER**
4. **INSTALL FRONT SUSPENSION SUPPORT SUB-ASSEMBLY**
5. **INSTALL FRONT SHOCK ABSORBER CUSHION NO. 1**
6. **INSTALL FRONT SHOCK ABSORBER CUSHION RETAINER**

SP

FRONT SHOCK ABSORBER WITH COIL SPRING (for 4WD and Pre-Runner)

COMPONENTS

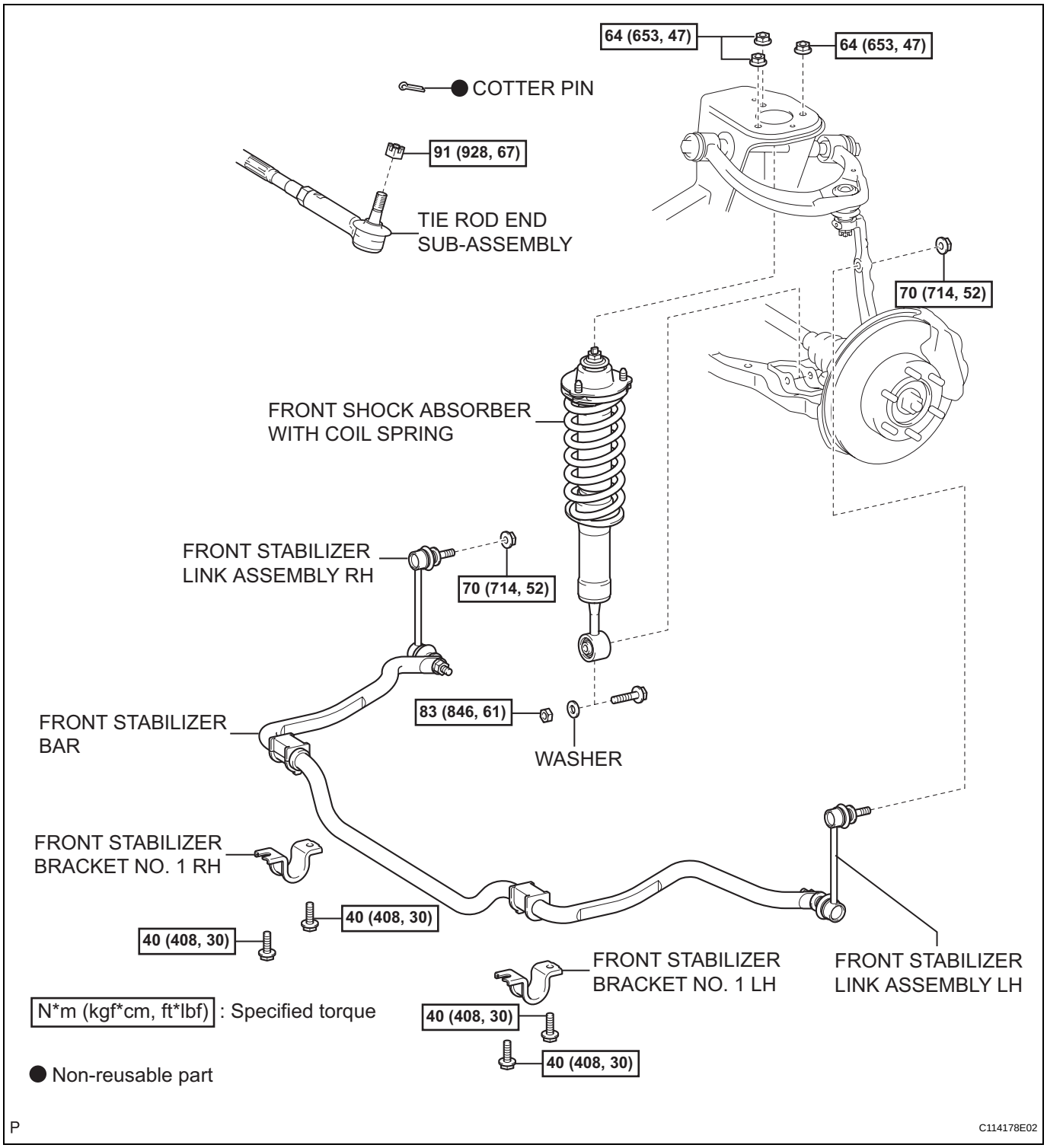

SP

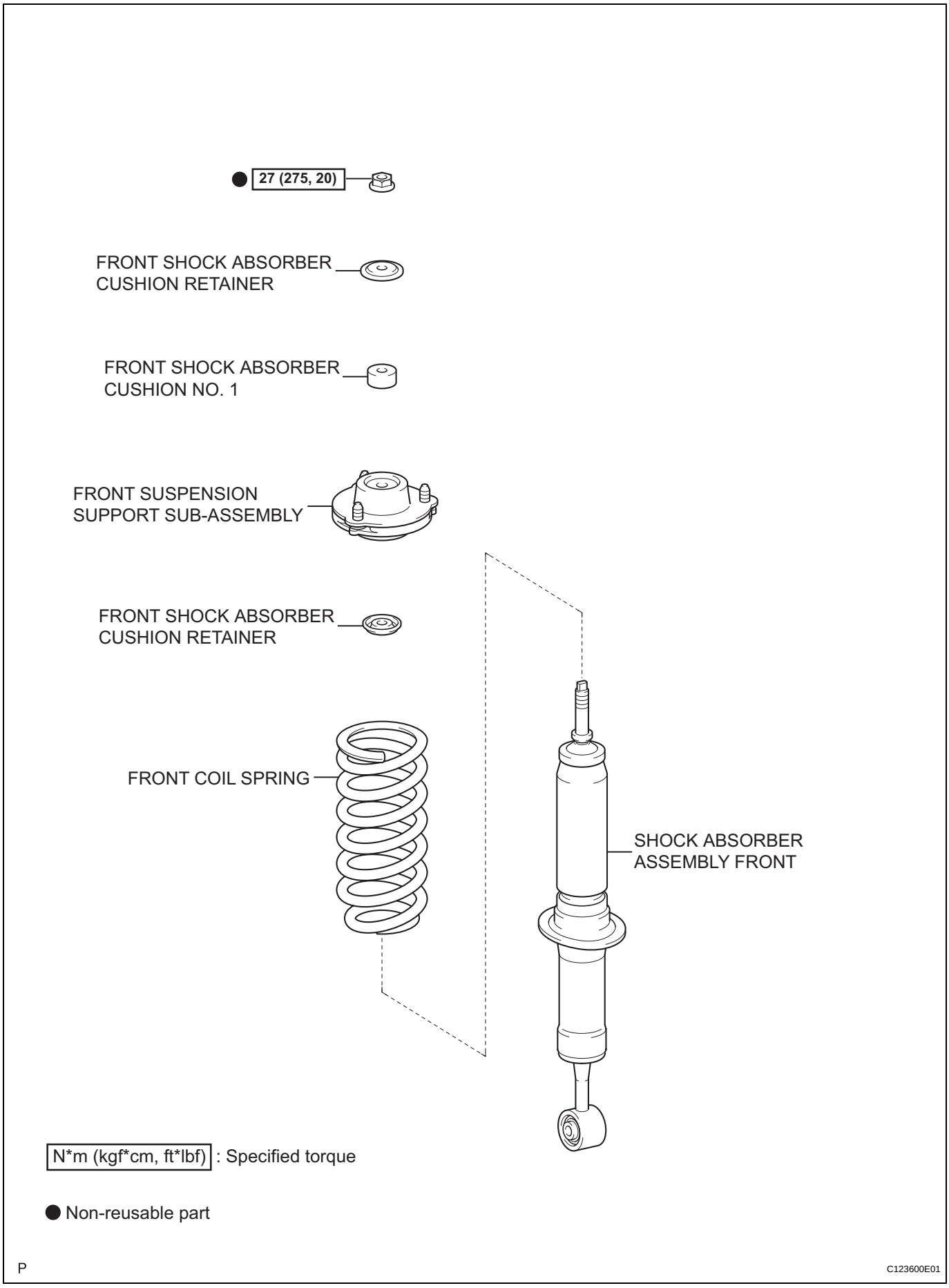
● 27 (275, 20)
FRONT SHOCK ABSORBER CUSHION RETAINER
FRONT SHOCK ABSORBER CUSHION NO. 1
FRONT SUSPENSION SUPPORT SUB-ASSEMBLY
FRONT SHOCK ABSORBER CUSHION RETAINER
FRONT COIL SPRING
SHOCK ABSORBER ASSEMBLY FRONT
N*m (kgf*cm, ft*lbf) : Specified torque
● Non-reusable part
P
C123600E01

SP

FRONT UPPER SUSPENSION ARM (for 2WD)

COMPONENTS

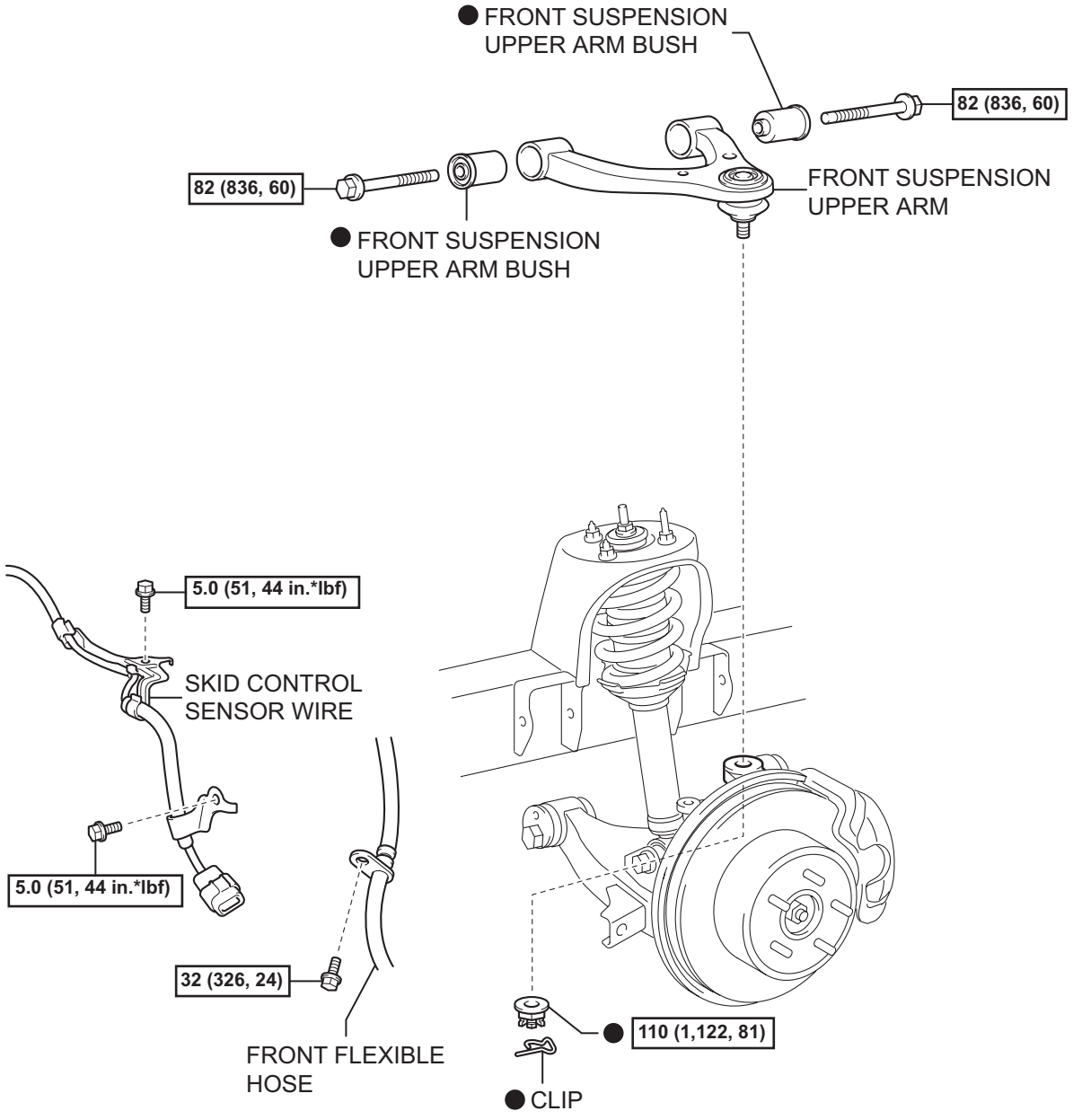

N*m (kgf*cm, ft*lbf) : Specified torque

● Non-reusable part

Y

C114238E01

SP

REMOVAL

1. DISCONNECT CABLE FROM NEGATIVE BATTERY TERMINAL

2. REMOVE FRONT WHEEL

3. INSPECT FRONT SUSPENSION UPPER ARM

(a) Check that there is no slack on the ball joint by shaking the upper arm up and down by hand.

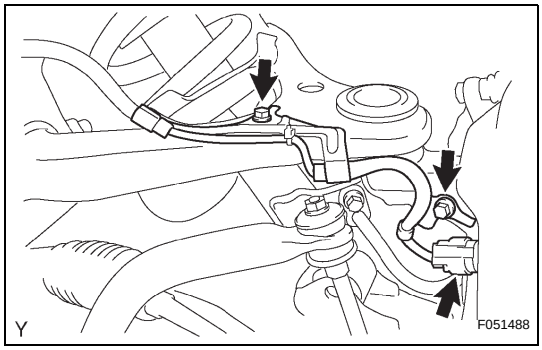

4. SEPARATE SKID CONTROL SENSOR WIRE

(a) Remove the speed sensor connector.

(b) Remove the 2 bolts, and separate the skid control sensor wire.

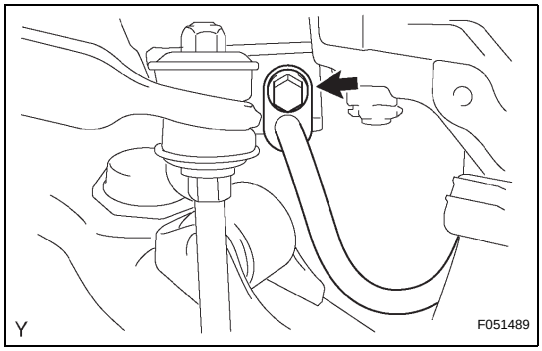

5. SEPARATE FRONT FLEXIBLE HOSE

(a) Remove the bolt, and separate the front flexible hose.

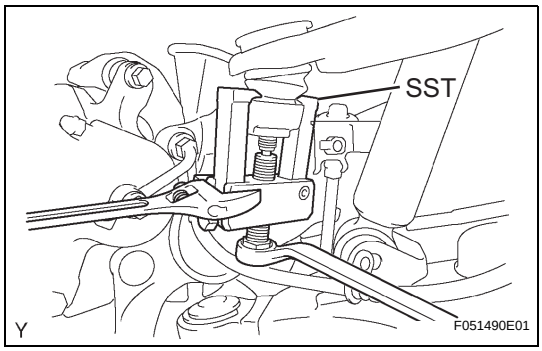

6. REMOVE FRONT SUSPENSION UPPER ARM

(a) Support the front suspension lower arm with a jack.

(b) Remove the clip and nut.

(c) Using SST, separate the upper ball joint from the steering knuckle.

SST 09628-62011

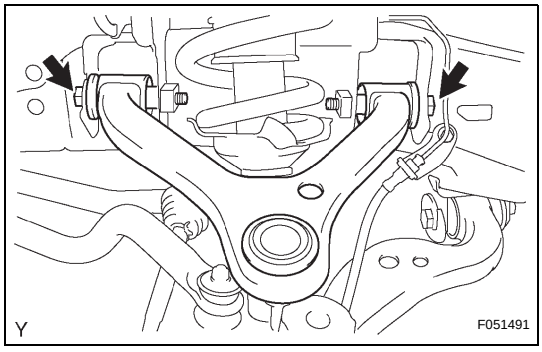

(d) Remove the 2 bolts.

(e) Remove the front suspension upper arm.

FRONT UPPER SUSPENSION ARM (for 4WD and Pre-Runner)

COMPONENTS

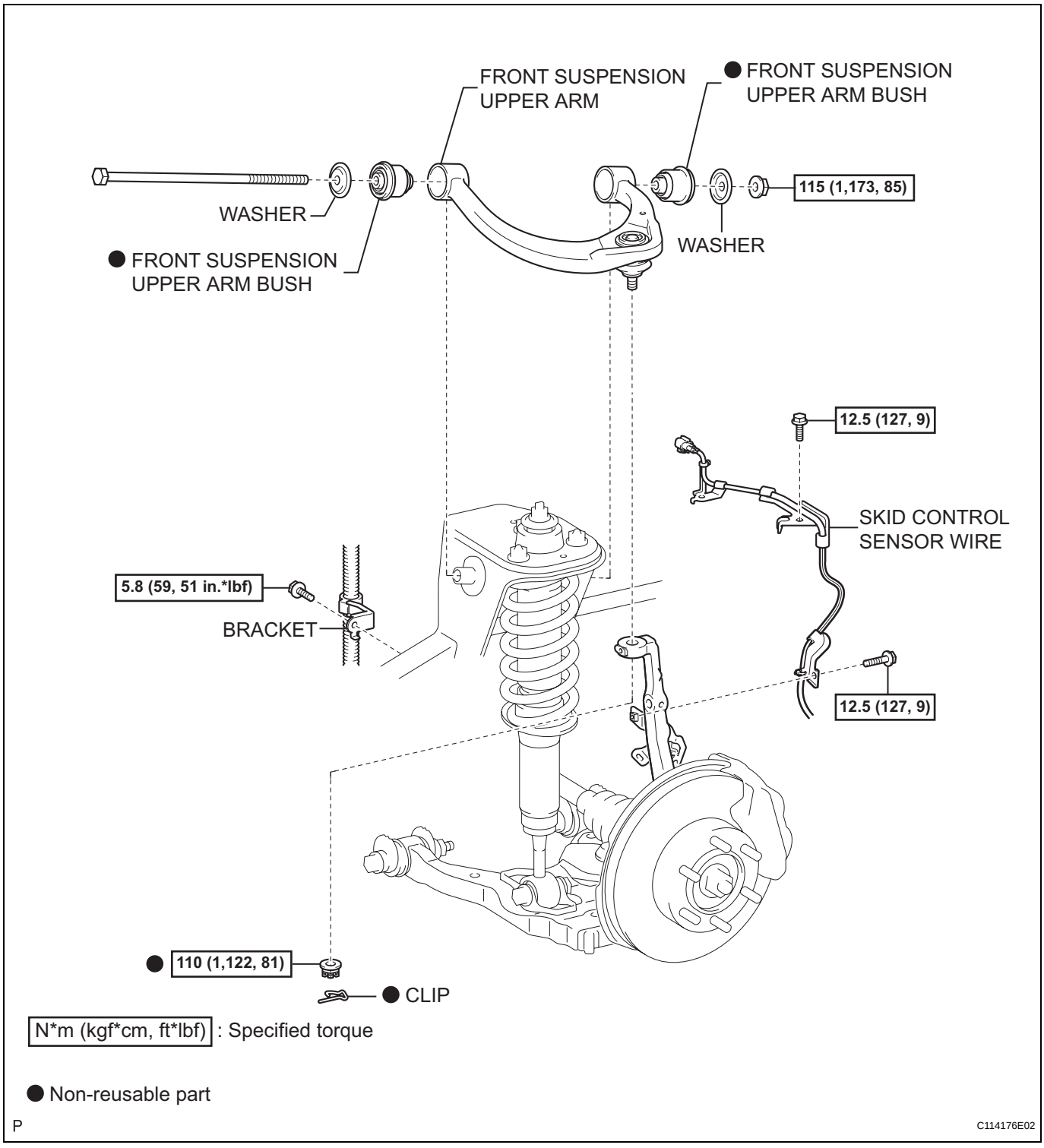

SP

REMOVAL

1. REMOVE FRONT WHEEL

2. INSPECT FRONT SUSPENSION UPPER ARM

(a) Check that there is no slack on the ball joint by shaking the upper arm up and down by hand.

3. SEPARATE SKID CONTROL SENSOR WIRE

(a) Remove the 2 bolts, and separate the skid control sensor wire.

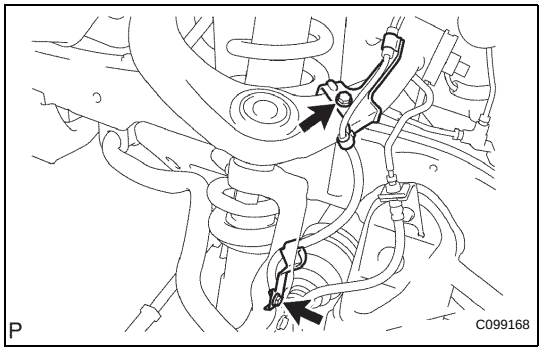

4. REMOVE FRONT SUSPENSION UPPER ARM

(a) Support the front suspension lower arm LH with a jack.

(b) Remove the clip and nut.

(c) Using SST, separate the upper ball joint from the steering knuckle.

SST 09628-62011

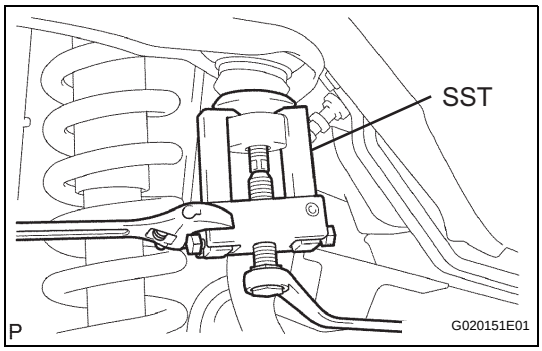

(d) Remove the bolt and bracket.

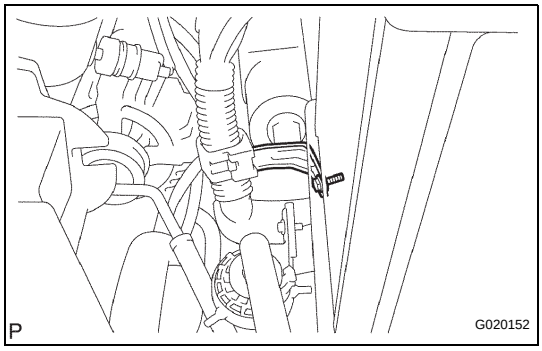

(e) Remove the bolt, 2 washers and nut.

(f) Remove the front suspension upper arm.

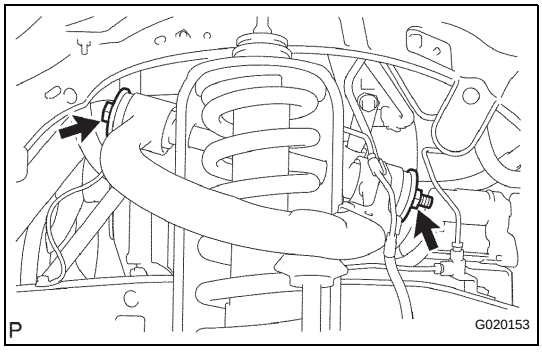

SP

FRONT LOWER SUSPENSION ARM (for 2WD)

COMPONENTS

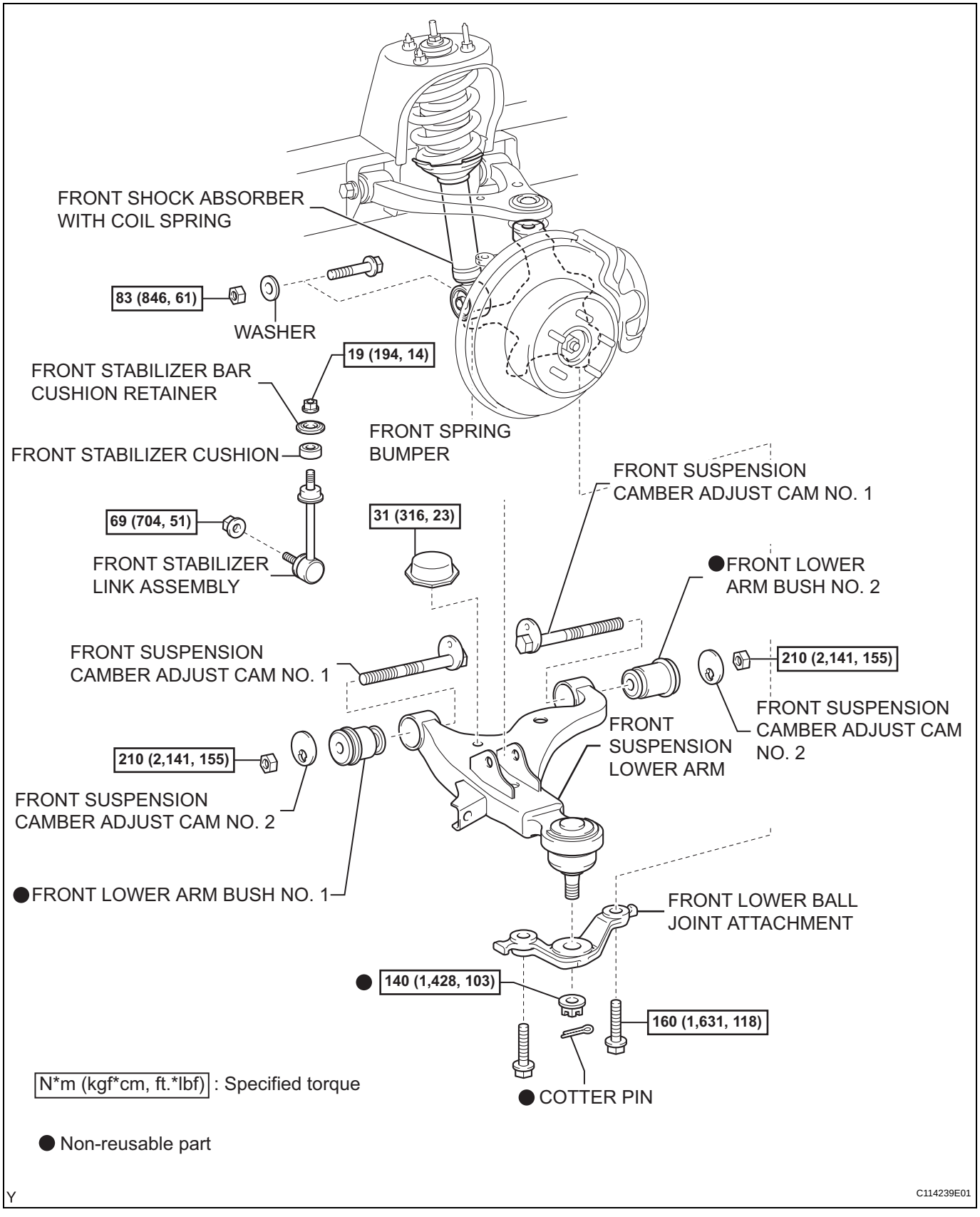

SP

REMOVAL

1. REMOVE FRONT WHEEL

2. INSPECT FRONT SUSPENSION LOWER ARM

(a) Install the hub nuts onto the disc.

(b) Using a dial indicator, check the lower ball joint for excessive play when you push the hub nuts up and down with a force of 294 N (30 kgf, 66 lbf).

Maximum:

0.5 mm (0.020 in.)

HINT:

If it is not within the specification, replace the lower arm.

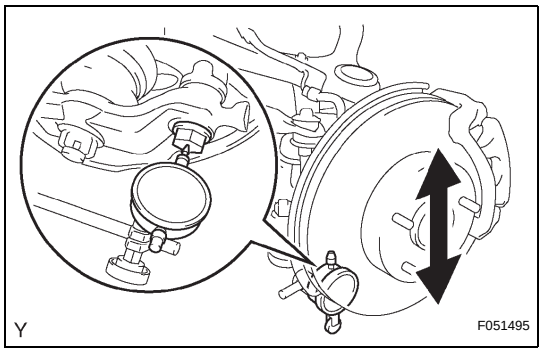

3. REMOVE FRONT STABILIZER LINK ASSEMBLY (See page SP-47)

4. SEPARATE FRONT SHOCK ABSORBER WITH COIL SPRING

(a) Remove the bolt, nut and washer.

(b) Separate the front shock absorber with coil spring from the suspension lower arm.

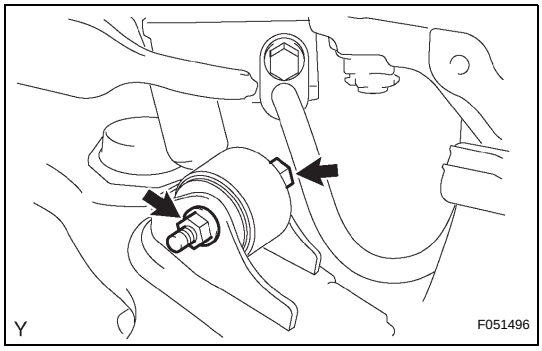

SP

5. REMOVE FRONT SUSPENSION LOWER ARM

(a) Remove the 2 bolts, and separate the front lower ball joint attachment from the front axle.

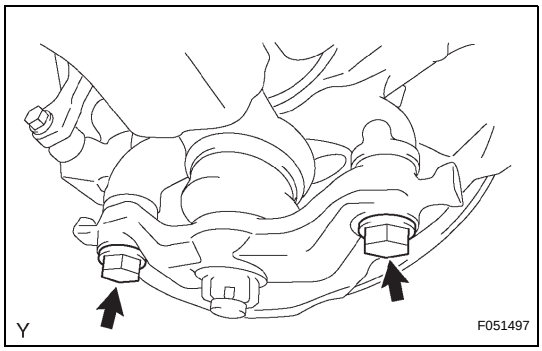

(b) Place matchmarks on the camber adjust cam No. 2.

(c) Remove the 2 nuts, 2 No. 2 camber adjust cams, 2 No. 1 camber adjust cams and front suspension lower arm.

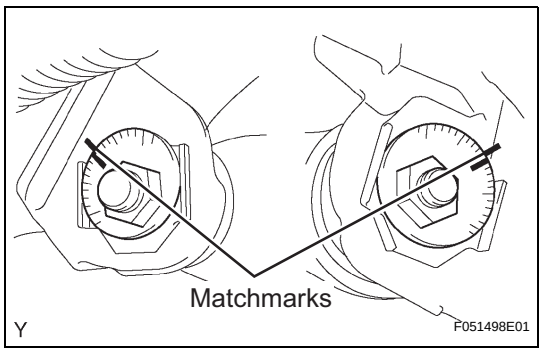

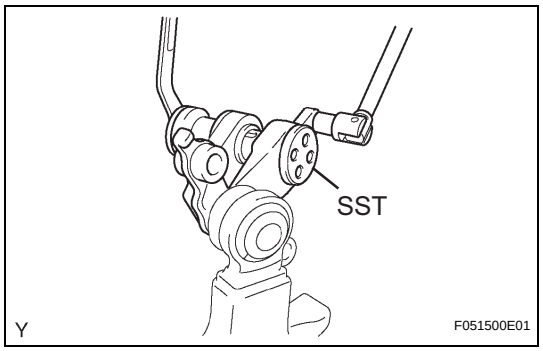

(d) Remove the cotter pin and nut.
(e) Using SST, remove the front lower ball joint attachment.
SST 09628-00011

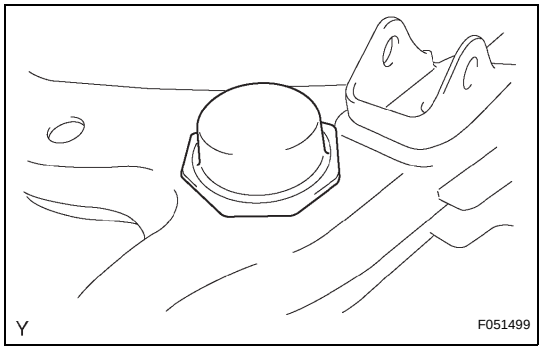

6. REMOVE FRONT SPRING BUMPER
(a) Remove the front spring bumper.

DISASSEMBLY

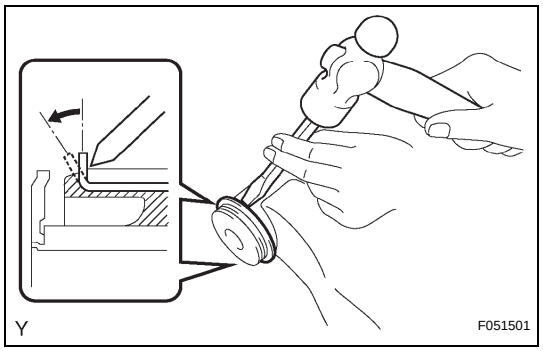

1. REMOVE FRONT LOWER ARM BUSH NO. 1
(a) Using a hammer and chisel, raise the flange of the bush diagonally as shown in the illustration.

SP

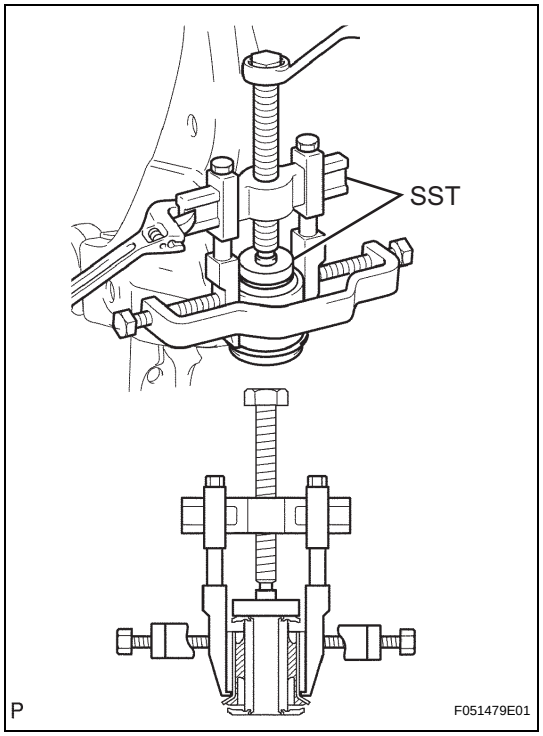

(b) Using SST, remove the lower arm bush.
SST 09950-40011 (09951-04010, 09952-04010, 09953-04020, 09954-04010, 09955-04011, 09957-04010, 09958-04011), 09950-60010 (09951-00450)

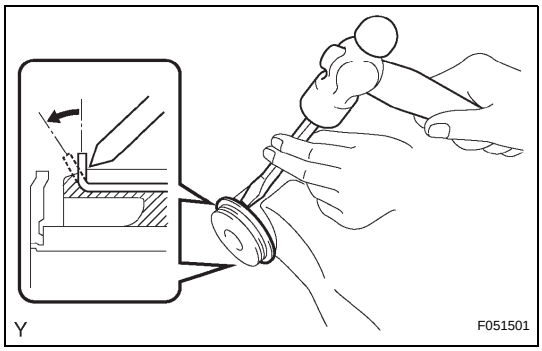

2. REMOVE FRONT LOWER ARM BUSH NO. 2

(a) Using a hammer and chisel, raise the flange of the bush diagonally as shown in the illustration.

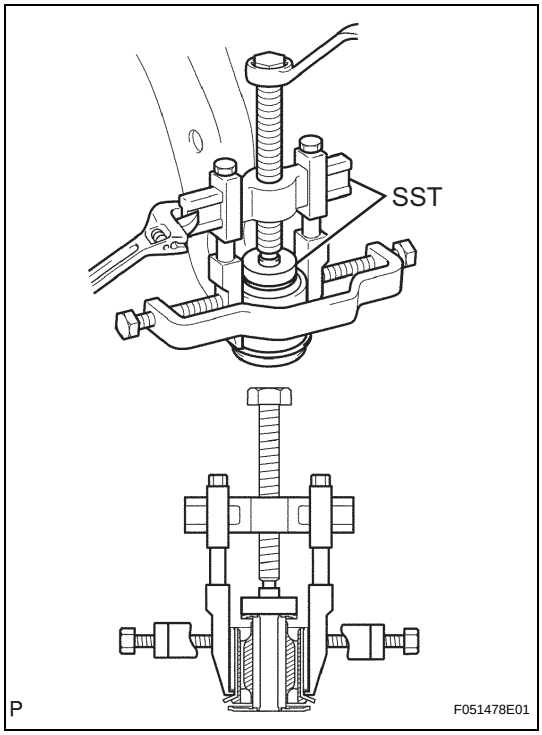

(b) Using SST, remove the lower arm bush.

SST 09950-40011 (09951-04010, 09952-04010, 09953-04020, 09954-04010, 09955-04011, 09957-04010, 09958-04011), 09950-60010 (09951-00450)

SP

INSPECTION

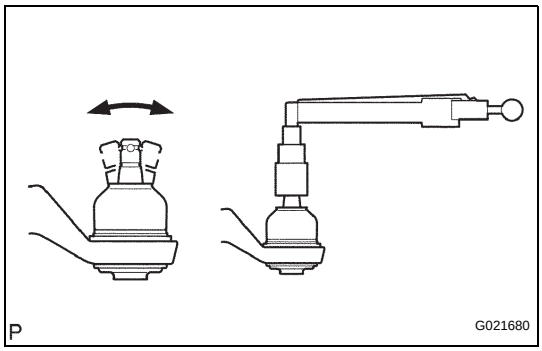

1. INSPECT FRONT SUSPENSION LOWER ARM

(a) Flip the ball joint stud back and forth 5 times, as shown in the illustration, before installing the nut.

(b) Using a torque wrench, turn the nut continuously at a rate of 2 to 4 seconds per turn and take the torque reading on the 5th turn.

Torque: 3.0 N*m (31 kgf*cm, 27 in.*lbf) or less

(c) Check for any cracks and grease leakage on the ball joint dust cover.

FRONT LOWER SUSPENSION ARM (for 4WD and Pre-Runner)

COMPONENTS

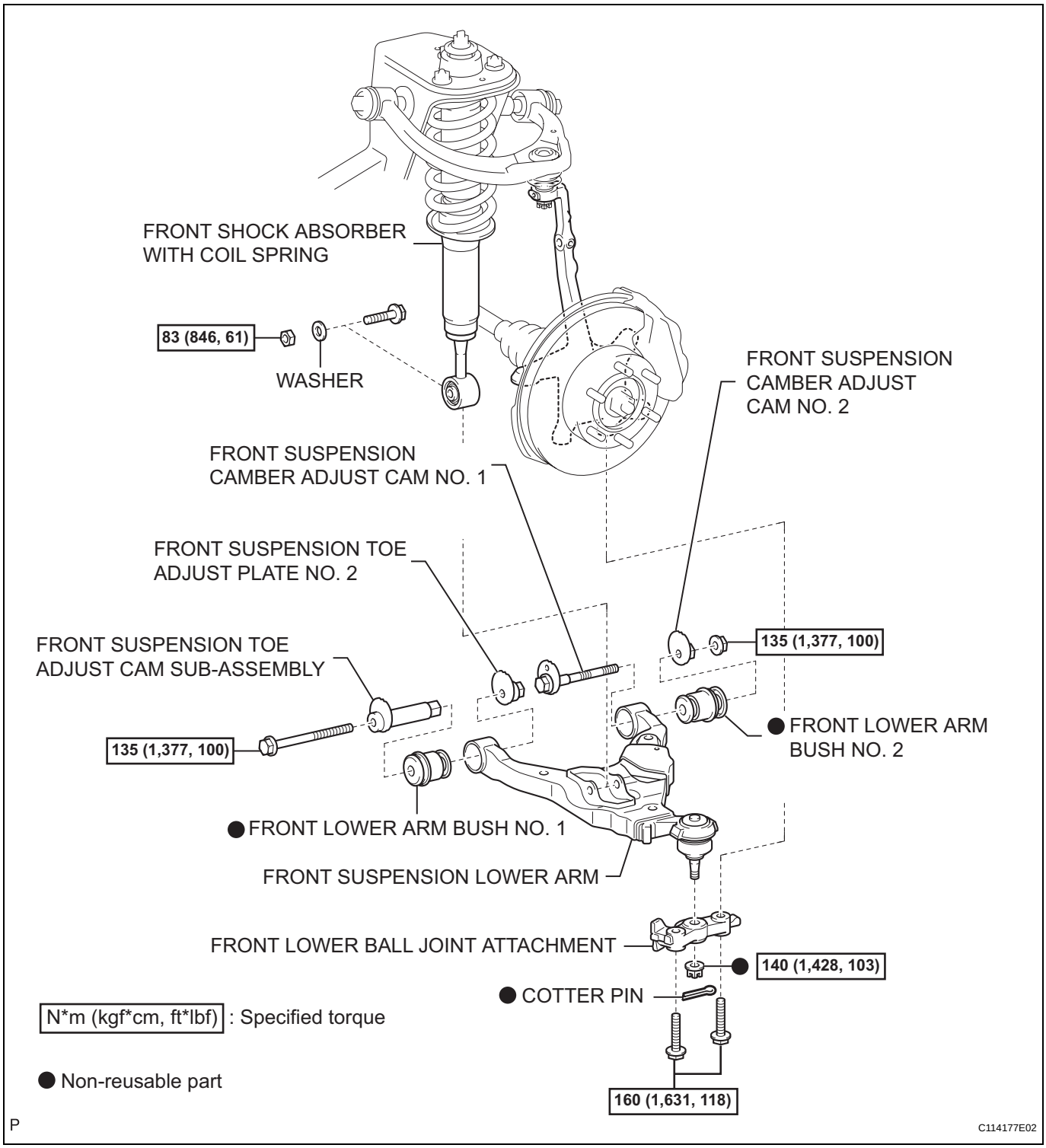

REMOVAL

1. REMOVE FRONT WHEEL

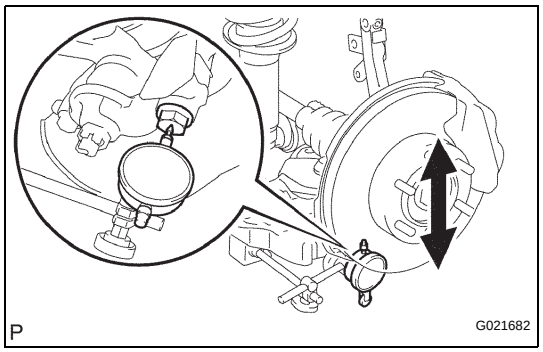

2. INSPECT FRONT SUSPENSION LOWER ARM

(a) Install the hub nuts onto the disc.

(b) Using a dial indicator, check the lower ball joint for excessive play when you push the hub nuts up and down with a force of 294 N (30 kgf, 66 lbf).

Maximum:

0.5 mm (0.020 in.)

HINT:

If it is not within the specification, replace the lower arm.

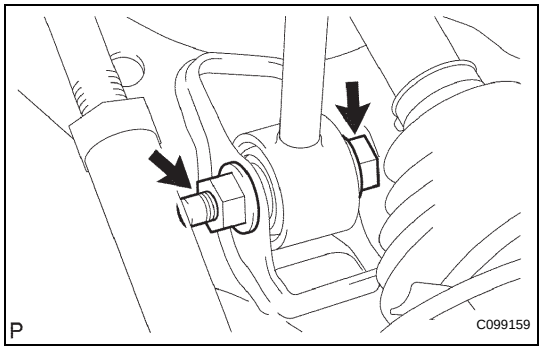

3. SEPARATE FRONT SHOCK ABSORBER WITH COIL SPRING

(a) Remove the bolt, nut and washer.

(b) Separate the front shock absorber with coil spring from the suspension lower arm.

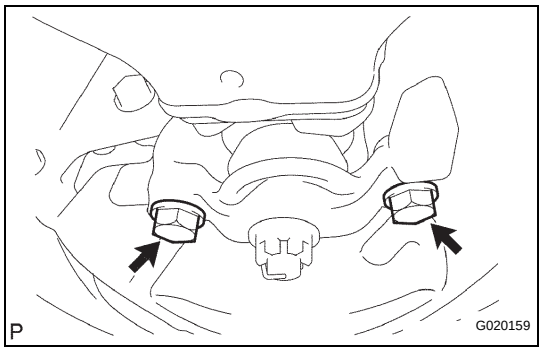

4. REMOVE FRONT SUSPENSION LOWER ARM

(a) Remove the 2 bolts, and separate the front lower ball joint attachment from the front axle.

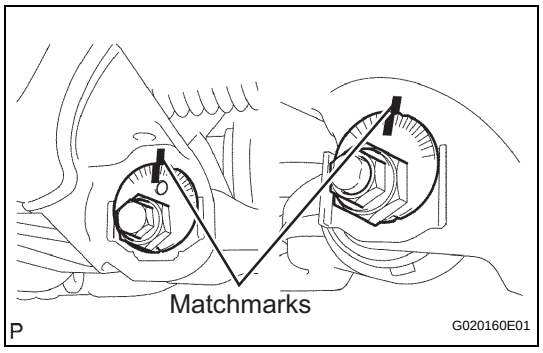

(b) Place matchmarks on the camber adjust cam No. 2 and toe adjust cam.

(c) Remove the nut, camber adjust cam No. 2, camber adjust cam No. 1, bolt, toe adjust cam, toe adjust plate No. 2 and front suspension lower arm.

SP

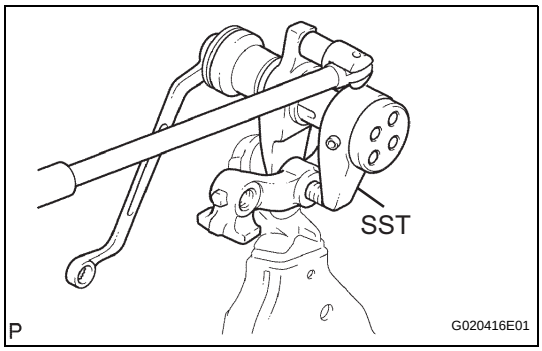

(d) Remove the cotter pin and the nut.
(e) Using SST, remove the front lower ball joint attachment LH.
SST 09628-00011

DISASSEMBLY

1. REMOVE FRONT LOWER ARM BUSH NO. 1

(a) Using a hammer and chisel, raise the flange of the bush diagonally as shown in the illustration.

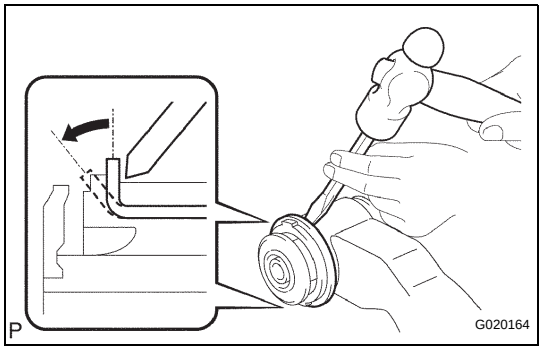

(b) Using SST, remove the lower arm bush.
SST 09950-40011 (09951-04010, 09952-04010, 09953-04020, 09954-04010, 09955-04011, 09957-04010, 09958-04011), 09950-60010 (09951-00470)

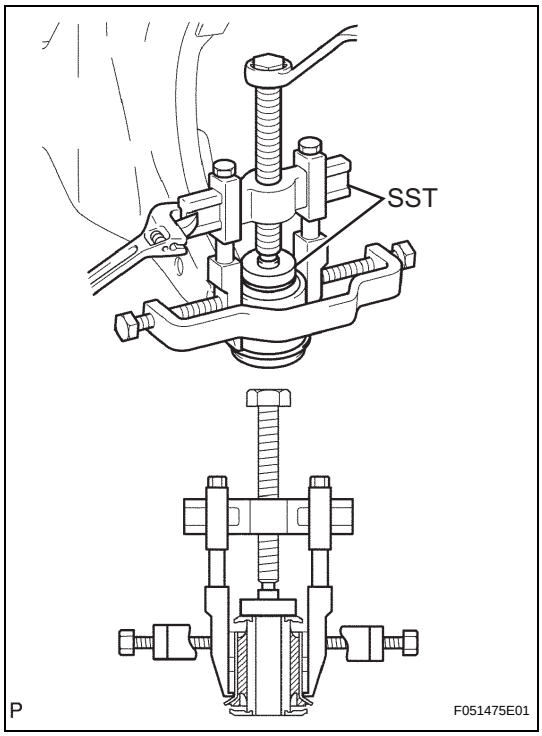

2. REMOVE FRONT LOWER ARM BUSH NO. 2

(a) Using a hammer and chisel, raise the flange of the bush diagonally as shown in the illustration.

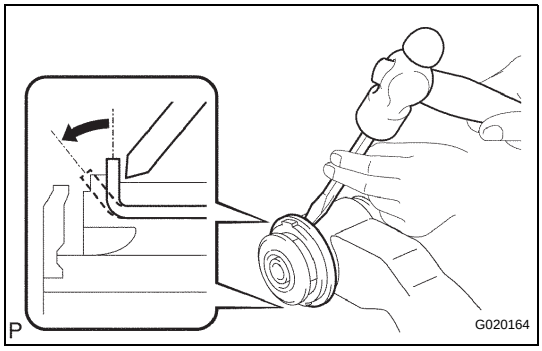

SP

FRONT STABILIZER BAR (for 2WD)

COMPONENTS

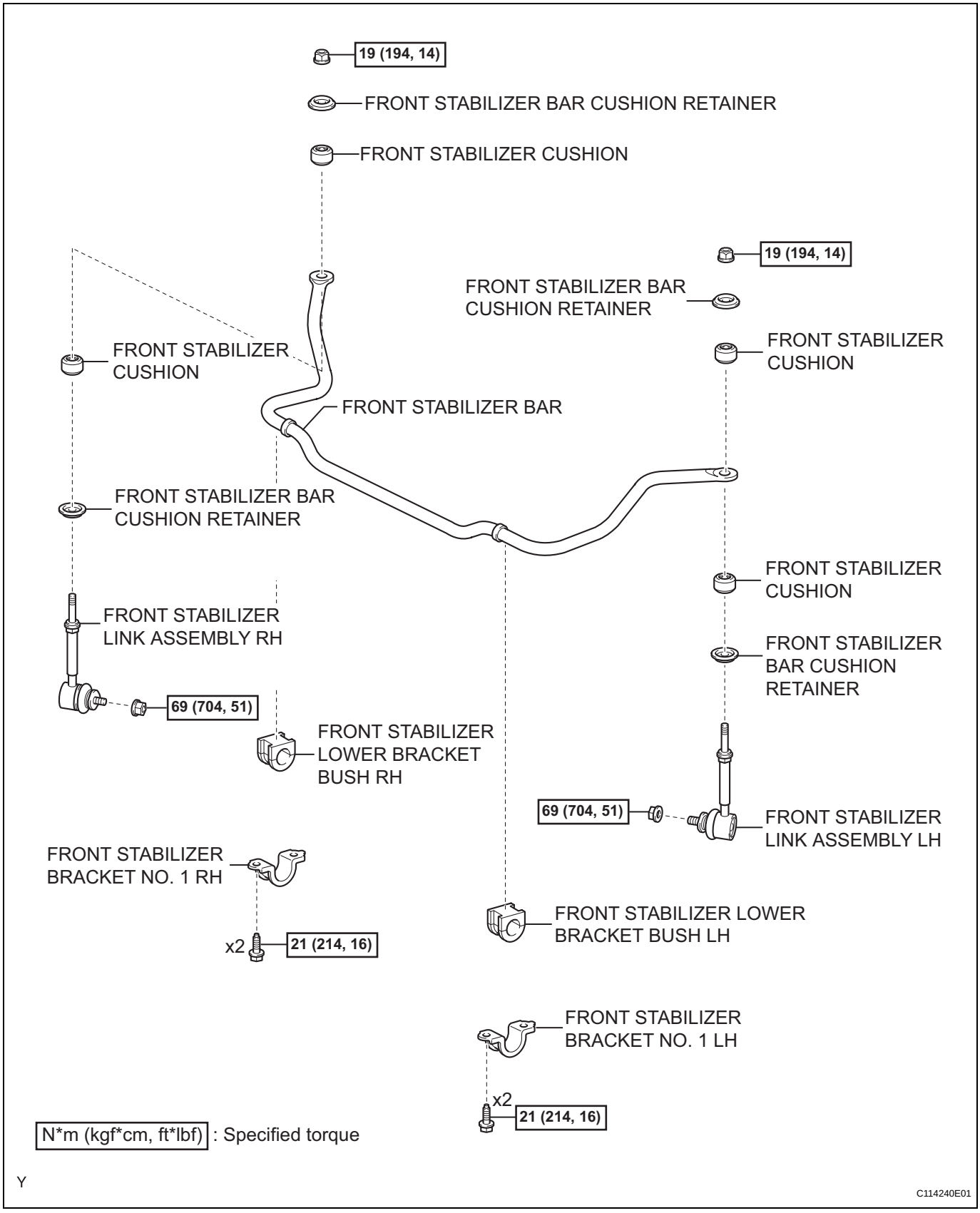

REMOVAL

1. REMOVE FRONT WHEELS

2. REMOVE FRONT STABILIZER LINK ASSEMBLY LH

(a) Remove the 2 nuts, 2 retainers, 2 cushions and the front stabilizer link LH.
HINT:
If the ball joint turns together with the nut, use a hexagon (6 mm) wrench to hold the stud.

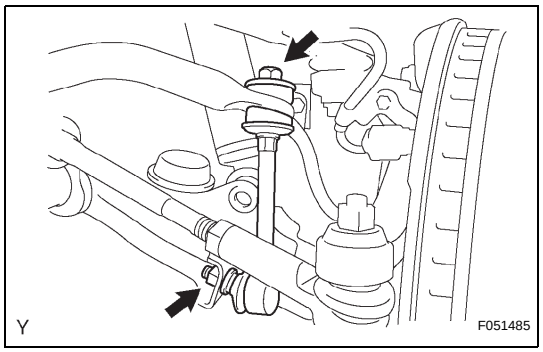

3. REMOVE FRONT STABILIZER LINK ASSEMBLY RH
HINT:
The removal procedure for the RH side is the same as that for the LH side.

4. REMOVE FRONT STABILIZER BRACKET NO. 1 LH

(a) Remove the 2 bolts and front stabilizer bracket.

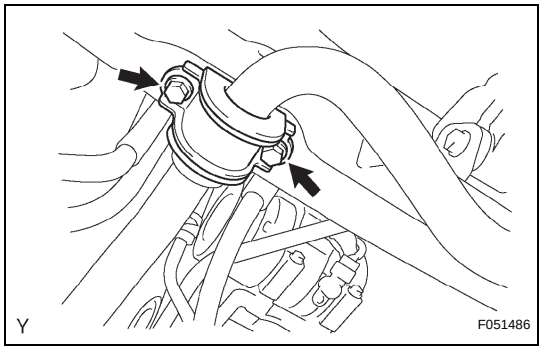

5. REMOVE FRONT STABILIZER BRACKET NO. 1 RH
HINT:
The removal procedure for the RH side is the same as that for the LH side.

6. REMOVE FRONT STABILIZER LOWER BRACKET BUSH LH

7. REMOVE FRONT STABILIZER LOWER BRACKET BUSH RH

8. REMOVE FRONT STABILIZER BAR

INSPECTION

1. INSPECT FRONT STABILIZER LINK ASSEMBLY

(a) Flip the ball joint stud back and forth 5 times, as shown in the illustration, before installing the nut.

(b) Using a torque wrench, turn the nut continuously at a rate of 2 to 4 seconds per turn and take the torque reading on the 5th turn.
Torque: 2.0 N*m (20 kgf*cm, 18 in.*lbf)

(c) Check for any cracks and grease leakage on the ball joint dust cover.

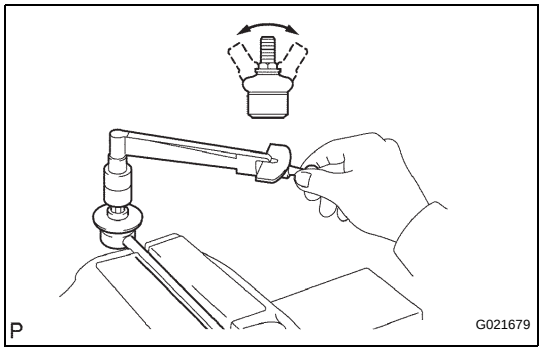

SP

FRONT STABILIZER BAR (for 4WD and Pre-Runner)

COMPONENTS

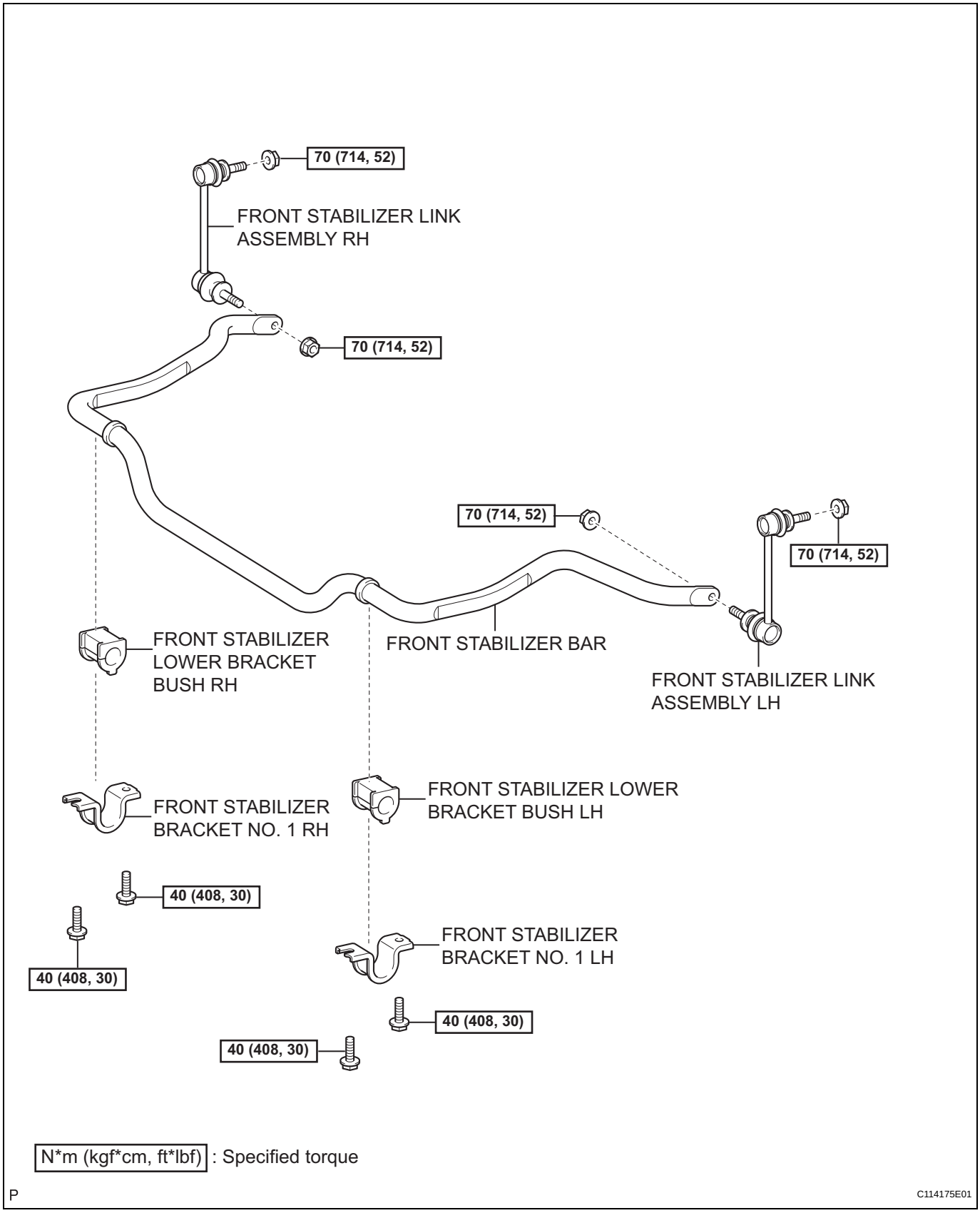

SP

REMOVAL

1. **REMOVE FRONT WHEELS**
2. **REMOVE ENGINE UNDER COVER SUB-ASSEMBLY NO. 1**
3. **REMOVE FRONT STABILIZER LINK ASSEMBLY LH**
   (a) Remove the 2 nuts and front stabilizer link LH.
   HINT:
   If the ball joint turns together with the nut, use a hexagon (6 mm) wrench to hold the stud.

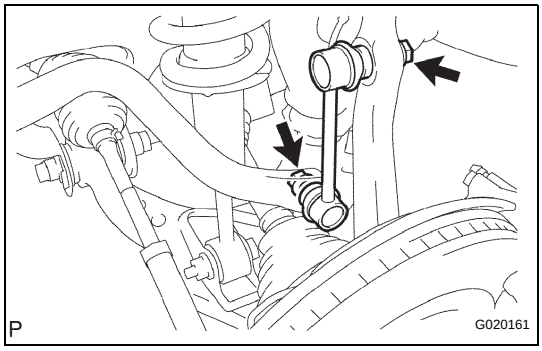

4. **REMOVE FRONT STABILIZER LINK ASSEMBLY RH**
   HINT:
   The removal procedure for the RH side is the same as that for the LH side.
5. **REMOVE FRONT STABILIZER BRACKET NO. 1 LH**
   (a) Remove the 2 bolts and front stabilizer bracket.

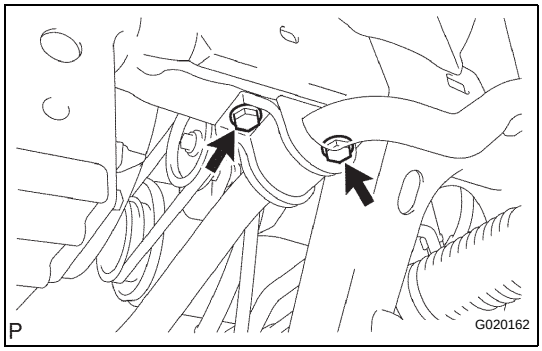

6. **REMOVE FRONT STABILIZER BRACKET NO. 1 RH**
   HINT:
   The removal procedure for the RH side is the same as that for the LH side.
7. **REMOVE FRONT STABILIZER LOWER BRACKET BUSH LH**
8. **REMOVE FRONT STABILIZER LOWER BRACKET BUSH RH**
9. **REMOVE FRONT STABILIZER BAR**

INSPECTION

1. **INSPECT FRONT STABILIZER LINK ASSEMBLY**
   (a) Flip the ball joint stud back and forth 5 times, as shown in the illustration, before installing the nut.
   (b) Using a torque wrench, turn the nut continuously at a rate of 2 to 4 seconds per turn and take the torque reading on the 5th turn.
   Torque: 2.0 N*m (20 kgf*cm, 18 in.*lbf) or less
   (c) Check for any cracks and grease leakage on the ball joint dust cover.

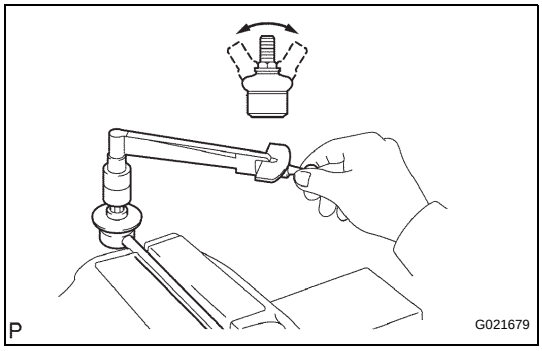

SP

REAR LEAF SPRING

COMPONENTS

for 2WD:

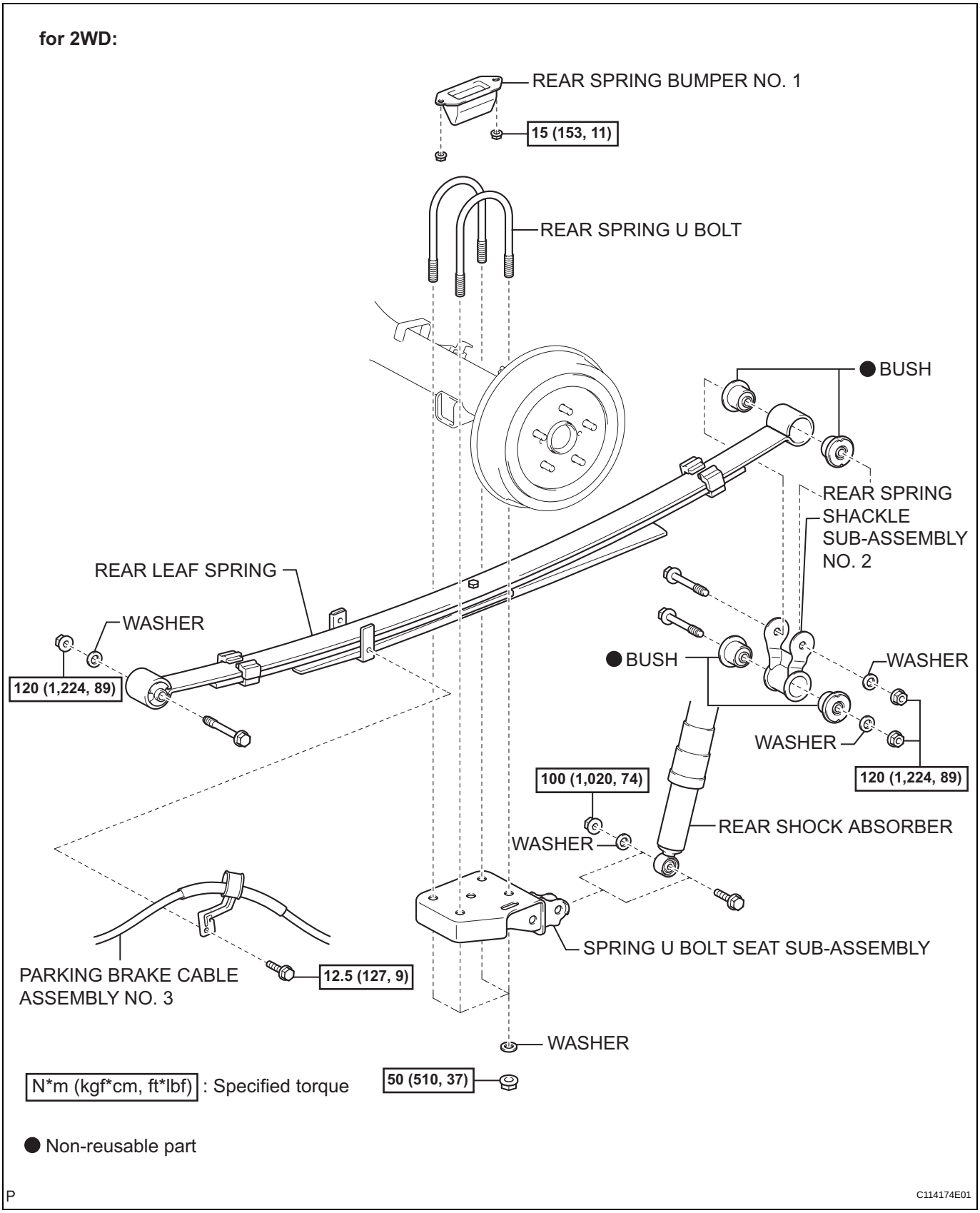

P

C114174E01

for 4WD and Pre-Runner:

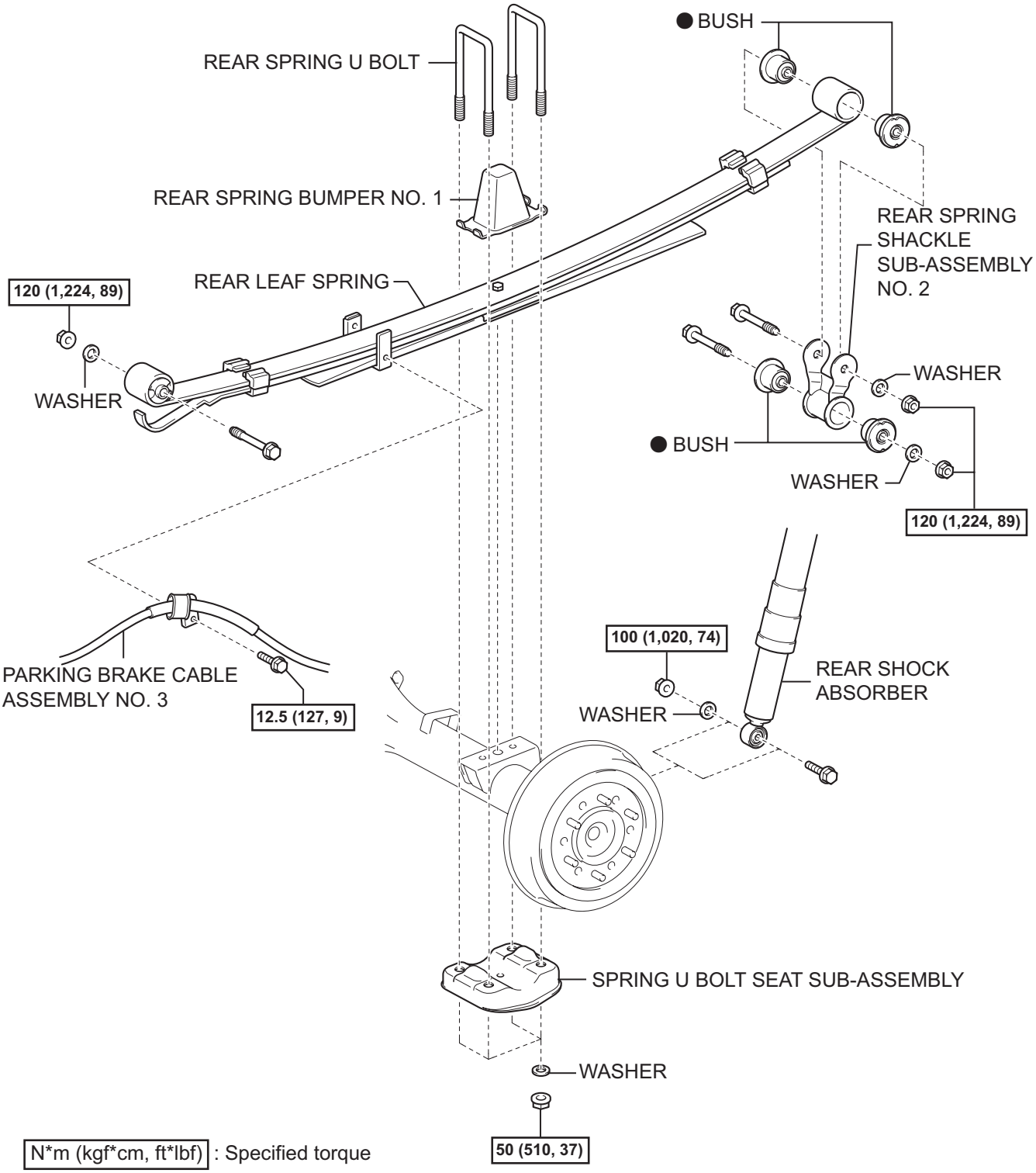

N*m (kgf*cm, ft*lbf) : Specified torque

● Non-reusable part

P

C114172E01

SP

REAR SHOCK ABSORBER

COMPONENTS

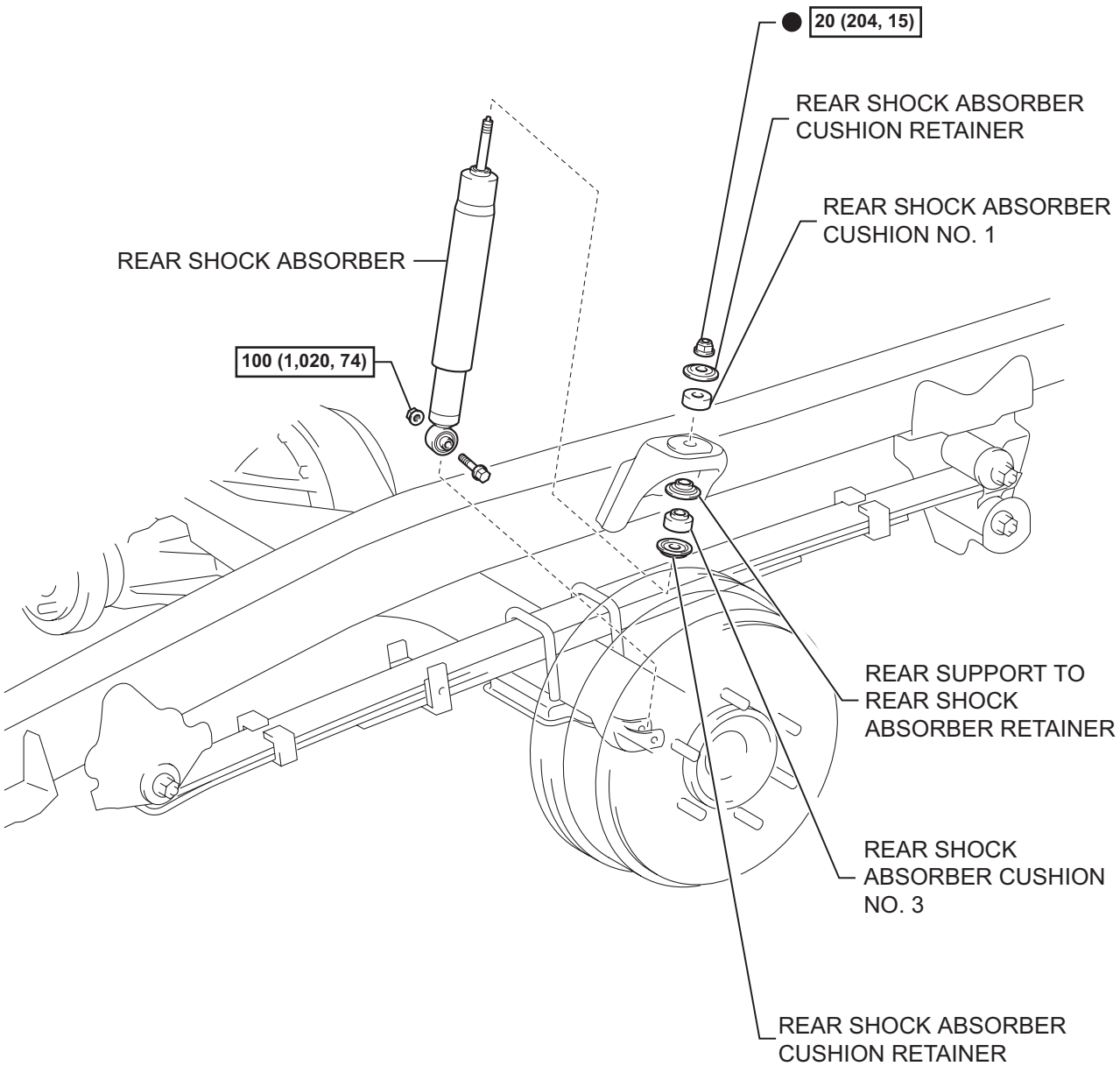

N*m (kgf*cm, ft*lbf) : Specified torque

● Non-reusable part

Y

C114233E01

SP

REMOVAL

1. REMOVE REAR WHEEL

2. REMOVE REAR SHOCK ABSORBER

(a) Support the rear axle housing.

(b) Remove the bolt, nut and washer.

(c) for 2WD:

(1) Separate the shock absorber from the rear spring seat.

(d) for 4WD and Pre-Runner:

(1) Separate the shock absorber from the rear axle housing.

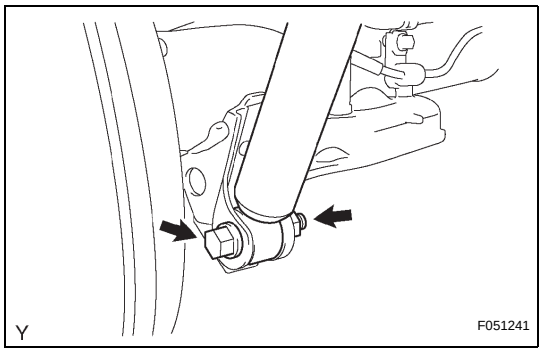

(e) Remove the nut, 3 cushion retainers, cushion No. 1, cushion No. 3 and shock absorber.

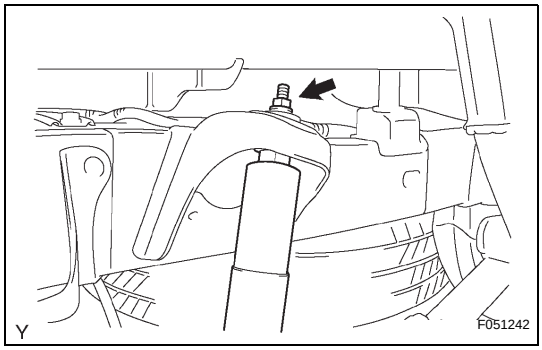

SP

INSPECTION

1. INSPECT REAR SHOCK ABSORBER

(a) Compress and extend the shock absorber rod and check that there is no abnormal resistance or abnormal sounds during operation.
If there is any abnormality, replace the shock absorber with a new one.
NOTICE:
When disposing of the shock absorber, see DISPOSAL on page SP-61.

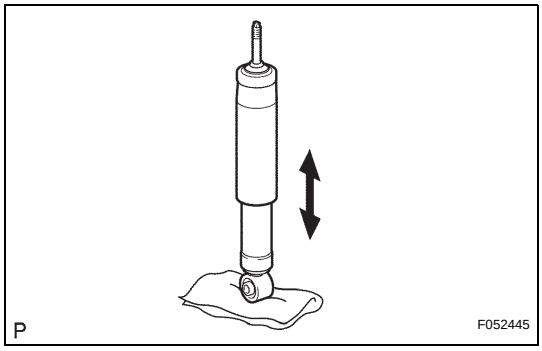

INSTALLATION

1. INSTALL REAR SHOCK ABSORBER

(a) Install the 3 cushion retainers, cushion No. 1, cushion No. 3 and shock absorber with a new nut.

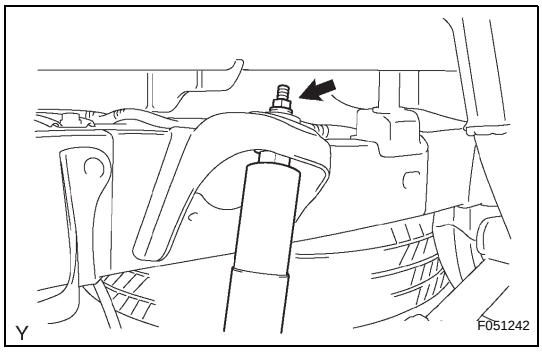

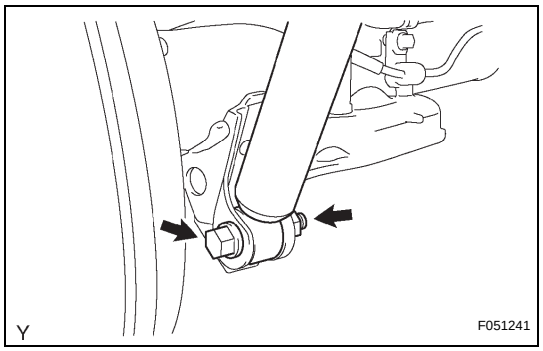

(b) Install the shock absorber with the bolt, nut and washer.

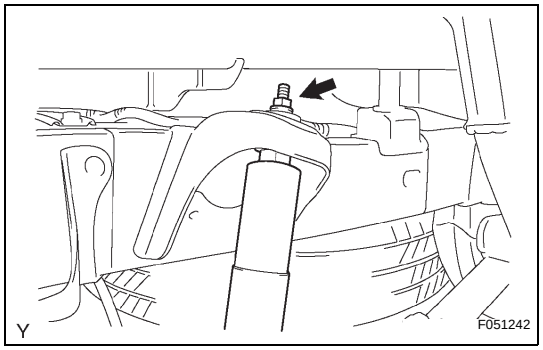

(c) Fully tighten the nut.
Torque: 20 N*m (204 kgf*cm, 15 ft.*lbf)

2. INSTALL REAR WHEEL
Torque: 113 N*m (1,152 kgf*cm, 83 ft.*lbf)

3. STABILIZE SUSPENSION
(a) Jack down the vehicle.
(b) Bounce the vehicle up and down several times to stabilize the suspension.

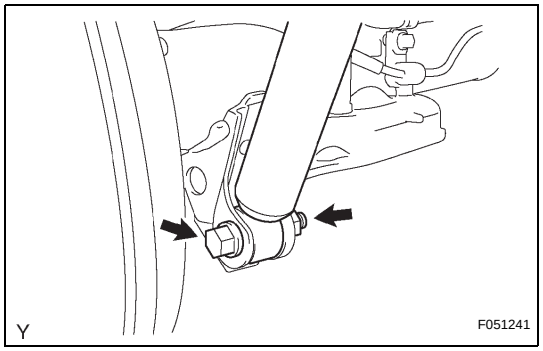

4. FULLY TIGHTEN REAR SHOCK ABSORBER
(a) Fully tighten the nut.
Torque: 100 N*m (1,020 kgf*cm, 74 ft.*lbf)

SP

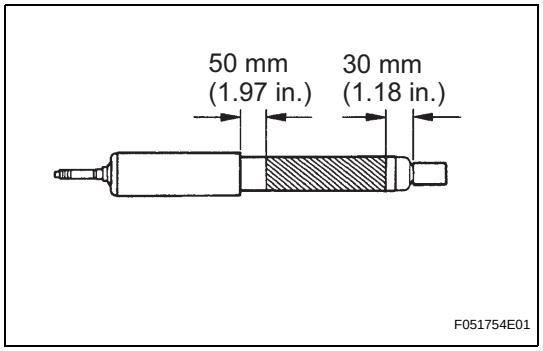

DISPOSAL

1. DISPOSE OF REAR SHOCK ABSORBER
(a) Fully extend the shock absorber rod.
(b) Using a drill, make a hole in the shaded area of the cylinder as shown in the illustration, to discharge the gas inside.
CAUTION:
- **Be careful when drilling because shards of metal may scatter.**
- **The gas is colorless, odorless and non-poisonous.**

REAR STABILIZER BAR (for Sport Suspension Package)

COMPONENTS

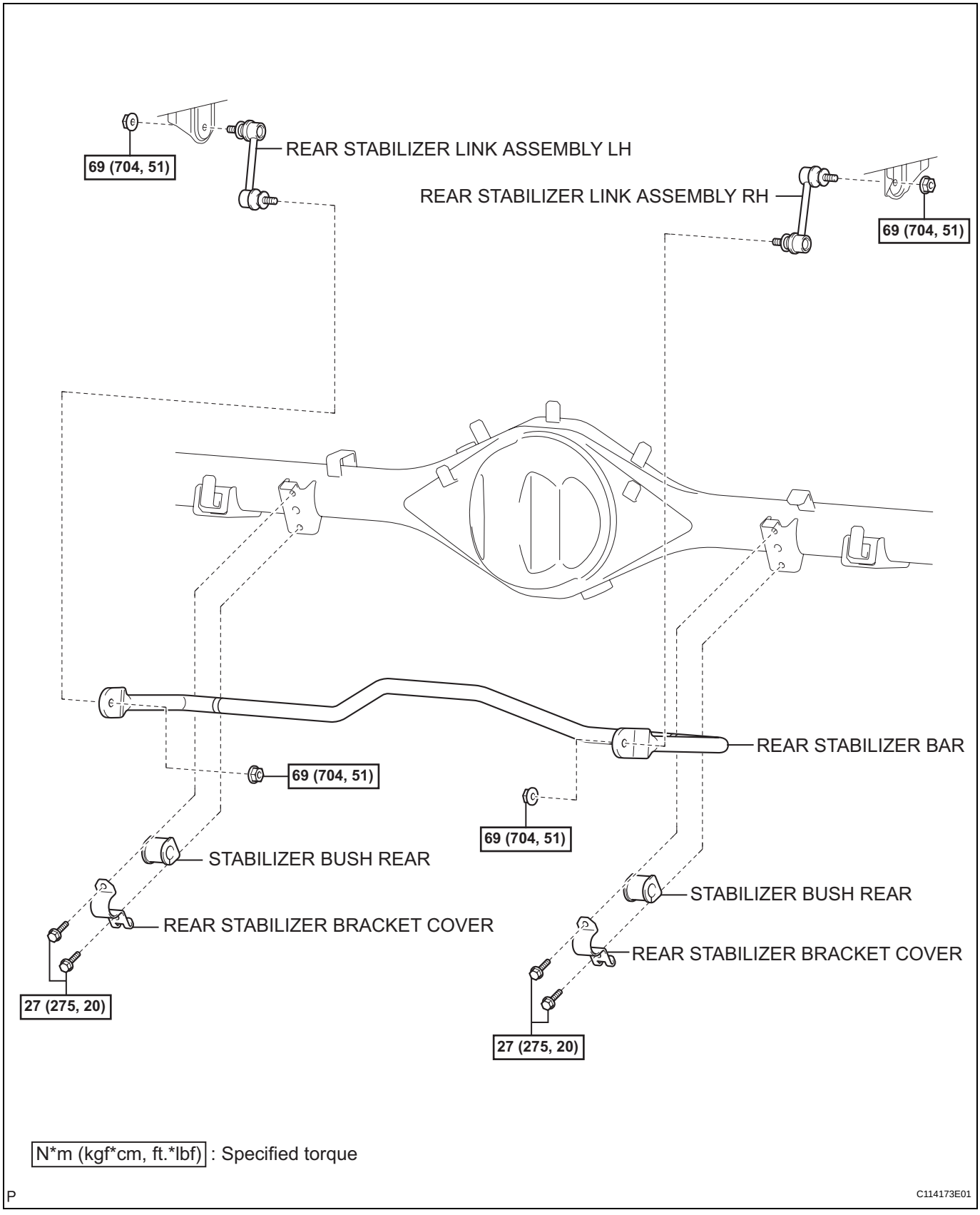

SP

N*m (kgf*cm, ft.*lbf) : Specified torque

P

C114173E01

REMOVAL

1. REMOVE REAR WHEEL

2. REMOVE REAR STABILIZER LINK ASSEMBLY LH

(a) Remove the 2 nuts and stabilizer link (LH side).
HINT:
If the ball joint turns together with the nut, use a hexagon wrench (6 mm) to hold the stud.

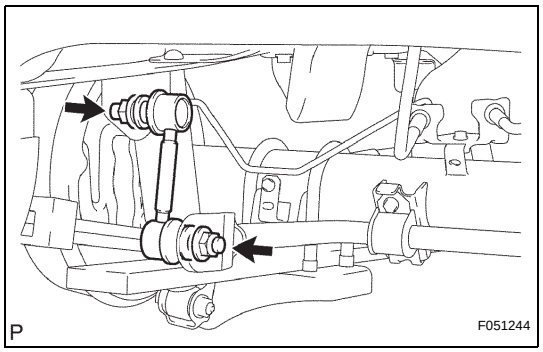

3. REMOVE REAR STABILIZER LINK ASSEMBLY RH

HINT:
The removal procedure for the RH side is the same as that for the LH side.

4. REMOVE REAR STABILIZER BAR

(a) Remove the 4 bolts, 2 stabilizer brackets and stabilizer bar.
(b) Remove the 2 stabilizer bushes from the stabilizer bar.

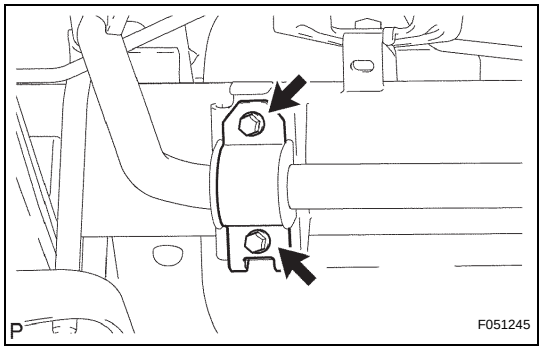

INSPECTION

1. INSPECT REAR STABILIZER LINK ASSEMBLY

(a) Flip the ball joint back and forth 5 times, as shown in the illustration, before installing the nut.
(b) Using a torque wrench, turn the nut continuously at a rate of 3 to 5 seconds per turn, and take the torque reading on the 5th turn.
Torque: 2.0 N*m (20 kgf*cm, 18 in.*lbf) or less
(c) Check for any cracks and grease leakage on the ball joint dust cover.

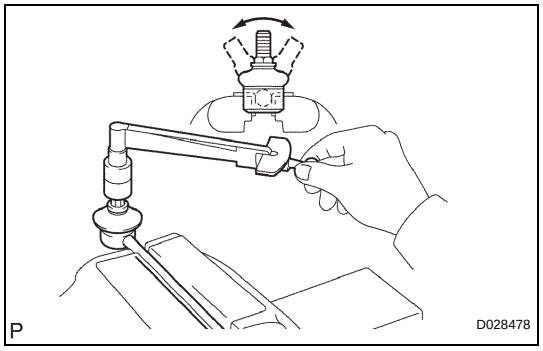

INSTALLATION

1. INSTALL REAR STABILIZER BAR

(a) Install the 2 stabilizer bushes onto the stabilizer bar.
HINT:
Install the stabilizer bush onto the outer side of the mark on the stabilizer bar.

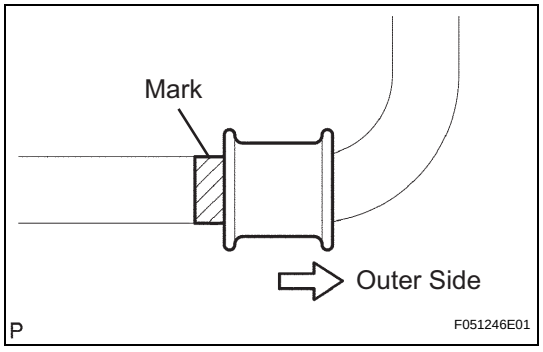

SP

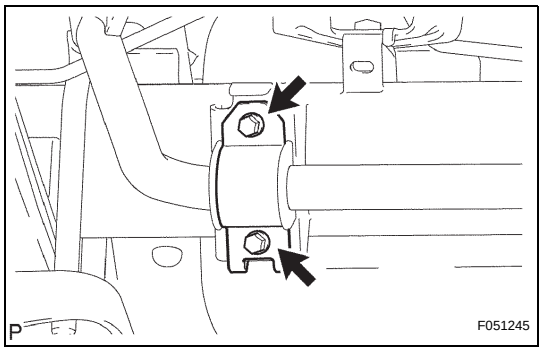

(b) Install the stabilizer bar and 2 stabilizer brackets with the 4 bolts.
Torque: 27 N*m (275 kgf*cm, 20 ft.*lbf)

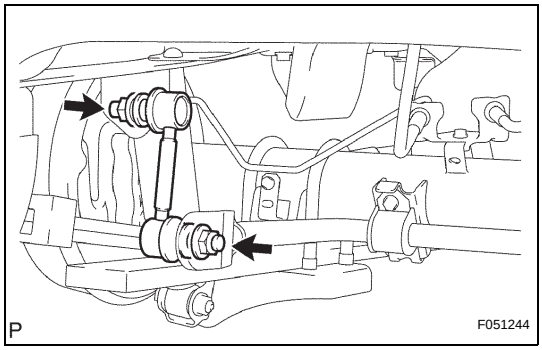

2. INSTALL REAR STABILIZER LINK ASSEMBLY LH

(a) Install the stabilizer link with the 2 nuts.
Torque: 69 N*m (704 kgf*cm, 51 ft.*lbf)
HINT:
If the ball joint turns together with the nut, use a hexagon wrench (6 mm) to hold the stud.

3. INSTALL REAR STABILIZER LINK ASSEMBLY RH
NOTICE:
The installation procedure for the RH side is the same as that for the LH side.

4. INSTALL REAR WHEEL
Torque: 113 N*m (1,152 kgf*cm, 83 ft.*lbf)

SP

TIRE AND WHEEL SYSTEM

PRECAUTION

1. REMOVAL AND INSTALLATION OF TIRE PRESSURE WARNING VALVE AND TRANSMITTER

(a) When installing a tire, make sure that the tire pressure warning valve and transmitter does not interfere with the tire bead in order to prevent damage to the sensor.

(b) After completing the operation, remove the valve core to rapidly release air and check that the warning light comes on. If not, the system may have a defect.

(c) If there is air leakage, tighten the nut to 4.0 N*m (41 kgf*cm, 35 in.*lbf) and push the valve core 2 or 3 times to remove any dirt attached to the valve core. If there is still air leakage, replace the grommet, the washer and the nut all together.

(d) When installing the tire pressure warning valve and transmitter, check whether the rim, grommet, washer and nut are clean. Use a manufacturer-specified cap.

(e) When putting air into the tire, first install the tire pressure valve straight onto the stem of the tire pressure warning valve and transmitter.

2. TIRE AND WHEEL REPLACEMENT OR TIRE ROTATION

(a) When replacing the tires, be sure to check if the grommet of the tire valve is damaged. If so, replace the grommet together with the washer and nut.

(b) When the tires and wheels are replaced, make sure to register the transmitter ID.

NOTICE:

Transmitter IDs of all tires including spare on vehicle should be correspond to IDs registered in ECU.

INSPECTION

1. INSPECT TIRES

(a) Check the tires for wear and proper inflation pressure.

Cold tire inflation pressure

Tire Size	Front Wheel kPa (kgf/cm^2, psi)	Rear Wheel kPa (kgf/cm^2, psi)	Spare Wheel kPa (kgf/cm^2, psi)
P215/70R15 97S	200 (2.0, 29)	220 (2.2, 32)	220 (2.2, 32)
P255/45R18 99V	240 (2.4, 35)	240 (2.4, 35)	240 (2.4, 35)
P245/75R16 109S	200 (2.0, 29)	200 (2.0, 29)	200 (2.0, 29)
P265/70R16 111T	200 (2.0, 29)	220 (2.2, 32)	220 (2.2, 32)
P265/65R17 110S	200 (2.0, 29)	200 (2.0, 29)	200 (2.0, 29)

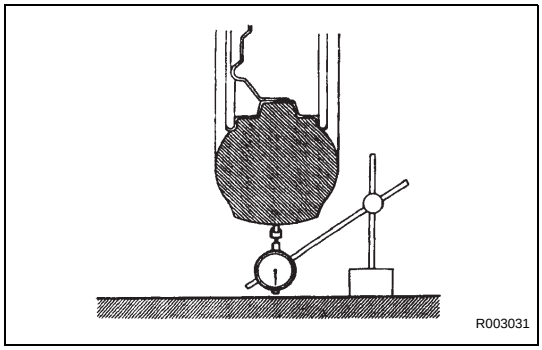

(b) Using a dial indicator, check the tire runout.

Tire runout:

3.0 mm (0.118 in.) or less

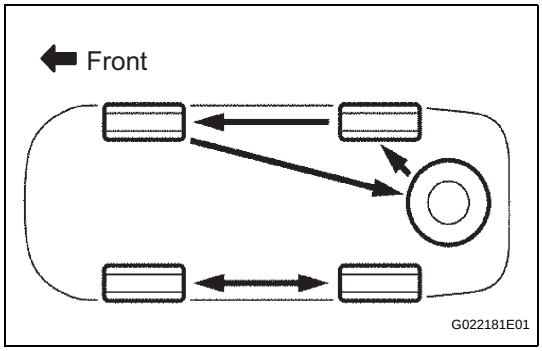

2. ROTATE TIRES

HINT:

See the illustration on the left for how to rotate the tires, when you include the spare tire in the rotation.

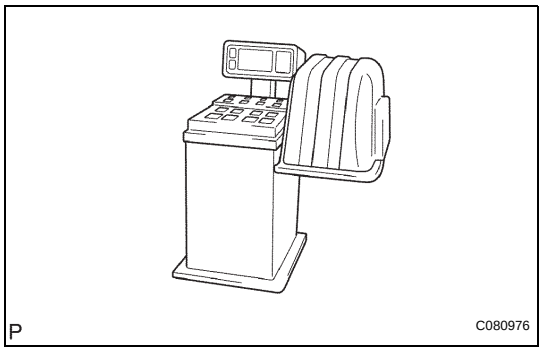

3. INSPECT WHEEL BALANCE

(a) Perform off-car balancing.

(b) If necessary, perform on-car balancing.

Imbalance after adjustment:

8 g (0.018 lb) or less

4. INSPECT FRONT AXLE HUB BEARING (See page AH-1)

5. INSPECT REAR AXLE HUB BEARING (See page AH-2)

TW

TIRE PRESSURE WARNING SYSTEM

PRECAUTION

1. TIRE PRESSURE WARNING SYSTEM PRECAUTION

(a) Under the following conditions, the system may not function properly;
- Areas, facilities or devices that use similar radio frequencies are located in the vicinity of the vehicle.
- Devices using similar radio frequencies are used in the vehicle.
- Large amounts snow or ice are stuck to the vehicle, especially on the wheels and around the wheel houses.
- The battery of the transmitter is depleted.
- Tires and wheels without tire pressure warning valves and transmitters are used.
- Snow tires and tire chains are used.
- If wheels other than the specified ones are used, the system may not function properly because different radio waves are transmitted from the tire pressure warning valve and transmitter.
- Depending on the tire type, the tire pressure warning valve and transmitter may not function properly even though the specified wheels are used.
- The system may not function properly if it is initialized with tire pressures which are not the specified values.

(b) Tire and wheel replacement or tire rotation.
- After tires or wheels are replaced, it is necessary to register the transmitter IDs of the new tire pressure warning valve and transmitters (See page TW-11).
- It is not necessary to register the transmitter IDs when only tire rotation is performed.
- When a tire needs to be removed from a wheel, first drop the tire pressure warning valve and transmitter into the tire (See page TW-95).
  NOTICE:
  Always drop the tire pressure warning valve and transmitter into the tire first. Otherwise, the tire bead and tire pressure warning valve and transmitter come into contact with each other, causing damage to the tire pressure warning valve and transmitter.
- The initialization is necessary to reset the warning threshold in accordance with variant tire pressure settings due to tire types.

(c) When replacing the tire pressure warning ECU and the tire pressure warning valves and transmitters;
It is necessary to perform the initialization (See page TW-15) after the registration (See page TW-11).

(d) Precautions about the tire pressure;
- The tire pressures decrease naturally.
- In winter, tire pressures may decrease due to low ambient temperatures (tire pressure decreases by approximately 10 kPa (0.2 kgf/cm^2, 1.45 psi) for every 10°C (50°F) drop in the ambient temperature).
  Therefore, the tire pressure warning is more likely to operate if the tire pressures are not adjusted appropriately.
  If the daily temperature variation is large, pressurize the tires high so that the tire pressures are suitable under cold conditions. Incorrect tire pressure warning operation becomes less likely.

TIRE PRESSURE WARNING RECEIVER

COMPONENTS

for Double Cab:

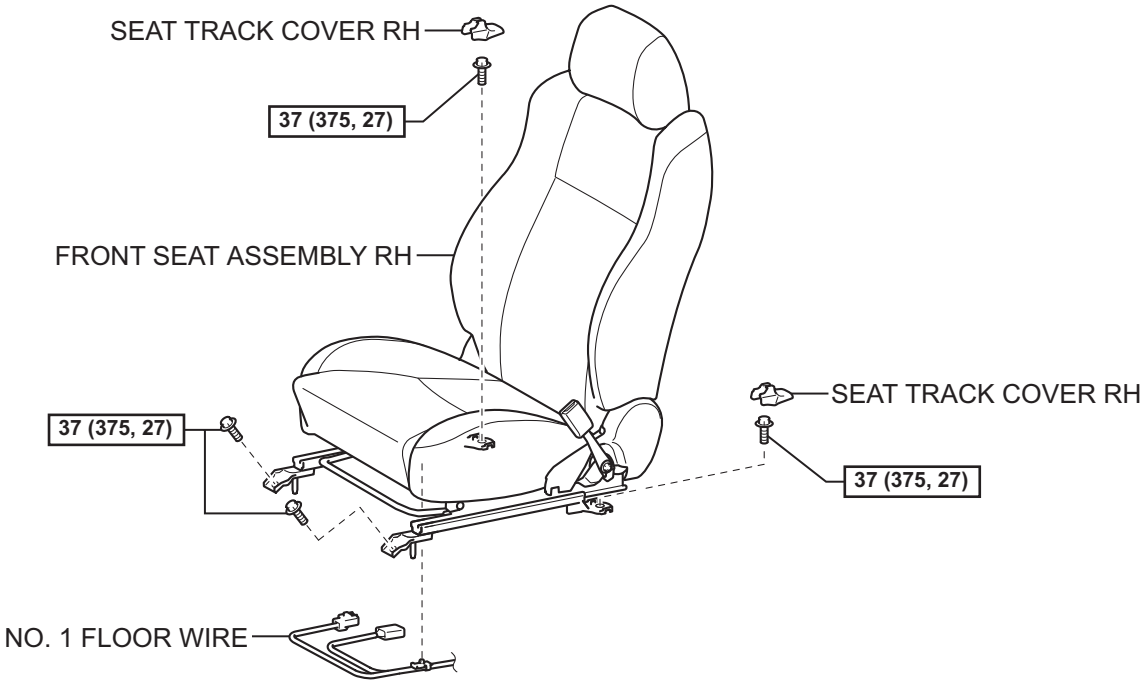

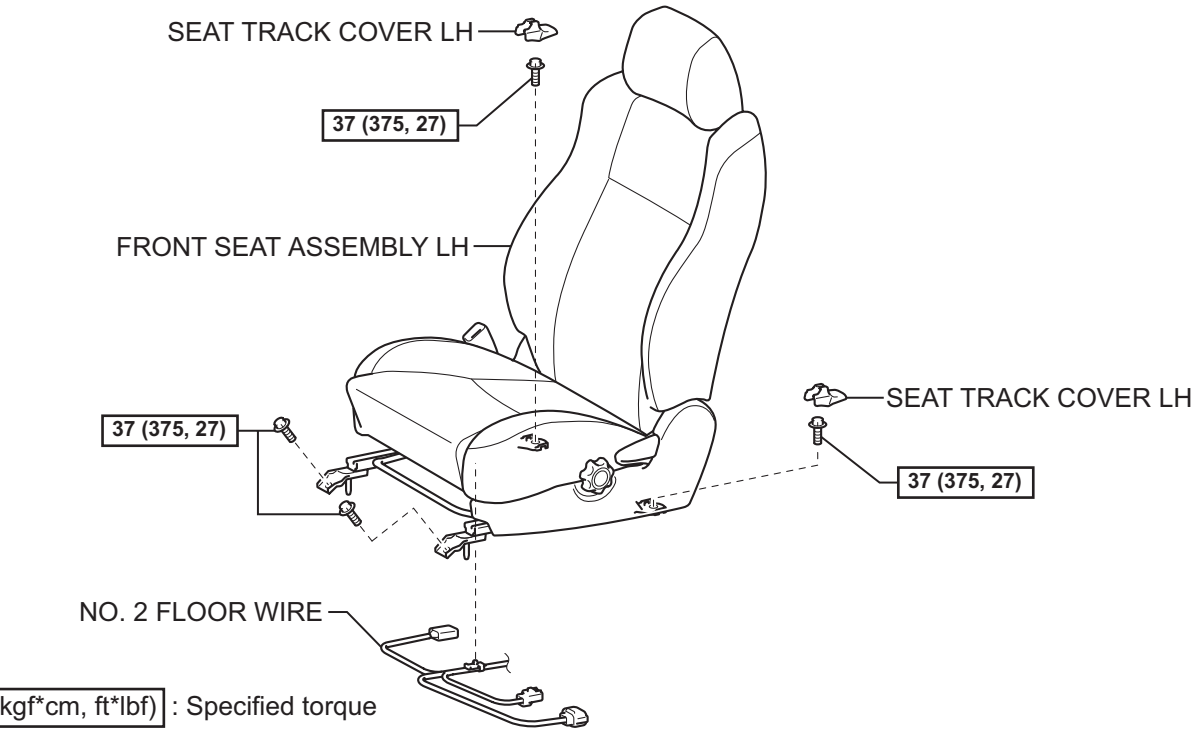

N*m (kgf*cm, ft*lbf) : Specified torque

H

B088207E04

TW

for Double Cab:

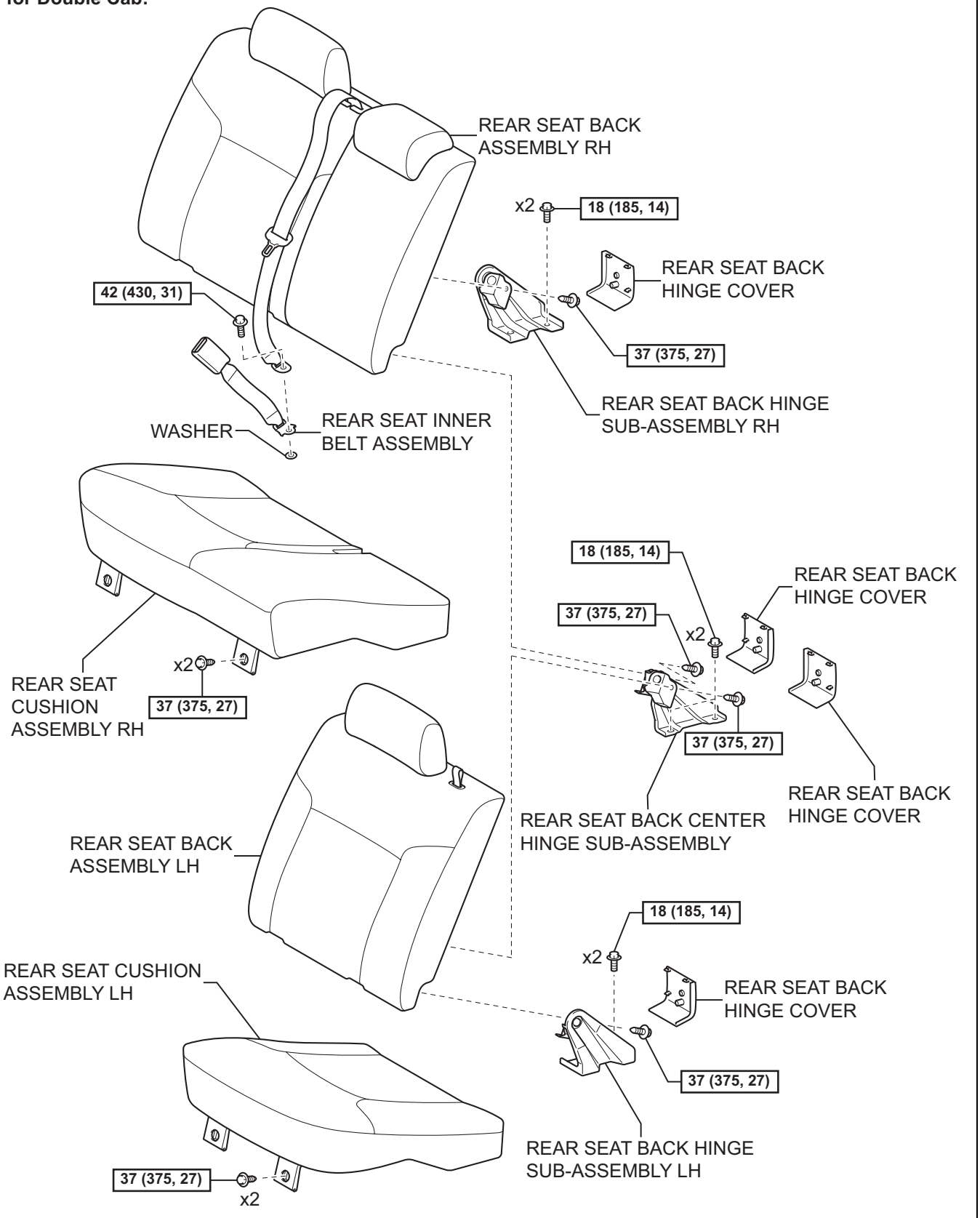

N*m (kgf*cm, ft*lbf) : Specified torque

H

B088208E03

for Double Cab:

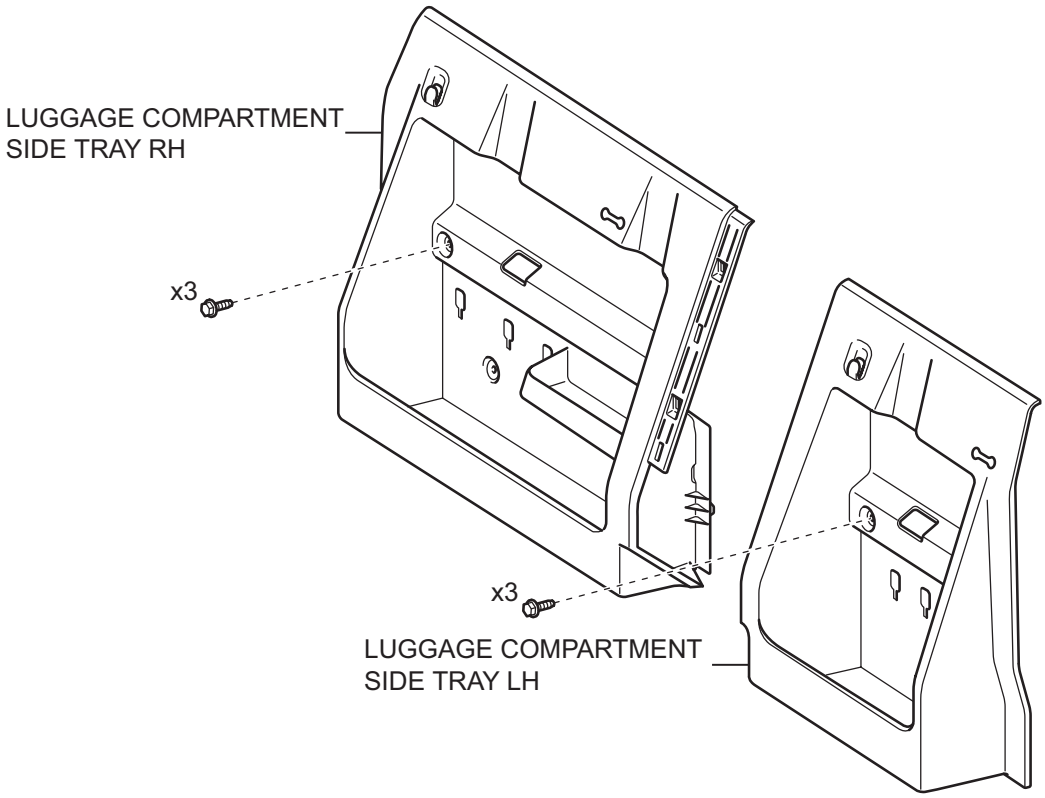

w/ Woofer:

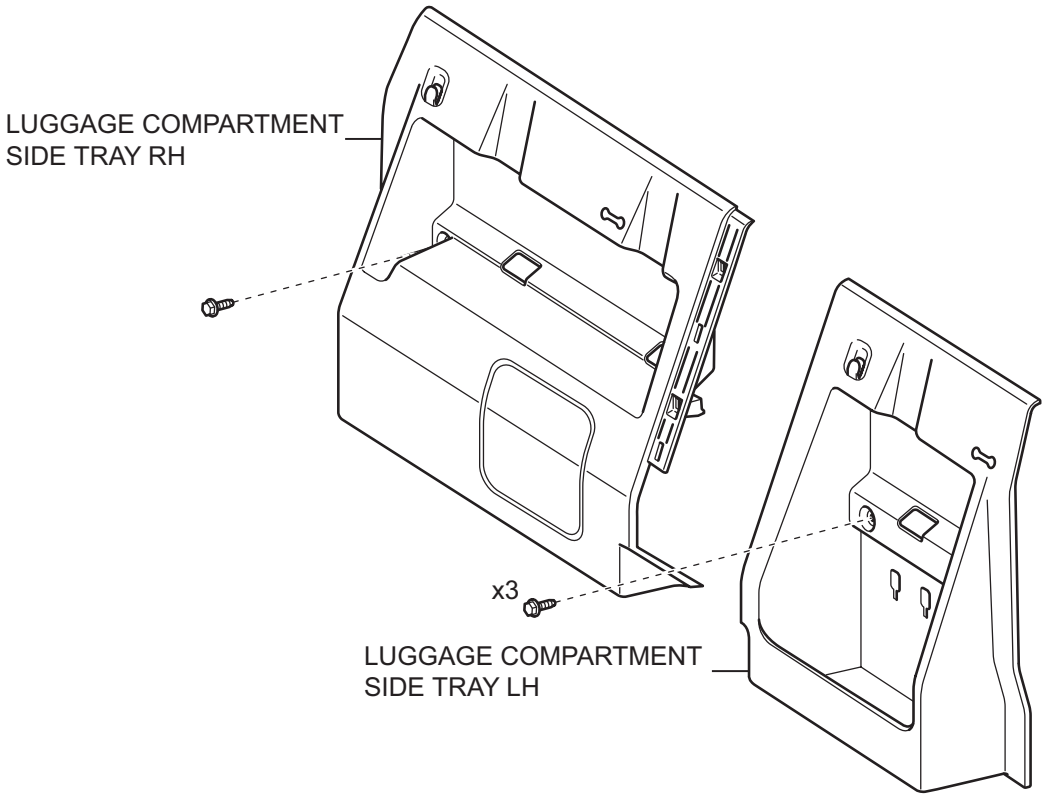

H

B087578E03

TW

for Regular Cab on Separate Seat Type:

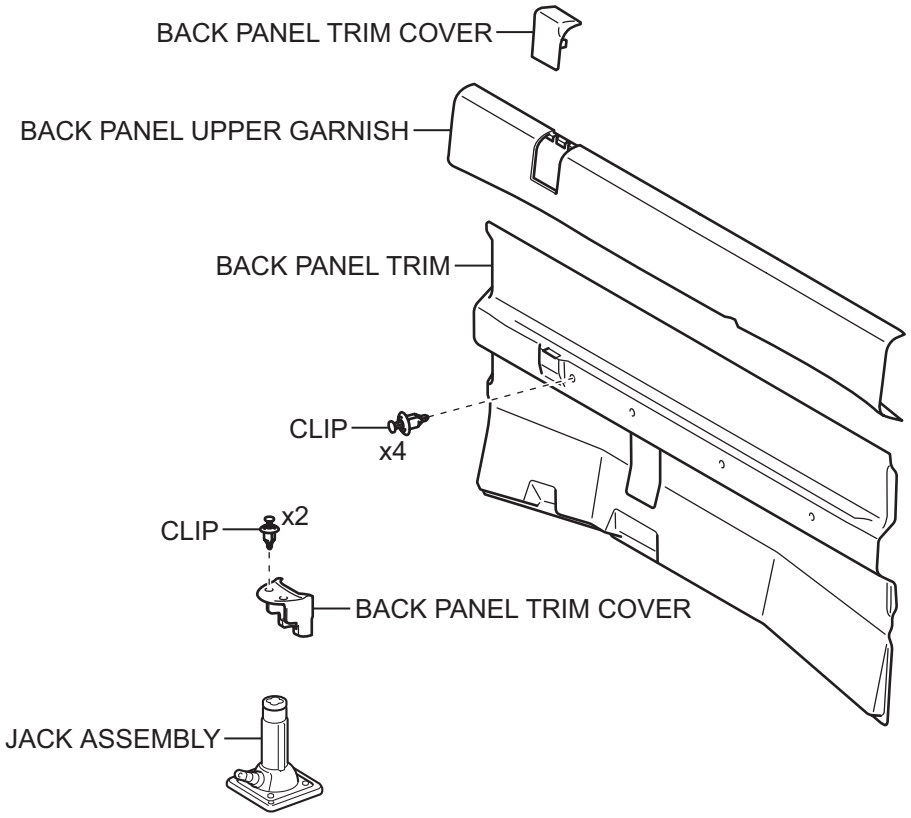

TW

for Regular Cab on Bench Seat Type:

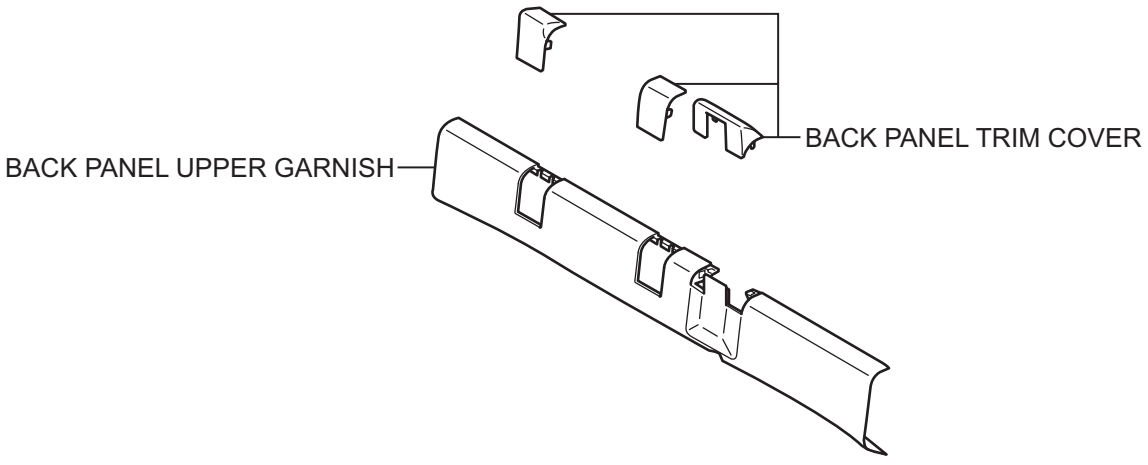

H

B087590E04

for Access Cab:

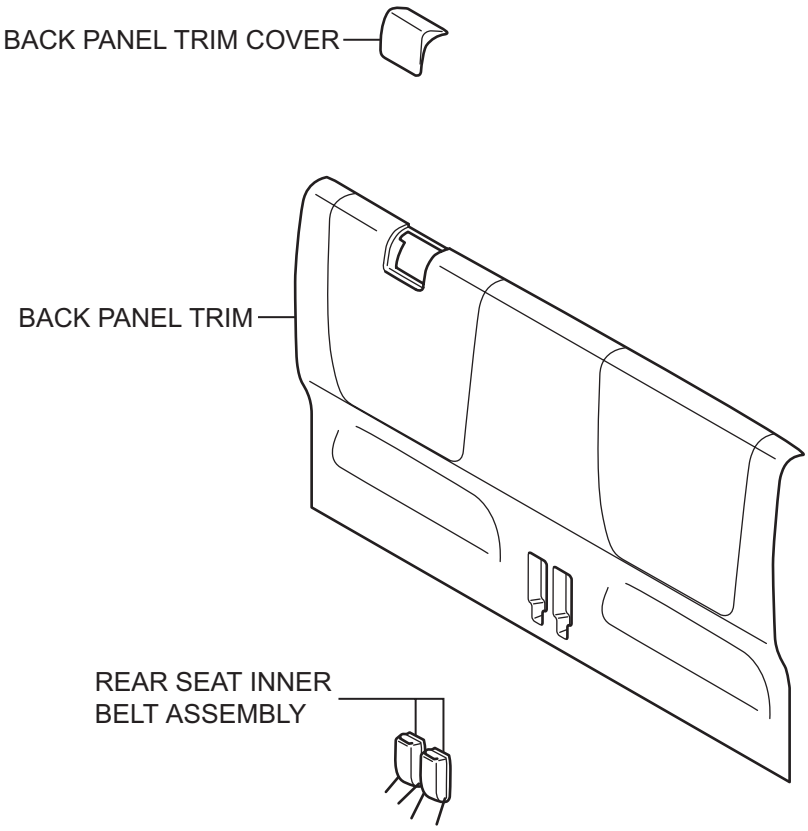

H

B087591E03

for Double Cab:

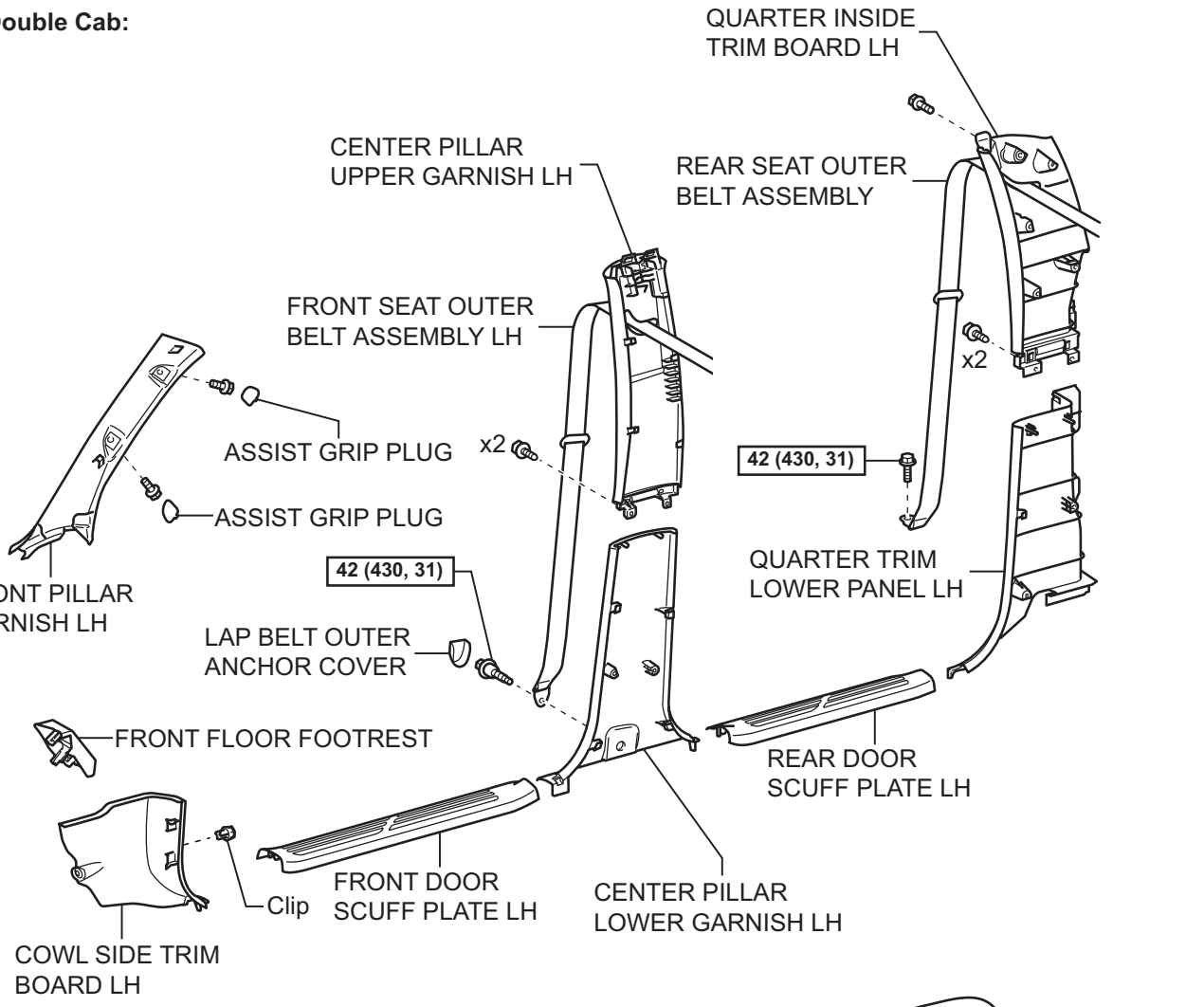

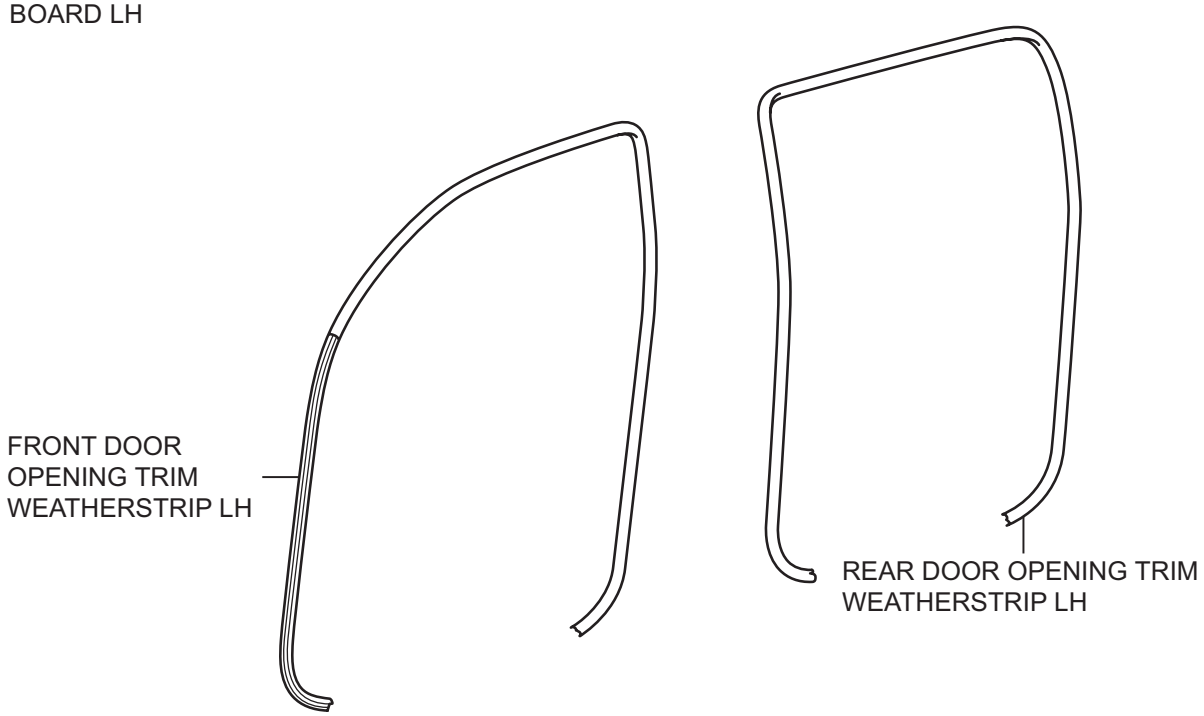

N*m (kgf*cm, ft*lbf) : Specified torque

H

B087408E03

TW

for Regular Cab:

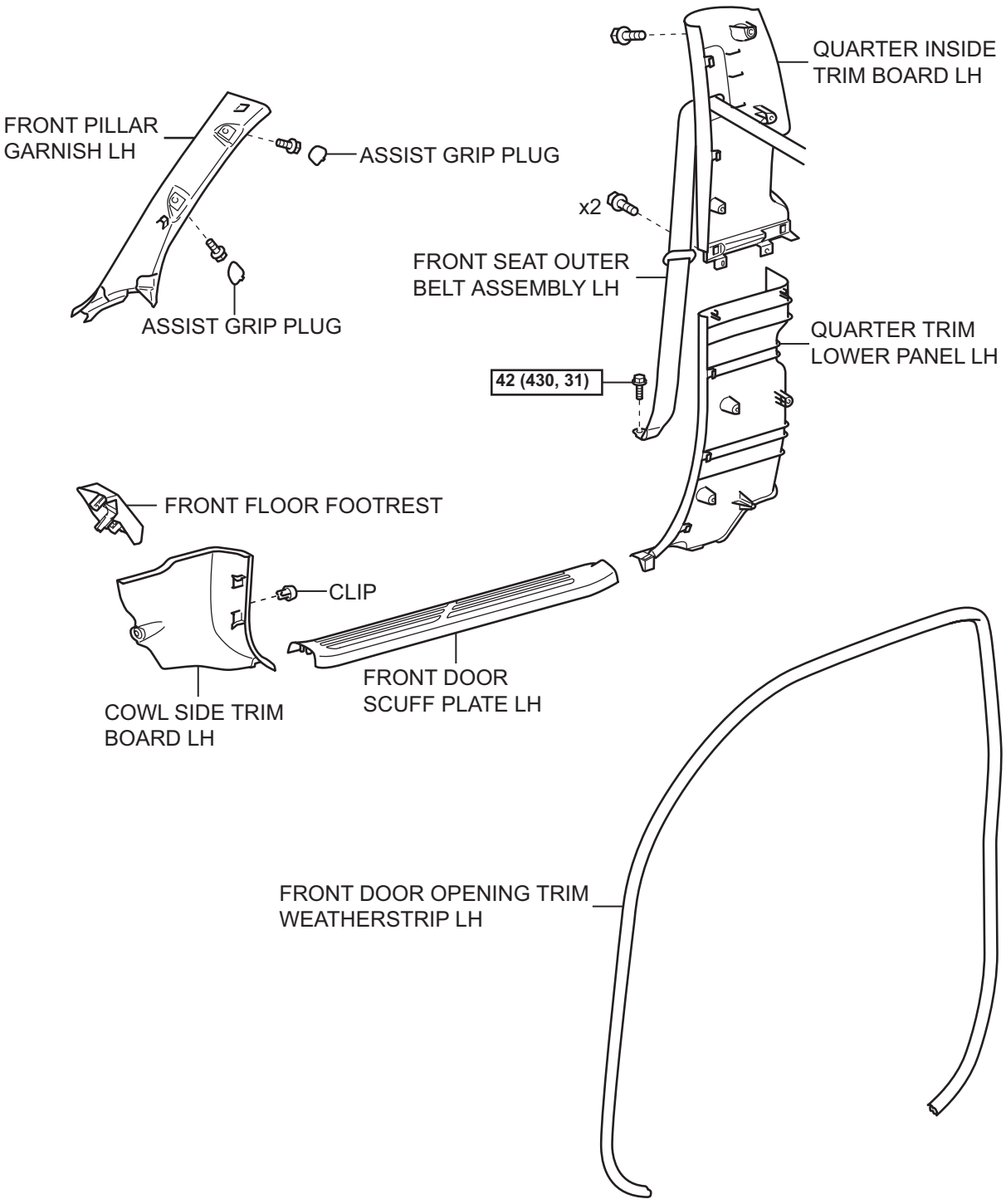

N*m (kgf*cm, ft*lbf) : Specified torque

H

B087473E04

TW

for Access Cab:

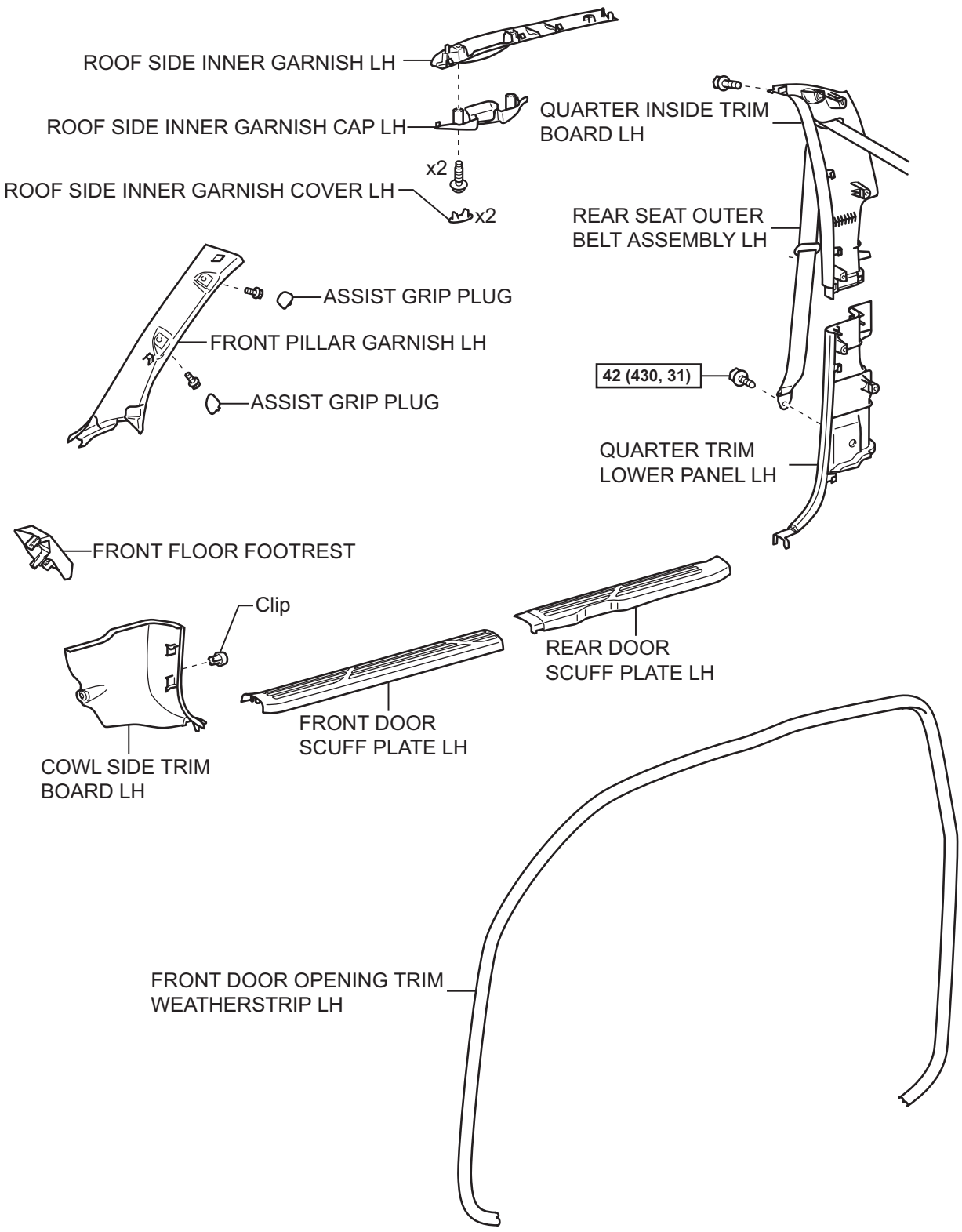

N*m (kgf*cm, ft*lbf) : Specified torque

H

B087433E03

for Double Cab:

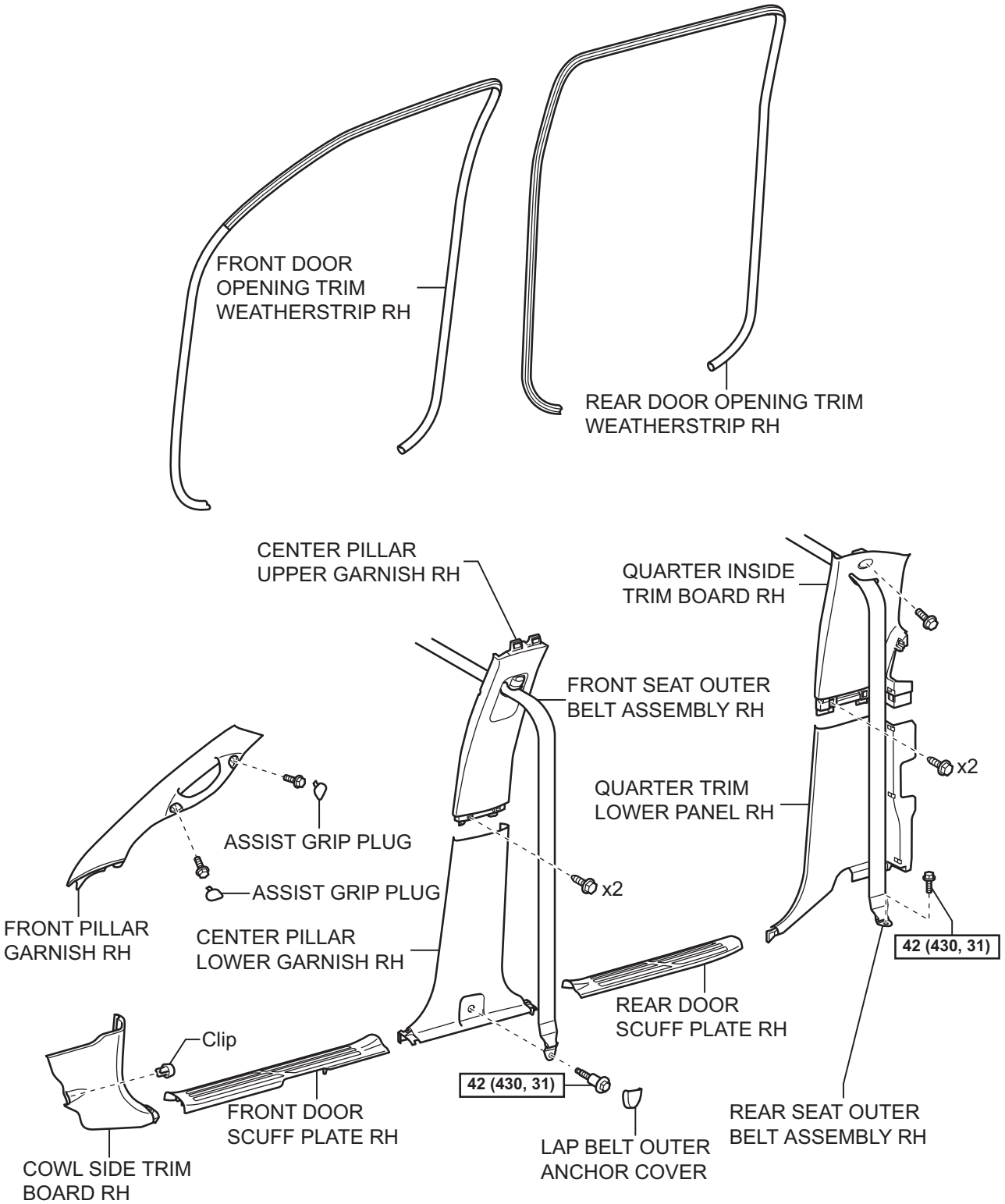

N*m (kgf*cm, ft*lbf) : Specified torque

H

B087409E03

TW

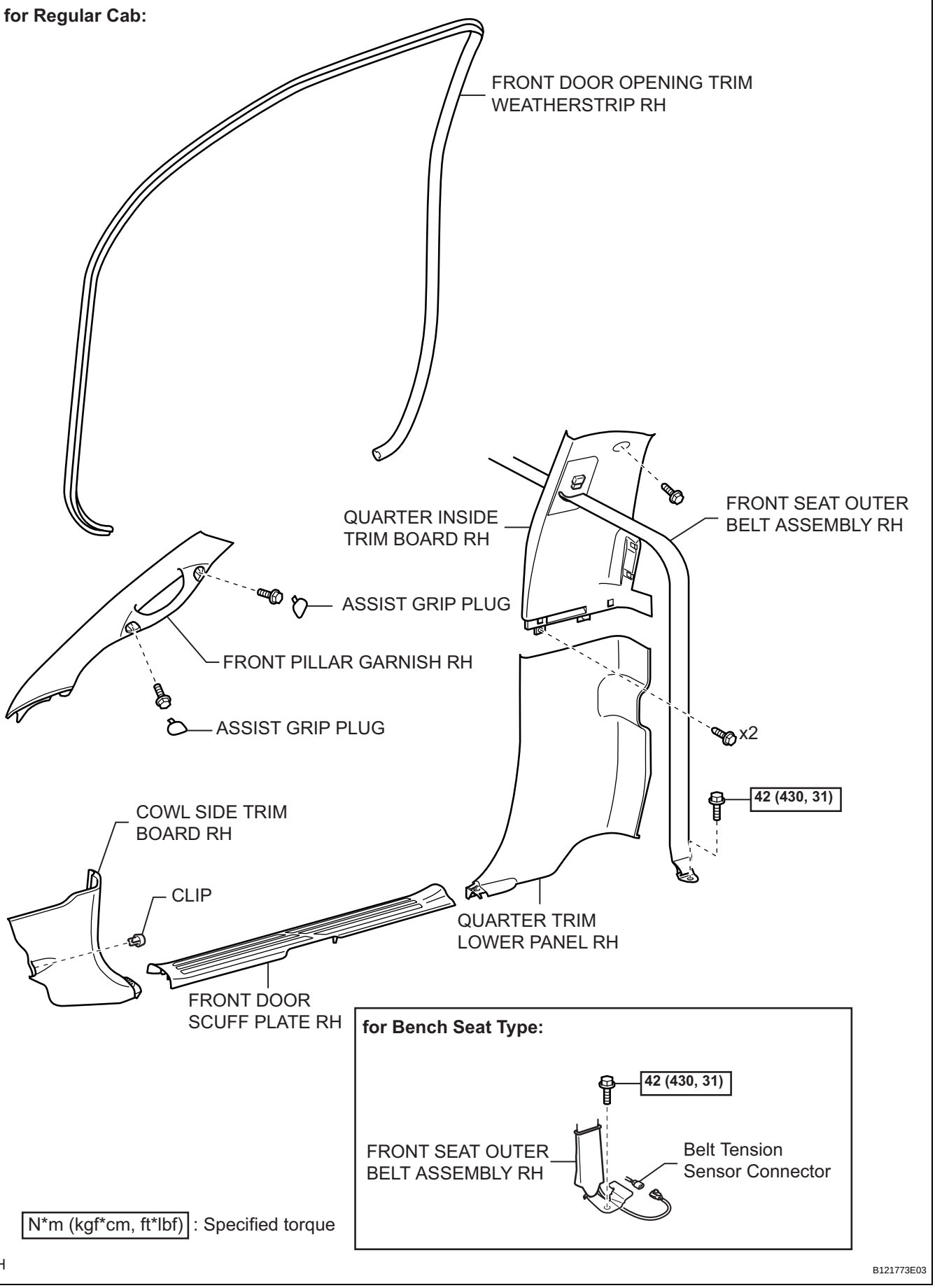
for Regular Cab:
FRONT DOOR OPENING TRIM WEATHERSTRIP RH
QUARTER INSIDE TRIM BOARD RH
FRONT SEAT OUTER BELT ASSEMBLY RH
ASSIST GRIP PLUG
FRONT PILLAR GARNISH RH
ASSIST GRIP PLUG
x2
42 (430, 31)
COWL SIDE TRIM BOARD RH
CLIP
QUARTER TRIM LOWER PANEL RH
FRONT DOOR SCUFF PLATE RH
for Bench Seat Type:
42 (430, 31)
FRONT SEAT OUTER BELT ASSEMBLY RH
Belt Tension Sensor Connector
N*m (kgf*cm, ft*lbf) : Specified torque
H
B121773E03

for Access Cab:

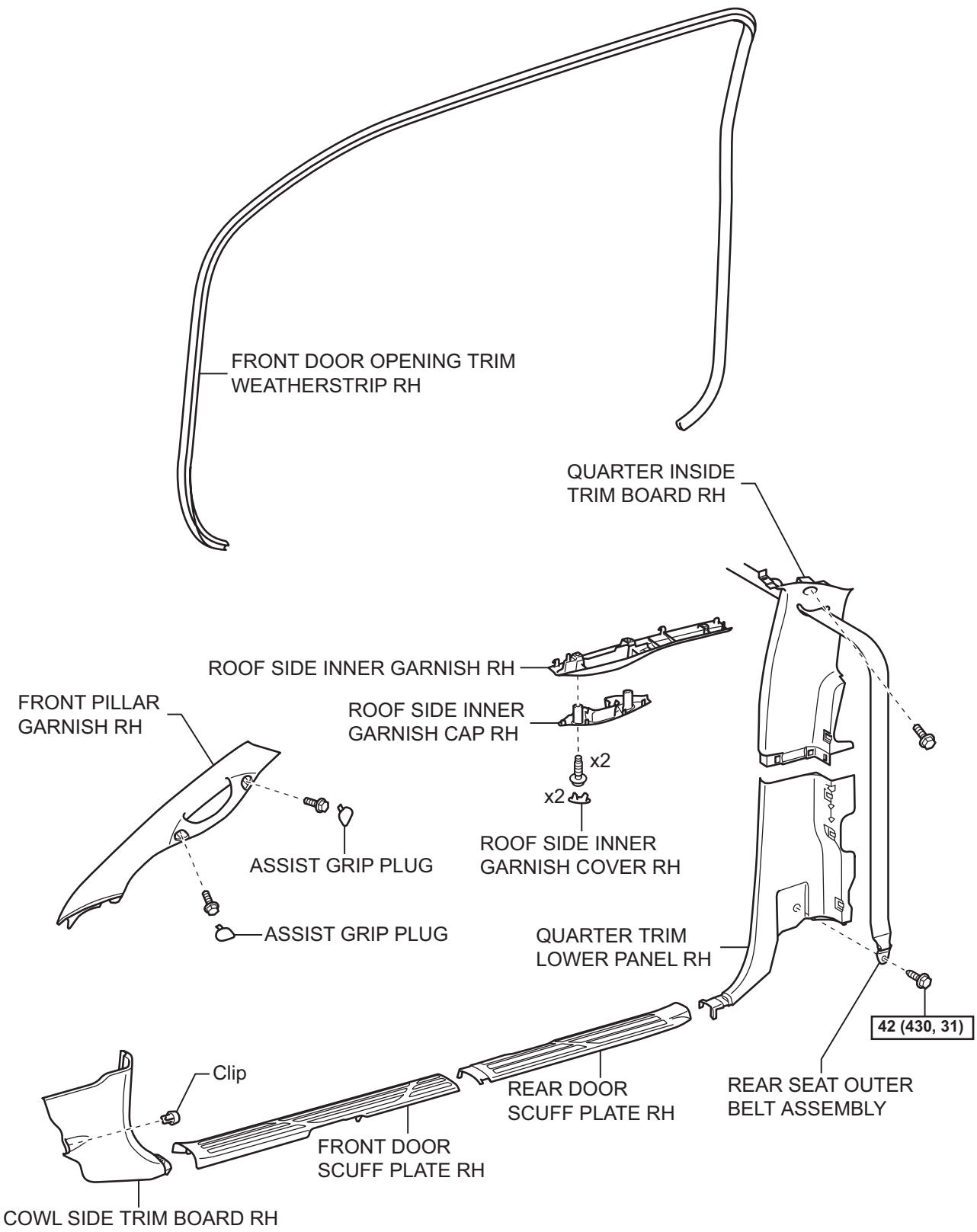

N*m (kgf*cm, ft*lbf) : Specified torque

H

B087434E03

TW

for Double Cab:

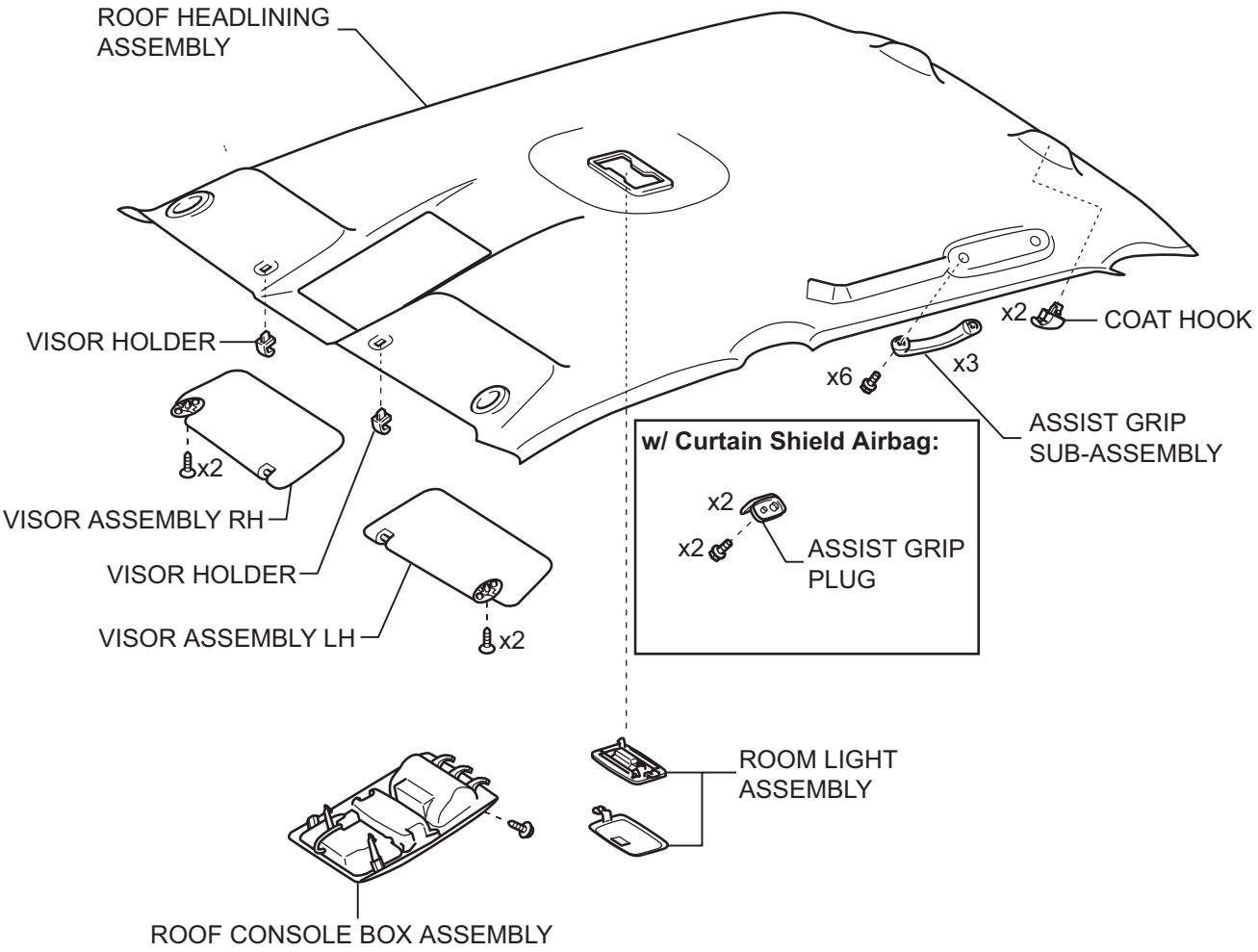

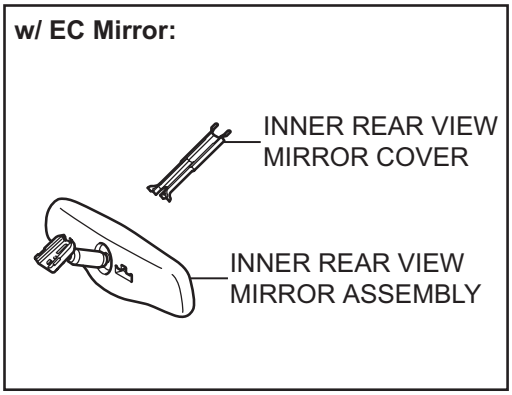

H

B126890E02

for Regular Cab:

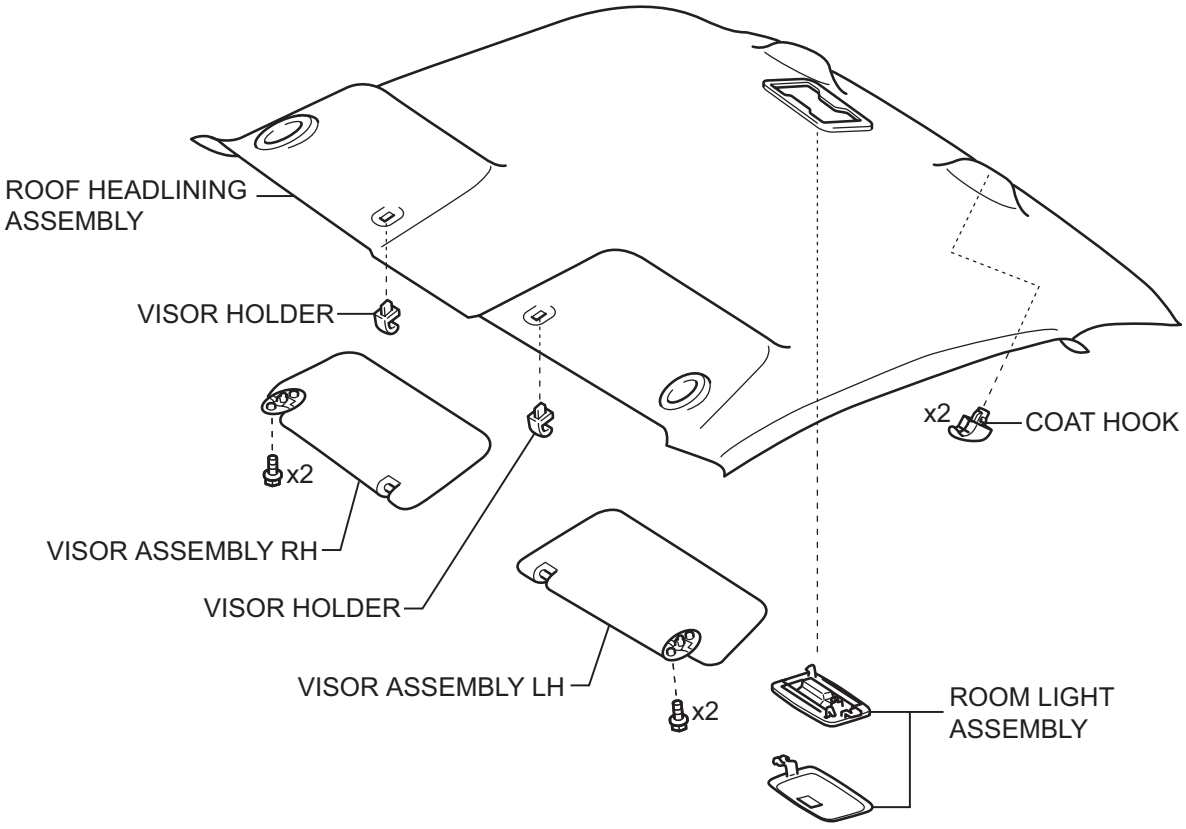

H

B126891E02

for Access Cab:

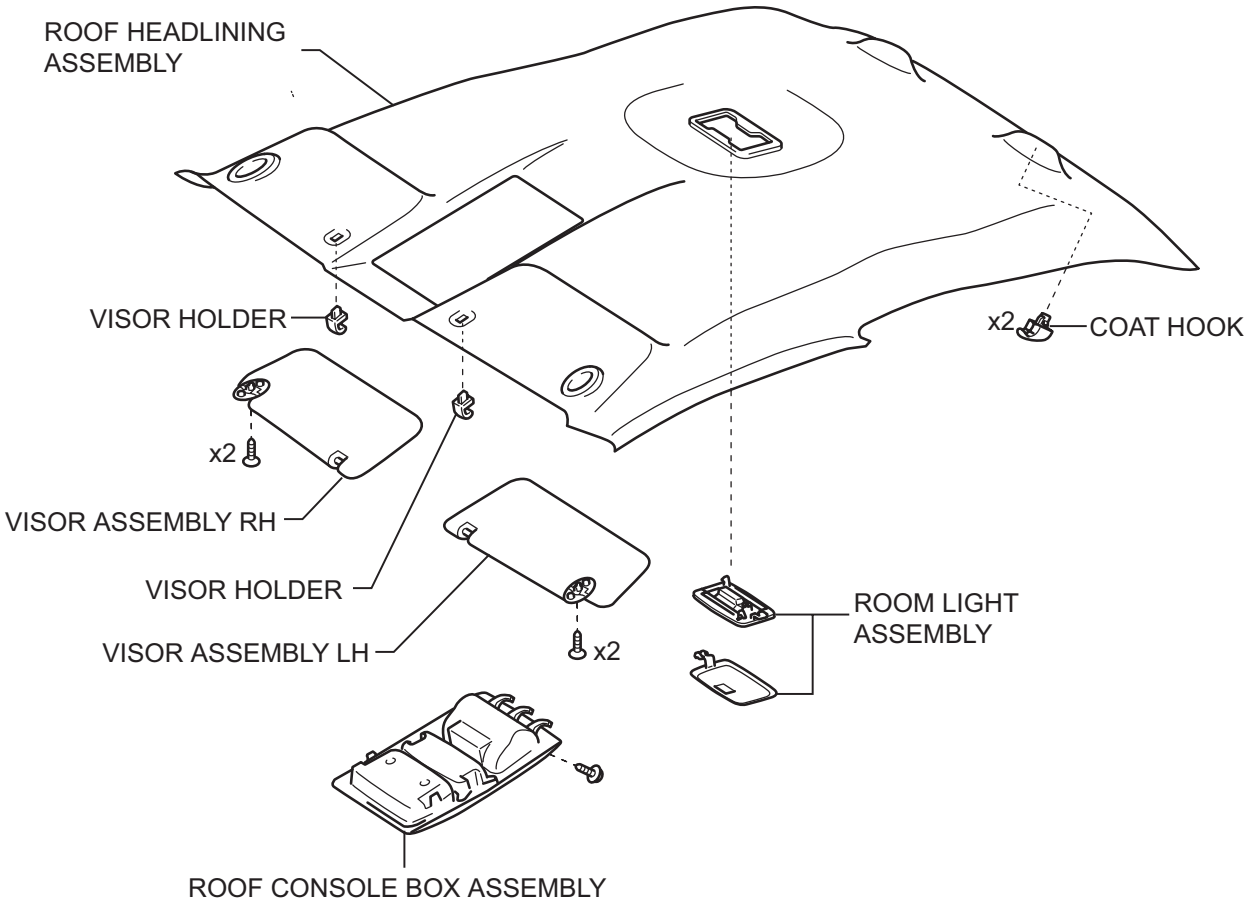

w/ EC Mirror:

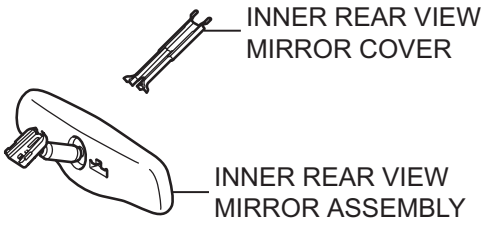

H

B126892E02

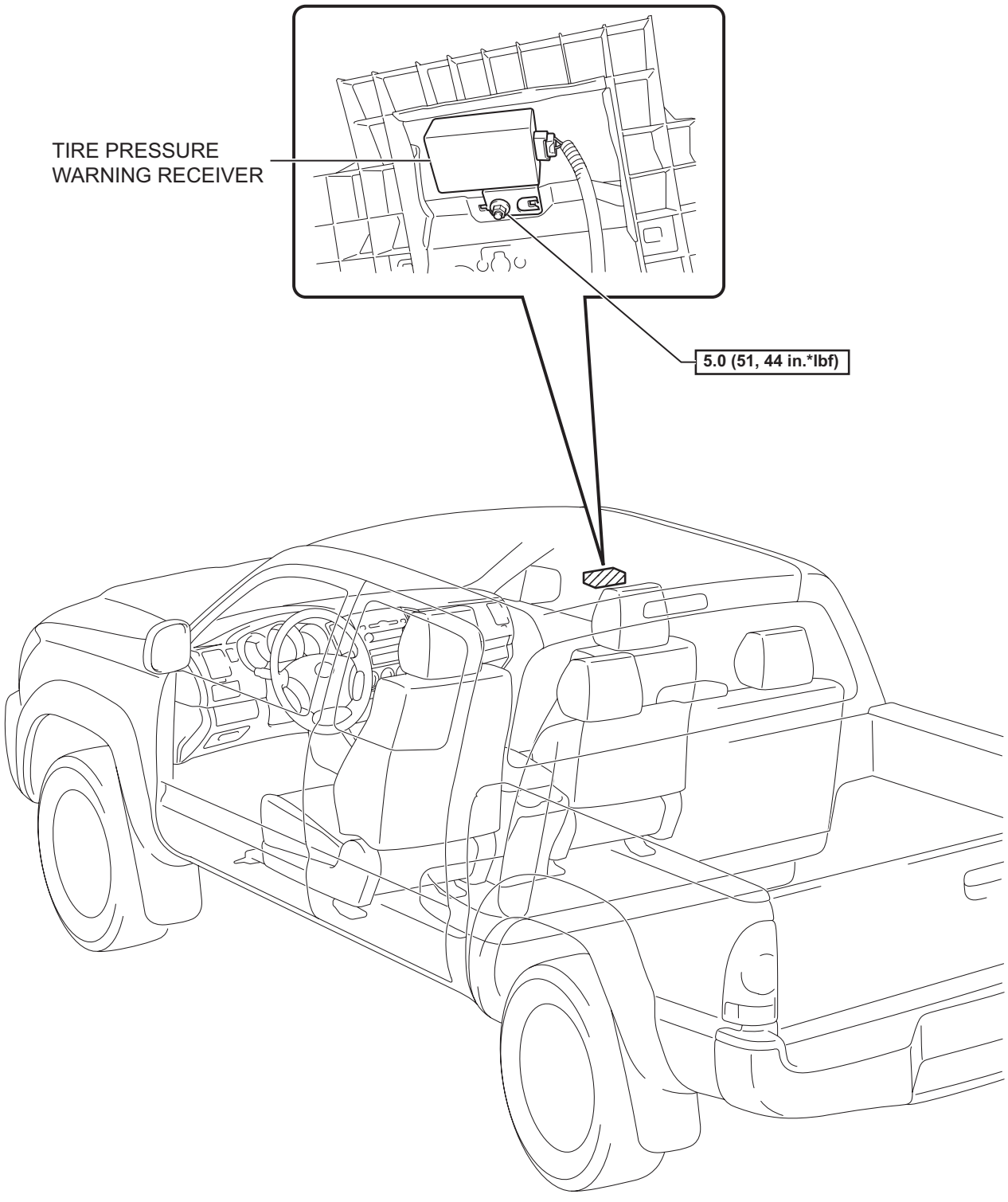

N*m (kgf*cm, ft*lbf) : Specified torque

Y

C125132E02

TIRE PRESSURE WARNING VALVE AND TRANSMITTER

COMPONENTS

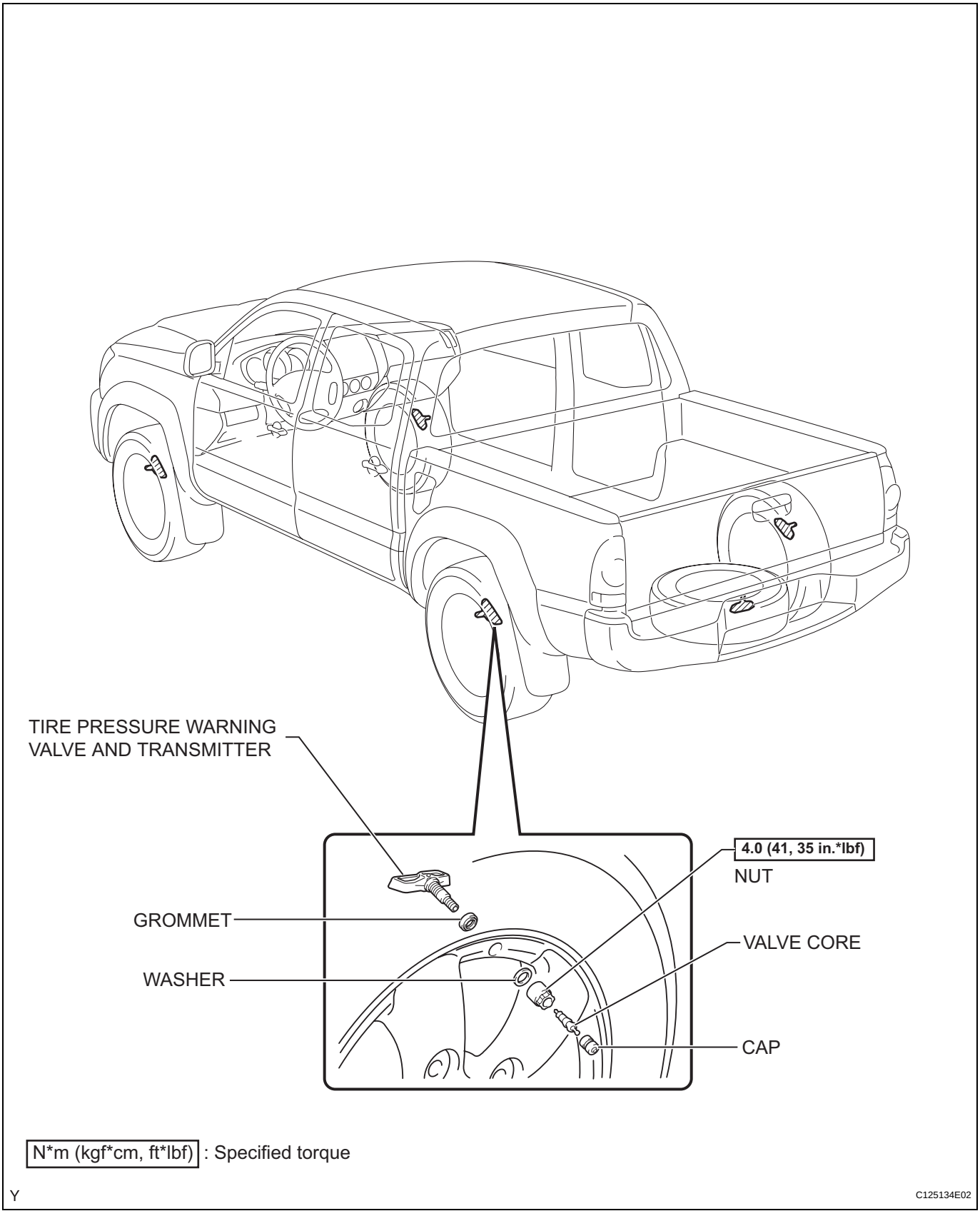

N*m (kgf*cm, ft*lbf) : Specified torque

Y

C125134E02

REMOVAL

1. **REMOVE FRONT TIRE**
2. **REMOVE REAR TIRE**
3. **REMOVE SPARE TIRE**
4. **REMOVE TIRE PRESSURE WARNING VALVE AND TRANSMITTER**
   (a) Remove the valve core and the cap, and release air from the tire.
   (b) After ensuring that air is sufficiently released, remove the nut and washer that are used to fix the tire pressure warning valve and transmitter and drop the valve sensor inside the tire.
   HINT:
   Keep the removed cap, valve core, nut and washer.

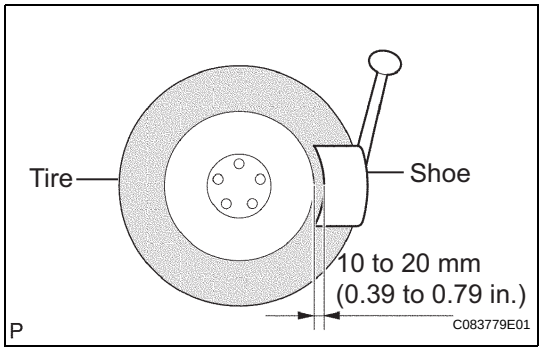

   (c) After dropping the tire pressure warning valve and transmitter into the tire, disengage the bead using the shoe of the tire remover.
   NOTICE:
   Do not damage the tire pressure warning valve and transmitter because of interference between the sensor and tire bead.
   (d) Remove the bead on the upper side.
   (e) Take the valve sensor out of the tire and remove the bead on the valve.
   HINT:
   Check that there are no cracks or damage to the grommet. If any damage is found, replace the grommet together with the washer and nut.

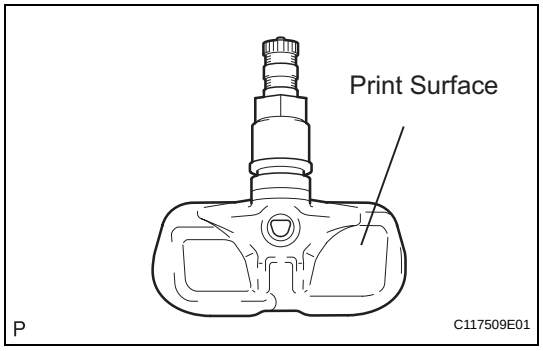

INSTALLATION

1. **INSTALL TIRE PRESSURE WARNING VALVE AND TRANSMITTER**
   (a) Insert the tire pressure warning valve and transmitter into the valve installation hole. Insert it from the inside of the rim so that the print surface can be seen.
   NOTICE:
   - **Check that there is no visible deformation, damage or other abnormalities in the transmitter.**
   - **Check that there is no foreign matter on the inner grommet and around the rim hole.**
   - **If installed in the reverse direction, the tire pressure warning valve and transmitter may be damaged or fail to transmit signals when running at high speed.**
   - **If installing a new tire pressure warning valve and transmitter, write down the ID number before installation.**
   - **It is necessary to register the ID in the ECU after installation (See page TW-11).**

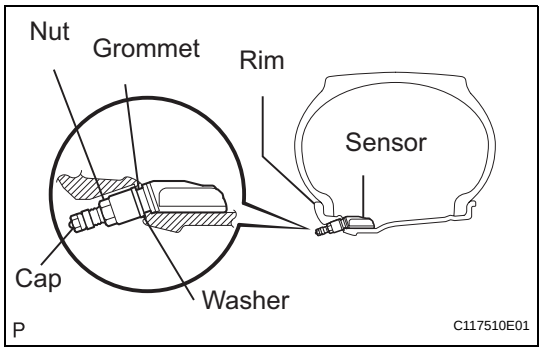

(b) Install the washer onto the tire pressure warning valve and transmitter from the rim side and tighten it with the nut.
Torque: 4.0 N*m (41 kgf*cm, 35 in.*lbf)
NOTICE:
- **The specified torque only applies the first time washer is used.**
- **Check that there is no foreign matter on the washer or nut.**
- **If the tire pressure warning valve and transmitter is removed when the tire is removed for replacement, check that there is no damage or cuts, and no foreign matter such as mud, dirt or sand attached to the grommet. Replace the grommet with a new one if necessary.**
- **Check that there is no oil, water or lubricant around the rim hole, tire pressure warning valve and transmitter, washer and nut. Failing to check may result in improper installation.**

(c) After the tire is inflated, the valve nut may be loose. Retighten the nut to the specified torque and then check for air leaks with soapy water.
Torque: 4.0 N*m (41 kgf*cm, 35 in.*lbf)
NOTICE:
The specified torque only applies the first time washer is used.

TW

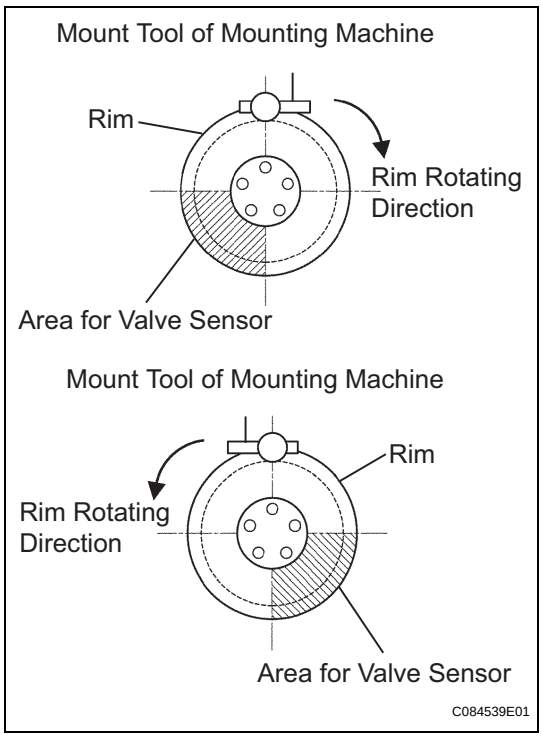

(d) Set the wheel disc to the mounting machine and install the lower tire bead. Position the main body of the valve sensor in the shaded area shown in the illustration.
NOTICE:
If the valve sensor is positioned outside this area, it generates interference with the tire bead, causing possible damage to the valve sensor.

(e) Install the upper bead.
NOTICE:
Make sure that the tire bead and tool do not interfere with the main body of the valve sensor and that the valve sensor is not interfered with the bead.

2. **INSTALL FRONT WHEEL**
Torque: 113 N*m (1,152 kgf*cm, 83 ft.*lbf)

3. **INSTALL REAR WHEEL**
Torque: 113 N*m (1,152 kgf*cm, 83 ft.*lbf)

4. **INSTALL SPARE TIRE**

5. **REGISTER TRANSMITTER ID (See page TW-11)**

6. **INSPECT TIRE PRESSURE WARNING SYSTEM**
(See page TW-11)

DISPOSAL

HINT:
The tire pressure warning valve and transmitter is powered by a lithium battery. When disposing of the tire pressure warning valve and transmitter, remove the battery and dispose of it correctly.

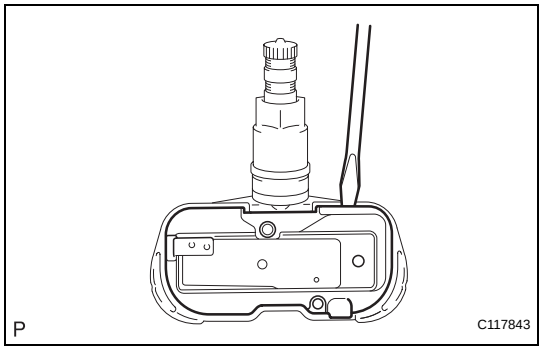

1. DISPOSE OF TIRE PRESSURE WARNING VALVE AND TRANSMITTER

(a) Using a screwdriver, pry off the cover. Remove the back cover.

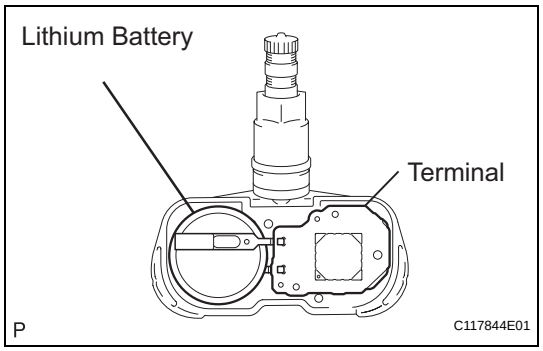

(b) Remove the battery and cut the 2 terminals which connect the battery and base board.
HINT:
The battery and base board covered with silicone resin are exposed.

TIRE PRESSURE WARNING ECU

COMPONENTS

for Automatic Transmission on Bench Seat Type:

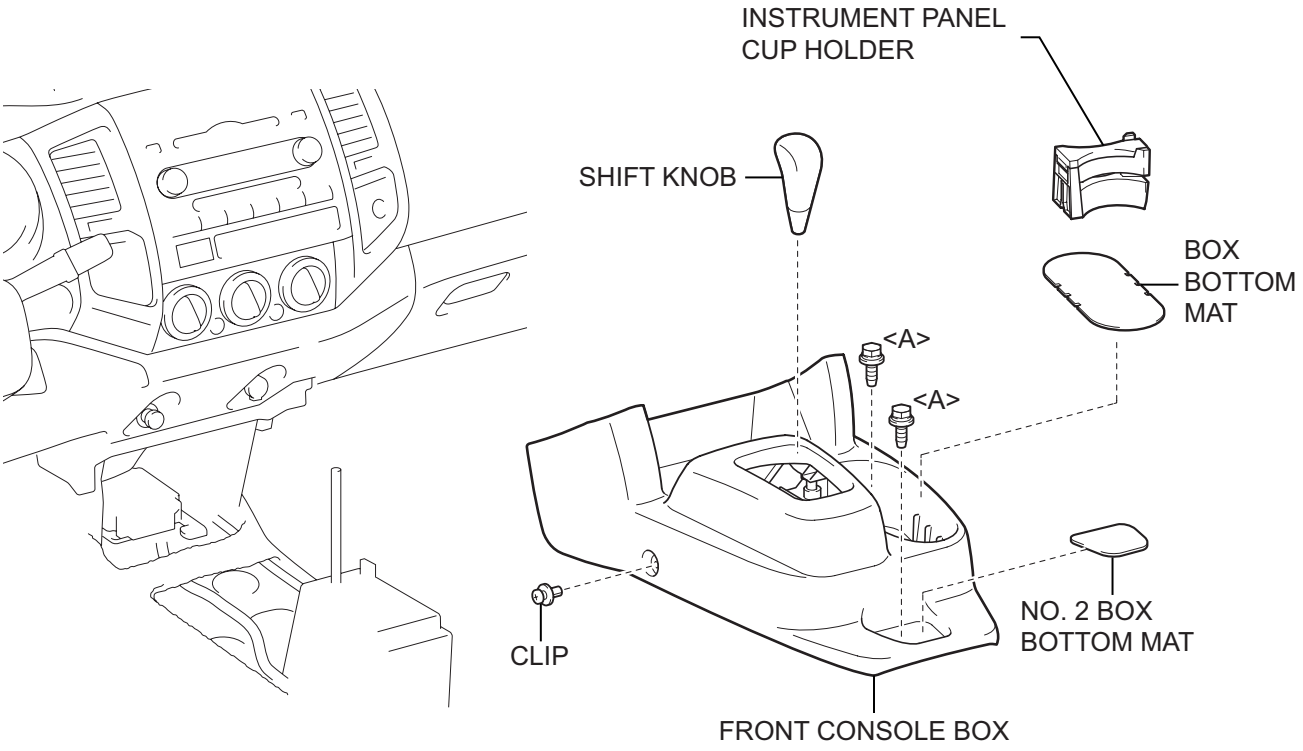

for Manual Transmission on Bench Seat Type:

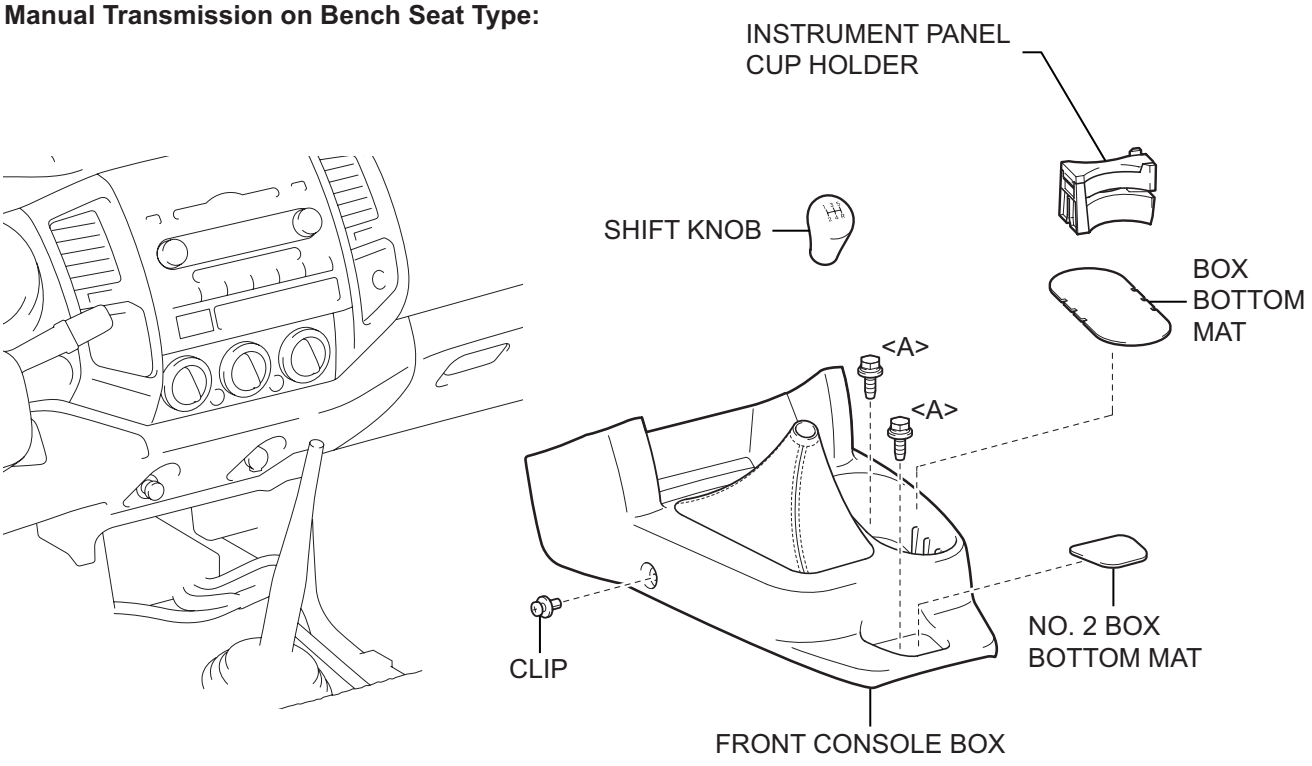

P

B085798E01

for Automatic Transmission on Separate Seat Type :

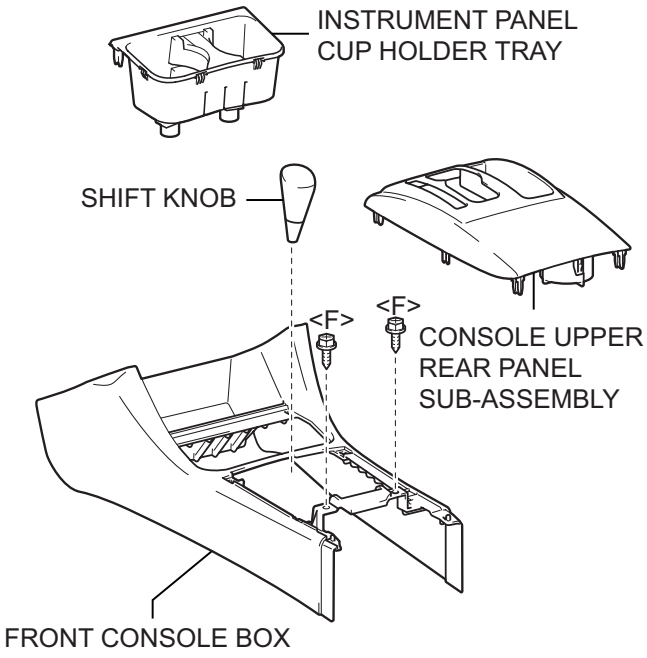

for Manual Transmission on Separate Seat Type:

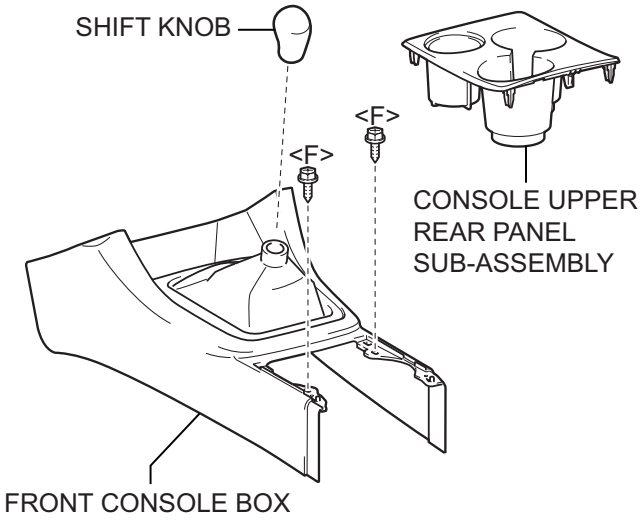

for Separate Seat Type:

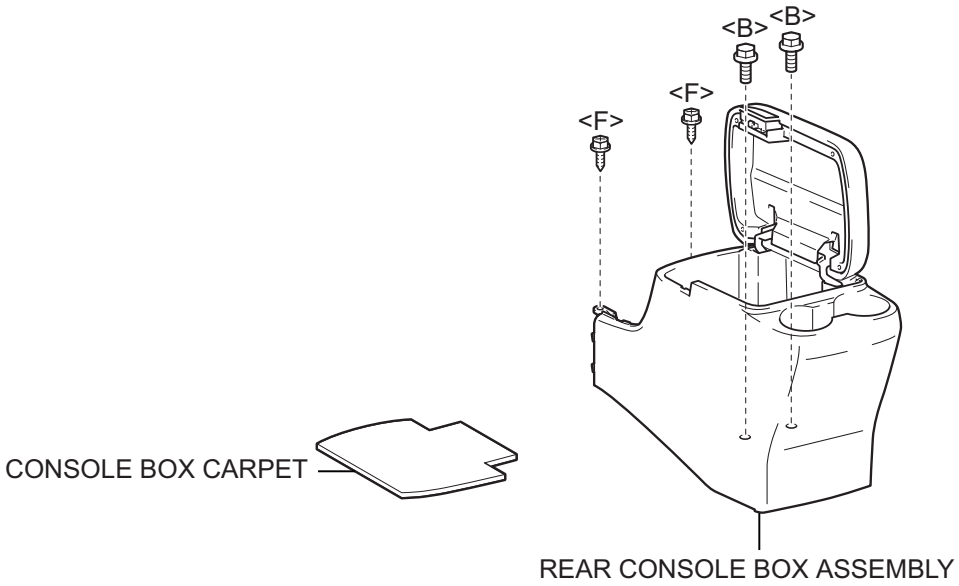

TW

P

B085799E01

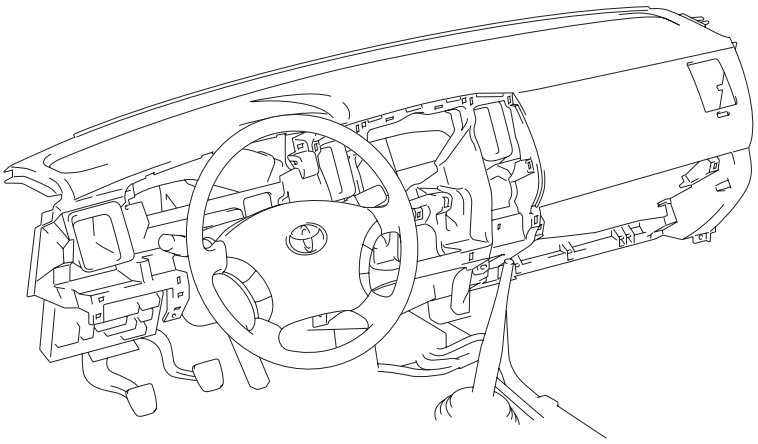

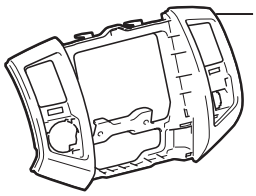

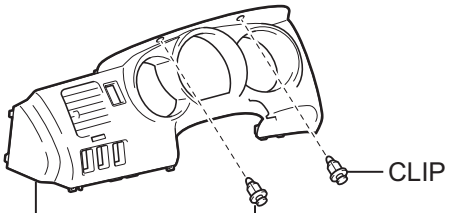

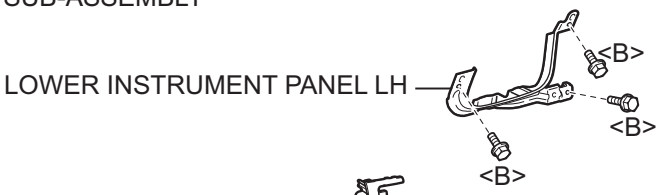

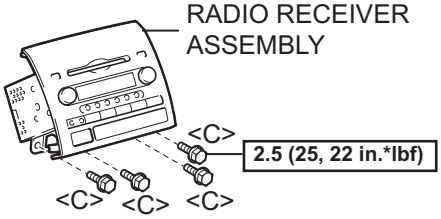

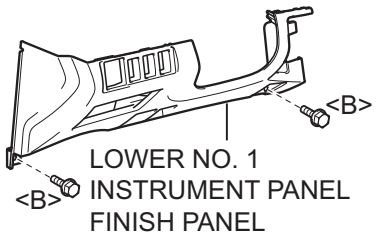

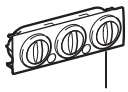



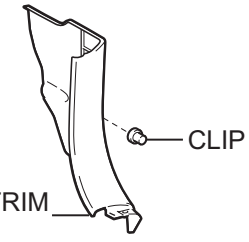





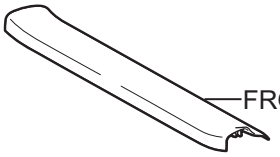

N*m (kgf*cm, ft*lbf) : Specified torque

P

C123598E02

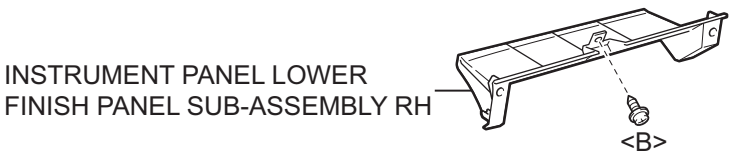

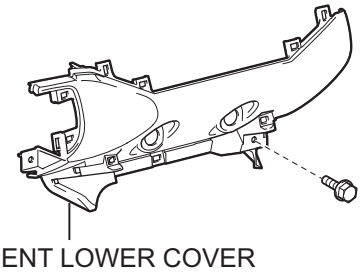

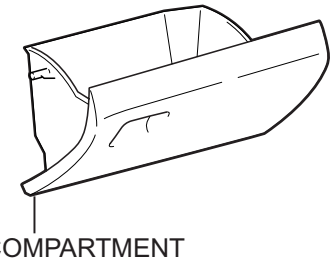



TW

P

C123599E01

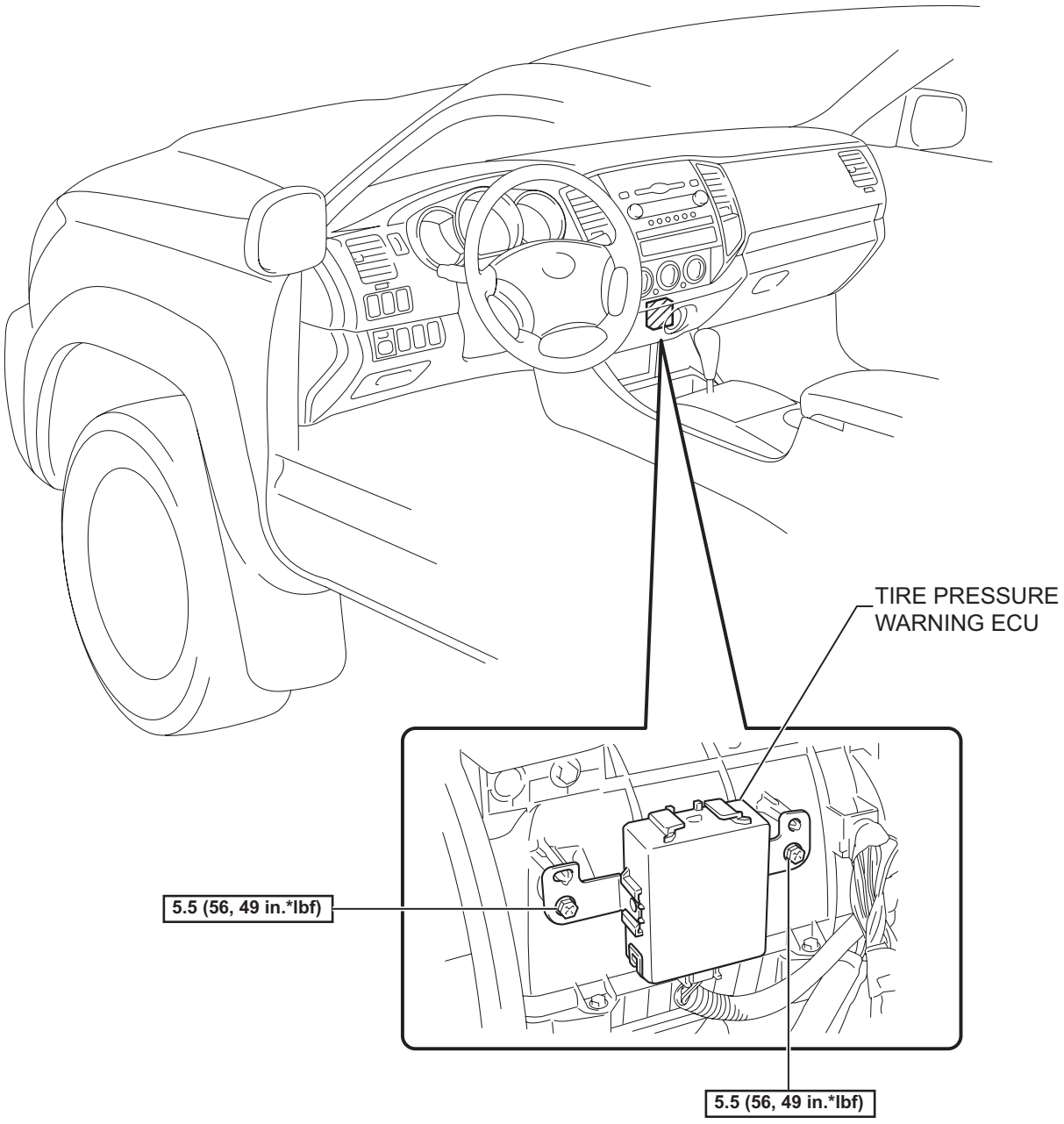

N*m (kgf*cm, ft*lbf) : Specified torque

Y

C125135E02

ANTI-LOCK BRAKE SYSTEM

PRECAUTION

- When there is a malfunction in the contact point of the terminals or installation problems with any parts, removal and reinstallation of the suspected problem parts may return the system to the normal condition either completely or temporarily.
- In order to determine the location of the malfunction, be sure to check the conditions at the time the malfunction occurred, through data such as DTC and freeze frame data outputs. Record this information before disconnecting any connectors and removing or installing any parts.
- Be sure to remove and install the brake actuator and each sensor with the ignition switch off, unless specified in the inspection procedures.
- When removing and installing the brake actuator assembly and each sensor, be sure to check that the normal display is output during a test mode inspection and a DTC output inspection after installing all the parts.

PARTS LOCATION

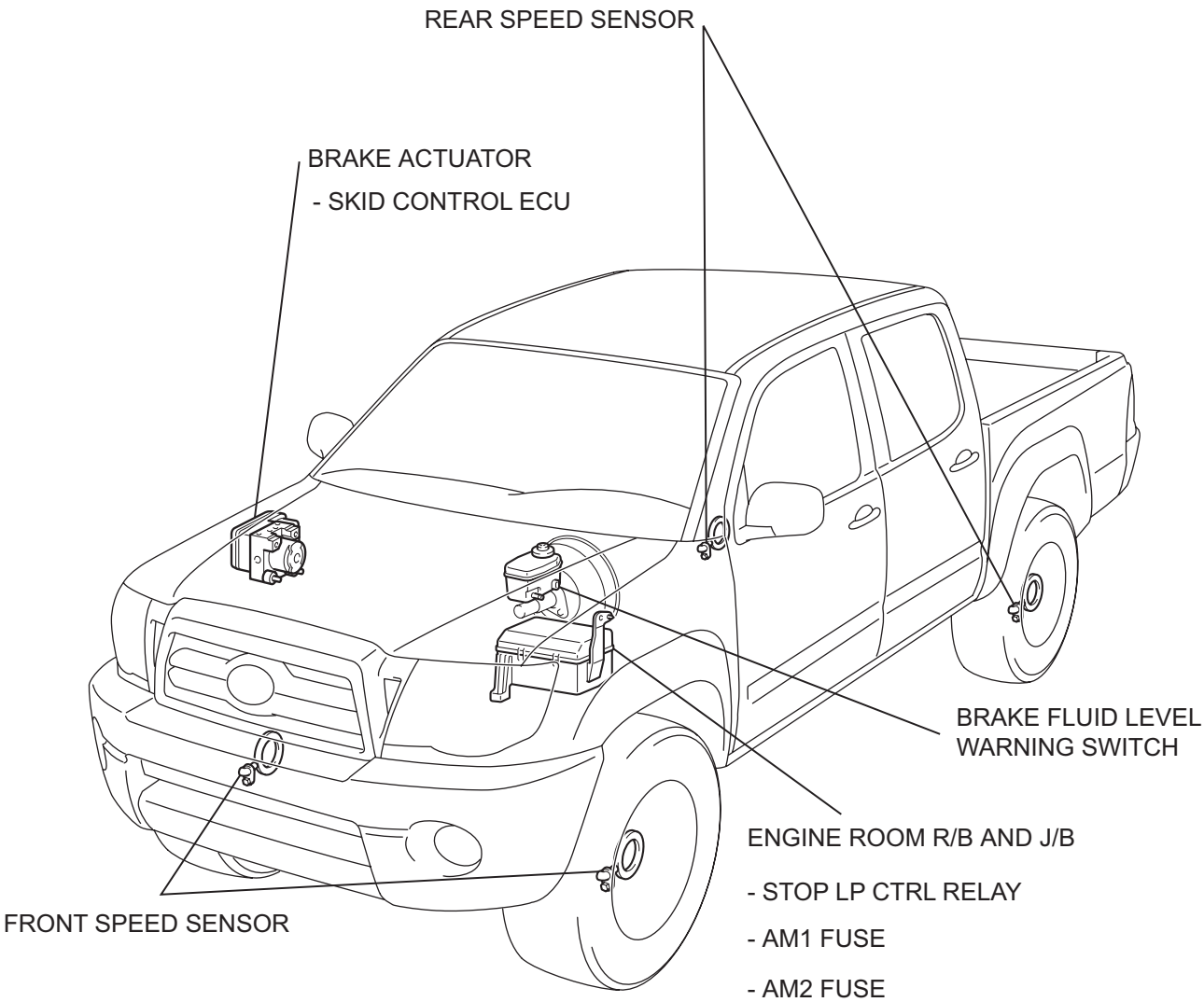

BC

Y

F051923E02

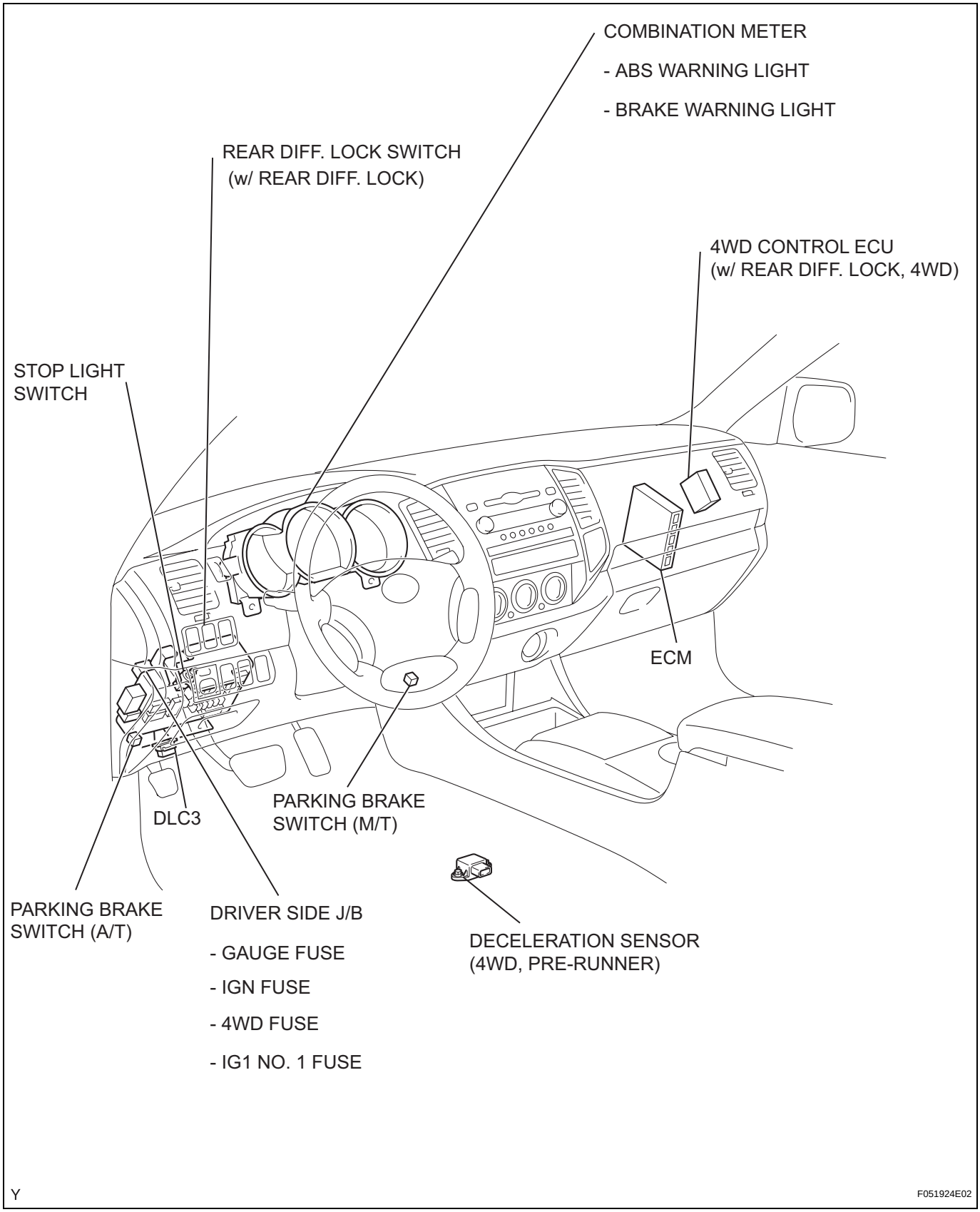
COMBINATION METER
- ABS WARNING LIGHT
- BRAKE WARNING LIGHT
REAR DIFF. LOCK SWITCH
(w/ REAR DIFF. LOCK)
4WD CONTROL ECU
(w/ REAR DIFF. LOCK, 4WD)
STOP LIGHT
SWITCH
ECM
DLC3
PARKING BRAKE
SWITCH (M/T)
PARKING BRAKE
SWITCH (A/T)
DRIVER SIDE J/B
- GAUGE FUSE
- IGN FUSE
- 4WD FUSE
- IG1 NO. 1 FUSE
DECELERATION SENSOR
(4WD, PRE-RUNNER)
Y
F051924E02

BC

VEHICLE STABILITY CONTROL SYSTEM

PRECAUTION

- When there is a malfunction in the contact point of the terminals or installation problems with parts, removal and reinstallation of the suspected problem parts may return the system to its normal condition either completely or temporarily.
- In order to determine the location of the malfunction, be sure to check the engine conditions at the time the malfunction occurred, through data such as DTC and freeze frame data outputs. Record this information before disconnecting any connectors and removing or installing any parts.
- Since the Vehicle Stability Control system may be influenced by malfunctions in other systems, be sure to check for DTCs in other systems.
- Be sure to remove and reinstall the hydraulic brake booster and each sensor with the ignition switch OFF unless specified in the inspection procedure.
- When removing and installing the hydraulic brake booster and each sensor, be sure to check that the normal display is output during a test mode inspection and a DTC output inspection after reinstalling all the parts.
- After replacing the master cylinder solenoid (skid control ECU) and/or the yaw rate sensor and deceleration sensor, be sure to perform the yaw rate sensor and deceleration sensor zero point calibration (See page BC-99).
- The CAN communication system is used for data communication between the skid control ECU, the steering angle sensor, and the yaw rate sensor (the deceleration sensor is included).
- If there is trouble in the CAN communication line, the DTC relating to the communication line is output. If a DTC relating to the CAN communication line is output, repair the malfunction in the communication line and troubleshoot the Vehicle Stability Control system.
- Since the CAN communication line has a specific length and route, it cannot be repaired temporarily with a bypass wire.

PARTS LOCATION

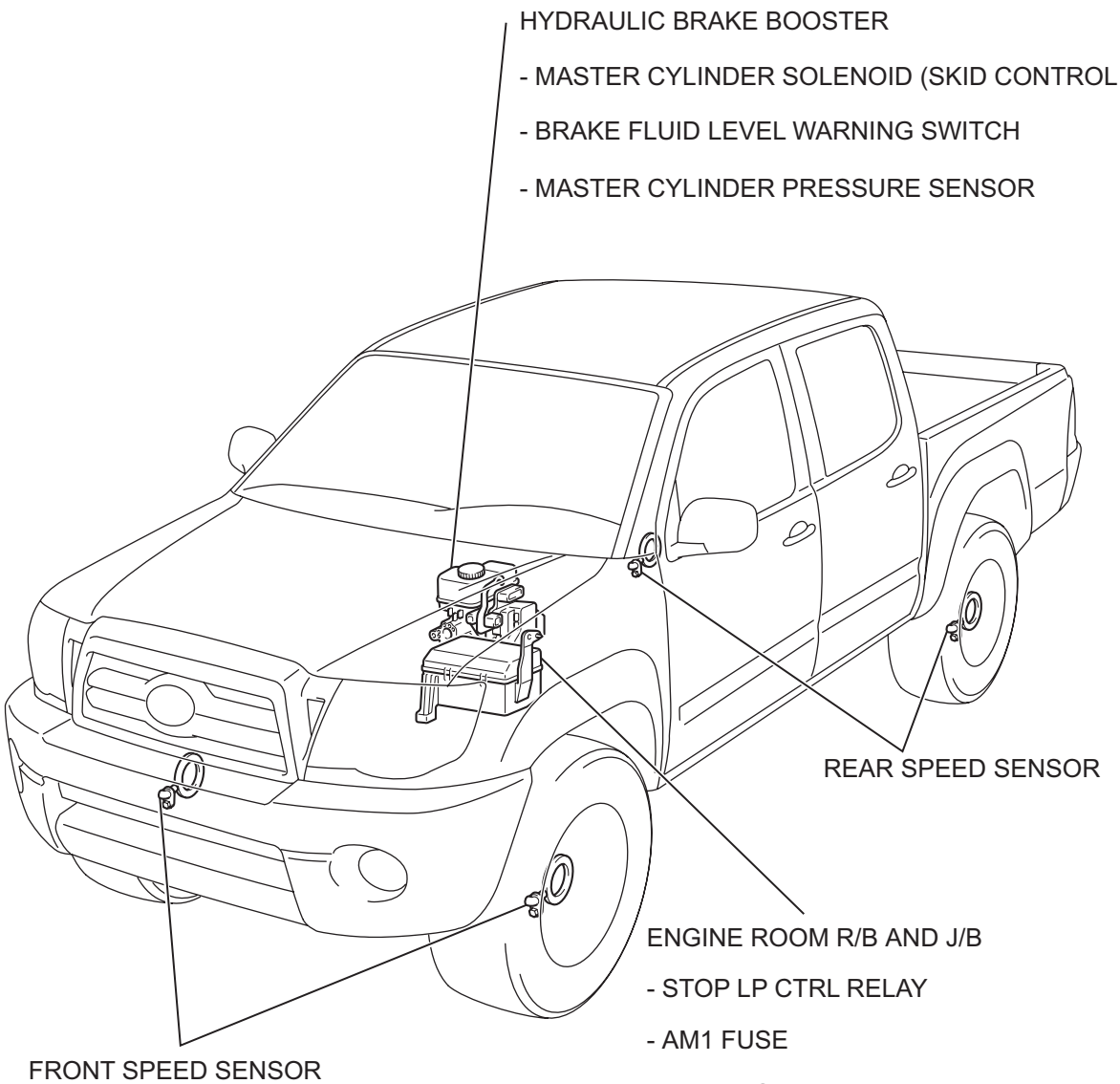

BC

Y

F051296E01

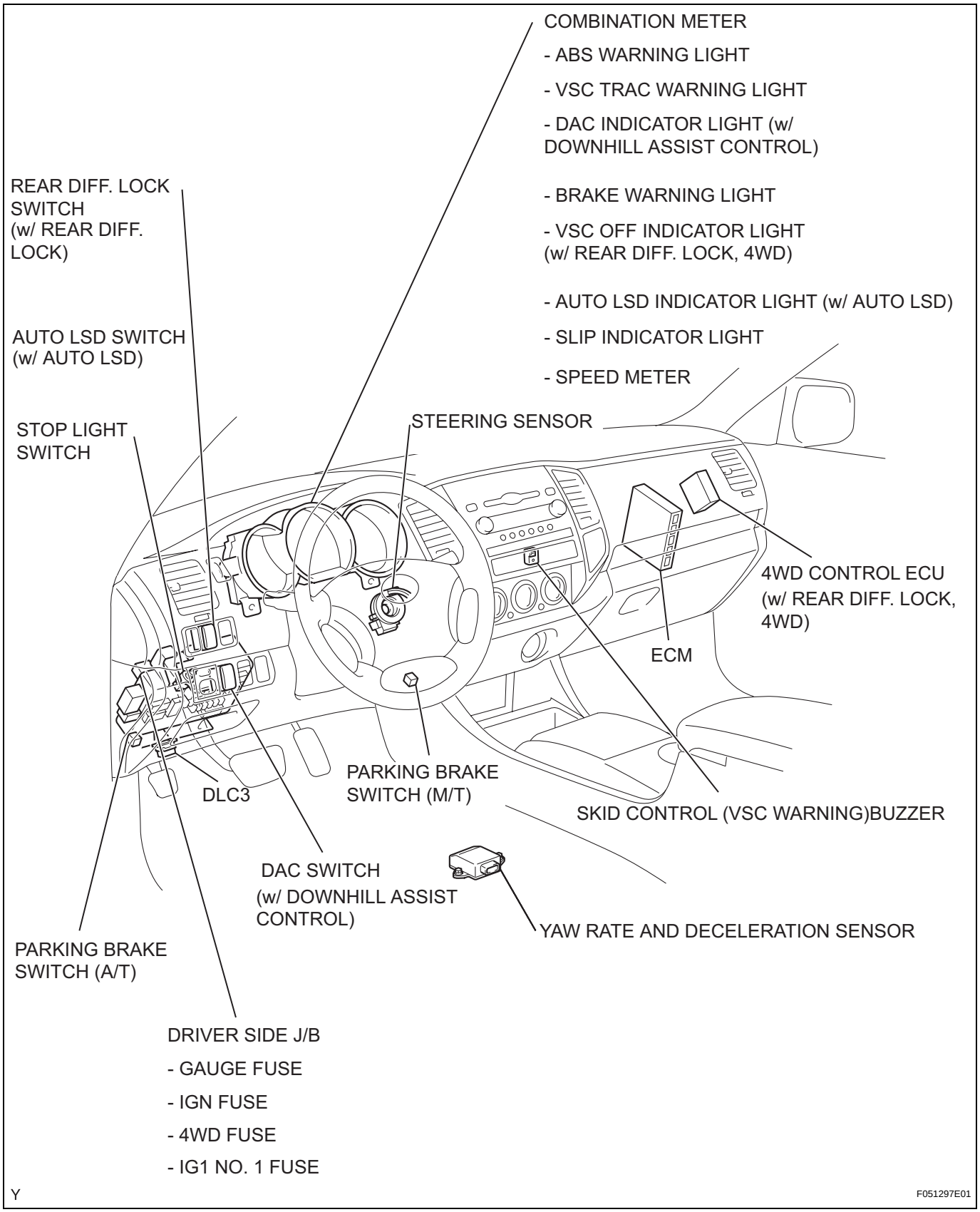
COMBINATION METER
- ABS WARNING LIGHT
- VSC TRAC WARNING LIGHT
- DAC INDICATOR LIGHT (w/ DOWNHILL ASSIST CONTROL)
- BRAKE WARNING LIGHT
- VSC OFF INDICATOR LIGHT (w/ REAR DIFF. LOCK, 4WD)
- AUTO LSD INDICATOR LIGHT (w/ AUTO LSD)
- SLIP INDICATOR LIGHT
- SPEED METER
REAR DIFF. LOCK SWITCH (w/ REAR DIFF. LOCK)
AUTO LSD SWITCH (w/ AUTO LSD)
STOP LIGHT SWITCH
STEERING SENSOR
4WD CONTROL ECU (w/ REAR DIFF. LOCK, 4WD)
ECM
DLC3
PARKING BRAKE SWITCH (M/T)
SKID CONTROL (VSC WARNING)BUZZER
DAC SWITCH (w/ DOWNHILL ASSIST CONTROL)
YAW RATE AND DECELERATION SENSOR
PARKING BRAKE SWITCH (A/T)
DRIVER SIDE J/B
- GAUGE FUSE
- IGN FUSE
- 4WD FUSE
- IG1 NO. 1 FUSE
Y
F051297E01

BC

BRAKE ACTUATOR (w/o VSC)

ON-VEHICLE INSPECTION

1. CONNECT INTELLIGENT TESTER

(a) Connect the intelligent tester to the DLC3.
(b) Start the engine and allow it to idle.
(c) Select ACTIVE TEST mode on the intelligent tester.
HINT:
Refer to the intelligent tester operator manual for further details.

2. INSPECT ACTUATOR MOTOR OPERATION

(a) With the motor relay ON, check the actuator motor operation noise.
(b) Turn the motor relay OFF.
(c) Depress the brake pedal and hold it for about 15 seconds. Check that the brake pedal cannot be depressed.
(d) With the motor relay ON, check that the pedal does not pulsate.
NOTICE:
Do not keep the motor relay ON for more than 5 seconds continuously. When operating it continuously, allow intervals of more than 20 seconds.
(e) Turn the motor relay OFF and release the brake pedal.

3. INSPECT RIGHT FRONT WHEEL OPERATION

NOTICE:
Never turn ON any solenoids other than those described below.

(a) With the brake pedal depressed, perform the following operations.
(b) Turn SFRH and SFRR solenoids ON simultaneously, and check that the pedal cannot be depressed.
NOTICE:
Do not keep the solenoids ON for more than 2 seconds continuously. When operating them continuously, allow intervals of more than 20 seconds.
(c) Turn SFRH and SFRR solenoids OFF simultaneously, and check that the pedal can be depressed.
(d) Turn the motor relay ON, and check that the pedal returns.
NOTICE:
Do not keep the motor relay ON for more than 5 seconds continuously. When operating it continuously, allow intervals of more than 20 seconds.
(e) Turn the motor relay OFF and release the brake pedal.

4. INSPECT OTHER WHEEL OPERATION

(a) Check the solenoids of the other wheels using the same procedures as above.
HINT:
Left front wheel: SFLH, SFLR
Right rear wheel: SRRH, SRRR
Left rear wheel: SRLH, SRLR

FRONT SPEED SENSOR

REMOVAL

1. **DISCONNECT CABLE FROM NEGATIVE BATTERY TERMINAL**
2. **REMOVE FRONT WHEEL**
3. **REMOVE FRONT SPEED SENSOR**
   (a) Disconnect the speed sensor connector.
   (b) Remove the bolt and front speed sensor.
   NOTICE:
   - **Do not attach any foreign matter to the sensor tip.**
   - **Ensure that no foreign matter enters the sensor installation part.**

for 2WD:

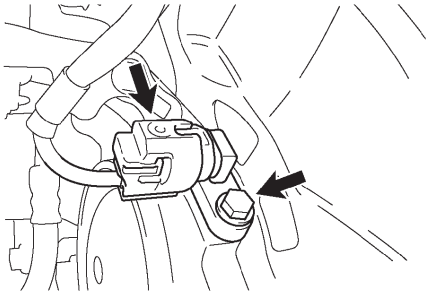

for 4WD and Pre-Runner:

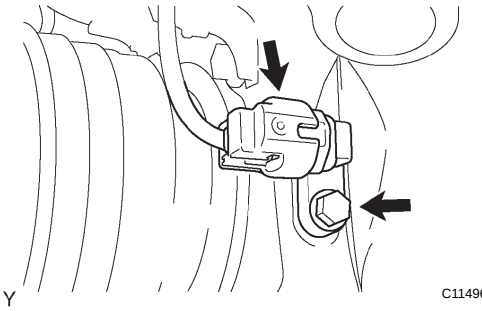

INSTALLATION

1. **INSTALL FRONT SPEED SENSOR**
   (a) Install the front speed sensor with the bolt.
   Torque: 8.3 N*m (85 kgf*cm, 73 in.*lbf)
   NOTICE:
   Make sure that the sensor tip is clean.
   (b) Connect the speed sensor connector.
2. **INSTALL FRONT WHEEL**
   Torque: 113 N*m (1,152 kgf*cm, 83 ft.*lbf)
3. **CONNECT CABLE TO NEGATIVE BATTERY TERMINAL**
   Torque: 3.9 N*m (40 kgf*cm, 35 in.*lbf)
   (See page IN-5)
4. **CHECK VSC SENSOR SIGNAL (w/ VSC)**
   (See page BC-103)
5. **CHECK ABS SENSOR SIGNAL (w/o VSC)**
   (See page BC-7)

for 2WD:

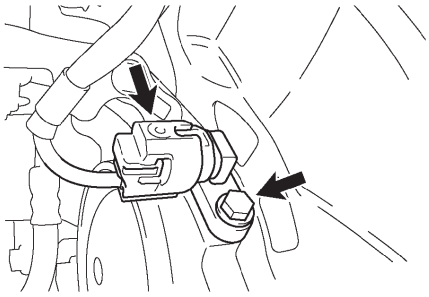

for 4WD and Pre-Runner:

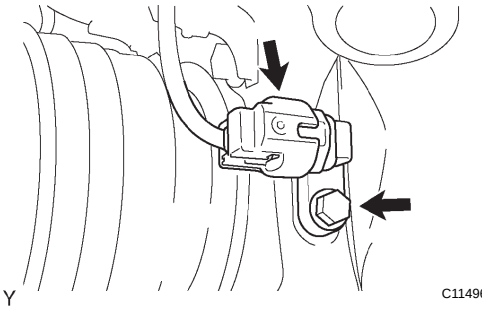

REAR SPEED SENSOR

REMOVAL

1. **DISCONNECT CABLE FROM NEGATIVE BATTERY TERMINAL**

2. **REMOVE REAR SPEED SENSOR**
   (a) Disconnect the speed sensor connector.
   (b) Remove the nut and speed sensor rear.
   NOTICE:
   - **Do not attach any foreign matter to the sensor tip.**
   - **Ensure that no foreign matter enters the sensor installation hole.**

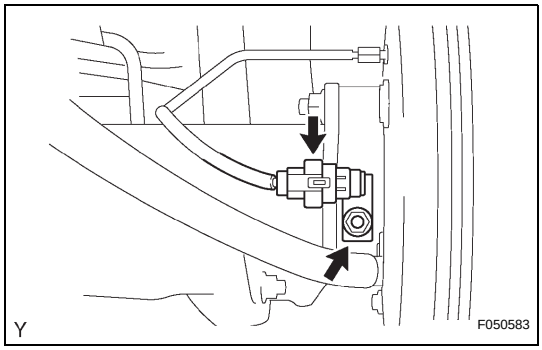

INSTALLATION

1. **INSTALL REAR SPEED SENSOR**
   (a) Install the rear speed sensor with the nut.
   Torque: 8.0 N*m (82 kgf*cm, 71 in.*lbf)
   NOTICE:
   Make sure that the sensor tip is clean.
   (b) Connect the speed sensor connector.

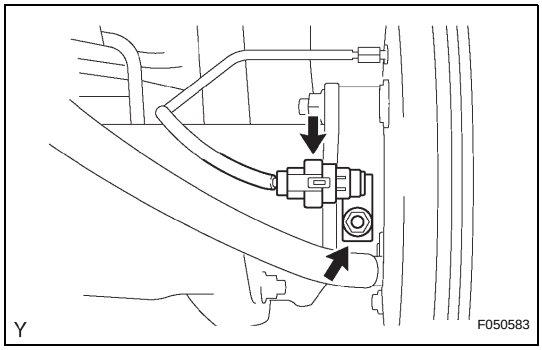

2. **CONNECT CABLE TO NEGATIVE BATTERY TERMINAL**
   Torque: 3.9 N*m (40 kgf*cm, 35 in.*lbf)
   (See page IN-5)

3. **CHECK VSC SENSOR SIGNAL (w/ VSC)**
   (See page BC-103)

4. **CHECK ABS SENSOR SIGNAL (w/o VSC)**
   (See page BC-7)

DECELERATION SENSOR (for 4WD and Pre-Runner without VSC)

REMOVAL

1. **DISCONNECT CABLE FROM NEGATIVE BATTERY TERMINAL**
2. **REMOVE FRONT SEAT INNER BELT ASSEMBLY LH (for Bench Seat Type) (See page SB-12)**
3. **REMOVE FRONT SEAT INNER BELT ASSEMBLY RH (for Bench Seat Type) (See page SB-12)**
4. **REMOVE FRONT SEAT HEADREST ASSEMBLY (for Bench Seat Type) (See page SE-53)**
5. **REMOVE FRONT SEAT ASSEMBLY (for Bench Seat Type) (See page SE-53)**
6. **REMOVE SEAT TRACK COVER (for Separate Seat Type) (See page SE-23)**
7. **REMOVE FRONT SEAT ASSEMBLY (for Separate Seat Type) (See page SE-23)**
8. **REMOVE FRONT FLOOR FOOTREST (See page IR-1)**
9. **REMOVE FRONT DOOR SCUFF PLATE (for Regular Cab) (See page IR-40)**
10. **REMOVE FRONT DOOR SCUFF PLATE (for Access Cab) (See page IR-40)**
11. **REMOVE FRONT DOOR SCUFF PLATE (for Double Cab) (See page IR-12)**
12. **REMOVE COWL SIDE TRIM BOARD (for Regular Cab) (See page IR-40)**
13. **REMOVE COWL SIDE TRIM BOARD (for Access Cab) (See page IR-40)**
14. **REMOVE COWL SIDE TRIM BOARD (for Double Cab) (See page IR-12)**
15. **REMOVE SENSOR BRACKET**
    (a) Turn up the floor carpet.
    (b) Remove the wire harness clamp.
    (c) Remove the bolt and bracket.

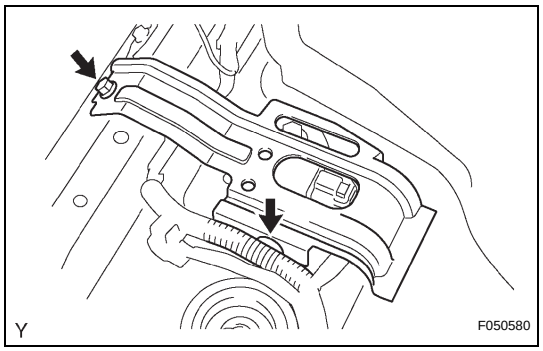

BC

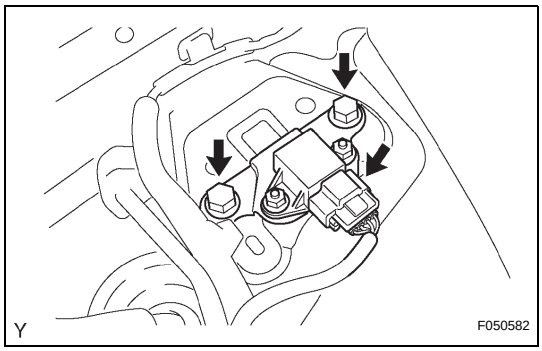

16. REMOVE DECELERATION SENSOR

(a) Disconnect the deceleration sensor connector.

(b) Remove the 2 bolts and deceleration sensor.

INSTALLATION

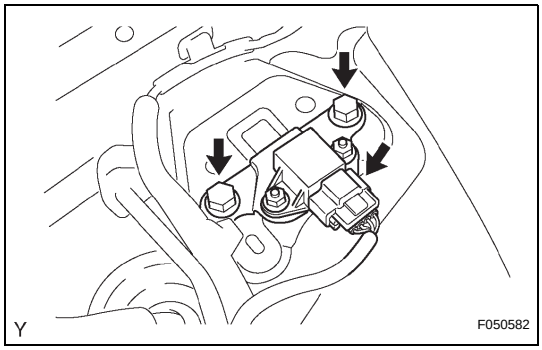

1. INSTALL DECELERATION SENSOR

(a) Install the deceleration sensor with the 2 bolts.
Torque: 12.5 N*m (127 kgf*cm, 9 ft.*lbf)
NOTICE:
Make sure the sensor is at the correct angle when installing.

(b) Connect the deceleration sensor connector.

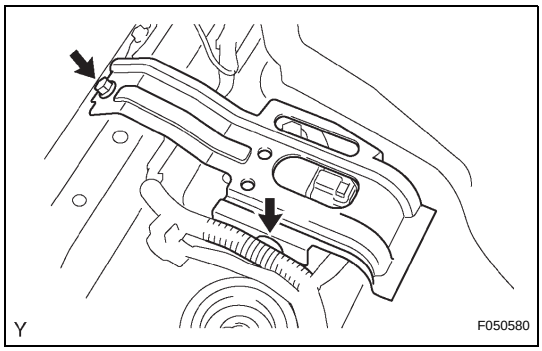

2. INSTALL SENSOR BRACKET

(a) Install the bracket with the bolt.
Torque: 12.5 N*m (127 kgf*cm, 9 ft.*lbf)

(b) Install the wire harness clamp.

3. INSTALL COWL SIDE TRIM BOARD (for Regular Cab) (See page IR-52)

4. INSTALL COWL SIDE TRIM BOARD (for Access Cab) (See page IR-75)

5. INSTALL COWL SIDE TRIM BOARD (for Double Cab) (See page IR-29)

6. INSTALL FRONT DOOR SCUFF PLATE (for Regular Cab) (See page IR-52)

7. INSTALL FRONT DOOR SCUFF PLATE (for Access Cab) (See page IR-75)

8. INSTALL FRONT DOOR SCUFF PLATE (for Double Cab) (See page IR-29)

9. INSTALL FRONT FLOOR FOOTREST (See page IR-1)

10. INSTALL FRONT SEAT ASSEMBLY (for Bench Seat Type) (See page SE-67)

11. INSTALL FRONT SEAT HEADREST ASSEMBLY (for Bench Seat Type) (See page SE-68)

12. INSTALL FRONT SEAT INNER BELT ASSEMBLY LH (for Bench Seat Type) (See page SB-13)

13. INSTALL FRONT SEAT INNER BELT ASSEMBLY RH (for Bench Seat Type) (See page SB-14)

14. INSTALL FRONT SEAT ASSEMBLY (for Separate Seat Type) (See page SE-34)

15. **INSTALL SEAT TRACK COVER (for Separate Seat Type) (See page SE-34)**

16. **CONNECT CABLE TO NEGATIVE BATTERY TERMINAL**
Torque: 3.9 N*m (40 kgf*cm, 35 in.*lbf)
(See page IN-5)

17. **CHECK ABS SENSOR SIGNAL**
(See page BC-7)

YAW RATE AND DECELERATION SENSOR (w/ VSC)

REMOVAL

1. **DISCONNECT CABLE FROM NEGATIVE BATTERY TERMINAL**
2. **REMOVE FRONT SEAT INNER BELT ASSEMBLY LH (for Bench Seat Type) (See page SB-12)**
3. **REMOVE FRONT SEAT INNER BELT ASSEMBLY RH (for Bench Seat Type) (See page SB-12)**
4. **REMOVE FRONT SEAT HEADREST ASSEMBLY (for Bench Seat Type) (See page SE-53)**
5. **REMOVE FRONT SEAT ASSEMBLY (for Bench Seat Type) (See page SE-53)**
6. **REMOVE SEAT TRACK COVER (for Separate Seat Type) (See page SE-23)**
7. **REMOVE FRONT SEAT ASSEMBLY (for Separate Seat Type) (See page SE-23)**
8. **REMOVE FRONT FLOOR FOOTREST (See page IR-1)**
9. **REMOVE FRONT DOOR SCUFF PLATE (for Regular Cab) (See page IR-40)**
10. **REMOVE FRONT DOOR SCUFF PLATE (for Access Cab) (See page IR-61)**
11. **REMOVE FRONT DOOR SCUFF PLATE (for Double Cab) (See page IR-12)**
12. **REMOVE COWL SIDE TRIM BOARD (for Regular Cab) (See page IR-40)**
13. **REMOVE COWL SIDE TRIM BOARD (for Access Cab) (See page IR-61)**
14. **REMOVE COWL SIDE TRIM BOARD (for Double Cab) (See page IR-12)**
15. **REMOVE SENSOR BRACKET**
    (a) Turn up the floor carpet.
    (b) Remove the wire harness clamp.
    (c) Remove the bolt and bracket.

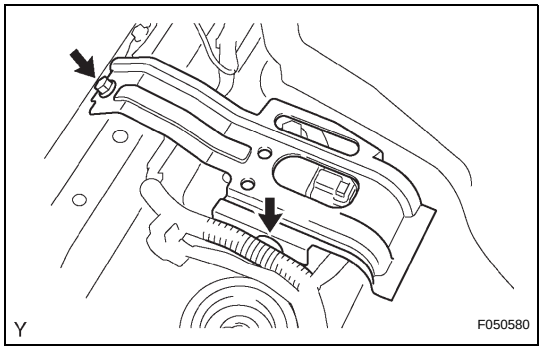

BC

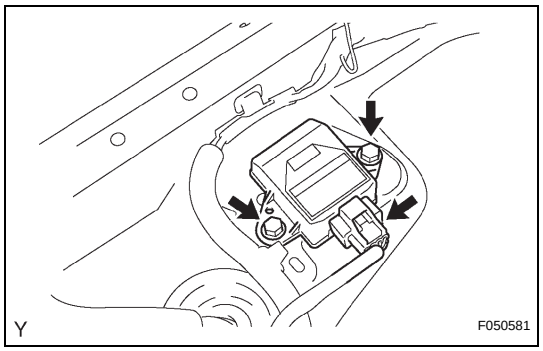

16. **REMOVE YAW RATE SENSOR**
    (a) Disconnect the yaw rate sensor connector.
    (b) Remove the 2 bolts and yaw rate sensor.

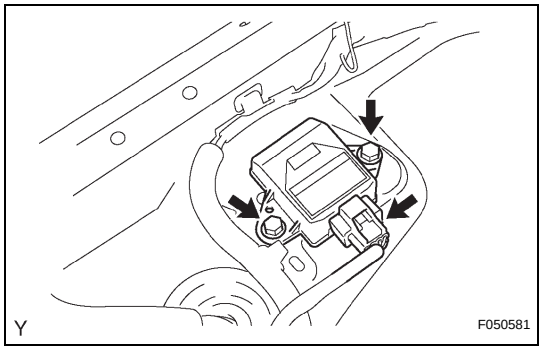

INSTALLATION

1. **INSTALL YAW RATE SENSOR**
    (a) Install the yaw rate sensor with the 2 bolts.
    Torque: 12.5 N*m (127 kgf*cm, 9 ft.*lbf)
    NOTICE:
    Make sure that the sensor is at the correct angle when installing.
    (b) Connect the yaw rate sensor connector.

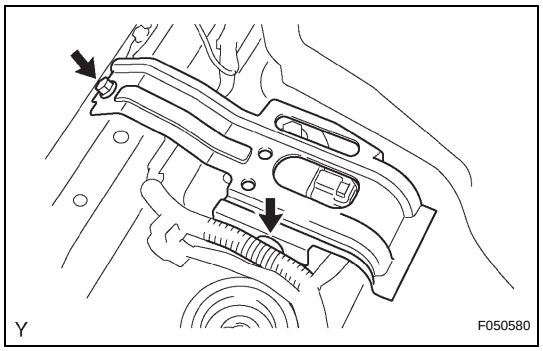

2. **INSTALL SENSOR BRACKET**
    (a) Install the bracket with the bolt.
    Torque: 12.5 N*m (127 kgf*cm, 9 ft.*lbf)
    (b) Install the wire harness clamp.
3. **INSTALL COWL SIDE TRIM BOARD (for Regular Cab) (See page IR-52)**
4. **INSTALL COWL SIDE TRIM BOARD (for Access Cab) (See page IR-75)**
5. **INSTALL COWL SIDE TRIM BOARD (for Double Cab) (See page IR-29)**
6. **INSTALL FRONT DOOR SCUFF PLATE (for Regular Cab) (See page IR-52)**
7. **INSTALL FRONT DOOR SCUFF PLATE (for Access Cab) (See page IR-75)**
8. **INSTALL FRONT DOOR SCUFF PLATE (for Double Cab) (See page IR-29)**
9. **INSTALL FRONT FLOOR FOOTREST (See page IR-1)**
10. **INSTALL FRONT SEAT ASSEMBLY (for Bench Seat Type) (See page SE-67)**
11. **INSTALL FRONT SEAT HEADREST ASSEMBLY (for Bench Seat Type) (See page SE-68)**
12. **INSTALL FRONT SEAT INNER BELT ASSEMBLY LH (for Bench Seat Type) (See page SB-13)**
13. **INSTALL FRONT SEAT INNER BELT ASSEMBLY RH (for Bench Seat Type) (See page SB-14)**
14. **INSTALL FRONT SEAT ASSEMBLY (for Separate Seat Type) (See page SE-34)**

15. **INSTALL SEAT TRACK COVER (for Separate Seat Type) (See page SE-34)**
16. **CONNECT CABLE TO NEGATIVE BATTERY TERMINAL**
    Torque: 3.9 N*m (40 kgf*cm, 35 in.*lbf)
    (See page IN-5)
17. **PERFORM YAW RATE SENSOR ZERO POINT CALIBRATION**
    (See page BC-99)
18. **CHECK VSC SENSOR SIGNAL**
    (See page BC-103)

STEERING ANGLE SENSOR (w/ VSC)

REMOVAL

1. **PRECAUTION**
   (See page RS-1)
2. **DISCONNECT CABLE FROM NEGATIVE BATTERY TERMINAL**
   (a) Wait for at least 90 seconds after disconnecting the cable to prevent the airbag from working.
3. **PLACE FRONT WHEELS FACING STRAIGHT AHEAD**
4. **REMOVE STEERING WHEEL COVER LOWER NO. 2 (See page SR-9)**
5. **REMOVE STEERING WHEEL COVER LOWER NO. 3 (See page SR-9)**
6. **REMOVE STEERING PAD ASSEMBLY (See page RS-558)**
7. **REMOVE STEERING WHEEL ASSEMBLY (See page SR-9)**
8. **REMOVE STEERING COLUMN COVER LOWER (See page RS-566)**
9. **REMOVE STEERING COLUMN COVER UPPER (See page RS-566)**
10. **REMOVE SPIRAL CABLE (See page RS-566)**
11. **REMOVE STEERING SENSOR**
    (a) Release 6 claw fittings and remove the steering sensor from the spiral cable.

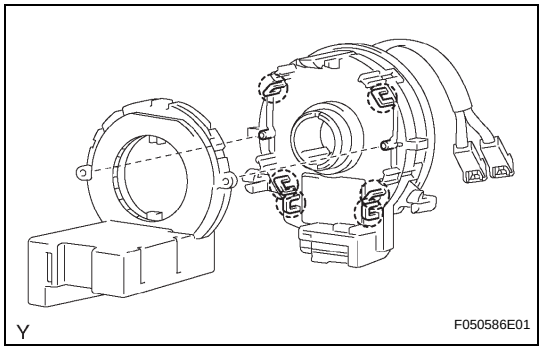

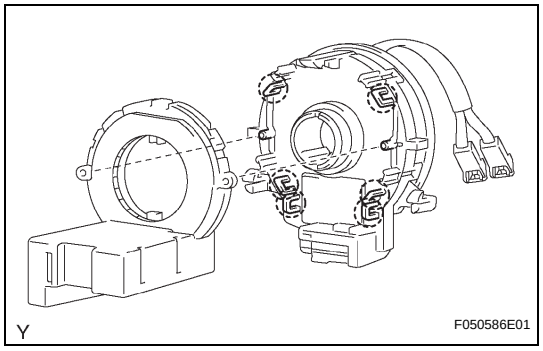

INSTALLATION

1. **INSTALL STEERING SENSOR**
   (a) Install the steering sensor onto the spiral cable.
   NOTICE:
   - **Engage the claws securely.**
   - **Be careful not to damage the claws.**
2. **REMOVE PLACE FRONT WHEELS FACING STRAIGHT AHEAD**
3. **INSTALL SPIRAL CABLE (See page RS-567)**
4. **CENTER SPIRAL CABLE (See page RS-567)**

BC

5. **INSTALL STEERING COLUMN COVER UPPER (See page RS-568)**
6. **INSTALL STEERING COLUMN COVER LOWER (See page RS-568)**
7. **INSTALL STEERING WHEEL ASSEMBLY (See page SR-18)**
8. **INSTALL STEERING PAD ASSEMBLY (See page RS-558)**
9. **INSTALL STEERING WHEEL COVER LOWER NO. 3 (See page SR-18)**
10. **INSTALL STEERING WHEEL COVER LOWER NO. 2 (See page SR-18)**
11. **CONNECT CABLE TO NEGATIVE BATTERY TERMINAL**
    Torque: 3.9 N*m (40 kgf*cm, 35 in.*lbf)
    (See page IN-5)
12. **INSPECT STEERING PAD ASSEMBLY**
13. **INSPECT SRS WARNING LIGHT**
    (See page RS-28)

BRAKE SYSTEM

PRECAUTION

1. **Necessary care must be taken to replace each part properly as it could affect the brake system performance. This could cause driving hazards. Replace each part with an identical part with the same number.**
2. **It is very important to keep parts and the area clean when repairing the brake system.**
3. **If the vehicle is equipped with a mobile communication system, refer to the precautions in the INTRODUCTION section.**

PROBLEM SYMPTOMS TABLE

HINT:
Use the table below to help you find the cause of the problem. The numbers indicate the ranked order of probability of each of the possible causes. Check each part in the order suggested. If necessary, replace these applicable parts.

Symptom	Suspected area	See page
Low pedal or spongy pedal	1. Fluid leakage in brake system	-
	2. Air in brake system (w/ VSC)	BR-4
	3. Air in brake system (w/o VSC)	BR-7
	4. Piston seal (Worn or damaged) (2WD)	BR-57
	5. Piston seal (Worn or damaged) (4WD and Pre-Runner)	BR-63
	6. Cylinder cup	BR-69
	7. Rear brake (Shoe clearance out of adjustment)	BR-74
	8. Brake master cylinder (Faulty) (w/o VSC)	BR-21
	9. Hydraulic brake booster (Faulty) (w/ VSC)	BR-44
	10. Booster push rod (Out of adjustment)	BR-21
Brake drag	1. Brake pedal free play (Minimum)	BR-14
	2. Parking brake pedal travel (Out of adjustment)	PB-1
	3. Parking brake lever travel (Out of adjustment)	PB-1
	4. Parking brake wire (Sticking)	PB-18
	5. Rear brake (Shoe clearance out of adjustment)	BR-74
	6. Pad (Cracked or distorted) (2WD)	BR-57
	7. Pad (Cracked or distorted) (4WD and Pre-Runner)	BR-64
	8. Brake shoe (Cracked or distorted)	BR-70
	9. Front disc brake piston (Stuck) (2WD)	BR-57
	10. Front Disc brake piston (Stuck) (4WD and Pre-Runner)	BR-63
	11. Piston (Stuck)	BR-69
	12. Front disc brake piston (Frozen) (2WD)	BR-57
	13. Front Disc brake piston (Frozen) (4WD and Pre-Runner)	BR-63
	14. Piston (Frozen)	BR-69
	15. Tension or return spring (Faulty)	BR-68
	16. Booster push rod (Out of adjustment)	BR-21
	17. Booster system (Vacuum leakage)	BR-26
	18. Brake master cylinder (Faulty) (w/o VSC)	BR-21
	19. Hydraulic brake booster (Faulty) (w/ VSC)	BR-44

Symptom	Suspected area	See page
Brake pull	1. Front disc brake piston (Stuck) (2WD)	BR-57
	2. Front Disc brake piston (Stuck) (4WD and Pre-Runner)	BR-63
	3. Piston (Stuck)	BR-69
	4. Pad (Oily) (2WD)	BR-57
	5. Pad (Oily) (4WD and Pre-Runner)	BR-64
	6. Brake shoe (Oily)	BR-70
	7. Front disc brake piston (Frozen) (2WD)	BR-57
	8. Front Disc brake piston (Frozen) (4WD and Pre-Runner)	BR-63
	9. Piston (Frozen)	BR-69
	10. Front disc (Scored) (2WD)	BR-58
	11. Front disc (Scored) (4WD and Pre-Runner)	BR-65
	12. Pad (Cracked or distorted) (2WD)	BR-57
	13. Pad (Cracked or distorted) (4WD and Pre-Runner)	BR-64
	14. Brake shoe (Cracked or distorted)	BR-70
Firm pedal but braking inefficient	1. Fluid leakage in brake system	-
	2. Air in brake system (w/ VSC)	BR-4
	3. Air in brake system (w/o VSC)	BR-7
	4. Pad (Worn) (2WD)	BR-57
	5. Pad (Worn) (4WD and Pre-Runner)	BR-64
	6. Brake shoe (Worn)	BR-70
	7. Pad (Cracked or distorted) (2WD)	BR-57
	8. Pad (Cracked or distorted) (4WD and Pre-Runner)	BR-64
	9. Brake shoe (Cracked or distorted)	BR-70
	10. Rear brake (Shoe clearance out of adjustment)	BR-74
	11. Pad (Oily) (2WD)	BR-57
	12. Pad (Oily) (4WD and Pre-Runner)	BR-64
	13. Brake shoe (Oily)	BR-70
	14. Pad (Glazed) (2WD)	BR-57
	15. Pad (Glazed) (4WD and Pre-Runner)	BR-64
	16. Brake shoe (Glazed)	BR-70
	17. Front disc (Scored) (2WD)	BR-58
	18. Front disc (Scored) (4WD and Pre-Runner)	BR-65
	19. Booster push rod (Out of adjustment)	BR-21
	20. Booster system (Vacuum leakage)	BR-26

Symptom	Suspected area	See page
Noise from brakes	1. Pad (Cracked or distorted) (2WD)	BR-57
	2. Pad (Cracked or distorted) (4WD and Pre-Runner)	BR-64
	3. Brake shoe (Cracked or distorted)	BR-70
	4. Installation bolt (Loose) (2WD)	BR-58
	5. Installation bolt (Loose) (4WD and Pre-Runner)	BR-64
	6. Front disc (Scored) (2WD)	BR-58
	7. Front disc (Scored) (4WD and Pre-Runner)	BR-65
	8. Pad support plate (Loose)	BR-55
	9. Sliding pin (Worn)	BR-55
	10. Pad (Dirty) (2WD)	BR-57
	11. Pad (Dirty) (4WD and Pre-Runner)	BR-64
	12. Brake shoe (Dirty)	BR-70
	13. Pad (Glazed) (2WD)	BR-57
	14 Pad (Glazed) (4WD and Pre-Runner)	BR-64
	15. Brake shoe (Glazed)	BR-70
	16. Tension or return spring (Faulty)	BR-68
	17. Anti-squeal shim (Damaged) (2WD)	BR-55
	18. Anti-squeal shim (Damaged) (4WD and Pre-Runner)	BR-62
	19. Shoe hold-down spring (Damaged)	BR-68
Noise from hydraulic brake booster (Abnormal pump motor operation noise)	1. Accumulator bracket clearance (Out of adjustment)	BR-44
Brake warning light illuminates (Parking brake pedal (lever) released)	1. Brake fluid level	-
	2. Brake master cylinder power supply system (Faulty)	BR-33
Brake warning light illuminates and skid control buzzer sounds	1. Brake master cylinder power supply system (Faulty)	BR-33
ABS warning light illuminates	1. Anti-lock brake system (Faulty)	-
	2. Brake master cylinder power supply system (Faulty)	BR-33

BRAKE FLUID (w/ VSC)

BLEEDING

NOTICE:

- **Immediately wash off any brake fluid that comes into contact with any painted surfaces.**
- **Depressing the brake pedal with the reservoir cap removed will cause the fluid to spray.**

HINT:

- If any work is done on the brake system or if air in the brake lines is suspected, bleed the air from the system.
- When bleeding, maintain the amount of fluid in the reservoir between the Min. and Max. lines.

1. FILL RESERVOIR WITH BRAKE FLUID

Fluid:

SAE J1703 or FMVSS NO. 116 DOT3

2. BLEED BRAKE BOOSTER WITH ACCUMULATOR PUMP ASSEMBLY

HINT:

If the brake master cylinder is disassembled, the brake line is disconnected from the brake master cylinder or if the reservoir becomes empty, bleed the brake master cylinder.

(a) Turn the ignition switch to ON, and wait until the pump motor has stopped (step A).

HINT:

Pump operating sound can be heard.

(b) Turn the ignition switch to OFF, and depress the brake pedal more than 20 times (step B).

HINT:

When pressure in the accumulator is released, the reaction force becomes lighter and the stroke becomes longer.

(c) Repeat step A and B 5 times (step C).

(d) Turn the ignition switch to ON, and check that the pump stops after approximately 8 to 14 seconds.

NOTICE:

If the pump does not stop, repeat step C again.

3. BLEED BRAKE LINE

(a) Turn the ignition switch to ON, and wait until the pump motor has stopped.

HINT:

Pump operating sound can be heard.

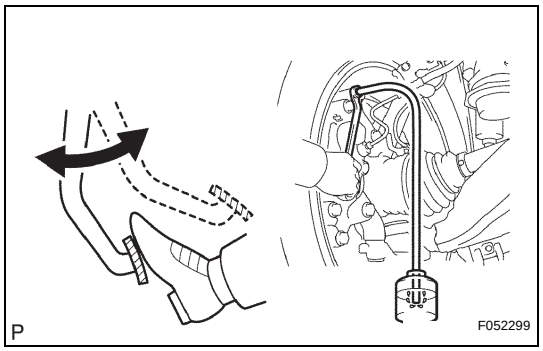

(b) Front brake line.
  (1) Connect the vinyl tube to the brake caliper.
  (2) Depress the brake pedal several times, then loosen the bleeder plug with the pedal held down (step D).
  (3) At the point when the fluid stops coming out, tighten the bleeder plug, then release the brake pedal (step E).
  (4) Repeat step D and E until all the air in the fluid has been bled out.
  Torque: 11 N*m (112 kgf*cm, 8 ft.*lbf)
  (5) Repeat the above procedures to bleed the other brake line.

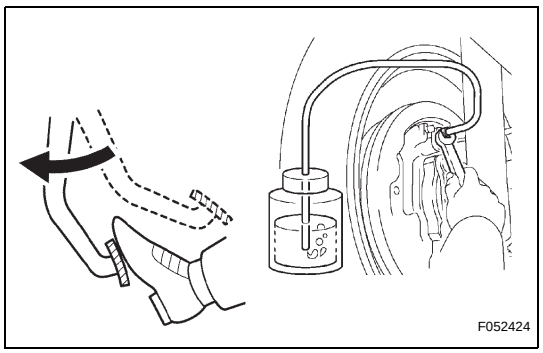

(c) Rear brake line.
  (1) Connect the vinyl tube to the wheel cylinder.
  (2) Depress the brake pedal, hold it, and then loosen the bleeder plug.
  HINT:
  Brake fluid is pumped out automatically.
  (3) Loosen the bleeder plug and release air.
  NOTICE:
  Keep brake fluid in the reservoir tank above the MIN line during the above procedures.
  (4) When the air is completely bled out of the brake fluid through the bleeder plug, tighten the bleeder plug.
  Torque: 11 N*m (112 kgf*cm, 8 ft.*lbf)
  (5) Repeat the above procedures to bleed the other brake line.

4. BLEED MASTER CYLINDER SOLENOID

HINT:
If the brake master cylinder is disassembled, the brake line is disconnected from the brake master cylinder or if the reservoir become empty, bleed the brake master cylinder.

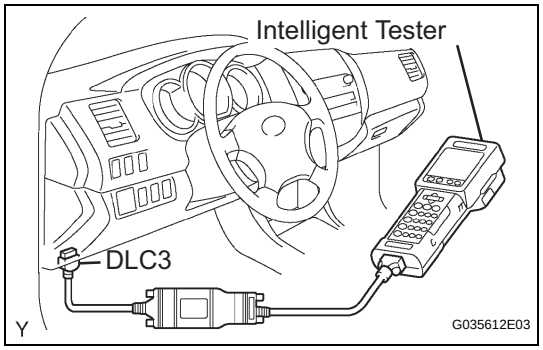

(a) Connect the intelligent tester to the DLC3.
(b) Turn the ignition switch to ON.
(c) Select "ACTIVE TEST" mode on the intelligent tester.

BR

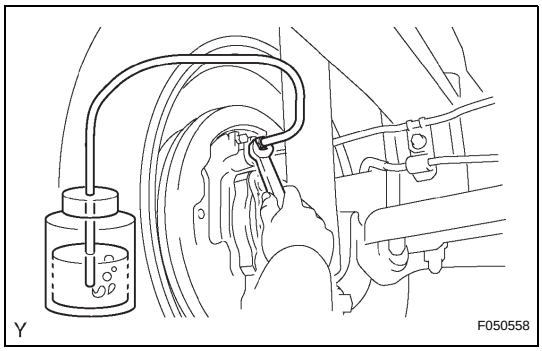

(d) Connect the vinyl tube to the rear wheel cylinder.
(e) Loosen the bleeder plug.
(f) Select "SRMF & SRMR" to drive the solenoids and bleed air from the rear wheel cylinder (step F).
NOTICE:
- **Do not depress the brake pedal.**
- **Keep brake fluid in the reservoir tank above the MIN line during the above procedures.**

HINT:
- Brake fluid is sent through the pump.
- To protect the solenoids, the intelligent tester turns OFF automatically 2 seconds after every solenoid has been turned ON.

(g) Repeat step F until all the air in the brake fluid is bled out.
(h) When the air is completely bled out of the brake fluid through the bleeder plug, tighten the bleeder plug.
Torque: 11 N*m (112 kgf*cm, 8 ft.*lbf)
(i) Repeat the above procedures to bleed the other brake line.
(j) Turn the ignition switch to OFF.
(k) Turn the ignition switch to ON.
(l) Clear DTC (see page BC-118).

5. CHECK FLUID LEVEL IN RESERVOIR

(a) Turn the ignition switch to OFF, and depress the brake pedal more than 20 times (until the pedal reaction feels light and pedal stroke becomes longer), and adjust the fluid level to the MAX level.
(b) When the ignition switch is turned to the ON, brake fluid is sent to the accumulator and the fluid level decreases by approximately 5 mm from the level when the ignition switch is off (normal).

BRAKE FLUID (w/o VSC)

BLEEDING

HINT:
If any work is done on the brake system or if air in the brake lines is suspected, bleed the air from the system.
NOTICE:
Immediately wash off any brake fluid that comes into contact with any painted surfaces.

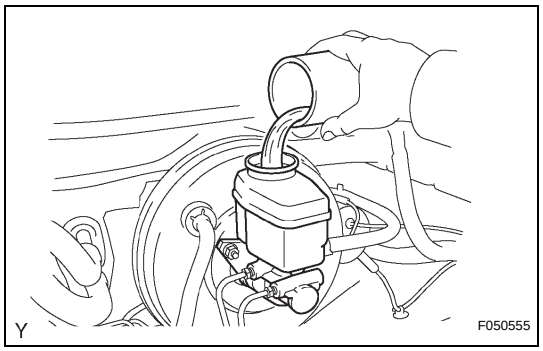

1. FILL RESERVOIR WITH BRAKE FLUID
Fluid:
SAE J1703 or FMVSS NO. 116 DOT3

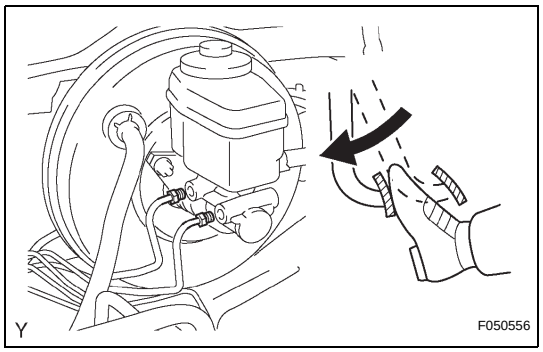

2. BLEED MASTER CYLINDER
HINT:
If the master cylinder has been disassembled or if the reservoir becomes empty, bleed the air from the master cylinder.
(a) Using SST, disconnect the brake lines from the master cylinder.
SST 09023-00101
(b) Slowly depress the brake pedal and hold it there (step A).

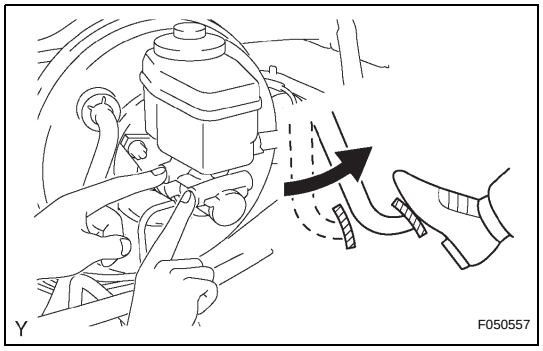

(c) Block the outer holes with your fingers, and release the brake pedal (step B).
(d) Repeat step A and B 3 or 4 times.

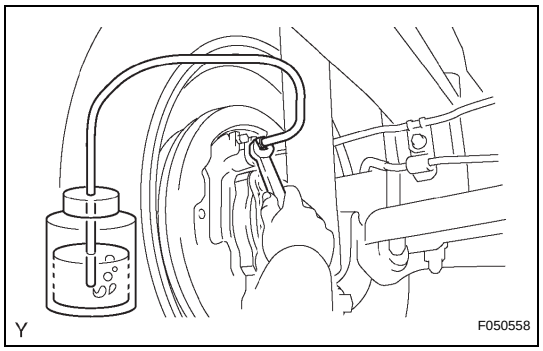

3. BLEED BRAKE LINE
(a) Connect the vinyl tube to the bleeder plug.
(b) Depress the brake pedal several times, then loosen the bleeder plug with the pedal held down (step C).
(c) At the point where the fluid stops coming out, tighten the bleeder plug, then release the brake pedal (step D).
(d) Repeat step C and D until all the air in the fluid has been bled out.

(e) Repeat the above procedure to bleed the air out of the brake line for each wheel.
Torque: 11 N*m (112 kgf*cm, 8 ft.*lbf)

4. CHECK FLUID LEVEL IN RESERVOIR

(a) Check the fluid level and add fluid if necessary.
Fluid:
SAE J1703 or FMVSS NO. 116 DOT3

BRAKE PEDAL

COMPONENTS

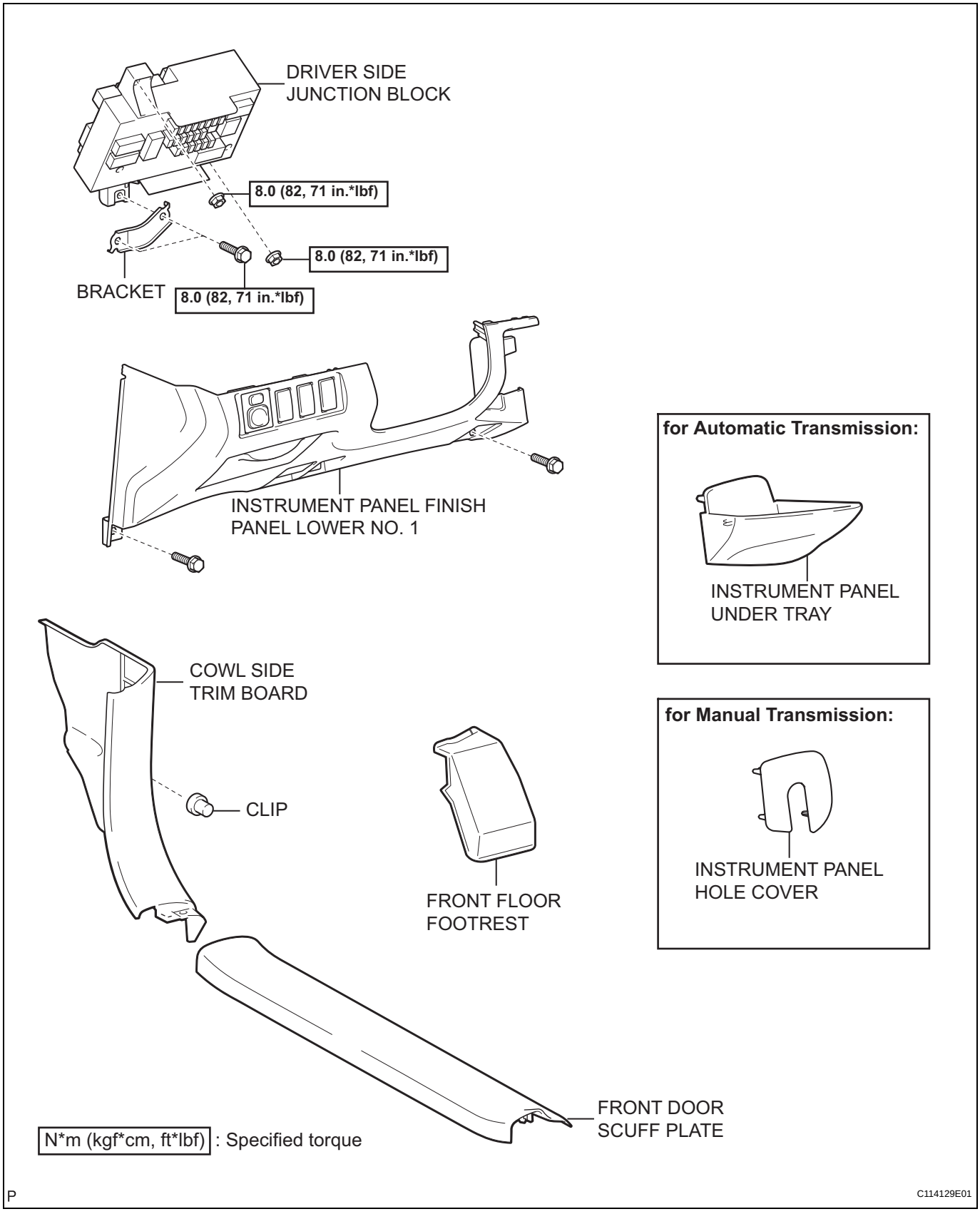

BR

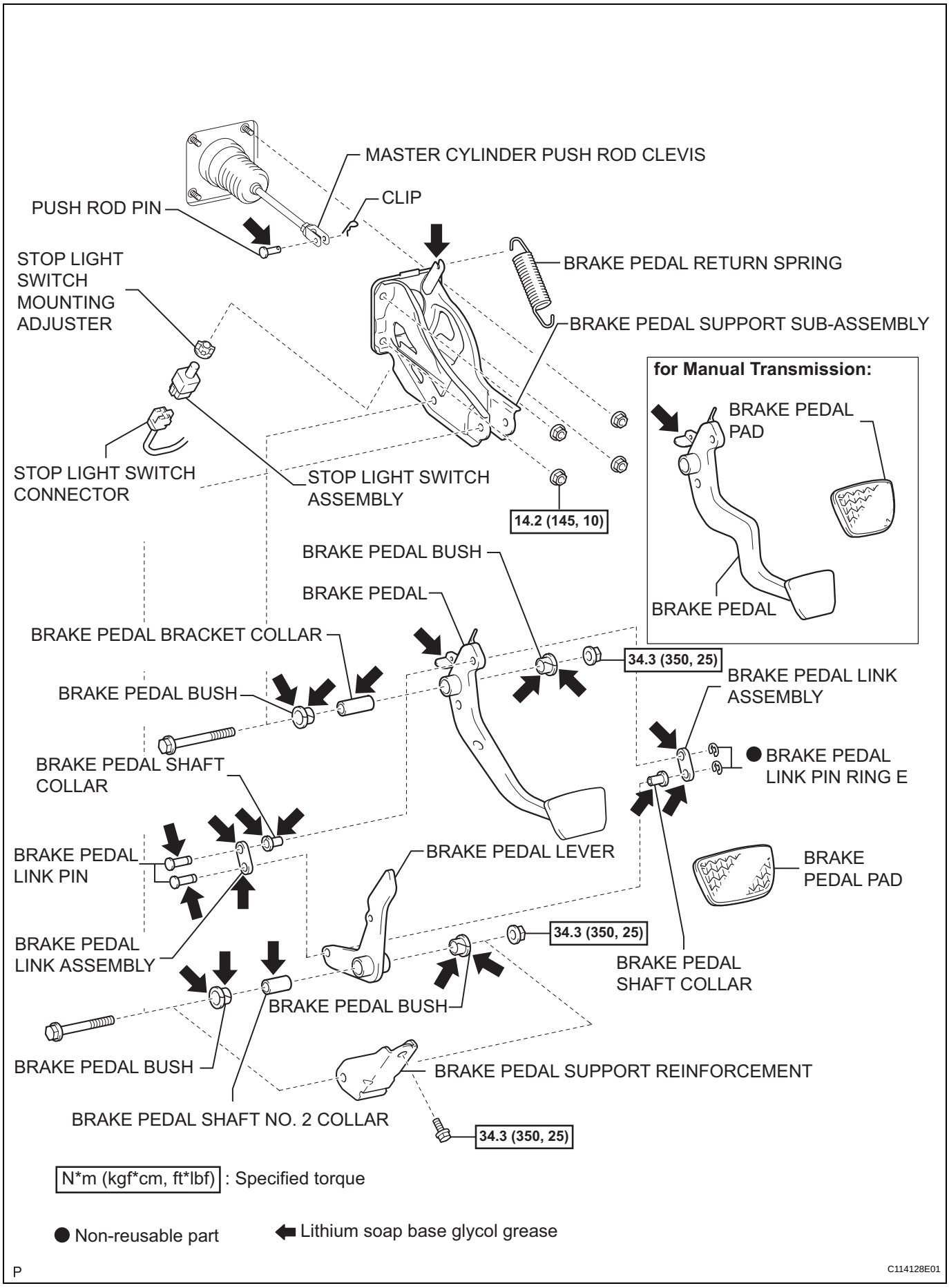
MASTER CYLINDER PUSH ROD CLEVIS
CLIP
PUSH ROD PIN
STOP LIGHT SWITCH MOUNTING ADJUSTER
BRAKE PEDAL RETURN SPRING
BRAKE PEDAL SUPPORT SUB-ASSEMBLY
for Manual Transmission:
BRAKE PEDAL PAD
BRAKE PEDAL
STOP LIGHT SWITCH CONNECTOR
STOP LIGHT SWITCH ASSEMBLY
14.2 (145, 10)
BRAKE PEDAL BUSH
BRAKE PEDAL
BRAKE PEDAL BRACKET COLLAR
34.3 (350, 25)
BRAKE PEDAL LINK ASSEMBLY
BRAKE PEDAL BUSH
BRAKE PEDAL SHAFT COLLAR
BRAKE PEDAL LINK PIN RING E
BRAKE PEDAL LINK PIN
BRAKE PEDAL LEVER
BRAKE PEDAL PAD
34.3 (350, 25)
BRAKE PEDAL LINK ASSEMBLY
BRAKE PEDAL SHAFT COLLAR
BRAKE PEDAL BUSH
BRAKE PEDAL BUSH
BRAKE PEDAL SUPPORT REINFORCEMENT
BRAKE PEDAL SHAFT NO. 2 COLLAR
34.3 (350, 25)
N*m (kgf*cm, ft*lbf) : Specified torque
● Non-reusable part
Lithium soap base glycol grease
P
C114128E01

w/ VSC:

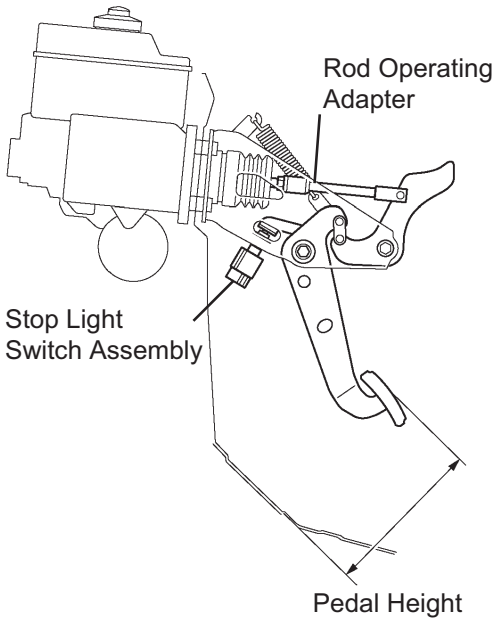

w/o VSC:

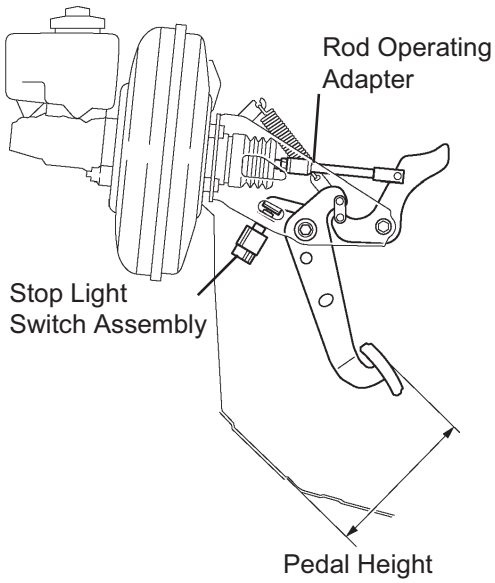

N

C114968E01

ON-VEHICLE INSPECTION

1. INSPECT BRAKE PEDAL HEIGHT

(a) Check the brake pedal height.

Pedal height from dash panel:
158.1 to 168.1 mm (6.224 to 6.618 in.)

NOTICE:

Do not adjust the pedal height. Doing so by changing the push rod length will structurally change the pedal ratio.

If the pedal height is incorrect, adjust the rod operating adapter length.

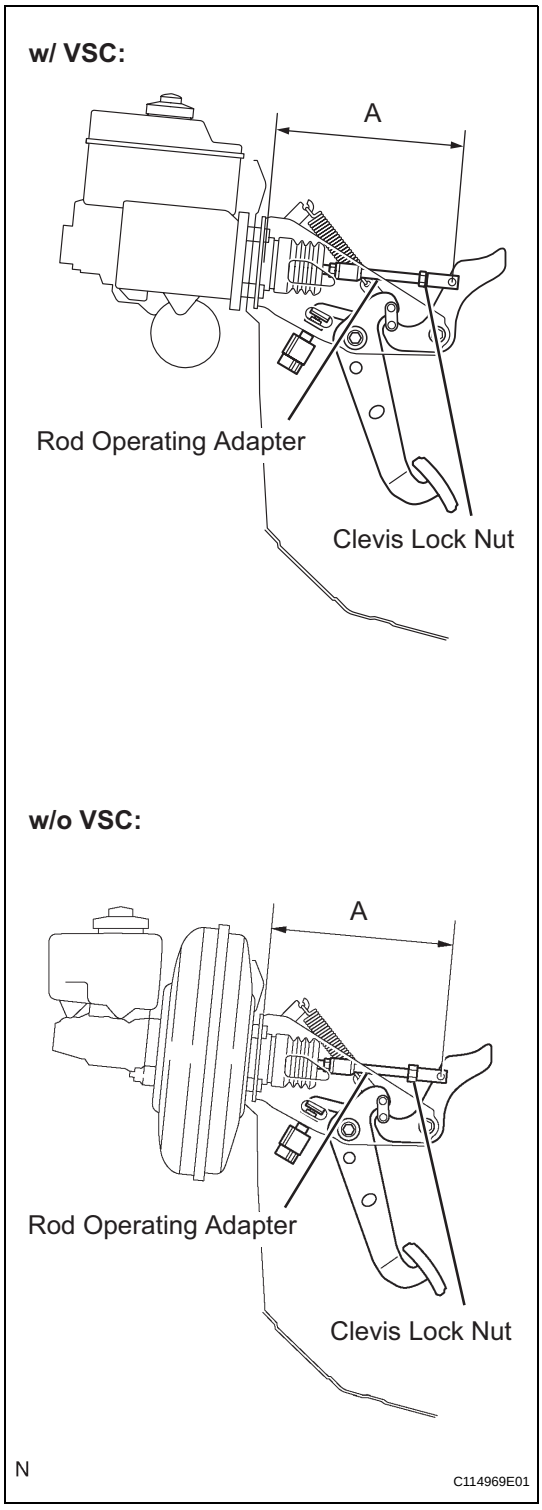

(b) Adjust the rod operating adapter length.
(1) Remove the clip and clevis pin.
(2) Loosen the clevis lock nut.
(3) Adjust the rod operating adapter length by turning the pedal push rod clevis.
Rod operating adapter length A:
w/ VSC:
214 to 224 mm (8.425 to 8.818 in.)
w/o VSC:
212 to 222 mm (8.346 to 8.740 in.)
(4) Tighten the clevis lock nut.
Torque: 25.5 N*m (260 kgf*cm, 19 ft.*lbf)
(5) Install the clip and clevis pin.
- If the pedal height is incorrect even when the rod operating adapter is adjusted, check that there is no damage in the brake pedal, brake pedal lever, brake pedal bracket or dash panel.
- Even if there is damage, there is no problem if the reserve distance is within the standard value.
- If necessary, replace the parts.

2. INSPECT AND ADJUST STOP LIGHT SWITCH

HINT:

If the pedal height is incorrect, check and adjust the stop light switch.

(a) Disconnect the stop light switch connector from the stop light switch.
(b) Turn the stop light switch counterclockwise, and remove the stop light switch.

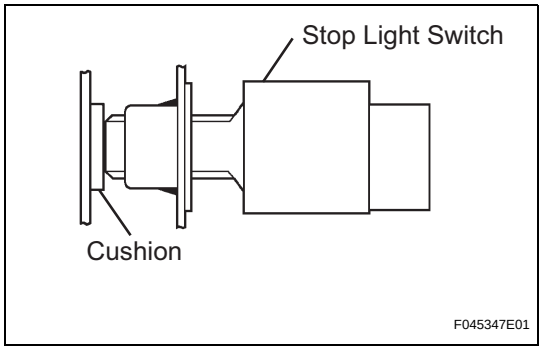

(c) Insert the stop light switch until the body comes into contact with the cushion.
NOTICE:
- **When inserting the stop light switch, support the pedal from behind so that the pedal is not pushed in.**
- **Take care not to depress the pedal during the operation.**

BR

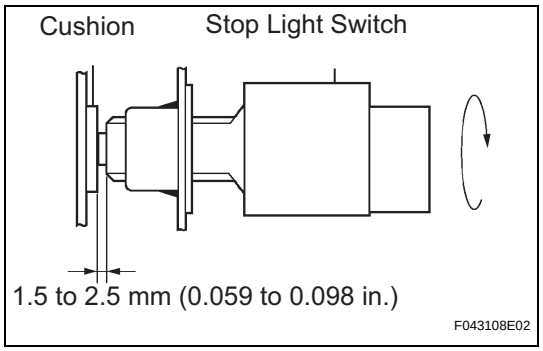

(d) Make a quarter turn clockwise to install the stop light switch.
NOTICE:
The turning torque for installing the stop light switch:
Torque: 1.5 N*m (15 kgf*cm, 13 in.*lbf) or less
HINT:
Due to the inverse screw structure, turning the stop light switch clockwise will cause it to become loose and eventually detach from the adjuster.

(e) Connect the stop light switch connector to the stop light switch.

(f) Check the protrusion of the rod.
Protrusion of the rod:
1.5 to 2.5 mm (0.059 to 0.098 in.)

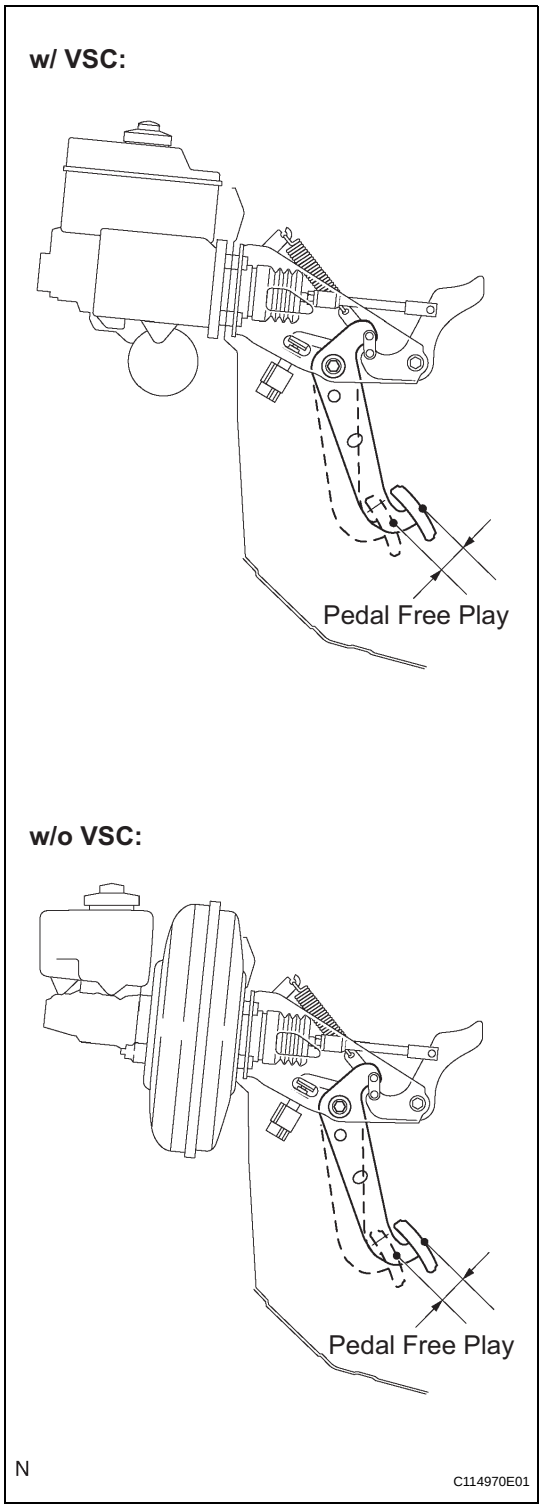

3. INSPECT PEDAL FREE PLAY

(a) Stop the engine and depress the brake pedal several times until there is no more vacuum left in the booster.

(b) Push in the pedal until the beginning of the resistance is felt. Measure the distance as shown.
Pedal free play:
1 to 6 mm (0.04 to 0.24 in.)

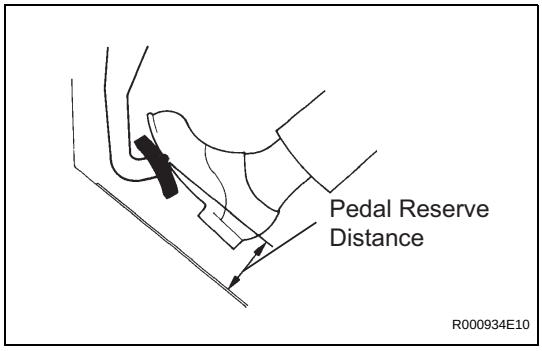

4. INSPECT PEDAL RESERVE DISTANCE

(a) Release the parking brake pedal.
With the engine running, depress the pedal and measure the pedal reserve distance as shown.
Pedal reserve distance from asphalt sheet at 490 N (50 kgf, 110.2 lbf):
More than 55 mm (2.17 in.)
If incorrect, troubleshoot the brake system.

BRAKE MASTER CYLINDER (w/o VSC)

COMPONENTS

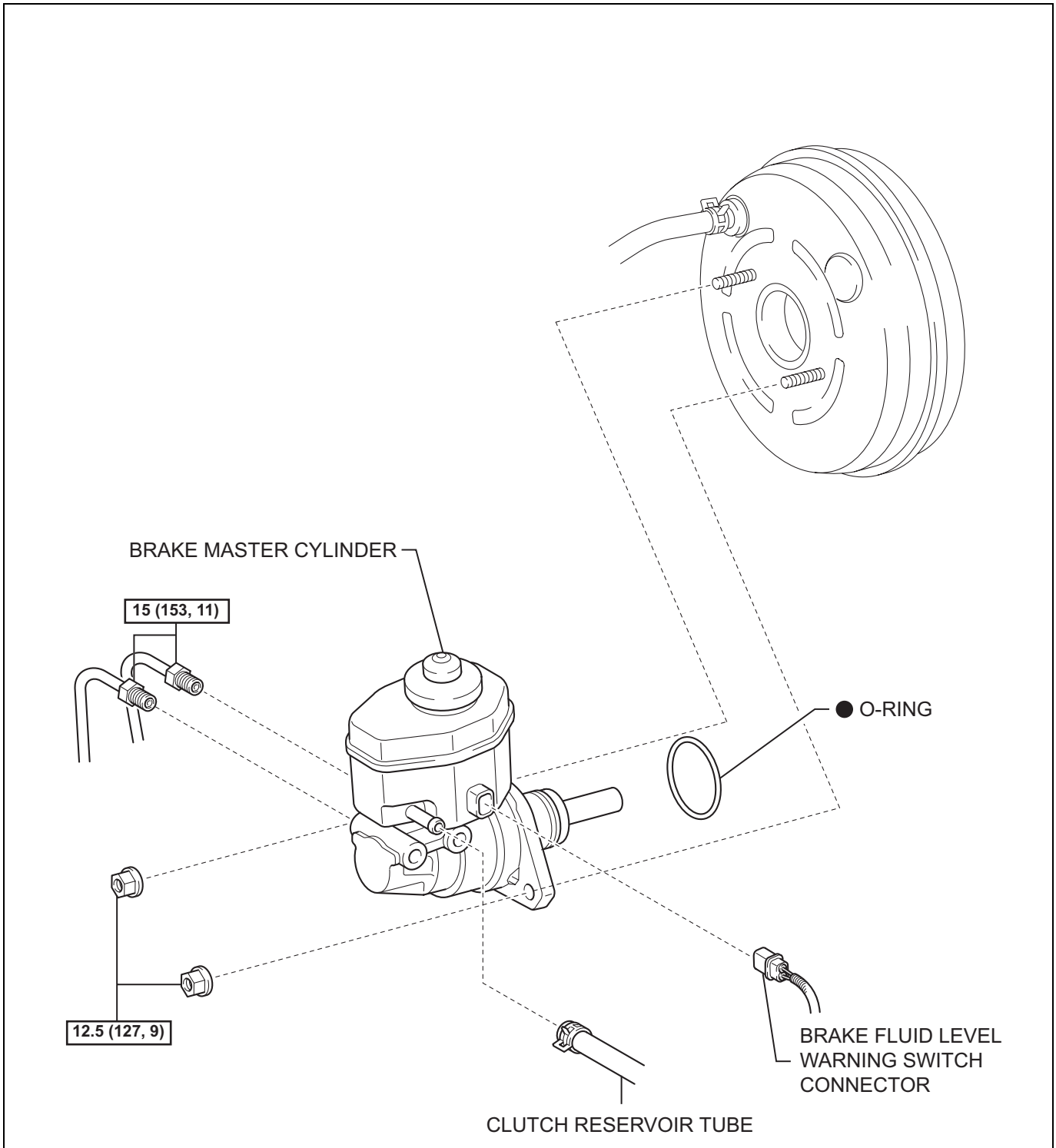

N*m (kgf*cm, ft*lbf) : Specified torque

● Non-reusable part

Y

C114226E01

BR

REMOVAL

1. DISCONNECT CABLE FROM NEGATIVE BATTERY TERMINAL

2. DRAIN BRAKE FLUID
NOTICE:
Immediately wash off any brake fluid that comes into contact with any painted surfaces.

3. REMOVE BRAKE MASTER CYLINDER

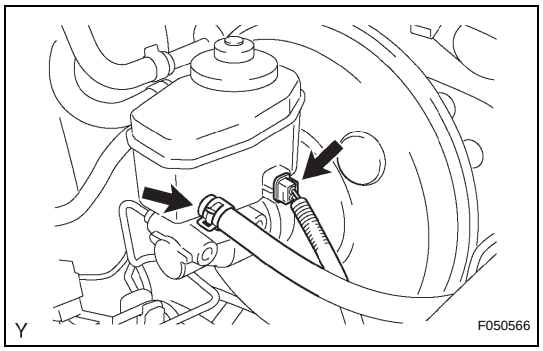

(a) Disconnect the brake fluid level warning switch connector.
(b) for Manual Transmission:
  (1) Disconnect the clutch reservoir tube from the reservoir.

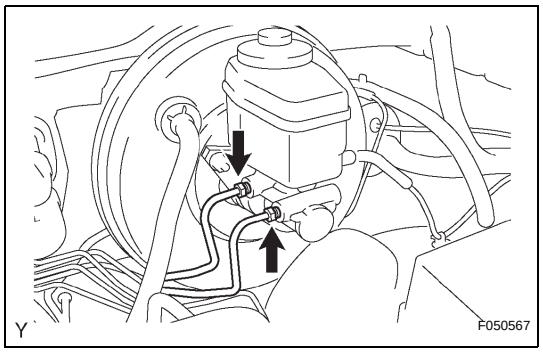

(c) Using SST, disconnect the 2 brake lines from the brake master cylinder.
SST 09023-00101

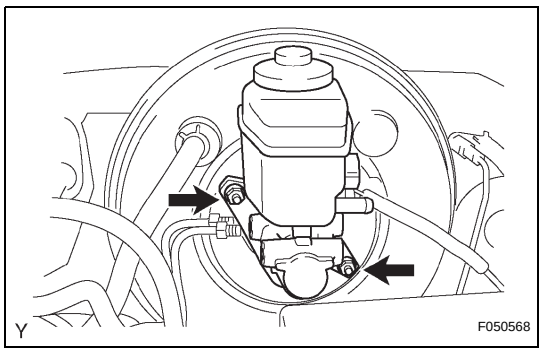

(d) Remove the 2 nuts, then pull the brake master cylinder out of the brake booster.
(e) Remove the O-ring from the brake master cylinder.

BRAKE BOOSTER (w/o VSC)

COMPONENTS

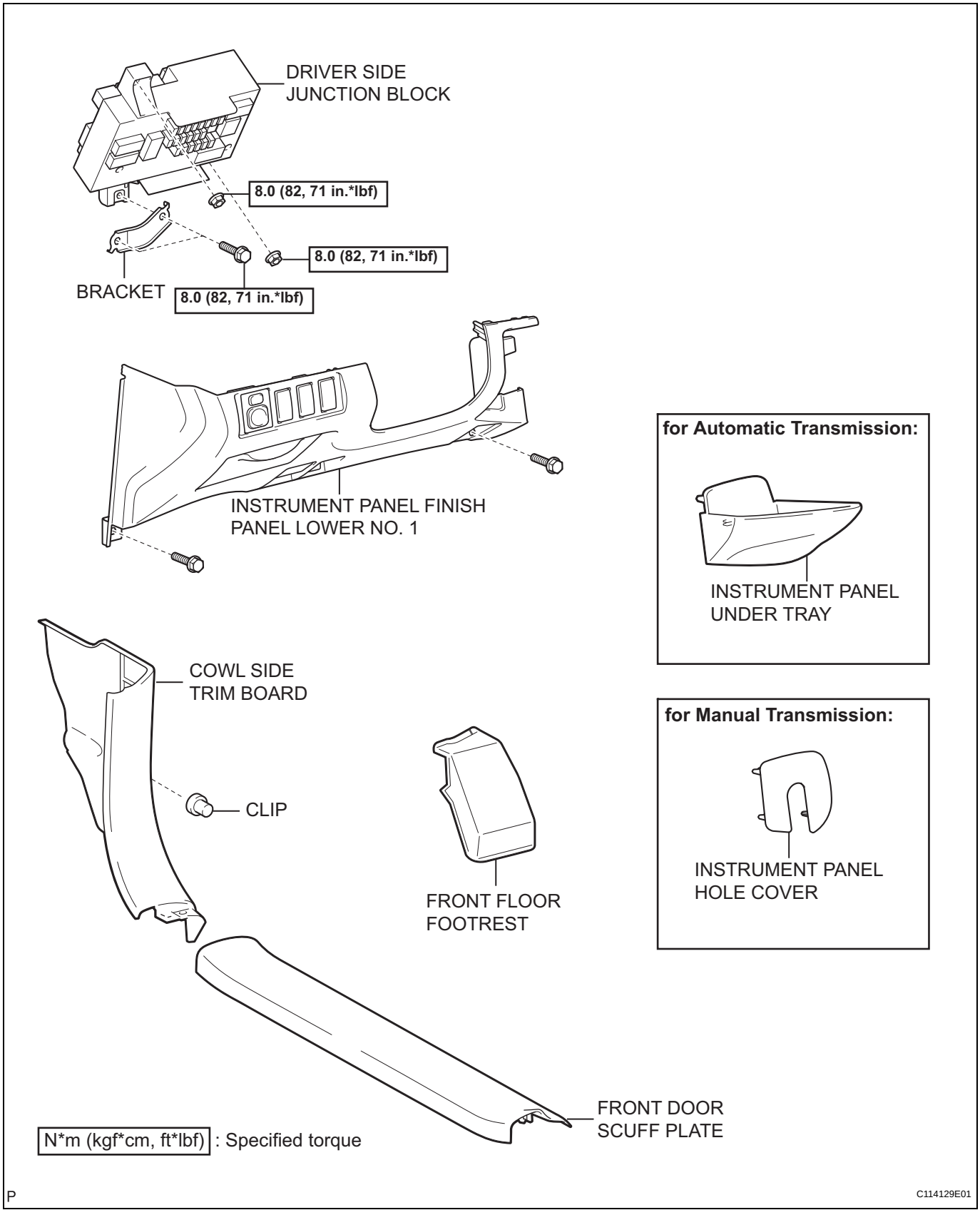

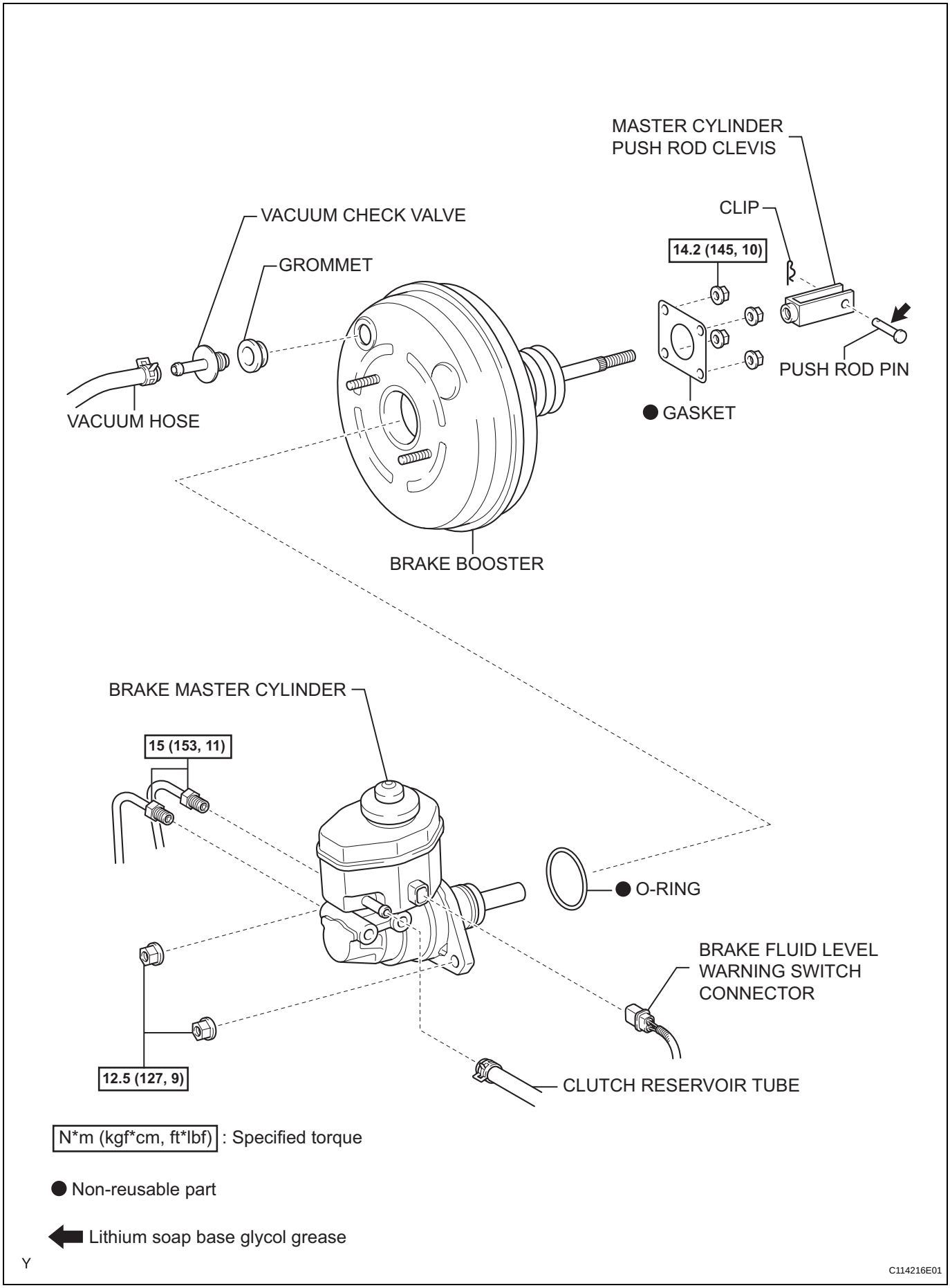
MASTER CYLINDER PUSH ROD CLEVIS
CLIP
VACUUM CHECK VALVE
14.2 (145, 10)
GROMMET
PUSH ROD PIN
VACUUM HOSE
● GASKET
BRAKE BOOSTER
BRAKE MASTER CYLINDER
15 (153, 11)
● O-RING
BRAKE FLUID LEVEL WARNING SWITCH CONNECTOR
12.5 (127, 9)
CLUTCH RESERVOIR TUBE
N*m (kgf*cm, ft*lbf) : Specified torque
● Non-reusable part
Lithium soap base glycol grease
Y
C114216E01

BR

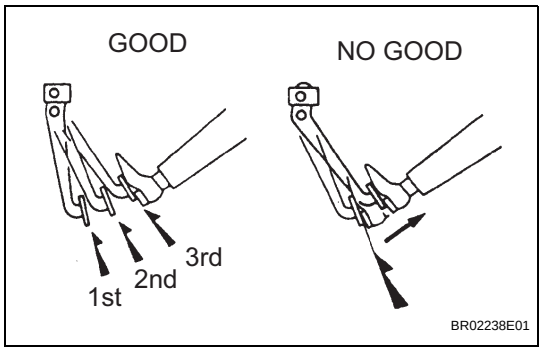

ON-VEHICLE INSPECTION

1. INSPECT BRAKE BOOSTER

(a) Check the air tightness.

(1) Start the engine and stop it after 1 or 2 minutes. Depress the brake pedal several times slowly.
HINT:
If the pedal can be depressed to the floor the 1st time, but cannot be depressed as far on the 2nd or 3rd time, the booster is airtight.

(2) Depress the brake pedal while the engine is running, and stop the engine with the pedal depressed.
HINT:
If there is no change in the pedal reserve distance after holding the pedal for 30 seconds, the booster is airtight.

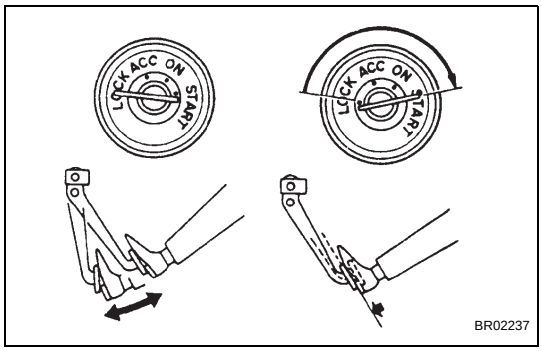

(b) Check the operation.

(1) Depress the brake pedal several times with the ignition switch at OFF and check that there is no change in the pedal reserve distance.

(2) Depress the brake pedal and start the engine.
HINT:
If the pedal goes down slightly, the operation is normal.

2. INSPECT VACUUM CHECK VALVE

(a) Check the vacuum check valve.

(1) Slide the clip and disconnect the vacuum hose.

(2) Remove the vacuum check valve.

(3) Check that there is ventilation from the booster to the engine, and no ventilation from the engine to the booster.
If any fault is found, replace the vacuum check valve.

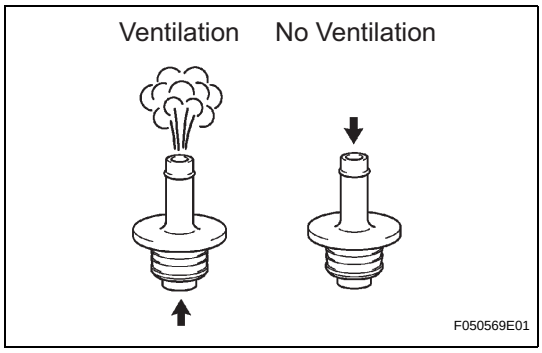

HYDRAULIC BRAKE BOOSTER (w/ VSC)

COMPONENTS

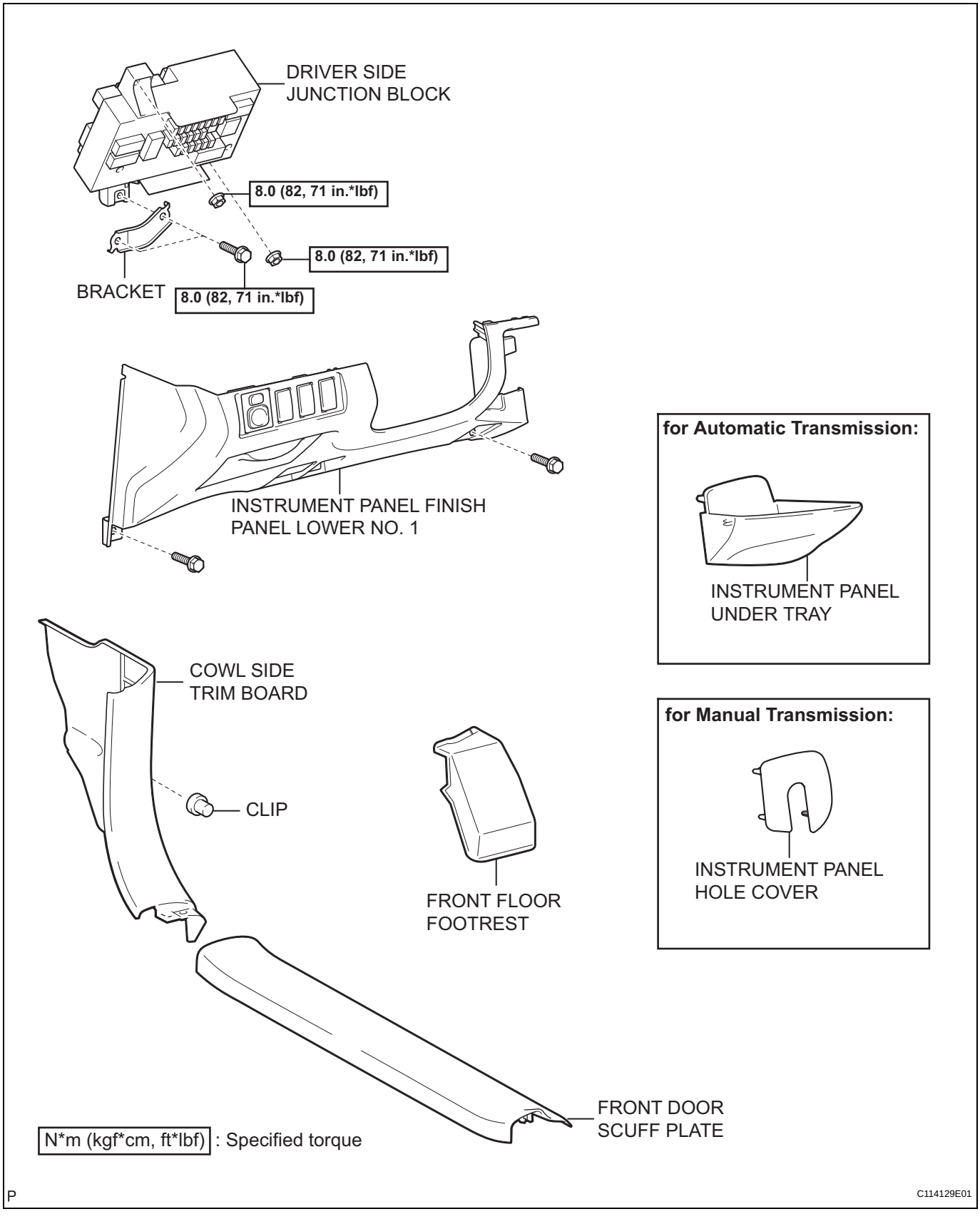

BR

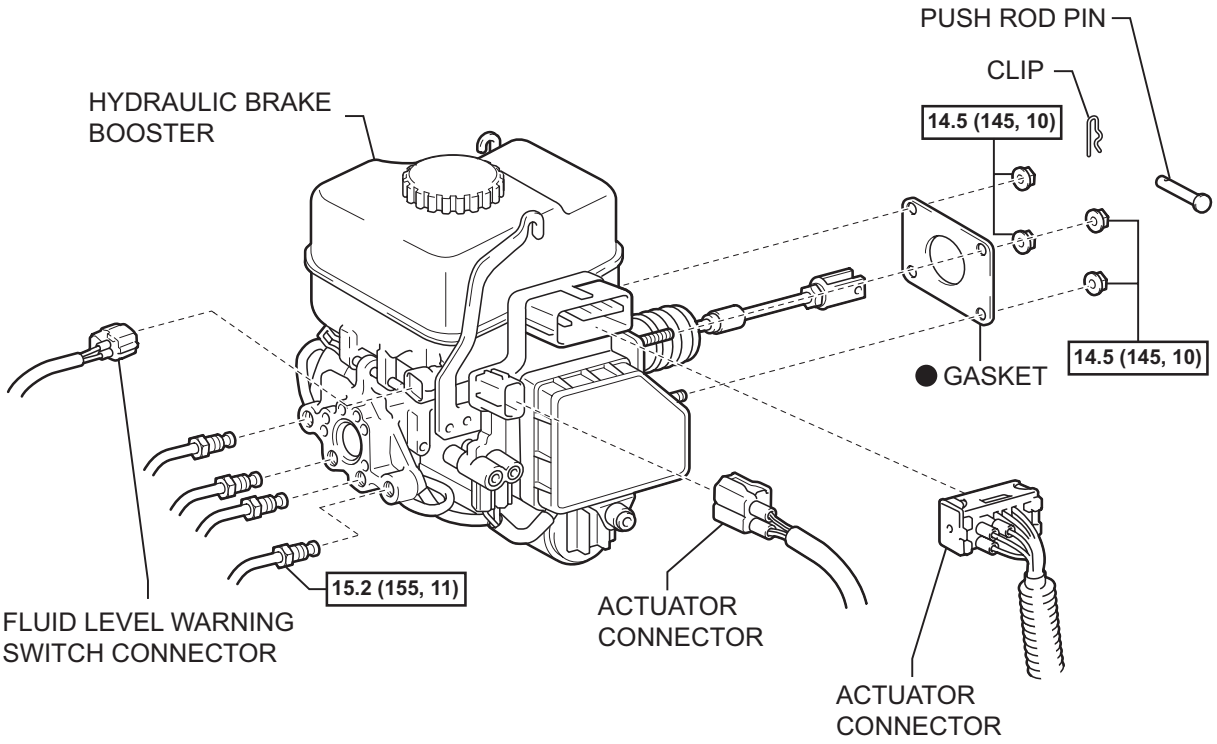

BR

N*m (kgf*cm, ft*lbf) : Specified torque

● Non-reusable part

P

C114118E02

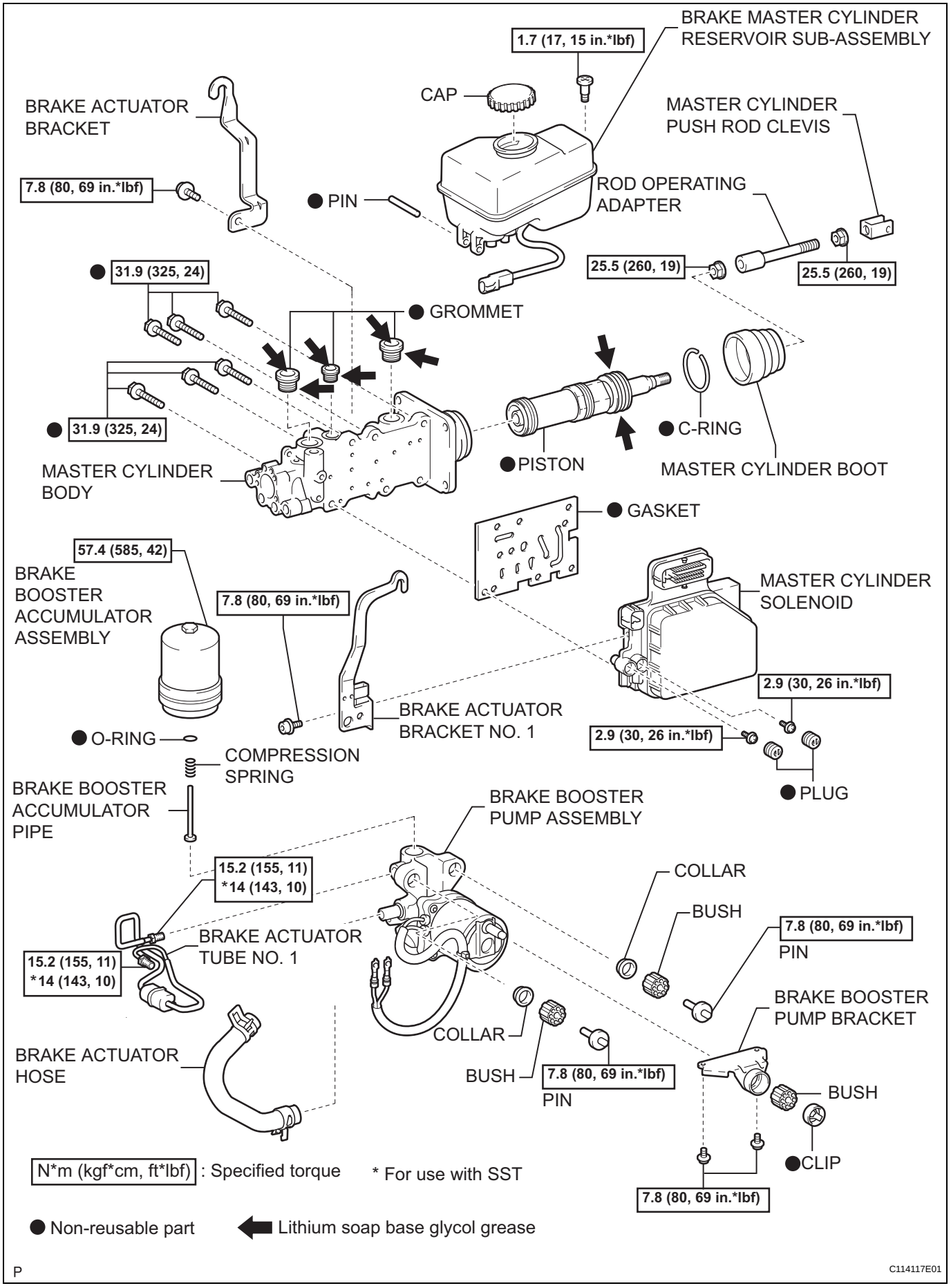
BRAKE MASTER CYLINDER RESERVOIR SUB-ASSEMBLY
1.7 (17, 15 in.*lbf)
CAP
BRAKE ACTUATOR BRACKET
MASTER CYLINDER PUSH ROD CLEVIS
7.8 (80, 69 in.*lbf)
PIN
ROD OPERATING ADAPTER
25.5 (260, 19)
25.5 (260, 19)
31.9 (325, 24)
GROMMET
31.9 (325, 24)
C-RING
MASTER CYLINDER BODY
PISTON
MASTER CYLINDER BOOT
GASKET
57.4 (585, 42)
BRAKE BOOSTER ACCUMULATOR ASSEMBLY
7.8 (80, 69 in.*lbf)
MASTER CYLINDER SOLENOID
2.9 (30, 26 in.*lbf)
BRAKE ACTUATOR BRACKET NO. 1
2.9 (30, 26 in.*lbf)
O-RING
COMPRESSION SPRING
PLUG
BRAKE BOOSTER ACCUMULATOR PIPE
BRAKE BOOSTER PUMP ASSEMBLY
15.2 (155, 11) *14 (143, 10)
COLLAR
BUSH
7.8 (80, 69 in.*lbf)
PIN
BRAKE ACTUATOR TUBE NO. 1
15.2 (155, 11) *14 (143, 10)
BRAKE BOOSTER PUMP BRACKET
COLLAR
BRAKE ACTUATOR HOSE
BUSH
7.8 (80, 69 in.*lbf)
PIN
BUSH
CLIP
7.8 (80, 69 in.*lbf)
N*m (kgf*cm, ft*lbf) : Specified torque
* For use with SST
Non-reusable part
Lithium soap base glycol grease
P
C114117E01

BR

FRONT BRAKE (for 2WD)

COMPONENTS

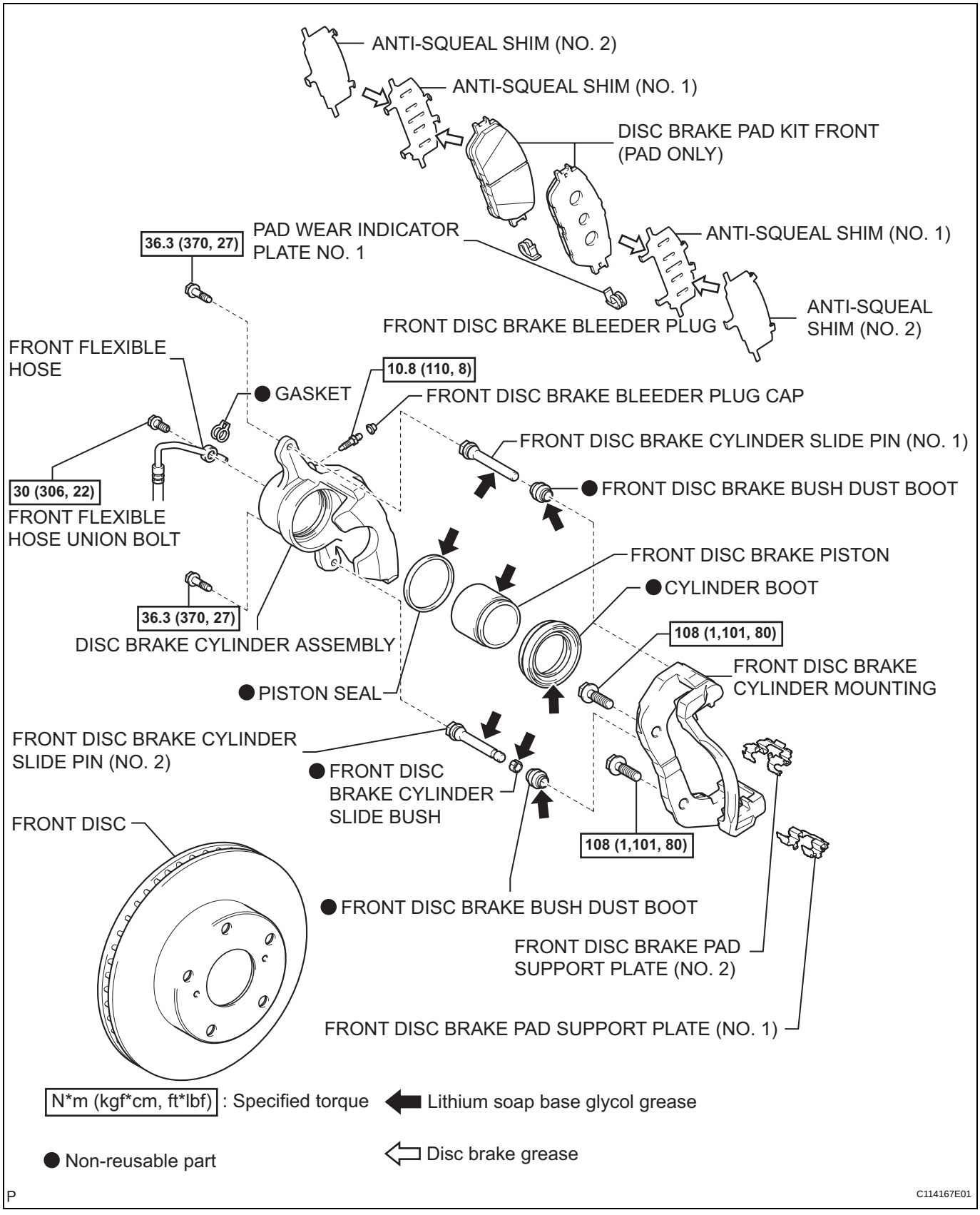

REMOVAL

1. **REMOVE FRONT WHEEL**

2. **DRAIN BRAKE FLUID**
   NOTICE:
   Immediately wash off any brake fluid that comes into contact with any painted surfaces.

3. **REMOVE DISC BRAKE CYLINDER ASSEMBLY**
   (a) Remove the union bolt and gasket from the disc brake cylinder, then disconnect the flexible hose.

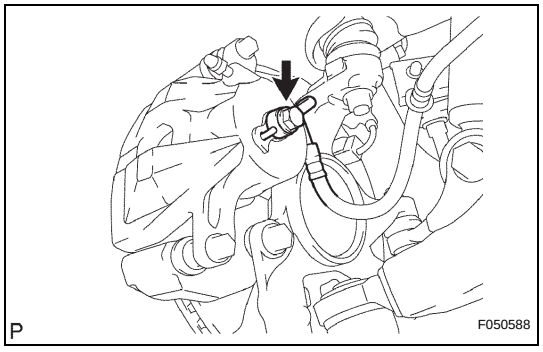

   (b) Hold the disc brake cylinder slide pin and remove the 2 bolts.

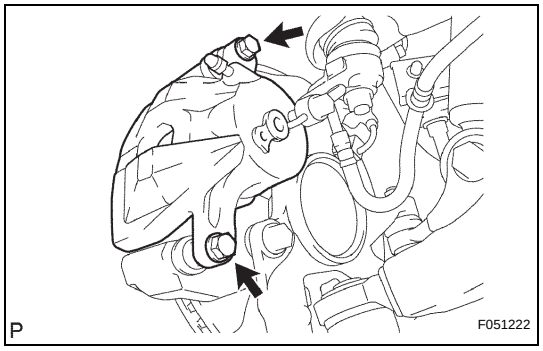

4. **REMOVE DISC BRAKE PAD KIT FRONT (PAD ONLY)**
   (a) Remove the 2 disc brake pads with anti-squeal shim from the disc brake cylinder mounting.

5. **REMOVE ANTI SQUEAL SHIM KIT FRONT**
   (a) Remove the 4 anti-squeal shims from each pad.
   (b) Remove the pad wear indicator plate from each pad.

6. **REMOVE FRONT DISC BRAKE PAD SUPPORT PLATE**
   (a) Remove the 2 disc brake pad support plates from the disc brake cylinder mounting.

BR

7. **REMOVE FRONT DISC BRAKE CYLINDER SLIDE PIN**
   (a) Remove the disc brake cylinder slide pin from the disc brake cylinder mounting.

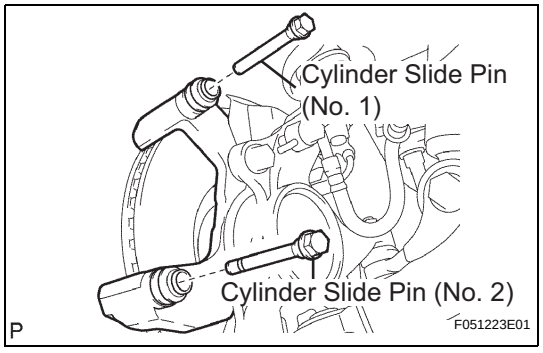

8. **REMOVE FRONT DISC BRAKE CYLINDER SLIDE BUSH**
   (a) Using a screwdriver, remove the disc brake cylinder slide bush from the disc brake cylinder slide pin (No. 2).
   NOTICE:
   Be careful not to damage the disc brake cylinder slide pin (No. 2).

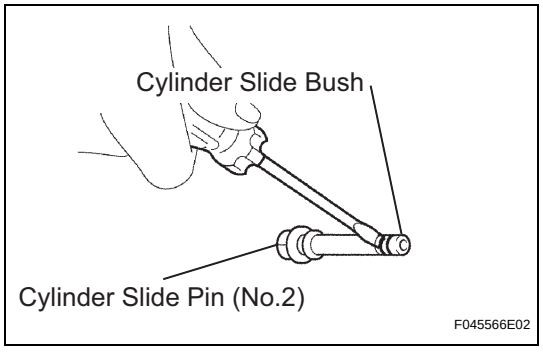

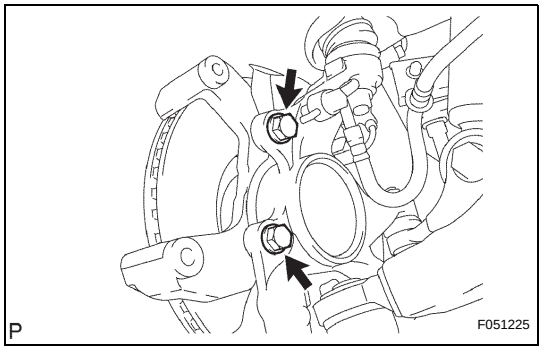

9. REMOVE FRONT DISC BRAKE CYLINDER MOUNTING

(a) Remove the 2 bolts and disc brake cylinder mounting.

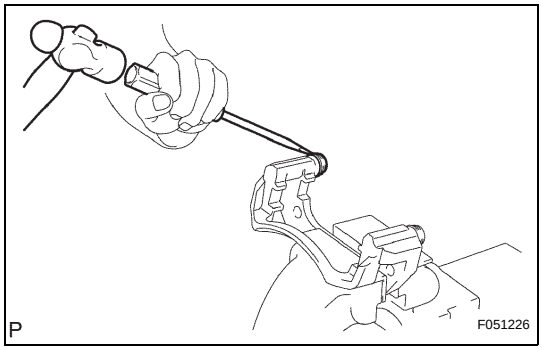

10. REMOVE FRONT DISC BRAKE BUSH DUST BOOT

(a) Place soft jaws on a vise and hold the disc brake cylinder mounting in the vise through aluminum plates.

(b) Using a screwdriver and hammer, remove the 2 disc brake bush dust boots from the disc brake cylinder mounting.

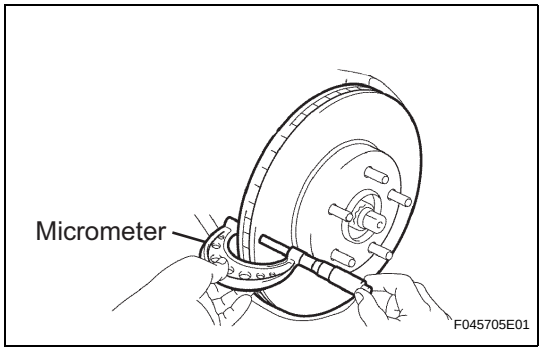

11. INSPECT DISC THICKNESS

(a) Using a micrometer, measure the disc thickness.

Standard thickness:
25.0 mm (0.984 in.)
Minimum thickness:
23.0 mm (0.906 in.)

If the disc thickness is less than the minimum, replace the disc.

12. REMOVE FRONT DISC

(a) Make matchmarks on the front disc and the axle hub.

(b) Remove the front disc.

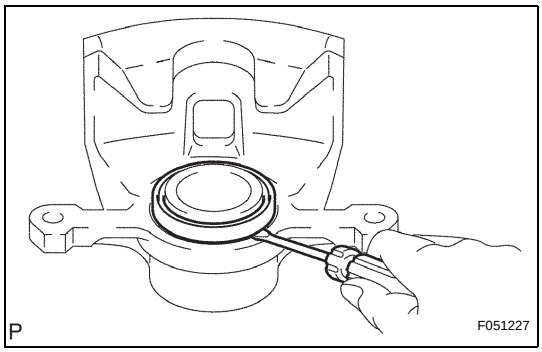

DISASSEMBLY

1. REMOVE CYLINDER BOOT

(a) Using a screwdriver, remove the cylinder boot.

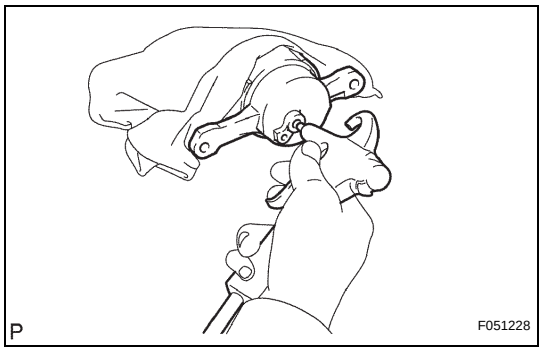

2. REMOVE FRONT DISC BRAKE PISTON

(a) Place a shop rag or equivalent between the disc brake piston and disc brake cylinder.

(b) Use compressed air to remove the disc brake piston from the disc brake cylinder.

CAUTION:
Be careful not to place your fingers in front of the piston when using compressed air.
NOTICE:
Be careful not to spatter the brake fluid.

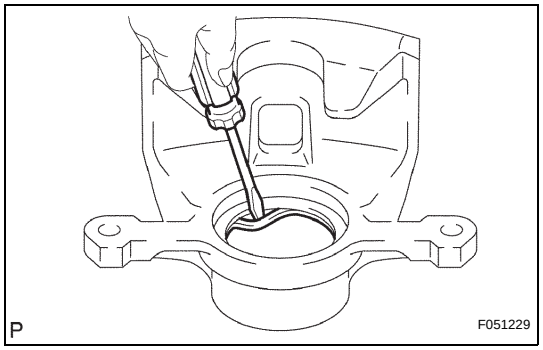

3. REMOVE PISTON SEAL

(a) Using a screwdriver, remove the piston seal from the front disc brake cylinder.

NOTICE:
Be careful not to damage the inner cylinder or cylinder groove.

4. REMOVE FRONT DISC BRAKE BLEEDER PLUG

FRONT BRAKE (for 4WD and Pre-Runner)

COMPONENTS

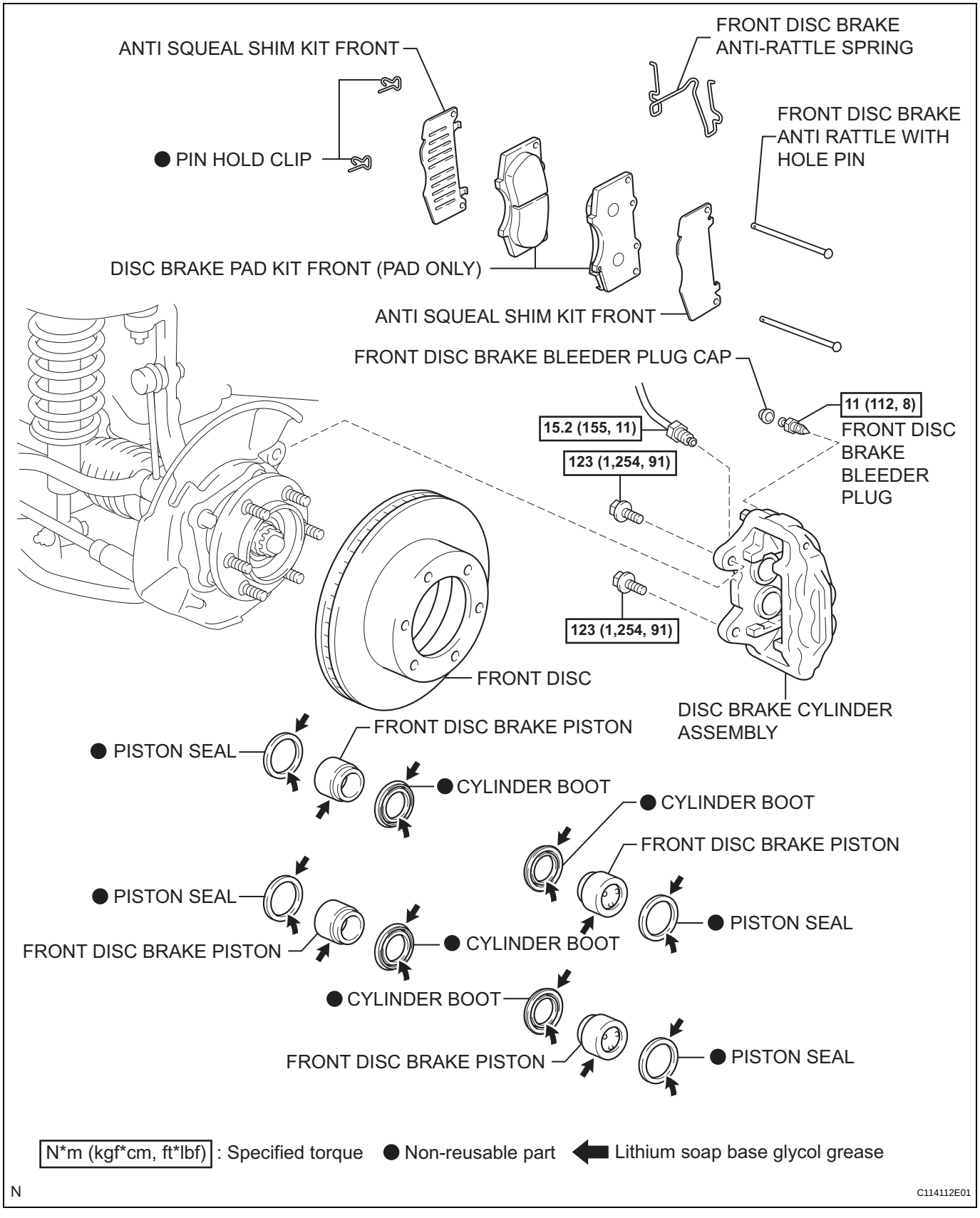

BR

REMOVAL

1. REMOVE FRONT WHEEL

2. DRAIN BRAKE FLUID
NOTICE:
Immediately wash off any brake fluid that comes into contact with any painted surfaces.

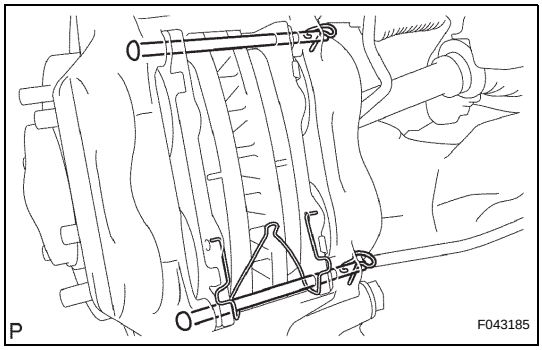

3. REMOVE FRONT DISC BRAKE ANTI RATTLE WITH HOLE PIN
(a) Remove the 2 pin hold clips, then remove the 2 anti-rattle w/ hole pins from the disc brake cylinder.
(b) Remove the anti-rattle spring from the disc brake pad.

4. REMOVE DISC BRAKE PAD KIT FRONT (PAD ONLY)
(a) Remove the 2 disc brake pads with anti-squeal shim from the disc brake cylinder.

5. REMOVE ANTI SQUEAL SHIM KIT FRONT
(a) Remove the 2 anti-squeal shims from each of the disc brake pads.

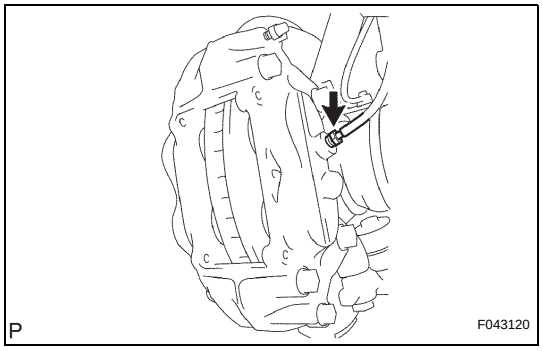

6. REMOVE DISC BRAKE CYLINDER ASSEMBLY
(a) Using SST, disconnect the brake tube from the disc brake cylinder.
SST 09023-00101
HINT:
Use a container to collect the brake fluid as it drains out.

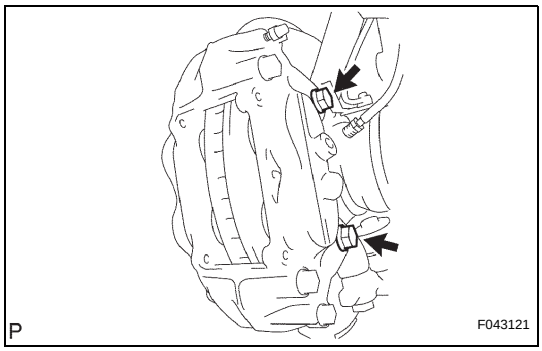

(b) Remove the 2 bolts and disc brake cylinder.

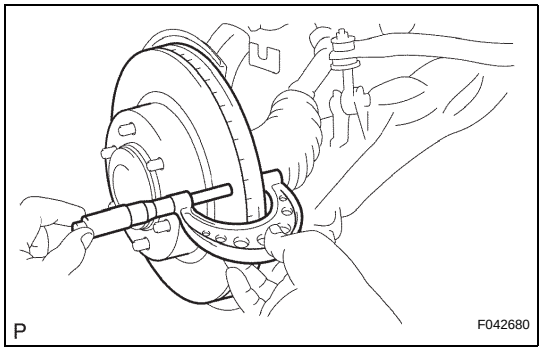

7. INSPECT DISC THICKNESS
(a) Using a micrometer, measure the disc thickness.
Standard thickness:
28.0 mm (1.102 in.)
Minimum thickness:
26.0 mm (1.024 in.)

8. REMOVE FRONT DISC
(a) Make matchmarks on the disc and the axle hub.
(b) Remove the front disc.

BR

REAR BRAKE

COMPONENTS

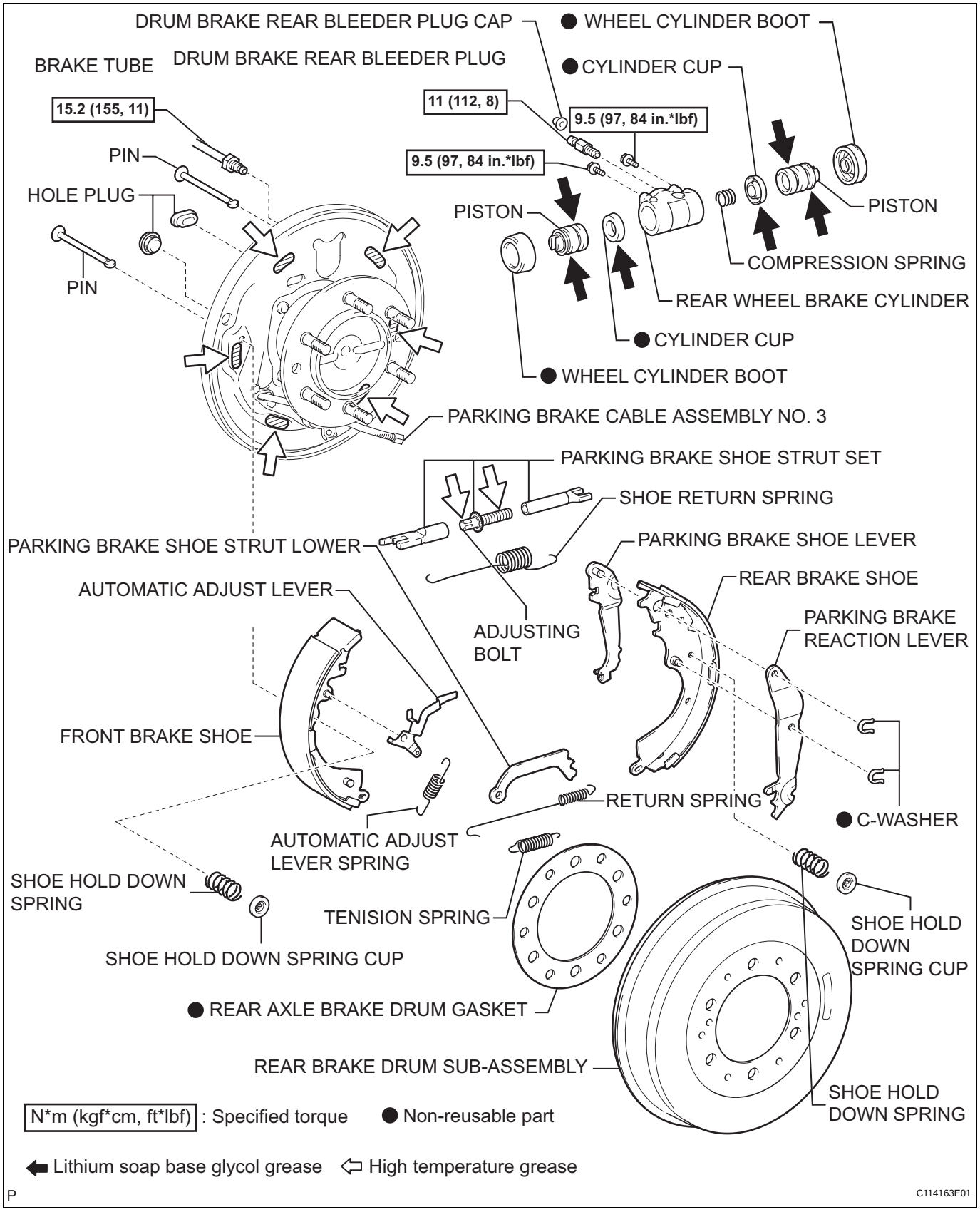

BR

REMOVAL

1. REMOVE REAR WHEEL

2. DRAIN BRAKE FLUID

HINT:
Immediately wash off any brake fluid that comes into contact with any painted surfaces.

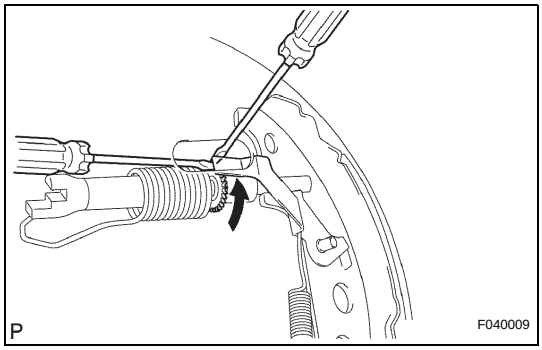

3. REMOVE REAR BRAKE DRUM SUB-ASSEMBLY

(a) Release the parking brake, and remove the rear brake drum.
If the rear brake drum cannot be removed easily, perform the following procedures.
(b) Remove the hole plug and insert a screwdriver through the hole into the backing plate, and hold the automatic adjusting lever away from the adjuster.
(c) Using another screwdriver, contract the brake shoe by turning the adjusting bolt.
(d) Remove the drum gasket from the rear brake drum.

DISASSEMBLY

1. REMOVE FRONT BRAKE SHOE

(a) Using SST, remove the shoe return spring from the front brake shoe.
SST 09921-00010

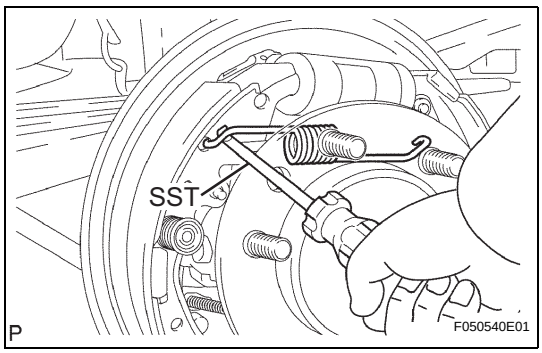

(b) Using needle-nose pliers, remove the return spring.

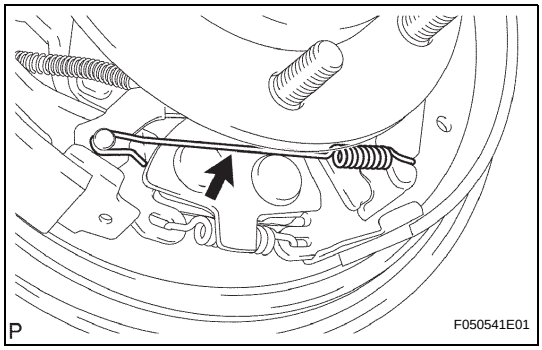

(c) Using SST, remove the shoe hold down spring cup, shoe hold down spring and pin.
SST 09718-00010
(d) Remove the parking brake shoe strut lower.
(e) Remove the tension spring and front brake shoe.
(f) Remove the automatic adjust lever spring and automatic adjust lever LH from the front brake shoe.

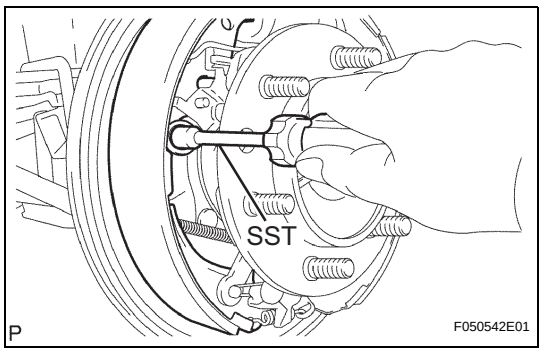

BR

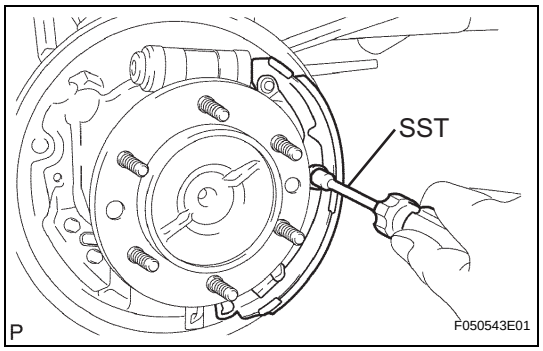

2. REMOVE REAR BRAKE SHOE

(a) Using SST, remove the shoe hold down spring cup, shoe hold down spring and pin.
SST 09718-00010

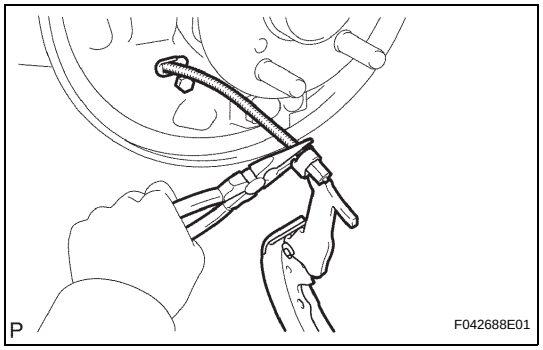

(b) Using needle-nose pliers, disconnect the parking brake cable No. 3 and remove the rear brake shoe.

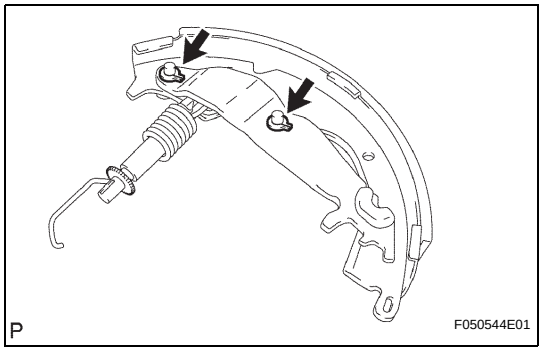

(c) Using a screwdriver, remove the 2 C-washers, parking brake shoe lever, parking brake reaction lever and parking brake shoe strut set.

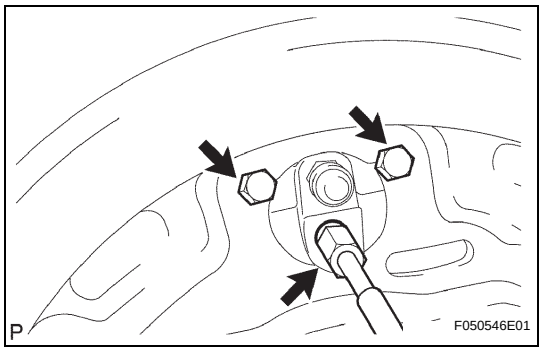

3. REMOVE FRONT OR UPPER REAR WHEEL BRAKE CYLINDER ASSEMBLY

(a) Using SST, disconnect the brake tube, and use a container to collect the brake fluid as it flows out.
SST 09023-00101

(b) Remove the 2 bolts and rear wheel brake cylinder assembly.

4. REMOVE REAR WHEEL CYLINDER CUP KIT

(a) Remove the 2 wheel cylinder boots from the rear wheel brake cylinder.
(b) Remove the 2 pistons and compression spring.
(c) Remove the 2 cylinder cups from each piston.
(d) Remove the bleeder plug cap and bleeder plug from the rear wheel brake cylinder.

PARKING BRAKE SYSTEM

PROBLEM SYMPTOMS TABLE

HINT:
Use the table below to help you find the cause of the problem. The numbers indicate the ranked order of probability of each of the possible causes. Check each part in the order suggested. If necessary, replace these parts.

Symptom	Suspected area	See page
Brake drag	1. Parking brake pedal travel (Out of adjustment) (Automatic Transmission)	PB-2
	2. Parking brake lever travel (Out of adjustment) (Manual Transmission)	PB-2
	3. Parking brake wire (Sticking)	PB-18
	4. Parking brake shoe clearance (Out of adjustment)	BR-74
	5. Parking brake shoe lining (Cracked or distorted)	BR-70
	6. Tension or return spring (Damaged)	BR-68

ADJUSTMENT

1. **REMOVE REAR WHEEL**
2. **ADJUST REAR DRUM BRAKE SHOE CLEARANCE (See page BR-74)**
3. **INSTALL REAR WHEEL**
   Torque: 113 N*m (1,152 kgf*cm, 83 ft.*lbf)
4. **INSPECT PARKING BRAKE PEDAL TRAVEL (for Automatic Transmission)**
   (a) Slowly depress the parking brake pedal to the fully applied position, and count the number of clicks.
   Parking brake pedal travel at 300 N (31 kgf, 67 lbf):
   7 to 10 clicks
5. **INSPECT PARKING BRAKE LEVER TRAVEL (for Manual Transmission)**
   (a) Slowly pull the parking brake lever to the fully applied position, and count the number of clicks.
   Parking brake lever travel at 200 N (20 kgf, 45 lbf):
   7 to 10 clicks
6. **REMOVE CONSOLE UPPER REAR PANEL SUB-ASSEMBLY (for Automatic Transmission on Separate Seat Type) (See page IP-9)**
7. **REMOVE CONSOLE UPPER REAR PANEL SUB-ASSEMBLY (for Manual Transmission on Separate Seat Type) (See page IP-9)**
8. **REMOVE CONSOLE BOX ASSEMBLY REAR (for Separate Seat Type) (See page IP-10)**
9. **REMOVE PARKING BRAKE CABLE JOINT PROTECTOR (for Bench Seat Type)**
   (a) Slide the seat to the rearmost position.
   (b) Pull up the floor carpet around the cable joint protector, along its seams.
   (c) Remove the 3 bolts and parking brake cable joint protector.
10. **ADJUST PARKING BRAKE PEDAL TRAVEL (for Automatic Transmission)**
    (a) Confirm that the parking brake pedal is released.

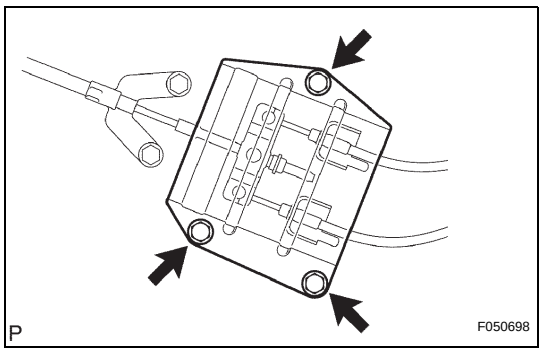

PB

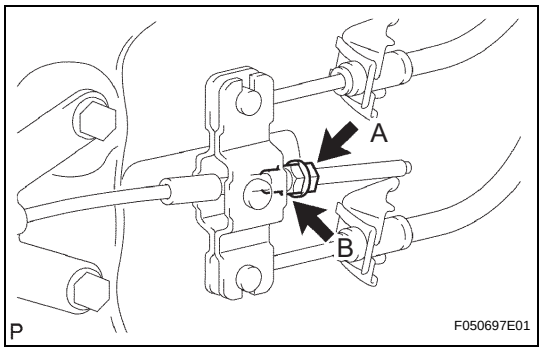

(b) Loosen the lock nut A and turn the adjusting nut B until the parking brake pedal travel is corrected to the specified value.
(c) Tighten the lock nut.
Torque: 13 N*m (127 kgf*cm, 9 ft.*lbf)
(d) Check whether the parking brake drags or not.
(e) When operating the parking brake pedal, check that the parking brake pedal indicator light comes on.

11. ADJUST PARKING BRAKE LEVER TRAVEL (for Manual Transmission)

(a) Confirm that the parking brake lever is released.

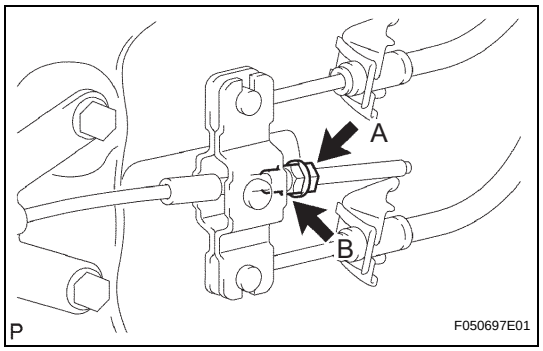

(b) Loosen the lock nut A and turn the adjusting nut B until the parking brake lever travel is corrected to the specified value.
(c) Tighten the lock nut.
Torque: 13 N*m (127 kgf*cm, 9 ft.*lbf)
(d) Check whether the parking brake drags or not.
(e) When operating the parking brake lever, check that the parking brake lever indicator light comes on.

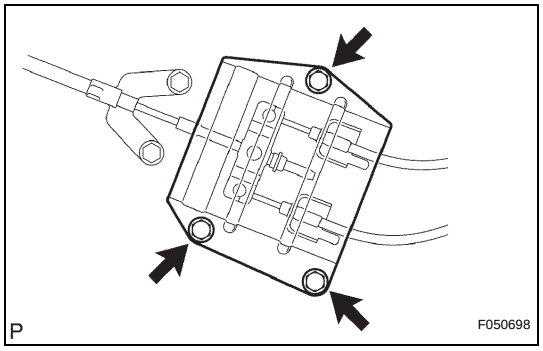

12. INSTALL PARKING BRAKE CABLE JOINT PROTECTOR (for Bench Seat Type)

(a) Install the 3 bolts and parking brake cable joint protector.
Torque: 13 N*m (127 kgf*cm, 9 ft.*lbf)
(b) Return the floor carpet to its original position.
(c) Return the seat to its original position.

13. INSTALL CONSOLE BOX ASSEMBLY REAR (for Separate Seat Type) (See page IP-24)

14. INSTALL CONSOLE UPPER REAR PANEL SUB-ASSEMBLY (for Automatic Transmission on Separate Seat Type) (See page IP-25)

15. INSTALL CONSOLE UPPER REAR PANEL SUB-ASSEMBLY (for Manual Transmission on Separate Seat Type) (See page IP-25)

PARKING BRAKE LEVER (for Manual Transmission)

COMPONENTS

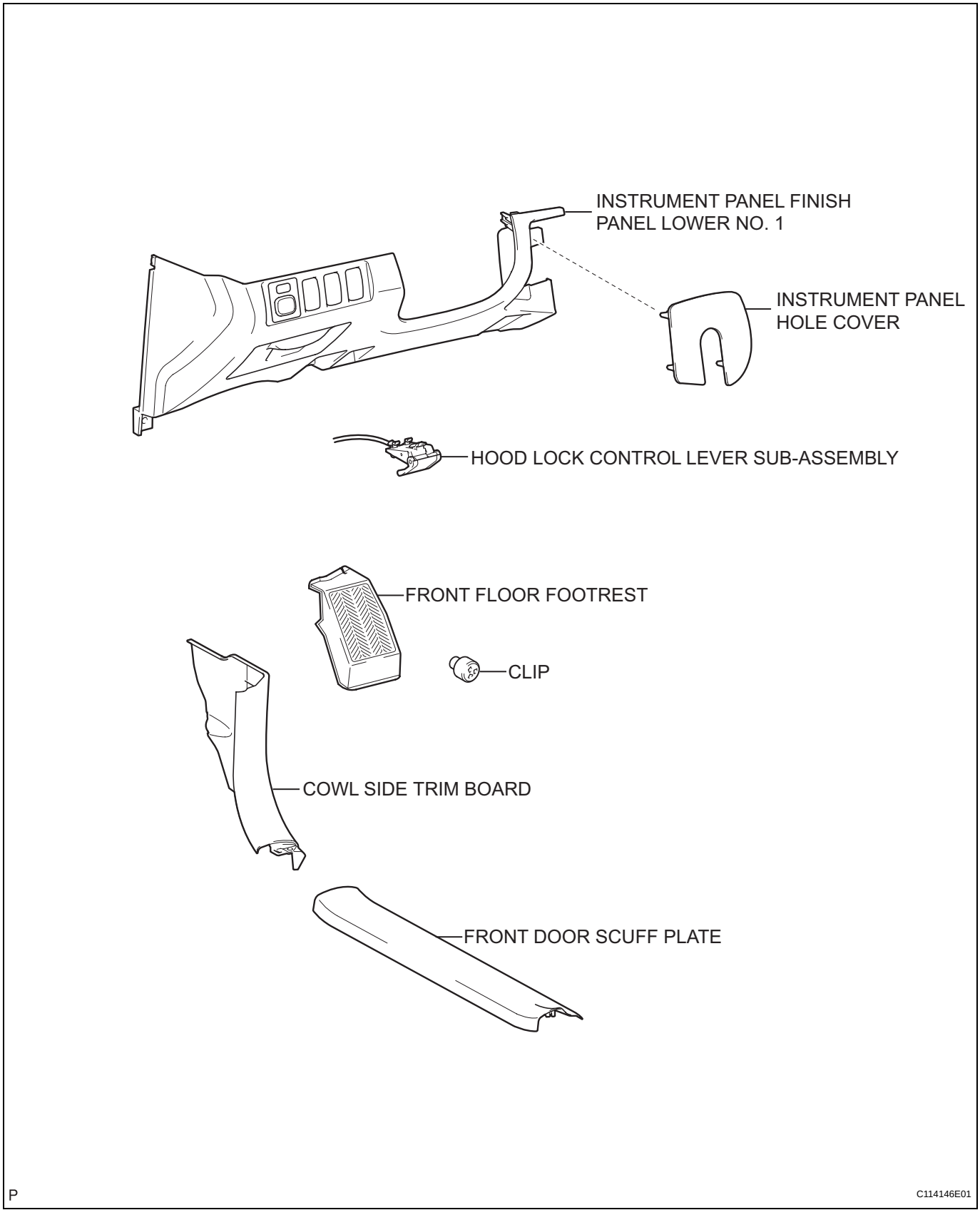

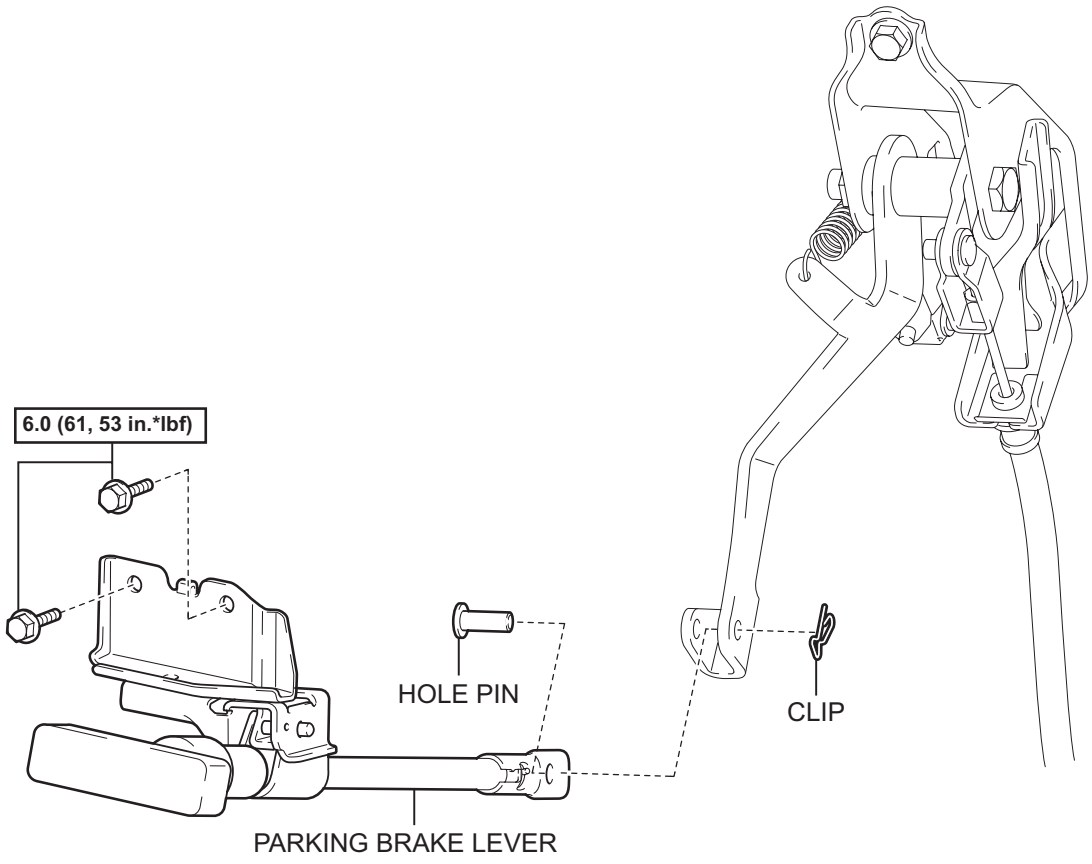

N*m (kgf*cm, ft*lbf) : Specified torque

P

C114147E01

PARKING BRAKE PEDAL (for Automatic Transmission)

COMPONENTS

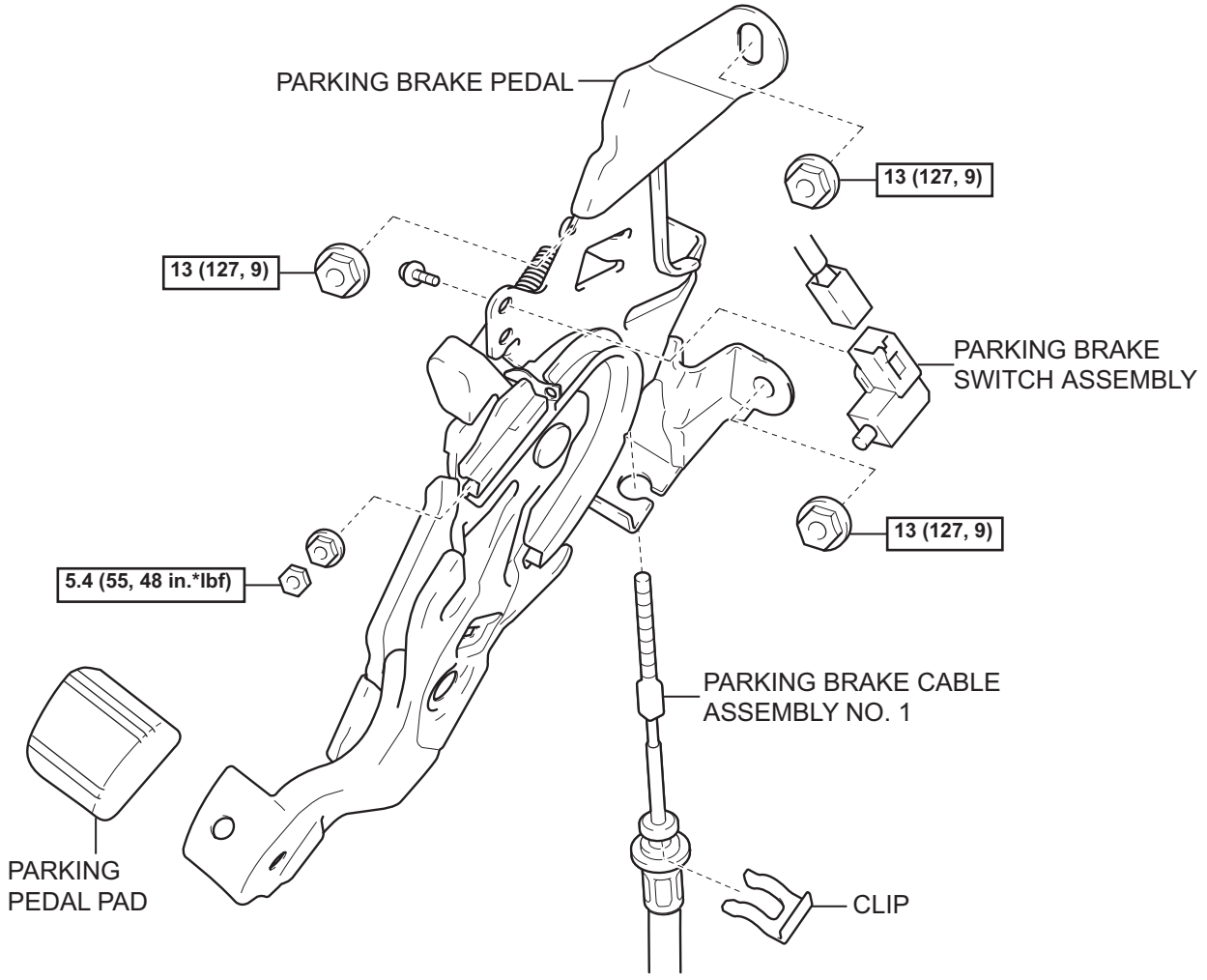

N*m (kgf*cm, ft*lbf) : Specified torque

P

C114148E01

REMOVAL

1. DISCONNECT CABLE FROM NEGATIVE BATTERY TERMINAL

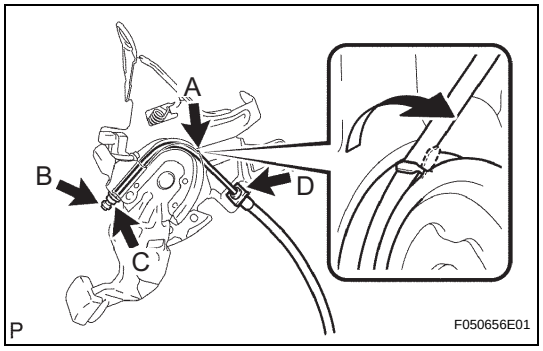

2. REMOVE PARKING BRAKE CABLE ASSEMBLY NO. 1

(a) Disengage the claw A.

(b) Remove the lock nut B, adjusting nut C, clip D and parking brake cable assembly No. 1.

3. REMOVE PARKING BRAKE PEDAL

(a) Release the parking brake pedal.

(b) Disconnect the parking brake switch connector.

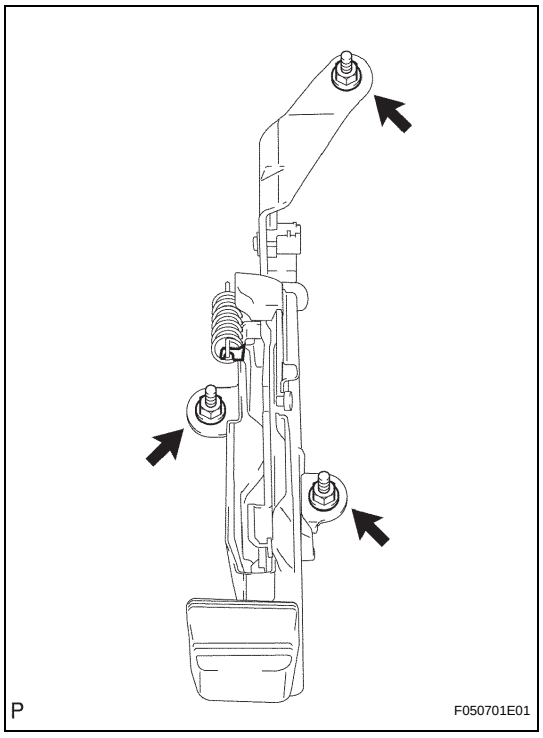

(c) Remove the 3 nuts and parking brake control pedal assembly.

4. REMOVE PARKING BRAKE SWITCH ASSEMBLY

(a) Remove the screw and parking brake switch assembly.

5. REMOVE PARKING PEDAL PAD

PARKING BRAKE CABLE

COMPONENTS

for Bench Seat Type:

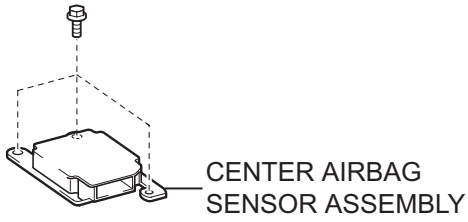

for Automatic Transmission:

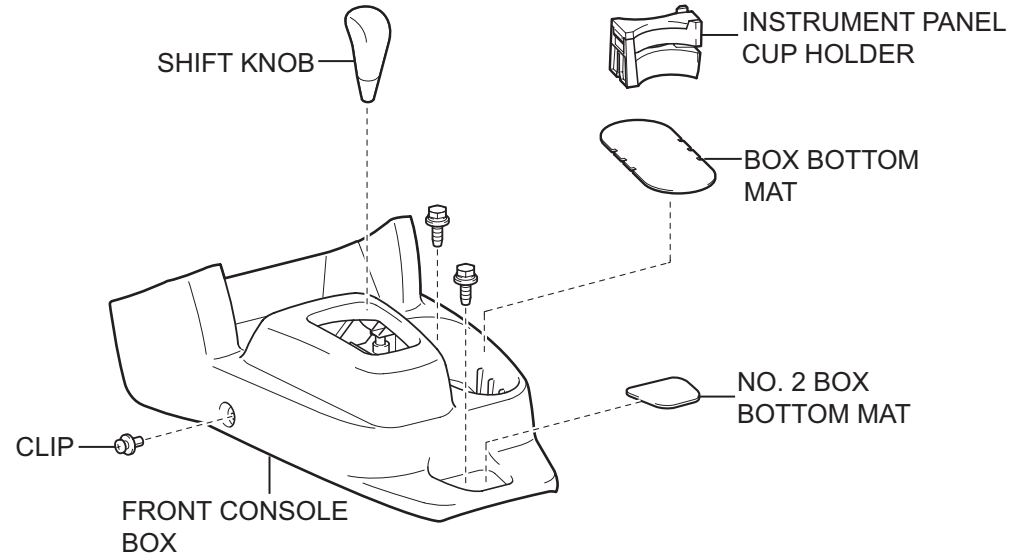

for Manual Transmission:

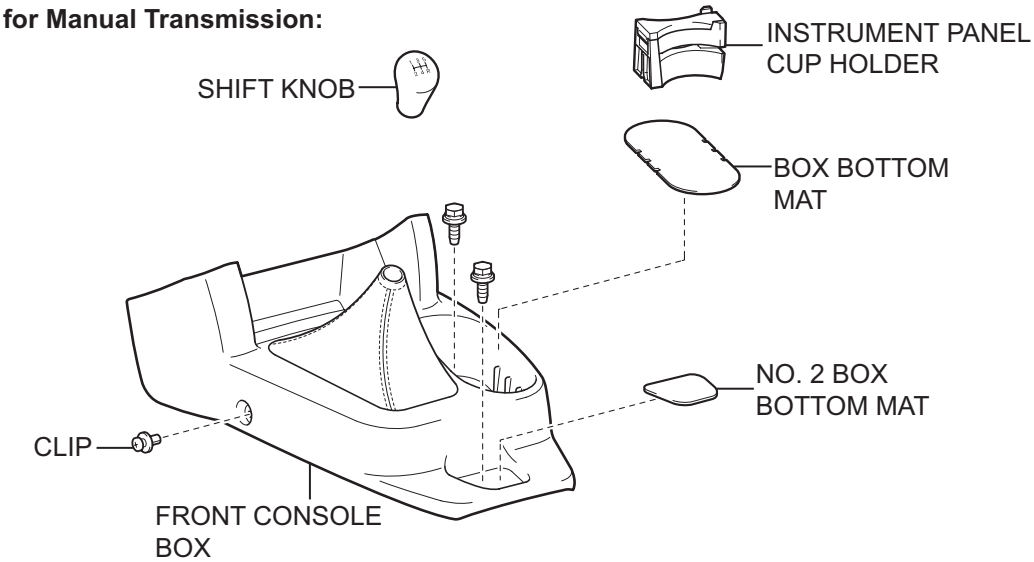

P

C114139E02

PB

for Separate Seat Type:

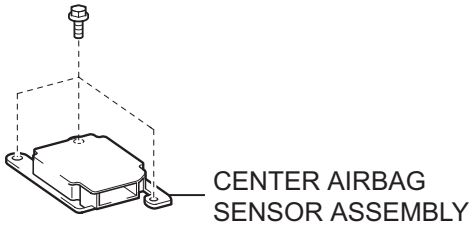

for Automatic Transmission:

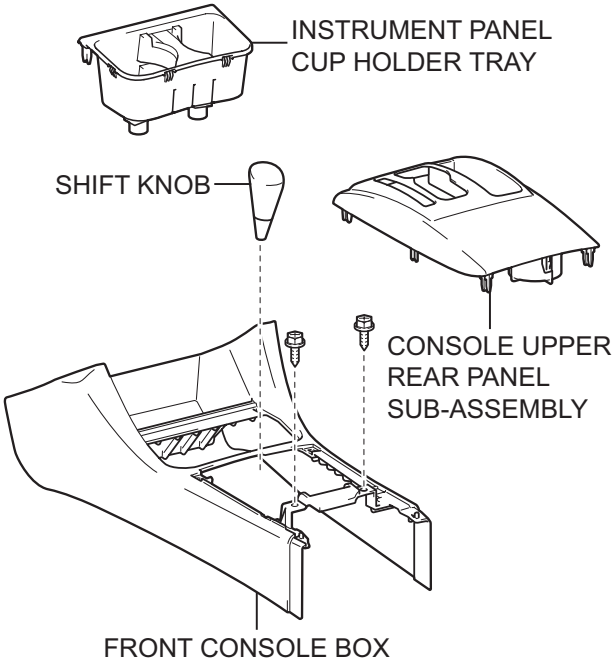

for Manual Transmission:

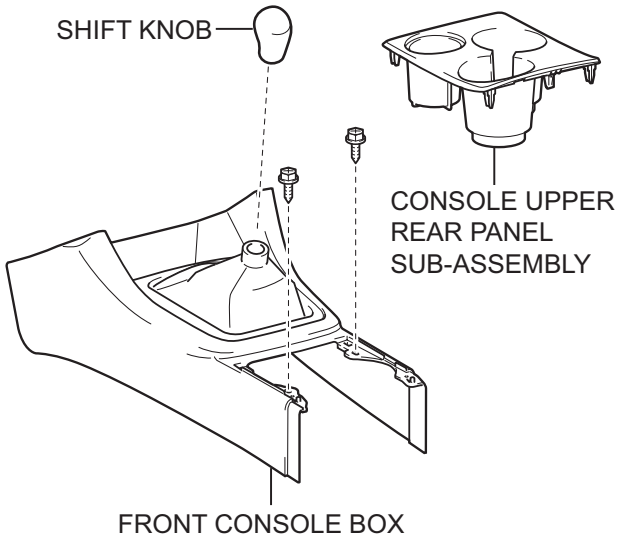

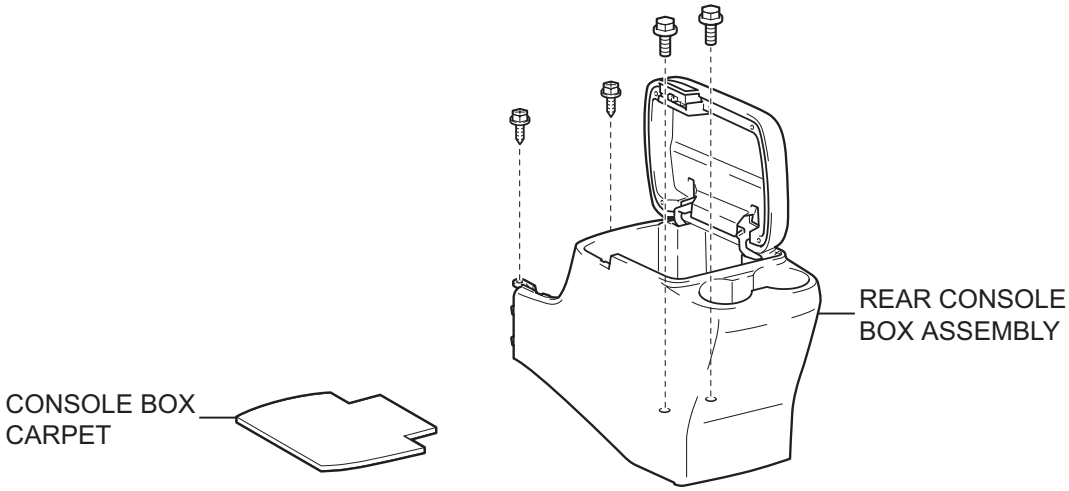

PB

P

C114138E02

for Automatic Transmission:

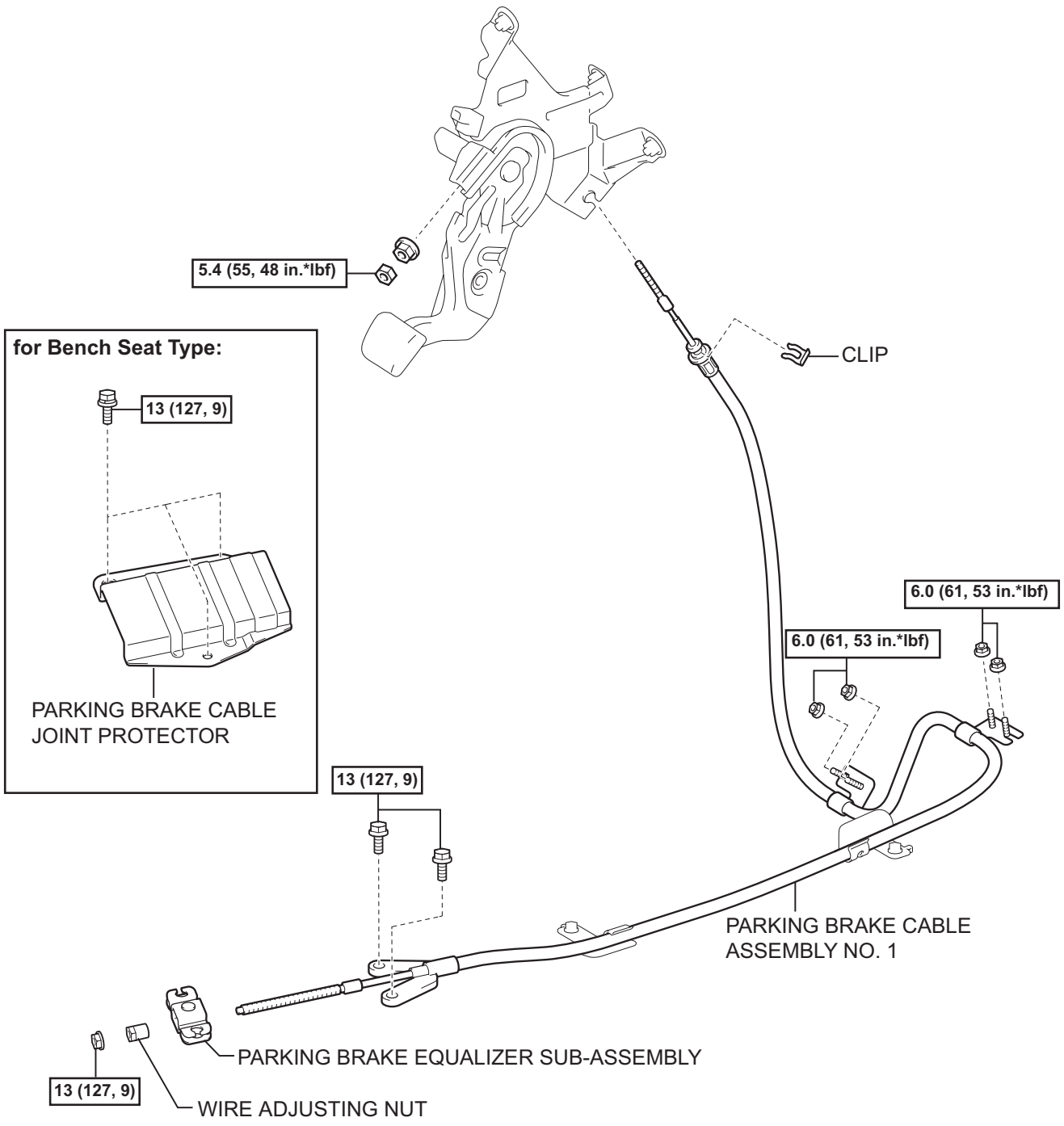

N*m (kgf*cm, ft*lbf) : Specified torque

P

C114143E01

PB

for Manual Transmission:

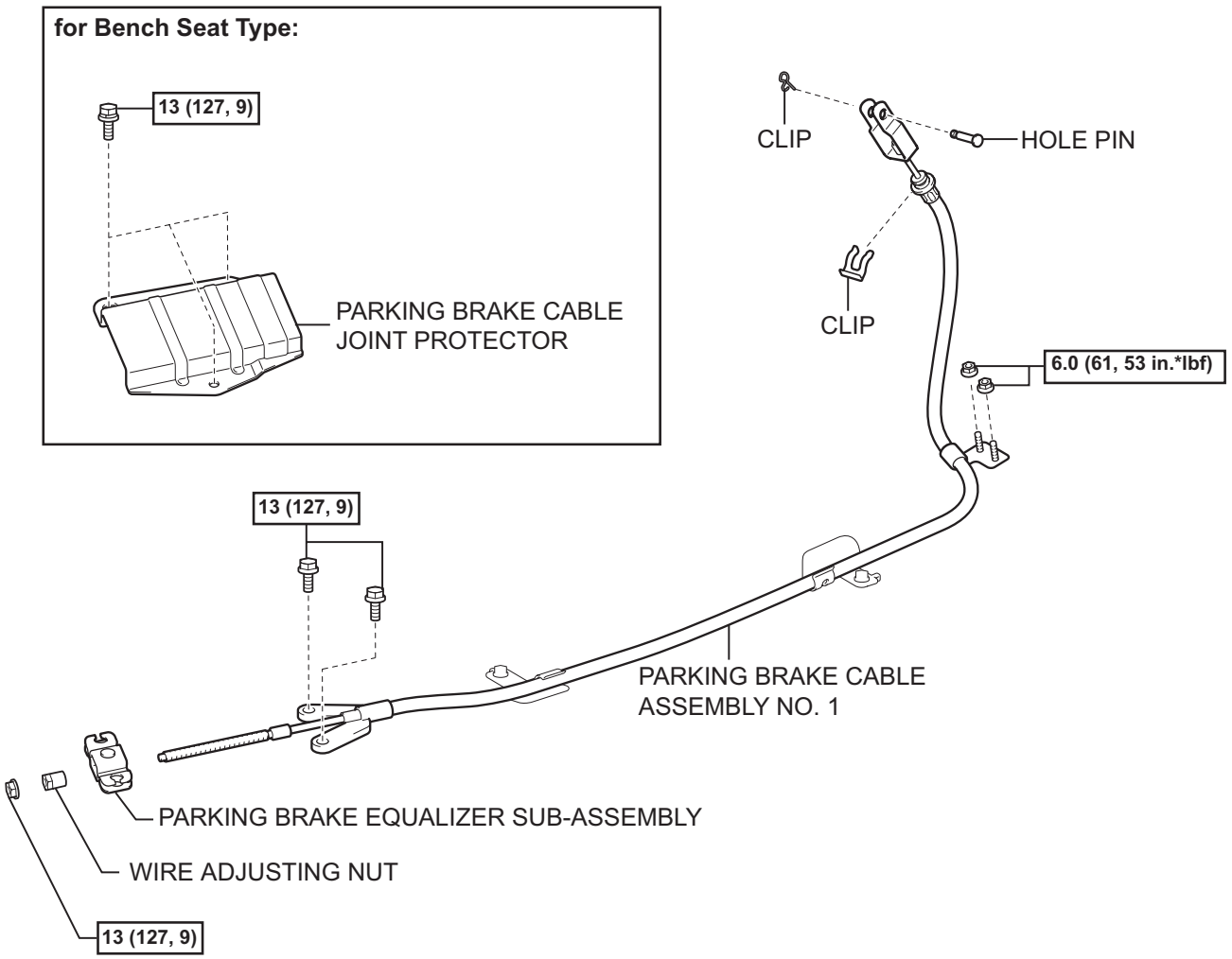

PB

N*m (kgf*cm, ft*lbf) : Specified torque

P

C114140E01

for Short Wheel-base:

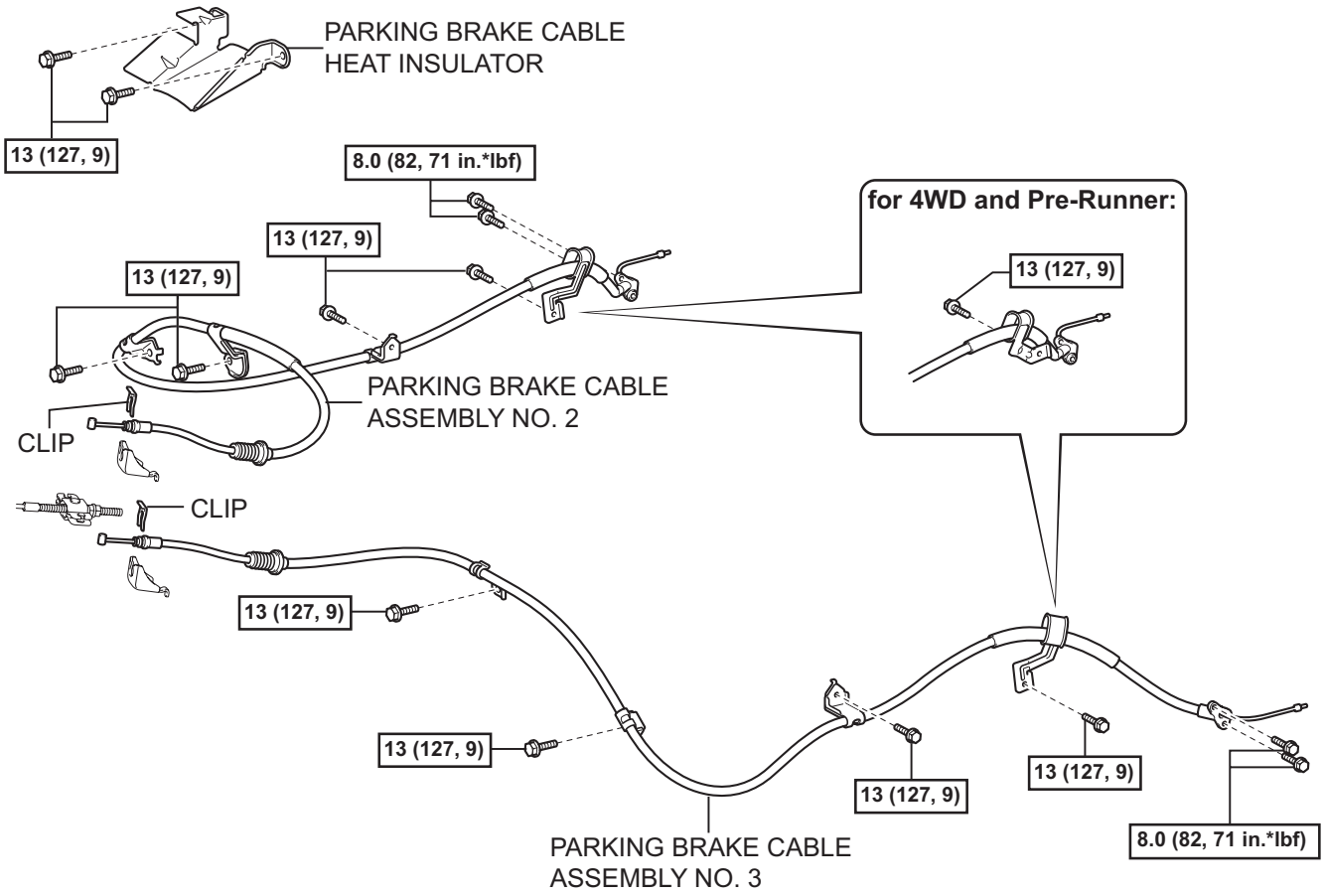

N*m (kgf*cm, ft*lbf) : Specified torque

P

C114137E01

PB

for E-Long Wheel-base:

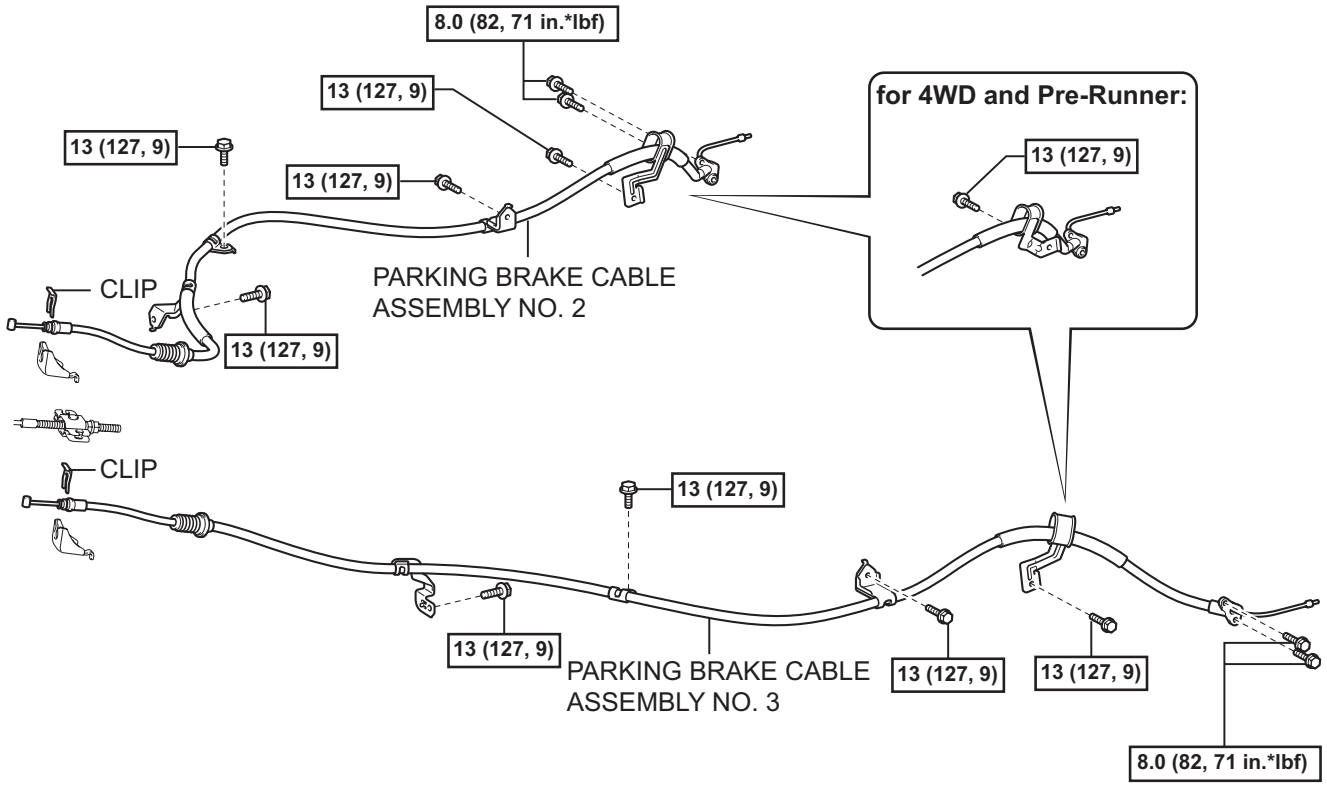

PB

N*m (kgf*cm, ft*lbf) : Specified torque

P

C114134E01

for S-Long Wheel-base:

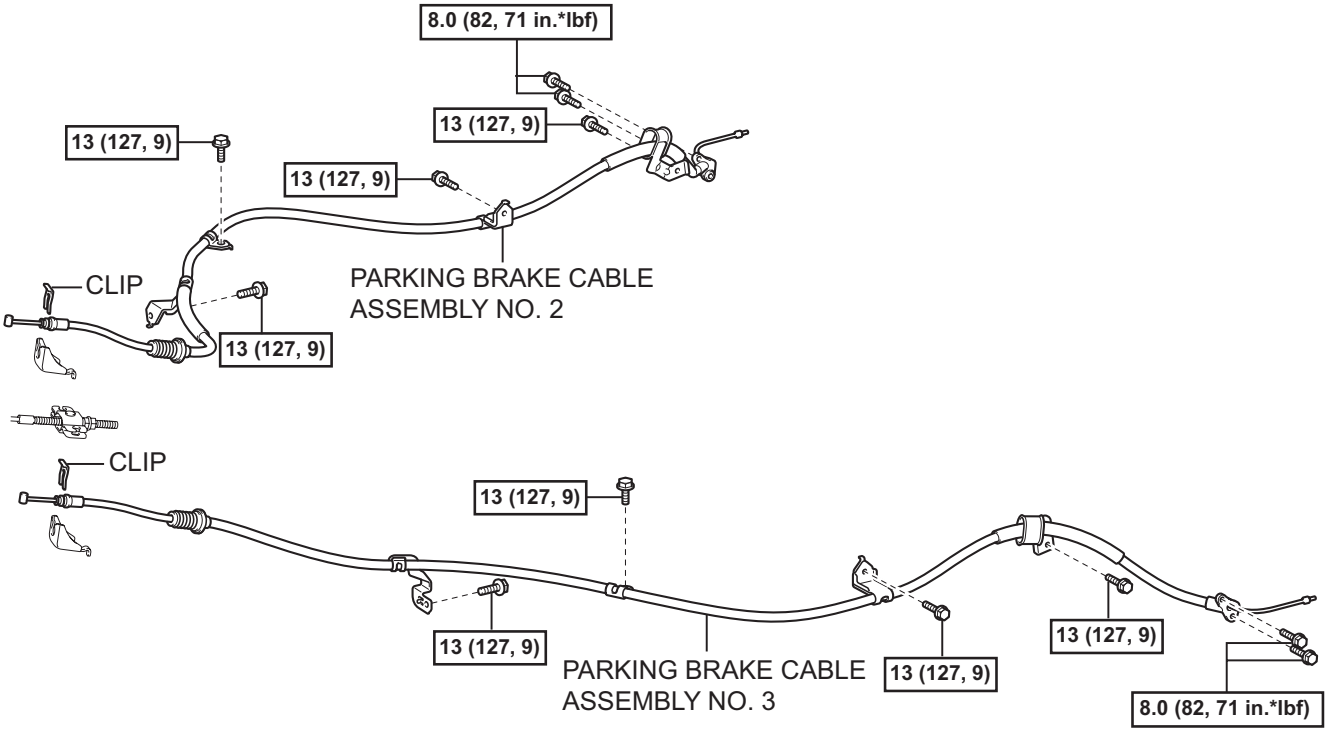

N*m (kgf*cm, ft*lbf) : Specified torque

P

C114135E01

PB

STEERING SYSTEM

PRECAUTION

1. HANDLING PRECAUTIONS ON STEERING SYSTEM

(a) Care must be taken when replacing parts. Incorrect replacement may affect the performance of the steering system and result in driving hazards.

2. HANDLING PRECAUTIONS ON SRS AIRBAG SYSTEM

(a) The vehicle is equipped with SRS (Supplemental Restraint System) such as the driver airbag and front passenger airbag. Failure to carry out service operations in the correct sequence could cause the SRS to unexpectedly deploy during servicing. This may cause a serious accident. Before servicing (including inspection, replacement, removal and installation of parts), be sure to read the precautionary notices for the supplemental restraint system (see page 60-6).

PROBLEM SYMPTOMS TABLE

Use the table below to help you find the cause of the problems. The numbers indicate the ranked order of probability of each of the possible causes. Check each part in the order shown. Repair or replace the parts as necessary.

STEERING SYSTEM

Symptom	Suspected area	See page
Hard steering	1. Tires (Improperly inflated)	TW-1
	2. Power steering fluid level (Low)	PS-2
	3. Drive belt (Loose)	PS-2
	4. Front wheel alignment (Incorrect) (2WD)	SP-2
	5. Front wheel alignment (Incorrect) (4WD Pre)	SP-7
	6. Steering system joints (Worn)	-
	7. Suspension arm ball joints (2WD) (Worn)	SP-34
	8. Suspension arm ball joints (4WD Pre) (Worn)	SP-40
	9. Steering column (Binding)	-
	10.Power steering vane pump (2TR)	PS-19
	11.Power steering vane pump (1GR)	PS-9
	12.Power steering gear (2WD)	PS-29
	13.Power steering gear (4WD Pre)	PS-53
Poor return	1. Tires (Improperly inflated)	TW-1
	2. Front wheel alignment (Incorrect) (2WD)	SP-2
	3. Front wheel alignment (Incorrect) (4WD Pre)	SP-7
	4. Steering column (Binding)	-
	5. Power steering gear (2WD)	PS-29
	6. Power steering gear (4WD Pre)	PS-53
Excessive free play	1. Steering system joints (Worn)	-
	2. Suspension arm ball joints (Worn) (2WD)	SP-34
	3. Suspension arm ball joints (Worn) (4WD Pre)	SP-40
	4. Intermediate shaft, Sliding yoke (Worn)	-
	5. Front wheel bearing (Worn) (2WD)	AH-7
	6. Front wheel bearing (Worn) (4WD pre)	AH-15
	7. Power steering gear (2WD)	PS-29
	8. Power steering gear (4WD Pre)	PS-53
Abnormal noise	1. Power steering fluid level (Low)	PS-2
	2. Steering system joints (Worn)	-
	3. Power steering vane pump (2TR)	PS-19
	4. Power steering vane pump (1GR)	PS-9
	5. Power steering gear (2WD)	PS-29
	6. Power steering gear (4WD Pre)	PS-53

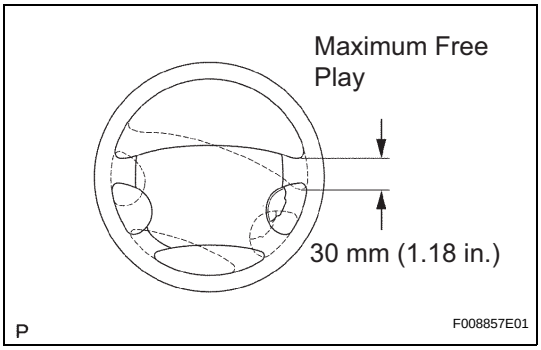

ON-VEHICLE INSPECTION

1. CHECK STEERING WHEEL FREE PLAY

(a) Stop the vehicle and align the tires facing straight ahead.

(b) Gently turn the steering wheel right and left by hand, and check the steering wheel free play.

Maximum free play:

30 mm (1.18 in.)

If the free play exceeds the maximum, replace the steering intermediate shaft or steering gear.

STEERING COLUMN ASSEMBLY

COMPONENTS

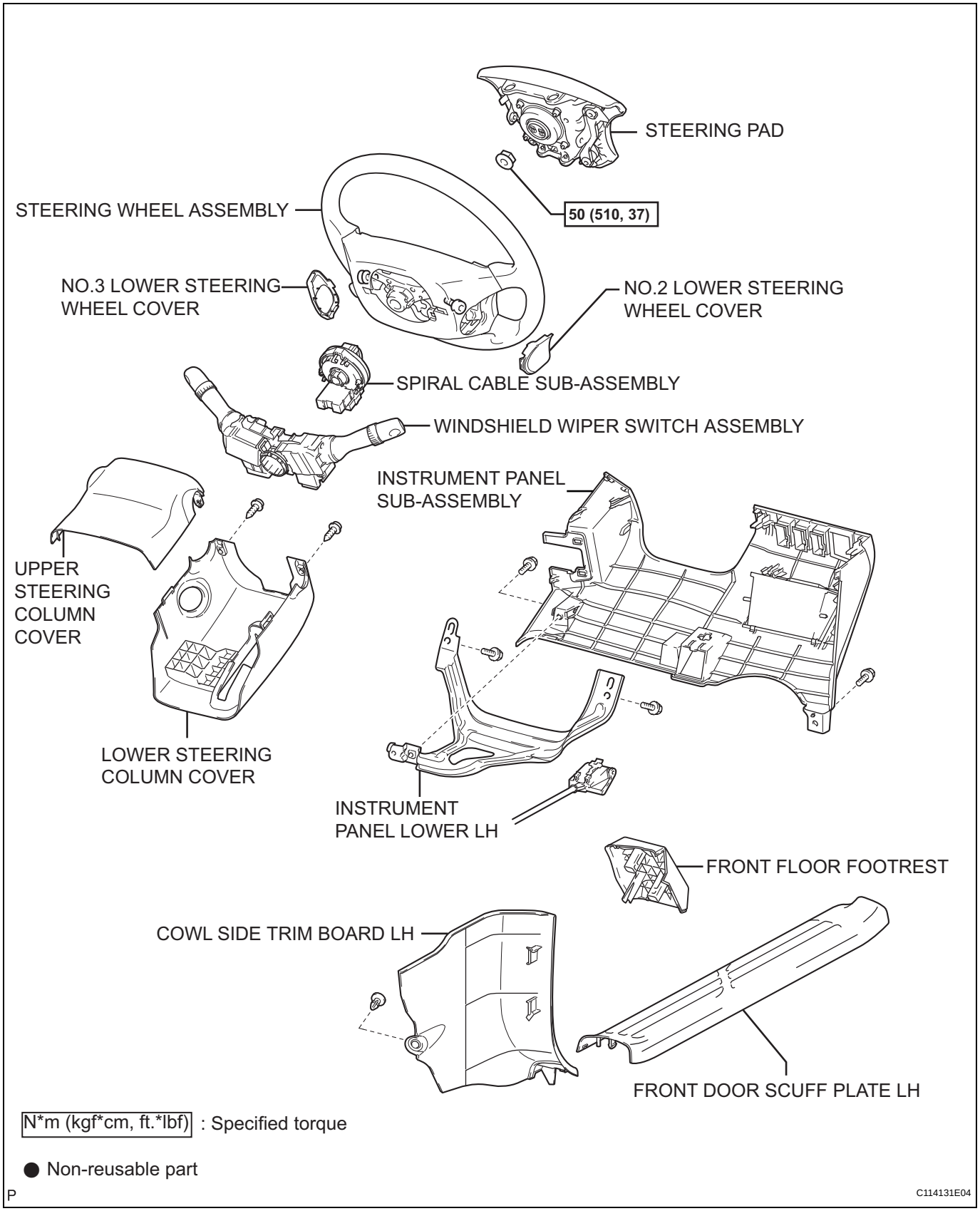

N*m (kgf*cm, ft.*lbf) : Specified torque

● Non-reusable part

P

C114131E04

SR

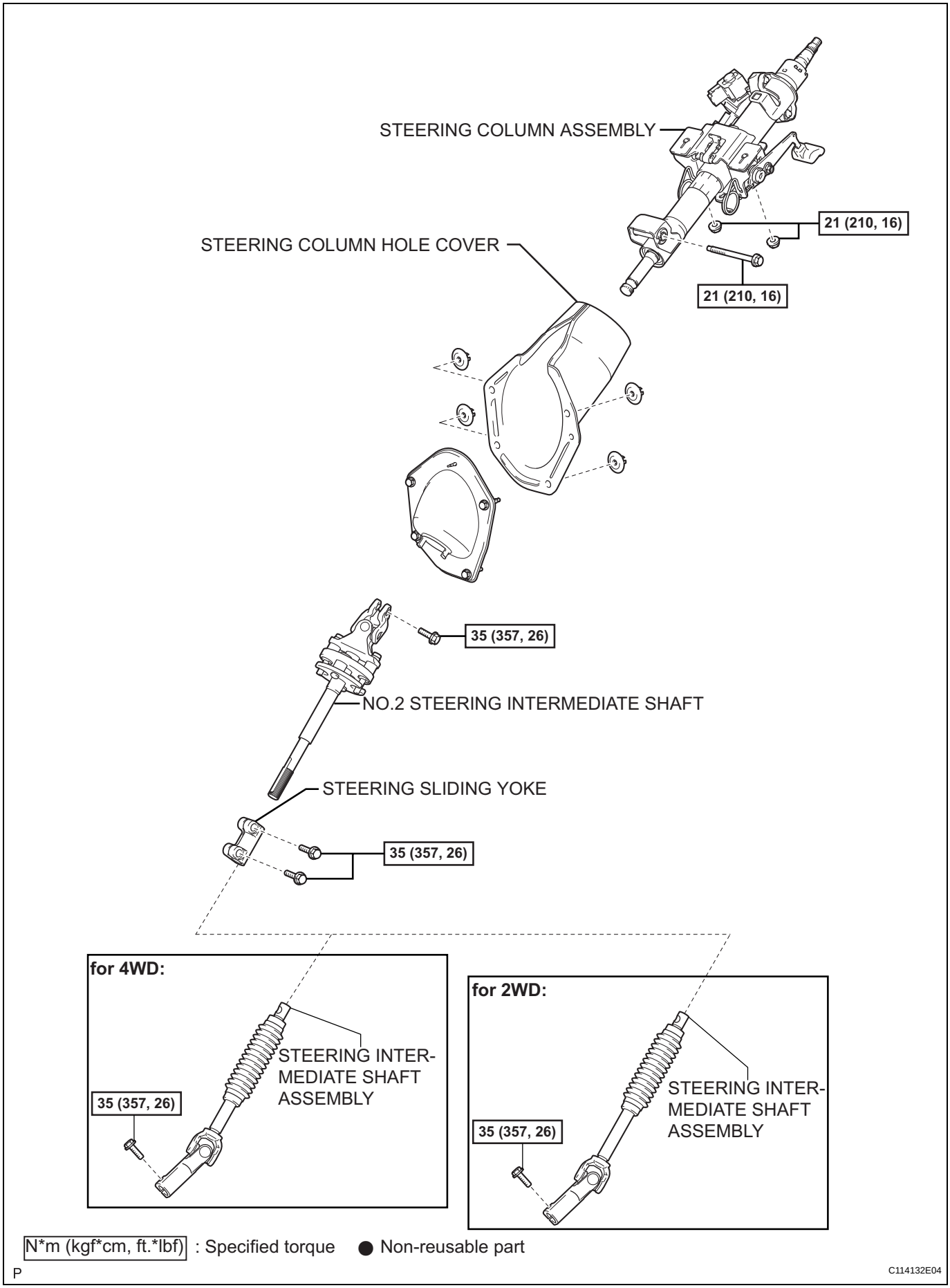

N*m (kgf*cm, ft.*lbf) : Specified torque ● Non-reusable part

P

C114132E04

SR

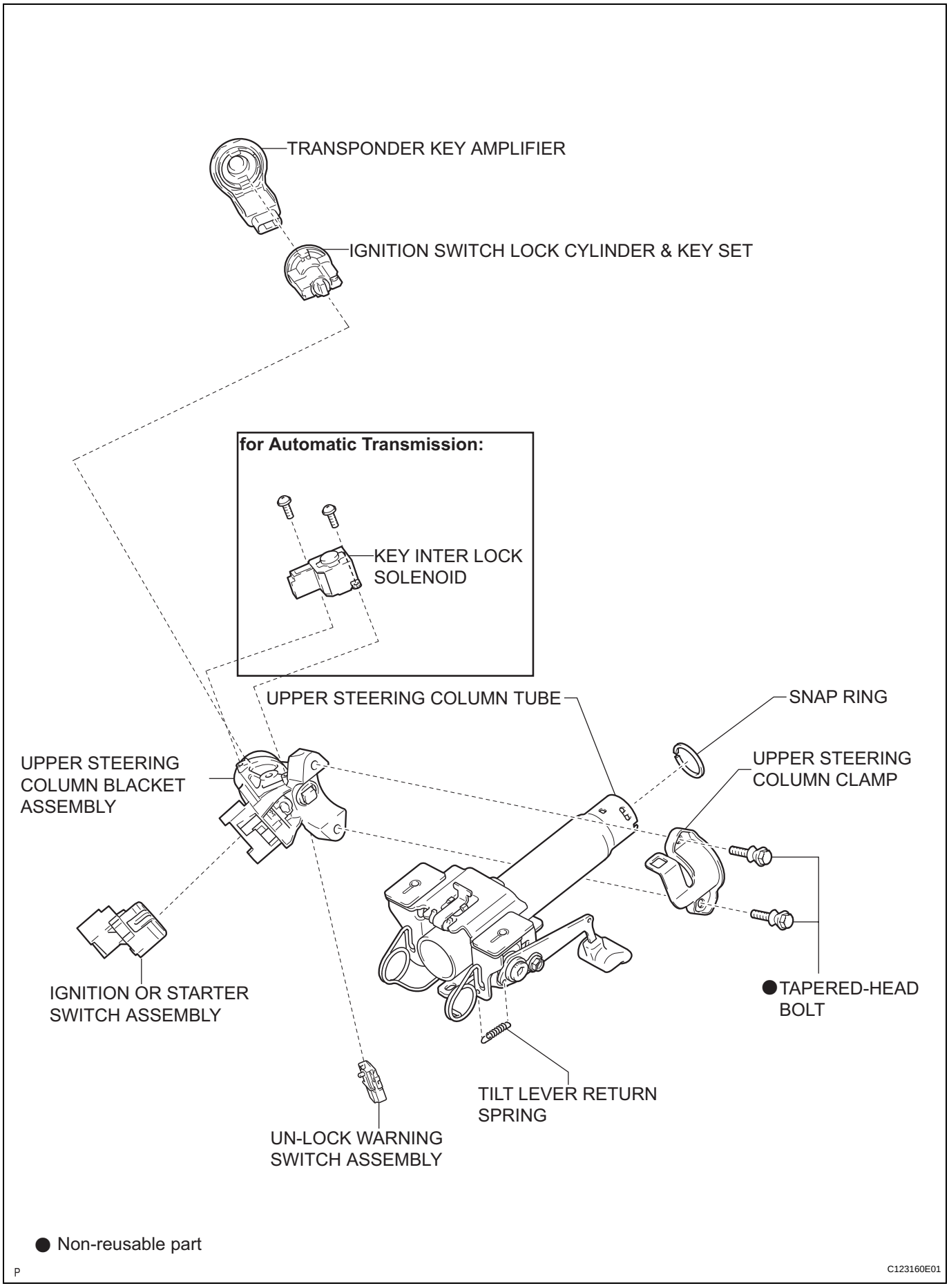
TRANSPONDER KEY AMPLIFIER
IGNITION SWITCH LOCK CYLINDER & KEY SET
for Automatic Transmission:
KEY INTER LOCK SOLENOID
UPPER STEERING COLUMN TUBE
SNAP RING
UPPER STEERING COLUMN BLACKET ASSEMBLY
UPPER STEERING COLUMN CLAMP
IGNITION OR STARTER SWITCH ASSEMBLY
● TAPERED-HEAD BOLT
TILT LEVER RETURN SPRING
UN-LOCK WARNING SWITCH ASSEMBLY
● Non-reusable part
P
C123160E01

SR

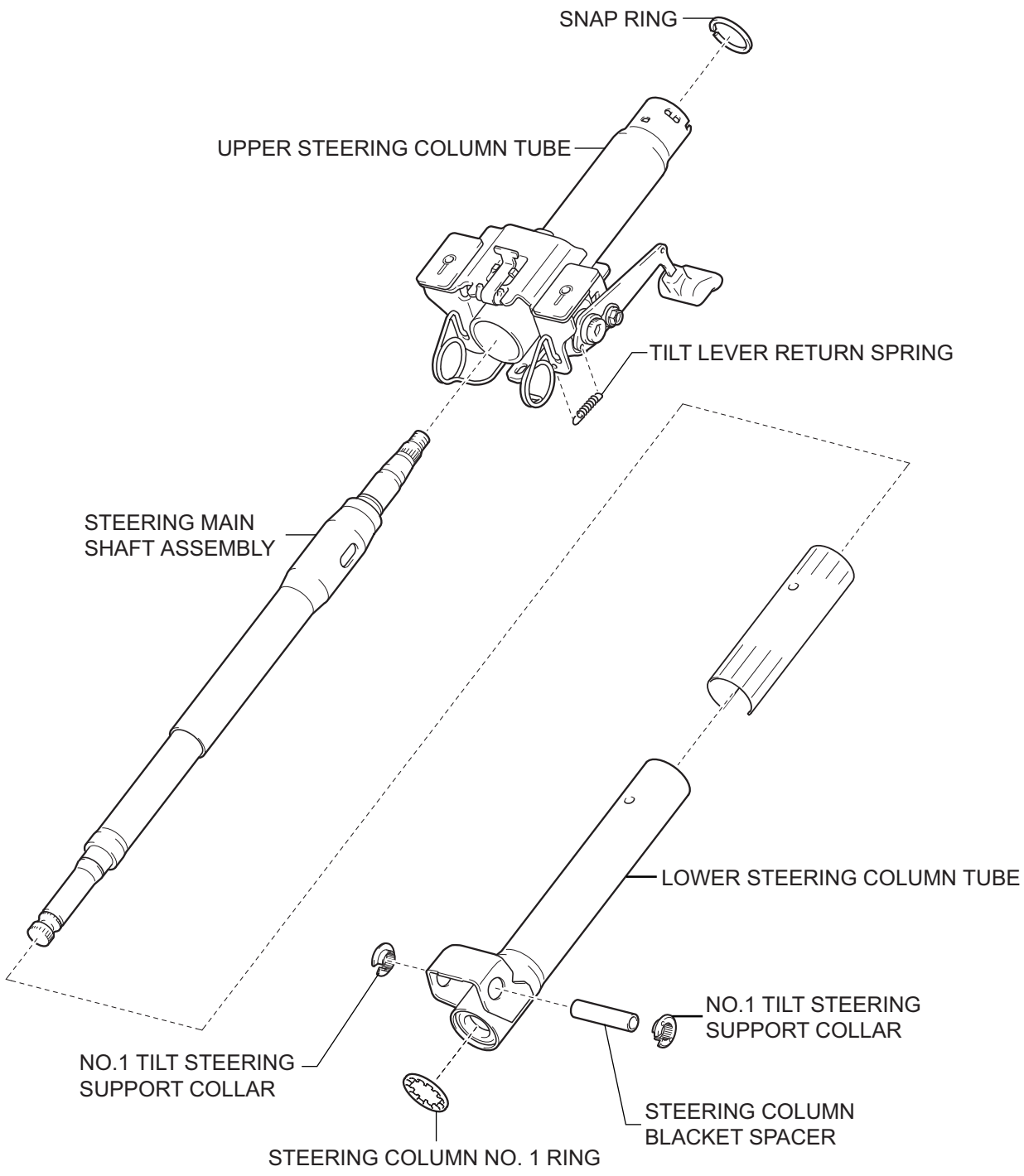

P

C114142E03

POWER STEERING SYSTEM

PRECAUTION

1. HANDLING PRECAUTIONS FOR STEERING SYSTEM

(a) Care must be taken when replacing parts. Incorrect replacement could affect the performance of the steering system and result in driving hazards.

2. HANDLING PRECAUTIONS FOR SRS AIRBAG SYSTEM

(a) The vehicle is equipped with SRS (Supplemental Restraint System), such as airbags. If service operation is not carried out properly in the correct sequence, the airbag may suddenly deploy and this may result in serious injury. Before servicing (including inspection, replacement, removal and inspection of parts), be sure to read the precautionary notices for the supplemental restraint system (See page RS-1).

PROBLEM SYMPTOMS TABLE

HINT:
Use the table below to help you find the cause of the problems. The numbers indicate the ranked order of probability of each of the possible causes. Check each part in the order suggested. If necessary, replace these applicable parts.

Symptom	Suspected area	See page
Hard steering	1. Tires (Improperly inflated)	TW-1
	2. Power steering fluid level (Low)	PS-3
	3. Drive belt (Loose) (2TR-FE)	EM-5
	4. Drive belt (Loose) (1GR-FE)	EM-5
	5. Front wheel alignment (Incorrect) (2WD)	SP-2
	6. Front wheel alignment (Incorrect) (4WD and Pre-Runner)	SP-7
	7. Steering system joints (Worn)	-
	8. Suspension arm ball joints (Worn) (2WD)	SP-36
	9. Suspension arm ball joints (Worn) (4WD and Pre-Runner)	SP-43
	10. Steering column (Binding)	-
	11. Vane pump (2TR-FE)	PS-21
	12. Vane pump (1GR-FE)	PS-11
	13. Power steering link (2WD)	PS-35
	14. Power steering link (4WD and Pre-Runner)	PS-60
Poor return	1. Tires (Improperly inflated)	TW-1
	2. Front wheel alignment (Incorrect) (2WD)	SP-2
	3. Front wheel alignment (Incorrect) (4WD and Pre-Runner)	SP-7
	4. Steering column (Binding)	-
	5. Power steering link (2WD)	PS-35
	6. Power steering link (4WD and Pre-Runner)	PS-60
Excessive play	1. Steering system joints (Worn)	-
	2. Suspension arm ball joints (Worn) (2WD)	SP-36
	3. Suspension arm ball joints (Worn) (4WD and Pre-Runner)	SP-43
	4. Intermediate shaft, Sliding yoke (Worn)	-
	5. Front wheel bearing (Worn)	AH-1
	6. Power steering link (2WD)	PS-35
	7. Power steering link (4WD and Pre-Runner)	PS-60
Abnormal noise	1. Power steering fluid level (Low)	PS-3
	2. Steering system joints (Worn)	-
	3. Vane pump (2TR-FE)	PS-21
	4. Vane pump (1GR-FE)	PS-11
	5. Power steering link (2WD)	PS-35
	6. Power steering link (4WD and Pre-Runner)	PS-60

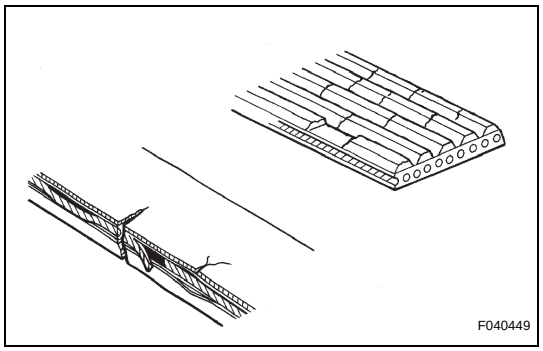

ON-VEHICLE INSPECTION

1. INSPECT DRIVE BELT

(a) Visually check the belt for defects, such as excessive wear and frayed cords.
If any defects are found, replace the drive belt.
HINT:
Cracks on the rib side of a belt are considered acceptable. Replace the belt if there are any missing ribs.

2. BLEED POWER STEERING SYSTEM

(a) Check the fluid level.
(b) Jack up the front of the vehicle and support it with stands.
(c) Turn the steering wheel.
  (1) With the engine stopped, turn the wheel slowly from lock to lock several times.
(d) Lower the vehicle.
(e) Start the engine.
  (1) Run the engine at idle for a few minutes.
(f) Turn the steering wheel.
  (1) With the engine idling, turn the wheel to the left or right full lock position and keep it there for 2 to 3 seconds. Then turn the wheel to the opposite full lock position and keep it there for 2 to 3 seconds (step A).
  (2) Repeat step A several times.
(g) Stop the engine.
(h) Check for foaming or emulsification.
Especially, if the system has to be bled twice because of foaming or emulsification, check for fluid leakage in the system.
(i) Check the fluid level.

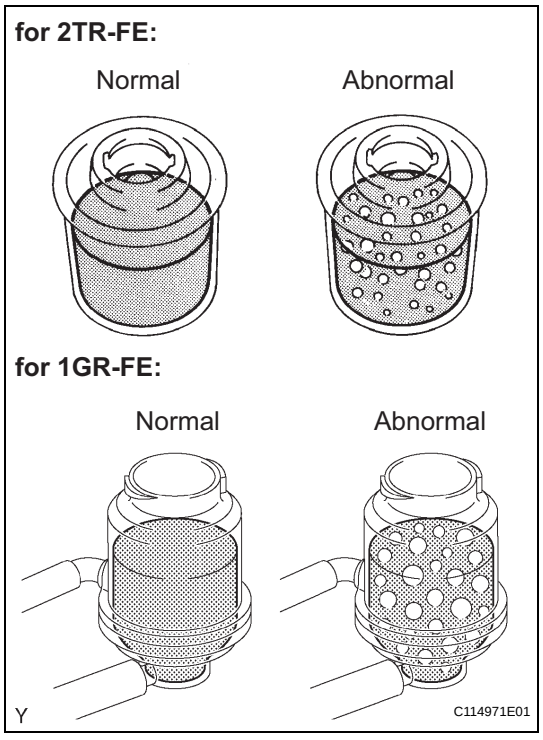

PS

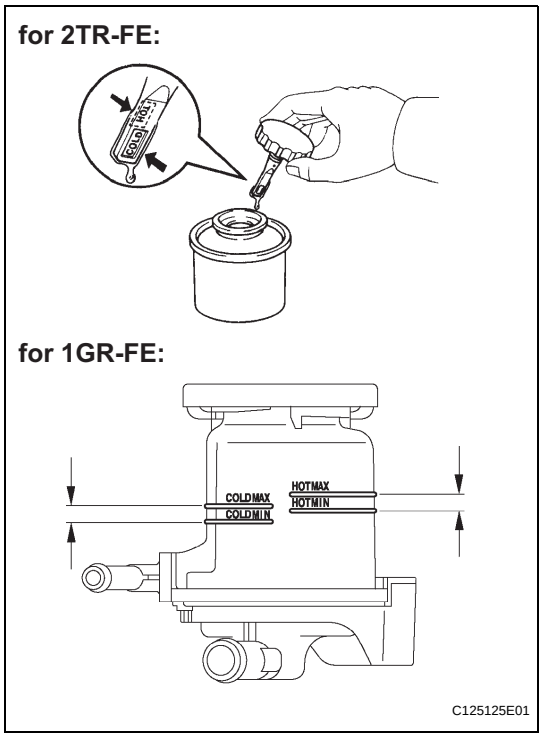

3. INSPECT FLUID LEVEL

(a) Keep the vehicle level.

(b) With the engine stopped, check the fluid level in the oil reservoir.
If necessary, add fluid.
Fluid:
ATF "DEXRON" II or III
HINT:
Check that the fluid level is within the HOT level range in the reservoir tank. If the fluid is cold, check that it is within the COLD level range.

(c) Start the engine and let it idle.

(d) Turn the steering wheel from lock to lock several times to raise fluid temperature.
Fluid temperature:
75 to 80°C (167 to 176°F)

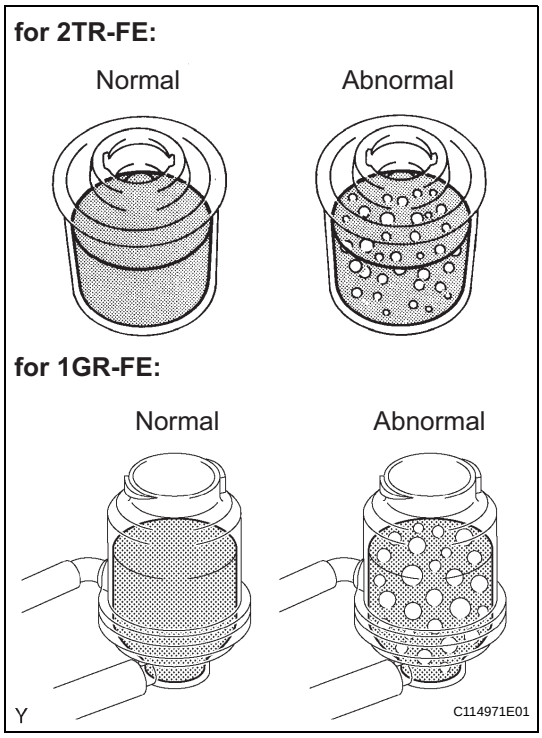

(e) Check for foaming or emulsification.
If any foaming or emulsification is identified, bleed the power steering system.

PS

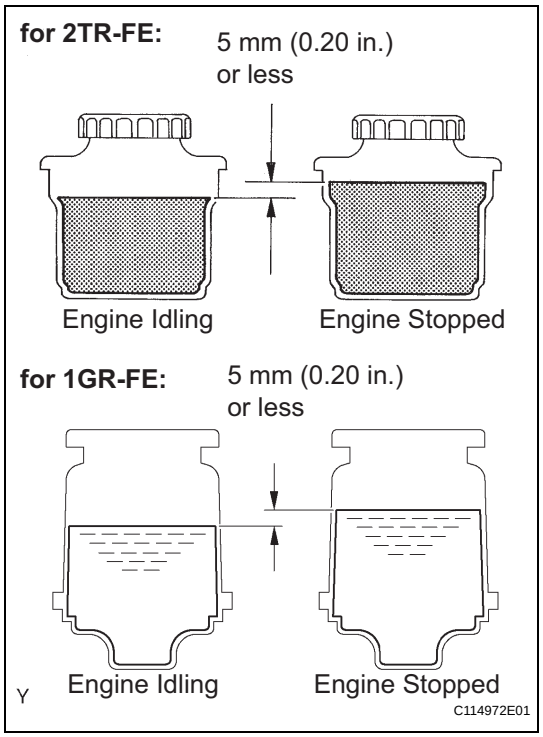

(f) With the engine idling, measure the fluid level in the oil reservoir.
(g) Stop the engine.
(h) Wait a few minutes and measure the fluid level in the oil reservoir again.
Maximum fluid level rise:
5 mm (0.20 in.)
If any problems are found, bleed the power steering system.
(i) Check the fluid level.

4. INSPECT STEERING FLUID PRESSURE

(a) for 2TR-FE:
(1) Disconnect the pressure feed tube from the vane pump (See page PS-19).
(b) for 1GR-FE:
(1) Disconnect the pressure feed tube from the vane pump (See page PS-9).
(c) Connect SST as shown in the illustration.
SST 09640-10010 (09641-01010, 09641-01030, 09641-01060)
NOTICE:
Check that the valve of SST is in the open position.
(d) Bleed the power steering system.
(e) Start the engine and let it idle.
(f) Turn the steering wheel from lock to lock several times to raise the fluid temperature.
Fluid temperature:
75 to 80 °C (167 to 176 °F)

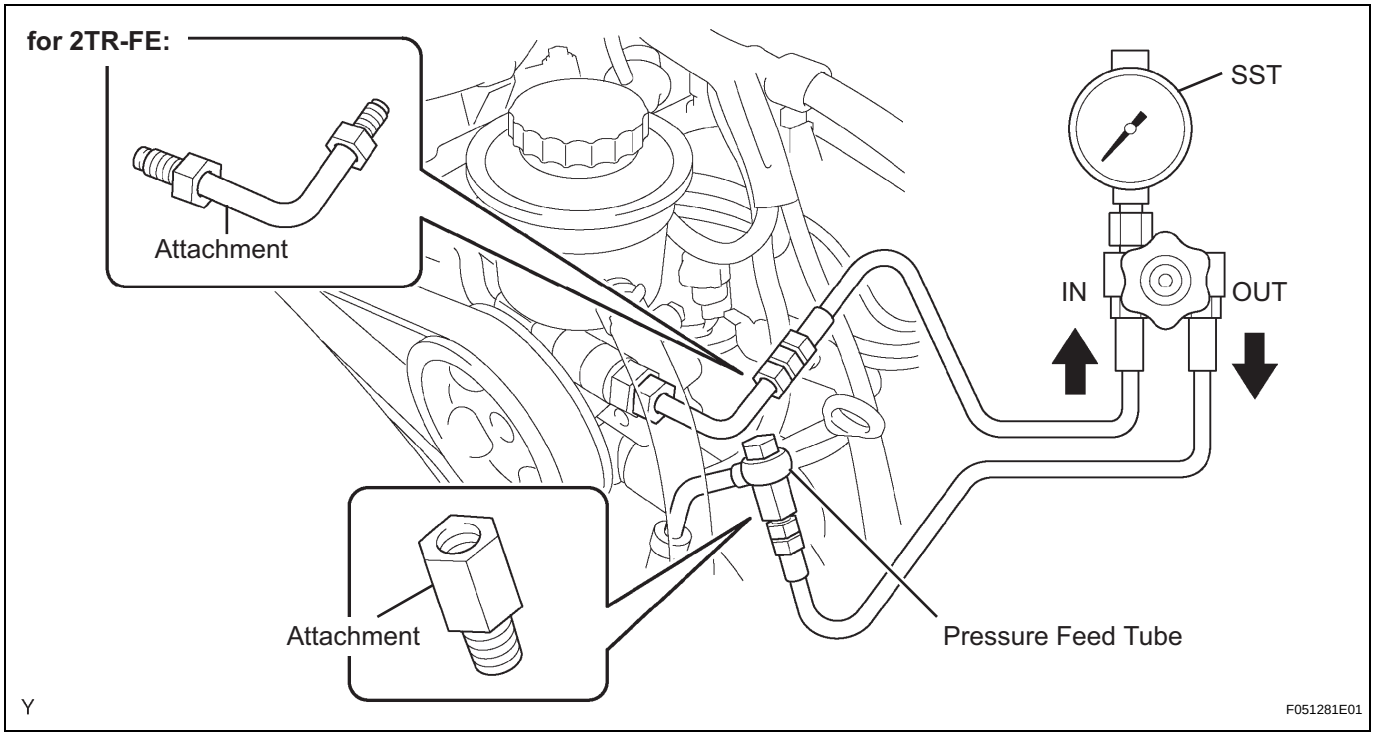

PS

for 1GR-FE:

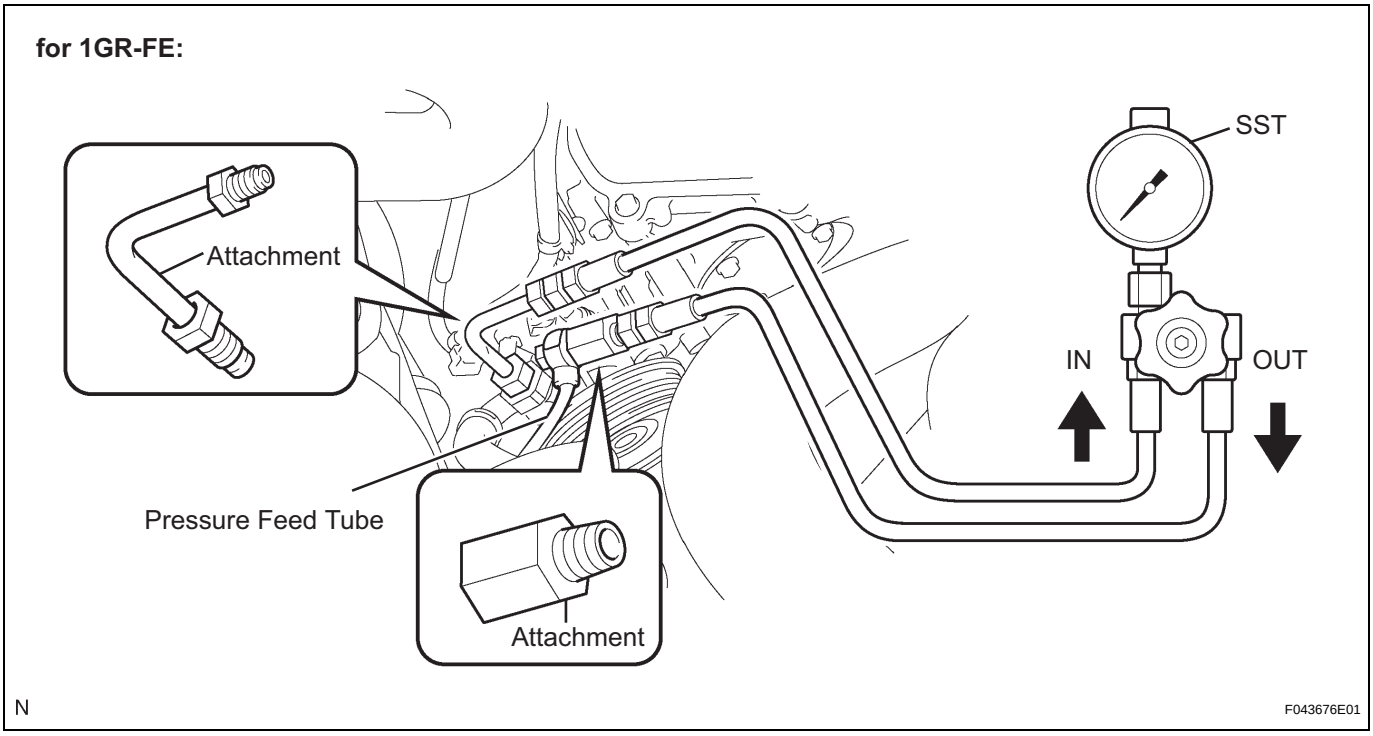

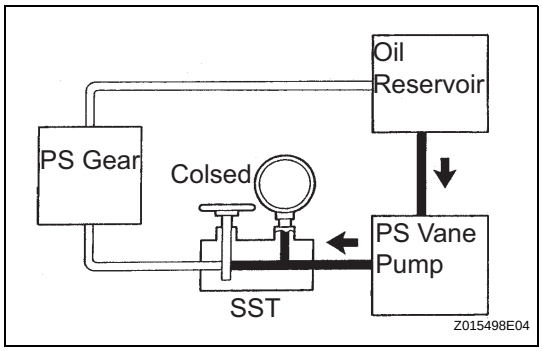

(g) With the engine idling, close the valve of SST and check the reading on SST.
Fluid pressure:

8,300 to 8,800 kPa (85 to 90 kgf/cm^2, 1,209 to 1,280 psi)
NOTICE:
- **Do not keep the valve closed for more than 10 seconds.**
- **Do not let the fluid temperature become too high.**

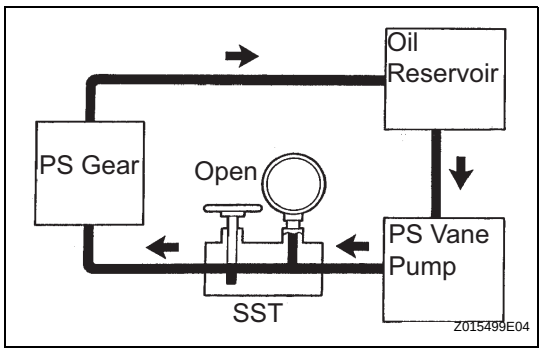

(h) With the engine idling, fully open the valve.
(i) Measure the fluid pressure at the engine speeds of 1,000 rpm and 3,000 rpm.
Fluid pressure difference:

490 kPa (5 kgf/cm^2, 71 psi) or less
NOTICE:
Do not turn the steering wheel.

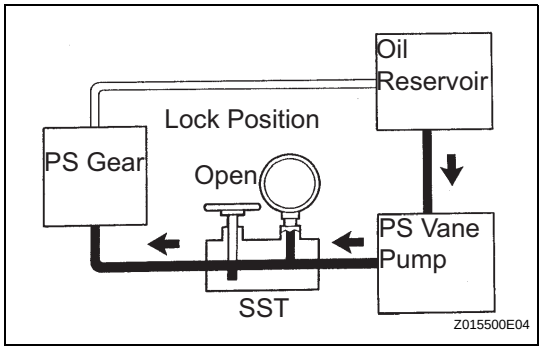

(j) With the engine idling and valve fully open, turn the steering wheel to the full lock position.
Fluid pressure:

8,300 to 8,800 kPa (85 to 90 kgf/cm^2, 1,209 to 1,280 psi)
NOTICE:
- **Do not keep the steering wheel in the full lock position for more than 10 seconds.**
- **Do not let the fluid temperature become too high.**

PS

(k) Disconnect SST.
(l) for 2TR-FE:
  (1) Connect the pressure feed tube to the vane pump (See page PS-25).
(m) for 1GR-FE:
  (1) Connect the pressure feed tube to the vane pump (See page PS-15).
(n) Bleed the power steering system.

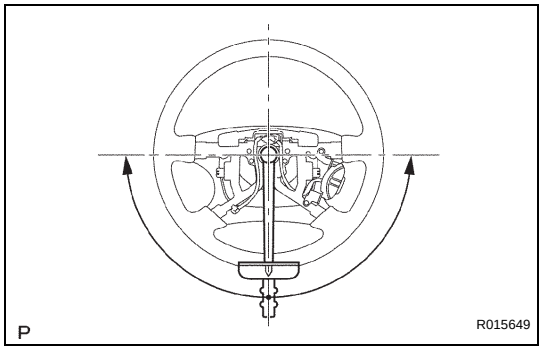

5. INSPECT STEERING EFFORT

(a) Center the steering wheel assembly.
(b) Remove the horn button assembly (See page RS-558).
(c) Start the engine and let it idle.
(d) Measure the steering effort in both directions.
Steering effort (Reference):
6.0 N*m (60 kgf*cm, 53 in.*lbf) or less
HINT:
Check the tire type, pressure and contact surfaces before making a diagnosis.
(e) Install the steering wheel assembly set nut.
Torque: 50 N*m (510 kgf*cm, 37 ft.*lbf)
(f) Install the horn button assembly (See page RS-558).

VANE PUMP (for 1GR-FE)

COMPONENTS

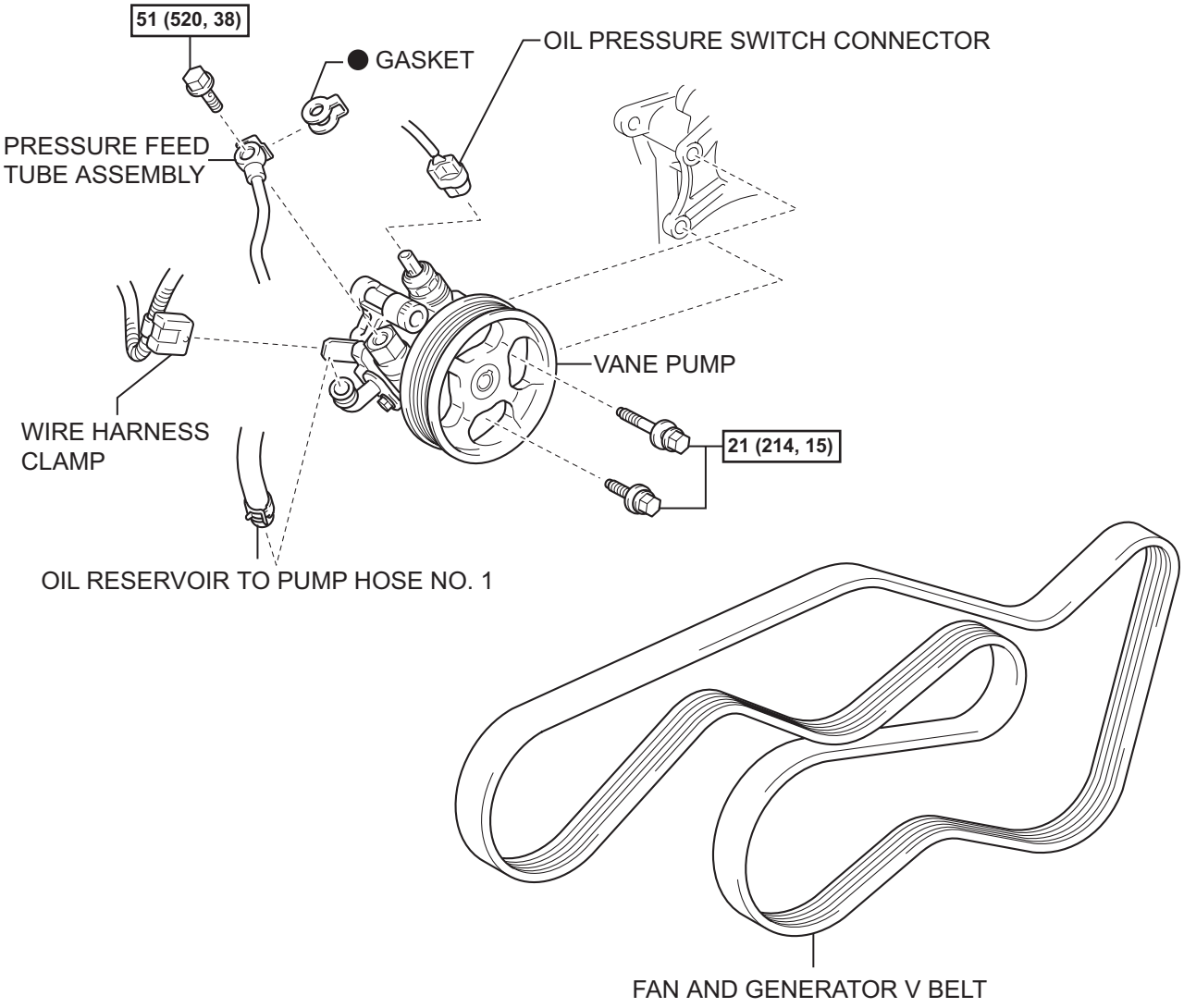

PS

N*m (kgf*cm, ft*lbf) : Specified torque

● Non-reusable part

Y

C114195E01

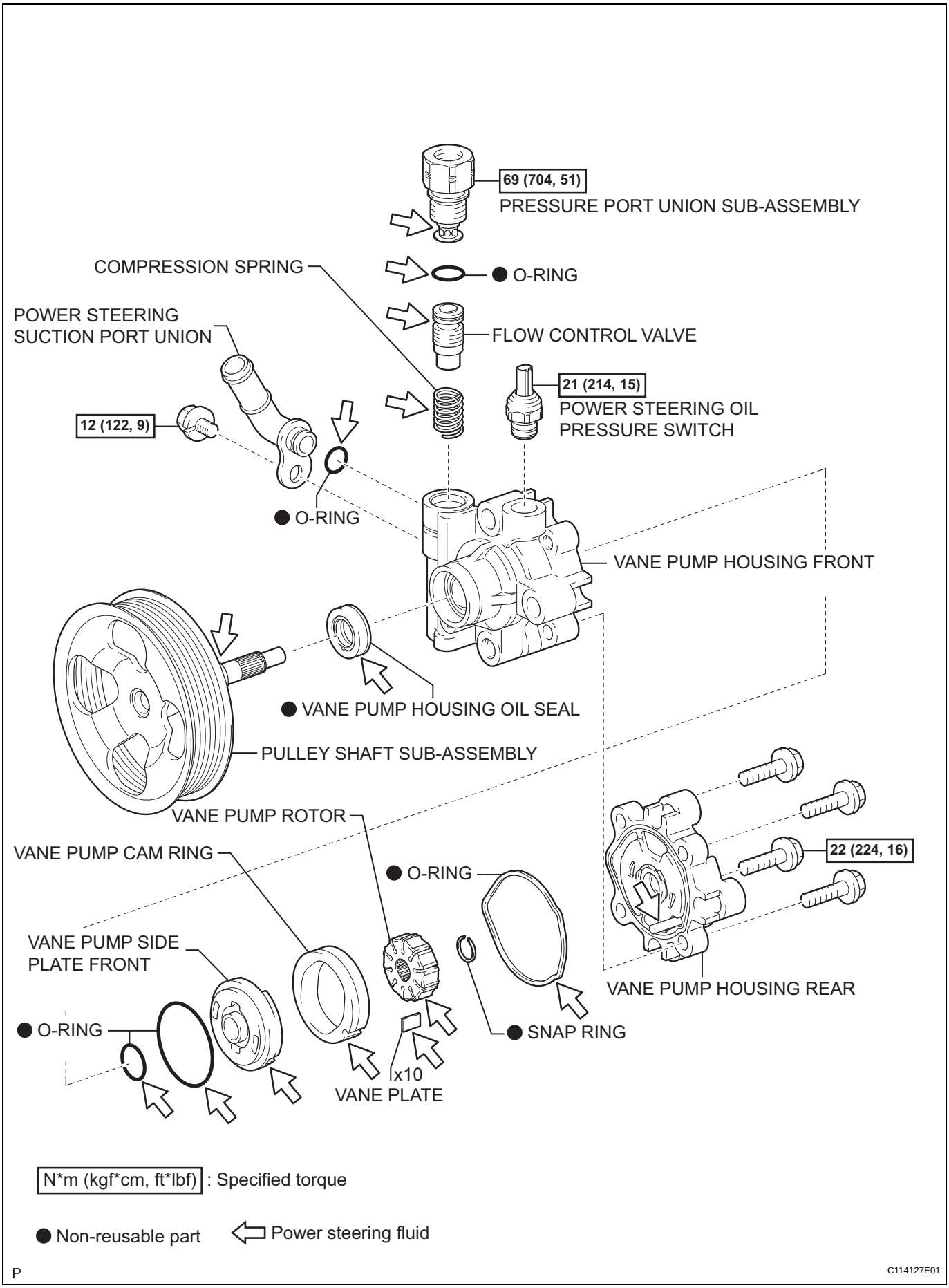

PS

P

C114127E01

VANE PUMP (for 2TR-FE)

COMPONENTS

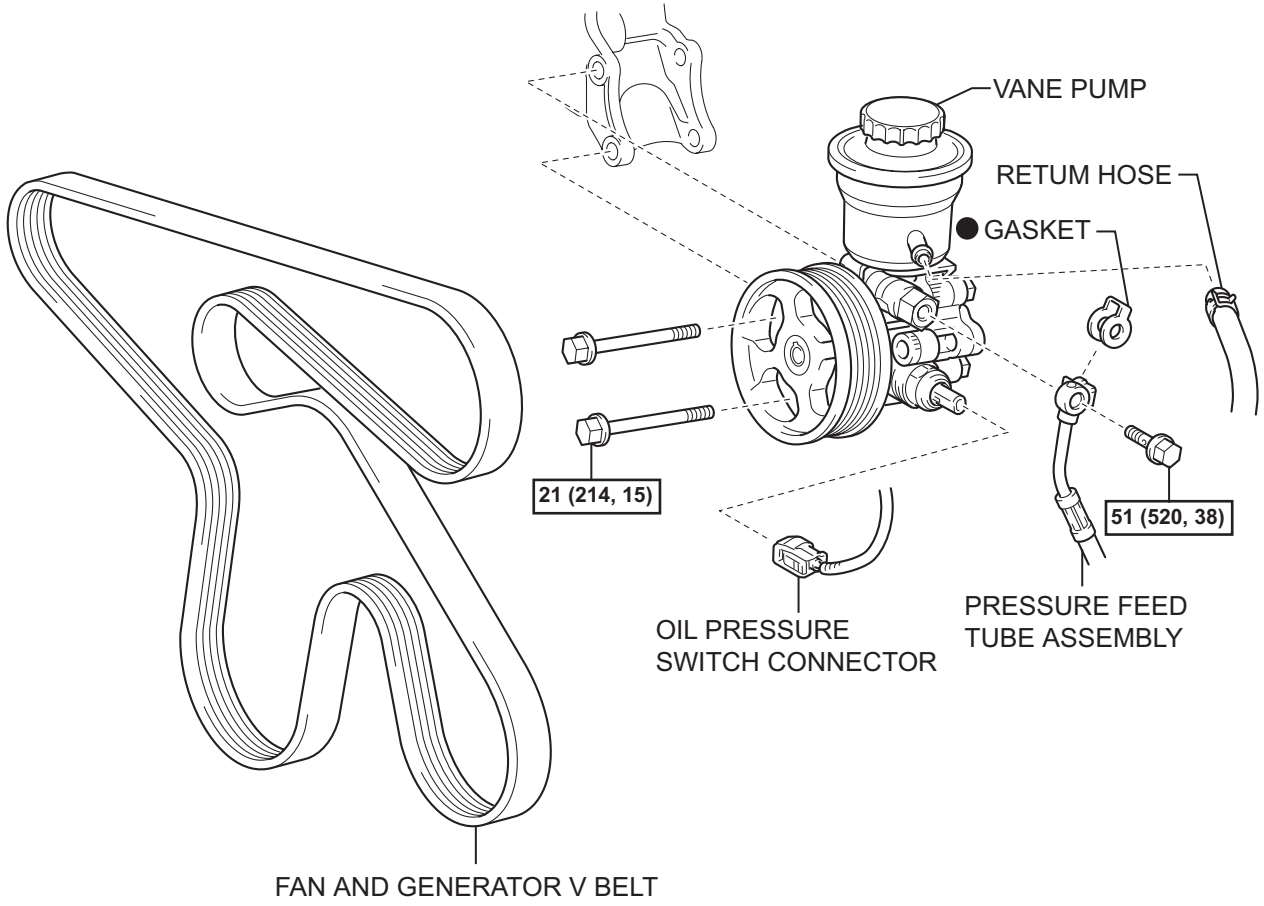

N*m (kgf*cm, ft*lbf) : Specified torque

● Non-reusable part

Y

C114204E01

PS

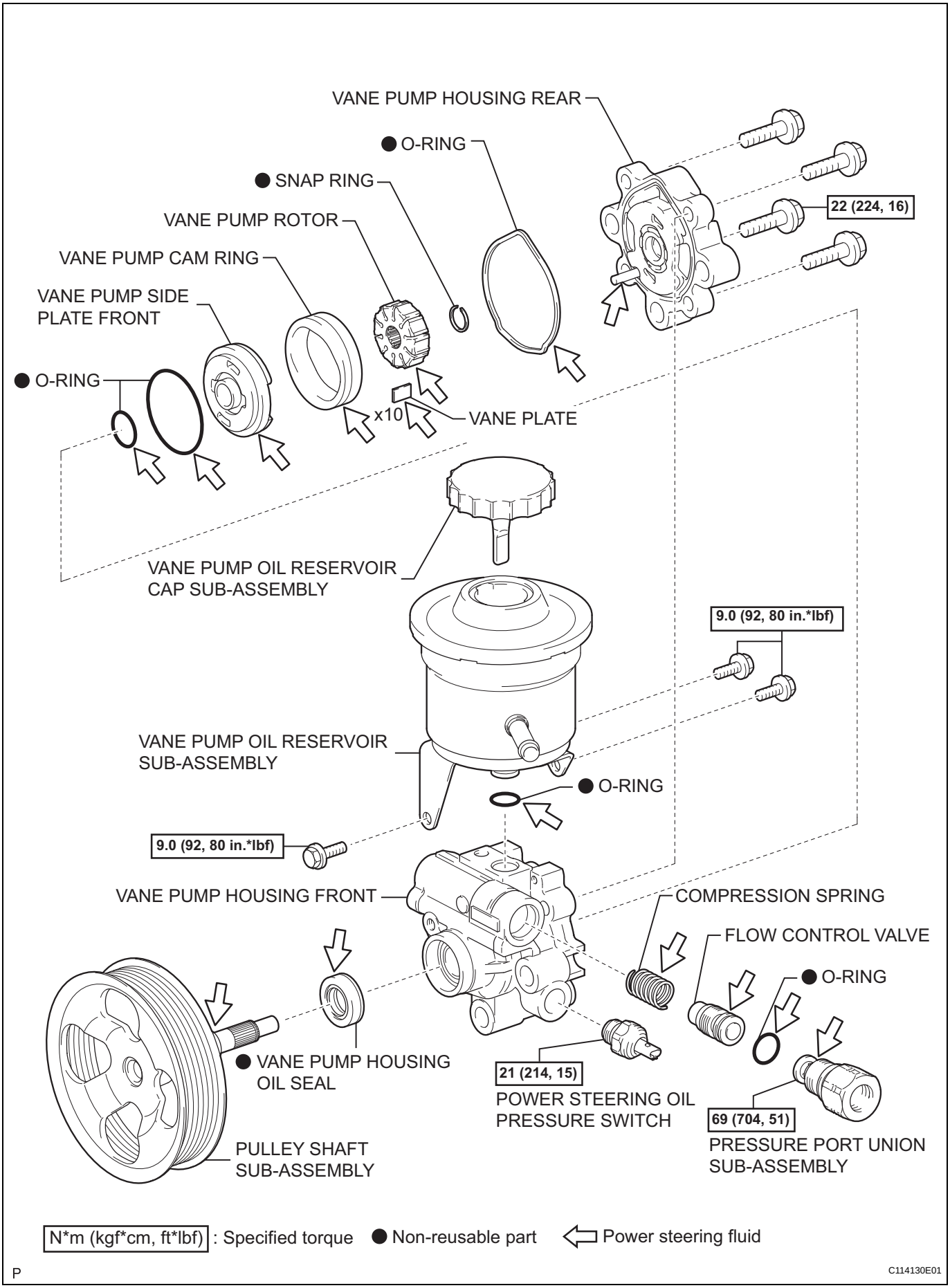

PS

P

C114130E01

POWER STEERING LINK (for 2WD)

COMPONENTS

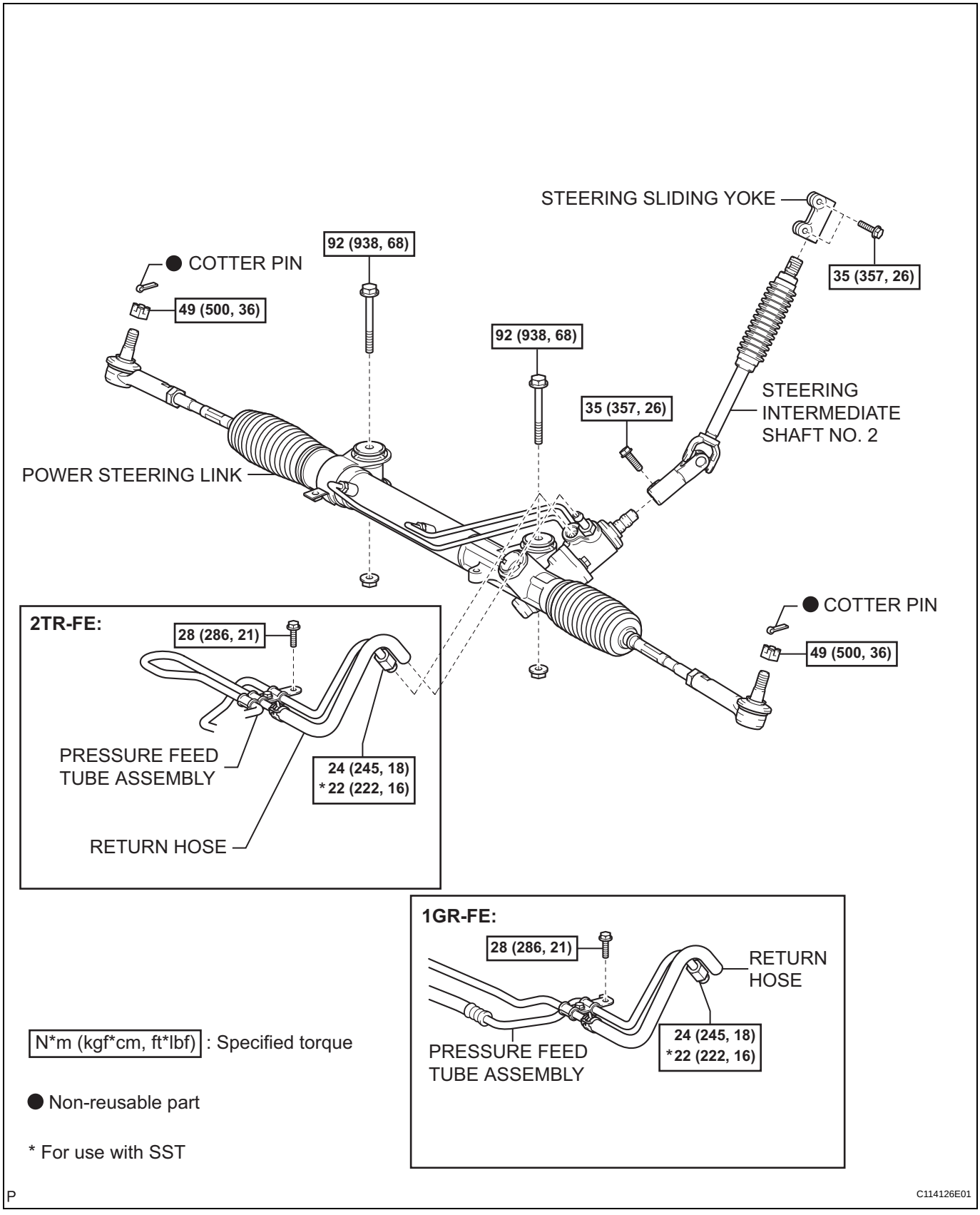

PS

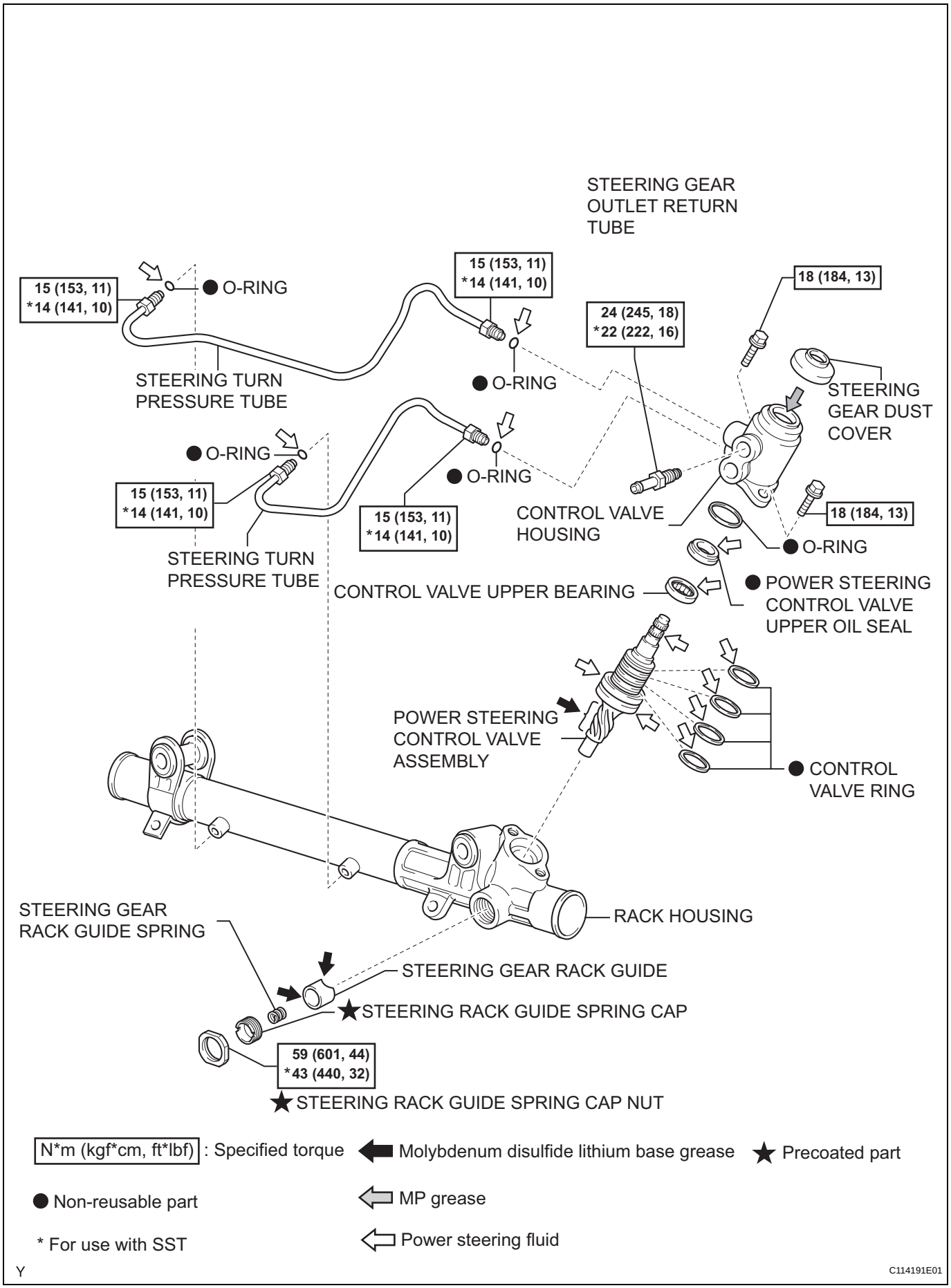
STEERING GEAR OUTLET RETURN TUBE
15 (153, 11) *14 (141, 10)
O-RING
15 (153, 11) *14 (141, 10)
18 (184, 13)
24 (245, 18) *22 (222, 16)
STEERING TURN PRESSURE TUBE
O-RING
STEERING GEAR DUST COVER
O-RING
O-RING
15 (153, 11) *14 (141, 10)
15 (153, 11) *14 (141, 10)
CONTROL VALVE HOUSING
18 (184, 13)
O-RING
STEERING TURN PRESSURE TUBE
CONTROL VALVE UPPER BEARING
POWER STEERING CONTROL VALVE UPPER OIL SEAL
POWER STEERING CONTROL VALVE ASSEMBLY
CONTROL VALVE RING
STEERING GEAR RACK GUIDE SPRING
RACK HOUSING
STEERING GEAR RACK GUIDE
STEERING RACK GUIDE SPRING CAP
59 (601, 44) *43 (440, 32)
STEERING RACK GUIDE SPRING CAP NUT
N*m (kgf*cm, ft*lbf) : Specified torque
Molybdenum disulfide lithium base grease
Precoated part
Non-reusable part
MP grease
* For use with SST
Power steering fluid
Y
C114191E01

PS

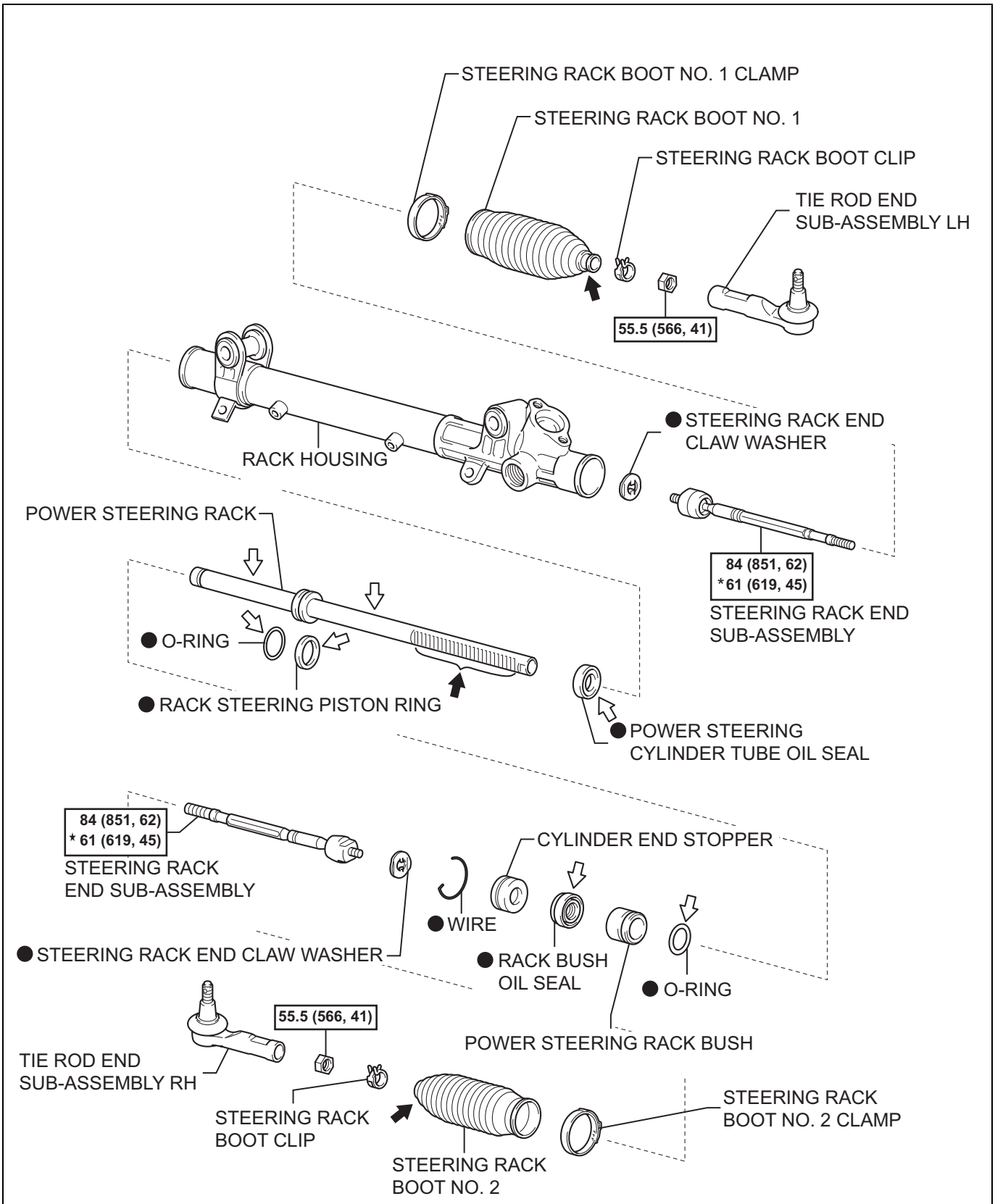

PS

Y

C114192E01

POWER STEERING LINK (for 4WD and Pre-Runner)

COMPONENTS

for 2TR-FE:

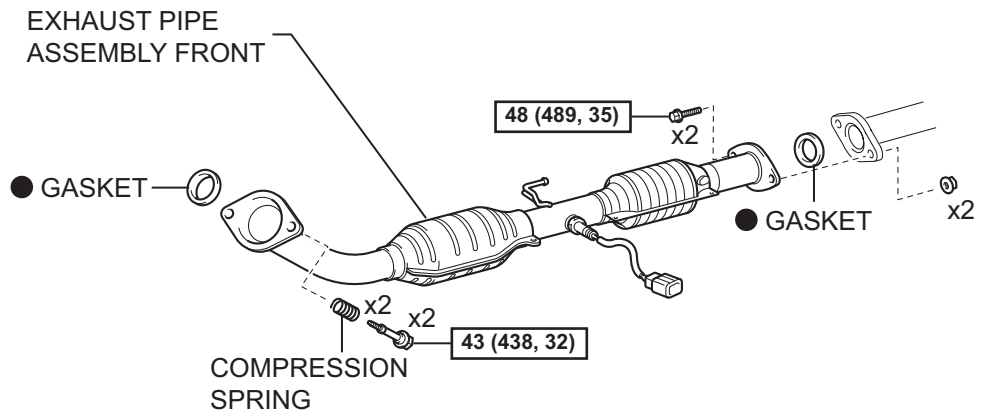

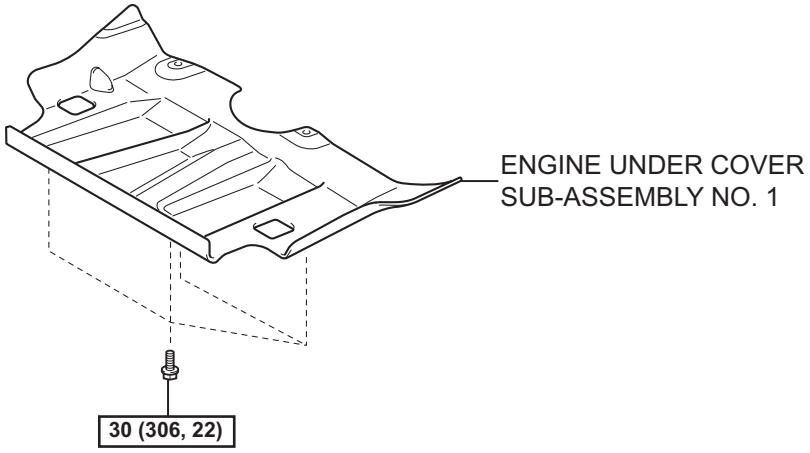

PS

N*m (kgf*cm, ft*lbf) : Specified torque

● Non-reusable part

Y

C123601E01

for 1GR-FE:

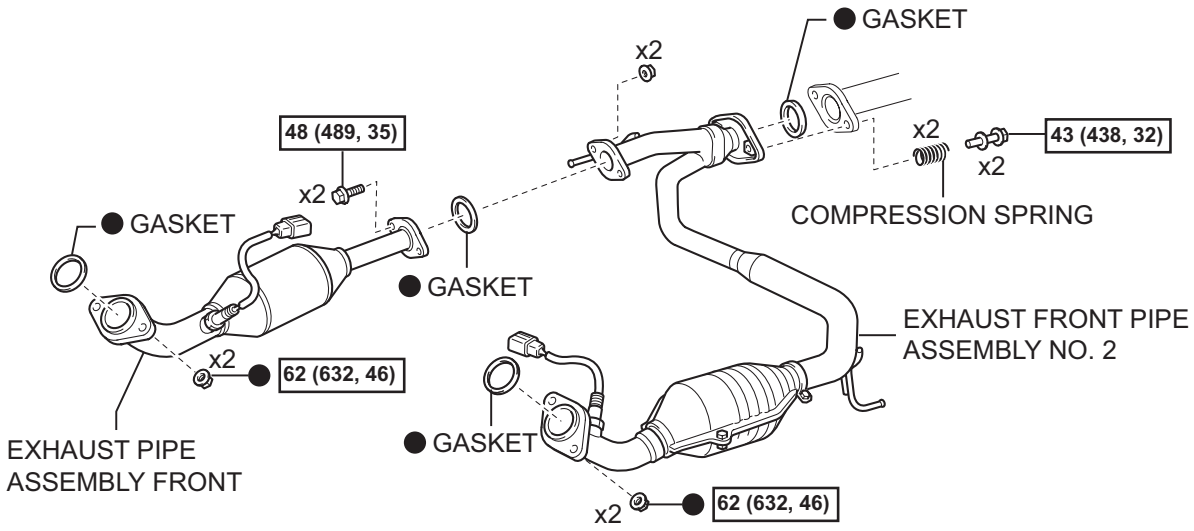

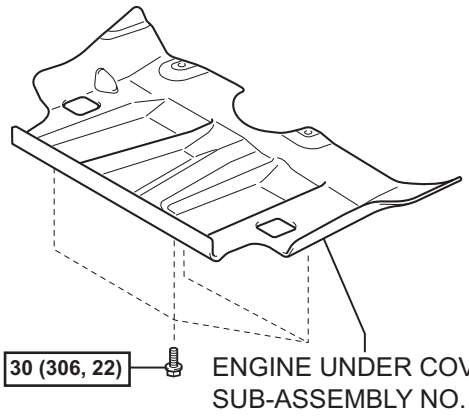

for 4WD:

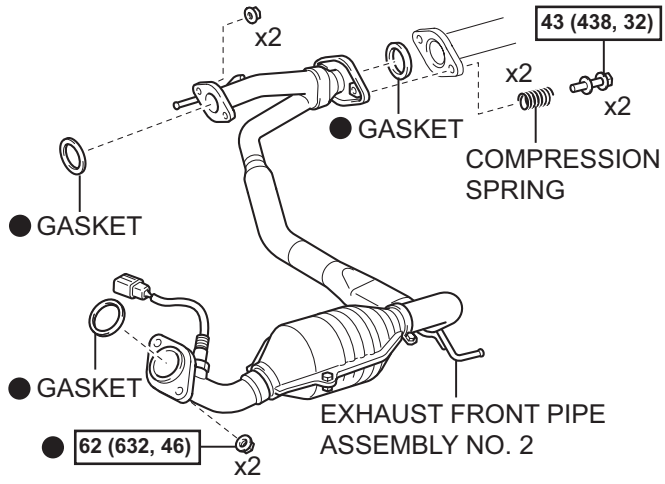

PS

N*m (kgf*cm, ft*lbf) : Specified torque

● Non-reusable part

Y

C114193E01

for Pre-Runner:

for Regular Cab:

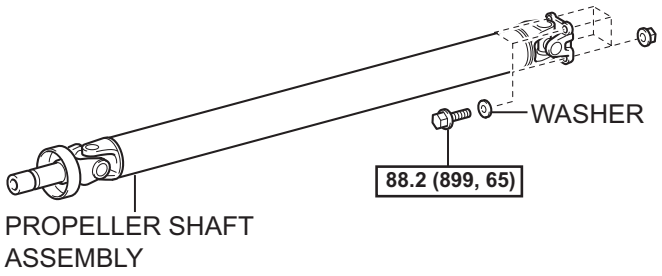

except for Regular Cab:

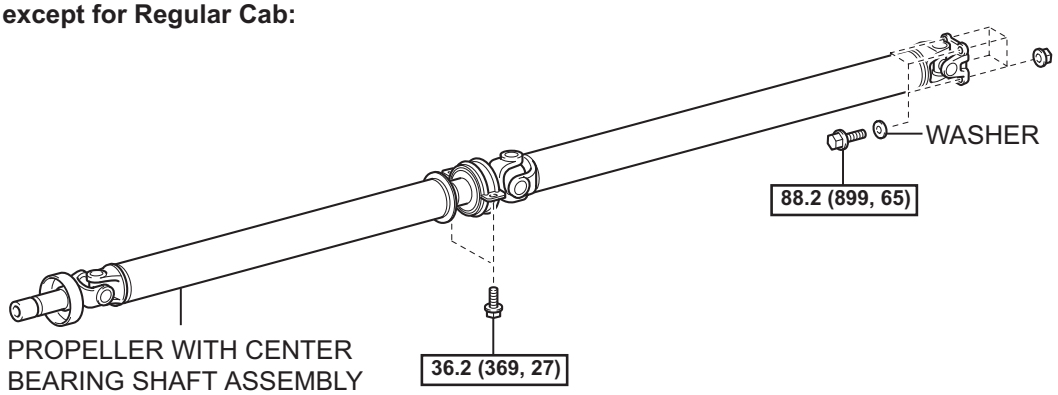

PS

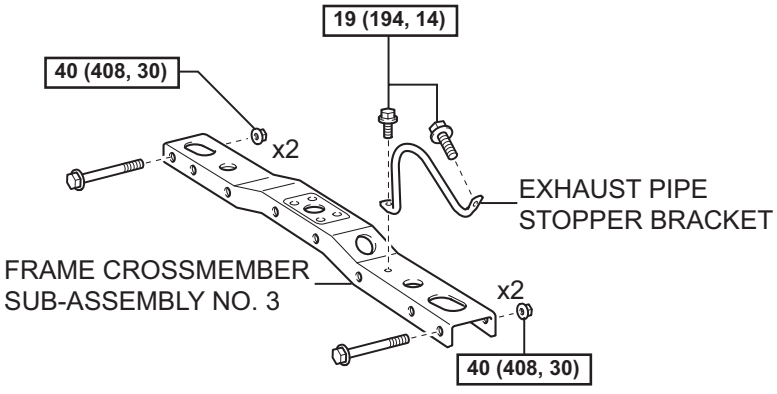

N*m (kgf*cm, ft*lbf) : Specified torque

Y

C123602E01

for 4WD:

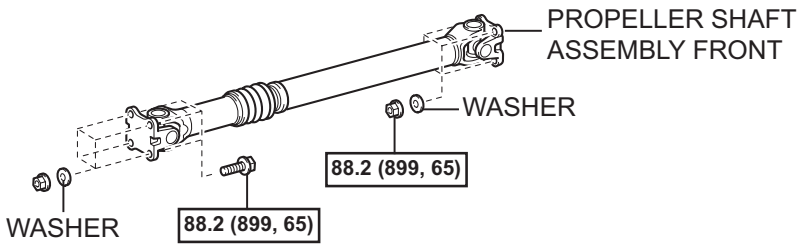

for Regular Cab:

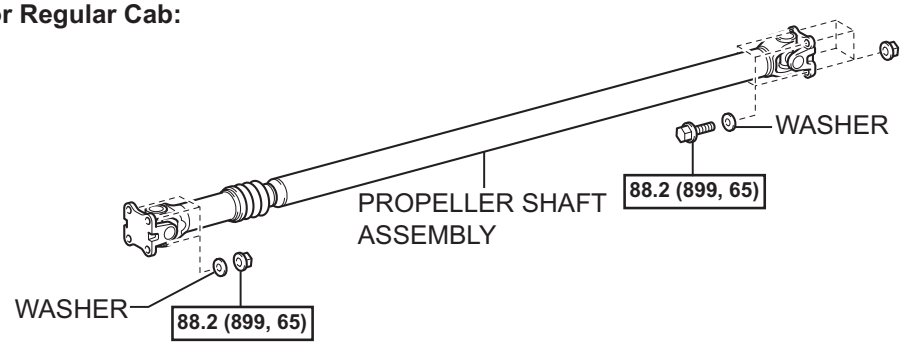

except for Regular Cab:

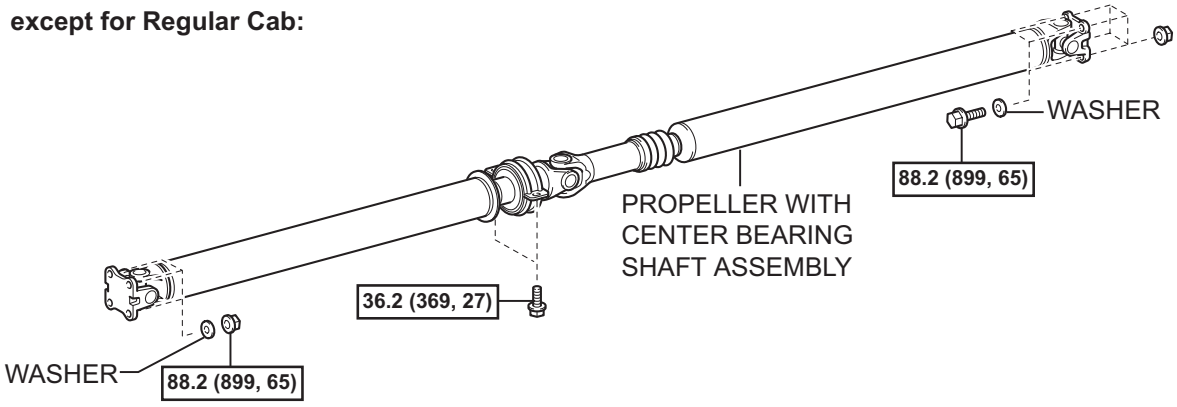

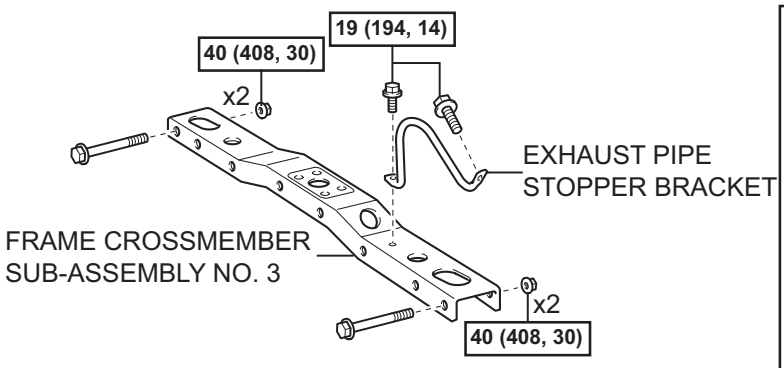

for 1GR-FE:

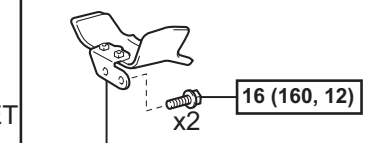

PS

N*m (kgf*cm, ft*lbf) : Specified torque

Y

C114194E01

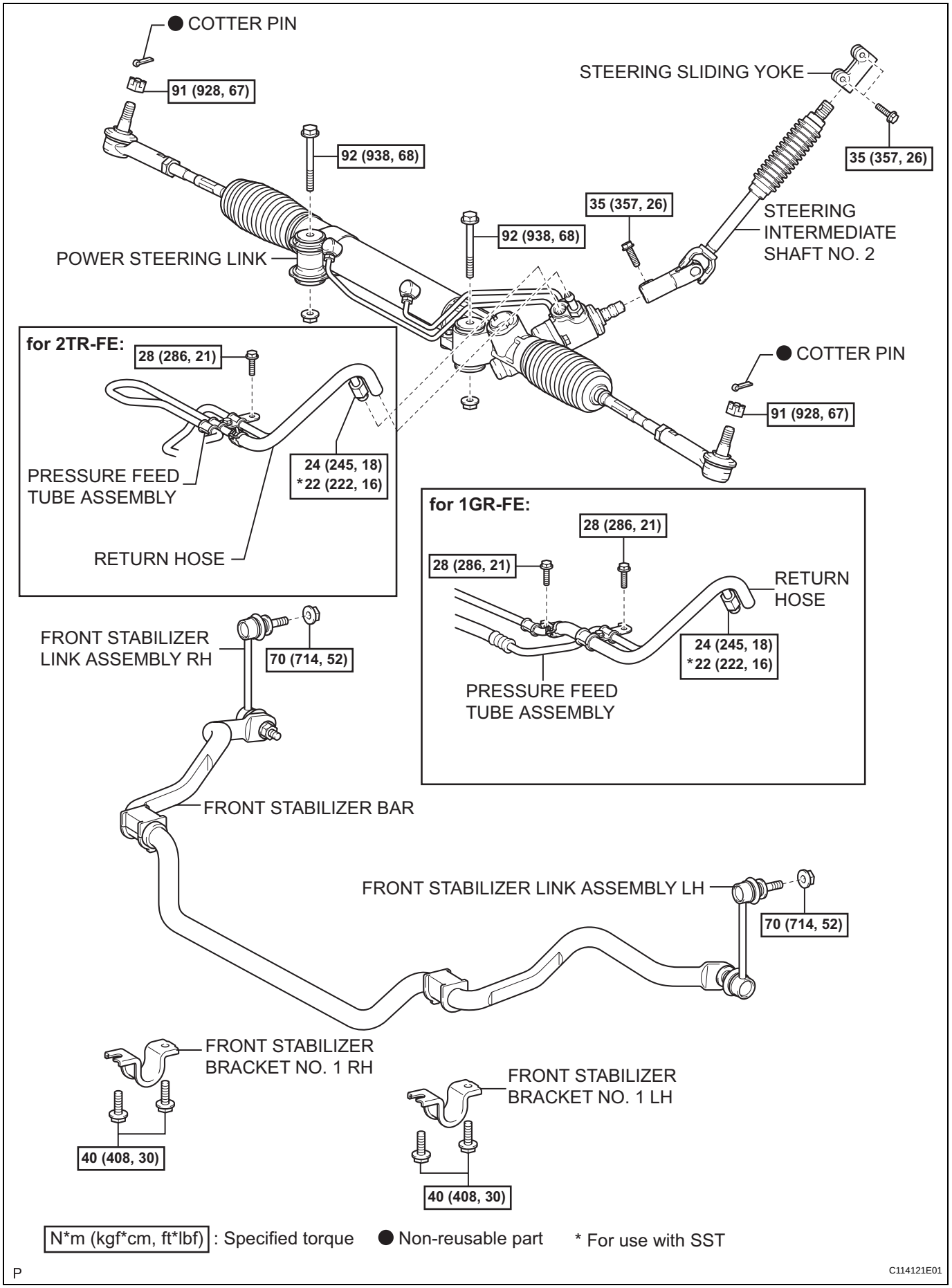

N*m (kgf*cm, ft*lbf) : Specified torque ● Non-reusable part * For use with SST

P

C114121E01

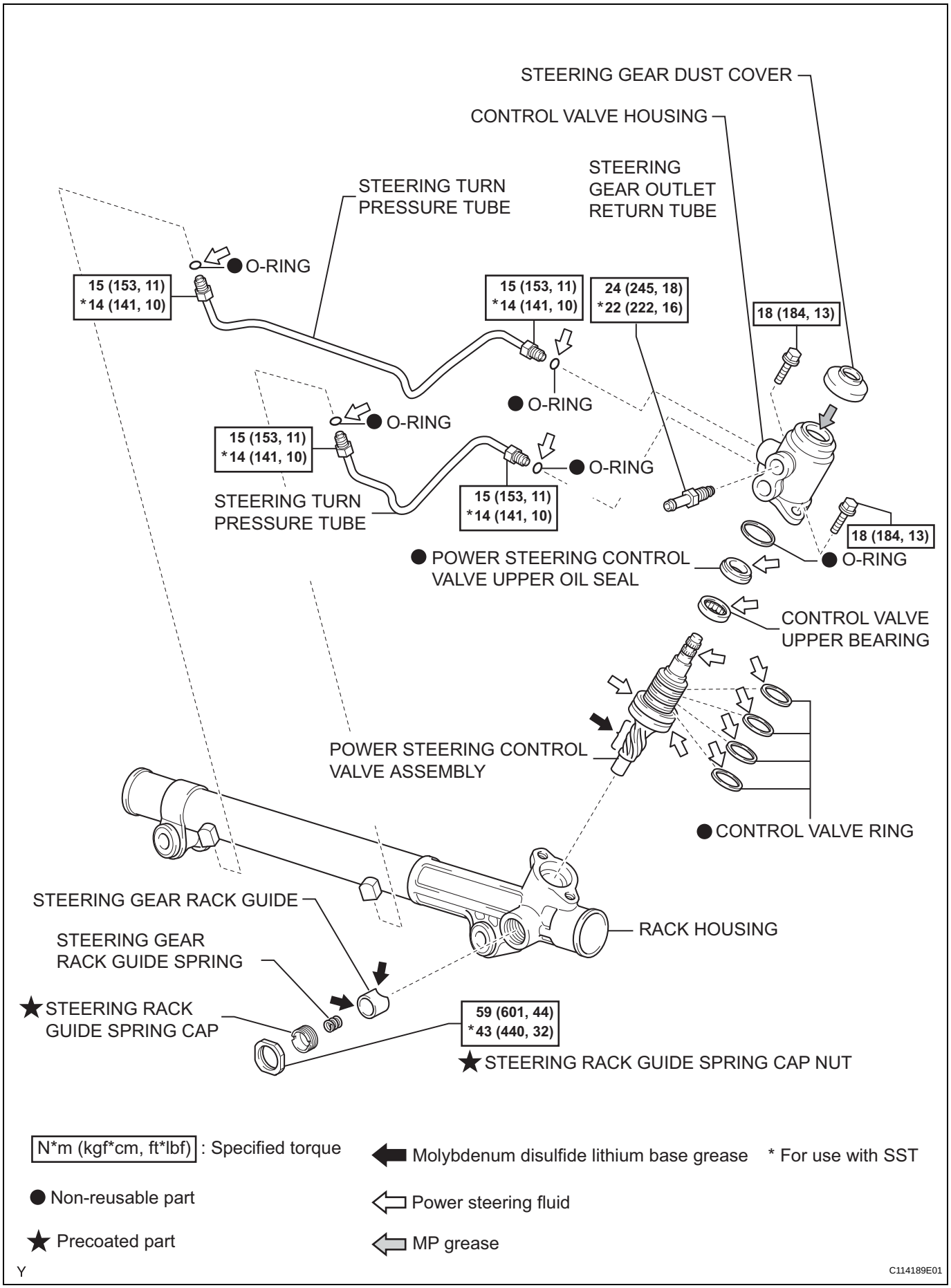
STEERING GEAR DUST COVER
CONTROL VALVE HOUSING
STEERING GEAR OUTLET RETURN TUBE
STEERING TURN PRESSURE TUBE
● O-RING
15 (153, 11) *14 (141, 10)
15 (153, 11) *14 (141, 10)
24 (245, 18) *22 (222, 16)
18 (184, 13)
● O-RING
● O-RING
15 (153, 11) *14 (141, 10)
● O-RING
STEERING TURN PRESSURE TUBE
15 (153, 11) *14 (141, 10)
18 (184, 13)
● POWER STEERING CONTROL VALVE UPPER OIL SEAL
● O-RING
CONTROL VALVE UPPER BEARING
POWER STEERING CONTROL VALVE ASSEMBLY
● CONTROL VALVE RING
STEERING GEAR RACK GUIDE
RACK HOUSING
STEERING GEAR RACK GUIDE SPRING
★ STEERING RACK GUIDE SPRING CAP
59 (601, 44) *43 (440, 32)
★ STEERING RACK GUIDE SPRING CAP NUT
N*m (kgf*cm, ft*lbf) : Specified torque
● Non-reusable part
★ Precoated part
Molybdenum disulfide lithium base grease
Power steering fluid
MP grease
* For use with SST
Y
C114189E01

PS

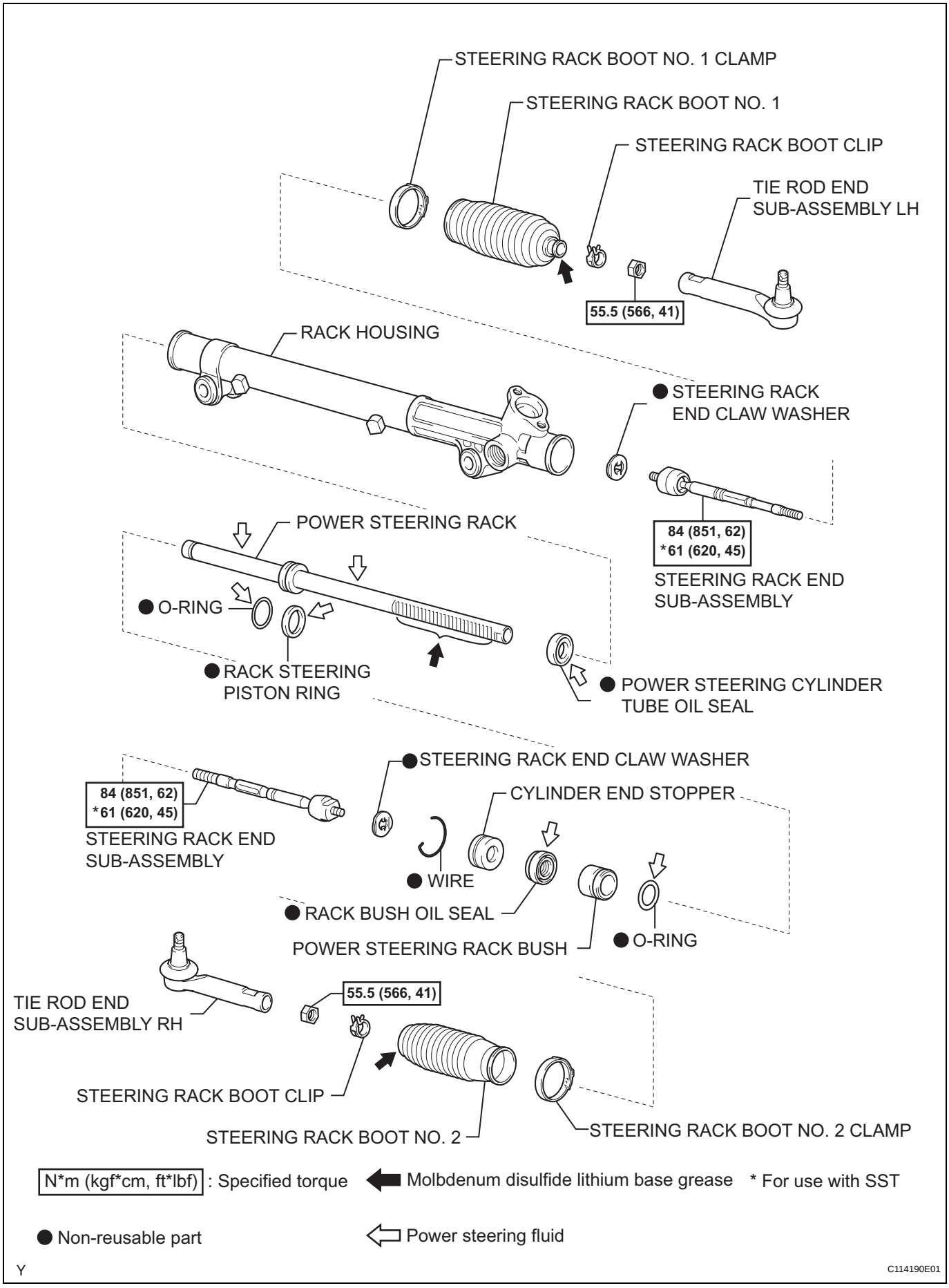
STEERING RACK BOOT NO. 1 CLAMP
STEERING RACK BOOT NO. 1
STEERING RACK BOOT CLIP
TIE ROD END SUB-ASSEMBLY LH
55.5 (566, 41)
RACK HOUSING
● STEERING RACK END CLAW WASHER
84 (851, 62) *61 (620, 45)
STEERING RACK END SUB-ASSEMBLY
POWER STEERING RACK
● O-RING
● RACK STEERING PISTON RING
● POWER STEERING CYLINDER TUBE OIL SEAL
● STEERING RACK END CLAW WASHER
CYLINDER END STOPPER
84 (851, 62) *61 (620, 45)
STEERING RACK END SUB-ASSEMBLY
● WIRE
● RACK BUSH OIL SEAL
POWER STEERING RACK BUSH
● O-RING
TIE ROD END SUB-ASSEMBLY RH
55.5 (566, 41)
STEERING RACK BOOT CLIP
STEERING RACK BOOT NO. 2
STEERING RACK BOOT NO. 2 CLAMP
N*m (kgf*cm, ft*lbf) : Specified torque
Molbdenum disulfide lithium base grease
* For use with SST
● Non-reusable part
Power steering fluid
Y
C114190E01

PS

AIR CONDITIONING SYSTEM

PRECAUTION

1. **CONNECT THE BATTERY NEGATIVE TERMINAL TO THE CABLE AND RUN THE ENGINE AT NO LESS THAN 2,000 RPM FOR 1 MINUTE**
   NOTICE:
   If the engine exceeds 2,000 rpm, the clutch is automatically disengaged by the compressor protection control system.
2. **DO NOT HANDLE REFRIGERANT IN ENCLOSED AREAS OR NEAR OPEN FLAMES**
3. **ALWAYS WEAR EYE PROTECTION**

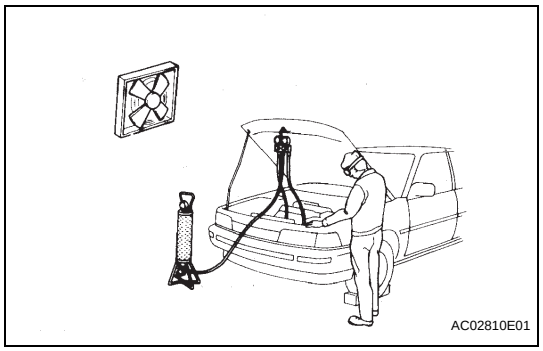
AC02810E01

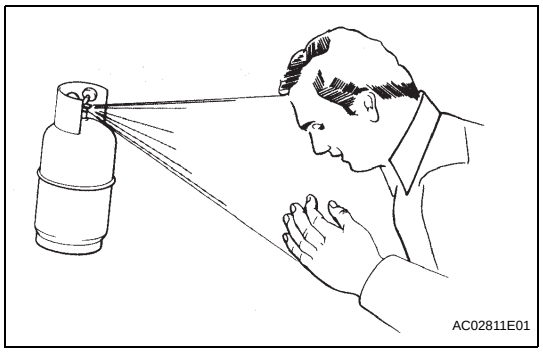
AC02811E01

4. **BE CAREFUL NOT TO GET LIQUID REFRIGERANT IN YOUR EYES OR ON YOUR SKIN**
   if liquid refrigerant gets in your eyes or on your skin:
   (a) Wash the area with lots of cold water.
   CAUTION:
   Do not rub your eyes or skin.
   (b) Apply clean petroleum jelly to the skin.
   (c) Go immediately to a hospital or a physician for professional treatment.
5. **NEVER HEAT CONTAINER OR EXPOSE IT TO NAKED FLAME**
6. **BE CAREFUL NOT TO DROP CONTAINER OR APPLY ANY PHYSICAL SHOCKS TO IT**

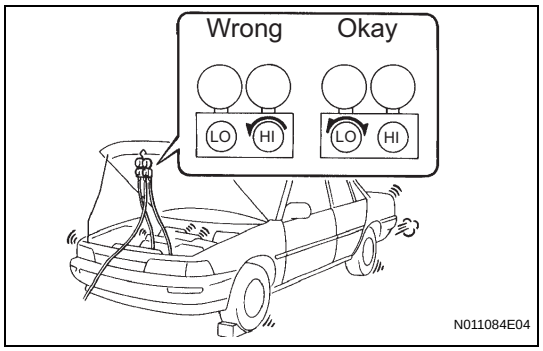

N011084E04

7. **DO NOT OPERATE COMPRESSOR WITHOUT ENOUGH REFRIGERANT IN REFRIGERANT SYSTEM**
   If there is not enough refrigerant in the refrigerant system, oil lubrication will be insufficient and compressor burnout may occur. Necessary care should be taken to avoid this.
8. **DO NOT OPEN HIGH PRESSURE MANIFOLD VALVE WHILE COMPRESSOR IS OPERATING**
   Open and close only the low pressure valve. If the high pressure valve is open, refrigerant flows in the reverse direction. This could cause the charging cylinder to rupture.
9. **BE CAREFUL NOT TO OVERCHARGE SYSTEM WITH REFRIGERANT**
   If the refrigerant is overcharged, it causes problems such as insufficient cooling, poor fuel economy and engine overheating.

10. DO NOT OPERATE ENGINE AND COMPRESSOR WITH NO REFRIGERANT
CAUTION:
This may damage the inside of the compressor.

REFRIGERANT

ON-VEHICLE INSPECTION

1. INSPECT REFRIGERANT PRESSURE WITH MANIFOLD GAUGE SET

(a) This is a method to specify trouble areas by using a manifold gauge set. Read the manifold gauge pressure when the following conditions are established.

Test conditions:

- Engine has been warmed up.
- All doors are fully open.
- A/C switch is ON.
- Engine is running at 1,500 rpm.
- Air inlet mode selector damper is set at recirculation.
- Temperature control switch is in MAX. COLD position.
- Blower speed control switch is in HI position.
- Air temperature at the air inlet is 30 to 35°C (86 to 95°F).

Gauge readings (Reference)

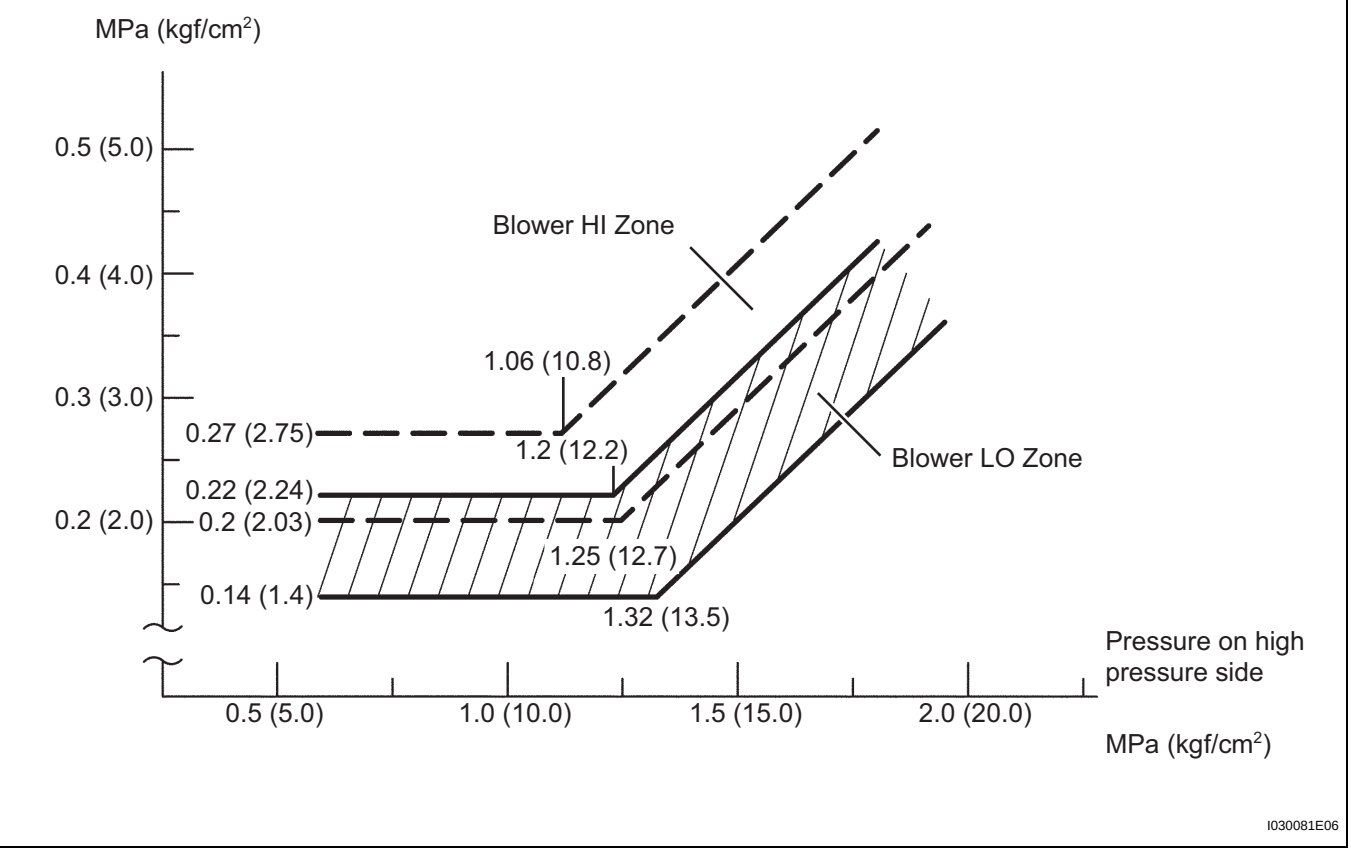

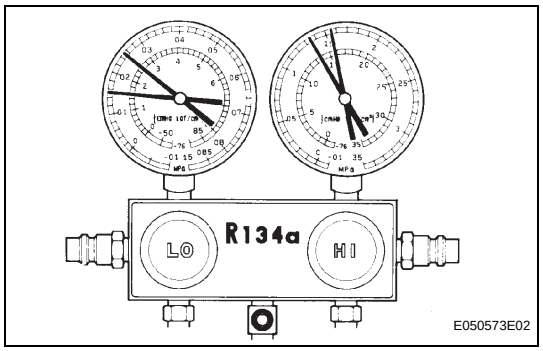

(1) When the refrigerant volume is proper:
Gauge reading:
Low pressure side:
0.15 to 0.25 MPa (1.5 to 2.5 kgf/cm^2)
High pressure side:
1.37 to 1.57 MPa (14 to 16 kgf/cm^2)

(2) When there is moisture in the refrigeration system:

Condition: Air conditioning system periodically repeats proper and improper function.

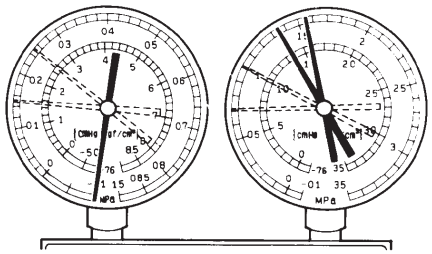

Symptoms	Probable Cause	Diagnosis	Corrective Actions
During operation, pressure on low pressure side cycles between normal and vacuum	Moisture in refrigeration system freezes at expansion valve orifice, causing temporary stop of cycle. However, when melted, normal state restored	• Drier overly saturated • Moisture in refrigeration system freezes at expansion valve orifice and blocks refrigerant circulation	1. Replace cooler drier 2. Remove moisture from cycle by repeatedly evacuating air 3. Supply appropriate volume of new refrigerant

(3) When cooling is insufficient:

Condition: Air conditioning system does not function effectively.

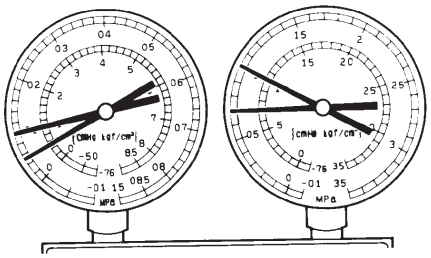

Symptoms	Probable Cause	Diagnosis	Corrective Actions
• Pressure low on both low and high pressure sides • Cooling performance insufficient	Gas leakage from refrigeration system	• Insufficient refrigerant • Refrigerant leakage	1. Check for gas leakage and repair if necessary 2. Supply appropriate volume of new refrigerant 3. If indicated pressure value close to 0 when connected to gauge, create vacuum after inspecting and repairing the location of leakage

AC

(4) When the circulation of the refrigerant is poor:

Condition: Air conditioning system does not function effectively.

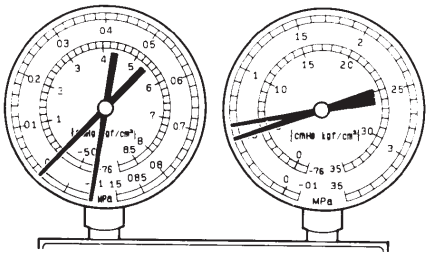

I022119E04

Symptoms	Probable Cause	Diagnosis	Corrective Action
• Pressure low on both low and high pressure sides • Frost exists on piping from condenser to A/C unit	Refrigerant flow obstructed by dirt in condenser	Condenser clogged	Replace condenser

(5) When the refrigerant does not circulate:

Condition: Air conditioning system does not function. (Sometimes it may function)

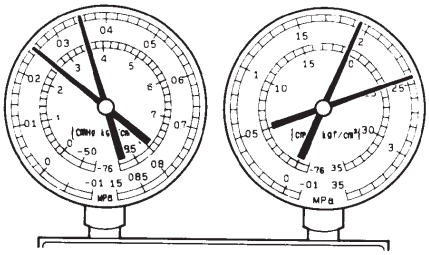

I022121E05

Symptoms	Probable Causes	Diagnosis	Corrective Actions
• Vacuum indicated on low pressure side, and extremely low pressure indicated on high pressure side • Frost or condensation seen on piping on both sides of condenser or expansion valve	• Refrigerant flow obstructed by moisture or dirt in refrigeration system • Refrigerant flow obstructed by gas leakage from expansion valve	Refrigerant does not circulate	1. Check expansion valve 2. Clean expansion valve by blowing air 3. Replace condenser 4. Evacuate air and charge appropriate volume of new refrigerant 5. For gas leakage from expansion valve, replace expansion valve

AC

(6) When the refrigerant is overcharged or cooling of condenser is insufficient:

Condition: Air conditioning system does not function effectively.

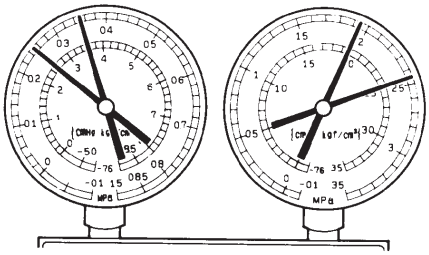

I022121E06

Symptoms	Probable Causes	Diagnosis	Corrective Actions
Pressure extremely high on both low and high pressure sides	• Excessive refrigerant • Cooling performance of condenser insufficient	• Excessive refrigerant • Cooling performance of condenser insufficient	1. Clean condenser 2. Check condenser fan motor operation 3. If 1 and 2 normal, check the amount of refrigerant and supply appropriate volume of refrigerant

(7) When there is air in the refrigeration system:

Condition: Air conditioning system does not function.

NOTE: These gauge indications occur when the refrigeration system opens and the refrigerant is charged without vacuum purging.

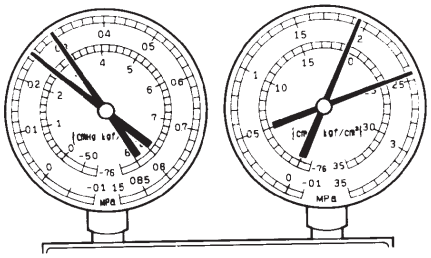

I022122E05

Symptoms	Probable Cause	Diagnosis	Corrective Actions
• Pressure extremely high on both low and high pressure sides • The low pressure piping too hot to touch	Air in refrigeration system	• Air in refrigeration system • Vacuum purging insufficient	1. Check whether compressor oil dirty or insufficient 2. Evacuate air and charge new refrigerant

(8) When the expansion valve malfunctions:

Condition: Air conditioning system does not function effectively.

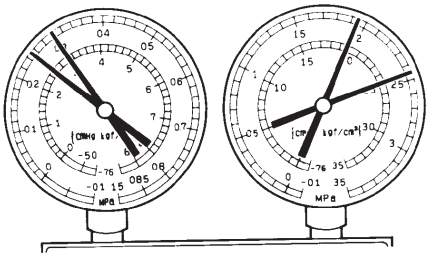

I022123E04

Symptoms	Probable Cause	Diagnosis	Corrective Action
• Pressure extremely high on both low and high pressure sides • Frost or condensation on piping on low pressure side	Trouble in expansion valve	• Excessive refrigerant in low pressure piping • Expansion valve too wide open	Replace expansion valve

AC

(9) When the compressor is defective:

Condition: Air conditioning system does not function.

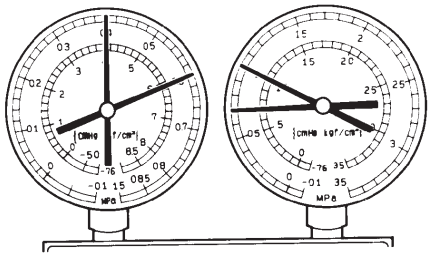

I022124E04

Symptoms	Probable Cause	Diagnosis	Corrective Action
• Pressure extremely high on both low and high pressure sides • Pressure extremely low on high pressure side	Internal leakage in compressor	• Compression failure • Leakage from damaged valve or broken sliding parts	Repair or replace compressor

REFRIGERANT LINE

COMPONENTS

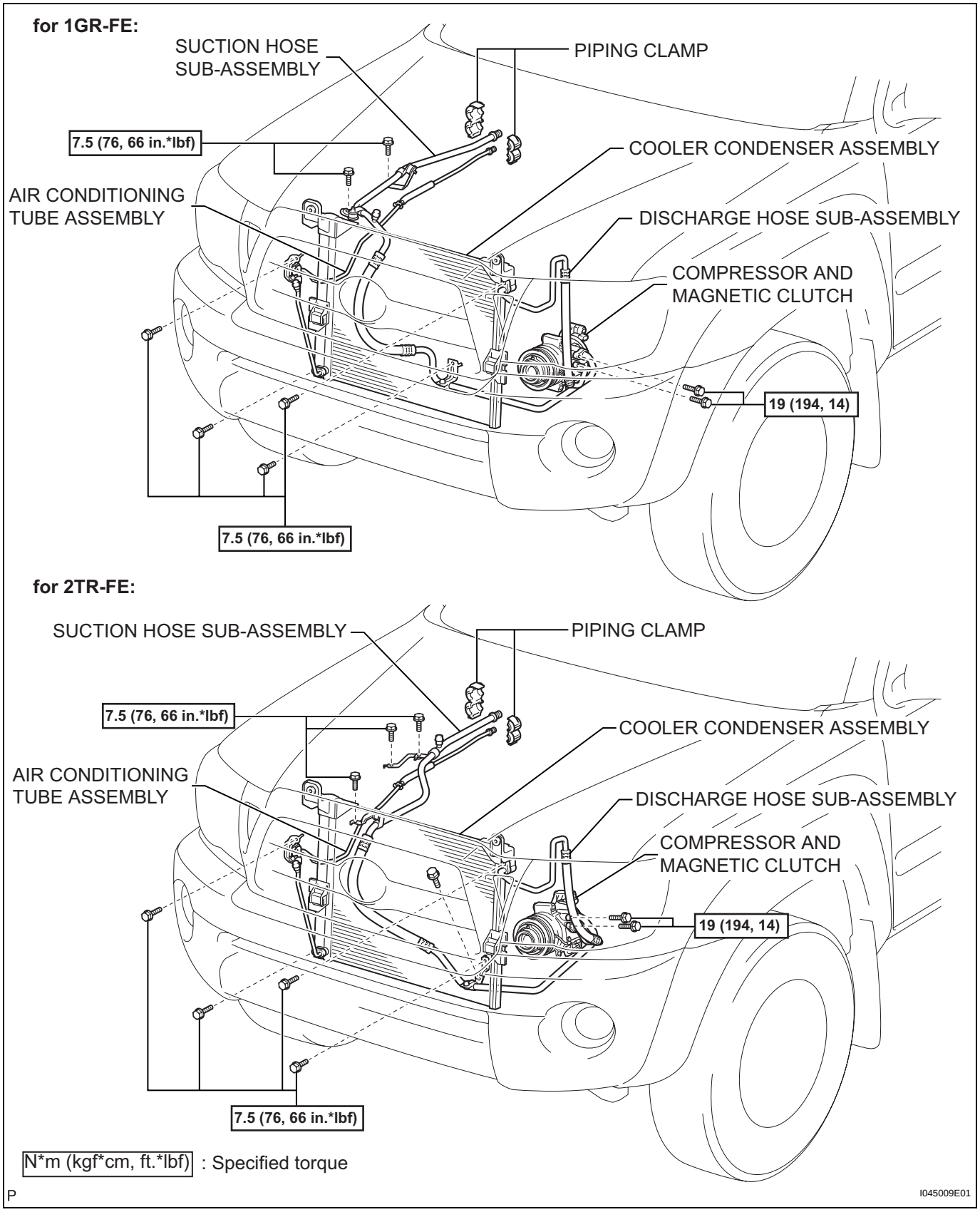

AC

AIR CONDITIONING UNIT

COMPONENTS

for 1GR-FE:

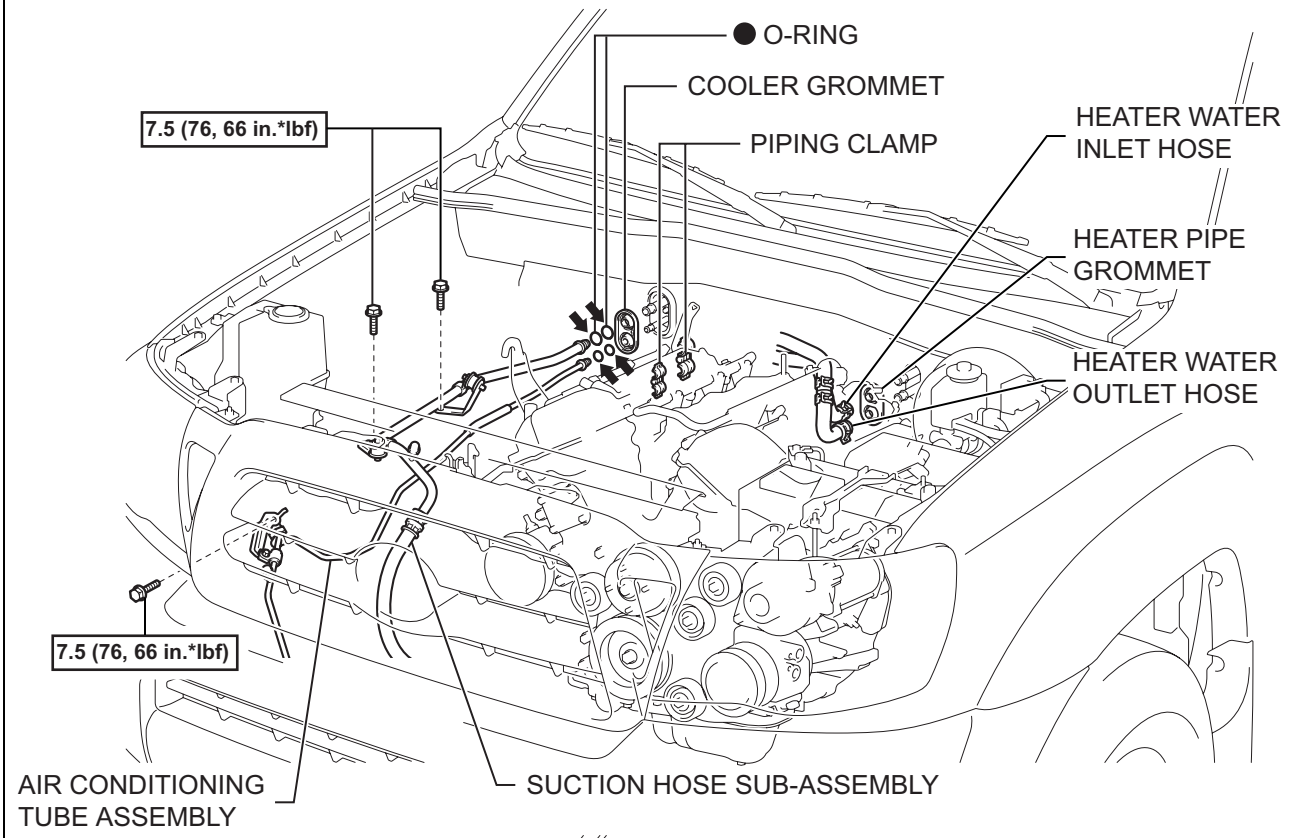

for 2TR-FE:

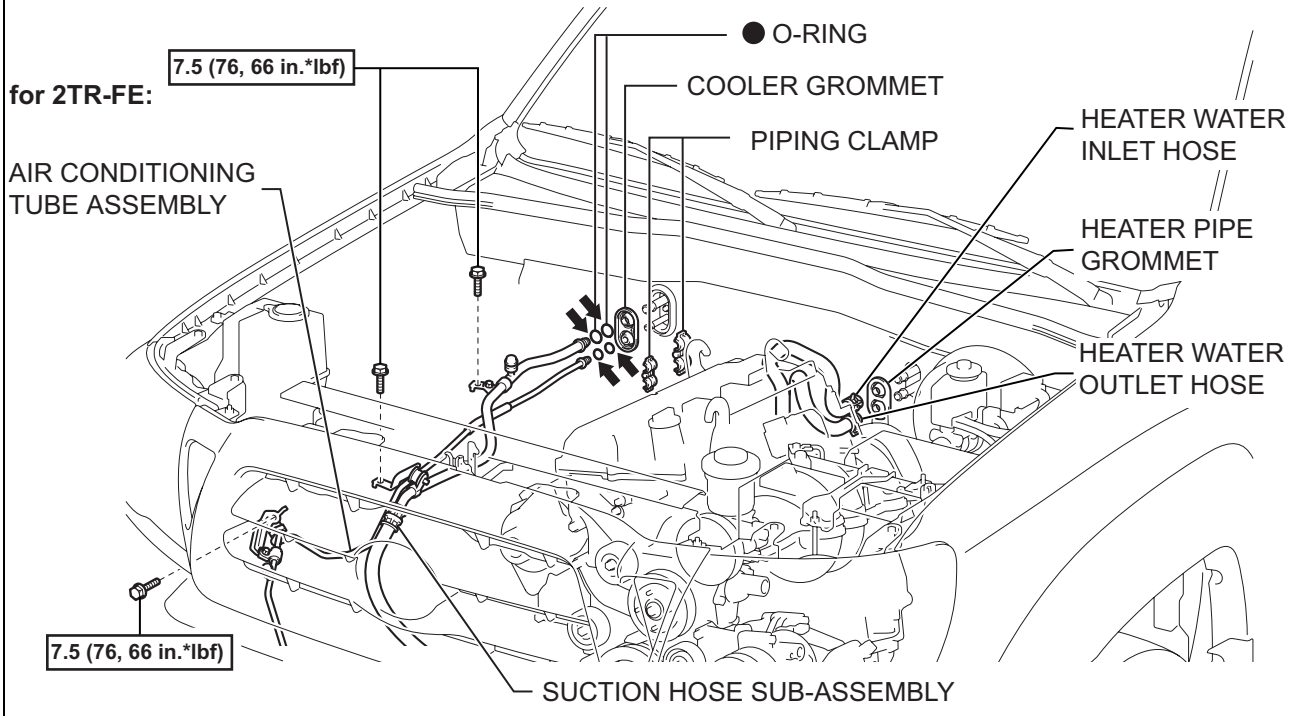

N*m (kgf*cm, ft.*lbf) : Specified torque ⬅ Compressor Oil RL-897 or equivalent ● Non-reusable part

P

I045008E01

AC

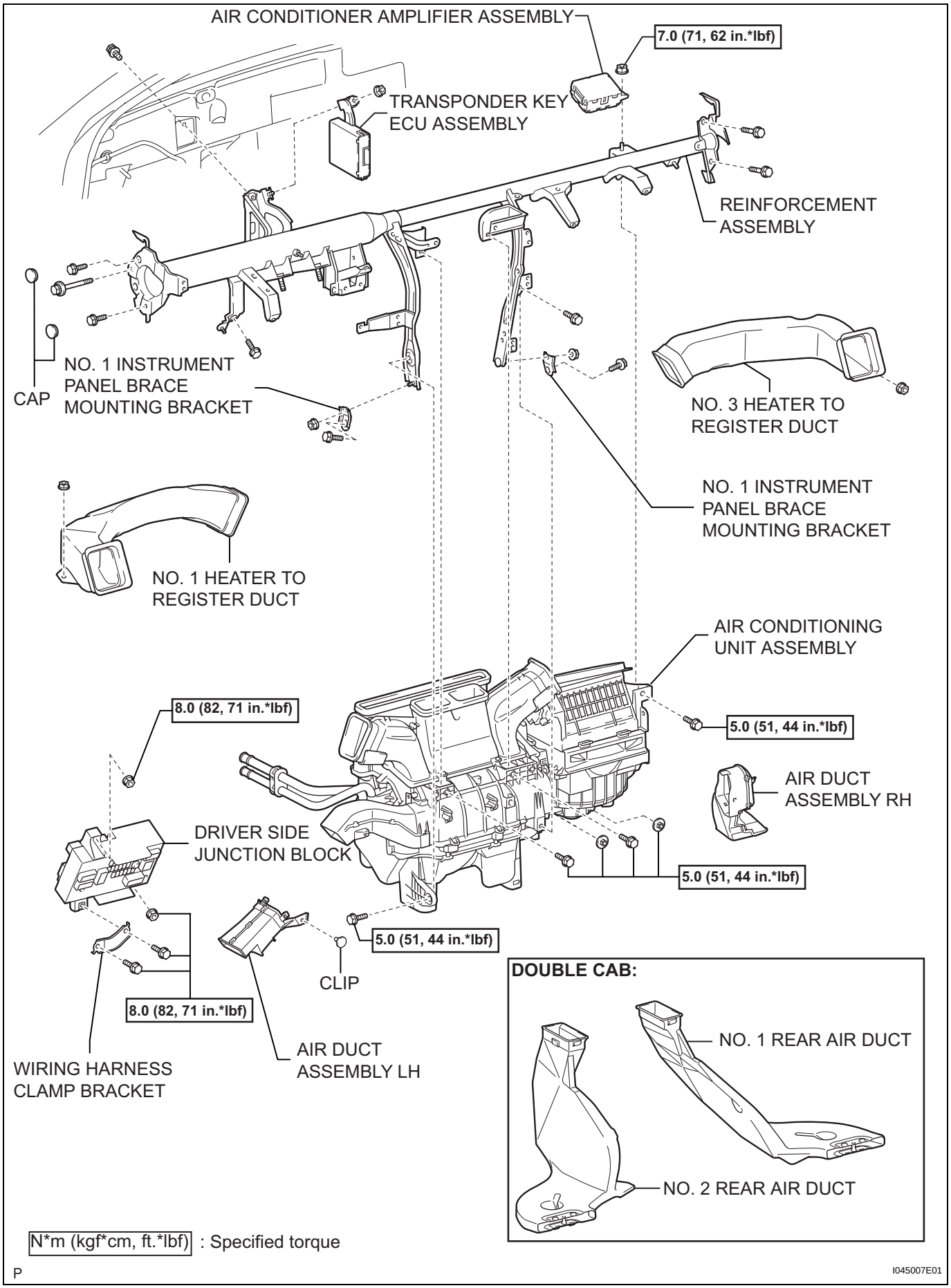
AIR CONDITIONER AMPLIFIER ASSEMBLY
7.0 (71, 62 in.*lbf)
TRANSPONDER KEY ECU ASSEMBLY
REINFORCEMENT ASSEMBLY
CAP
NO. 1 INSTRUMENT PANEL BRACE MOUNTING BRACKET
NO. 3 HEATER TO REGISTER DUCT
NO. 1 INSTRUMENT PANEL BRACE MOUNTING BRACKET
NO. 1 HEATER TO REGISTER DUCT
AIR CONDITIONING UNIT ASSEMBLY
8.0 (82, 71 in.*lbf)
5.0 (51, 44 in.*lbf)
AIR DUCT ASSEMBLY RH
DRIVER SIDE JUNCTION BLOCK
5.0 (51, 44 in.*lbf)
5.0 (51, 44 in.*lbf)
CLIP
8.0 (82, 71 in.*lbf)
AIR DUCT ASSEMBLY LH
WIRING HARNESS CLAMP BRACKET
DOUBLE CAB:
NO. 1 REAR AIR DUCT
NO. 2 REAR AIR DUCT
N*m (kgf*cm, ft.*lbf) : Specified torque
P
I045007E01

AC

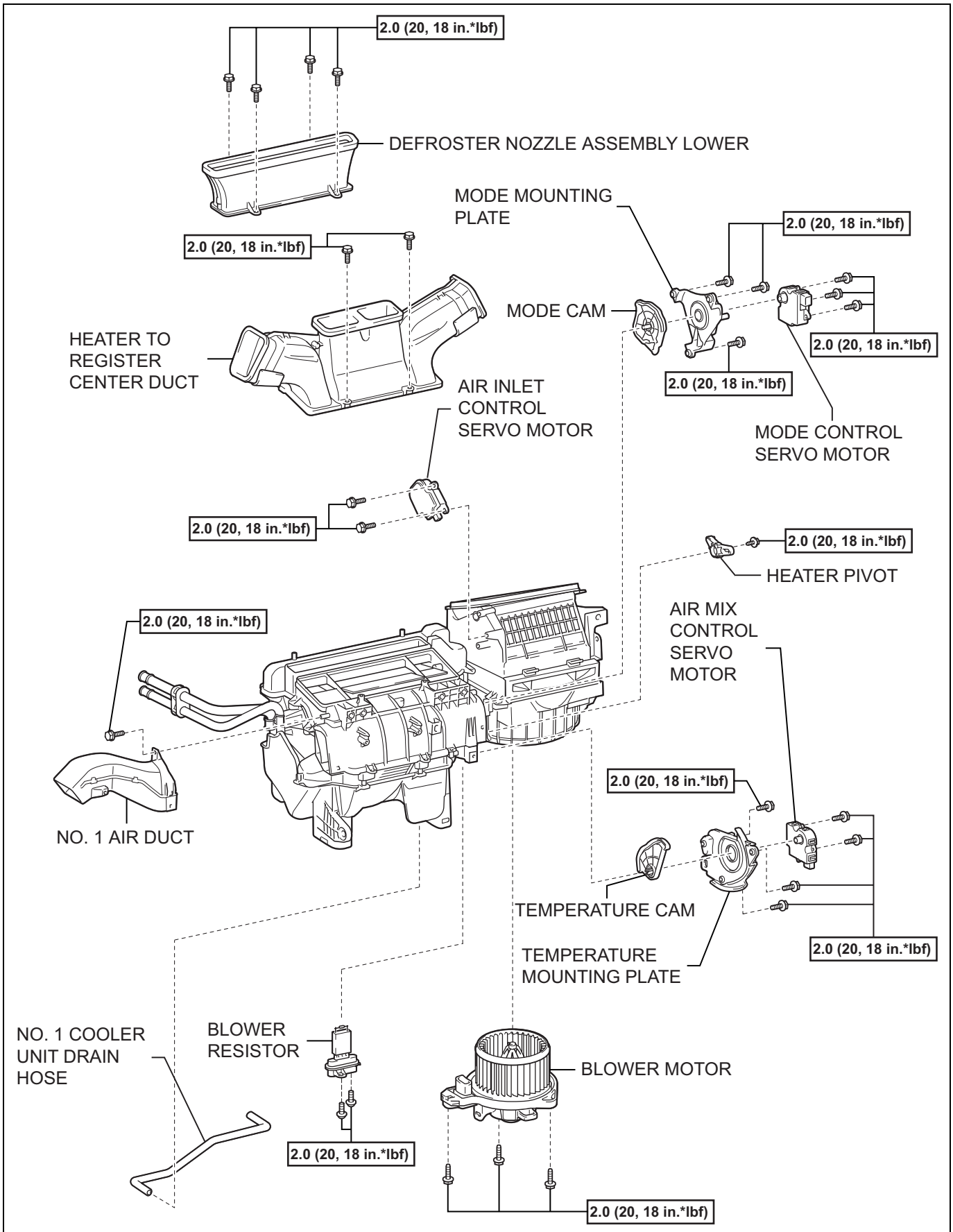
2.0 (20, 18 in.*lbf)
DEFROSTER NOZZLE ASSEMBLY LOWER
MODE MOUNTING PLATE
2.0 (20, 18 in.*lbf)
2.0 (20, 18 in.*lbf)
MODE CAM
HEATER TO REGISTER CENTER DUCT
2.0 (20, 18 in.*lbf)
2.0 (20, 18 in.*lbf)
AIR INLET CONTROL SERVO MOTOR
MODE CONTROL SERVO MOTOR
2.0 (20, 18 in.*lbf)
2.0 (20, 18 in.*lbf)
HEATER PIVOT
2.0 (20, 18 in.*lbf)
AIR MIX CONTROL SERVO MOTOR
NO. 1 AIR DUCT
2.0 (20, 18 in.*lbf)
TEMPERATURE CAM
TEMPERATURE MOUNTING PLATE
2.0 (20, 18 in.*lbf)
NO. 1 COOLER UNIT DRAIN HOSE
BLOWER RESISTOR
BLOWER MOTOR
2.0 (20, 18 in.*lbf)
2.0 (20, 18 in.*lbf)
N*m (kgf*cm, ft.*lbf) : Specified torque
P
I045054E01

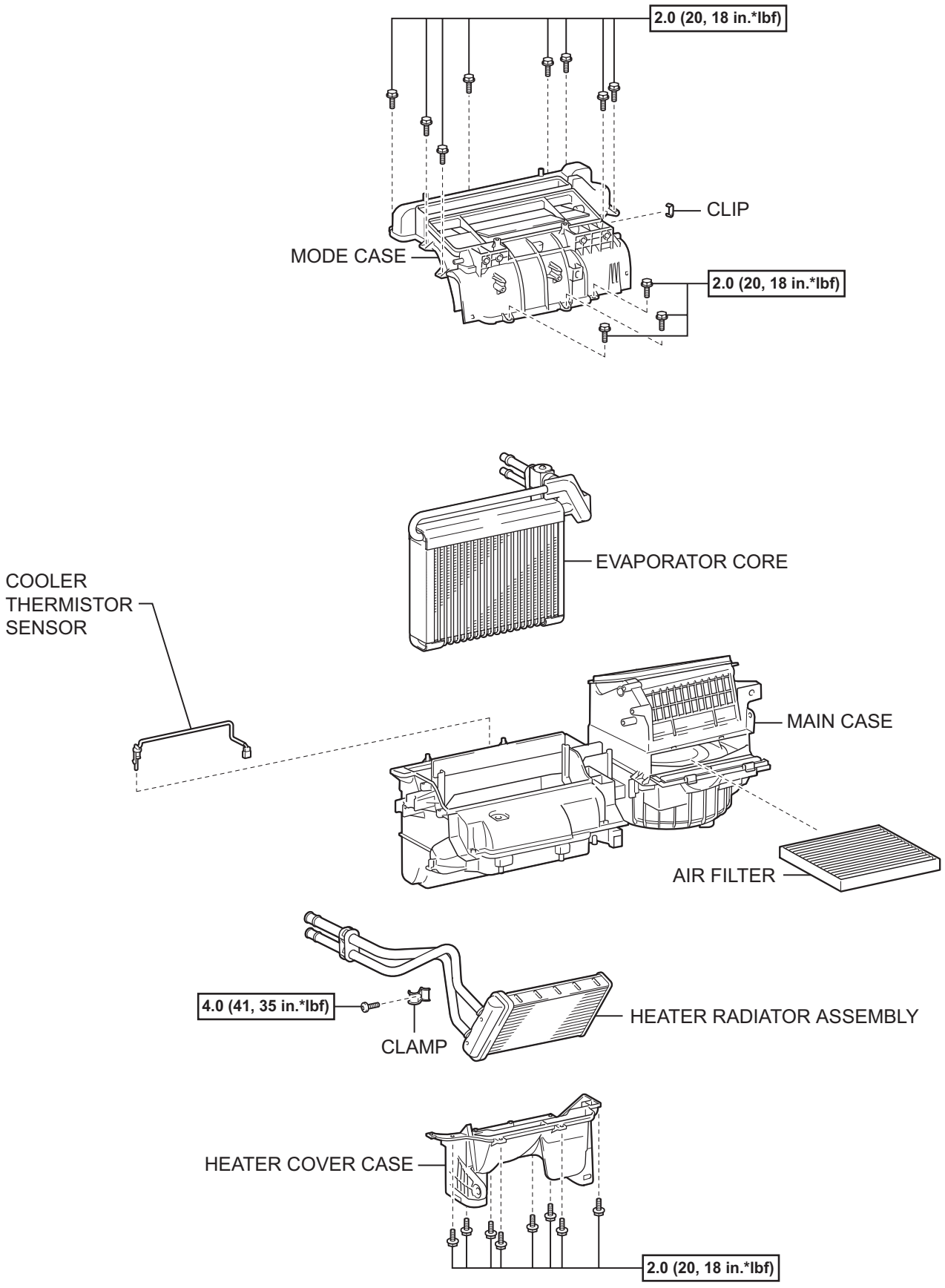

N*m (kgf*cm, ft*lbf) : Specified torque

P

I101601E01

AC

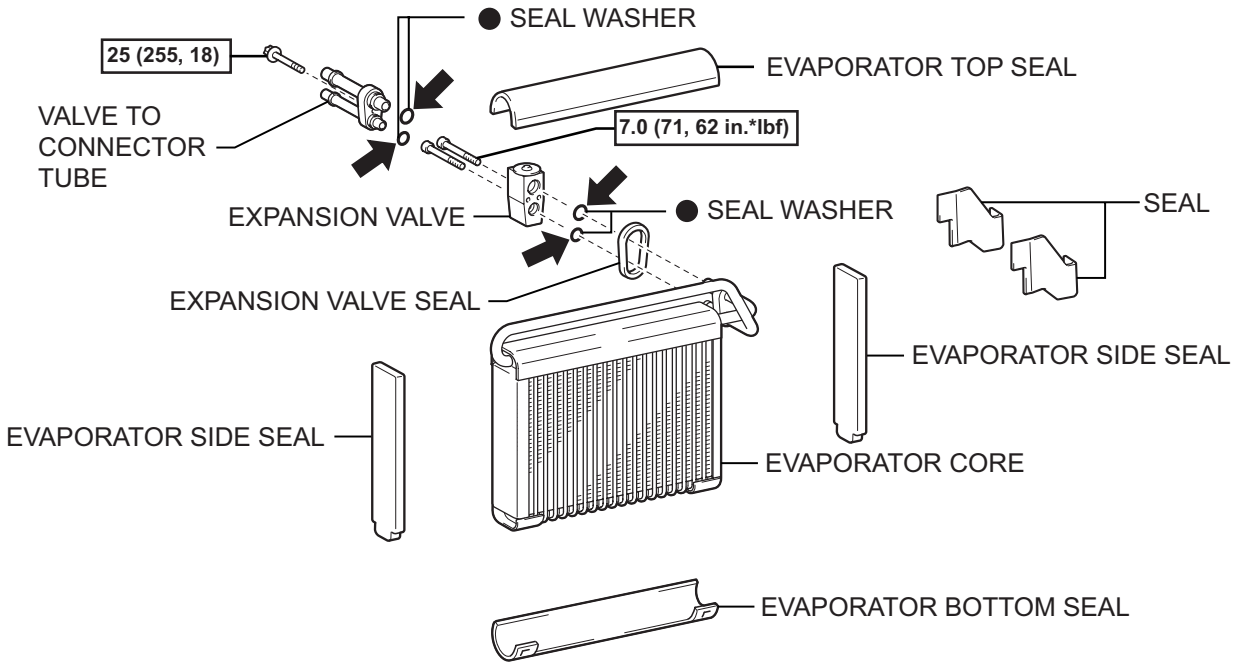

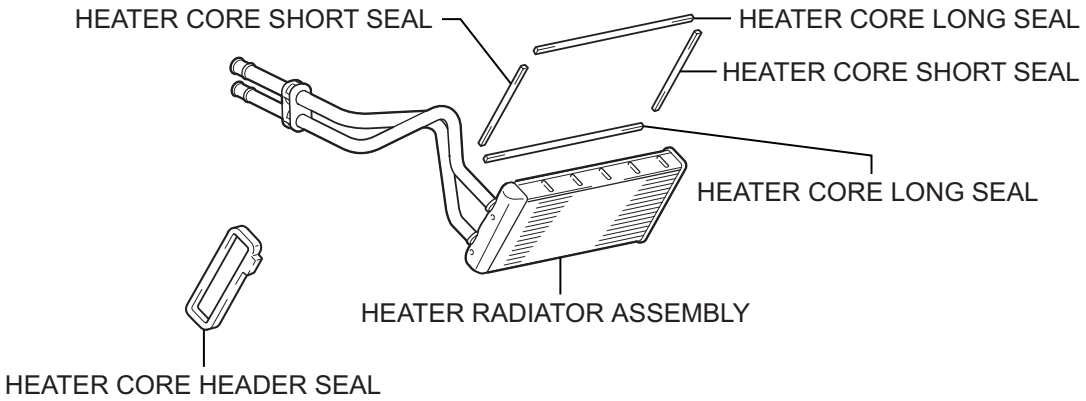

AC

N*m (kgf*cm, ft.*lbf) : Specified torque

⬅ Compressor Oil RL-897 or equivalent ● Non-reusable part

P

I045440E01

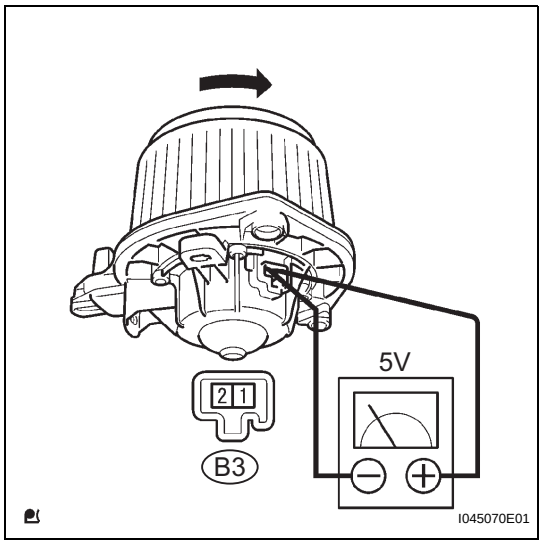

BLOWER MOTOR

INSPECTION

1. INSPECT BLOWER MOTOR

(a) Inspect the blower motor.

(1) Connect the positive (+) lead from to terminal 1 and negative (-) lead to terminal 2, then check that the motor operates smoothly.

CAUTION:

- **Use safety glasses**
- **Do not use battery power, use DC power supply (30 A).**
- **Do not operate the motor and fan assembly at over 5 V.**
- **Be sure to hold the motor in a stable and safe way.**

If the result is not as specified, replace the blower motor.

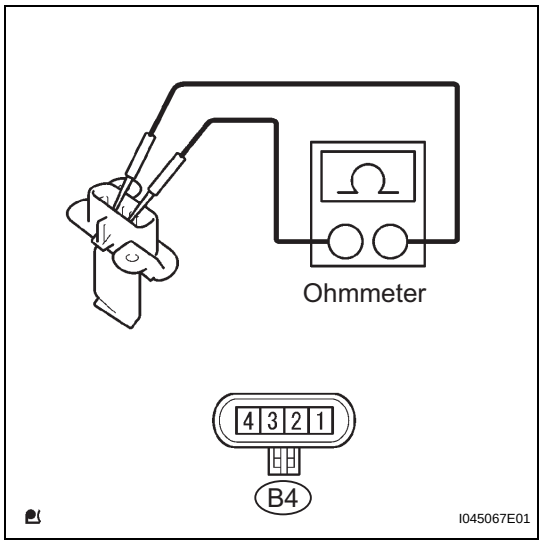

BLOWER RESISTOR

INSPECTION

1. INSPECT BLOWER RESISTOR

(a) Check the resistance.

(1) Using an ohmmeter, measure the resistance between the terminals.

Standard

Tester Connection	Specified Condition
1 (M1) - 3 (COMMON)	0.792 to 0.968 Ω at 20°C (68°F)
2 (M2) - 3 (COMMON)	0.342 to 0.418 Ω at 20°C (68°F)
4 (Lo) - 3 (COMMON)	2.07 to 2.53 Ω at 20°C (68°F)

If the result is not as specified, replace the blower resistor.

COMPRESSOR AND MAGNETIC CLUTCH

COMPONENTS

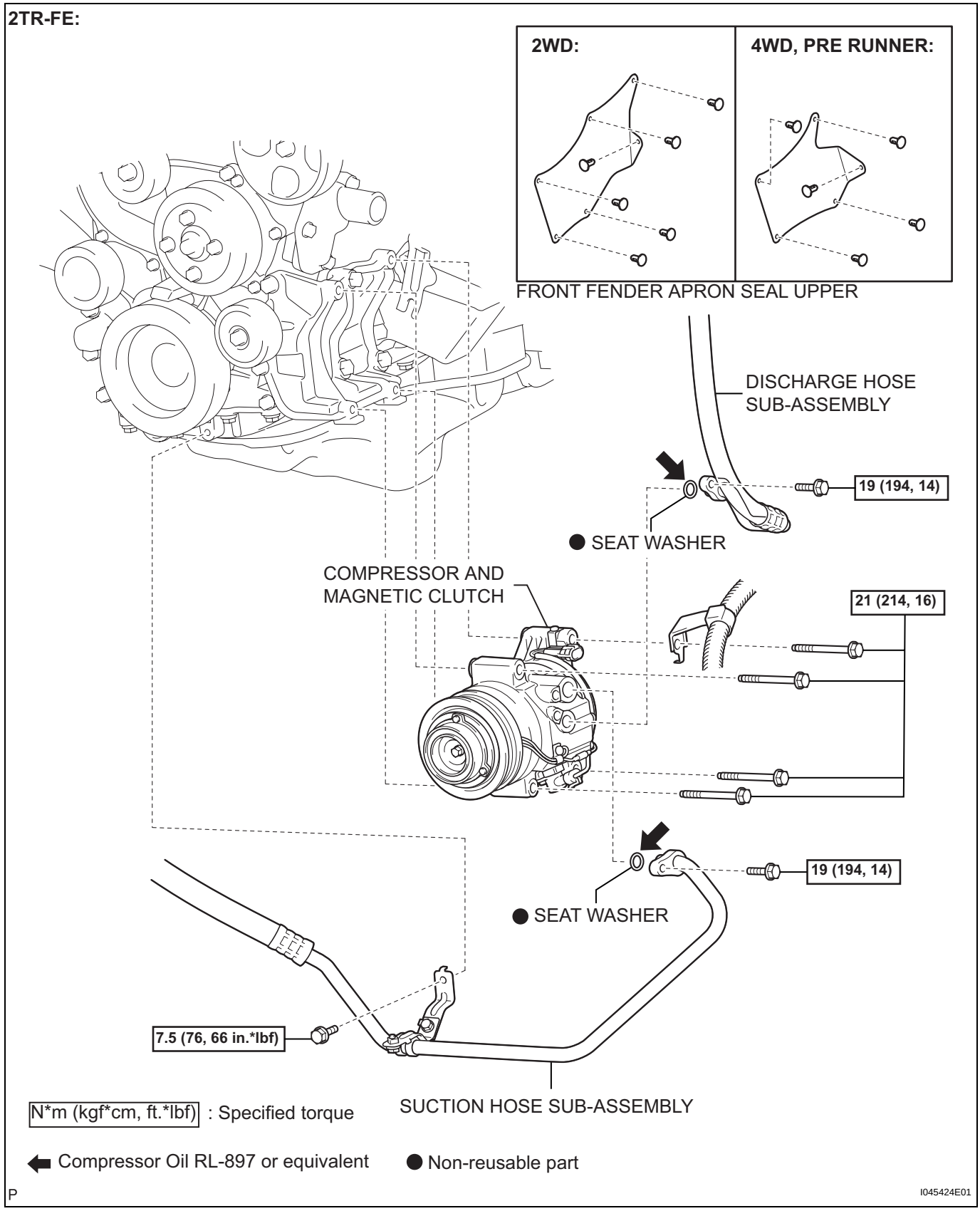

AC

1GR-FE:

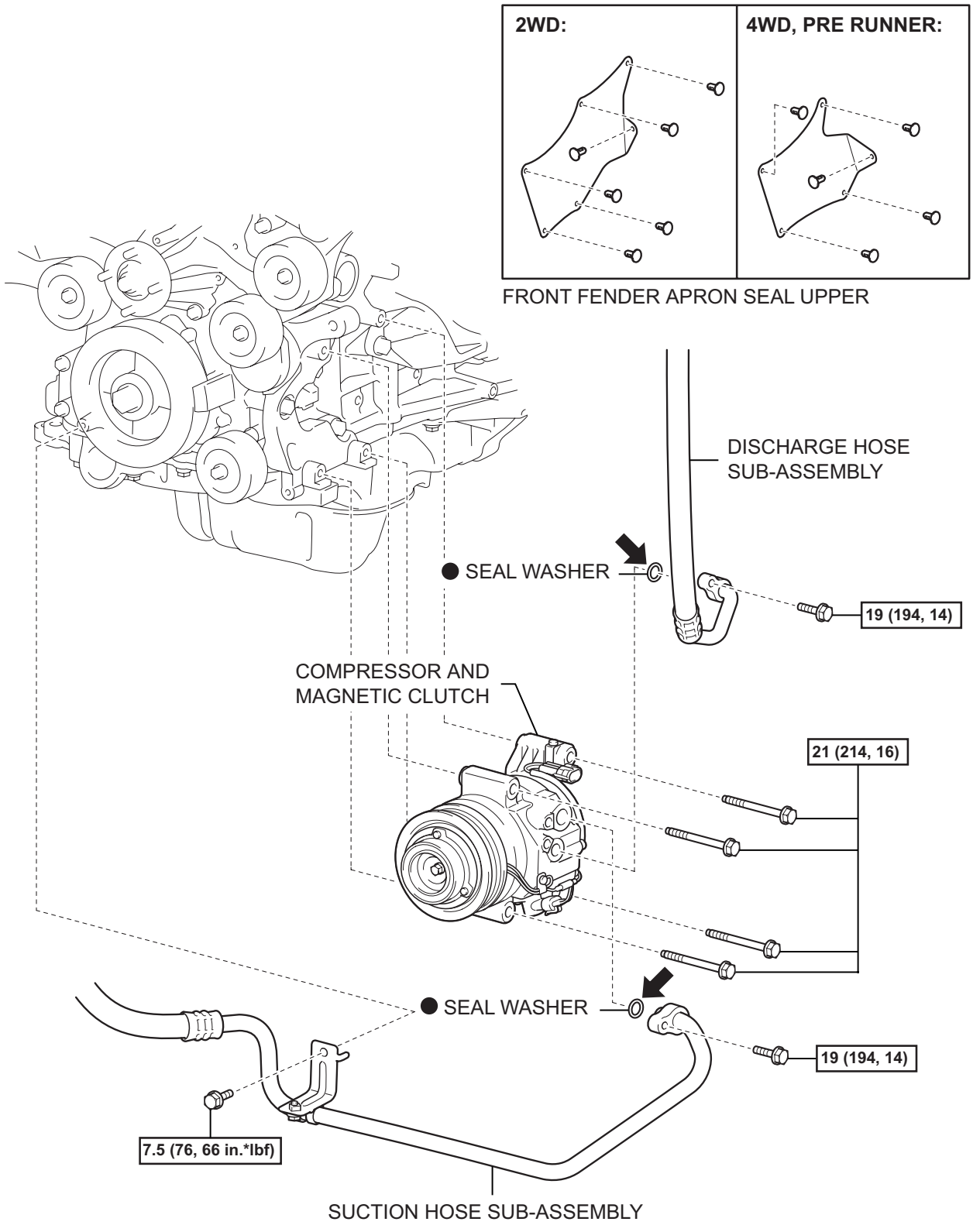

N*m (kgf*cm, ft.*lbf) : Specified torque

Compressor Oil RL-897 or equivalent ● Non-reusable part

P

I045425E01

AC

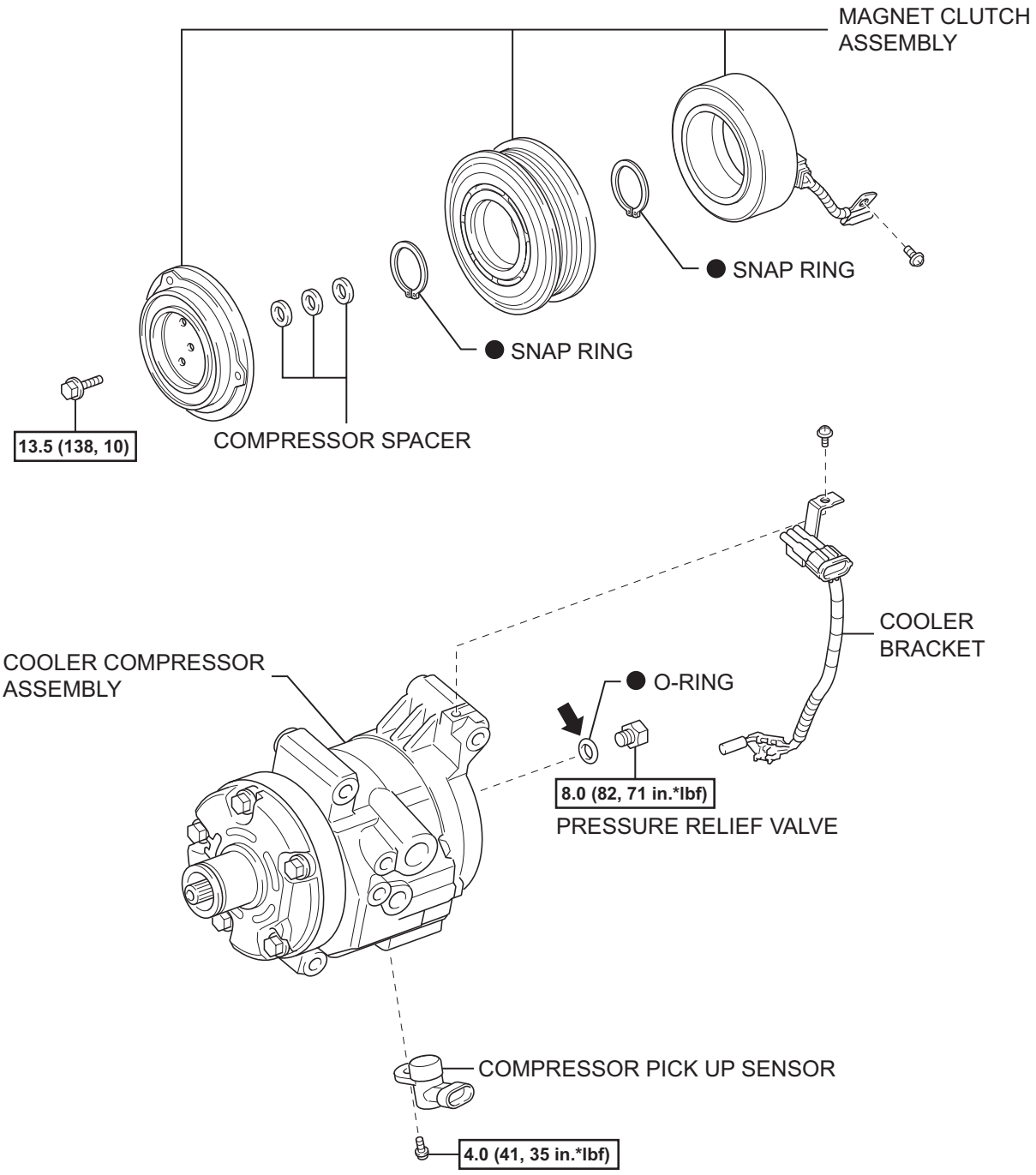

N*m (kgf*cm, ft.*lbf) : Specified torque

⬅ Compressor Oil RL-897 or equivalent ● Non-reusable part

Y

I045000E01

AC

CONDENSER

COMPONENTS

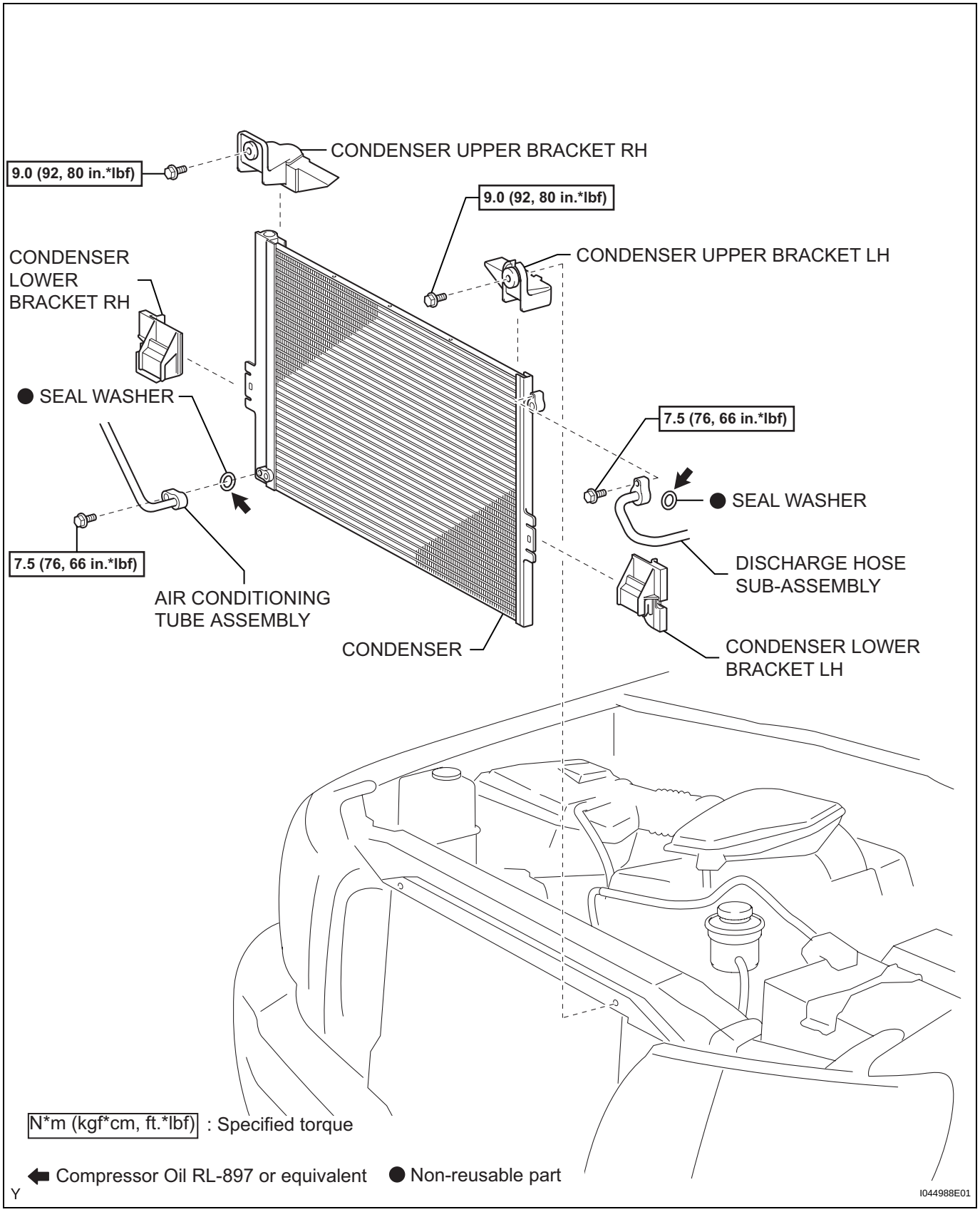

AC

ON-VEHICLE INSPECTION

1. INSPECT COOLER CONDENSER ASSEMBLY

(a) If the fins of the cooler condenser assembly are dirty, clean them with water and dry them with compressed air.

NOTICE:

Do not damage the fins of the condenser assembly.

(b) If the fins of the cooler condenser assembly are bent, straighten them using a screwdriver or pliers.

2. CHECK CONDENSER FOR REFRIGERANT LEAKAGE

(a) Check the pipe joints for gas leakage, using a halogen leak detector.

(b) Check the tightening torque of the joints if gas leakage is detected in any pipe joints.

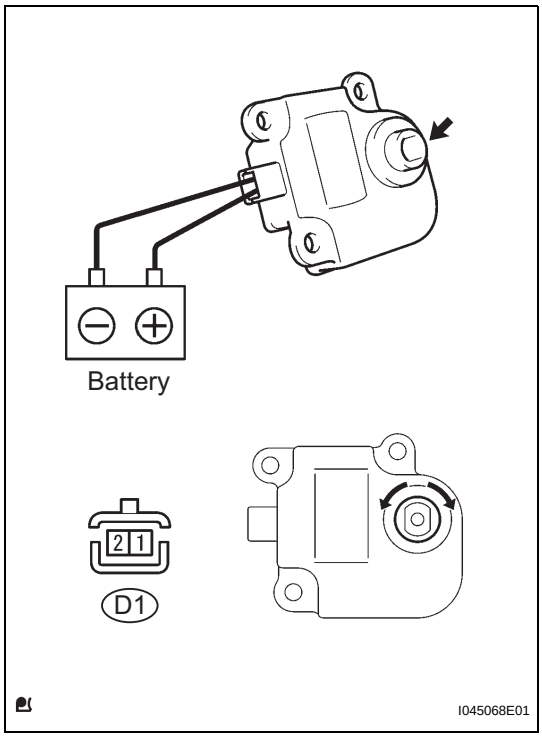

SERVO MOTOR

INSPECTION

1. INSPECT AIR INLET CONTROL SERVO MOTOR

(a) Inspect the servo motor operation.

(1) Connect the positive (+) lead from the battery to terminal 1 (FRS) and negative (-) lead to terminals 2 (REC), then check that the shaft rotates clockwise smoothly.

(2) Connect the positive (+) lead from the battery to terminal 2 (REC) and negative (-) lead to terminal 1 (FRS) then check that the shaft rotates counter clockwise smoothly.

If the operations are not as specified, replace the air control servo motor.

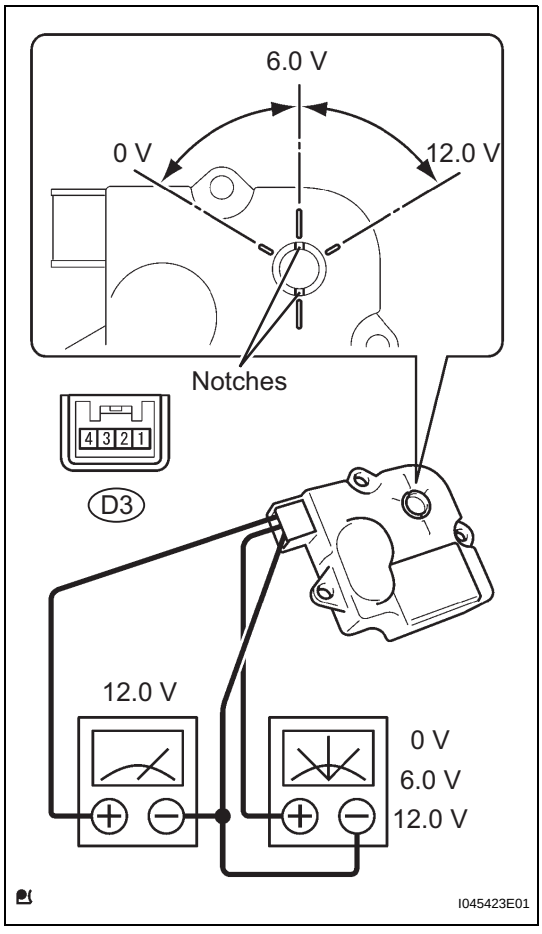

2. INSPECT MODE CONTROL SERVO MOTOR

(a) Inspect the servo motor operation.

(1) When 12V is applied between terminals 4 (IGN) and 1 (GND), and 0V is applied between terminals 2 (SIG) and 1 (GND), check that the line connecting the 2 notches moves to the 0V position.

If the result is not as specified, replace the mode control servo motor.

(2) When 12V is applied between terminals 4 (IGN) and 1 (GND), and 6V is applied between terminals 2 (SIG) and 1 (GND), check that the line connecting the 2 notches moves to the 6V position.

If the result is not as specified, replace the mode control servo motor.

(3) When 12V is applied between terminals 4 (IGN) and 1 (GND), and between terminals 2 (SIG) and 1 (GND), check that the line connecting the 2 notches moves to the 12V position.

If the result is not as specified, replace the mode control servo motor.

AC

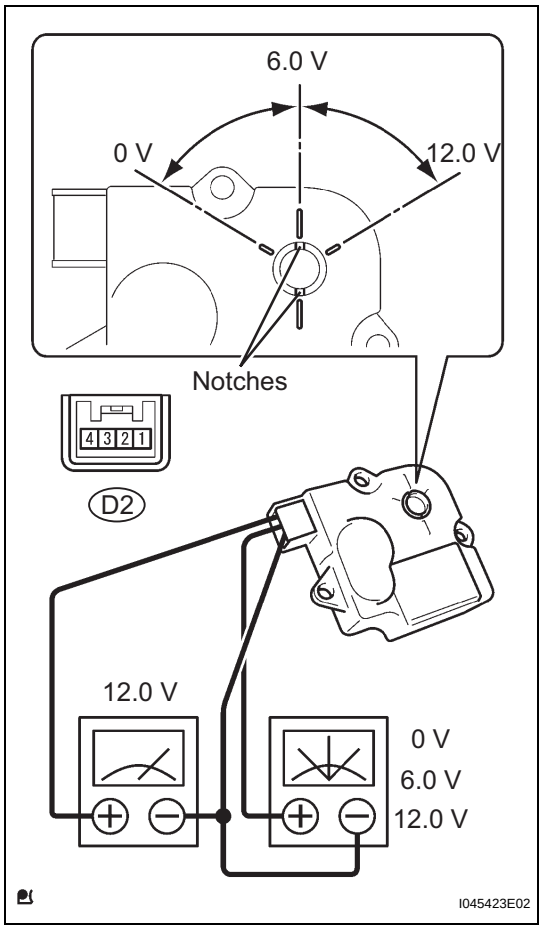

3. INSPECT AIR MIX CONTROL SERVO MOTOR

(a) Inspect the servo motor operation.

(1) When 12 V is applied between terminals 4 (IGN) and 1 (GND), and 0V is applied between terminals 2 (SIG) and 1 (GND), check that the line connecting the 2 notches moves to the 0V position.
If the result is not as specified, replace the air mix control servo motor.

(2) When 12V is applied between terminals 4 (IGN) and 1 (GND), and 6V is applied between terminals 2 (SIG) and 1 (GND), check that the line connecting the 2 notches moves to the 6V position.
If the result is not as specified, replace the air mix control servo motor.

(3) When 12V is applied between terminals 4 (IGN) and 1 (GND), and between terminals 2 (SIG) and 1 (GND), check that the line connecting the 2 notches moves to the 12V position.
If the result is not as specified, replace the air mix control servo motor.

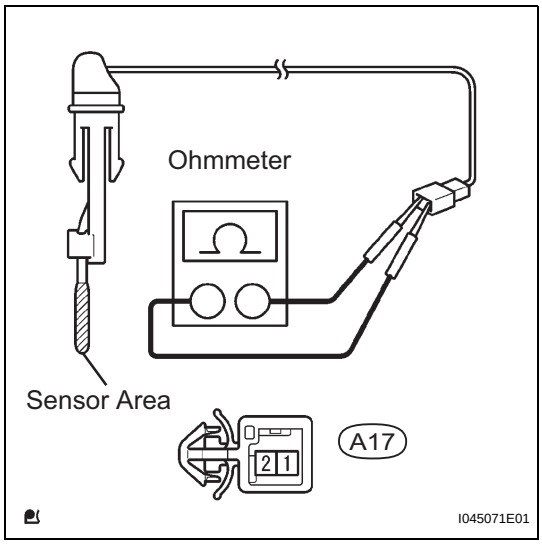

EVAPORATOR TEMPERATURE SENSOR

INSPECTION

1. INSPECT COOLER THERMISTOR SENSOR

(a) Check the resistance.

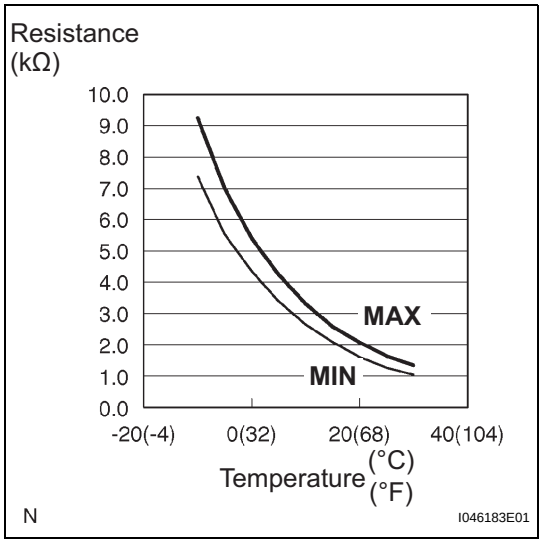

(1) Measure the resistance and check the results in accordance with the values in the table below.

Standard

Tester Connection	Condition	Specified Condition
1 - 2	-10°C (14°F)	7.40 to 9.20 kΩ
1 - 2	-5°C (23°F)	5.65 to 7.00 kΩ
1 - 2	0°C (32°F)	4.35 to 5.40 kΩ
1 - 2	5°C (41°F)	3.40 to 4.20 kΩ
1 - 2	10°C (50°F)	2.68 to 3.30 kΩ
1 - 2	15°C (59°F)	2.10 to 2.60 kΩ
1 - 2	20°C (68°F)	1.66 to 2.10 kΩ
1 - 2	25°C (77°F)	1.32 to 1.66 kΩ
1 - 2	30°C (86°F)	1.05 to 1.35 kΩ

If the result is not as specified, replace the cooler thermistor sensor.

NOTICE:

- **Even slightly touching the sensor may change the resistance value. Be sure to hold the connector of the sensor.**
- **When measuring, the sensor temperature must be almost the same as the ambient temperature.**

HINT:

As the temperature increases, the resistance decreases (see the graph on the left).

AC

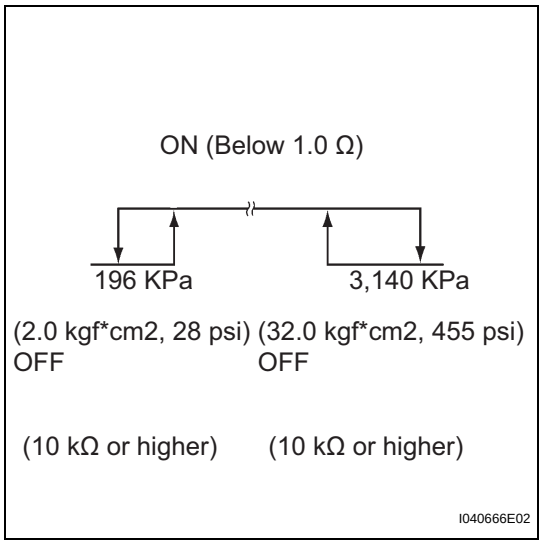

PRESSURE SWITCH

ON-VEHICLE INSPECTION

1. INSPECT PRESSURE NO.1 SWITCH

HINT:

- The pressure switch is installed onto the air conditioning pipe on the high pressure side.
- The switch detects a drop in refrigerant pressure, such as from refrigerant leakage, and turns the magnet clutch off (*1) to prevent damage to the compressor.
- The switch detects abnormally high pressure in the air conditioning cycle and turns the magnet clutch off (*1) to prevent damage to parts in the air conditioning cycle.

  (*1): The ECM turns the magnet clutch on or off upon receiving the signal from the pressure switch.
- As the pressure switch operates when there is a malfunction with the refrigerant pressure, its function cannot be inspected on-vehicle. Follow the procedures below to inspect it.

(a) Inspect refrigerant pressure in the air conditioning cycle.

(b) Read the manifold gauge pressure when the conditions below are established. (*2)

Test conditions:

- Engine is running at 1,500 rpm
- Blower speed control knob is in HI position
- Temperature control knob is in COOL position
- Air conditioning switch is ON
- Recirculation
- Doors fully open

Standard:

Pressure on high pressure side:

1.37 to 1.57 MPa (13.9 to 16.0 kgf*cm^2, 198 to 228 psi)

HINT:

- If the refrigerant pressure is not within the standard range, inspect and repair the air conditioning cycle.
  AC-14
- Proceed to step (*2) if the refrigerant pressure is within the specified range.
- If the refrigerant pressure is below 196 KPa (2.0 kgf*cm^2, 28 psi), the refrigerant amount in the air conditioning cycle may have decreased significantly for reasons such as a gas leakage.

Pressure Switch Connector Wire Harness View:

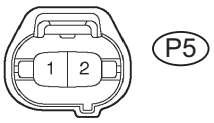

C I036436E02

(c) Check the air conditioning operation.
(1) Disconnect the pressure switch connector.
(2) Connect terminals 1 and 2 of the pressure switch connector on the vehicle wire harness side using a service wire.
(3) Start the engine.
(4) Turn the air conditioning switch on and check that the magnet clutch is turned on.
(5) Check that the magnet clutch is turned off when disconnecting terminals 1 and 2 (that are connected in the prior step).

Standard:

Terminals 1 and 2 connected: Magnet clutch is ON

Terminals 1 and 2 disconnected: Magnet clutch is OFF

Replace the pressure switch if the magnet clutch operates normally.

Inspect and repair the wire harness between the pressure switch and the ECM.

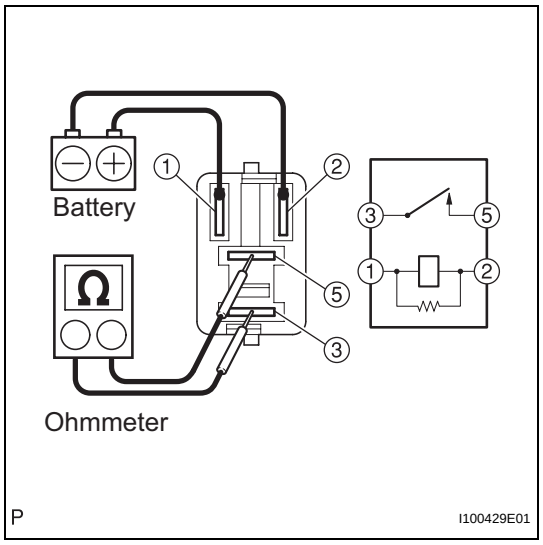

MAGNETIC CLUTCH RELAY

INSPECTION

1. INSPECT MAGNET-CLUTCH RELAY

(a) Check the resistance.

(1) Using an ohmmeter, measure the resistance between the terminals.

Standard

Tester Connection	Specified Condition
3 - 5	10 kΩ or higher
3 - 5	Below 1 Ω (Apply battery voltage to terminals 1 and 2)

If the result is not as specified, replace the relay.

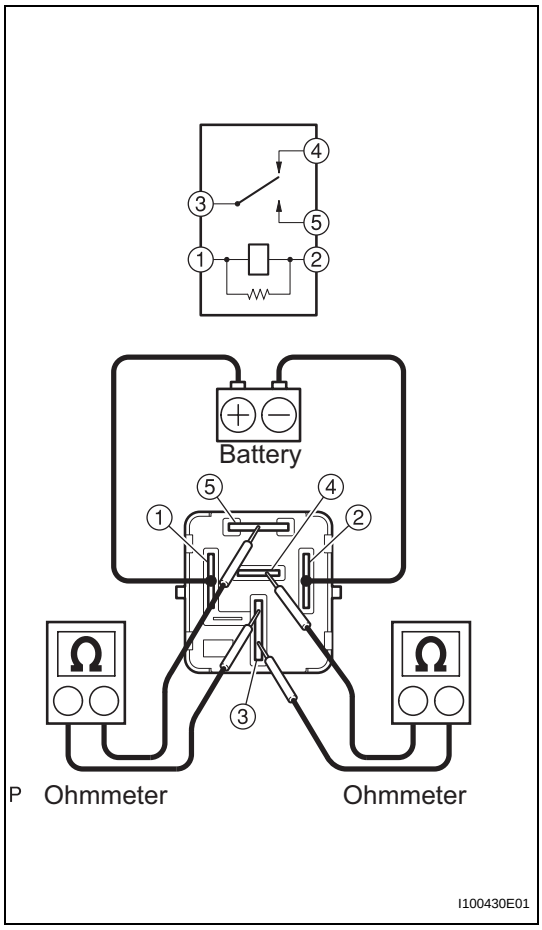

HEATER RELAY

INSPECTION

1. INSPECT HEATER RELAY

(a) Check the resistance.

(1) Using an ohmmeter, measure the resistance between each terminal.

Standard

Tester Connection	Specified Condition
3 - 4	Below 1 Ω
3 - 4	10 kΩ or higher (Apply battery voltage to terminals 1 and 2)
3 - 5	10 kΩ or higher
3 - 5	Below 1 Ω (Apply battery voltage to terminals 1 and 2)

If the result is not as specified, replace the relay.

AIR CONDITIONING CONTROL ASSEMBLY

COMPONENTS

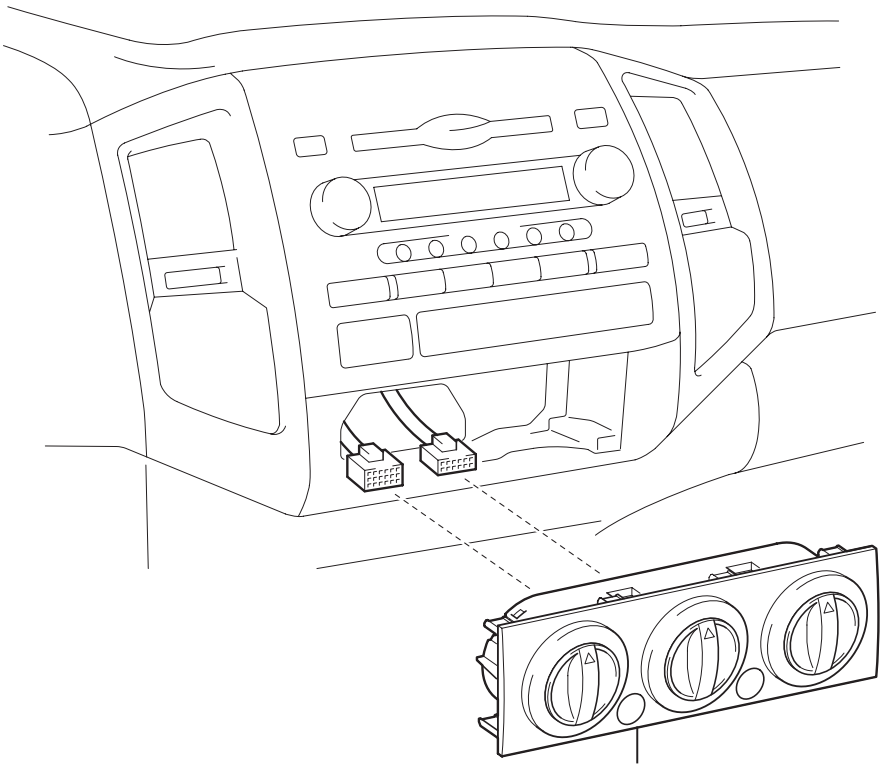

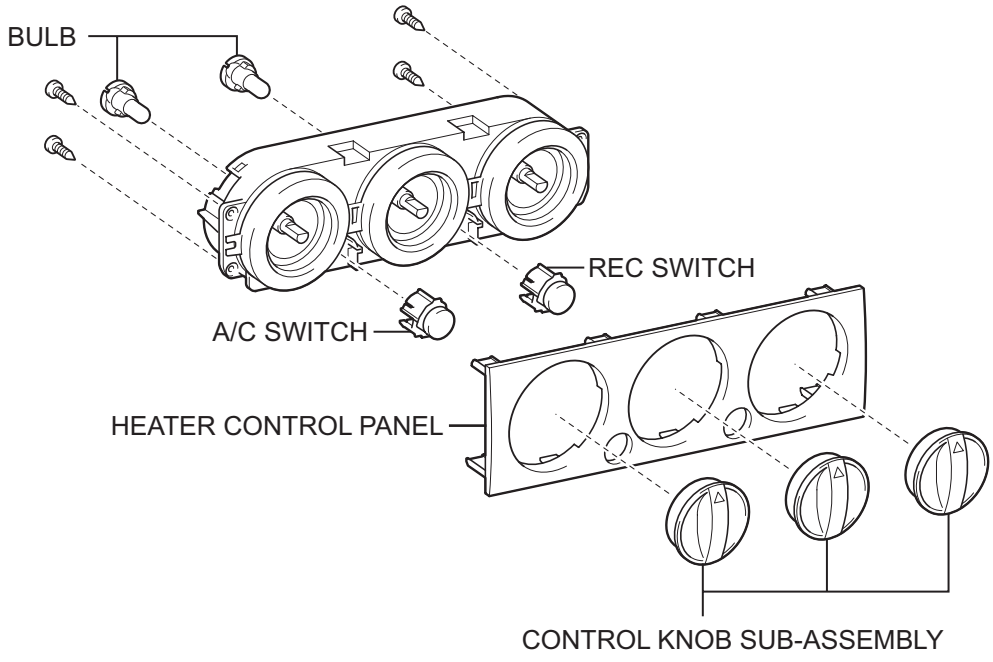

P

I045036E01

AC

REMOVAL

1. DISCONNECT CABLE FROM NEGATIVE BATTERY TERMINAL

2. REMOVE AIR CONDITIONING CONTROL ASSEMBLY

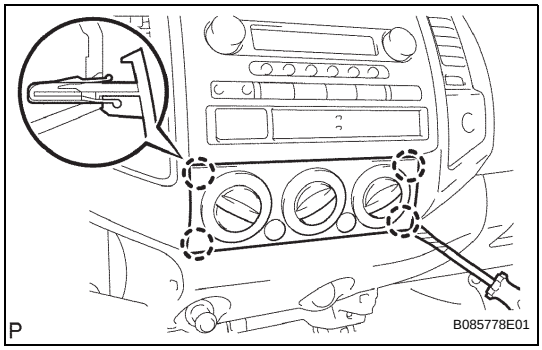

(a) Using a screwdriver, disengage the 4 clips and remove the air conditioner control assembly.
HINT:
Tape up the screwdriver tip before use.

(b) Disconnect the 2 connectors.

DISASSEMBLY

1. REMOVE CONTROL KNOB SUB-ASSEMBLY

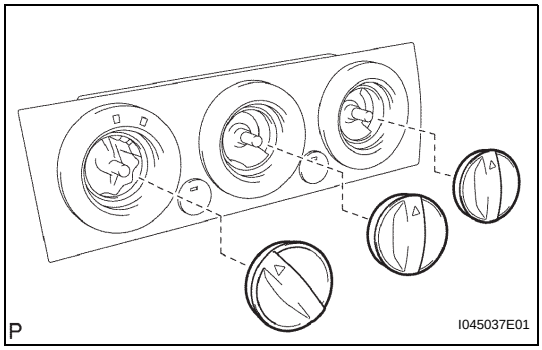

(a) Remove the 3 control knob sub-assemblies.

2. REMOVE HEATER CONTROL PANEL

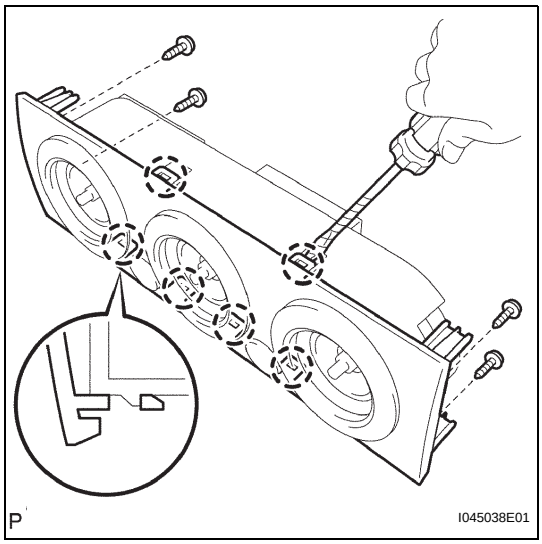

(a) Remove the 4 screws.

(b) Using a screwdriver, disengage the 6 claws and remove the heater control panel.
HINT:
Tape up the screwdriver tip before use.

3. REMOVE A/C SWITCH

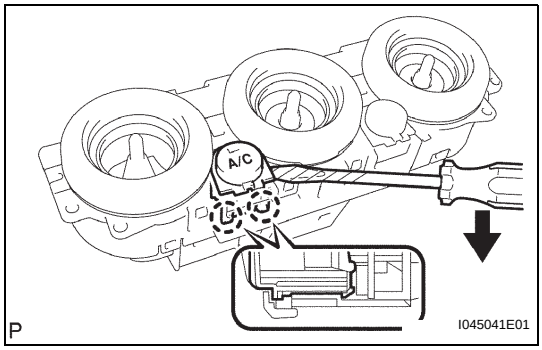

(a) Using a screwdriver, pry out the A/C switch.
HINT:
Tape up the screwdriver tip before use.

AC

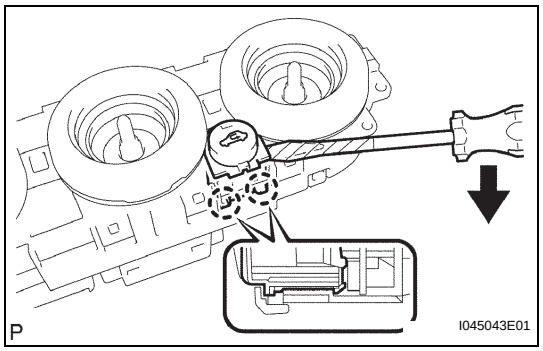

4. REMOVE REC SWITCH

(a) Using a screwdriver, pry out the REC switch.
HINT:
Tape up the screwdriver tip before use.

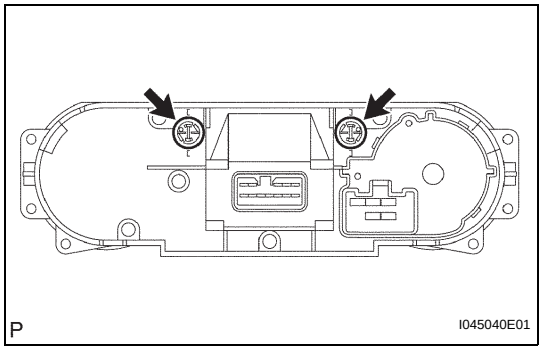

5. REMOVE BULB

(a) Using a screwdriver, turn the 2 bulbs counterclockwise and pull them out.

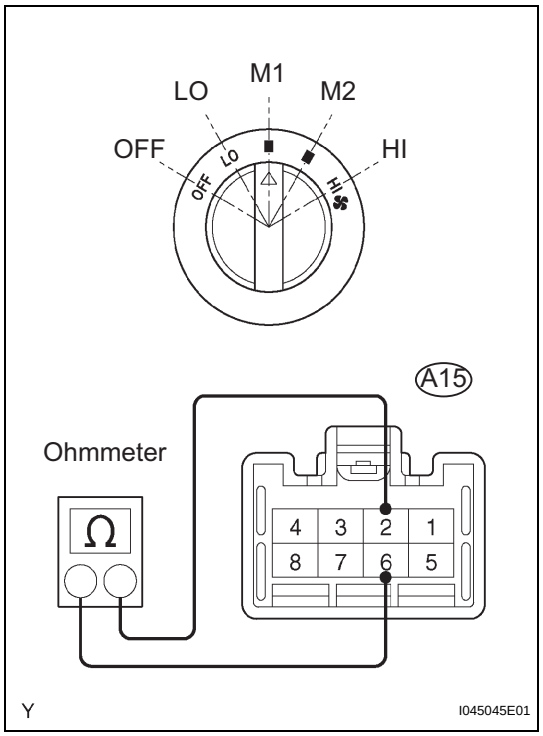

INSPECTION

1. INSPECT AIR CONDITIONING CONTROL ASSEMBLY

(a) Check the blower switch resistance.

(1) Using an ohmmeter, measure the resistance and check the results in accordance with the values in the table below.

Standard

Tester connection	Blower Switch Position	Specified Condition
2 - 3 - 4 - 6 - 7	OFF	10 KΩ or higher
2 - 6	LO	Below 1 Ω
2 - 6 - 7	LO - M1	Below 1 Ω
2 - 6 - 7	M1	Below 1 Ω
2 - 4 - 6 - 7	M1 - M2	Below 1 Ω
2 - 4 - 6	M2	Below 1 Ω
2 - 3 - 4 - 6	M2 - HI	Below 1 Ω
2 - 3 - 6	HI	Below 1 Ω

If the result is not as specified, replace the air conditioning control assembly.

AC

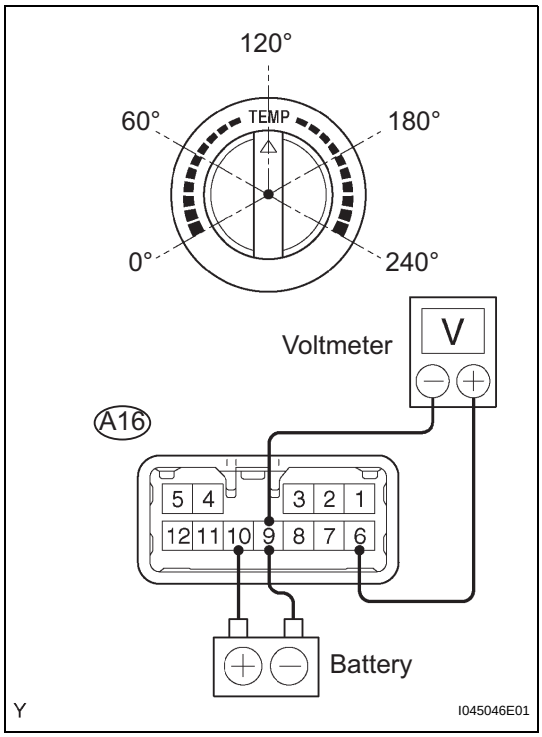

(b) Check the temperature selector switch voltage.
(1) Apply battery voltage (13.5V) across terminals 10 (IG) and 9 (GND).
(2) Connect the positive (+) tester probe of a voltmeter to terminal 6 (AMSW) and the negative (-) tester probe to terminal 9 (GND), then check the voltage.

Standard

Angle (Position)	Specified Condition
0° (MAX COOL)	13.0 to 13.5 V
60° (COOL)	9.7 to 10.6 V
120°	6.3 to 7.2 V
180° (HOT)	2.9 to 3.8 V
240° (MAX HOT)	0 to 0.5 V

If the result is not as specified, replace the air conditioning control assembly.

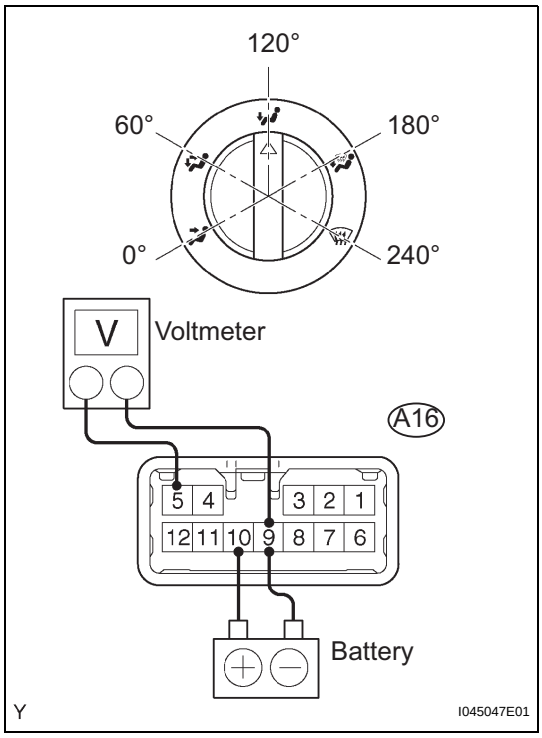

(c) Check the mode selector switch voltage.
(1) Apply battery voltage (13.5V) across terminals 10 (IG) and 9 (GND).
(2) Connect the positive (+) tester probe of a voltmeter to terminal 5 (MSET) and the negative (-) tester probe to terminal 9 (GND), then check the voltage.

Standard

Angle (Position)	Specified Condition
0° (FACE)	13.3 to 13.5 V
60° (B/L)	10.1 to 11.0 V
120° (FOOT)	6.3 to 7.2 V
180° (FOOT/DEF)	2.7 to 3.4 V
240° (DEF)	0 to 0.2 V

If the result is not as specified, replace the air conditioning control assembly.

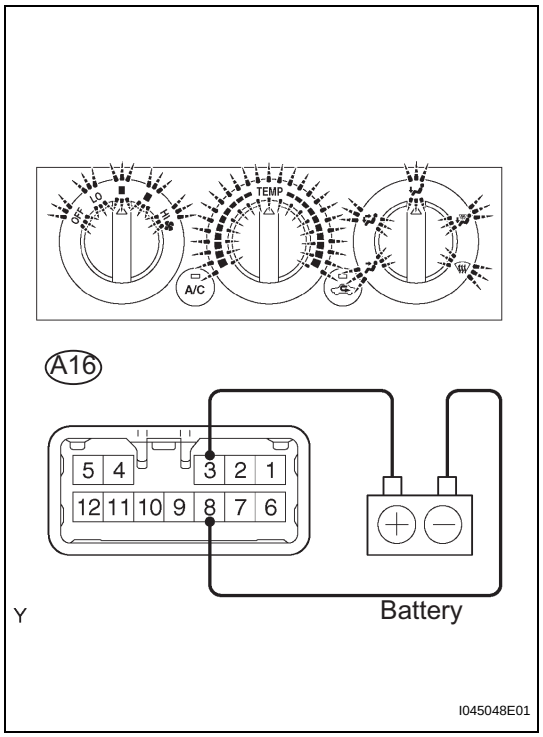

(d) Inspect the illumination operation.
(1) Connect the positive (+) lead from the battery to terminal 3 (ILL+) and negative (-) lead to terminal 8 (ILL-), then check that the illuminations light up.
Standard:
Illuminations light up
If the result is not as specified, check the faulty bulb.

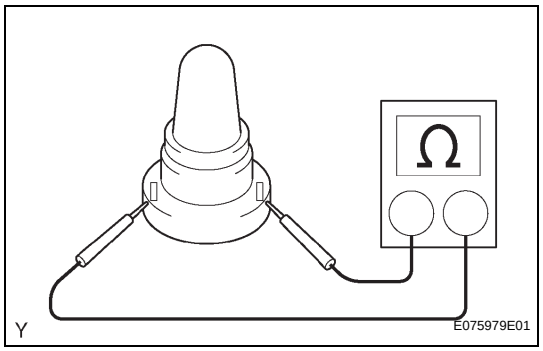

(e) Inspect the bulb.
(1) Inspect continuity of the bulb by connecting the tester as shown in the illustration.
Standard:
7 to 11 Ω at 20°C (68°F)
If continuity exists, replace the heater control.
If no continuity exists, replace the bulb.

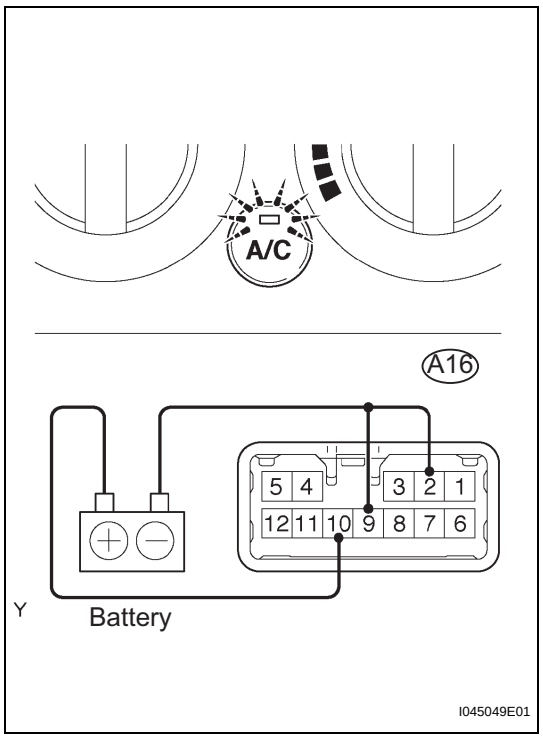

(f) Inspect A/C indicator operation.
(1) Connect the positive (+) lead from the battery to terminal 10 (IG) and negative (-) lead to terminal 2 (ACID) and 9 (GND).
(2) Push the A/C button in and then check that the indicator lights up.
Standard:
Indicator lights up
If the result is not as specified, replace the air conditioning control assembly.

AC

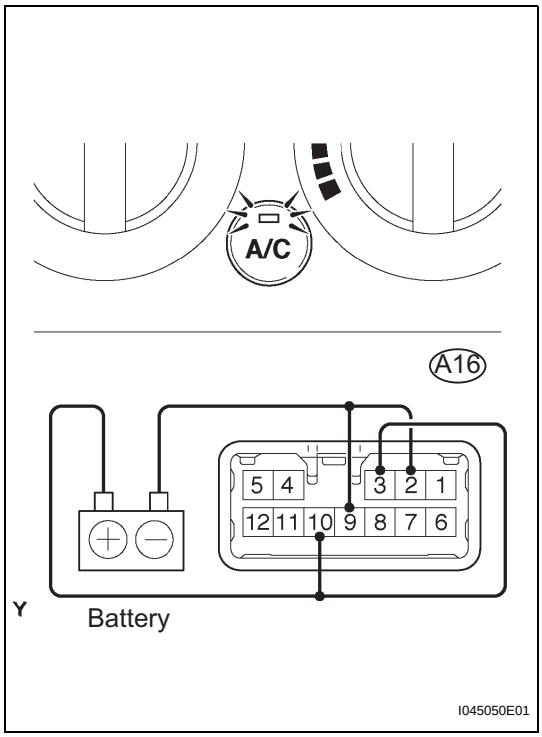

(3) Under the above condition, connect the positive (+) lead from the battery to terminal 3 (ILL+) and then check that the indicator dims.
Standard:
Indicator dims
If the result is not as specified, replace the air conditioning control assembly.

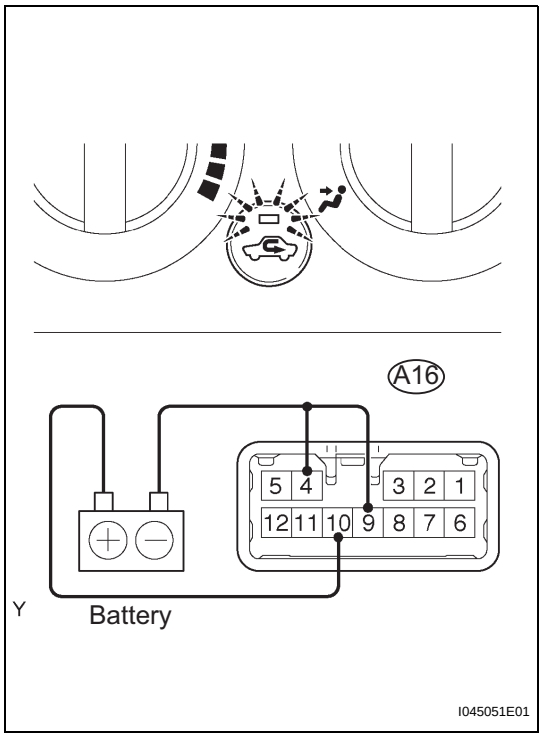

(g) Inspect the REC indicator operation.
(1) Connect the positive (+) lead from the battery to terminal 10 (IG) and negative (-) lead to terminal 4 (REC) and 9 (GND).
(2) Push the REC button in and then check that the indicator lights up.
Standard:
Indicator lights up
If the result is not as specified, replace the air conditioning control assembly.

AC

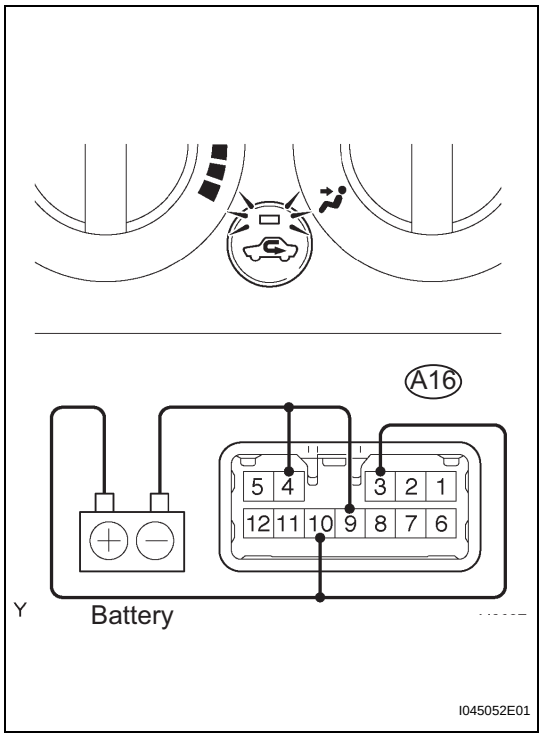

(3) Under the above condition, connect the positive (+) lead from the battery to terminal 3 (ILL+) and then check that the indicator dims.
Standard:
Indicator dims
If the result is not as specified, replace the air conditioning control assembly.

REASSEMBLY

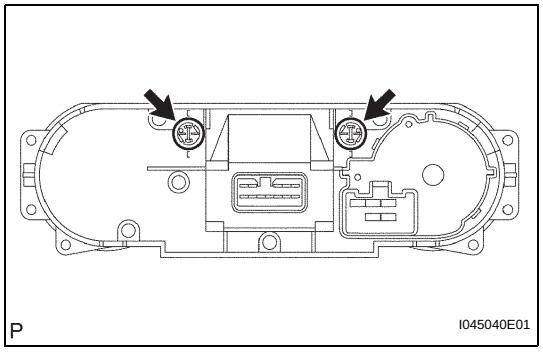

1. INSTALL BULB
(a) Using a screwdriver, turn the 2 bulbs clockwise to install them.

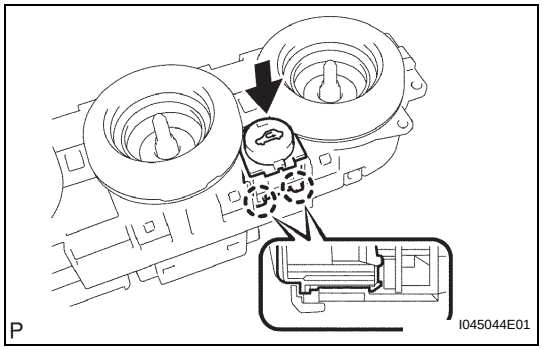

2. INSTALL REC SWITCH
(a) Engage the 2 claws and install the REC switch.

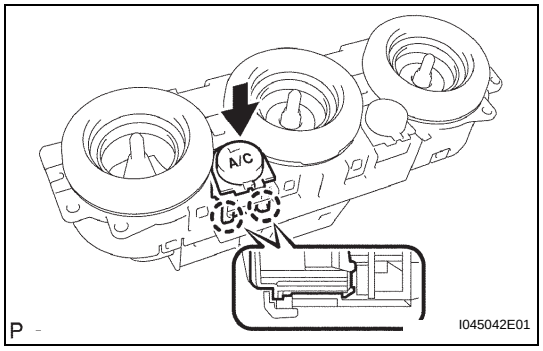

3. INSTALL A/C SWITCH
(a) Engage the 2 claws and install the A/C switch.

AC

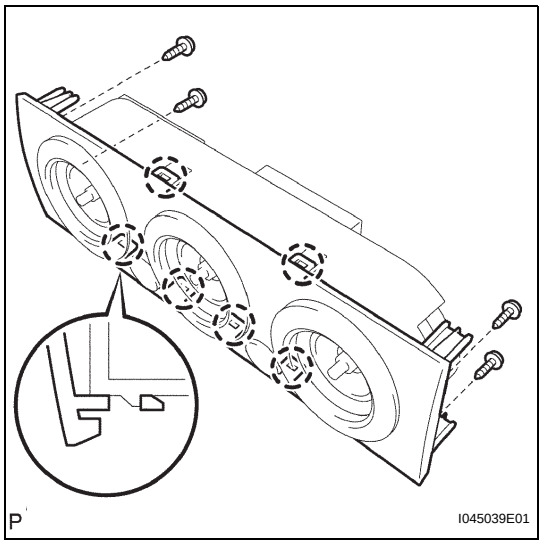

4. INSTALL HEATER CONTROL PANEL

(a) Engage the 6 claws and install the heater control panel.

(b) Install the 4 screws.

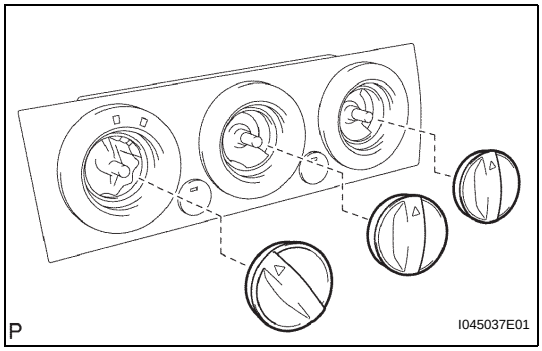

5. INSTALL CONTROL KNOB SUB-ASSEMBLY

(a) Install the 3 control knob sub-assemblies.

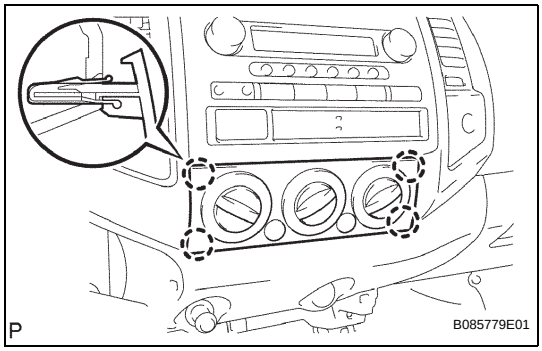

INSTALLATION

1. INSTALL AIR CONDITIONING CONTROL ASSEMBLY

(a) Connect the 2 connectors.

(b) Engage the 4 clips and install the air conditioning control assembly.

2. CONNECT CABLE TO NEGATIVE BATTERY TERMINAL

Torque: 3.9 N*m (40 kgf*cm, 35 in.*lbf)

NOTICE:

AC-1

AIR CONDITIONING AMPLIFIER

COMPONENTS

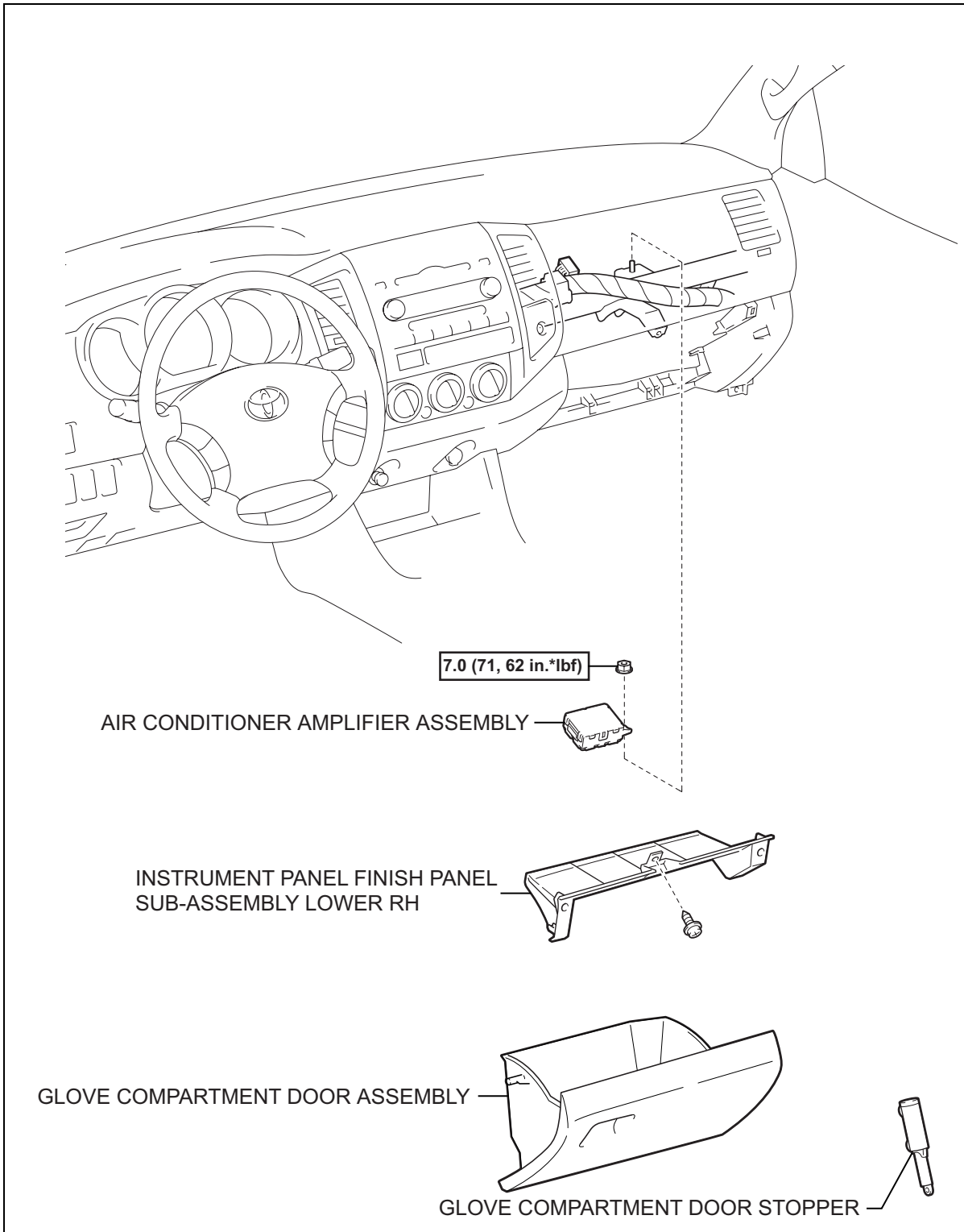

N*m (kgf*cm, ft.*lbf) : Specified torque

P

I045419E01

AC

REMOVAL

1. **DISCONNECT CABLE FROM NEGATIVE BATTERY TERMINAL**
   Wait at least for 90 seconds after disconnecting the cable to prevent the airbag from working.
2. **REMOVE GLOVE COMPARTMENT DOOR ASSEMBLY (See page IP-13)**
3. **REMOVE INSTRUMENT PANEL FINISH PANEL SUB-ASSEMBLY LOWER RH (See page IP-14)**
4. **REMOVE AIR CONDITIONER AMPLIFIER ASSEMBLY**
   (a) Disconnect the connector.
   (b) Remove the nut and the air conditioner amplifier assembly.

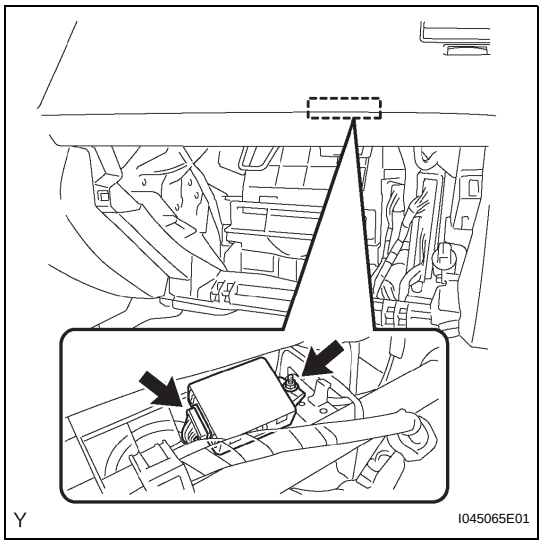

INSTALLATION

1. **INSTALL AIR CONDITIONER AMPLIFIER ASSEMBLY**
   (a) Install the air conditioner amplifier assembly with the nut.
   Torque: 7.0 N*m (71 kgf*cm, 62 in.*lbf)
   (b) Connect the connector.
2. **INSTALL INSTRUMENT PANEL FINISH PANEL SUB-ASSEMBLY LOWER RH (See page IP-20)**
3. **INSTALL GLOVE COMPARTMENT DOOR ASSEMBLY (See page IP-20)**
4. **CONNECT CABLE TO NEGATIVE BATTERY TERMINAL**
   Torque: 3.9 N*m (40 kgf*cm, 35 in.*lbf)
   NOTICE:
   (See page AC-1)

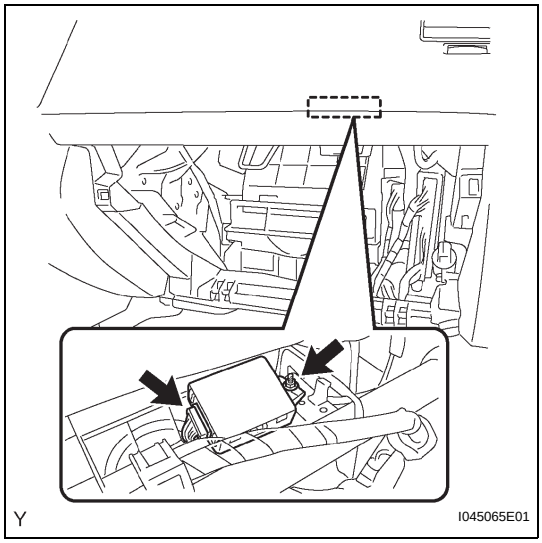

AC

AIRBAG SYSTEM

PRECAUTION

CAUTION:

- **The vehicle is equipped with SRS, which consists of a driver airbag, front passenger airbag, side airbags and curtain shield airbags. Failure to carry out service operations in the correct sequence could cause the SRS to unexpectedly deploy during servicing, possibly leading to a serious accident. Further more, if a mistake is made in servicing the SRS, it is possible that the SRS may fail to operate when required. Before performing servicing (including removal or installation of parts, inspection or replacement), be sure to read the following items carefully, then follow the correct procedures indicated in the repair manual.**
- **Wait at least 90 seconds after the ignition switch is turned to the LOCK position and the negative (-) terminal cable is disconnected from the battery. (The SRS is equipped with a back-up power source, so if work is started within 90 seconds after disconnecting the negative (-) terminal cable of the battery, the SRS may be deployed.)**
- **Do not directly expose the Steering pad, front panel passenger airbag assembly, Center airbag sensor assembly, front airbag sensor, front seat side airbag assembly, side airbag sensor, curtain shield airbag assembly, rear airbag sensor, seat position sensor or occupant classification ECU to hot air or flames.**
- **Be sure to perform the initialization of the occupant classification ECU if any of the following conditions occur (See page RS-357 or RS-480). If the initialization is not performed, the SRS may not operate properly.**
  - **The occupant classification ECU is replaced.**
  - **Accessories (seatback tray, seat cover, etc.) are installed onto the vehicle.**
  - **The passenger seat is removed from the vehicle, and then reinstalled or replaced.**
  - **The passenger airbag ON/OFF indicator light (OFF) comes on when the passenger seat is not occupied.**
  - **The vehicle is brought to the workshop for repair due to an accident or collision.**

NOTICE:

- **Malfunction symptoms of the SRS are difficult to confirm, so DTCs are the most important source of information when troubleshooting. When troubleshooting the SRS, always inspect DTCs before disconnecting the battery.**

- **Even in the case of a minor collision when the SRS does not deploy, the Steering pad, front passenger airbag assembly, Center airbag sensor assembly, front airbag sensor, front seat side airbag assembly, side airbag sensor, Curtain shield airbag assembly, rear airbag sensor, seat position sensor and occupant classification ECU should be inspected.**
- **Before repair work, remove the airbag sensor if any kind of shock is likely to occur to the airbag sensor during the operation.**
- **Never use SRS parts from another vehicle. When replacing parts, replace them with new ones.**
- **Never disassemble or repair the Steering pad, front passenger airbag assembly, Center airbag sensor assembly, front airbag sensor, front seat side airbag assembly, side airbag sensor, Curtain shield airbag assembly, rear airbag sensor, seat position sensor or occupant classification ECU in order to reuse it.**
- **If the Steering pad, front passenger airbag assembly, Center airbag sensor assembly, front airbag sensor, front seat side airbag assembly, side airbag sensor, curtain shield airbag assembly, rear airbag sensor, seat position sensor or occupant classification ECU has been dropped, or if there are any cracks, dents or other defects in the case, bracket or connector, replace it with a new one.**
- **Use a volt/ohmmeter with high impedance (10 kΩ/V minimum) for troubleshooting the electrical circuits.**
- **Information labels are attached to the periphery of the SRS components. Follow the instructions in the cautions.**
- **After work on the SRS is completed, perform the SRS warning light check (See page RS-28).**
- **When the negative (-) terminal cable is disconnected from the battery, the memory will be cleared. Thus, be sure to make a record of the contents stored in each system before starting work. When the work is finished, reset each system, as it was before. Never use a back-up power supply from outside the vehicle to avoid erasing the memory in any system.**
- **If the vehicle is equipped with a mobile communication system, refer to the precaution in the INTRODUCTION section.**

1. HANDLING PRECAUTIONS FOR AIRBAG SENSORS

HINT:

In order to prevent unexpected airbag deployment, disconnect the following connectors before inspecting parts such as wire harnesses, if the application of tester probes to the center airbag sensor assembly connector is necessary.

- Center Airbag Sensor assembly
- Front Airbag Sensor LH
- Front Airbag Sensor RH
- Side Airbag Sensor LH

RS

- Side Airbag Sensor RH
- Rear Airbag Sensor LH
- Rear Airbag Sensor RH

(a) Before starting the following operations, wait for at least 90 seconds after disconnecting the negative (-) terminal cable from the battery:
  (1) Replacement of the airbag sensors.
  (2) Adjustment of the front/rear doors of the vehicle equipped with the side airbag and curtain shield airbag (fitting adjustment).

(b) When connecting or disconnecting the airbag sensor connectors, ensure that each sensor is installed in the vehicle.

(c) Do not use the airbag sensors which has been dropped during the operation or transportation.

(d) Do not disassemble the airbag sensors.

(e) If engine is run immediately after reconnecting negative battery terminal cable, keep it at less than 2000rpm for at least 1 minute.

(f) If the engine exceeds 2,000rpm, the clutch is automatically disengaged by the compressor protection control system.

2. INSPECTION PROCEDURE FOR VEHICLE INVOLVED IN ACCIDENT

(a) When the airbag has not deployed, check for DTCs by checking the SRS warning light blinking patterns or using a intelligent tester. If any DTCs are present, perform troubleshooting for those DTCs.

(b) When any of the airbags have deployed, replace the airbag sensor and check the installation condition.

3. SRS CONNECTORS

HINT:

SRS connectors are located as shown in the following illustration.

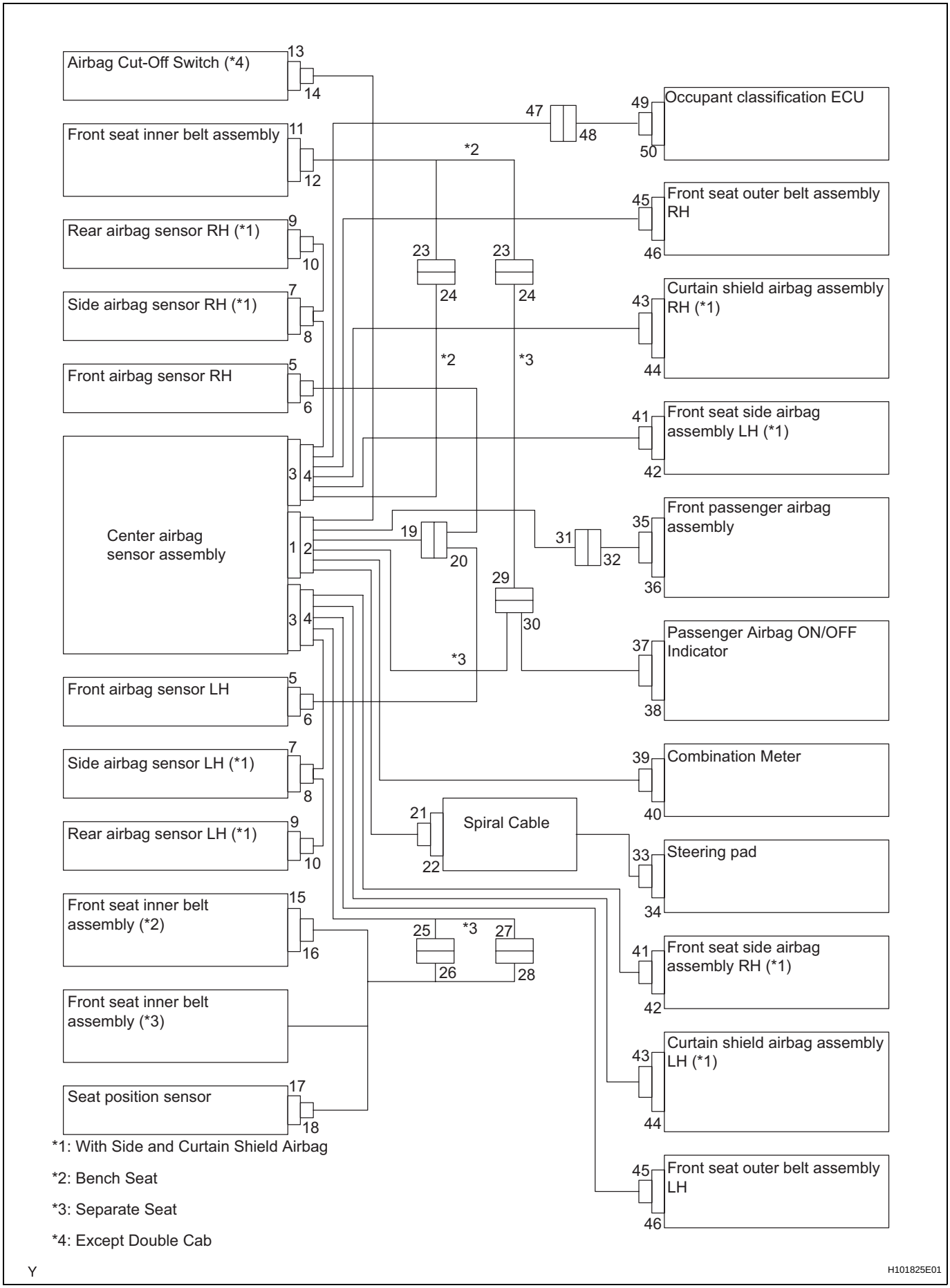
Airbag Cut-Off Switch (*4)
13
14
Front seat inner belt assembly
11
12
Rear airbag sensor RH (*1)
9
10
Side airbag sensor RH (*1)
7
8
Front airbag sensor RH
5
6
Center airbag sensor assembly
3
4
1
2
3
4
Front airbag sensor LH
5
6
Side airbag sensor LH (*1)
7
8
Rear airbag sensor LH (*1)
9
10
Front seat inner belt assembly (*2)
15
16
Front seat inner belt assembly (*3)
Seat position sensor
17
18
47
48
49
50
Occupant classification ECU
*2
45
46
Front seat outer belt assembly RH
23
24
23
24
43
44
Curtain shield airbag assembly RH (*1)
*2
*3
41
42
Front seat side airbag assembly LH (*1)
19
20
31
32
35
36
Front passenger airbag assembly
29
30
*3
37
38
Passenger Airbag ON/OFF Indicator
39
40
Combination Meter
21
22
Spiral Cable
33
34
Steering pad
25
26
*3
27
28
41
42
Front seat side airbag assembly RH (*1)
43
44
Curtain shield airbag assembly LH (*1)
45
46
Front seat outer belt assembly LH
*1: With Side and Curtain Shield Airbag
*2: Bench Seat
*3: Separate Seat
*4: Except Double Cab
Y
H101825E01

RS

No.	Connector Type	Application
(1)	Terminal Twin-Lock Mechanism	Connectors 2, 4, 6, 8, 10, 19, 20, 21, 23, 24, 31, 41
(2)	Activation Prevention Mechanism	Connectors 2, 4, 22, 32, 42
(3)	Half Connection Prevention Mechanism	Connectors 6, 8, 10, 20, 21, 41
(4)	Connector Lock Mechanism (1)	Connectors 19, 25, 27, 33, 35, 43, 45
(5)	Connector Lock Mechanism (2)	Connectors 2, 4
(6)	Improper Connection Prevention Lock Mechanism	Connectors 1, 3

(a) All connectors in the SRS except the seat position sensor connector and the occupant classification ECU connector are colored yellow to distinguish them from other connectors. Some connectors have special functions, and are specially designed for the SRS. These connectors use durable gold-plated terminals, and are placed in the locations shown on the previous page to ensure high reliability.

(1) Terminal twin-lock mechanism:
Each connector has a two-piece component consisting of a housing and a spacer. This design enables the terminal to be locked securely by two locking devices (the retainer and the lance) to prevent the terminals from becoming disconnected.

(2) Activation prevention mechanism:
Each connector contains a short spring plate. When the connector is disconnected, the short spring plate automatically connects the positive (+) and negative (-) terminals of the squib.

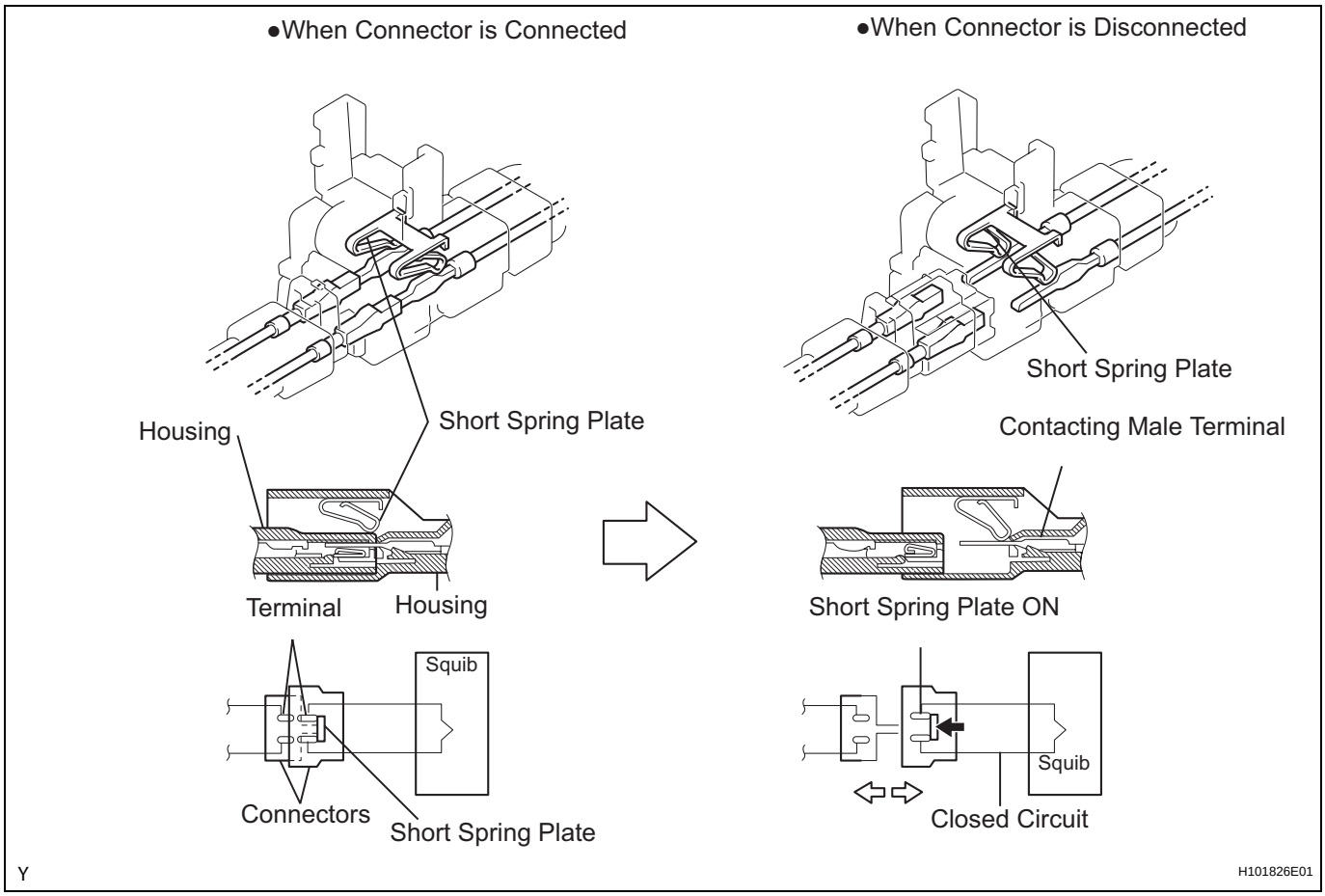

(3) Half connection prevention mechanism:
If the connector is not completely connected, the connector is disconnected due to the spring operation so that no continuity exists.

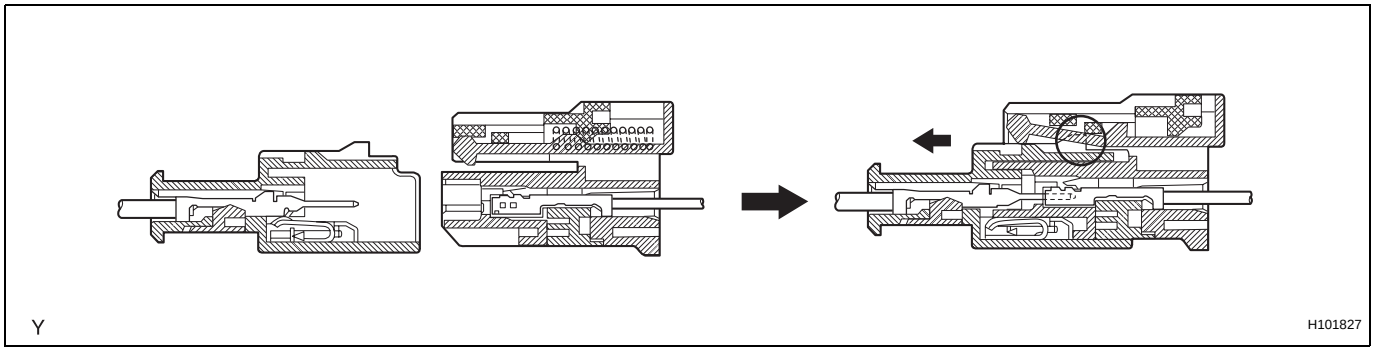

RS

(4) Connector lock mechanism (1):
Locking the connector lock button connects the connector securely.

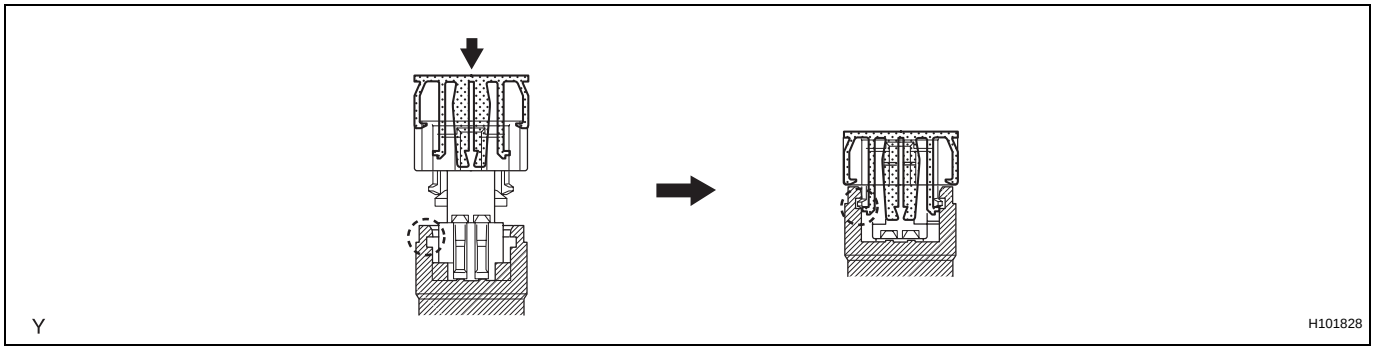

(5) Connector lock mechanism (2):
Both the primary lock with holder lances and the secondary lock with retainer prevent the connectors from becoming disconnected.

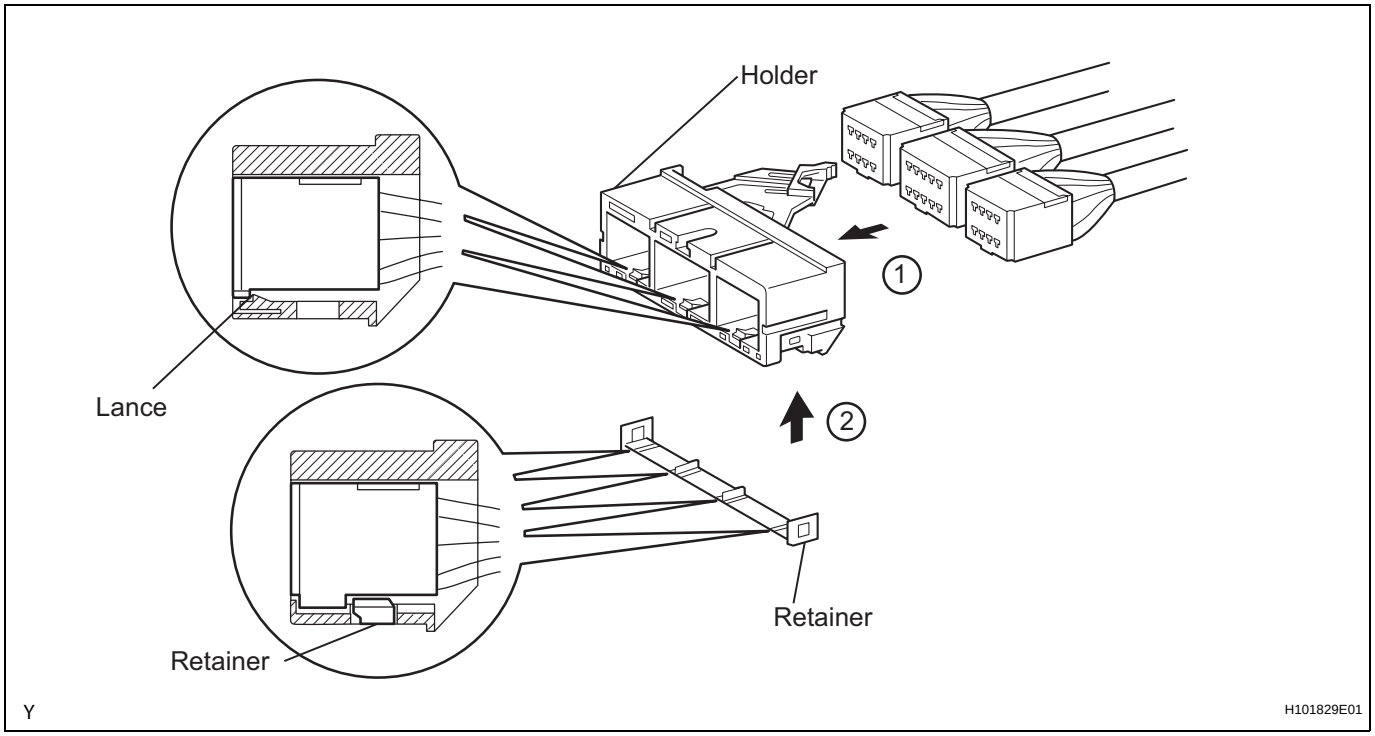

RS

(6) Improper connection prevention lock mechanism:
When connecting the holder, the lever is pushed into the end by rotating around the A axis to lock the holder securely.

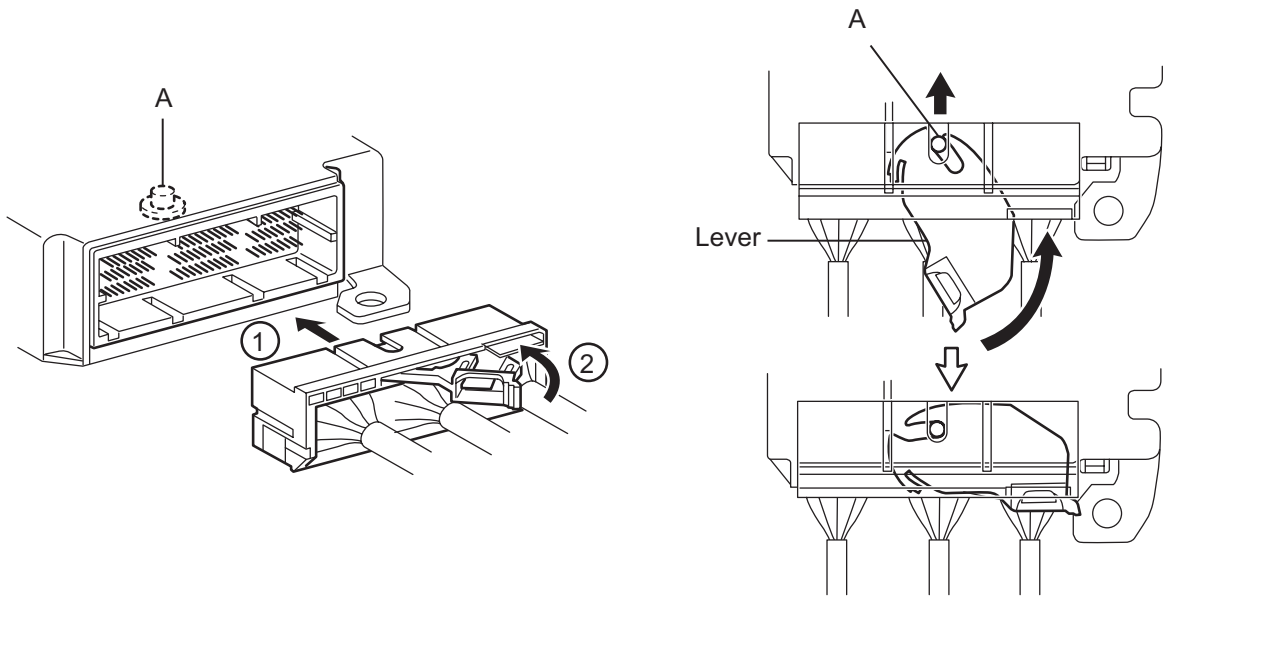

(b) When the vehicle is involved in a frontal collision in the hatched area (Fig.1) and the shock is larger than the predetermined level, the SRS is activated automatically. The safing sensor is designed to activate at a lower deceleration rate than the airbag sensor. As illustrated in Fig.2, ignition is caused when a current flows to the squib, which happens when the safing sensor and the deceleration sensor go on simultaneously. When a deceleration force acts on the sensors, 2 squibs in the driver airbag and front passenger airbag ignite and generate gas. The gas discharging into the driver airbag and front passenger airbag rapidly increases the pressure inside the bags, breaking the Steering pad and instrument panel. The deployment of the bags then ends, and the bags deflate as the gas is discharged through discharge holes at the rear of the bag.

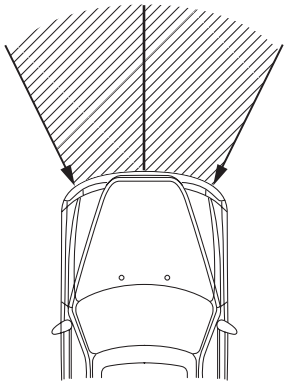

Fig.1

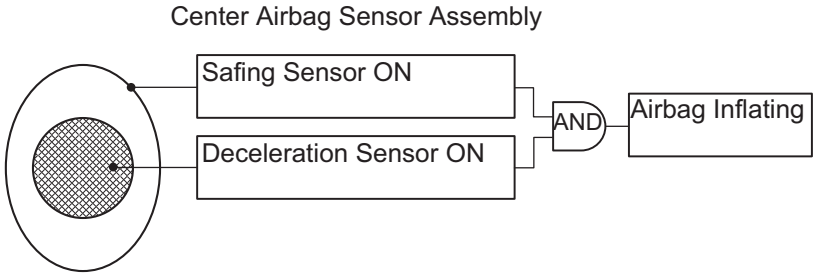

Fig.2

Y

H101831E01

4. DISCONNECTION OF CONNECTORS FOR STEERING PAD, FRONT PASSENGER AIRBAG ASSEMBLY AND CURTAIN SHIELD AIRBAG ASSEMBLY

(a) Release the lock button (yellow part) of the connector using a screwdriver.

RS

(b) Insert the screwdriver tip between the connector and the base, and then raise the connector.

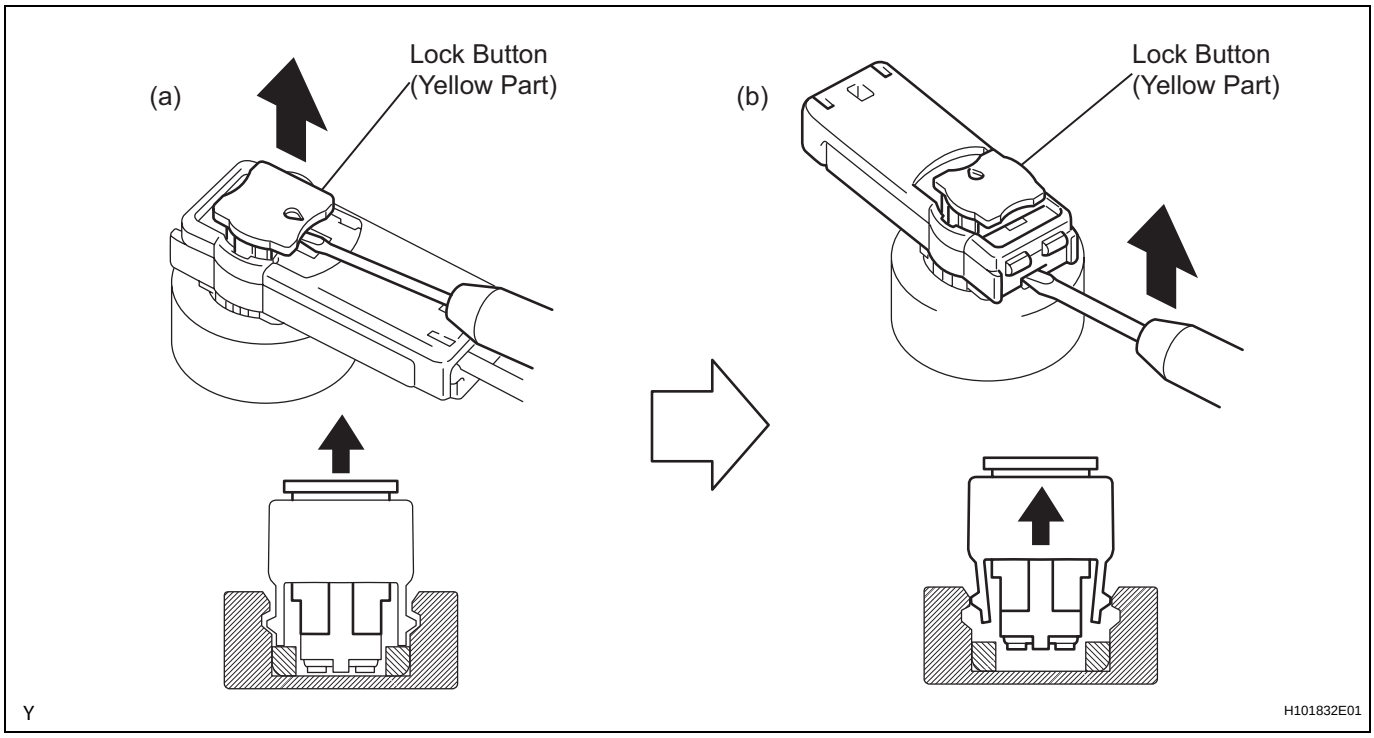

5. CONNECTION OF CONNECTORS FOR STEERING PAD, FRONT PASSENGER AIRBAG ASSEMBLY AND CURTAIN SHIELD AIRBAG ASSEMBLY

(a) Connect the connector.

(b) Push down securely on the lock button (yellow part) of the connector. (When locking, a click sound can be heard.)

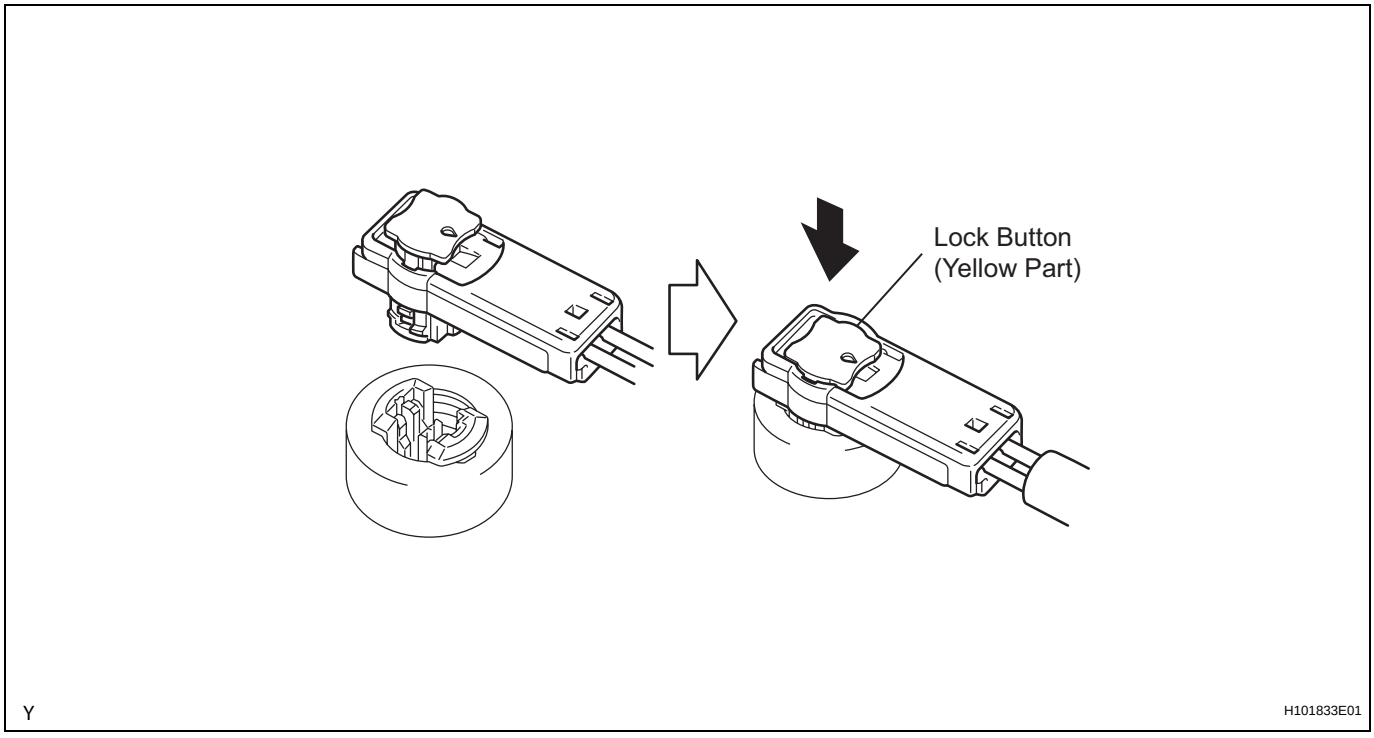

RS

6. DISCONNECTION OF CONNECTOR FOR FRONT SEAT SIDE AIRBAG ASSEMBLY

(a) Place a finger on the slider, slide the slider to release the lock, and then disconnect the connector.

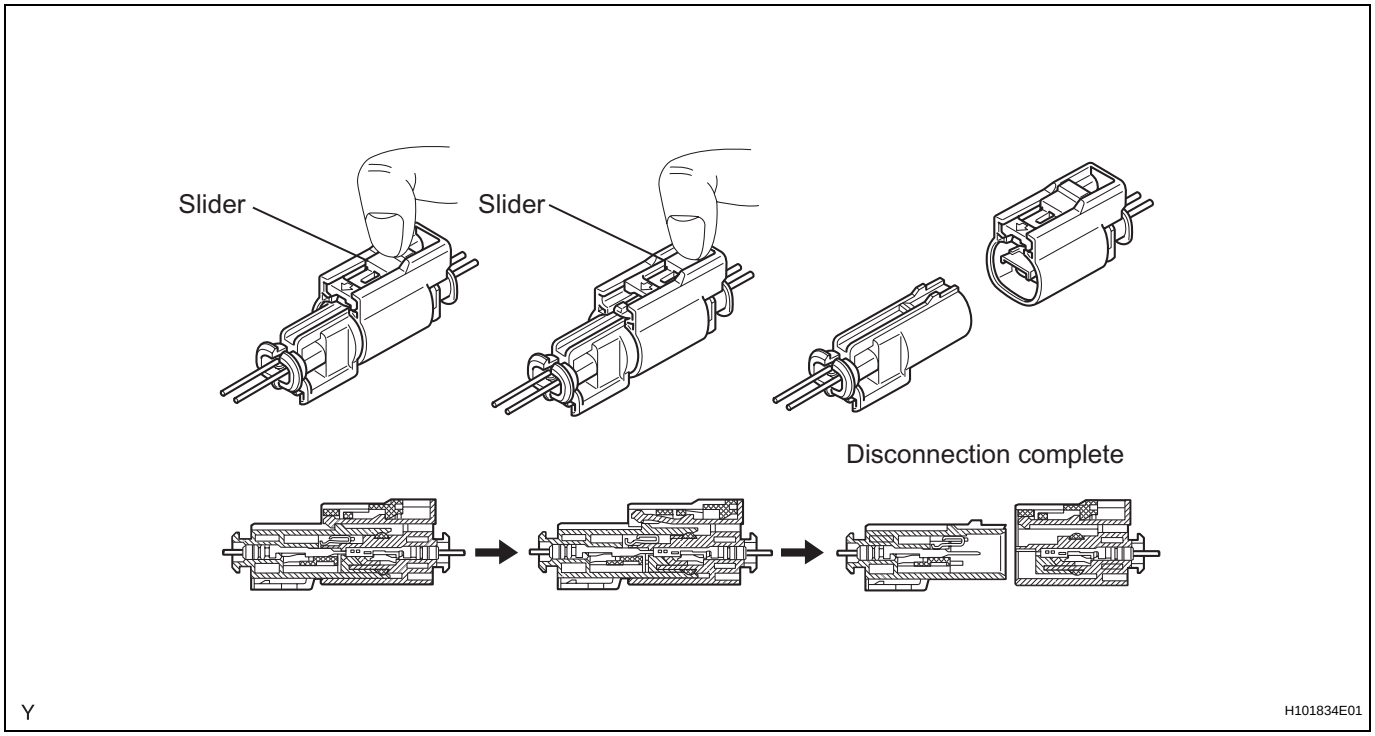

7. CONNECTION OF CONNECTOR FOR SEAT SIDE AIRBAG ASSEMBLY

(a) Connect the connector as shown in the illustration. (When locking, make sure that the slider returns to its original position and a click sound can be heard.)
HINT:
When connecting, the slider will slide. Be sure not to touch the slider while connecting, as this may result in an insecure fit.

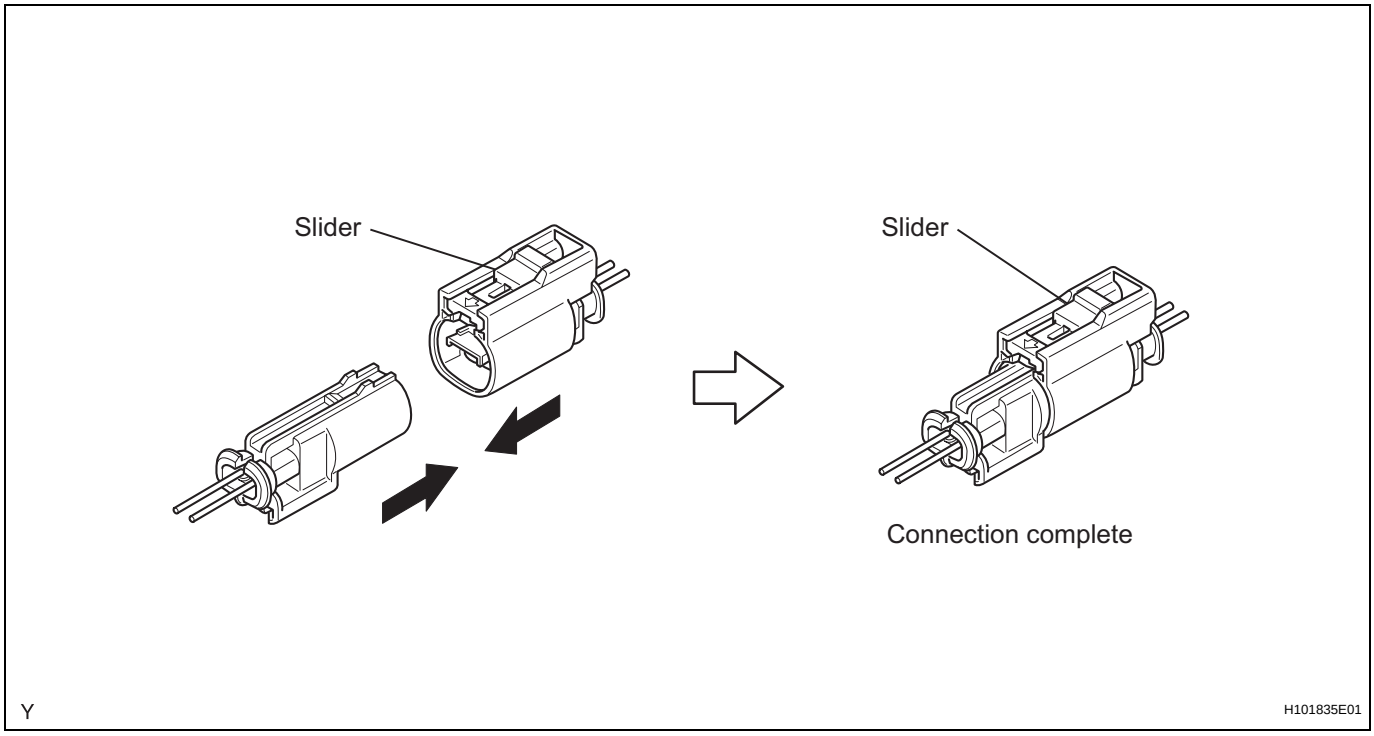

8. DISCONNECTION OF CONNECTOR FOR FRONT PASSENGER AIRBAG ASSEMBLY

(a) Place a finger on the slider, slide the slider to release the lock, and then disconnect the connector.

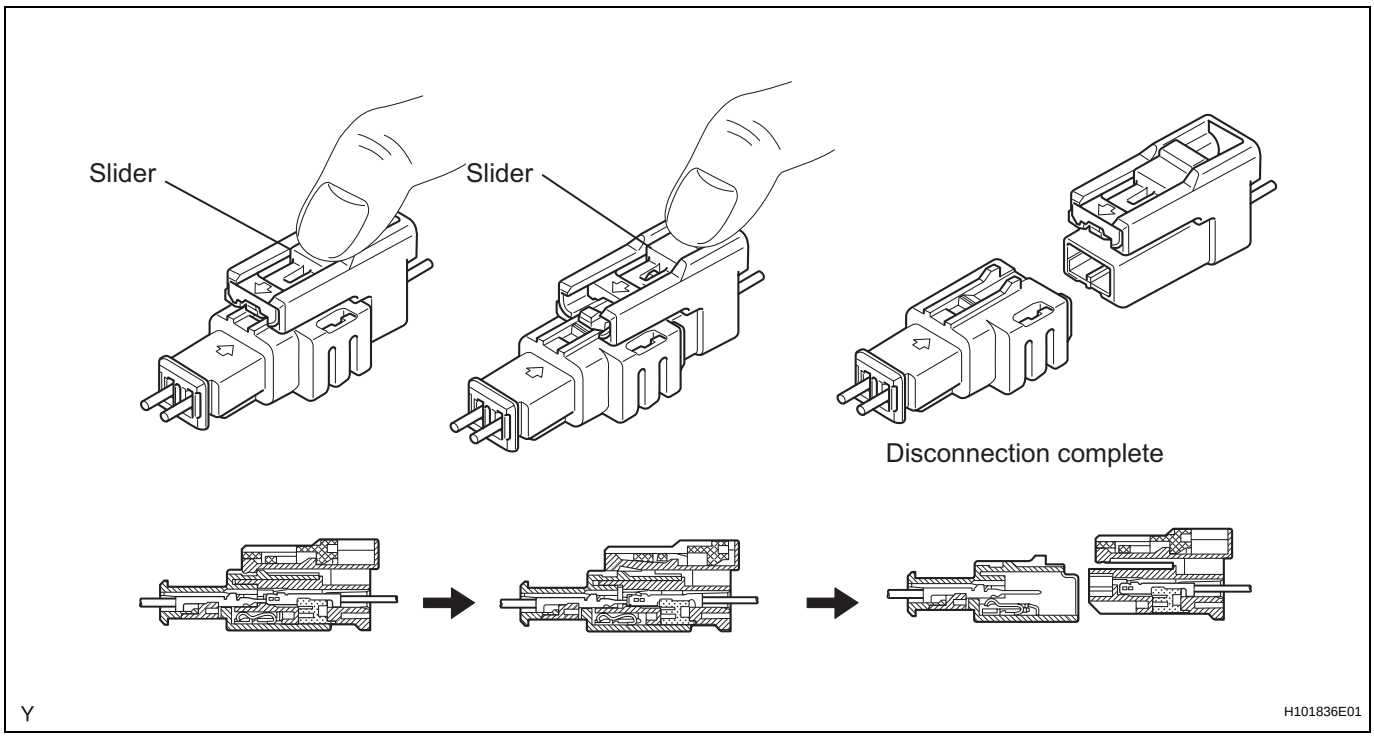

RS

9. CONNECTION OF CONNECTOR FOR FRONT PASSENGER AIRBAG ASSEMBLY

(a) Connect the connector as shown in the illustration. (When locking, make sure that the slider returns to its original position and a click sound can be heard.)
HINT:
When connecting, the slider will slide. Be sure not to touch the slider while connecting, as this may result in an insecure fit.

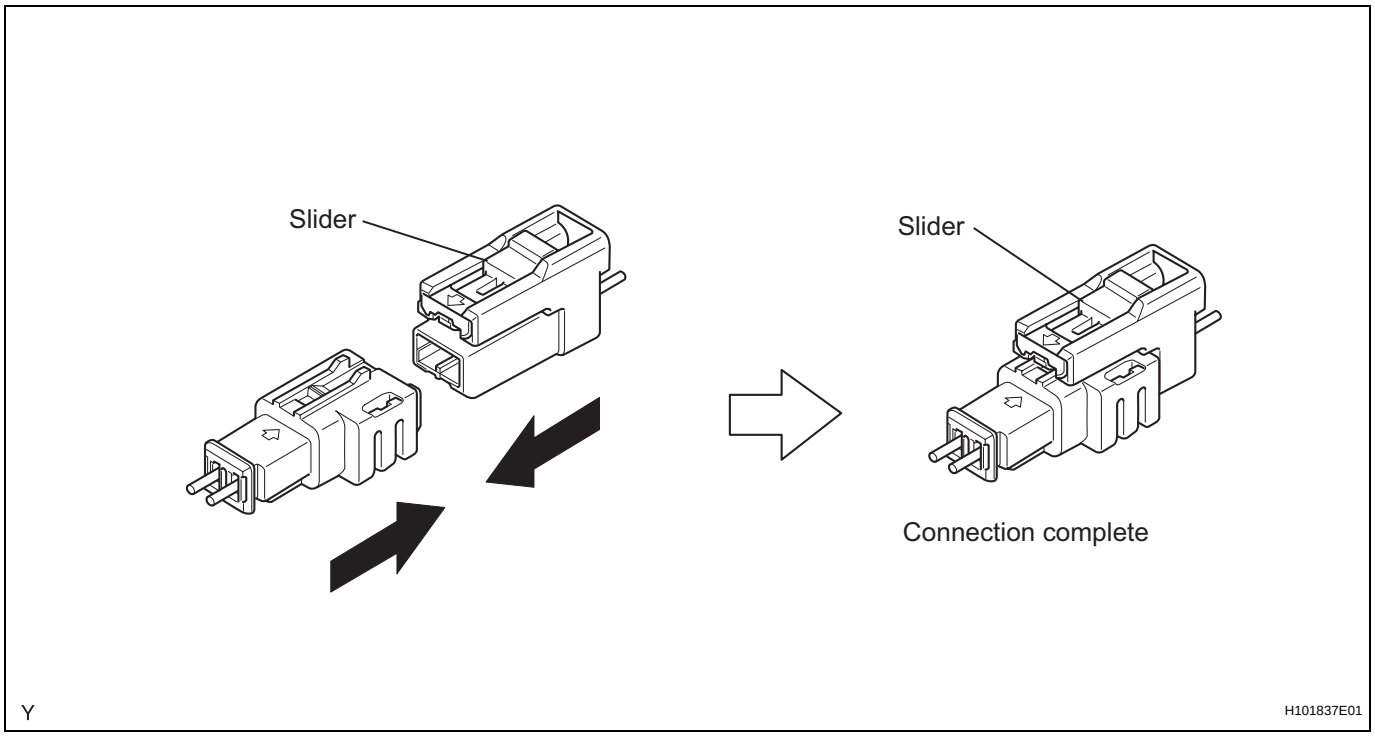

10. DISCONNECTION OF CONNECTOR FOR CENTER AIRBAG SENSOR ASSEMBLY

(a) Pull the lever by pushing part A as shown in the illustration and disconnect the holder (with connectors).

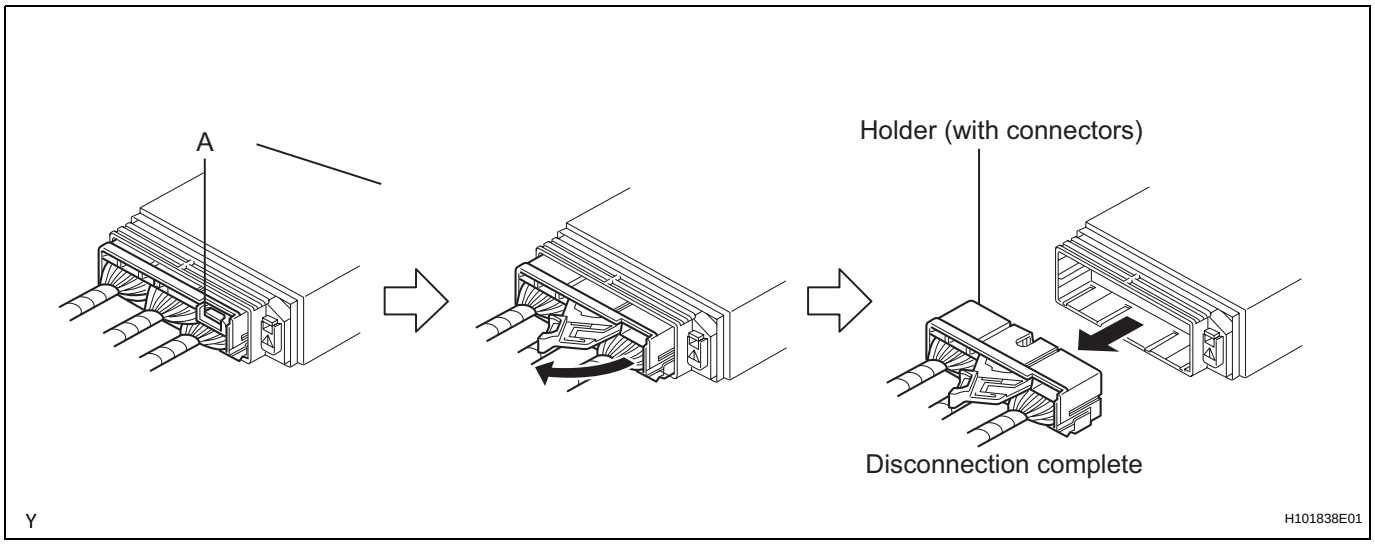

RS

HINT:
Perform the following procedures when replacing the holder.

(b) Remove the holder.
(1) Using a screwdriver, unlock the retainer.

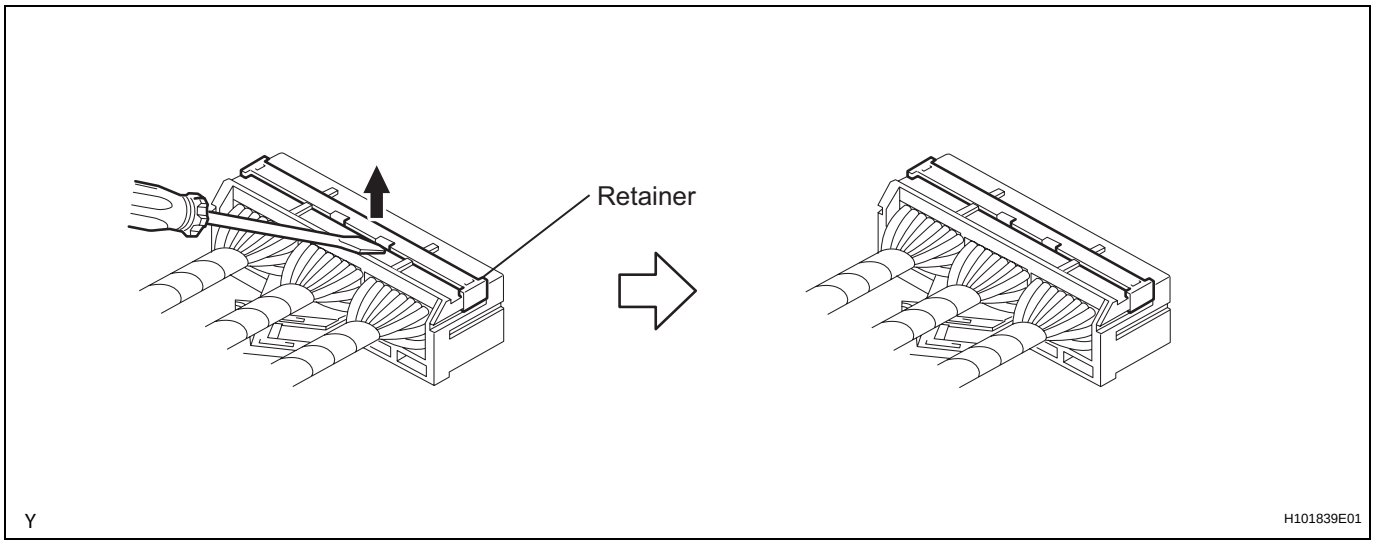

(2) Release the fitting lances and remove the holder.

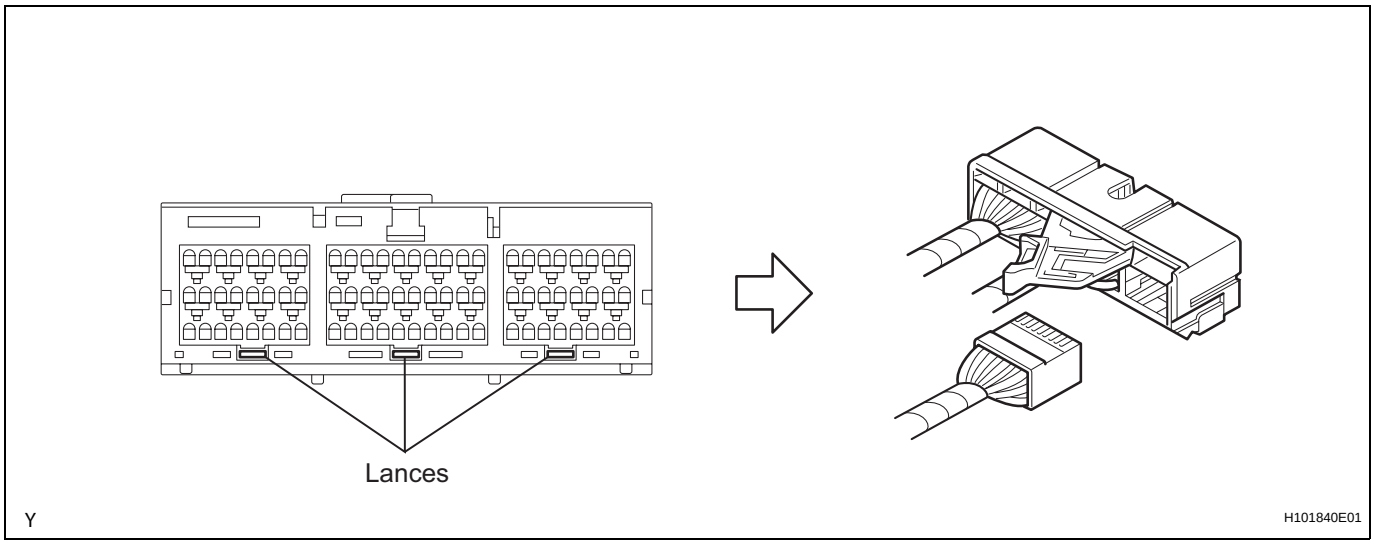

(c) Install the holder.
(1) Install the connectors into the holder. (When locking, a click sound can be heard.)
HINT:
The retainer is locked when the holder is connected.

11. CONNECTION OF CONNECTOR FOR CENTER AIRBAG SENSOR ASSEMBLY

(a) Firmly insert the holder (with connectors) until it can not be pushed any further.

RS

(b) Push the lever to connect the holder (with connectors). (When locking, a click sound can be heard.)
HINT:
The holder slides when connecting. Holding the holder when connecting may result in an insecure connection.

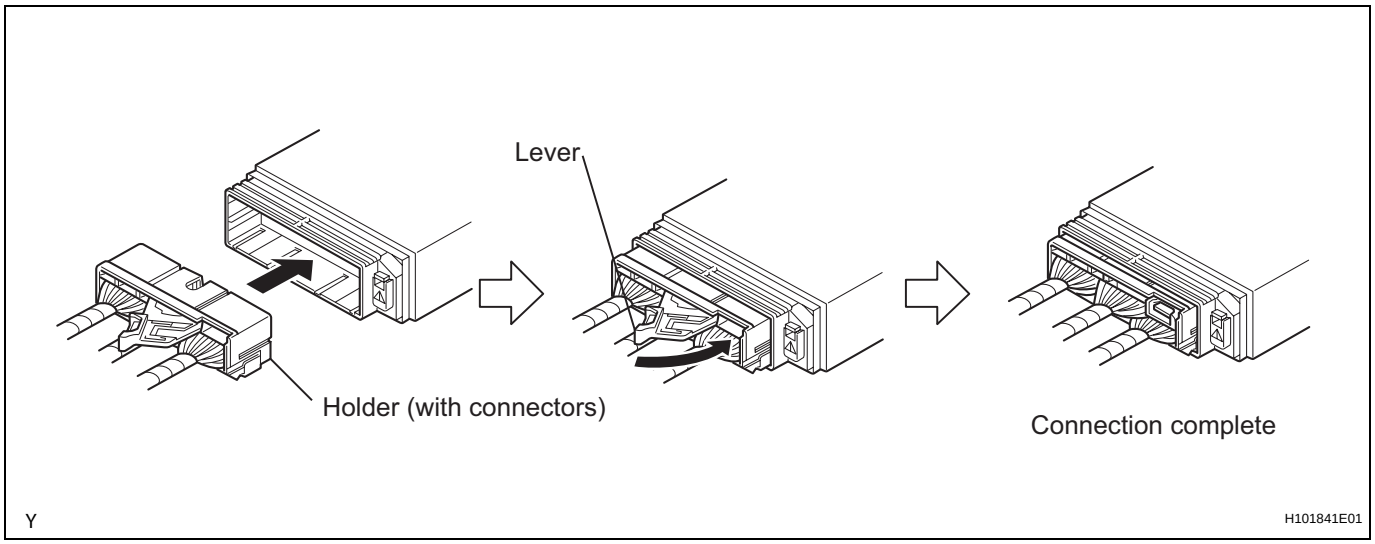

12. DISCONNECTION OF CONNECTORS FOR FRONT AIRBAG SENSOR, SIDE AIRBAG SENSOR AND REAR AIRBAG SENSOR

(a) While holding both outer flank sides, slide the outer in the direction shown by the arrow.

(b) When the connector lock is released, the connectors are disconnected.
HINT:
Be sure to hold both outer flank sides. Holding the top and bottom sides will make disconnection difficult.

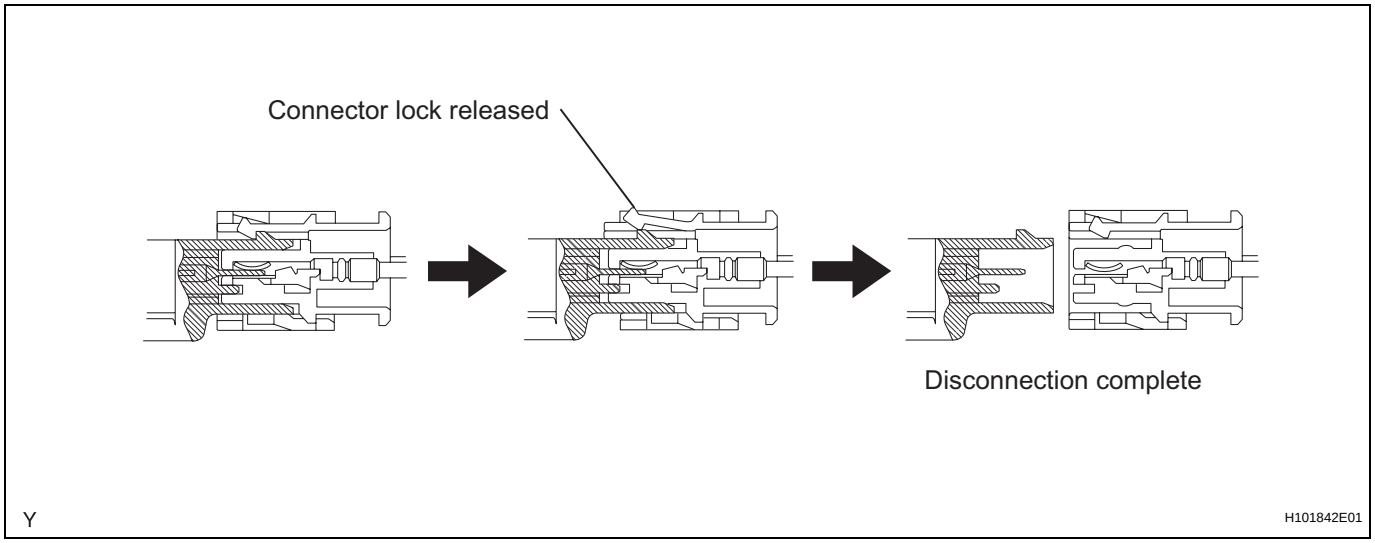

RS

13. CONNECTION OF CONNECTORS FOR FRONT AIRBAG SENSOR, SIDE AIRBAG SENSOR AND REAR AIRBAG SENSOR

(a) Connect the connector as shown in the illustration. (When locking, make sure that the outer returns to its original position and a click sound can be heard.)
HINT:
When connecting, the outer will slide. Be sure not to hold the outer while connecting, as it may result in an insecure fit.

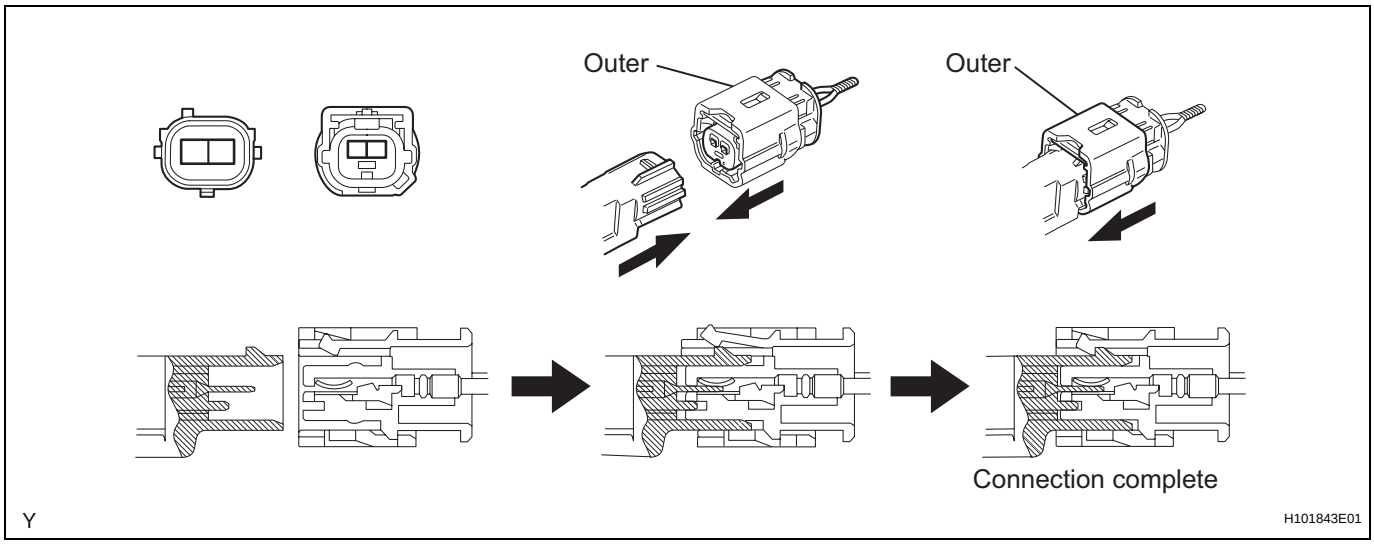

OCCUPANT CLASSIFICATION SYSTEM (for Separate Seat Type)

PRECAUTION

1. INSPECTION PROCEDURE FOR VEHICLE INVOLVED IN ACCIDENT

(a) Perform the zero point calibration and sensitivity check if any of the following conditions apply.

- The occupant classification ECU is replaced.
- Accessories (seatback tray and seat cover, etc.) are installed.
- The front passenger seat is removed from the vehicle.
- The passenger airbag ON/OFF indicator (OFF) comes on when the front passenger seat is not occupied.
- The vehicle is brought to the workshop for repair due to an accident or a collision.

NOTICE:

When an accident vehicle is brought into the workshop for repair, check the flatness of the floor where the front passenger seat is mounted. If the flatness is not within +- 3.0 mm (0.118 in.), adjust it to the specified range.

PARTS LOCATION

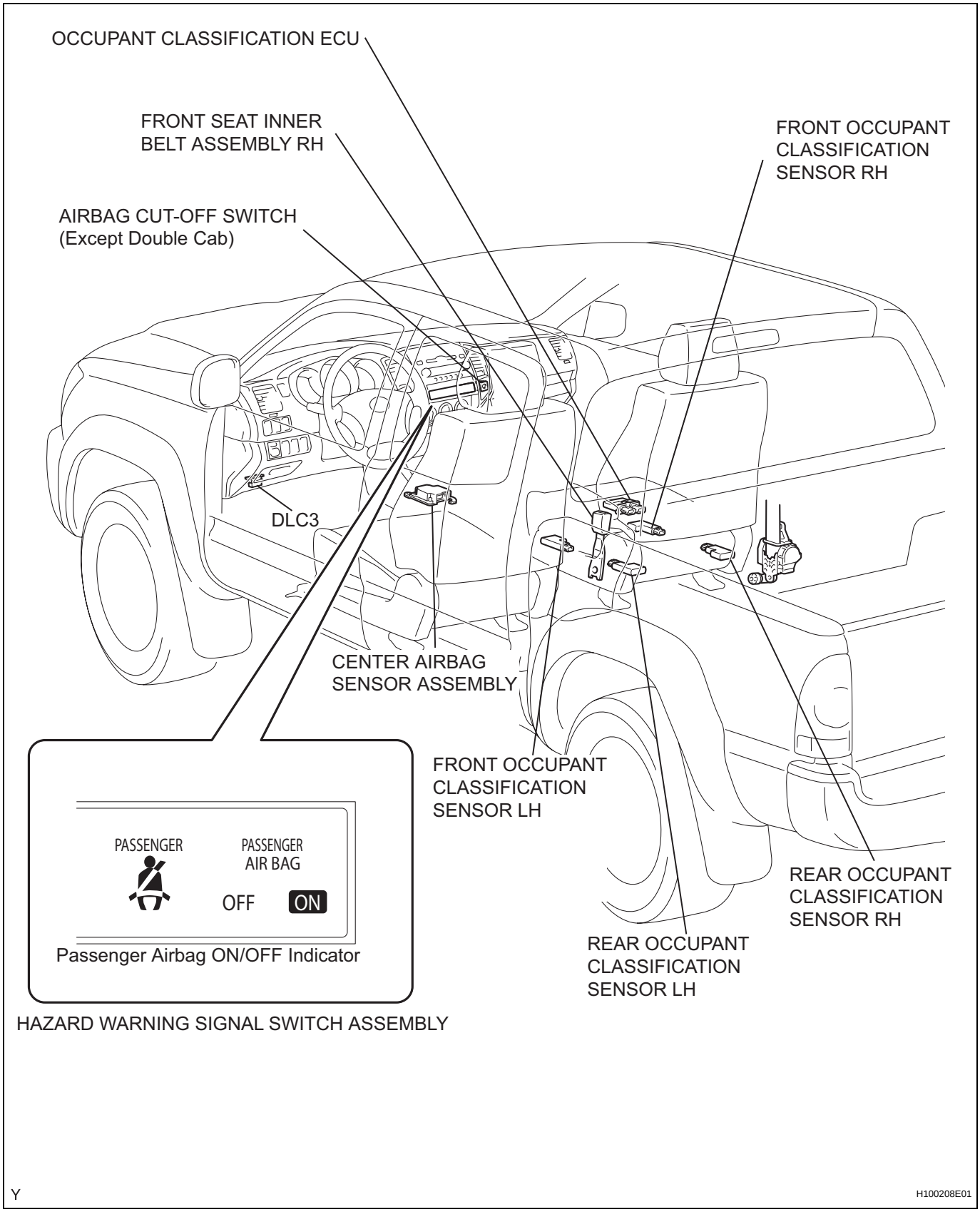

RS

Y

H100208E01

OCCUPANT CLASSIFICATION SYSTEM (for Bench Seat Type)

PRECAUTION

1. INSPECTION PROCEDURE FOR VEHICLE INVOLVED IN ACCIDENT

(a) Perform the zero point calibration and sensitivity check if any of the following conditions apply.

- The occupant classification ECU is replaced.
- Accessories (seatback tray and seat cover, etc.) are installed.
- The front passenger seat is removed from the vehicle.
- The passenger airbag ON/OFF indicator indicates OFF when the front passenger seat is not occupied.
- The vehicle is brought to the workshop for repair due to an accident or a collision.

NOTICE:

When an accident vehicle is brought into the workshop for repair, check the flatness of the floor where the front passenger seat is mounted. If the flatness is not within +- 3.0 mm (0.118 in.), adjust it to the specified range.

PARTS LOCATION

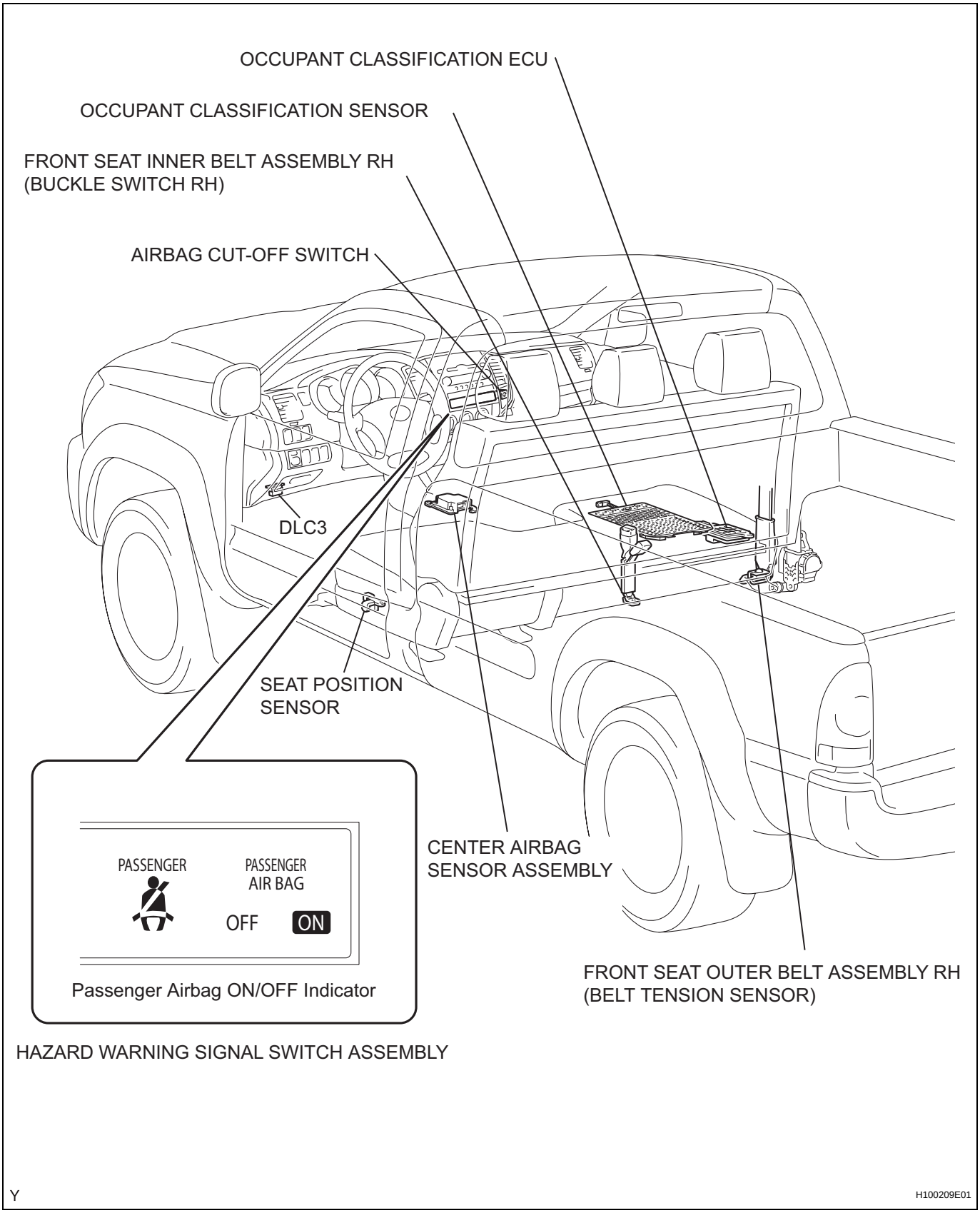

RS

STEERING PAD

COMPONENTS

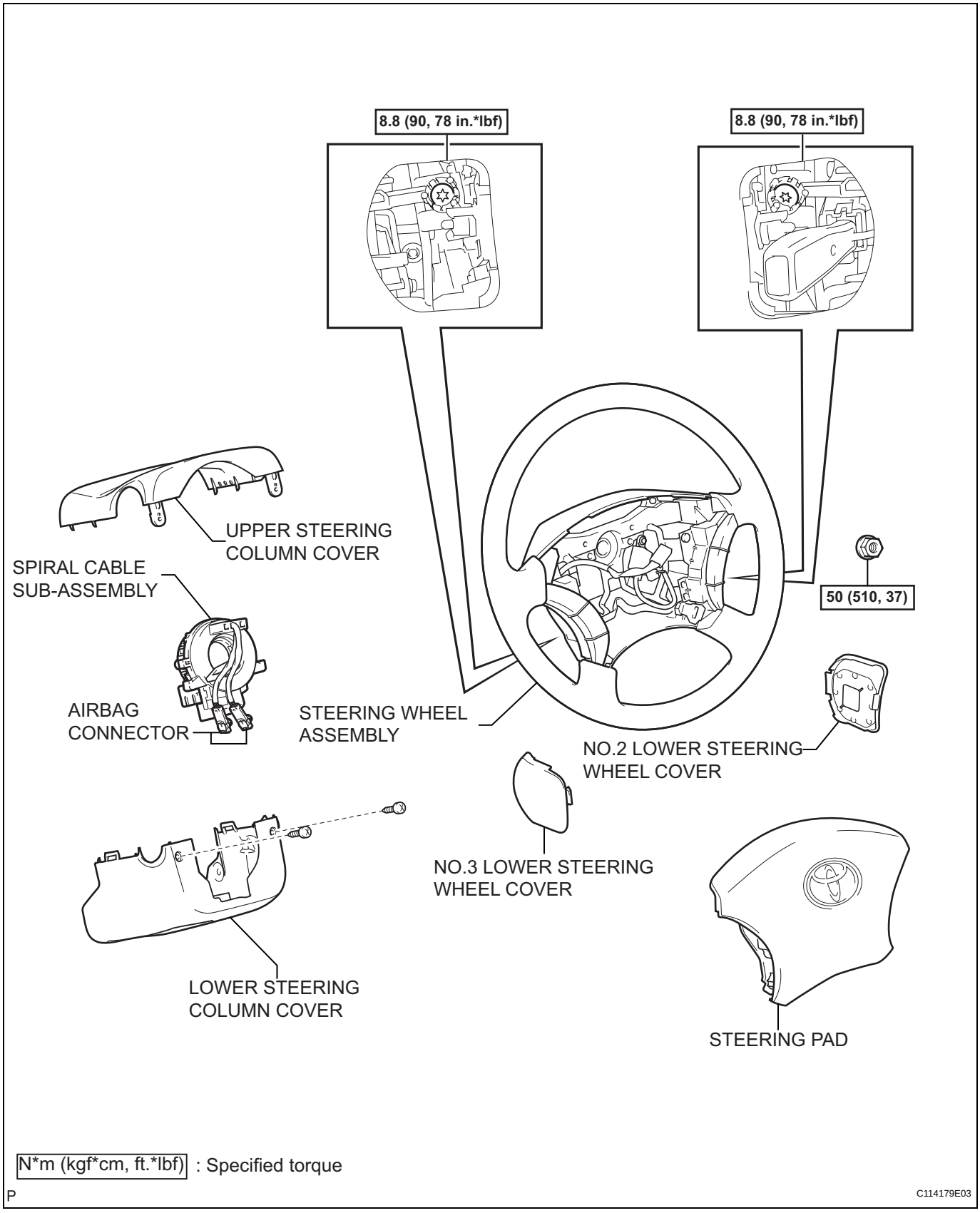

RS

ON-VEHICLE INSPECTION

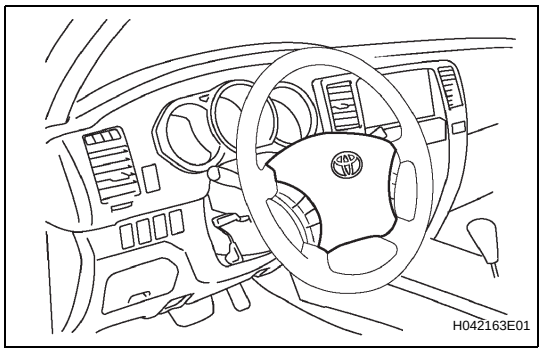

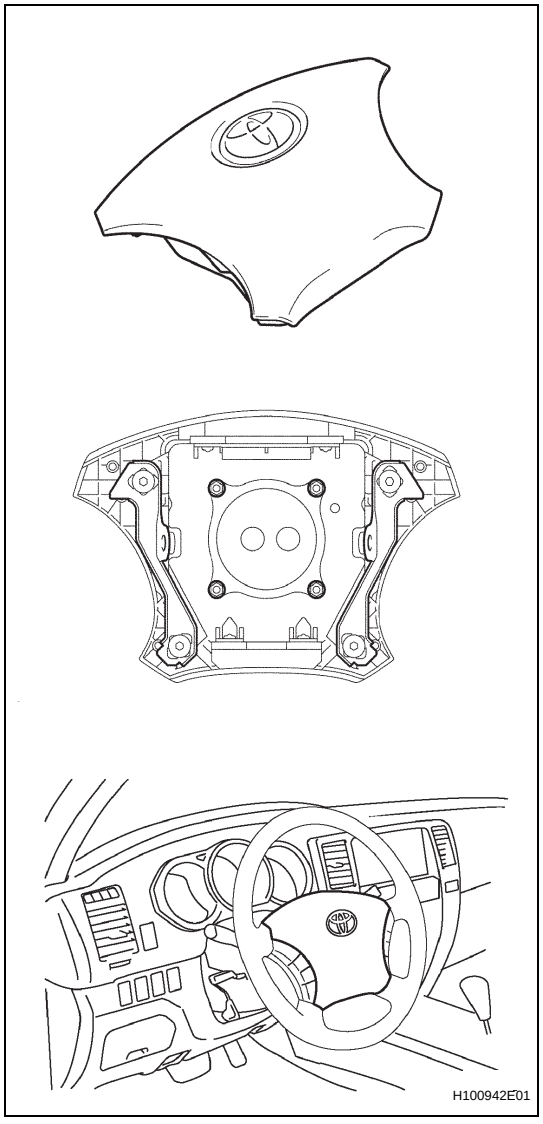

1. INSPECT STEERING PAD (for Vehicle not Involved in Collision)

(a) Perform a diagnostic system check (see page RS-37).

(b) With the steering pad installed on the vehicle, perform a visual check. If there are any defects as mentioned below, replace the steering pad with a new one:
Cuts, minute cracks or marked discoloration on the steering pad top surface or in the grooved portion.

2. INSPECT STEERING PAD (for Vehicle Involved in Collision and Airbag not Deployed)

(a) Perform a diagnostic system check (see page RS-37).

(b) With the steering pad removed from the vehicle, perform a visual check. If there are any defects as mentioned below, replace the steering pad or steering wheel assembly with a new one:

- Cuts, minute cracks or marked discoloration on the horn button assembly top surface or in the grooved portion.
- Cracks or other damage to the connectors.
- Deformation of the steering wheel assembly.
- Deformation of the horn button contact plate of the steering pad.
- There should be no interference between the steering pad and steering wheel assembly, and the clearance should be uniform all the way around when the new steering pad is installed on the steering wheel assembly.

CAUTION:
For removal and installation procedures of the steering pad. Be sure to follow the correct procedure.

RS

SPIRAL CABLE

REMOVAL

HINT:
COMPONENTS: See page RS-556

1. **PRECAUTION**
2. **DISCONNECT CABLE FROM NEGATIVE BATTERY TERMINAL**
   Wait for at least 90 seconds after disconnecting the cable to prevent the airbag from working.
3. **PLACE FRONT WHEELS FACING STRAIGHT AHEAD**
4. **REMOVE NO.2 LOWER STEERING WHEEL COVER (See page SR-9)**
5. **REMOVE NO.3 LOWER STEERING WHEEL COVER (See page SR-9)**
6. **REMOVE STEERING PAD (See page RS-558)**
7. **REMOVE STEERING WHEEL ASSEMBLY (See page SR-9)**
8. **REMOVE LOWER STEERING COLUMN COVER**
   (a) Remove the 2 screws.
   (b) Disengage the 2 claws to remove the steering column cover lower.

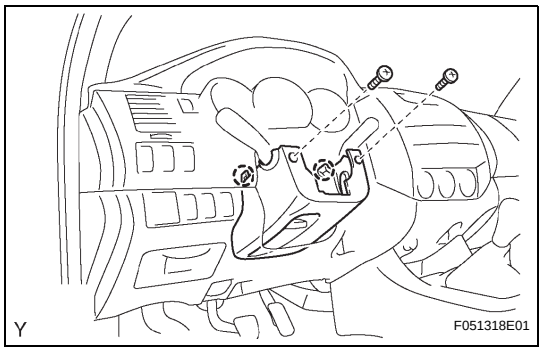

9. **REMOVE UPPER STEERING COLUMN COVER**
   (a) Disengage the claw, then remove the upper steering column cover.

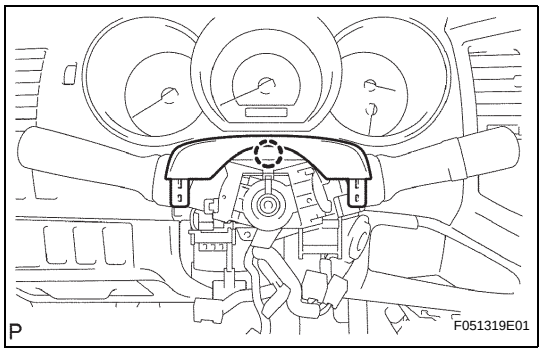

10. **REMOVE SPIRAL CABLE SUB-ASSEMBLY**
    (a) Disconnect the airbag connector and the connector from the spiral cable sub-assembly.
    NOTICE:
    When handling the airbag connector, take care not to damage the airbag with harness.
    (b) Disengage the 3 claws and remove the spiral cable sub-assembly.

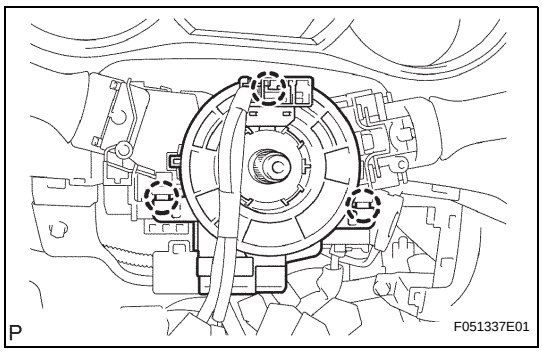

RS

INSPECTION

1. INSPECT SPIRAL CABLE SUB-ASSEMBLY

(a) If any of the following conditions is identified, replace the spiral cable sub-assembly with a new one.

Condition:

Scratches or cracks on the connector
Cracks, dents or chipping of the spiral cable sub-assembly

FRONT PASSENGER AIRBAG ASSEMBLY

COMPONENTS

for Automatic Transmission on Bench Seat Type:

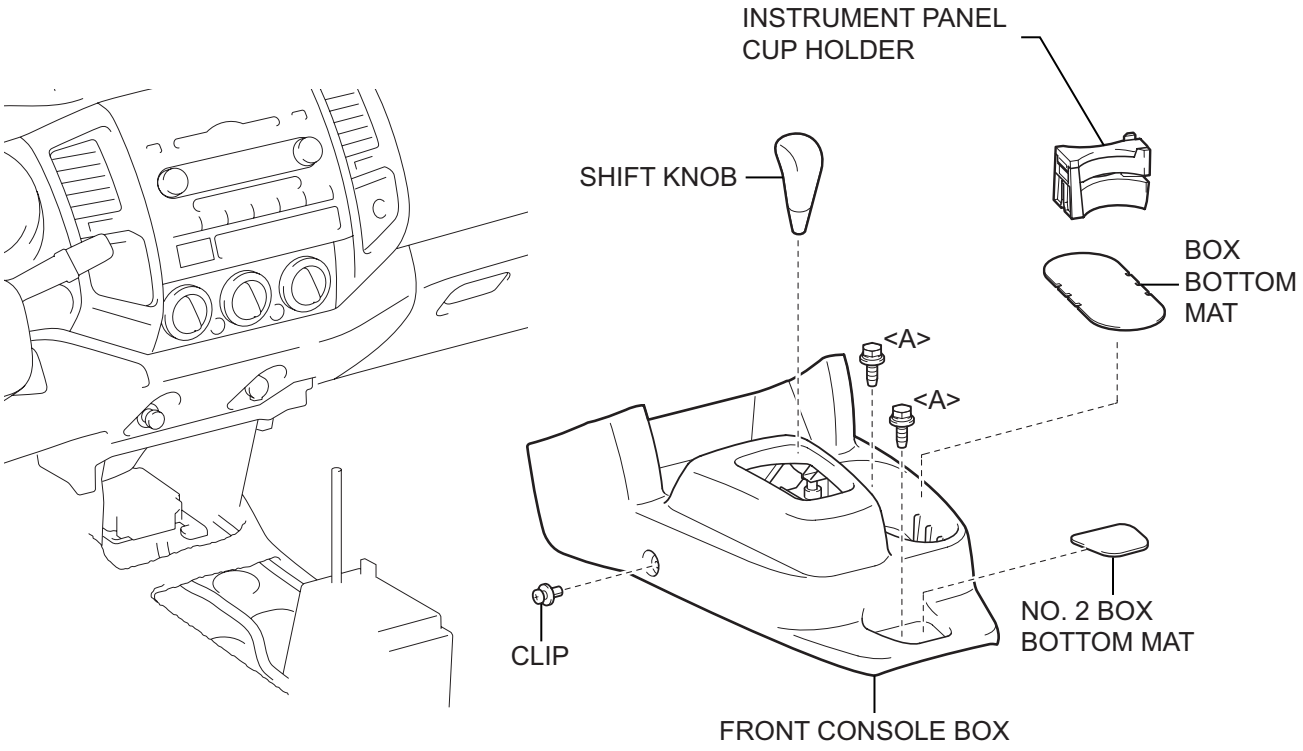

for Manual Transmission on Bench Seat Type:

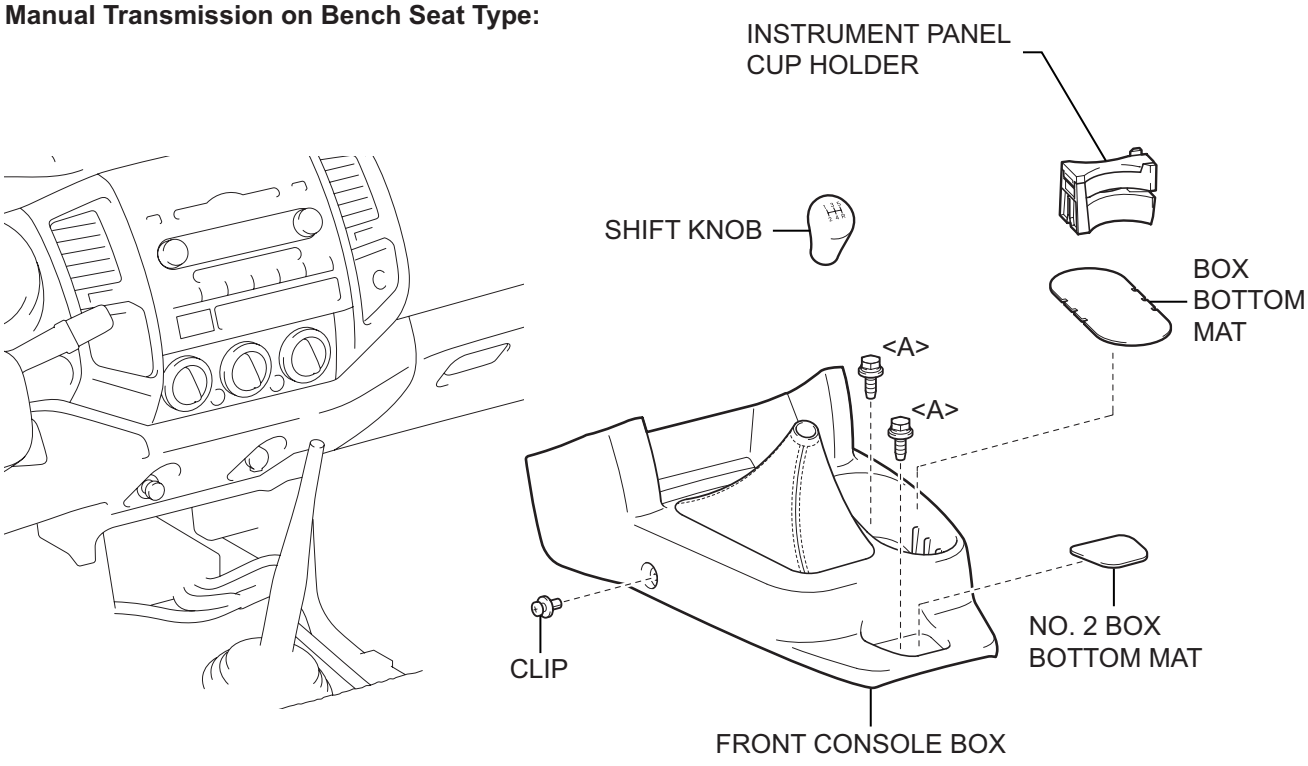

P

B085798E01

RS

for Automatic Transmission on Separate Seat Type :

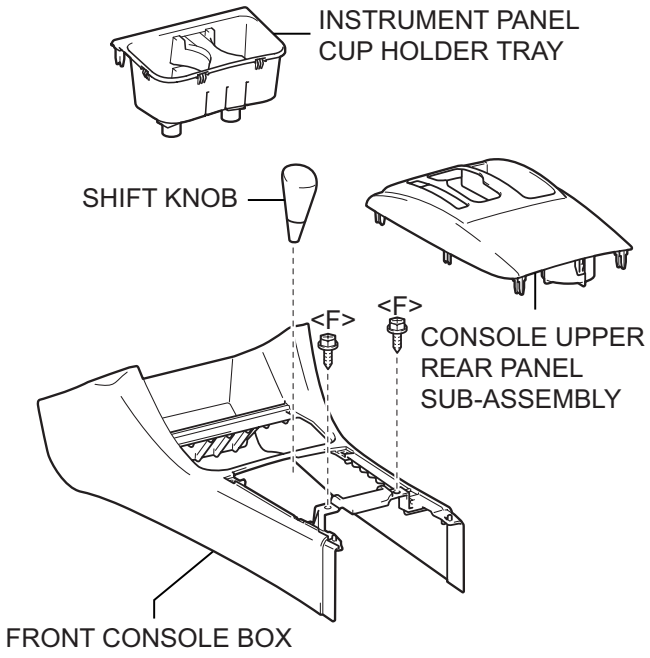

for Manual Transmission on Separate Seat Type:

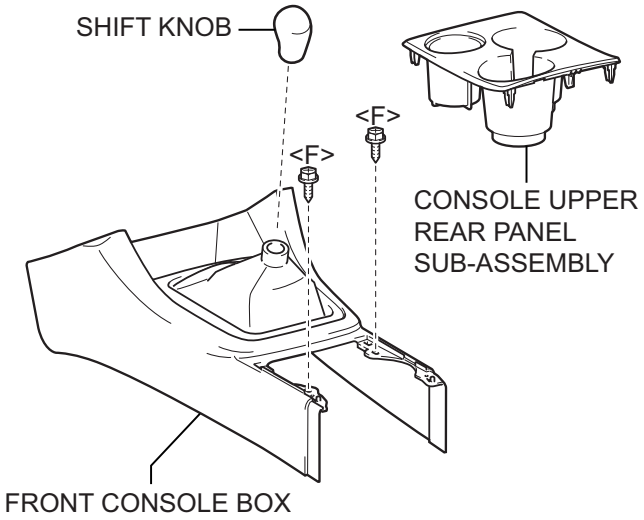

for Separate Seat Type:

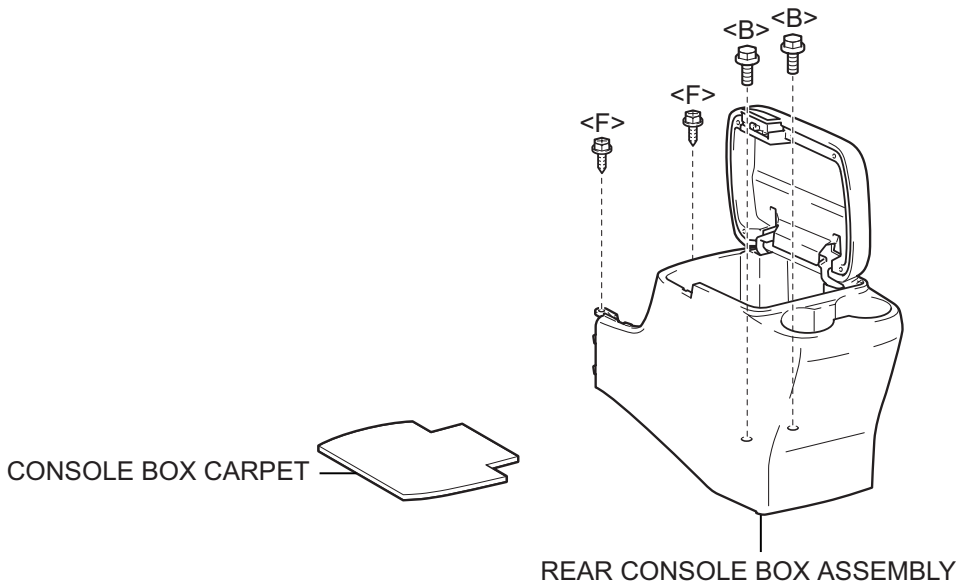

RS

P

B085799E01

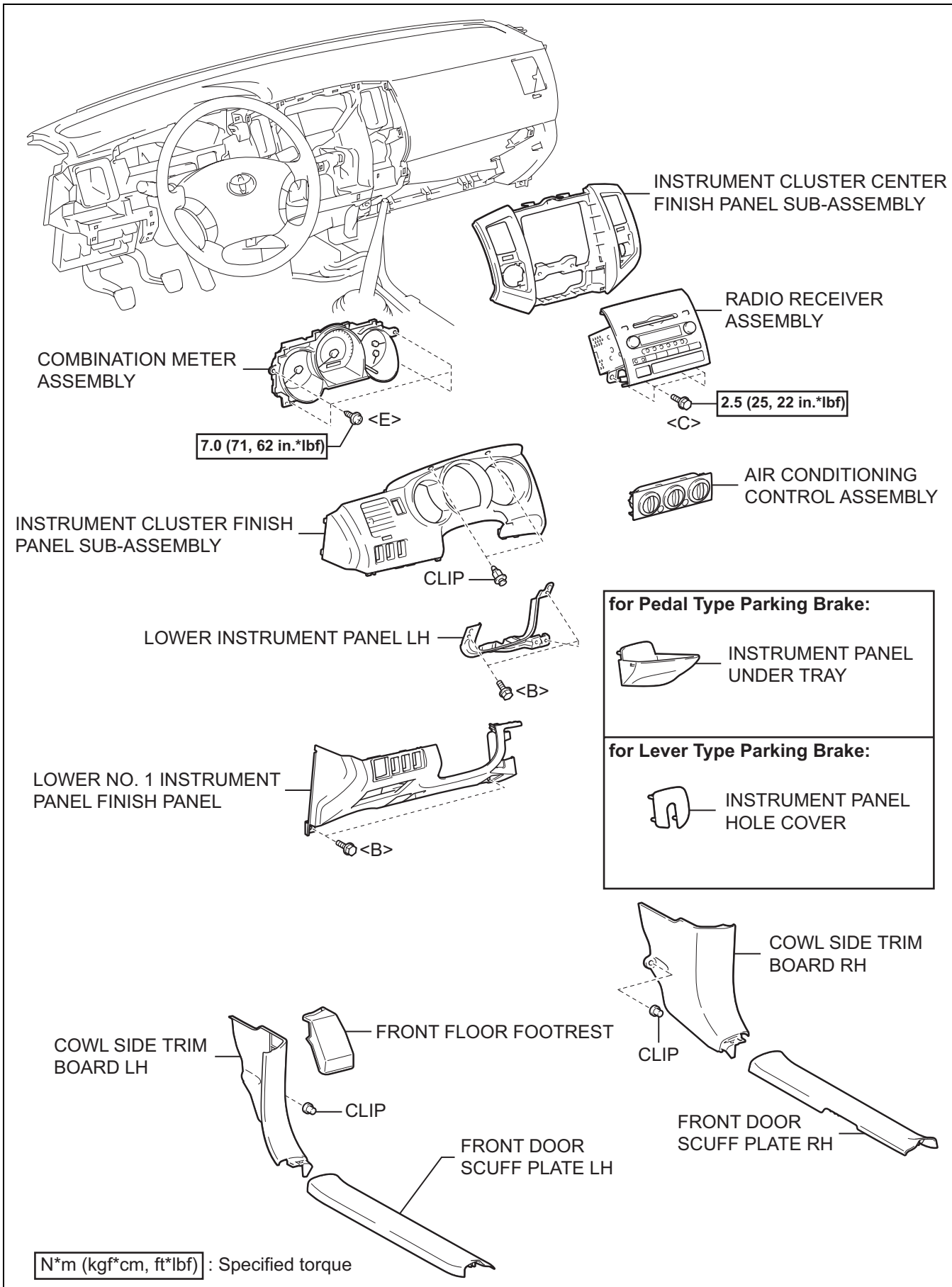
INSTRUMENT CLUSTER CENTER FINISH PANEL SUB-ASSEMBLY
RADIO RECEIVER ASSEMBLY
COMBINATION METER ASSEMBLY
<E>
7.0 (71, 62 in.*lbf)
<C>
2.5 (25, 22 in.*lbf)
AIR CONDITIONING CONTROL ASSEMBLY
INSTRUMENT CLUSTER FINISH PANEL SUB-ASSEMBLY
CLIP
LOWER INSTRUMENT PANEL LH
<B>
for Pedal Type Parking Brake:
INSTRUMENT PANEL UNDER TRAY
for Lever Type Parking Brake:
INSTRUMENT PANEL HOLE COVER
LOWER NO. 1 INSTRUMENT PANEL FINISH PANEL
<B>
COWL SIDE TRIM BOARD RH
CLIP
FRONT FLOOR FOOTREST
COWL SIDE TRIM BOARD LH
CLIP
FRONT DOOR SCUFF PLATE RH
FRONT DOOR SCUFF PLATE LH
N*m (kgf*cm, ft*lbf) : Specified torque
P
B085800E01

RS

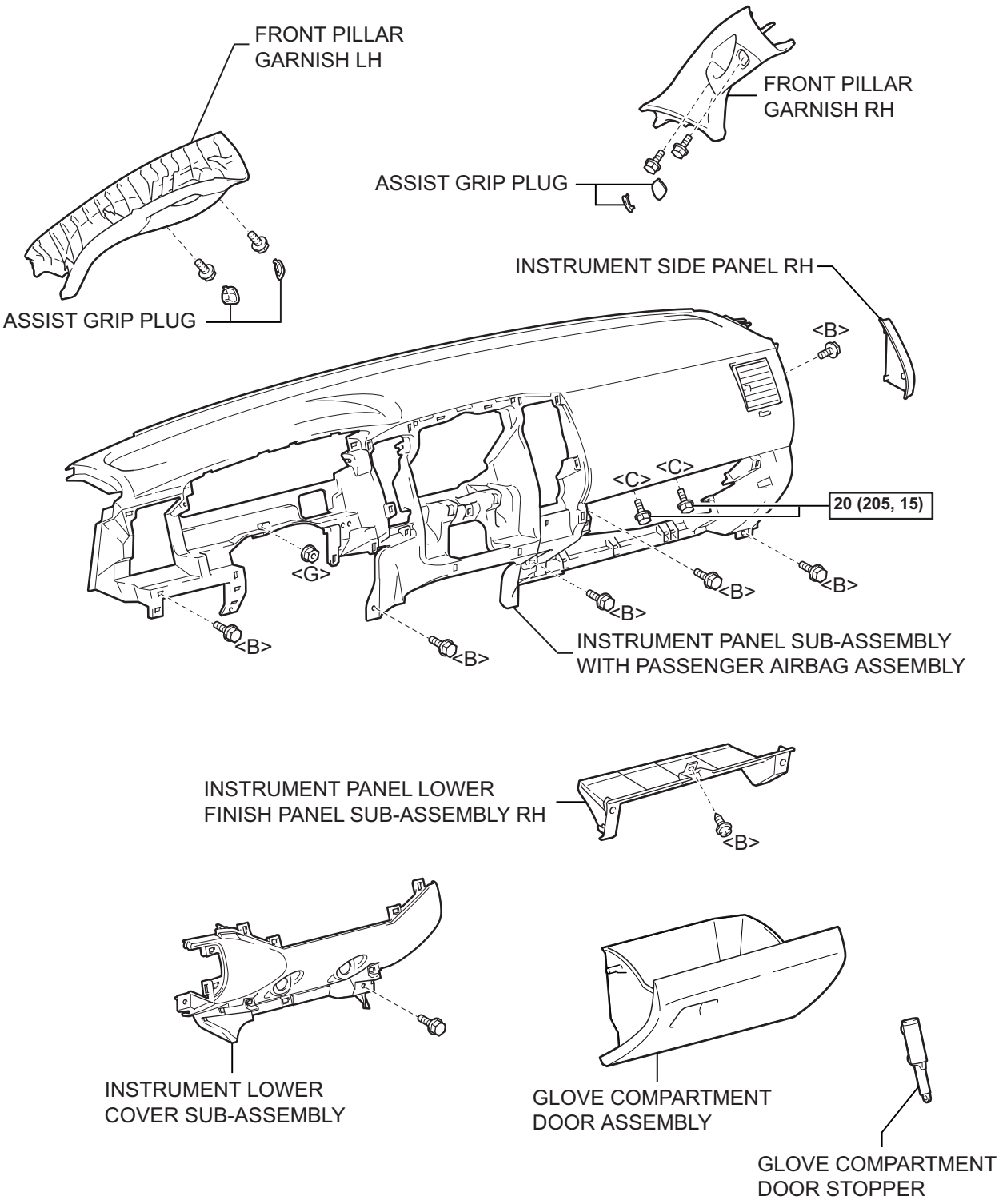

N*m (kgf*cm, ft.*lbf) : Specified torque

P

B085801E01

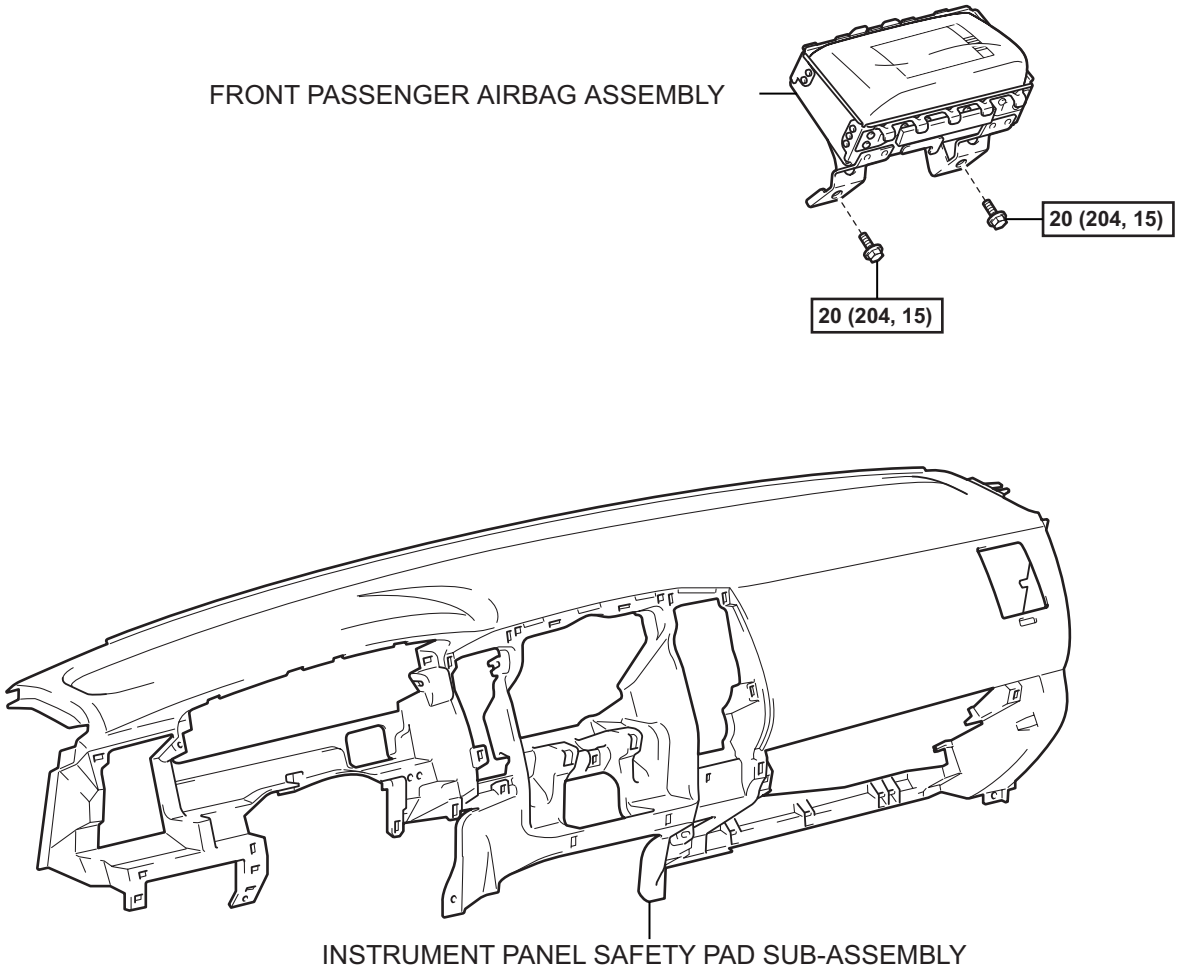

N*m (kgf*cm, ft.*lbf) : Specified torque

P

C114180E02

RS

CURTAIN SHIELD AIRBAG ASSEMBLY

COMPONENTS

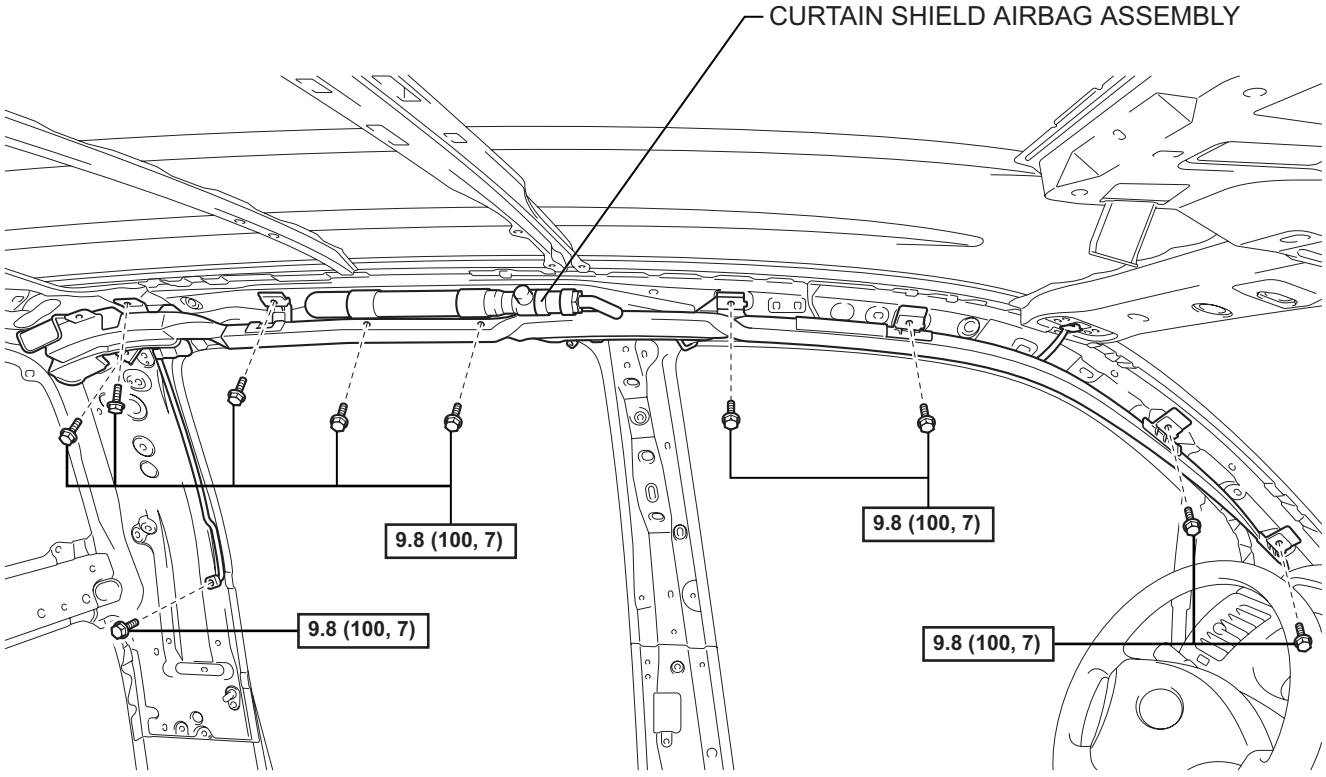

N*m (kgf*cm, ft.*lbf) : Specified torque

P

C114181E02

ON-VEHICLE INSPECTION

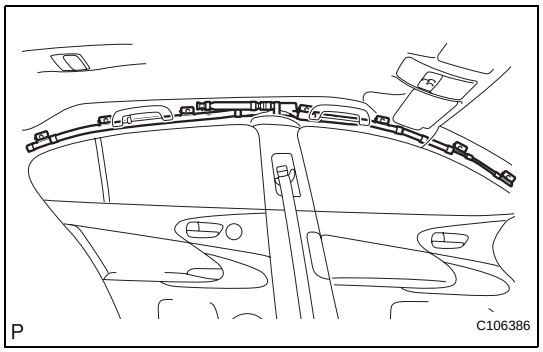

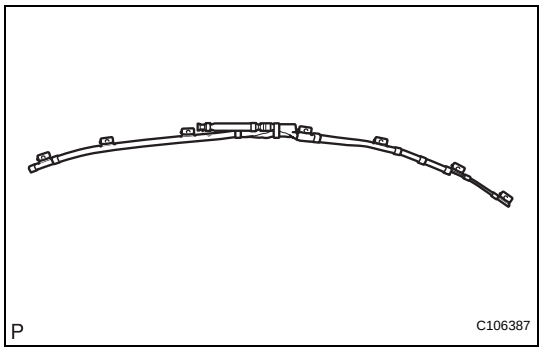

1. INSPECT CURTAIN SHIELD AIRBAG ASSEMBLY (for Vehicle not Involved in Collision)

(a) Perform a diagnostic system check (see page RS-37).

(b) With the curtain shield airbag assembly installed on the vehicle, perform a visual check. If there are any defects as mentioned below, replace the front pillar garnish or roof headlining assembly with a new one: Cuts, minute cracks or marked discoloration on the front pillar garnish or roof headlining assembly around the curtain shield airbag assembly.

2. INSPECT CURTAIN SHIELD AIRBAG ASSEMBLY (for Vehicle Involved in Collision and Airbag not Deployed)

(a) Perform a diagnostic system check (see page RS-37).

(b) With the curtain shield airbag assembly removed from the vehicle, perform a visual check. If there are any defects as mentioned below, replace the curtain shield airbag assembly with a new one:

- Cuts, minute cracks or marked discoloration on the curtain shield airbag assembly.
- Cracks or other damage to the connectors.

CAUTION:
For removal and installation procedures of the curtain shield airbag assembly. Be sure to follow the correct procedure.

RS

FRONT SEAT SIDE AIRBAG ASSEMBLY

ON-VEHICLE INSPECTION

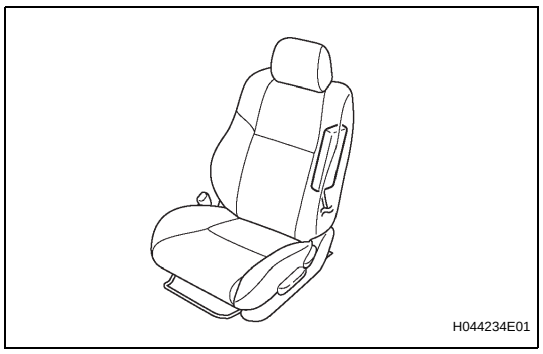

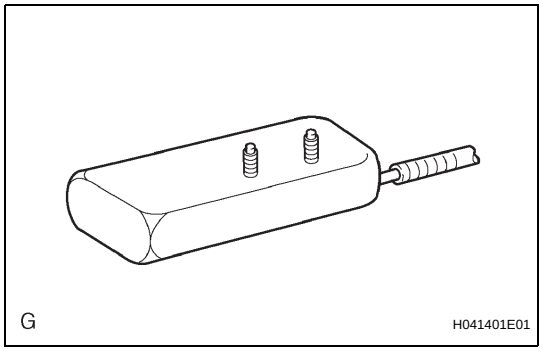

1. **FRONT SEAT SIDE AIRBAG ASSEMBLY (for Vehicle not Involved in Collision)**
   (a) Perform a diagnostic system check (see page RS-37).
   (b) With the front seat airbag assembly installed on the vehicle, perform a visual check. If there are any defects as mentioned below, replace the front seat assembly with a new one:
   Cuts, minute cracks or marked discoloration on the front seat back assembly around the front seat airbag assembly.

2. **FRONT SEAT SIDE AIRBAG ASSEMBLY (for Vehicle Involved in Collision and Airbag not Deployed)**
   (a) Perform a diagnostic system check (see page RS-37).
   (b) With the front seat airbag assembly removed from the vehicle, perform a visual check. If there are any defects as mentioned below, replace the front seat airbag assembly with a new one:
   - Cuts, minute cracks or marked discoloration on the front seat airbag assembly.
   - Cracks or other damage to the wire harness or connector.

   CAUTION:
   For removal and installation procedures of the front seat airbag assembly. Be sure to follow the correct procedure.

DISPOSAL

HINT:

- When scrapping a vehicle equipped with the SRS or disposing of the front seat side airbag assembly, be sure to deploy the airbag in accordance with the procedure described below. If any abnormality occurs with the airbag deployment, contact the SERVICE DEPT. of TOYOTA MOTOR SALES, U.S.A., INC.
- When disposing of a front seat side airbag assembly with an airbag deployed in a collision, follow the procedure in step 1-(e) in DISPOSAL.

CAUTION:

- **Never dispose of a front seat side airbag assembly which has an undeployed airbag.**
- **The airbag produces a loud exploding sound when it deploys, so perform the operation outdoors, where it will not create a nuisance to nearby residents.**
- **When deploying the airbag, always use the specified SST (SRS Airbag Deployment Tool), perform the operation in a place away from electrical noise.**
- **When deploying an airbag, perform the operation at least 10 m (33 ft) away from the airbag assembly.**
- **The front seat side airbag assembly becomes extremely hot when the airbag is deployed, so do not touch it for at least 30 minutes after deployment.**
- **Use gloves and safety glasses when handling a front seat side airbag assembly with a deployed airbag.**
- **Always wash your hands with water after completing the operation.**
- **Do not apply water, etc. to a front seat side airbag assembly with the deployed airbag.**

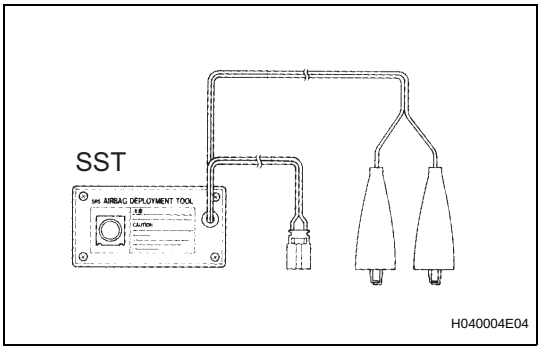

1. DISPOSE OF FRONT SEAT SIDE AIRBAG ASSEMBLY (WHEN SCRAPPING VEHICLE DEPLOYMENT METHOD)

HINT:

Have a battery as the power source to deploy the airbag.

(a) Check the function of SST (see step 1-(a) on page RS-559).

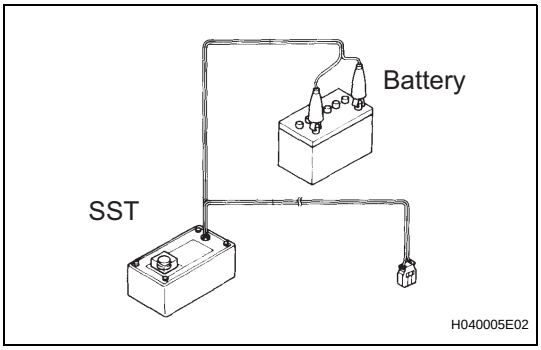

(b) Disconnect the front seat side airbag assembly connector.

NOTICE:

When handling the airbag connector, take care not to damage the airbag wire harness.

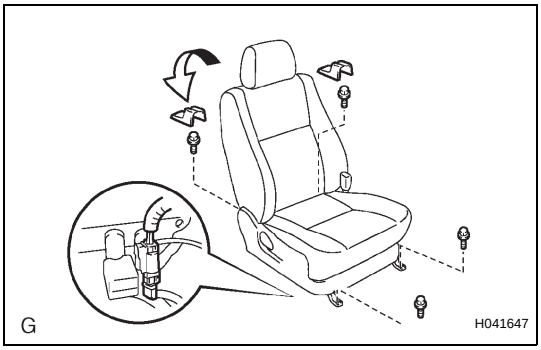

RS

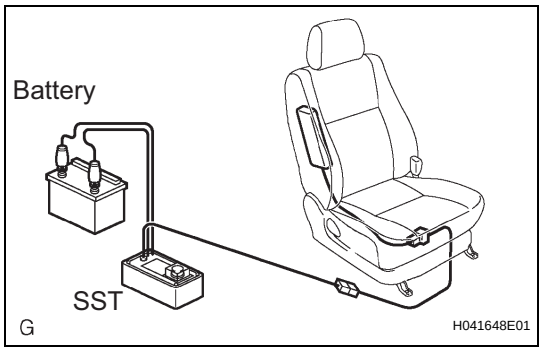

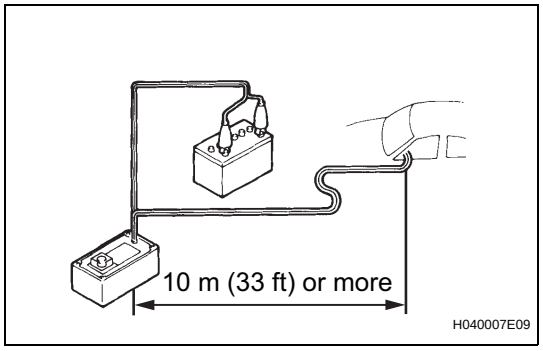

(c) Set SST.
(1) Connect the connectors of 2 SSTs to the front seat side airbag assembly connector.
SST 09082-00700, 09082-00750
NOTICE:
To avoid damaging the SST connector and wire harness, do not lock the secondary lock of the twin lock.

(2) Move SST at least 10 m (33 ft) away from the front of the vehicle.
(3) Close all the doors and windows of the vehicle.
NOTICE:
Take care not to damage the SST wire harness.
(4) Connect the SST red clip to the battery positive (+) terminal and the black clip to the battery negative (-) terminal.

(d) Deploy the airbag.
(1) Check that no one is inside the vehicle or within a 10 m (33 ft) radius of the vehicle.
(2) Press the SST activation switch and deploy the airbag.
HINT:
The airbag deploys simultaneously when the LED of the SST activation switch lights up.

(e) Dispose of the front seat side airbag assembly.
CAUTION:
- **The front seat side airbag assembly becomes extremely hot when the airbag is deployed, so do not touch it for at least 30 minutes after deployment.**
- **Use gloves and safety glasses when handling a front seat side airbag assembly a the deployed airbag.**
- **Do not apply water, etc. to a front seat side airbag assembly with the deployed airbag.**
- **Always wash your hands with water after completing the operation.**

HINT:
When scrapping a vehicle, deploy the airbag and scrap the vehicle with the front seat side airbag assembly installed.

2. DISPOSE OF FRONT SEAT SIDE AIRBAG ASSEMBLY (WHEN DISPOSING OF AIRBAG ASSEMBLY DEPLOYMENT METHOD)
NOTICE:
- **When disposing of the front seat side airbag assembly only, never use the customers vehicle to deploy the airbag.**
- **Be sure to follow the procedure given below when deploying the airbag.**

HINT:
Prepare a battery as the power source to deploy the airbag.

(a) Remove the front seat side airbag assembly.
  (1) Remove the 2 nuts and front seat side airbag assembly from the seatback assembly.
  CAUTION:
  Place the front seat side airbag assembly with the airbag deployment side facing upward.

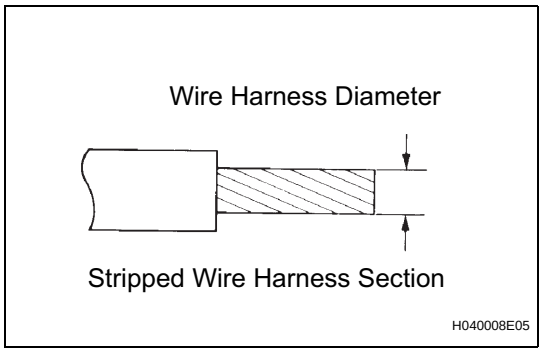

(b) Using a service-purpose wire harness, tie down the front seat side airbag assembly.
Wire harness:

Stripped wire harness section 1.25 mm^2 or more (0.0019 in^2 or more)

CAUTION:
If the wire harness is too thin or any other object is used to tie down the front seat side airbag assembly, it may be snapped by the shock when the airbag is deployed. This is highly dangerous. Be sure to use a wire harness for vehicle use with the wire size of at least 1.25 mm^2 (0.0019 in^2).

HINT:
To calculate the area of the stripped wire harness section :
Area:

3.14 x $(Diameter)^2$ divided by 4

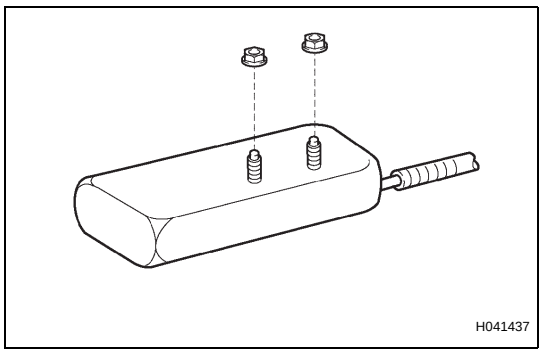

  (1) Install the 2 nuts in the front seat side airbag assembly.

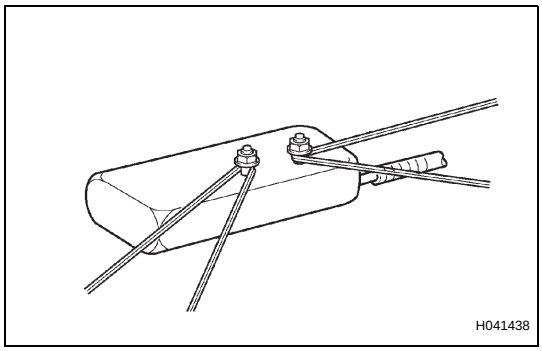

  (2) Wind the wire harness around the stud bolts of the front seat side airbag assembly, as shown in the illustration.

RS

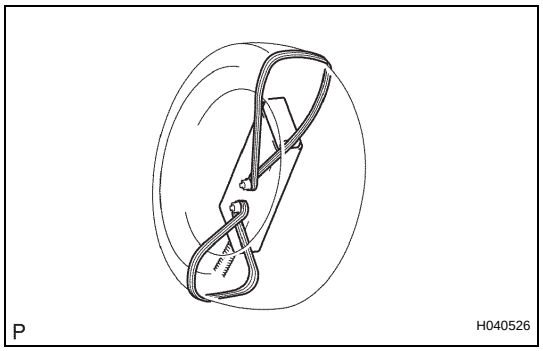

(3) Position the front seat side airbag assembly inside the tire with the airbag deployment side facing inside.
Tire size:
Must exceed the following dimensions:
Width: 185 mm (7.28 in.)
Inner diameter: 360 mm (14.17 in.)
CAUTION:
- **Make sure that the wire harness is tight. It is very dangerous if it is loose, as this could cause the front seat side airbag assembly to come free due to the shock when the airbag is deployed.**
- **Always tie down the front seat side airbag assembly with the airbag deployment side facing inside.**

NOTICE:
The tires will be marked by the airbag deployment, so use spare tires.

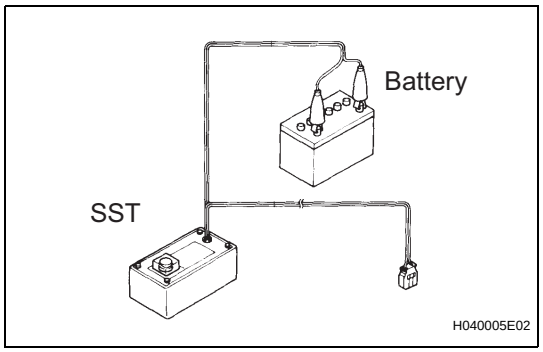

(c) Check the function of SST (see step 1-(a) on page RS-559).

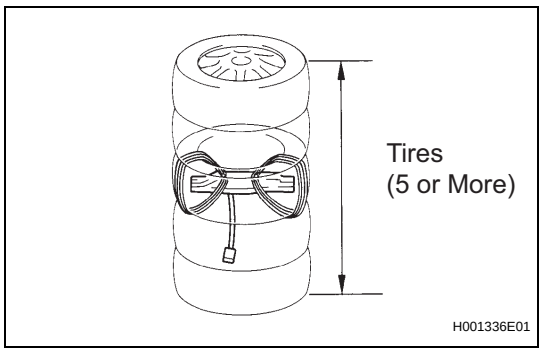

(d) Place tires.
(1) Place at least 2 tires under the tire to which the front seat side airbag assembly is tied.
(2) Place at least 2 tires over the tire to which the front seat side airbag assembly is tied. The top tire should have the wheel installed.

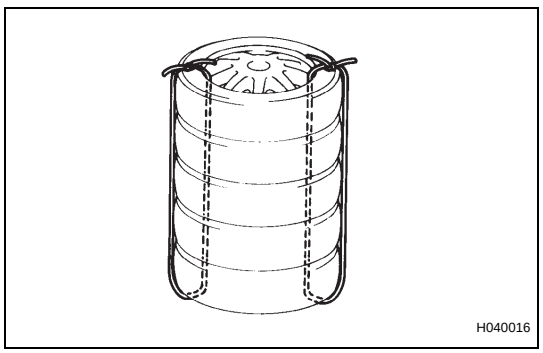

(3) Tie the tires together with 2 wire harnesses.
CAUTION:
Make sure that the wire harness is tight. It is very dangerous if it is loose, as this could cause the tires to come free due to the shock when the airbag is deployed.
HINT:
Place the SST connector and wire harness inside the tires. Secure at least 1 m (3 ft) of slack for the wire harness.

RS

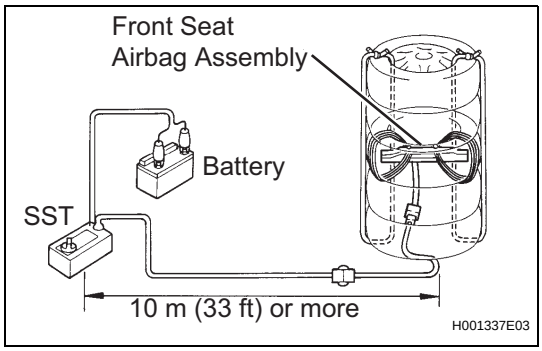

(e) Set SST.
Connect the connectors of 2 SSTs to the front seat side airbag assembly connector.
NOTICE:
To avoid damaging the SST connector and wire harness, do not lock the secondary lock of the twin lock.

(f) Deploy the airbag.
(1) Connect the red clip of SST to the battery positive (+) terminal and the black clip to the battery negative (-) terminal.
(2) Check that no one is within a 10 m (33 ft) radius of the tire to which the front seat side airbag assembly is tied.
(3) Press the SST activation switch and deploy the airbag.
HINT:
The airbag deploys simultaneously when the LED of the SST activation switch lights up.

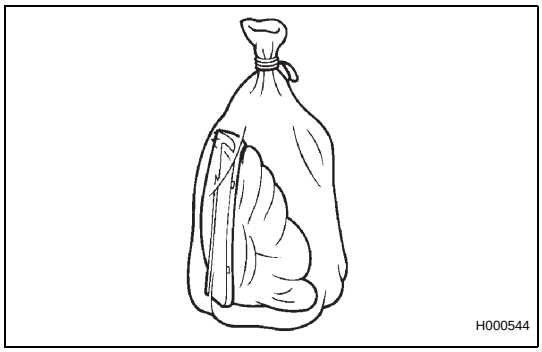

(g) Dispose of the front seat side airbag assembly.
CAUTION:
- **The front seat side airbag assembly becomes extremely hot when the airbag is deployed, so do not touch it for at least 30 minutes after deployment.**
- **Use gloves and safety glasses when handling a front seat side airbag assembly with the deployed airbag.**
- **Do not apply water etc. to a front seat side airbag assembly with the deployed airbag.**
- **Always wash your hands with water after completing the operation.**

(1) Remove the front seat side airbag assembly from the tire.
(2) Place the front seat side airbag assembly in a vinyl bag, tie the end tightly and dispose of it in the same way as other general parts.

CENTER AIRBAG SENSOR ASSEMBLY

COMPONENTS

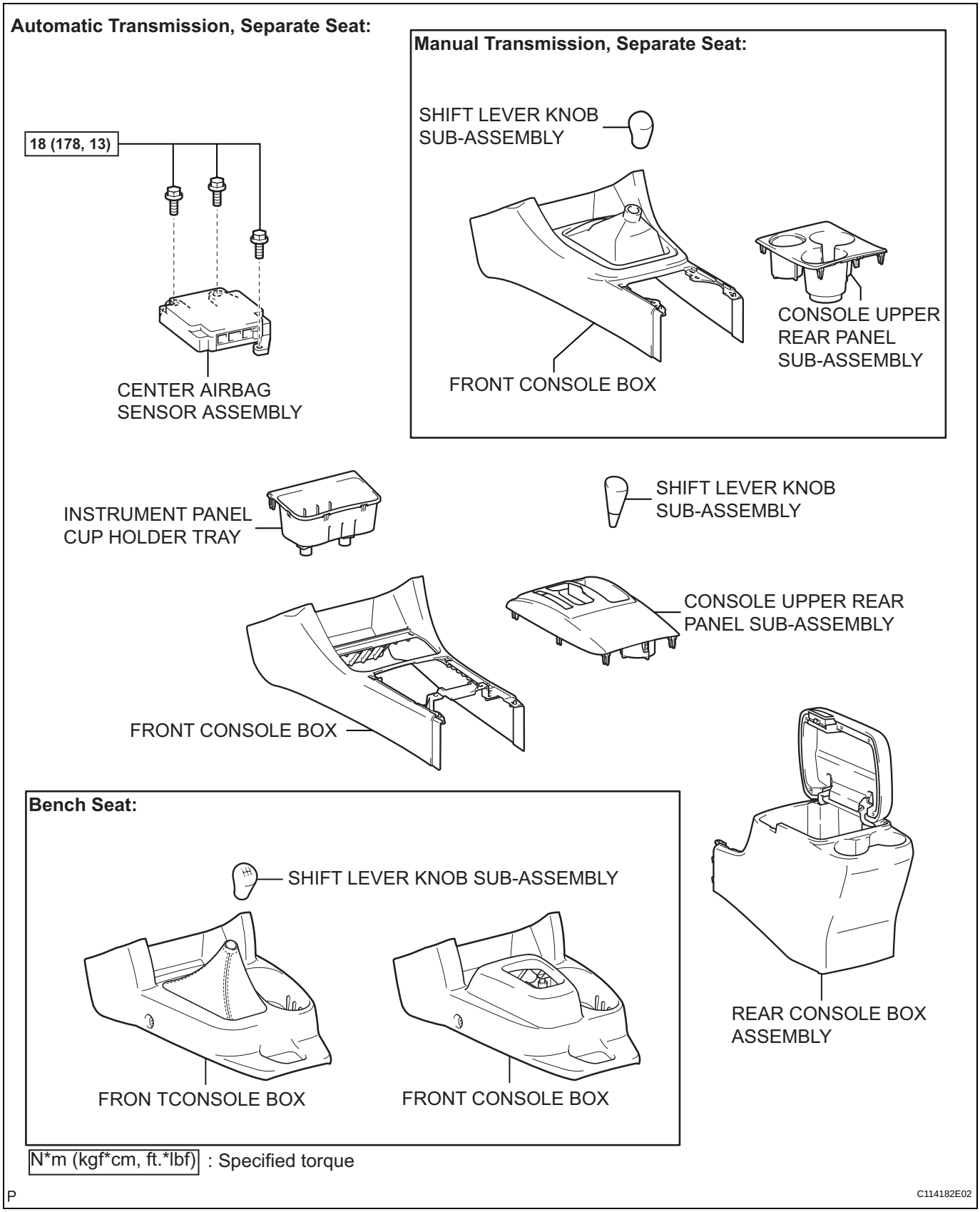

RS

ON-VEHICLE INSPECTION

1. **INSPECT CENTER AIRBAG SENSOR ASSEMBLY (for Vehicle not Involved in Collision)**
   (a) Perform a diagnostic system check (see page RS-37).

2. **INSPECT CENTER AIRBAG SENSOR ASSEMBLY (for Vehicle Involved in Collision and Airbag not Deployed)**
   (a) Perform a diagnostic system check (see page RS-37).

3. **INSPECT CENTER AIRBAG SENSOR ASSEMBLY (for Vehicle Involved in Collision)**
   (a) Replace the front airbag sensor.
   CAUTION:
   For removal and installation procedures of the front airbag sensor. Be sure to follow the correct procedure.
   HINT:
   The front airbag sensor should be replaced after any of the airbags has deployed, as it has been subjected to the impact.

FRONT AIRBAG SENSOR

COMPONENTS

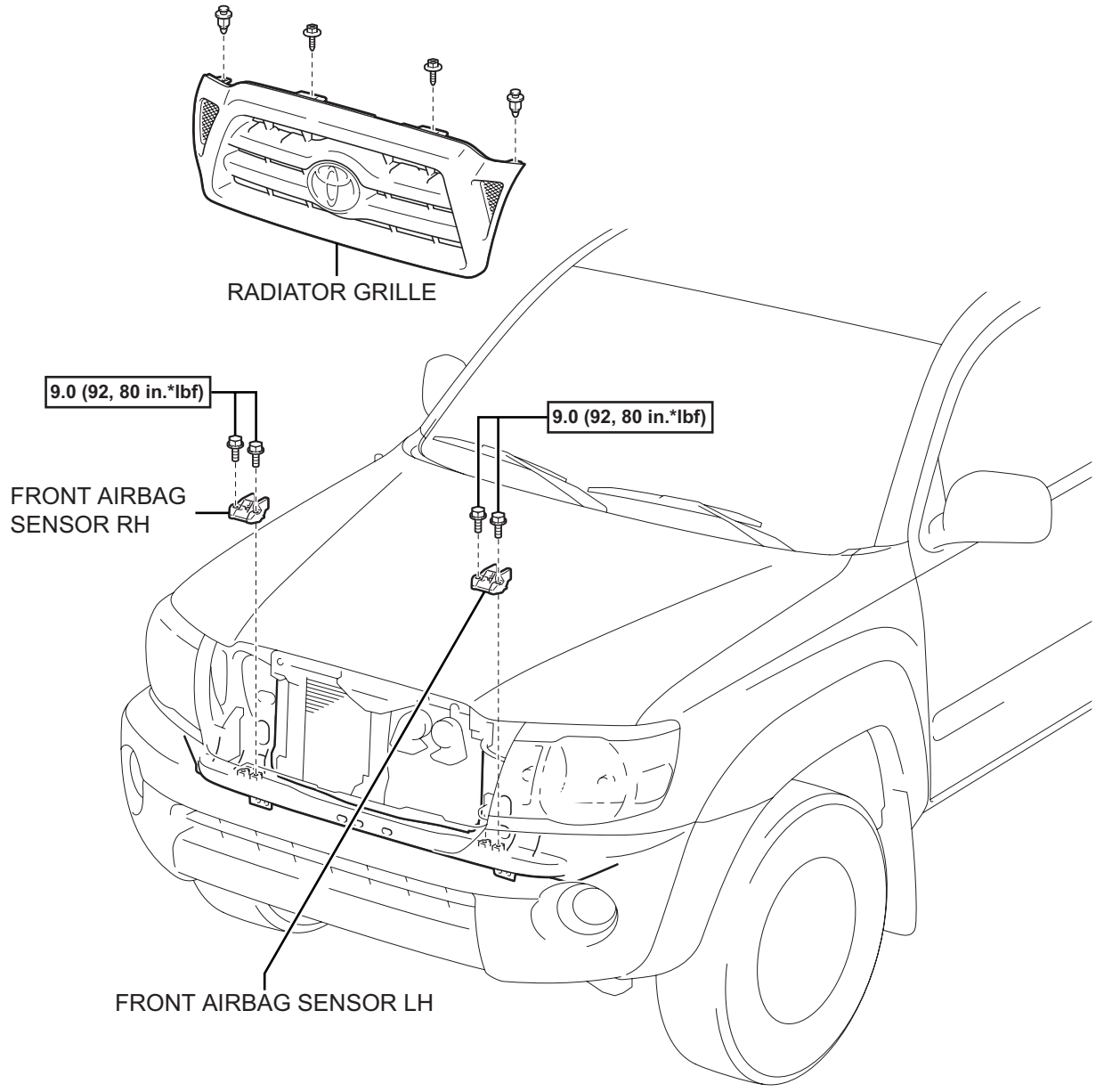

N*m (kgf*cm, ft.*lbf) : Specified torque

P

C114183E02

RS

ON-VEHICLE INSPECTION

1. **INSPECT FRONT AIRBAG SENSOR (for Vehicle not Involved in Collision)**
   (a) Perform a diagnostic system check (see page RS-37).

2. **INSPECT FRONT AIRBAG SENSOR (for Vehicle Involved in Collision and Airbag not Deployed)**
   (a) Perform a diagnostic system check (see page RS-37).
   (b) When the front bumper of the vehicle or its area is damaged, check if there is any damage to the front airbag sensor. If any of the front airbag sensor have defects as mentioned below, replace it with a new one:
   - Cracks, dents or chips on the sensor housing.
   - Cracks or other damage to the connector.
   - Peeling off of the label or damage to the serial number.

   CAUTION:
   For removal and installation procedures of the front airbag sensor. Be sure to follow the correct procedure.

3. **INSPECT FRONT AIRBAG SENSOR (for Vehicle Involved in Collision)**
   (a) Replace the front airbag sensor.
   CAUTION:
   For removal and installation procedures of the front airbag sensor. Be sure to follow the correct procedure.
   HINT:
   The front airbag sensor on the impacted side should be replaced after the steering pad, front passenger airbag assembly, driver side knee airbag assembly or front passenger side knee airbag assembly has deployed.

SIDE AIRBAG SENSOR

COMPONENTS

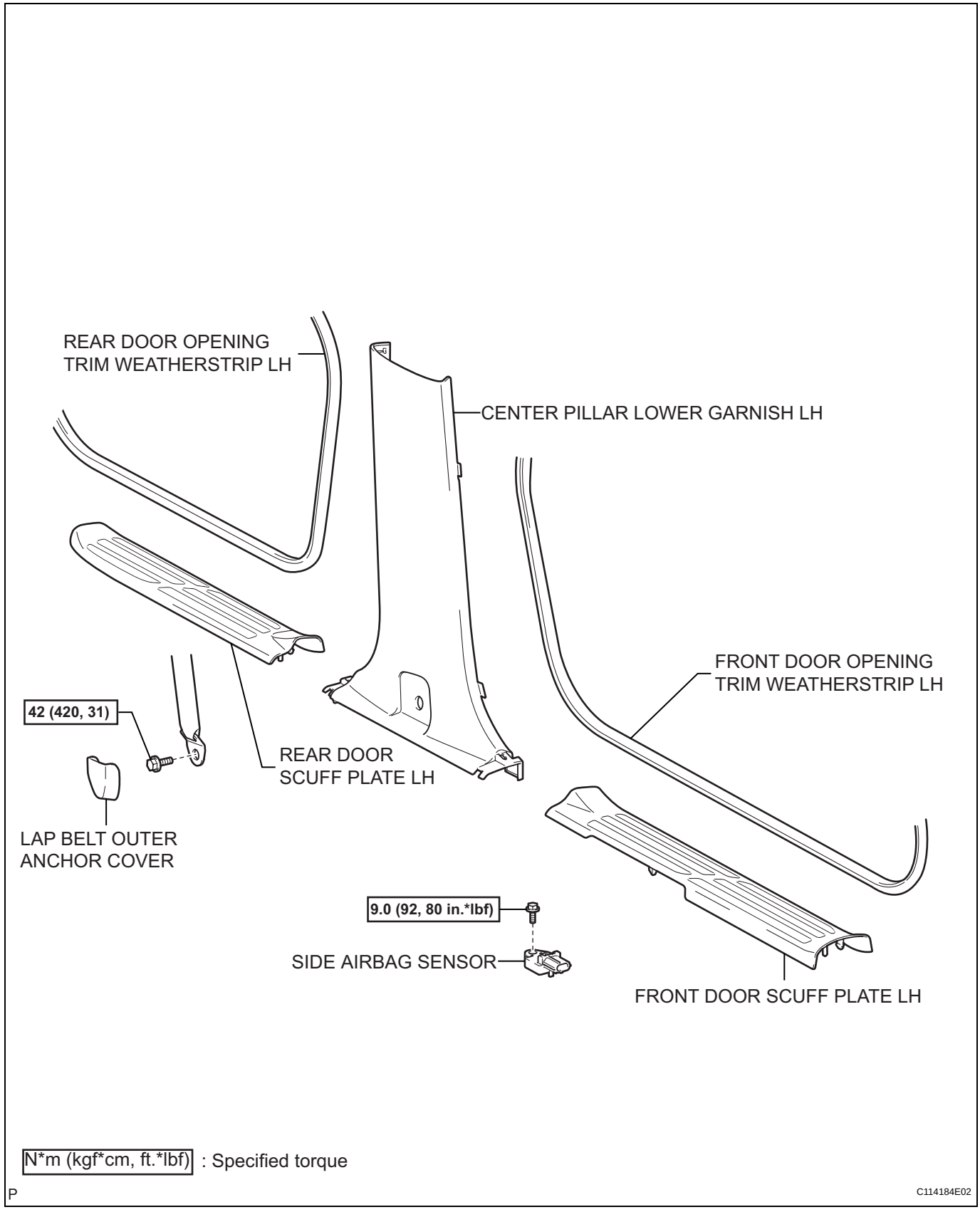

RS

ON-VEHICLE INSPECTION

1. **INSPECT SIDE AIRBAG SENSOR (for Vehicle not Involved in Collision)**
   (a) Perform a diagnostic system check (see page RS-37).

2. **INSPECT SIDE AIRBAG SENSOR (for Vehicle Involved in Collision and Airbag not Deployed)**
   (a) Perform a diagnostic system check (see page RS-37).
   (b) When the center pillar of the vehicle or its area is damaged, check if there is any damage to the side airbag sensor. If there are any defects as mentioned below, replace the side airbag sensor with a new one:
   - Cracks, dents or chips on the sensor housing.
   - Cracks or other damage to the connector.
   - Peeling off of the label or damage to the serial number.

   CAUTION:
   For removal and installation procedures of the side airbag sensor. Be sure to follow the correct procedure.

3. **INSPECT SIDE AIRBAG SENSOR (for Vehicle Involved in Collision)**
   (a) Replace the side airbag sensor.
   CAUTION:
   For removal and installation procedures of the side airbag sensor. Be sure to follow the correct procedure.
   HINT:
   The side airbag sensor on the impacted side should be replaced after the front seat airbag assembly and curtain shield airbag assembly have deployed.

REAR AIRBAG SENSOR

COMPONENTS

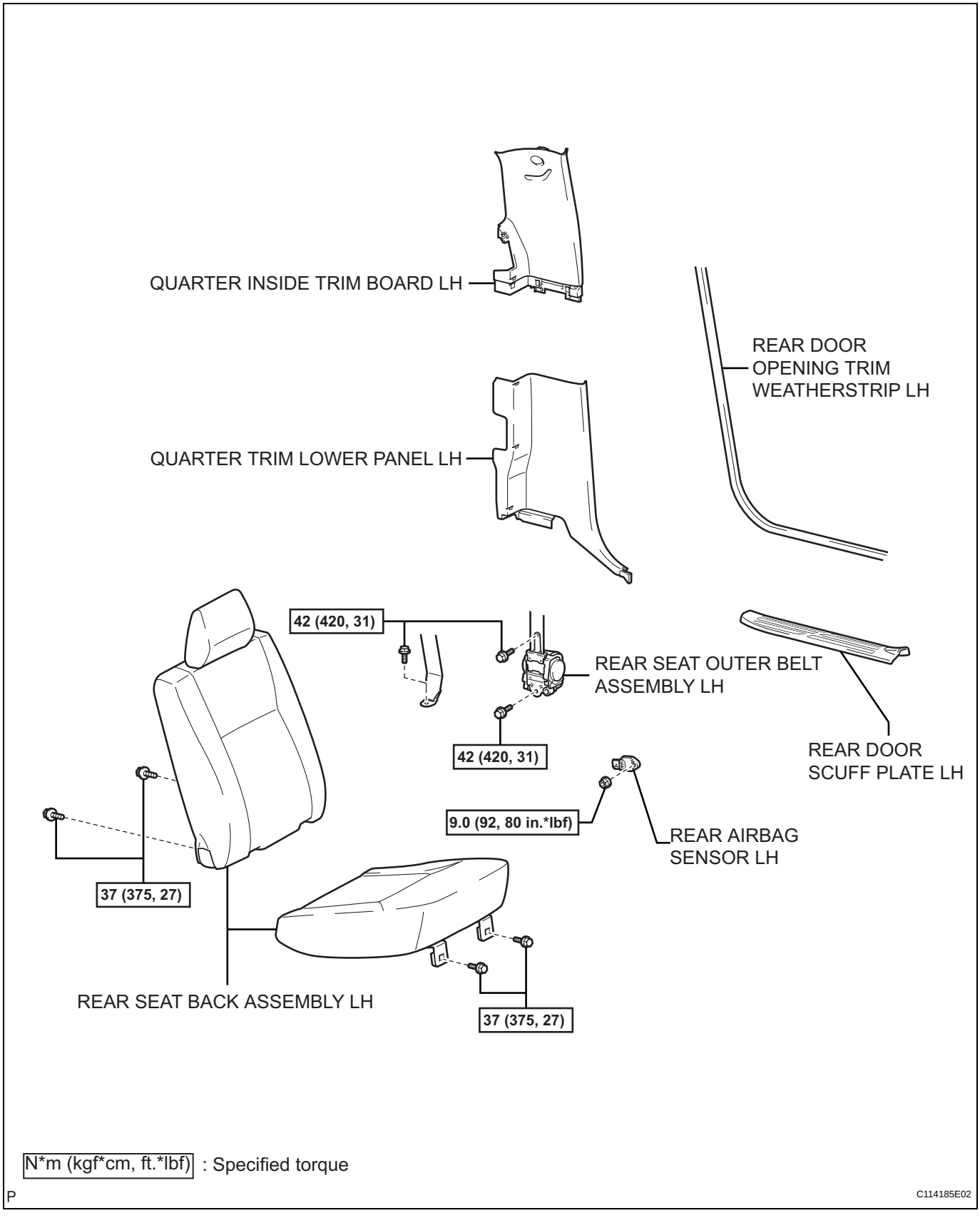

N*m (kgf*cm, ft.*lbf) : Specified torque

P

C114185E02

RS

ON-VEHICLE INSPECTION

1. **INSPECT REAR AIRBAG SENSOR (for Vehicle not Involved in Collision)**
   (a) Perform a diagnostic system check (see page RS-37).

2. **INSPECT REAR AIRBAG SENSOR (for Vehicle Involved in Collision and Airbag not Deployed)**
   (a) Perform a diagnostic system check (see page RS-37).
   (b) When the quarter panel of the vehicle or its area is damaged, check if there is any damage to the rear airbag sensor. If there are any defects as mentioned below, replace the rear airbag sensor with a new one:
   - Cracks, dents or chips on the sensor housing.
   - Cracks or other damage to the connector.
   - Peeling off of the label or damage to the serial number.

   CAUTION:
   For removal and installation procedures of the rear airbag sensor. Be sure to following the correct procedure.

3. **INSPECT REAR AIRBAG SENSOR (for Vehicle Involved in Collision)**
   (a) Replace the rear airbag sensor.
   CAUTION:
   For removal and installation procedures of the rear airbag sensor. Be sure to follow the correct procedure.
   HINT:
   The rear airbag sensor on the impacted side should be replaced after the curtain shield airbag assembly has deployed.

SEAT POSITION SENSOR (for Separate Seat Type)

COMPONENTS

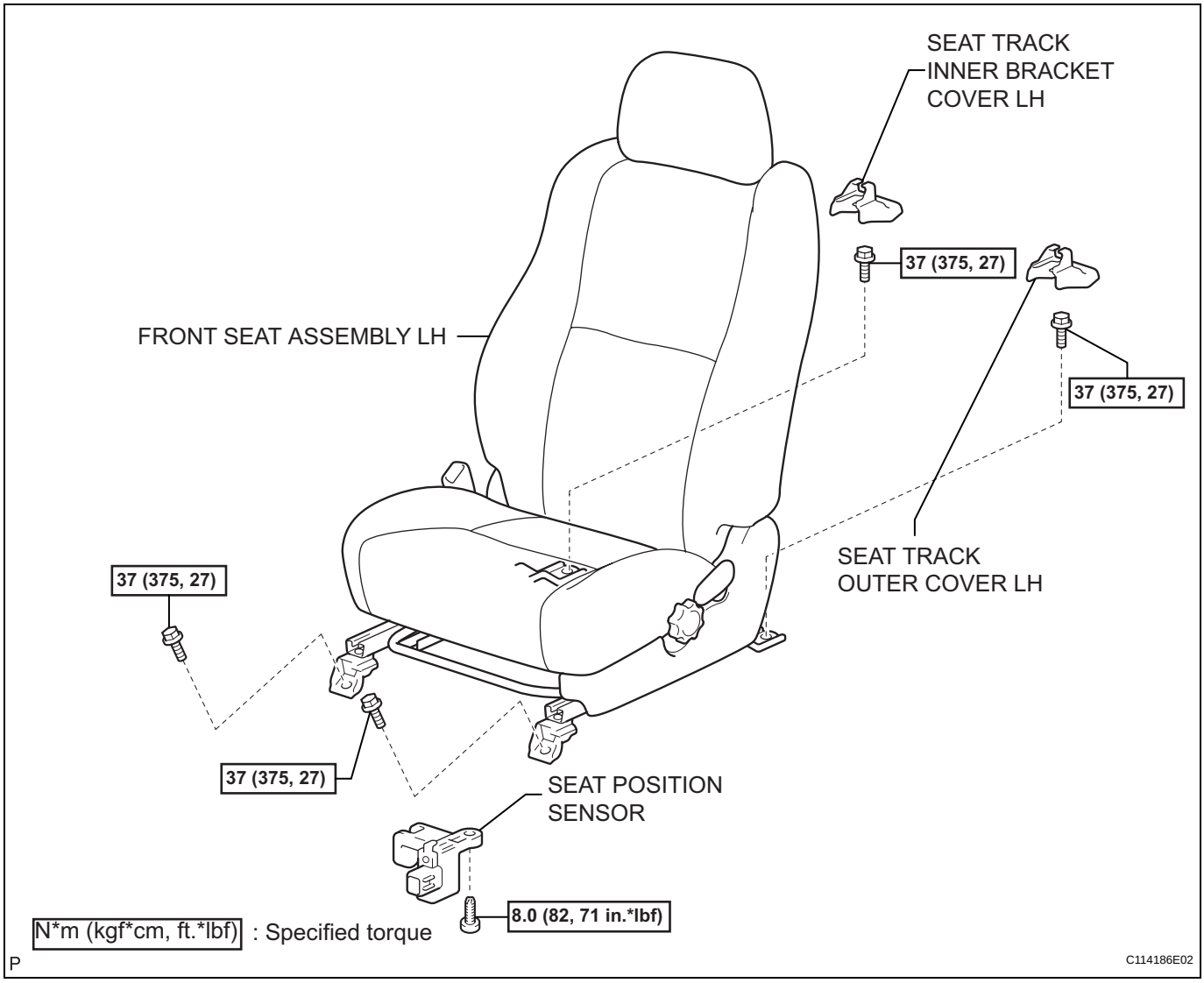

RS

ON-VEHICLE INSPECTION

1. **SEAT POSITION SENSOR (for Vehicle not Involved in Collision)**
   (a) Perform a diagnostic system check (See page RS-34).

2. **SEAT POSITION SENSOR (for Vehicle Involved in Collision)**
   (a) Perform a diagnostic system check (See page RS-34).
   (b) Even if the airbag was not deployed, perform a visual check for damage to the seat position sensor. If there are any defects as mentioned below, replace the seat position sensor with a new one:
   - Cracks, dents or chips in the case.
   - Cracks or other damage to the connector.

   CAUTION:
   For removal and installation procedures of the seat position sensor, see page RS-617, RS-620, and be sure to follow the correct procedure.

SEAT POSITION SENSOR (for Bench Seat Type)

COMPONENTS

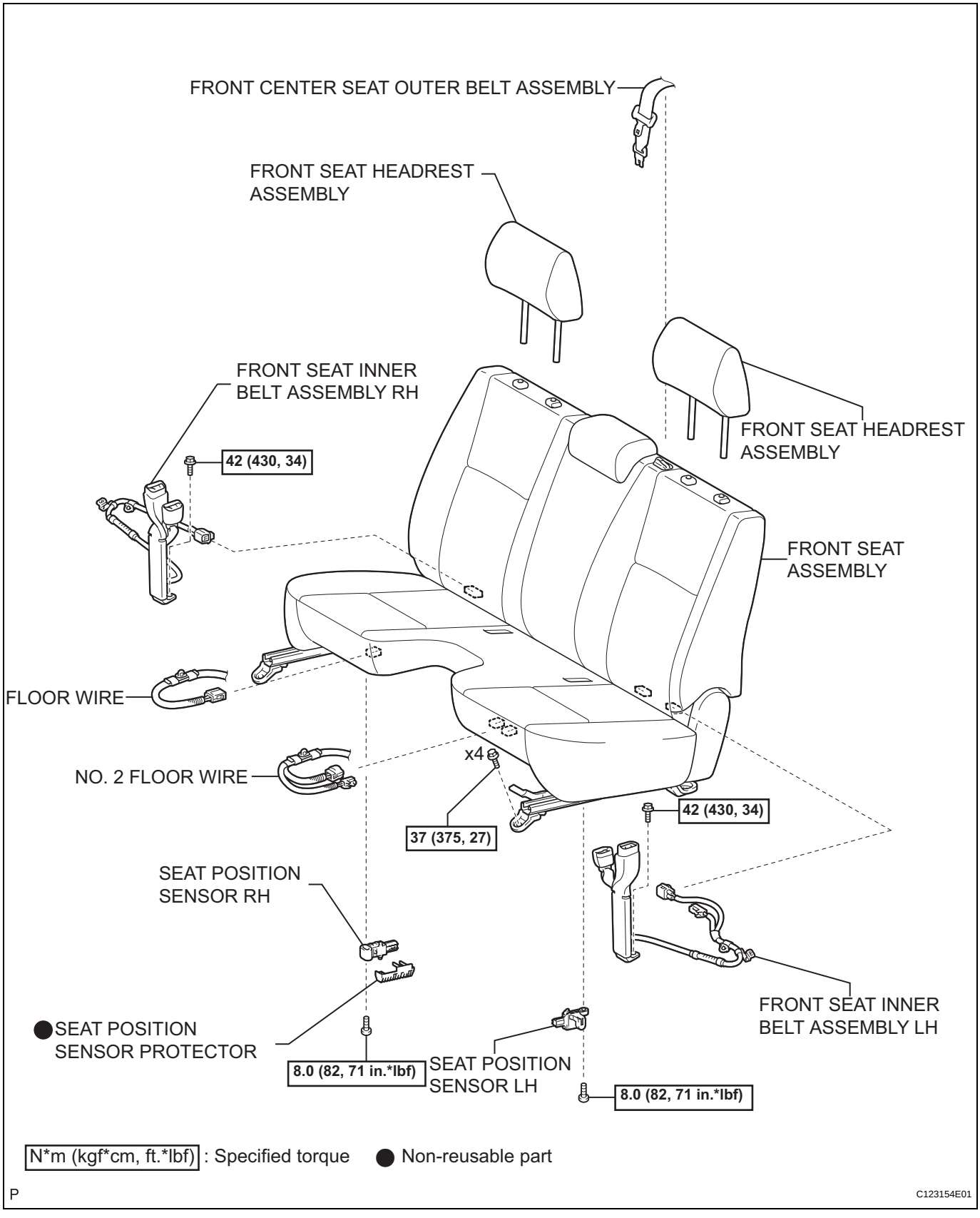

RS

ON-VEHICLE INSPECTION

1. **REMOVE SEAT POSITION SENSOR (for Vehicle not Involved in Collision)**
   (a) Perform a diagnostic system check (See page RS-34).

2. **REMOVE SEAT POSITION SENSOR (for Vehicle Involved in Collision)**
   (a) Perform a diagnostic system check (See page RS-34).
   (b) Even if the airbag was not deployed, perform a visual check for damage to the seat position airbag sensor. If there are any defects as mentioned below, replace the seat position airbag sensor with a new one:
   - Cracks, dents or chips in the case.
   - Cracks or other damage to the connector.

   CAUTION:
   For removal and installation procedures of the seat position airbag sensor, see pages RS-620 and RS-621, and be sure to follow the correct procedure.

FRONT SEAT CUSHION ASSEMBLY (w/ Occupant Classification ECU, Occupant Classification Sensor)

COMPONENTS

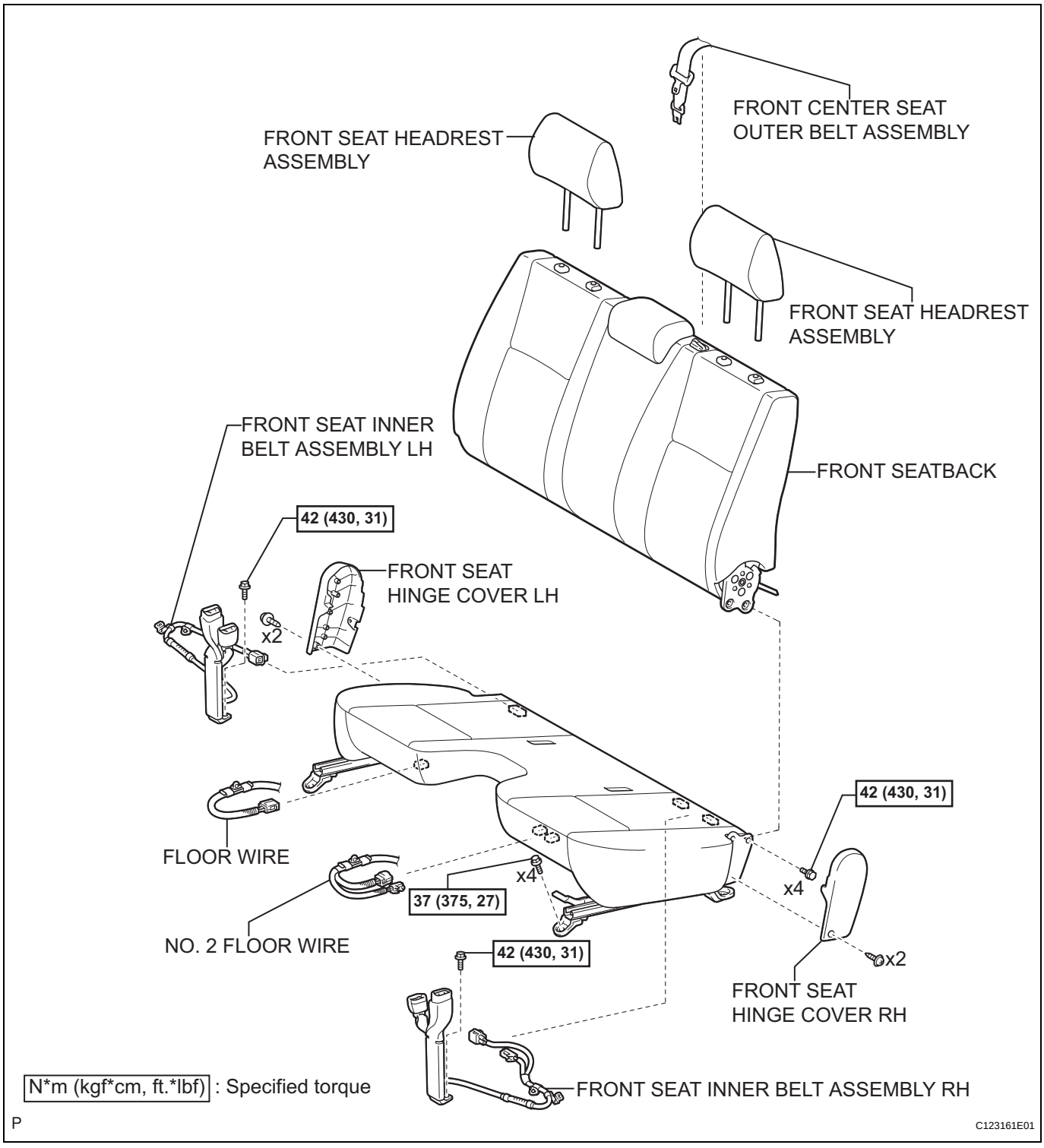

RS

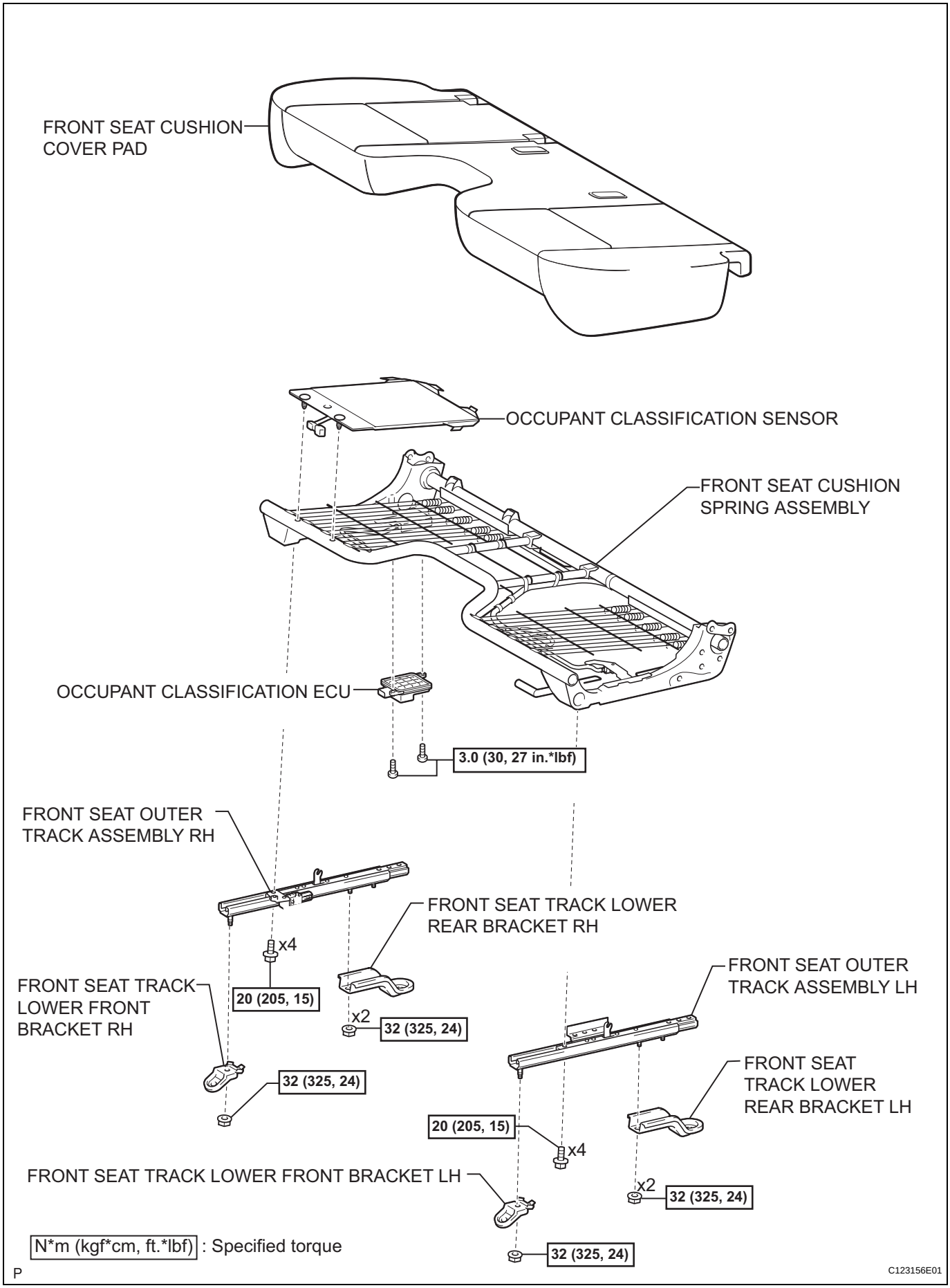
FRONT SEAT CUSHION COVER PAD
OCCUPANT CLASSIFICATION SENSOR
FRONT SEAT CUSHION SPRING ASSEMBLY
OCCUPANT CLASSIFICATION ECU
3.0 (30, 27 in.*lbf)
FRONT SEAT OUTER TRACK ASSEMBLY RH
FRONT SEAT TRACK LOWER REAR BRACKET RH
x4
20 (205, 15)
FRONT SEAT TRACK LOWER FRONT BRACKET RH
x2
32 (325, 24)
32 (325, 24)
FRONT SEAT OUTER TRACK ASSEMBLY LH
FRONT SEAT TRACK LOWER REAR BRACKET LH
20 (205, 15)
x4
FRONT SEAT TRACK LOWER FRONT BRACKET LH
x2
32 (325, 24)
32 (325, 24)
N*m (kgf*cm, ft.*lbf) : Specified torque
P
C123156E01

RS

OCCUPANT CLASSIFICATION ECU (for Separate Seat Type)

COMPONENTS

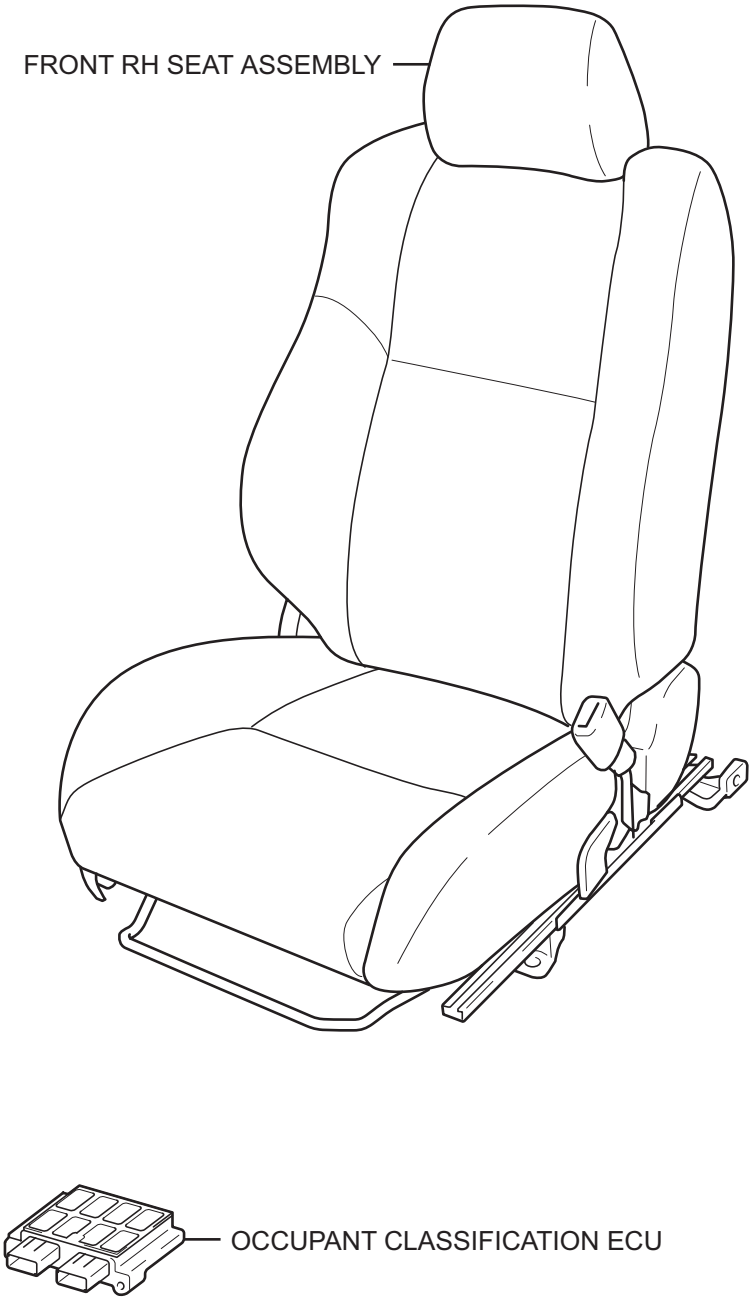

RS

ON-VEHICLE INSPECTION

1. INSPECT OCCUPANT CLASSIFICATION ECU (for Vehicle not Involved in Collision)

(a) Perform a diagnostic system check (See page RS-34).

2. INSPECT OCCUPANT CLASSIFICATION ECU (for Vehicle Involved in Collision)

(a) Perform a diagnostic system check (See page RS-34).

(b) Even if the airbag was not deployed, perform a visual check for damage to the occupant classification ECU. If there are any defects as mentioned below, replace the occupant classification ECU with a new one:

- Cracks, dents or chips in the case.
- Cracks or other damage to the connector.

CAUTION:
For removal and installation procedures of the occupant classification ECU, see page RS-631, and be sure to follow the correct procedure.

OCCUPANT CLASSIFICATION ECU (for Bench Seat Type)

COMPONENTS

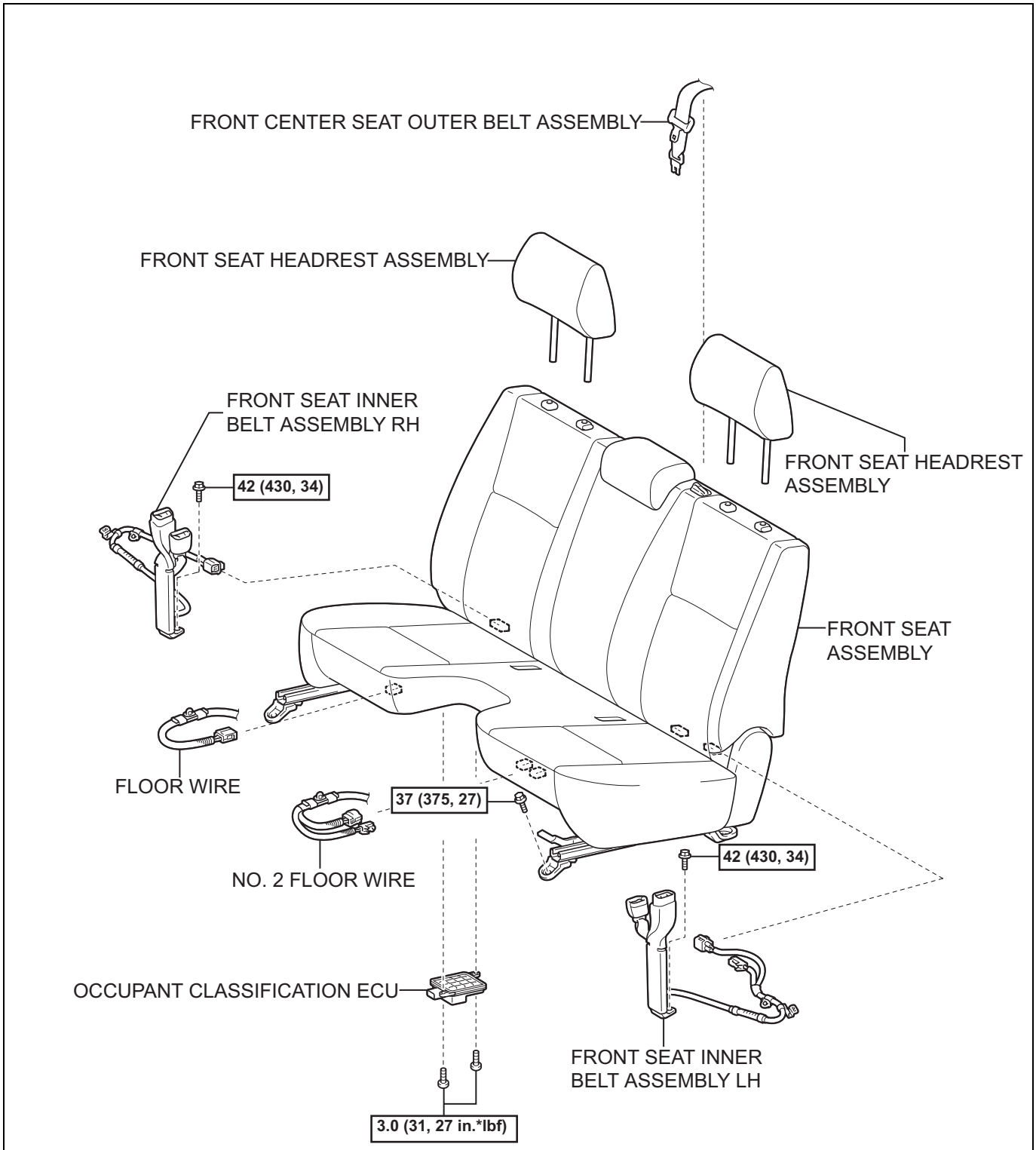

N*m (kgf*cm, ft.*lbf) : Specified torque

P

C123155E01

RS

ON-VEHICLE INSPECTION

1. **INSPECT OCCUPANT CLASSIFICATION ECU (for Vehicle not Involved in Collision)**
   (a) Perform a diagnostic system check (See page RS-34).

2. **REMOVE OCCUPANT CLASSIFICATION ECU (for Vehicle Involved in Collision)**
   (a) Perform a diagnostic system check (See page RS-34).
   (b) Even if the airbag was not deployed, check if there is any damage to the occupant classification ECU. If there are any defects as mentioned below, replace the occupant classification ECU with a new one:
   - Cracks, dents or chips on the case.
   - Cracks or other damage to the connector.

   CAUTION:
   Be sure to follow the correct removal and installation procedures.

AIRBAG CUT-OFF SWITCH

COMPONENTS

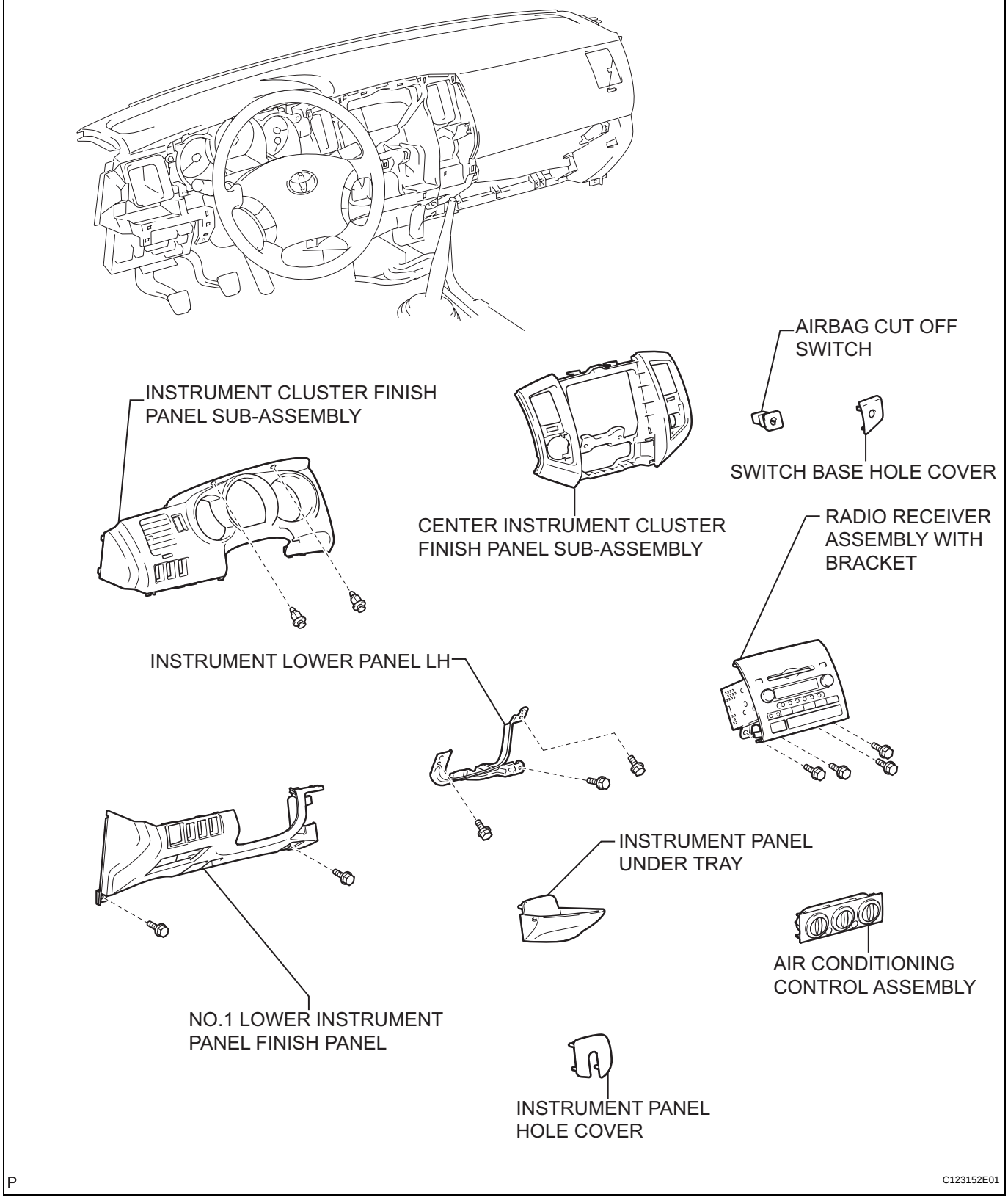

RS

REMOVAL

1. **PRECAUTION**
   (See page RS-1)
2. **DISCONNECT CABLE FROM NEGATIVE BATTERY TERMINAL**
3. **REMOVE INSTRUMENT PANEL UNDER TRAY (for Pedal Type Parking Brake) (See page IP-9)**
4. **REMOVE INSTRUMENT PANEL HOLE COVER (for Lever Type Parking Brake) (See page IP-9)**
5. **REMOVE AIR CONDITIONING CONTROL ASSEMBLY (See page IP-12)**
6. **REMOVE RADIO RECEIVER ASSEMBLY WITH BRACKET (See page AV-69)**
7. **SEPARATE HOOD LOCK CONTROL LEVER SUB-ASSEMBLY (See page ED-3)**
8. **REMOVE NO.1 LOWER INSTRUMENT PANEL FINISH PANEL (See page IP-12)**
9. **REMOVE INSTRUMENT LOWER PANEL LH (See page IP-14)**
10. **REMOVE INSTRUMENT CLUSTER FINISH PANEL SUB-ASSEMBLY (See page IP-12)**
11. **REMOVE CENTER INSTRUMENT CLUSTER FINISH PANEL SUB-ASSEMBLY (See page IP-13)**
12. **REMOVE SWITCH BASE HOLE COVER**
    (a) Disengage the 3 claws and remove the switch base hole cover.

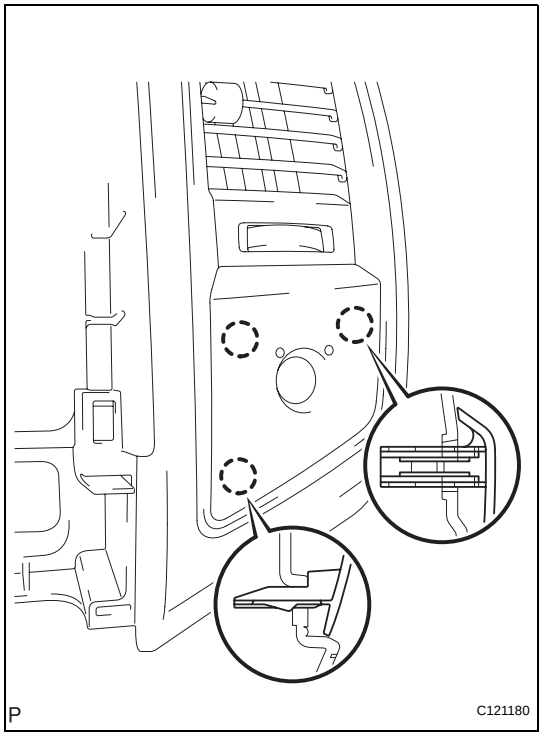

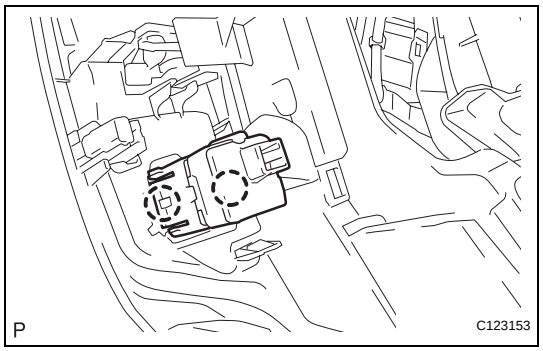

13. REMOVE AIRBAG CUT OFF SWITCH

(a) Disconnect the airbag cut off switch connector.

(b) Remove the instrument cluster finish panel sub-assembly center while holding the 2 claws of the airbag cut off switch.

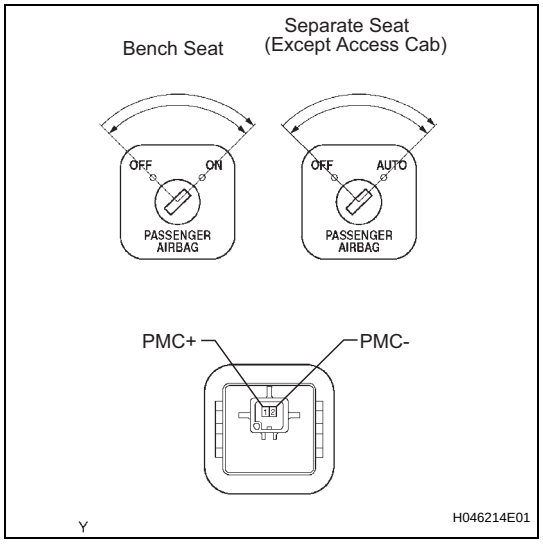

INSPECTION

1. INSPECT AIRBAG CUT OFF SWTCH

(a) Check the resistance.

(1) Using an ohmmeter, measure the resistance between the terminals.

Standard :

Switch Connection	Tester Condition	Specified Condition
OFF	1 (MSW+) - 2 (MSW-)	80 to 120Ω
ON	1 (MSW+) - 2 (MSW-)	320 to 480Ω

If the result is not as specified, replace the air bag cut off switch.

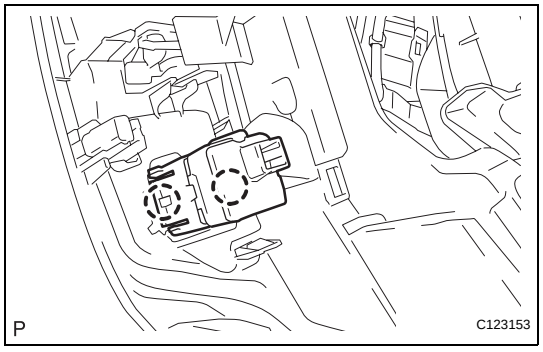

INSTALLATION

1. INSTALL AIRBAG CUT-OFF SWITCH

(a) Engage the 2 claws of the cut off switch with the instrument cluster finish panel sub-assembly center.

(b) Attach the connector to the airbag cut off switch.

SEAT BELT WARNING SYSTEM

PARTS LOCATION

FOR BENCH SEAT:

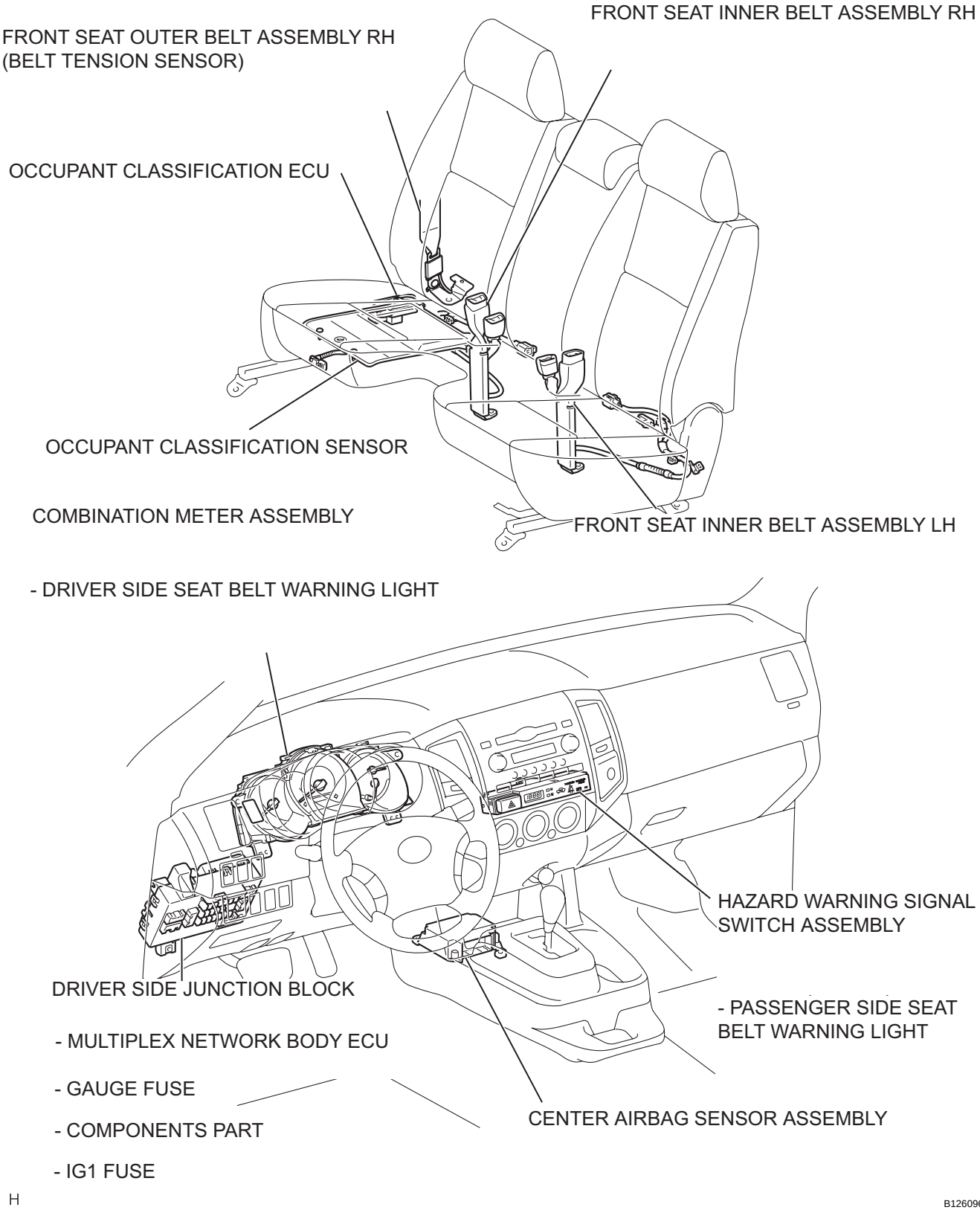

H

B126096E02

SB

FOR SEPARATE SEAT:

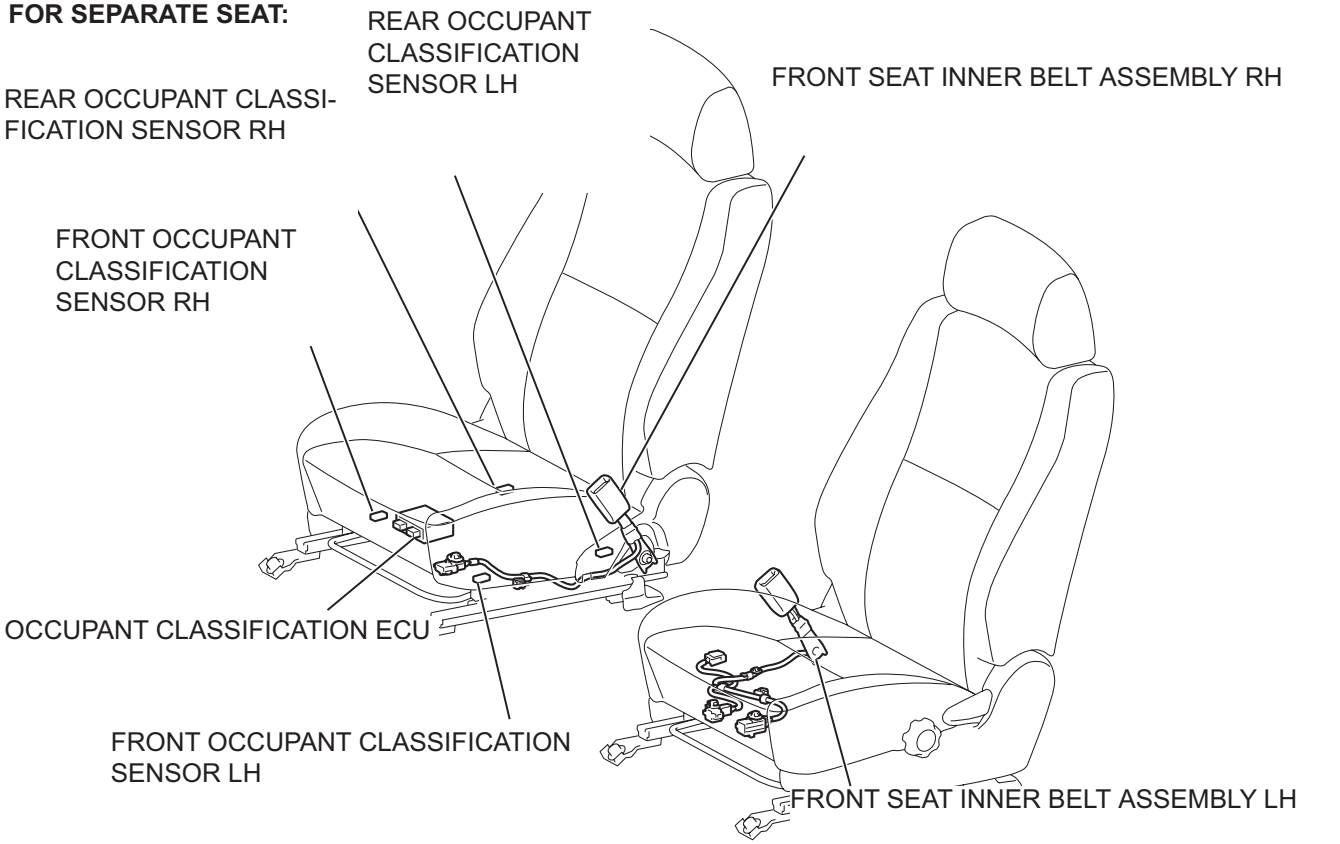

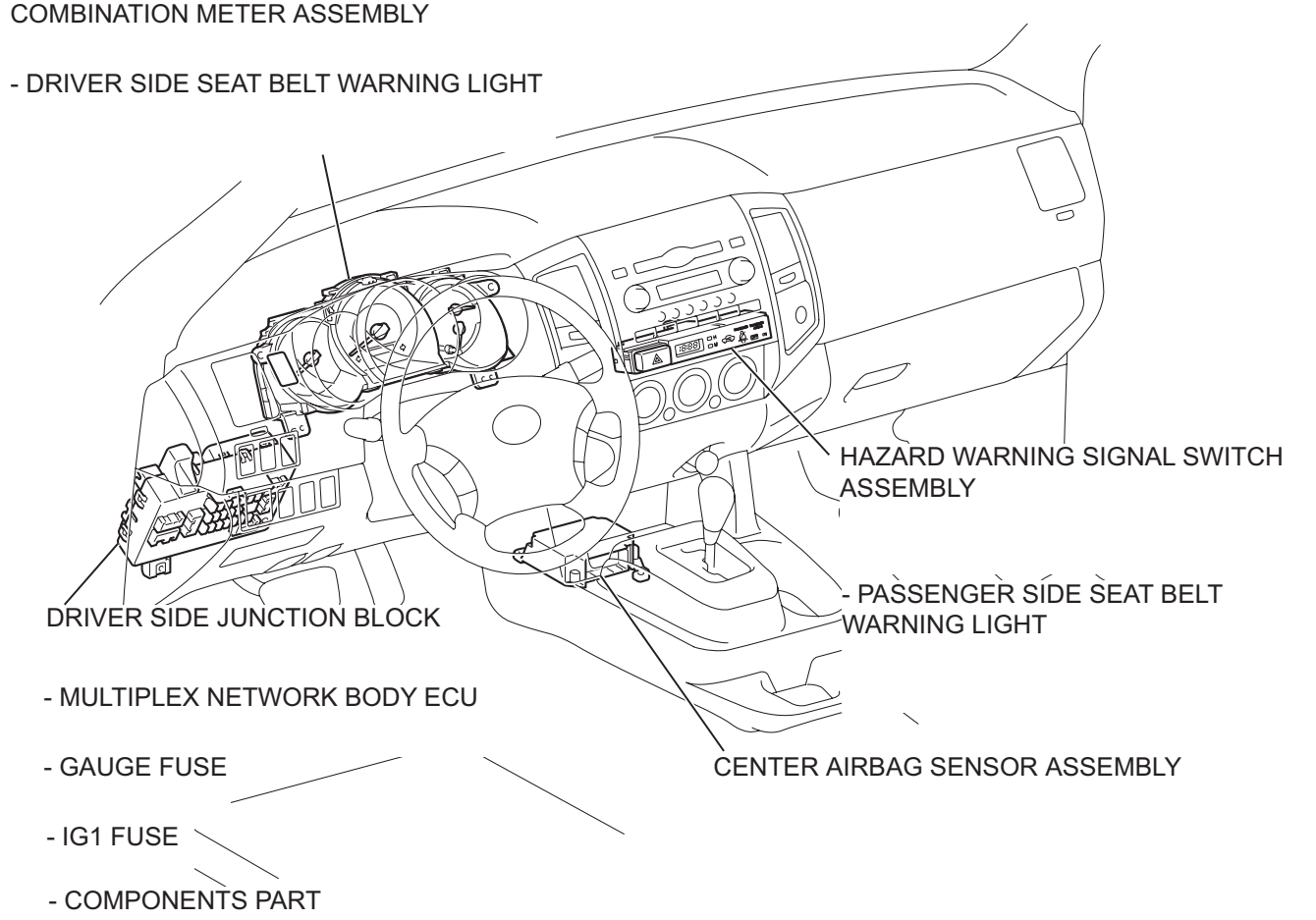

SB

H

B126097E04

FRONT SEAT INNER BELT ASSEMBLY (for Separate Seat Type)

COMPONENTS

for Driver Side:

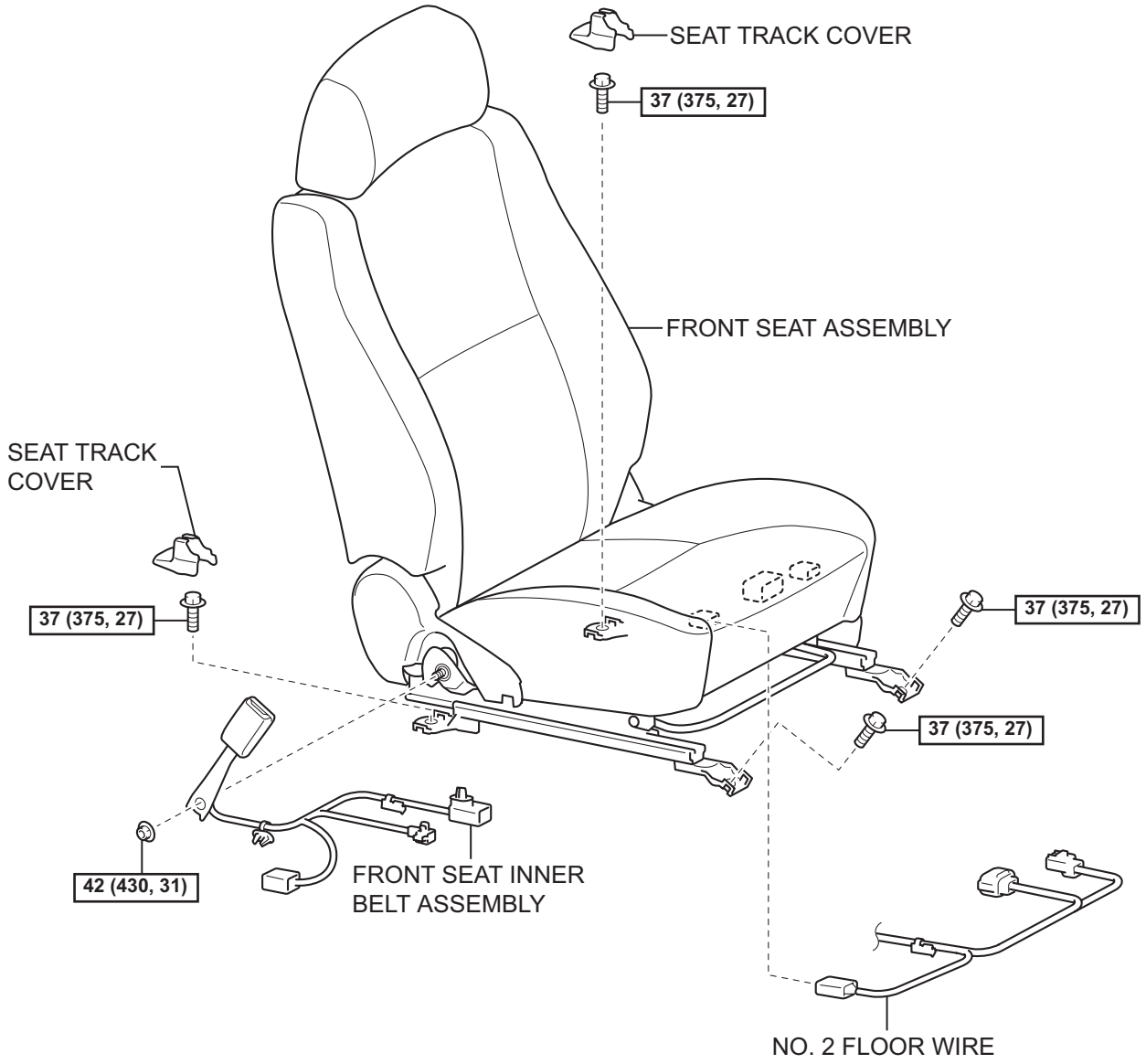

N*m (kgf*cm, ft*lbf) : Specified torque

H

B087331E02

SB

for Front Passenger Side:

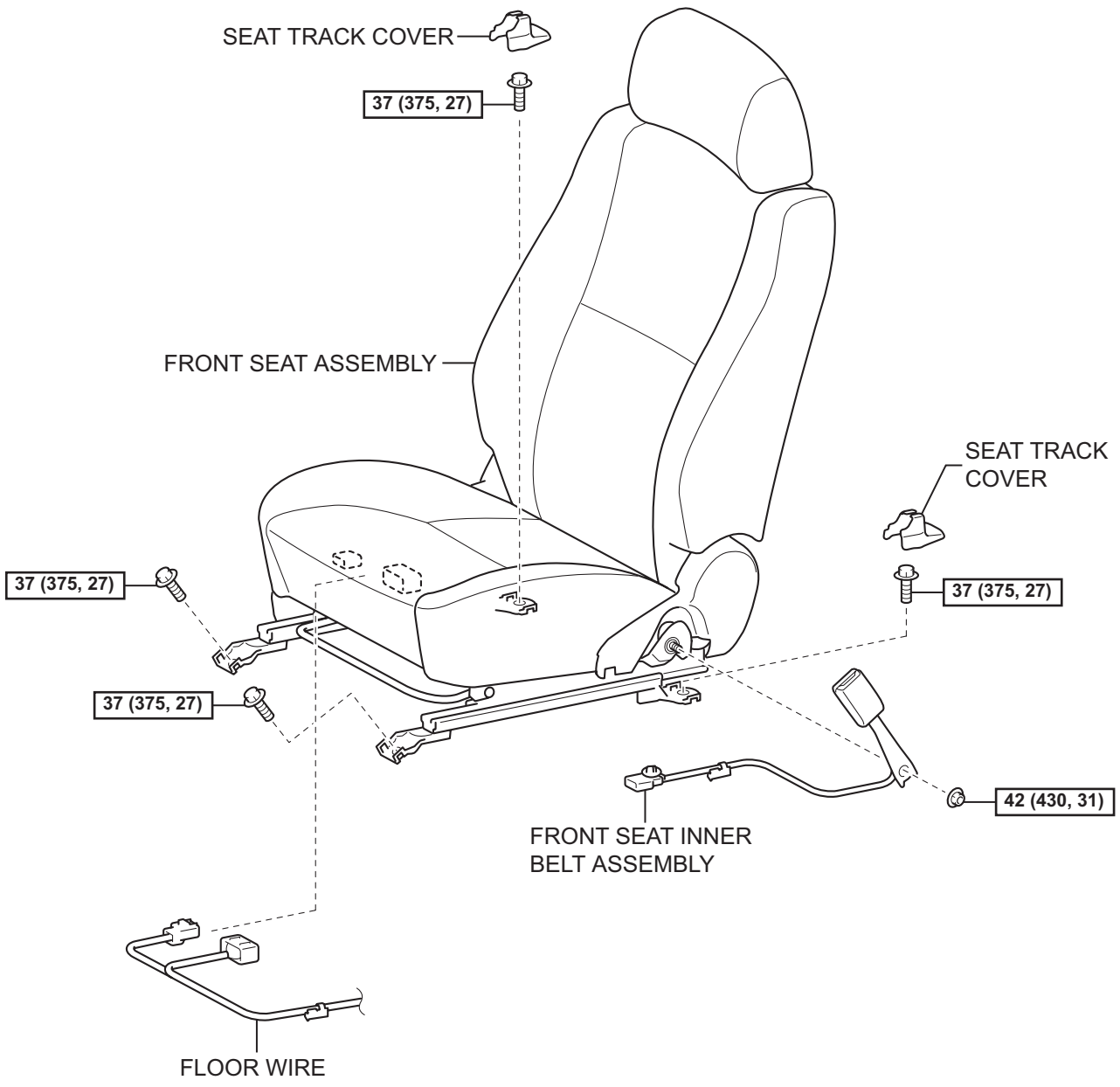

N*m (kgf*cm, ft*lbf) : Specified torque

H

B087319E01

SB

FRONT SEAT INNER BELT ASSEMBLY (for Bench Seat Type)

COMPONENTS

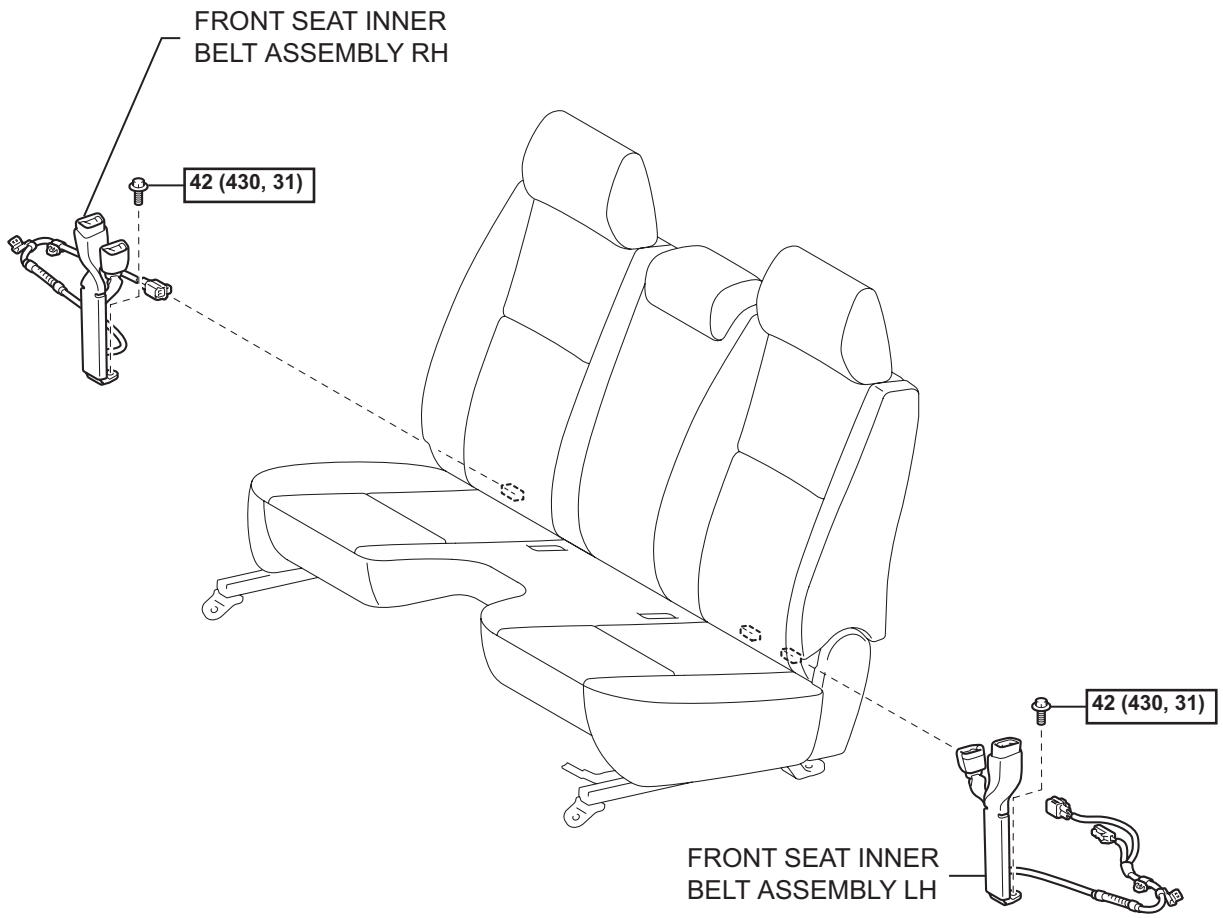

N*m (kgf*cm, ft*lbf) : Specified torque

H

B121776E01

SB

REMOVAL

1. DISCONNECT CABLE FROM NEGATIVE BATTERY TERMINAL

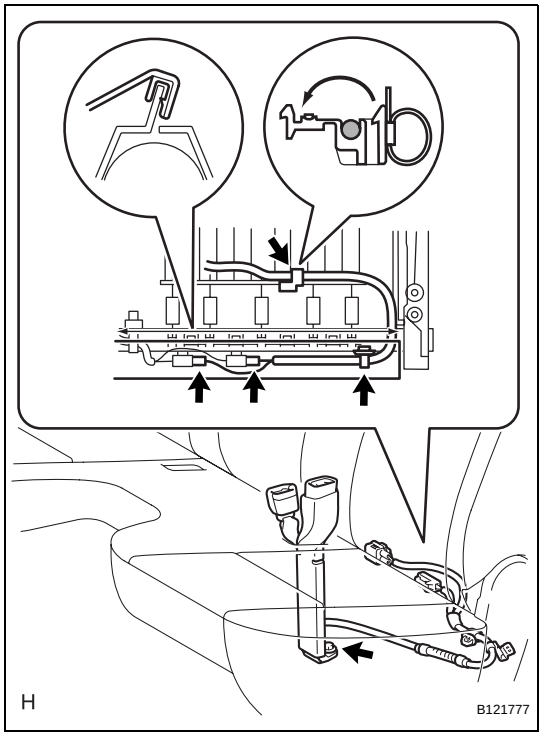

2. REMOVE FRONT SEAT INNER BELT ASSEMBLY LH

(a) Slide the front seat to the most forward position.
(b) Disengage the hook.
(c) Disconnect the 2 connectors.
(d) Using a clip remover, remove the wiring harness clamp.
(e) Remove the wiring harness clamp.
(f) Remove the bolt and the front seat inner belt.

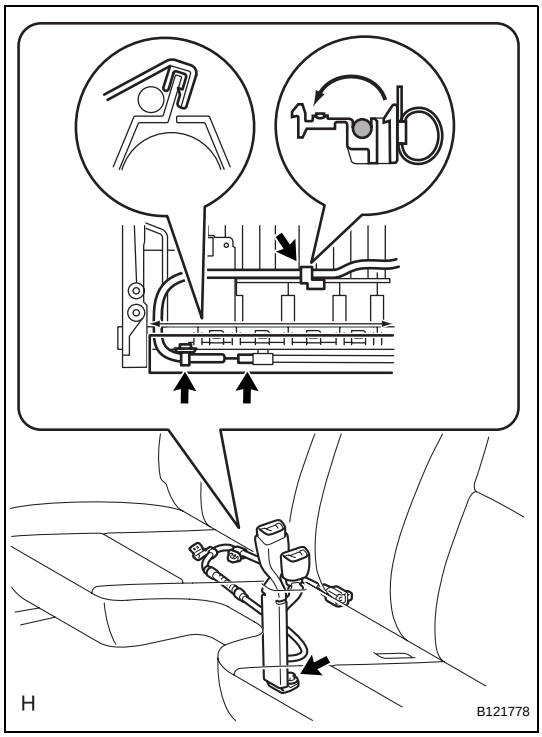

3. REMOVE FRONT SEAT INNER BELT ASSEMBLY RH

(a) Slide the front seat to the most forward position.
(b) Disengage the hook.
(c) Disconnect the connector.
(d) Using a clip remover, remove the wiring harness clamp.
(e) Remove the wiring harness clamp.
(f) Remove the bolt and the front seat inner belt.

FRONT SEAT OUTER BELT ASSEMBLY (for Double Cab)

COMPONENTS

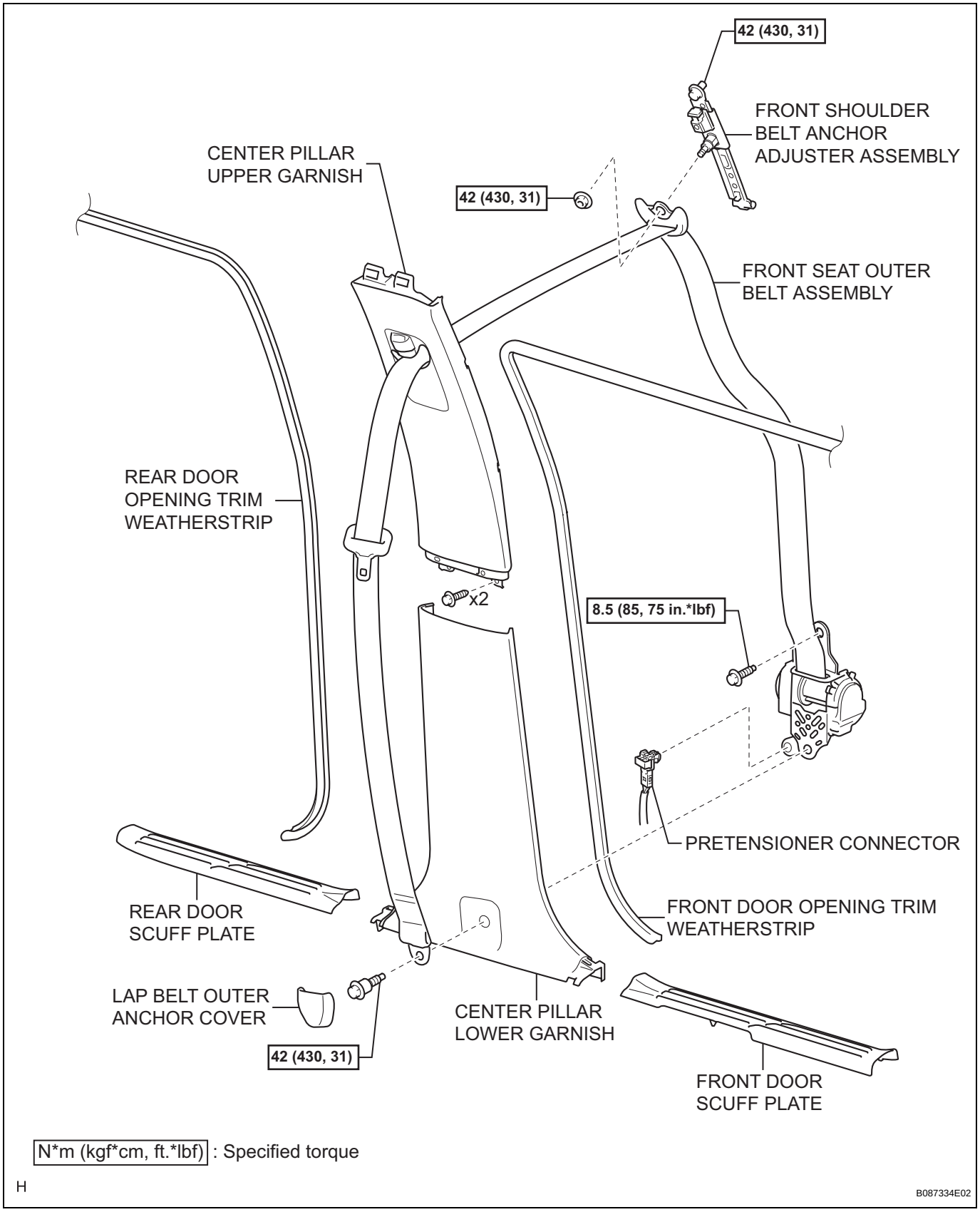

SB

REMOVAL

CAUTION:
Some of these service operations affect the SRS airbag system. Read the precautionary notices concerning the SRS airbag system before servicing (See page RS-1).

1. **DISCONNECT CABLE FROM NEGATIVE BATTERY TERMINAL**
   Wait for at least 90 seconds after disconnecting the cable to prevent the air bag from working.
2. **REMOVE FRONT DOOR SCUFF PLATE (See page IR-12)**
3. **REMOVE REAR DOOR SCUFF PLATE (See page IR-13)**
4. **REMOVE FRONT DOOR OPENING TRIM WEATHERSTRIP**
   (a) Separate the front door opening trim weatherstrip to the extent which allows the removal of the center pillar lower garnish and center pillar upper garnish.

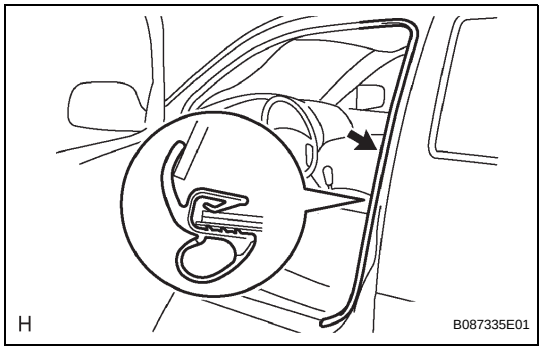

5. **REMOVE REAR DOOR OPENING TRIM WEATHERSTRIP**
   (a) Separate the rear door opening trim weatherstrip to the extent which allows the removal of the center pillar lower garnish and center pillar upper garnish.

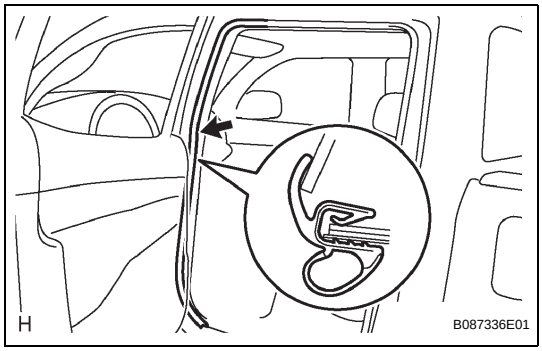

6. **REMOVE LAP BELT OUTER ANCHOR COVER**
   (a) Disengage the 3 claws and remove the lap belt outer anchor cover.
7. **REMOVE CENTER PILLAR LOWER GARNISH (See page IR-15)**
8. **REMOVE CENTER PILLAR UPPER GARNISH (See page IR-16)**

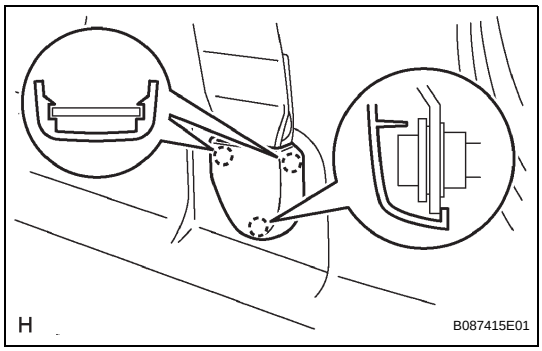

SB

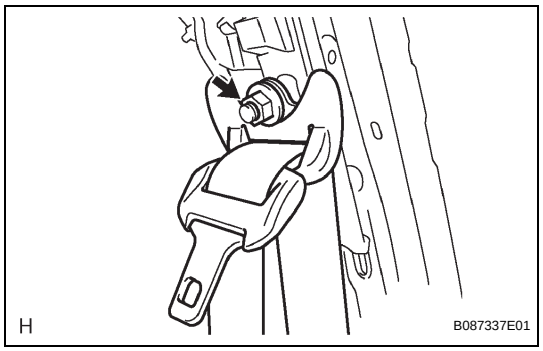

9. REMOVE FRONT SEAT OUTER BELT ASSEMBLY

(a) Remove the nut and shoulder anchor.

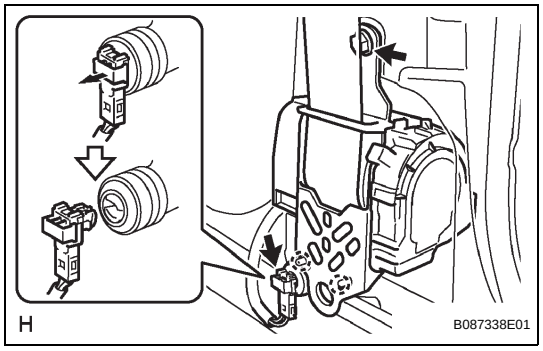

(b) Disconnect the pretensioner connector as shown in the illustration.

(c) Remove the bolt and retractor.

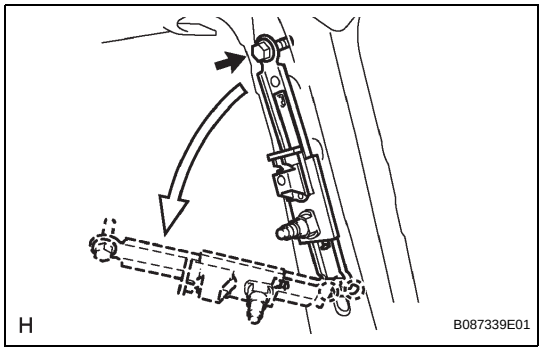

10. REMOVE FRONT SHOULDER BELT ANCHOR ADJUSTER ASSEMBLY

(a) Remove the bolt.

(b) Disengage the 2 claws and remove the front shoulder belt anchor adjuster.

FRONT SEAT OUTER BELT ASSEMBLY (for Regular Cab)

COMPONENTS

for Separate Seat Type:

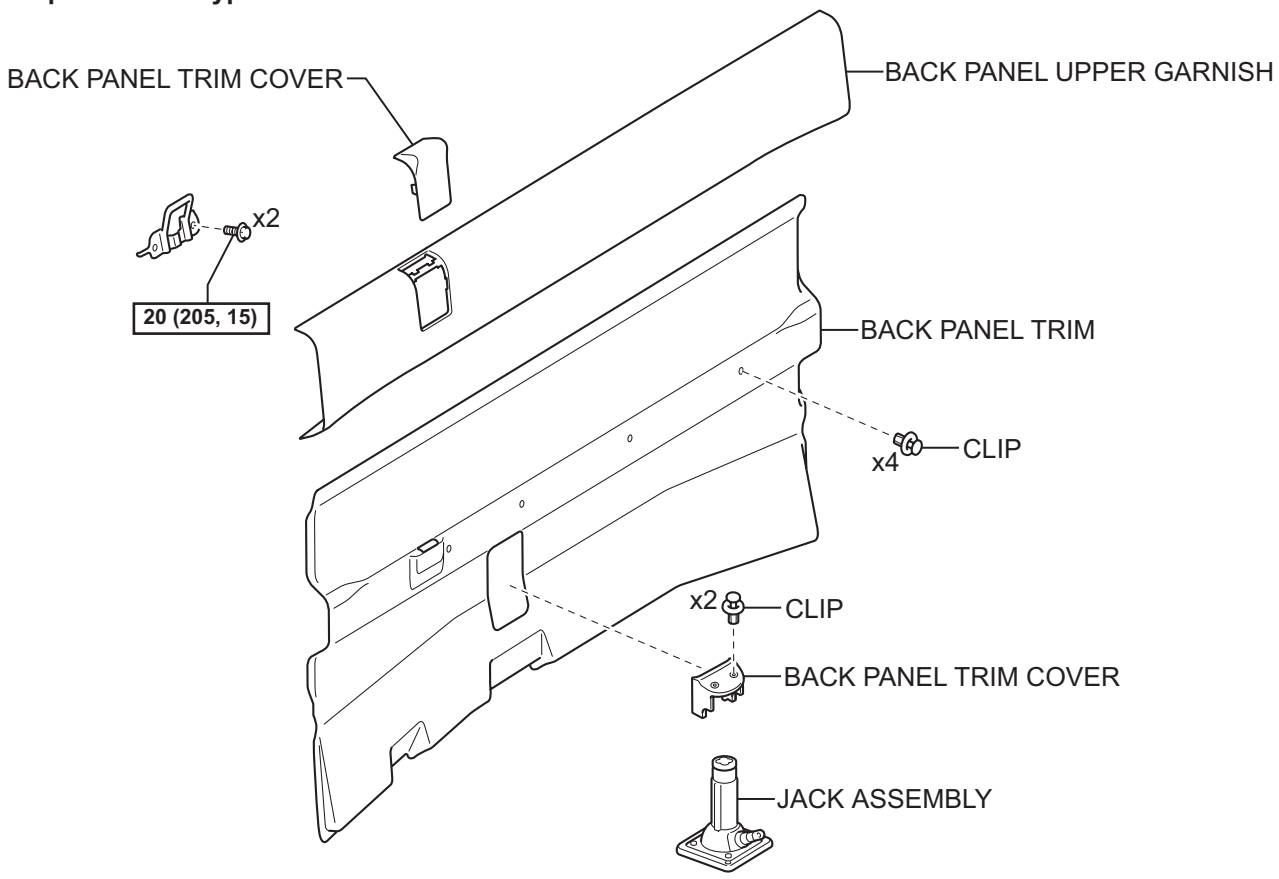

for Bench Seat Type:

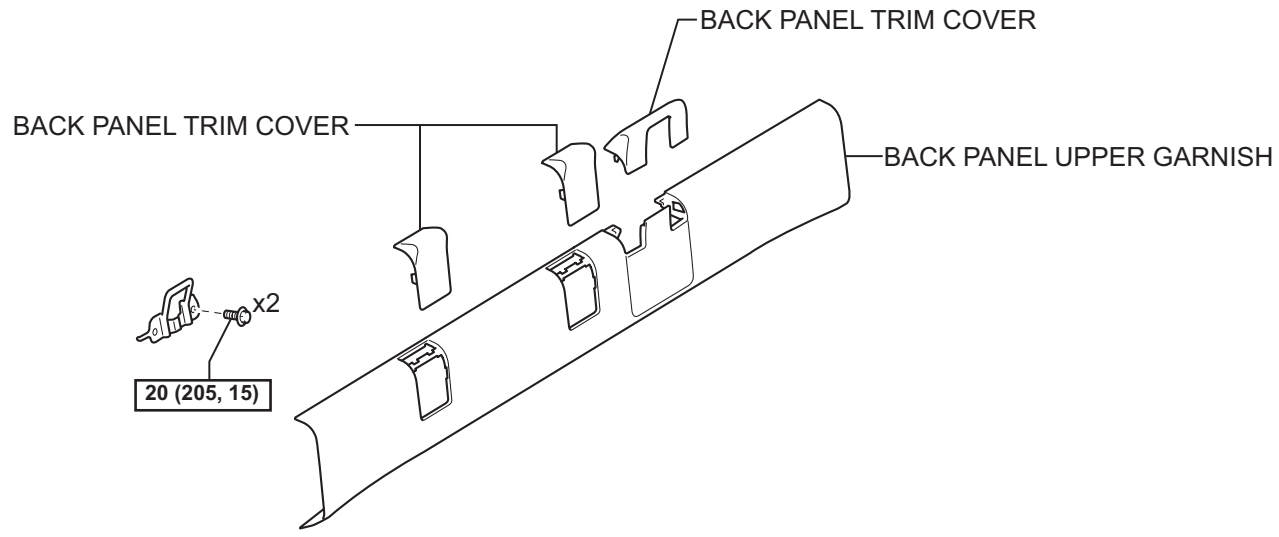

N*m (kgf*cm, ft*lbf) : Specified torque

H

B088593E02

SB

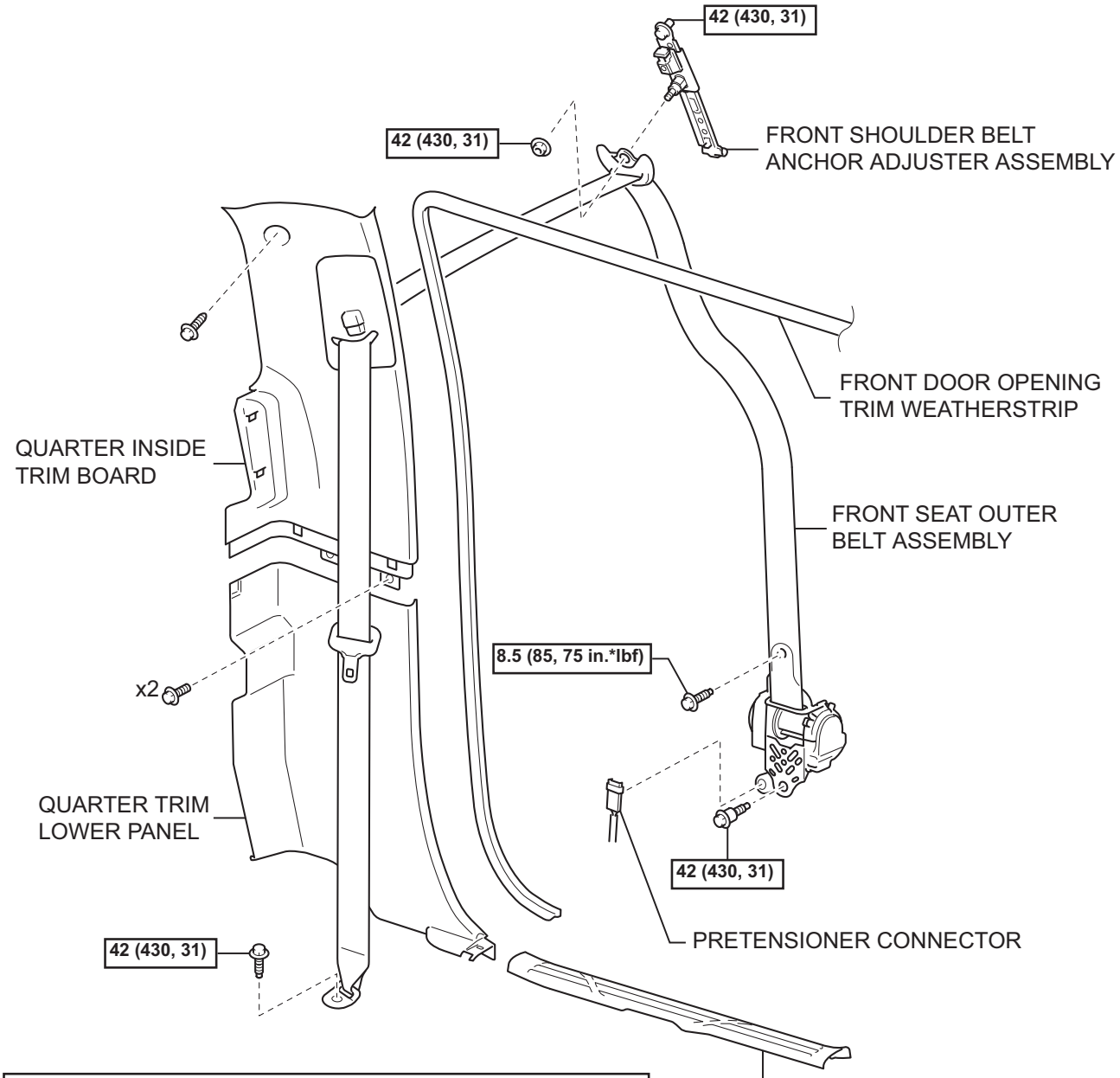

for Bench Seat Type RH Side:

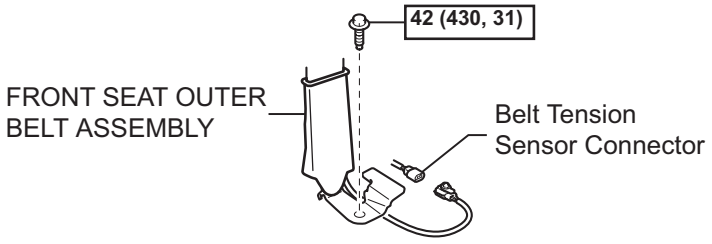

SB

N*m (kgf*cm, ft*lbf) : Specified torque

H

B121772E01

FRONT SEAT OUTER BELT ASSEMBLY (for Access Cab)

COMPONENTS

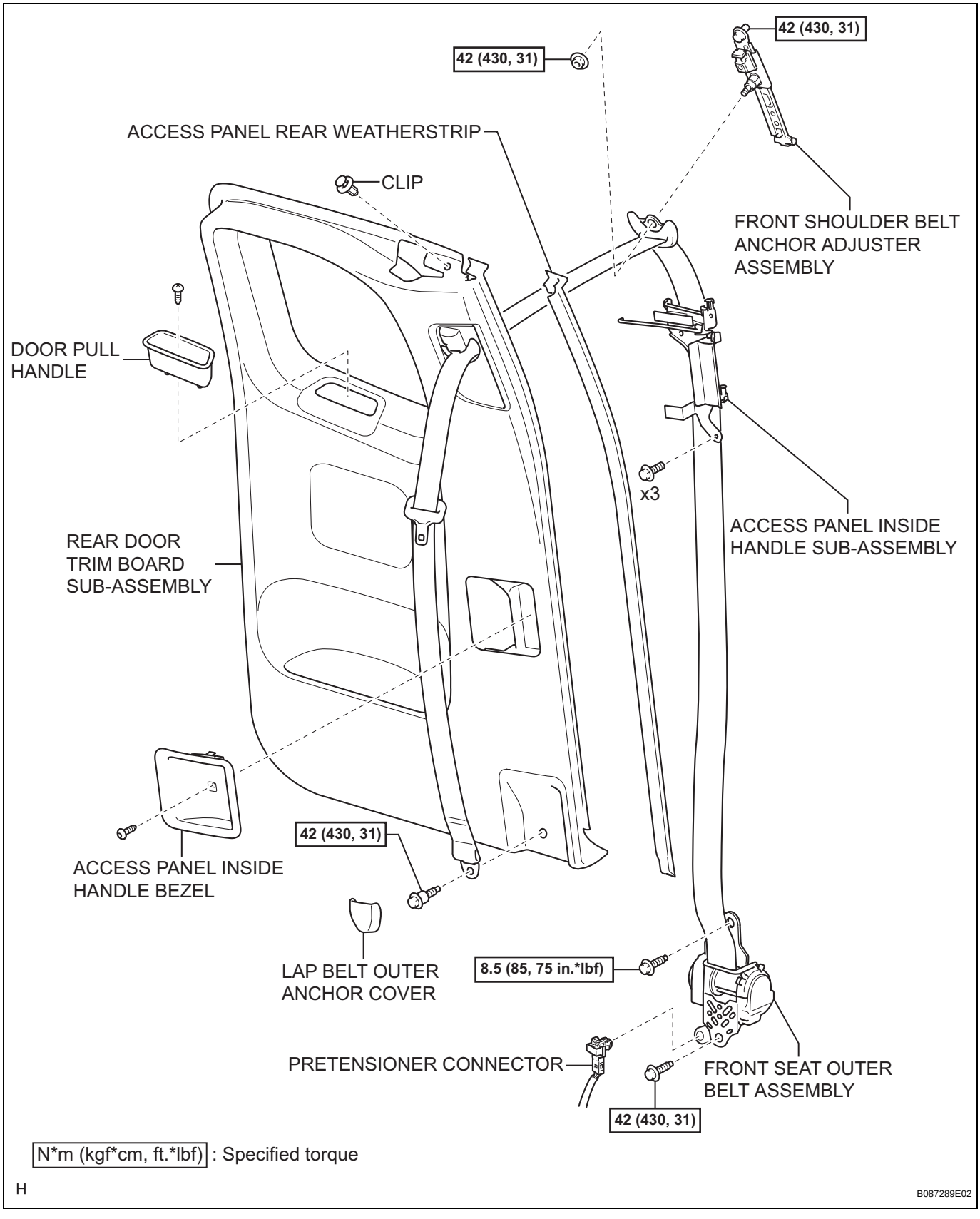

SB

REMOVAL

CAUTION:
Some of these service operations affect the SRS airbag system. Read the precautionary notices concerning the SRS airbag system before servicing (See page RS-1).

1. **DISCONNECT CABLE FROM NEGATIVE BATTERY TERMINAL**
   Wait for at least 90 seconds after disconnecting the cable to prevent the air bag from working.
2. **REMOVE ACCESS PANEL REAR WEATHERSTRIP (See page ED-53)**
3. **REMOVE LAP BELT OUTER ANCHOR COVER (See page ED-53)**
4. **REMOVE DOOR PULL HANDLE**
   (a) Remove the screw, then remove the door pull handle.

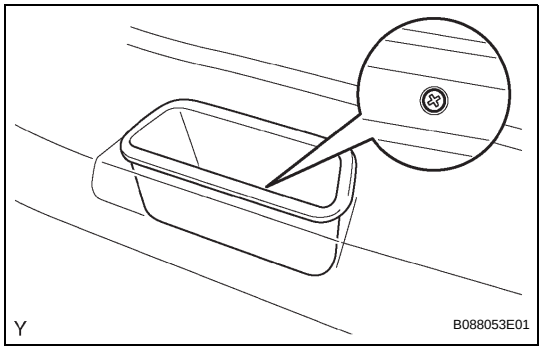

5. **REMOVE ACCESS PANEL INSIDE HANDLE BEZEL**
   (a) Using a screwdriver with its tip wrapped in protective tape, open the cover.

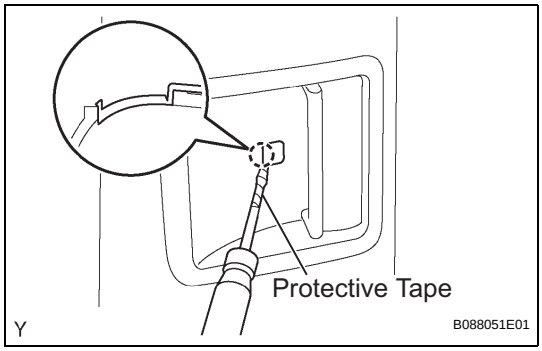

   (b) Remove the screw, then remove the access panel inside handle bezel.

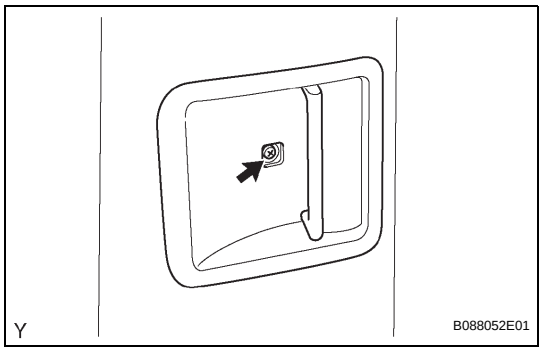

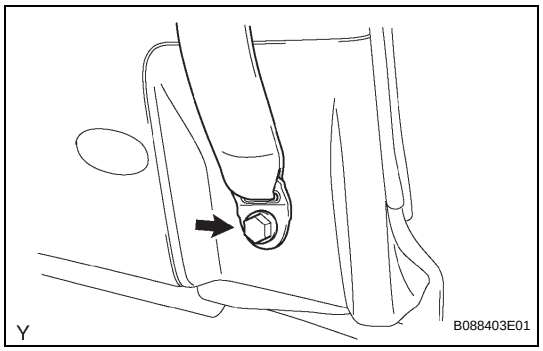

6. REMOVE REAR DOOR TRIM BOARD SUB-ASSEMBLY

(a) Remove the bolt and floor anchor of the front seat outer belt.

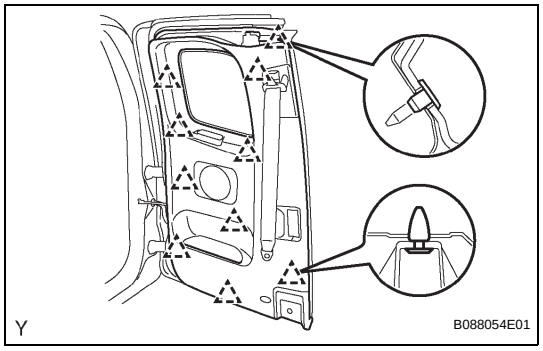

(b) Remove the clip.

(c) Disengage the 9 clips and remove the rear door trim board.

7. REMOVE ACCESS PANEL INSIDE HANDLE SUB-ASSEMBLY (See page ED-54)

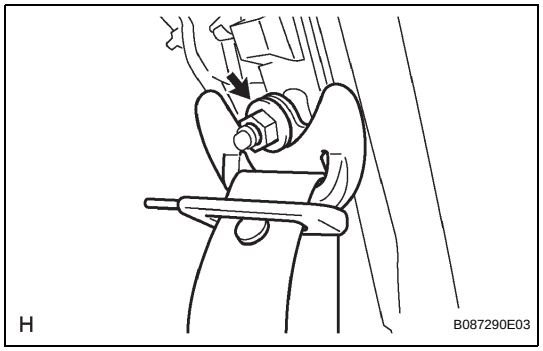

8. REMOVE FRONT SEAT OUTER BELT ASSEMBLY

(a) Remove the nut and shoulder anchor.

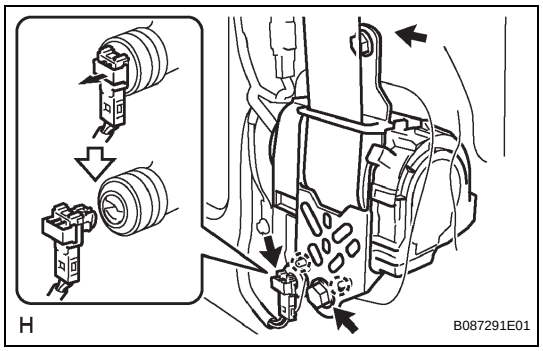

(b) Disconnect the pretensioner connector as shown in the illustration.

(c) Remove the 2 bolts and retractor.

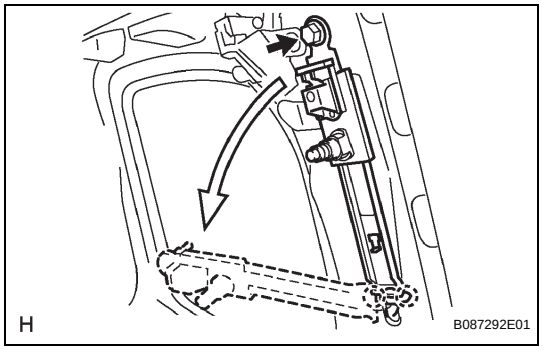

9. REMOVE FRONT SHOULDER BELT ANCHOR ADJUSTER ASSEMBLY

(a) Remove the bolt.

(b) Disengage the 2 claws and remove the front shoulder belt anchor adjuster.

SB

FRONT CENTER SEAT OUTER BELT (for Bench Seat Type)

COMPONENTS

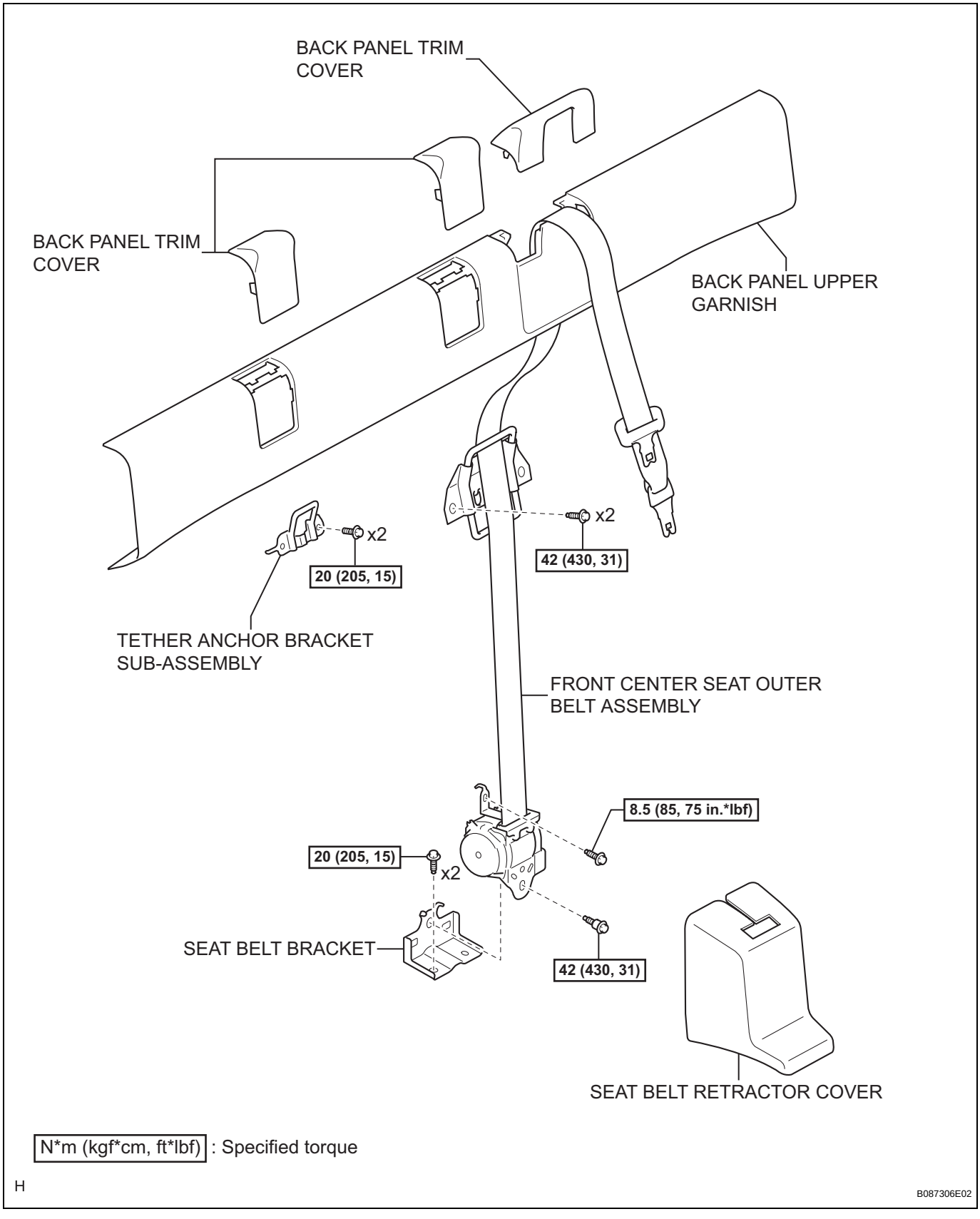

N*m (kgf*cm, ft*lbf) : Specified torque

H

B087306E02

SB

REMOVAL

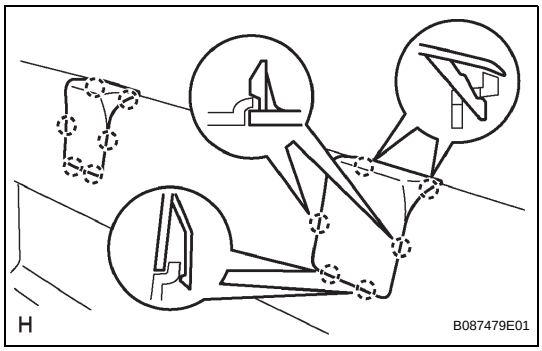

1. REMOVE BACK PANEL TRIM COVER

(a) Disengage the 6 claws and remove the back panel trim cover.
HINT:
Follow the same procedures as for the opposite side.

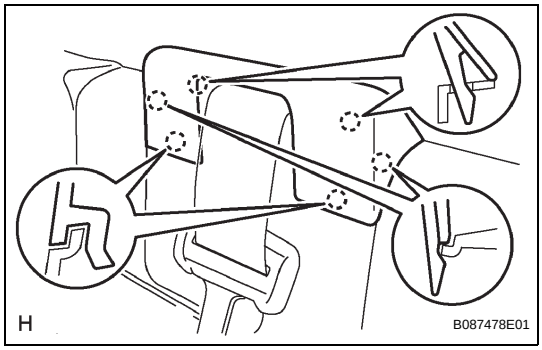

(b) Disengage the 6 claws and remove the back panel trim cover.

2. REMOVE BACK PANEL UPPER GARNISH (See page IR-43)

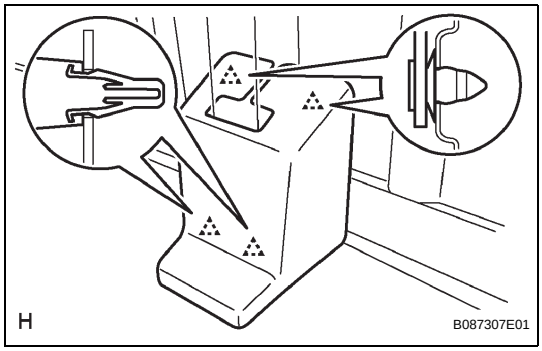

3. REMOVE SEAT BELT RETRACTOR COVER

(a) Disengage the 4 clips and remove the seat retractor cover.

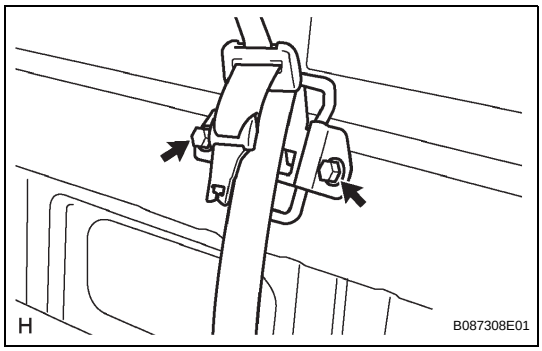

4. REMOVE REAR CENTER SEAT OUTER BELT ASSEMBLY

(a) Remove the 2 bolts and shoulder anchor.

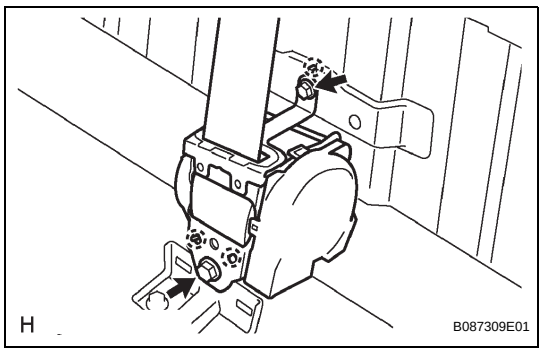

(b) Remove the 2 bolts and retractor.

SB

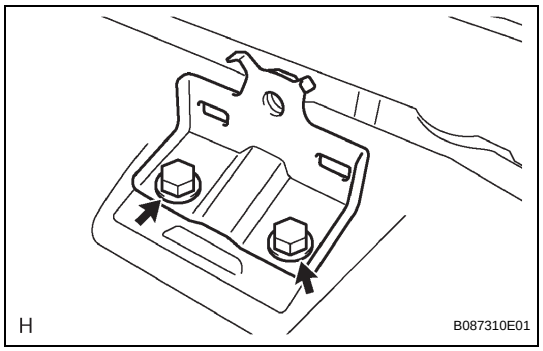

5. REMOVE SEAT BELT BRACKET

(a) Remove the 2 bolts and seat belt bracket.

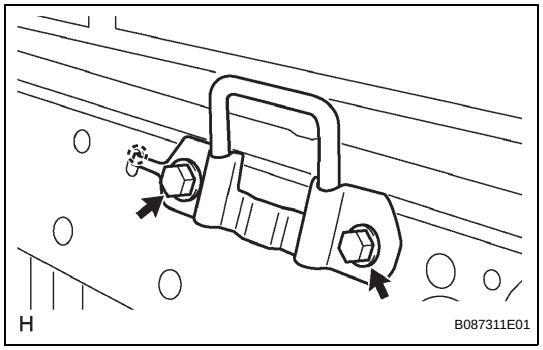

6. REMOVE TETHER ANCHOR BRACKET SUB-ASSEMBLY

(a) Remove the 2 bolts and tether anchor bracket.

INSTALLATION

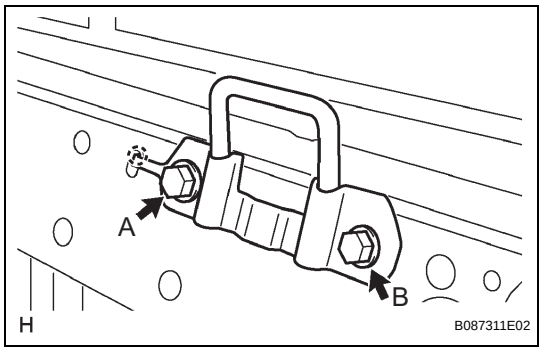

1. INSTALL TETHER ANCHOR BRACKET SUB-ASSEMBLY

(a) Hook the claw of the tether anchor bracket into the body hole.

(b) Tighten bolt A, and then tighten bolt B.
Torque: 20 N*m (205 kgf*cm, 15 ft.*lbf)

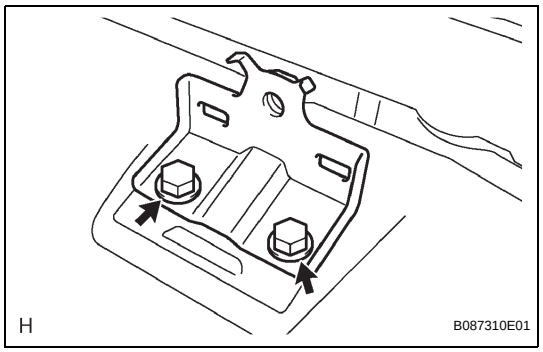

2. INSTALL SEAT BELT BRACKET

(a) Install the seat belt bracket with the 2 bolts.
Torque: 20 N*m (205 kgf*cm, 15 ft.*lbf)

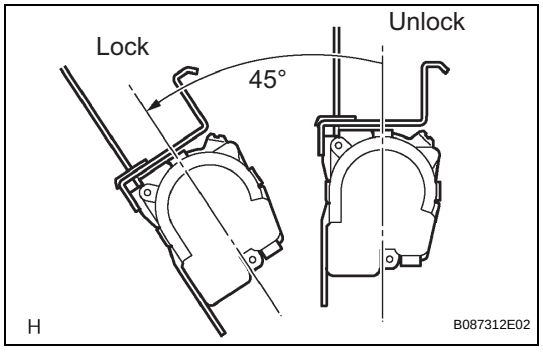

3. INSTALL REAR SEAT SHOULDER BELT GUIDE

(a) Check the amount of inclination required to lock the retractor.

(1) Gently incline the retractor from its initial position. Check that the belt does not lock when the retractor is inclined 15° or less in any directions. Also check that the belt locks when the inclination of the retractor is 45° or more.
NOTICE:
Do not disassemble the retractor.

SB

If operation is not as specified, replace the rear center seat outer belt.

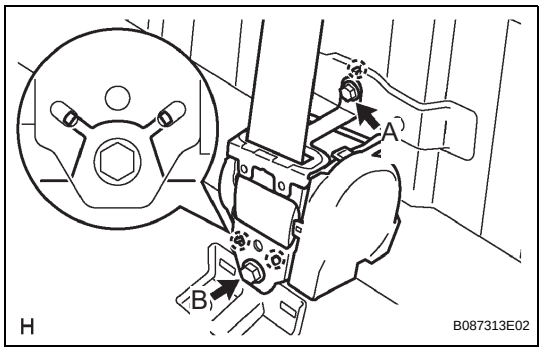

(b) Hook the lower stay of the retractor onto the 2 hooks of the seat belt bracket.

(c) Tighten bolt A, and then tighten bolt B.

Torque: 8.5 N*m (85 kgf*cm, 75 in.*lbf) for bolt A
42 N*m (430 kgf*cm, 31 in.*lbf) for bolt B

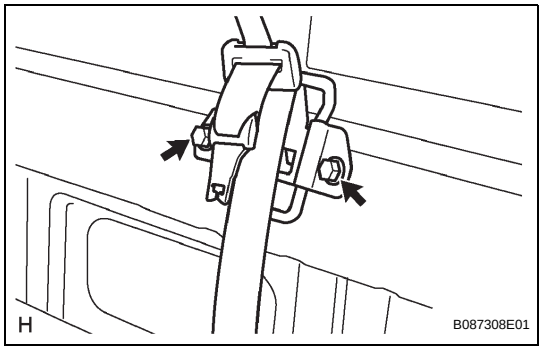

(d) Install the shoulder anchor with the 2 bolts.

Torque: 42 N*m (430 kgf*cm, 31 ft.*lbf)

(e) Check the ELR lock.

NOTICE:

- **The check should be performed with the rear center seat outer belt installed.**
- **Do not allow the anchor part of the rear center seat outer belt and the protruding parts of the floor panel to overlap.**

(1) With the belt installed, check that the belt locks when it is pulled out quickly.
If operation is not as specified, replace the rear center seat outer belt.

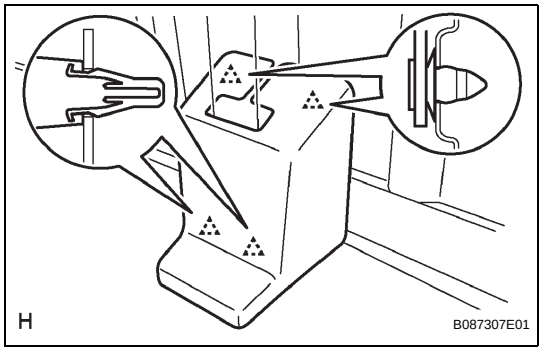

4. INSTALL SEAT BELT RETRACTOR COVER

(a) Engage the 4 clips and install the seat retractor cover.

5. INSTALL BACK PANEL UPPER GARNISH (See page IR-50)

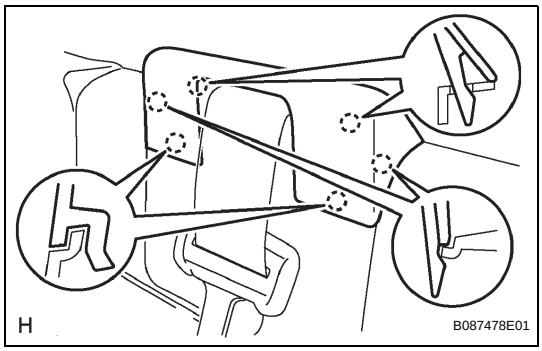

6. INSTALL BACK PANEL TRIM COVER

(a) Engage the 6 claws and install the back panel trim cover.

SB

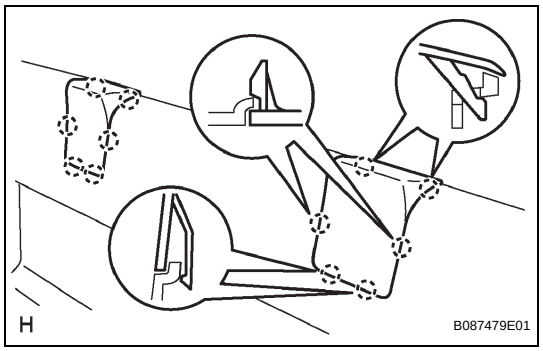

(b) Engage the 6 claws and install the back panel trim cover.
HINT:
Follow the same procedures as for the opposite side.

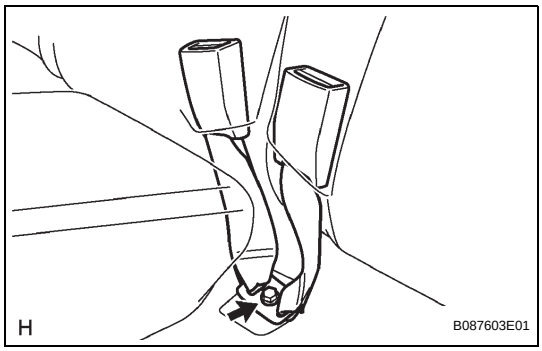

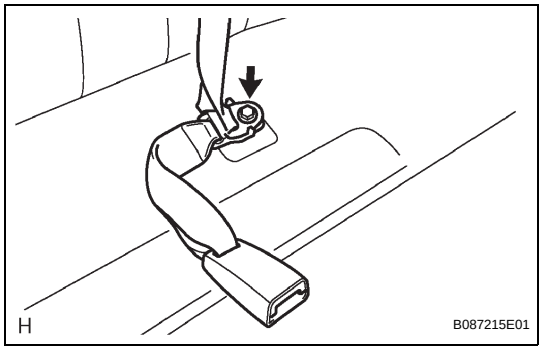

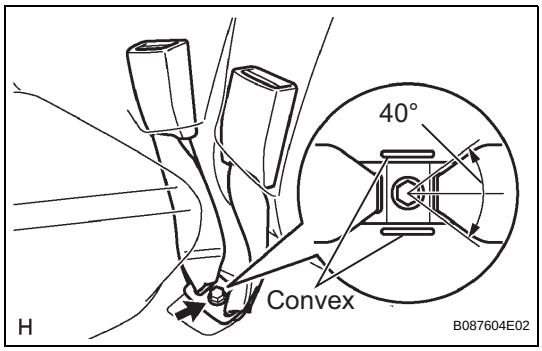

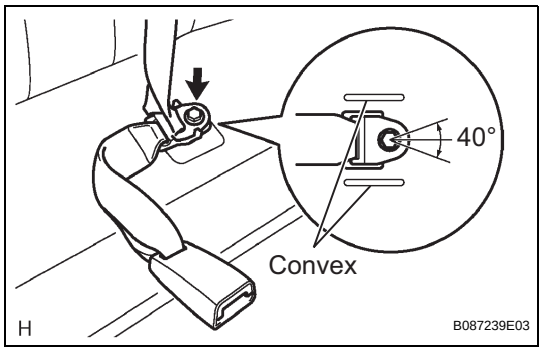

REAR SEAT INNER BELT ASSEMBLY (for Double Cab)

REMOVAL

1. REMOVE REAR SEAT INNER BELT ASSEMBLY

(a) for LH Side:

(1) Remove the bolt and rear seat inner belt.

(b) for RH Side:

(1) Remove the bolt, rear seat inner belt and floor anchor of the rear center seat outer belt.

INSTALLATION

1. INSTALL REAR SEAT INNER BELT ASSEMBLY

(a) for LH Side:

(1) Install the rear seat inner belt with the bolt.
Torque: 42 N*m (430 kgf*cm, 31 ft.*lbf)
NOTICE:
- **Make sure that the rear seat inner belt is oriented in the correct direction when installing.**
- **Be careful not to place the rear seat inner belt over the convex areas of the floor panel.**

(b) for RH Side:

(1) Install the rear seat belt inner and floor anchor of the rear seat belt outer center with the bolt.
Torque: 42 N*m (430 kgf*cm, 31 ft.*lbf)
NOTICE:
- **Make sure that the rear seat inner belt and floor anchor of the rear center seat outer belt are oriented in the correct direction when installing.**
- **Be careful not to place the rear seat inner belt (and floor anchor of the rear center seat outer belt) over the convex areas of the floor panel.**

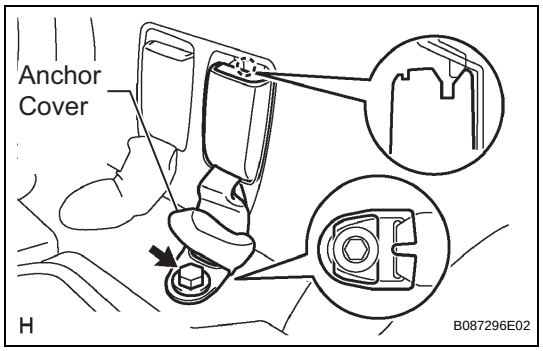

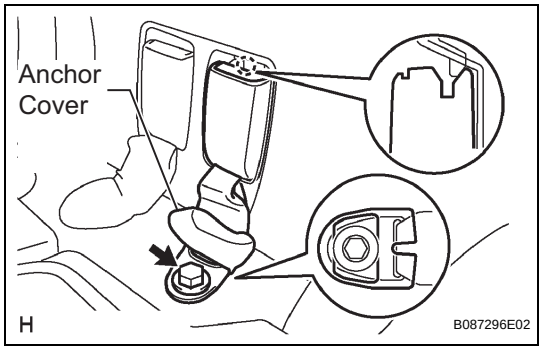

REAR SEAT INNER BELT ASSEMBLY (for Access Cab)

REMOVAL

1. REMOVE REAR SEAT INNER BELT ASSEMBLY

(a) Disengage the claw and remove the buckle.
(b) Open the anchor cover.
(c) Remove the bolt and rear seat inner belt.

INSTALLATION

1. INSTALL REAR SEAT INNER BELT ASSEMBLY

(a) Install the rear seat inner belt with the bolt.
Torque: 42 N*m (430 kgf*cm, 31 ft.*lbf)
(b) Check that the floor anchor rotates smoothly.
(c) Close the anchor cover.
(d) Engage the claw and install the buckle.

REAR SEAT OUTER BELT ASSEMBLY (for Double Cab)

COMPONENTS

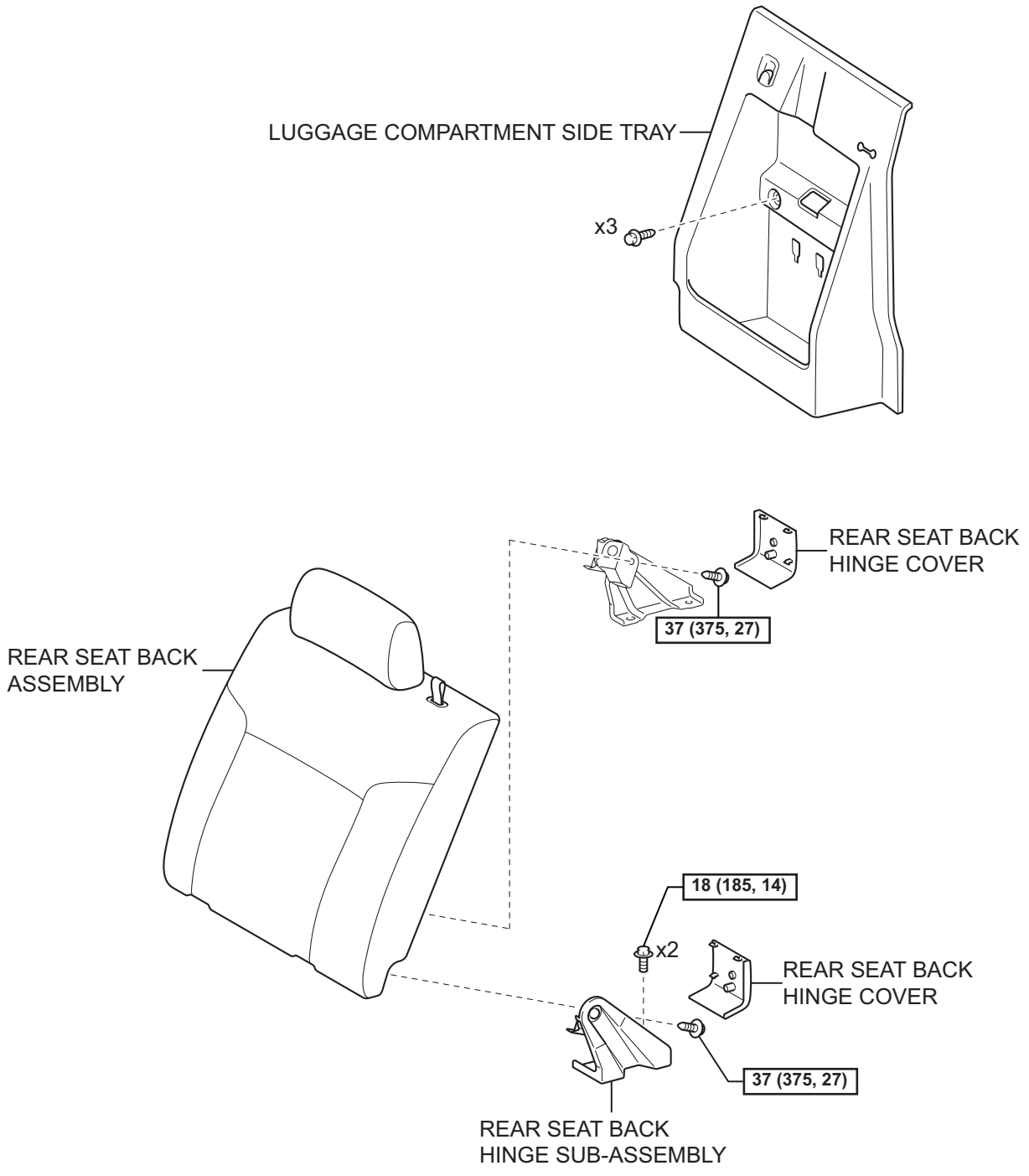

N*m (kgf*cm, ft*lbf) : Specified torque

H

B088235E01

SB

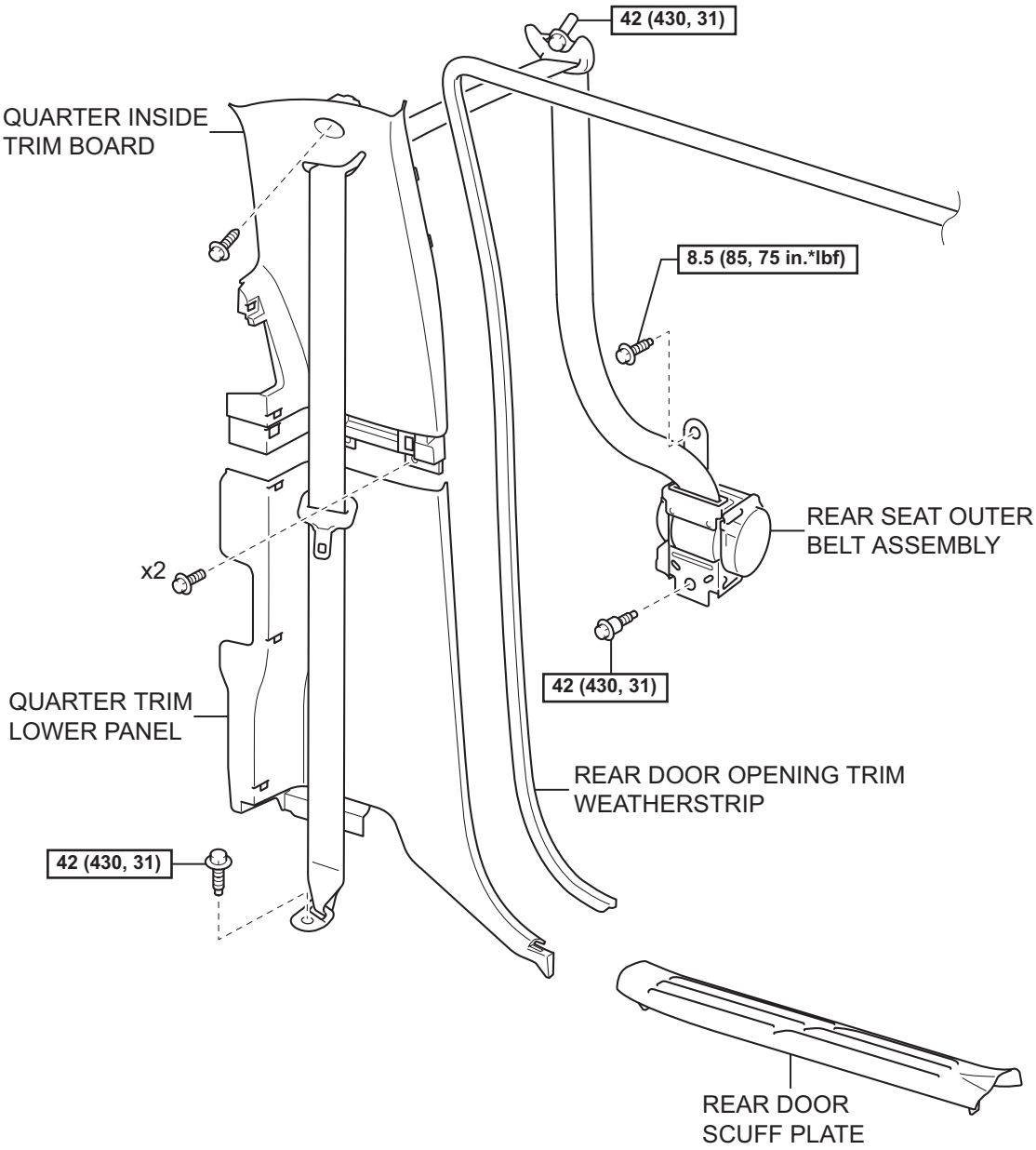

N*m (kgf*cm, ft*lbf) : Specified torque

H

B087314E01

SB

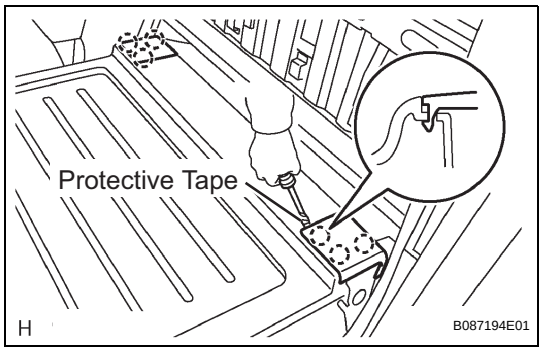

REMOVAL

1. **REMOVE REAR SEAT BACK HINGE COVER**
   HINT:
   Follow the same procedure as for the opposite side.
   (a) Using a screwdriver with its tip taped in protective tape, disengage the 3 claws and remove the rear seat back hinge cover.
2. **REMOVE REAR SEAT BACK ASSEMBLY (See page SE-71)**
3. **REMOVE REAR SEAT BACK HINGE SUB-ASSEMBLY (See page SE-71)**
4. **REMOVE REAR DOOR SCUFF PLATE (See page IR-13)**

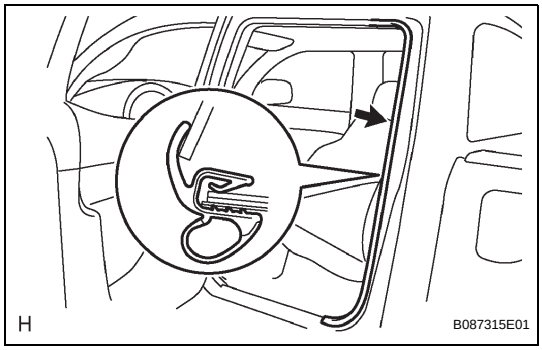

5. **REMOVE REAR DOOR OPENING TRIM WEATHERSTRIP**
   (a) Separate the rear door opening trim weatherstrip to the extent which allows the removal of the quarter trim lower panel and quarter inside trim board.
6. **REMOVE LUGGAGE COMPARTMENT SIDE TRAY (See page IR-16)**
7. **REMOVE QUARTER TRIM LOWER PANEL (See page IR-17)**

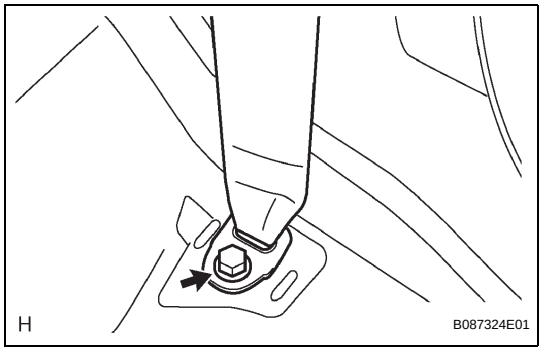

8. **REMOVE QUARTER INSIDE TRIM BOARD**
   (a) Remove the bolt and remove the floor anchor of the rear seat outer belt.

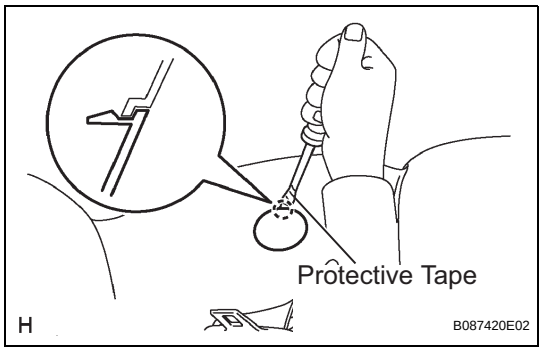

   (b) Using a screwdriver with its tip taped in protective tape, disengage the claw and open the cover.

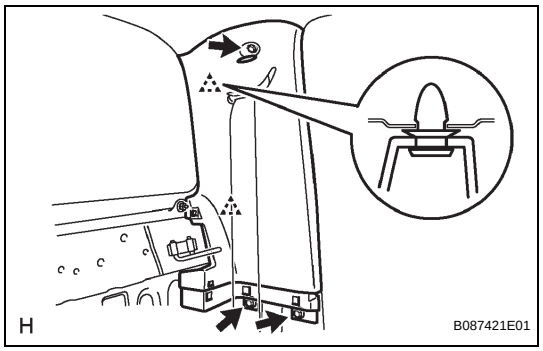

(c) Remove the 3 screws.
(d) Disengage the 2 clips and remove the quarter inside trim board.



9. REMOVE REAR SEAT OUTER BELT ASSEMBLY
(a) Remove the bolt and shoulder anchor.

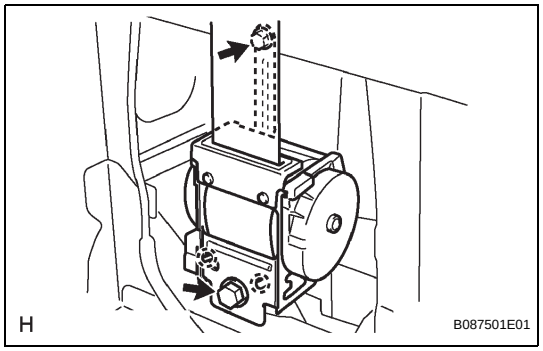

(b) Remove the 2 bolts and retractor.

INSTALLATION

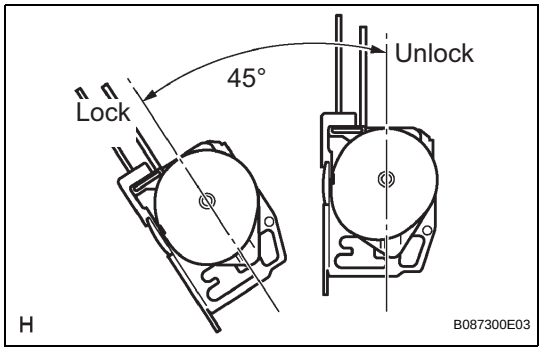

1. INSTALL REAR SEAT OUTER BELT ASSEMBLY
(a) Check the amount of inclination required to lock the retractor.
(1) Gently incline the retractor from its initial position. Check that the belt does not lock when the retractor is inclined 15° or less in any directions. Also check that the belt locks when inclination of the retractor is 45° or more.
NOTICE:
Do not disassemble the retractor.
If operation is not as specified, replace the rear seat outer belt.

REAR SEAT OUTER BELT ASSEMBLY (for Access Cab)

COMPONENTS

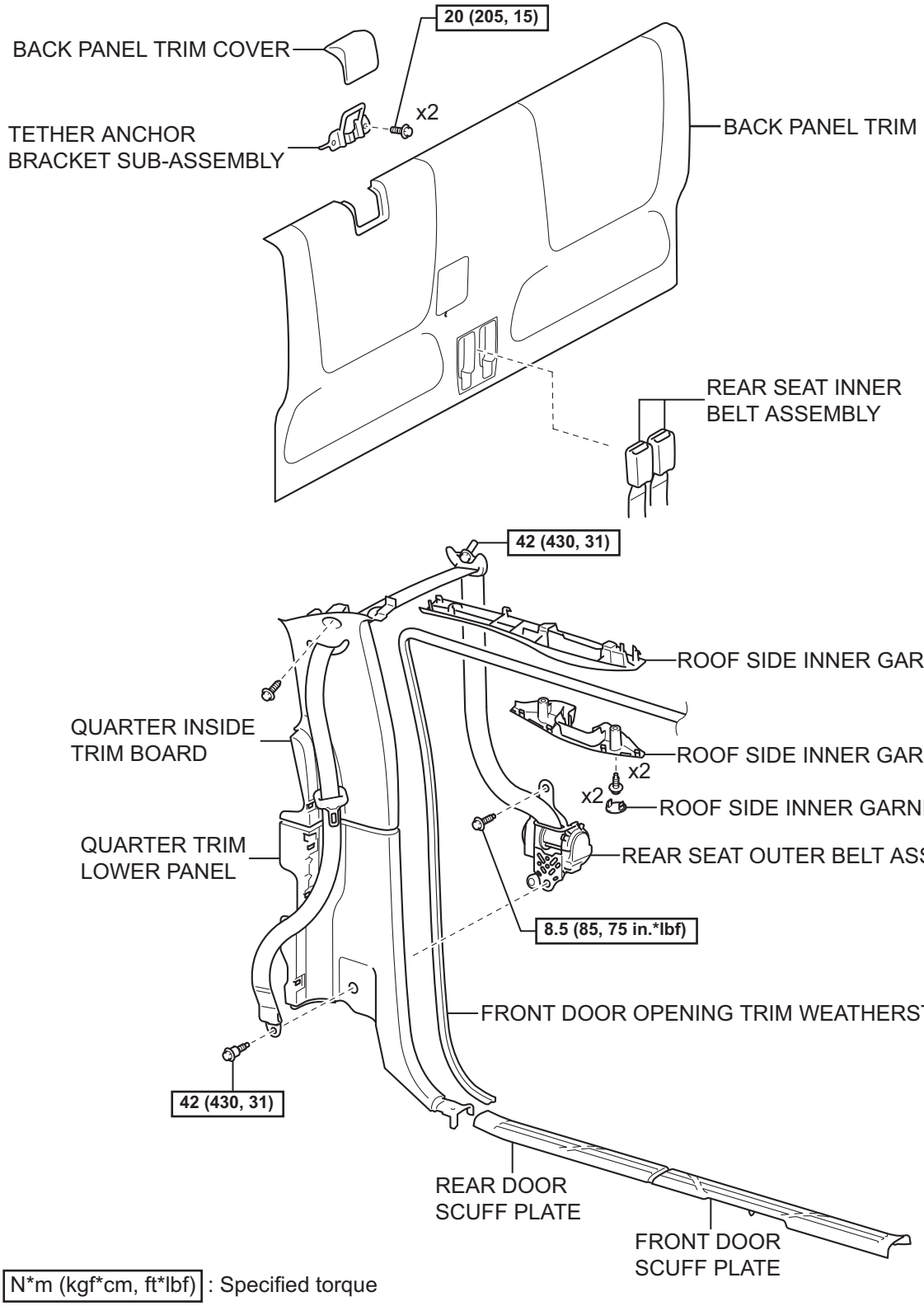

SB

REMOVAL

1. **REMOVE FRONT DOOR SCUFF PLATE (See page IR-61)**
2. **REMOVE REAR DOOR SCUFF PLATE (See page IR-61)**
3. **REMOVE ROOF SIDE INNER GARNISH COVER (See page IR-62)**
4. **REMOVE ROOF SIDE INNER GARNISH CAP (See page IR-62)**
5. **REMOVE FRONT DOOR OPENING TRIM WEATHERSTRIP**
   (a) Separate the front door opening trim weatherstrip to the extent which allows the removal of the roof side garnish inner, quarter trim lower panel and quarter inside trim board.
6. **REMOVE BACK PANEL TRIM COVER (See page IR-64)**
7. **REMOVE REAR SEAT INNER BELT ASSEMBLY (See page IR-64)**
8. **REMOVE BACK PANEL TRIM (See page IR-64)**
9. **REMOVE QUARTER TRIM LOWER PANEL (See page IR-65)**
10. **REMOVE ROOF SIDE INNER GARNISH (See page IR-65)**
11. **REMOVE QUARTER INSIDE TRIM BOARD (See page IR-65)**
12. **REMOVE REAR SEAT OUTER BELT ASSEMBLY**
    (a) Remove the bolt and shoulder anchor.

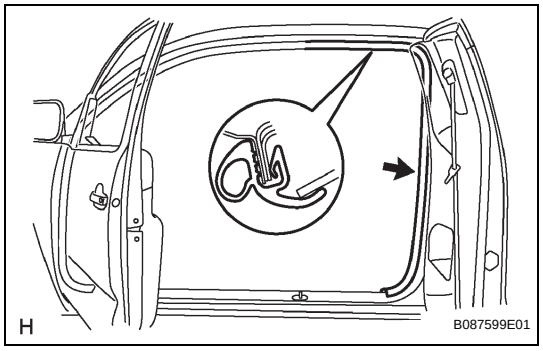

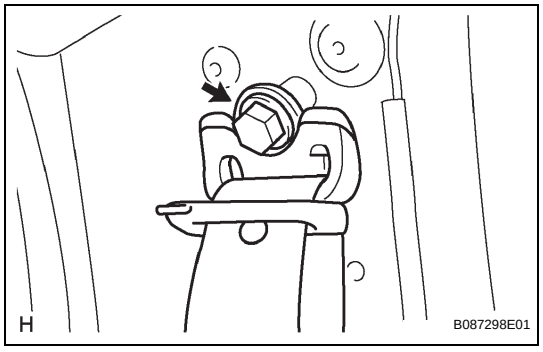

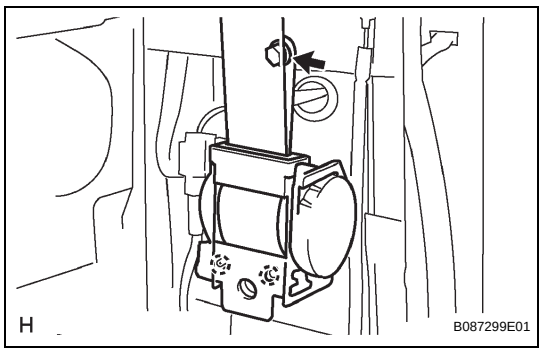

(b) Remove the bolt and retractor.

SB

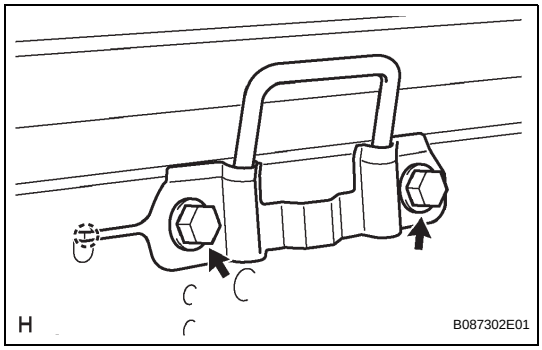

13. REMOVE TETHER ANCHOR BRACKET SUB-ASSEMBLY

(a) Remove the 2 bolts and tether anchor bracket.

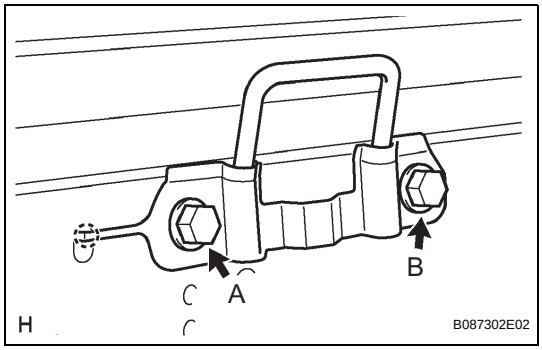

INSTALLATION

1. INSTALL TETHER ANCHOR BRACKET SUB-ASSEMBLY

(a) Hook the claw of the tether anchor bracket into the body hole.

(b) Tighten bolt A, and then tighten bolt B.
Torque: 20 N*m (205 kgf*cm, 15 ft.*lbf)

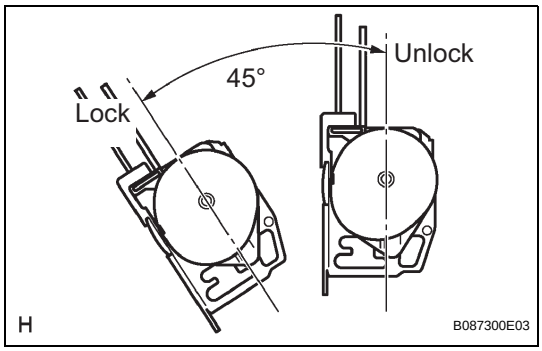

2. INSTALL REAR SEAT OUTER BELT ASSEMBLY

(a) Check the amount of inclination required to lock the retractor.

(1) Gently incline the retractor from its initial position. Check that the belt does not lock when the retractor is inclined 15° or less in any directions. Also check the belt locks when the inclination of the retractor is 45° or more.
NOTICE:
Do not disassemble the retractor.
If operation is not as specified, replace the rear seat outer belt.

(b) Hook the lower stay of the retractor onto the 2 body hooks.

(c) Tighten the bolt.
Torque: 8.5 N*m (85 kgf*cm, 75 in.*lbf)

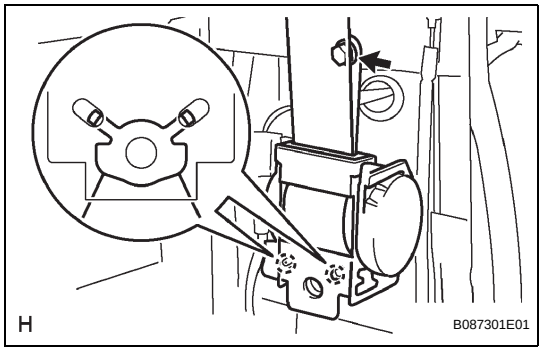

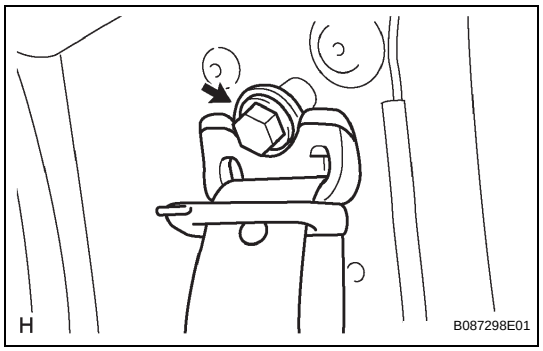

(d) Install the shoulder anchor with the bolt.
Torque: 42 N*m (430 kgf*cm, 31 ft.*lbf)
(e) Check that the shoulder anchor rotates smoothly.

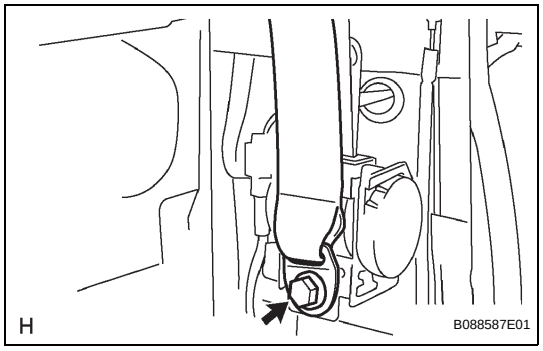

(f) Install the floor anchor with the bolt.
Torque: 42 N*m (430 kgf*cm, 31 ft.*lbf)
(g) Check the ELR lock.
NOTICE:
- **The check should be performed with the rear seat outer belt installed.**
- **Do not allow the anchor part of the rear seat outer belt and the protruding parts of the floor panel to overlap.**

(1) With the belt installed, check that the belt locks when it is pulled out quickly.
If operation is not as specified, replace the rear seat outer belt.
(h) Remove the bolt and floor anchor.

3. **INSTALL QUARTER INSIDE TRIM BOARD (See page IR-71)**
4. **INSTALL ROOF SIDE INNER GARNISH (See page IR-71)**
5. **INSTALL QUARTER TRIM LOWER PANEL (See page IR-72)**
6. **INSTALL REAR SEAT INNER BELT ASSEMBLY (See page IR-72)**
7. **INSTALL BACK PANEL TRIM (See page IR-72)**
8. **INSTALL BACK PANEL TRIM COVER (See page IR-73)**

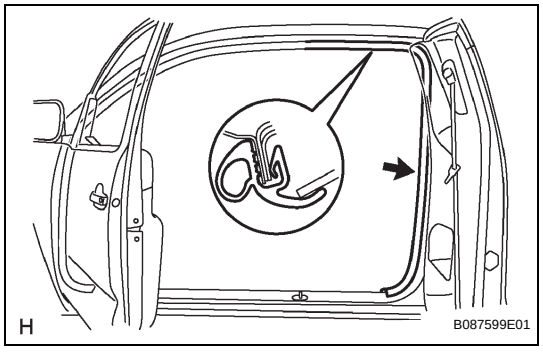

9. **INSTALL FRONT DOOR OPENING TRIM WEATHERSTRIP**
(a) Install the front door opening trim weatherstrip.
10. **INSTALL ROOF SIDE INNER GARNISH CAP (See page IR-75)**
11. **INSTALL ROOF SIDE INNER GARNISH COVER (See page IR-75)**
12. **INSTALL REAR DOOR SCUFF PLATE (See page IR-75)**
13. **INSTALL FRONT DOOR SCUFF PLATE (See page IR-75)**

REAR CENTER SEAT OUTER BELT ASSEMBLY (for Double Cab)

COMPONENTS

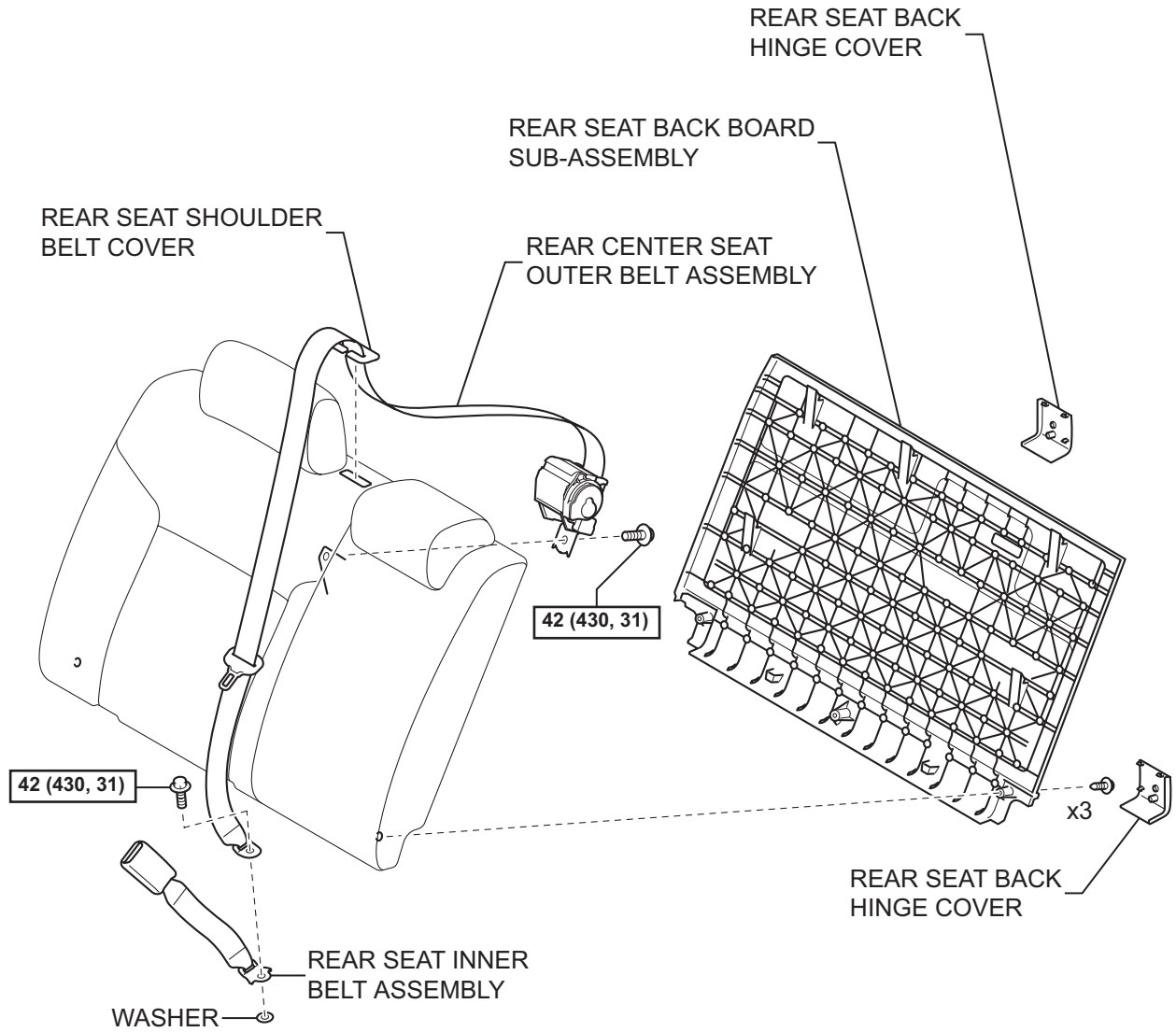

N*m (kgf*cm, ft*lbf) : Specified torque

H

B087318E02

SB

REMOVAL

1. **REMOVE REAR SEAT BACK HINGE COVER (See page SE-82)**
2. **REMOVE REAR SEAT BACK BOARD SUB-ASSEMBLY (See page SE-84)**
3. **REMOVE REAR SEAT SHOULDER BELT COVER (See page SE-84)**
4. **REMOVE REAR CENTER SEAT OUTER BELT ASSEMBLY**
   (a) Remove the bolt, floor anchor of the rear center seat outer belt and rear seat inner belt.

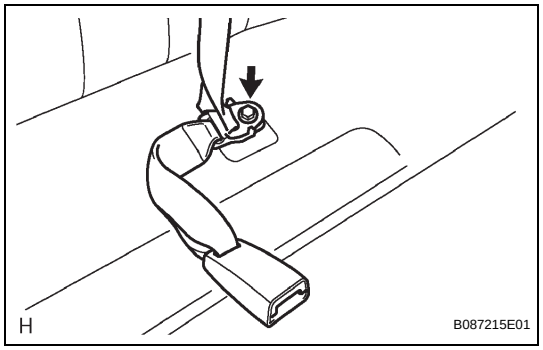

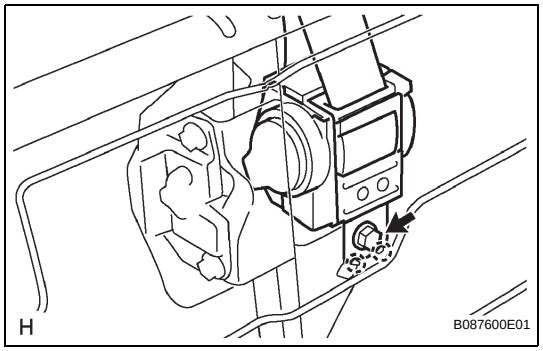

   (b) Insert the belt through the hole into the rear seat back frame.
   (c) Remove the bolt and rear center seat outer belt.

INSTALLATION

1. **INSTALL REAR CENTER SEAT OUTER BELT ASSEMBLY**
   (a) Check the amount of inclination required to lock the ELR.
      (1) Gently incline the retractor from its initial position. Check that the belt does not lock when the retractor is inclined 15° or less in any directions. Also check that the belt locks when the inclination of the retractor is 45° or more.
      NOTICE:
      Do not disassemble the retractor.

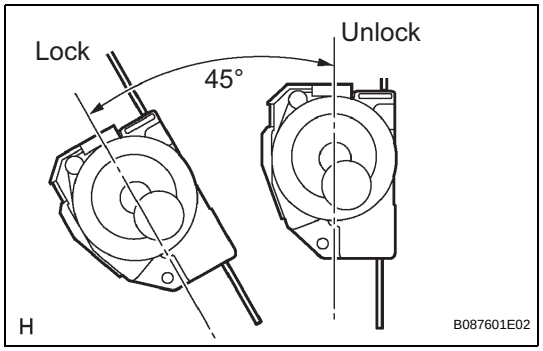

   (b) Align the retractor with the positioning hooks of the rear seat back frame and install the retractor with the bolt.
   Torque: 42 N*m (430 kgf*cm, 31 ft.*lbf)
   (c) Insert the belt through the hole into the rear seat back frame.

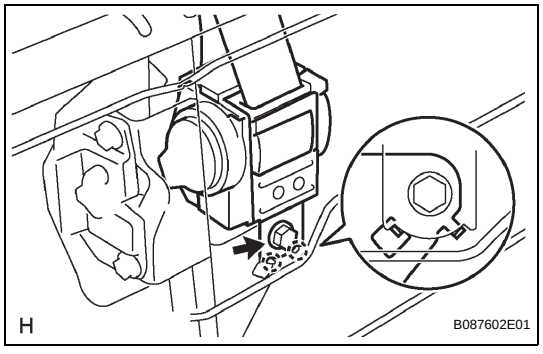

SB

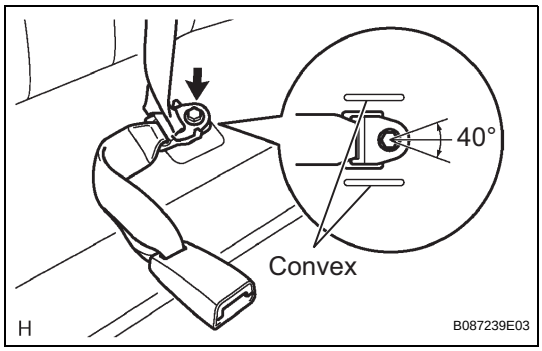

(d) Install the rear seat belt inner and floor anchor of the rear seat belt outer center with the bolts.
Torque: 42 N*m (430 kgf*cm, 31 ft.*lbf)
NOTICE:
- **Make sure that the rear seat inner belt and floor anchor of the rear center seat outer belt are oriented in the correct direction when installing.**
- **Be careful not to place the rear seat inner belt (and floor anchor of the rear center seat outer belt) over the convex areas of the floor panel.**

2. **INSTALL REAR SEAT SHOULDER BELT COVER (See page SE-87)**
3. **INSTALL REAR SEAT BACK BOARD SUB-ASSEMBLY (See page SE-87)**
4. **INSTALL REAR SEAT BACK HINGE COVER (See page SE-90)**

ENGINE IMMOBILISER SYSTEM

PARTS LOCATION

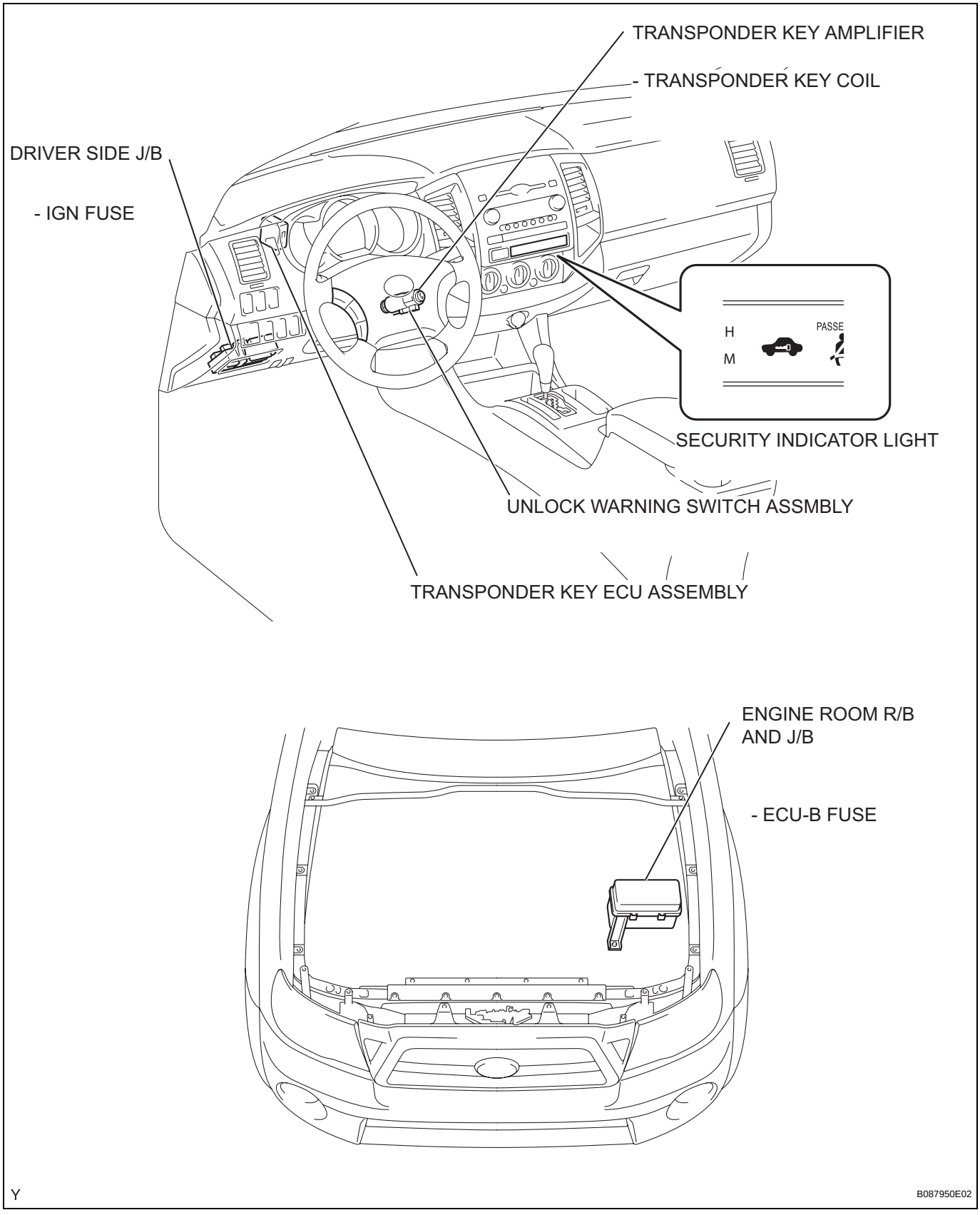

EI

SYSTEM DIAGRAM

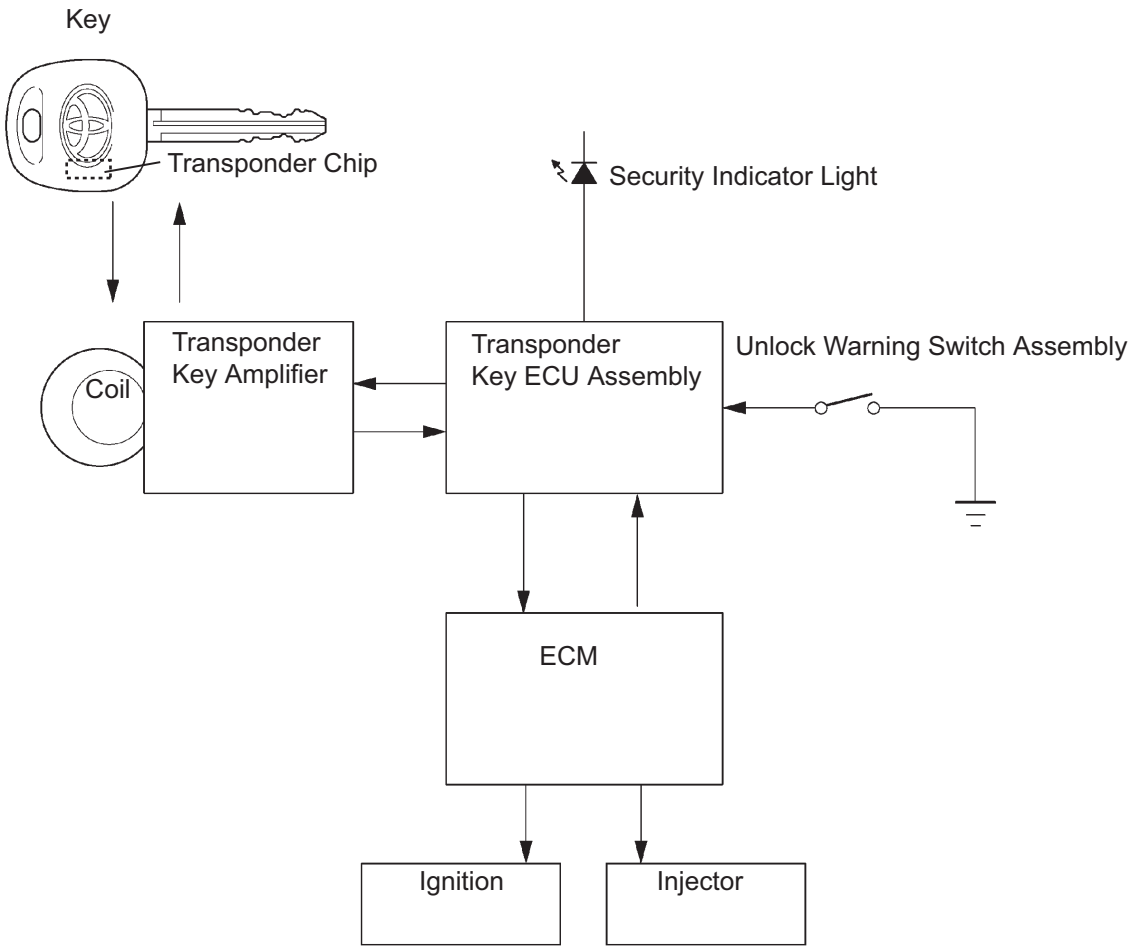

Y

B087951E02

CRUISE CONTROL SYSTEM

PARTS LOCATION

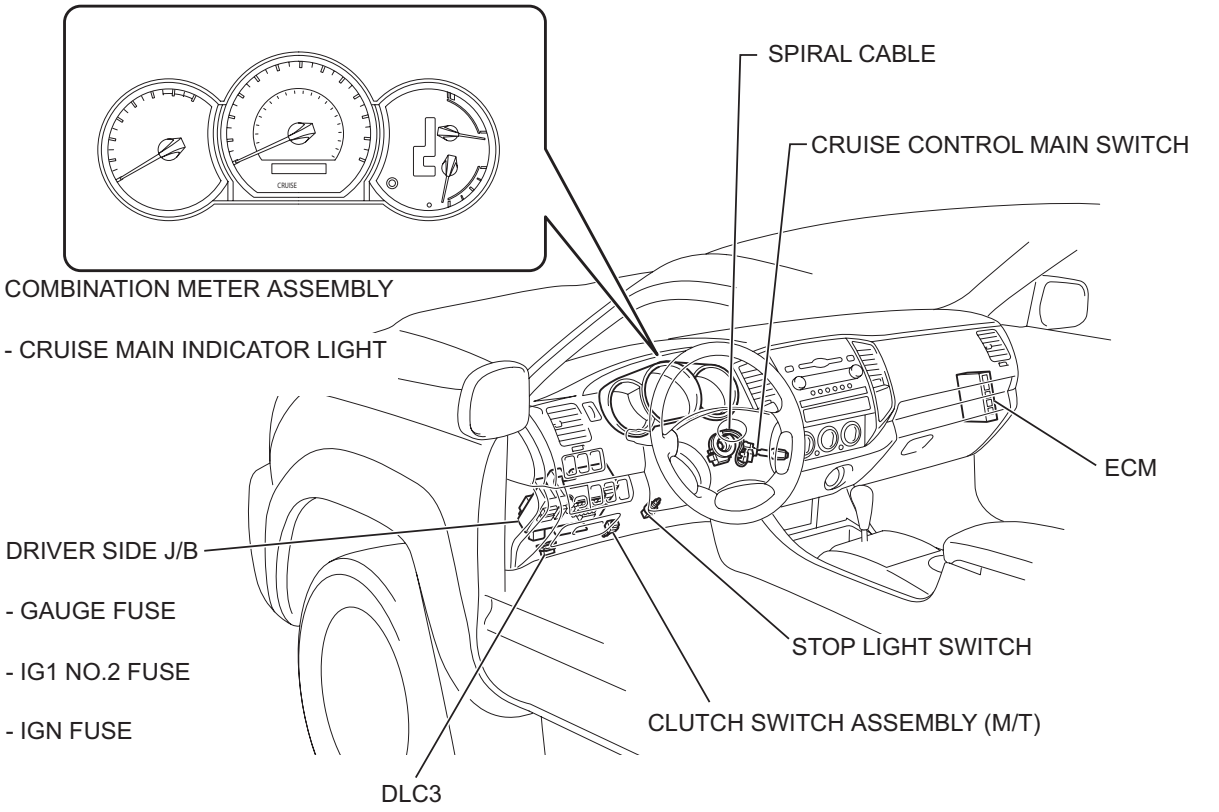

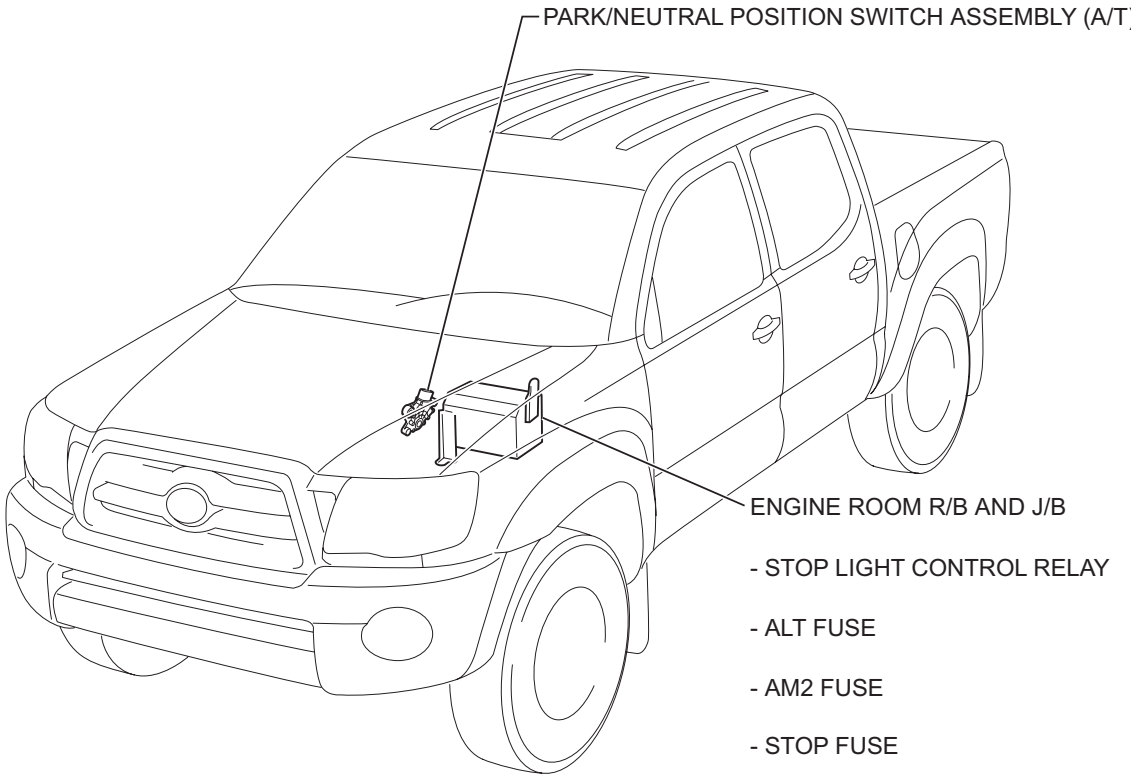

Y

B126376E01

CC

SYSTEM DIAGRAM

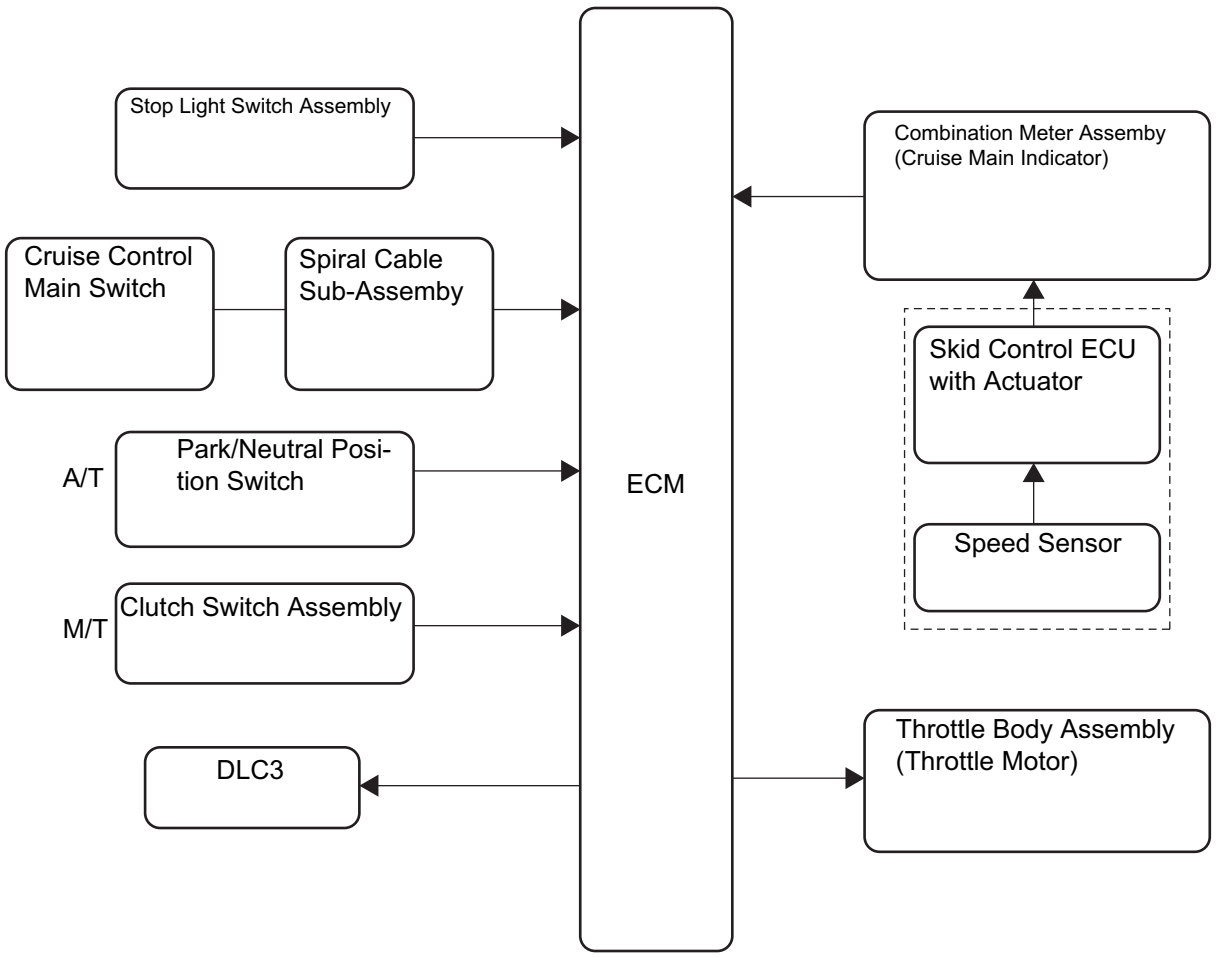

CC

T

B125037E01

CRUISE CONTROL MAIN SWITCH

COMPONENTS

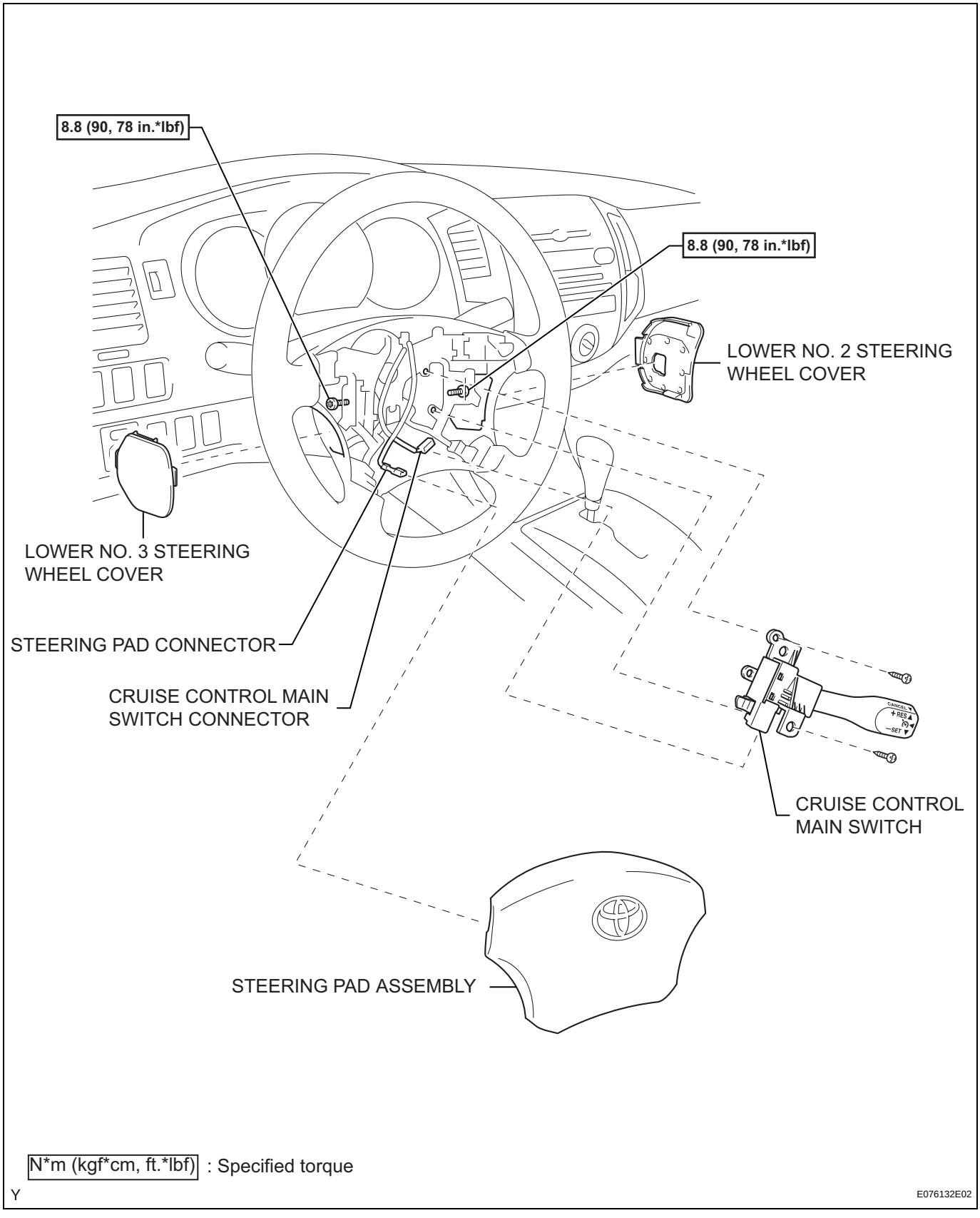

CC

REMOVAL

1. **PRECAUTION**
   RS-1
2. **DISCONNECT CABLE FROM NEGATIVE BATTERY TERMINAL**
   Wait at least for 90 seconds after disconnecting the cable to prevent the airbag from working.
3. **REMOVE LOWER NO. 2 STEERING WHEEL COVER (See page RS-558)**
4. **REMOVE LOWER NO. 3 STEERING WHEEL COVER (See page RS-558)**
5. **REMOVE STEERING PAD ASSEMBLY (See page RS-558)**
6. **REMOVE CRUISE CONTROL MAIN SWITCH**
   (a) Disconnect the connector and remove the 2 screws.

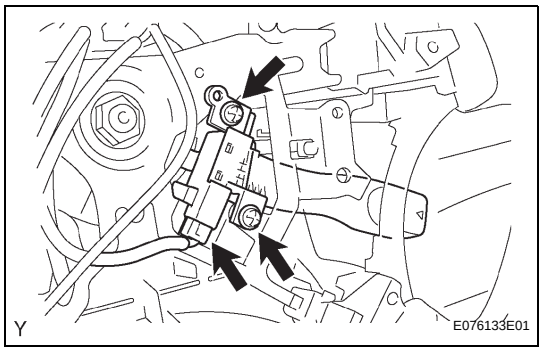

   (b) Remove the cruise control main switch from the steering wheel.

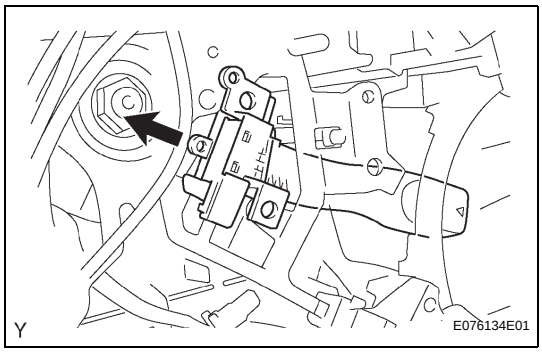

INSTALLATION

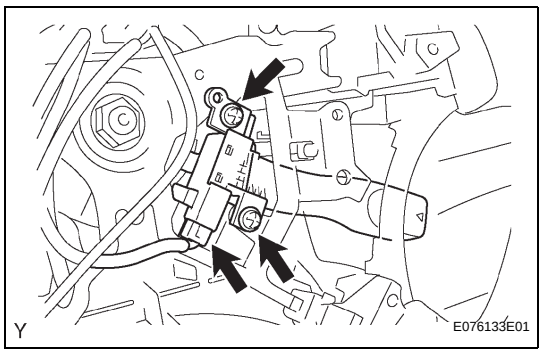

1. **INSTALL CRUISE CONTROL MAIN SWITCH**
   (a) Install the cruise control main switch with the 2 screws and connect the connector.
2. **INSTALL STEERING PAD ASSEMBLY (See page RS-558)**
3. **INSTALL LOWER NO. 3 STEERING WHEEL COVER (See page RS-559)**
4. **INSTALL LOWER NO. 2 STEERING WHEEL COVER (See page RS-559)**
5. **CONNECT CABLE TO NEGATIVE BATTERY TERMINAL**
   Torque: 3.9 N*m (40 kgf*cm, 35 in.*lbf)
6. **INSPECT STEERING PAD ASSEMBLY**

7. INSPECT SRS WARNING LIGHT

RS-28

CLUTCH SWITCH

COMPONENTS

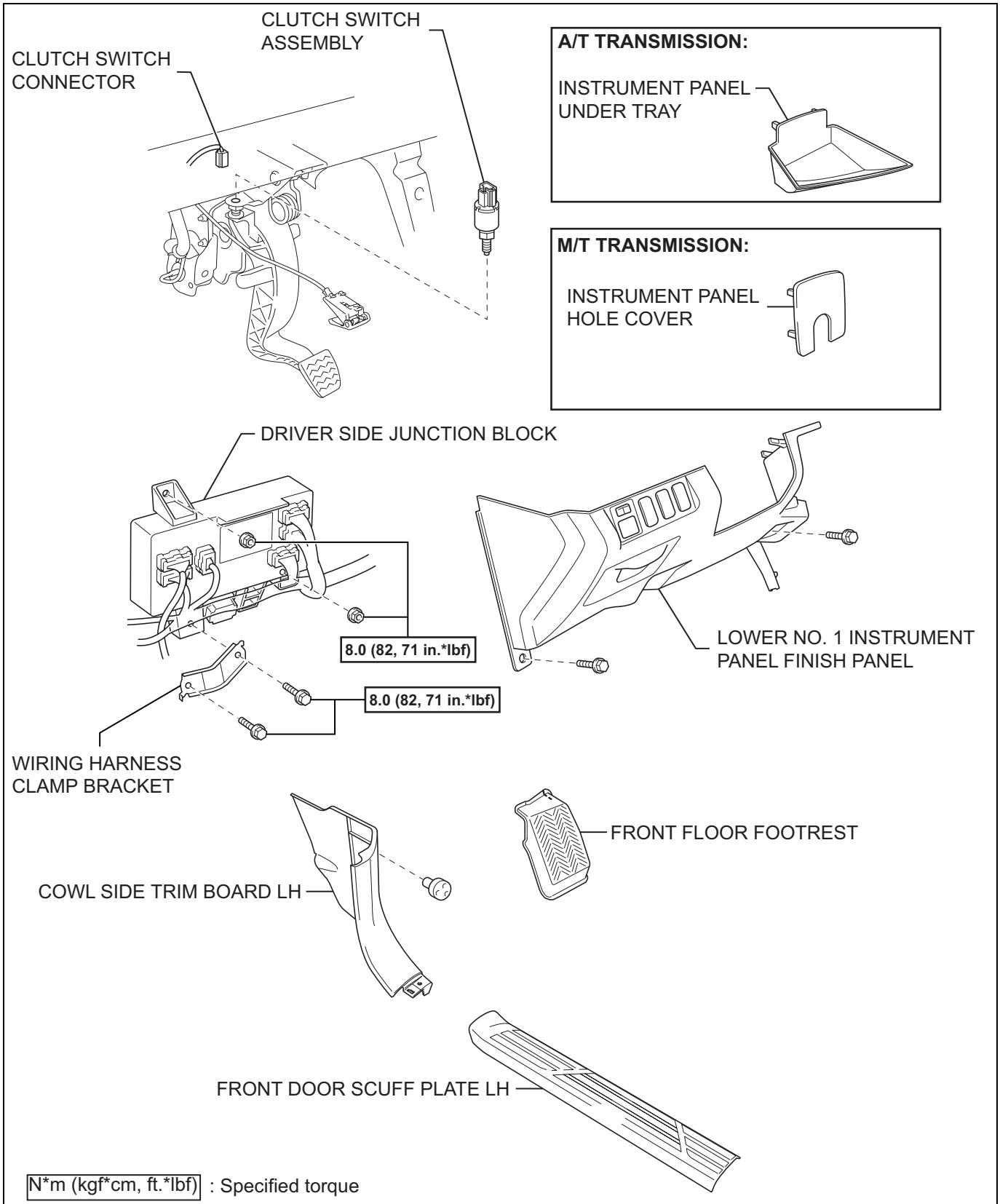

N*m (kgf*cm, ft.*lbf) : Specified torque

Y

E076137E01

CC

REMOVAL

1. **DISCONNECT CABLE FROM NEGATIVE BATTERY TERMINAL**
2. **REMOVE FRONT FLOOR FOOTREST (See page IR-1)**
3. **REMOVE FRONT DOOR SCUFF PLATE LH (for Regular Cab) (See page IR-40)**
4. **REMOVE FRONT DOOR SCUFF PLATE LH (for Access Cab) (See page IR-61)**
5. **REMOVE FRONT DOOR SCUFF PLATE LH (for Double Cab) (See page IR-12)**
6. **REMOVE COWL SIDE TRIM BOARD LH (for Regular Cab) (See page IR-40)**
7. **REMOVE COWL SIDE TRIM BOARD LH (for Access Cab) (See page IR-61)**
8. **REMOVE COWL SIDE TRIM BOARD LH (for Double Cab) (See page IR-12)**
9. **REMOVE INSTRUMENT PANEL UNDER TRAY (for Pedal Type Parking Brake) (See page IP-9)**
10. **REMOVE INSTRUMENT PANEL HOLE COVER (for Lever Type Parking Brake) (See page IP-9)**
11. **SEPARATE HOOD LOCK CONTROL LEVER SUB-ASSEMBLY (See page ED-3)**
12. **REMOVE LOWER NO. 1 INSTRUMENT PANEL FINISH PANEL (See page IP-12)**
13. **SEPARATE DRIVER SIDE JUNCTION BLOCK**
    (a) Remove the 2 bolts and bracket.
    (b) Remove the 2 nuts and separate the driver side junction block assembly.

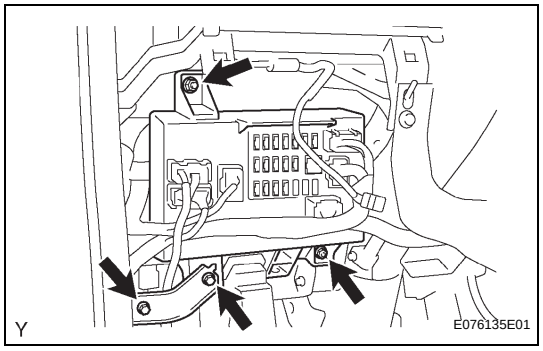

14. **REMOVE CLUTCH SWITCH ASSEMBLY**
    (a) Disconnect the connector.
    (b) Loosen the nut and remove the clutch switch assembly.

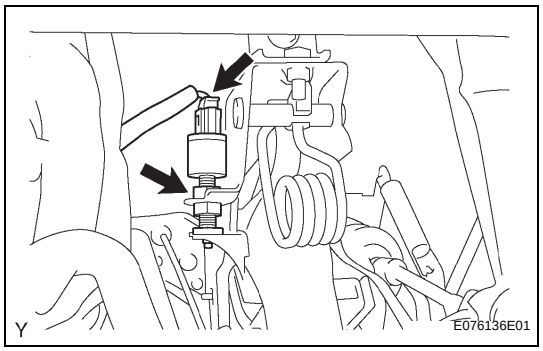

CC

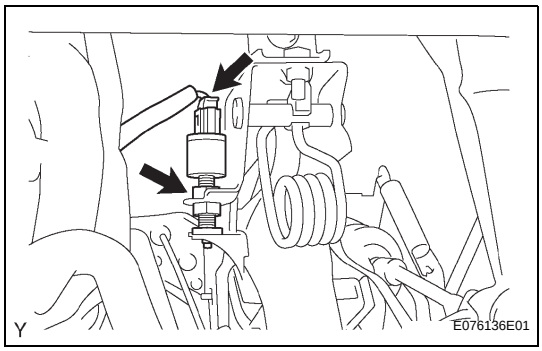

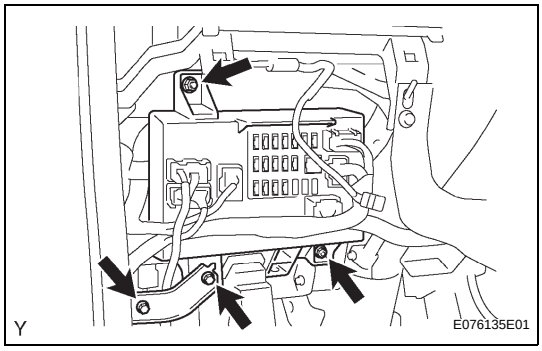

INSTALLATION

1. **INSTALL CLUTCH SWITCH ASSEMBLY**
   (a) Install the clutch switch assembly and tighten the nut.
   (b) Connect the connector.

2. **INSTALL DRIVER SIDE JUNCTION BLOCK**
   (a) Install the driver side junction block assembly with the 2 nuts.
   Torque: 8.0 N*m (82 kgf*cm, 71 in.*lbf)
   (b) Install the bracket with the 2 bolts.
   Torque: 8.0 N*m (82 kgf*cm, 71 in.*lbf)

3. **INSTALL LOWER NO. 1 INSTRUMENT PANEL FINISH PANEL (See page IP-22)**

4. **CONNECT HOOD LOCK CONTROL LEVER SUB-ASSEMBLY (See page ED-8)**

5. **INSTALL INSTRUMENT PANEL HOLE COVER (for Lever Type Parking Brake) (See page IP-25)**

6. **INSTALL INSTRUMENT PANEL UNDER TRAY (for Pedal Type Parking Brake) (See page IP-25)**

7. **INSTALL COWL SIDE TRIM BOARD LH (for Regular Cab) (See page IR-52)**

8. **INSTALL COWL SIDE TRIM BOARD LH (for Access Cab) (See page IR-75)**

9. **INSTALL COWL SIDE TRIM BOARD LH (for Double Cab) (See page IR-12)**

10. **INSTALL FRONT DOOR SCUFF PLATE LH (for Regular Cab) (See page IR-52)**

11. **INSTALL FRONT DOOR SCUFF PLATE LH (for Access Cab) (See page IR-75)**

12. **INSTALL FRONT DOOR SCUFF PLATE LH (for Double Cab) (See page IR-29)**

13. **INSTALL FRONT FLOOR FOOTREST (See page IR-1)**

14. **CONNECT CABLE TO NEGATIVE BATTERY TERMINAL**
    Torque: 3.9 N*m (40 kgf*cm, 35 in.*lbf)

LIGHTING SYSTEM

PRECAUTION

1. PRECAUTION OF HEADLIGHT BULB REPLACEMENT

(a) If even a thin film of oil is left on the surface of the halogen light, its service life will be shortened because the light will burn at a higher temperature.

(b) Handle any halogen light with great care. Dropping, hitting or damaging the bulb in any way may result in exploding and shattering it because the internal pressure is high.

(c) Always prepare a new bulb for immediate replacement. While replacing the bulb, the lens may attract dust and moisture if removed from the vehicle for too long.

(d) Always use a bulb of the same wattage for replacement.

(e) Firmly reinstall the socket after bulb replacement. The lens may become cloudy or the light cavity may fill with water through the gaps around the socket.

HEADLIGHT ASSEMBLY

COMPONENTS

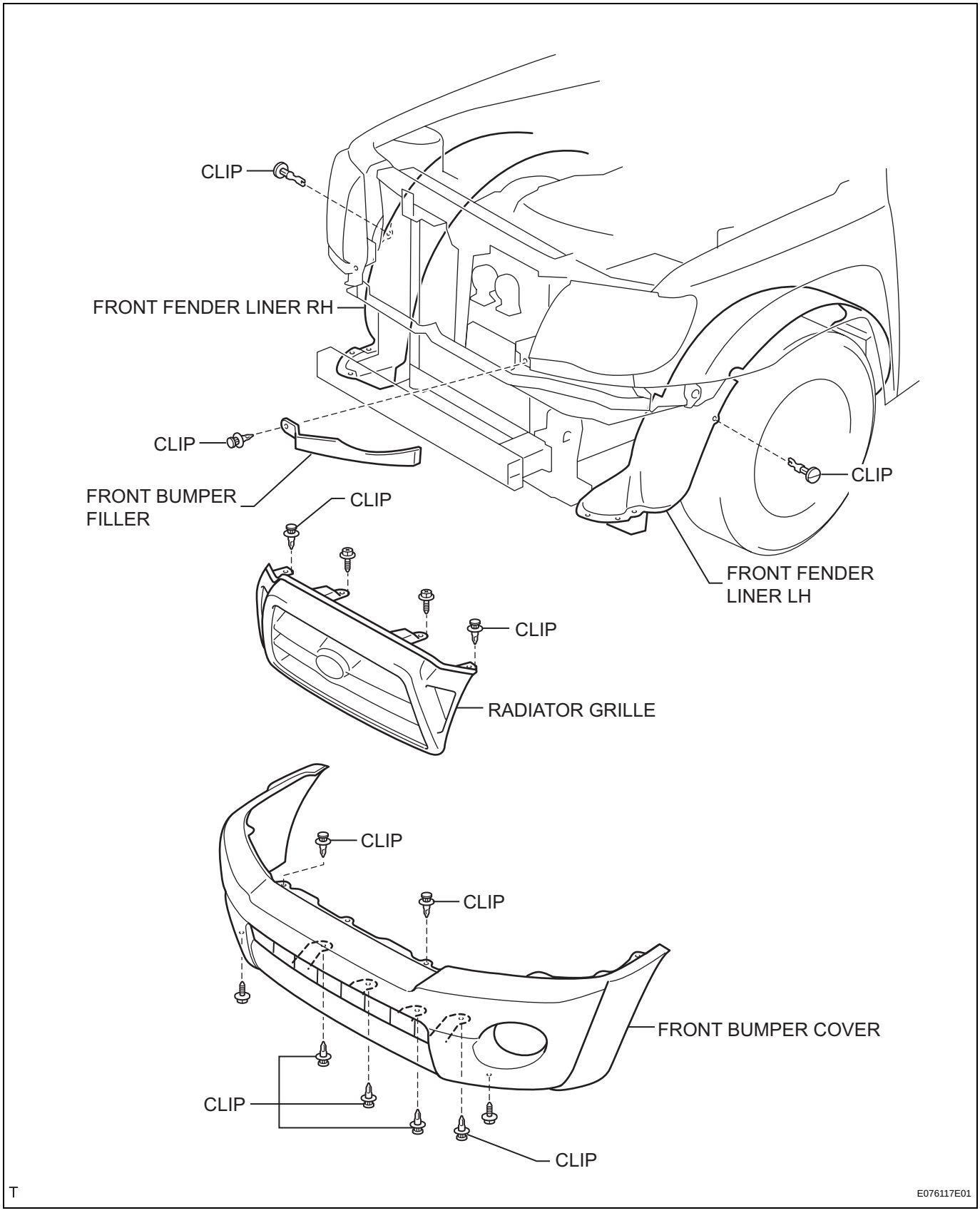

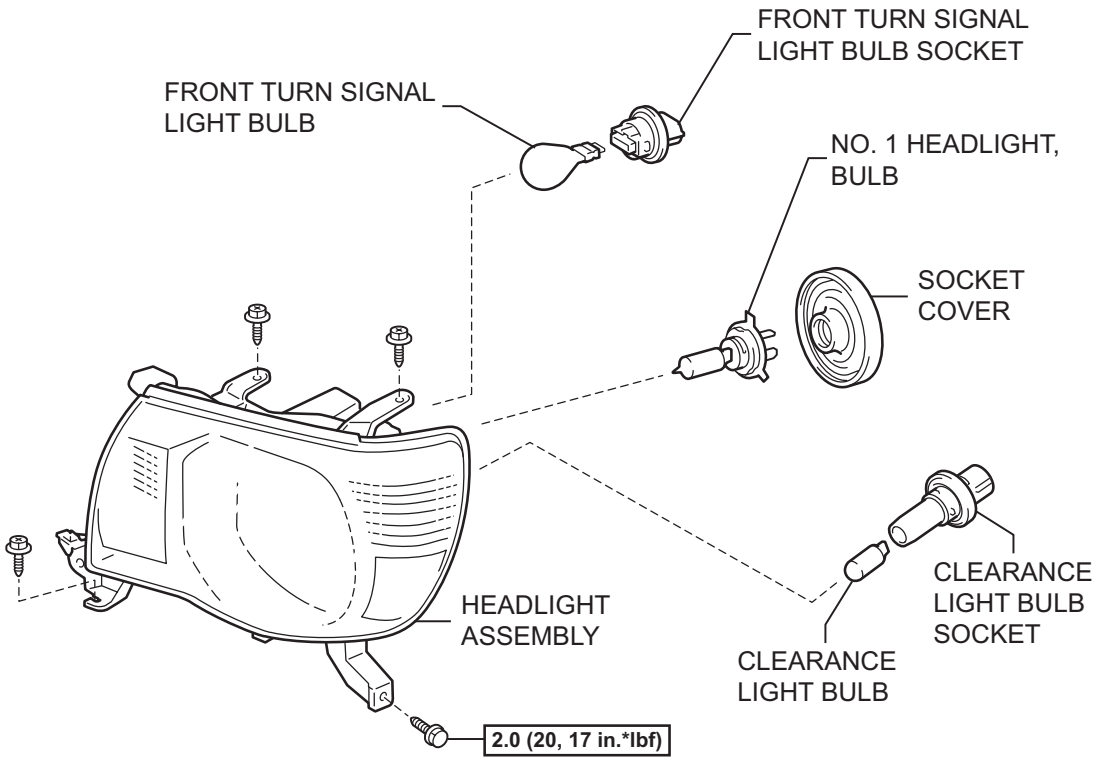

Bracket for Repair:

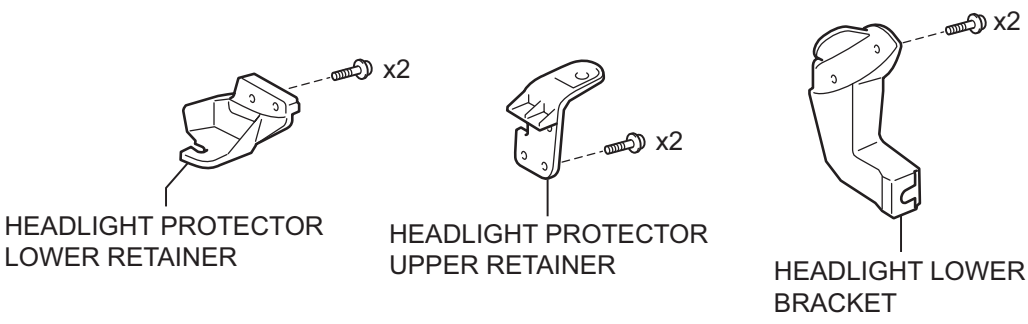

N*m (kgf*cm, ft*lbf) : Specified torque

T

E076118E01

LI

FOG LIGHT ASSEMBLY

COMPONENTS

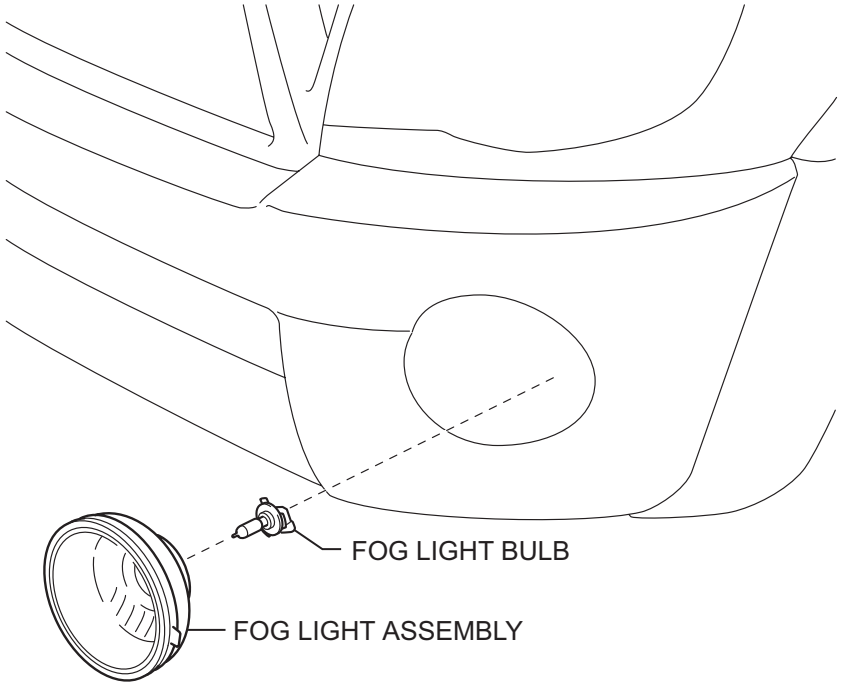

T

E076093E01

REMOVAL

1. DISCONNECT CABLE FROM NEGATIVE BATTERY TERMINAL

2. REMOVE FOG LIGHT ASSEMBLY

(a) Disconnect the connector.

(b) Disengage the 2 claws and remove the fog light assembly LH.

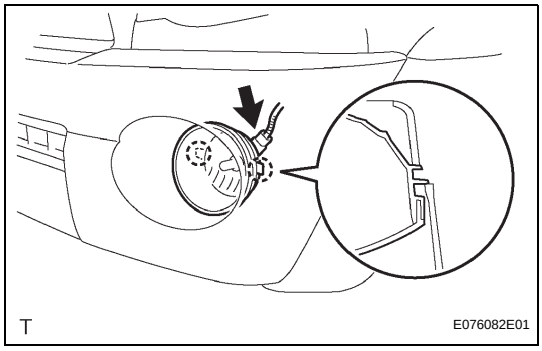

(c) To remove the fog light socket and bulb, turn them in the direction indicated by the arrow in the illustration.

(d) Remove the fog light bulb from the light socket.

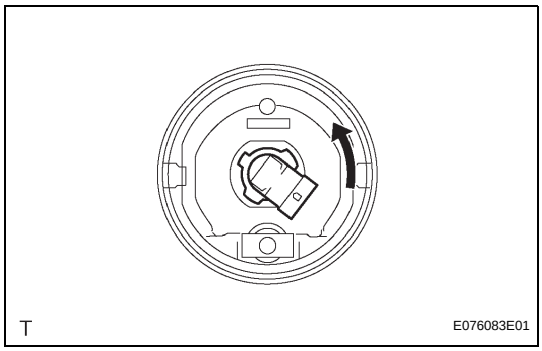

REAR COMBINATION LIGHT ASSEMBLY

COMPONENTS

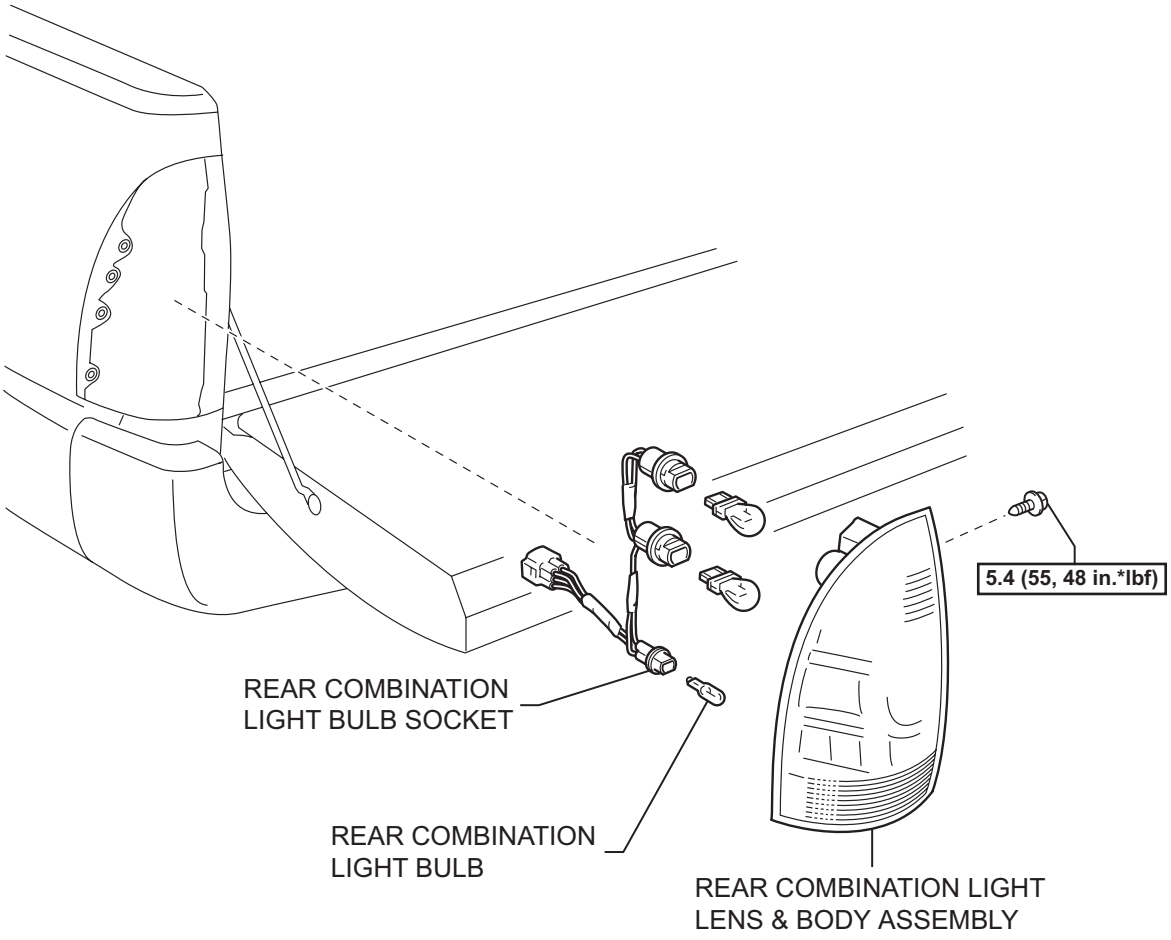

LI

N*m (kgf*cm, ft*lbf) : Specified torque

T

E076094E01

REMOVAL

1. DISCONNECT CABLE FROM NEGATIVE BATTERY TERMINAL

2. REMOVE REAR COMBINATION LIGHT ASSEMBLY

(a) Remove the 2 bolts.

(b) Slide the tail light (rear combination light) assembly LH toward the rear of the vehicle and release the 2 pins.

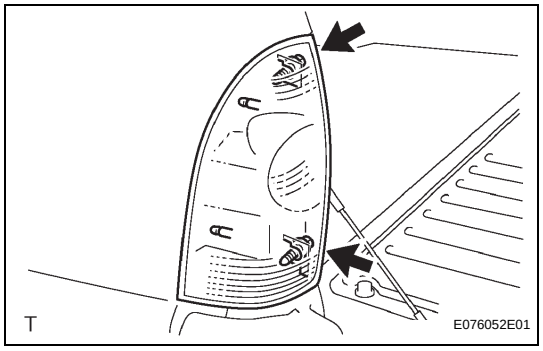

(c) Disconnect the connector, then remove the tail light (rear combination light) assembly LH.

(d) Remove the wire harness clamp.

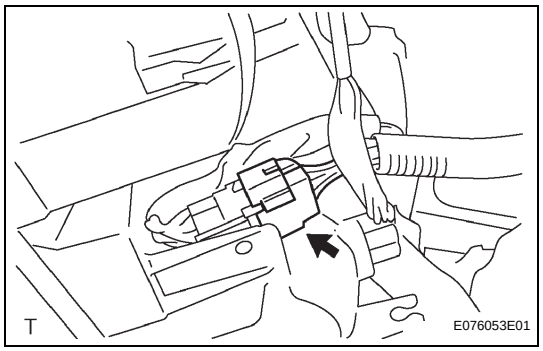

(e) To remove the 3 light bulb sockets and 3 bulbs, turn them in the direction indicated by the arrow in the illustration.

(f) Remove the 3 light bulbs from the 3 light sockets.

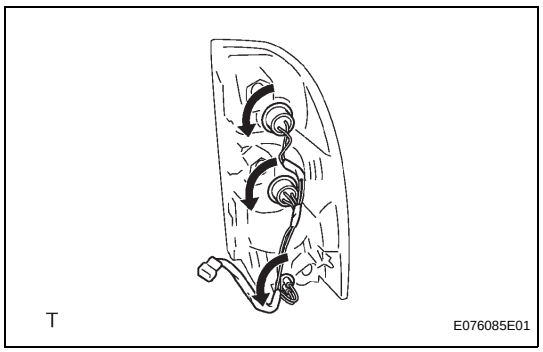

LICENSE PLATE LIGHT ASSEMBLY

COMPONENTS

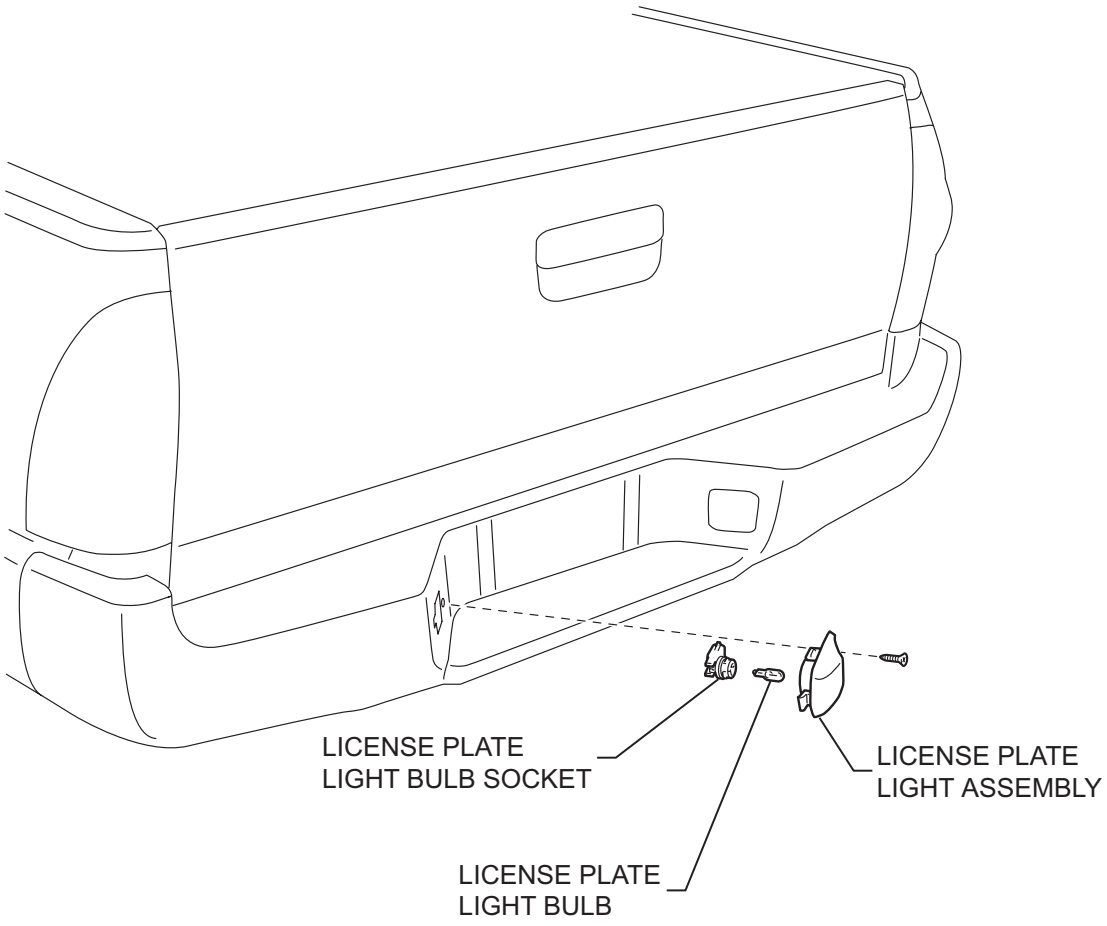

T

E076095E01

REMOVAL

1. DISCONNECT CABLE FROM NEGATIVE BATTERY TERMINAL

2. REMOVE LICENSE PLATE LIGHT ASSEMBLY

(a) Disconnect the connector.

(b) Remove the screw and license plate light assembly.

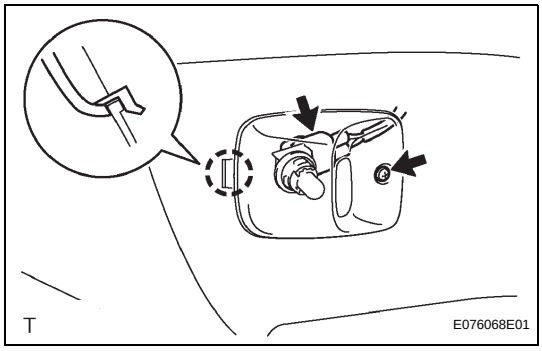

(c) To remove the license plate light bulb socket and bulb, turn them in the direction indicated by the arrow in the illustration.

(d) Remove the license plate light bulb from the light socket.

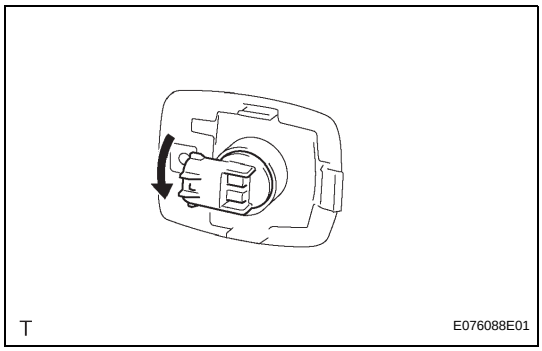

HIGH MOUNTED STOP LIGHT ASSEMBLY

COMPONENTS

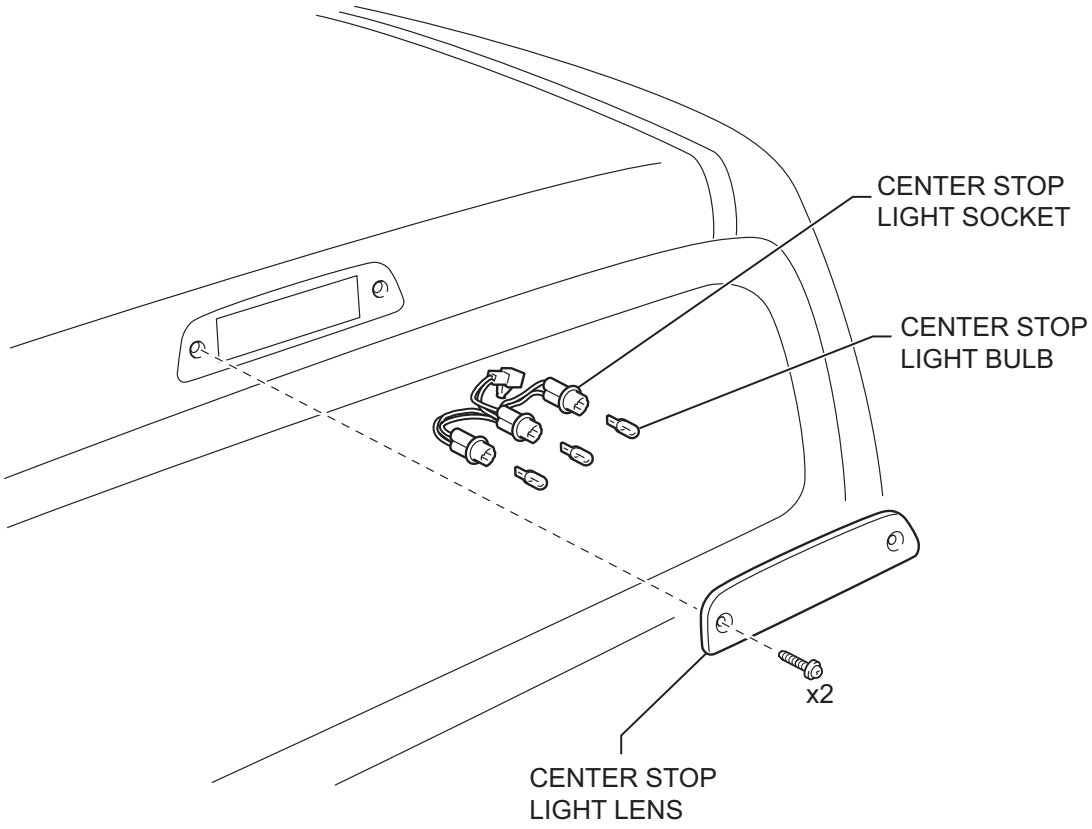

T

E076096E01

REMOVAL

1. DISCONNECT CABLE FROM NEGATIVE BATTERY TERMINAL

2. REMOVE CENTER STOP LIGHT ASSEMBLY

(a) Remove the 2 screws, then remove the center stop light assembly.

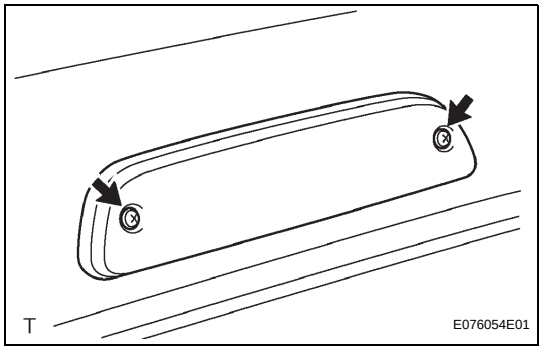

(b) Disconnect the connector.

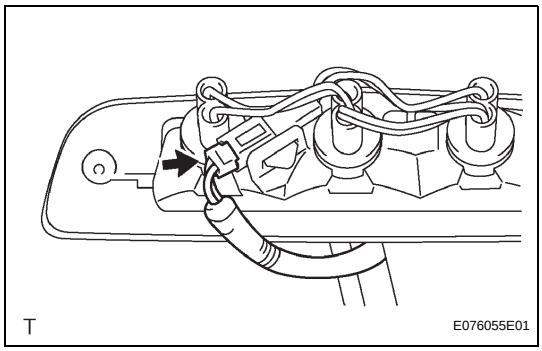

(c) Remove the wire harness clamp.

(d) To remove the 3 center stop light sockets and bulbs, turn them in the direction indicated by the arrow in the illustration.

(e) Remove the 3 center stop light bulbs from the 3 light sockets.

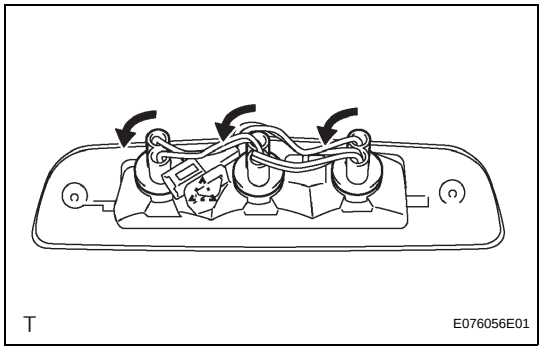

Connector Front Side:

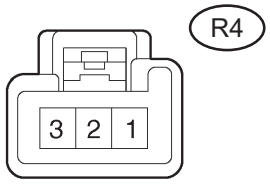

T E076078E01

MAP LIGHT ASSEMBLY

INSPECTION

1. INSPECT MAP LIGHT ASSEMBLY

(a) Check the resistance.

(1) Measure the resistance using an ohmmeter, and check the results in accordance with the value(s) in the table below.

Standard

Tester Connection	Condition	Specified Condition
1-2	OFF	10 kΩ or higher
1-2	ON	Below 1 Ω

If the result is not as specified, replace the map light assembly.

(b) Check the light operation.

(1) Connect the battery positive (+) lead to terminal 1 and the battery positive (-) lead to terminal 2, then check that the light comes on.

Standard:

Light comes on.

If the light does not come on, replace the bulb.

Connector Front Side:

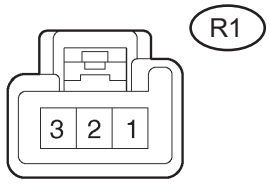

T E076078E03

ROOM LIGHT ASSEMBLY

INSPECTION

1. INSPECT ROOM LIGHT ASSEMBLY

(a) Check the resistance.

(1) Measure the resistance using an ohmmeter, and check the results in accordance with the value(s) in the table below.

Standard

Tester Connection	Condition	Specified Condition
1 - 2	OFF	10 kΩ or higher
1 - 3	OFF	10 kΩ or higher
2 - 3	OFF	10 kΩ or higher
1 - 2	DOOR	Below 1 Ω
1 - 3	ON	Below 1 Ω

If the result is not as specified, replace the room light assembly.

(b) Check the light operation.

(1) Connect the battery positive (+) lead to terminal 1 and the battery negative (-) lead to terminal 2, then check that the light comes on when the switch is in the DOOR position.

Standard:

Light comes on.

If the light does not come on, replace the bulb.

(2) Connect the battery positive (+) lead to terminal 1 and the battery negative (-) lead to terminal 3, then check that the light comes on when the switch is in the ON position.

Standard:

Light comes on.

If the light does not come on, replace the bulb.

HEADLIGHT DIMMER SWITCH

COMPONENTS

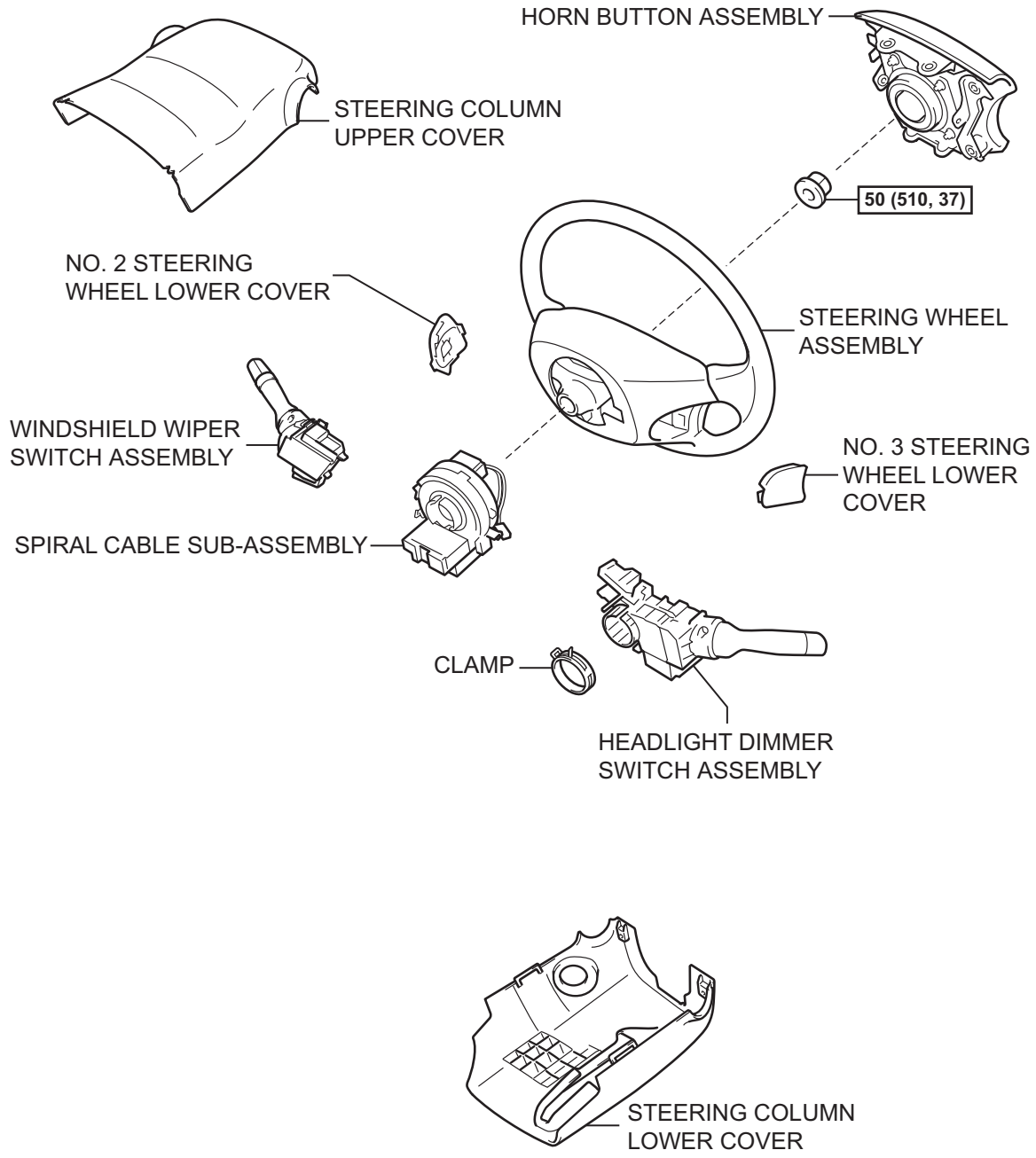

N*m (kgf*cm, ft*lbf) : Specified torque

T

E076120E01

LI

REMOVAL

1. **PRECAUTION**
2. **DISCONNECT CABLE FROM NEGATIVE BATTERY TERMINAL**
   Wait for at least 90 seconds after disconnecting the cable to prevent the airbag from working.
3. **PLACE FRONT WHEELS FACING STRAIGHT AHEAD**
4. **REMOVE NO. 2 STEERING WHEEL LOWER COVER (See page RS-558)**
5. **REMOVE NO. 3 STEERING WHEEL LOWER COVER (See page RS-558)**
6. **REMOVE HORN BUTTON ASSEMBLY (See page RS-558)**
7. **REMOVE STEERING WHEEL ASSEMBLY (See page SR-9)**
8. **REMOVE STEERING COLUMN LOWER COVER (See page SR-9)**
9. **REMOVE STEERING COLUMN UPPER COVER (See page SR-10)**
10. **REMOVE SPIRAL CABLE SUB-ASSEMBLY (See page RS-566)**
11. **REMOVE WINDSHIELD WIPER SWITCH ASSEMBLY (See page WW-17)**
12. **REMOVE HEADLIGHT DIMMER SWITCH ASSEMBLY**
    (a) Disconnect the connector.
    (b) Remove the headlight dimmer switch assembly as shown in the illustration.

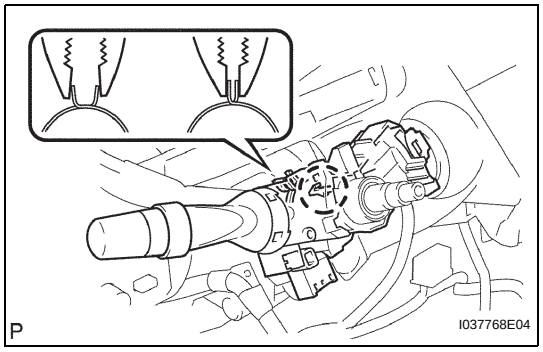

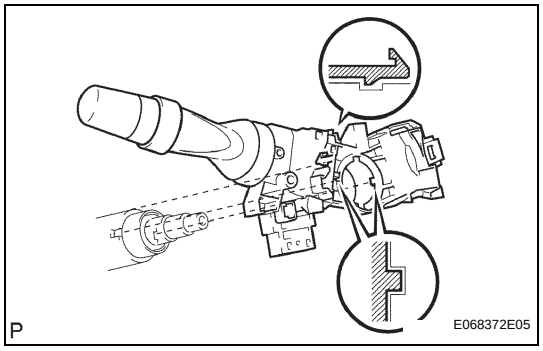

(c) Disengage the 2 claws and remove the headlight dimmer switch assembly.

Connector Front Side:

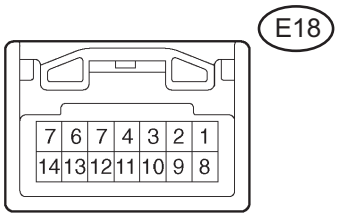

T E076077E01

HAZARD WARNING SWITCH

INSPECTION

1. INSPECT HAZARD WARNING SWITCH

(a) Check the resistance.

(1) Measure the resistance using an ohmmeter, and check the results in accordance with the value(s) in the table below.

Standard

Tester Connection	Condition	Specified Condition
7-9	OFF	10 kΩ or higher
7-9	ON	Below 1 Ω
10-11	Illumination circuit	Below 1 Ω

If the result is not as specified, replace the hazard warning signal switch assembly.

(b) Check the illumination operation.

(1) (1) Connect the battery positive (+) lead to terminal 11 and the battery negative (-) lead to terminal 10, then check that the illumination comes on.

Standard:

Illumination comes on.

If the illumination does not come on, replace the bulb.

Connector Front Side:

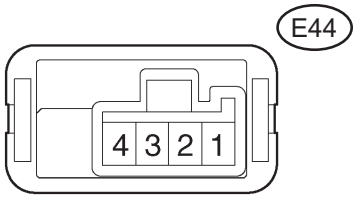

T E076076E02

FRONT FOG LIGHT SWITCH

INSPECTION

1. INSPECT FRONT FOG LIGHT SWITCH

(a) Check the resistance.

(1) Measure the resistance using an ohmmeter, and check the results in accordance with the value(s) in the table below.

Standard

Tester Connection	Condition	Specified Condition
1-2	Illumination circuit	Below 1 Ω
3-4	OFF	10 kΩ or higher
3-4	ON	Below 1 Ω

If the result is not as specified, replace the front fog light switch assembly.

(b) Check the illumination operation.

(1) Connect the battery positive (+) lead to terminal 1 and the battery negative (-) lead to terminal 2, then check that the illumination comes on.

Standard:

Illumination comes on.

If the illumination does not come on, replace the bulb.

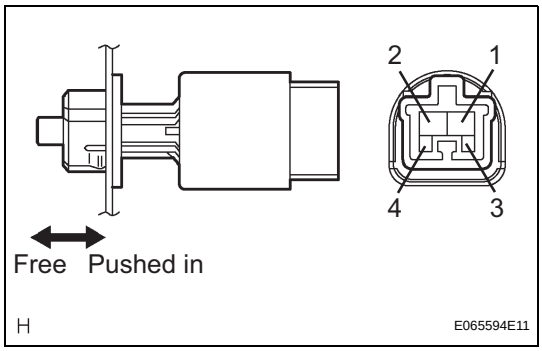

STOP LIGHT SWITCH

INSPECTION

1. INSPECT STOP LIGHT SWITCH

(a) Check the resistance.

(1) Measure the resistance using an ohmmeter, and check the results in accordance with the value(s) in the table below.

Standard

Tester Connection	Condition	Specified Condition
1-2	Switch pin free	Below 1 Ω
3-4	Switch pin free	10 kΩ or higher
1-2	Switch pin pushed in	10 kΩ or higher
3-4	Switch pin pushed in	Below 1 Ω

If the result is not as specified, replace the stop light switch assembly.

FRONT DOOR COURTESY SWITCH

INSPECTION

1. INSPECT FRONT DOOR COURTESY SWITCH

(a) Check the resistance.

(1) Measure the resistance using an ohmmeter, and check the results in accordance with the value(s) in the table below.

Standard

Tester Connection	Condition	Specified Condition
1-Switch body	ON (When shaft is pressed)	10 kΩ or higher
1-Switch body	OFF (When shaft is not pressed)	Below 1 Ω

If the result is not as specified, replace the front door courtesy light switch assembly.

REAR DOOR COURTESY SWITCH

INSPECTION

1. INSPECT REAR DOOR COURTESY SWITCH

(a) Check the resistance.

(1) Measure the resistance using an ohmmeter, and check the results in accordance with the value(s) in the table below.

Standard

Tester Connection	Condition	Specified Condition
1-Switch body	ON (When shaft is pressed)	10 kΩ or higher
1-Switch body	OFF (When shaft is not pressed)	Below 1 Ω

If the result is not as specified, replace the rear door courtesy light switch assembly.

TURN SIGNAL FLASHER ASSEMBLY

ON-VEHICLE INSPECTION

1. INSPECT TURN SIGNAL FLASHER ASSEMBLY (w/o Daytime Running Light System)

(a) Check the power source circuit and ground circuit.

(1) Remove the turn signal flasher assembly from the instrument panel junction block assembly.

(2) Measure the voltage and check the results in accordance with the value(s) in the table below.

Instrument Panel Junction Block

Front side:

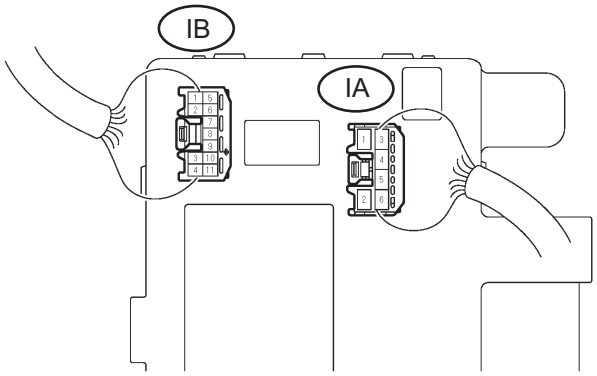

Back side:

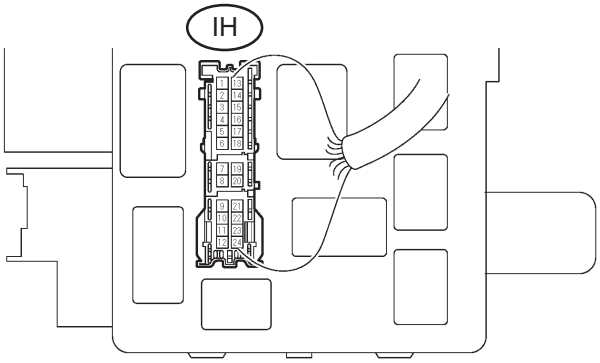

T

E076121E01

Standard

Tester Connection	Condition	Specified Condition
IA-4 - Body ground	Ignition switch ON	10 to 14 V
IA-4 - Body ground	Ignition switch OFF	0 V
IB-4 - Body ground	Always	10 to 14 V

(3) Measure the resistance and check the result in accordance with the value(s) in the table below.

Standard

Tester Connection	Condition	Specified Condition
IH-18 - Body ground	Always	Below 1 Ω

Instrument Panel Junction Block Back side:

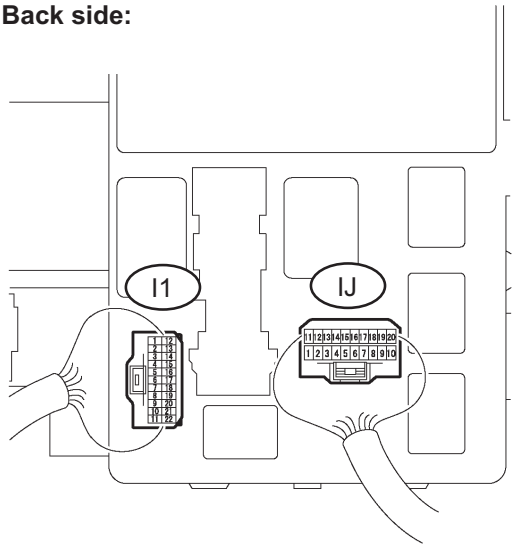

T

E076122E01

(b) Check the output operation signal.
(1) Install the turn signal flasher assembly onto the instrument panel junction block assembly.
(2) Measure the voltage and check the results in accordance with the value(s) in the table below.

Standard

Tester Connection	Condition	Specified Condition
I1-11 - Body ground	Hazard switch OFF → ON	0 V → 10 to 14 V (60 to 120 times per minute)
I1-11 - Body ground	Turn signal switch (right turn) OFF → ON	0 V → 10 to 14 V (60 to 120 times per minute)
I1-12 - Body ground	Hazard switch OFF → ON	0 V → 10 to 14 V (60 to 120 times per minute)
I1-12 - Body ground	Turn signal switch (left turn) OFF → ON	0 V → 10 to 14 V (60 to 120 times per minute)
IJ-8 - Body ground	Turn signal switch (left turn) OFF → ON	10 to 14 V → 0 V
IJ-18 - Body ground	Turn signal switch (right turn) OFF → ON	10 to 14 V → 0 V
IJ-11 - Body ground	Hazard switch OFF → ON	10 to 14 V → 0 V

Connector Front Side:

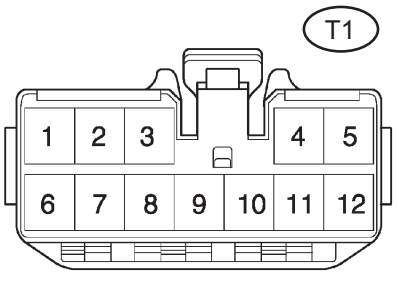

T

E076115E01

2. INSPECT TURN SIGNAL FLASHER ASSEMBLY (w/ Daytime Running Light System)

(a) Check the power source circuit and ground circuit.
(1) Disconnect the connector from the turn signal flasher assembly.
(2) Measure the voltage and check the results in accordance with the value(s) in the table below.

Standard

Tester Connection	Condition	Specified Condition
1 - Body ground	Ignition switch ON	10 to 14 V

Tester Connection	Condition	Specified Condition
1 - Body ground	Ignition switch OFF	0 V
6 - Body ground	Always	10 to 14 V

(3) Measure the resistance and check the result in accordance with the value(s) in the table below.

Standard

Tester Connection	Condition	Specified Condition
9 - Body ground	Always	Below 1 Ω

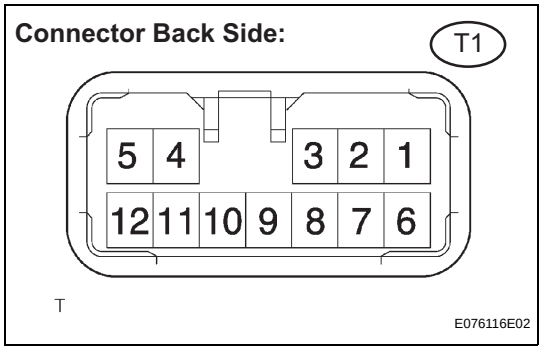

(b) Check the output operation signal.
(1) Connect the connector to the turn signal flasher assembly.
(2) Measure the voltage and check the results in accordance with the value(s) in the table below.

Standard

Tester Connection	Condition	Specified Condition
2 - Body ground	Hazard switch OFF → ON	0 V → 10 to 14 V (60 to 120 times per minute)
2 - Body ground	Turn signal switch (right turn) OFF → ON	0 V → 10 to 14 V (60 to 120 times per minute)
2 - Body ground	Turn signal switch (right turn) ON → OFF	10 to 14 V (60 to 120 times per minute) → 10 to 14 V
3 - Body ground	Hazard switch OFF → ON	0 V → 10 to 14 V (60 to 120 times per minute)
3 - Body ground	Turn signal switch (right turn) OFF → ON	0 V → 10 to 14 V (60 to 120 times per minute)
4 - Body ground	Hazard switch OFF → ON	0 V → 10 to 14 V (60 to 120 times per minute)
4 - Body ground	Turn signal switch (left turn) OFF → ON	0 V → 10 to 14 V (60 to 120 times per minute)
4 - Body ground	Turn signal switch (left turn) ON → OFF	10 to 14 V (60 to 120 times per minute) → 10 to 14 V
5 - Body ground	Hazard switch OFF → ON	0 V → 10 to 14 V (60 to 120 times per minute)
5 - Body ground	Turn signal switch (left turn) OFF → ON	0 V → 10 to 14 V (60 to 120 times per minute)
7 - Body ground	Turn signal switch (left turn) OFF → ON	10 to 14 V → 0 V
8 - Body ground	Turn signal switch (right turn) OFF → ON	10 to 14 V → 0 V
10 - Body ground	Hazard switch OFF → ON	10 to 14 V → 0 V

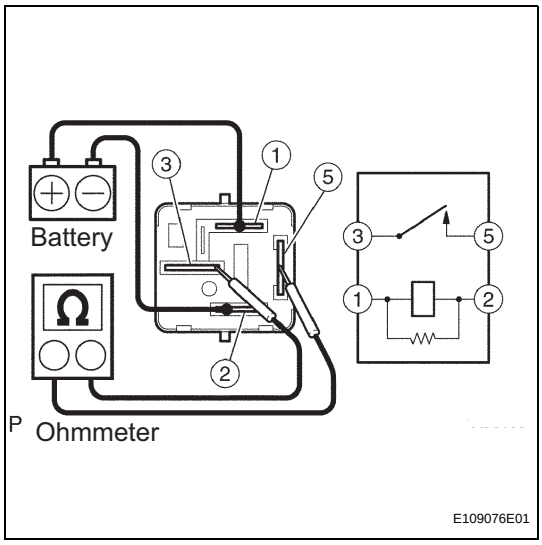

HEADLIGHT RELAY

INSPECTION

1. INSPECT HEADLIGHT RELAY

(a) Check the resistance.

(1) Using an ohmmeter, measure the resistance between the terminals.

Standard

Tester Connection	Specified Condition
3-5	10 kΩ or higher
3-5	Below 1 Ω (When battery voltage applied to terminals 1 and 2)

If the result is not as specified, replace the headlight relay.

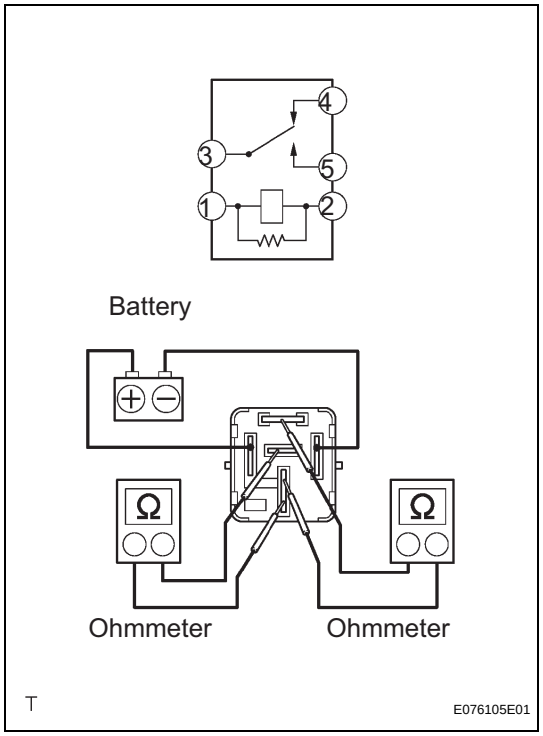

HEADLIGHT DIMMER RELAY

INSPECTION

1. INSPECT HEADLIGHT DIMMER RELAY

(a) Check the resistance.

(1) Using an ohmmeter, measure the resistance between the terminals.

Standard

Tester Connection	Specified Condition
3-4	Below 1 Ω
3-4	10 kΩ or higher (When battery voltage applied to terminals 1 and 2)
3-5	10 kΩ or higher
3-5	Below 1 Ω (When battery voltage applied to terminals 1 and 2)

If the result is not as specified, replace, the headlight dimmer relay.

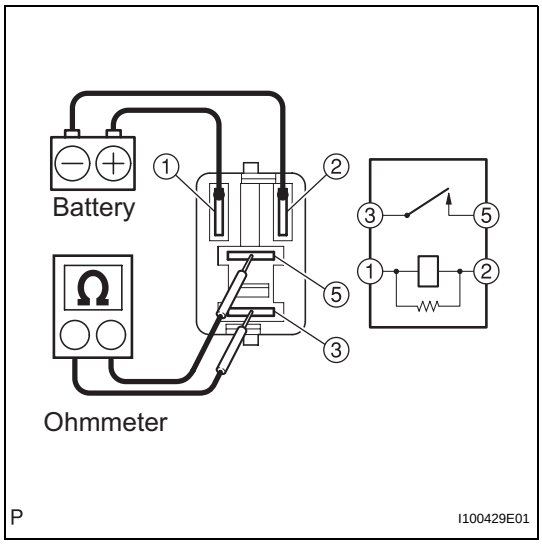

TAILLIGHT RELAY

INSPECTION

1. INSPECT TAIL LIGHT RELAY

(a) Check the resistance.

(1) Using an ohmmeter, measure the resistance between the terminals.

Standard

Tester Connection	Specified Condition
3-5	10 kΩ or higher
3-5	Below 1 Ω (When 1 battery voltage applied to terminals 1and 2)

If the result is not as specified, replace the tail light relay.

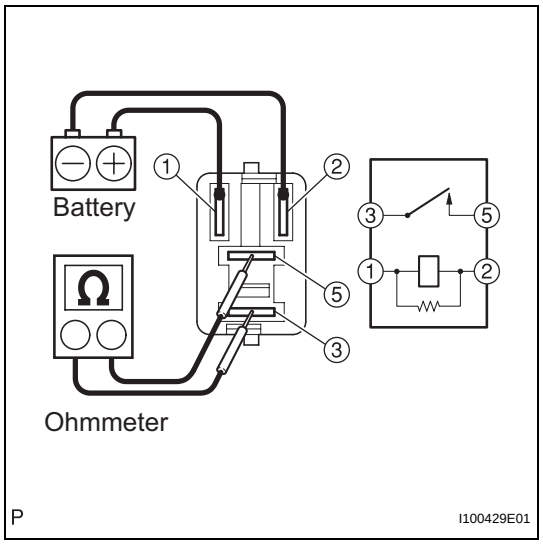

FOG LIGHT RELAY

INSPECTION

1. INSPECT FOG LIGHT RELAY

(a) Check the resistance.

(1) Using an ohmmeter, measure the resistance between the terminals.

Standard

Tester Connection	Specified Condition
3-5	10 kΩ or higher
3-5	Below 1 Ω (When battery voltage applied to terminals 1 and 2)

If the result is not as specified, replace the fog light relay.

TRAILER SOCKET

COMPONENTS

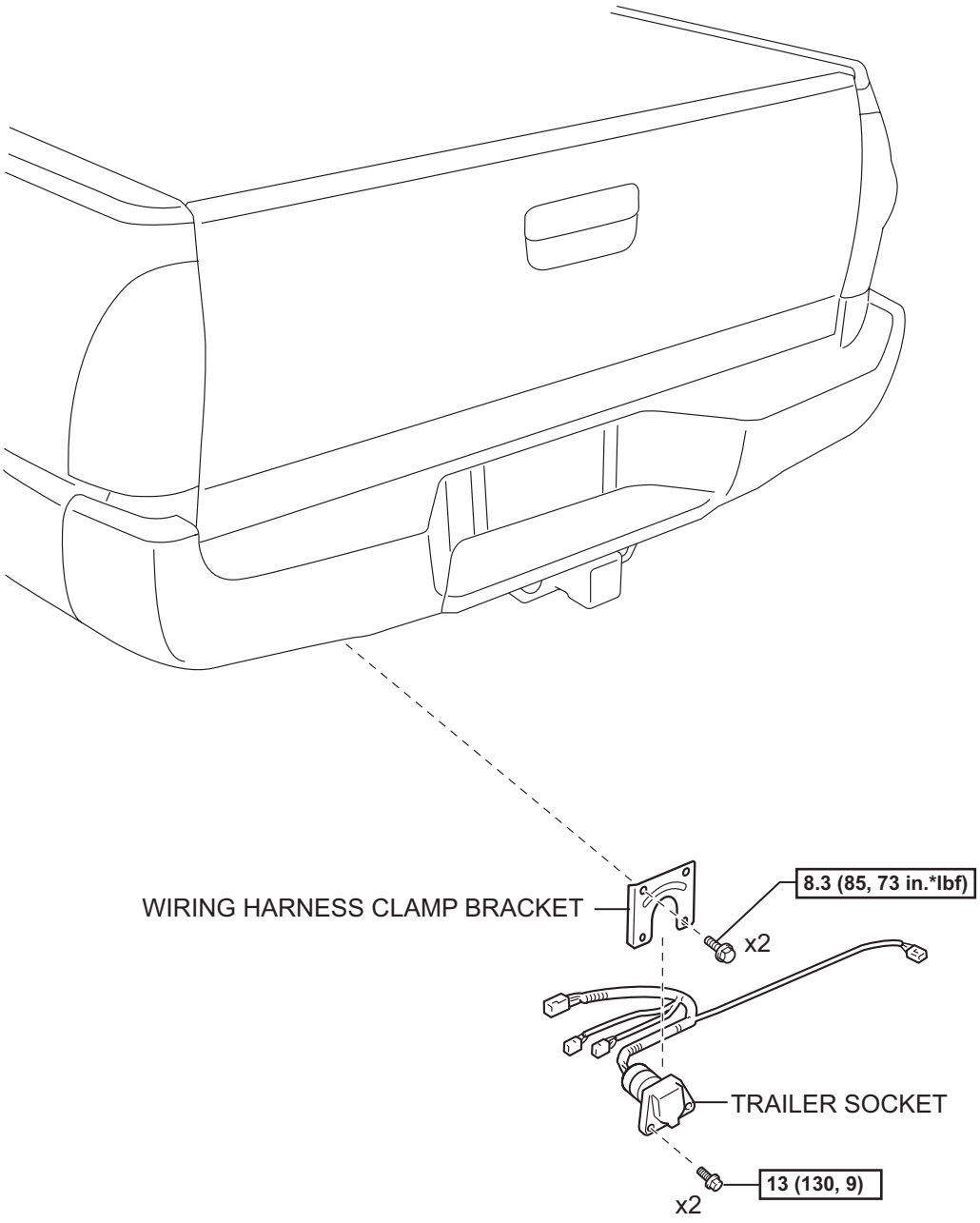

N*m (kgf*cm, ft*lbf) : Specified torque

T

E076097E01

REMOVAL

1. DISCONNECT CABLE FROM NEGATIVE BATTERY TERMINAL

2. REMOVE TRAILER SOCKET

(a) Disconnect the 4 connectors and disengage the 2 clamps.

(b) Remove the 2 bolts, then remove the No. 3 wire frame.

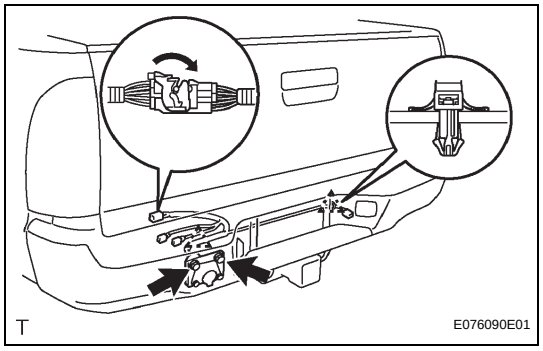

(c) Remove the 2 bolts, then remove the wiring harness clamp bracket.

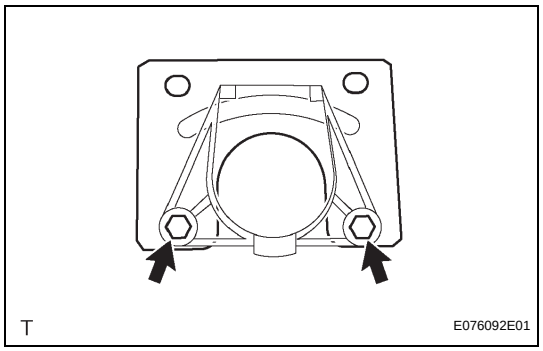

INSTALLATION

1. INSTALL TRAILER SOCKET

(a) Install the 2 bolts and wiring harness clamp bracket.
Torque: 8.3 N*m (85 kgf*cm, 73 in.*lbf)

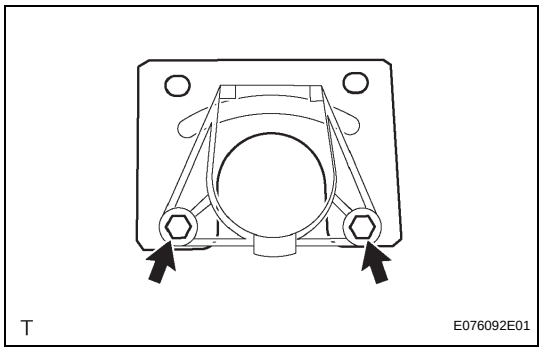

(b) Install the 2 bolts and No. 3 wire flame.
Torque: 13 N*m (130 kgf*cm, 9 ft.*lbf)

(c) Connect the 4 connectors and engage the 2 clamps.

2. CONNECT CABLE TO NEGATIVE BATTERY TERMINAL
Torque: 3.9 N*m (40 kgf*cm, 35 in.*lbf)

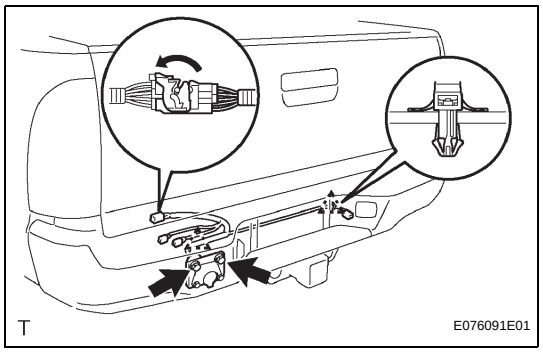

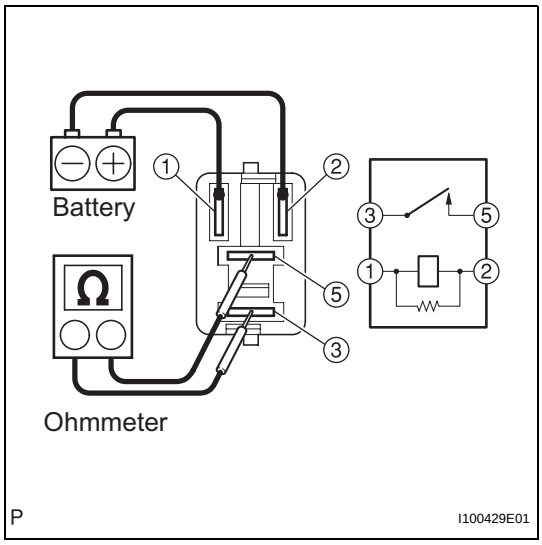

TOWING TAIL RELAY

INSPECTION

1. INSPECT TOWING TAIL RELAY

(a) Check the resistance.

(1) Using an ohmmeter, measure the resistance between the terminals.

Standard

Tester Connection	Specified Condition
3-5	10 kΩ or higher
3-5	Below 1 Ω (When battery voltage applied to terminals 1 and 2)

If the result is not as specified, replace the towing tail relay.

TOWING CONVERTER RELAY

COMPONENTS

for Automatic Transmission on Bench Seat Type:

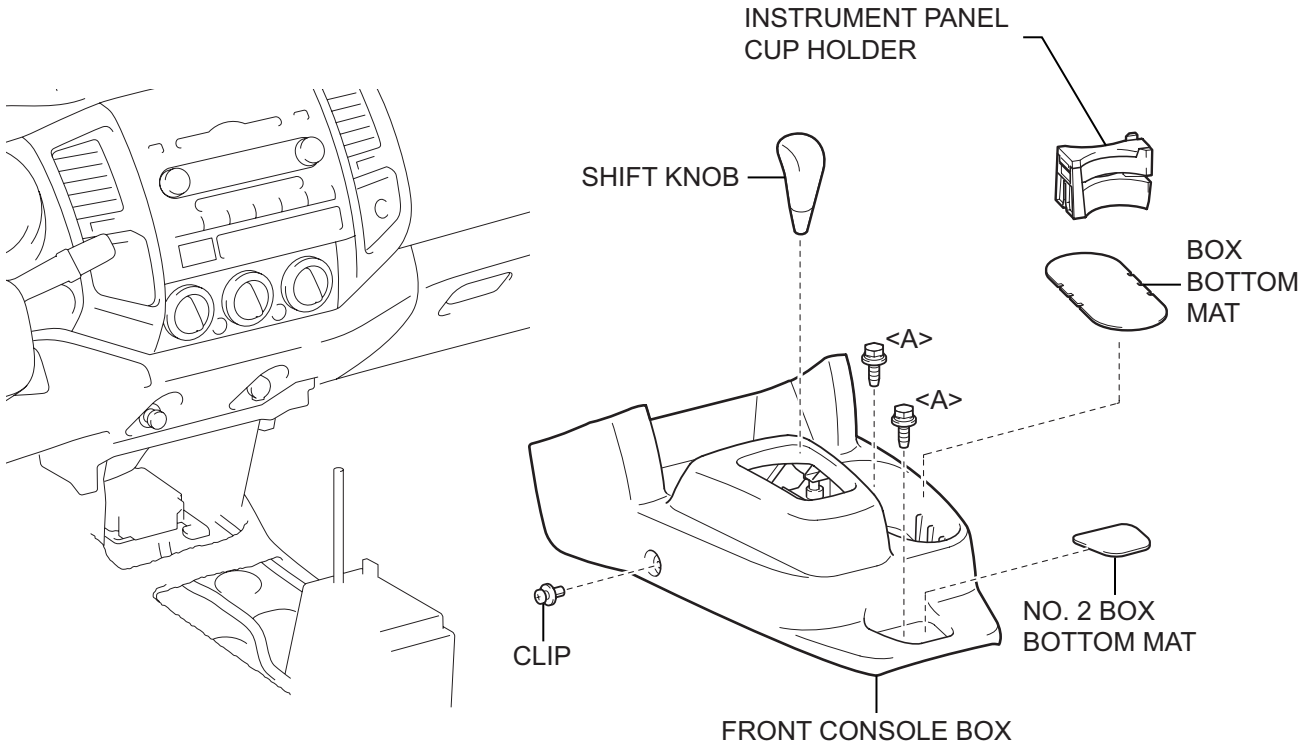

for Manual Transmission on Bench Seat Type:

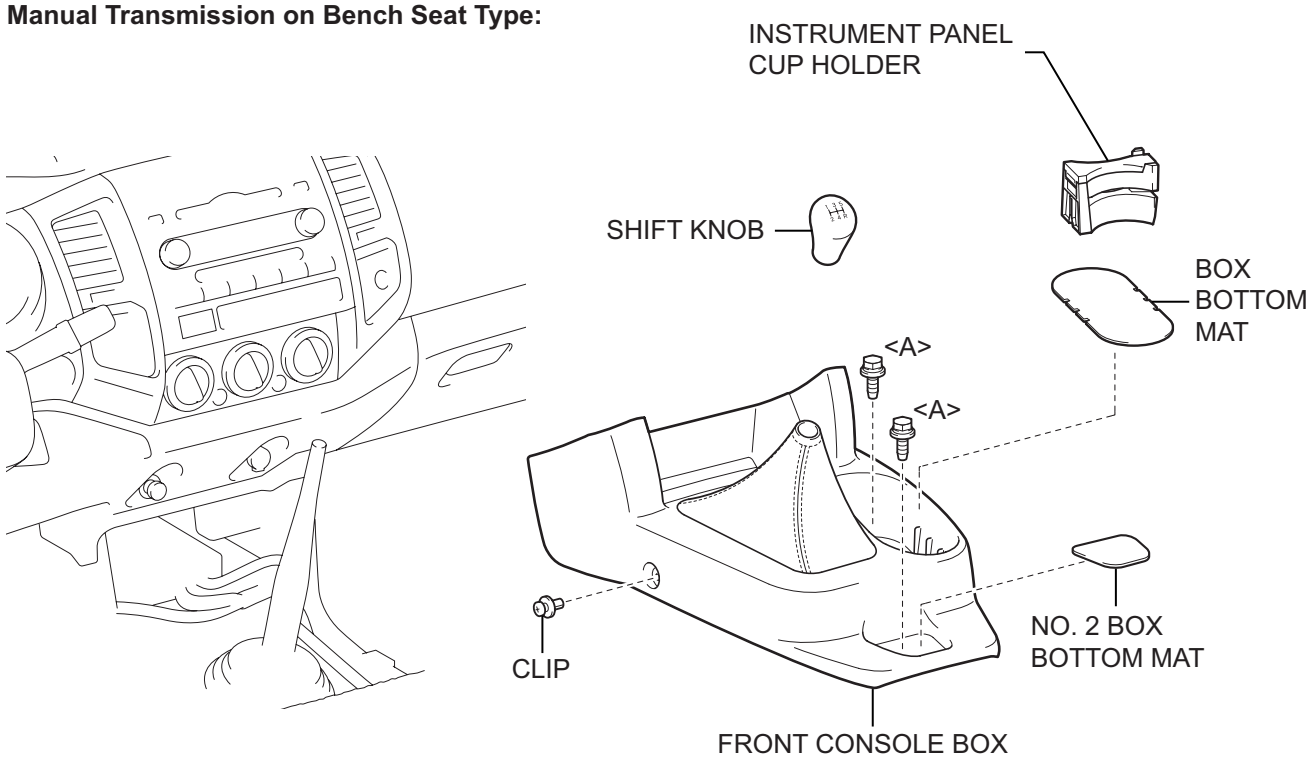

P

B085798E01

for Automatic Transmission on Separate Seat Type :

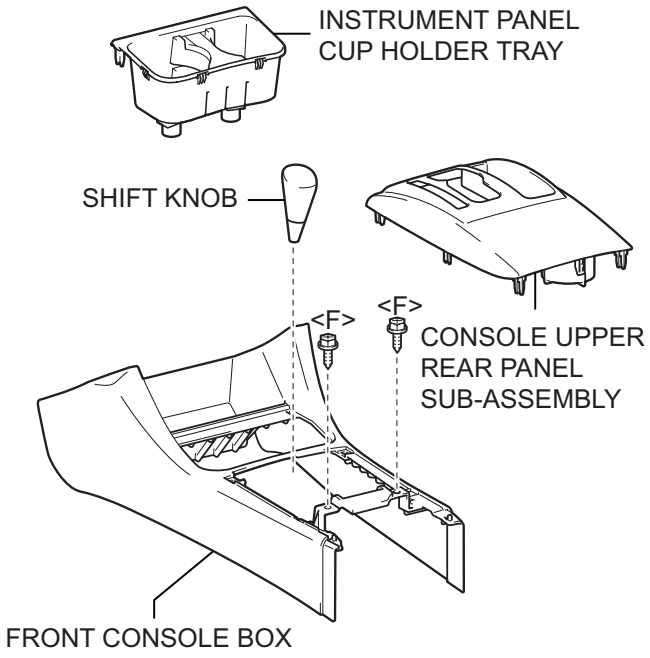

for Manual Transmission on Separate Seat Type:

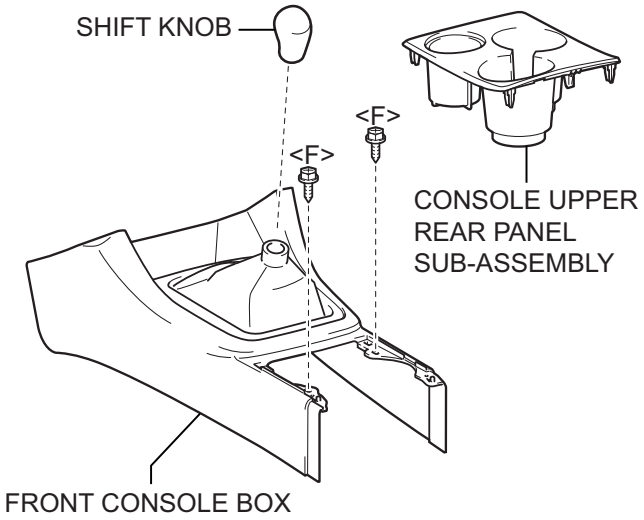

for Separate Seat Type:

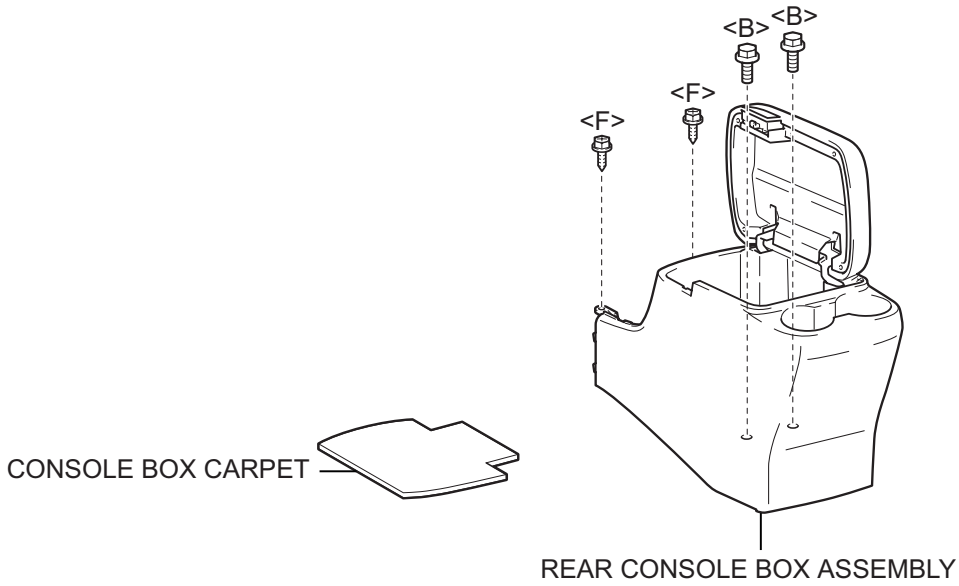

LI

P

B085799E01

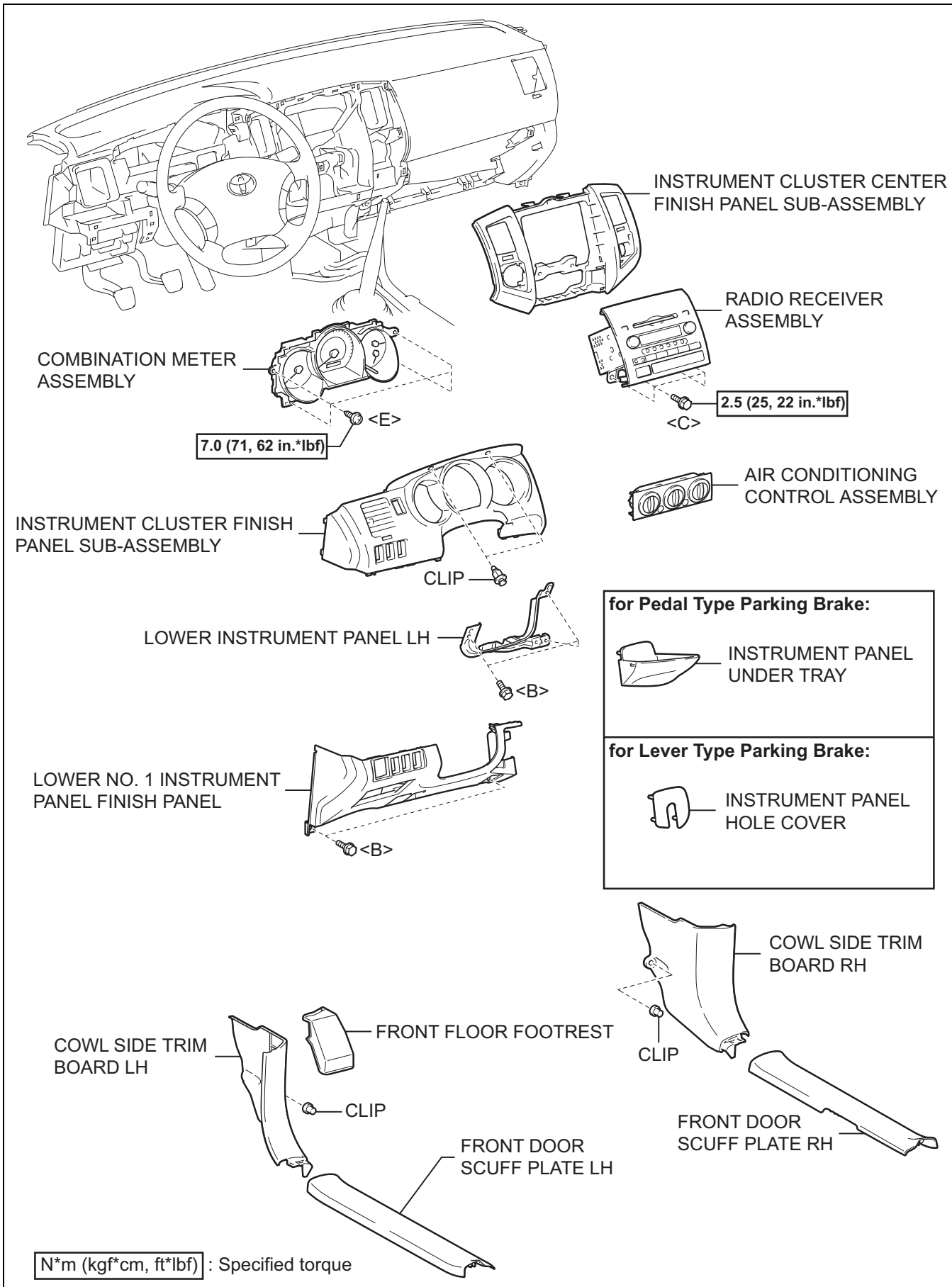
INSTRUMENT CLUSTER CENTER FINISH PANEL SUB-ASSEMBLY
RADIO RECEIVER ASSEMBLY
COMBINATION METER ASSEMBLY
<E>
7.0 (71, 62 in.*lbf)
<C>
2.5 (25, 22 in.*lbf)
AIR CONDITIONING CONTROL ASSEMBLY
INSTRUMENT CLUSTER FINISH PANEL SUB-ASSEMBLY
CLIP
LOWER INSTRUMENT PANEL LH
<B>
for Pedal Type Parking Brake:
INSTRUMENT PANEL UNDER TRAY
for Lever Type Parking Brake:
INSTRUMENT PANEL HOLE COVER
LOWER NO. 1 INSTRUMENT PANEL FINISH PANEL
<B>
COWL SIDE TRIM BOARD RH
CLIP
FRONT DOOR SCUFF PLATE RH
FRONT FLOOR FOOTREST
COWL SIDE TRIM BOARD LH
CLIP
FRONT DOOR SCUFF PLATE LH
N*m (kgf*cm, ft*lbf) : Specified torque
P
B085800E01

LI

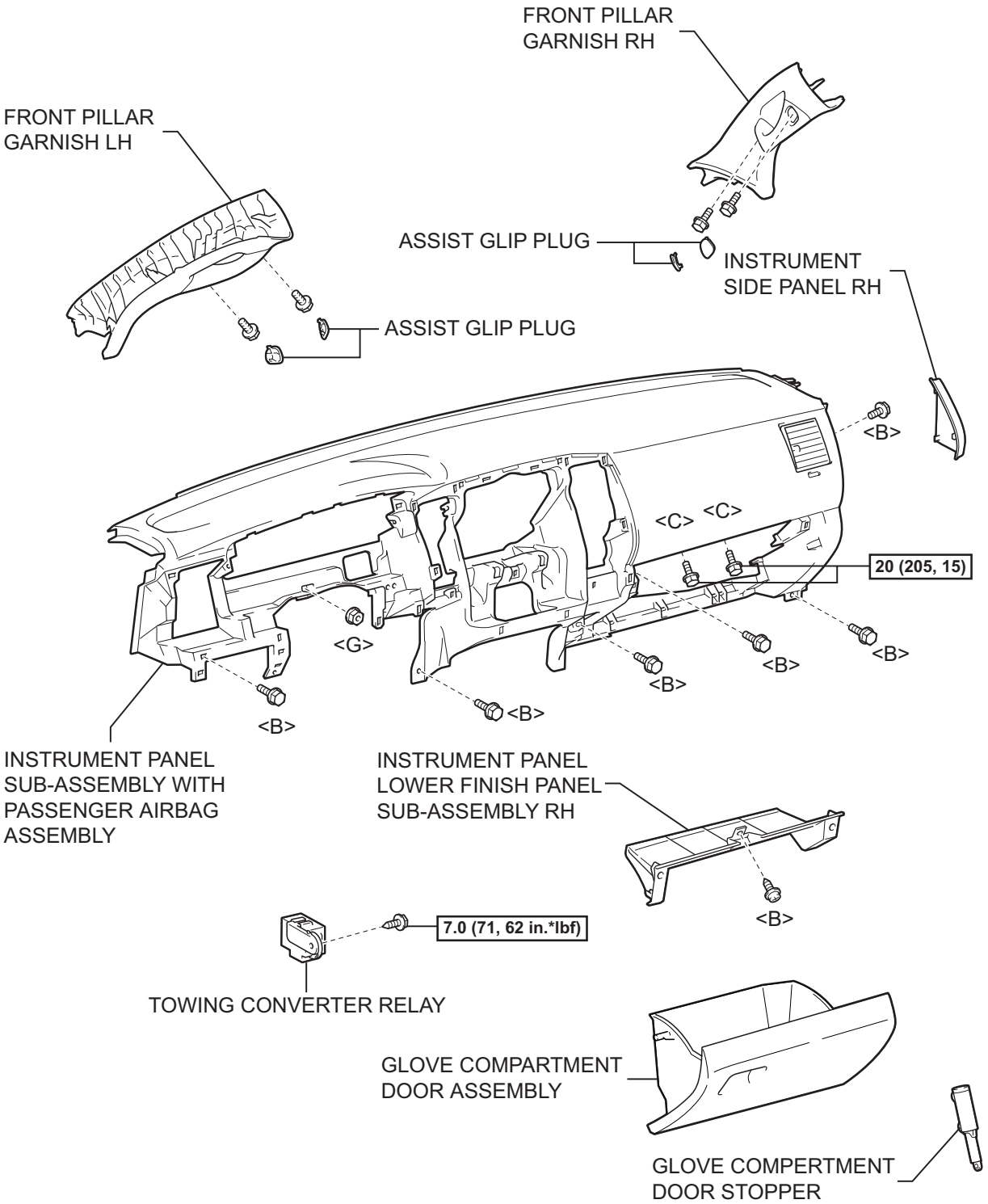

N*m (kgf*cm, ft*lbf) : Specified torque

P

E076119E01

LI

WIPER AND WASHER SYSTEM

PRECAUTION

1. PRECAUTION OF WASHER NOZZLE ADJUSTMENT

(a) Do not clean or adjust the washer nozzle with sharp metal objects, such as safety pins because;
  (1) the washer nozzle tip is made of resin and could be damaged.
  (2) adjustment is not necessary because it has a spray type nozzle.

(b) If the washer nozzle is clogged with materials such as wax, remove the objects and clean the nozzle hole with a soft resin brush, etc.

PARTS LOCATION

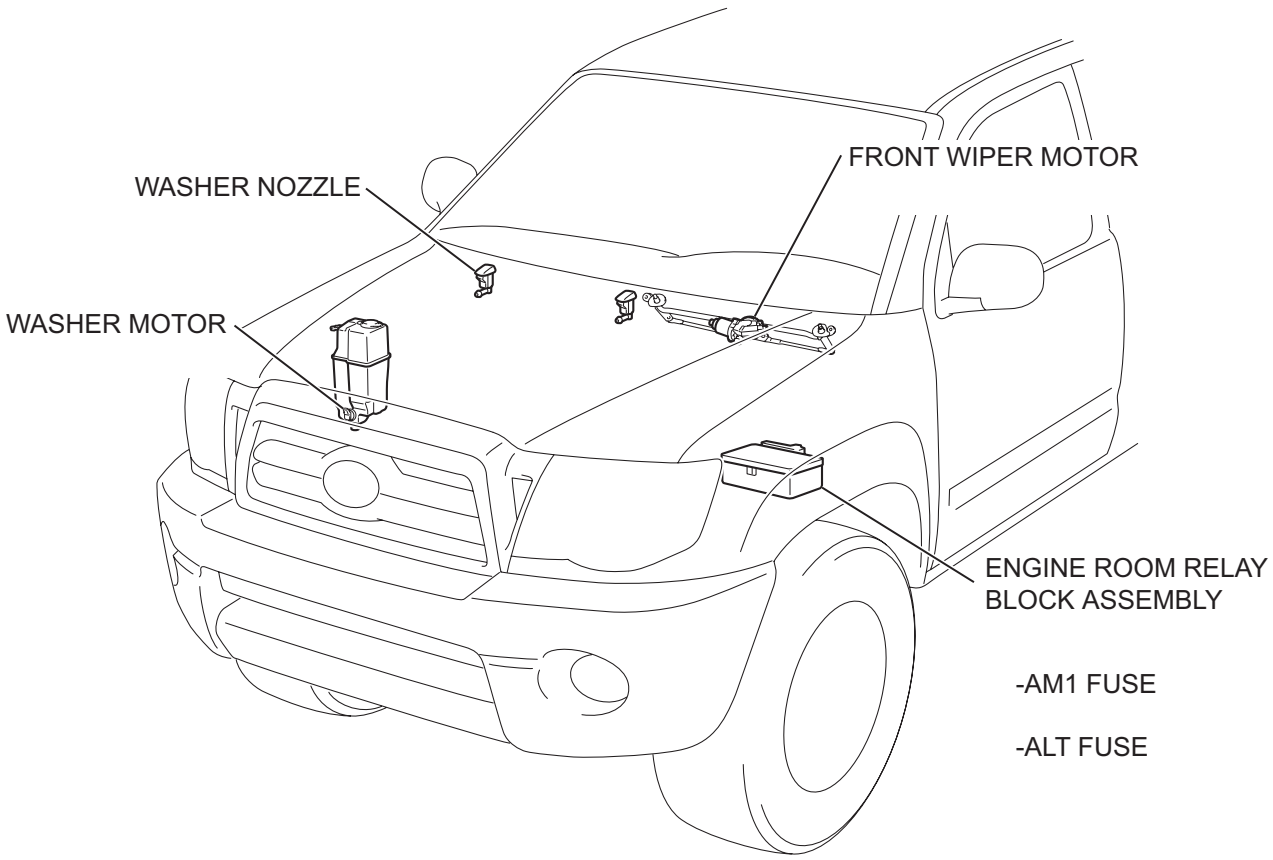

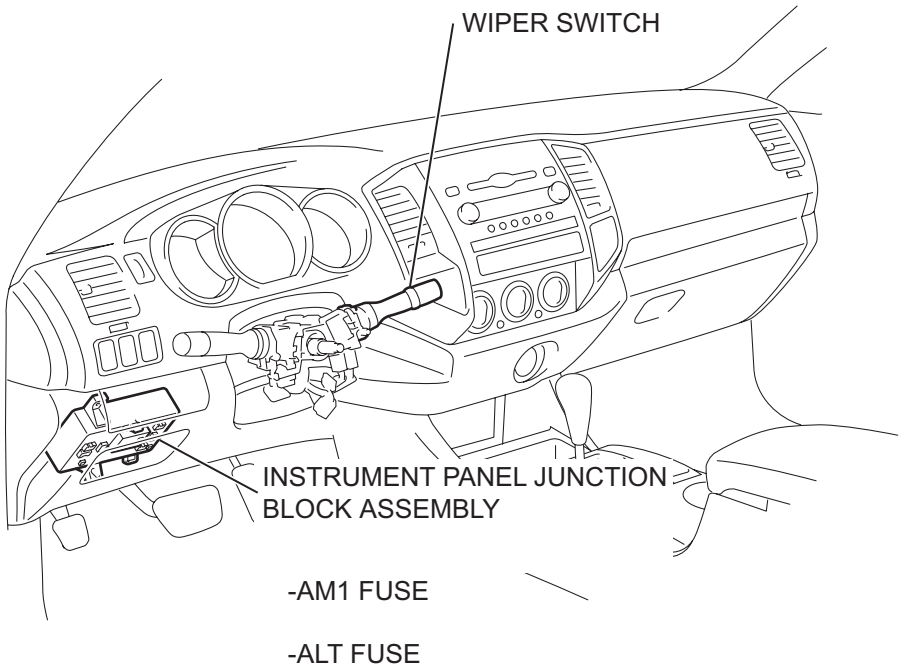

T

E076106E01

WW

FRONT WIPER MOTOR

COMPONENTS

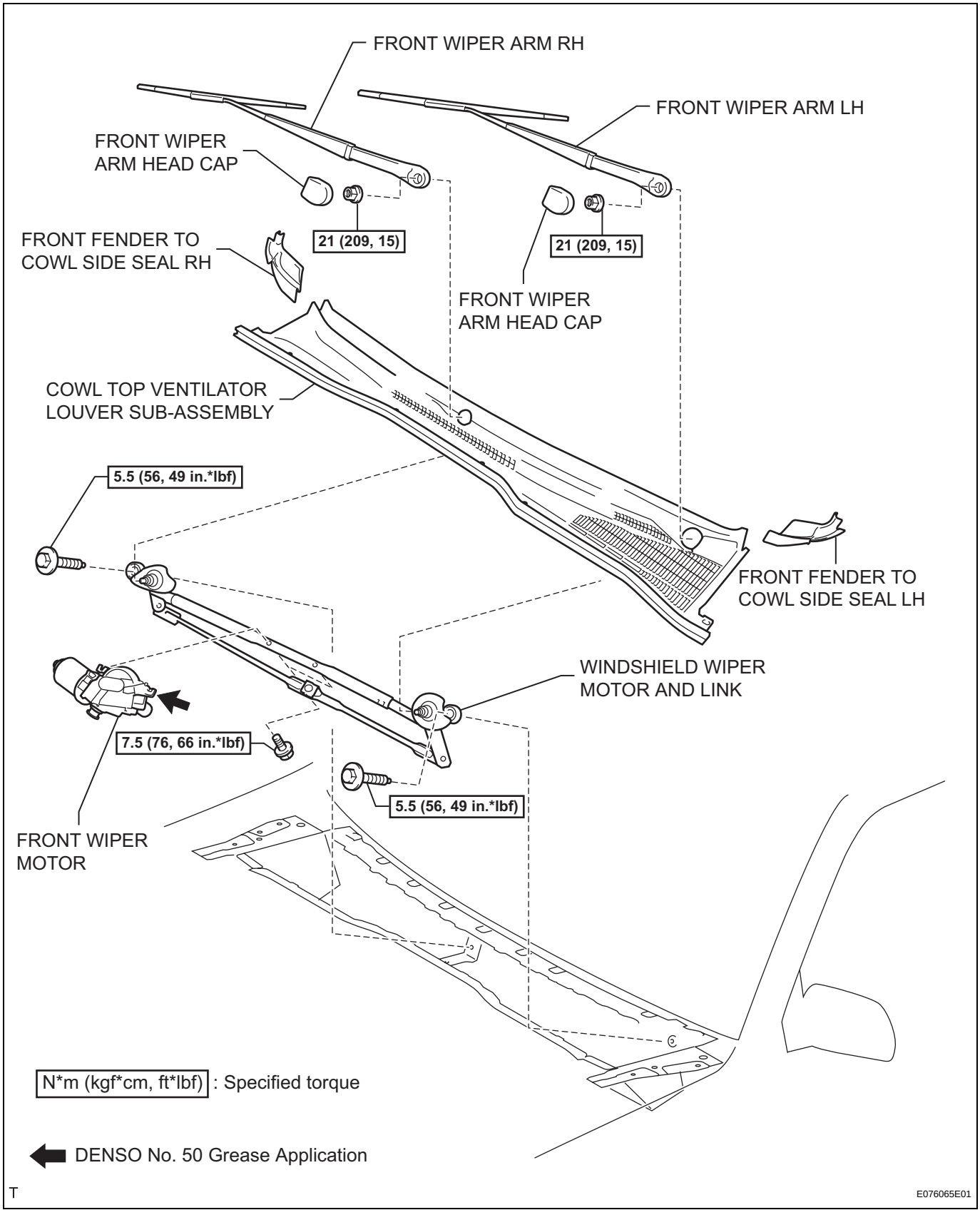

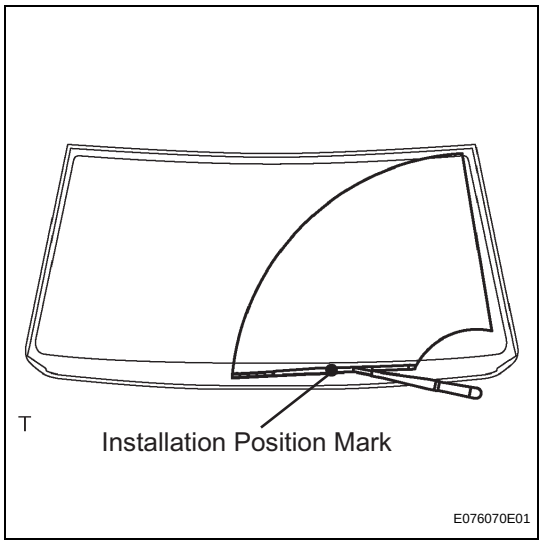

ON-VEHICLE INSPECTION

1. INSPECT FRONT WIPER MOTOR (for Driver Side)

(a) Check the automatic stop position.

(1) Operate the windshield wiper motor assembly, then stop the operation.

(2) Check the automatic stop position when stopping the windshield wiper motor assembly operation.

Standard:

Front wiper arm stops at the position shown in the illustration.

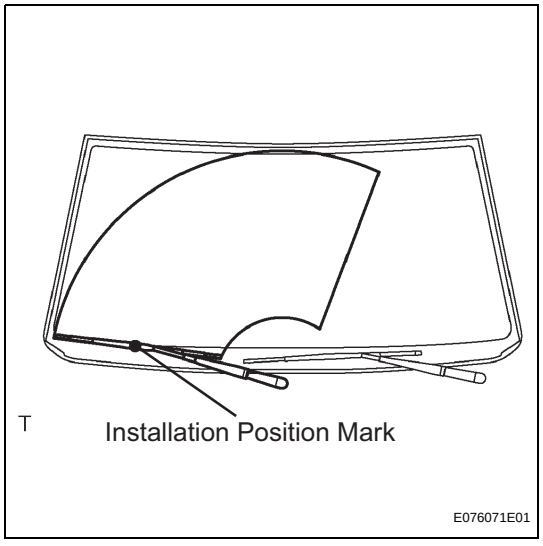

2. INSPECT FRONT WIPER MOTOR (for Front Passenger Side)

(a) Check the automatic stop position.

(1) Operate the windshield wiper motor assembly, then stop the operation.

(2) Check the automatic stop position when stopping the windshield wiper motor assembly operation.

Standard:

Front wiper arm stops at the position shown in the illustration.

FRONT WIPER RUBBER

COMPONENTS

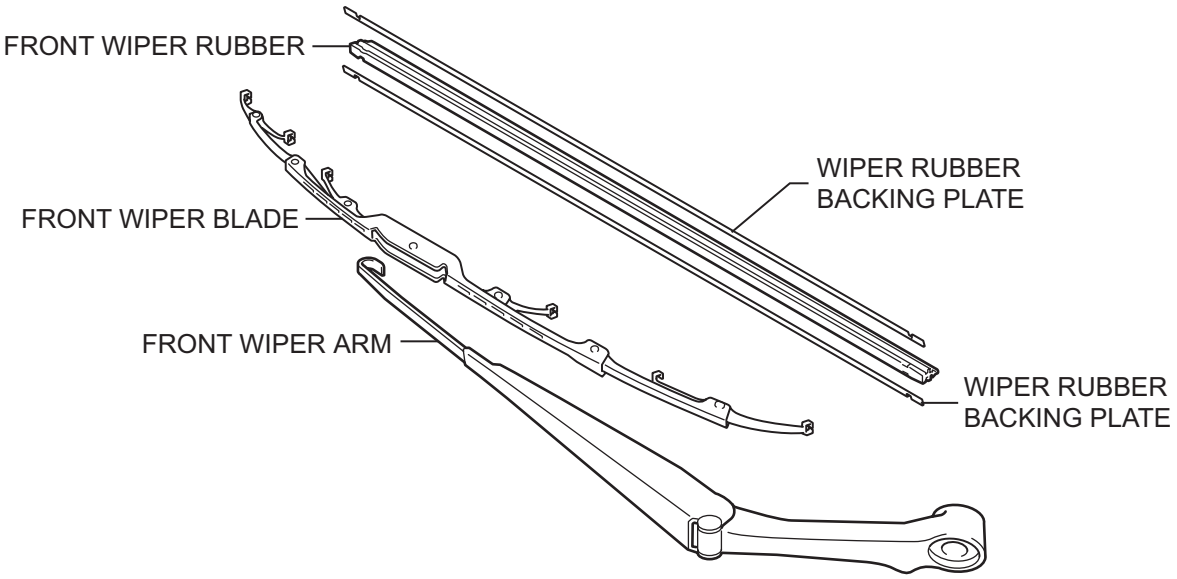

T

E076066E01

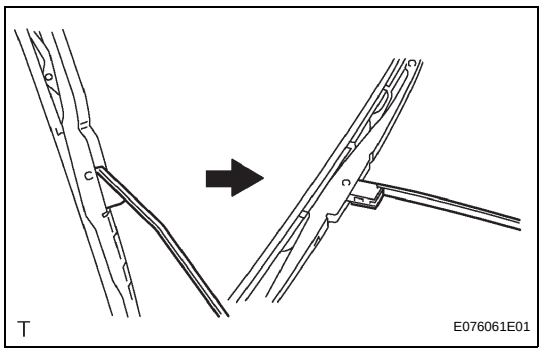

T

E076061E01

REMOVAL

1. REMOVE FRONT WIPER BLADE

(a) Raise the front wiper blade to the position as shown in the illustration.

WW

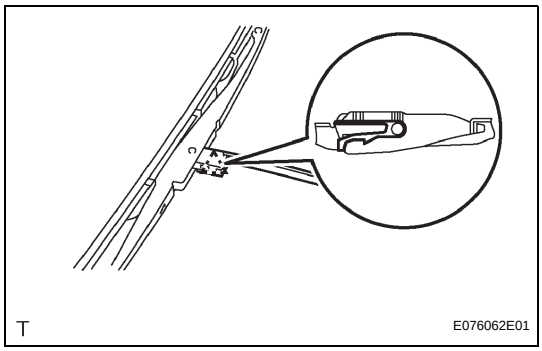

(b) Disengage the claw and remove the front wiper blade LH from the front wiper arm LH.
NOTICE:
Do not bend the front wiper arm with the front wiper blade LH removed, as the arm tip could damage the windshield surface.

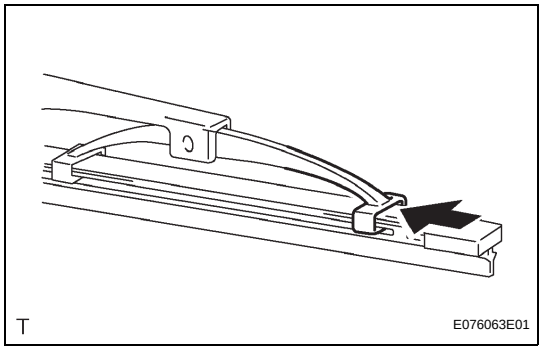

2. REMOVE FRONT WIPER RUBBER

(a) Remove the front wiper rubber LH from the front wiper blade.

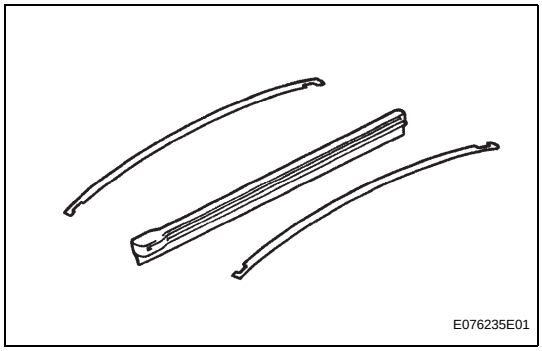

(b) Remove the 2 wiper rubber backing plates from the wiper rubber LH.

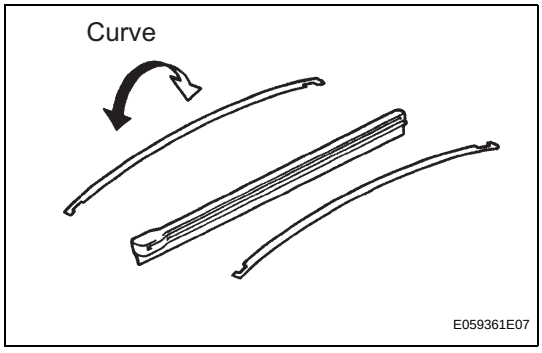

INSTALLATION

1. REMOVE FRONT WIPER RUBBER

(a) Install the 2 wiper rubber backing plates onto the wiper rubber LH.
NOTICE:
Be sure to install the wiper rubber backing plates in the correct direction.

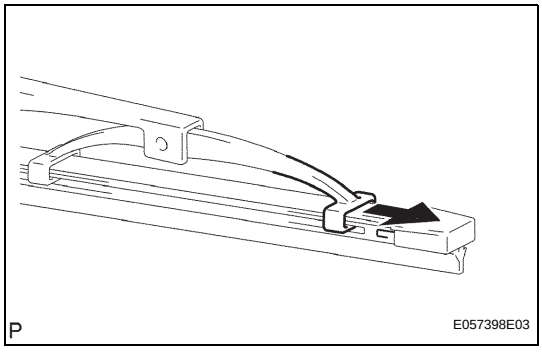

(b) Install the wiper rubber LH so that the head part (Larger side) of the wiper rubber faces the arm axle side.
NOTICE:
Push the front wiper blade into the grooves of the wiper rubber to engage them completely.

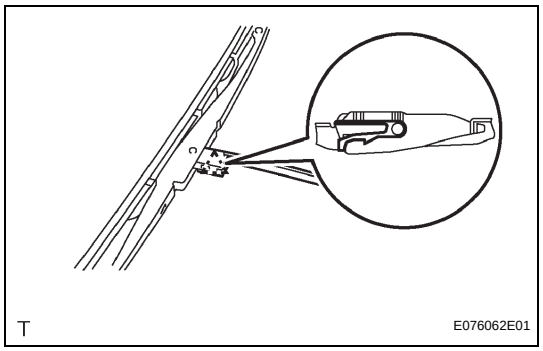

2. REMOVE FRONT WIPER BLADE

(a) Engage the claw and install the front wiper blade LH onto the front wiper arm LH.

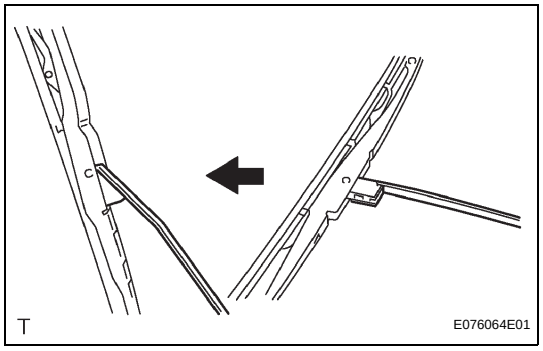

(b) Hold down the front wiper blade LH as shown in the illustration.

WIPER SWITCH

COMPONENTS

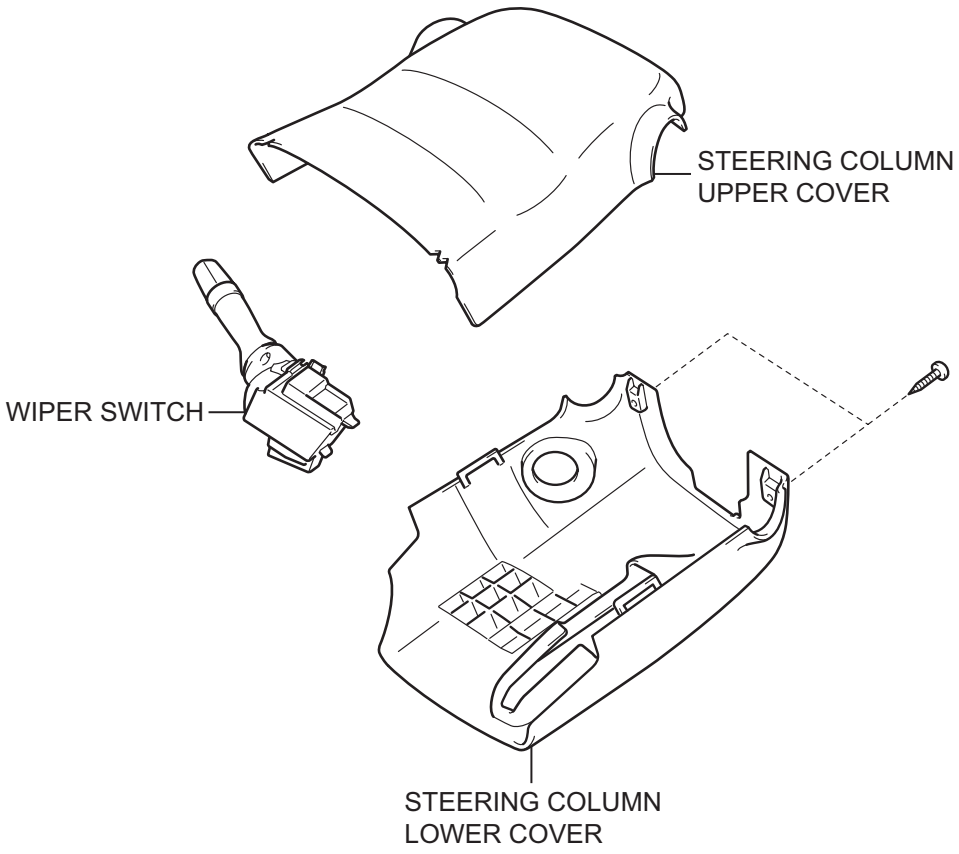

T

E076072E01

REMOVAL

1. **DISCONNECT CABLE FROM NEGATIVE BATTERY TERMINAL**
   Wait for at least 90 seconds after disconnecting the cable to prevent the airbag from working.
2. **REMOVE STEERING COLUMN LOWER COVER (See page SR-9)**
3. **REMOVE STEERING COLUMN UPPER COVER (See page SR-10)**
4. **REMOVE WIPER SWITCH**
   (a) Disconnect the 2 connectors.
   (b) Using a screwdriver wrapped with protective tape, disengage the claw and remove the windshield wiper switch assembly.
   NOTICE:
   The claw will break if pressed too hard.

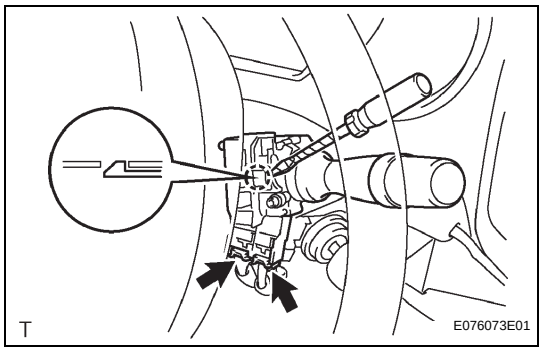

Windshield Wiper Switch Assembly Connector Front View:

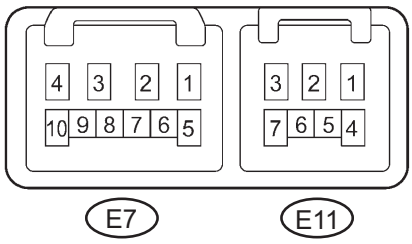

E113070E01

INSPECTION

1. **INSPECT WIPER SWITCH**
   (a) Check the resistance.
   (1) Measure the resistance and check the results in accordance with the value(s) in the table below.
   Standard:
   Wiper Switch

Tester connection	Condition	Specified condition
+B(E7-2) - +1(E7-3)	MIST	Below 1 Ω
+S(E7-1) - +1(E7-3)	OFF	Below 1 Ω
+S(E7-1) - +1(E7-3)	INTO	Below 1 Ω
+B(E7-2) - +1(E7-3)	LO	Below 1 Ω
+B(E7-2) - +2(E7-4)	HI	Below 1 Ω

If the result is not as specified, replace the windshield wiper switch assembly.

Standard:
Washer Switch

Tester connection	Condition	Specified condition
EW(E11-2) - WF(E11-3)	OFF	10 kΩ or higher
EW(E11-2) - WF(E11-3)	ON	Below 1 Ω

If the result is not as specified, replace the windshield wiper switch assembly.

(b) Check the intermittent operation.
(1) Connect the voltmeter positive terminal to terminal 3 (+1) of the E7 connector and the voltmeter negative terminal to terminal 2 (EW) of the E11 connector.

(2) Connect the battery positive (+) lead to terminal 2 (+B) of the E7 connector and the battery negative (-) lead to terminals 2 (EW) of the E11 connector and 1 (+S) of the E7 connector.
(3) Turn the wiper switch to the INT position.
(4) Connect the battery positive (+) lead to terminal 1 (+S) of the E7 connector for 5 seconds.
(5) Connect the battery negative lead to terminal 1 (+S) of the E7 connector. Operate the intermittent wiper relay and check the voltage between terminals 3 (+1) of the E7 connector and 2 (EW) of the E11 connector.

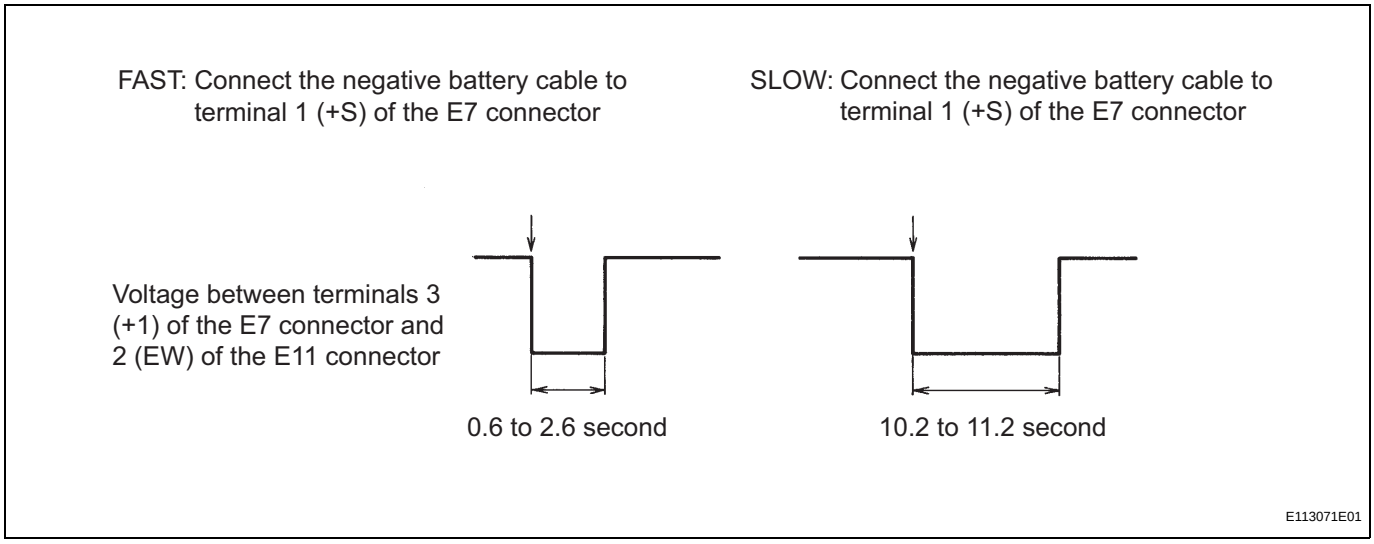

(c) Check the operation

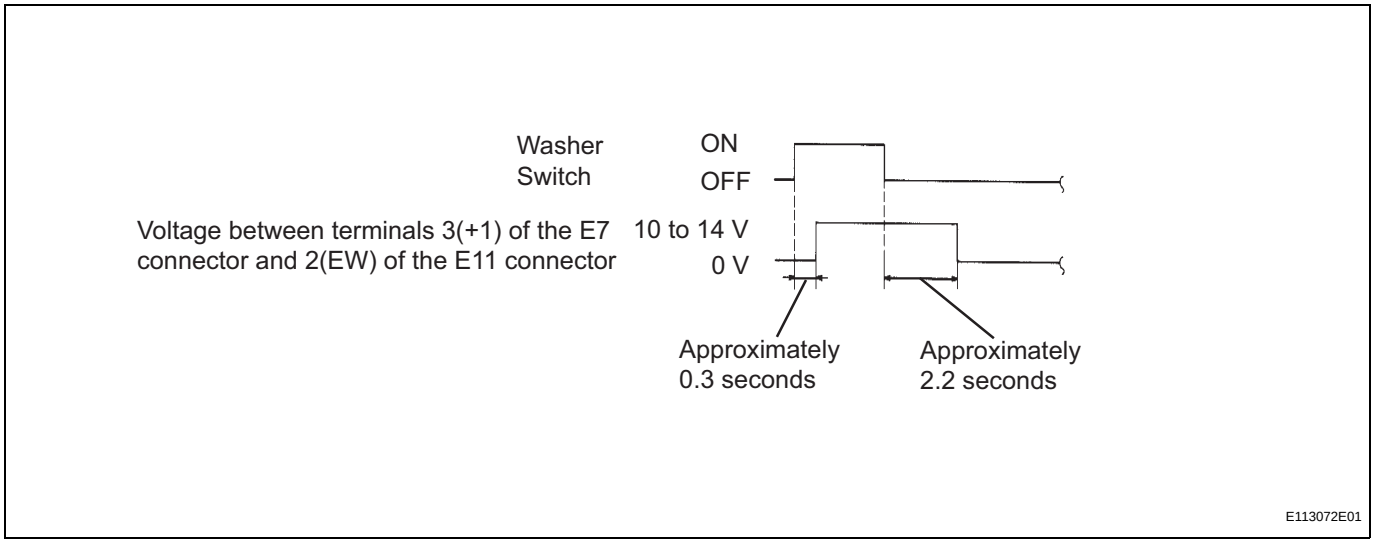

(1) Turn the wiper switch off.
(2) Connect the battery positive lead to terminal 2 (+B) of the E7 connector and the battery negative lead to terminals 1 (+S) of the E7 connector and 2 (EW) of the E11 connector.

(3) Connect the voltmeter positive terminal to terminal 3 (+1) of the E7 connector and the voltmeter negative terminal to terminal 2 (EW) of the E11 connector. Turn the washer switch on and off, and check the voltage between terminals 3 (+1) of the E7 connector and 2 (EW) of the E11 connector.

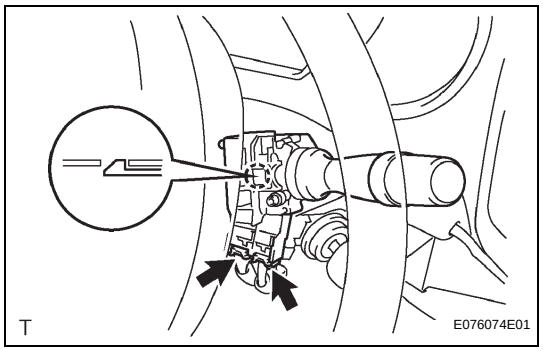

INSTALLATION

1. **INSTALL WIPER SWITCH**
   (a) Engage the claw and install the windshield wiper switch assembly.
   (b) Connect the 2 connectors.
2. **CONNECT CABLE TO NEGATIVE BATTERY TERMINAL**
   Torque: 3.9 N*m (40 kgf*cm, 35 in.*lbf)
3. **INSTALL STEERING COLUMN UPPER COVER (See page SR-18)**
4. **INSTALL STEERING COLUMN LOWER COVER (See page SR-18)**

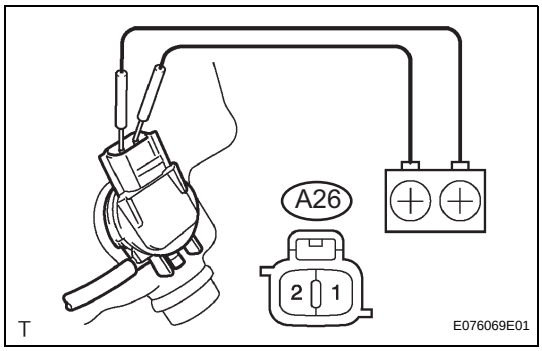

WASHER MOTOR

ON-VEHICLE INSPECTION

1. INSPECT WASHER MOTOR

(a) Check the operation.

(1) Fill the washer jar with washer fluid.
HINT:
Operation should be performed with the windshield washer motor and pump assembly installed onto the washer jar assembly.

(2) Connect the positive battery (+) lead to terminal 1 of the windshield washer motor and pump assembly, then the negative battery (-) lead to terminal 2. Check that washer fluid flows from the washer jar.
Standard:
Washer fluid flows from the washer jar.

WASHER NOZZLE

INSPECTION

1. INSPECT WASHER NOZZLE

(a) With the engine running, check that the washer fluid hits in the range indicated by the hatched lines on the windshield.

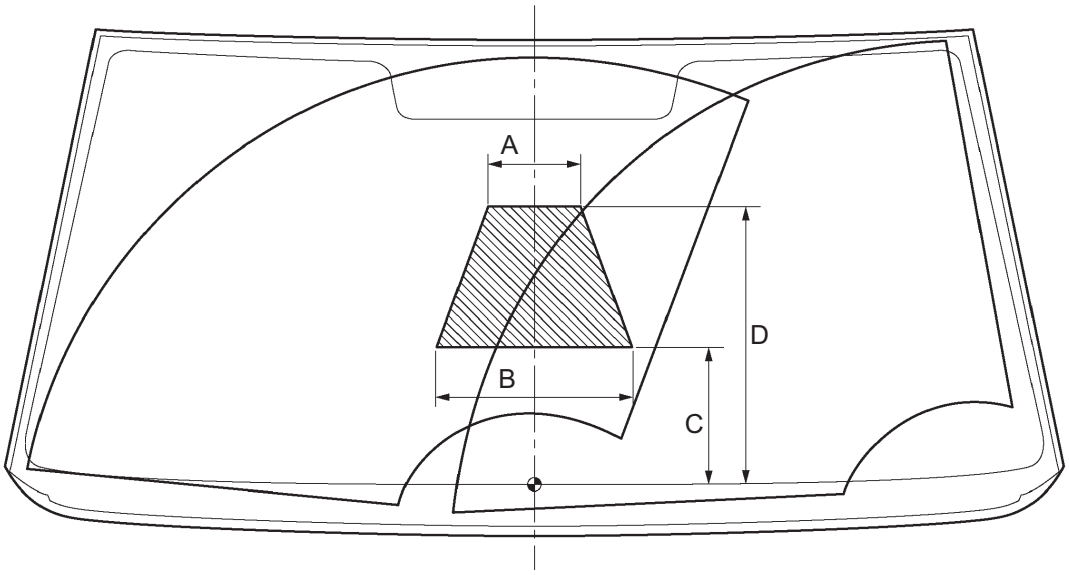

Standard: The washer fluied intersects within the range above.

A: 173.7 mm (6.83 in.)

B: 273 mm (10.75 in.)

C: 191.1 mm (7.52 in.)

D: 397.5 mm (15.65 in.)

T

E076098E01

HINT:
This washer nozzle does not have an adjustment function because it has a spray type nozzle.

POWER DOOR LOCK CONTROL SYSTEM

PARTS LOCATION

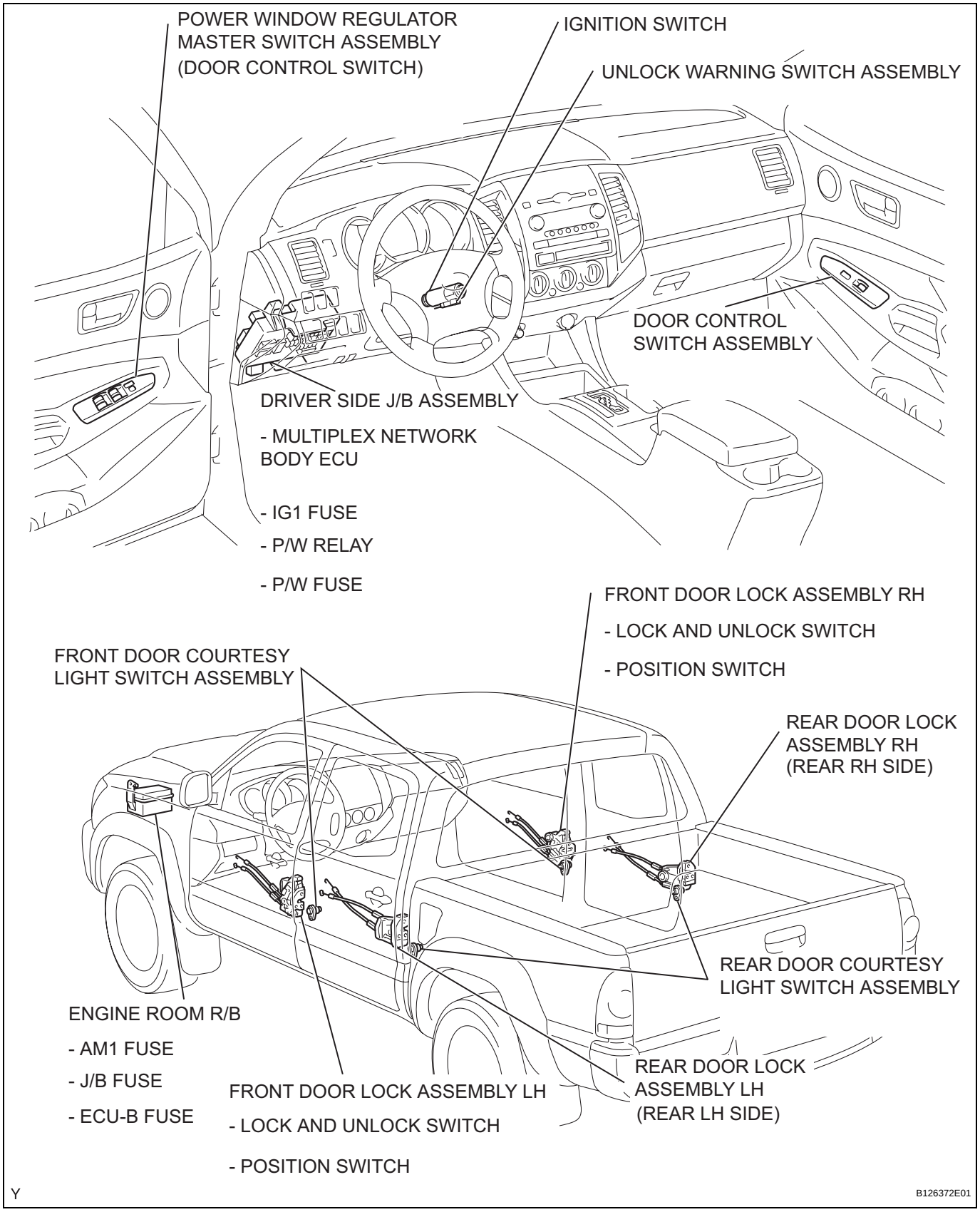

DL

SYSTEM DIAGRAM

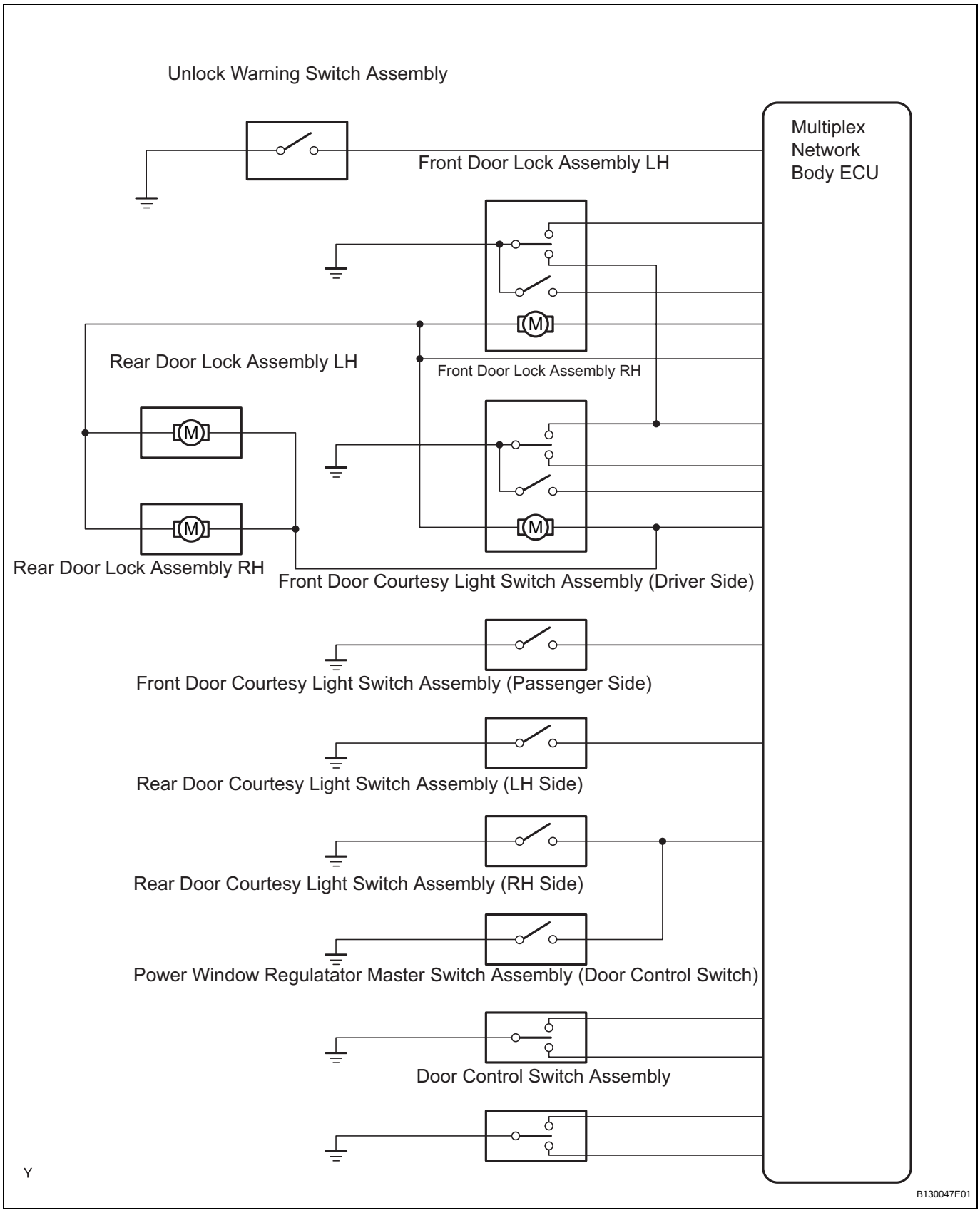

WIRELESS DOOR LOCK CONTROL SYSTEM

PARTS LOCATION

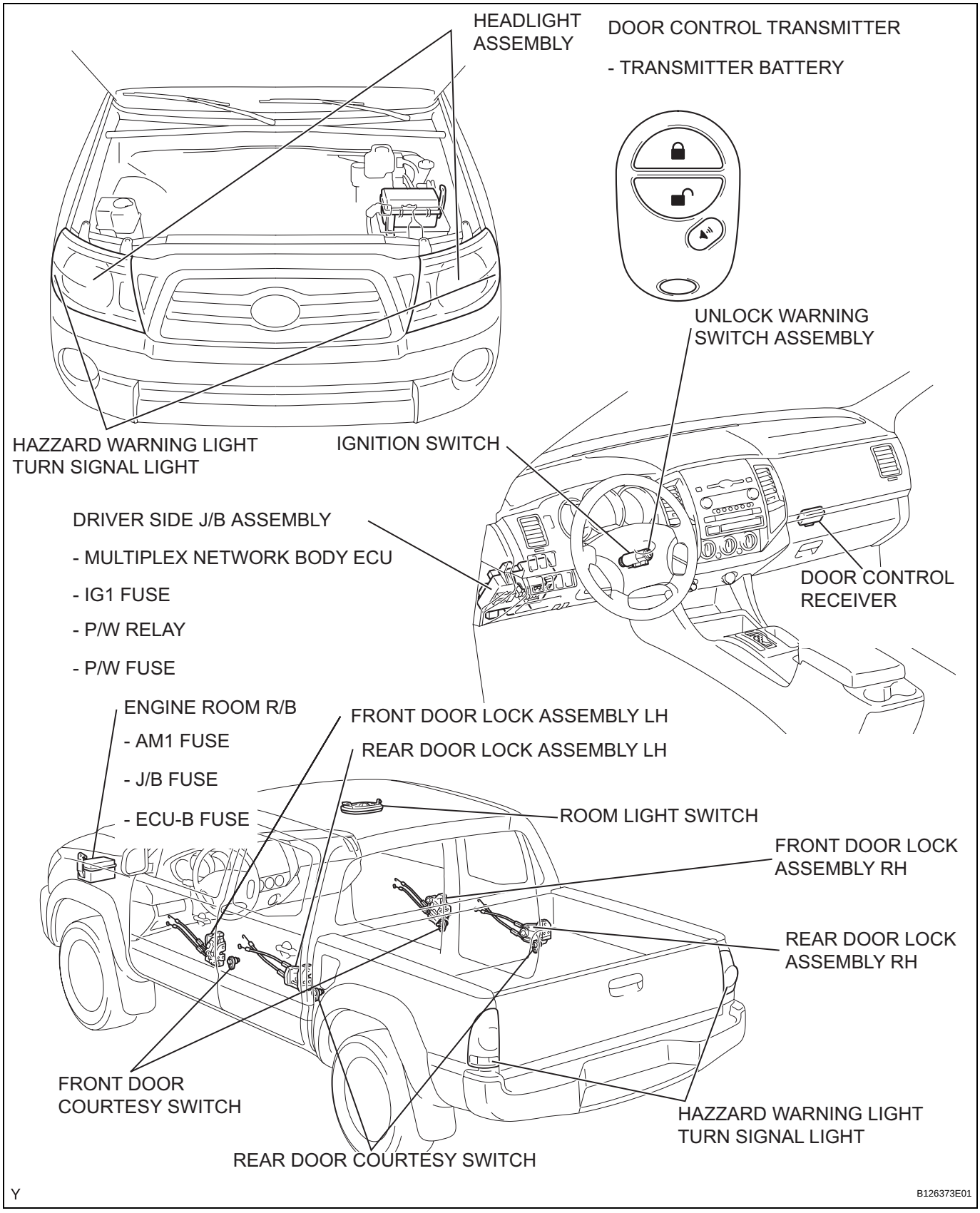

DL

SYSTEM DIAGRAM

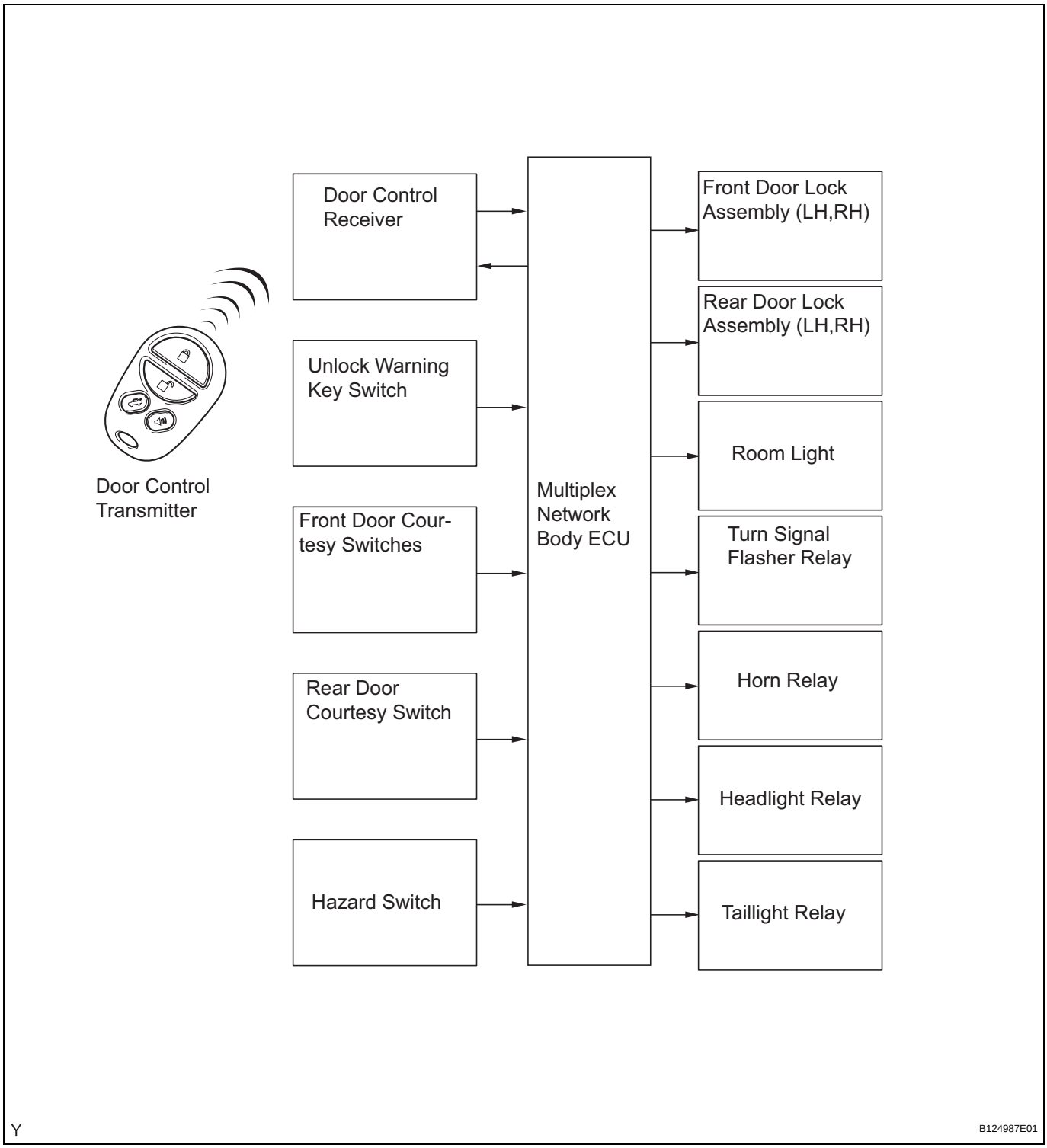

KEY REMINDER WARNING SYSTEM

PARTS LOCATION

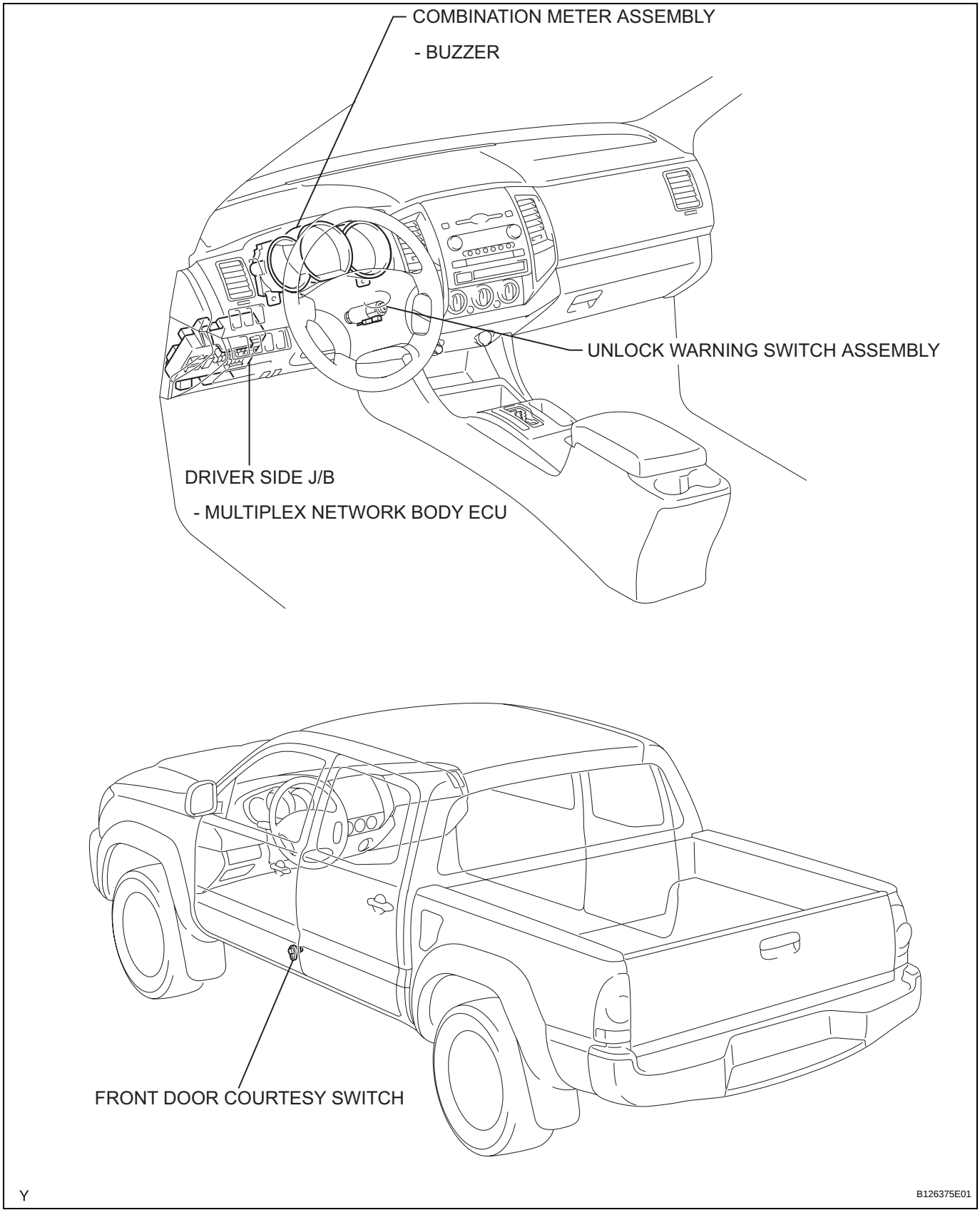

SYSTEM DIAGRAM

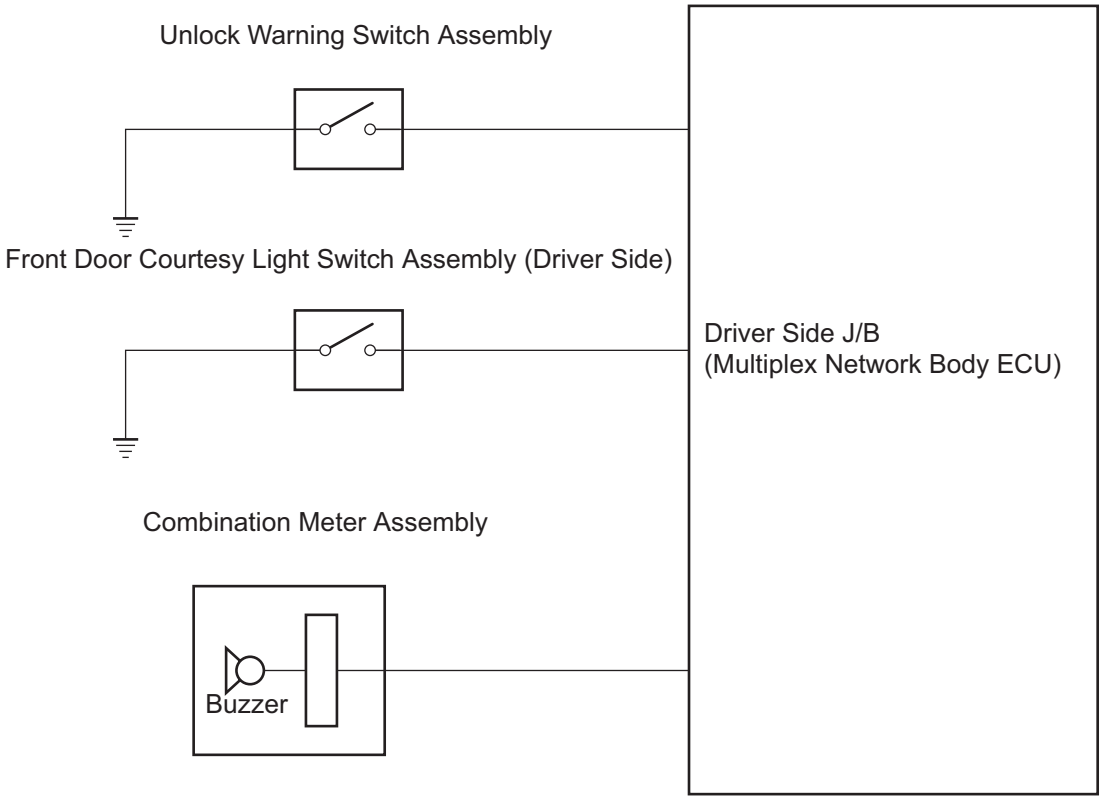

T

B125056E02

METER / GAUGE SYSTEM

PARTS LOCATION

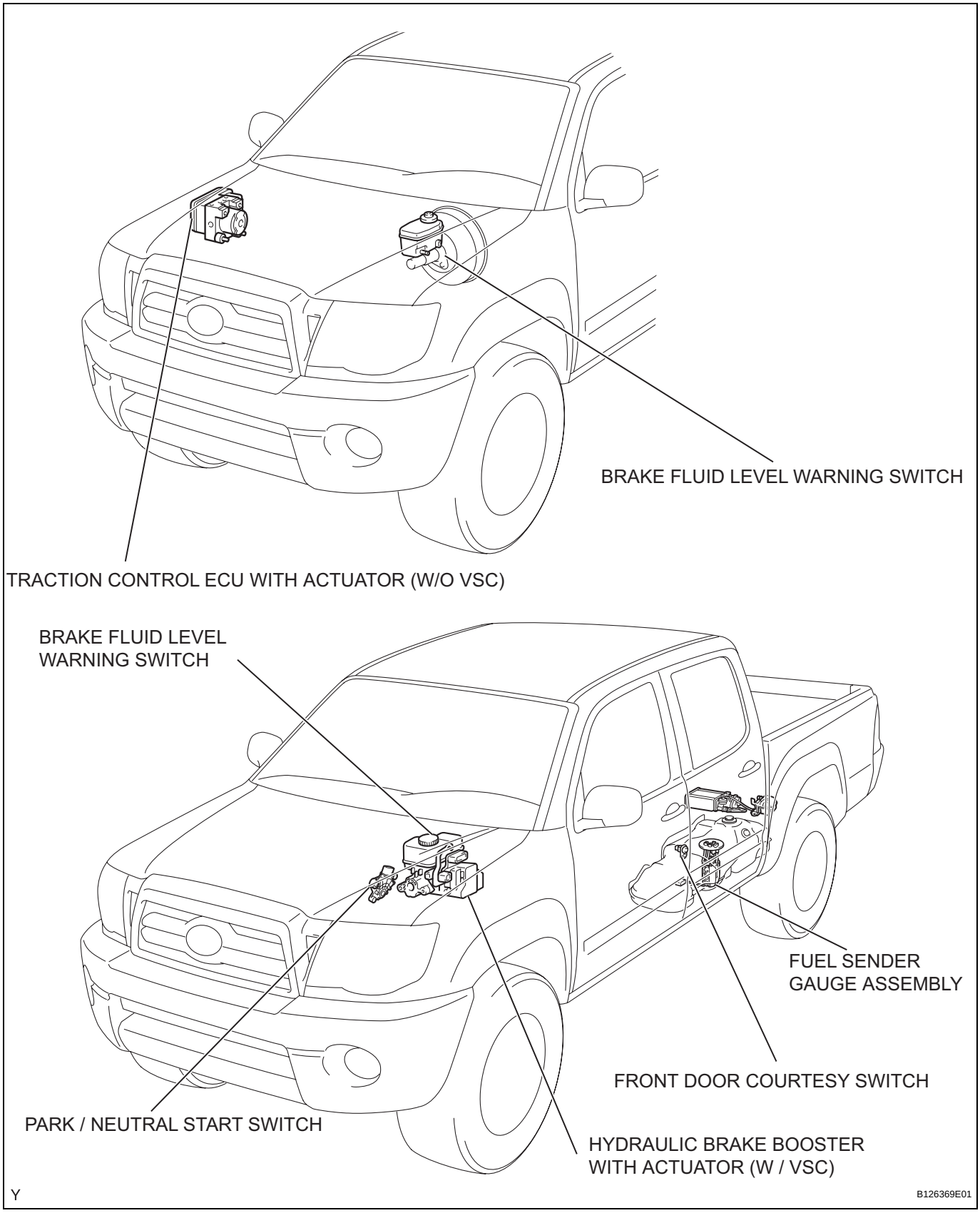

BENCH SEAT TYPE:

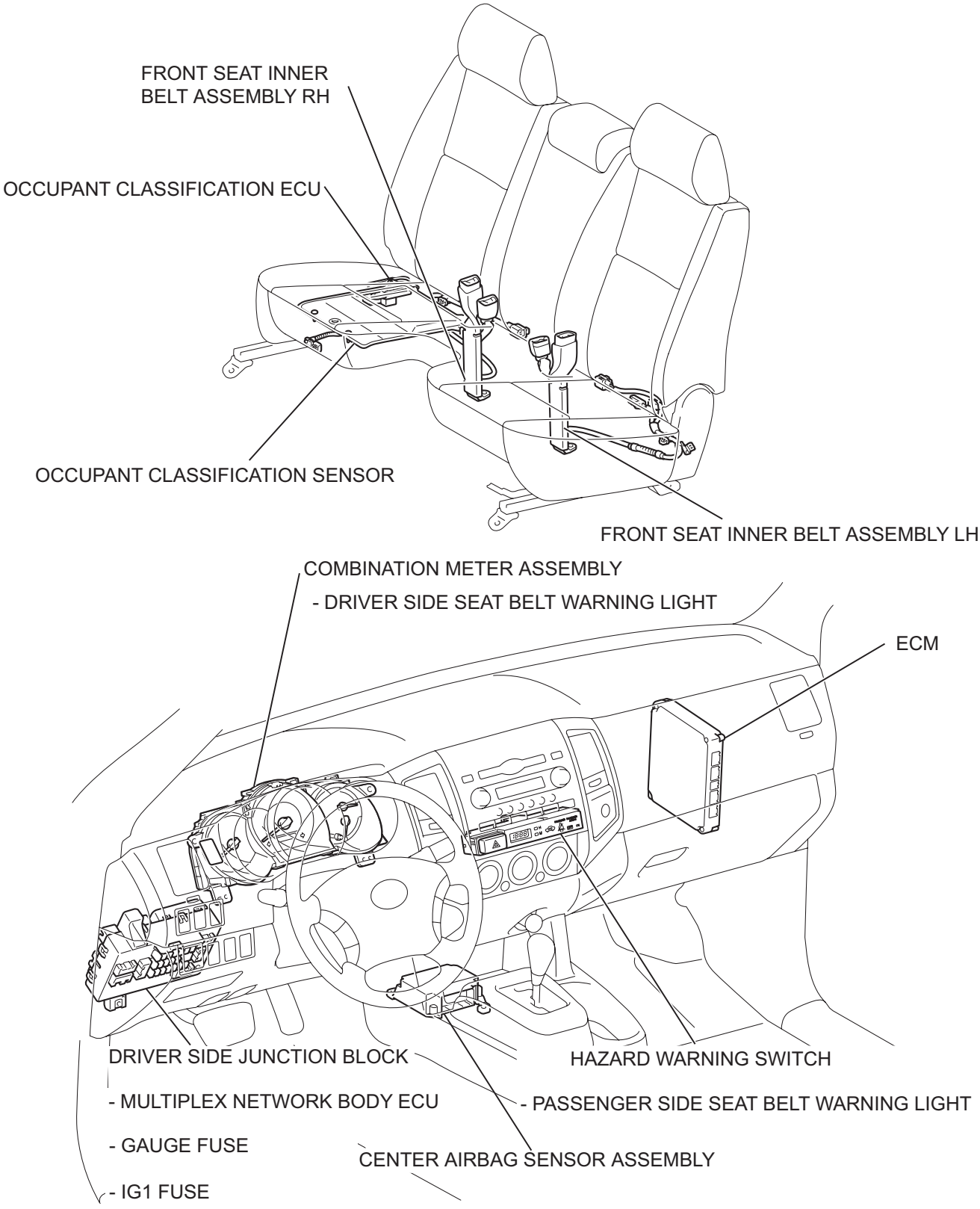

I102167E03

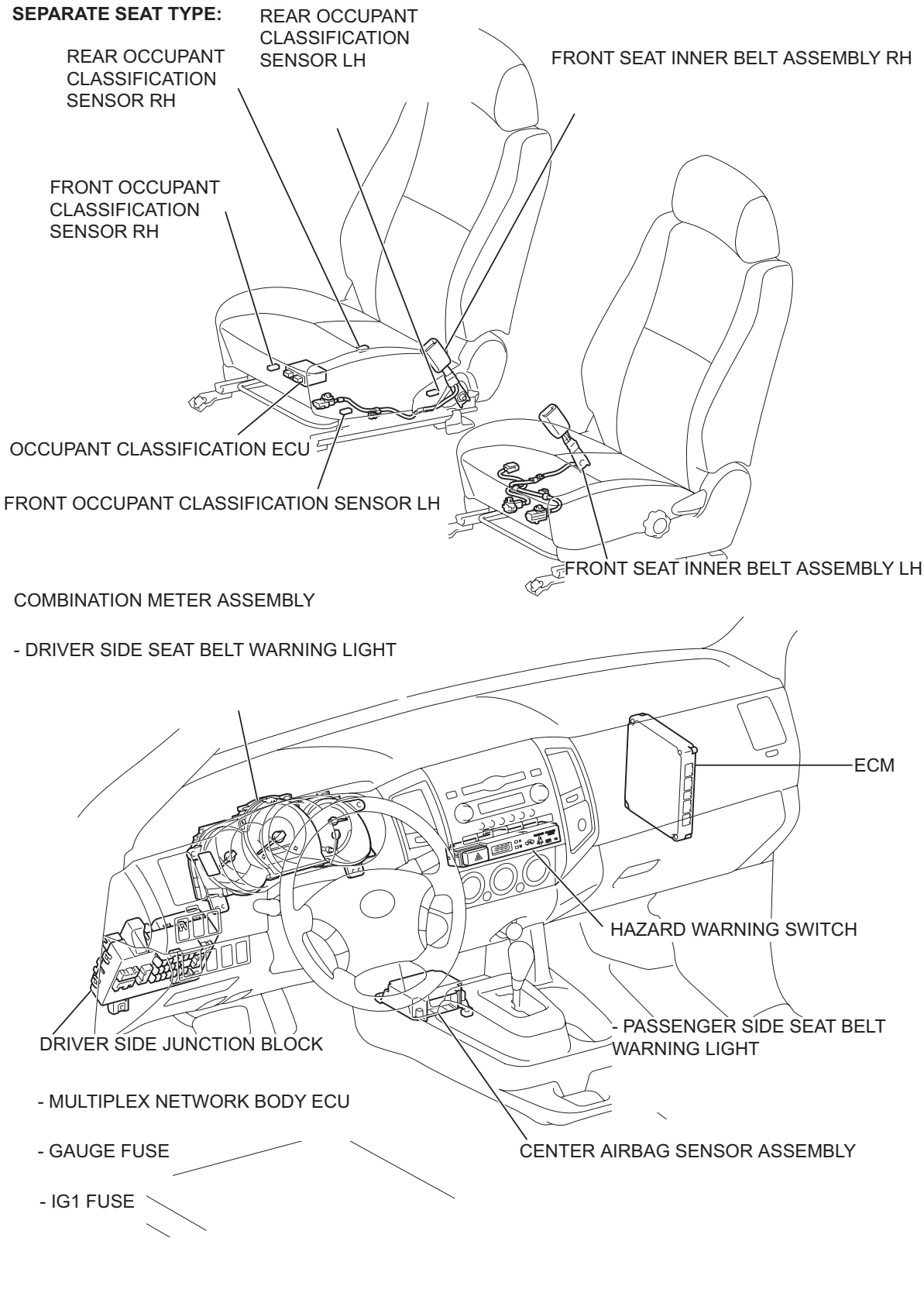
SEPARATE SEAT TYPE:
REAR OCCUPANT CLASSIFICATION SENSOR LH
REAR OCCUPANT CLASSIFICATION SENSOR RH
FRONT SEAT INNER BELT ASSEMBLY RH
FRONT OCCUPANT CLASSIFICATION SENSOR RH
OCCUPANT CLASSIFICATION ECU
FRONT OCCUPANT CLASSIFICATION SENSOR LH
FRONT SEAT INNER BELT ASSEMBLY LH
COMBINATION METER ASSEMBLY
- DRIVER SIDE SEAT BELT WARNING LIGHT
ECM
HAZARD WARNING SWITCH
- PASSENGER SIDE SEAT BELT WARNING LIGHT
DRIVER SIDE JUNCTION BLOCK
- MULTIPLEX NETWORK BODY ECU
- GAUGE FUSE
- IG1 FUSE
CENTER AIRBAG SENSOR ASSEMBLY
I102168E03

1GR-FE:

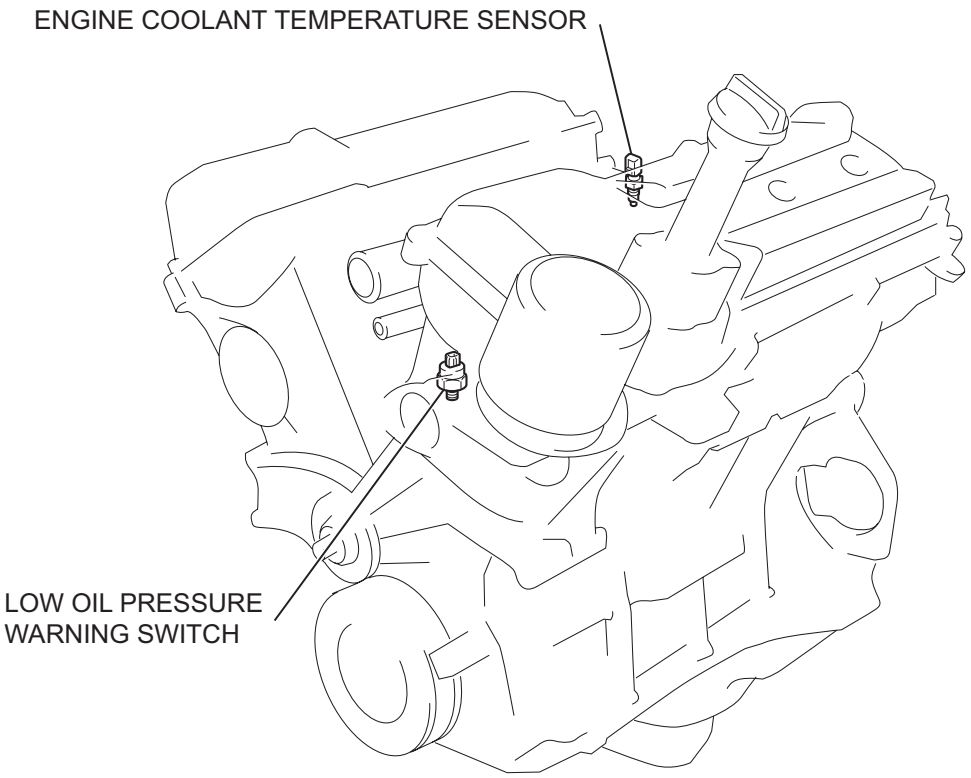

2TR-FE:

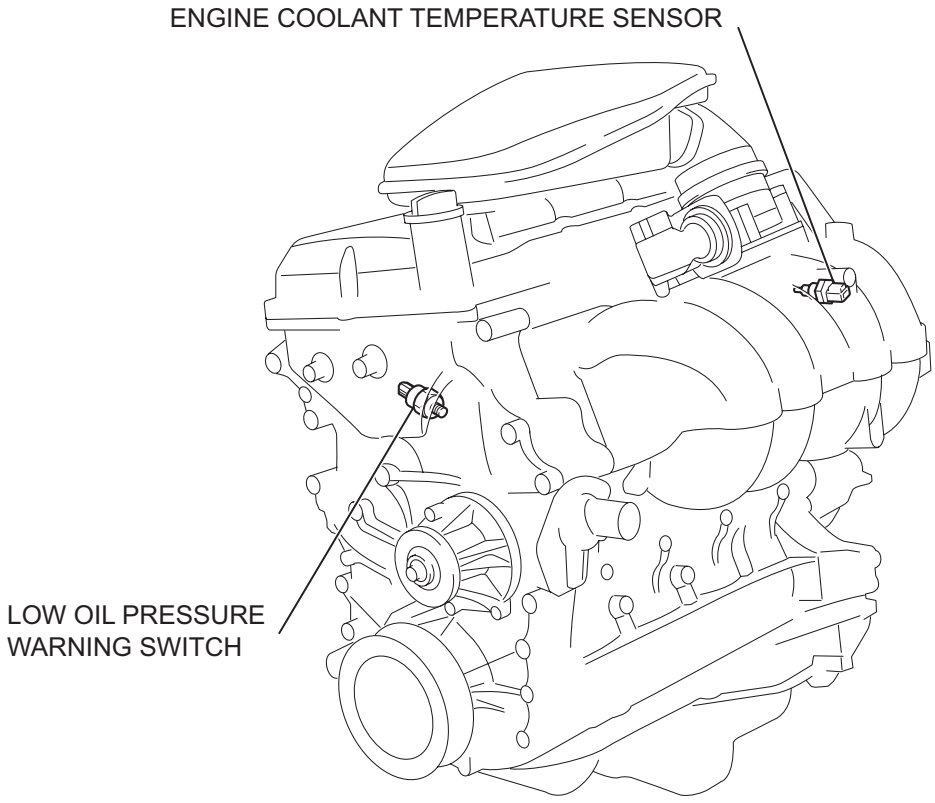

ME

Y

I045533E01

COMBINATION METER

COMPONENTS

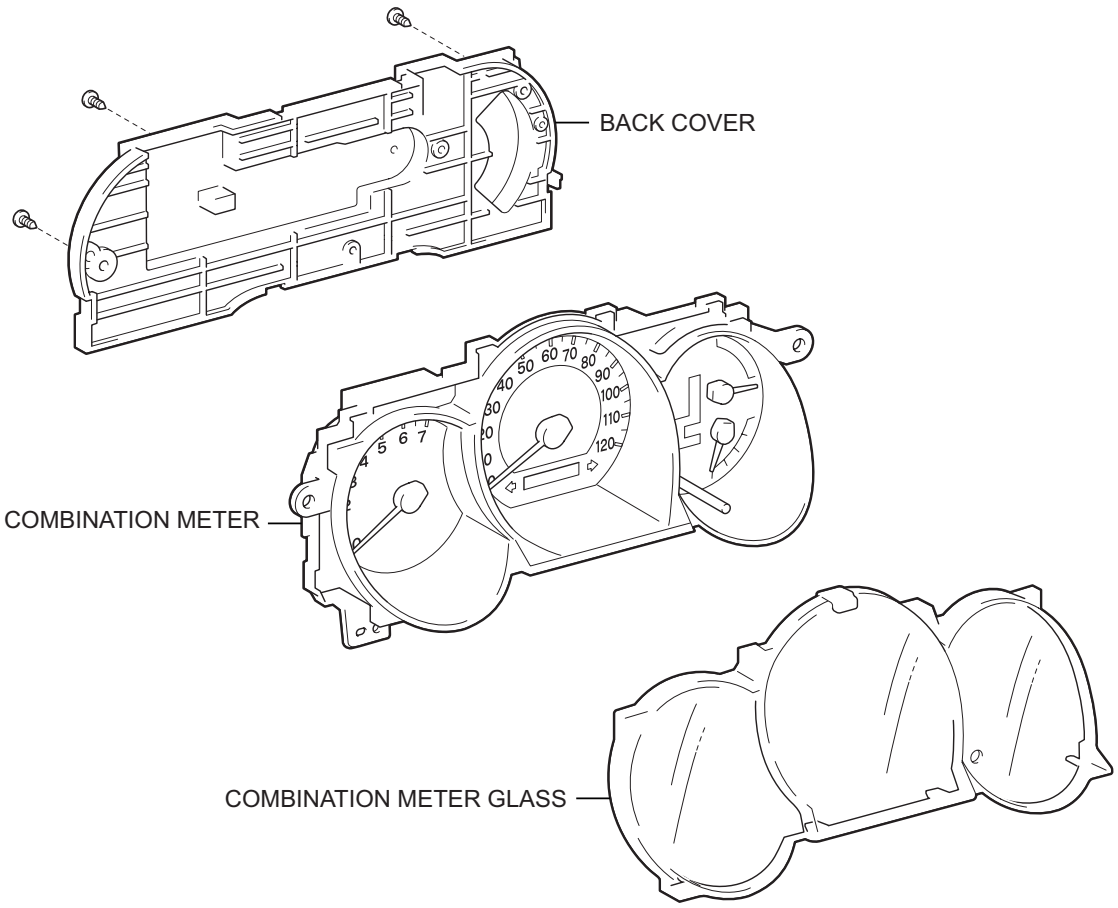

P

B085803E01

REMOVAL

1. **DISCONNECT CABLE FROM NEGATIVE BATTERY TERMINAL**
2. **REMOVE FRONT FLOOR FOOTREST (See page IR-1)**
3. **REMOVE FRONT DOOR SCUFF PLATE LH (for Regular Cab) (See page IR-40)**
4. **REMOVE FRONT DOOR SCUFF PLATE LH (for Access Cab) (See page IR-61)**
5. **REMOVE FRONT DOOR SCUFF PLATE LH (for Double Cab) (See page IR-12)**
6. **REMOVE COWL SIDE TRIM BOARD LH (for Regular Cab) (See page IR-40)**
7. **REMOVE COWL SIDE TRIM BOARD LH (for Access Cab) (See page IR-61)**
8. **REMOVE COWL SIDE TRIM BOARD LH (for Double Cab) (See page IR-12)**
9. **REMOVE INSTRUMENT PANEL UNDER TRAY (for Pedal Type Parking Brake) (See page IP-9)**
10. **REMOVE INSTRUMENT PANEL HOLE COVER (for Lever Type Parking Brake) (See page IP-9)**
11. **SEPARATE HOOD LOCK CONTROL LEVER SUB-ASSEMBLY (See page ED-3)**
12. **REMOVE LOWER NO. 1 INSTRUMENT PANEL FINISH PANEL (See page IP-12)**
13. **REMOVE INSTRUMENT CLUSTER FINISH PANEL SUB-ASSEMBLY (See page IP-12)**
14. **REMOVE COMBINATION METER ASSEMBLY**
    (a) Remove the 4 screws and the combination meter assembly.
    (b) Disconnect the 2 connectors.

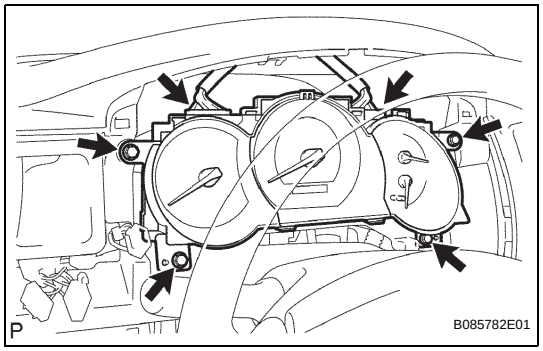

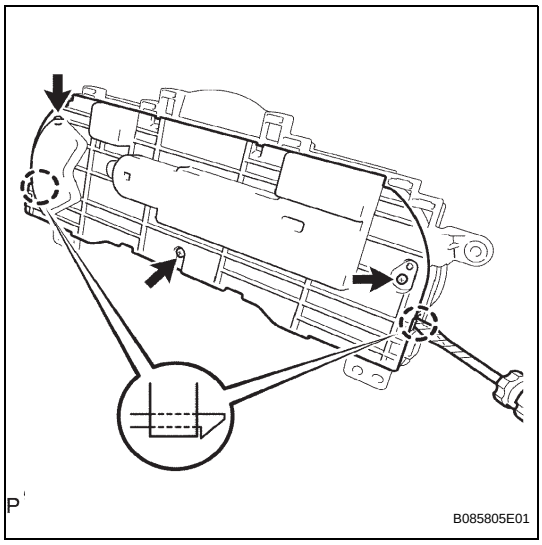

DISASSEMBLY

1. REMOVE BACK COVER

(a) Remove the 3 screws.

(b) Using a screwdriver, disengage the 2 claws and remove the back cover.
HINT:
Tape up the screwdriver tip before use.

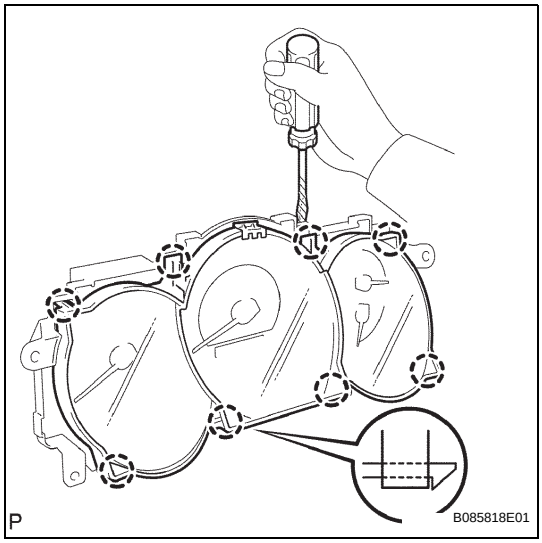

2. REMOVE COMBINATION METER GLASS

(a) Using a screwdriver, disengage the 8 claws and remove the combination meter glass.
HINT:
Tape up the screwdriver tip before use.

REASSEMBLY

1. INSTALL COMBINATION METER GLASS

(a) Engage the 8 claws and install the combination meter glass.

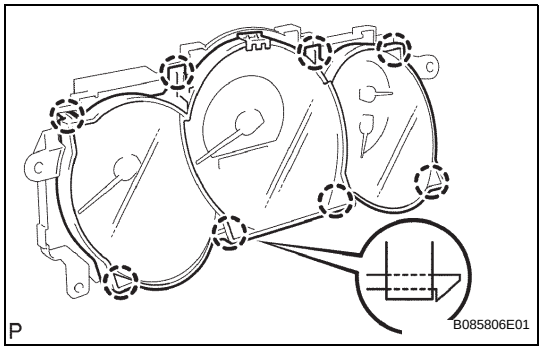

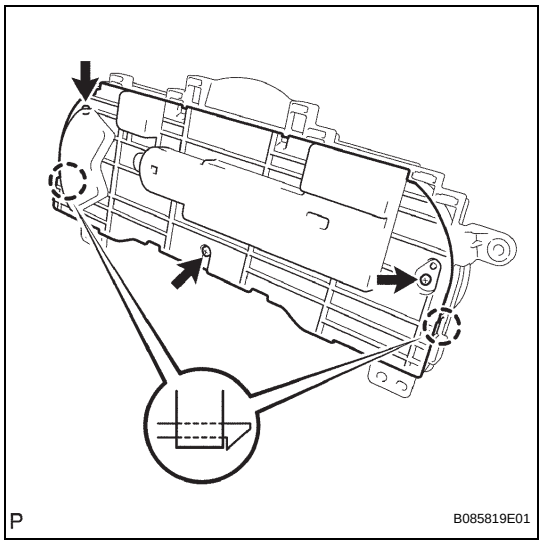

2. **REMOVE BACK COVER**
   (a) Engage the 2 claws and install the back cover.
   (b) Install the 3 screws.

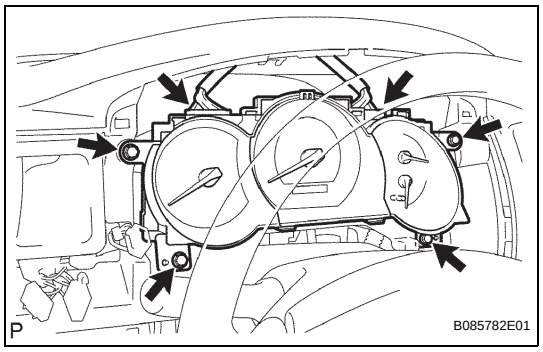

INSTALLATION

1. **INSTALL COMBINATION METER ASSEMBLY**
   (a) Connect the 2 connectors.
   (b) Install the combination meter assembly with the 4 screws.
   Torque: 7.0 N*m (71 kgf*cm, 62 in.*lbf)
2. **INSTALL INSTRUMENT CLUSTER FINISH PANEL SUB-ASSEMBLY (See page IP-21)**
3. **INSTALL LOWER NO. 1 INSTRUMENT PANEL FINISH PANEL (See page IP-22)**
4. **CONNECT HOOD LOCK CONTROL LEVER SUB-ASSEMBLY (See page ED-8)**
5. **INSTALL INSTRUMENT PANEL HOLE COVER (for Lever Type Parking Brake) (See page IP-25)**
6. **INSTALL INSTRUMENT PANEL UNDER TRAY (for Pedal Type Parking Brake) (See page IP-25)**
7. **INSTALL COWL SIDE TRIM BOARD LH (for Regular Cab) (See page IR-52)**
8. **INSTALL COWL SIDE TRIM BOARD LH (for Access Cab) (See page IR-75)**
9. **INSTALL COWL SIDE TRIM BOARD LH (for Double Cab) (See page IR-29)**
10. **INSTALL FRONT DOOR SCUFF PLATE LH (for Regular Cab) (See page IR-52)**
11. **INSTALL FRONT DOOR SCUFF PLATE LH (for Access Cab) (See page IR-75)**
12. **INSTALL FRONT DOOR SCUFF PLATE LH (for Double Cab) (See page IR-29)**
13. **INSTALL FRONT FLOOR FOOTREST (See page IR-1)**
14. **CONNECT CABLE TO NEGATIVE BATTERY TERMINAL**
    Torque: 3.9 N*m (40 kgf*cm, 35 in.*lbf)

AUDIO AND VISUAL SYSTEM

PARTS LOCATION

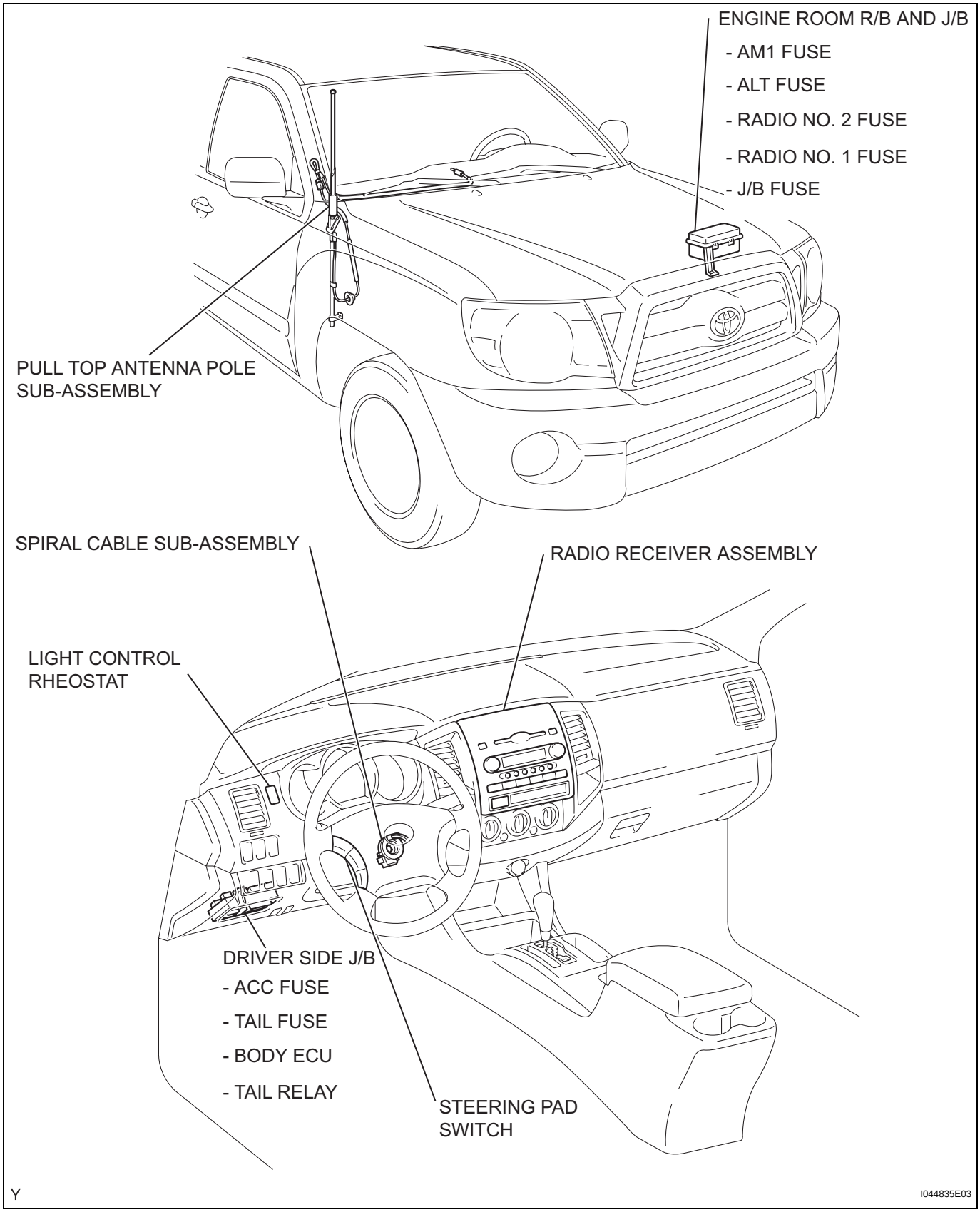

AV

REGULAR CAB:

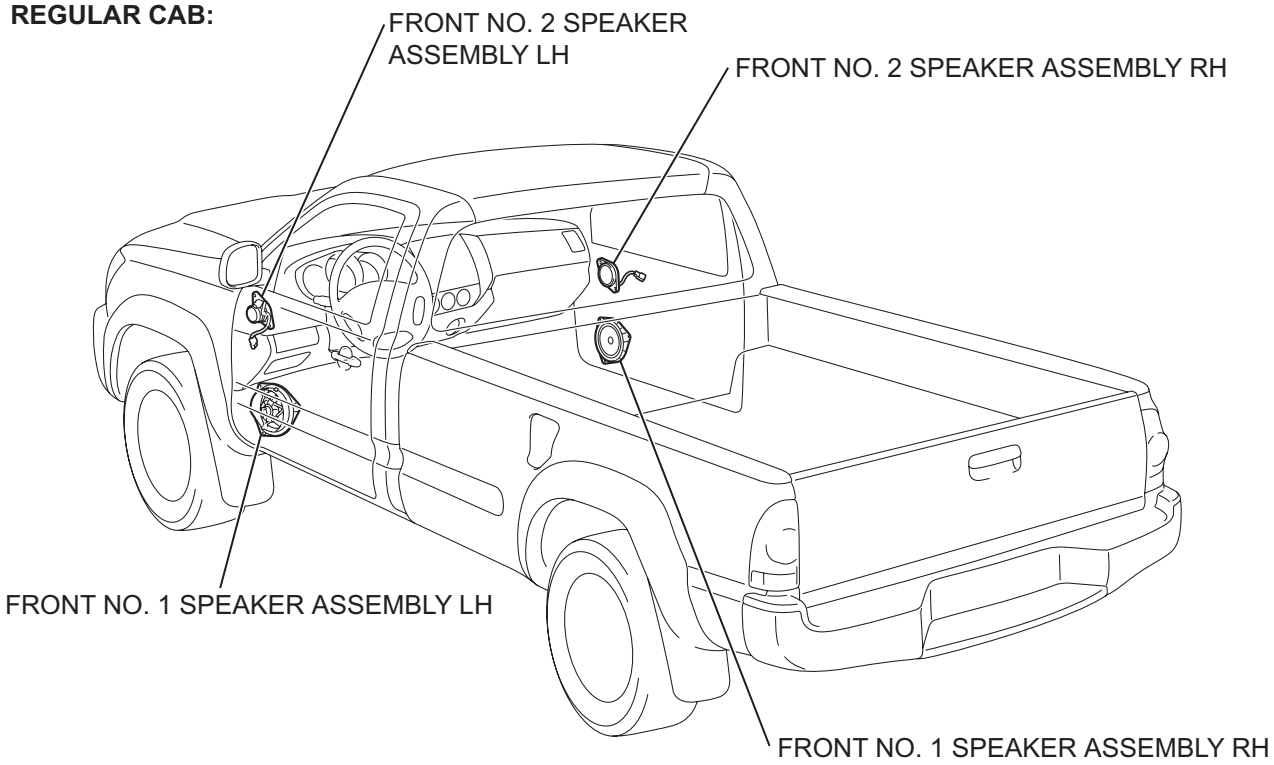

ACCESS CAB:

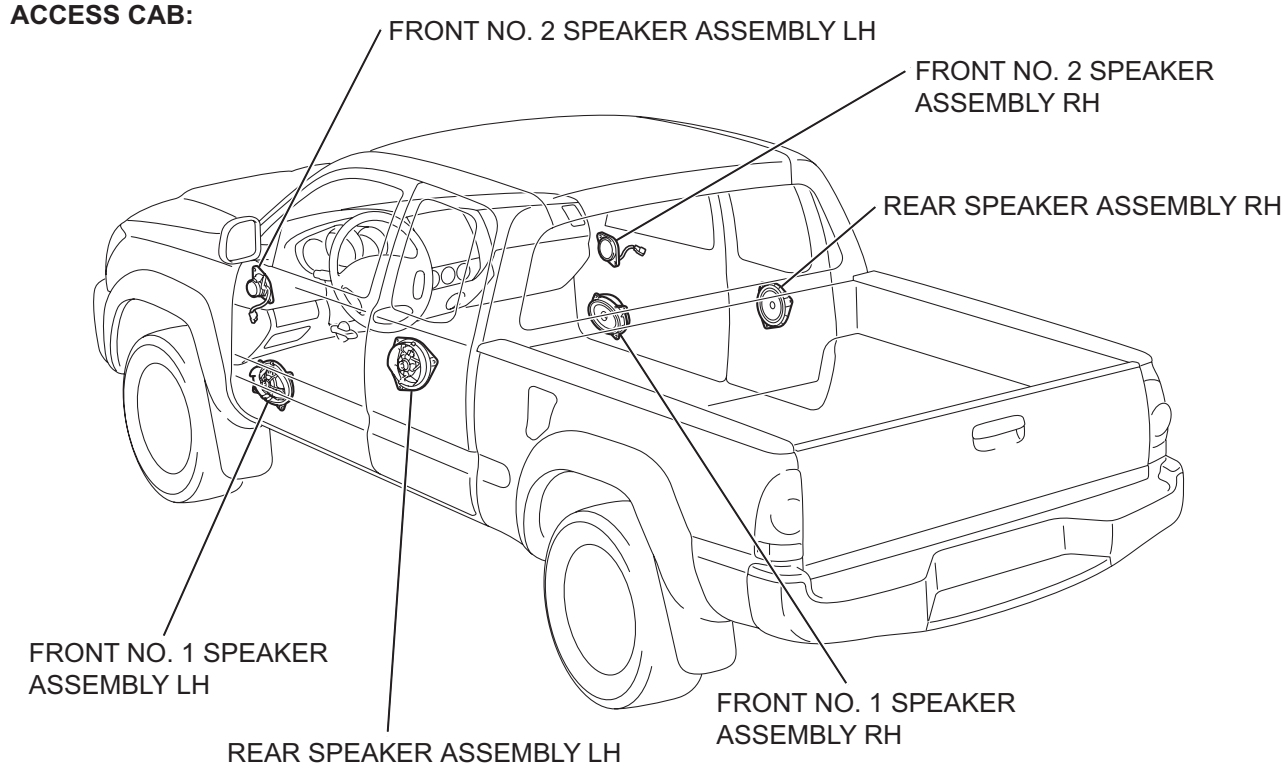

Y

C124795E01

DOUBLE CAB:

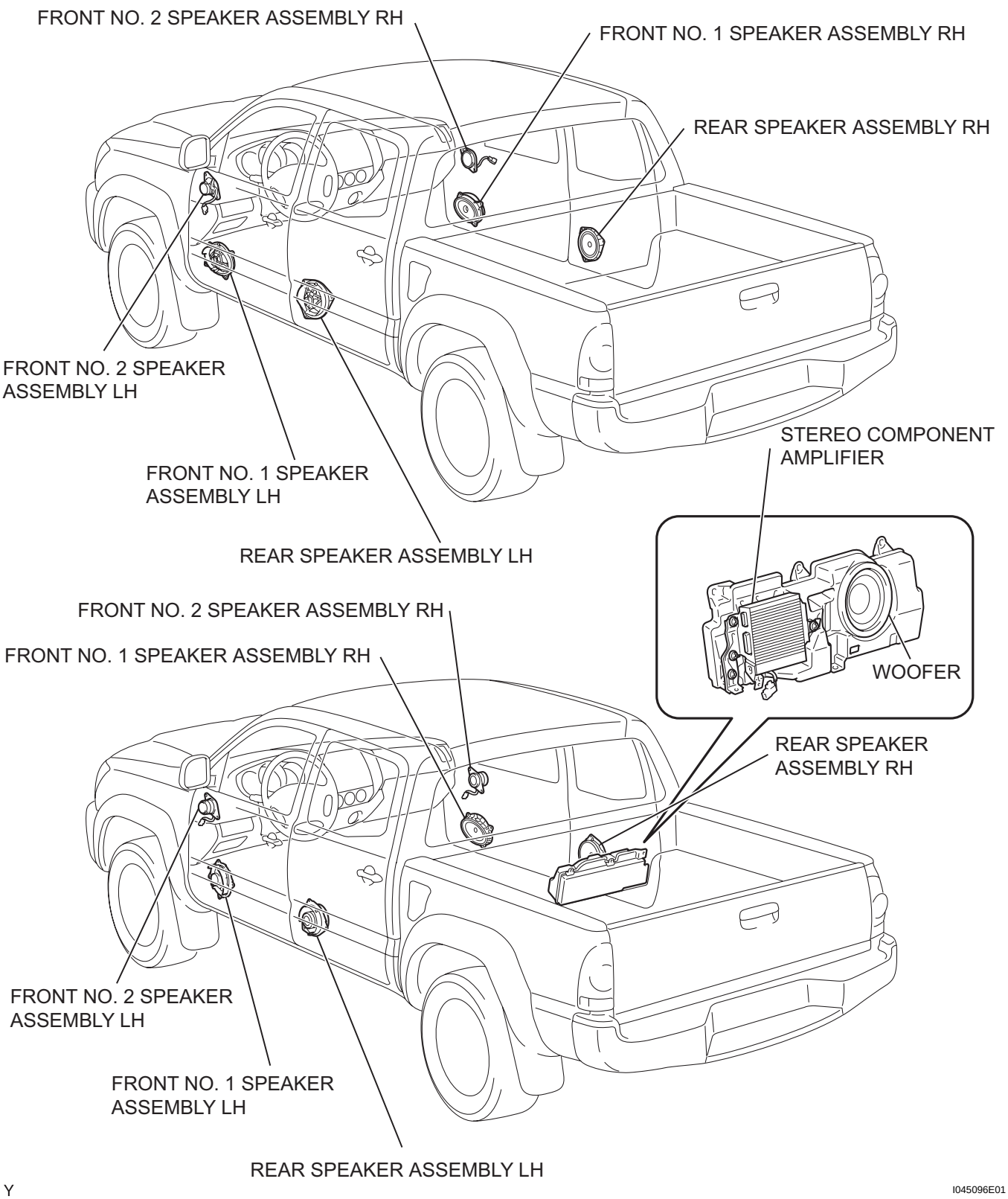

Y

I045096E01

RADIO RECEIVER

COMPONENTS

AV

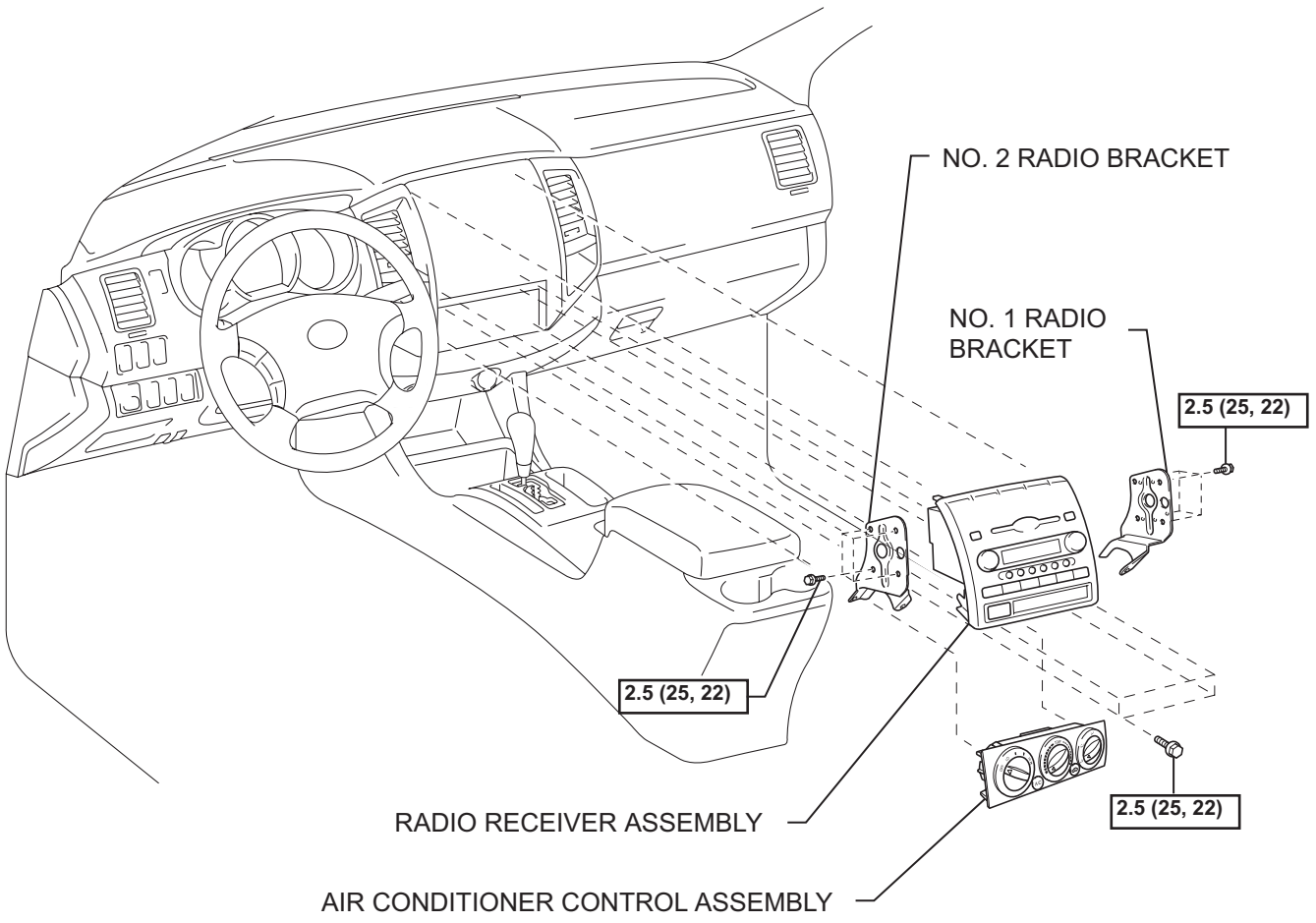

N*m (kgf*cm, ft*lbf) : Specified torque

Y

E123175E01

REMOVAL

1. **DISCONNECT CABLE FROM NEGATIVE BATTERY TERMINAL**

2. **REMOVE AIR CONDITIONING CONTROL ASSEMBLY (See page AC-90)**

3. **REMOVE RADIO RECEIVER ASSEMBLY**
   (a) Remove the 4 bolts.
   (b) Disconnect the connector and remove the radio receiver assembly with bracket.

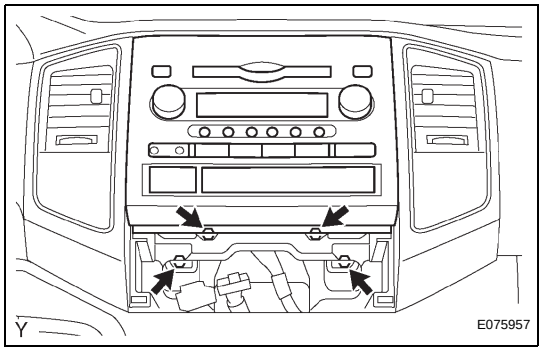

4. **REMOVE NO. 1 RADIO BRACKET**
   (a) Remove the 4 bolts and the No.1 radio bracket.

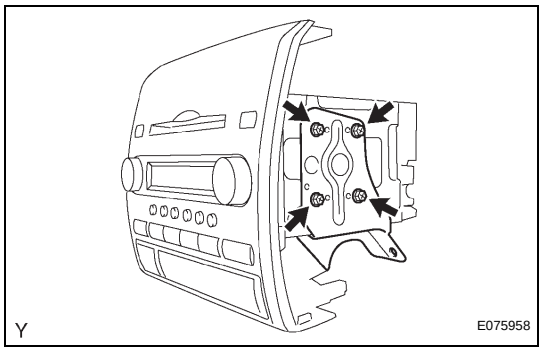

5. **REMOVE NO. 2 RADIO BRACKET**
   (a) Remove the 4 bolts and the No. 2 radio bracket.

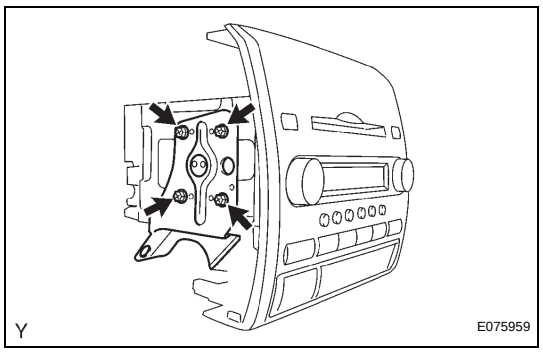

INSTALLATION

1. **INSTALL NO. 2 RADIO BRACKET**
   (a) Install the No. 2 radio bracket with the 4 bolts.
   Torque: 2.5 N*m (25 kgf*cm, 22 in.*lbf)

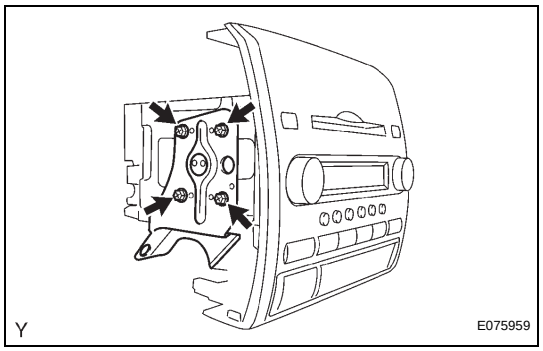

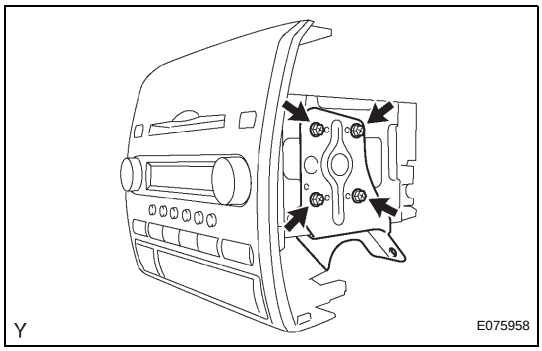

2. INSTALL NO. 1 RADIO BRACKET

(a) Install the No. 1 radio bracket with the 4 bolts.
Torque: 2.5 N*m (25 kgf*cm, 22 in.*lbf)

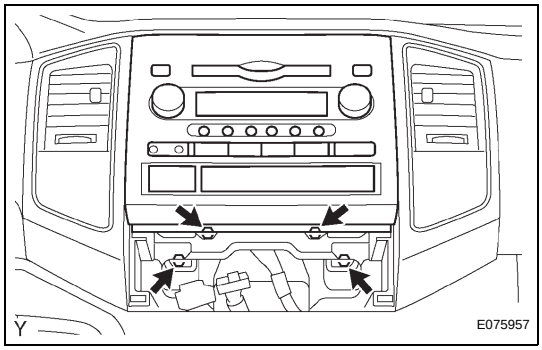

3. INSTALL RADIO RECEIVER ASSEMBLY

(a) Connect the connector.
(b) Install the radio receiver assembly with bracket with the 4 bolts.
Torque: 2.5 N*m (25 kgf*cm, 22 in.*lbf)

4. INSTALL AIR CONDITIONING CONTROL ASSEMBLY (See page AC-96)

5. CONNECT CABLE TO NEGATIVE BATTERY TERMINAL
Torque: 3.9 N*m (40 kgf*cm, 35 in.*lbf)

RADIO SETTING CONDENSER (for 1GR-FE)

COMPONENTS

AV

RADIO SETTING CONDENSER

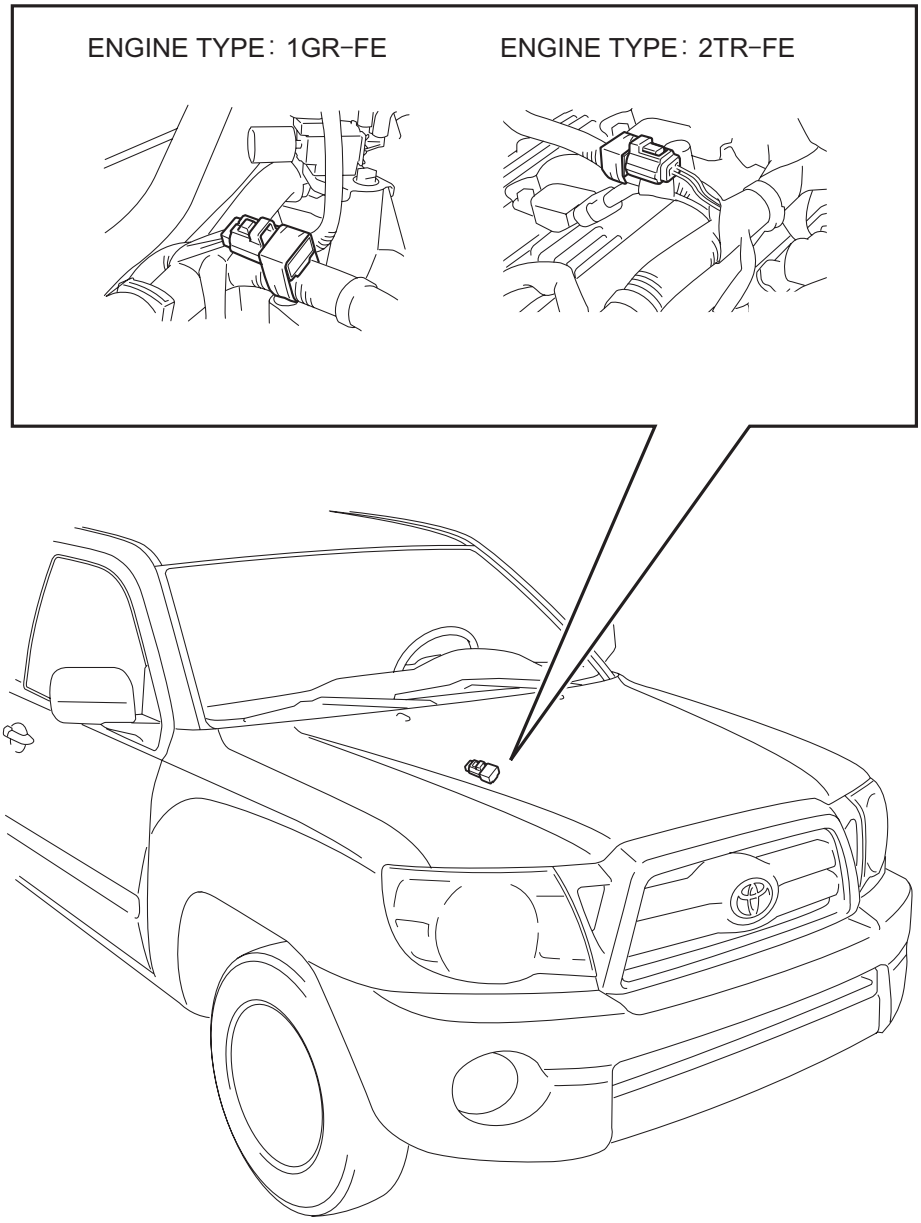

Y

E123180E01

AV

REMOVAL

1. **DISCONNECT CABLE FROM NEGATIVE BATTERY TERMINAL**
2. **REMOVE V-BANK COVER (See page ES-414)**
3. **REMOVE AIR CLEANER ASSEMBLY (See page ES-415)**
4. **REMOVE RADIO SETTING CONDENSER**
   (a) Disconnect the connector.
   (b) Remove the tape and the radio setting condenser.

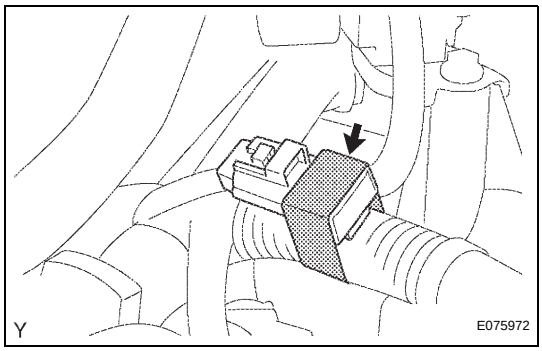

INSTALLATION

1. **INSTALL RADIO SETTING CONDENSER**
   (a) Disconnect the connector.
   (b) Wind new vinyl tape around the hose and install the radio setting condenser.
2. **INSTALL AIR CLEANER ASSEMBLY (See page ES-416)**
3. **INSTALL V-BANK COVER (See page ES-416)**
4. **CONNECT CABLE TO NEGATIVE BATTERY TERMINAL**
   Torque: 3.9 N*m (40 kgf*cm, 35 in.*lbf)

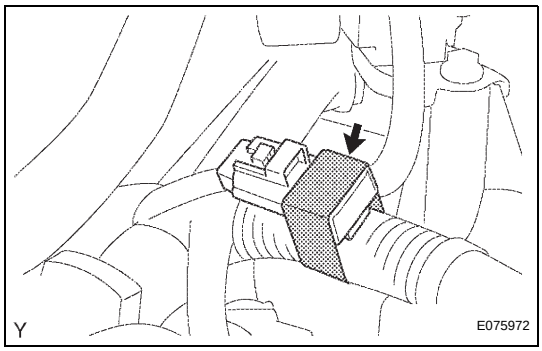

RADIO SETTING CONDENSER (for 2TR-FE)

COMPONENTS

RADIO SETTING CONDENSER

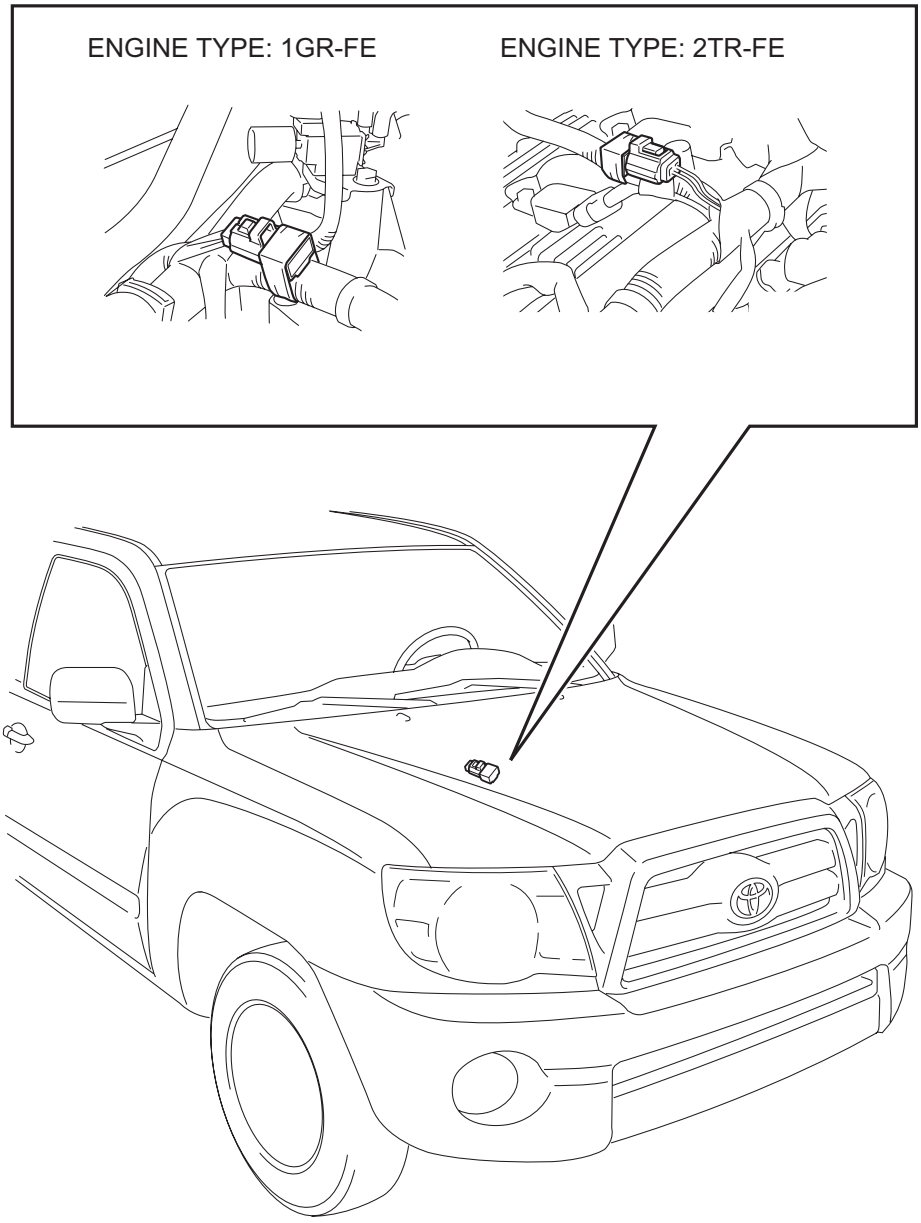

Y

E123180E02

AV

REMOVAL

1. **DISCONNECT CABLE FROM NEGATIVE BATTERY TERMINAL**
2. **REMOVE AIR CLEANER ASSEMBLY (See page ES-452)**
3. **REMOVE RADIO SETTING CONDENSER**
   (a) Disconnect the connector.
   (b) Remove the tape and the radio setting condenser.

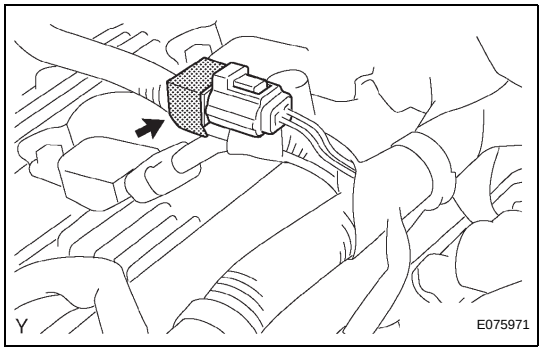

INSTALLATION

1. **INSTALL RADIO SETTING CONDENSER**
   (a) Disconnect the connector.
   (b) Remove the tape and the radio setting condenser.
2. **INSTALL AIR CLEANER ASSEMBLY (See page ES-455)**
3. **CONNECT CABLE TO NEGATIVE BATTERY TERMINAL**
   Torque: 3.9 N*m (40 kgf*cm, 35 in.*lbf)

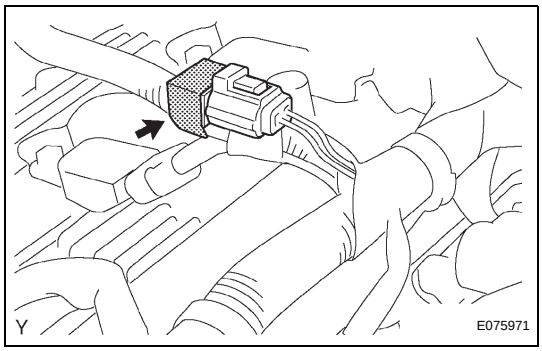

FRONT NO. 1 SPEAKER (for Regular Cab)

COMPONENTS

REGULAR CAB:

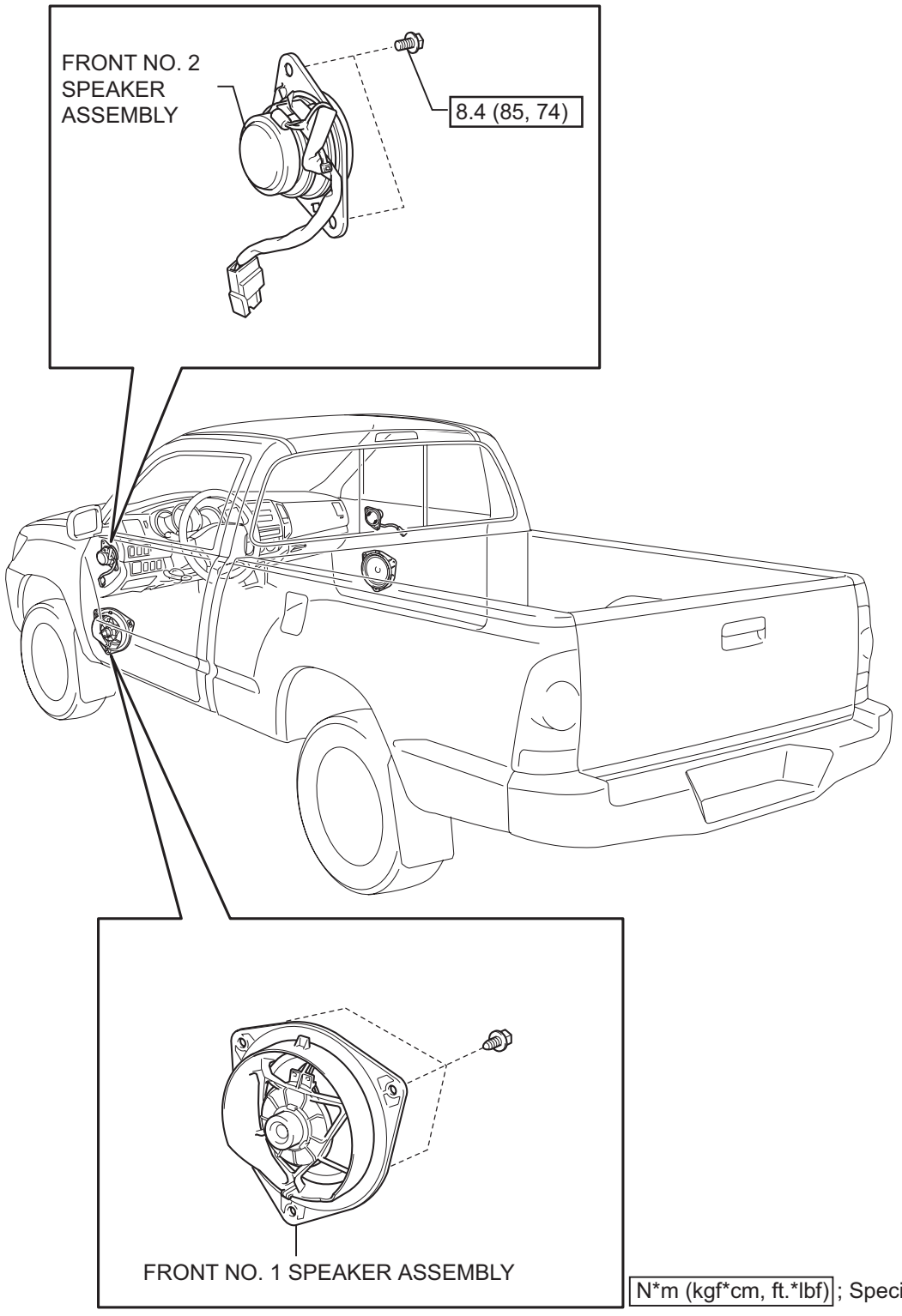

N*m (kgf*cm, ft.*lbf): Specified torque

Y

E121434E01

AV

REMOVAL

HINT:

- Use the same procedures for the RH and LH sides.
- The procedures listed below are for the LH side.

1. **DISCONNECT CABLE FROM NEGATIVE BATTERY TERMINAL**
2. **REMOVE FRONT DOOR WINDOW REGULATOR HANDLE ASSEMBLY (See page ED-34)**
3. **REMOVE FRONT DOOR LOWER FRAME BRACKET GARNISH LH (See page ED-34)**
4. **REMOVE FRONT DOOR TRIM PANEL ASSEMBLY LH (See page ED-35)**
5. **REMOVE FRONT NO. 1 SPEAKER ASSEMBLY**
   (a) Disconnect the connector.
   (b) Remove the 3 screws and the front No. 1 speaker assembly.

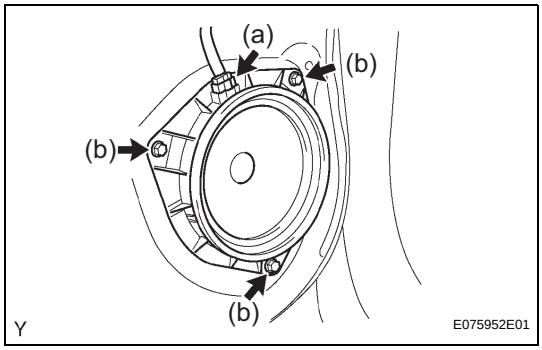

FRONT NO. 1 SPEAKER (except Regular Cab)

COMPONENTS

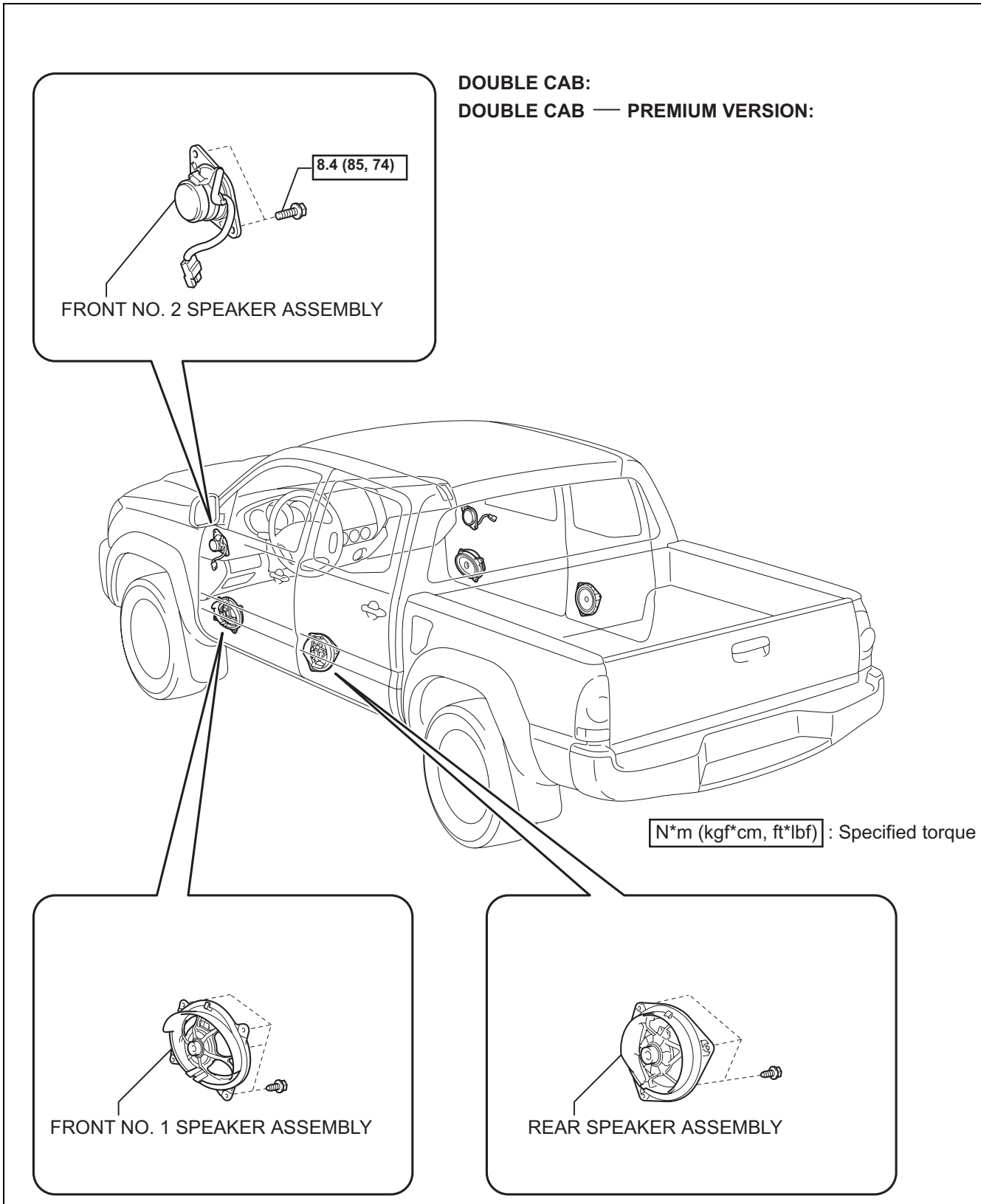

AV

ACCESS CAB:

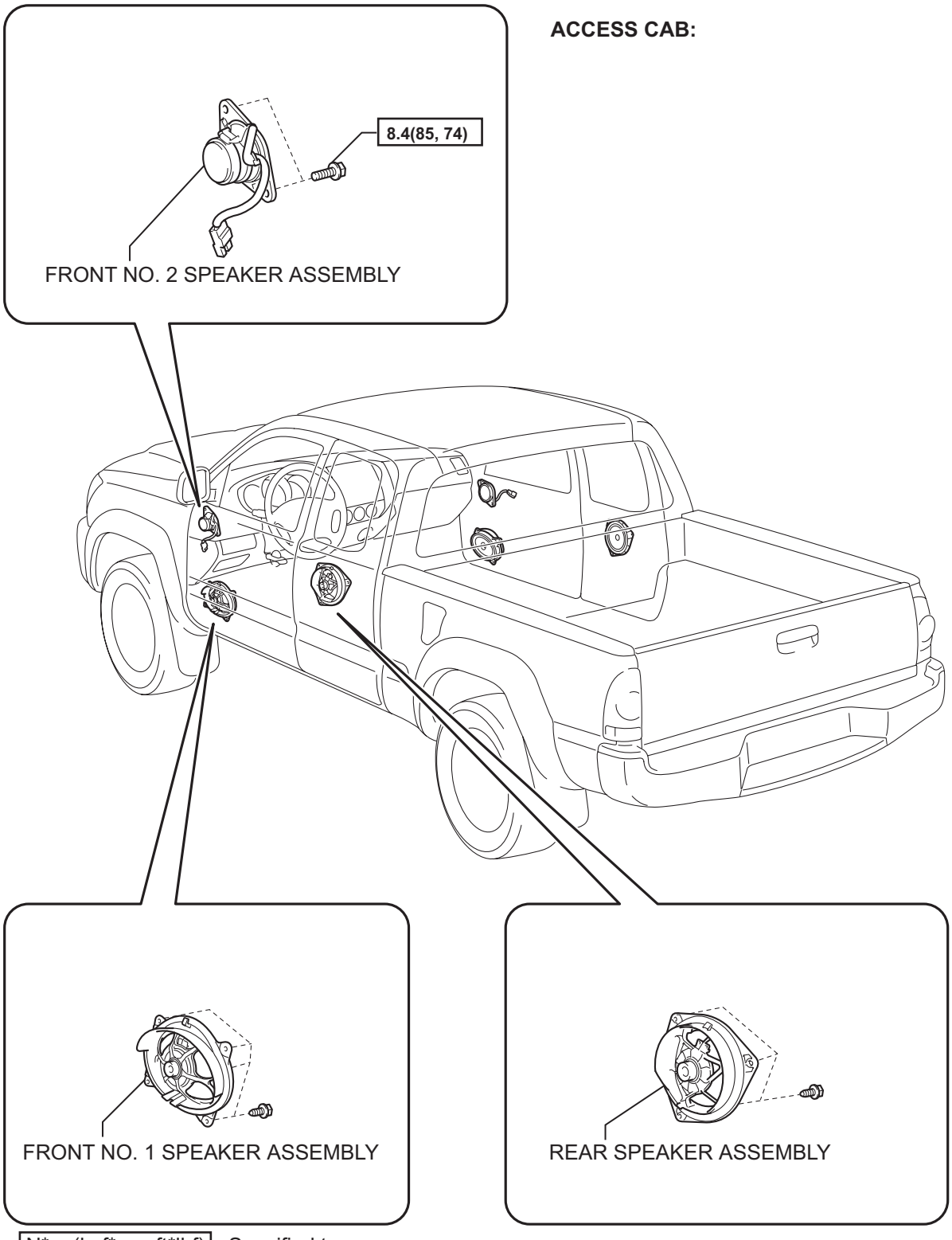

N*m (kgf*cm, ft*lbf) : Specified torque

Y

E123183E01

FRONT NO. 2 SPEAKER

COMPONENTS

REGULAR CAB:

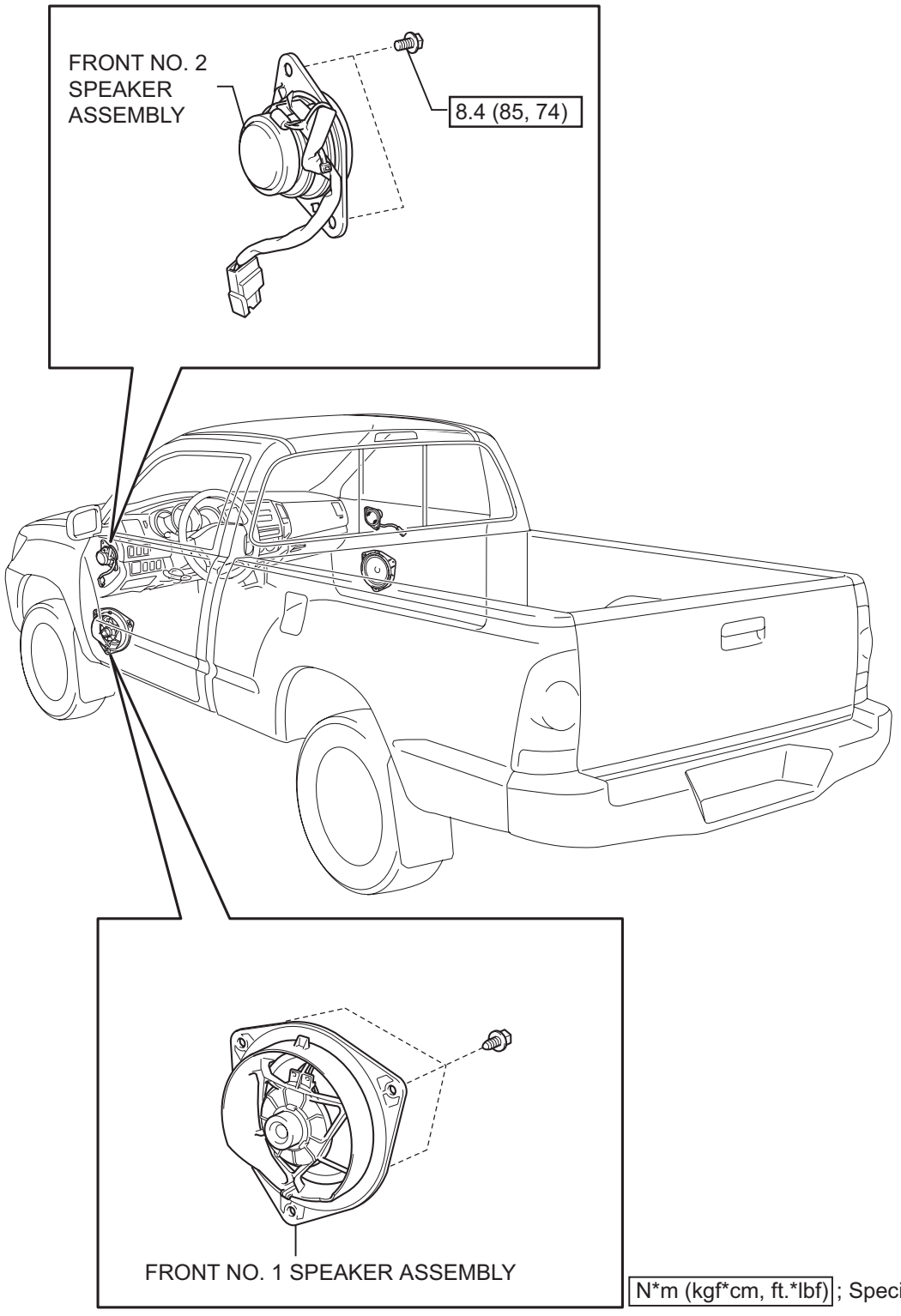

N*m (kgf*cm, ft.*lbf); Specified torque

Y

E121434E03

AV

DOUBLE CAB:
DOUBLE CAB — PREMIUM VERSION:

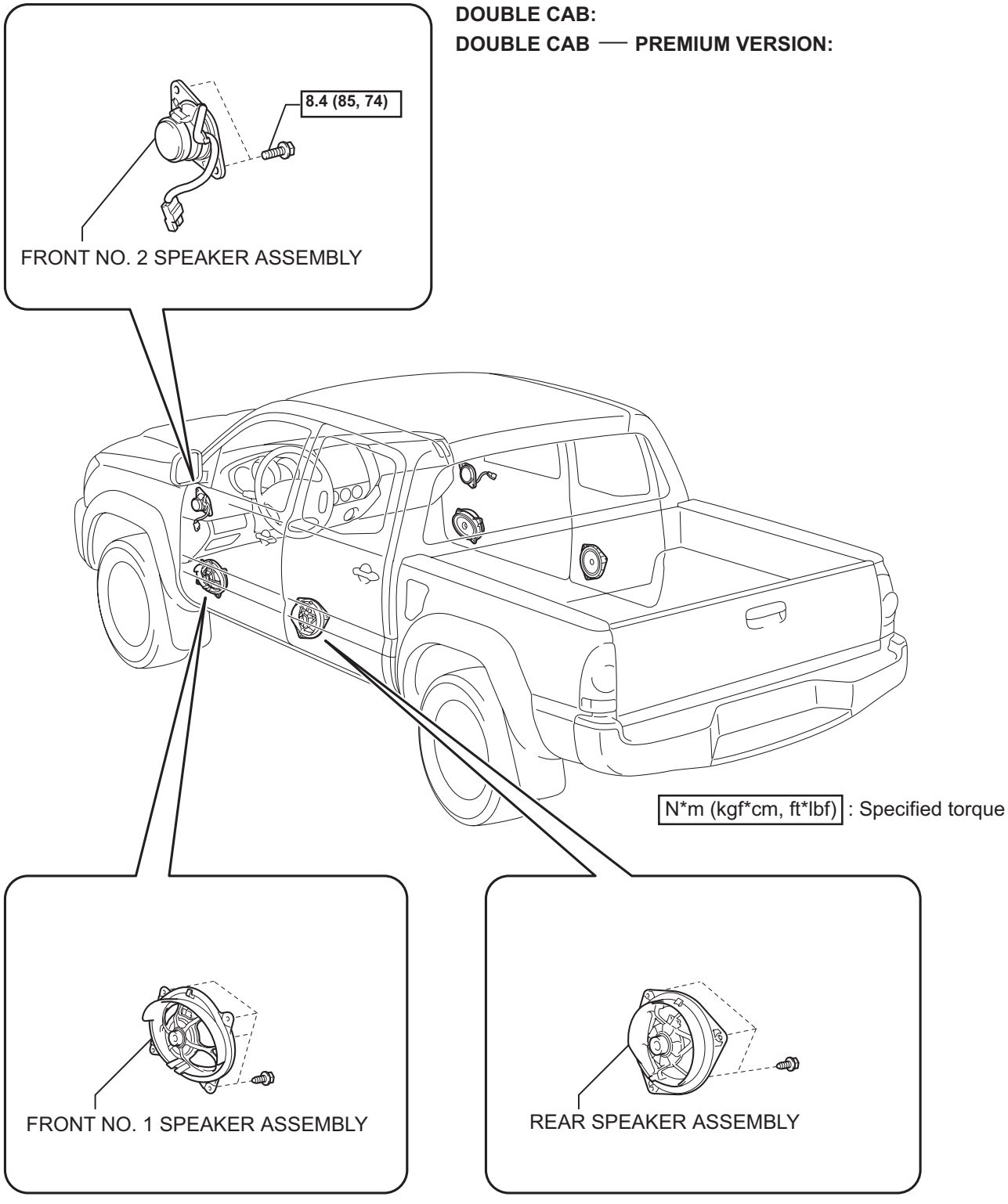

Y

E123184E02

AV

ACCESS CAB:

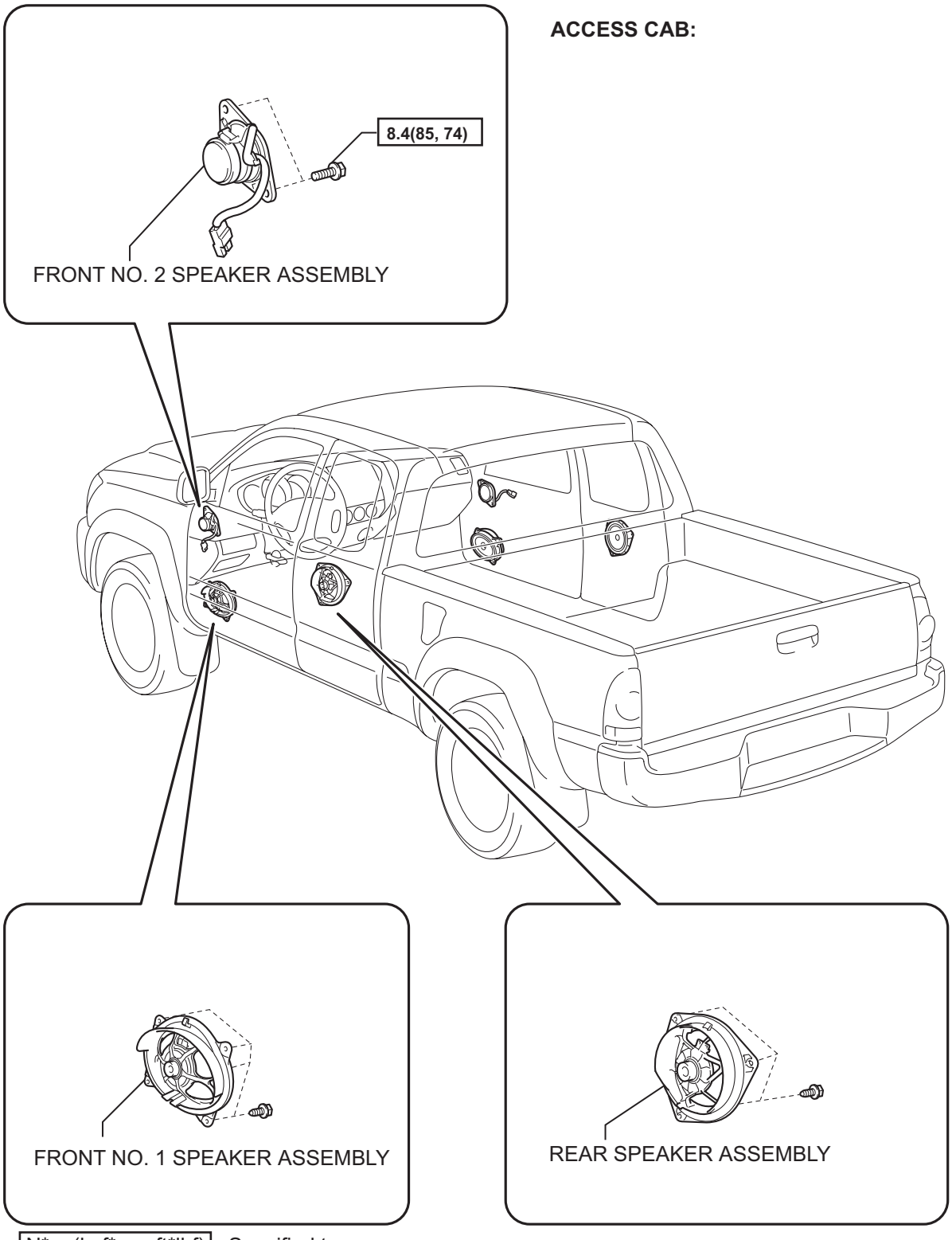

N*m (kgf*cm, ft*lbf) : Specified torque

Y

E123183E02

REAR SPEAKER (for Double Cab)

COMPONENTS

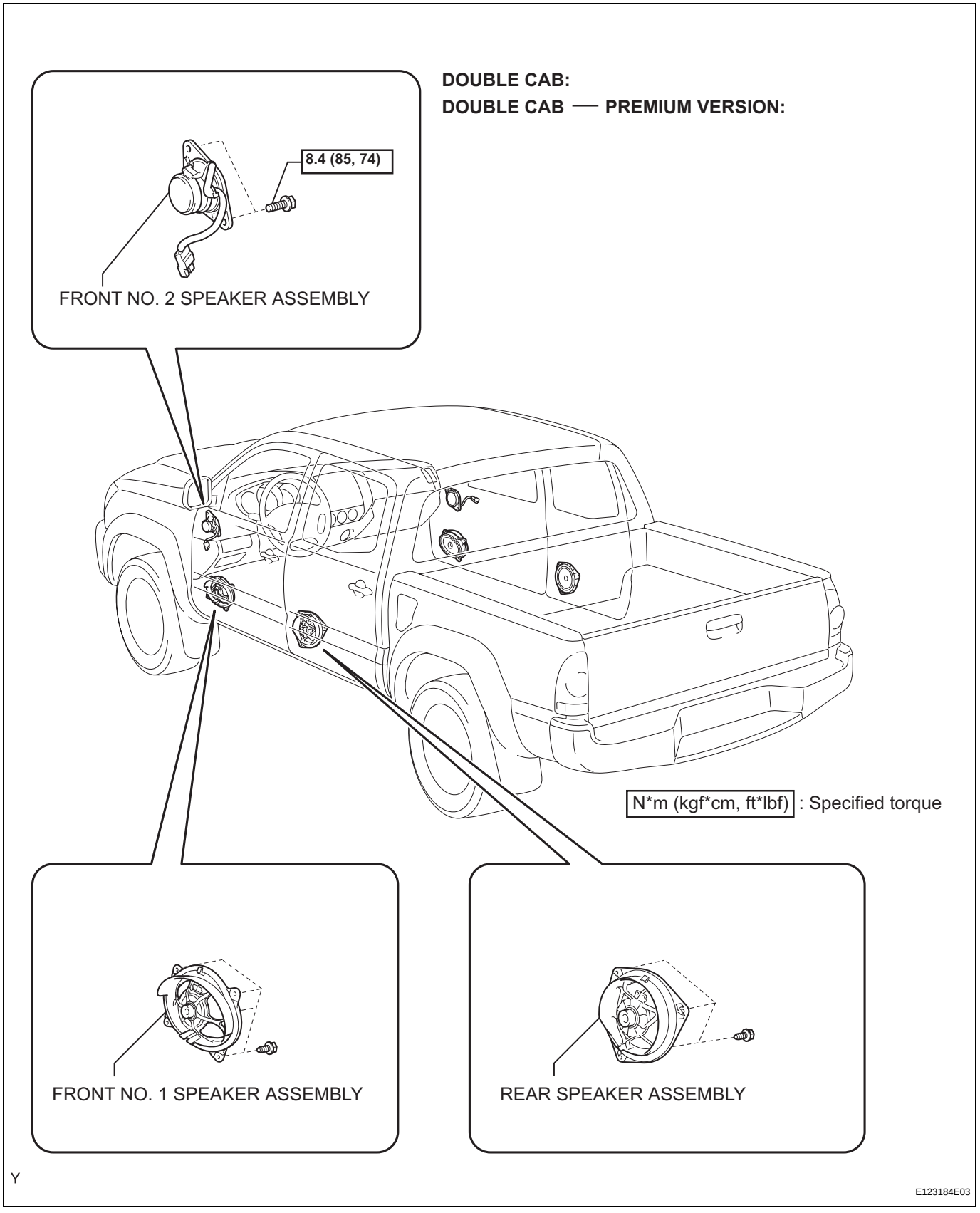

AV

REMOVAL

HINT:

- Use the same procedures for the RH and LH sides.
- The procedures listed below are for the LH side.

1. **DISCONNECT CABLE FROM NEGATIVE BATTERY TERMINAL**
2. **REMOVE REAR POWER WINDOW REGULATOR SWITCH ASSEMBLY (See page ED-68)**
3. **REMOVE REAR DOOR TRIM PANEL ASSEMBLY LH (See page ED-68)**
4. **REMOVE REAR DOOR INSIDE HANDLE SUB-ASSEMBLY LH (See page ED-69)**
5. **REMOVE REAR SPEAKER ASSEMBLY**
   (a) Disconnect the connector.
   (b) Remove the 3 screws and the rear speaker assembly.

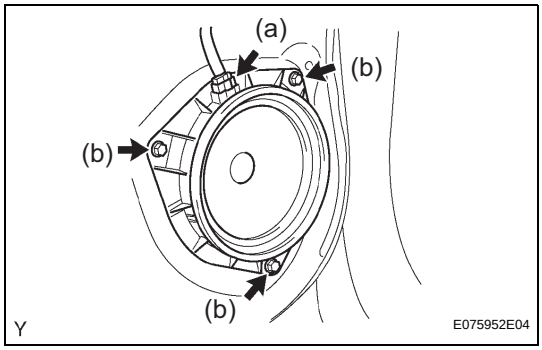

REAR SPEAKER (for Access Cab)

COMPONENTS

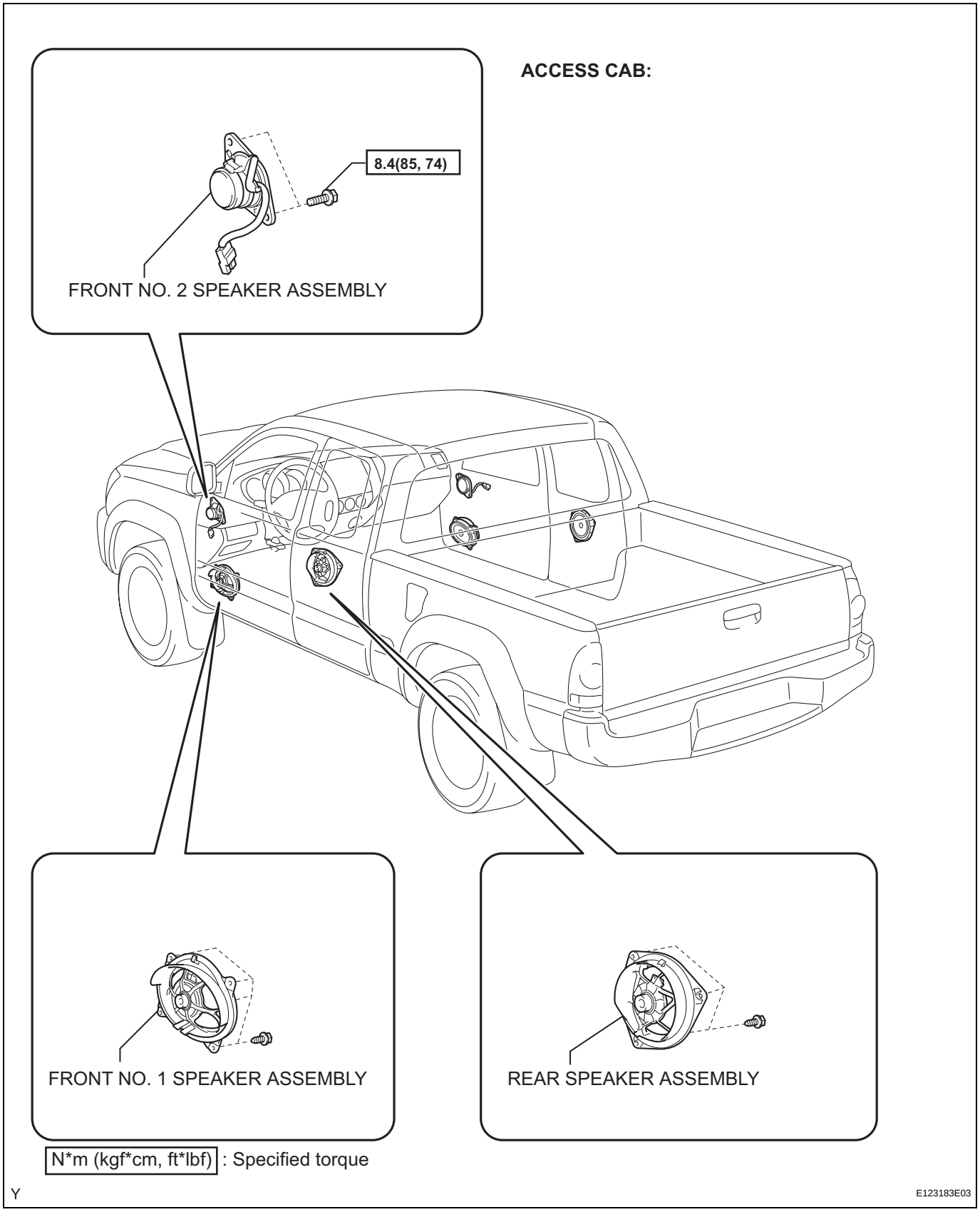

AV

REMOVAL

HINT:

- Use the same procedures for the RH and LH sides.
- The procedures listed below are for the LH side.

1. **DISCONNECT CABLE FROM NEGATIVE BATTERY TERMINAL**
2. **REMOVE LAP BELT OUTER ANCHOR COVER (See page ED-53)**
3. **REMOVE REAR DOOR TRIM BOARD SUB-ASSEMBLY LH (See page ED-53)**
4. **REMOVE REAR ACCESS PANEL WEATHERSTRIP LH (See page ED-53)**
5. **REMOVE REAR SPEAKER ASSEMBLY**
   (a) Disconnect the connector.
   (b) Remove the 3 screws and the rear speaker assembly.

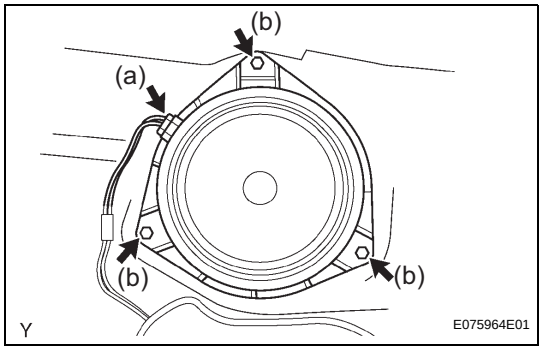

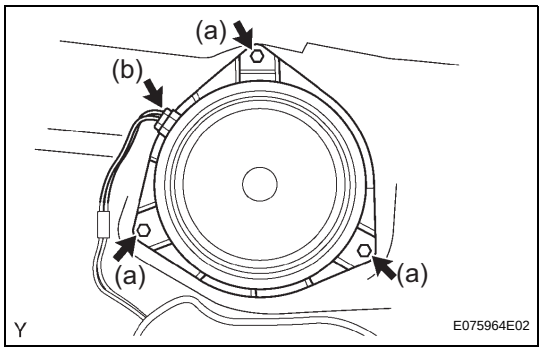

INSTALLATION

1. **INSTALL REAR SPEAKER ASSEMBLY**
   (a) Install the rear speaker assembly with the 3 screws.
   (b) Connect the connector.
2. **INSTALL REAR ACCESS PANEL WEATHERSTRIP LH (See page ED-64)**
3. **INSTALL REAR DOOR TRIM BOARD SUB-ASSEMBLY (See page ED-63)**
4. **INSTALL LAP BELT OUTER ANCHOR COVER (See page ED-63)**
5. **CONNECT CABLE TO NEGATIVE BATTERY TERMINAL**
   Torque: 3.9 N*m (40 kgf*cm, 35 in.*lbf)

NO. 1 SPEAKER WITH BOX

COMPONENTS

AV

DOUBULE CAB — PREMIUM VERSION:

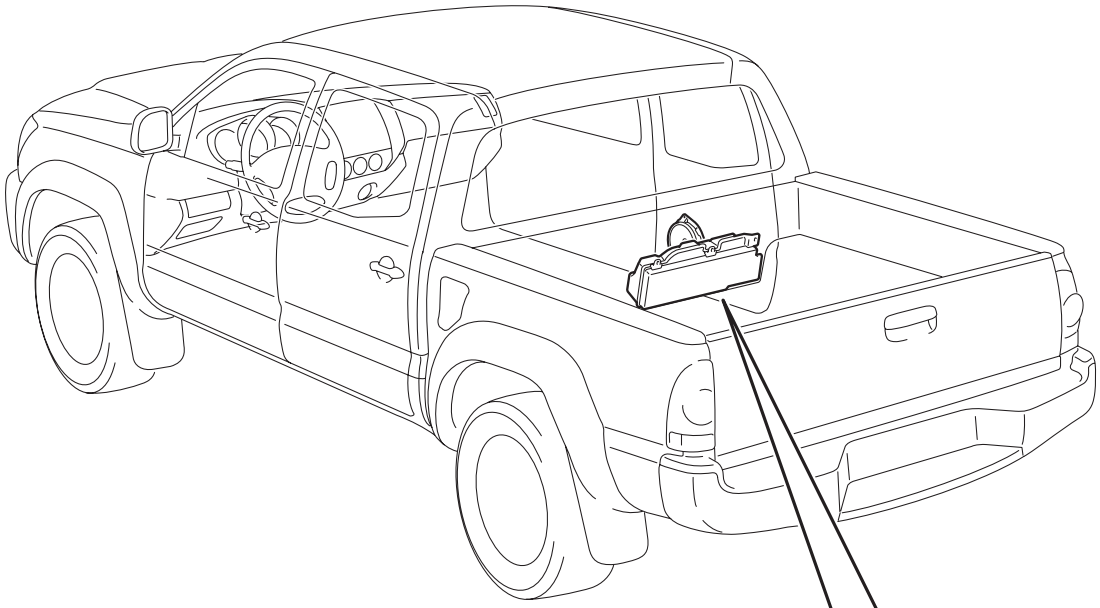

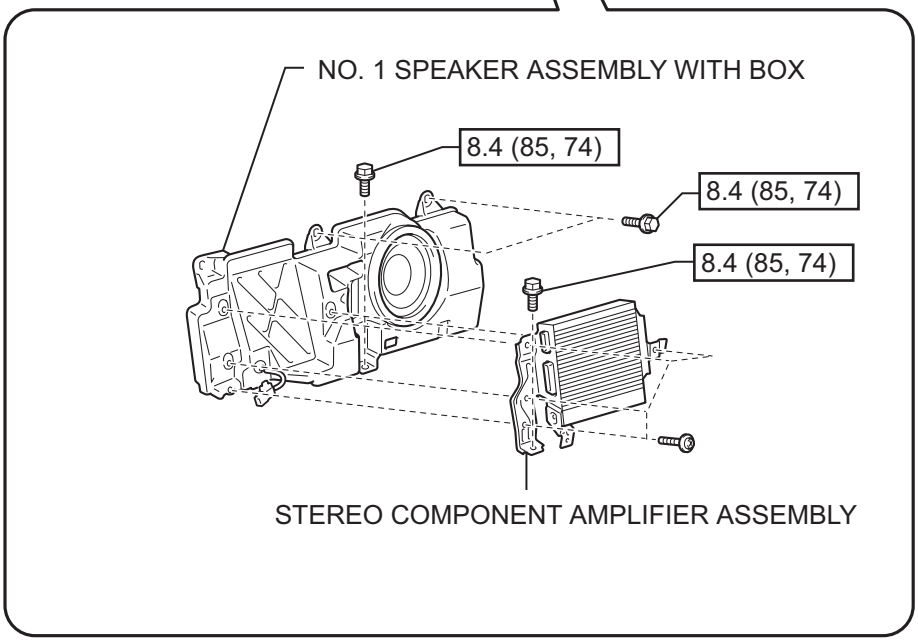

N*m (kgf*cm, ft.*lbf) ; Specified torque

Y

E123187E01

AV

REMOVAL

1. **DISCONNECT CABLE FROM NEGATIVE BATTERY TERMINAL**
2. **REMOVE REAR SEATBACK ASSEMBLY RH (See page SE-82)**
3. **REMOVE REAR SEATBACK ASSEMBLY LH (See page SE-71)**
4. **REMOVE LUGGAGE COMPARTMENT SIDE TRAY (See page IR-16)**
5. **REMOVE NO. 1 SPEAKER ASSEMBLY WITH BOX**
   (a) Disconnect the 3 connectors.
   (b) Remove the clamp.

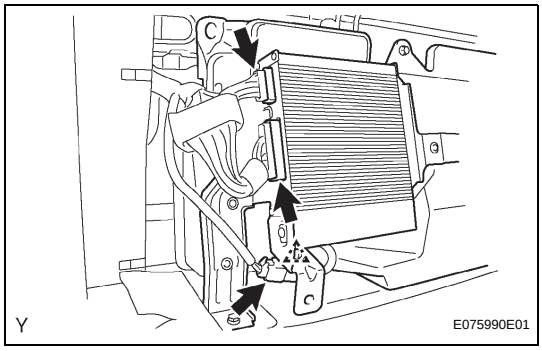

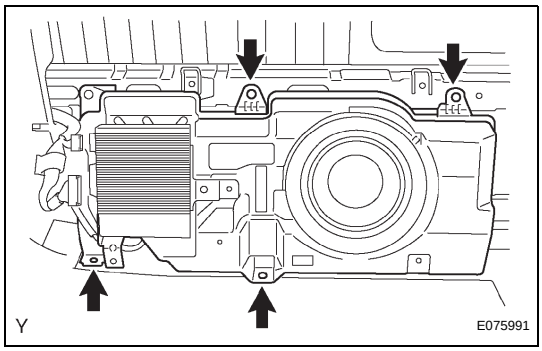

   (c) Remove the 4 bolts and the No. 1 speaker assembly with box.

6. **REMOVE STEREO COMPONENT AMPLIFIER ASSEMBLY**
   (a) Using a torx socket wrench T20, remove the 4 screws and the stereo component amplifier assembly.

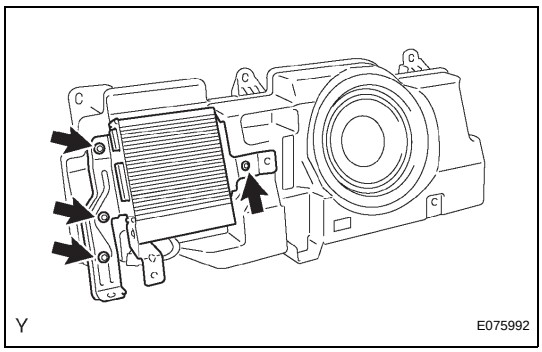

INSTALLATION

1. **INSTALL STEREO COMPONENT AMPLIFIER ASSEMBLY**
   (a) Using a torx socket wrench T20, install the 4 screws and the stereo component amplifier assembly.

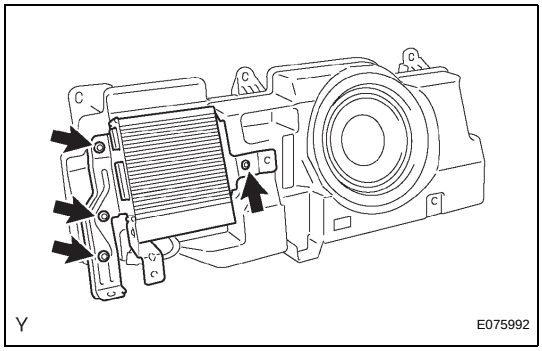

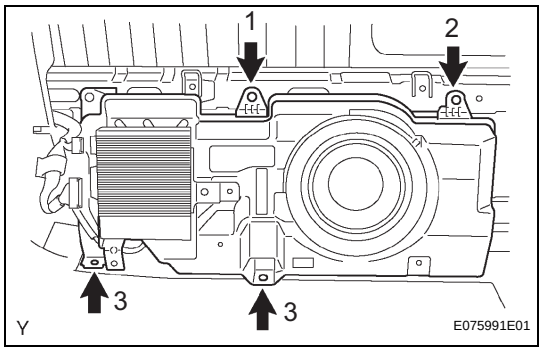

2. INSTALL NO. 1 SPEAKER ASSEMBLY WITH BOX

(a) Install the No. 1 speaker assembly with box with the 4 bolts.

Torque: 8.4 N*m (85 kgf*cm, 74 in.*lbf)

NOTICE:

Install the bolts in the order shown in the illustration.

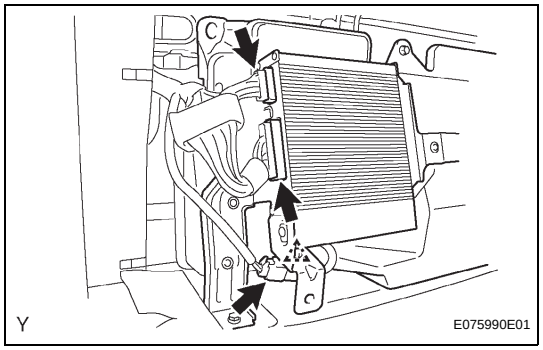

(b) Connect the connector.

(c) Install the clamp.

3. INSTALL LUGGAGE COMPARTMENT SIDE TRAY (See page IR-26)

4. INSTALL REAR SEATBACK ASSEMBLY LH (See page SE-77)

5. INSTALL REAR SEATBACK ASSEMBLY RH (See page SE-90)

6. CONNECT CABLE TO NEGATIVE BATTERY TERMINAL

Torque: 3.9 N*m (40 kgf*cm, 35 in.*lbf)

AV

RADIO ANTENNA CORD

COMPONENTS

AV

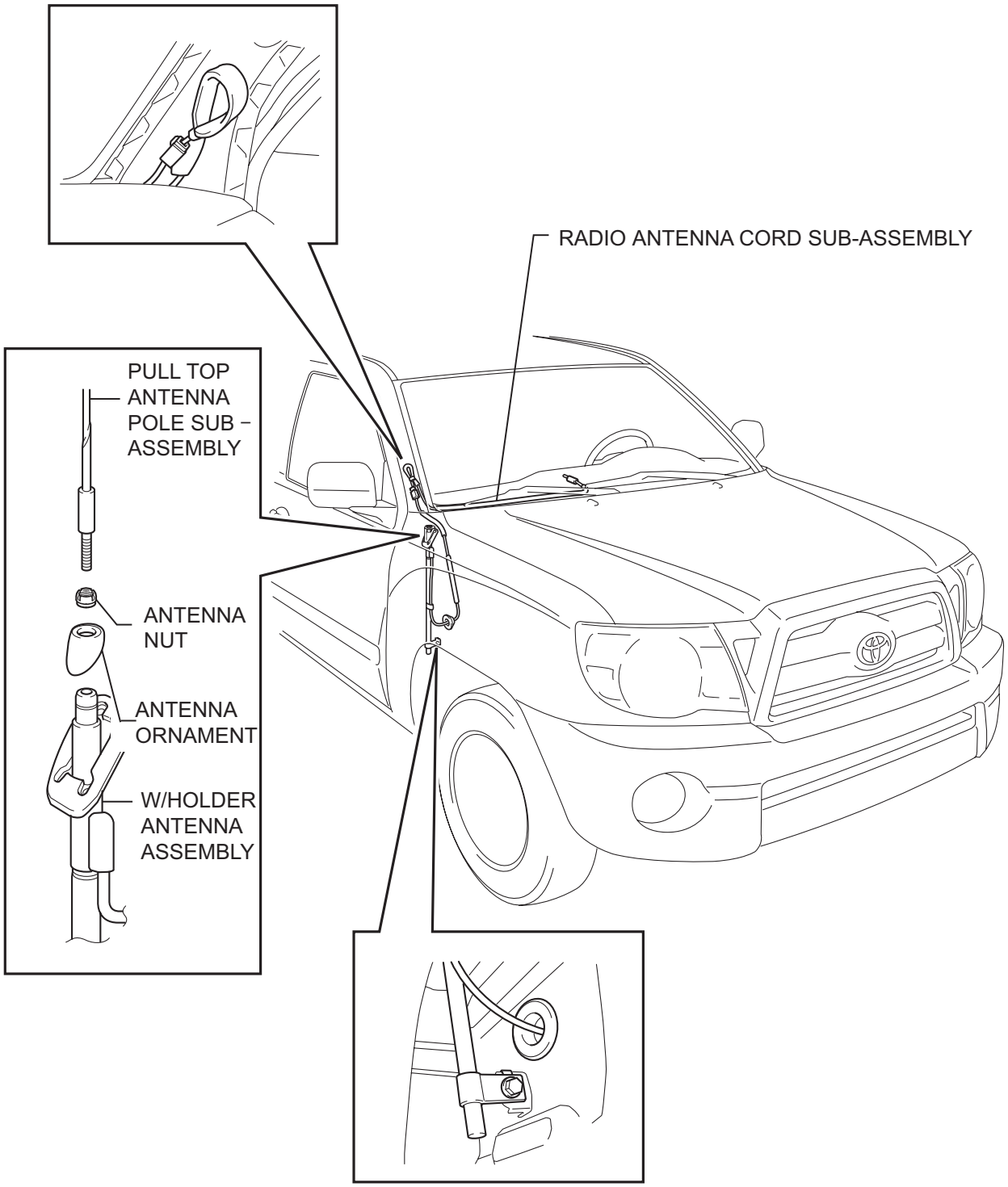

REMOVAL

1. DISCONNECT CABLE FROM NEGATIVE BATTERY TERMINAL
2. REMOVE FRONT FLOOR FOOTREST (See page IR-1)
3. REMOVE FRONT DOOR SCUFF PLATE LH (See page IR-12)
4. REMOVE FRONT DOOR SCUFF PLATE RH (See page IR-12)
5. REMOVE COWL SIDE TRIM BOARD LH (See page IR-12)
6. REMOVE COWL SIDE TRIM BOARD RH (See page IR-12)
7. SEPARATE FRONT DOOR OPENING TRIM WEATHERSTRIP LH (See page IR-13)
8. SEPARATE FRONT DOOR OPENING TRIM WEATHERSTRIP RH (See page IR-13)
9. REMOVE FRONT PILLAR GARNISH LH (See page IR-13)
10. REMOVE FRONT PILLAR GARNISH RH (See page IR-14)
11. REMOVE INSTRUMENT PANEL UNDER TRAY (for Pedal Type Parking Brake) (See page IP-9)
12. REMOVE INSTRUMENT PANEL HOLE COVER (for Lever Type Parking Brake) (See page IP-9)
13. REMOVE CONSOLE UPPER REAR PANEL SUB-ASSEMBLY (for Automatic Transmission on Separate Seat Type) (See page IP-9)
14. REMOVE CONSOLE UPPER REAR PANEL SUB-ASSEMBLY (for Manual Transmission on Separate Seat Type) (See page IP-9)
15. REMOVE REAR CONSOLE BOX ASSEMBLY (for Separate Seat Type) (See page IP-10)
16. REMOVE INSTRUMENT PANEL CUP HOLDER TRAY (for Automatic Transmission on Separate Seat Type) (See page IP-10)
17. REMOVE FRONT CONSOLE BOX (for Automatic Transmission on Separate Seat Type) (See page IP-10)
18. REMOVE FRONT CONSOLE BOX (for Manual Transmission on Separate Seat Type) (See page IP-11)
19. REMOVE FRONT CONSOLE BOX (for Automatic Transmission on Bench Seat Type) (See page IP-11)
20. REMOVE FRONT CONSOLE BOX (for Manual Transmission on Bench Seat Type) (See page IP-11)

AV

21. REMOVE AIR CONDITIONER CONTROL ASSEMBLY (See page AC-90)
22. REMOVE RADIO RECEIVER ASSEMBLY (See page AV-69)
23. SEPARATE HOOD LOCK CONTROL LEVER SUB-ASSEMBLY (See page ED-3)
24. REMOVE NO. 1 LOWER INSTRUMENT PANEL FINISH PANEL (See page IP-12)
25. REMOVE INSTRUMENT CLUSTER FINISH PANEL SUB-ASSEMBLY (See page IP-12)
26. REMOVE COMBINATION METER ASSEMBLY (See page ME-63)
27. REMOVE INSTRUMENT CLUSTER CENTER FINISH PANEL SUB-ASSEMBLY (See page IP-13)
28. REMOVE GLOVE COMPARTMENT DOOR ASSEMBLY (See page IP-13)
29. REMOVE INSTRUMENT PANEL LOWER FINISH PANEL SUB-ASSEMBLY RH (See page IP-14)
30. REMOVE LOWER INSTRUMENT PANEL LH (See page IP-14)
31. REMOVE INSTRUMENT LOWER COVER SUB-ASSEMBLY (See page IP-14)
32. REMOVE INSTRUMENT SIDE PANEL RH (See page IP-14)
33. DISCONNECT PASSENGER AIRBAG CONNECTOR (See page RS-576)
34. REMOVE INSTRUMENT PANEL PASSENGER AIRBAG ASSEMBLY (See page IP-14)
35. REMOVE INSTRUMENT PANEL SUB-ASSEMBLY
36. REMOVE RADIO ANTENNA CORD SUB-ASSEMBLY

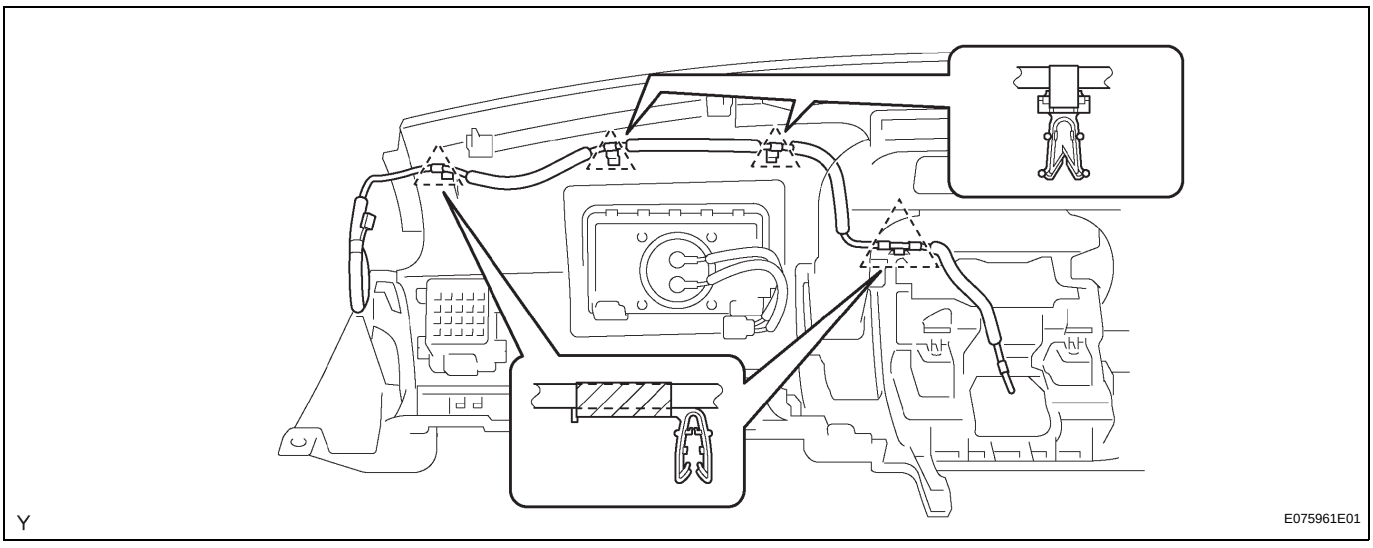

(a) Disengage the 4 claws and remove the radio antenna cord sub-assembly.

RADIO ANTENNA HOLDER

COMPONENTS

AV

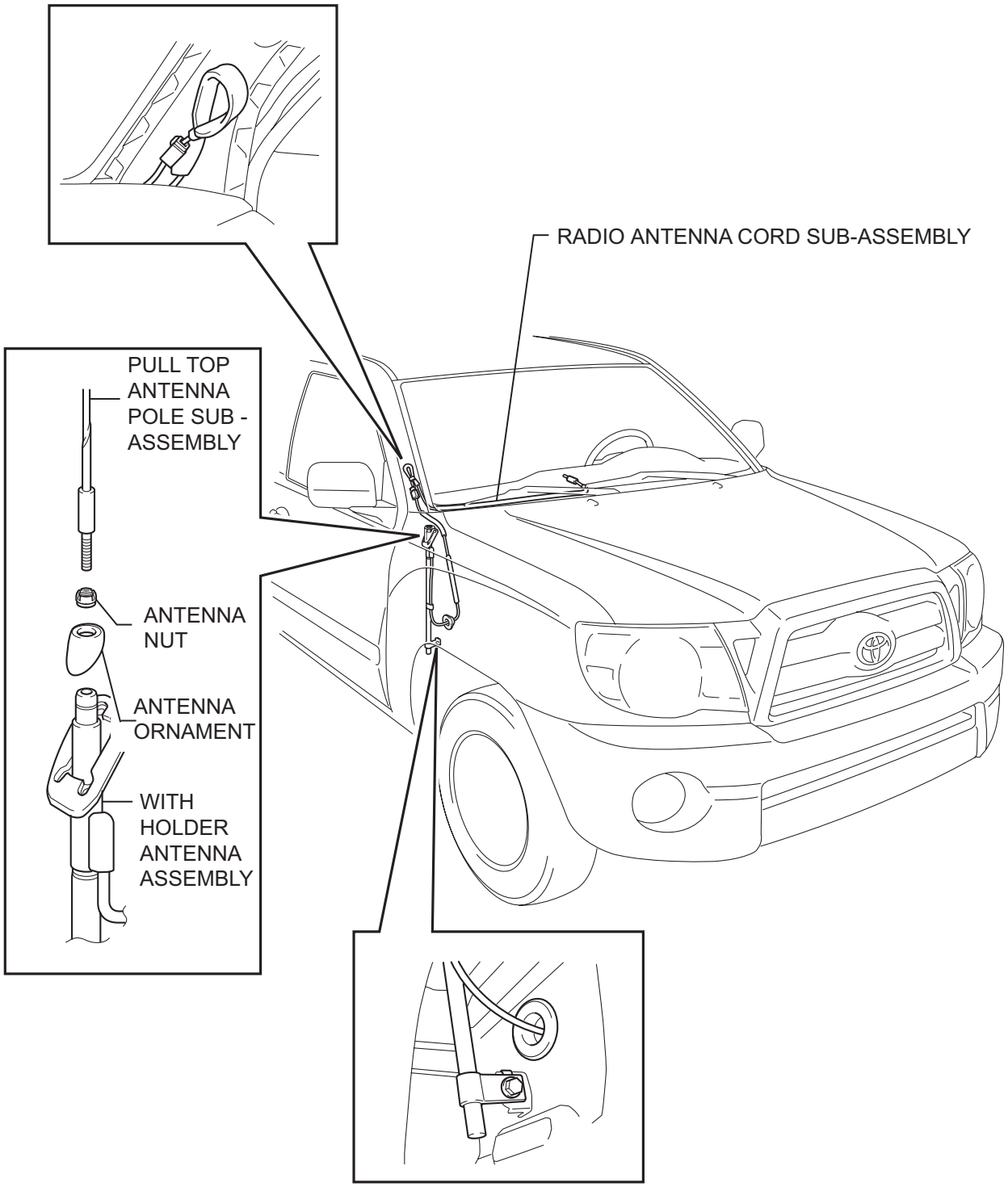

REMOVAL

1. **DISCONNECT CABLE FROM NEGATIVE BATTERY TERMINAL**
2. **REMOVE GLOVE COMPARTMENT DOOR ASSEMBLY (See page IP-13)**
3. **REMOVE INSTRUMENT PANEL LOWER FINISH PANEL SUB-ASSEMBLY RH (See page IP-14)**
4. **REMOVE ASSIST GRIP SUB-ASSEMBLY (See page IR-18)**
5. **REMOVE FRONT PILLAR GARNISH RH (See page IR-14)**
6. **REMOVE PULL TOP ANTENNA POLE SUB - ASSEMBLY (See page AV-102)**
7. **REMOVE ANTENNA ORNAMENT**
   (a) Remove the nut and the antenna ornament.

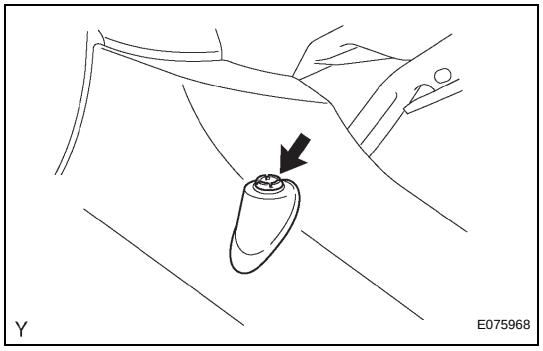

8. **REMOVE WITH HOLDER ANTENNA ASSEMBLY**
   (a) Disconnect the connector and remove the 3 clamps.

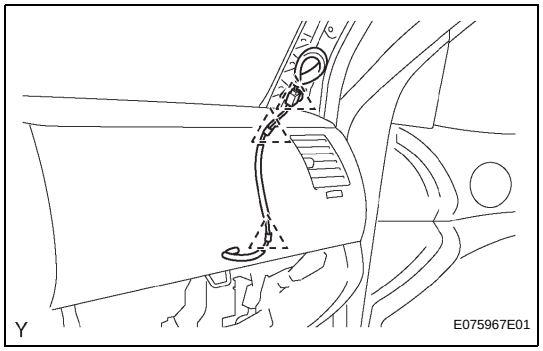

   (b) Tie a piece of string to the tip of the cable of the with holder antenna assembly.
   HINT:
   Use a string that is longer than the antenna assembly (with holder).

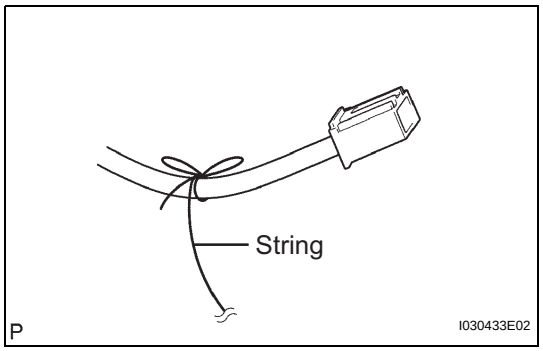

AV

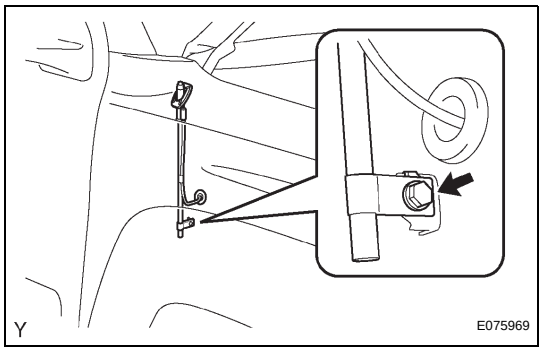

(c) Remove the bolt and the with holder antenna assembly.
NOTICE:
Leave the string inside the pillar for the installation of a new antenna.

RADIO ANTENNA POLE

COMPONENTS

AV

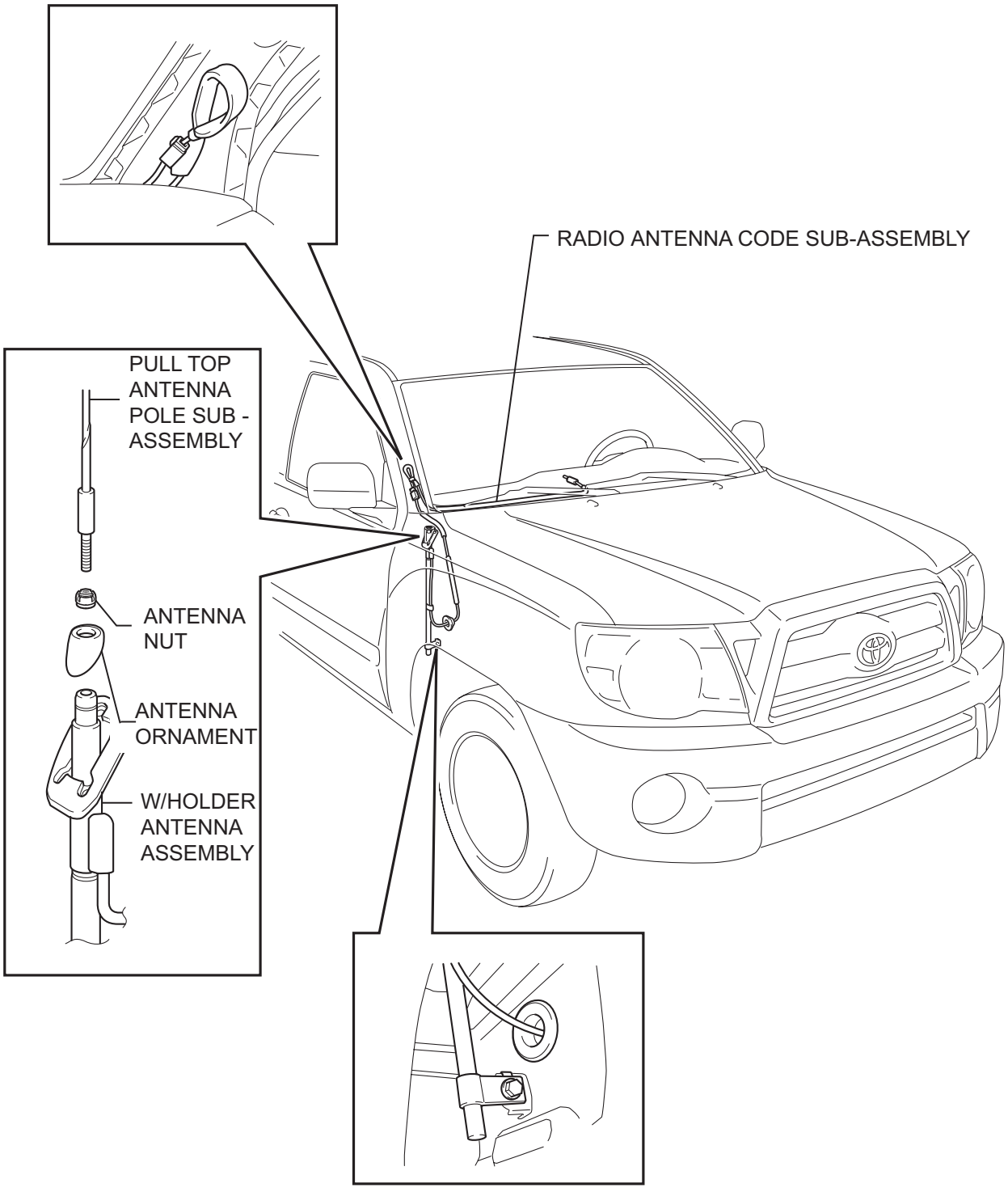

AV

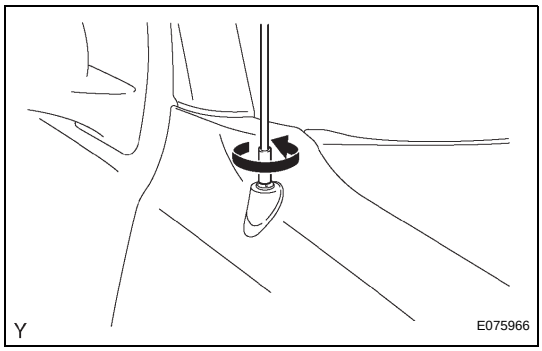

REMOVAL

1. REMOVE PULL TOP ANTENNA POLE SUB - ASSEMBLY

(a) Remove the pull top antenna pole sub-assembly by turning it counterclockwise.

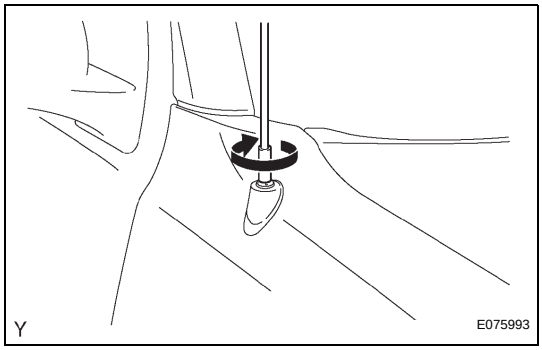

INSTALLATION

1. INSTALL PULL TOP ANTENNA POLE SUB - ASSEMBLY

(a) Install the pull top antenna pole sub-assembly by turning it clockwise.

VOLTAGE INVERTER

COMPONENTS

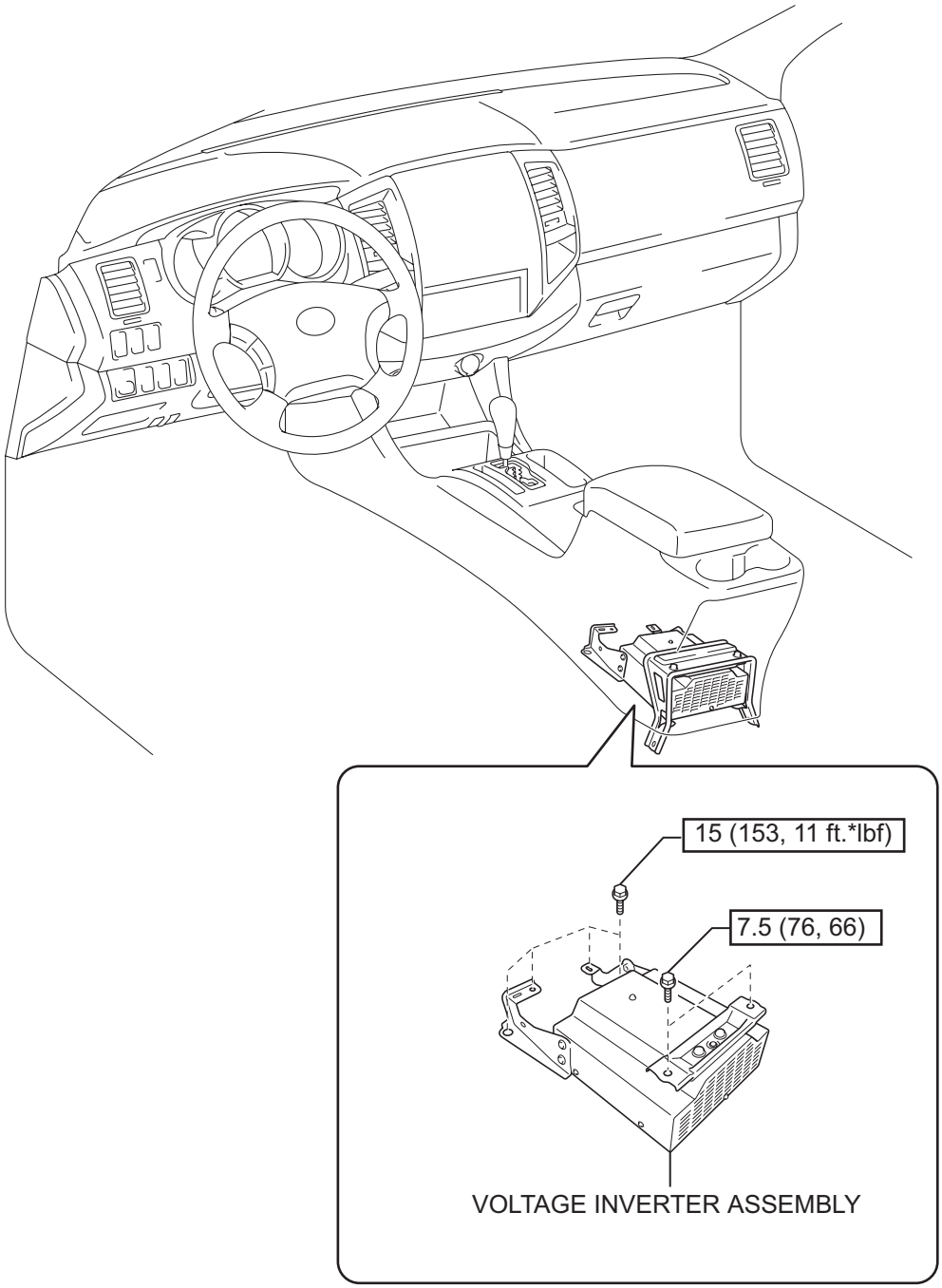

N*m (kgf*cm, ft.*lbf) ; Specified torque

Y

E123177E01

AV

REMOVAL

1. **DISCONNECT CABLE FROM NEGATIVE BATTERY TERMINAL**
2. **REMOVE CONSOLE UPPER REAR PANEL SUB-ASSEMBLY (See page IP-9)**
3. **REMOVE REAR CONSOLE BOX ASSEMBLY (See page IP-10)**
4. **REMOVE VOLTAGE INVERTER ASSEMBLY**
   (a) Remove the 6 bolts.

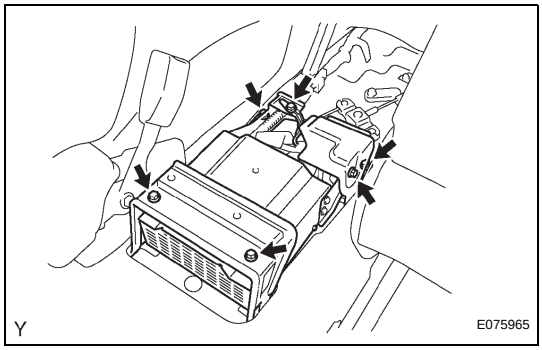

(b) Disconnect the 2 connectors and remove the 2 wire harness clamps.

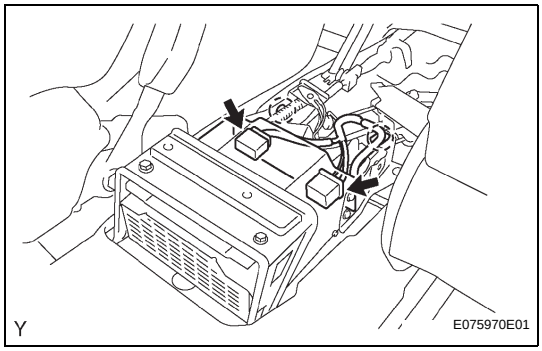

STEERING PAD SWITCH

COMPONENTS

AV

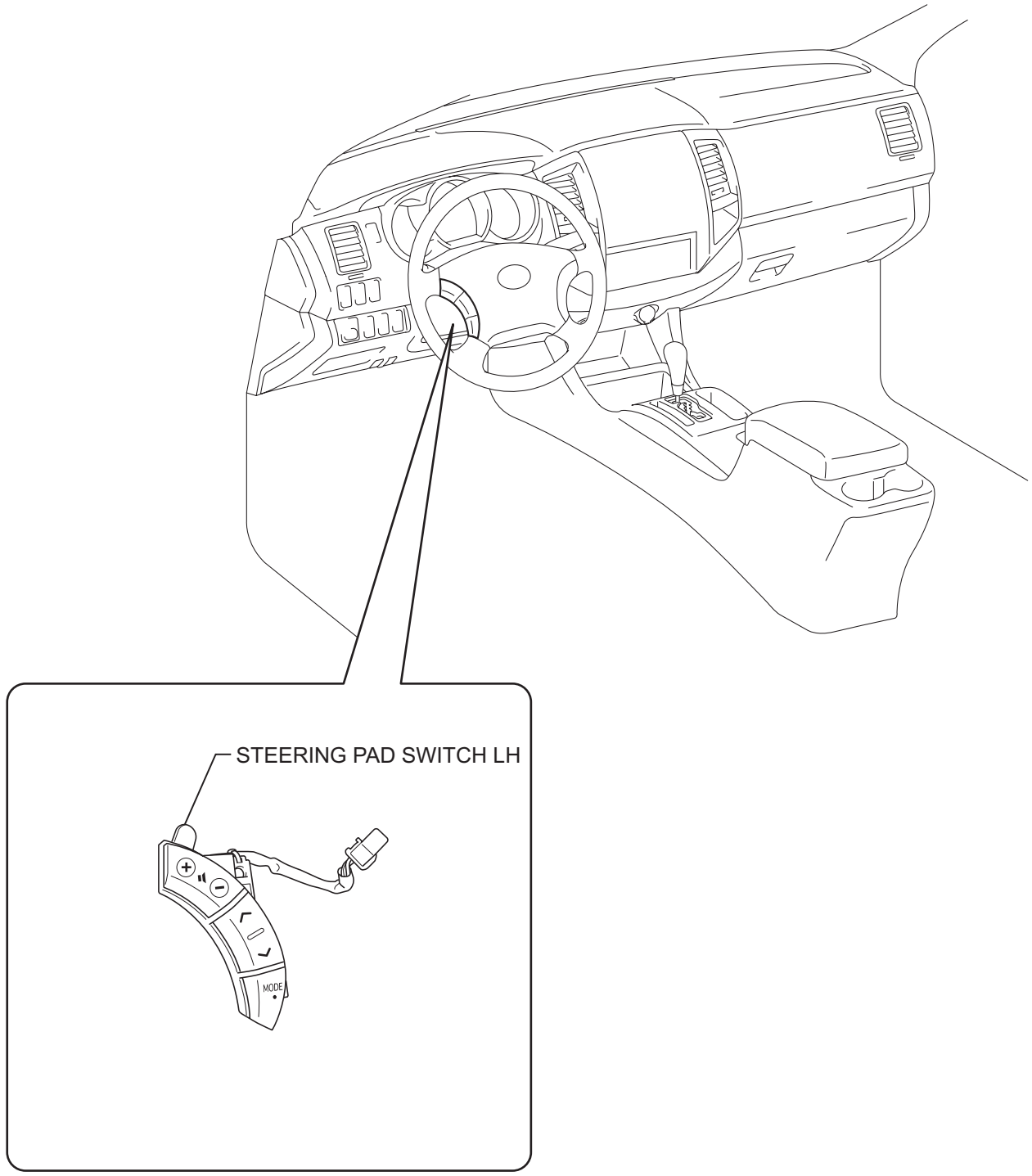

Y

E123176E01

REMOVAL

1. **DISCONNECT CABLE FROM NEGATIVE BATTERY TERMINAL**
   Wait for 90 seconds after disconnecting the cable to prevent the airbag working.
2. **REMOVE NO. 2 LOWER STEERING WHEEL COVER (See page SR-9)**
3. **REMOVE NO. 3 LOWER STEERING WHEEL COVER (See page SR-9)**
4. **REMOVE HORN BUTTON ASSEMBLY (See page RS-558)**
5. **REMOVE STEERING PAD SWITCH LH**
   (a) Disconnect the connector.
   (b) Remove the screw.

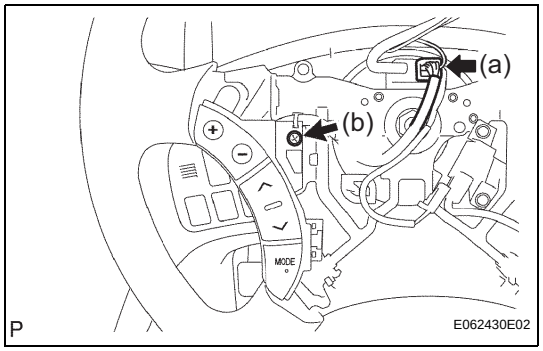

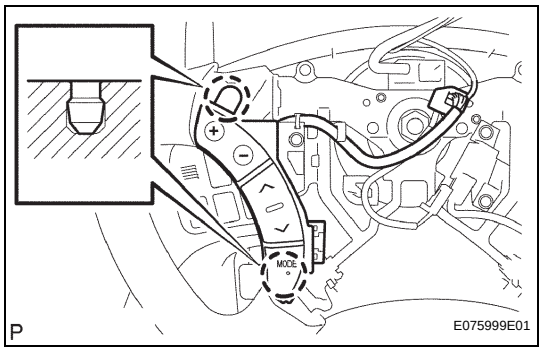

(c) Disengage the 2 pins and remove the steering pad switch LH.

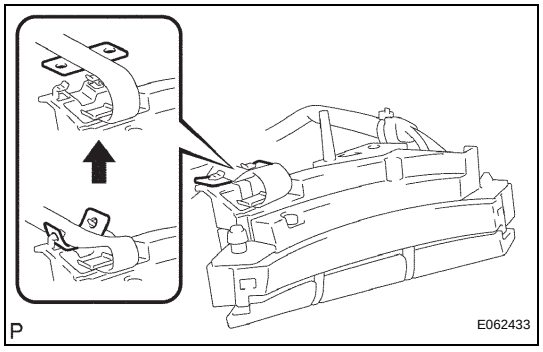

(d) Release the tab of the steering pad switch cable from the steering pad switch LH as shown in the illustration.

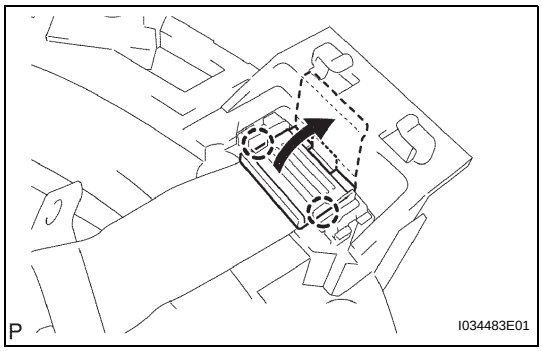

(e) Disengage the 2 claws and open the latch on the top of the connector as shown in the illustration.

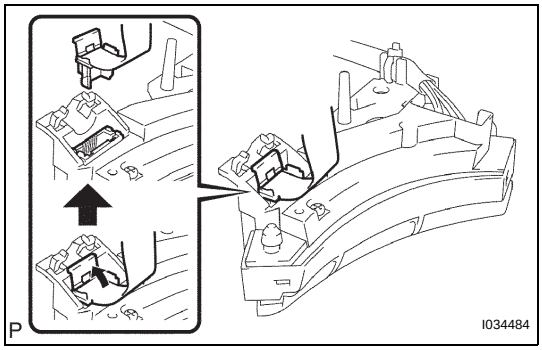

(f) Pull out the connector while pinching the latch with fingers and disconnect the steering pad switch cable from the steering pad switch LH.

INSTALLATION

1. INSTALL STEERING PAD SWITCH LH

(a) Install the steering pad switch cable onto the steering pad switch LH while holding the connector cover.

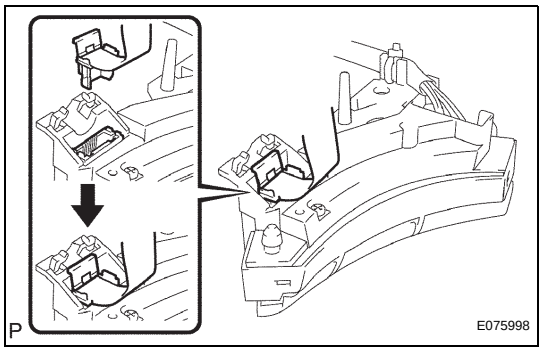

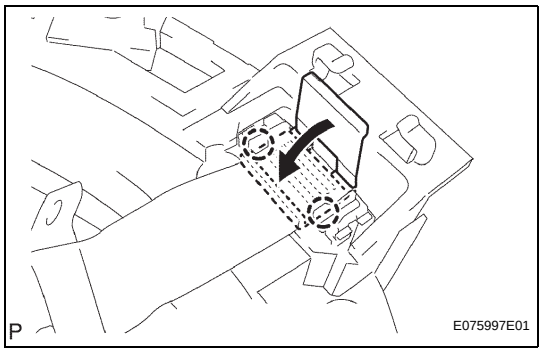

(b) Hold the connector cover down to engage the 2claws as shown in the illustration.

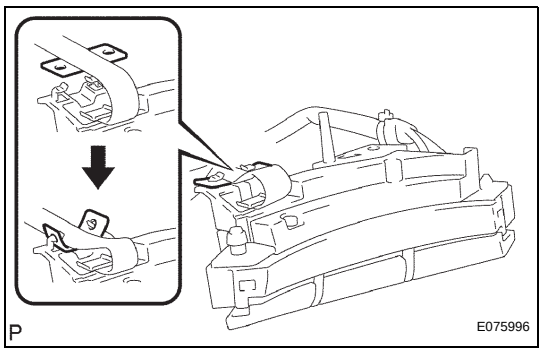

(c) Install the tab of the steering pad switch cable onto the steering pad switch LH as shown in the illustration.

HORN SYSTEM

COMPONENTS

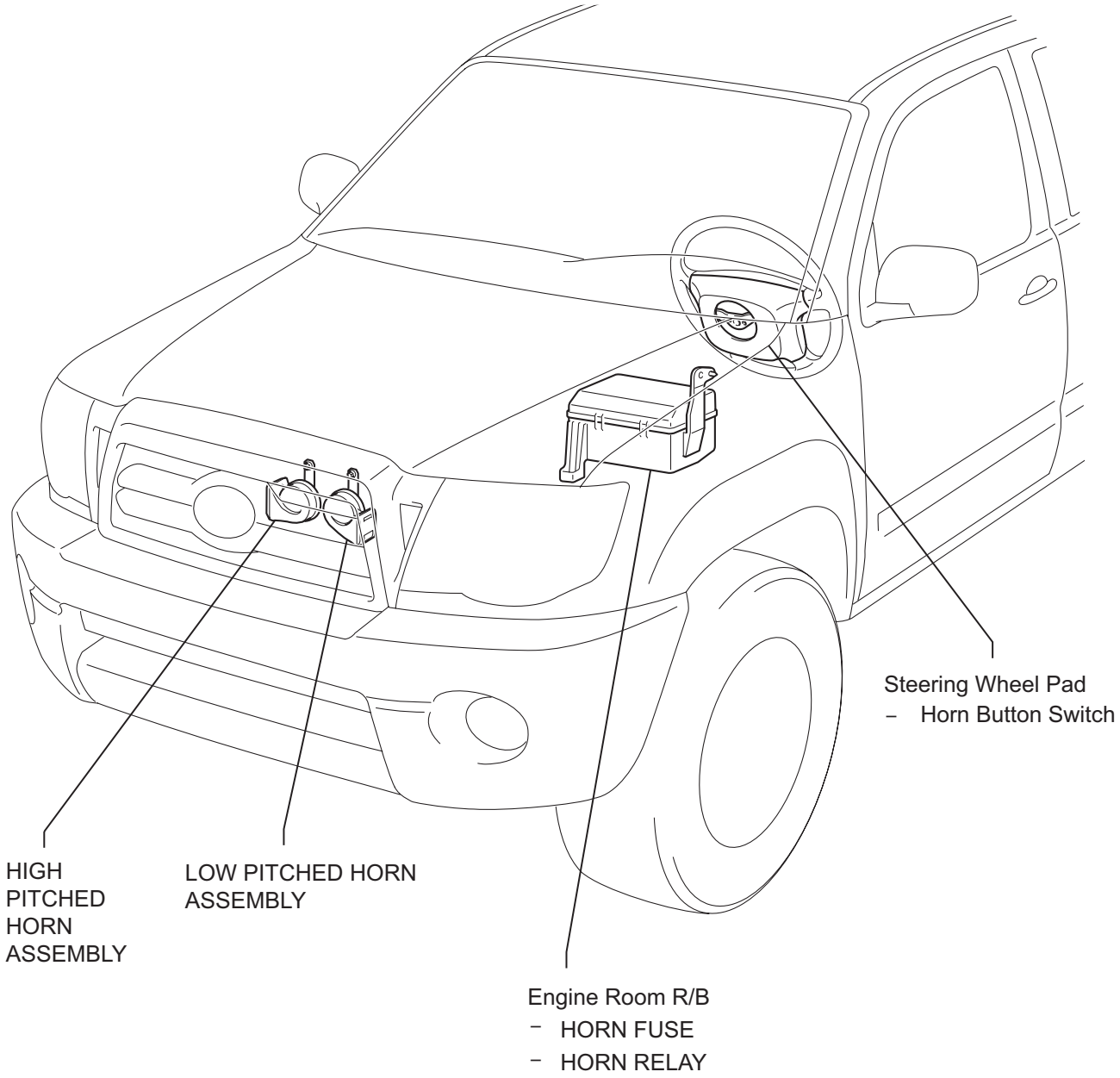

Y

E075994E01

HO

REMOVAL

1. **DISCONNECT CABLE FROM NEGATIVE BATTERY TERMINAL**
2. **REMOVE RADIATOR GRILLE (See page ET-4)**
3. **REMOVE HIGH PITCHED HORN ASSEMBLY**
   (a) Disconnect the connector.
   (b) Remove the bolt and horn.
4. **REMOVE LOW PITCHED HORN ASSEMBLY**

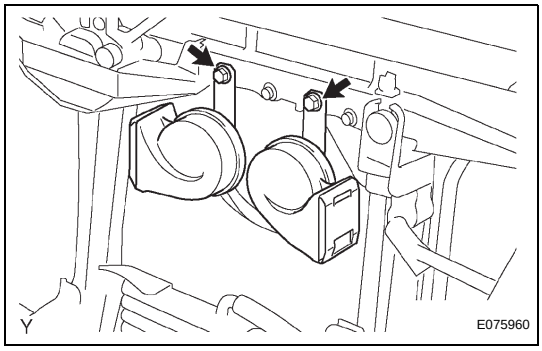

INSPECTION

1. **INSPECT HORN FUSE**
   (a) Check the resistance.
      (1) Using an ohmmeter, measure the resistance between each terminals.
      Standard resistance:
      Below 1 Ω
      If the result is not as specified, replace the fuse.

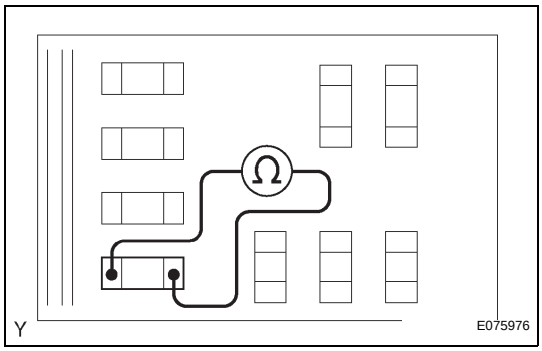

2. **INSPECT HORN RELAY**
   (a) Check the resistance.
      (1) Using an ohmmeter, measure the resistance between the terminals.
      Standard resistance:

Tester Connection	Specified Condition
3-5	10 kΩ or higher
3-5	Below 1 Ω (When battery voltage applied to terminals 1 and 2)

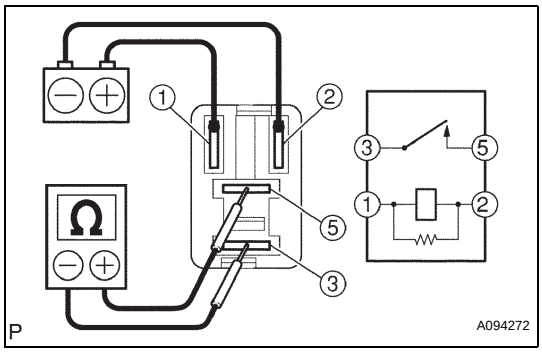

3. **INSPECT HIGH PITCHED HORN ASSEMBLY**
   (a) Check the operation.
      (1) Apply battery voltage, then check the horn.
      OK:

Measurement Condition	Specified Operation
Battery positive(+) → Terminal 1 Battery negative(-) → Horn bracket	Horn sounds

If the result is not as specified, replace the horn.

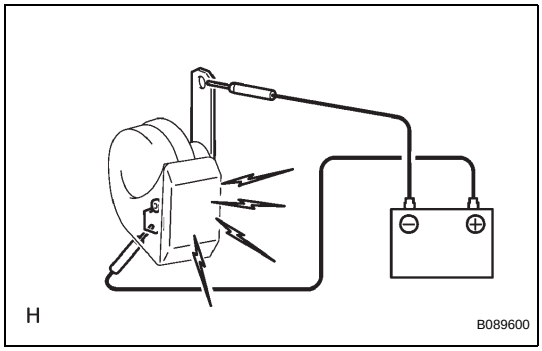

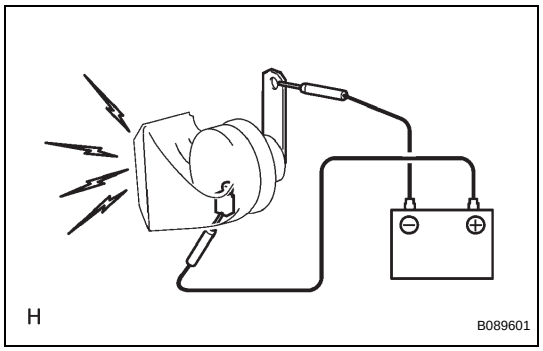

4. INSPECT LOW PITCHED HORN ASSEMBLY

(a) Check the operation.

(1) Apply battery voltage, then check the horn.

OK:

Measurement Condition	Specified Operation
Battery positive(+) → Terminal 1 Battery negative(-) → Horn bracket	Horn sounds

If the result is not as specified, replace the horn.

If all the check results are as specified above and the wire harness is normal, replace the horn button switch (steering wheel pad) (See page RS-558).

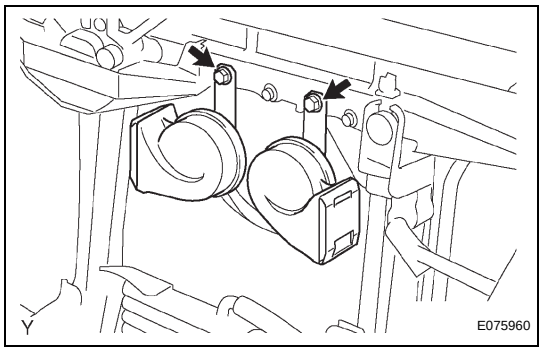

INSTALLATION

1. INSTALL HIGH PITCHED HORN ASSEMBLY

(a) Place the stay onto the baffle part in the upper radiator support, and then install the horn with the bolt.

Torque: 9.9 N*m (101 kgf*cm, 73 ft.*lbf)

(b) Connect the connector.

2. INSTALL LOW PITCHED HORN ASSEMBLY

(a) Place the stay onto the baffle part in the upper radiator support, and then install the horn with the bolt.

Torque: 9.9 N*m (101 kgf*cm, 73 ft.*lbf)

(b) Connect the connector.

3. INSTALL RADIATOR GRILLE (See page ET-11)

4. CONNECT CABLE TO NEGATIVE BATTERY TERMINAL

Torque: 3.9 N*m (40 kgf*cm, 35 in.*lbf)

POWER WINDOW CONTROL SYSTEM

PARTS LOCATION

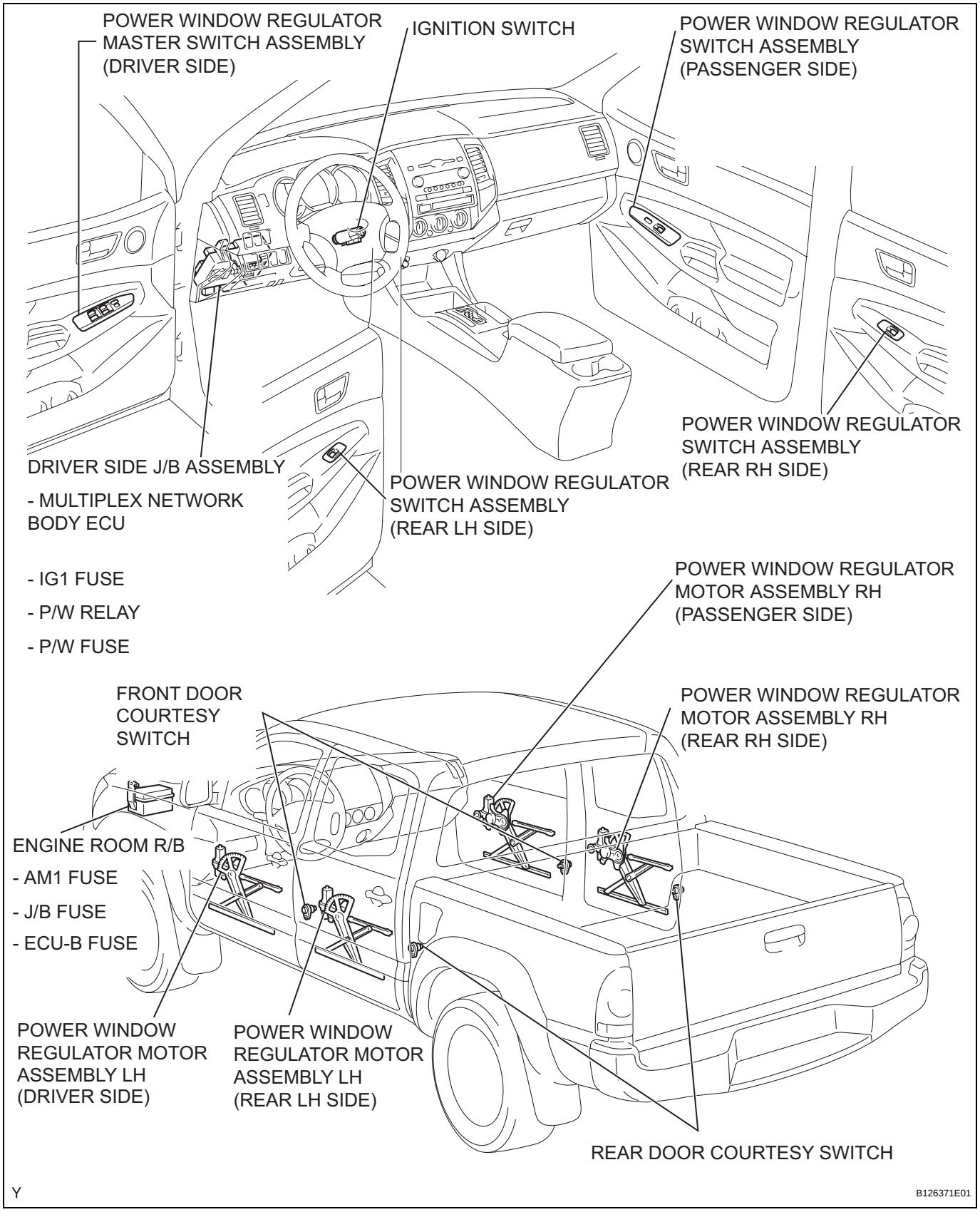

WS

WS

SYSTEM DIAGRAM

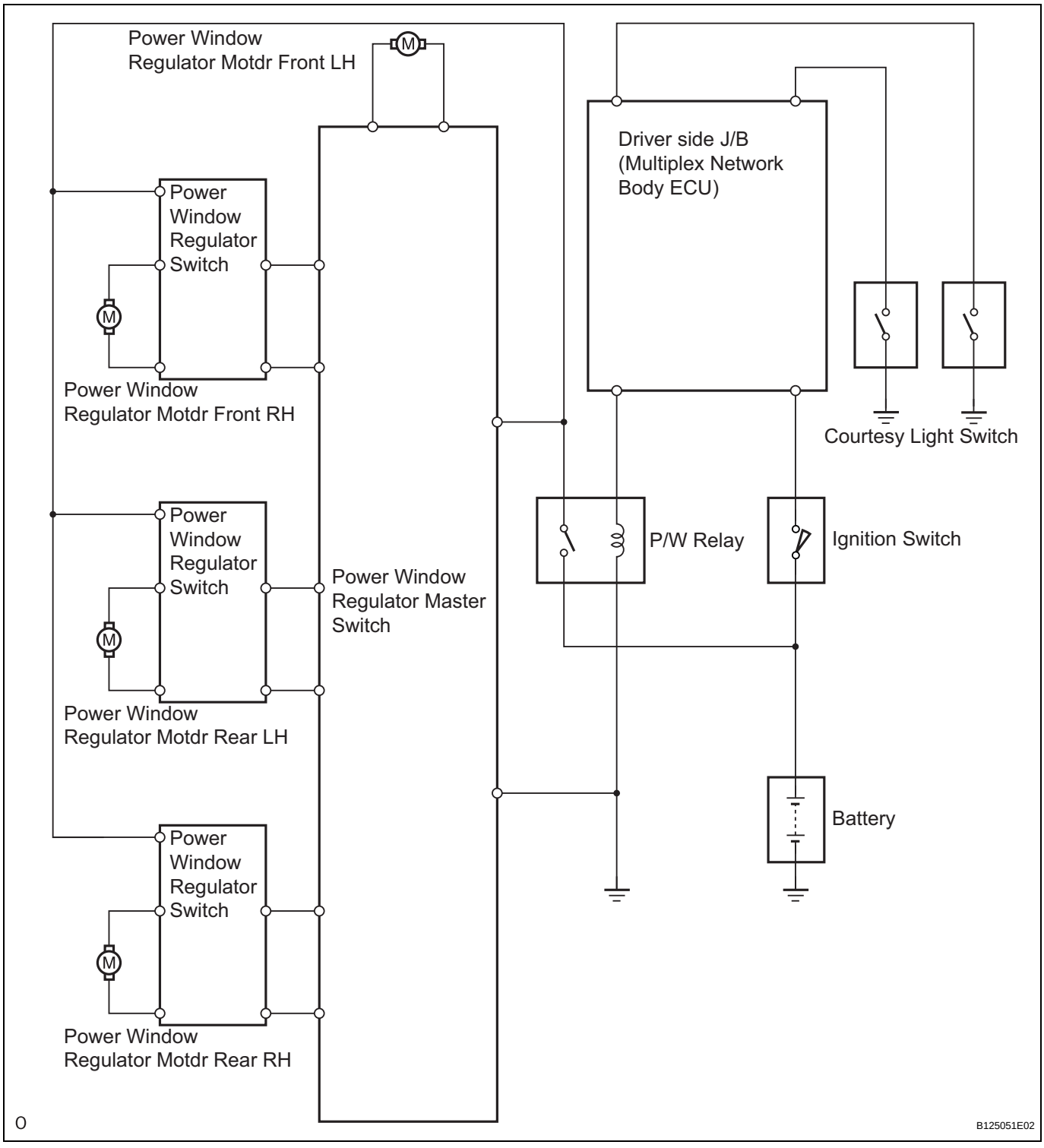

WINDSHIELD GLASS

COMPONENTS

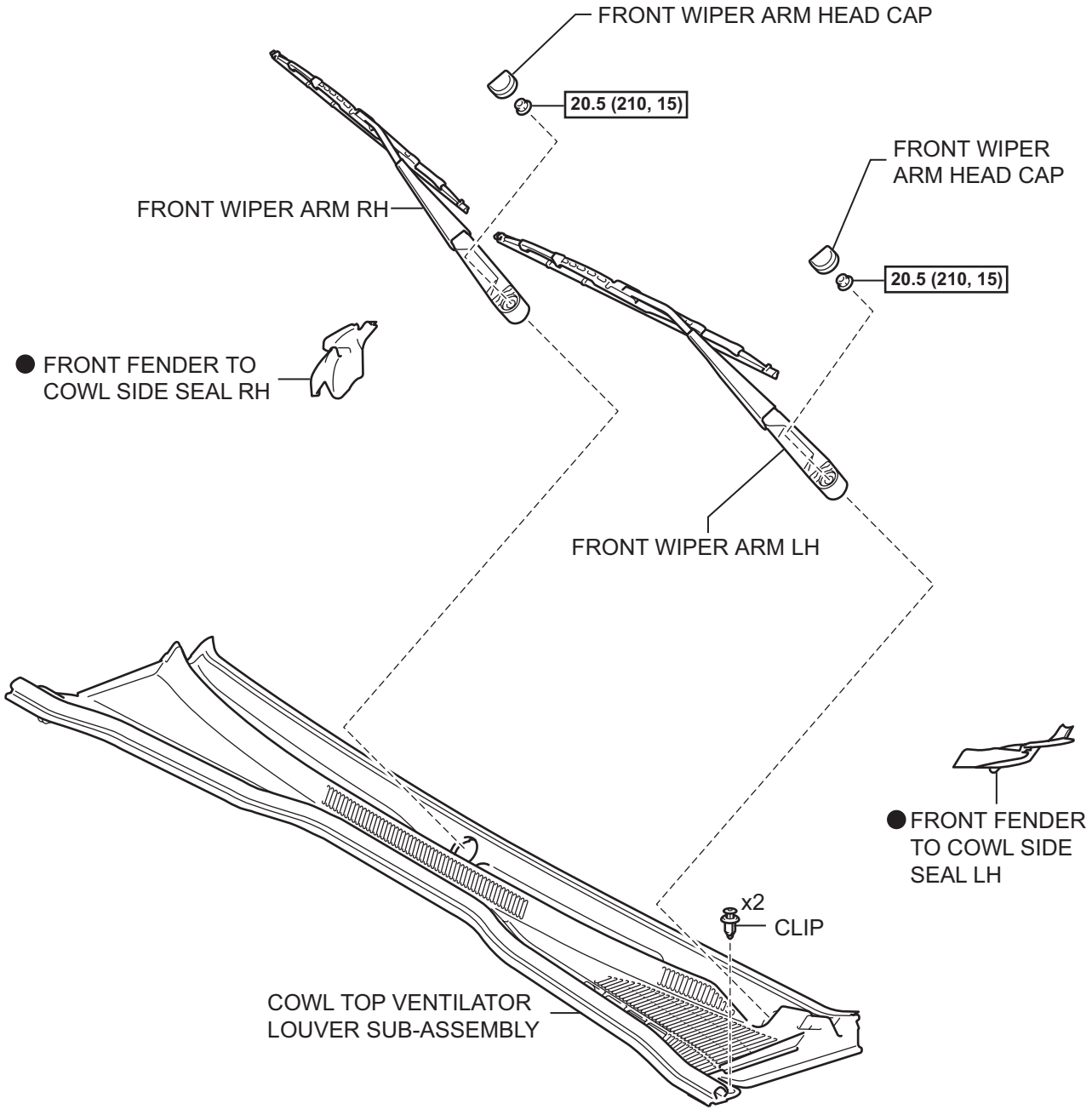

N*m (kgf*cm, ft*lbf) : Specified torque

● Non-reusable part

H

B087540E01

WS

WS

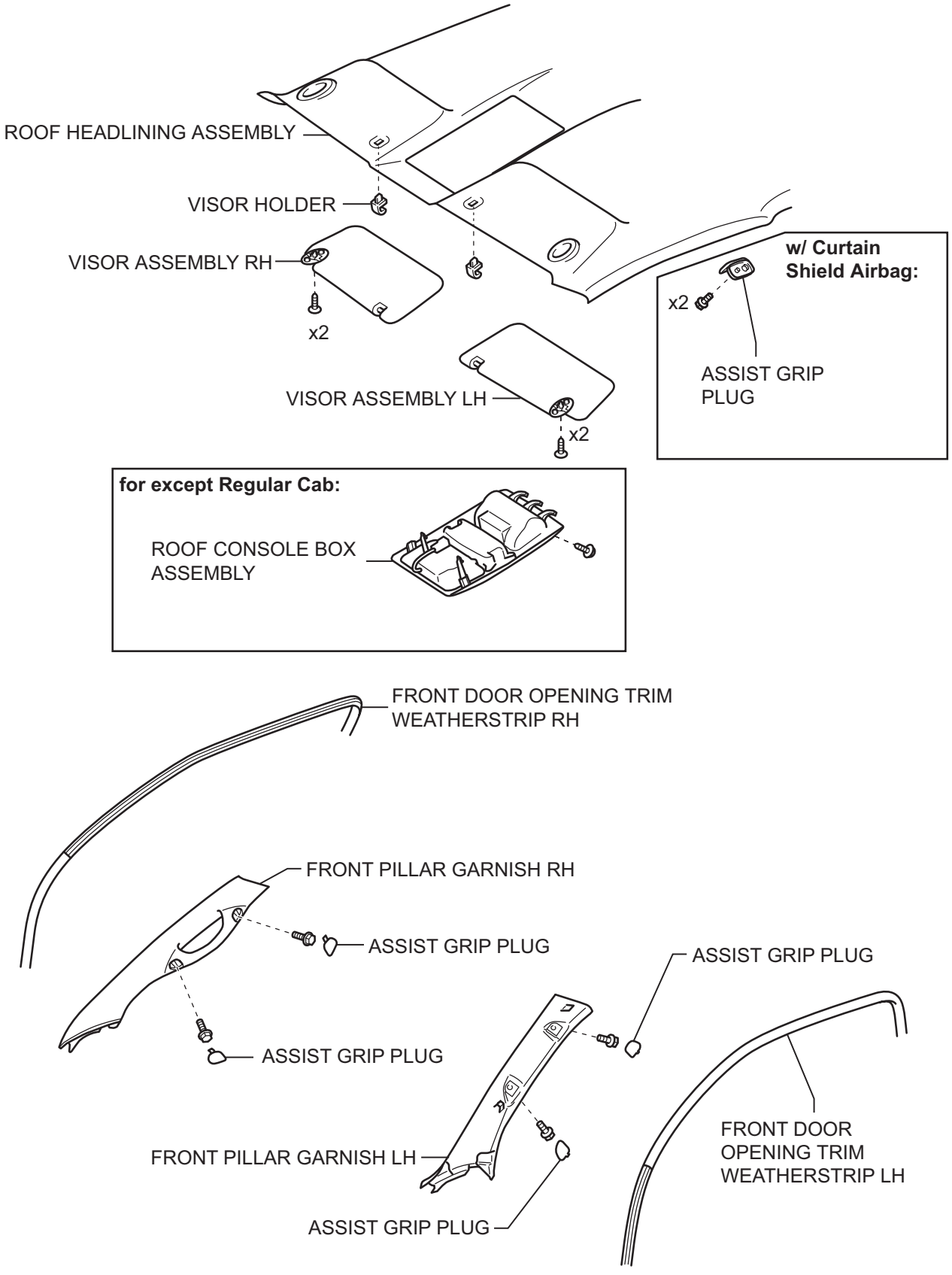

H

B088238E01

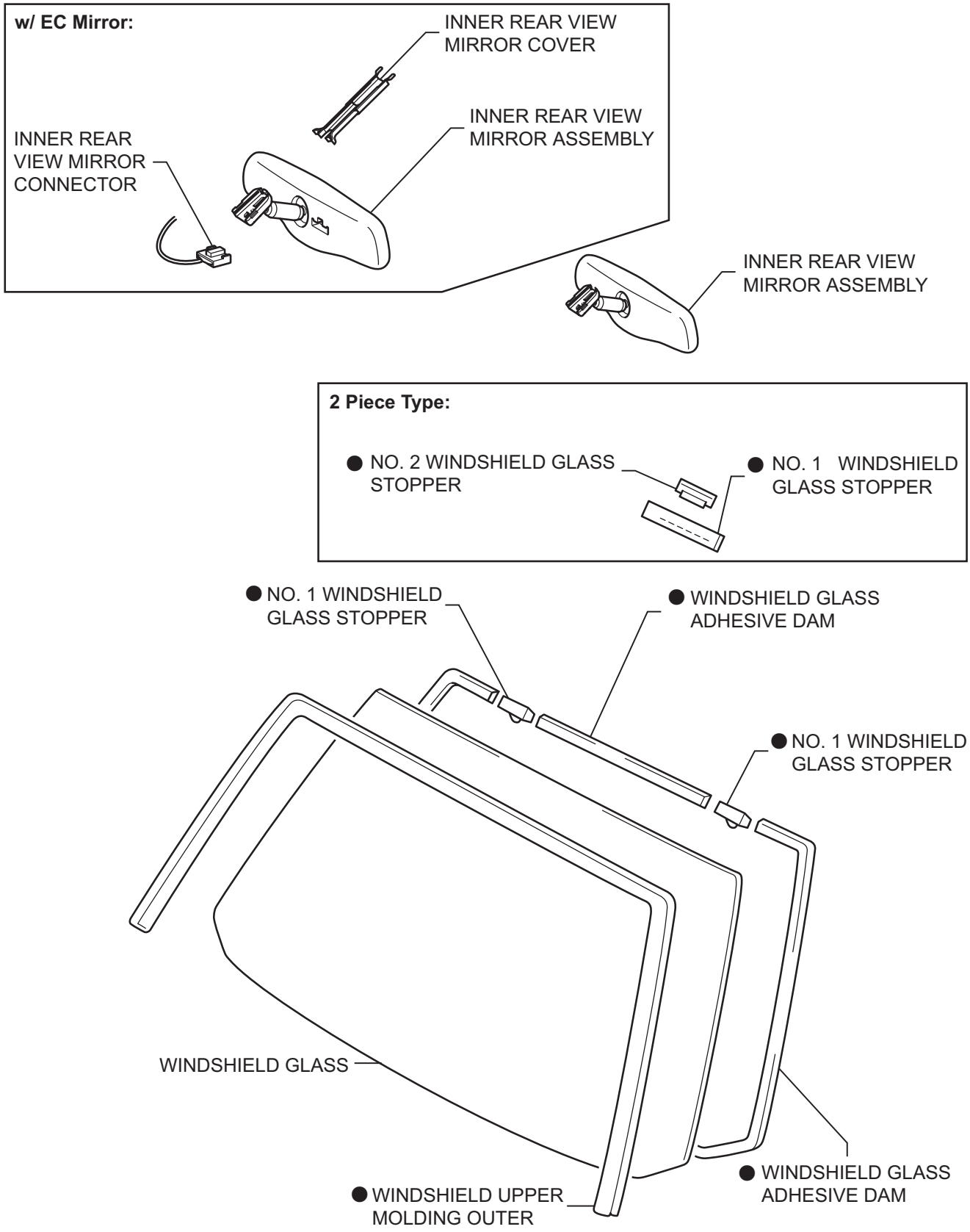
w/ EC Mirror:
INNER REAR VIEW MIRROR COVER
INNER REAR VIEW MIRROR ASSEMBLY
INNER REAR VIEW MIRROR CONNECTOR
INNER REAR VIEW MIRROR ASSEMBLY
2 Piece Type:
● NO. 2 WINDSHIELD GLASS STOPPER
● NO. 1 WINDSHIELD GLASS STOPPER
● NO. 1 WINDSHIELD GLASS STOPPER
● WINDSHIELD GLASS ADHESIVE DAM
● NO. 1 WINDSHIELD GLASS STOPPER
WINDSHIELD GLASS
● WINDSHIELD GLASS ADHESIVE DAM
● WINDSHIELD UPPER MOLDING OUTER
● Non-reusable part
H
B087633E01

WS

BACK WINDOW GLASS

COMPONENTS

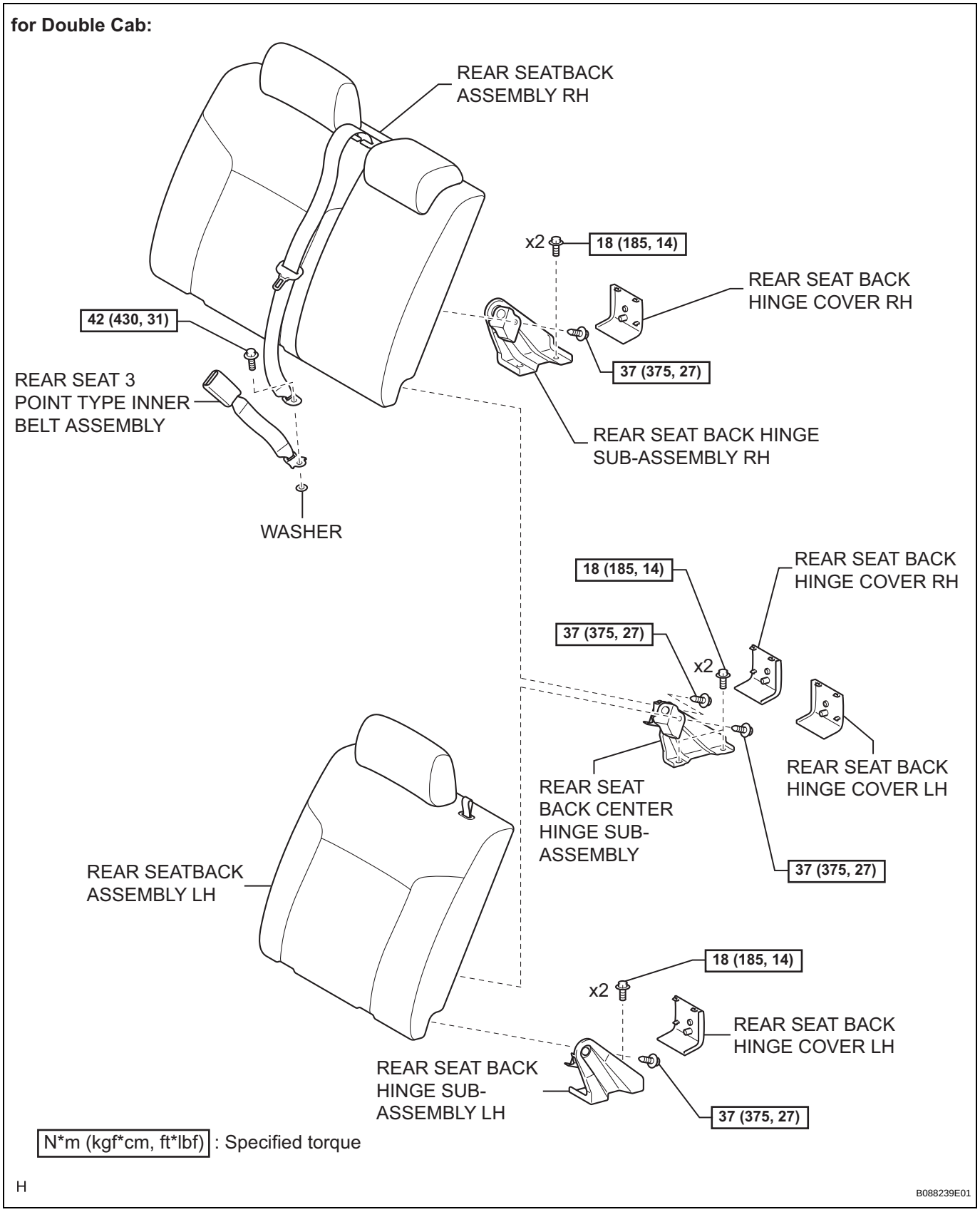

for Regular Cab:

for Bench Seat Type:

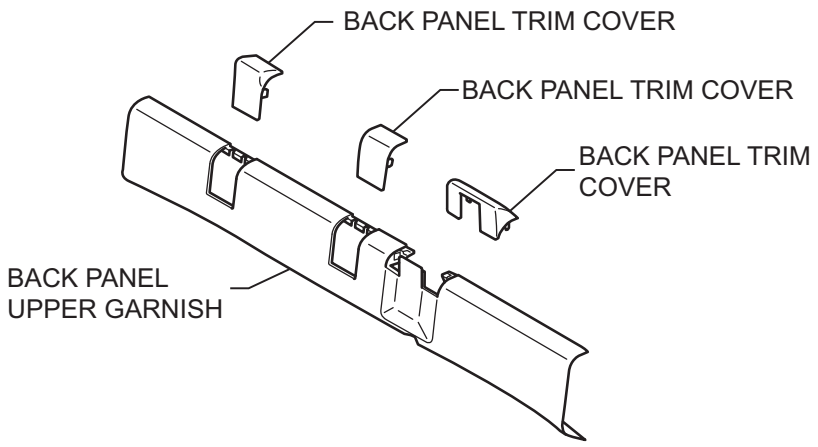

for Separate Seat Type:

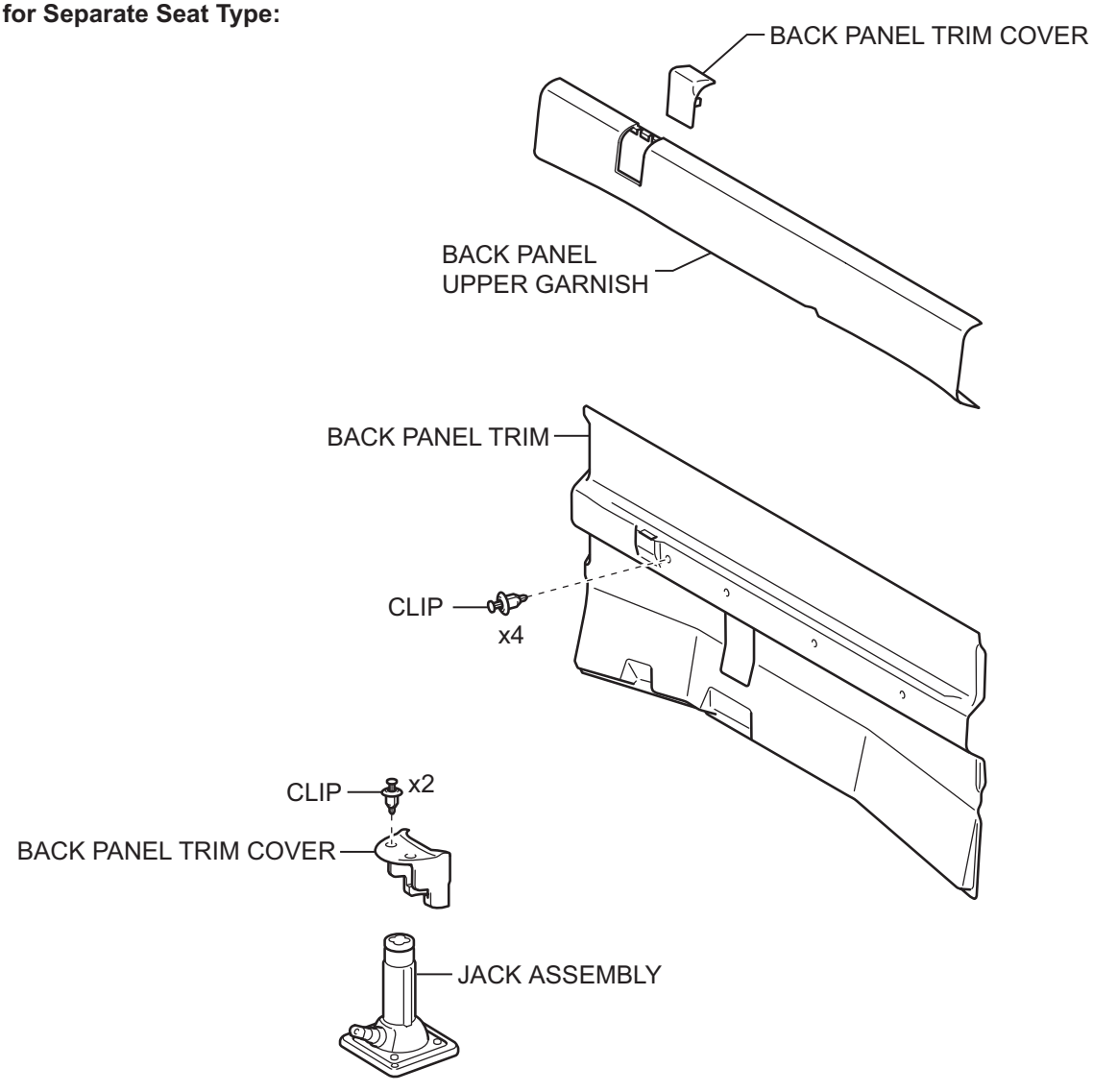

H

B088240E01

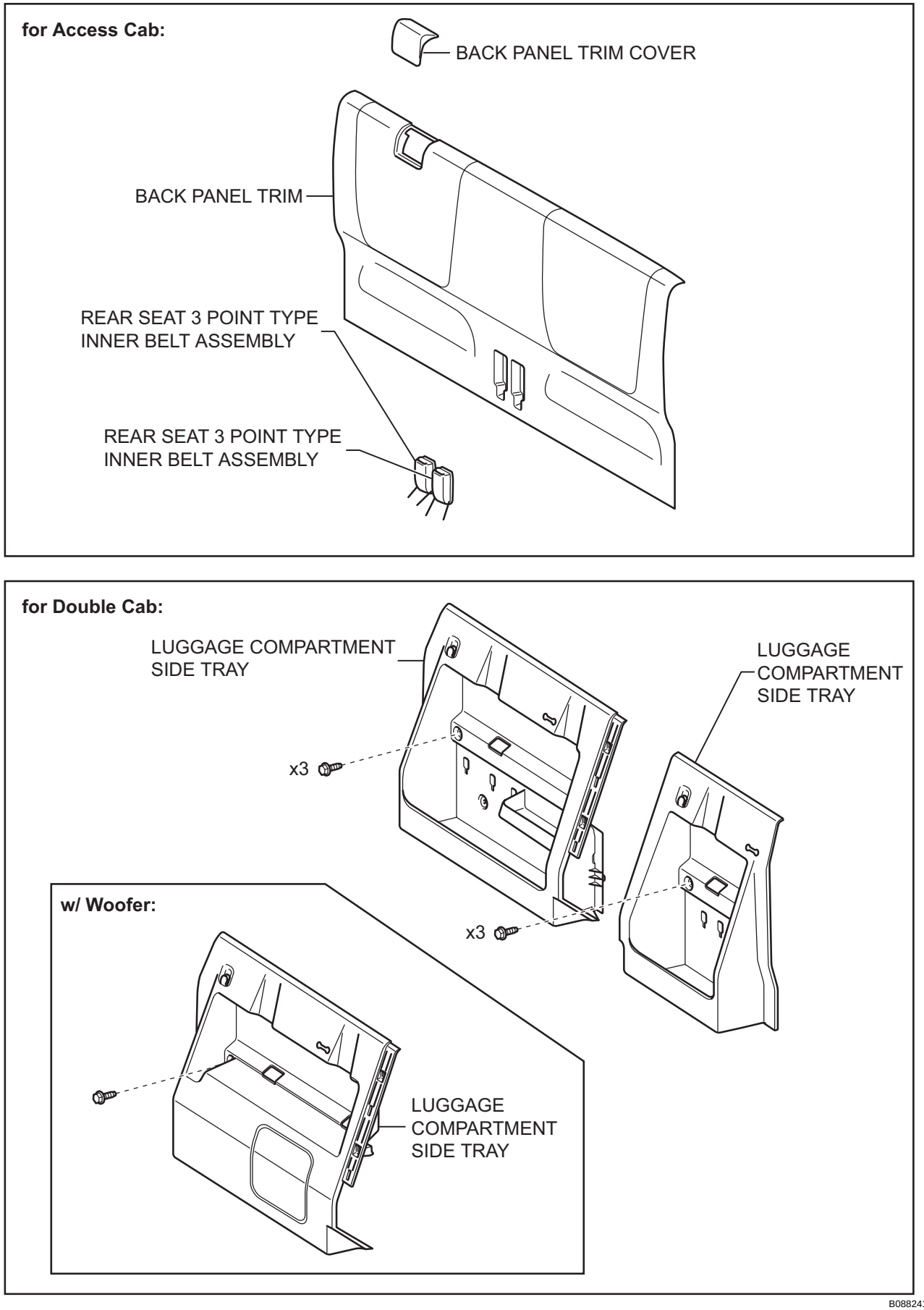
for Access Cab:
BACK PANEL TRIM COVER
BACK PANEL TRIM
REAR SEAT 3 POINT TYPE
INNER BELT ASSEMBLY
REAR SEAT 3 POINT TYPE
INNER BELT ASSEMBLY
for Double Cab:
LUGGAGE COMPARTMENT
SIDE TRAY
LUGGAGE
COMPARTMENT
SIDE TRAY
x3
x3
w/ Woofer:
LUGGAGE
COMPARTMENT
SIDE TRAY
H
B088241E01

WS

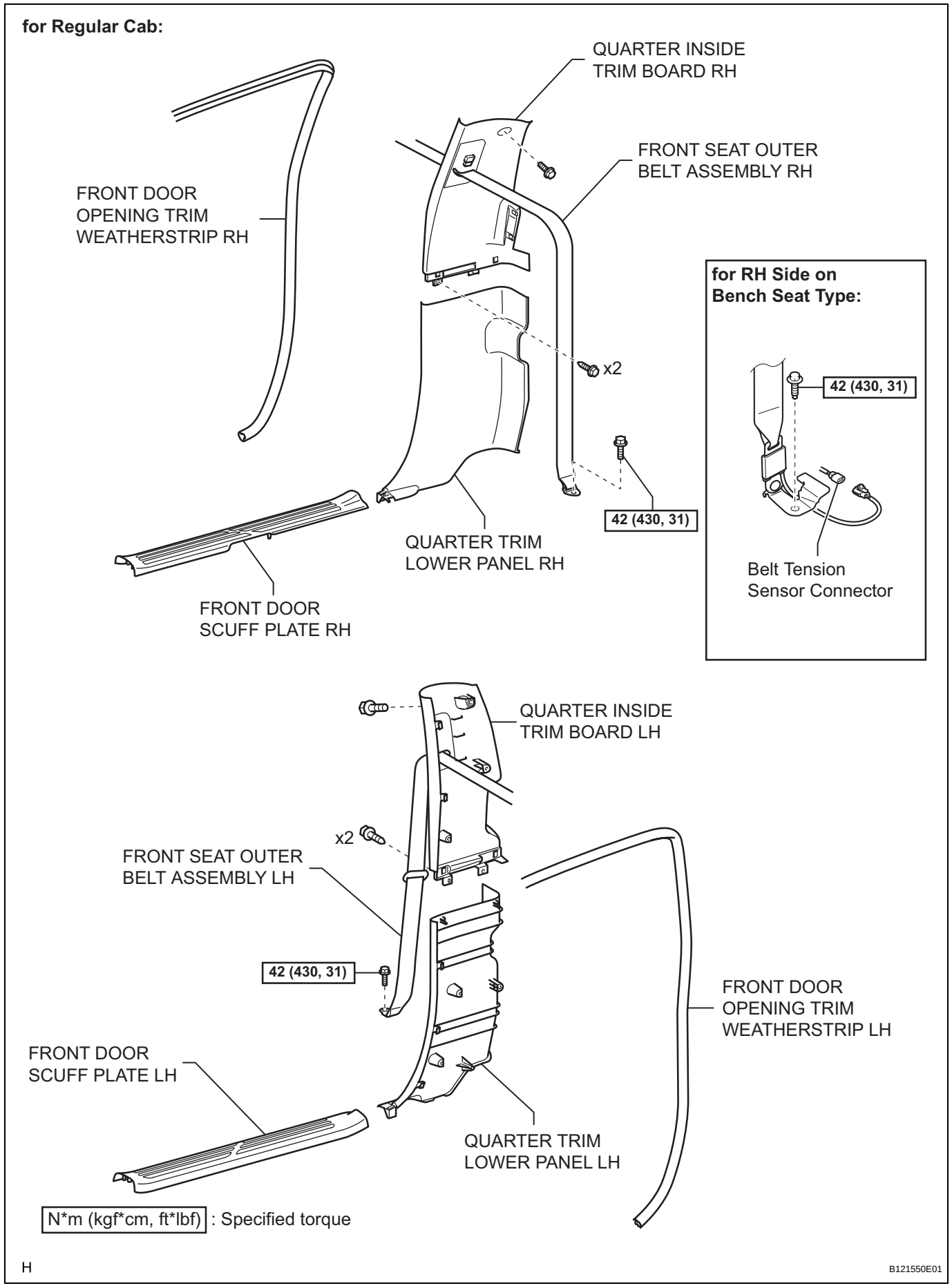
for Regular Cab:
QUARTER INSIDE TRIM BOARD RH
FRONT SEAT OUTER BELT ASSEMBLY RH
FRONT DOOR OPENING TRIM WEATHERSTRIP RH
x2
42 (430, 31)
QUARTER TRIM LOWER PANEL RH
FRONT DOOR SCUFF PLATE RH
for RH Side on Bench Seat Type:
42 (430, 31)
Belt Tension Sensor Connector
QUARTER INSIDE TRIM BOARD LH
x2
FRONT SEAT OUTER BELT ASSEMBLY LH
42 (430, 31)
FRONT DOOR OPENING TRIM WEATHERSTRIP LH
FRONT DOOR SCUFF PLATE LH
QUARTER TRIM LOWER PANEL LH
N*m (kgf*cm, ft*lbf) : Specified torque
H
B121550E01

for Access Cab:

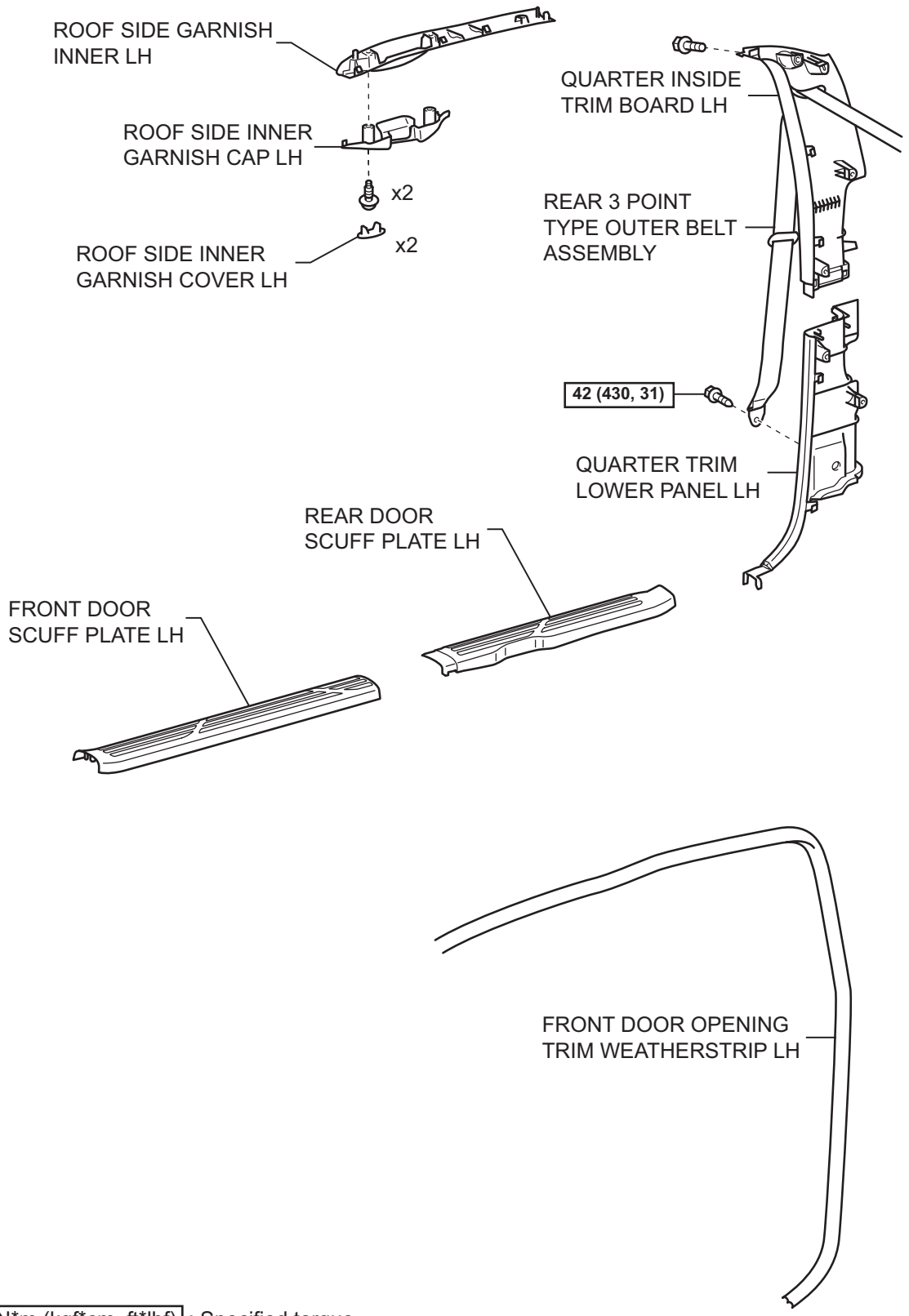

N*m (kgf*cm, ft*lbf) : Specified torque

H

B088243E01

WS

WS

for Access Cab:

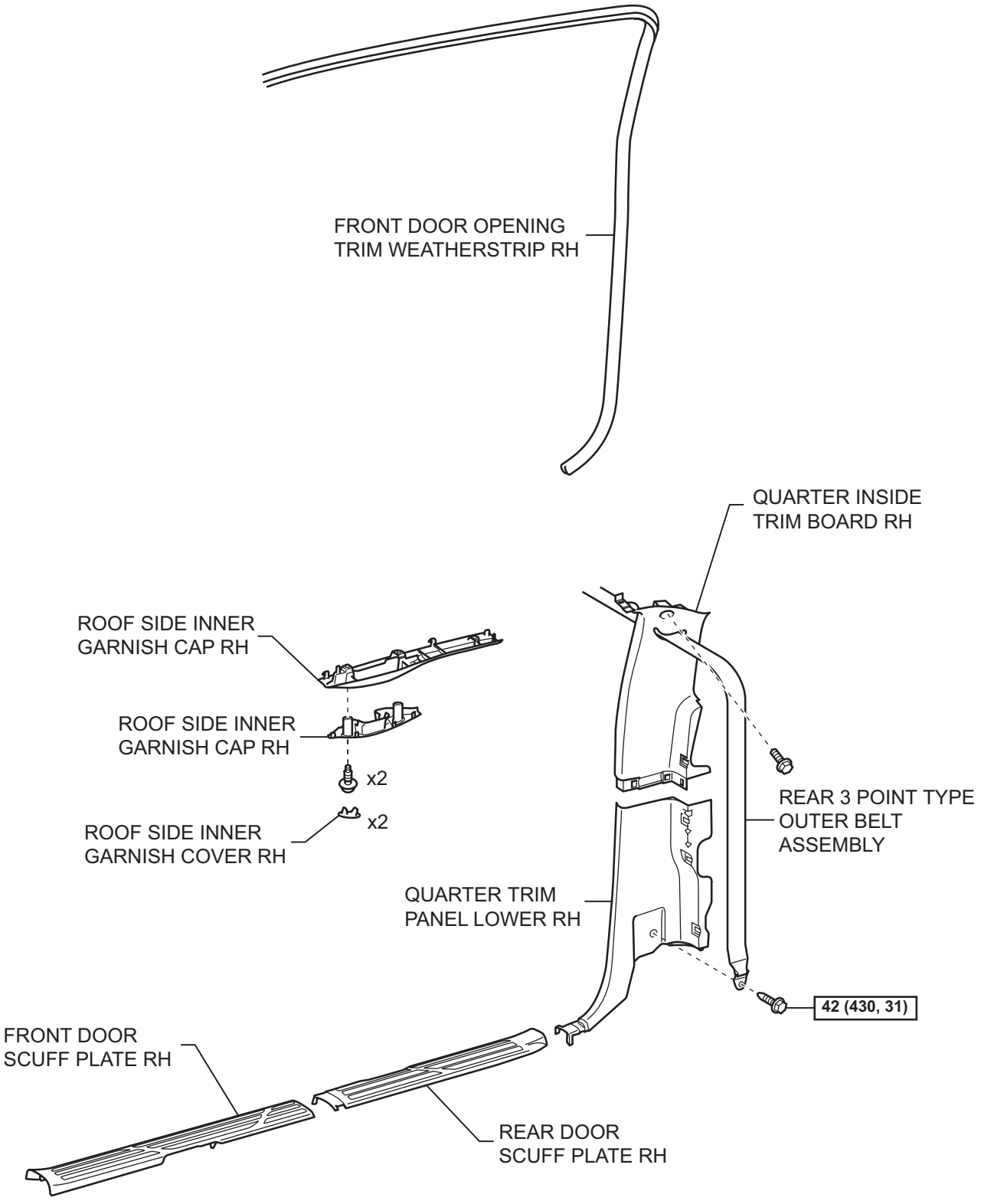

N*m (kgf*cm, ft*lbf) : Specified torque

H

B088244E01

for Double Cab:

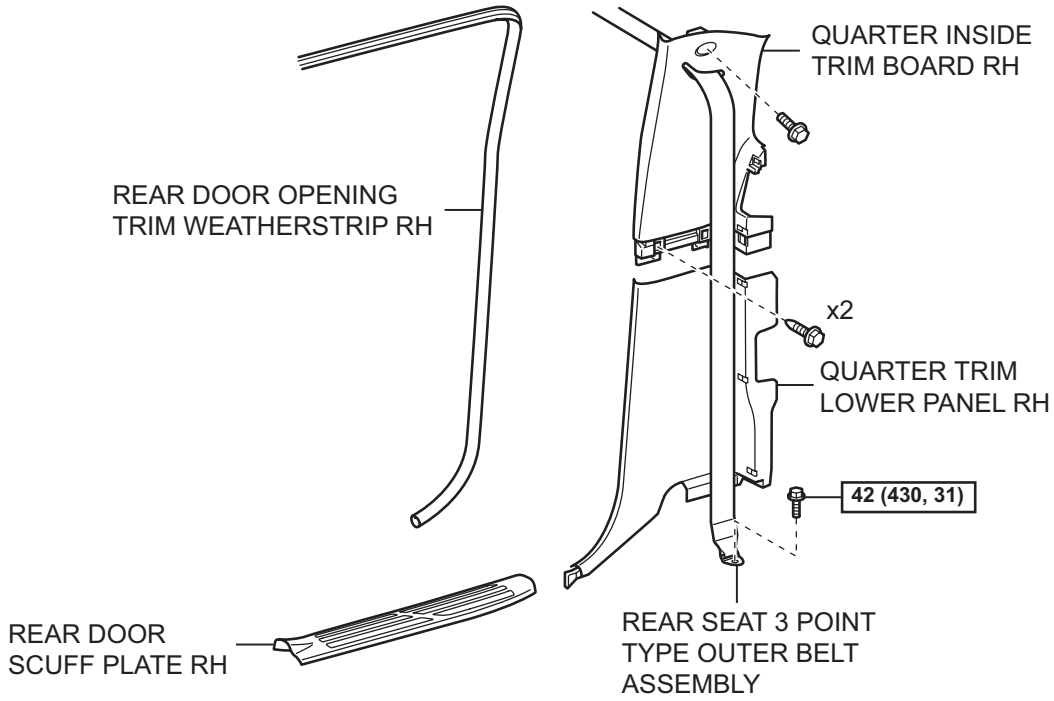

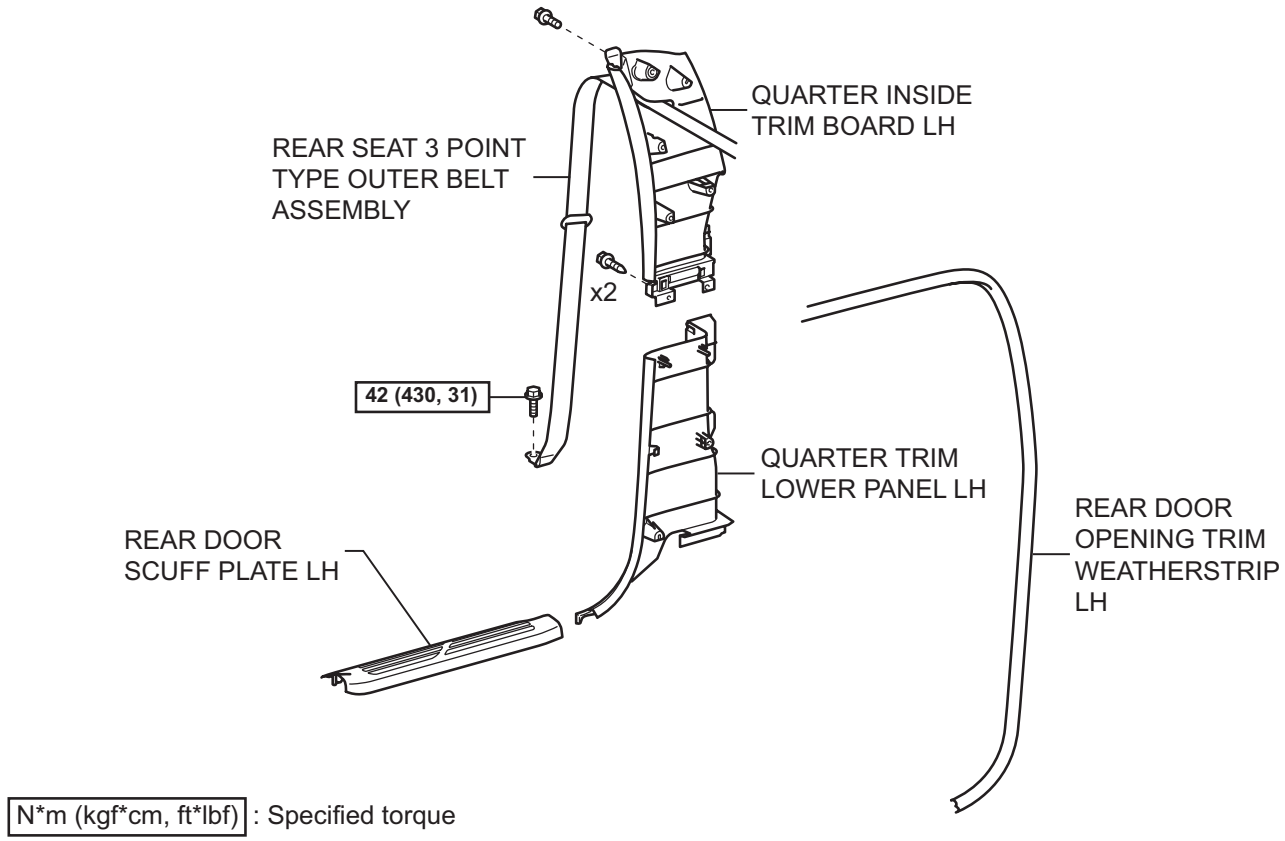

N*m (kgf*cm, ft*lbf) : Specified torque

H

B088245E01

WS

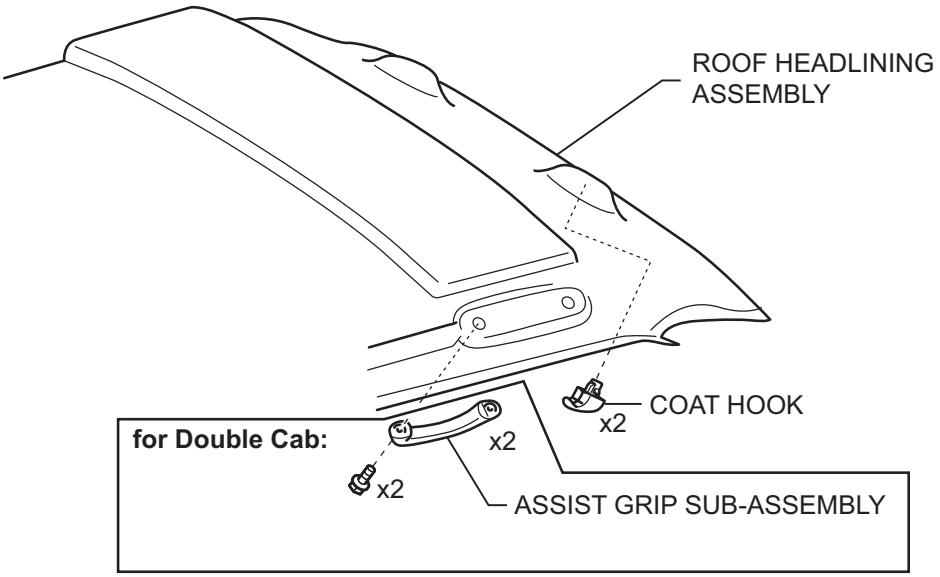

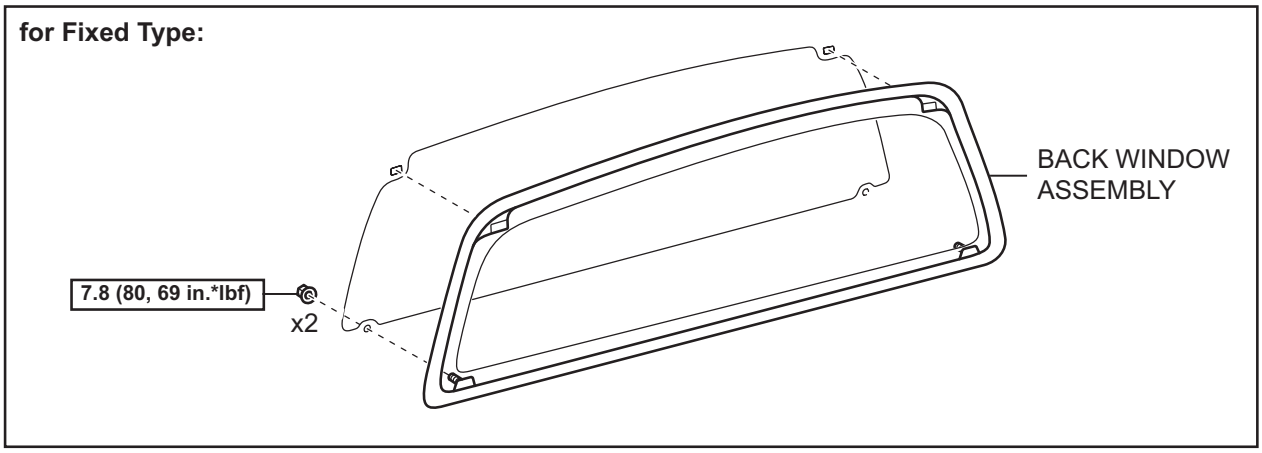

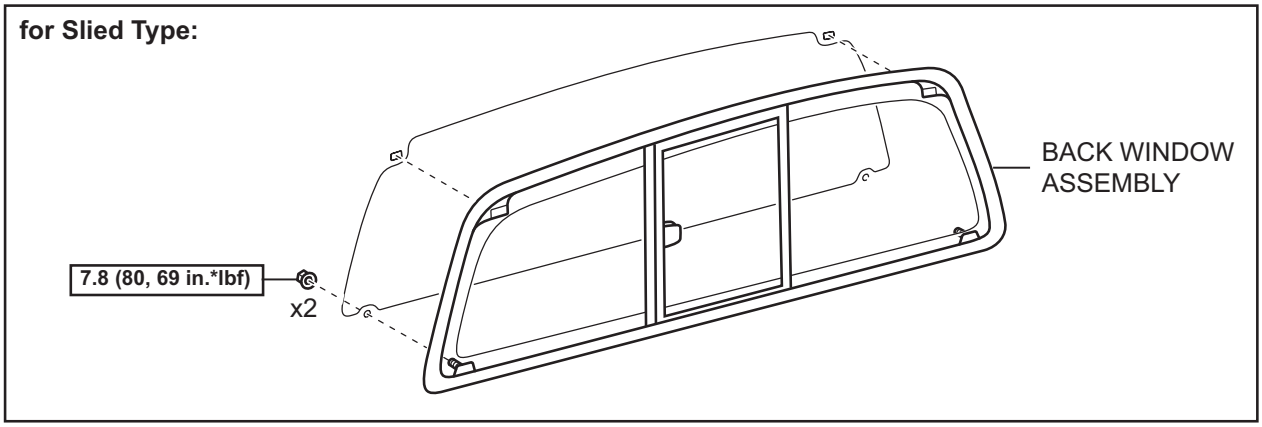

N*m (kgf*cm, ft*lbf) : Specified torque

H

B087623E01

QUARTER WINDOW GLASS (for Access Cab)

COMPONENTS

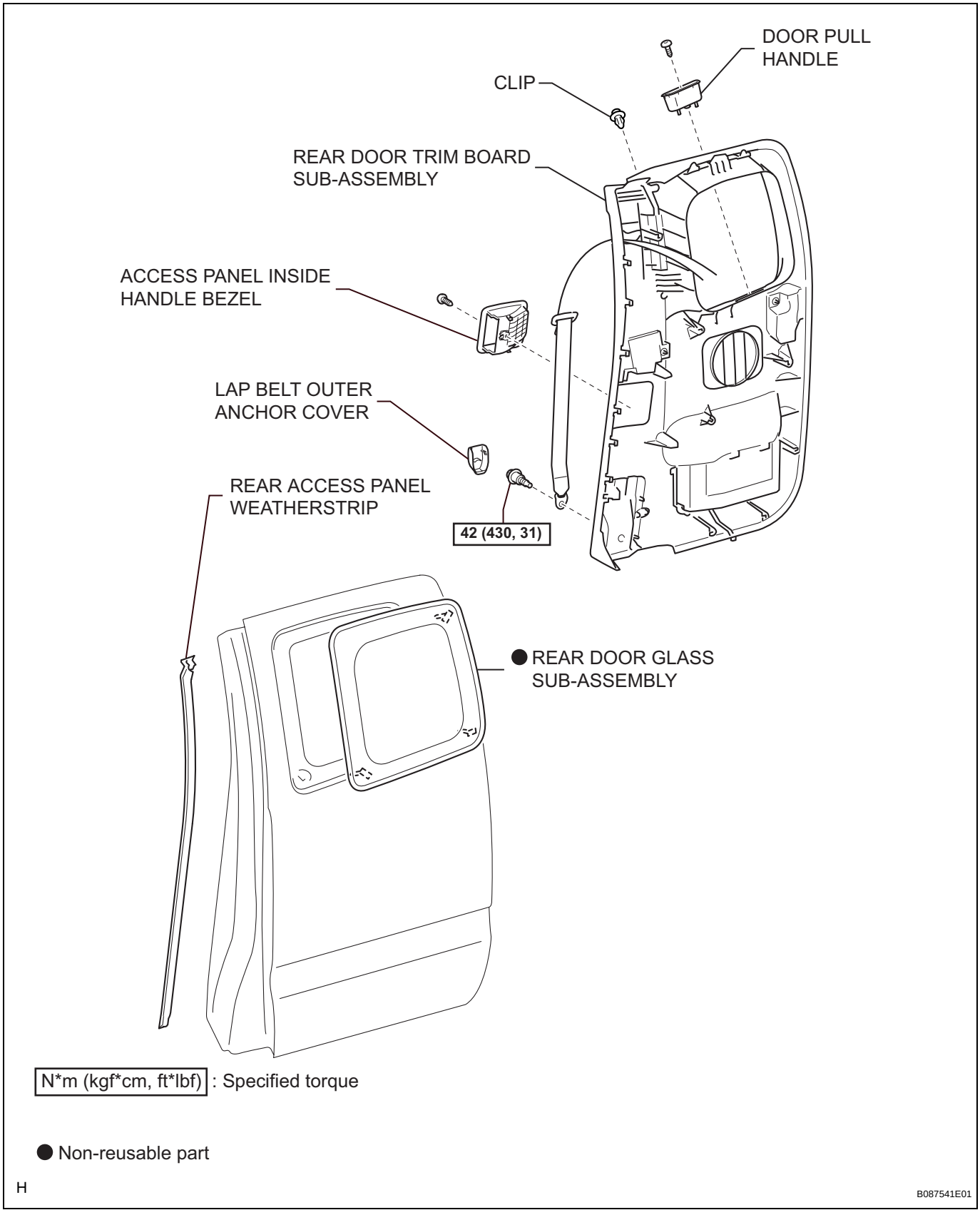

WS

REMOVAL

1. **REMOVE REAR ACCESS PANEL WEATHERSTRIP (See page ED-53)**
2. **REMOVE LAP BELT OUTER ANCHOR COVER (See page ED-53)**
3. **REMOVE REAR DOOR TRIM BOARD SUB-ASSEMBLY (See page ED-53)**
4. **REMOVE REAR DOOR GLASS SUB-ASSEMBLY**
   (a) Apply protective tape to the outer circumference of the quarter window, as shown in the illustration.
   (b) From the interior, insert piano wires between the vehicle body and quarter window, as shown in the illustration.
   (c) When separating the quarter window from the vehicle, be careful not to damage the vehicle's paint or exterior/interior ornaments.
   NOTICE:
   When separating the quarter window from the vehicle, be careful not to damage the vehicle's paint or exterior/interior ornaments.
   (d) Cut through the adhesive by pulling the piano wire around the quarter window.

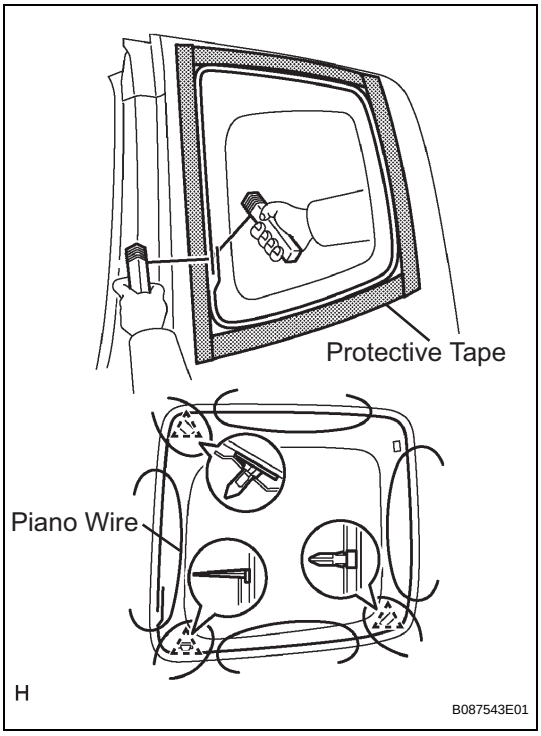

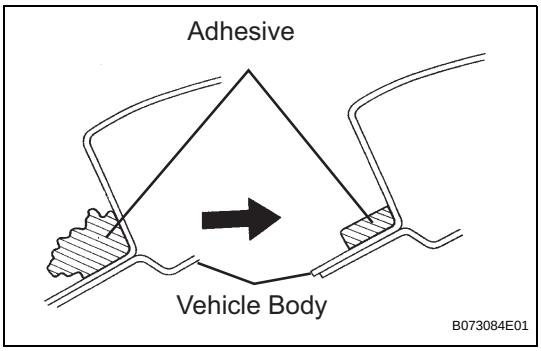

INSTALLATION

1. **CLEAN VEHICLE BODY**
   (a) Clean and shape the contact surface of the vehicle body.
      (1) Using a knife, cut away any rough adhesive on the contact surface of the vehicle body to ensure the appropriate surface shape.
      NOTICE:
      Be careful not to damage the vehicle body.
      HINT:
      Leave as much adhesive on the vehicle body as possible.
      (2) Clean the contact surface of the vehicle body with a shop rag saturated with cleaner.
      HINT:
      Even if all the adhesive has been removed, clean the vehicle body.
2. **INSTALL REAR DOOR GLASS SUB-ASSEMBLY LH**
   (a) Using a brush, apply Primer M to the exposed part of the vehicle body.
   NOTICE:
   - **Allow the primer to dry for 3 minutes or more.**
   - **Do not apply Primer M to the adhesive.**

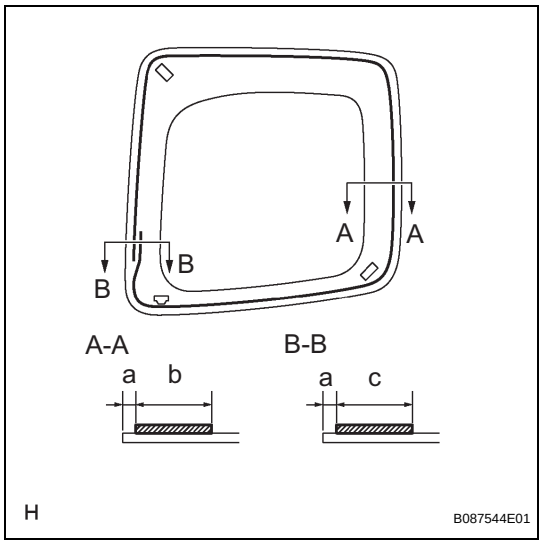

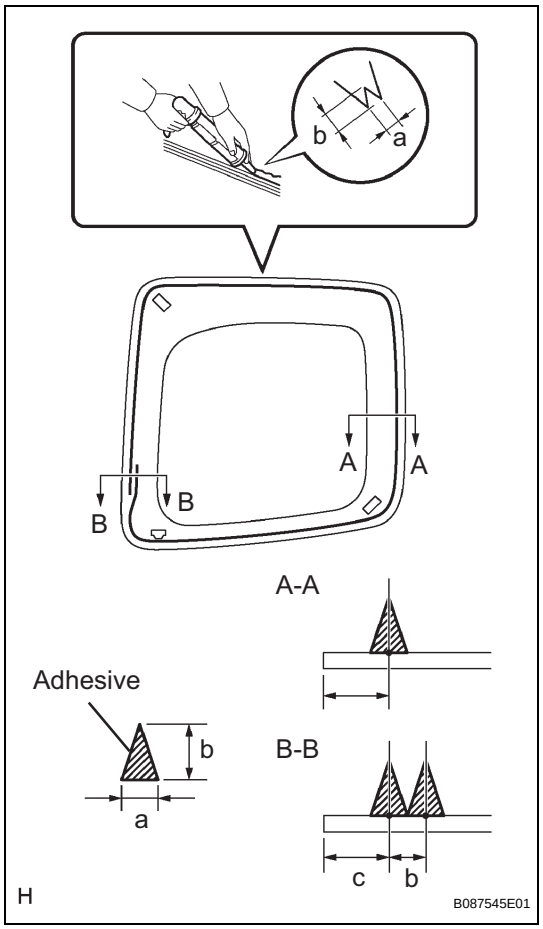

- **Throw away any leftover Primer M.**
- **Do not apply too much Primer M.**

(b) Using a brush or sponge, apply Primer G to the edge of the quarter window and contact surface.
Specification

Area	Measurement
a	5 mm (0.197 in.)
b	20 mm (0.787 in.)
c	26 mm (1.023 in.)

NOTICE:
- **Allow the primer to dry for 3 minutes or more.**
- **Throw away any leftover Primer G.**
- **Do not apply too much Primer G.**

HINT:
If Primer G is applied to any areas other than that which is specified, wipe off the primer with a clean shop rag before it dries.

(c) Apply adhesive.
Adhesive:
Part No. 08850-00801 or equivalent
(1) Cut off the tip of the cartridge nozzle, as shown in the illustration.
HINT:
After cutting off the tip, use all adhesive within the time indicated in the table bellow.
Usage time frame

Temperature	Usage Time Frame
35°C (95°F)	15 minutes
20°C (68°F)	1 hour 40 minutes
5°C (41°F)	8 hours

(2) Load the sealer gun with the cartridge.
(3) Apply adhesive to the quarter window as shown in the illustration.
Specification

Area	Measurement
a	8 mm (0.315 in.)
b	12 mm (0.472 in.)
c	13 mm (0.512 in.)

3. CHECK FOR LEAKAGE AND REPAIR
(a) Conduct a leak test after the adhesive has completely hardened.
(b) Seal any leakage with auto glass sealer.

4. INSTALL REAR DOOR TRIM BOARD SUB-ASSEMBLY (See page ED-63)

5. INSTALL LAP BELT OUTER ANCHOR COVER (See page ED-63)

6. INSTALL REAR ACCESS PANEL WEATHERSTRIP (See page ED-64)

WS

POWER MIRROR CONTROL SYSTEM

PARTS LOCATION

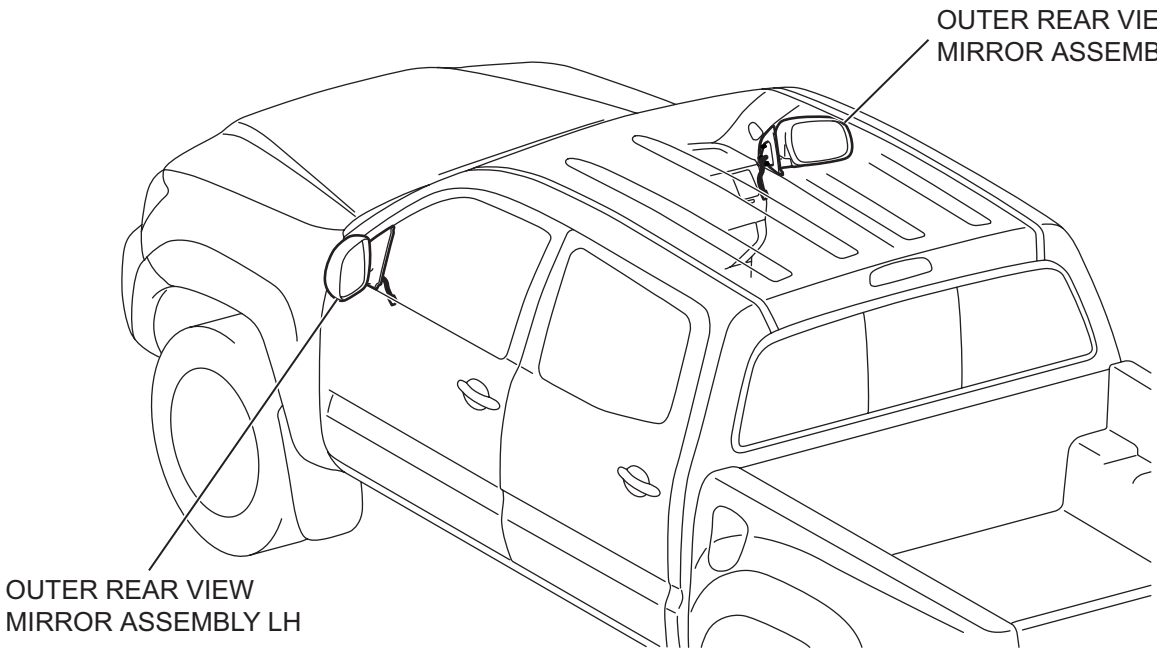

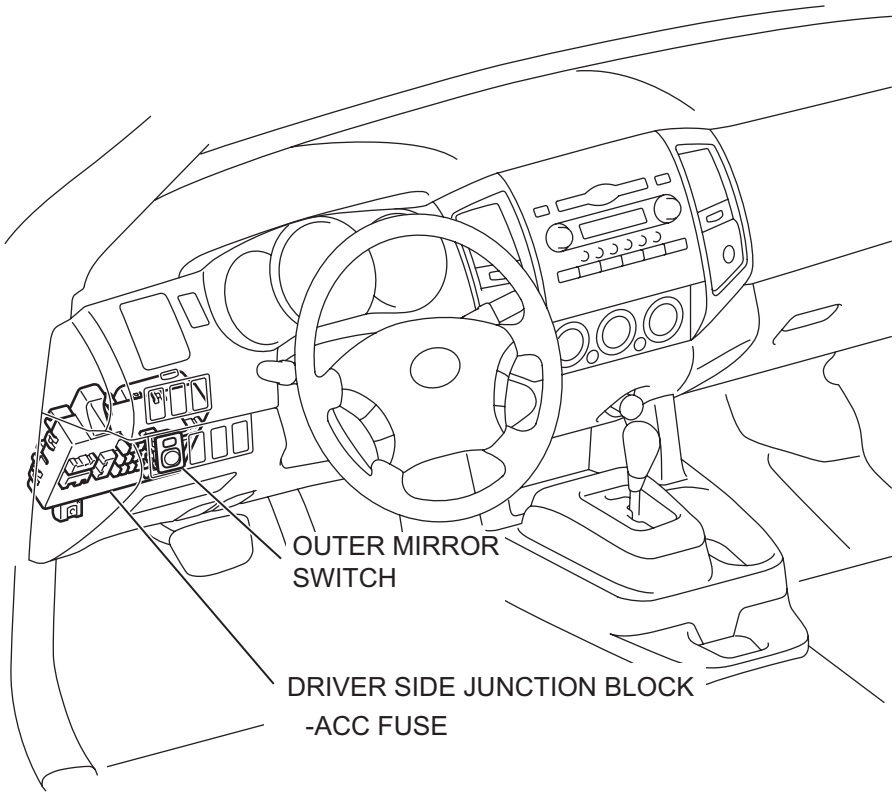

H

B087559E01

SYSTEM DIAGRAM

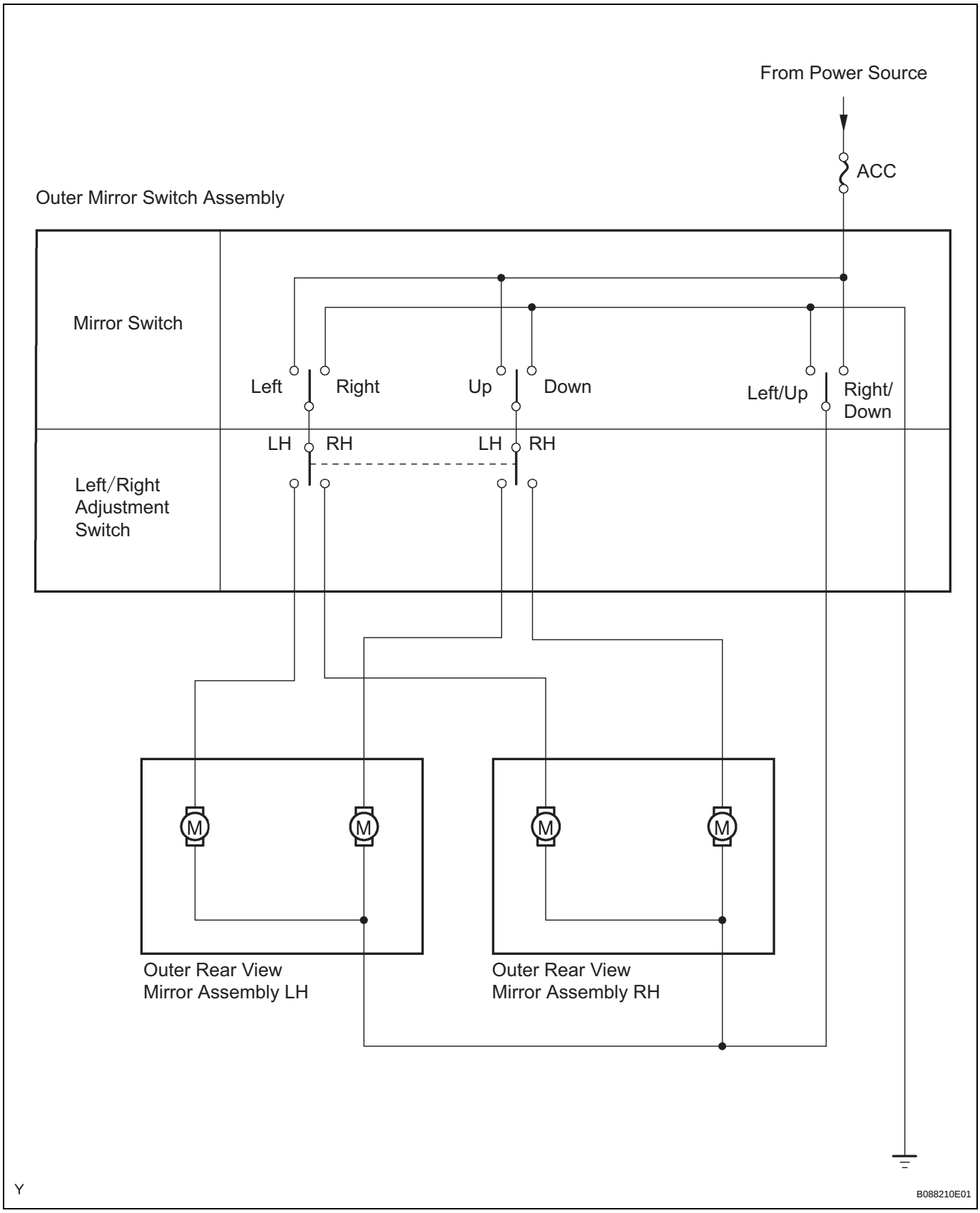

INNER REAR VIEW MIRROR

REMOVAL

1. DISCONNECT CABLE FROM NEGATIVE BATTERY TERMINAL (w/ EC Mirror)

2. REMOVE INNER REAR VIEW MIRROR ASSEMBLY

(a) w/o Automatic glare-resistant EC mirror:

(1) Pinch the cover and disengage the 2 claws, and remove the cover.

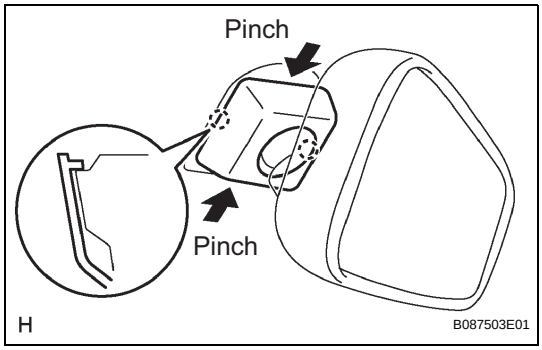

(2) Push the lever, and slide and remove the inner rear view mirror.

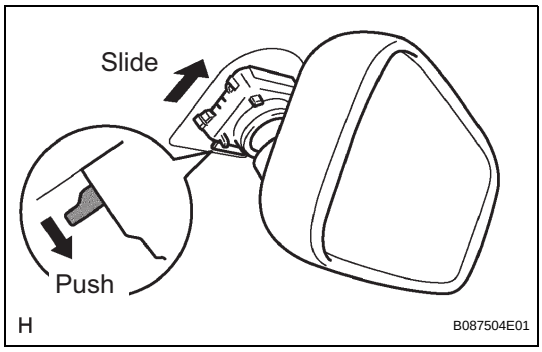

(b) w/ Automatic glare-resistant EC mirror.

(1) Disconnect the EC mirror connector.

(2) Slide the inner rear view mirror cover.

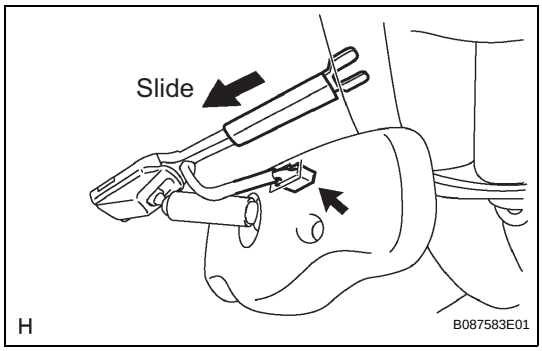

(3) Slide the inner rear view mirror.

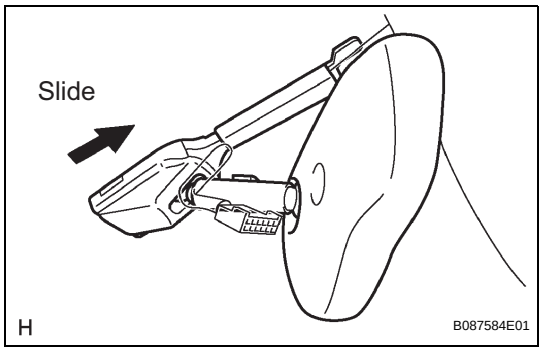

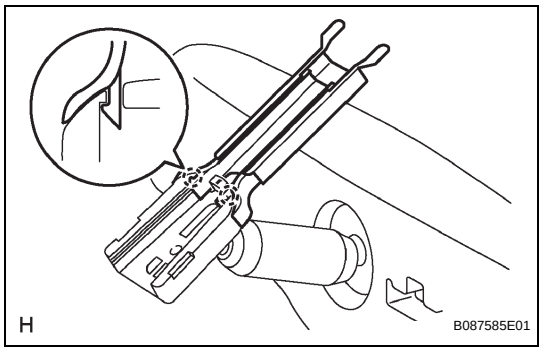

(4) Disengage the 2 claws and remove the inner rear view mirror cover.

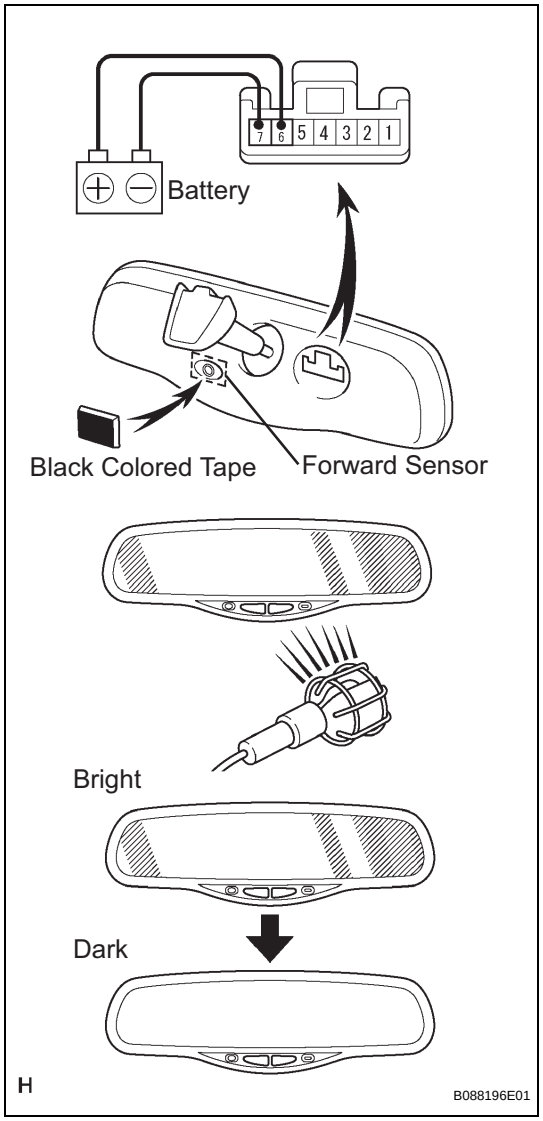

INSPECTION

1. INSPECT INNER REAR VIEW MIRROR ASSEMBLY (w/ EC Mirror)

(a) Check the operation.

(1) Connect the battery's positive (+) lead to terminal 6 and the negative (-) lead to terminal 7.

(2) Apply black colored tape to the forward sensor to prevent it from sensing.

(3) Light up the mirror with an electric light, and check that the mirror surface changes from bright to dark.
If the result is not as specified, replace the inner rear view mirror.

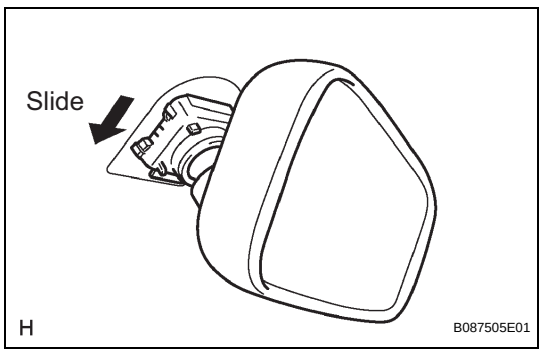

INSTALLATION

1. INSTALL INNER REAR VIEW MIRROR ASSEMBLY

(a) w/o Automatic glare-resistant EC mirror:

(1) Slide and install the inner rear view mirror.

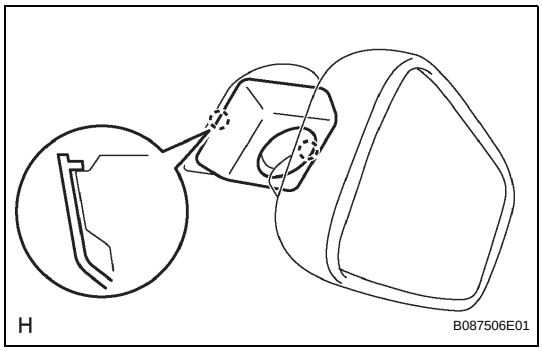

(2) Engage the 2 claws and install the cover.

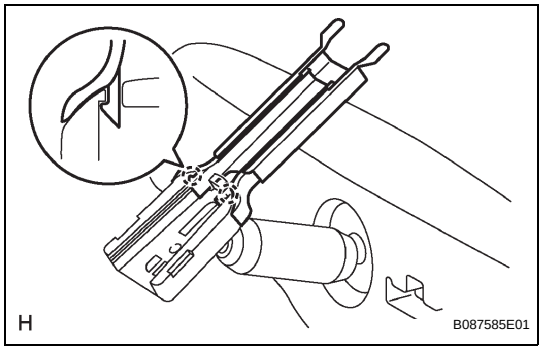

(b) w/ Automatic glare-resistant EC mirror:
(1) Engage the 2 claws and install the inner rear view mirror cover.

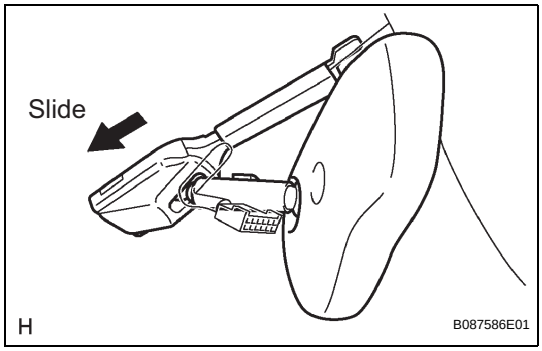

(2) Slide and install the inner rear view mirror.

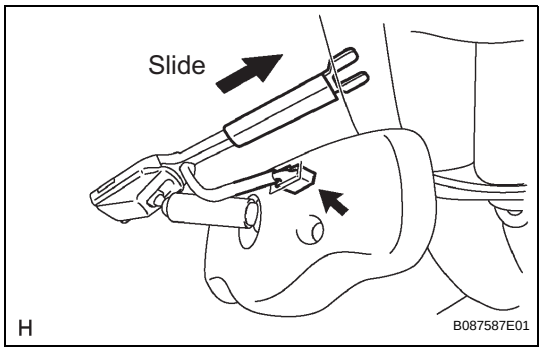

(3) Slide the inner rear view mirror cover.
(4) Connect the EC mirror connector.

2. CONNECT CABLE TO NEGATIVE BATTERY TERMINAL (w/ EC Mirror)
Torque: 3.9 N*m (40 kgf*cm, 35 in.*lbf)

OUTER REAR VIEW MIRROR

COMPONENTS

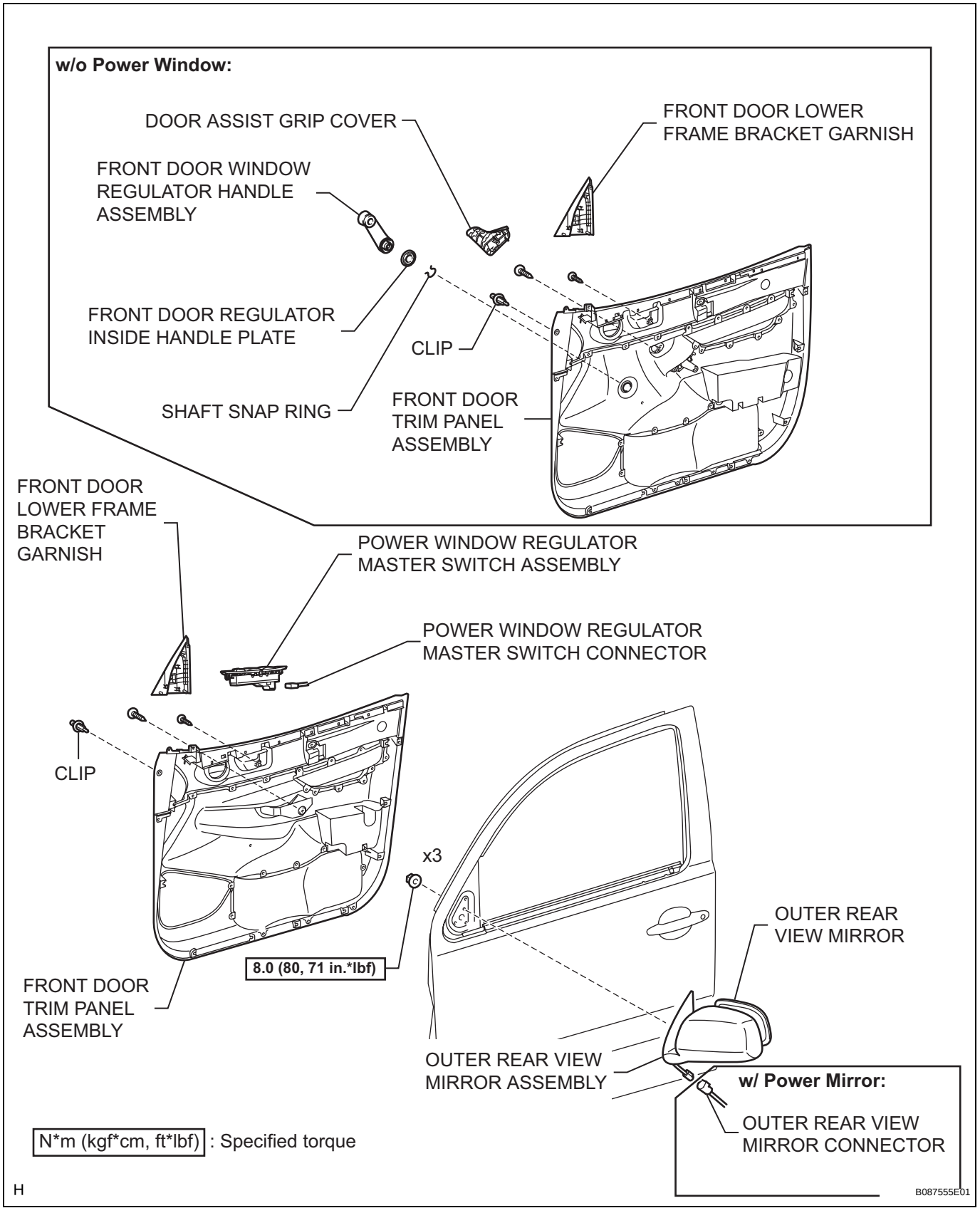

REMOVAL

1. **DISCONNECT CABLE FROM NEGATIVE BATTERY TERMINAL**
2. **REMOVE FRONT DOOR LOWER FRAME BRACKET GARNISH (w/ Power Window) (See page ED-13)**
3. **REMOVE FRONT DOOR LOWER FRAME BRACKET GARNISH (w/o Power Window) (See page ED-34)**
4. **REMOVE FRONT DOOR WINDOW REGULATOR HANDLE ASSEMBLY (See page ED-34)**
5. **REMOVE POWER WINDOW REGULATOR MASTER SWITCH ASSEMBLY (for Double Cab) (See page ED-13)**
6. **REMOVE POWER WINDOW REGULATOR MASTER SWITCH ASSEMBLY (for Access Cab) (See page ED-13)**
7. **REMOVE FRONT DOOR TRIM PANEL ASSEMBLY (w/ Power Window) (See page ED-14)**
8. **REMOVE FRONT DOOR TRIM PANEL ASSEMBLY (w/ o Power Window) (See page ED-35)**
9. **REMOVE OUTER REAR VIEW MIRROR ASSEMBLY**
   (a) Disconnect the outer rear view mirror connector (w/ Power mirror).
   (b) Remove the 3 nuts.
   (c) Disengage the claw and remove the outer rear view mirror.

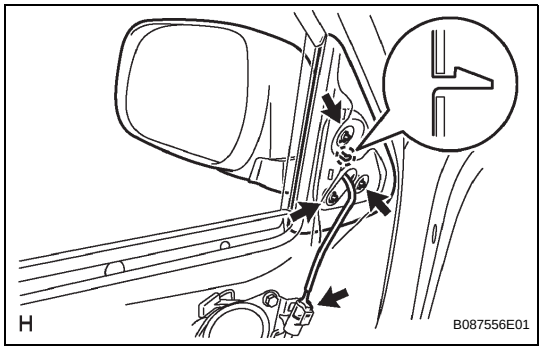

10. **REMOVE OUTER REAR VIEW MIRROR**
    (a) Apply protective tape to the outer circumference of the outer rear view mirror, as shown in the illustration.
    (b) Using a screwdriver with its tip taped in protective tape, disengage the 2 claws.
    (c) Disengage the 2 claws and remove the outer rear view mirror.

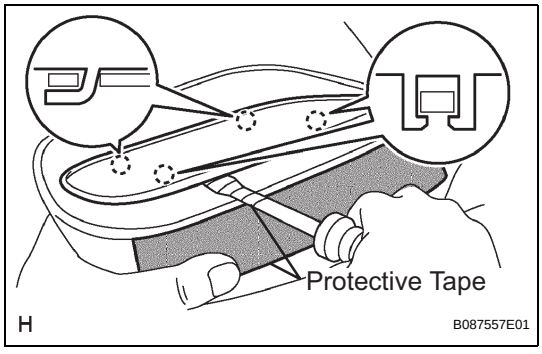

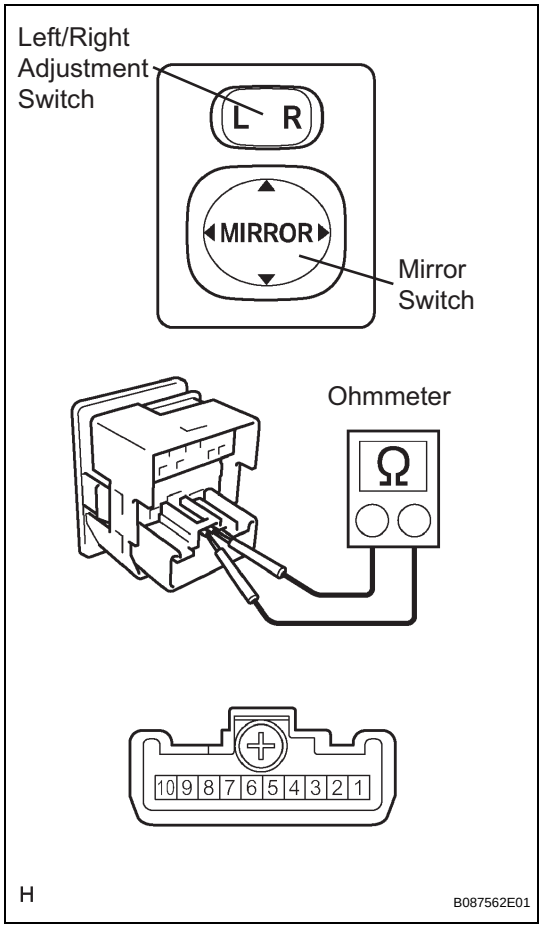

OUTER MIRROR SWITCH

INSPECTION

1. INSPECT OUTER MIRROR SWITCH ASSEMBLY

(a) Check the resistance.

(1) Press L on the left/right adjustment switch.

(2) Using an ohmmeter, measure the resistance between the terminals.

Standard

Terminal Connection	Mirror Switch Condition	Specified Condition
4 (VL) - 8 (B) 6 (M+) - 7 (E)	UP	Below 1 Ω
4 (VL) - 7 (E) 6 (M+) - 8 (B)	DOWN	Below 1 Ω
5 (HL) - 8 (B) 6 (M+) - 7 (E)	LEFT	Below1 Ω
5 (HL) - 7 (E) 6 (M+) - 8 (B)	RIGHT	Below 1 Ω

If the result is not as specified, replace the outer mirror switch.

(3) Press R on the left/right adjustment switch.

(4) Using an ohmmeter, measure the resistance between the terminals.

Standard

Terminal Connection	Mirror Switch Condition	Specified Condition
3 (VR) - 8 (B) 6 (M+) - 7 (E)	UP	Below 1 Ω
3 (VR) - 7 (E) 6 (M+) - 8 (B)	DOWN	Below 1 Ω
2 (HR) - 8 (B) 6 (M+) - 7 (E)	LEFT	Below 1 Ω
2 (HR) - 7 (E) 6 (M+) - 8 (B)	RIGHT	Below 1 Ω

If the result is not as specified, replace the outer mirror switch.

INSTRUMENT PANEL SAFETY PAD

PRECAUTION

1. PRECAUTION FOR VEHICLE WITH SRS AIRBAG AND SEAT BELT PRETENSIONER

(a) Some operations in this section may affect the SRS airbags. Prior to performing the corresponding operations, read the SRS airbag NOTICE (see page RS-1).

COMPONENTS

for Automatic Transmission on Bench Seat Type:

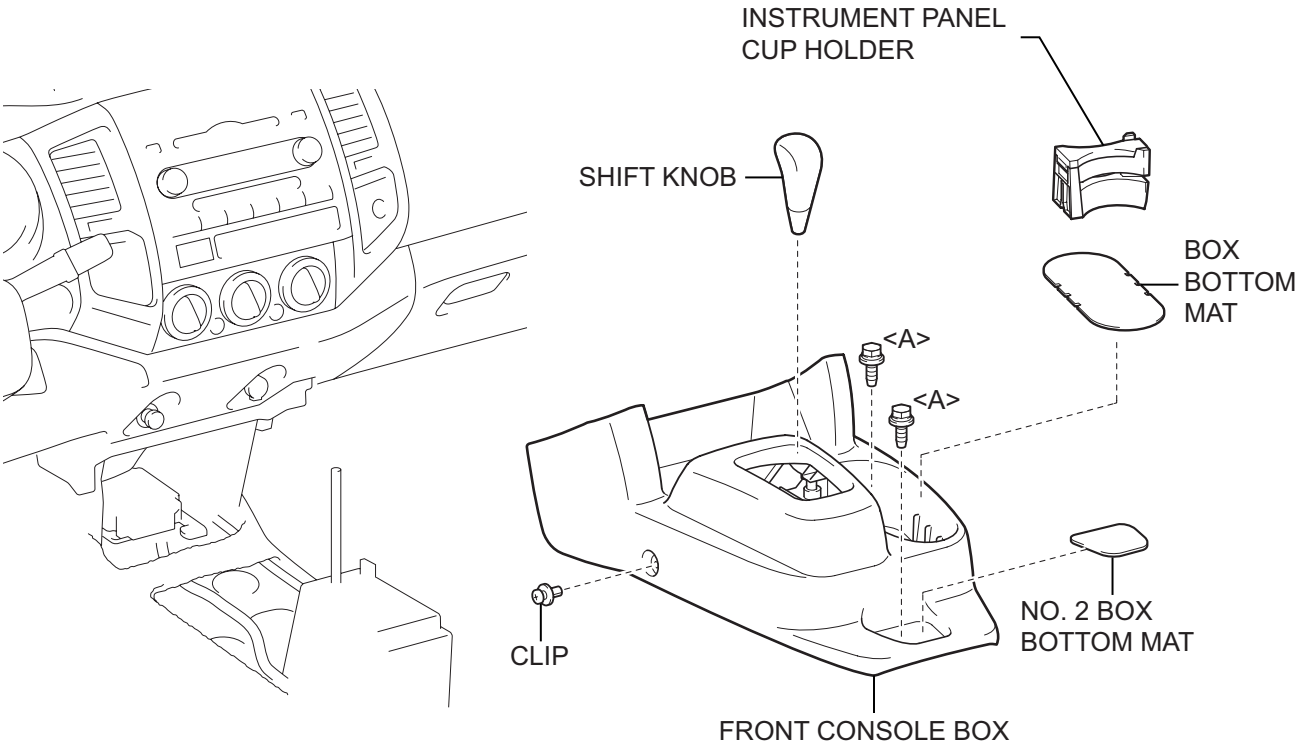

for Manual Transmission on Bench Seat Type:

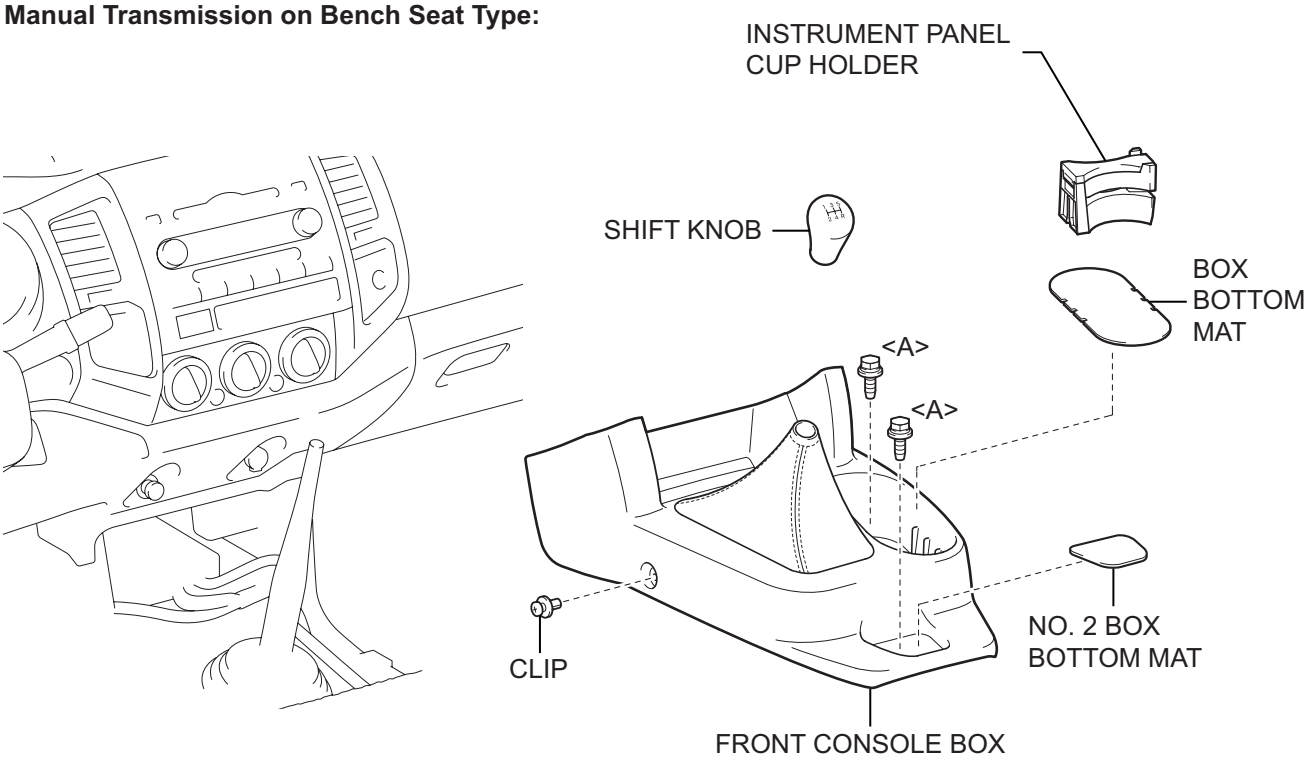

P

B085798E01

for Automatic Transmission on Separate Seat Type :

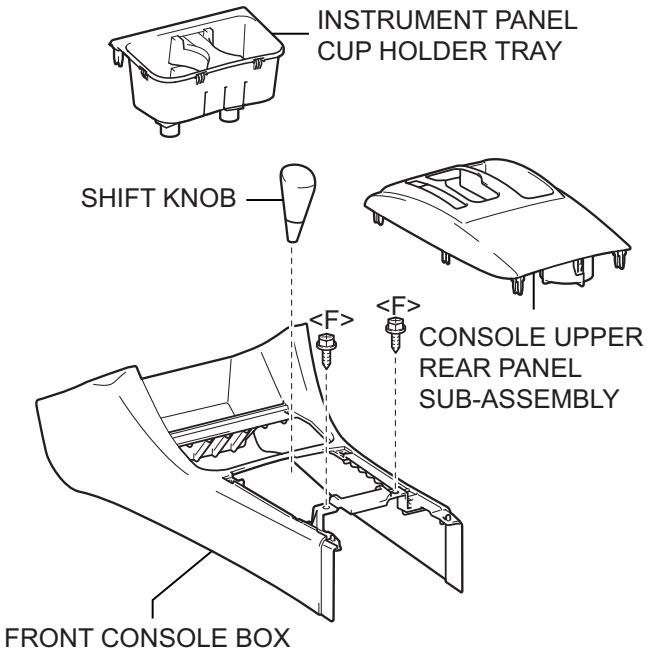

for Manual Transmission on Separate Seat Type:

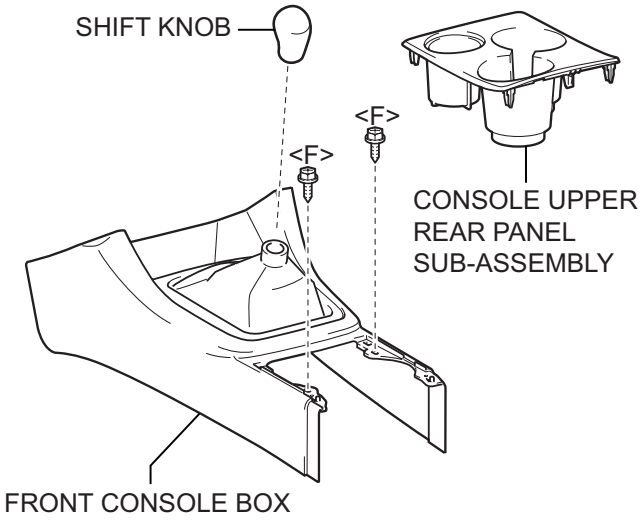

for Separate Seat Type:

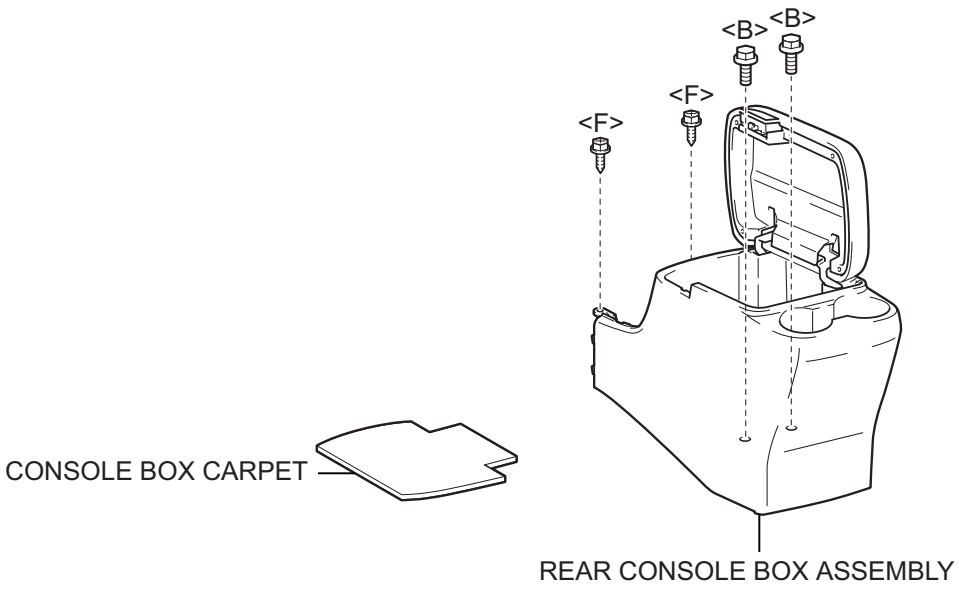

P

B085799E01

IP

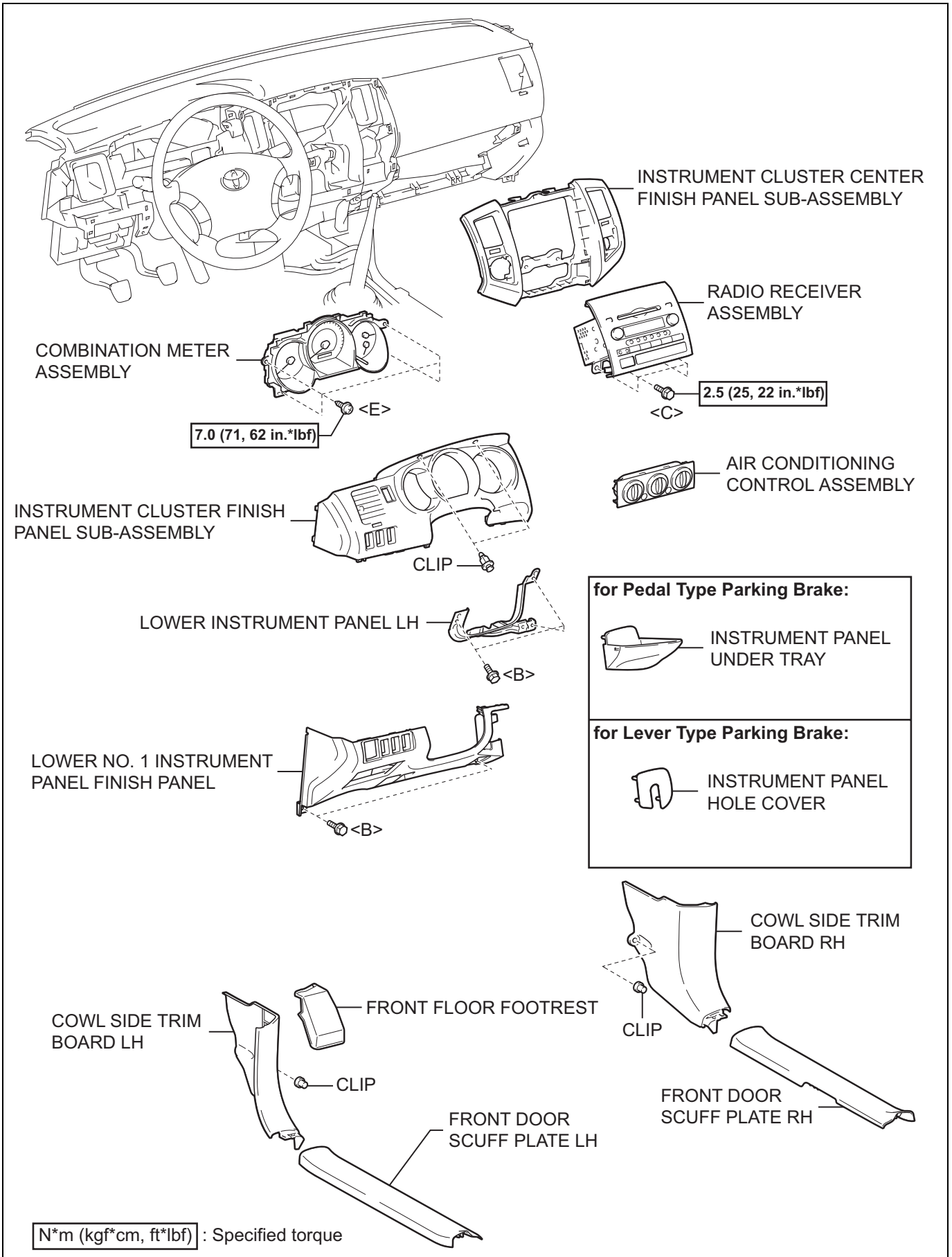

P

B085800E01

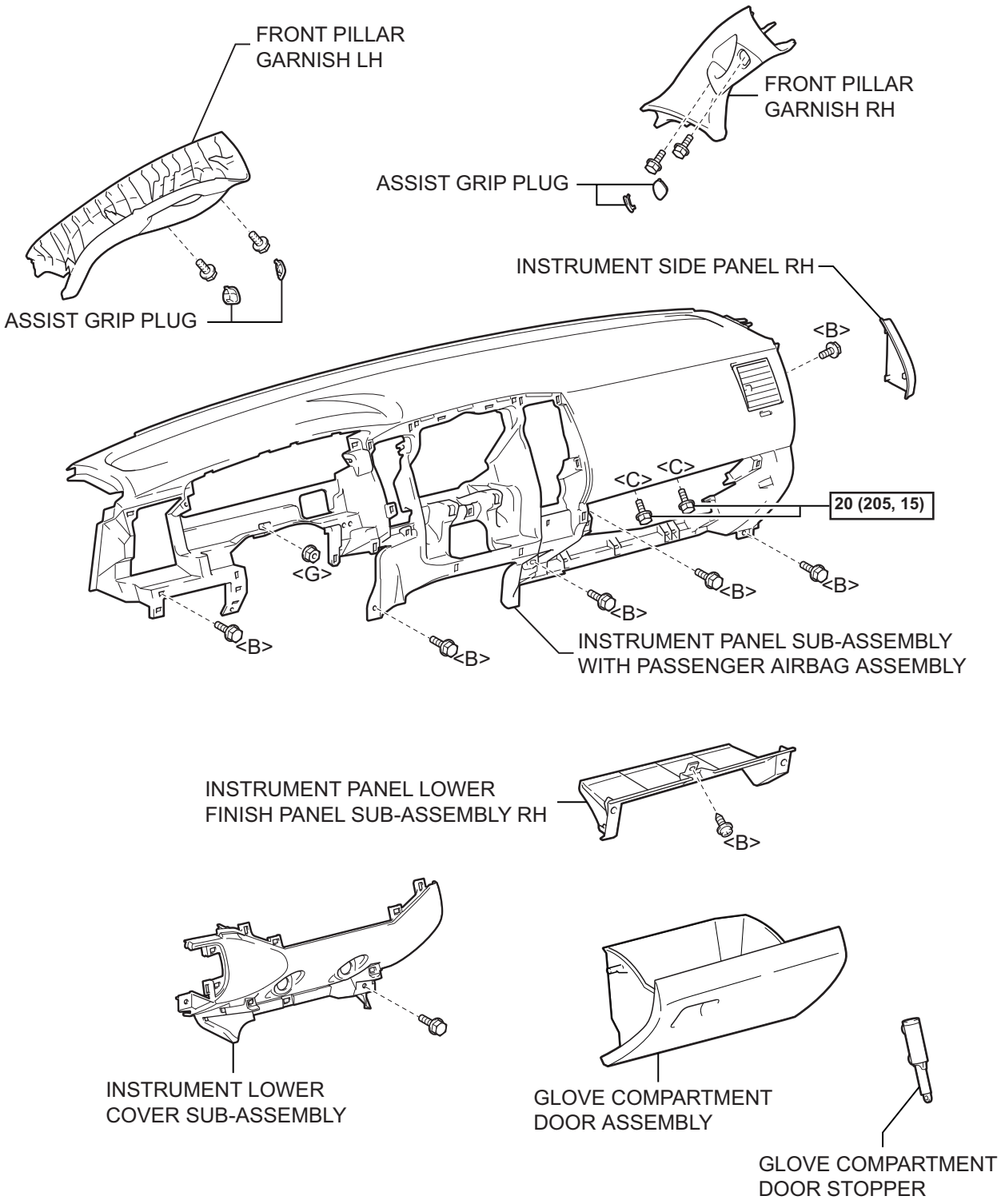

N*m (kgf*cm, ft.*lbf) : Specified torque

P

B085801E01

IP

IP

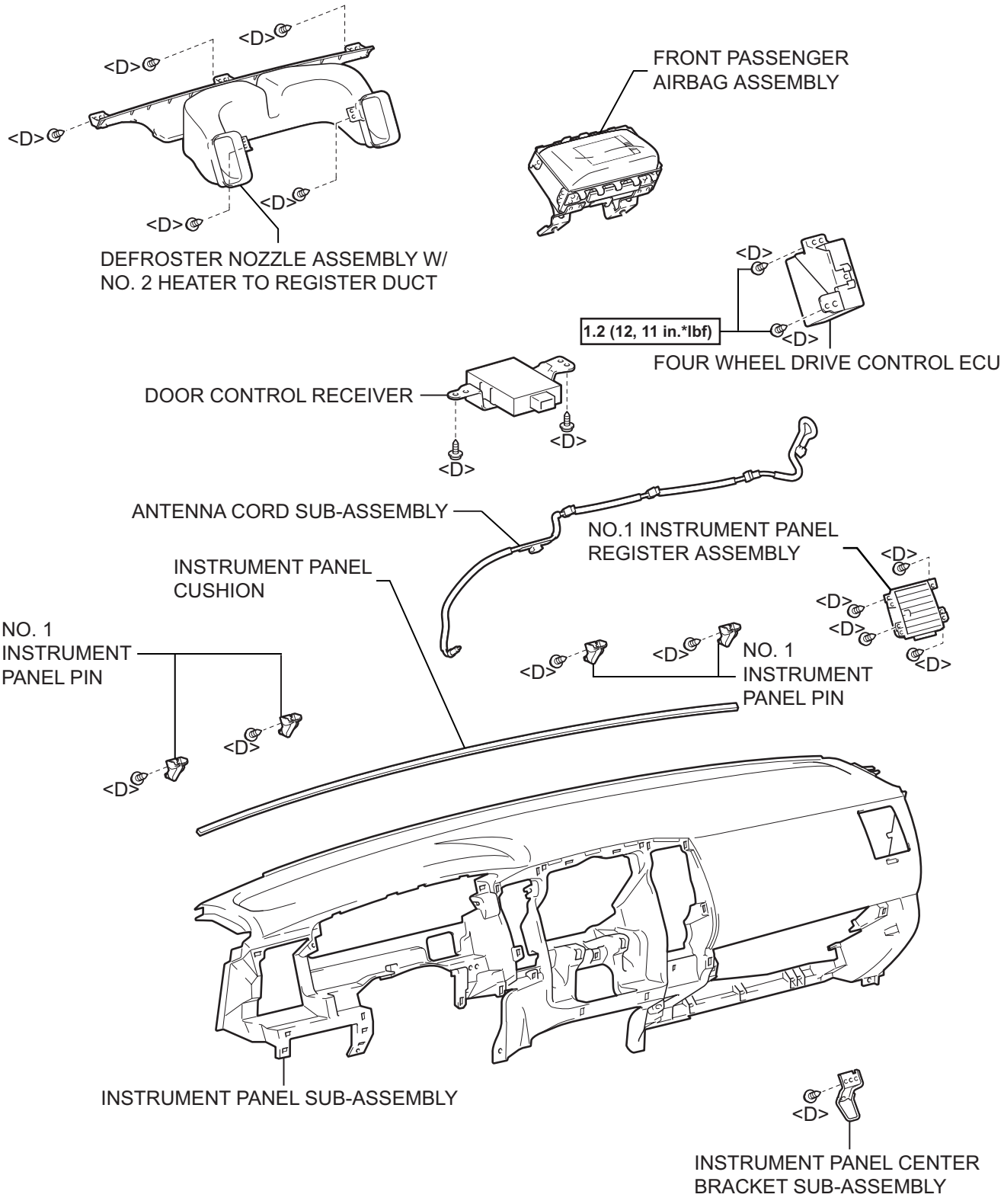

N*m (kgf*cm, ft.*lbf) : Specified torque

P

B085802E01

FRONT SEAT ASSEMBLY (for Separate Folding Seat Type)

COMPONENTS

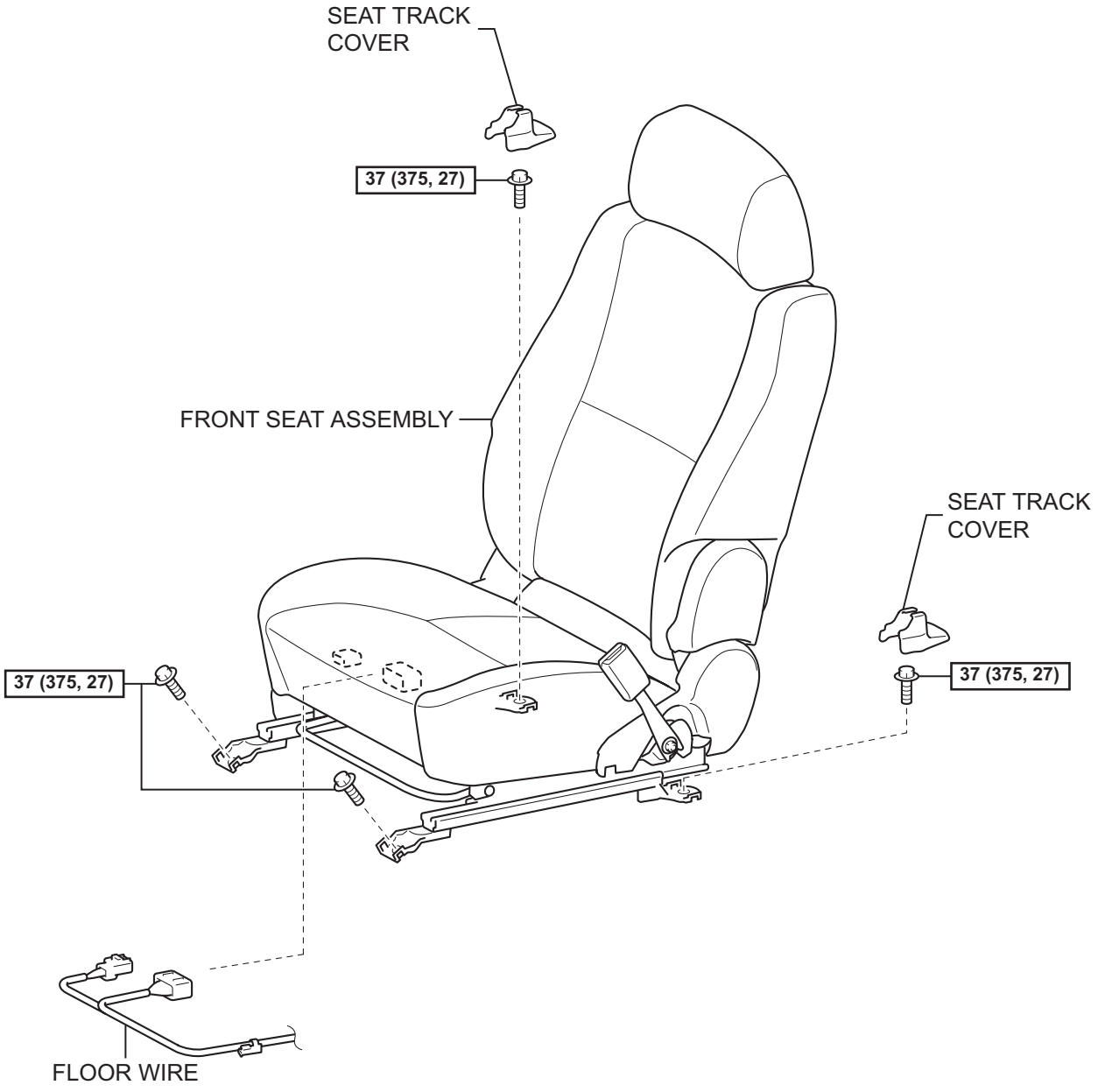

N*m (kgf*cm, ft*lbf) : Specified torque

H

B087342E02

SE

SE

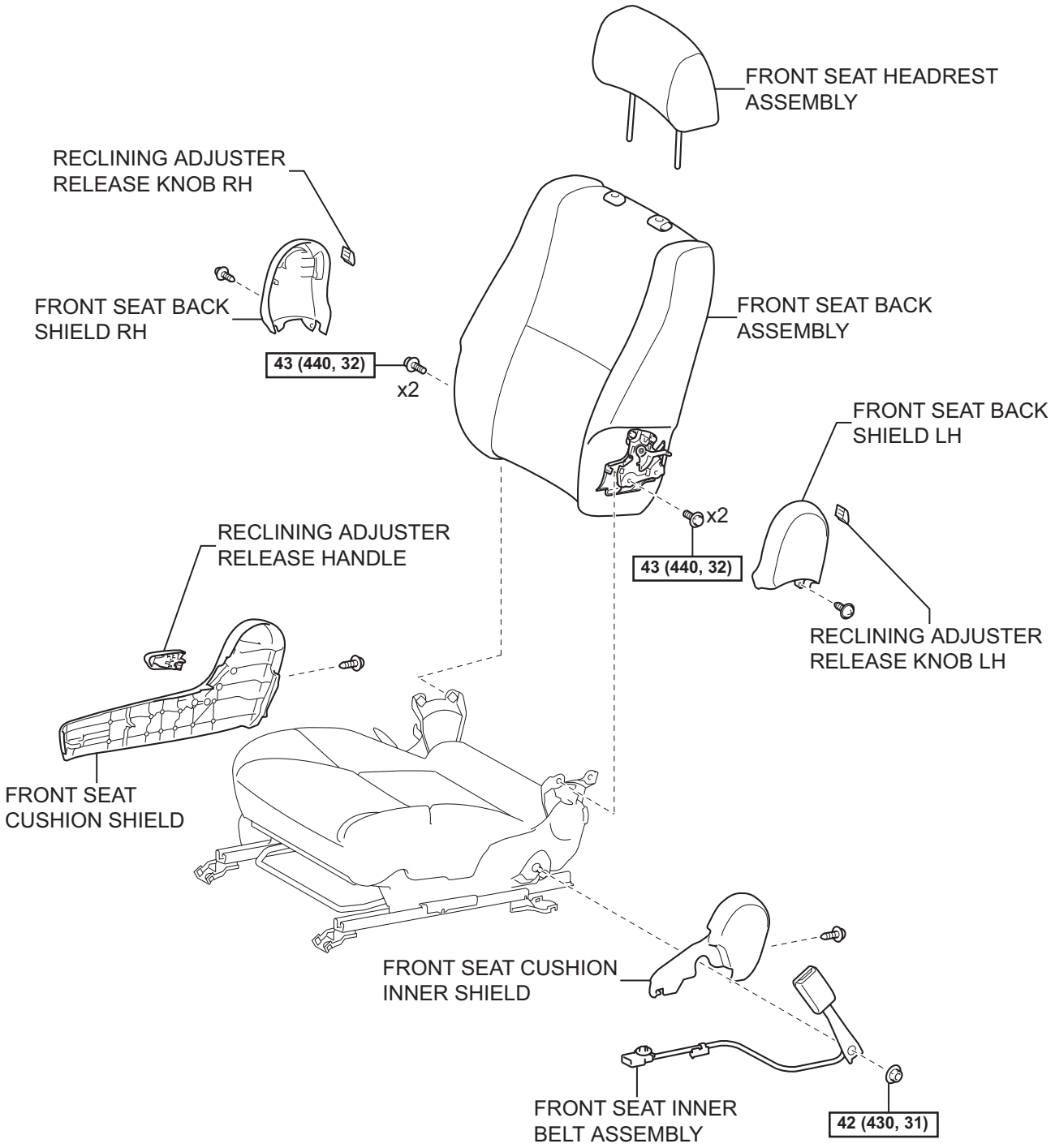

N*m (kgf*cm, ft*lbf) : Specified torque

H

B087343E02

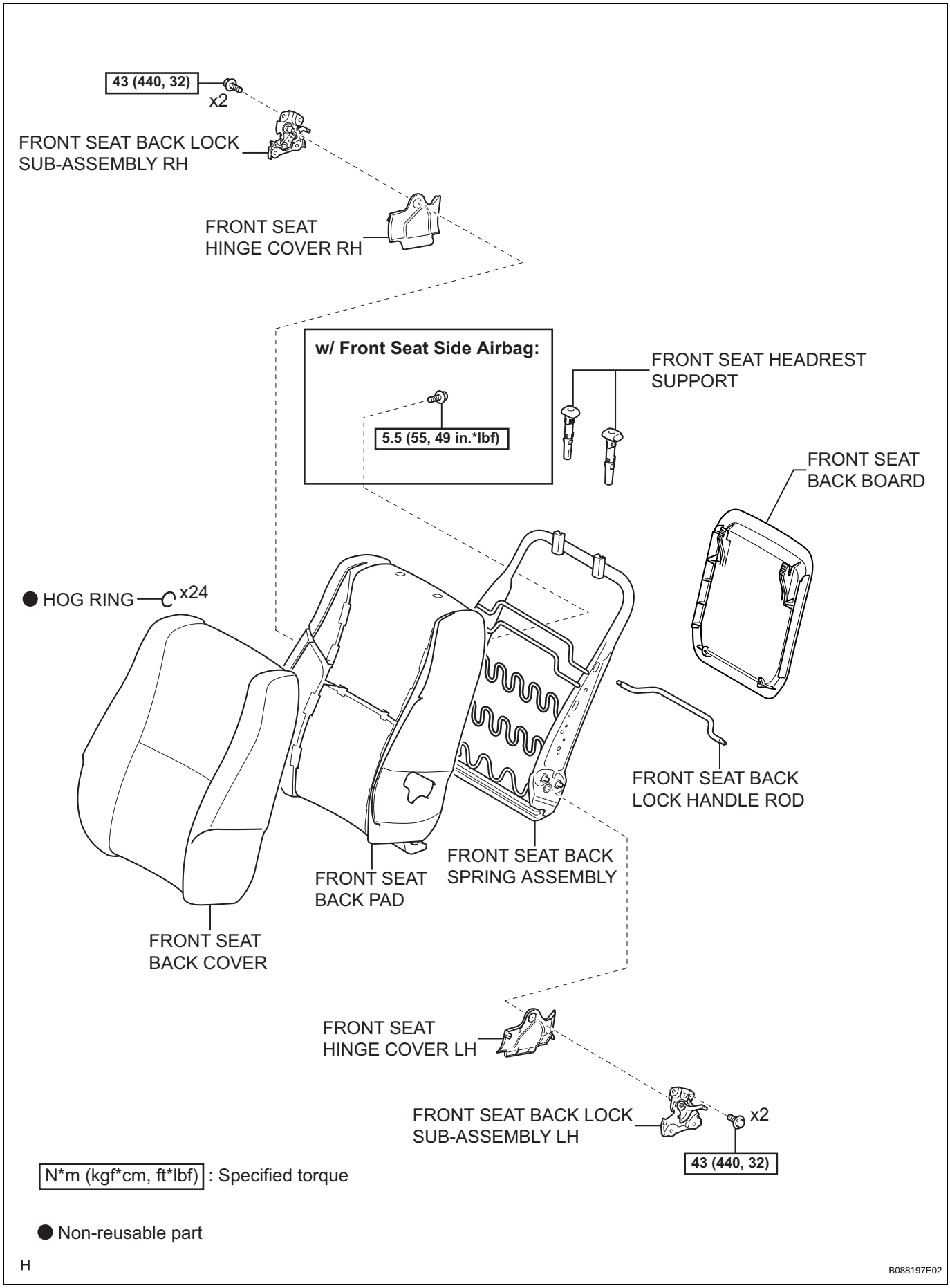
43 (440, 32)
x2
FRONT SEAT BACK LOCK SUB-ASSEMBLY RH
FRONT SEAT HINGE COVER RH
w/ Front Seat Side Airbag:
5.5 (55, 49 in.*lbf)
FRONT SEAT HEADREST SUPPORT
FRONT SEAT BACK BOARD
● HOG RING
x24
FRONT SEAT BACK LOCK HANDLE ROD
FRONT SEAT BACK SPRING ASSEMBLY
FRONT SEAT BACK PAD
FRONT SEAT BACK COVER
FRONT SEAT HINGE COVER LH
FRONT SEAT BACK LOCK SUB-ASSEMBLY LH
x2
43 (440, 32)
N*m (kgf*cm, ft*lbf) : Specified torque
● Non-reusable part
H
B088197E02

SE

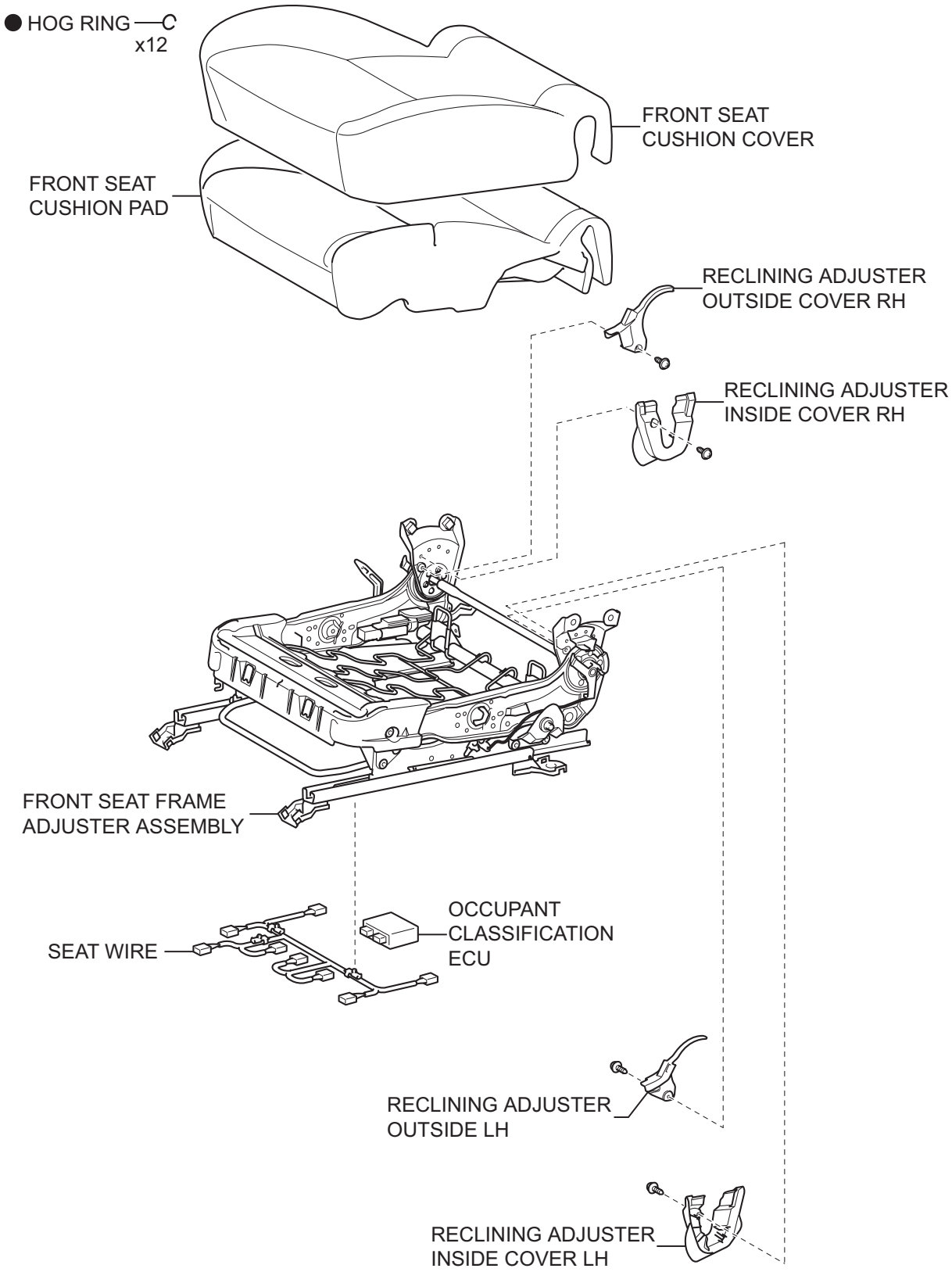

● Non-reusable part

H

B087344E02

FRONT SEAT ASSEMBLY (for Separate Seat Type Driver Side)

COMPONENTS

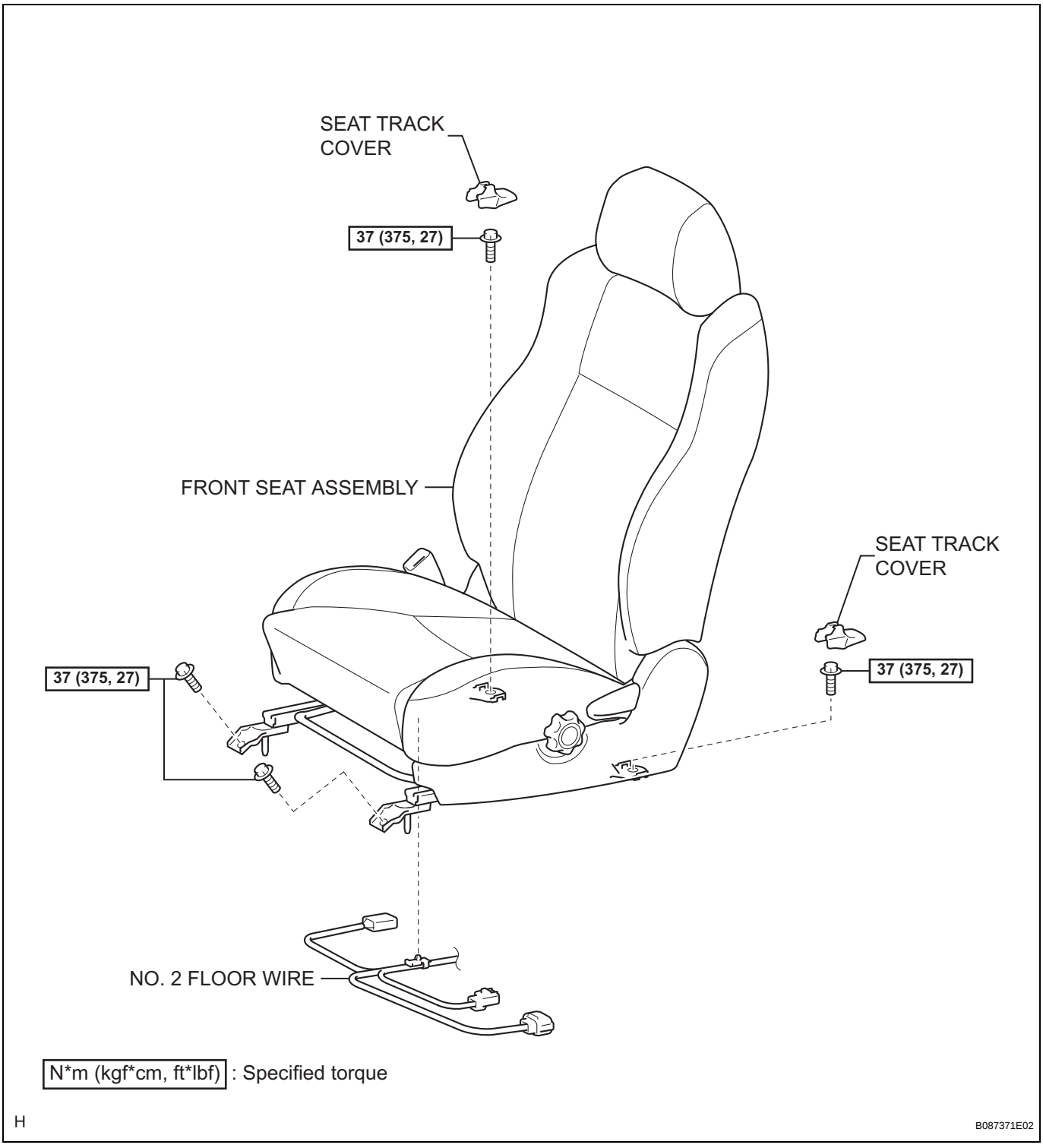

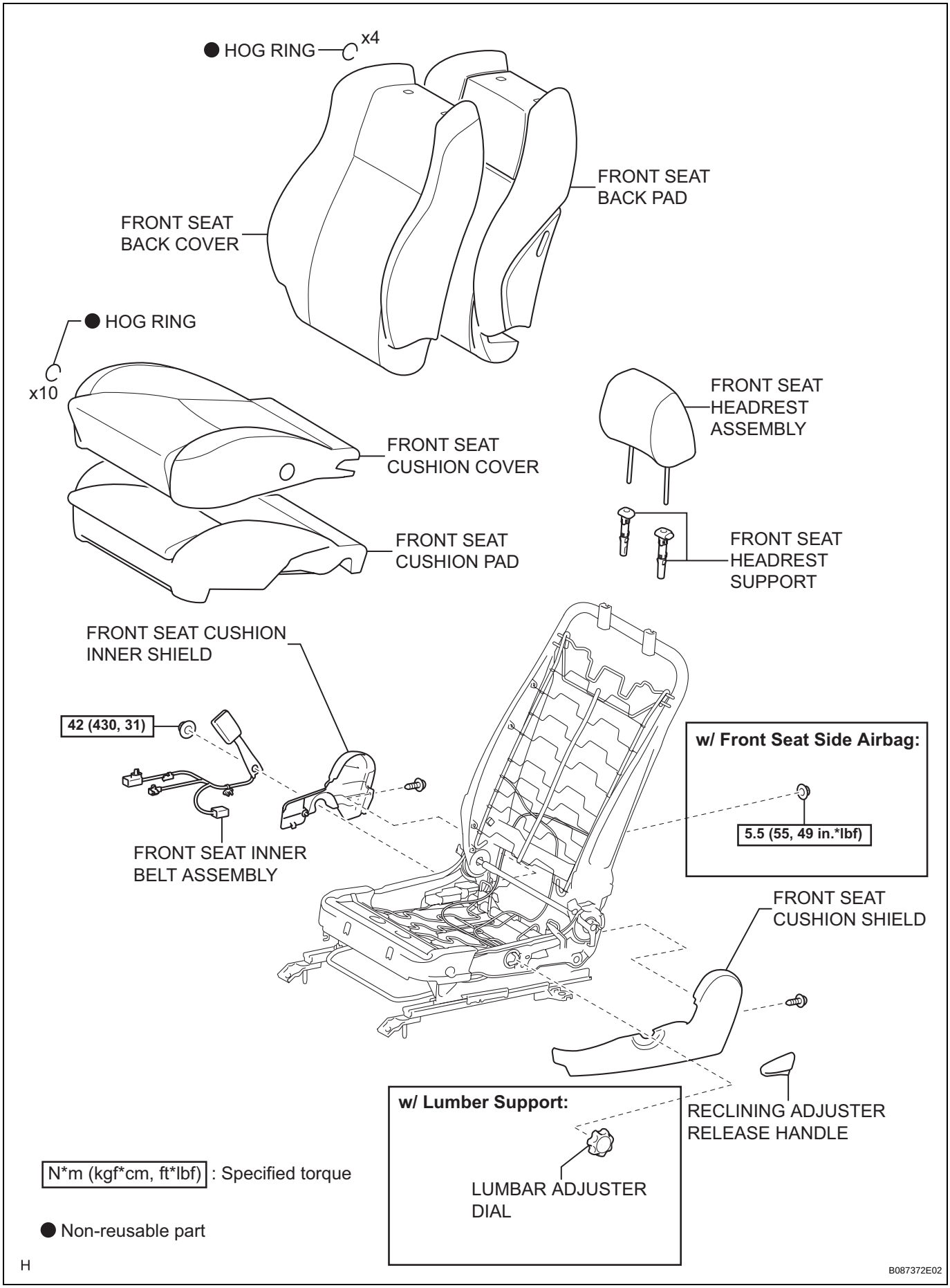
● HOG RING
x4
FRONT SEAT BACK PAD
FRONT SEAT BACK COVER
● HOG RING
x10
FRONT SEAT CUSHION COVER
FRONT SEAT CUSHION PAD
FRONT SEAT HEADREST ASSEMBLY
FRONT SEAT HEADREST SUPPORT
FRONT SEAT CUSHION INNER SHIELD
42 (430, 31)
FRONT SEAT INNER BELT ASSEMBLY
w/ Front Seat Side Airbag:
5.5 (55, 49 in.*lbf)
FRONT SEAT CUSHION SHIELD
w/ Lumber Support:
LUMBAR ADJUSTER DIAL
RECLINING ADJUSTER RELEASE HANDLE
N*m (kgf*cm, ft*lbf) : Specified torque
● Non-reusable part
H
B087372E02

SE

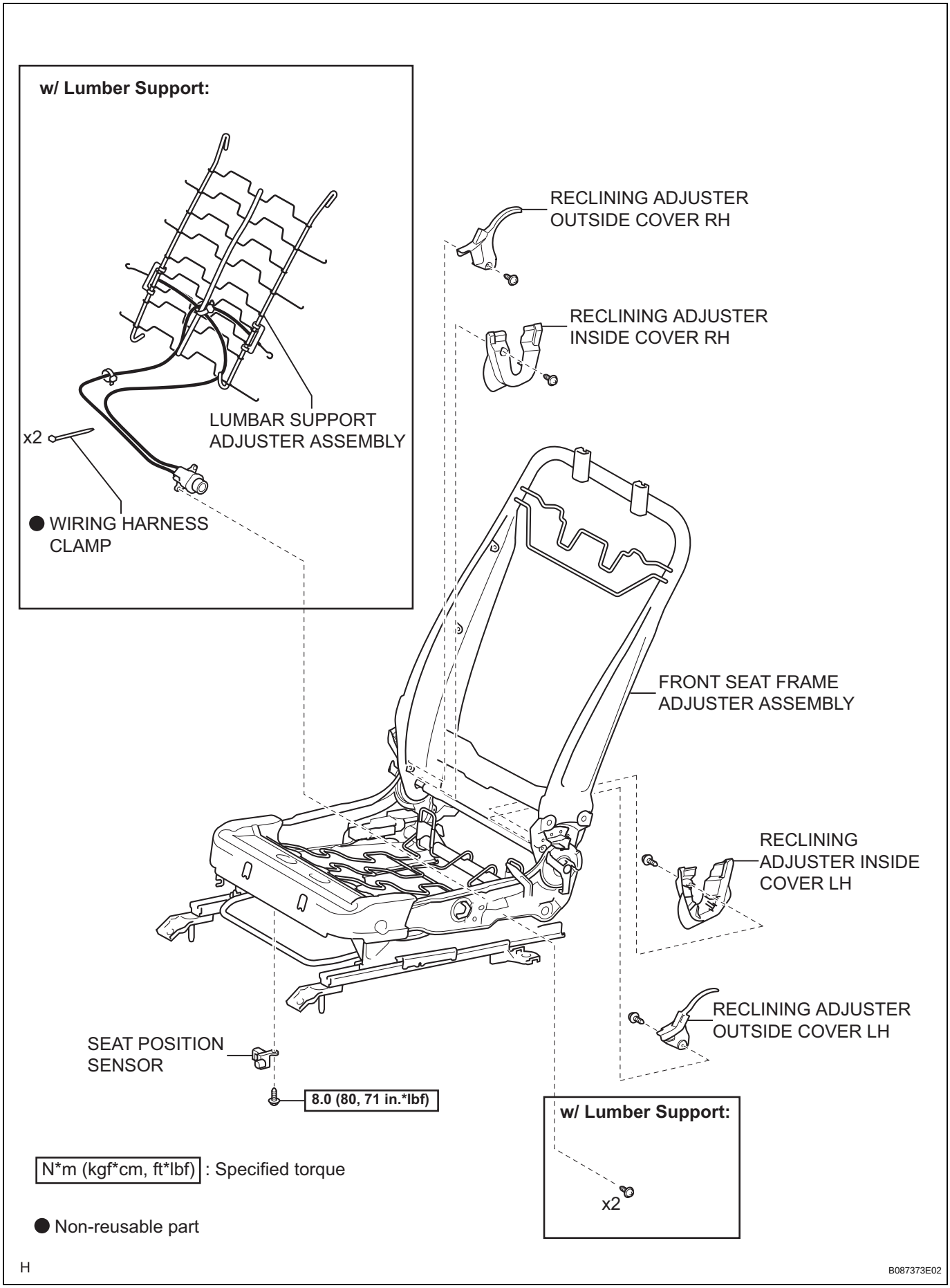
w/ Lumber Support:
LUMBAR SUPPORT ADJUSTER ASSEMBLY
x2
● WIRING HARNESS CLAMP
RECLINING ADJUSTER OUTSIDE COVER RH
RECLINING ADJUSTER INSIDE COVER RH
FRONT SEAT FRAME ADJUSTER ASSEMBLY
RECLINING ADJUSTER INSIDE COVER LH
RECLINING ADJUSTER OUTSIDE COVER LH
SEAT POSITION SENSOR
8.0 (80, 71 in.*lbf)
w/ Lumber Support:
x2
N*m (kgf*cm, ft*lbf) : Specified torque
● Non-reusable part
H
B087373E02

FRONT SEAT ASSEMBLY (for Separate Seat Type Front Passenger Side)

COMPONENTS

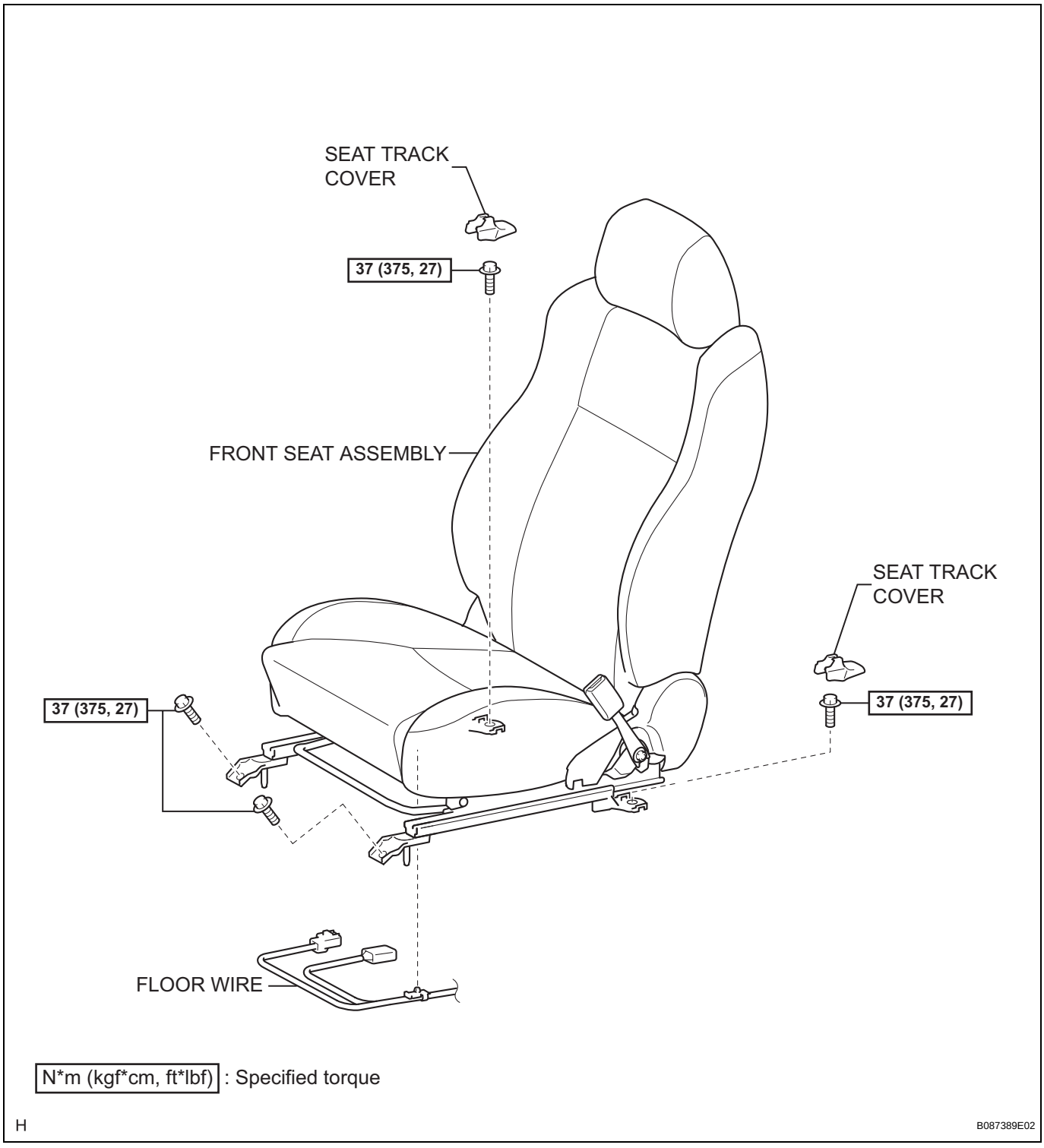

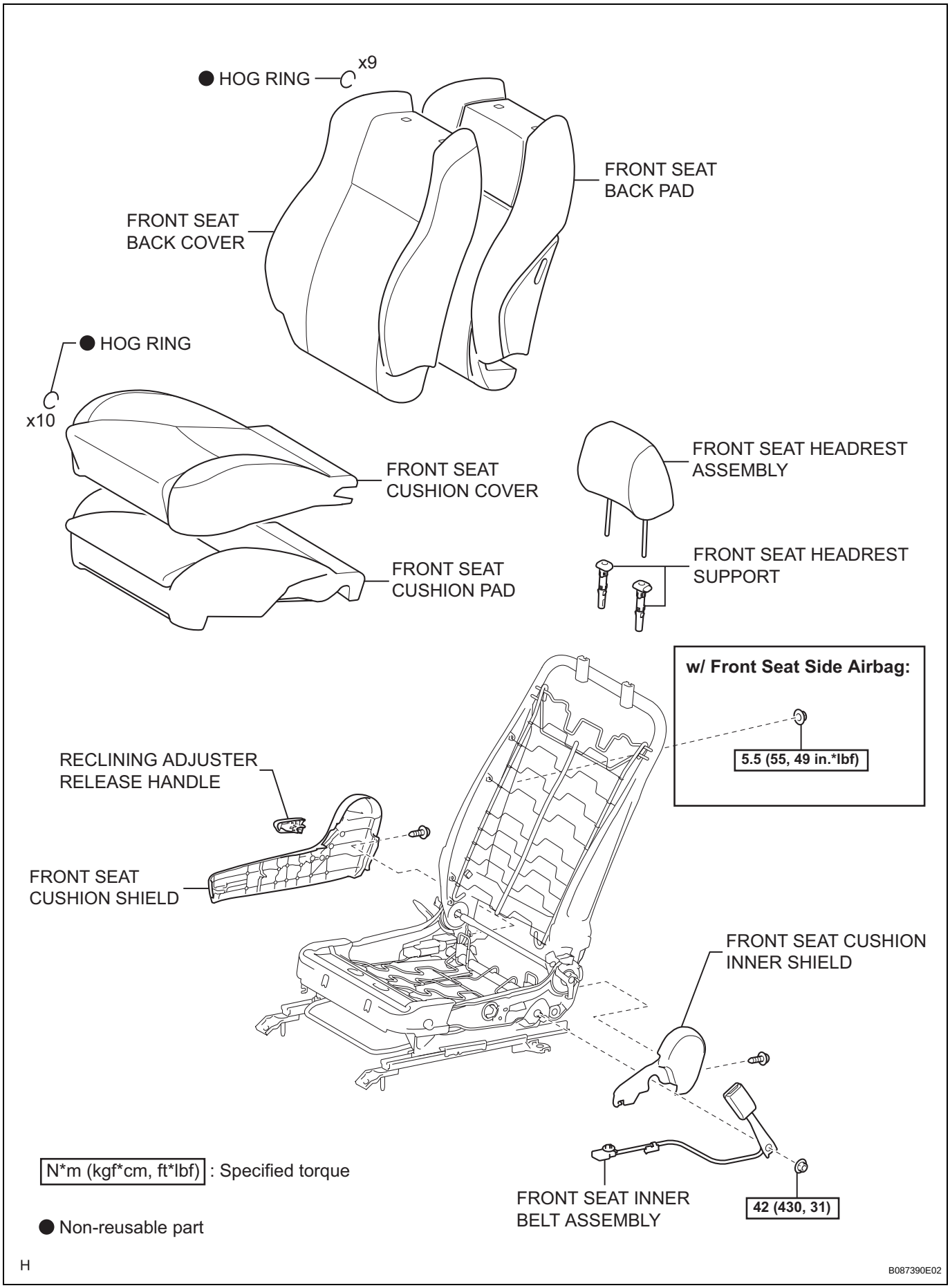
● HOG RING
x9
FRONT SEAT BACK PAD
FRONT SEAT BACK COVER
● HOG RING
x10
FRONT SEAT CUSHION COVER
FRONT SEAT CUSHION PAD
FRONT SEAT HEADREST ASSEMBLY
FRONT SEAT HEADREST SUPPORT
w/ Front Seat Side Airbag:
5.5 (55, 49 in.*lbf)
RECLINING ADJUSTER RELEASE HANDLE
FRONT SEAT CUSHION SHIELD
FRONT SEAT CUSHION INNER SHIELD
FRONT SEAT INNER BELT ASSEMBLY
42 (430, 31)
N*m (kgf*cm, ft*lbf) : Specified torque
● Non-reusable part
H
B087390E02

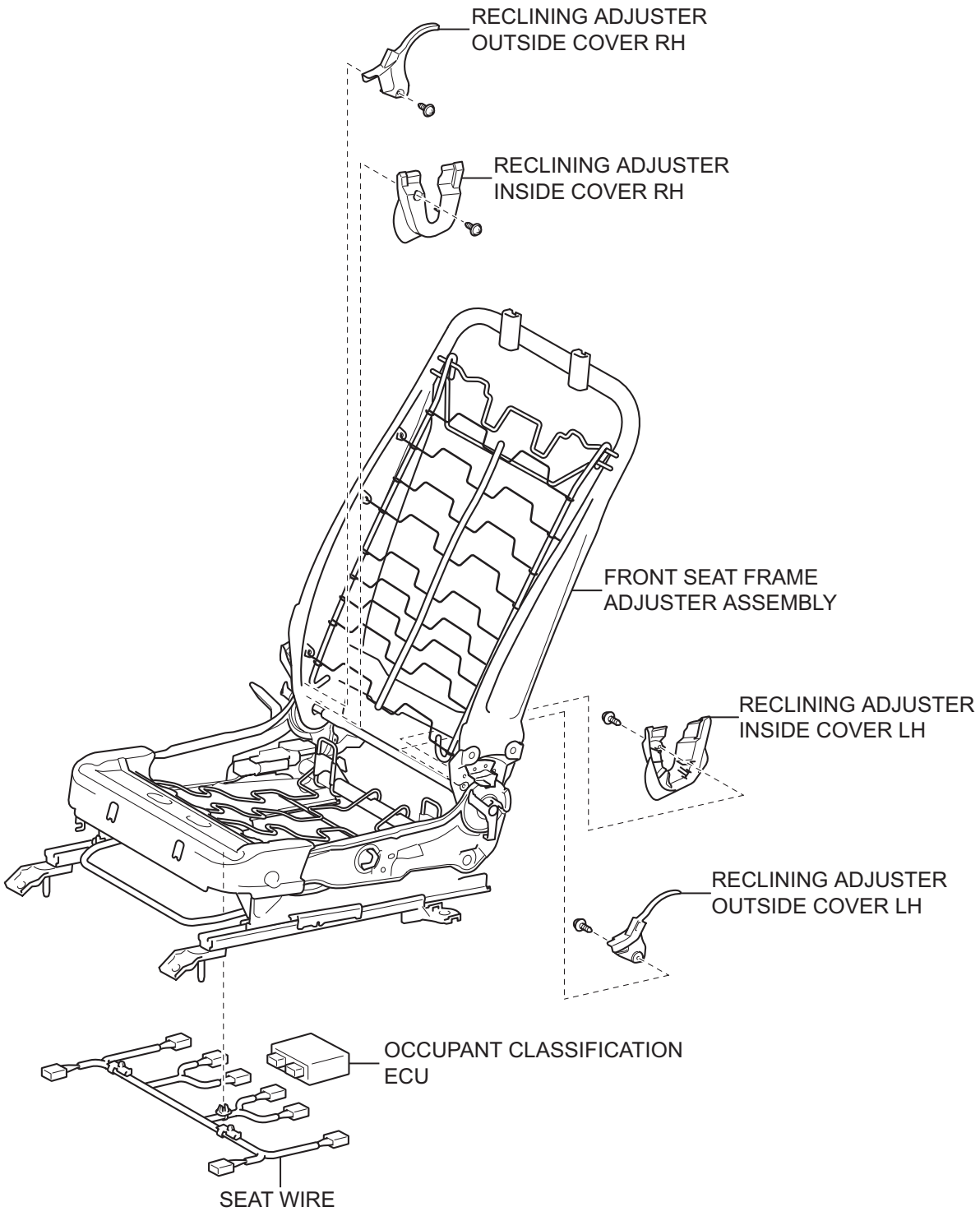

H

B087391E02

SE

FRONT SEAT ASSEMBLY (for Bench Seat Type)

COMPONENTS

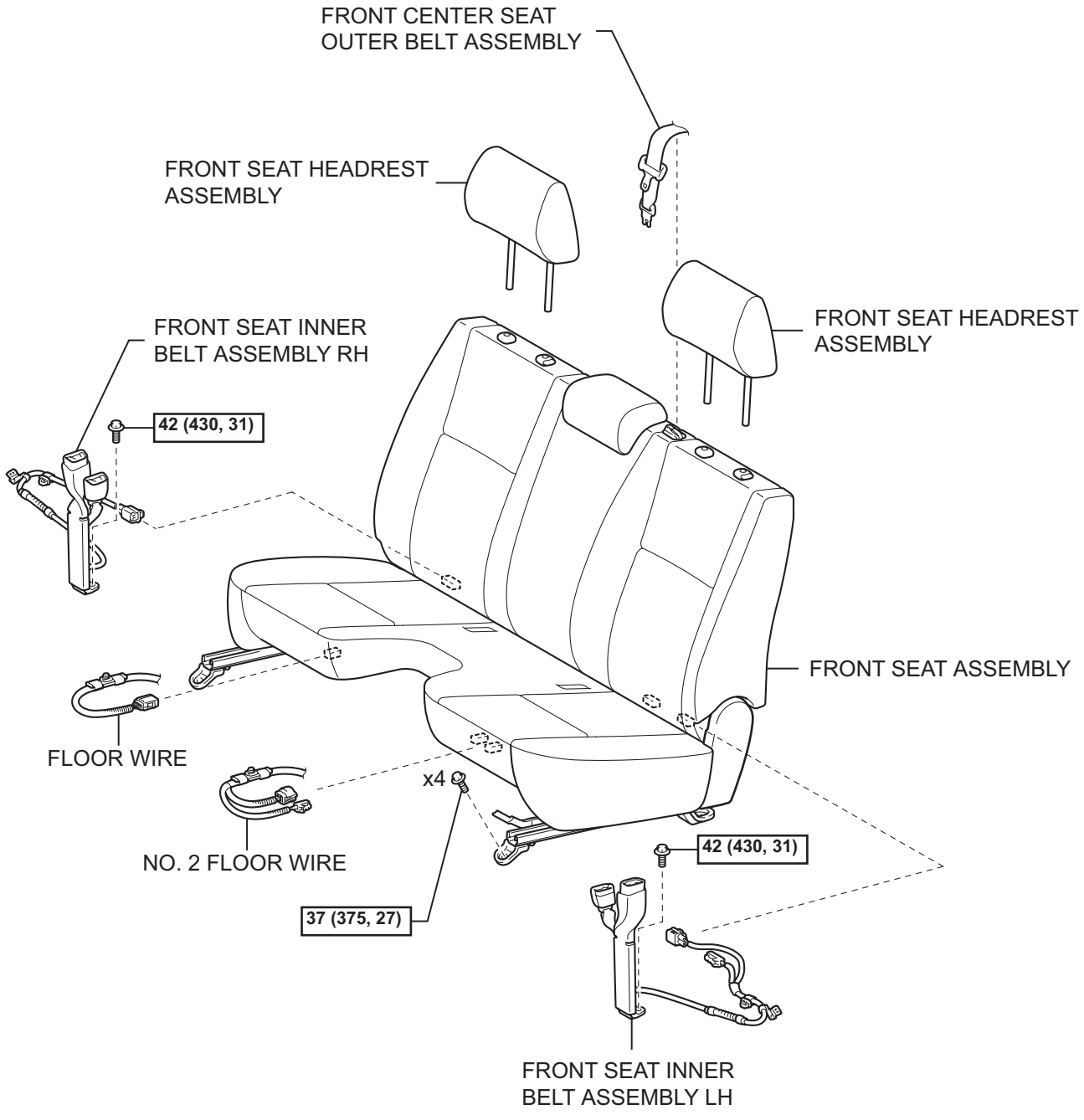

N*m (kgf*cm, ft*lbf) : Specified torque

H

B121734E01

SE

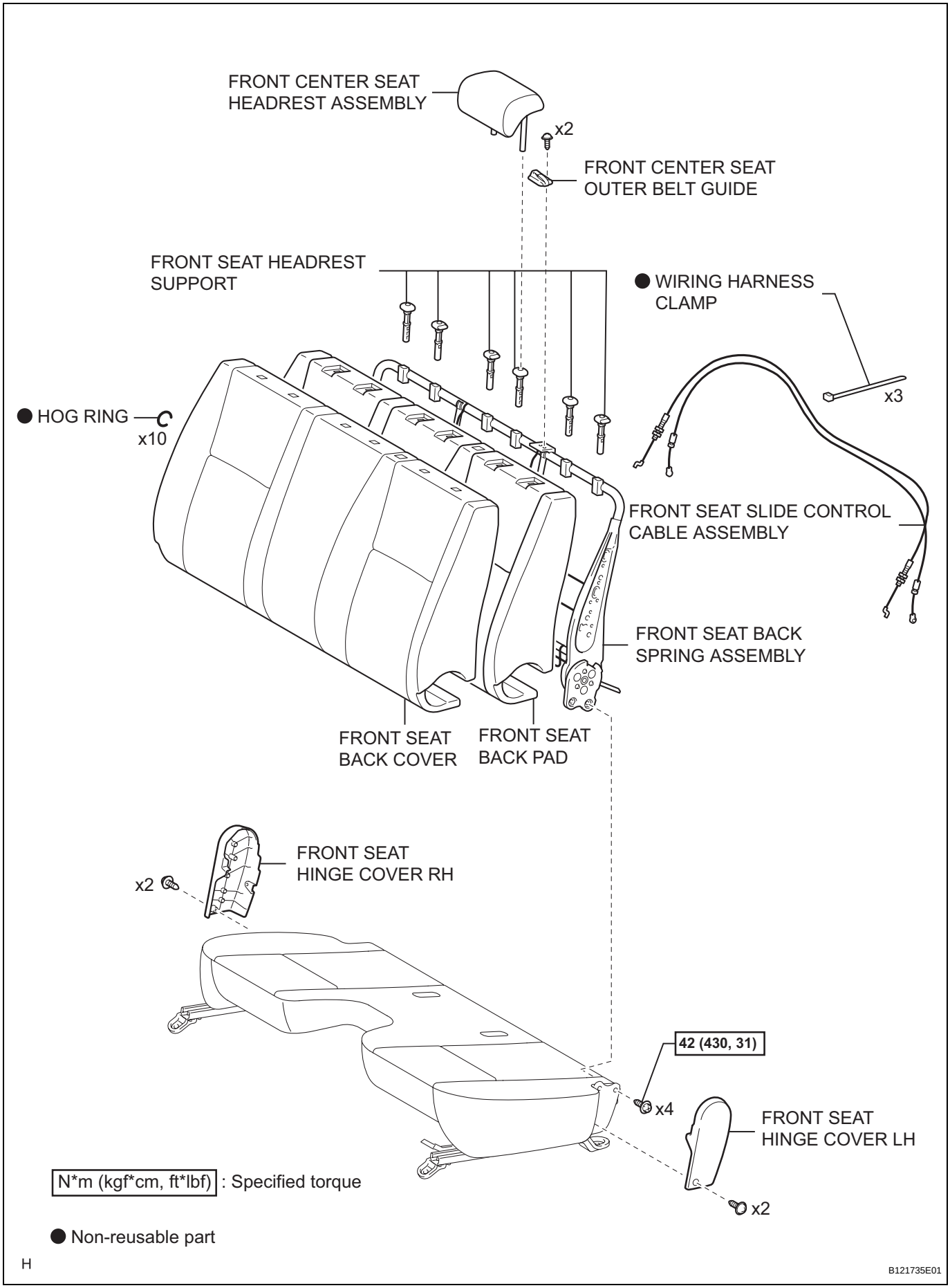
FRONT CENTER SEAT HEADREST ASSEMBLY
x2
FRONT CENTER SEAT OUTER BELT GUIDE
FRONT SEAT HEADREST SUPPORT
● WIRING HARNESS CLAMP
x3
● HOG RING
x10
FRONT SEAT SLIDE CONTROL CABLE ASSEMBLY
FRONT SEAT BACK SPRING ASSEMBLY
FRONT SEAT BACK COVER
FRONT SEAT BACK PAD
x2
FRONT SEAT HINGE COVER RH
42 (430, 31)
x4
FRONT SEAT HINGE COVER LH
x2
N*m (kgf*cm, ft*lbf) : Specified torque
● Non-reusable part
H
B121735E01

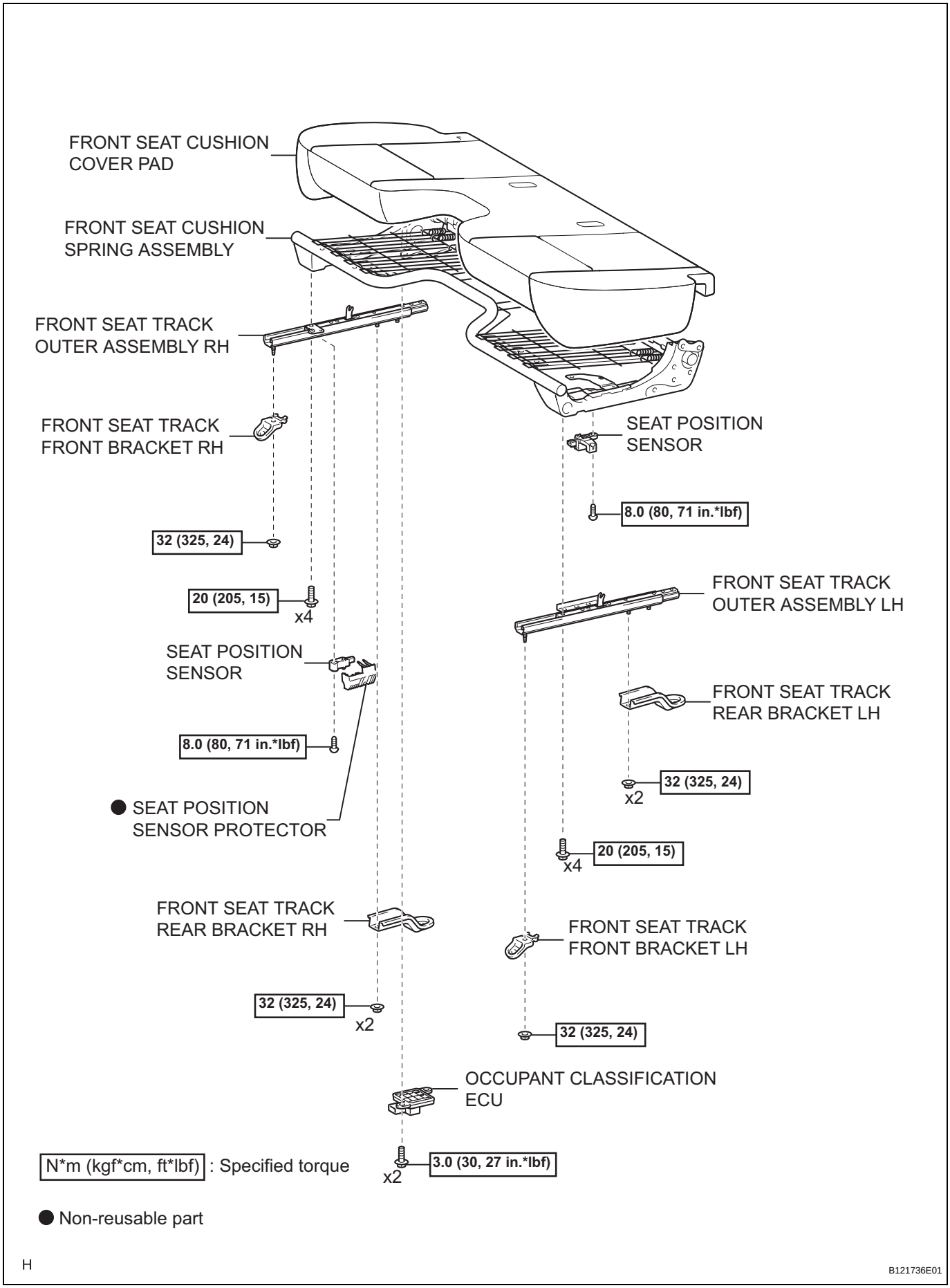
FRONT SEAT CUSHION COVER PAD
FRONT SEAT CUSHION SPRING ASSEMBLY
FRONT SEAT TRACK OUTER ASSEMBLY RH
FRONT SEAT TRACK FRONT BRACKET RH
SEAT POSITION SENSOR
8.0 (80, 71 in.*lbf)
32 (325, 24)
20 (205, 15)
x4
FRONT SEAT TRACK OUTER ASSEMBLY LH
SEAT POSITION SENSOR
FRONT SEAT TRACK REAR BRACKET LH
8.0 (80, 71 in.*lbf)
32 (325, 24)
x2
● SEAT POSITION SENSOR PROTECTOR
20 (205, 15)
x4
FRONT SEAT TRACK REAR BRACKET RH
FRONT SEAT TRACK FRONT BRACKET LH
32 (325, 24)
x2
32 (325, 24)
OCCUPANT CLASSIFICATION ECU
N*m (kgf*cm, ft*lbf) : Specified torque
3.0 (30, 27 in.*lbf)
x2
● Non-reusable part
H
B121736E01

SE

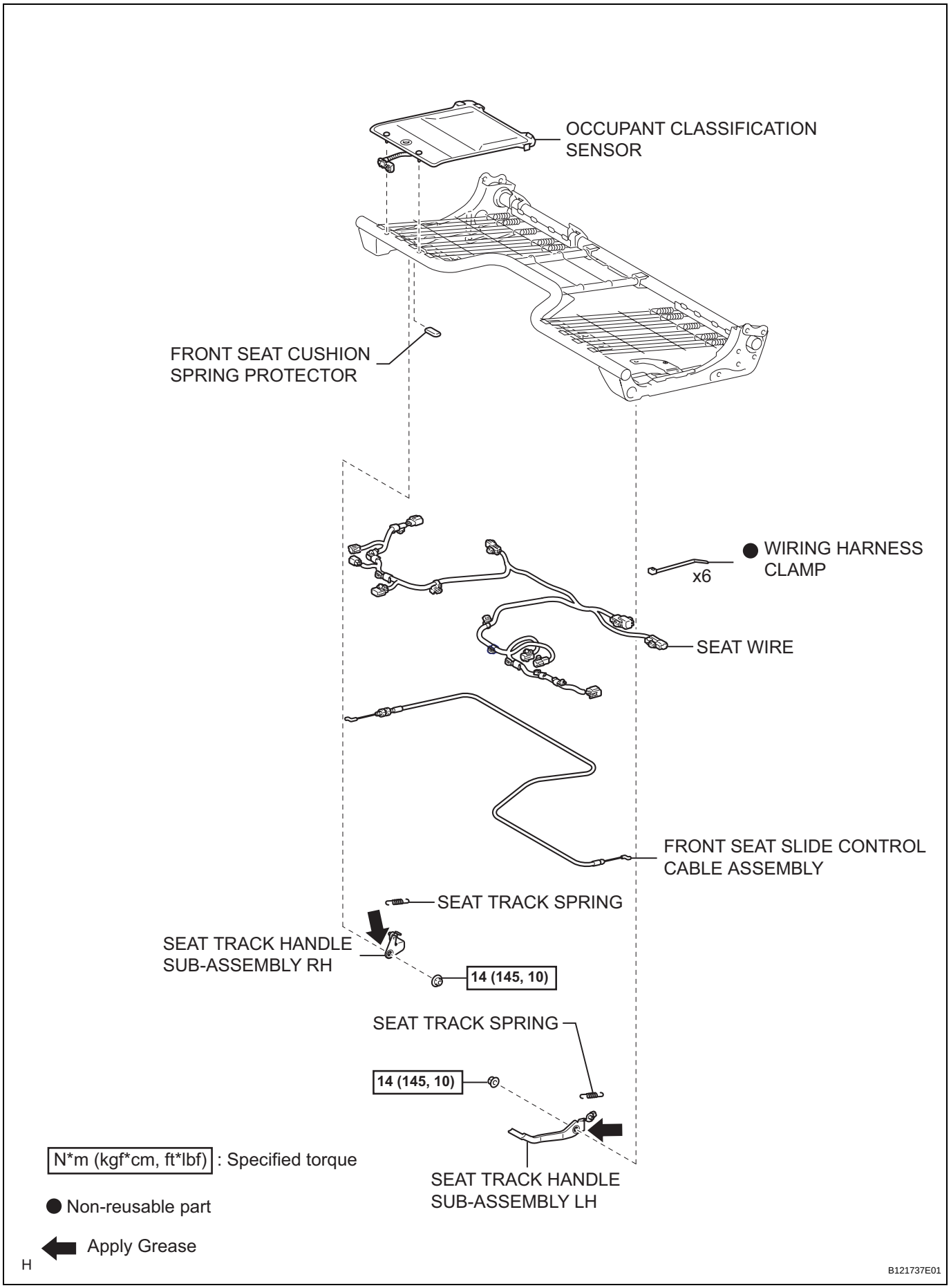
OCCUPANT CLASSIFICATION SENSOR
FRONT SEAT CUSHION SPRING PROTECTOR
● WIRING HARNESS CLAMP
x6
SEAT WIRE
FRONT SEAT SLIDE CONTROL CABLE ASSEMBLY
SEAT TRACK SPRING
SEAT TRACK HANDLE SUB-ASSEMBLY RH
14 (145, 10)
SEAT TRACK SPRING
14 (145, 10)
SEAT TRACK HANDLE SUB-ASSEMBLY LH
N*m (kgf*cm, ft*lbf) : Specified torque
● Non-reusable part
Apply Grease
H
B121737E01

REAR SEAT ASSEMBLY (for LH Side)

COMPONENTS

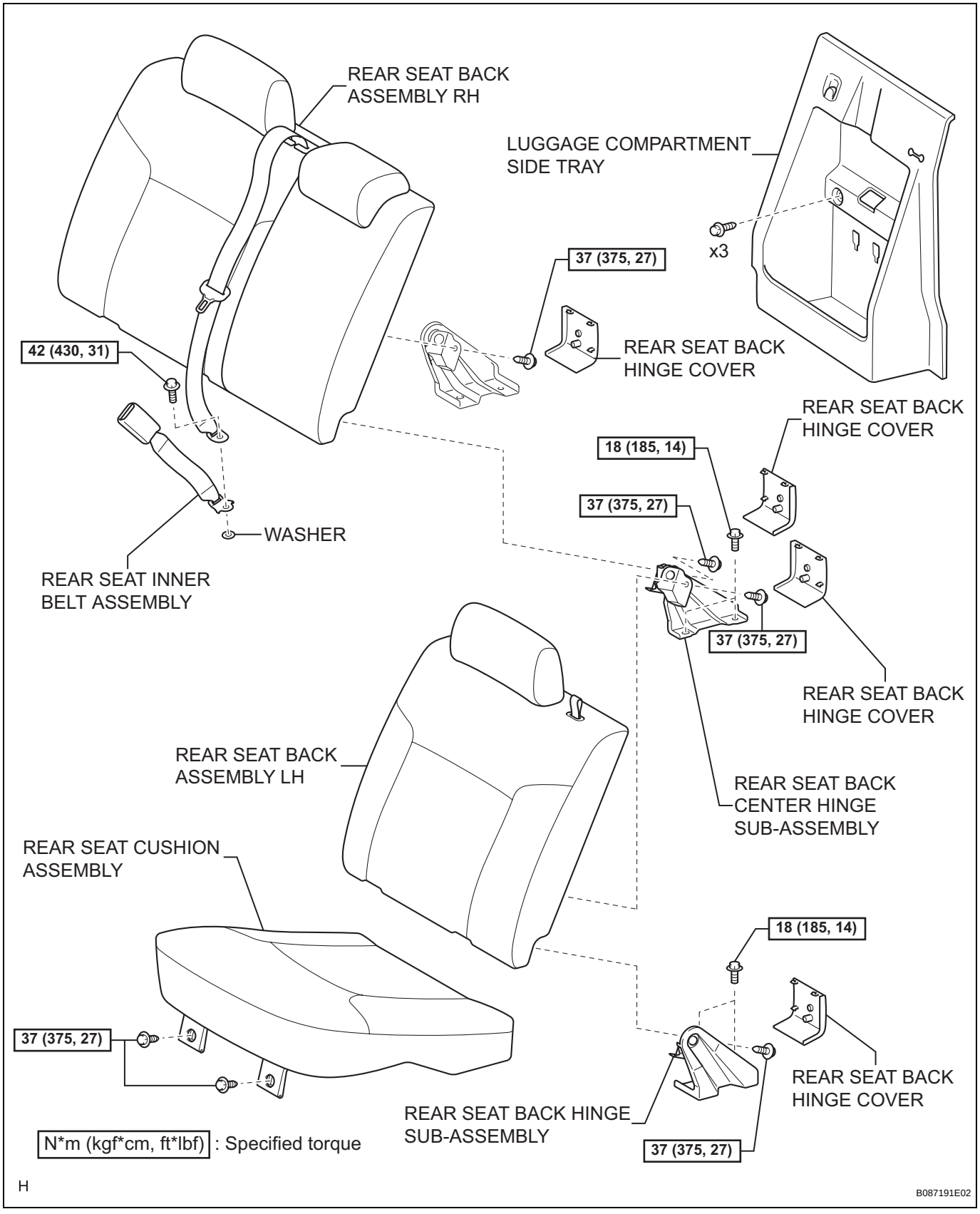

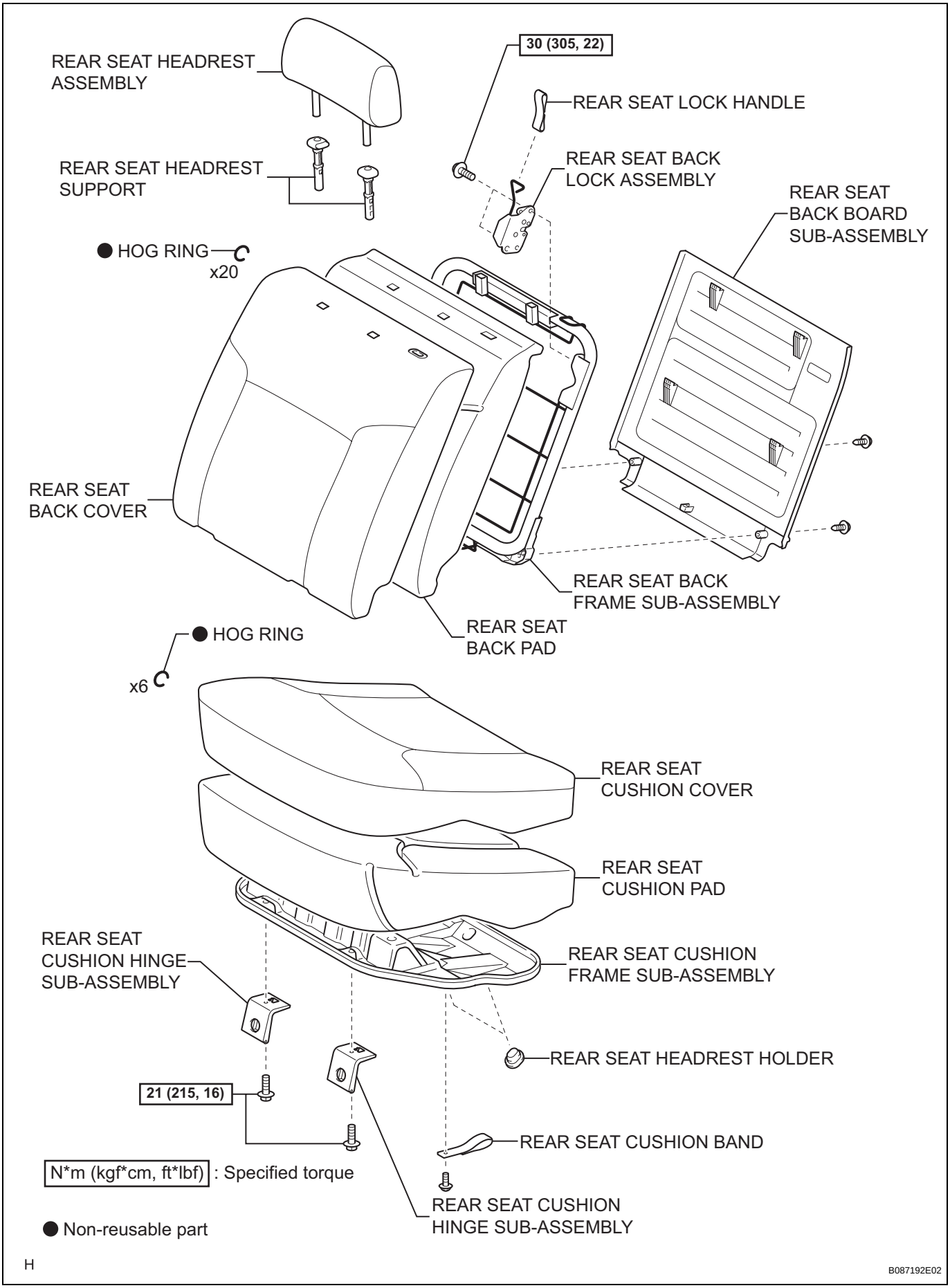
REAR SEAT HEADREST ASSEMBLY
30 (305, 22)
REAR SEAT LOCK HANDLE
REAR SEAT HEADREST SUPPORT
REAR SEAT BACK LOCK ASSEMBLY
REAR SEAT BACK BOARD SUB-ASSEMBLY
● HOG RING
x20
REAR SEAT BACK COVER
REAR SEAT BACK FRAME SUB-ASSEMBLY
REAR SEAT BACK PAD
● HOG RING
x6
REAR SEAT CUSHION COVER
REAR SEAT CUSHION PAD
REAR SEAT CUSHION HINGE SUB-ASSEMBLY
REAR SEAT CUSHION FRAME SUB-ASSEMBLY
REAR SEAT HEADREST HOLDER
21 (215, 16)
REAR SEAT CUSHION BAND
N*m (kgf*cm, ft*lbf) : Specified torque
REAR SEAT CUSHION HINGE SUB-ASSEMBLY
● Non-reusable part
H
B087192E02

REAR SEAT ASSEMBLY (for RH Side)

COMPONENTS

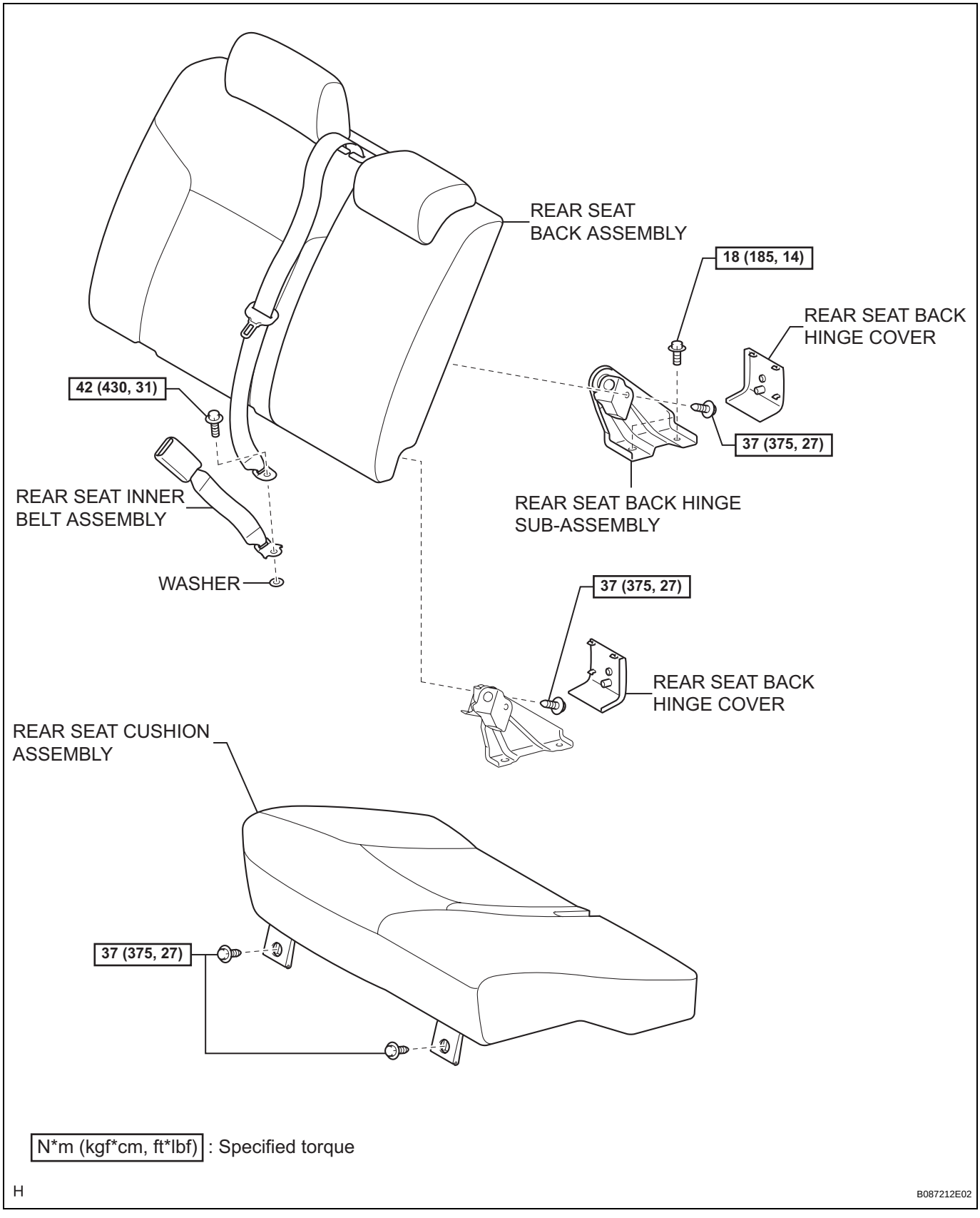

SE

SE

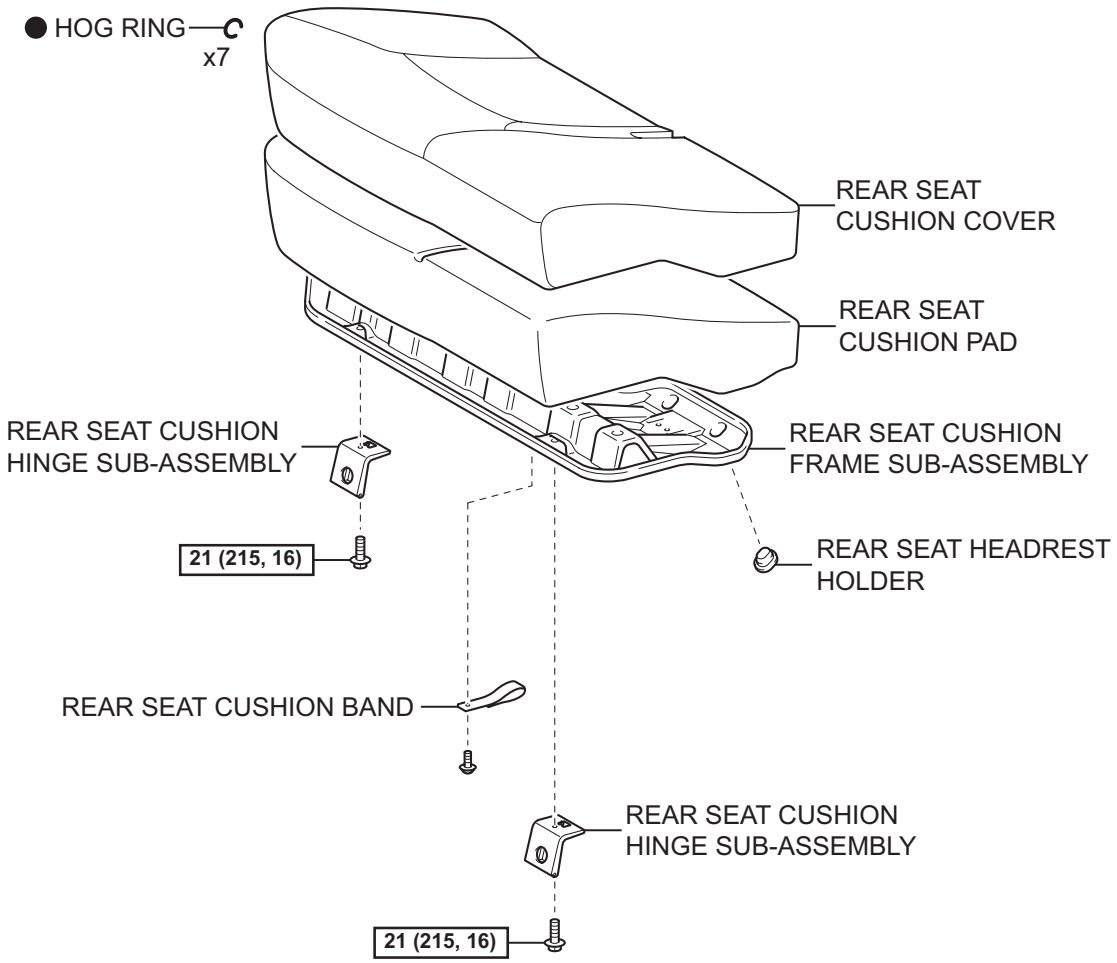

N*m (kgf*cm, ft*lbf) : Specified torque

● Non-reusable part

H

B121731E01

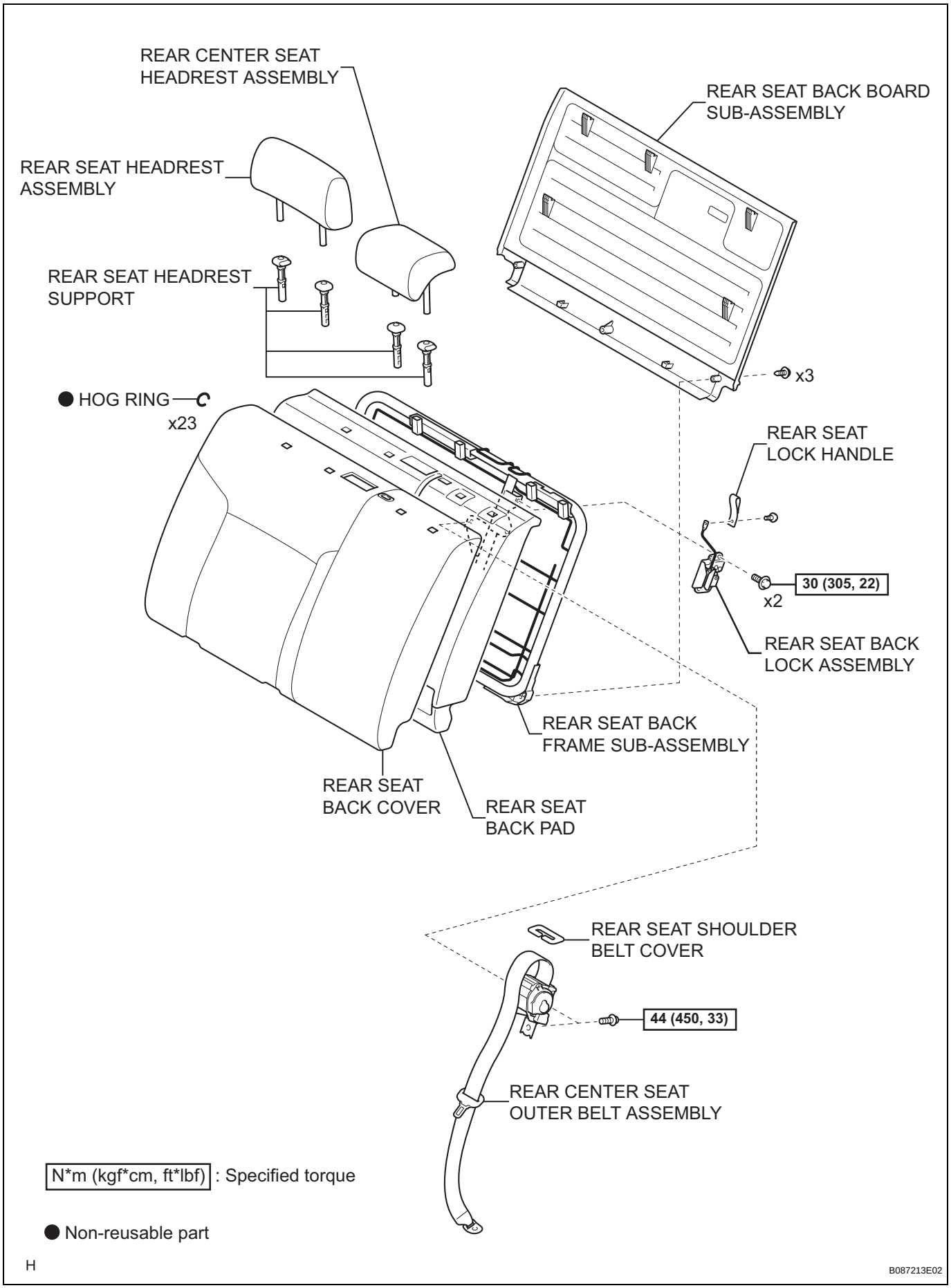
REAR CENTER SEAT HEADREST ASSEMBLY
REAR SEAT HEADREST ASSEMBLY
REAR SEAT HEADREST SUPPORT
REAR SEAT BACK BOARD SUB-ASSEMBLY
x3
● HOG RING
x23
REAR SEAT LOCK HANDLE
30 (305, 22)
x2
REAR SEAT BACK LOCK ASSEMBLY
REAR SEAT BACK FRAME SUB-ASSEMBLY
REAR SEAT BACK COVER
REAR SEAT BACK PAD
REAR SEAT SHOULDER BELT COVER
44 (450, 33)
REAR CENTER SEAT OUTER BELT ASSEMBLY
N*m (kgf*cm, ft*lbf) : Specified torque
● Non-reusable part
H
B087213E02

SE

REAR SEAT ASSEMBLY (for Access Cab)

COMPONENTS

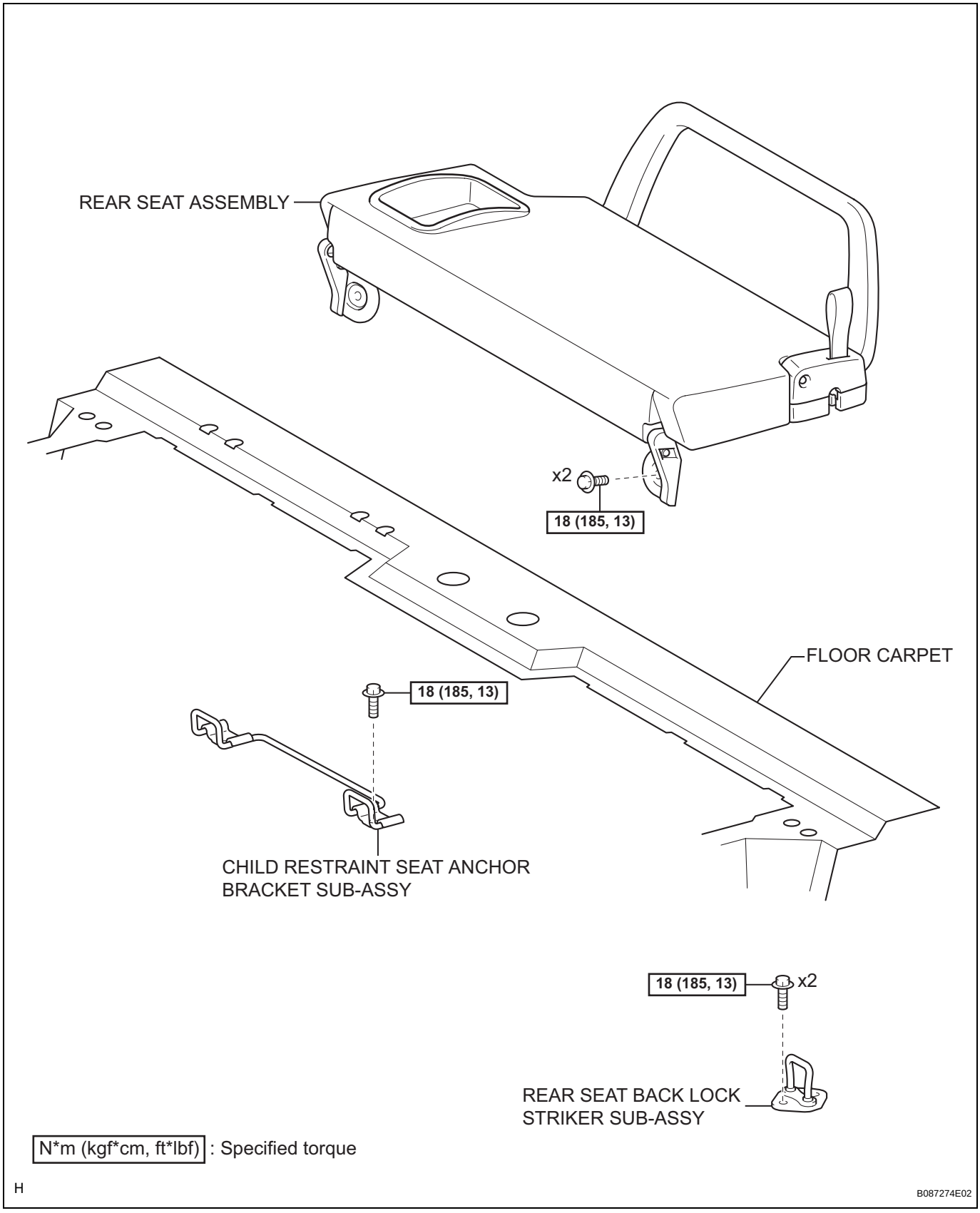

SE

SE

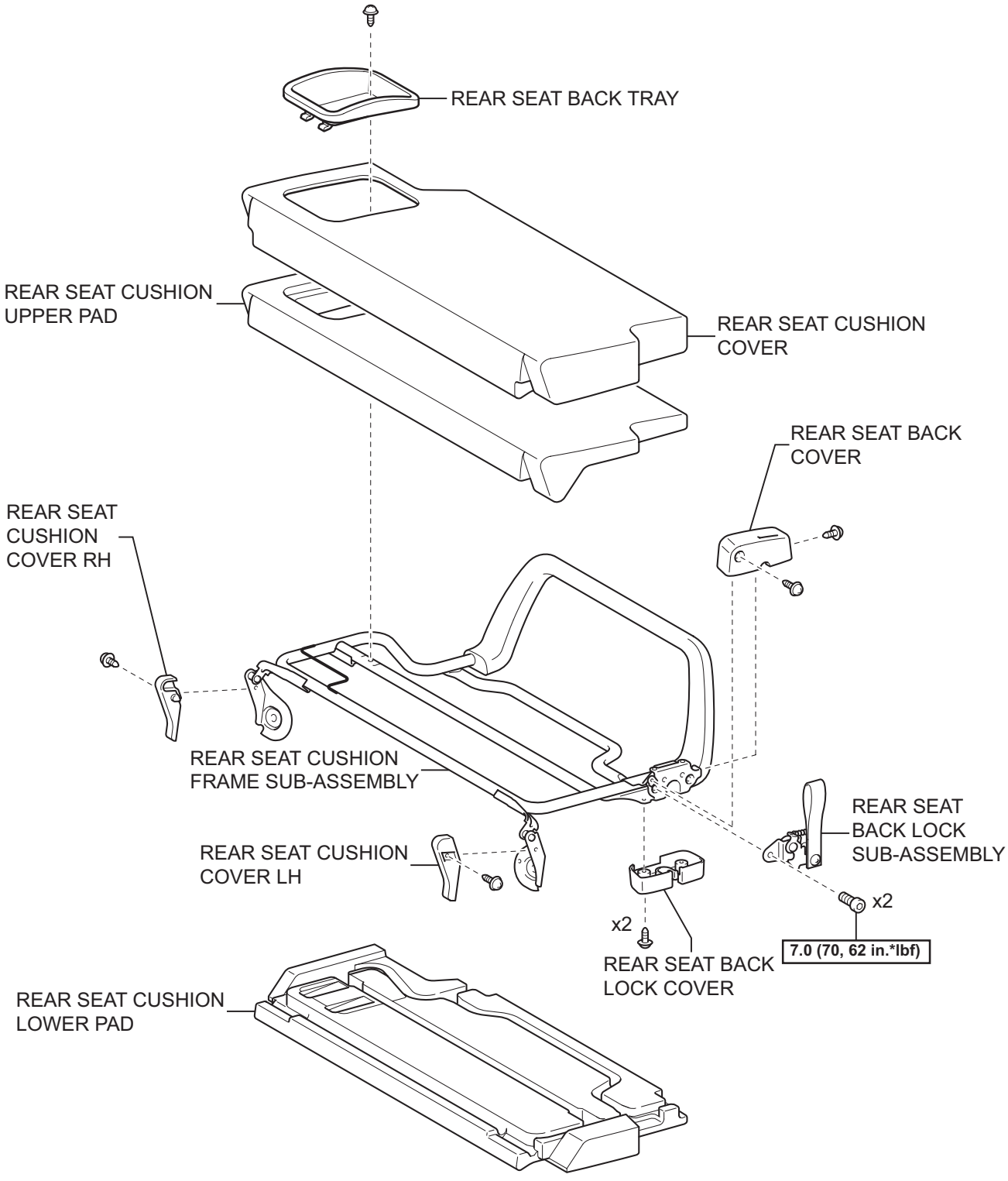

N*m (kgf*cm, ft*lbf) : Specified torque

H

B087275E02

HOOD

COMPONENTS

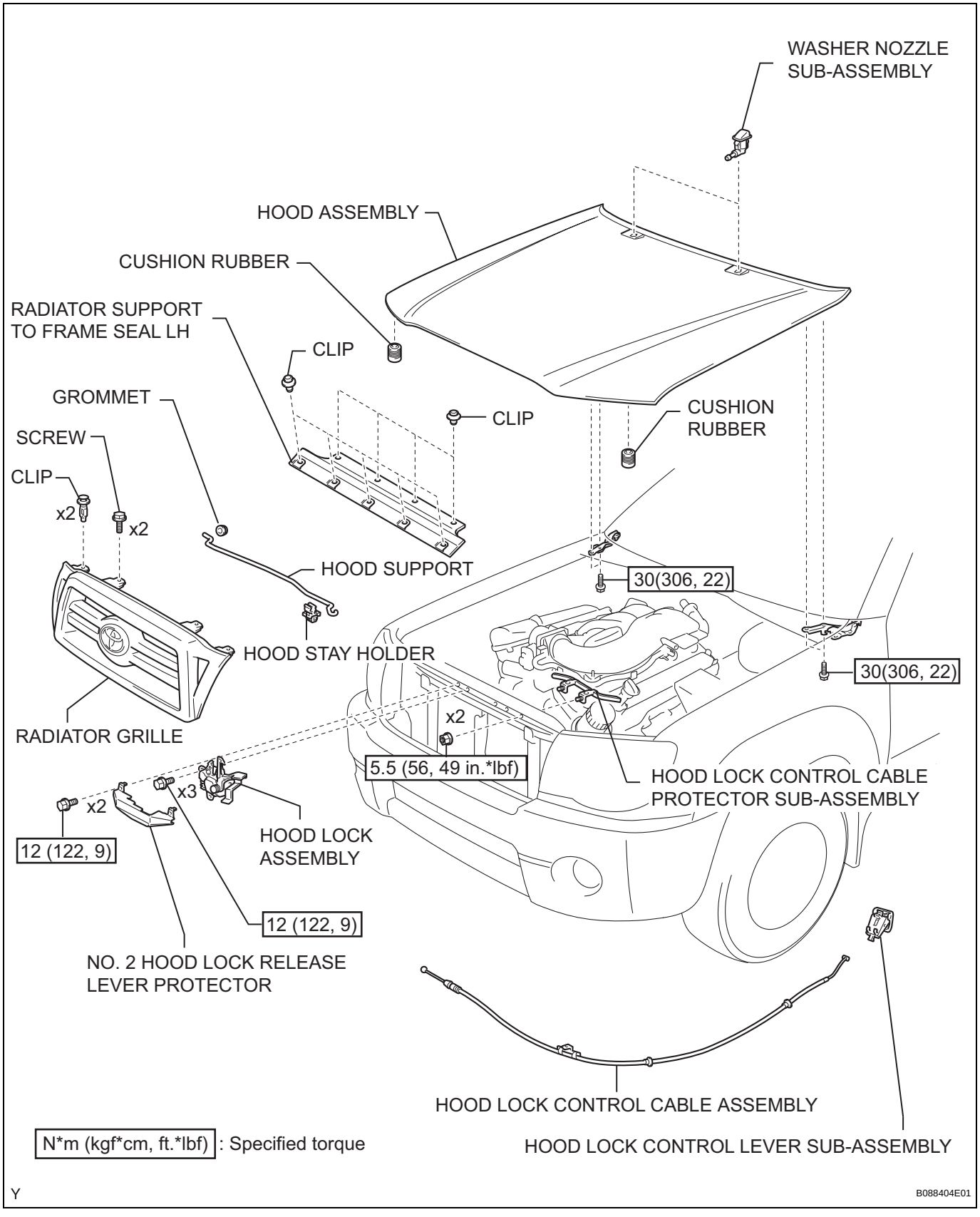

DISASSEMBLY

HINT:
For bolts without torque specifications, check the standard bolt chart (See page SS-2).

1. **REMOVE RADIATOR GRILLE (See page ET-4)**
2. **REMOVE NO. 2 HOOD LOCK RELEASE LEVER PROTECTOR (See page ED-5)**
3. **REMOVE HOOD LOCK ASSEMBLY**
   (a) Remove the 3 bolts.

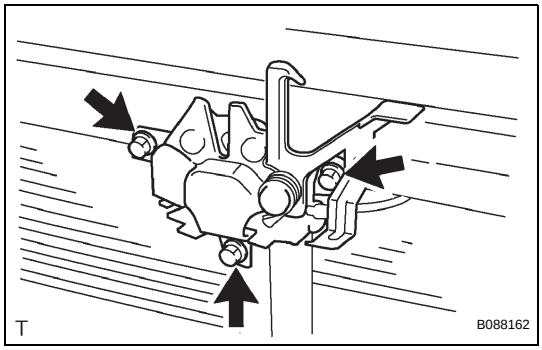

(b) Disconnect the hood lock control cable assembly, then remove the hood lock assembly.

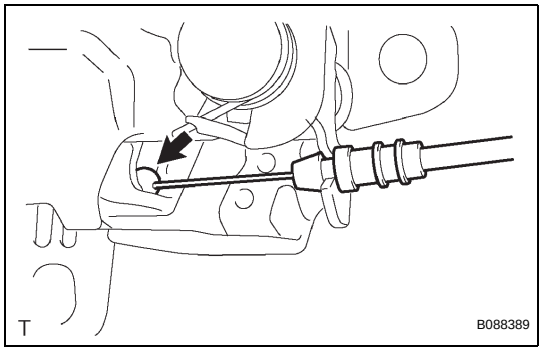

4. **REMOVE HOOD SUPPORT**
   (a) Remove the hood support.
   (b) Remove the grommet.

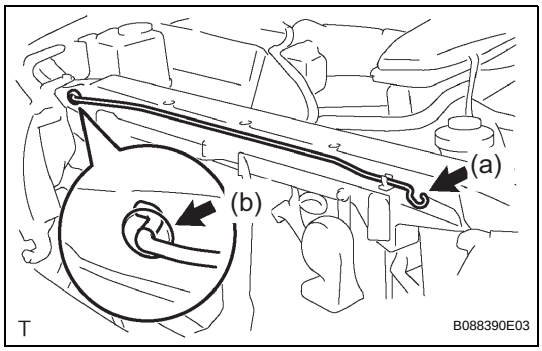

(c) Using a clip remover, disengage the 2 claws and remove the hood stay holder.

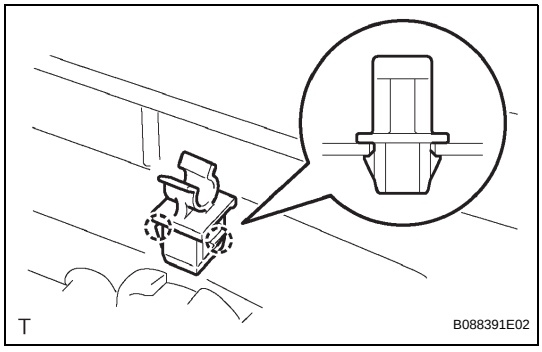

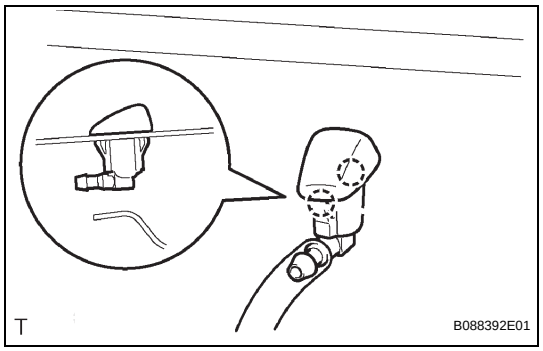

5. REMOVE WASHER NOZZLE SUB-ASSEMBLY

(a) Disengage the 2 claws and remove the washer nozzle sub-assembly.

(b) Disconnect the washer hose.

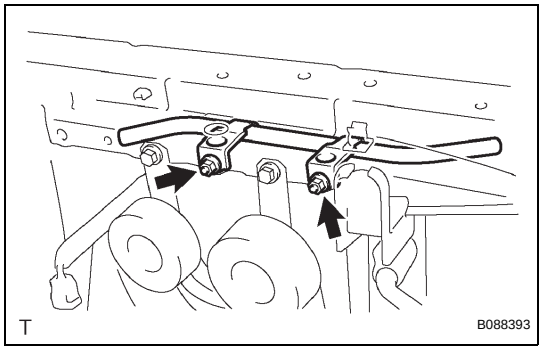

6. REMOVE HOOD LOCK CONTROL CABLE PROTECTOR SUB-ASSEMBLY

(a) Remove the 2 nuts, then remove the hood lock control cable protector sub-assembly.

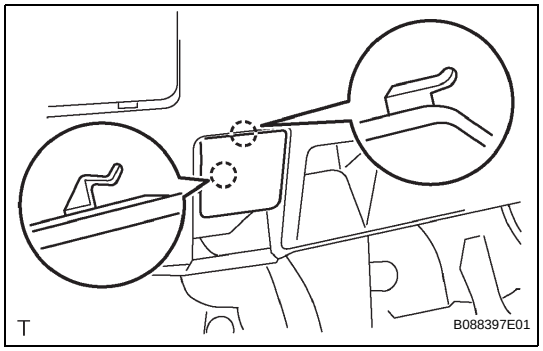

7. REMOVE HOOD LOCK CONTROL LEVER SUB-ASSEMBLY

(a) Disengage the 2 claws.

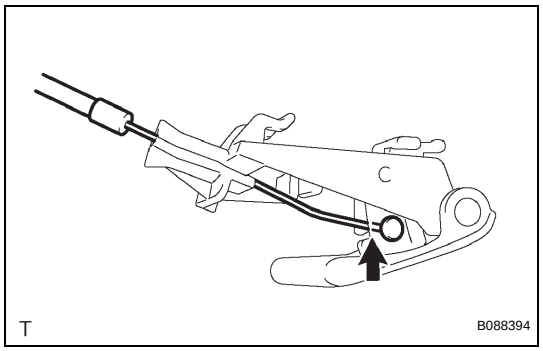

(b) Disconnect the hood lock control cable assembly and remove the hood lock control lever sub-assembly.

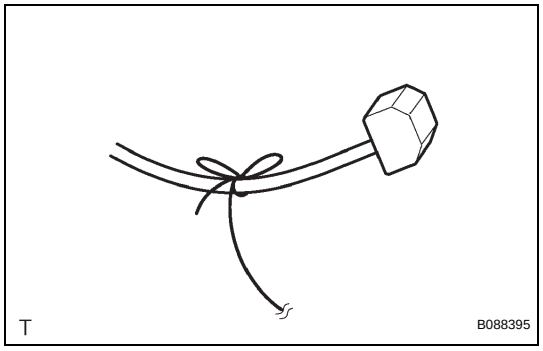

8. REMOVE HOOD LOCK CONTROL CABLE ASSEMBLY

(a) Tie a piece of string to the tip of the hood lock control cable assembly.

HINT:

Use a piece of string which is longer than the hood lock control cable assembly.

(b) Remove the hood lock control cable assembly referring to the illustration.

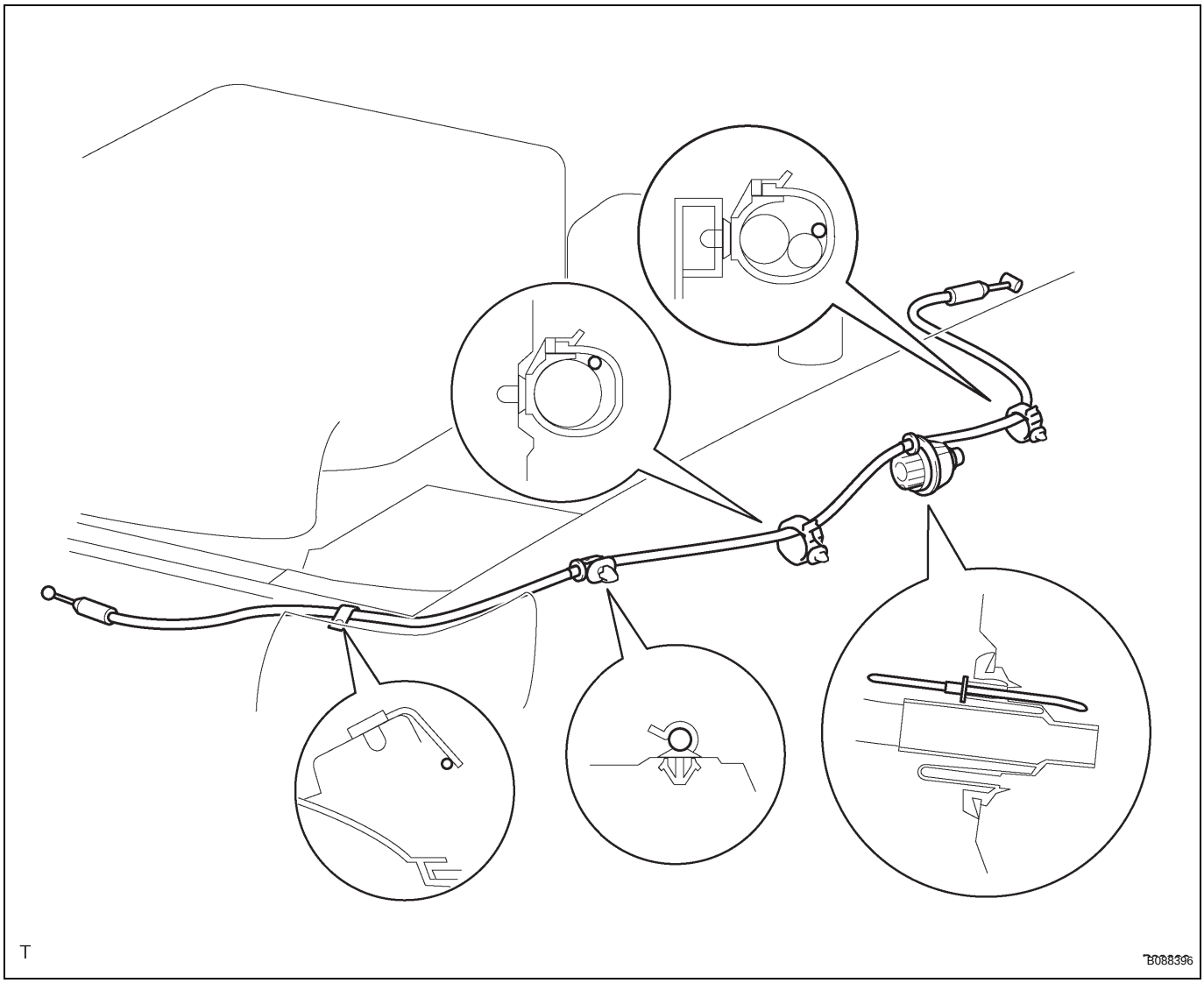

NOTICE:
Leave the string inside the wire harness grommet for the installation of the hood lock control cable assembly.

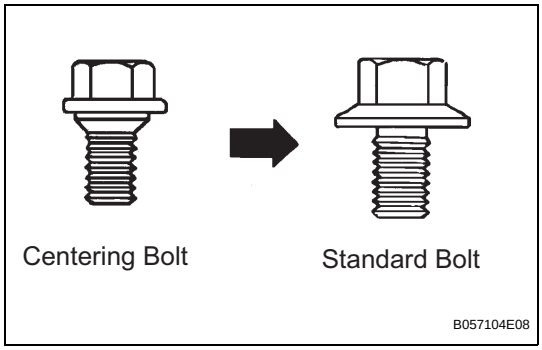

ADJUSTMENT

HINT:

- Centering bolts are used to mount the hood hinge and hood lock. The hood and hood lock cannot be adjusted with the centering bolts on. Substitute the standard bolts (with washers) for the centering bolts when making adjustments.
- For bolts without torque specifications, check the standard bolt chart (See page SS-2).

FRONT DOOR (w/ Power Window)

COMPONENTS

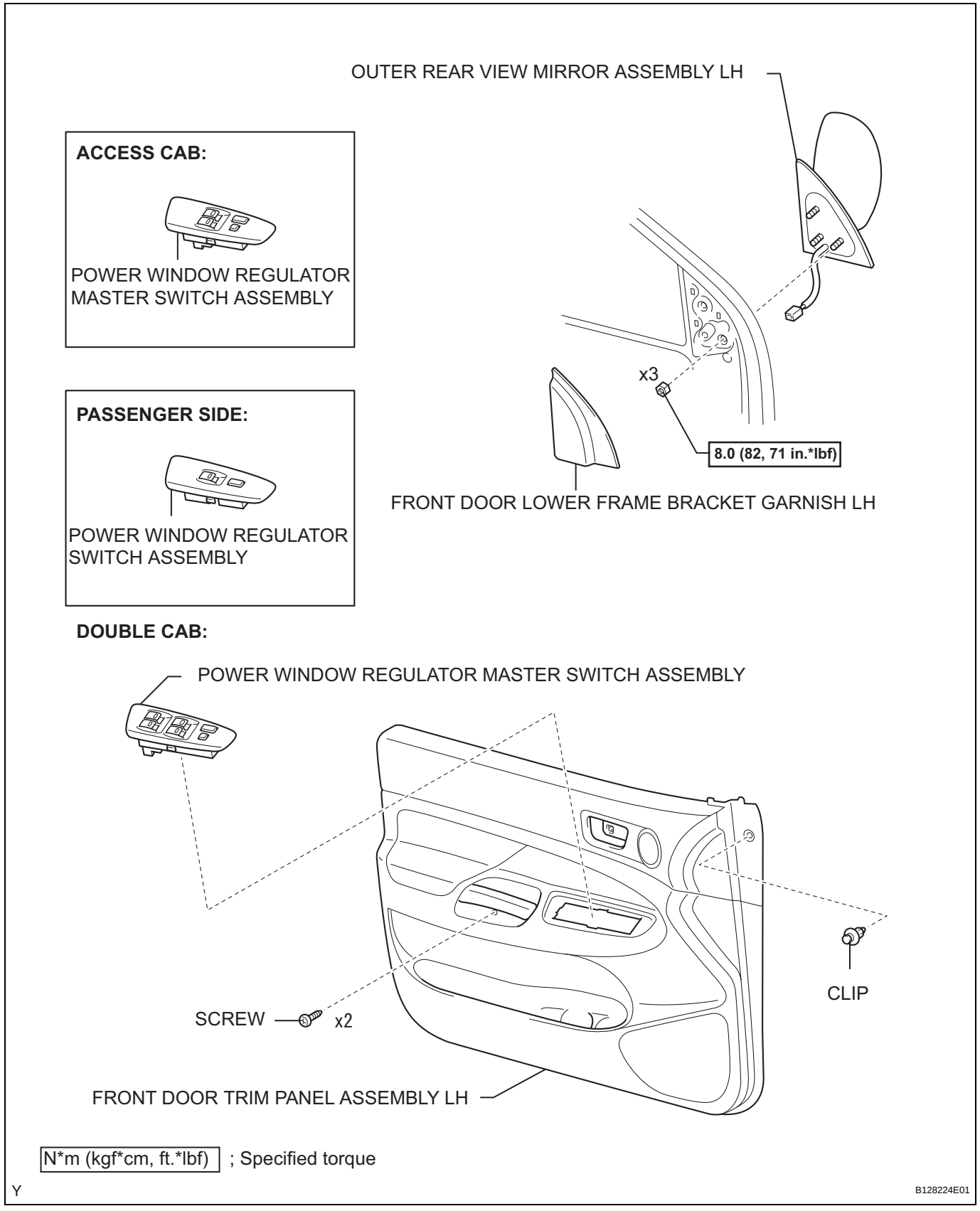

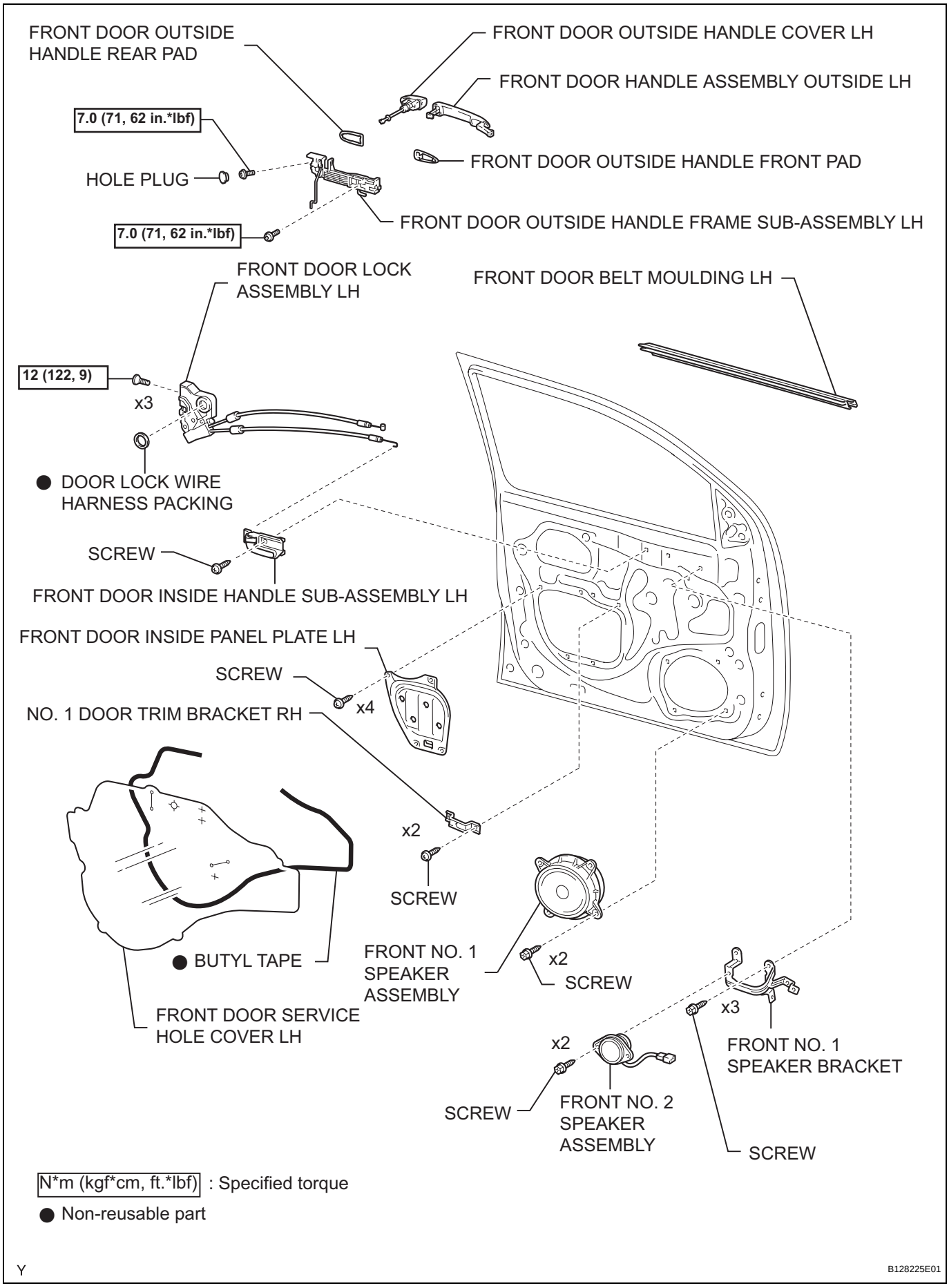

N*m (kgf*cm, ft.*lbf) : Specified torque

● Non-reusable part

Y

B128225E01

ED

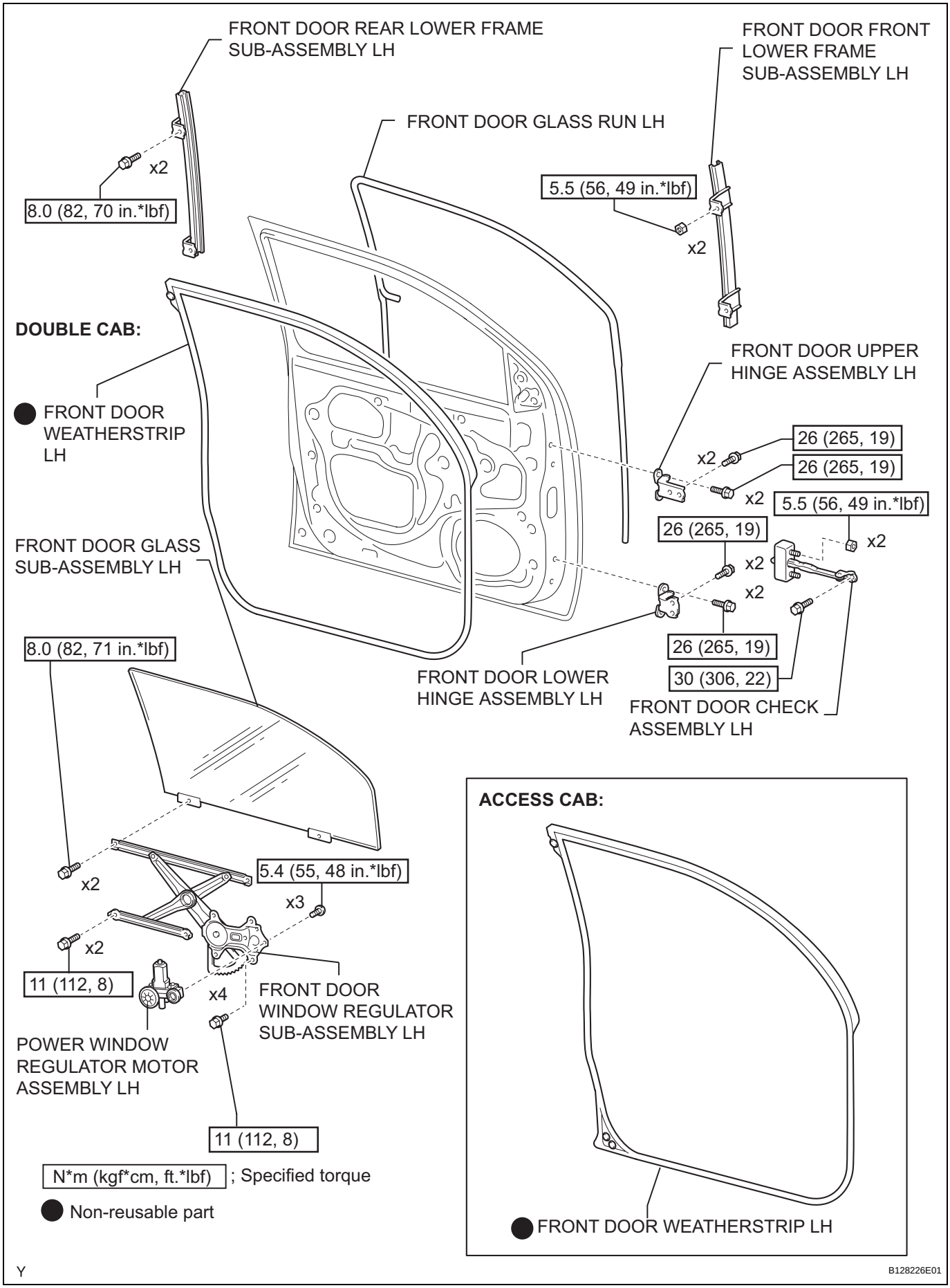
FRONT DOOR REAR LOWER FRAME SUB-ASSEMBLY LH
FRONT DOOR FRONT LOWER FRAME SUB-ASSEMBLY LH
FRONT DOOR GLASS RUN LH
x2
8.0 (82, 70 in.*lbf)
5.5 (56, 49 in.*lbf)
x2
DOUBLE CAB:
FRONT DOOR UPPER HINGE ASSEMBLY LH
FRONT DOOR WEATHERSTRIP LH
26 (265, 19)
x2
26 (265, 19)
x2
5.5 (56, 49 in.*lbf)
26 (265, 19)
x2
x2
x2
FRONT DOOR GLASS SUB-ASSEMBLY LH
8.0 (82, 71 in.*lbf)
26 (265, 19)
30 (306, 22)
FRONT DOOR LOWER HINGE ASSEMBLY LH
FRONT DOOR CHECK ASSEMBLY LH
x2
5.4 (55, 48 in.*lbf)
x3
x2
11 (112, 8)
x4
FRONT DOOR WINDOW REGULATOR SUB-ASSEMBLY LH
POWER WINDOW REGULATOR MOTOR ASSEMBLY LH
11 (112, 8)
ACCESS CAB:
FRONT DOOR WEATHERSTRIP LH
N*m (kgf*cm, ft.*lbf) ; Specified torque
Non-reusable part
Y
B128226E01

FRONT DOOR (w/o Power Window)

COMPONENTS

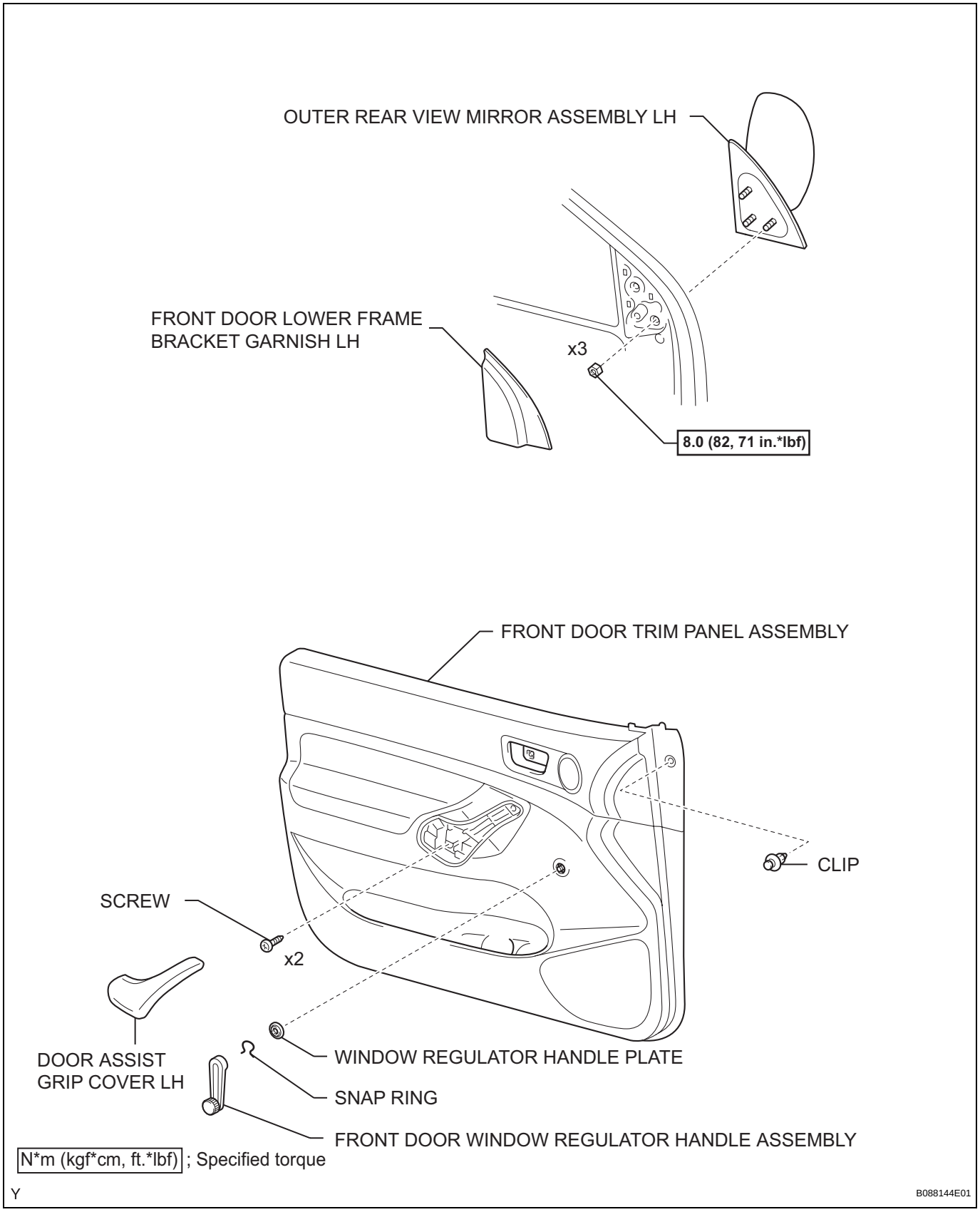

ED

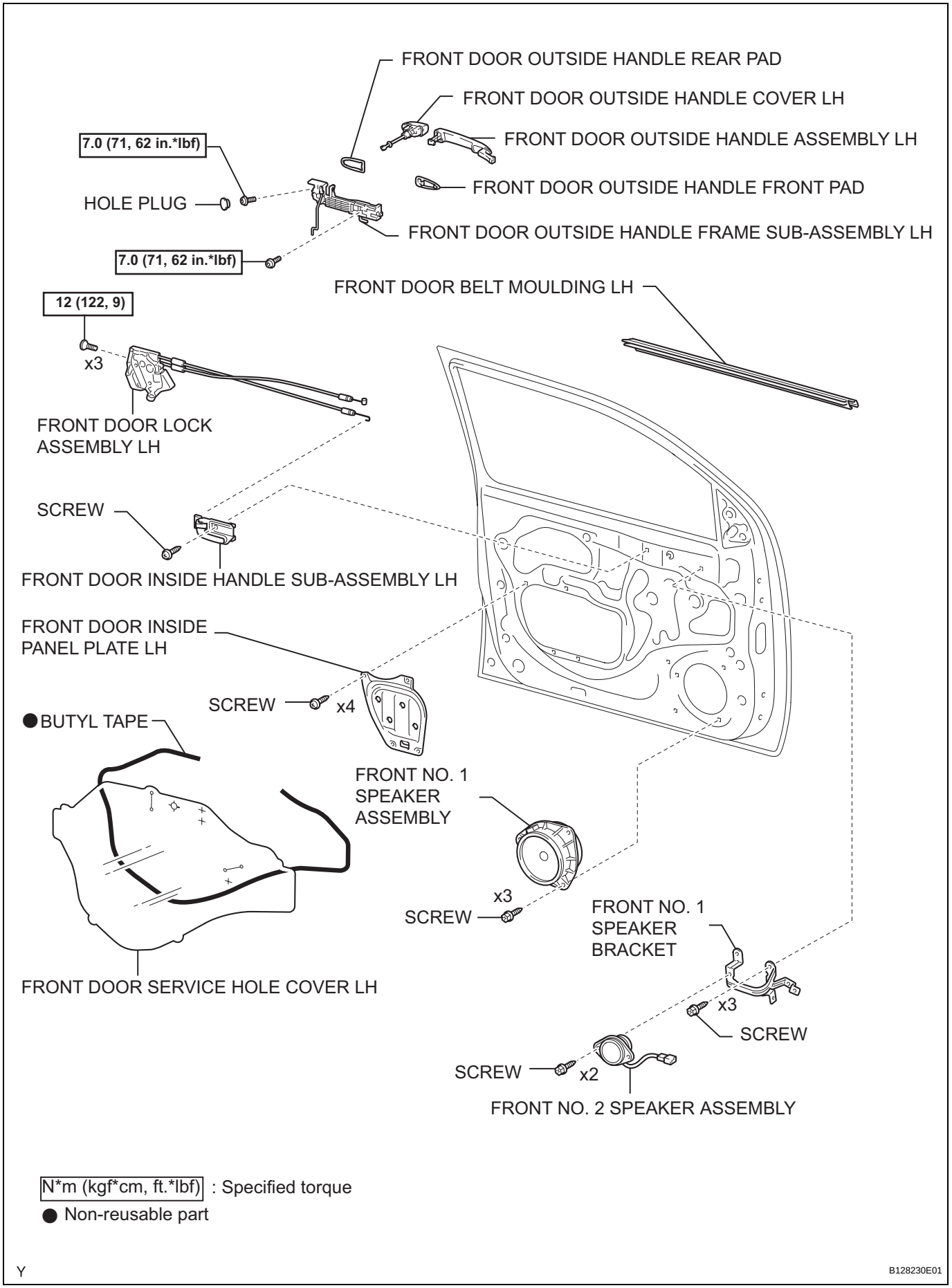

N*m (kgf*cm, ft.*lbf) : Specified torque

● Non-reusable part

Y

B128230E01

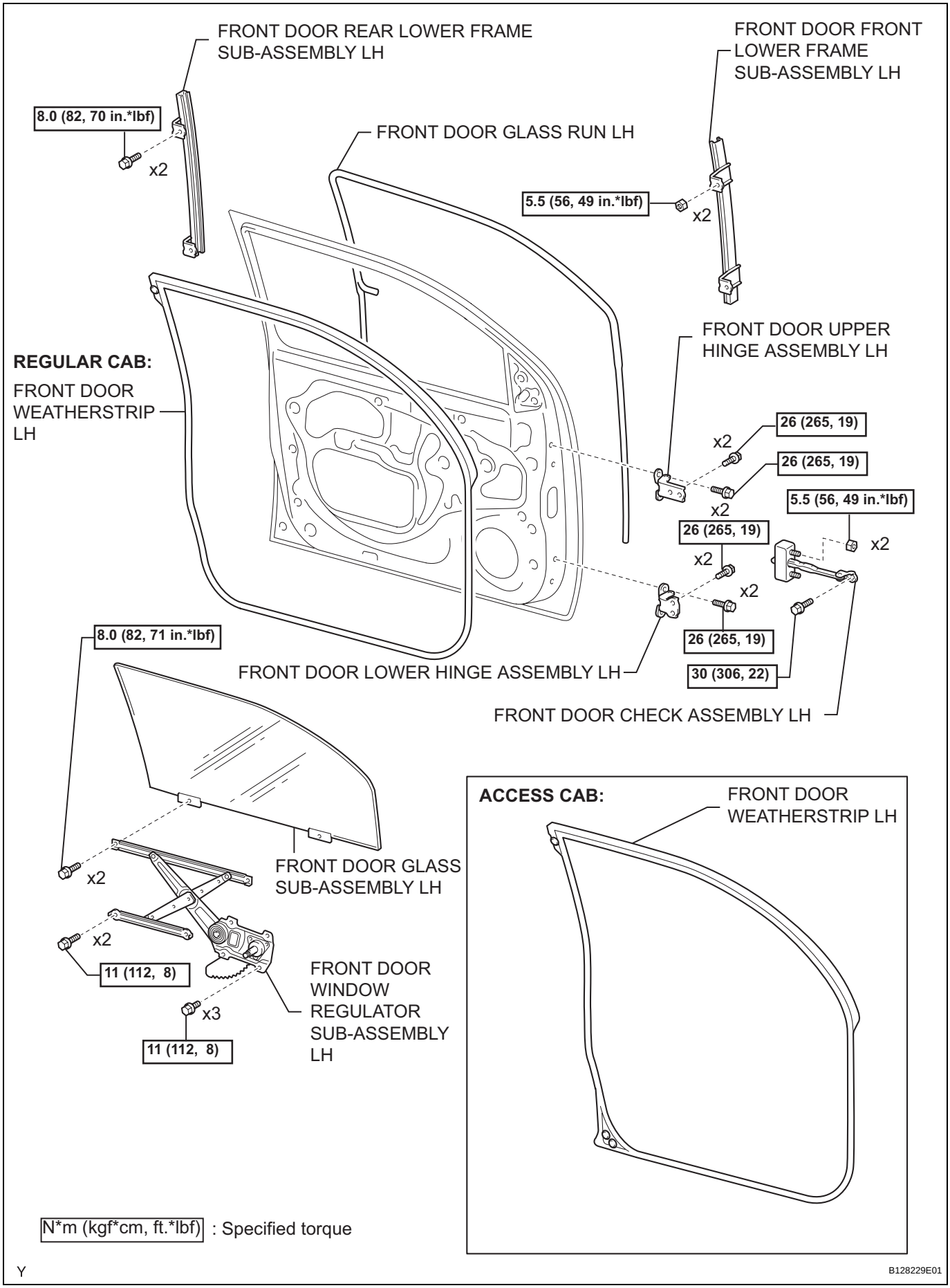
FRONT DOOR REAR LOWER FRAME SUB-ASSEMBLY LH
FRONT DOOR FRONT LOWER FRAME SUB-ASSEMBLY LH
8.0 (82, 70 in.*lbf)
x2
FRONT DOOR GLASS RUN LH
5.5 (56, 49 in.*lbf)
x2
FRONT DOOR UPPER HINGE ASSEMBLY LH
REGULAR CAB:
FRONT DOOR WEATHERSTRIP LH
26 (265, 19)
x2
26 (265, 19)
x2
5.5 (56, 49 in.*lbf)
x2
26 (265, 19)
x2
x2
26 (265, 19)
8.0 (82, 71 in.*lbf)
FRONT DOOR LOWER HINGE ASSEMBLY LH
30 (306, 22)
FRONT DOOR CHECK ASSEMBLY LH
x2
FRONT DOOR GLASS SUB-ASSEMBLY LH
x2
11 (112, 8)
FRONT DOOR WINDOW REGULATOR SUB-ASSEMBLY LH
x3
11 (112, 8)
ACCESS CAB:
FRONT DOOR WEATHERSTRIP LH
N*m (kgf*cm, ft.*lbf) : Specified torque
Y
B128229E01

ED

ACCESS DOOR

COMPONENTS

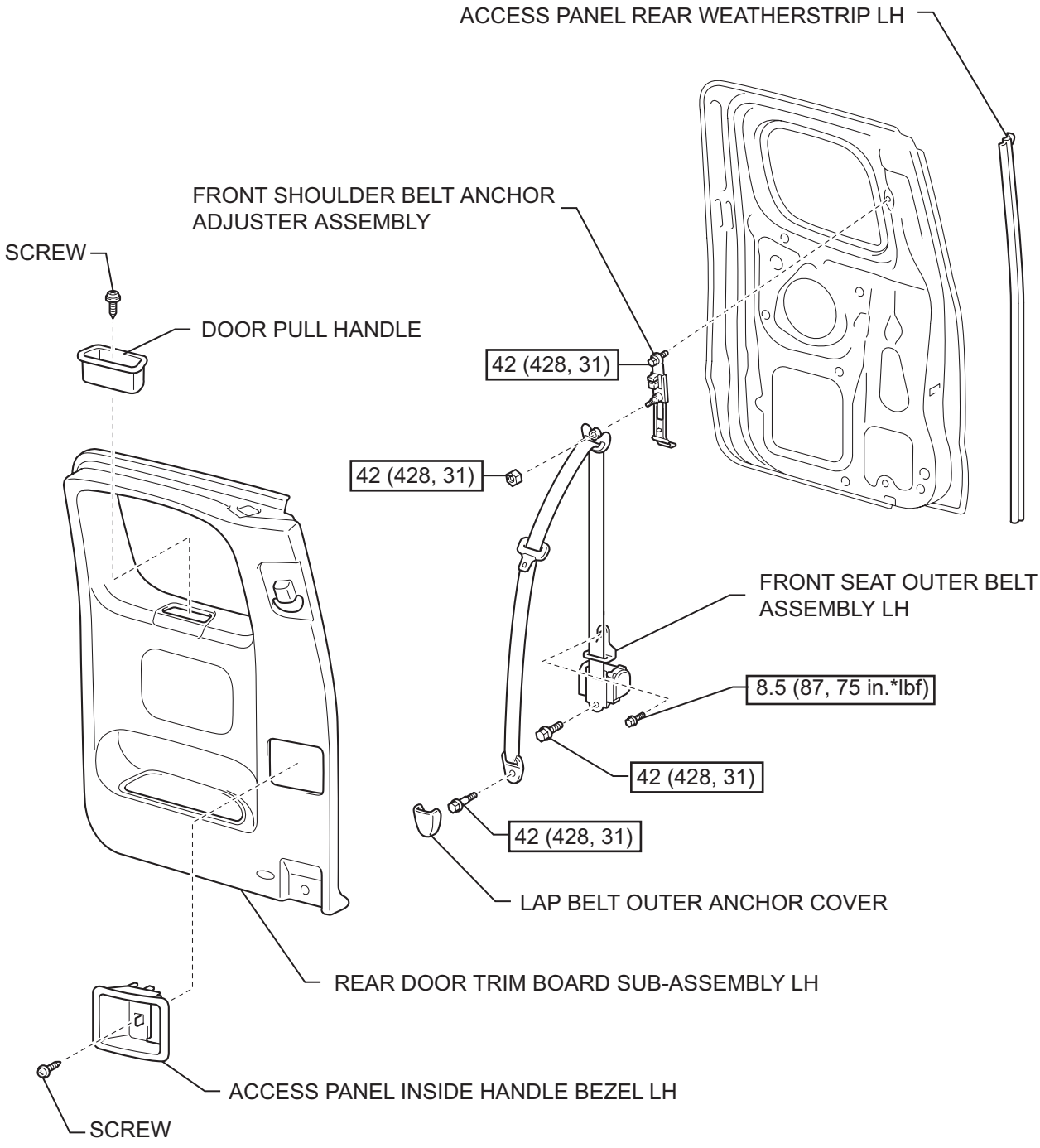

N*m (kgf*cm, ft.*lbf) ; Specified torque

Y

B088150E01

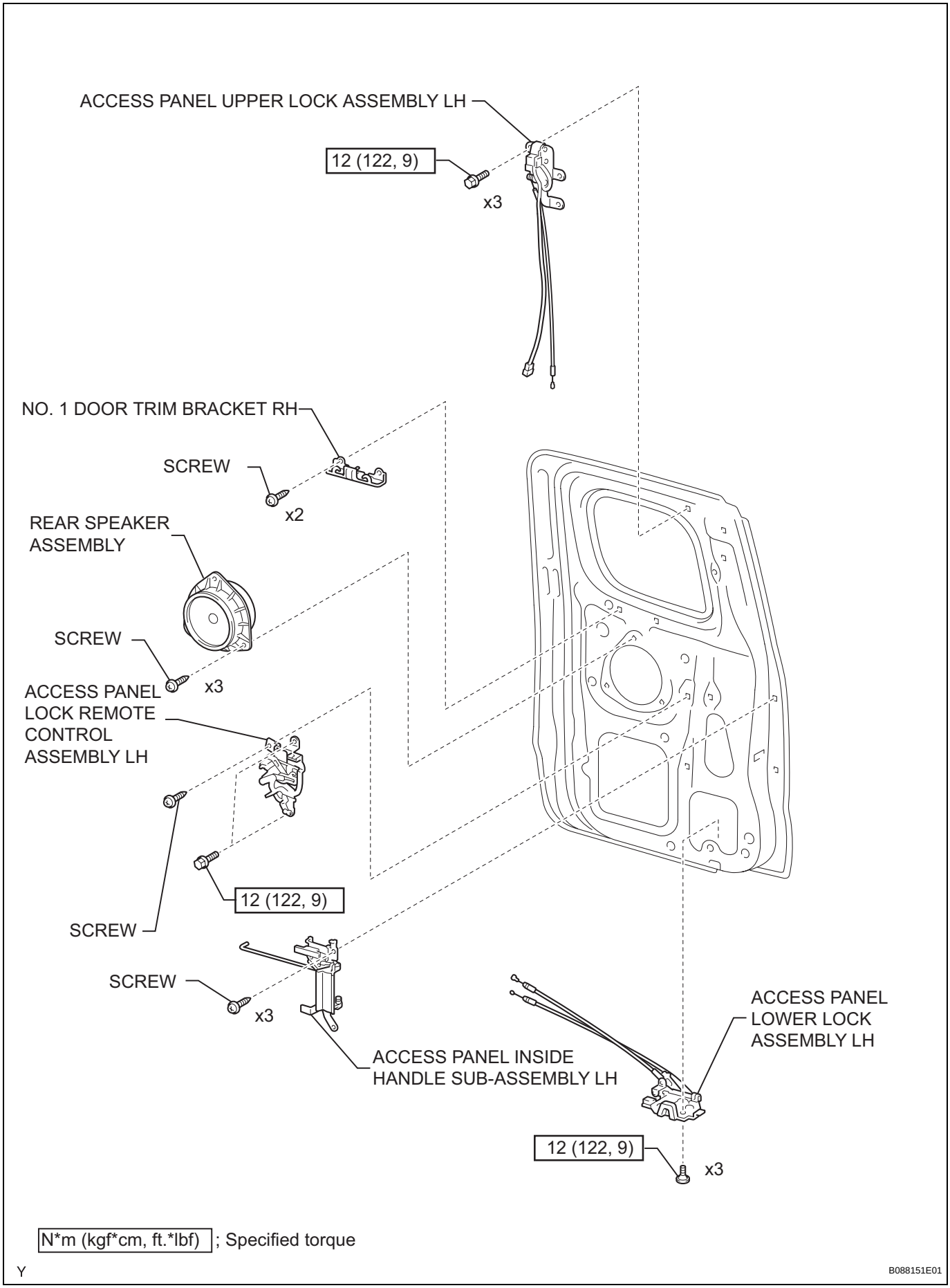
ACCESS PANEL UPPER LOCK ASSEMBLY LH
12 (122, 9)
x3
NO. 1 DOOR TRIM BRACKET RH
SCREW
x2
REAR SPEAKER ASSEMBLY
SCREW
x3
ACCESS PANEL LOCK REMOTE CONTROL ASSEMBLY LH
12 (122, 9)
SCREW
SCREW
x3
ACCESS PANEL INSIDE HANDLE SUB-ASSEMBLY LH
ACCESS PANEL LOWER LOCK ASSEMBLY LH
12 (122, 9)
x3
N*m (kgf*cm, ft.*lbf) ; Specified torque
Y
B088151E01

ED

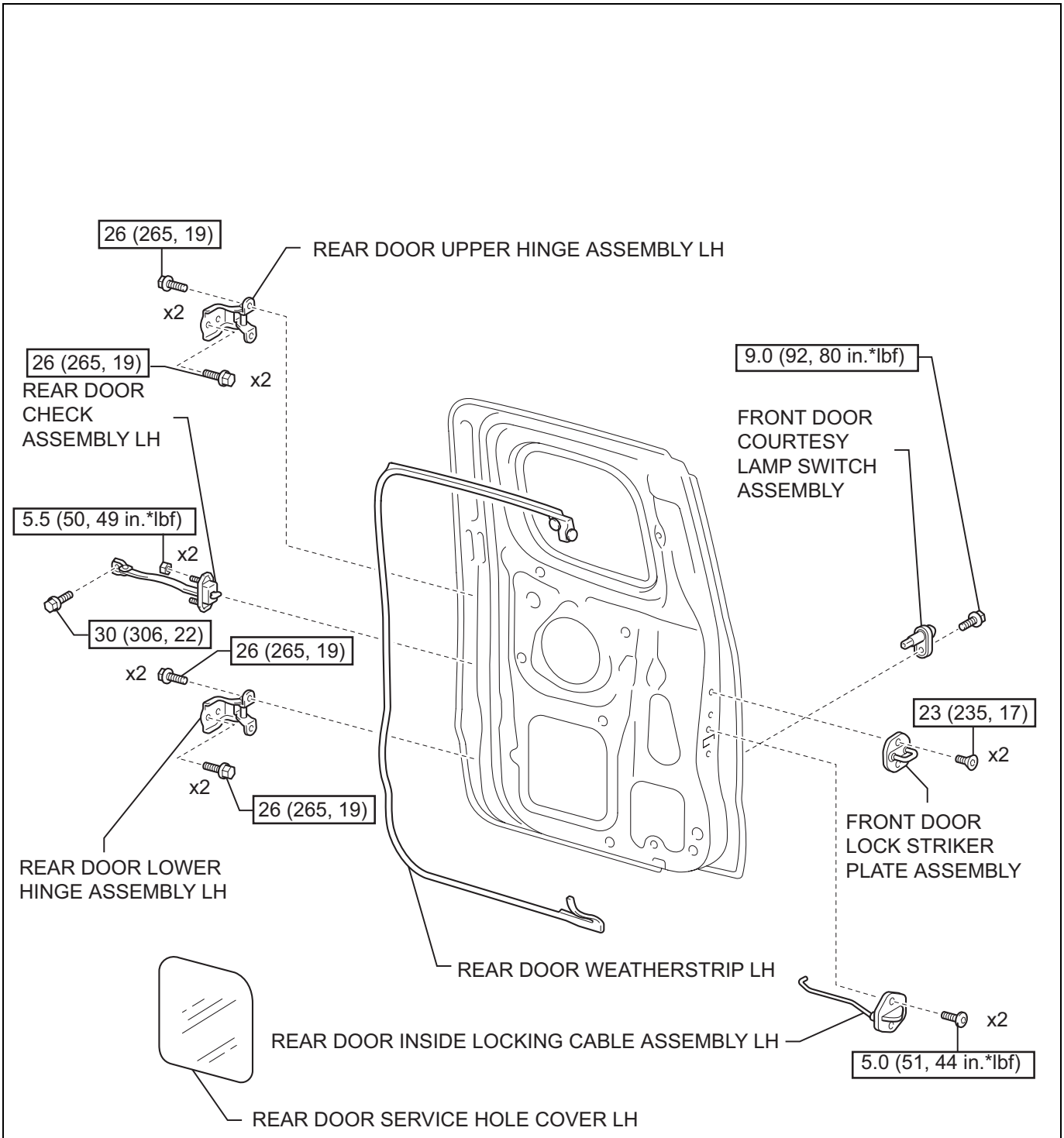

N*m (kgf*cm, ft.*lbf) ; Specified torque

● Non-reusable part

Y

B128228E01

REAR DOOR

COMPONENTS

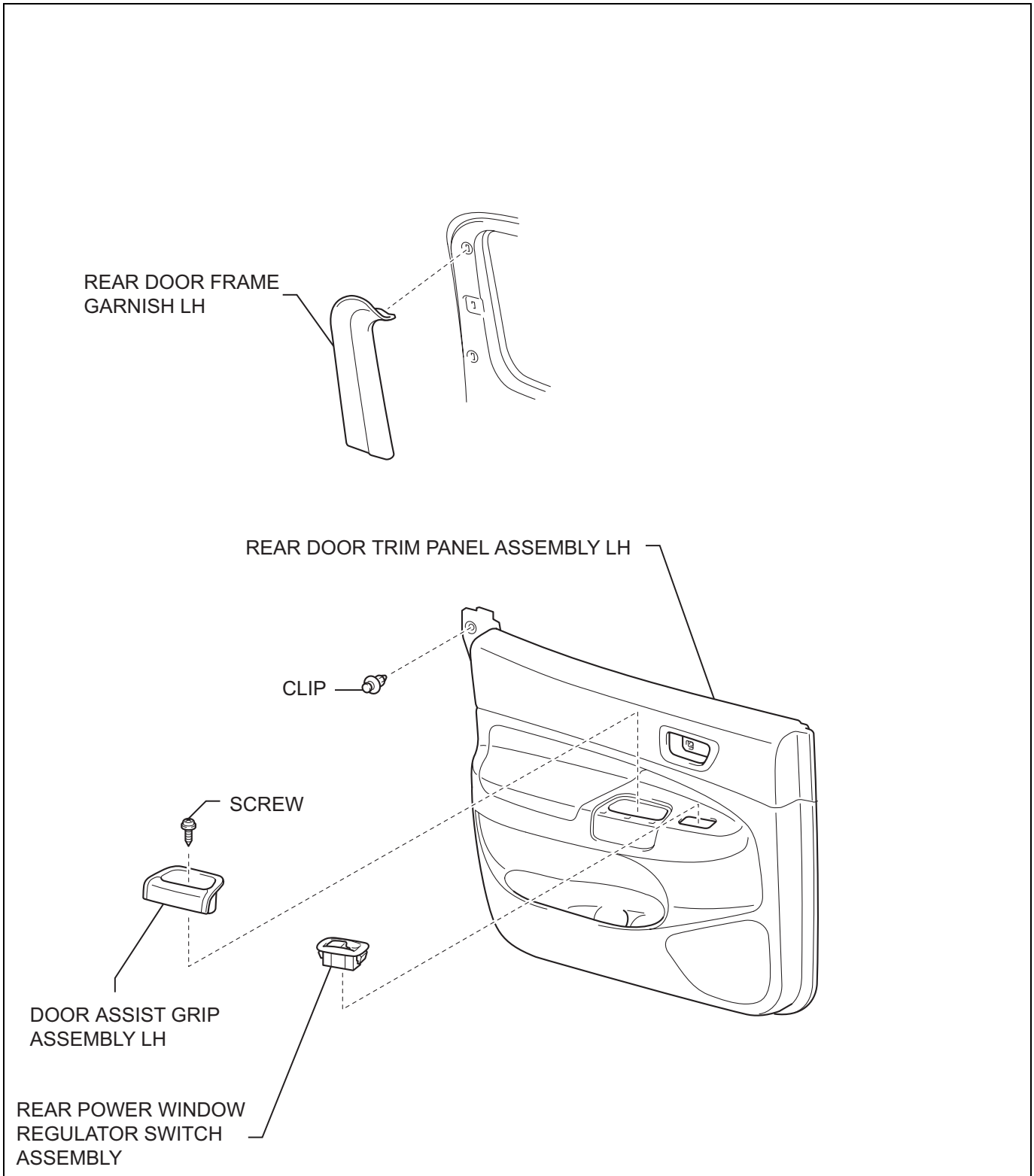

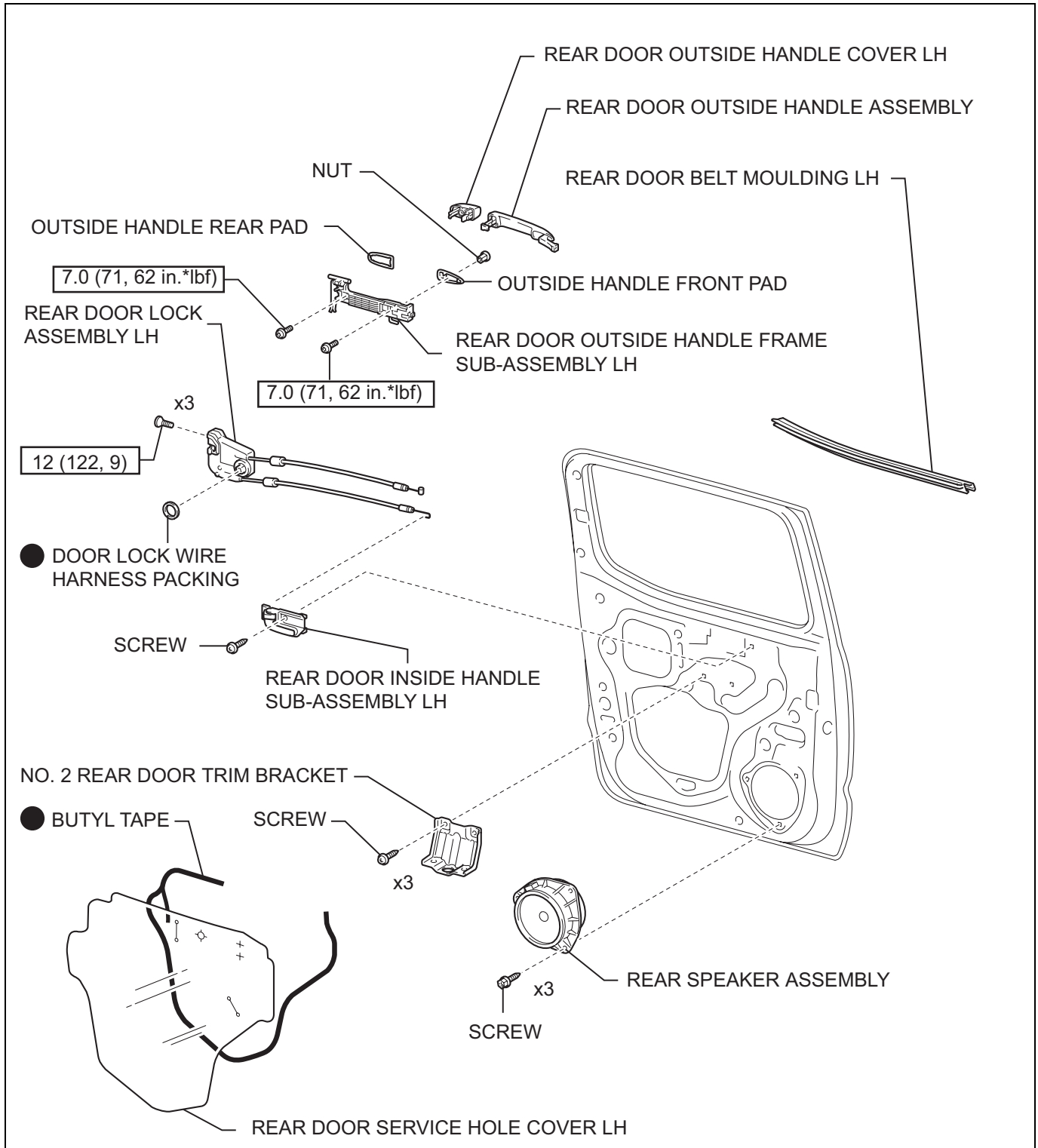

N*m (kgf*cm, ft.*lbf) ; Specified torque

● Non-reusable part

Y

B088148E01

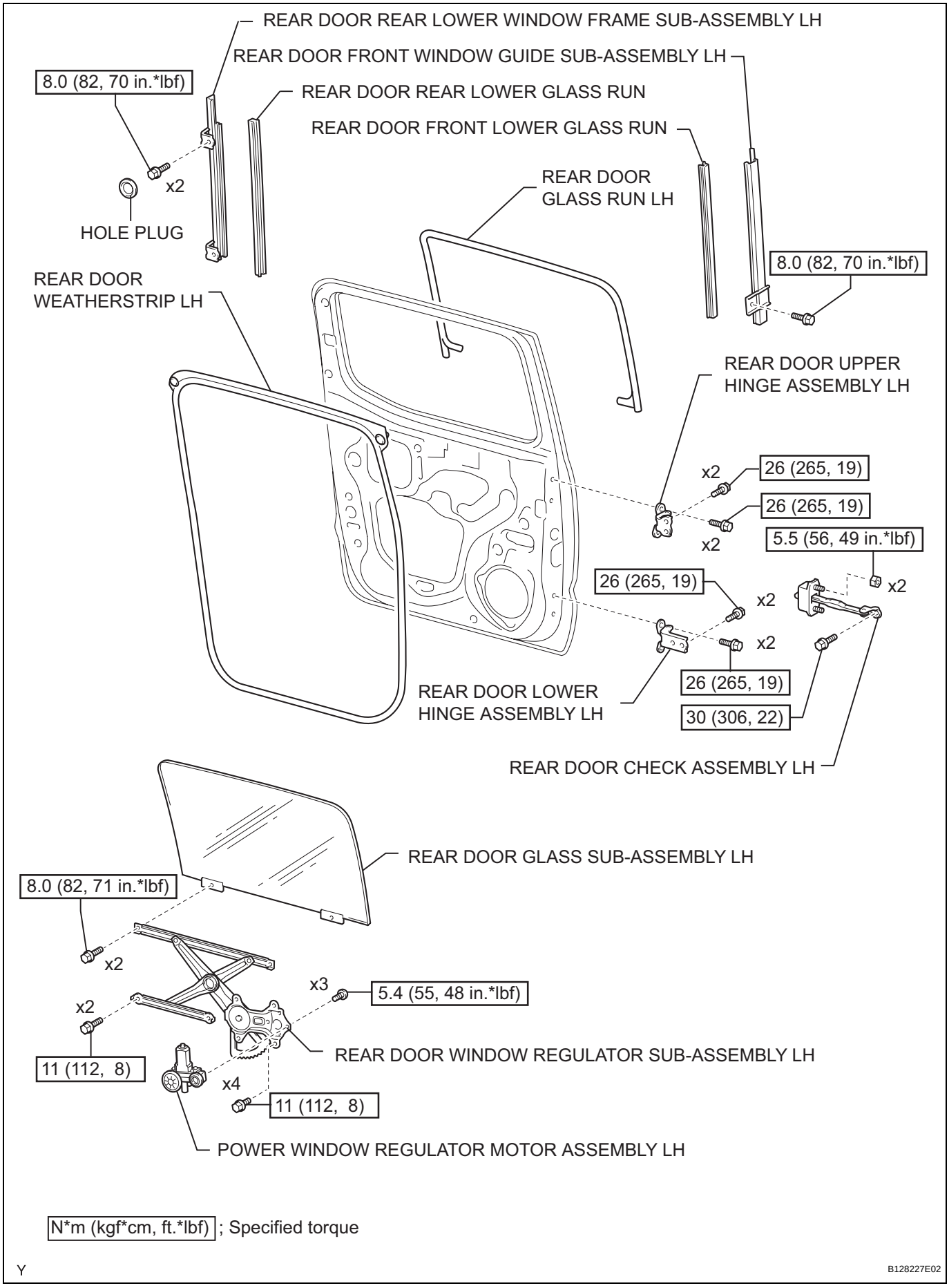

ED

N*m (kgf*cm, ft.*lbf) ; Specified torque

Y

B128227E02

TAIL GATE

COMPONENTS

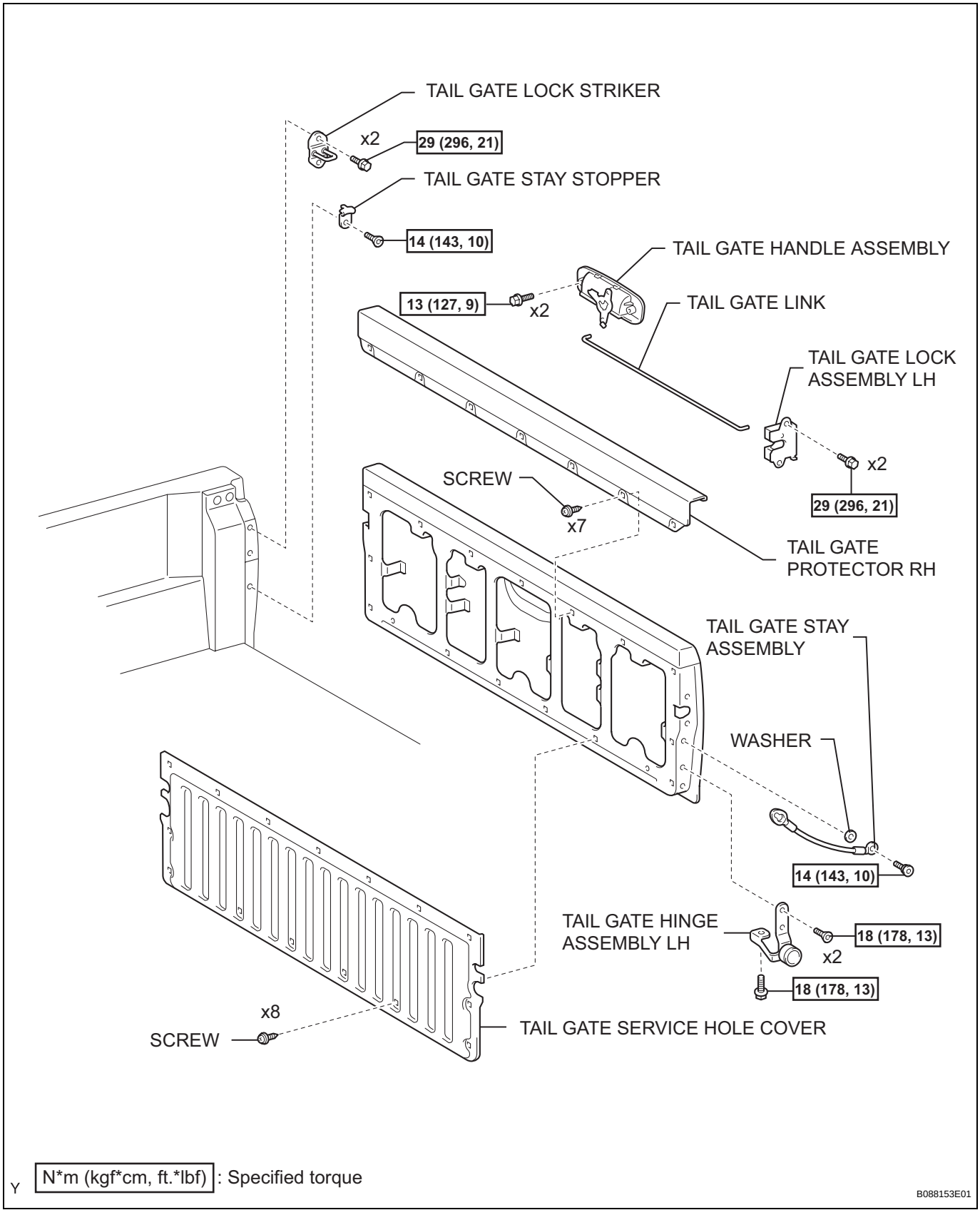

DISASSEMBLY

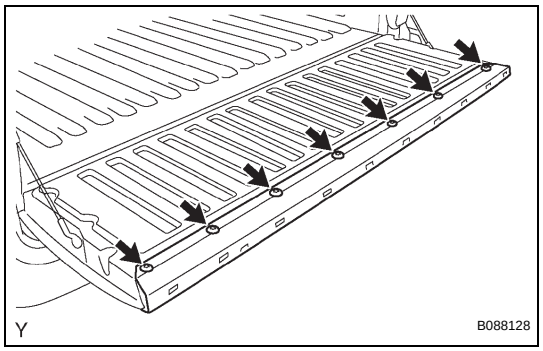

1. REMOVE TAIL GATE PROTECTOR RH

(a) Using a torx socket wrench T30 , remove the 7 screws.

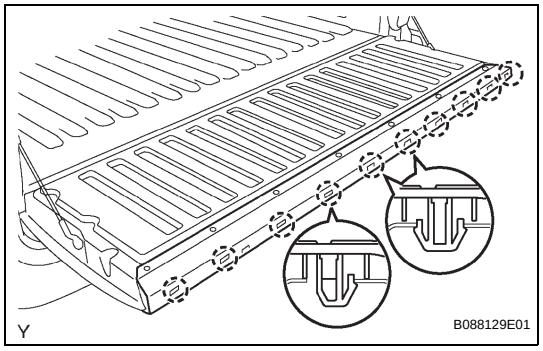

(b) Disengage the 10 claws and remove the tail gate protector RH.

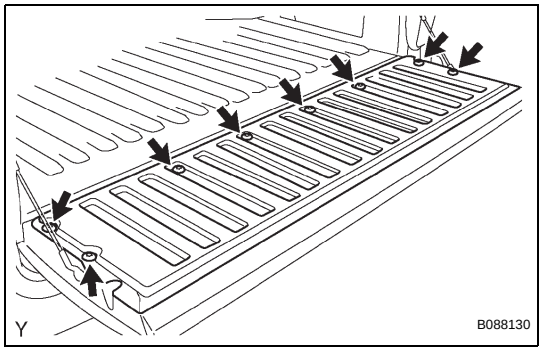

2. REMOVE TAIL GATE SERVICE HOLE COVER

(a) Using a torx socket wrench T30, remove the 8 screws and tail gate service hole cover.

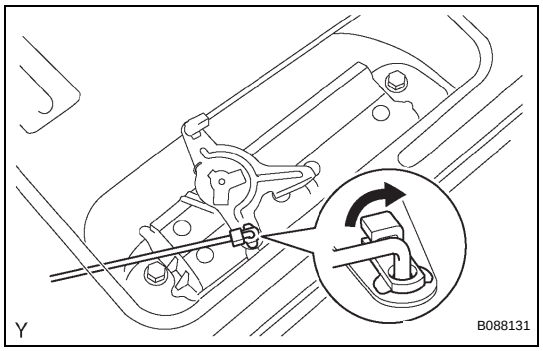

3. REMOVE TAIL GATE LOCK ASSEMBLY LH

(a) Disconnect the tail gate link as shown in the illustration.

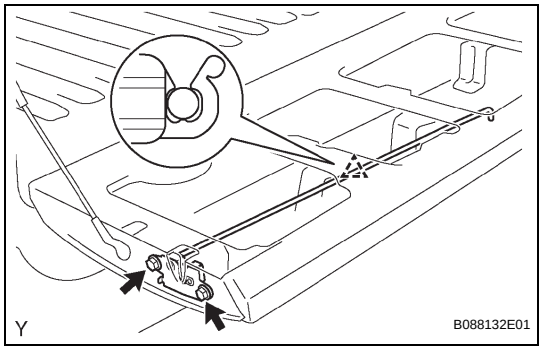

(b) Disengage the clip and remove the 2 bolts, then remove the tail gate lock assembly LH from the tail gate.

4. REMOVE TAIL GATE LOCK ASSEMBLY RH

HINT:

Use the same procedure as described for the LH side.

ED

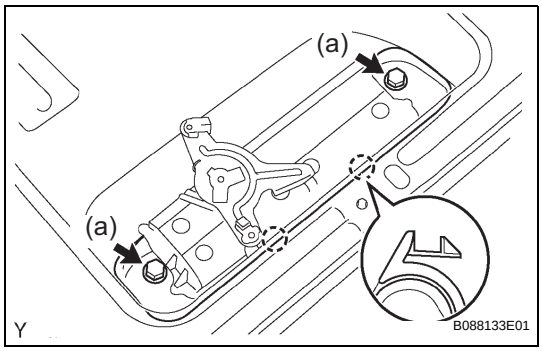

5. REMOVE TAIL GATE HANDLE ASSEMBLY

(a) Remove the 2 bolts.

(b) Disengage the 2 claws and remove the tail gate handle assembly.

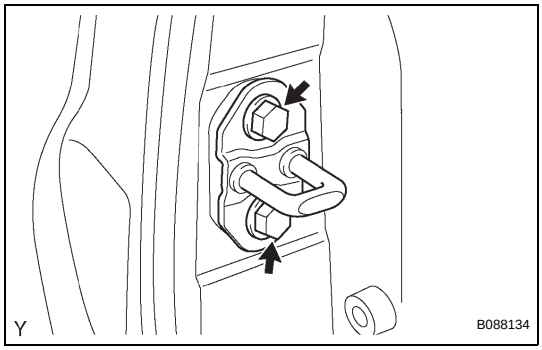

6. REMOVE TAIL GATE LOCK STRIKER

(a) Remove the 2 bolts and tail gate lock striker.
HINT:
Use the same procedures for both the LH and RH sides.

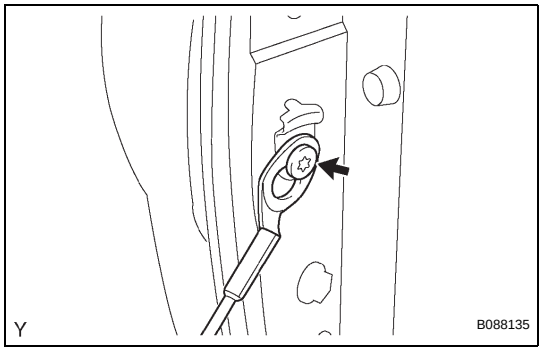

7. REMOVE TAIL GATE

(a) Disconnect the tail gate stay.
HINT:
Use the same procedures for both the LH and RH sides.

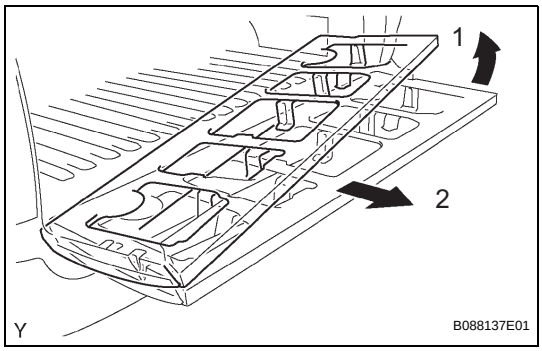

(b) Remove the tail gate from the vehicle as shown in the illustration.
NOTICE:
Be careful not to drop the tail gate.
HINT:
Remove the tail gate from the vehicle by lifting up the right side and sliding it slightly to the right.

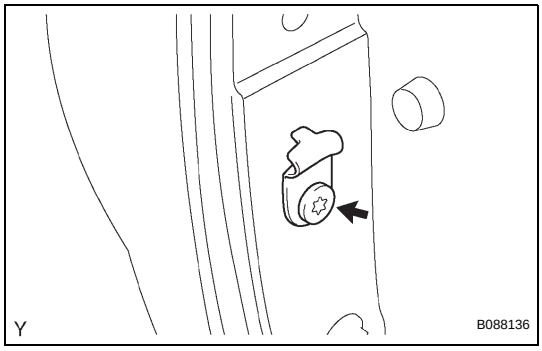

8. REMOVE TAIL GATE STAY STOPPER

(a) Using a torx socket wrench T40, remove the screw and tail gate stopper.
HINT:
Use the same procedure for both the LH and RH sides.

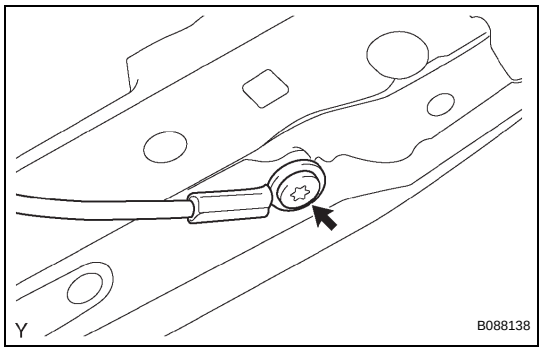

9. REMOVE TAIL GATE STAY ASSEMBLY

(a) Using a torx socket wrench T40 , remove the screw, washer and tail gate stay assembly.
HINT:
Use the same procedure for both the LH and RH sides.

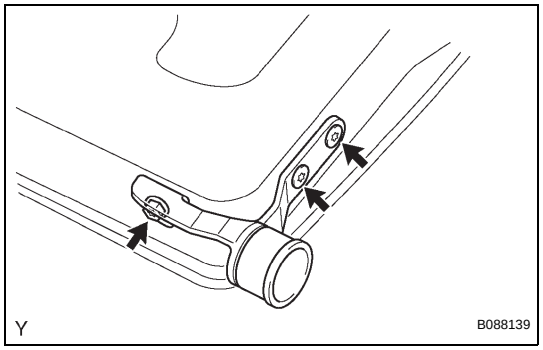

10. REMOVE TAIL GATE HINGE ASSEMBLY LH

(a) Using a torx socket wrench T40 , remove the bolt, 2 screws and tail gate hinge assembly LH.
HINT:
Perform the same procedure as above on the opposite side.

11. REMOVE TAIL GATE HINGE ASSEMBLY RH

HINT:
Use the same procedures as described for the LH side.

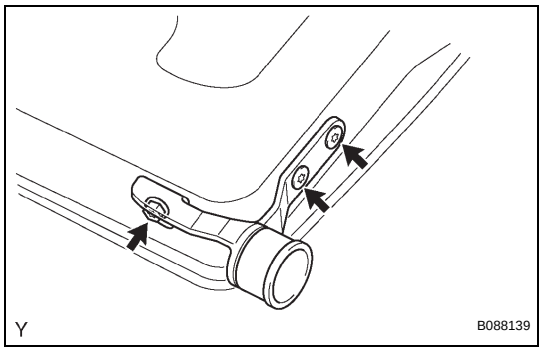

REASSEMBLY

1. INSTALL TAIL GATE HINGE ASSEMBLY LH

(a) Using a torx socket wrench T40 , install the tail gate hinge assembly LH with the bolt and 2 screws.
Torque: 18 N*m (178 kgf*cm, 13 ft.*lbf)

2. INSTALL TAIL GATE HINGE ASSEMBLY RH

HINT:
Use the same procedures as described for the LH side.

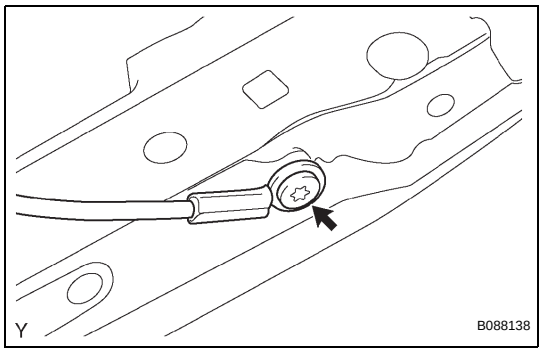

3. INSTALL TAIL GATE STAY ASSEMBLY

(a) Using a torx socket wrench T40 , install the tail gate stay assembly with the screw and washer.
Torque: 14 N*m (143 kgf*cm, 10 ft.*lbf)
HINT:
Use the same procedure for both the LH and RH sides.

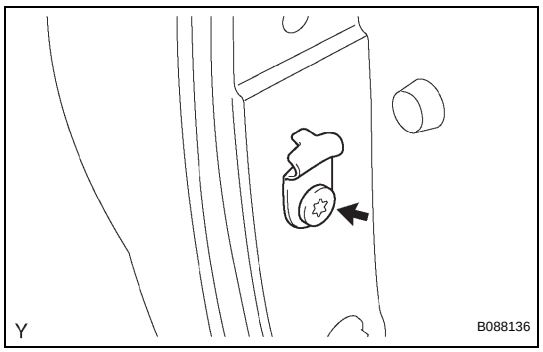

4. INSTALL TAIL GATE STAY STOPPER

(a) Using a torx socket wrench T40 , install the tail gate stopper with the screw.
Torque: 14 N*m (143 kgf*cm, 10 ft.*lbf)
HINT:
Use the same procedure for both the LH and RH sides.

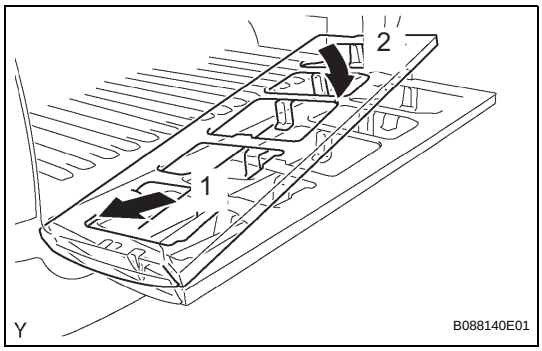

5. INSTALL TAIL GATE

(a) Install the tail gate onto the vehicle.
NOTICE:
Be careful not to drop the tail gate.
HINT:
Install the tail gate onto the vehicle by engaging the hinge on the left side first and then the hinge on the right side.

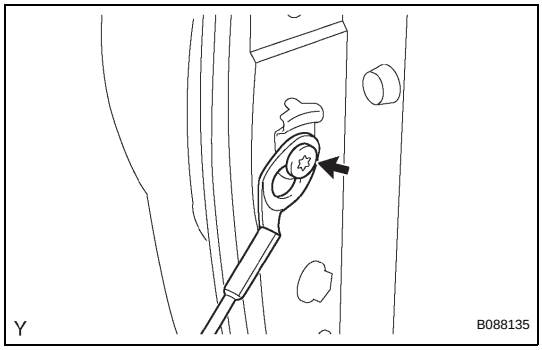

(b) Connect the tail gate stay.
HINT:
Use the same procedure for both the LH and RH sides.

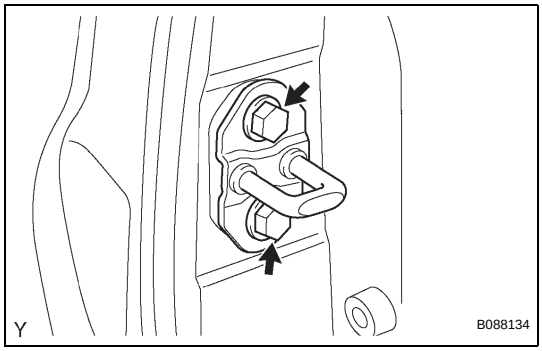

6. INSTALL TAIL GATE LOCK STRIKER

(a) Install the tail gate lock striker with the 2 bolts.
Torque: 29 N*m (296 kgf*cm, 21 ft.*lbf)
HINT:
Use the same procedure for both the LH and RH sides.

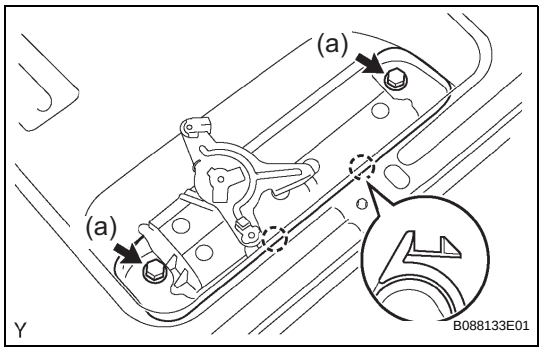

7. INSTALL TAIL GATE HANDLE ASSEMBLY

(a) Engage the 2 claws and install the tail gate handle assembly with the 2 bolts.
Torque: 13 N*m (127 kgf*cm, 9 ft.*lbf)

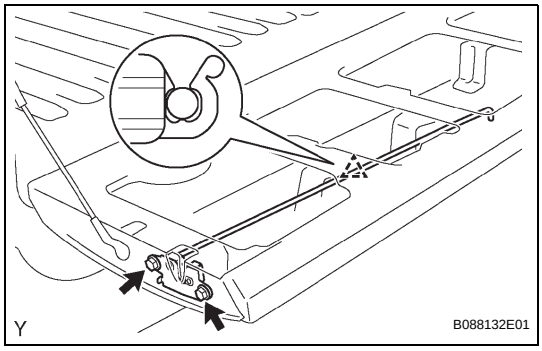

8. INSTALL TAIL GATE LOCK ASSEMBLY LH

(a) Engage the clip and install the tail gate lock assembly LH with the 2 bolts and clip.
Torque: 29 N*m (269 kgf*cm, 21 ft.*lbf)

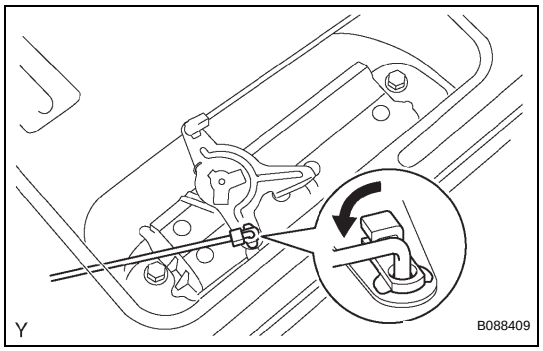

(b) Connect the tail gate link as shown in the illustration.

9. INSTALL TAIL GATE LOCK ASSEMBLY RH

HINT:

Use the same procedure as described for the LH side.

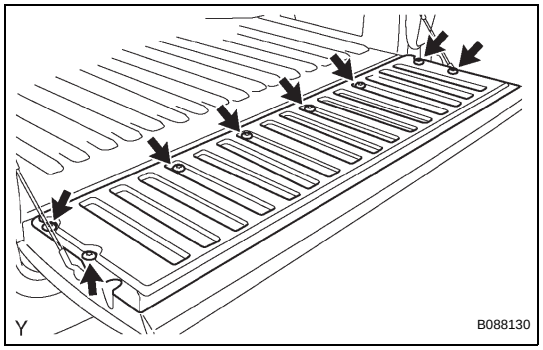

10. INSTALL TAIL GATE SERVICE HOLE COVER

(a) Using a torx socket wrench T30 , install the tail gate service hole cover with the 8 screws.

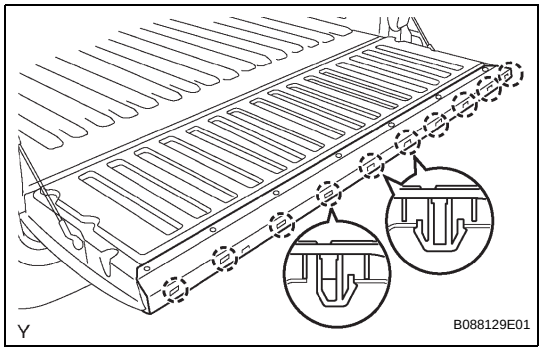

11. INSTALL TAIL GATE PROTECTOR RH

(a) Engage the 10 claws and install the tail gate protector.

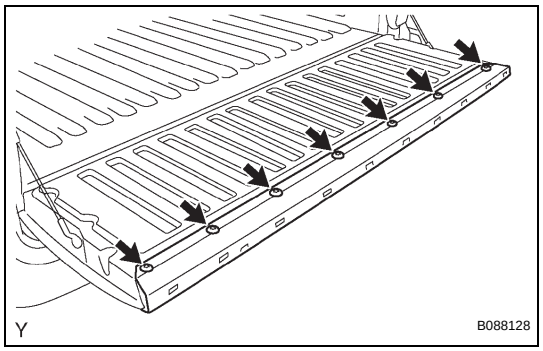

(b) Using a torx socket wrench T30 , tighten the 7 screws to the tail gate protector.

FRONT BUMPER

COMPONENTS

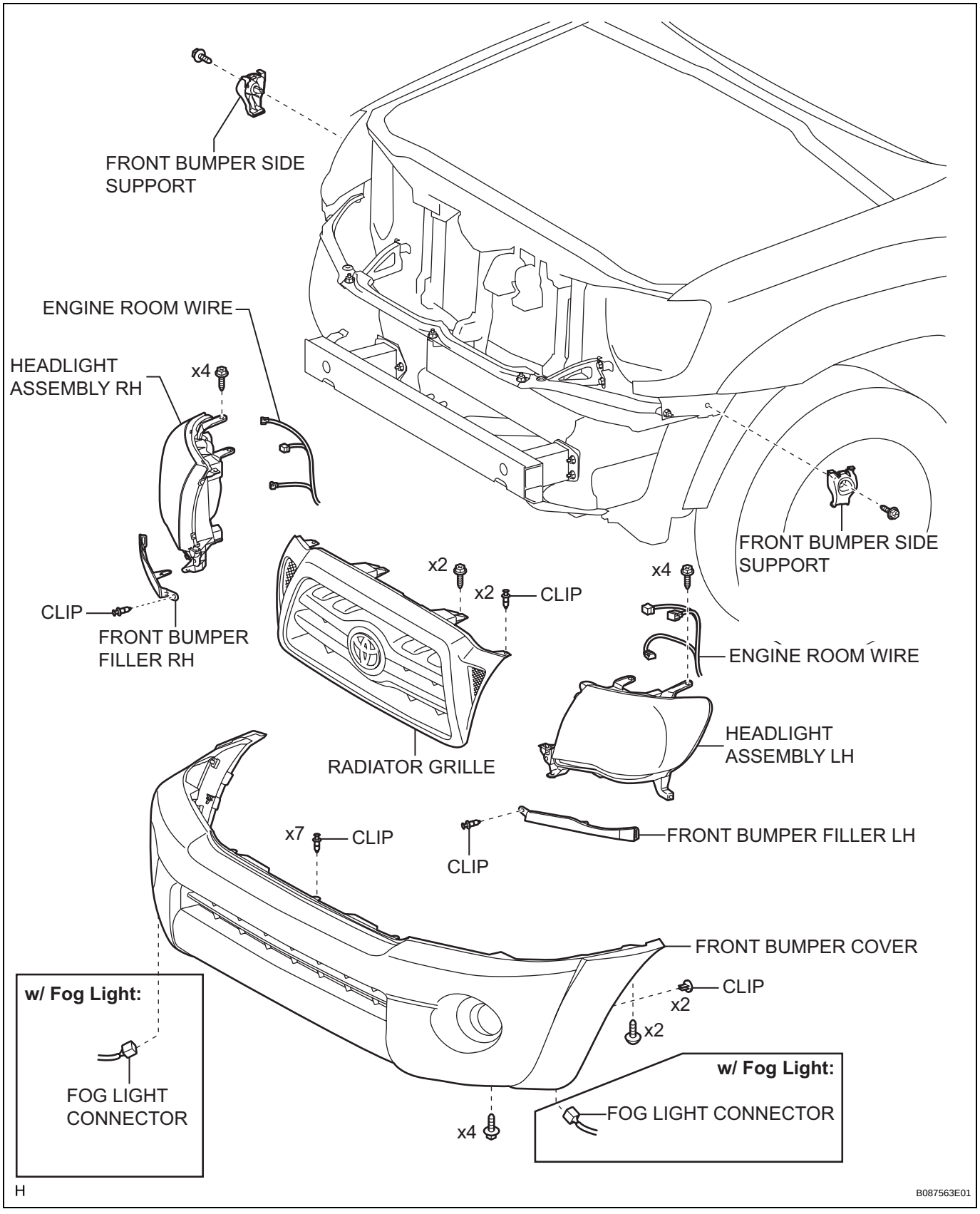

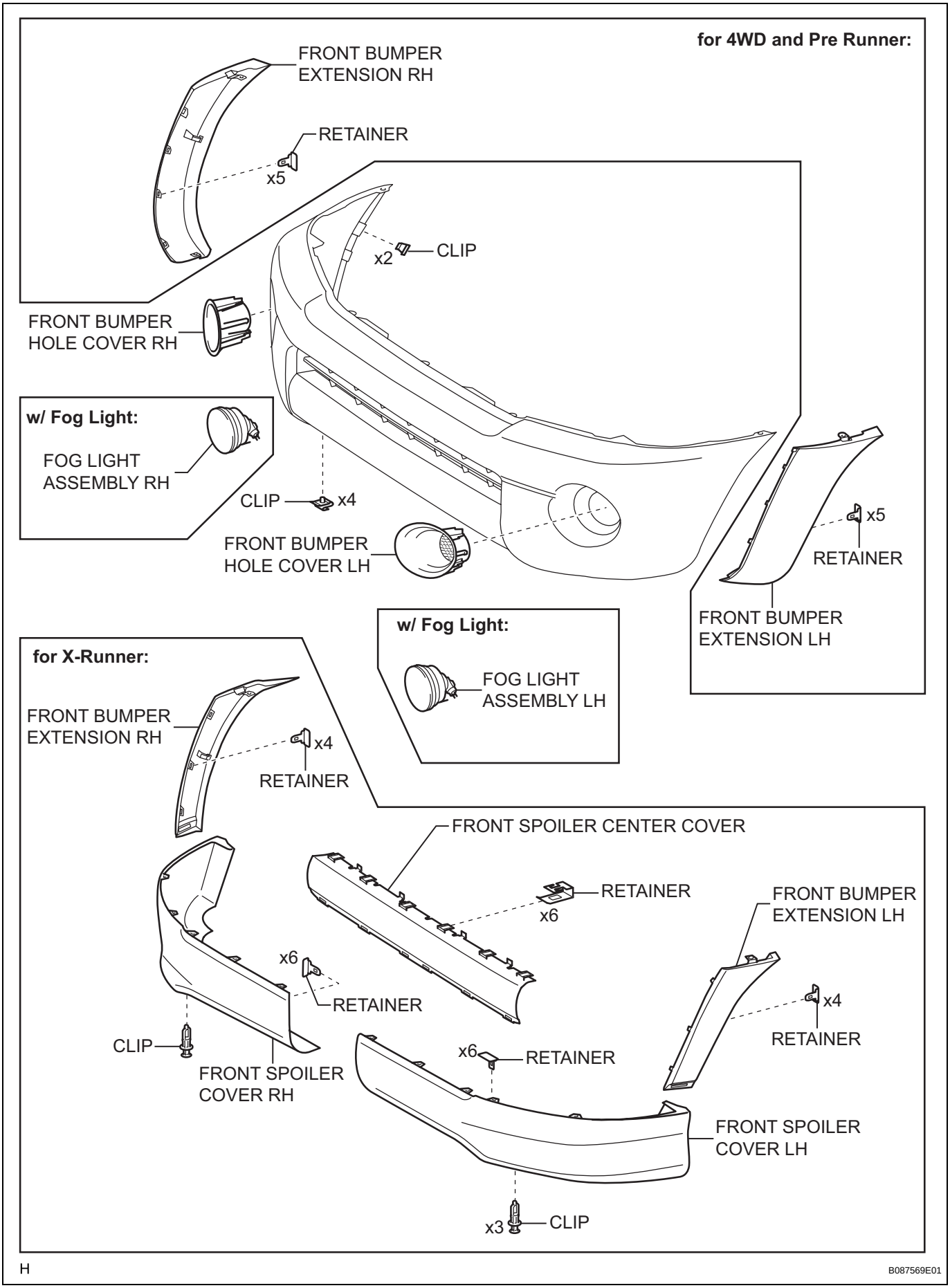

H

B087569E01

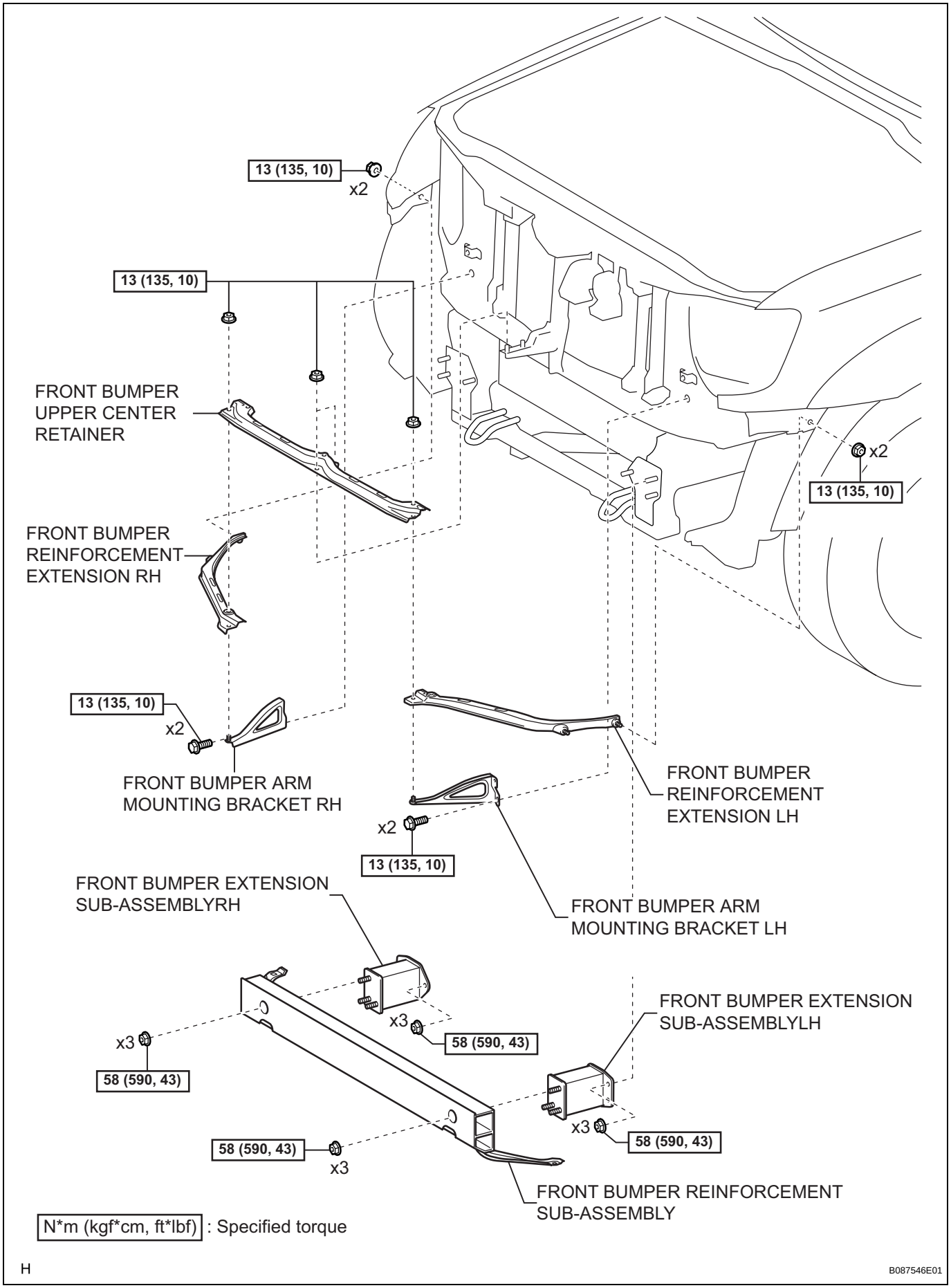
13 (135, 10)
x2
13 (135, 10)
FRONT BUMPER
UPPER CENTER
RETAINER
x2
13 (135, 10)
FRONT BUMPER
REINFORCEMENT
EXTENSION RH
13 (135, 10)
x2
FRONT BUMPER ARM
MOUNTING BRACKET RH
FRONT BUMPER
REINFORCEMENT
EXTENSION LH
x2
13 (135, 10)
FRONT BUMPER EXTENSION
SUB-ASSEMBLYRH
FRONT BUMPER ARM
MOUNTING BRACKET LH
FRONT BUMPER EXTENSION
SUB-ASSEMBLYLH
x3
58 (590, 43)
x3
58 (590, 43)
x3
58 (590, 43)
58 (590, 43)
x3
FRONT BUMPER REINFORCEMENT
SUB-ASSEMBLY
N*m (kgf*cm, ft*lbf) : Specified torque
H
B087546E01

ET

REAR BUMPER

COMPONENTS

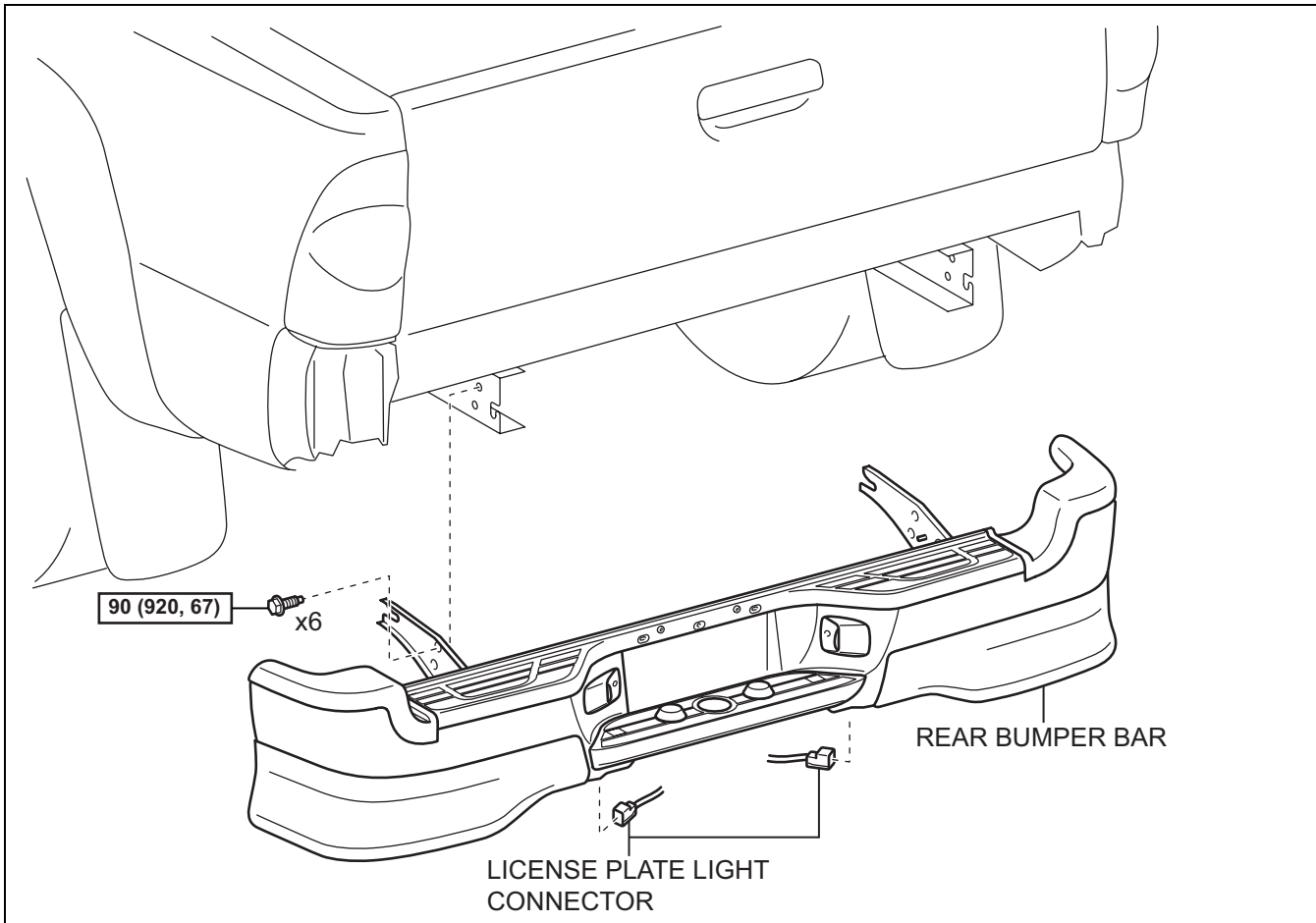

w/ Towing Hitch:

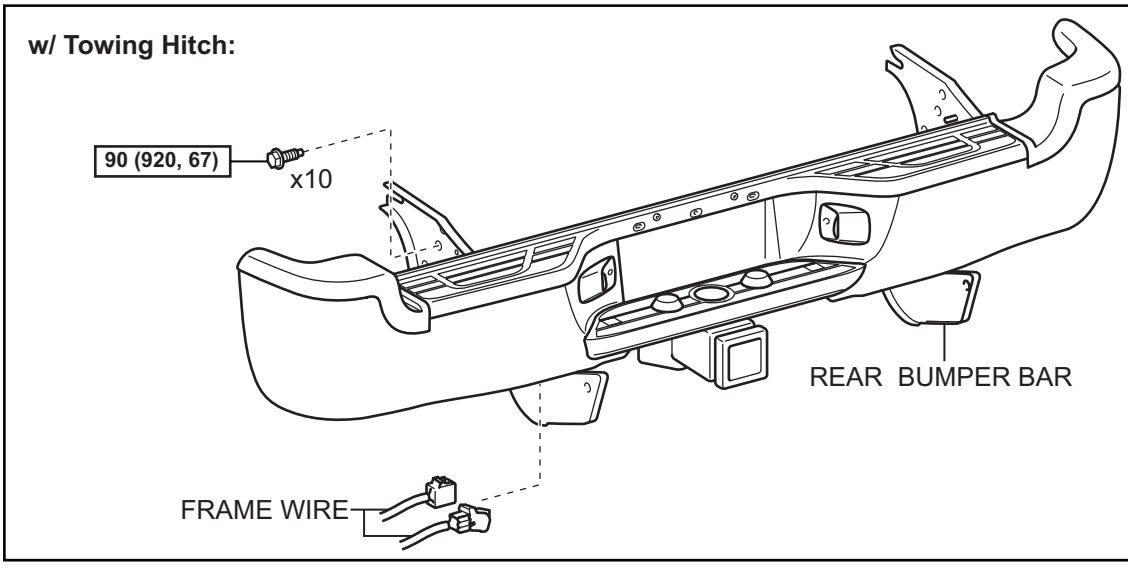

N*m (kgf*cm, ft*lbf) : Specified torque

H

B087513E02

ET

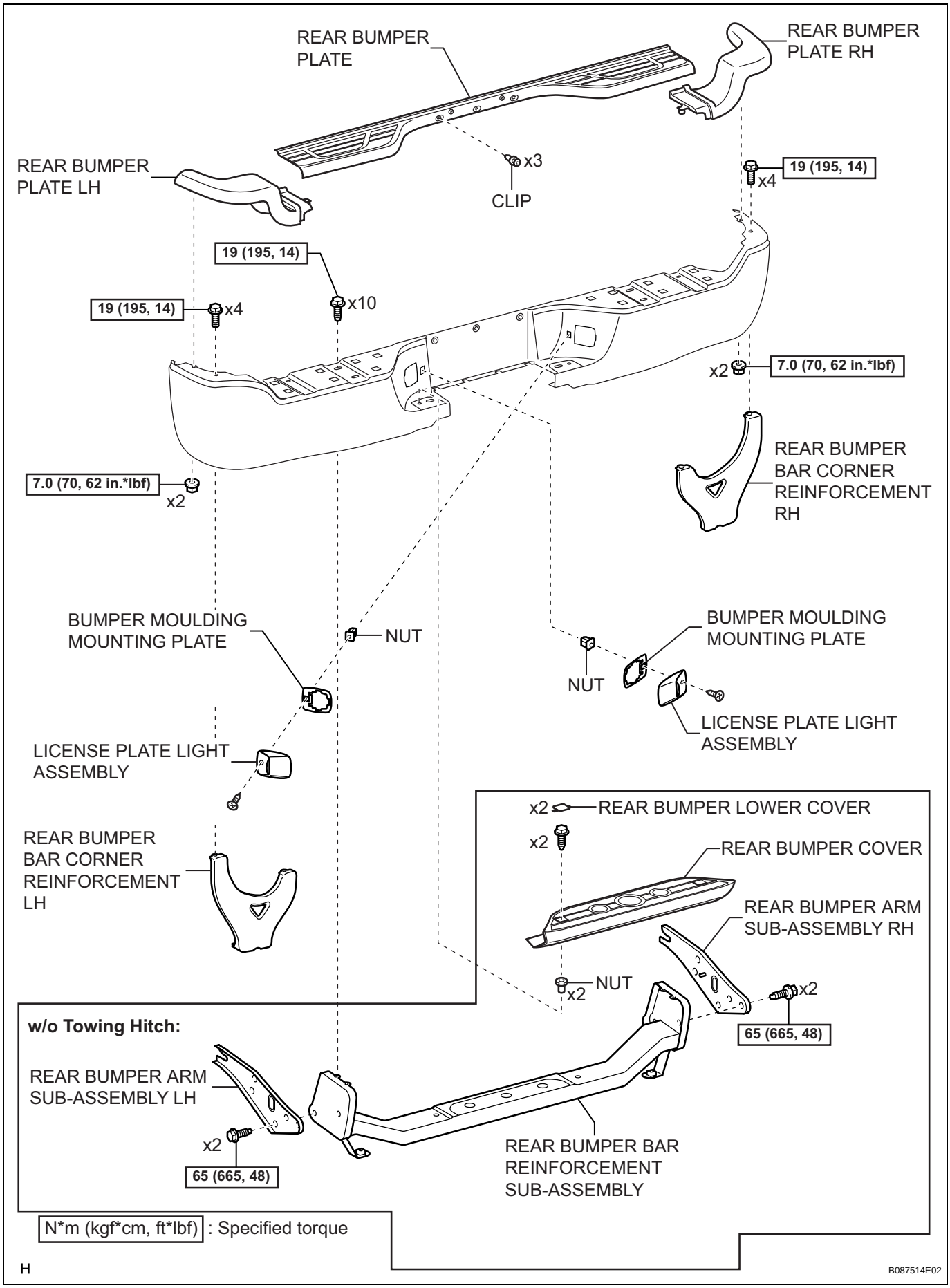
REAR BUMPER PLATE
REAR BUMPER PLATE RH
REAR BUMPER PLATE LH
x3
CLIP
19 (195, 14)
x4
19 (195, 14)
x10
19 (195, 14)
x4
x2
7.0 (70, 62 in.*lbf)
REAR BUMPER BAR CORNER REINFORCEMENT RH
7.0 (70, 62 in.*lbf)
x2
BUMPER MOULDING MOUNTING PLATE
NUT
BUMPER MOULDING MOUNTING PLATE
NUT
LICENSE PLATE LIGHT ASSEMBLY
LICENSE PLATE LIGHT ASSEMBLY
x2
REAR BUMPER LOWER COVER
x2
REAR BUMPER COVER
REAR BUMPER BAR CORNER REINFORCEMENT LH
REAR BUMPER ARM SUB-ASSEMBLY RH
NUT
x2
x2
65 (665, 48)
w/o Towing Hitch:
REAR BUMPER ARM SUB-ASSEMBLY LH
x2
65 (665, 48)
REAR BUMPER BAR REINFORCEMENT SUB-ASSEMBLY
N*m (kgf*cm, ft*lbf) : Specified torque
H
B087514E02

w/ Towing Hitch:

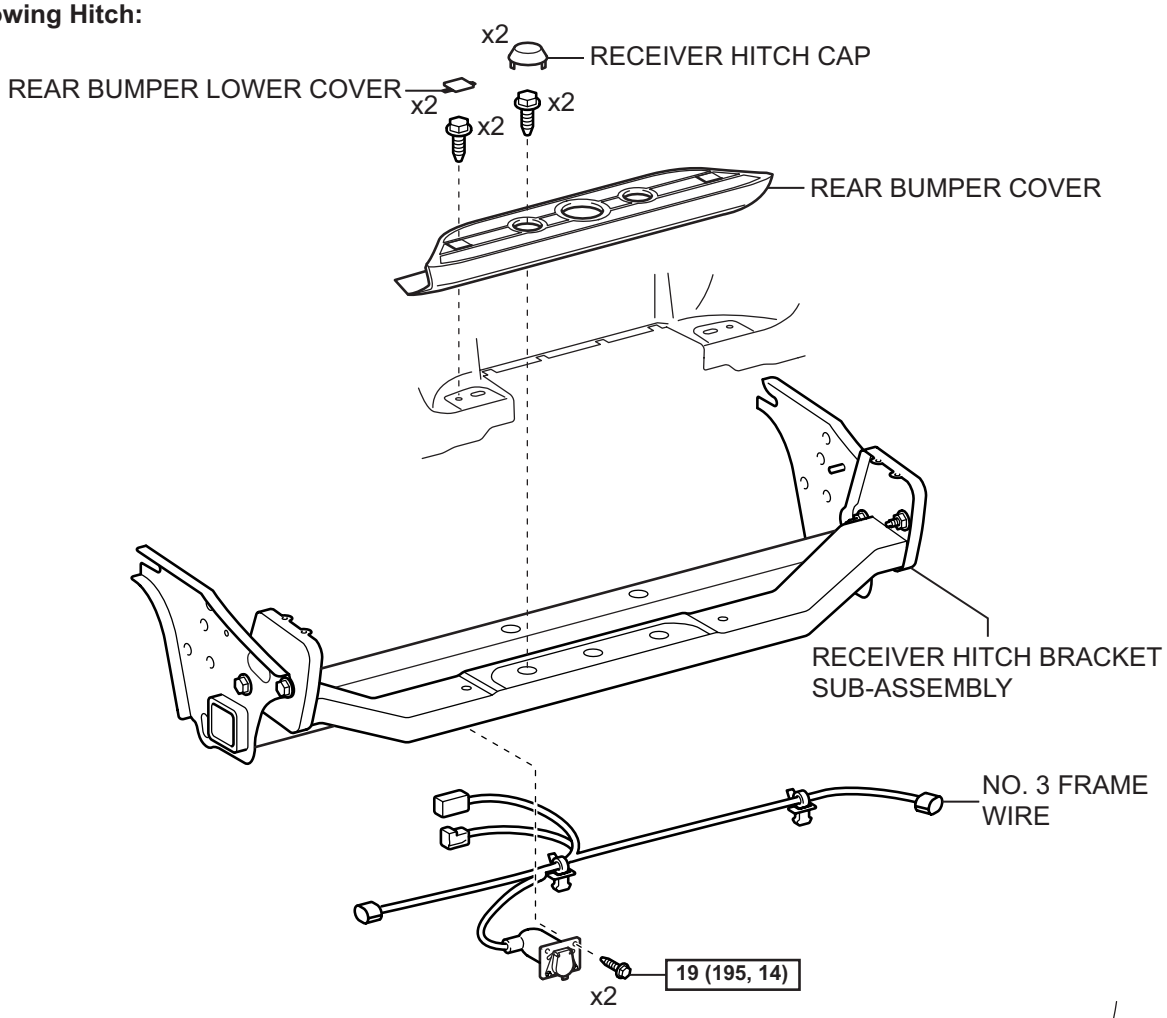

for X-Runner:

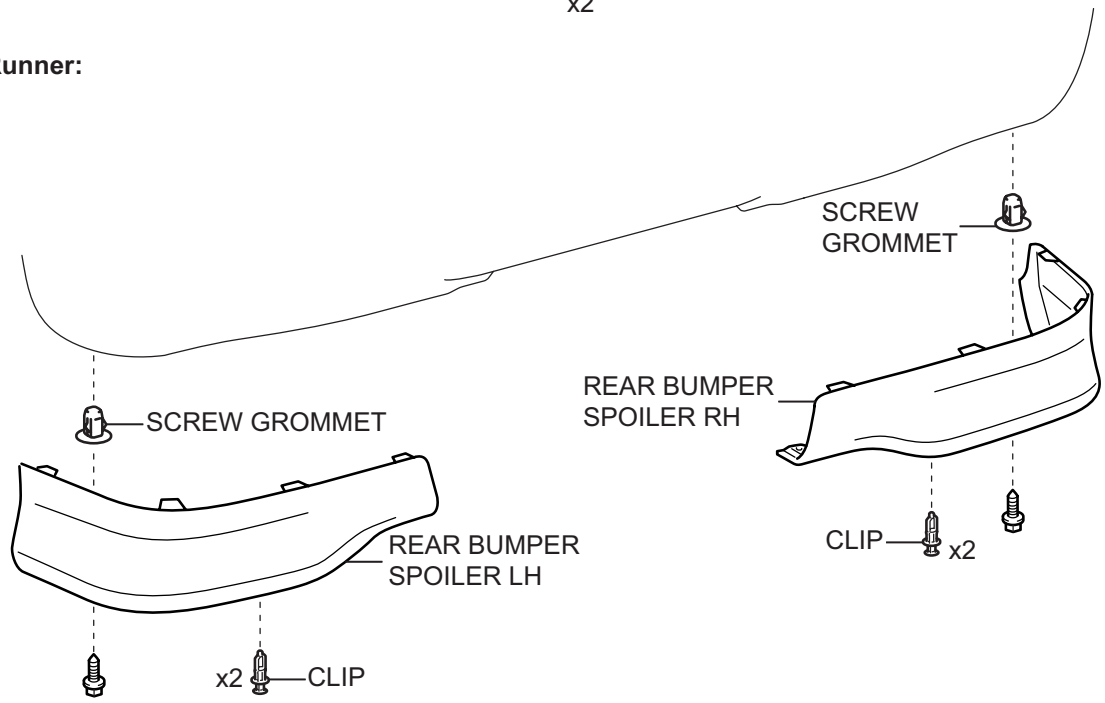

N*m (kgf*cm, ft*lbf) : Specified torque

H

B087515E02

ET

NAME PLATE

COMPONENTS

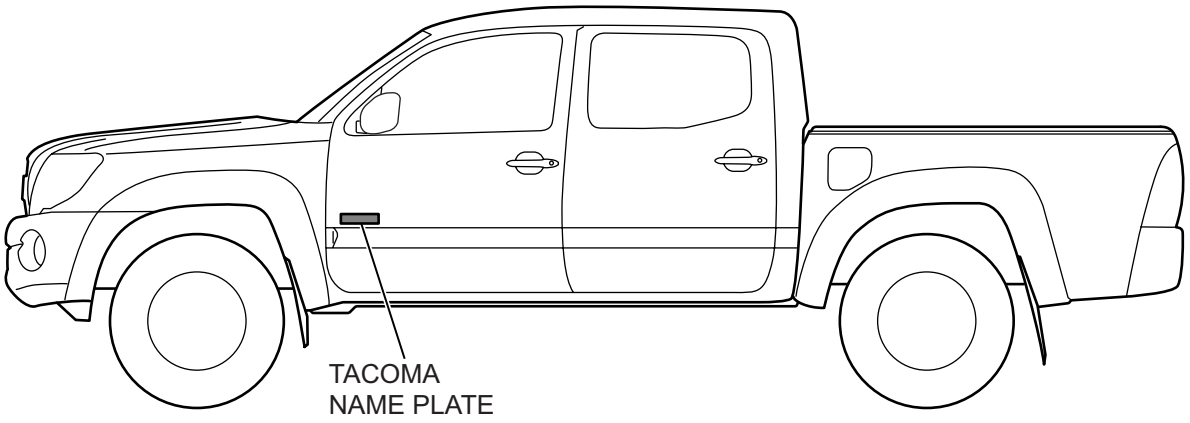

ET

for LH Side:

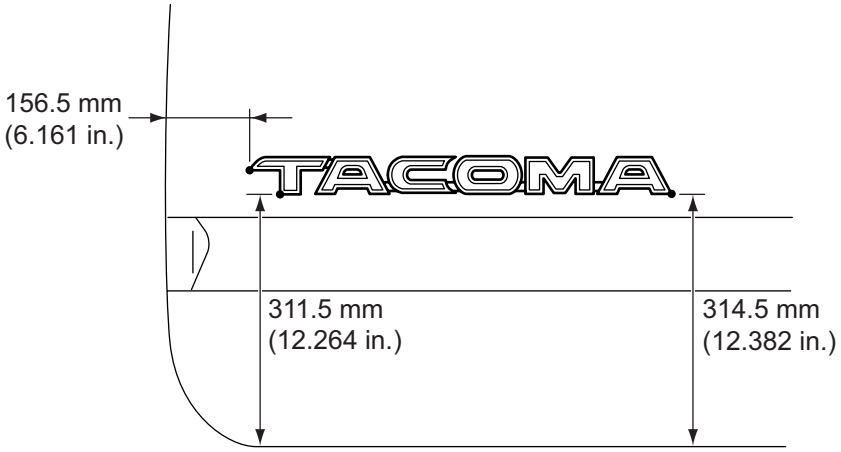

for RH Side:

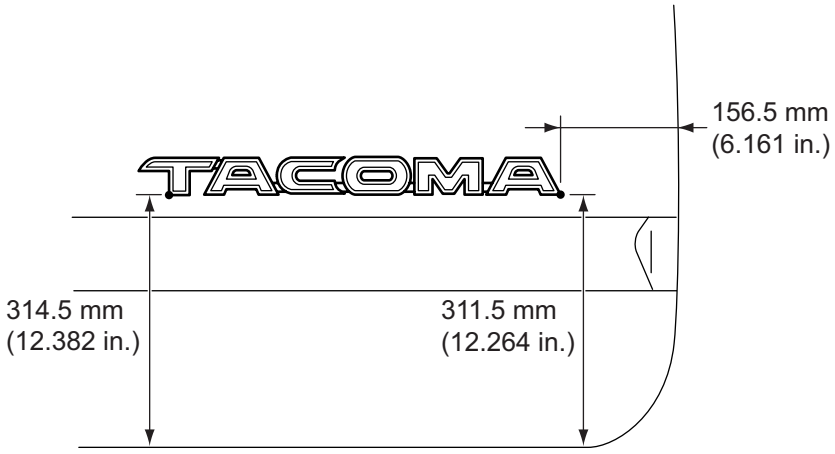

H

B087493E01

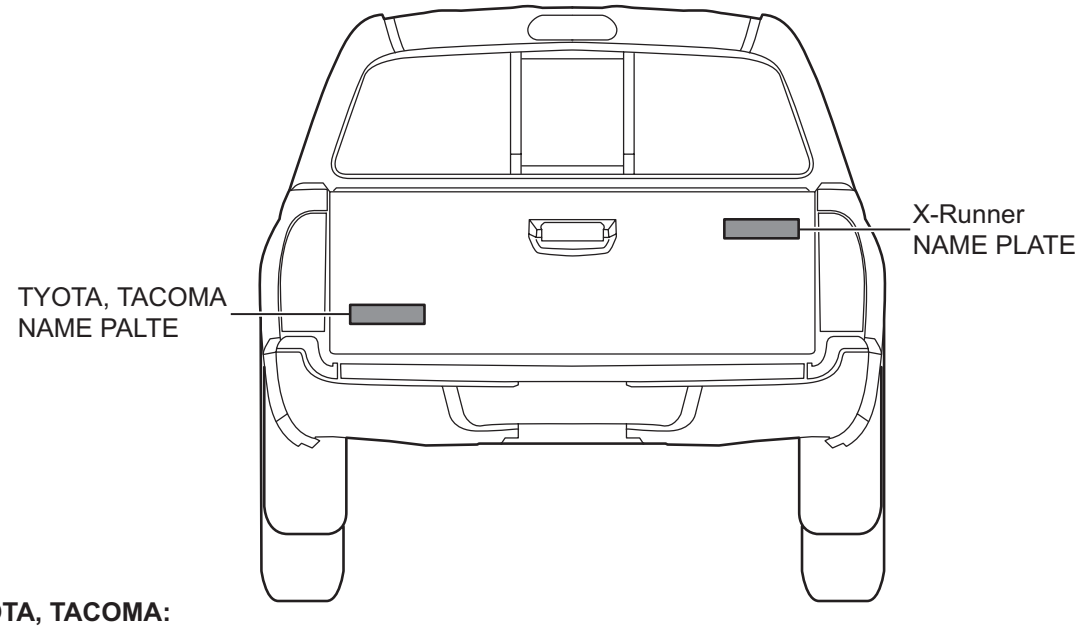

TOYOTA, TACOMA:

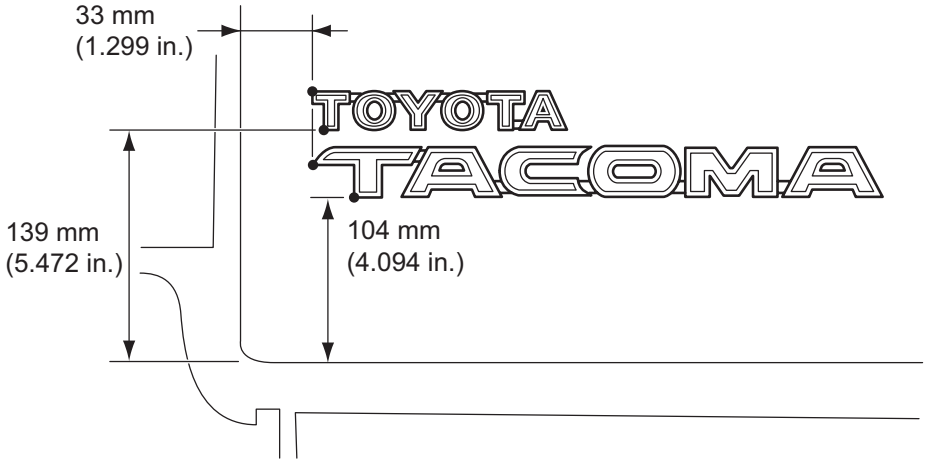

X-Runner:

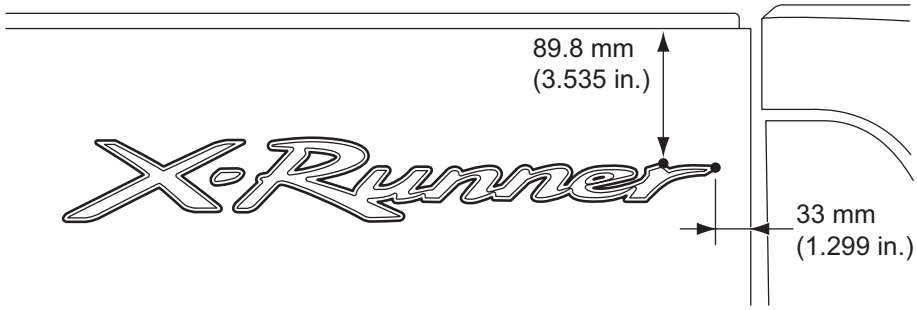

H

B087494E01

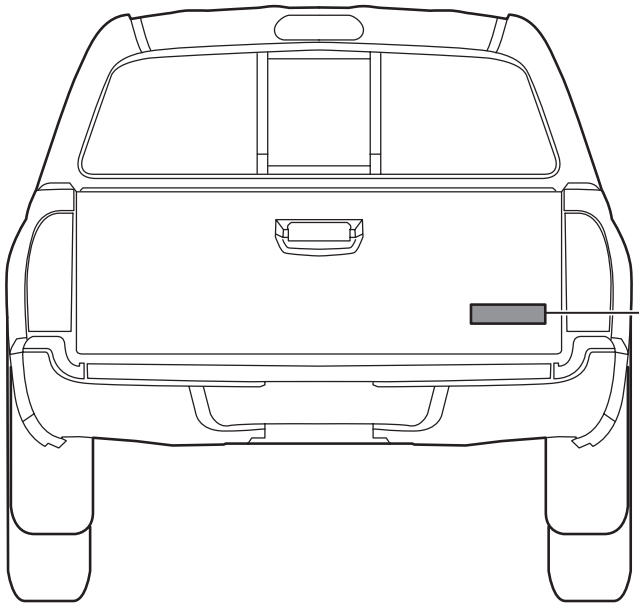

ET

SR5, Pre Runner SR5:

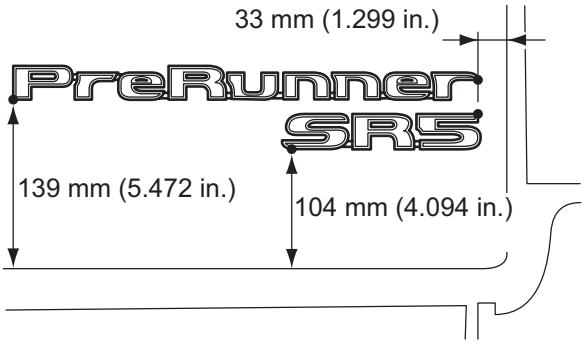

V6, Pre Runner V6:

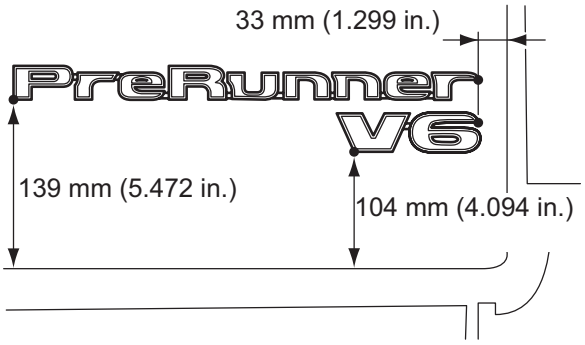

V6 SR5, Pre Runner V6 SR5:

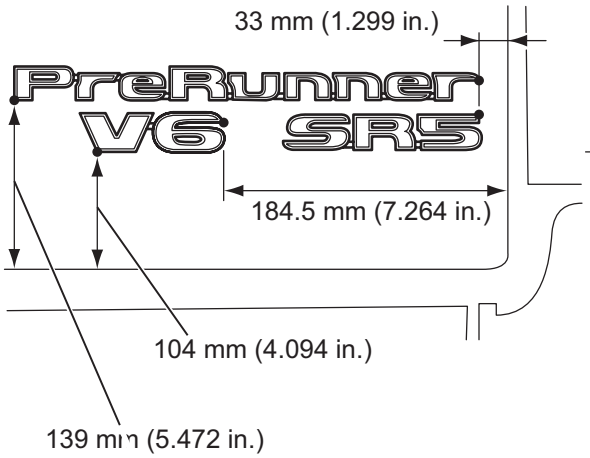

Pre Runner:

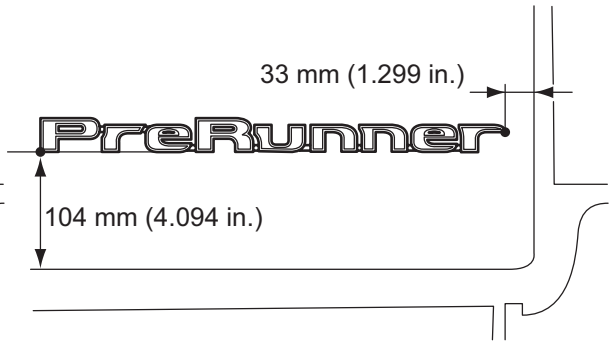

H

B087495E01

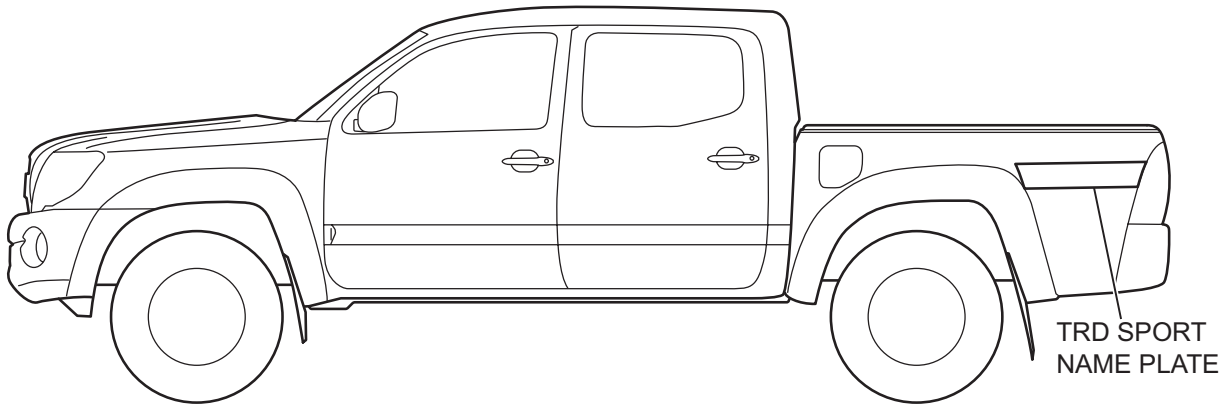

for LH Side:

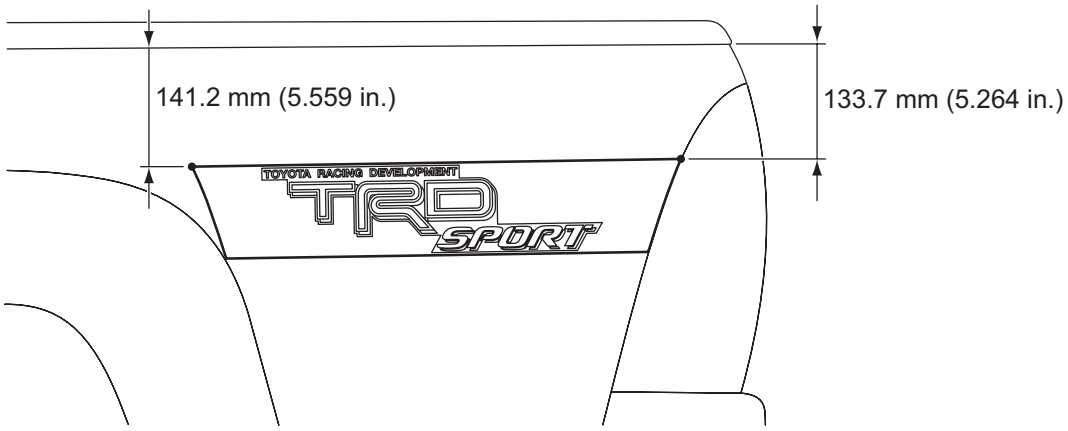

for RH Side:

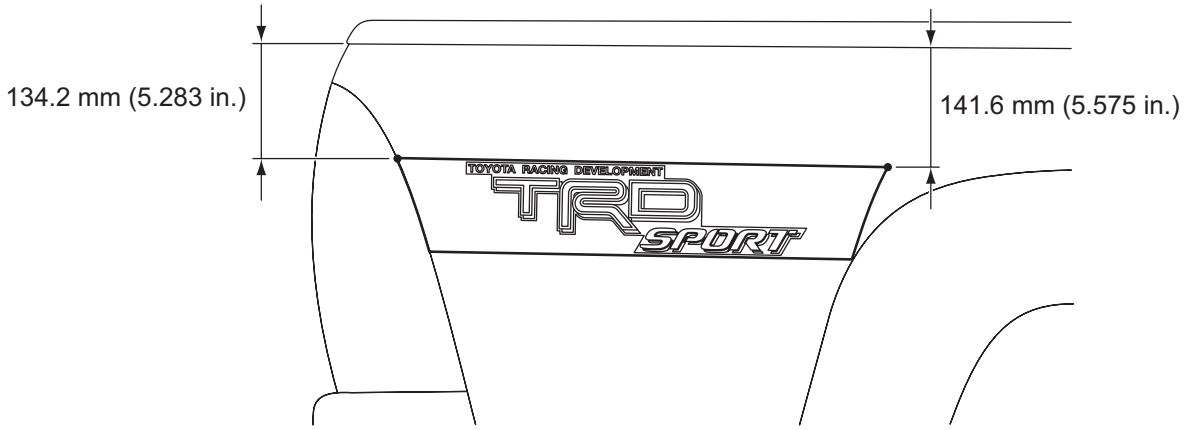

H

B088588E01

ET

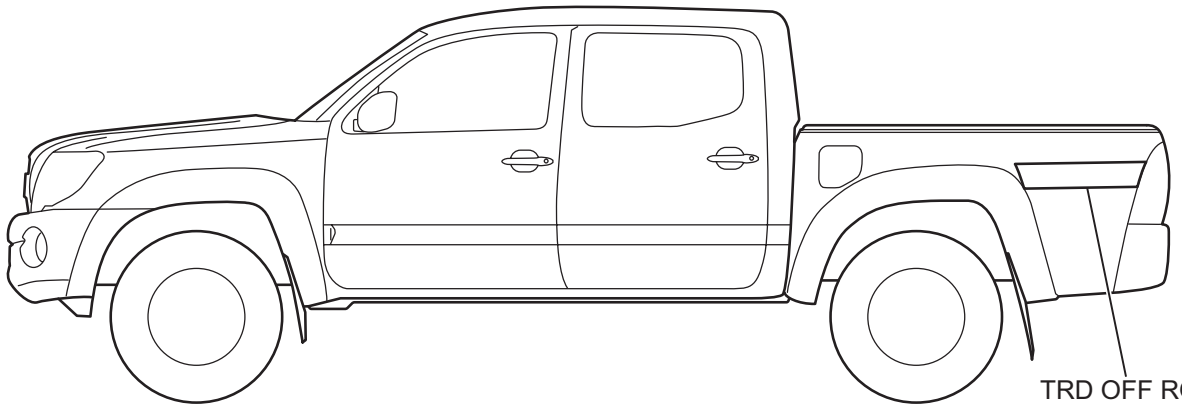

for LH Side:

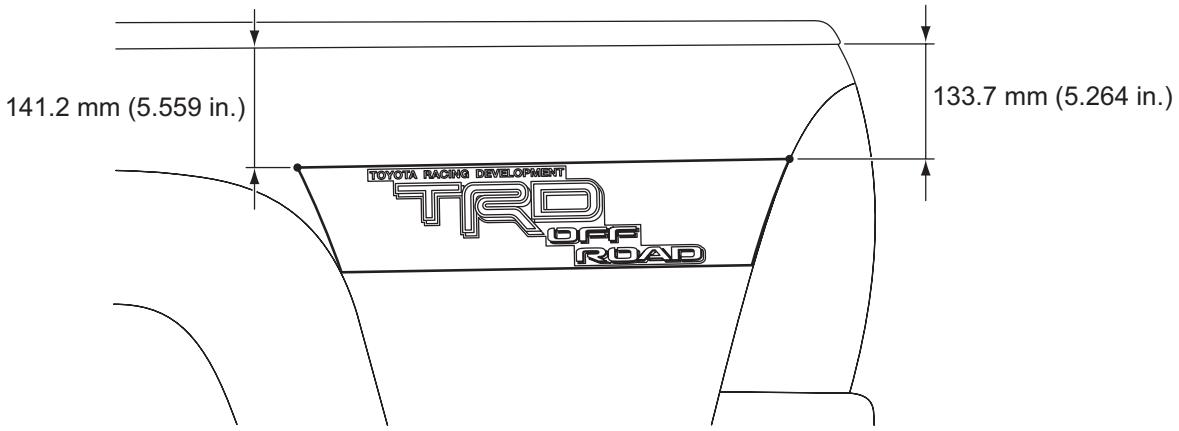

for RH Side:

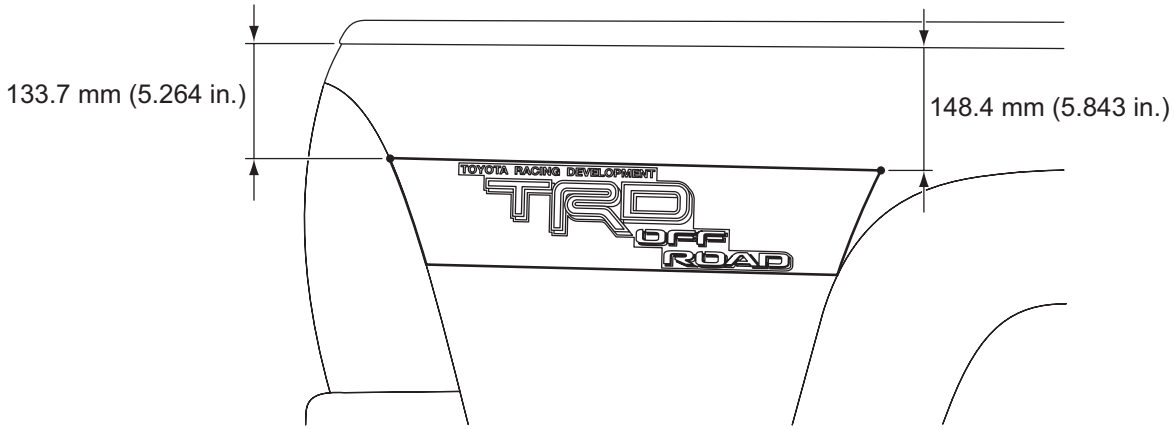

H

B088589E01

FRONT DOOR BELT MOULDING

COMPONENTS

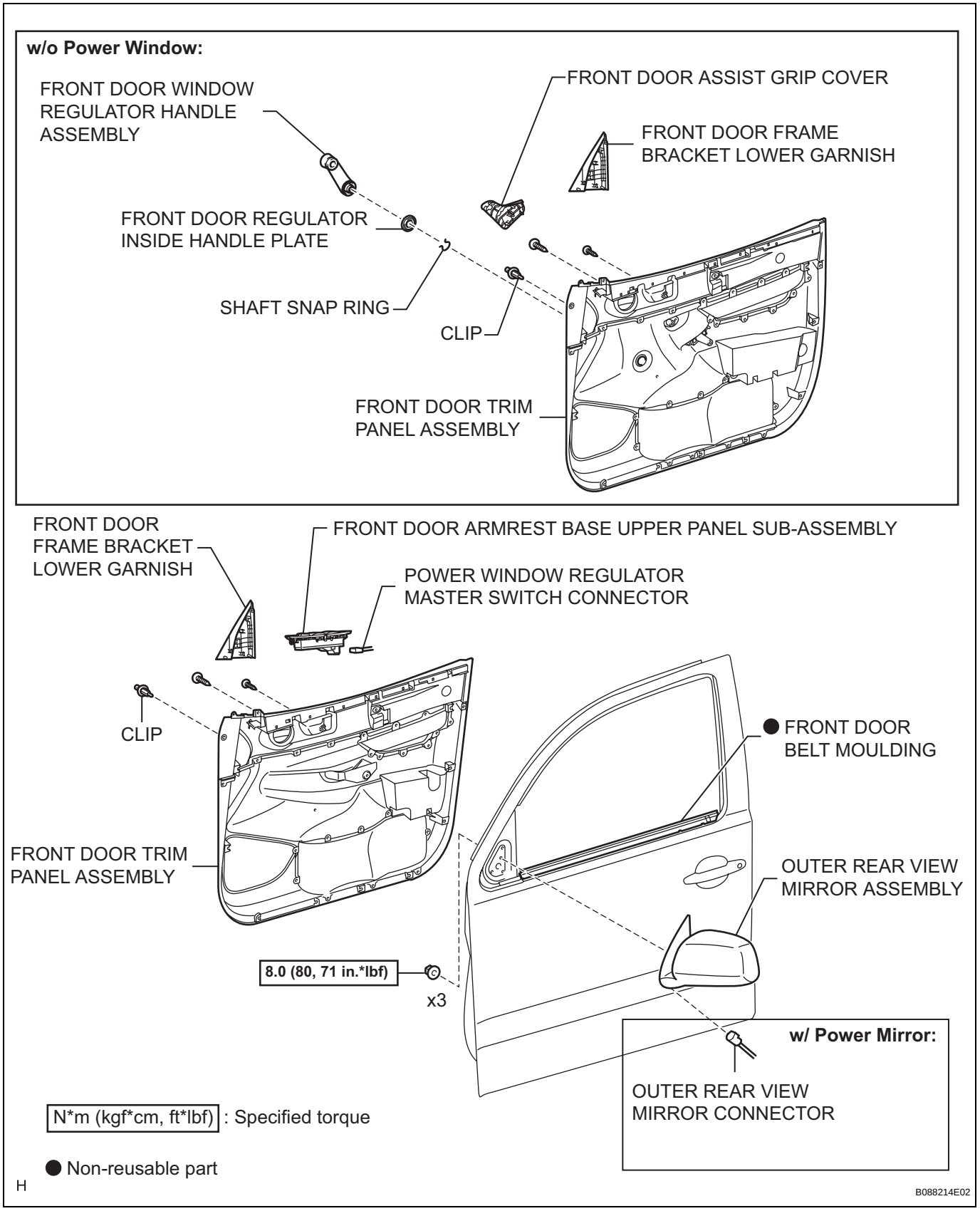

ET

REMOVAL

1. **DISCONNECT CABLE FROM NEGATIVE BATTERY TERMINAL**

2. **REMOVE FRONT DOOR FRAME BRACKET LOWER GARNISH**
   (a) w/ Power Window:
      (1) Remove the front door frame bracket lower garnish (See page ED-13).
   (b) w/o Power Window:
      (1) Remove the front door frame bracket lower garnish (See page ED-34).

3. **REMOVE FRONT DOOR ARMREST BASE UPPER PANEL SUB-ASSEMBLY (w/ Power Window)**
   (a) for Double Cab:
      (1) Remove the front door armrest base upper panel sub-assembly (See page ED-13).
   (b) for Access Cab and Regular Cab:
      (1) Remove the front door armrest base upper panel sub-assembly (See page ED-13).

4. **REMOVE FRONT DOOR WINDOW REGULATOR HANDLE ASSEMBLY (w/o Power Window) (See page ED-34)**

5. **REMOVE FRONT DOOR TRIM PANEL ASSEMBLY**
   (a) w/ Power Window:
      (1) Remove the front door trim panel assembly (See page ED-14).
   (b) w/o Power Window:
      (1) Remove the front door trim panel assembly (See page ED-35).

6. **REMOVE OUTER REAR VIEW MIRROR ASSEMBLY (See page MI-8)**

7. **REMOVE FRONT DOOR BELT MOULDING**
   (a) Apply protective tape to the outer circumference of the front door belt moulding, as shown in the illustration.
   (b) Using a moulding remover, disengage the 5 claws and remove the front door belt moulding.

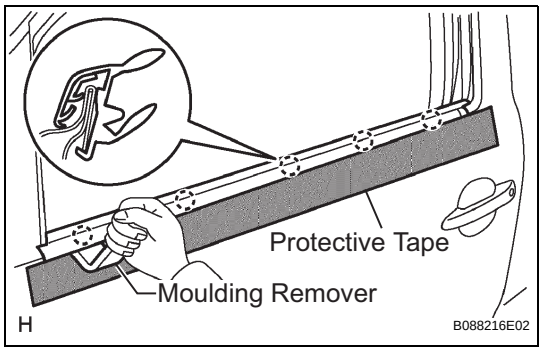

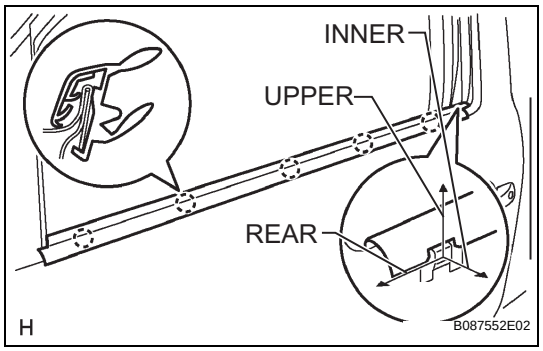

INSTALLATION

1. **INSTALL FRONT DOOR BELT MOULDING**
   (a) Engage the 5 claws and install a new front door belt moulding.

2. **INSTALL OUTER REAR VIEW MIRROR ASSEMBLY (See page MI-10)**

3. **INSTALL FRONT DOOR TRIM PANEL ASSEMBLY**
   (a) w/ Power Window:
      (1) Install the front door trim panel assembly (See page ED-29).
   (b) w/o Power Window:
      (1) Install the front door trim panel assembly (See page ED-48).

4. **INSTALL FRONT DOOR ARMREST BASE UPPER PANEL SUB-ASSEMBLY (w/ Power Window)**
   (a) for Double Cab:
      (1) Install the front door armrest base upper panel sub-assembly (See page ED-30).
   (b) for Access Cab and Regular Cab:
      (1) Install the front door armrest base upper panel sub-assembly (See page ED-30).

5. **INSTALL FRONT DOOR WINDOW REGULATOR HANDLE ASSEMBLY (w/o Power Window) (See page ED-49)**

6. **INSTALL FRONT DOOR FRAME BRACKET LOWER GARNISH**
   (a) w/ Power Window:
      (1) Install the front door frame bracket lower garnish (See page ED-30).
   (b) w/o Power Window:
      (1) Install the front door frame bracket lower garnish (See page ED-49).

7. **CONNECT CABLE TO NEGATIVE BATTERY TERMINAL**
   Torque: 3.9 N*m (40 kgf*cm, 35 in.*lbf)

REAR DOOR BELT MOULDING

COMPONENTS

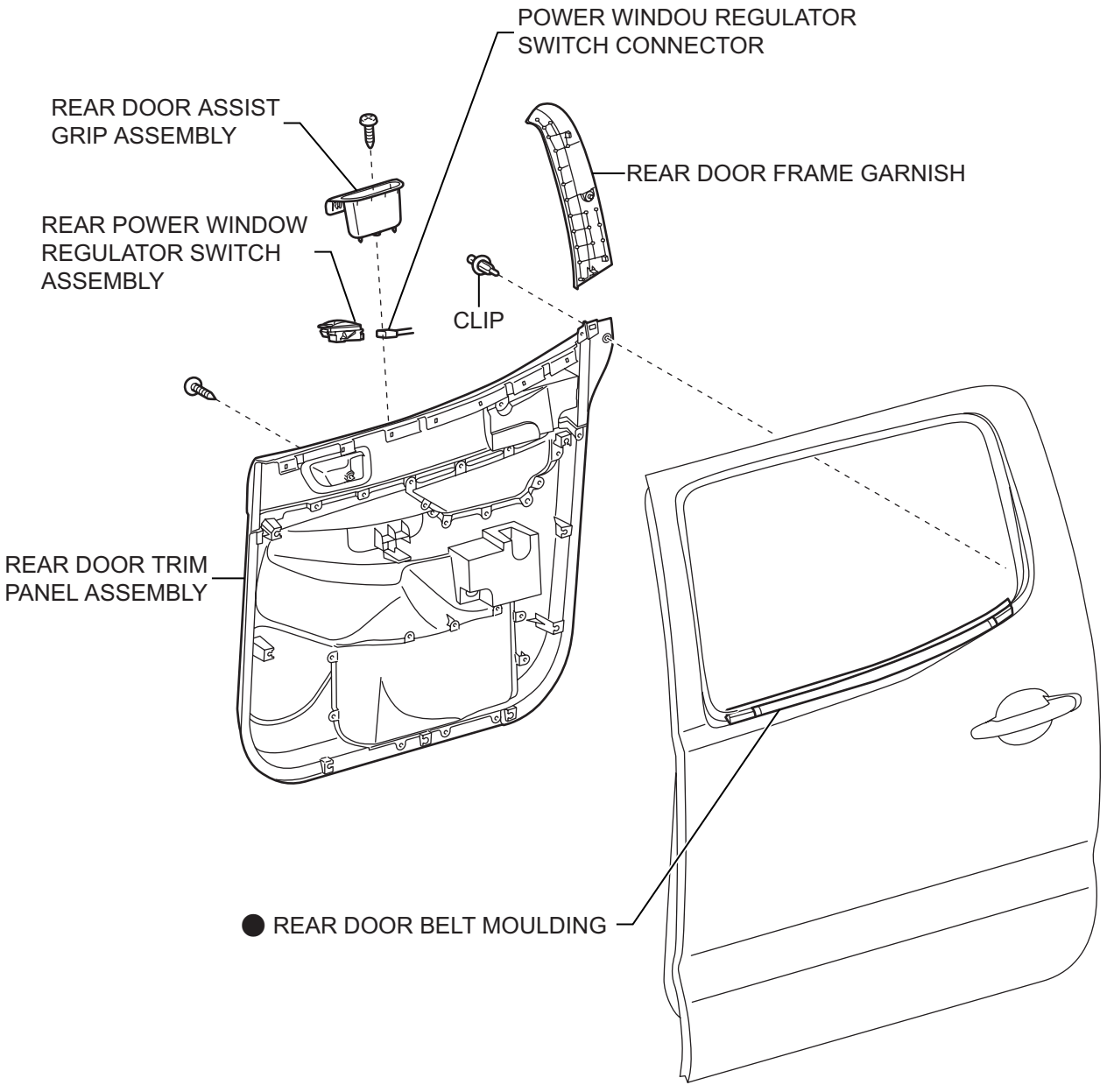

● Non-reusable part

H

B088215E02

REMOVAL

1. **DISCONNECT CABLE FROM NEGATIVE BATTERY TERMINAL**
2. **REMOVE REAR DOOR FRAME GARNISH (See page ED-68)**
3. **REMOVE REAR POWER WINDOW REGULATOR SWITCH ASSEMBLY (See page ED-68)**
4. **REMOVE REAR DOOR TRIM PANEL ASSEMBLY (See page ED-68)**
5. **REMOVE REAR DOOR BELT MOULDING**
   (a) Apply protective tape to the outer circumference of the rear door belt moulding.
   (b) Using a moulding remover, disengage the 6 claws and remove the rear door belt moulding.

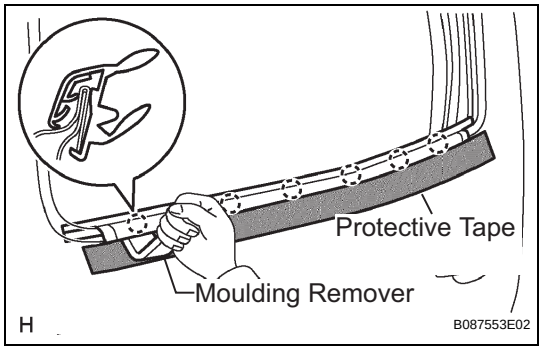

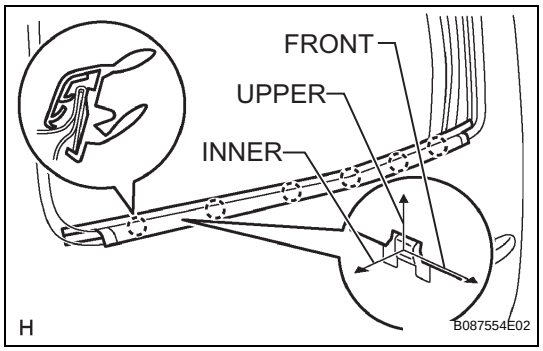

INSTALLATION

1. **INSTALL REAR DOOR BELT MOULDING**
   (a) Engage the 6 claws and install a new front door belt molding.
2. **INSTALL REAR DOOR TRIM PANEL ASSEMBLY (See page ED-81)**
3. **INSTALL REAR POWER WINDOW REGULATOR SWITCH ASSEMBLY (See page ED-81)**
4. **INSTALL REAR DOOR FRAME GARNISH (See page ED-81)**
5. **CONNECT CABLE TO NEGATIVE BATTERY TERMINAL**
   Torque: 3.9 N*m (40 kgf*cm, 35 in.*lbf)

ET

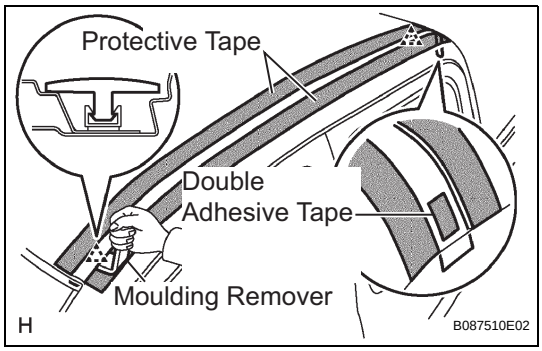

ROOF DRIP SIDE FINISH MOULDING

REMOVAL

1. REMOVE ROOF DRIP SIDE FINISH MOULDING

(a) Apply protective tape to the outer circumference of the roof drip side finish moulding, as shown in the illustration.

(b) Using a heat light, heat the roof drip side finish moulding.

Heating temperature:
40 to 60°C (104 to 140°F)

NOTICE:
Do not heat the roof drip side finish moulding and vehicle body excessively.

(c) Using a moulding remover, disengage the 2 clips and remove the roof drip side finish moulding.

NOTICE:
- **Do not remove the clips from the vehicle body.**
- **If the clips are damaged or removed accidentally, replace them.**

ET

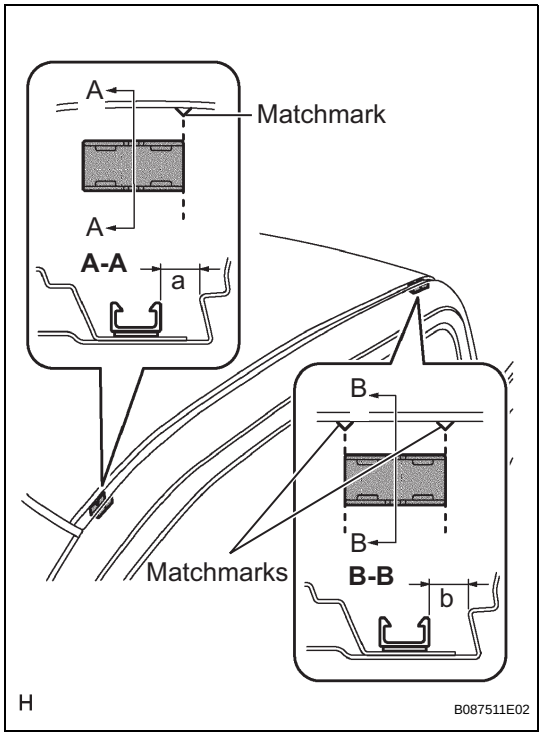

INSTALLATION

1. INSTALL ROOF DRIP SIDE FINISH MOULDING

HINT:
Use the following steps (a) to (c) only when replacing the clips.

(a) Remove the tape that remains on the mounting surface of the vehicle body, and clean the surface with white gasoline.

(b) Using a heat light, heat the clip installation surfaces of the vehicle body and roof drip side finish moulding.

(c) Install new clips in the positions shown in the illustration. Press the clips by hand.

Specification

Area	Measurement
a	7.0 mm (0.276 in.)
b	8.2 mm (0.323 in.)

NOTICE:
After pressing the clips, wait 30 minutes or more before installing the roof drip side finish moulding.

HINT:
- Minimum hardening time: 30 minutes
- Time needed for complete hardening: 24 hours

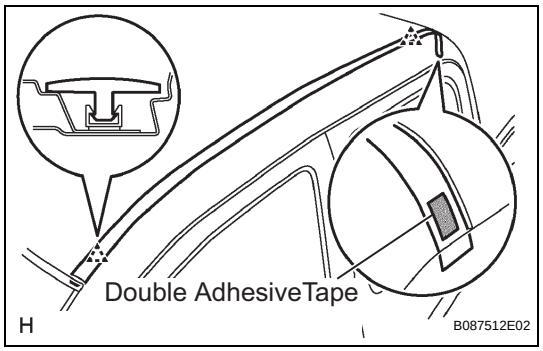

(d) Engage the 2 clips and install the roof drip side finish moulding.

ROCKER PANEL MOULDING

REMOVAL

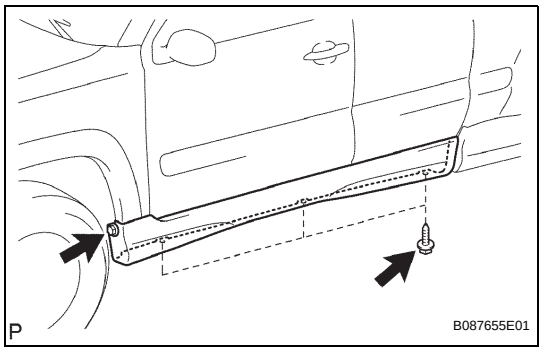

1. REMOVE ROCKER PANEL MOULDING

(a) Remove the 4 screws.

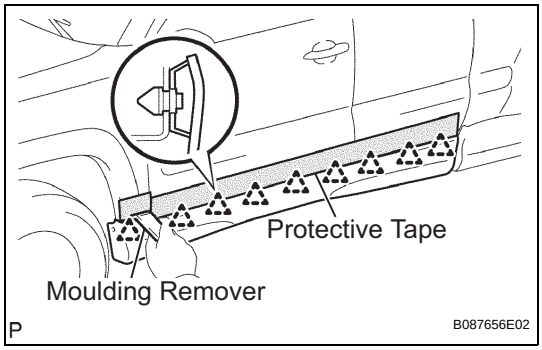

(b) Apply protective tape to the outer circumference of the rocker panel moulding, as shown in the illustration.

(c) Using a moulding remover, disengage the 9 clips and remove the rocker panel moulding.

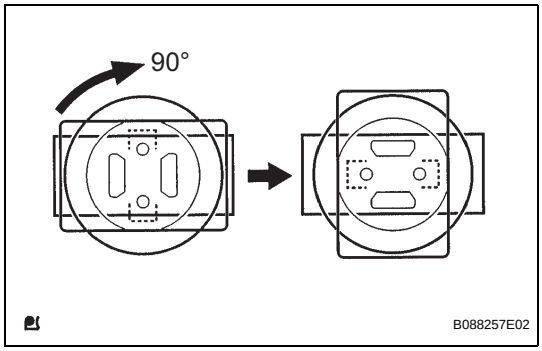

(d) Turn the clips 90° clockwise and remove them.

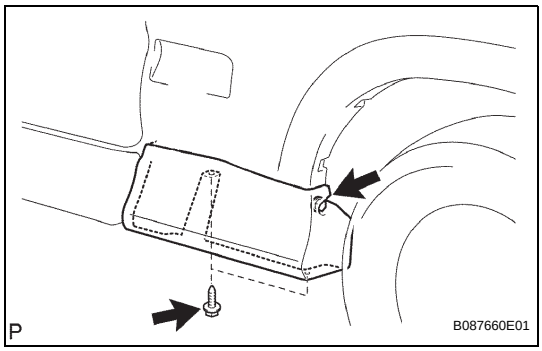

2. REMOVE BODY ROCKER PANEL MOULDING ASSEMBLY

(a) Remove the 3 screws.

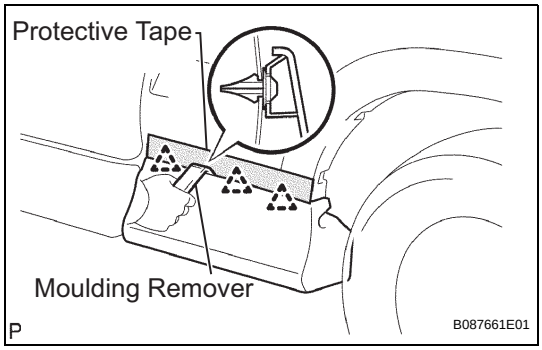

(b) Apply protective tape to the outer circumference of the body rocker panel moulding, as shown in the illustration.

(c) Using a moulding remover, disengage the 3 clips and remove the body rocker panel moulding.

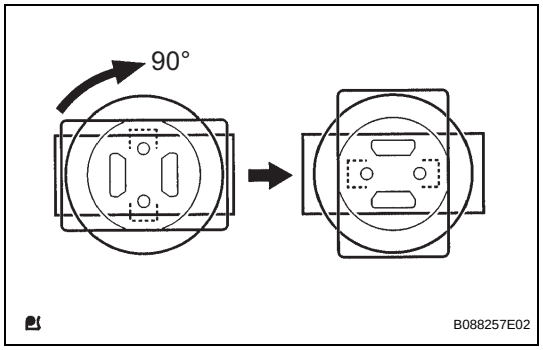

(d) Turn the 90° clockwise and remove them.

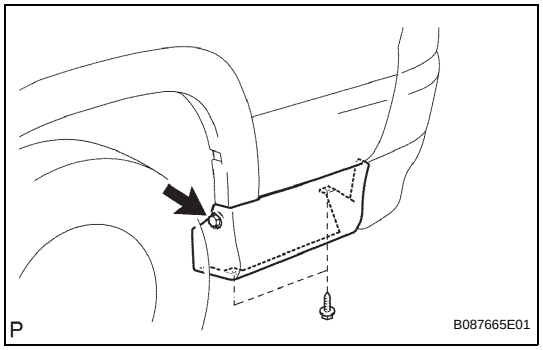

3. REMOVE BACK DOOR OUTSIDE MOULDING SUB-ASSEMBLY

(a) Remove the 3 screws.

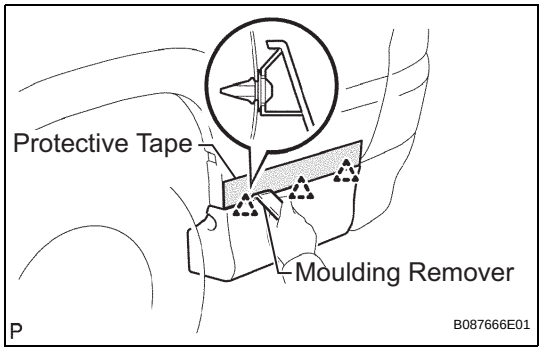

(b) Apply protective tape to the outer circumference of the back door outside moulding, as shown in the illustration.

(c) Using a moulding remover, disengage the 3 clips and remove the back door outside moulding.

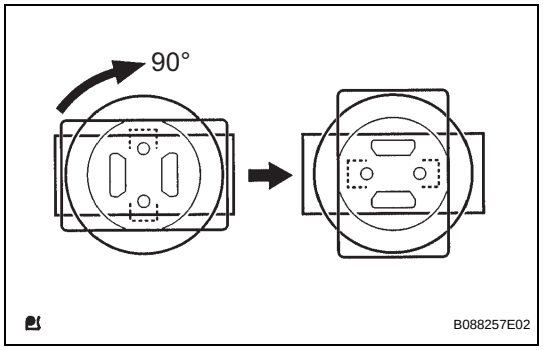

(d) Turn the clips 90° clockwise and remove them.

INSTALLATION

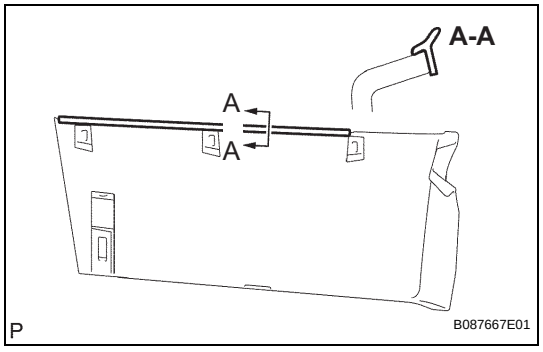

1. INSTALL BACK DOOR OUTSIDE MOULDING SUB-ASSEMBLY

(a) Install new No. 3 body outside moulding pad in the position shown in the illustration.

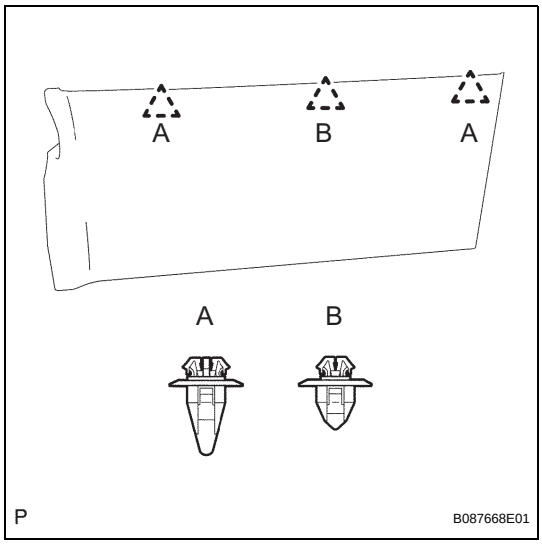

(b) Install each clip in the position shown in the illustration.
NOTICE:
If you install the clips wrongly, the installation of the back door outside moulding would be improper.

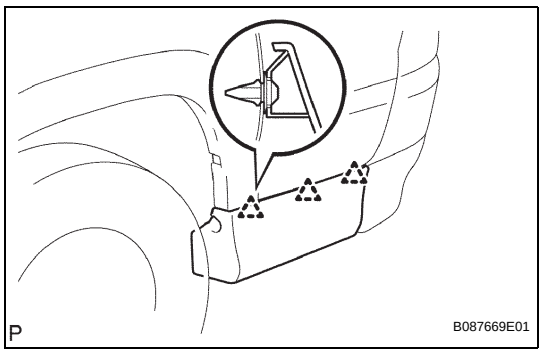

(c) Engage the 3 clips and install the back door outside moulding.

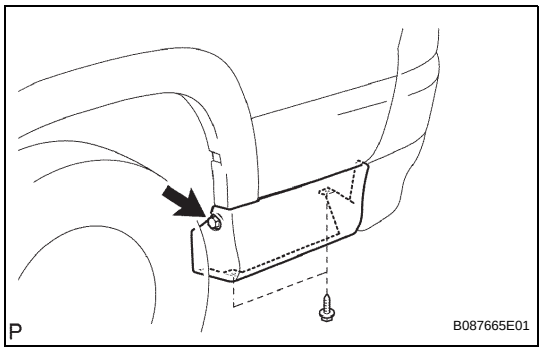

(d) Tighten the 3 screws.

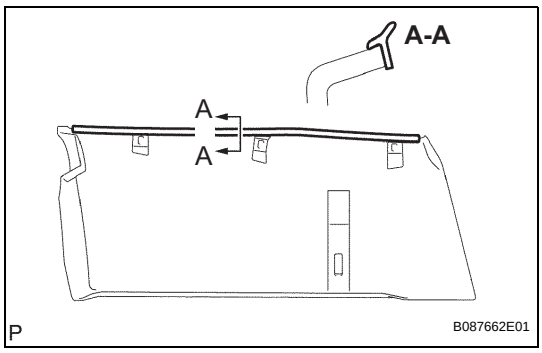

2. INSTALL BODY ROCKER PANEL MOULDING ASSEMBLY

(a) Install new No. 2 body outside moulding pad in the position shown in the illustration.

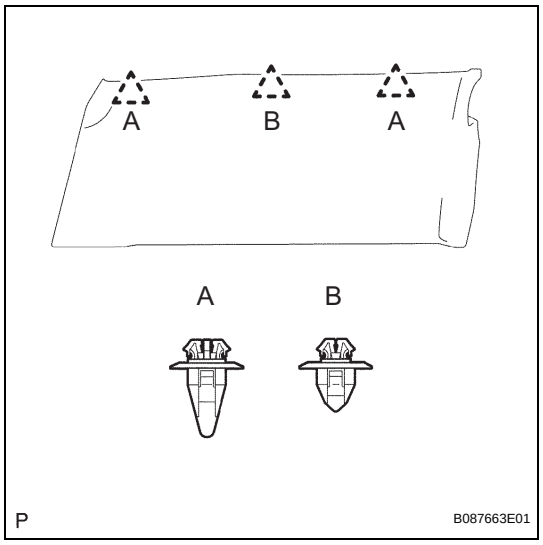

(b) Install each clip in the position shown in the illustration.
NOTICE:
If you install the clips wrongly, the installation of the body rocker panel moulding would be improper.

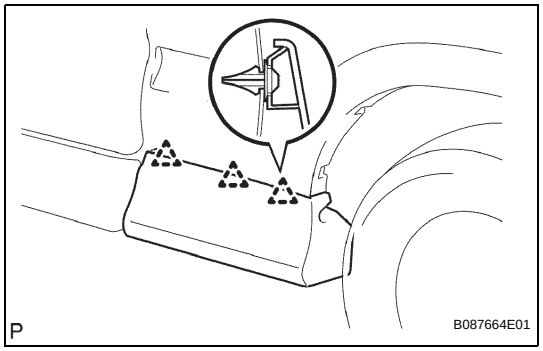

(c) Engage the 3 claws and install the body rocker panel moulding.

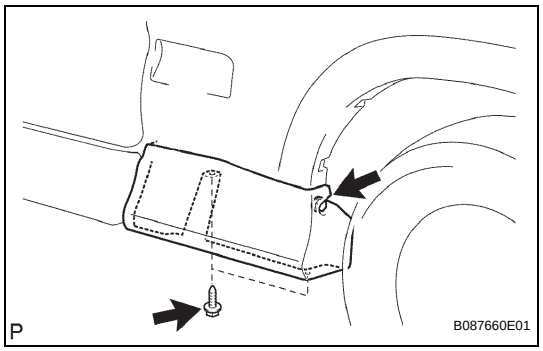

(d) Tighten the 3 screws.

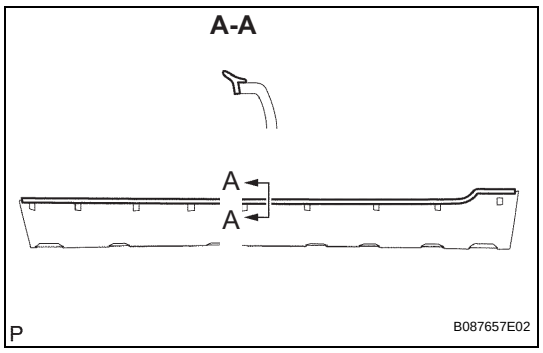

3. INSTALL ROCKER PANEL MOULDING

(a) Install new No. 1 body outside moulding pad in the position shown in the illustration.

ET

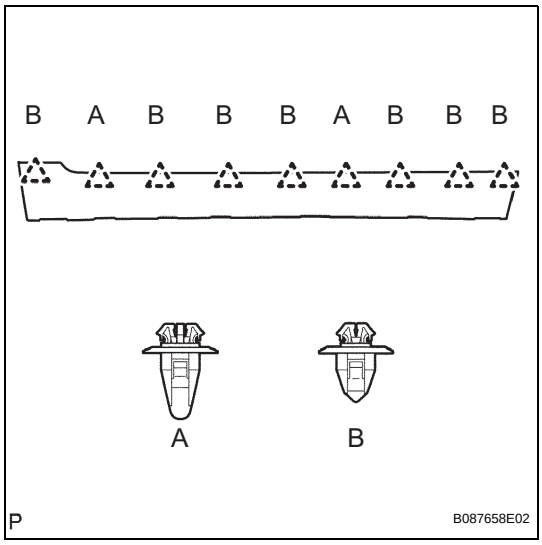

(b) Install each clip in the position shown in the illustration.
NOTICE:
If you install the clips wrongly, the installation of the rocker panel moulding would be improper.

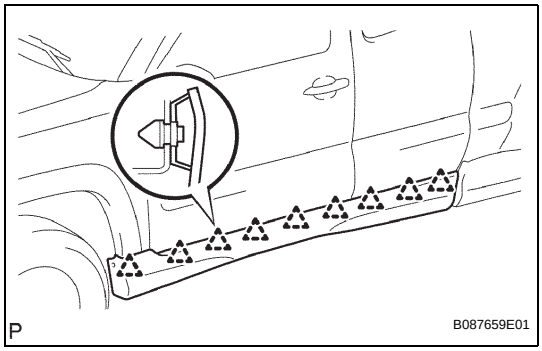

(c) Engage the 9 clips and install the rocker panel moulding.

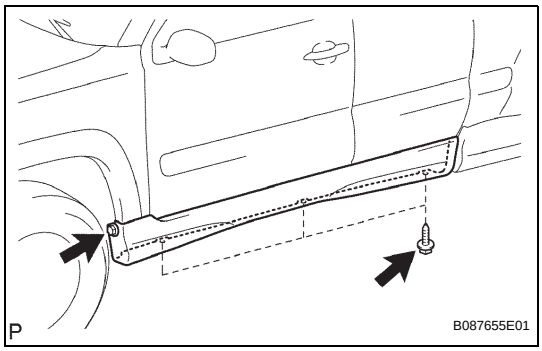

(d) Tighten the 4 screws.

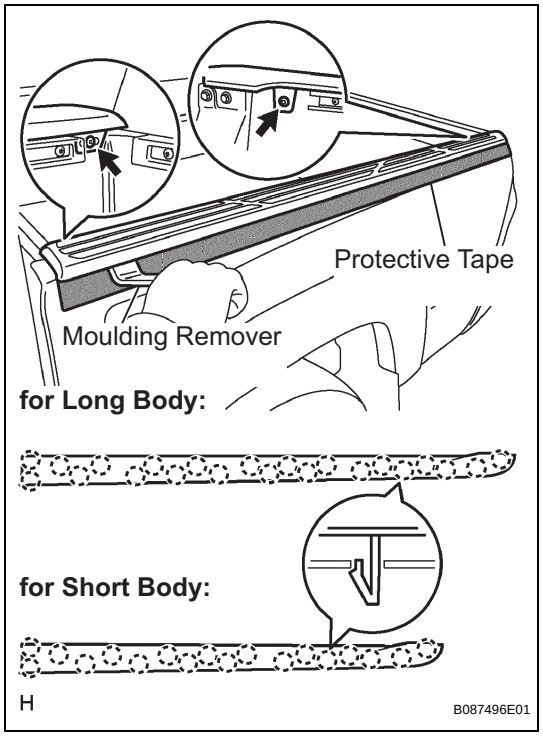

REAR BODY SIDE PANEL PROTECTOR

REMOVAL

1. REMOVE REAR BODY SIDE PANEL PROTECTOR

(a) Apply protective tape to the outer circumference of the rear body side panel protector.
(b) Remove the 2 clips.
(c) for Long Body:
  (1) Using a moulding remover, disengage the 22 claws and remove the rear body side panel protector.
(d) for Short Body:
  (1) Using a moulding remover, disengage the 18 claws and remove the rear body side panel protector.

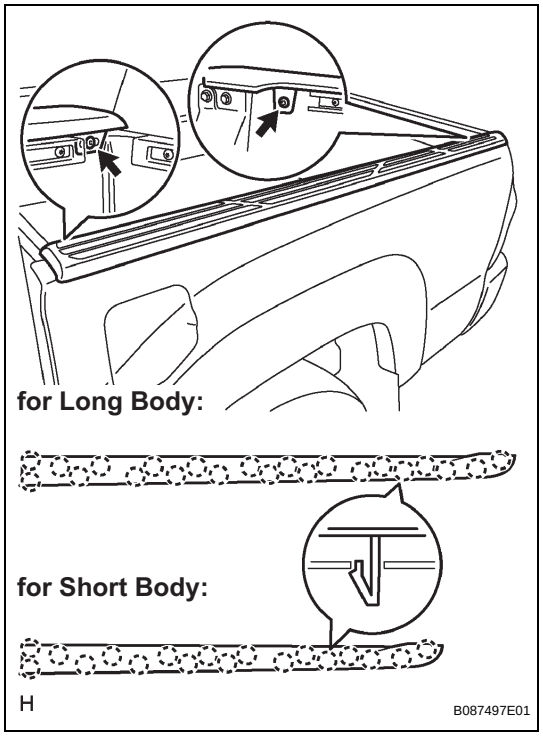

INSTALLATION

1. INSTALL REAR BODY SIDE PANEL PROTECTOR

(a) for Long Body:
  (1) Engage the 22 claws and install the rear body side panel protector.
(b) for Short Body:
  (1) Engage the 18 claws and install the rear body side panel protector.
(c) Install the 2 clips.

ET

TAIL GATE PROTECTOR

REMOVAL

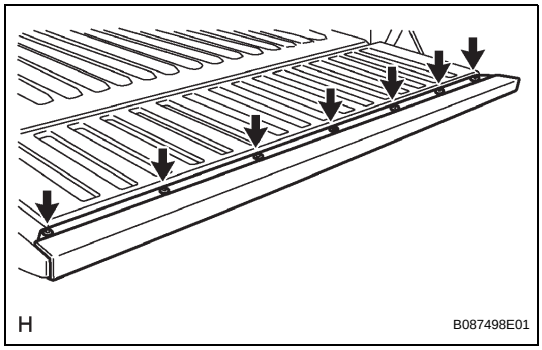

1. REMOVE TAIL GATE PROTECTOR

(a) Using "Torx" socket wrench T30, remove the 7 screws.

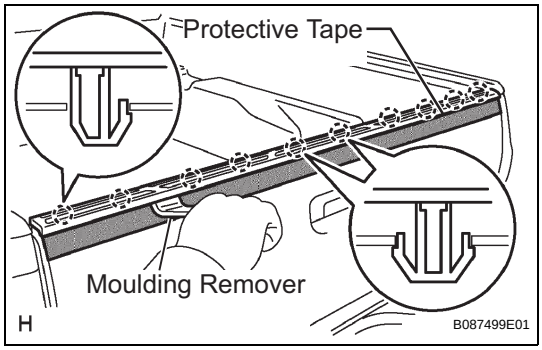

(b) Apply protective tape to the outer circumference of the tail gate protector.

(c) Using a moulding remover, disengage the 10 claws and remove the tail gate protector.

INSTALLATION

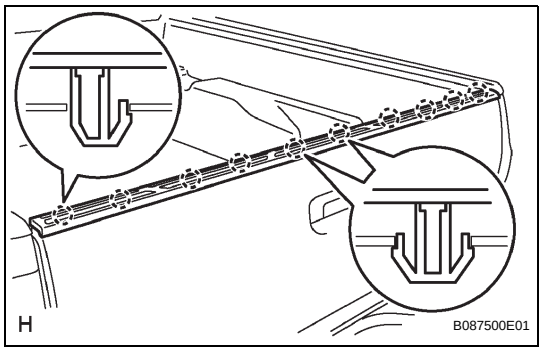

1. INSTALL TAIL GATE PROTECTOR

(a) Engage the 10 claws and install the tail gate protector.

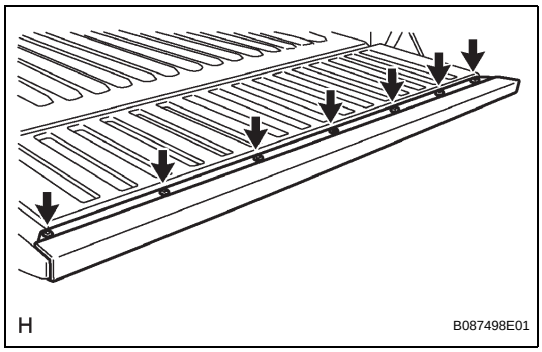

(b) Using "Torx" socket wrench T30, tighten the 7 screws.

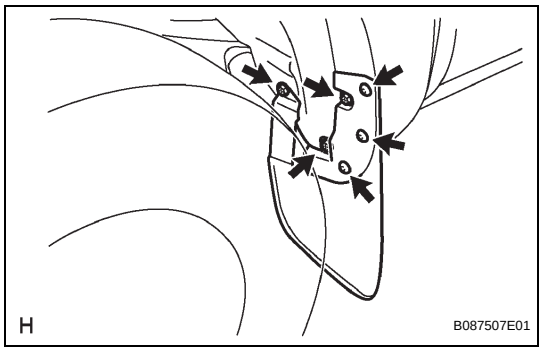

FENDER PANEL MUDGUARD

REMOVAL

1. REMOVE FRONT FENDER MUDGUARD

(a) Using a clip remover, remove the 3 clips.

(b) Remove the 3 screws and front fender mudguard.

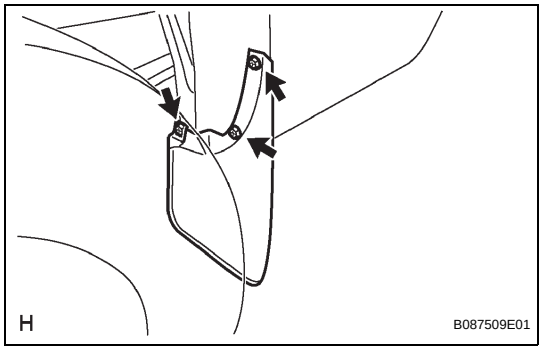

2. REMOVE REAR QUARTER PANEL MUDGUARD

(a) for 2WD:

(1) Remove the 3 screws and rear quarter panel mudguard.

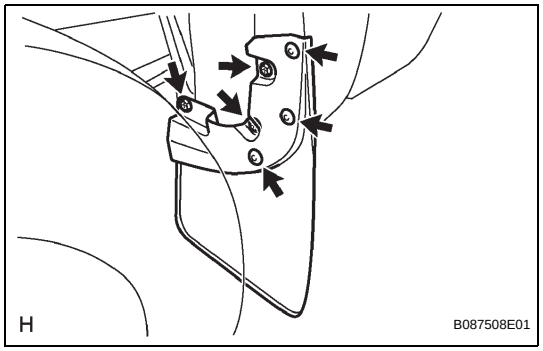

(b) for 4WD and Pre Runner:

(1) Using a clip remover, remove the 3 clips.

(2) Remove the 3 screws and rear quarter panel mudguard.

INSTALLATION

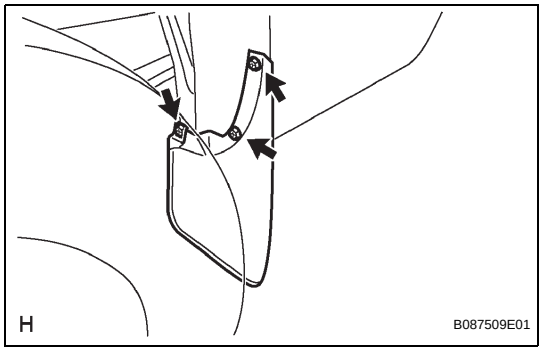

1. INSTALL REAR QUARTER PANEL MUDGUARD

(a) for 2WD:

(1) Install the rear quarter panel mudguard with the 3 screws.

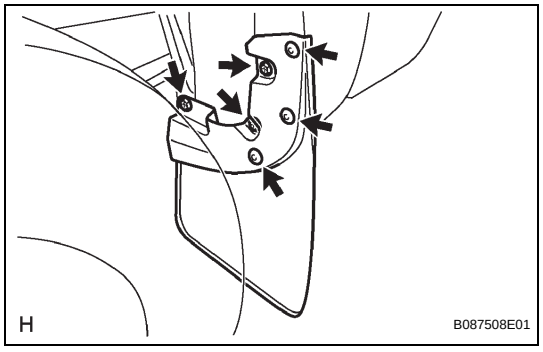

(b) for 4WD and Pre Runner:

(1) Install the rear quarter panel mudguard with the 3 screws.

(2) Install the 3 clips.

ET

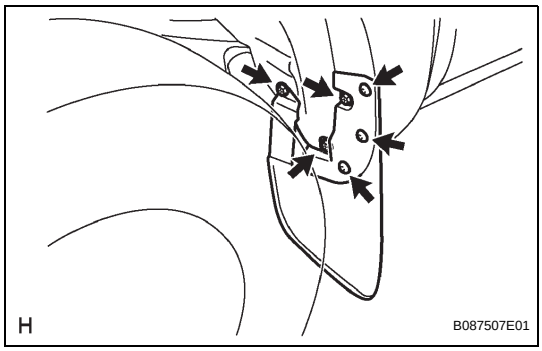

2. INSTALL FRONT FENDER MUDGUARD

(a) Install the front fender mudguard with the 3 screws.

(b) Install the 3 clips.

FRONT BUMPER EXTENSION

REMOVAL

1. **REMOVE FRONT SPOILER COVER (for X-Runner) (See page ET-5)**

2. **REMOVE FRONT BUMPER EXTENSION**

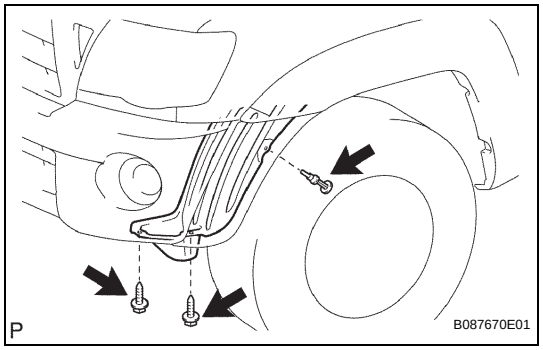

(a) Remove the 2 screws and clip, and open the front fender liner.

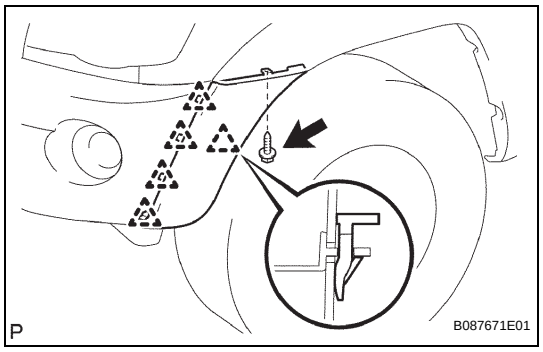

(b) for 4WD and Pre Runner:
(1) Remove the screw.
(2) Remove the 5 retainers and front bumper extension.

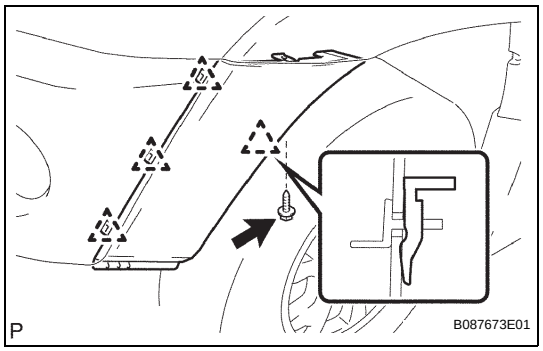

(c) for X-Runner:
(1) Remove the 4 retainers and front bumper extension.

INSTALLATION

1. **INSTALL FRONT BUMPER EXTENSION**

(a) for 4WD and Pre Runner:
(1) Install new front spoiler side protector in the position shown in the illustration.

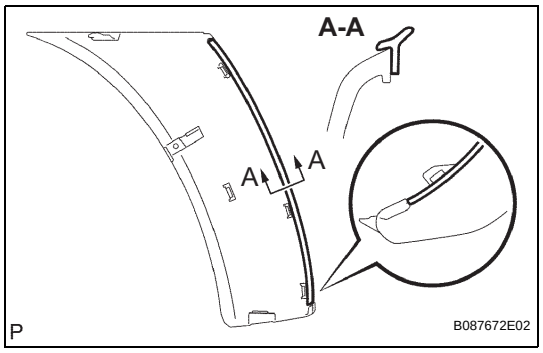

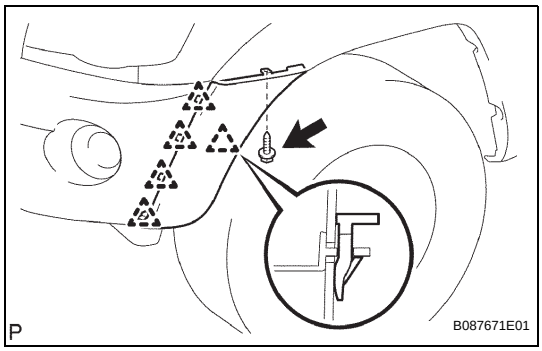

(2) Install the front bumper with the 5 retainers.
(3) Tighten the screw.

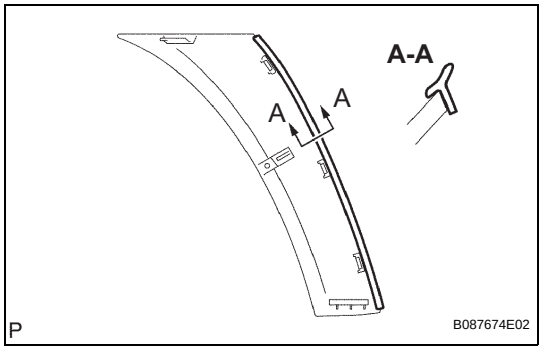

(b) for X-Runner:
(1) Install new front spoiler side protector in the position shown in the illustration.

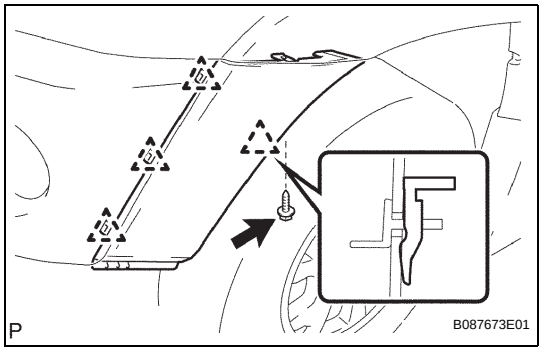

(2) Install the front bumper with the 4 retainers.
(3) Tighten the screw.

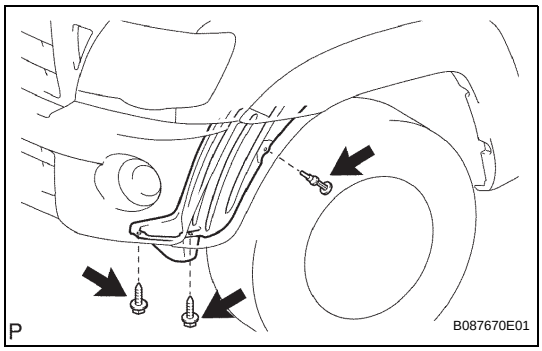

(c) Tighten the 2 screws.
(d) Install the clip.

2. INSTALL FRONT SPOILER COVER (for X-Runner) (See page ET-10)

WHEEL OPENING MOULDING

REMOVAL

1. **REMOVE FRONT FENDER MUDGUARD (for 4WD and Pre-Runner) (See page ET-45)**
2. **REMOVE ROCKER PANEL MOULDING (for X-Runner) (See page ET-38)**
3. **REMOVE FRONT FENDER WHEEL OPENING MOULDING**
   (a) for 4WD and Pre Runner:
      (1) Remove the 4 screws.

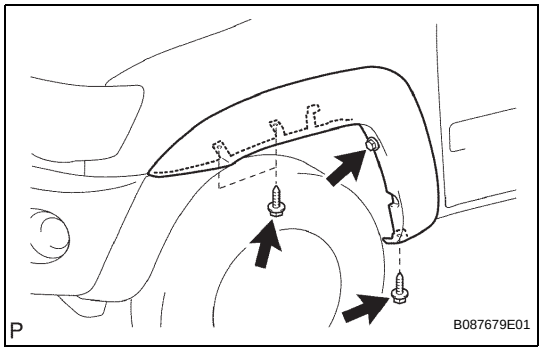

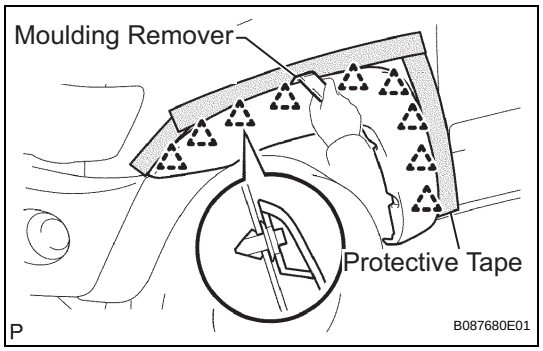

      (2) Apply protective tape to the outer circumference of the front fender wheel opening moulding, as shown in the illustration.
      (3) Using a moulding remover, disengage the 9 clips and remove the front fender wheel opening moulding.

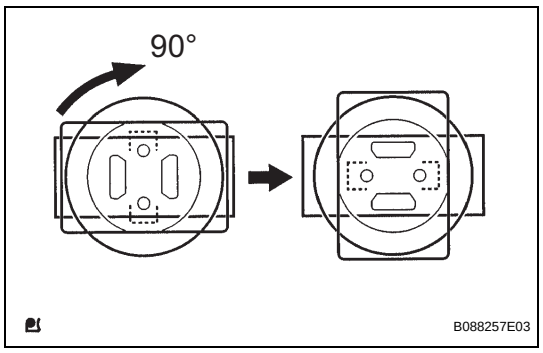

      (4) Turn the clips 90° clockwise and remove them.

   (b) for X-Runner:
      (1) Remove the 5 screws and front fender wheel opening moulding.

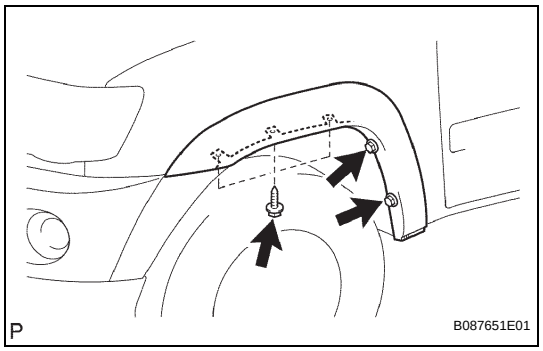

4. **REMOVE REAR QUARTER PANEL MUDGUARD (for 4WD and Pre-Runner) (See page ET-45)**
5. **REMOVE BACK DOOR OUTSIDE MOULDING SUB-ASSEMBLY (for X-Runner) (See page ET-39)**
6. **REMOVE BODY ROCKER PANEL MOULDING ASSEMBLY (for X-Runner) (See page ET-38)**

ET

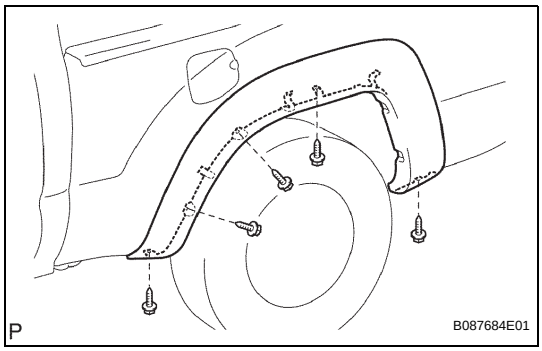

7. REMOVE QUARTER PANEL WHEEL OPENING MOULDING

(a) for 4WD and Pre Runner:

(1) Remove the 5 screws.

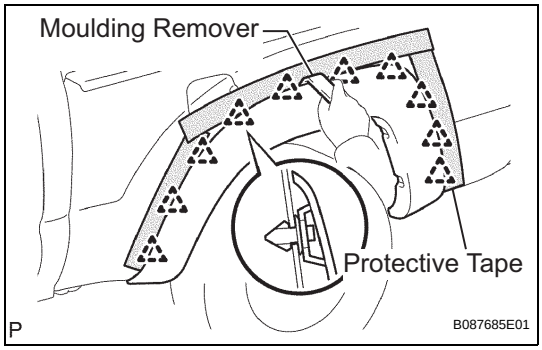

(2) Apply protective tape to the outer circumference of the quarter panel wheel opening moulding, as shown in the illustration.

(3) Using a moulding remover, disengage the 10 clips and remove the quarter panel wheel opening moulding.

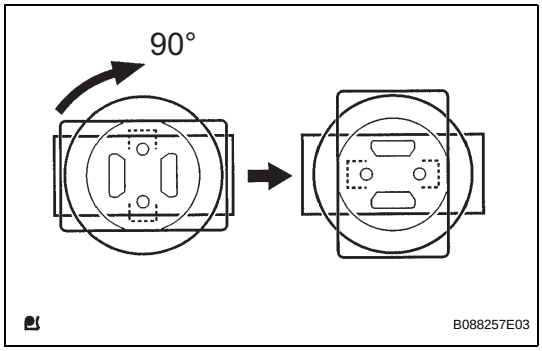

(4) Turn the clips 90° clockwise and remove them.

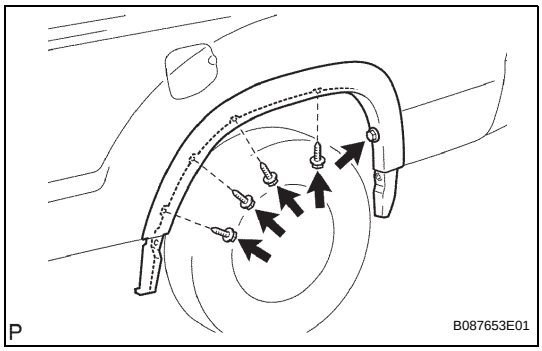

(b) for X-Runner:

(1) Remove the 5 screws and quarter panel wheel opening moulding.

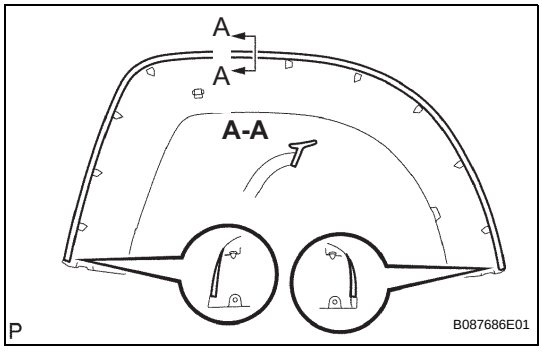

INSTALLATION

1. INSTALL QUARTER PANEL WHEEL OPENING MOULDING

(a) for 4WD and Pre Runner:

(1) Install new No. 1 quarter panel moulding pad in the position shown in the illustration.

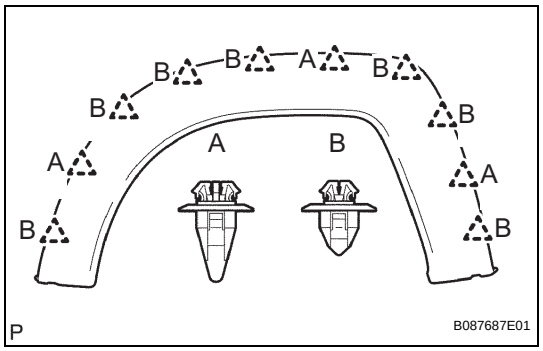

(2) Install each clip in the position shown in the illustration.
NOTICE:
If you install the clips wrongly, the installation of the quarter panel wheel opening moulding would be improper.

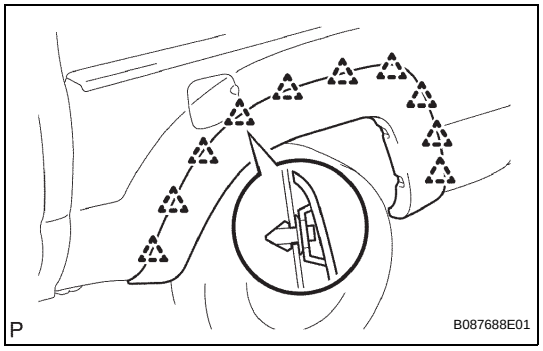

(3) Engage the 10 clips and install the quarter panel wheel opening moulding.

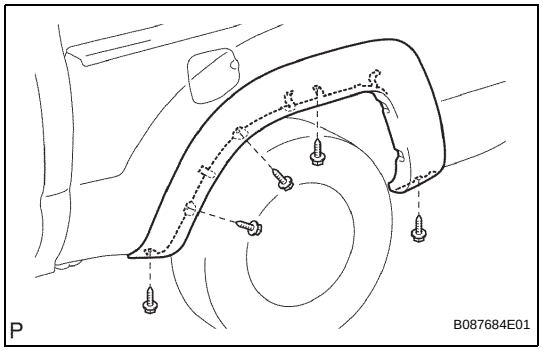

(4) Tighten the 5 screws.

(b) for X-Runner:
(1) Install new No. 1 quarter panel moulding pad in the position shown in the illustration.

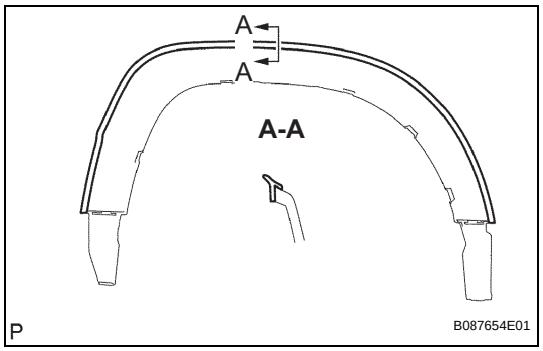

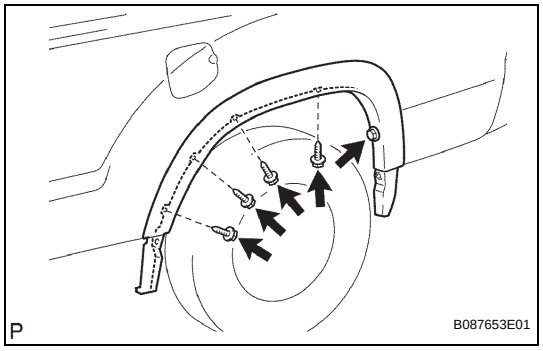

(2) Install the quarter panel wheel opening moulding with the 5 screws.

2. INSTALL BODY ROCKER PANEL MOULDING ASSEMBLY (for X-Runner) (See page ET-40)

3. INSTALL BACK DOOR OUTSIDE MOULDING SUB-ASSEMBLY (for X-Runner) (See page ET-39)

4. INSTALL REAR QUARTER PANEL MUDGUARD (for 4WD and Pre-Runner) (See page ET-45)

ET

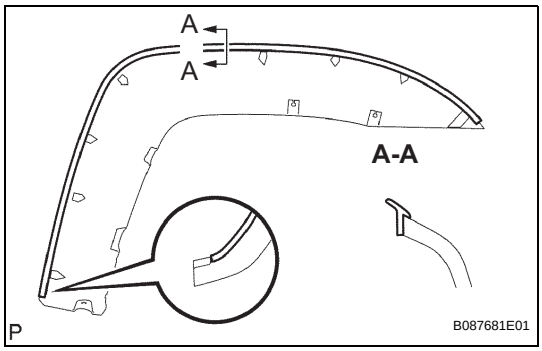

5. INSTALL FRONT FENDER WHEEL OPENING MOULDING

(a) for 4WD and Pre Runner:

(1) Install new No. 1 front fender wheel opening extension pad in the position shown in the illustration.

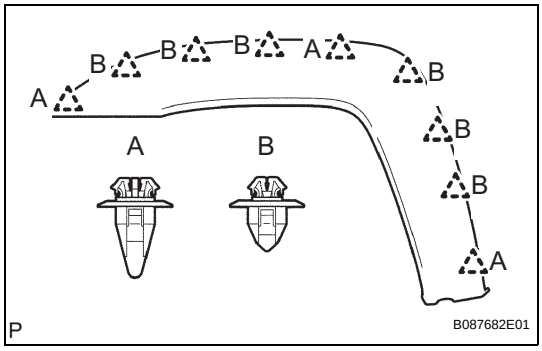

(2) Install each clip in the position shown in the illustration.
NOTICE:
If you install the clip wrongly, the installation of the front fender wheel opening moulding would be improper.

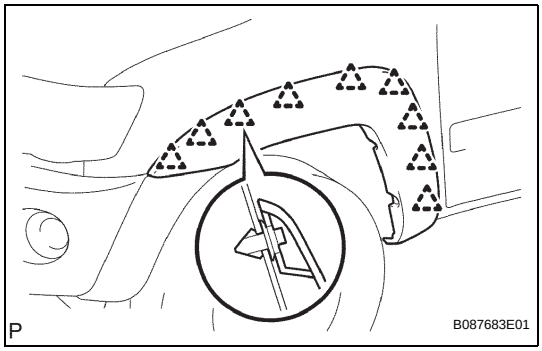

(3) Engage the 9 clips and install the front fender wheel opening moulding.

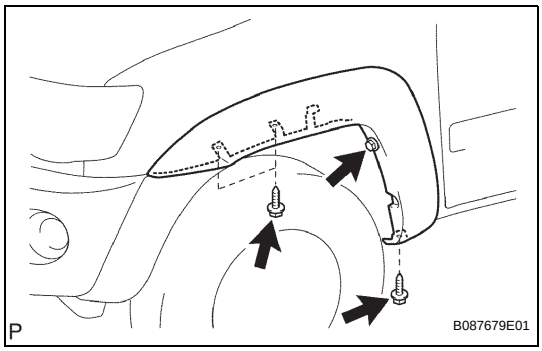

(4) Tighten the 4 screws.

(b) for X-Runner:

(1) Install new No. 2 body outside moulding pad in the position shown in the illustration.

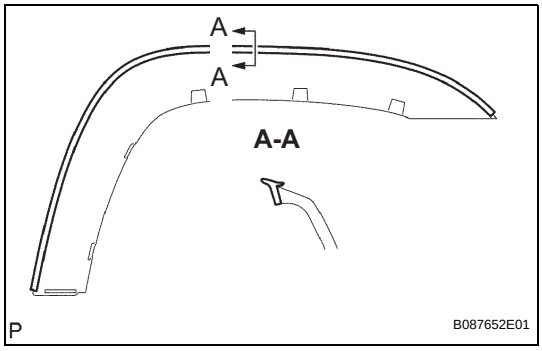

ET

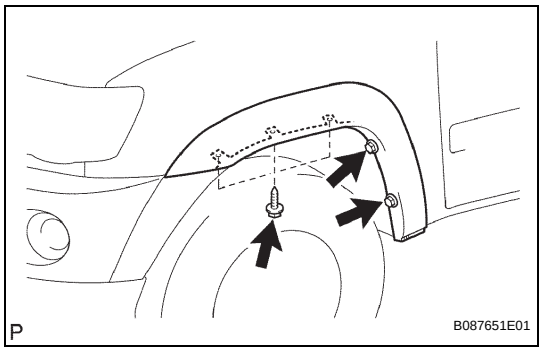

(2) Install the front fender wheel opening moulding with the 5 screws.

6. **INSTALL ROCKER PANEL MOULDING (for X-Runner) (See page ET-41)**

7. **INSTALL FRONT FENDER MUDGUARD (for 4WD and Pre-Runner) (See page ET-46)**

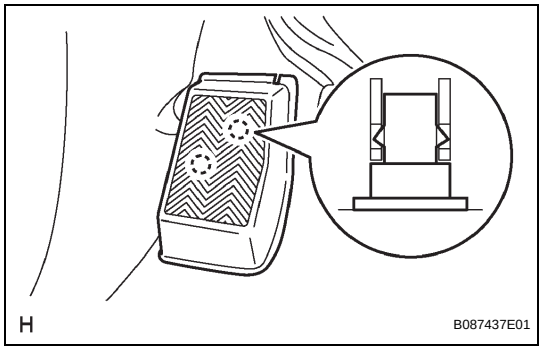

FRONT FLOOR FOOTREST

REMOVAL

1. REMOVE FRONT FLOOR FOOTREST

(a) Disengage the 2 clips and remove the front floor footrest.

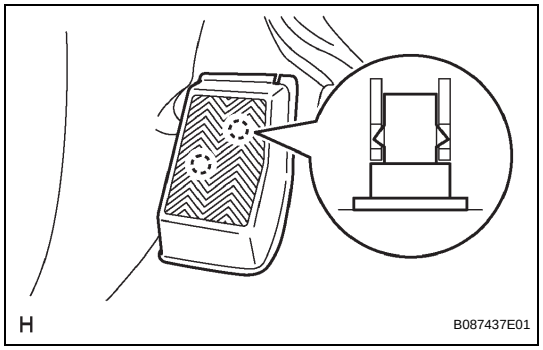

INSTALLATION

1. INSTALL FRONT FLOOR FOOTREST

(a) Engage the 2 clips and install the front floor footrest.

ROOF HEADLINING (for Double Cab)

COMPONENTS

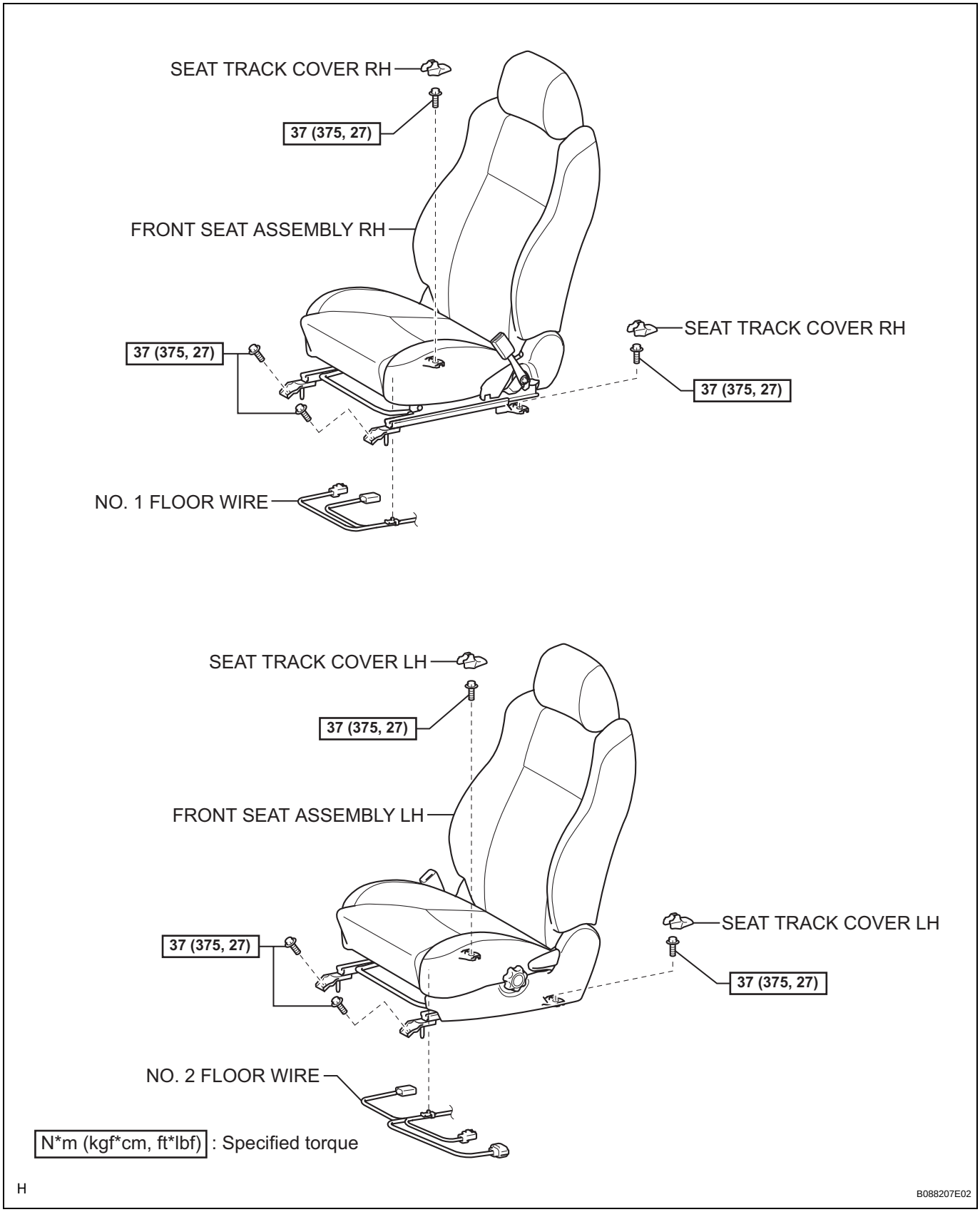

IR

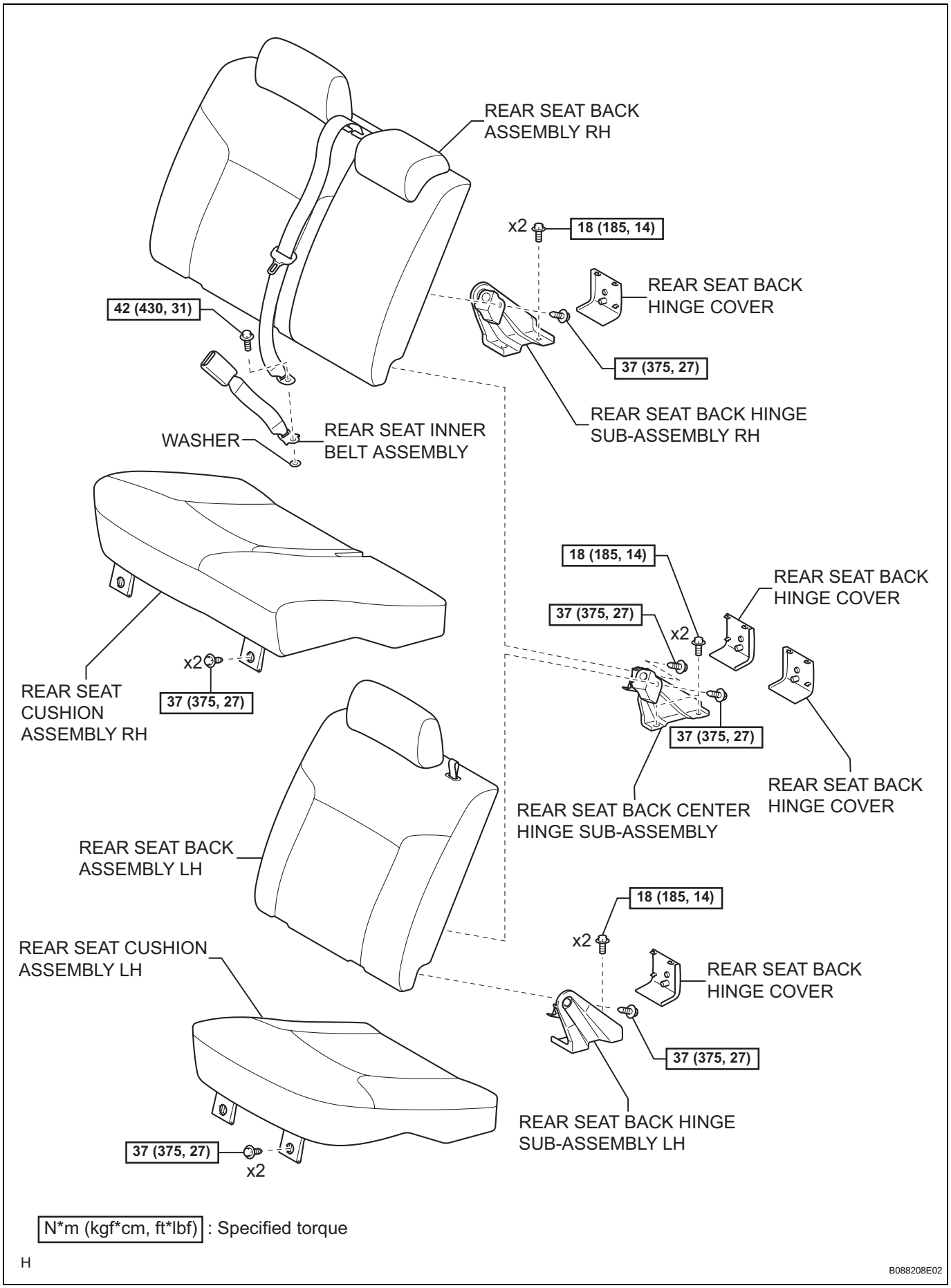
REAR SEAT BACK ASSEMBLY RH
x2
18 (185, 14)
REAR SEAT BACK HINGE COVER
42 (430, 31)
37 (375, 27)
REAR SEAT BACK HINGE SUB-ASSEMBLY RH
WASHER
REAR SEAT INNER BELT ASSEMBLY
18 (185, 14)
REAR SEAT BACK HINGE COVER
37 (375, 27)
x2
x2
37 (375, 27)
REAR SEAT CUSHION ASSEMBLY RH
37 (375, 27)
REAR SEAT BACK CENTER HINGE SUB-ASSEMBLY
REAR SEAT BACK HINGE COVER
REAR SEAT BACK ASSEMBLY LH
18 (185, 14)
x2
REAR SEAT CUSHION ASSEMBLY LH
REAR SEAT BACK HINGE COVER
37 (375, 27)
REAR SEAT BACK HINGE SUB-ASSEMBLY LH
37 (375, 27)
x2
N*m (kgf*cm, ft*lbf) : Specified torque
H
B088208E02

IR

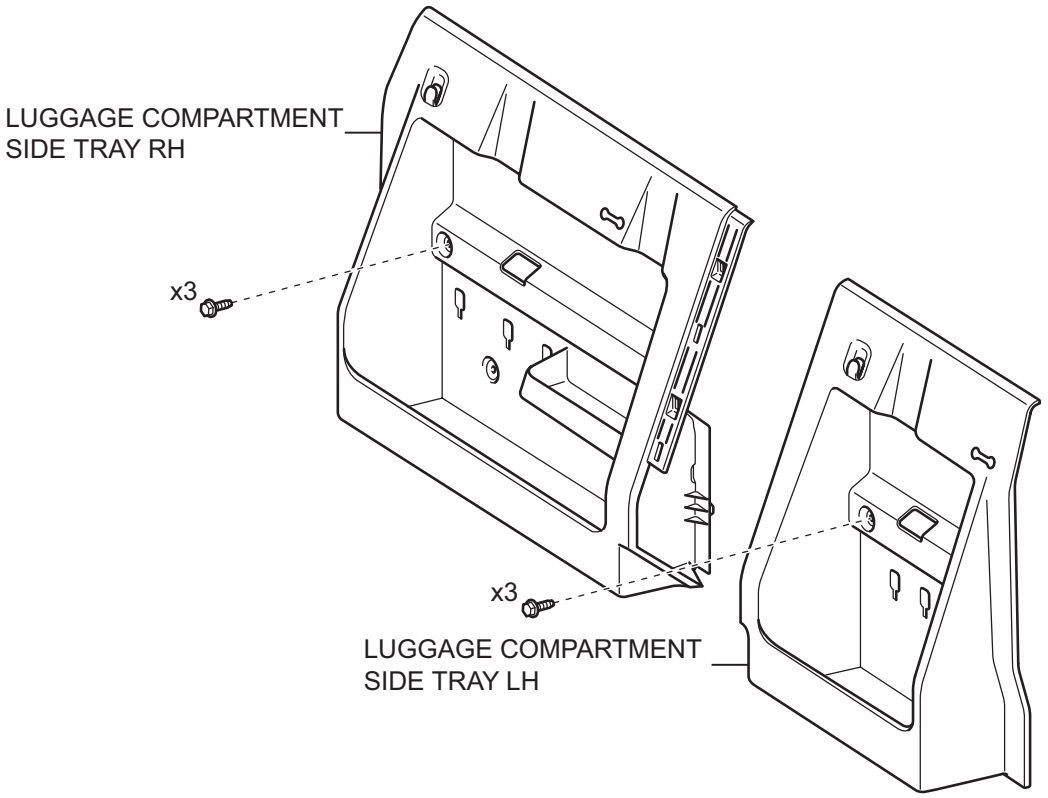

w/ Woofer:

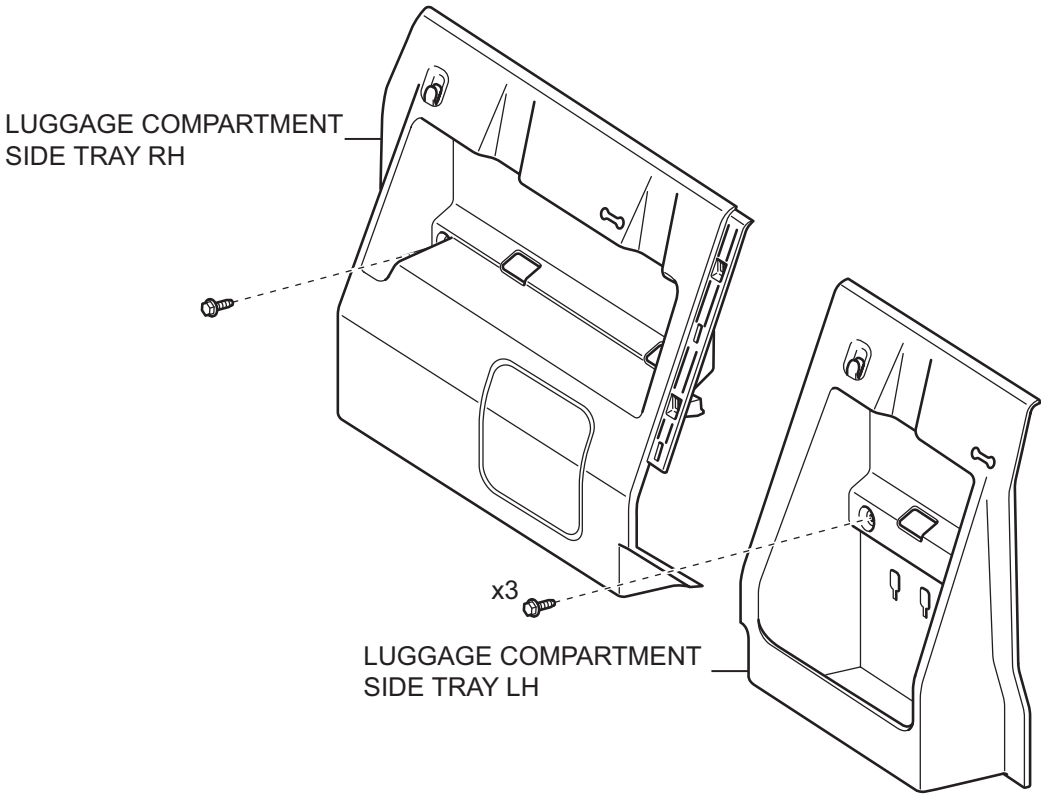

H

B087578E02

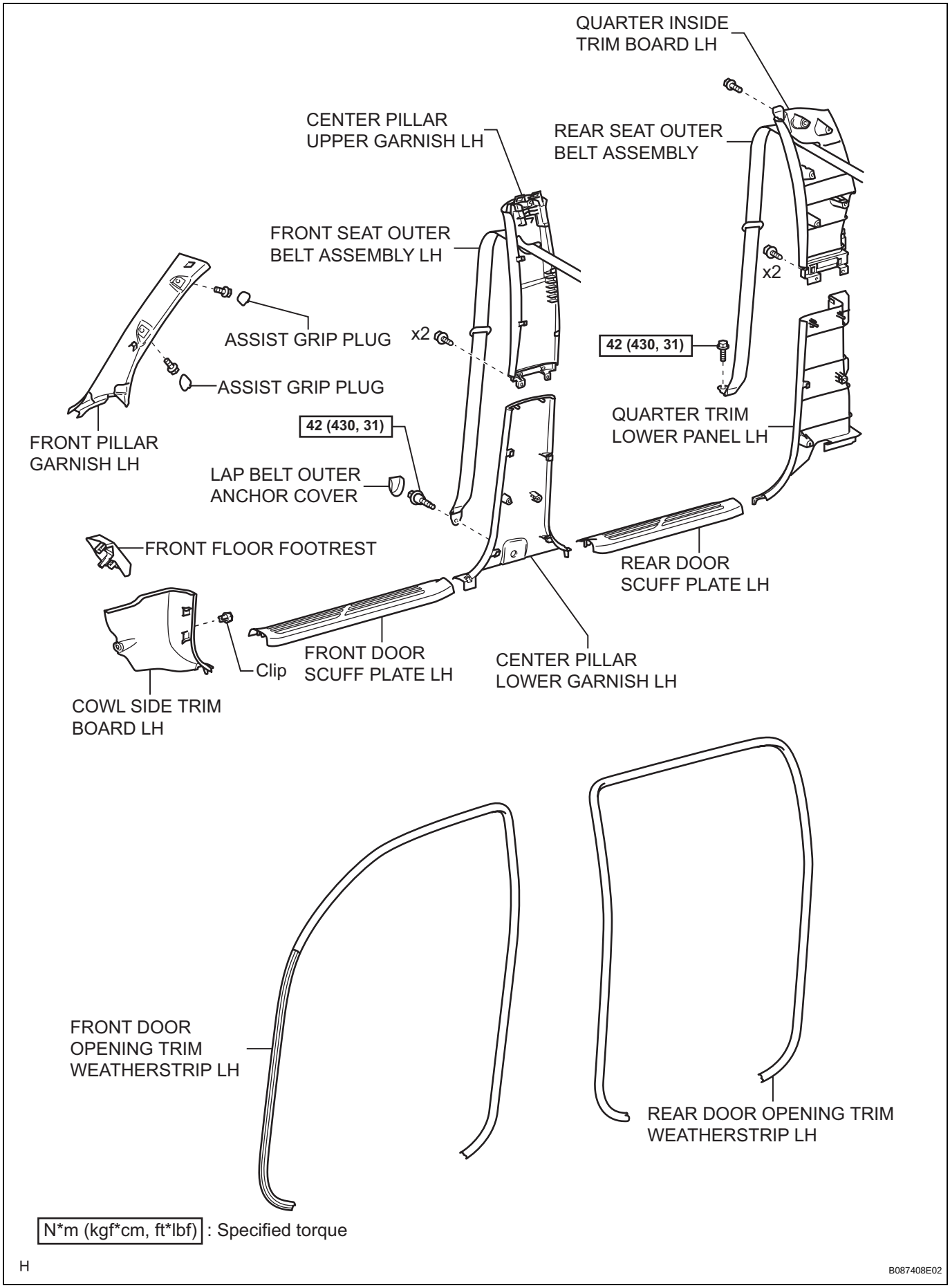
QUARTER INSIDE TRIM BOARD LH
CENTER PILLAR UPPER GARNISH LH
REAR SEAT OUTER BELT ASSEMBLY
FRONT SEAT OUTER BELT ASSEMBLY LH
x2
ASSIST GRIP PLUG
x2
42 (430, 31)
ASSIST GRIP PLUG
42 (430, 31)
QUARTER TRIM LOWER PANEL LH
FRONT PILLAR GARNISH LH
LAP BELT OUTER ANCHOR COVER
FRONT FLOOR FOOTREST
REAR DOOR SCUFF PLATE LH
Clip
FRONT DOOR SCUFF PLATE LH
CENTER PILLAR LOWER GARNISH LH
COWL SIDE TRIM BOARD LH
FRONT DOOR OPENING TRIM WEATHERSTRIP LH
REAR DOOR OPENING TRIM WEATHERSTRIP LH
N*m (kgf*cm, ft*lbf) : Specified torque
H
B087408E02

IR

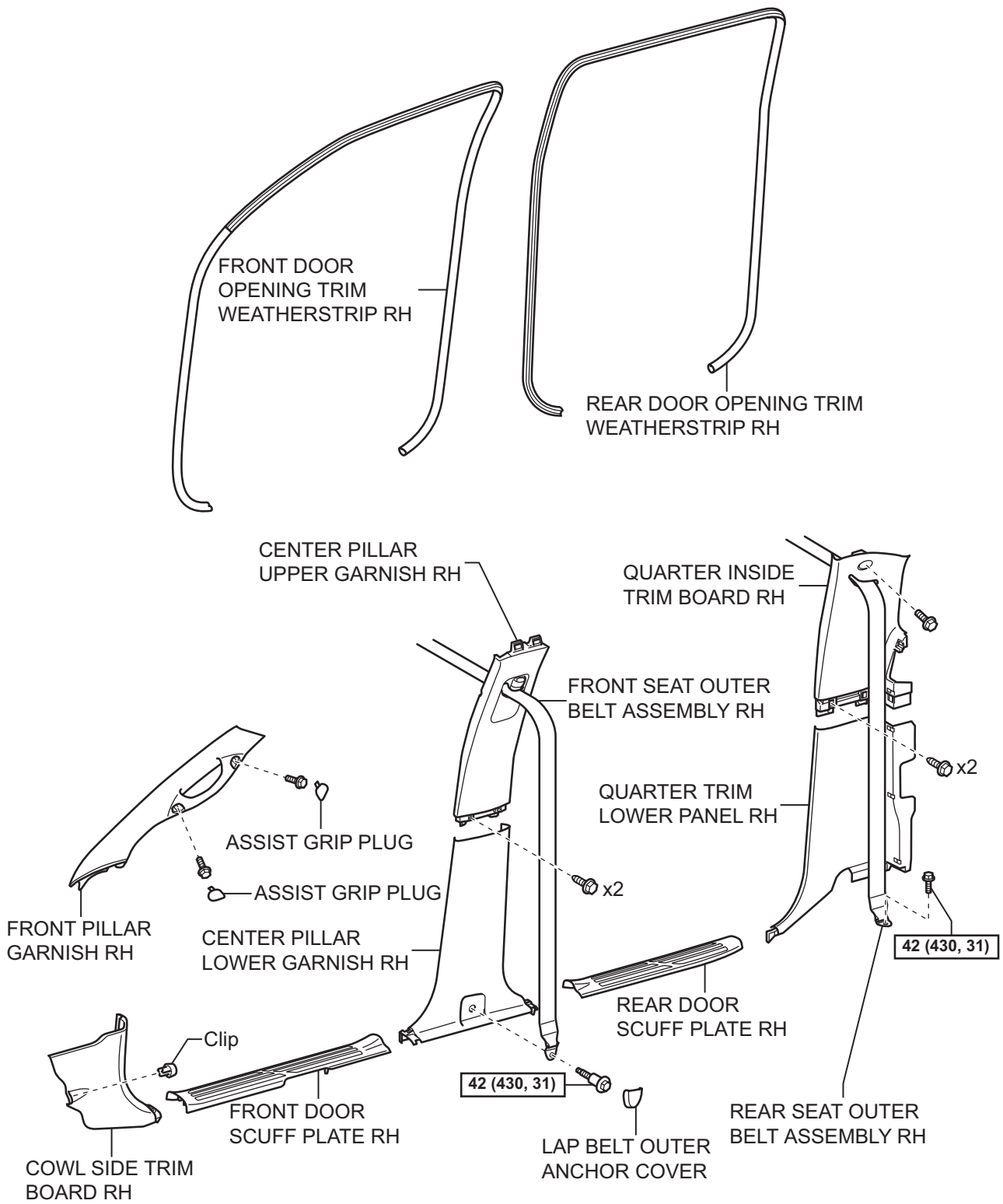

N*m (kgf*cm, ft*lbf) : Specified torque

H

B087409E02

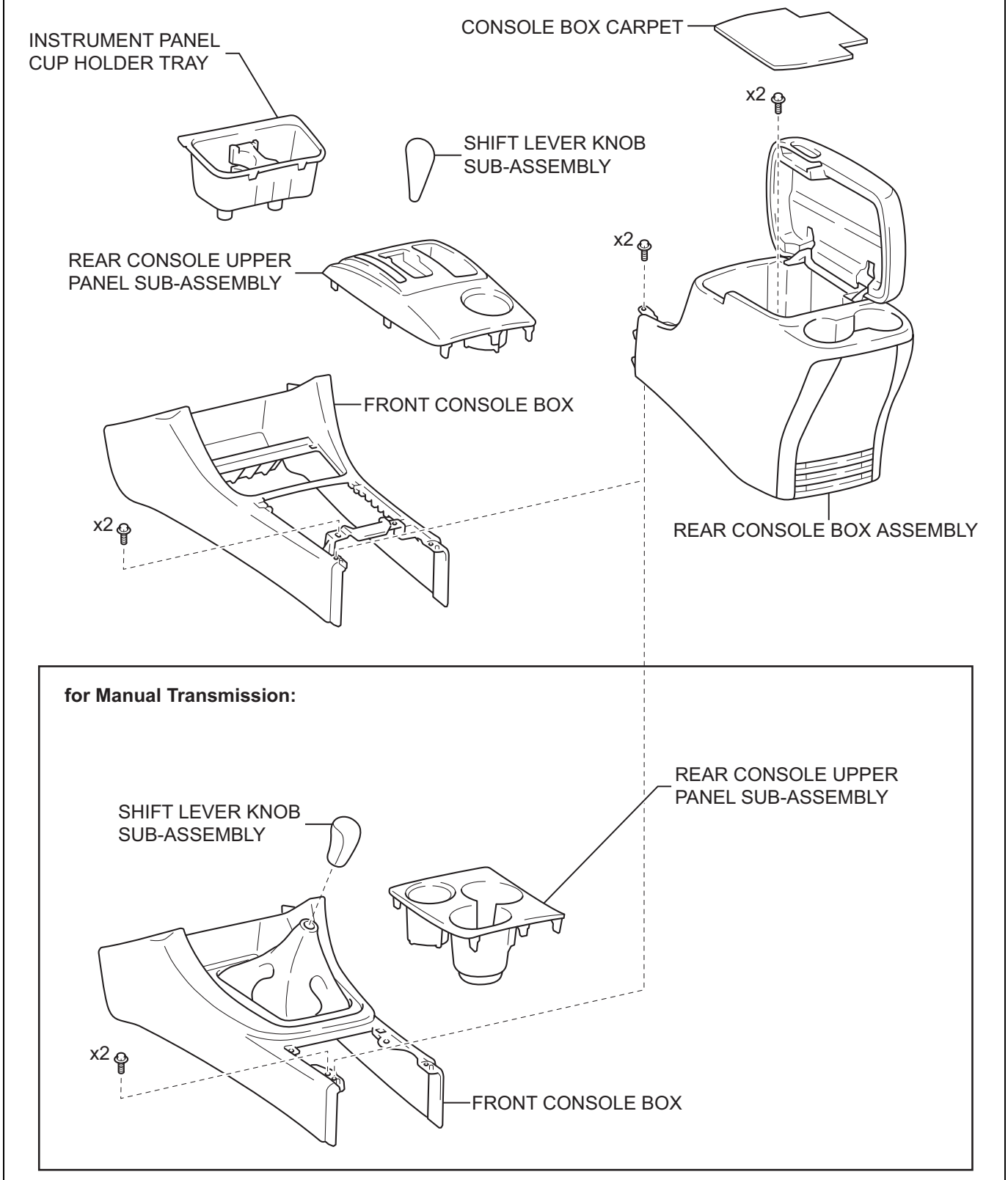
INSTRUMENT PANEL
CUP HOLDER TRAY
CONSOLE BOX CARPET
x2
SHIFT LEVER KNOB
SUB-ASSEMBLY
REAR CONSOLE UPPER
PANEL SUB-ASSEMBLY
x2
FRONT CONSOLE BOX
x2
REAR CONSOLE BOX ASSEMBLY
for Manual Transmission:
SHIFT LEVER KNOB
SUB-ASSEMBLY
REAR CONSOLE UPPER
PANEL SUB-ASSEMBLY
x2
FRONT CONSOLE BOX
H
B087622E05

IR

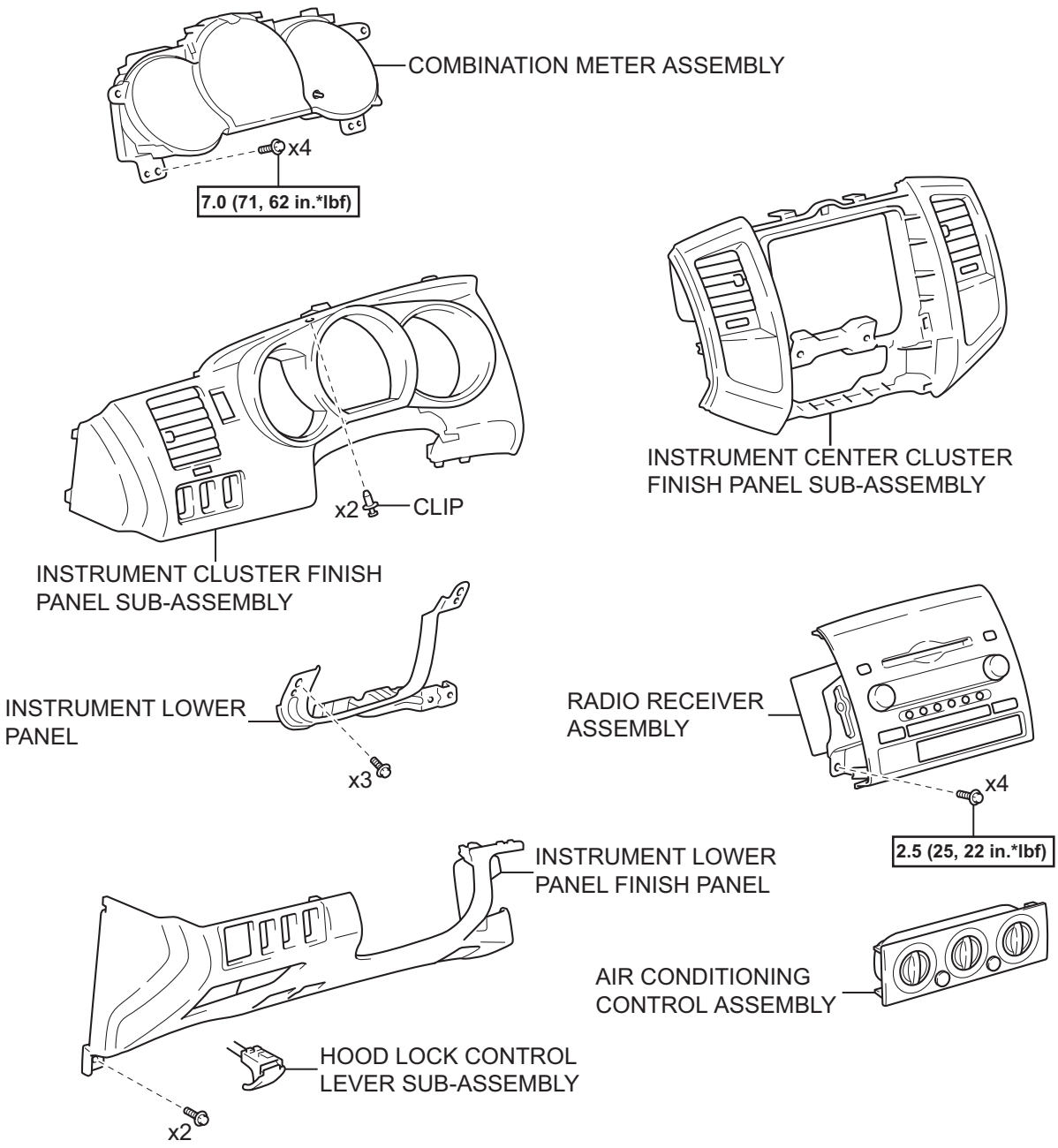

for Pedal Type Parking Brake:	for Lever Type Parking Brake:
INSTRUMENT PANEL UNDER TRAY	INSTRUMENT PANEL HOLE COVER

N*m (kgf*cm, ft*lbf) : Specified torque

B087619E04

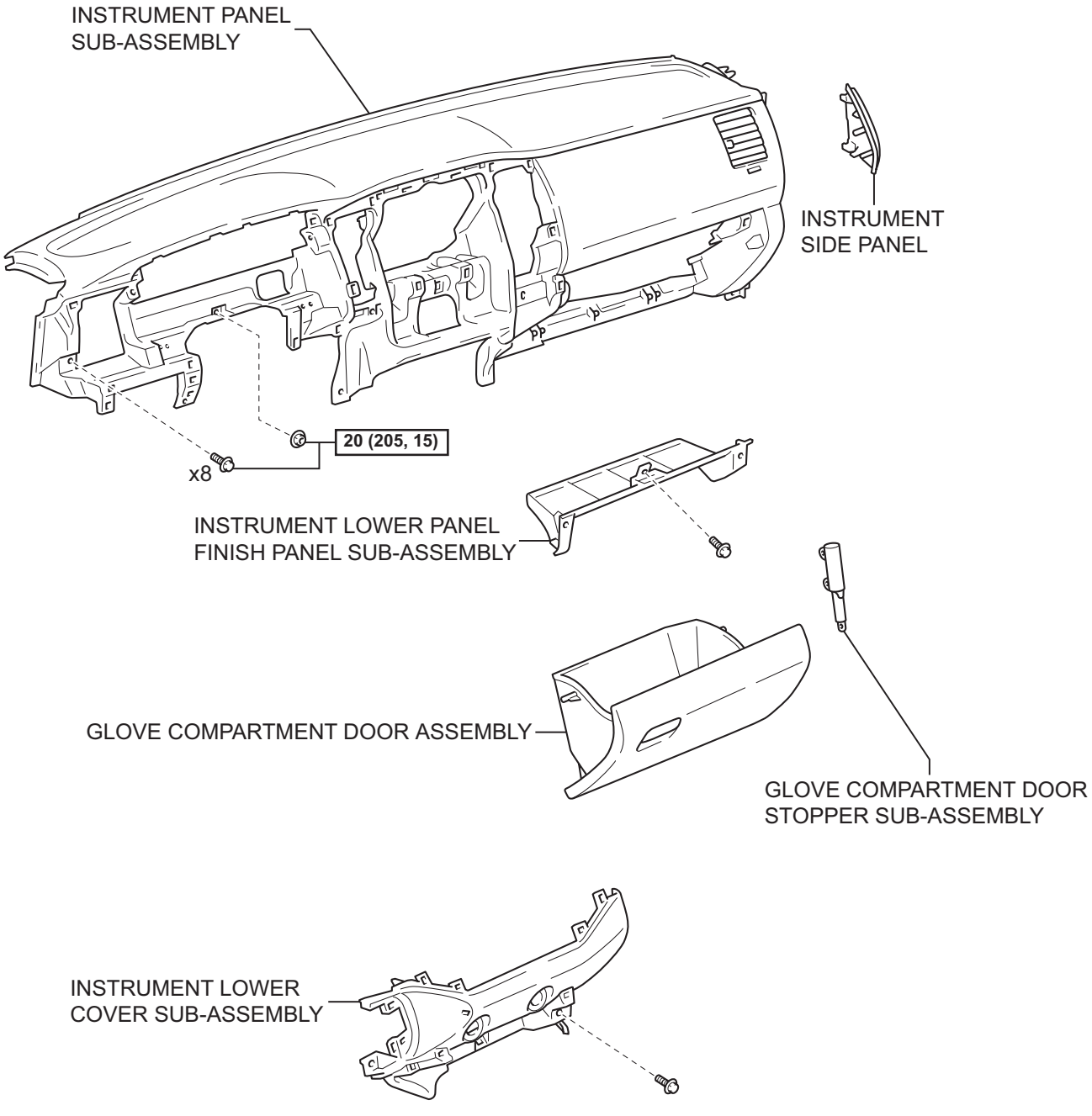

N*m (kgf*cm, ft*lbf) : Specified torque

H

B087620E03

IR

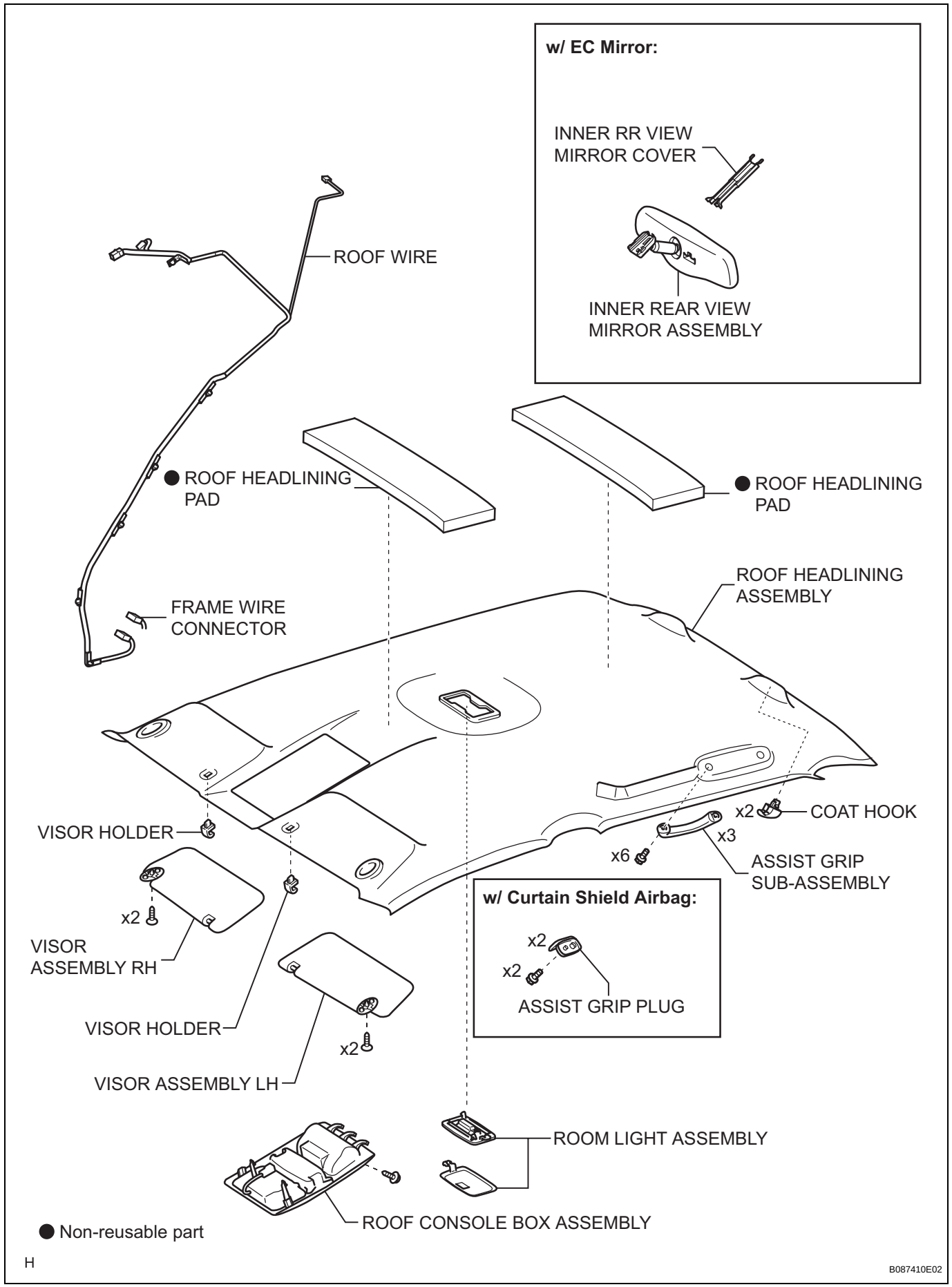
w/ EC Mirror:
INNER RR VIEW MIRROR COVER
INNER REAR VIEW MIRROR ASSEMBLY
ROOF WIRE
● ROOF HEADLINING PAD
● ROOF HEADLINING PAD
ROOF HEADLINING ASSEMBLY
FRAME WIRE CONNECTOR
VISOR HOLDER
x2
COAT HOOK
x3
x6
ASSIST GRIP SUB-ASSEMBLY
w/ Curtain Shield Airbag:
x2
x2
ASSIST GRIP PLUG
x2
VISOR ASSEMBLY RH
VISOR HOLDER
x2
VISOR ASSEMBLY LH
ROOM LIGHT ASSEMBLY
ROOF CONSOLE BOX ASSEMBLY
● Non-reusable part
H
B087410E02

ROOF HEADLINING (for Regular Cab)

COMPONENTS

for Separate Seat Type:

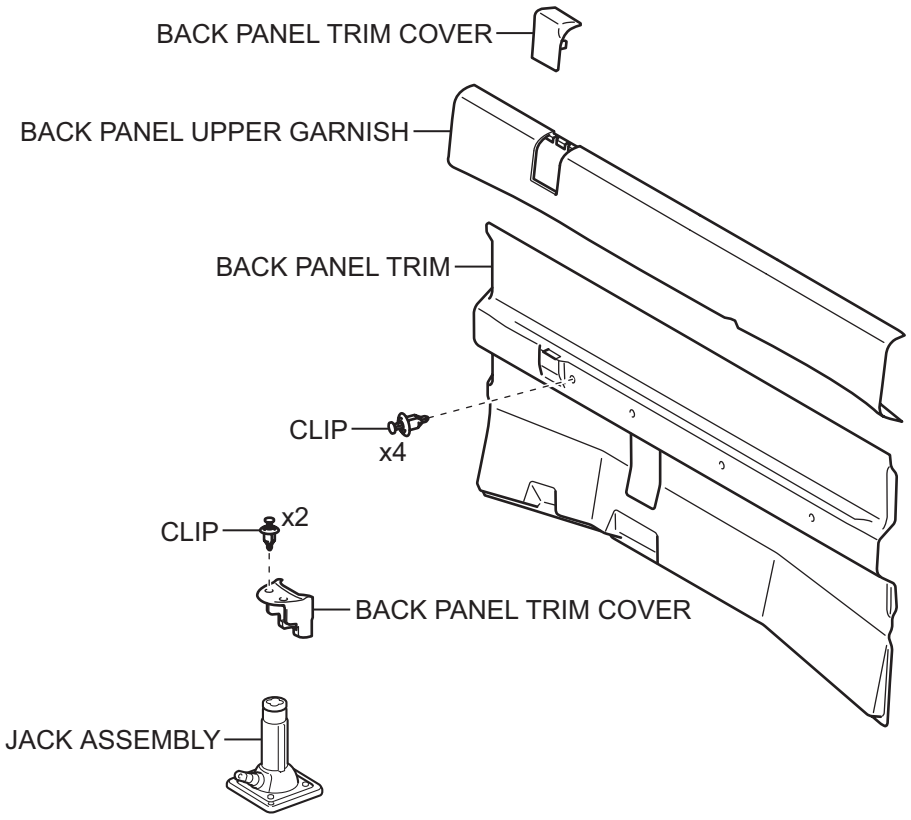

for Bench Seat Type:

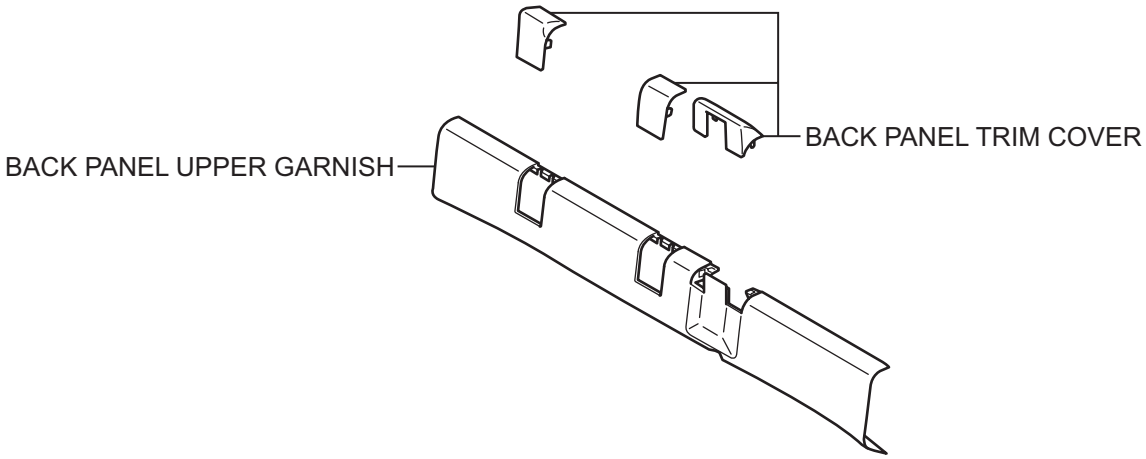

H

B087590E03

IR

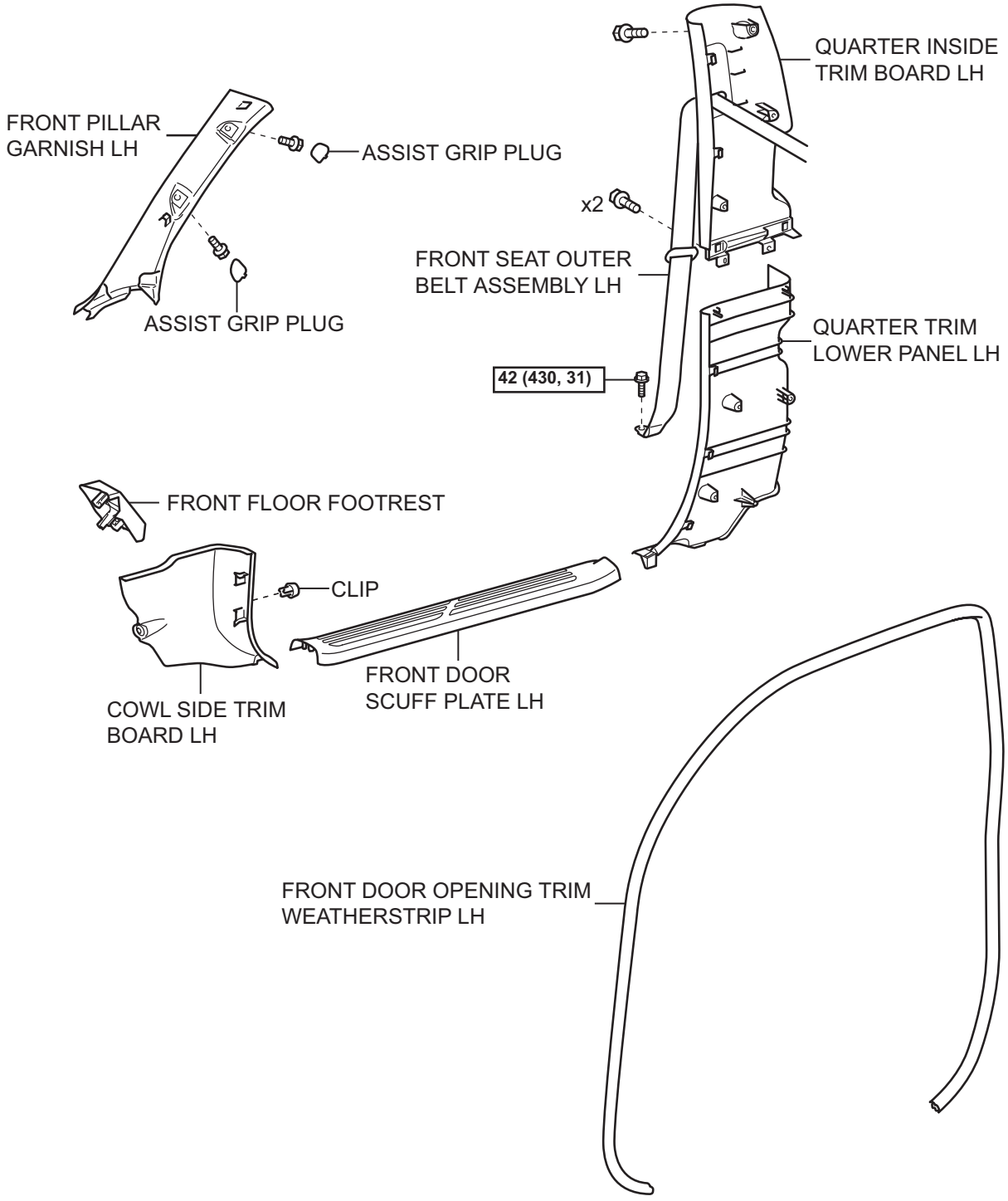

N*m (kgf*cm, ft*lbf) : Specified torque

H

B087473E03

IR

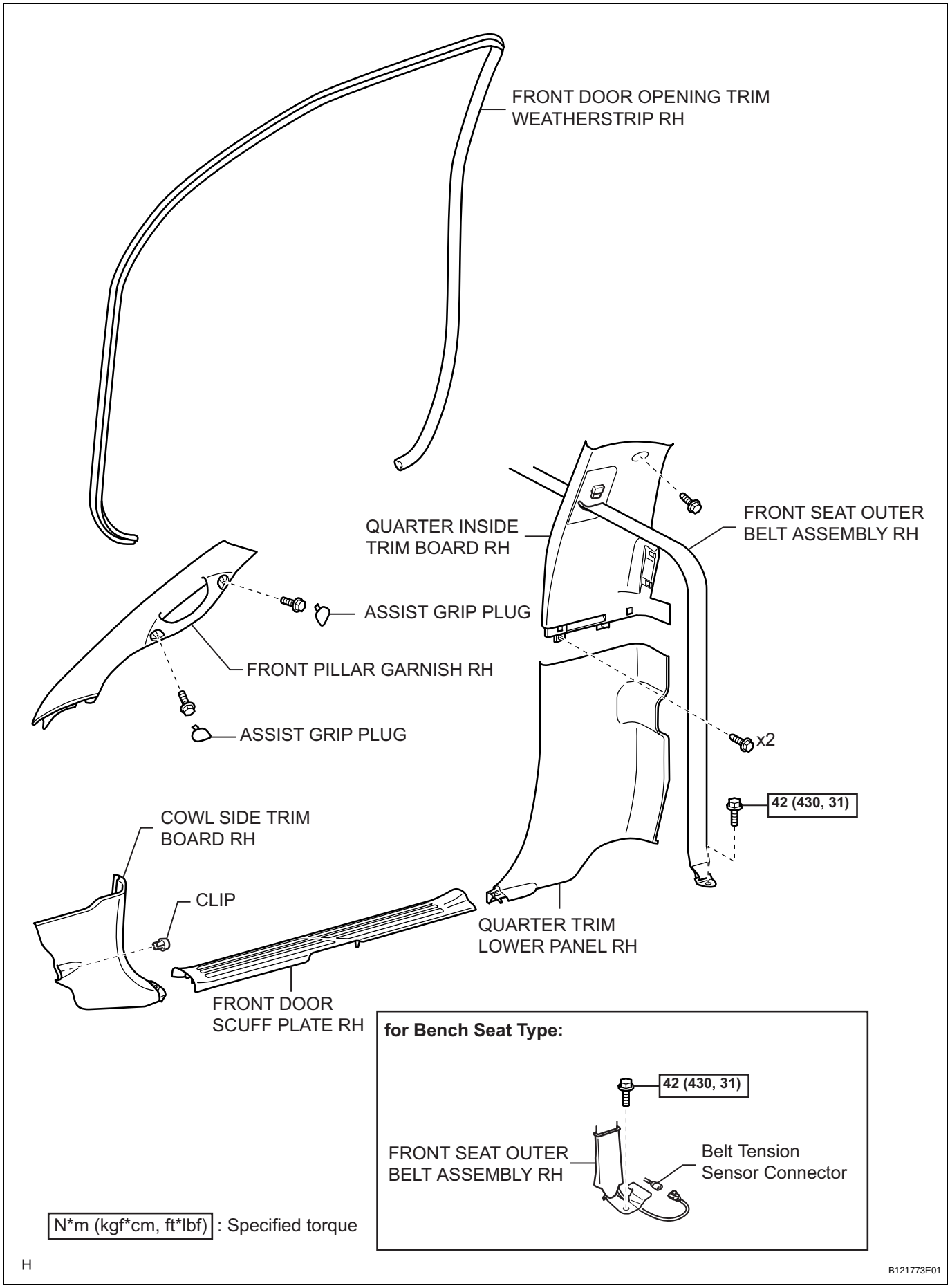
FRONT DOOR OPENING TRIM WEATHERSTRIP RH
QUARTER INSIDE TRIM BOARD RH
FRONT SEAT OUTER BELT ASSEMBLY RH
ASSIST GRIP PLUG
FRONT PILLAR GARNISH RH
ASSIST GRIP PLUG
x2
42 (430, 31)
COWL SIDE TRIM BOARD RH
CLIP
QUARTER TRIM LOWER PANEL RH
FRONT DOOR SCUFF PLATE RH
for Bench Seat Type:
42 (430, 31)
FRONT SEAT OUTER BELT ASSEMBLY RH
Belt Tension Sensor Connector
N*m (kgf*cm, ft*lbf) : Specified torque
H
B121773E01

for Separate Seat Type:

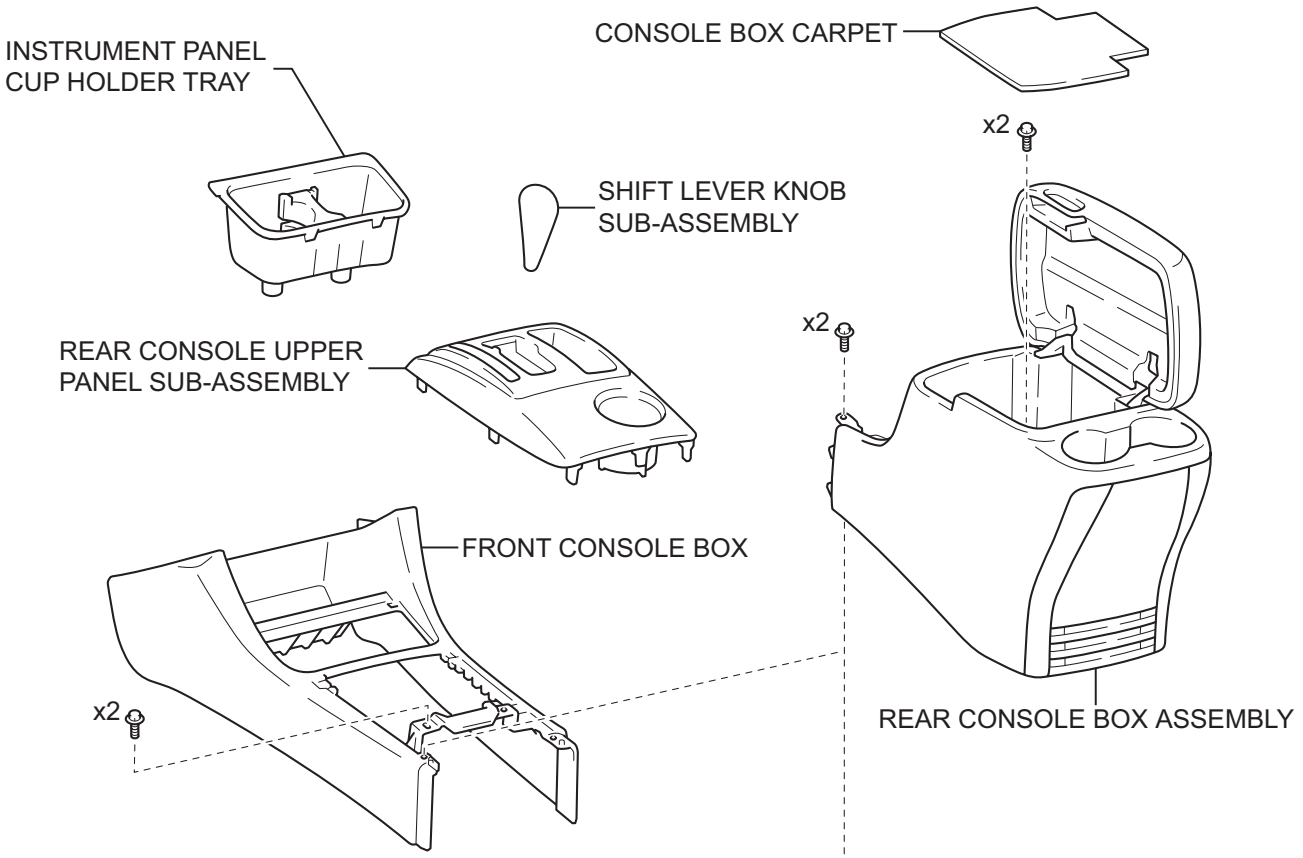

for Manual Transmission:

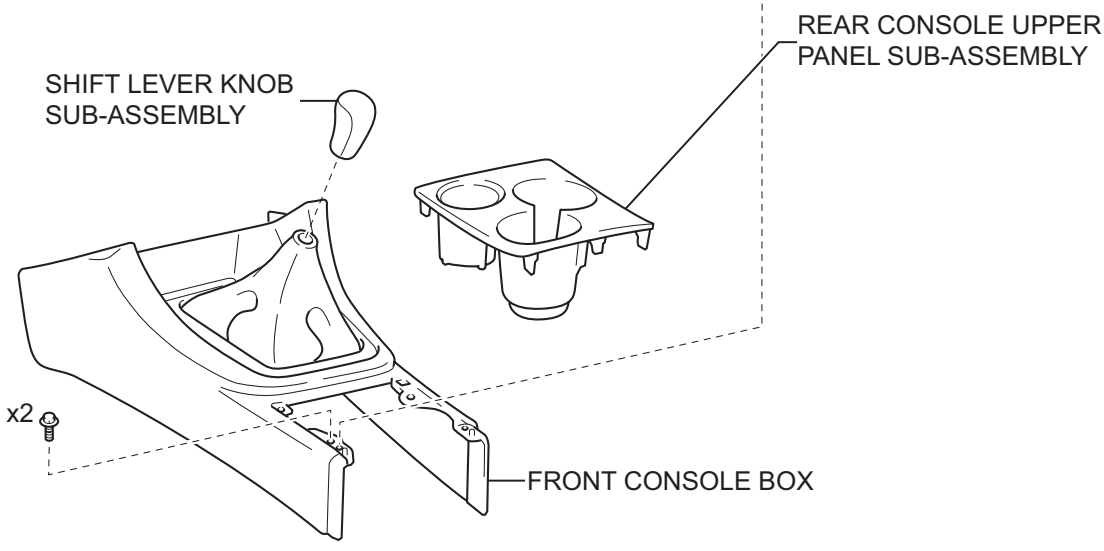

H

B087622E04

IR

for Bench Seat Type:

for Automatic Transmission:

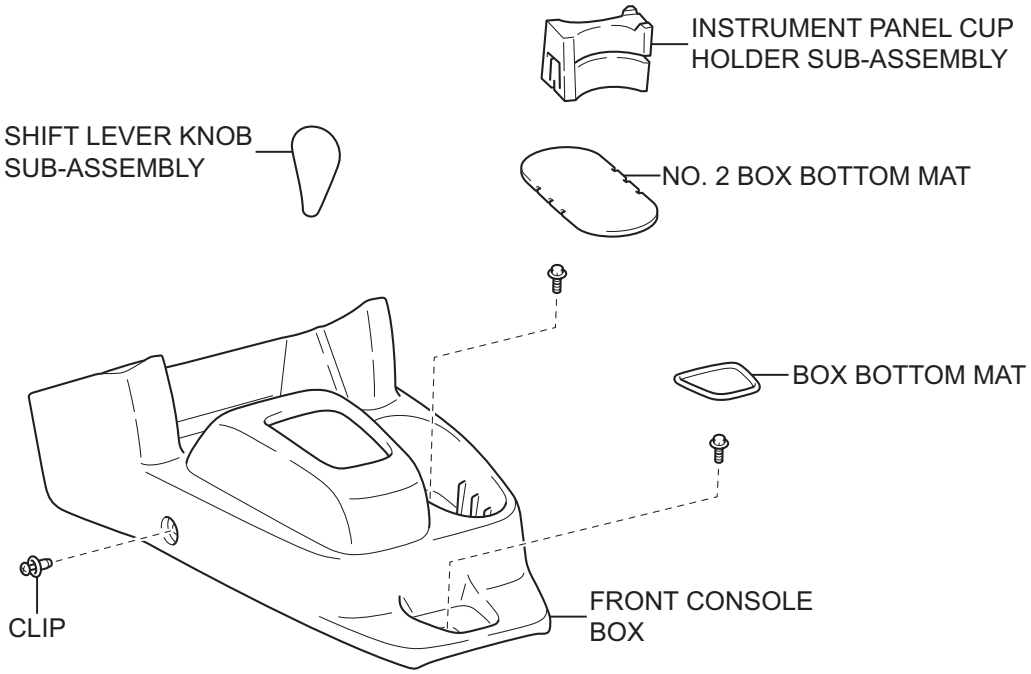

for Manual Transmission:

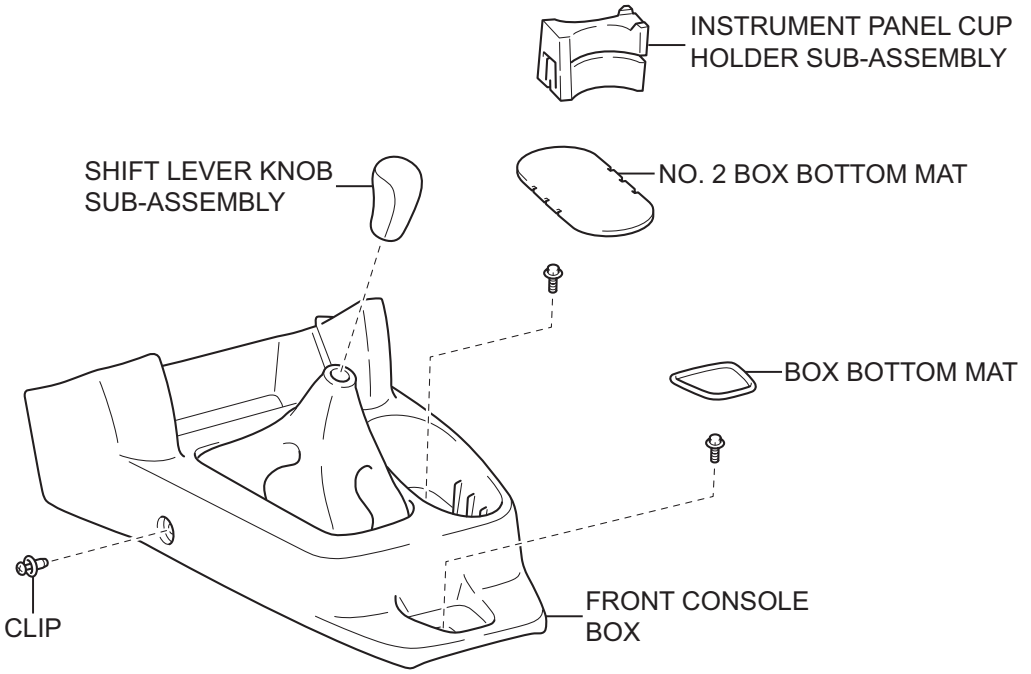

IR

H

B087621E03

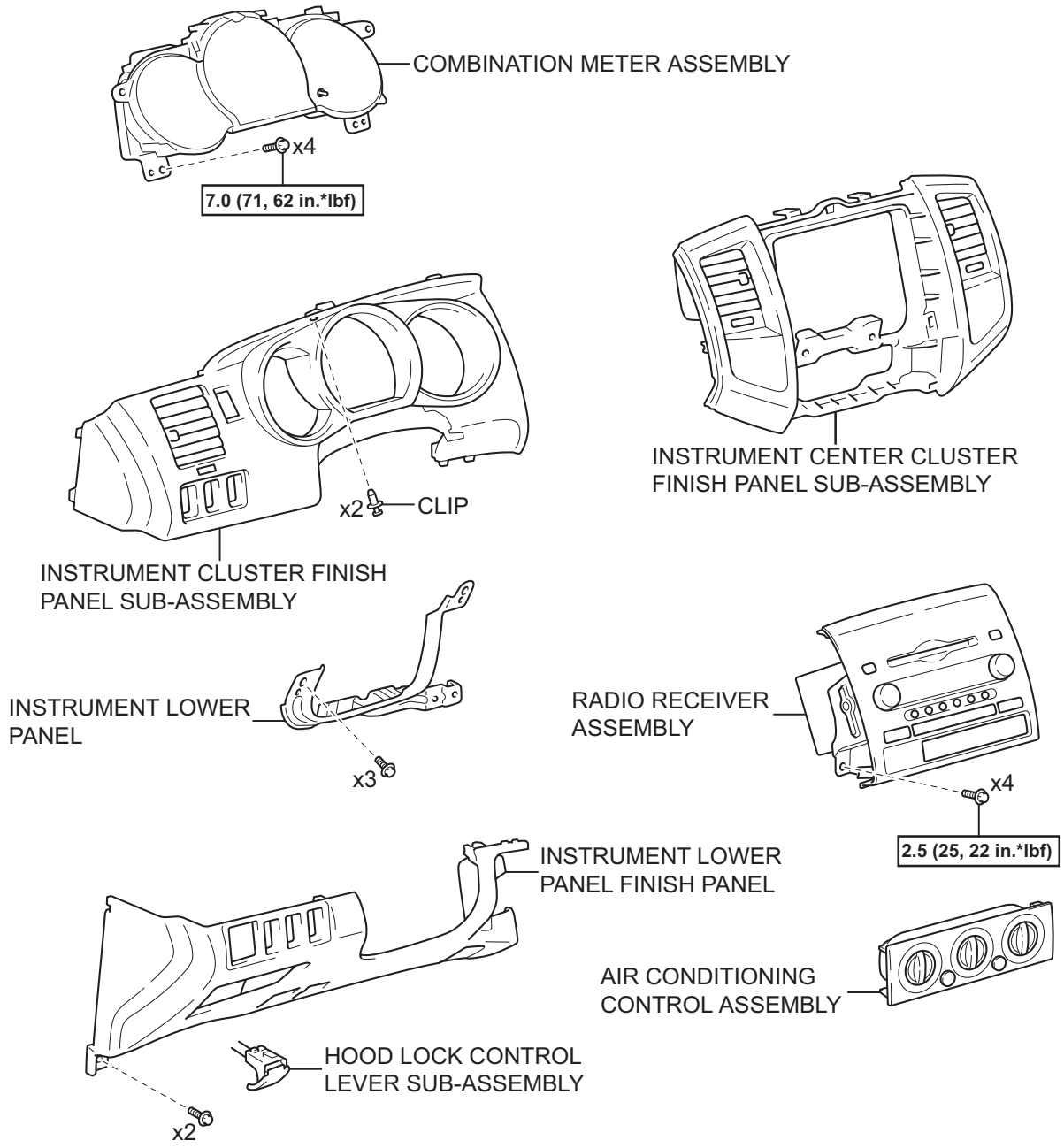

for Pedal Type Parking Brake:	for Lever Type Parking Brake:
INSTRUMENT PANEL UNDER TRAY	INSTRUMENT PANEL HOLE COVER

N*m (kgf*cm, ft*lbf) : Specified torque

H

B087619E04

IR

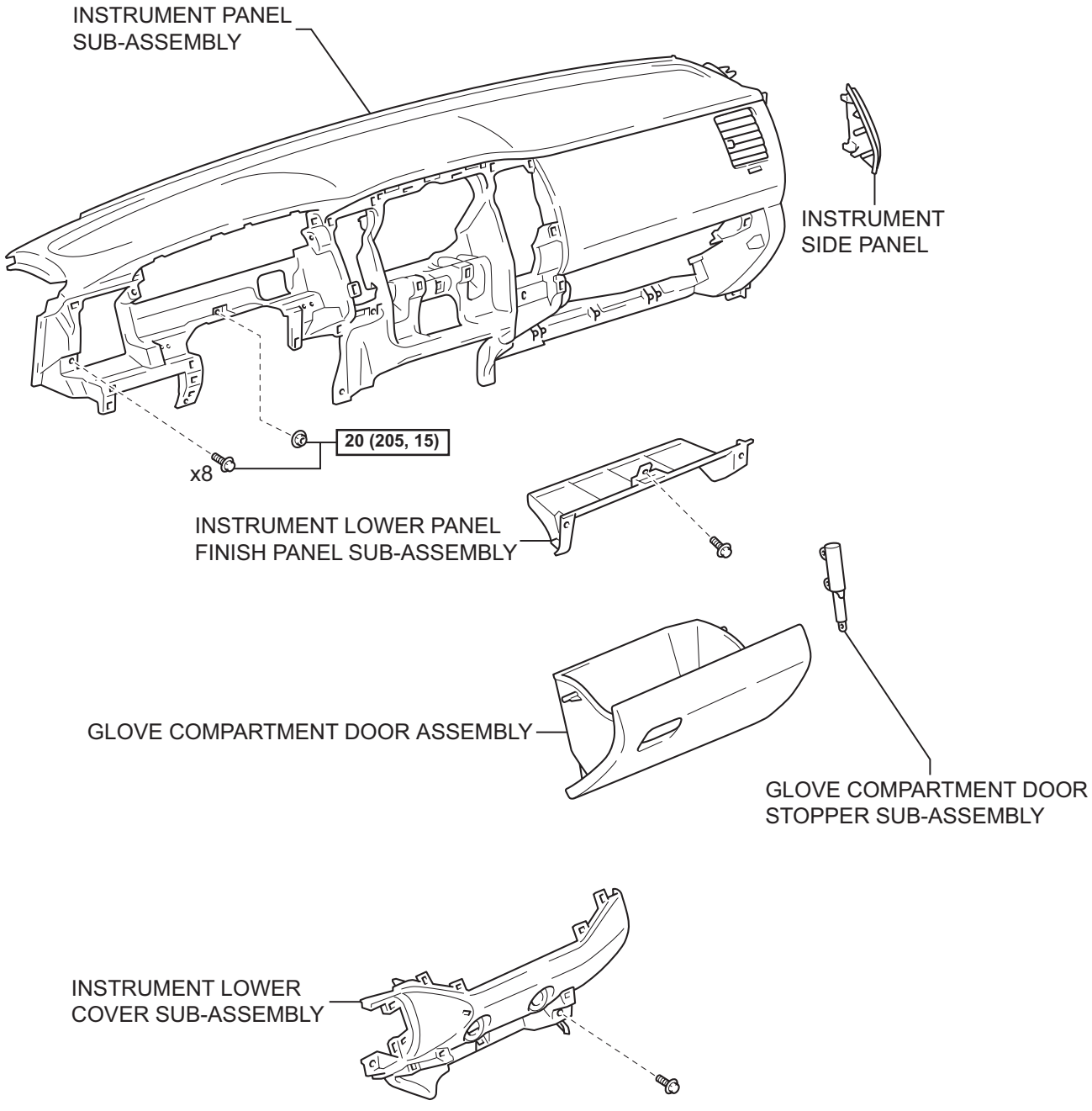

N*m (kgf*cm, ft*lbf) : Specified torque

H

B087620E03

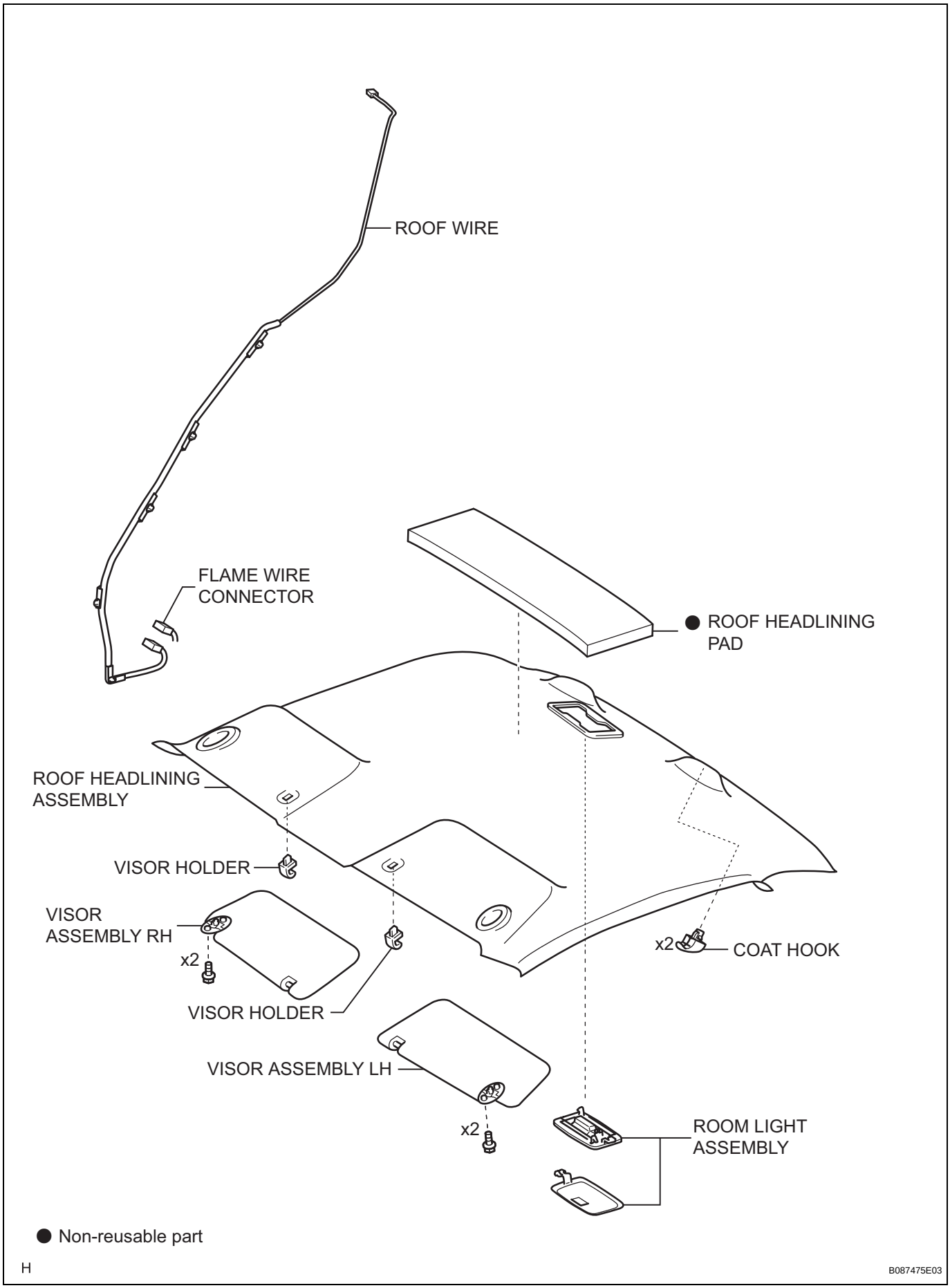
ROOF WIRE
FLAME WIRE CONNECTOR
● ROOF HEADLINING PAD
ROOF HEADLINING ASSEMBLY
VISOR HOLDER
VISOR ASSEMBLY RH
x2
VISOR HOLDER
x2
COAT HOOK
VISOR ASSEMBLY LH
x2
ROOM LIGHT ASSEMBLY
● Non-reusable part
H
B087475E03

ROOF HEADLINING (for Access Cab)

COMPONENTS

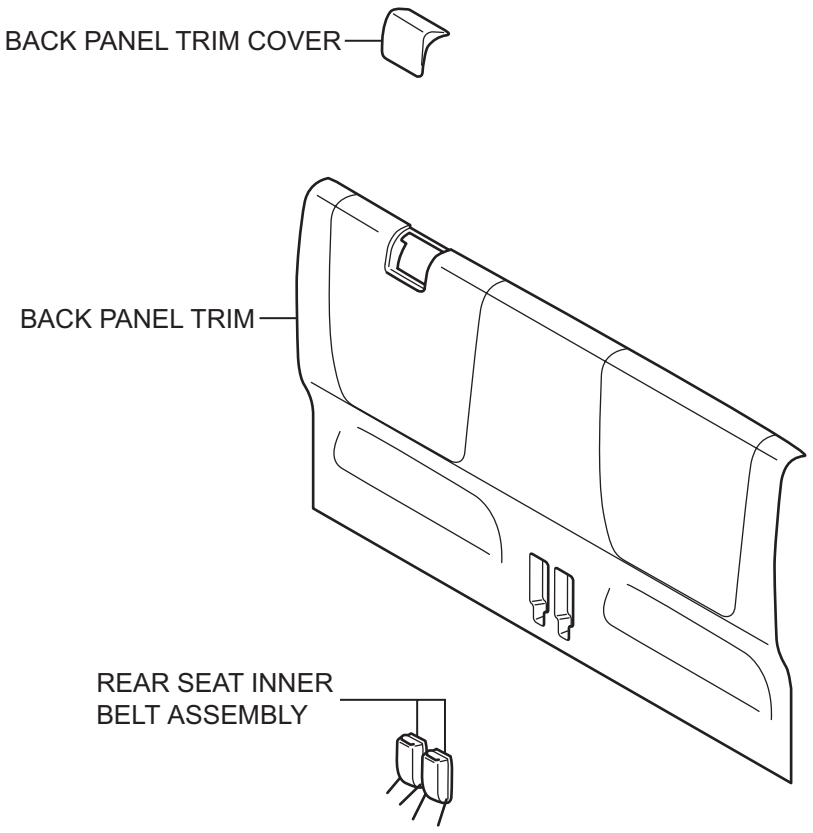

H

B087591E02

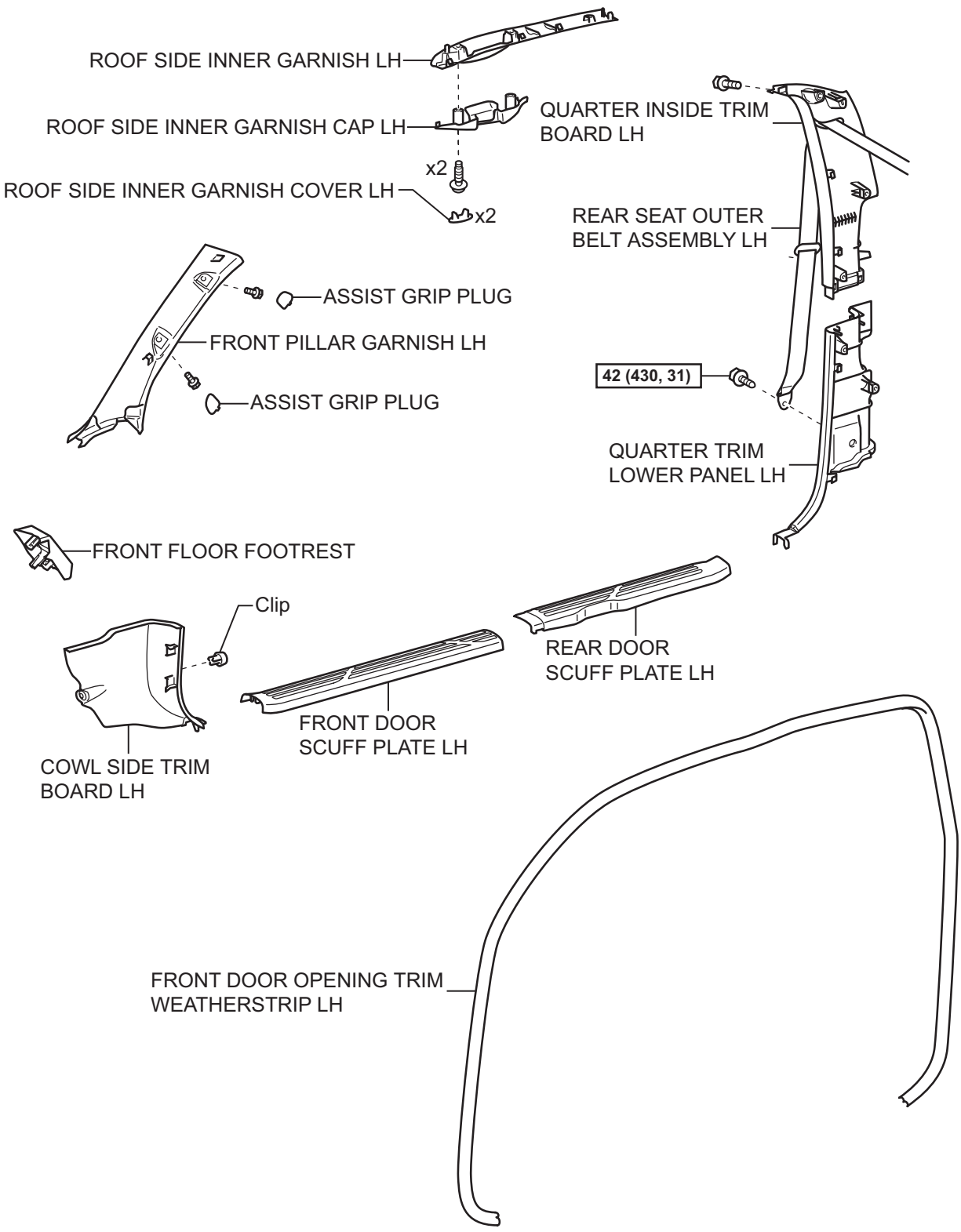

N*m (kgf*cm, ft*lbf) : Specified torque

H

B087433E02

IR

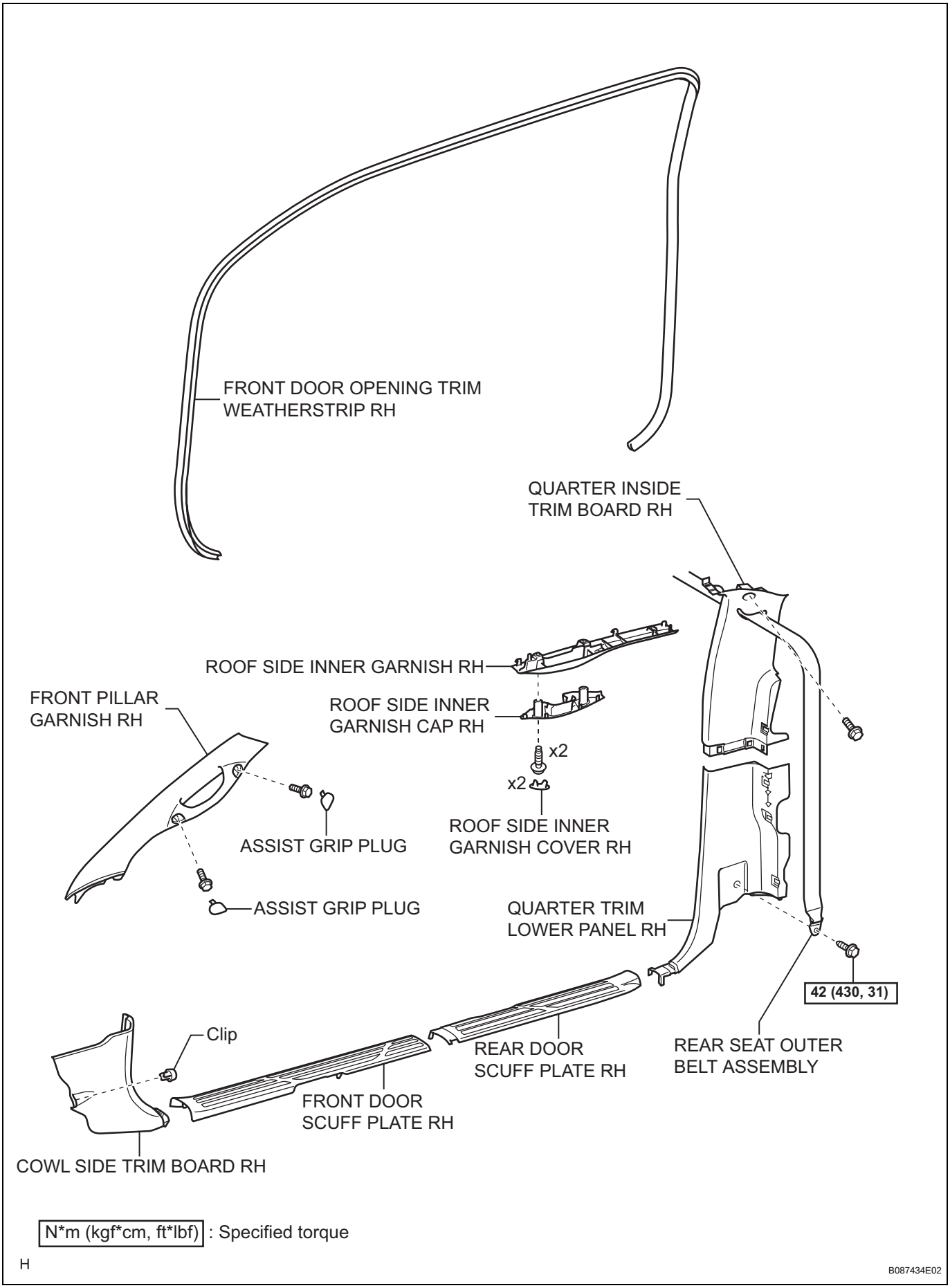

N*m (kgf*cm, ft*lbf) : Specified torque

H

B087434E02

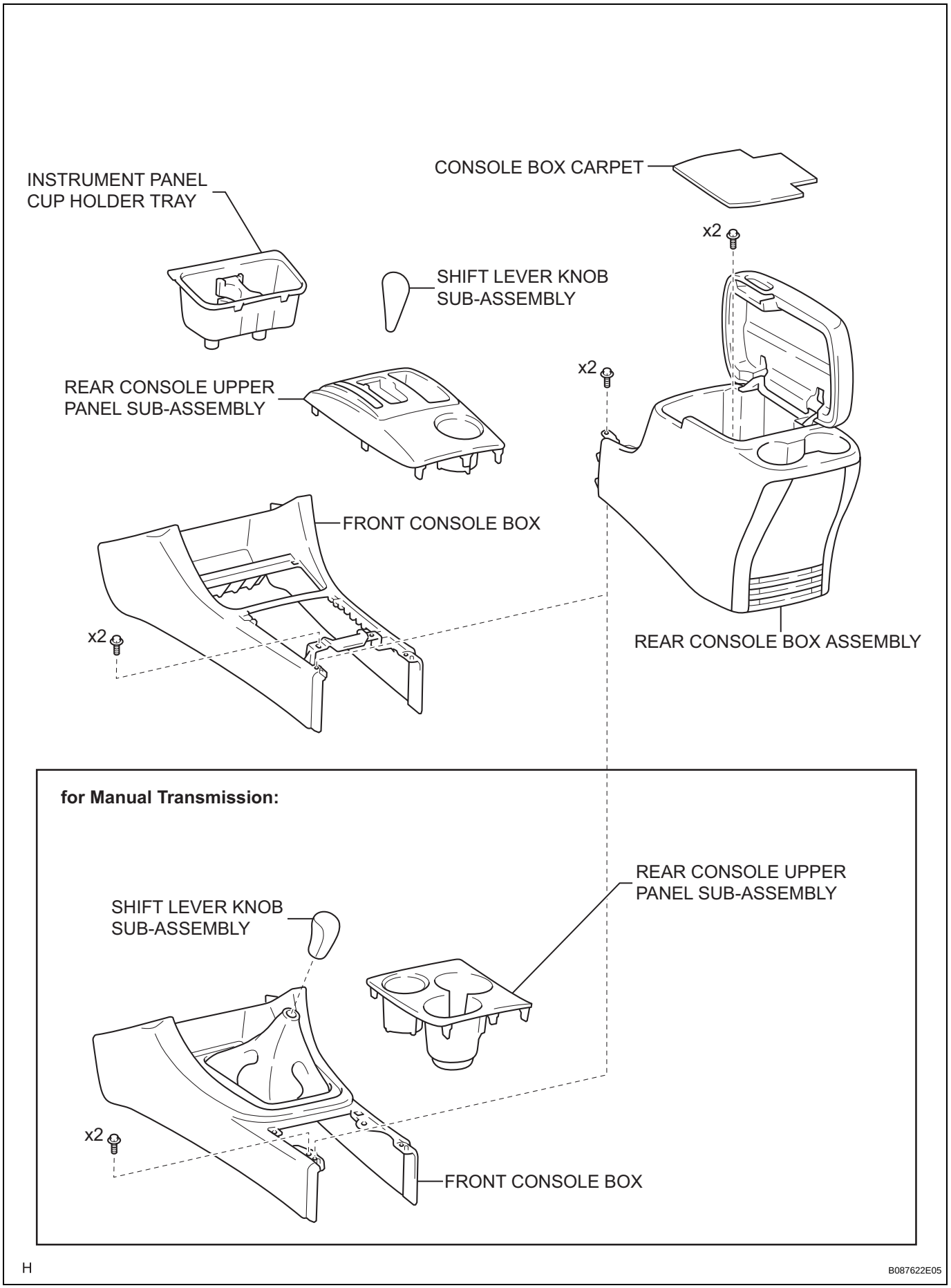
INSTRUMENT PANEL
CUP HOLDER TRAY
CONSOLE BOX CARPET
x2
SHIFT LEVER KNOB
SUB-ASSEMBLY
REAR CONSOLE UPPER
PANEL SUB-ASSEMBLY
x2
FRONT CONSOLE BOX
x2
REAR CONSOLE BOX ASSEMBLY
for Manual Transmission:
SHIFT LEVER KNOB
SUB-ASSEMBLY
REAR CONSOLE UPPER
PANEL SUB-ASSEMBLY
x2
FRONT CONSOLE BOX
H
B087622E05

IR

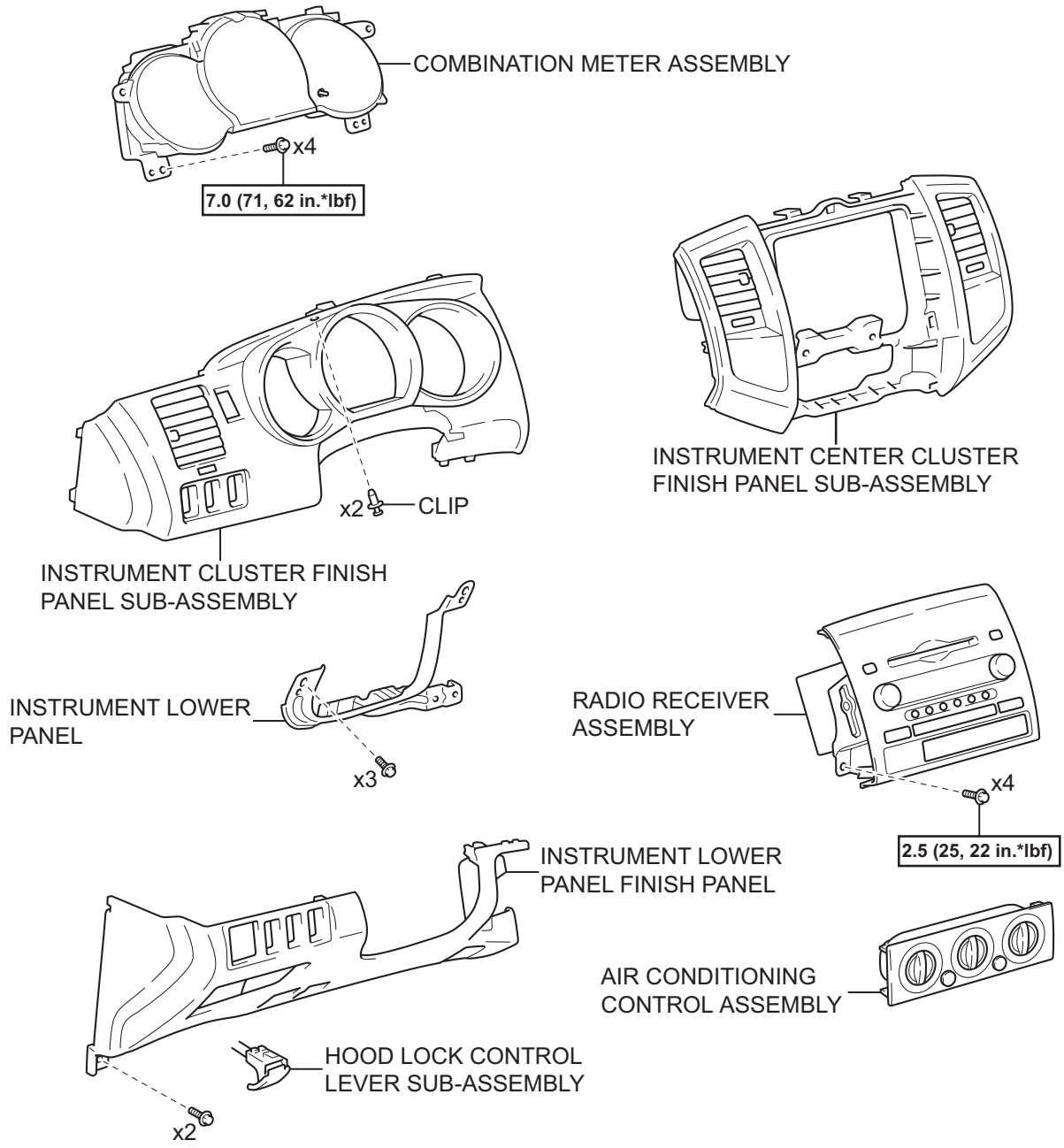

for Pedal Type Parking Brake:	for Lever Type Parking Brake:
INSTRUMENT PANEL UNDER TRAY	INSTRUMENT PANEL HOLE COVER

N*m (kgf*cm, ft*lbf) : Specified torque

B087619E04

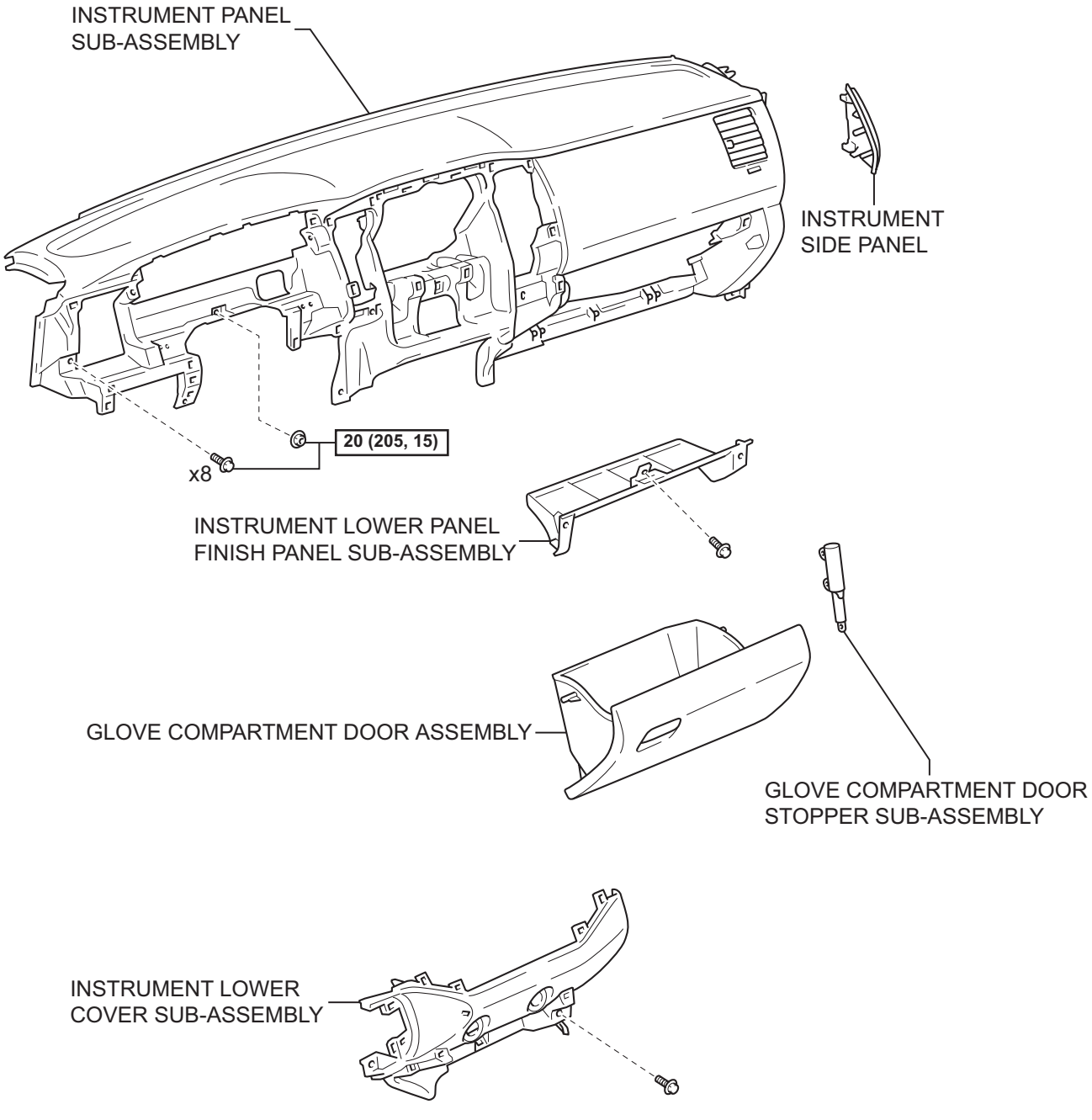

N*m (kgf*cm, ft*lbf) : Specified torque

H

B087620E03

IR

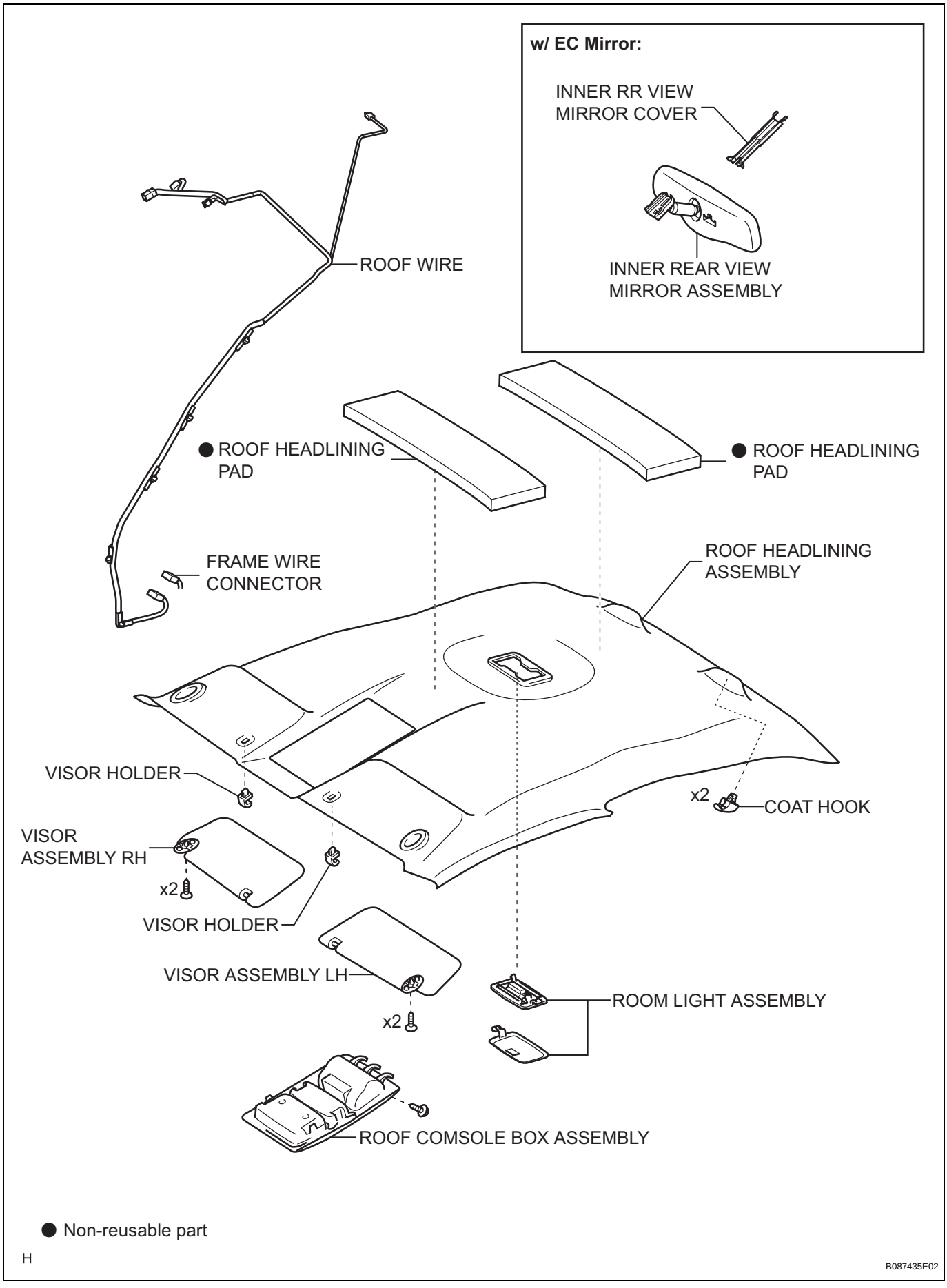

● Non-reusable part

H

B087435E02

IR

CAN COMMUNICATION SYSTEM

PRECAUTION

1. HANDLING PRECAUTIONS ON STEERING SYSTEM

(a) Care must be taken when replacing parts. Incorrect replacement could affect the performance of the steering system and result in hazardous driving.

2. HANDLING PRECAUTIONS ON SRS AIRBAG SYSTEM

(a) This vehicle is equipped with an SRS (Supplemental Restraint System), such as the driver airbag and front passenger airbag. Failure to carry out service operations in the correct sequence could cause the SRS airbag to unexpectedly deploy during servicing, possibly leading to a serious accident. Before servicing (including removal or installation of parts, inspection or replacement), be sure to read the precautionary notice for the SRS (See page RS-1).

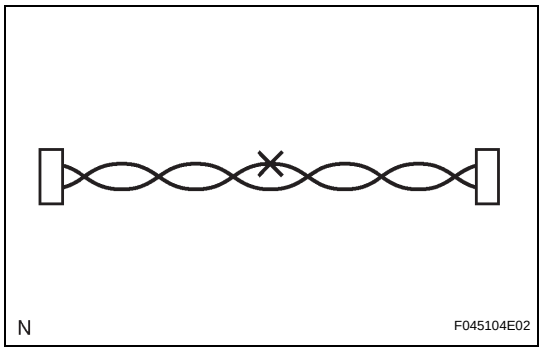

3. WIRE HARNESS REPAIR

(a) After repairing the wire bus line with a solder, wrap the repaired part with vinyl tape.
NOTICE:
- **The CANL bus line and CANH bus line must be installed together all the time. When installing, make sure to twist them.**
- **The difference in length of the CANL bus line and CANH bus line should be within 100 mm (3.93 in.).**
- **Untwisted parts around the connector should be within 80 mm (3.15 in.).**

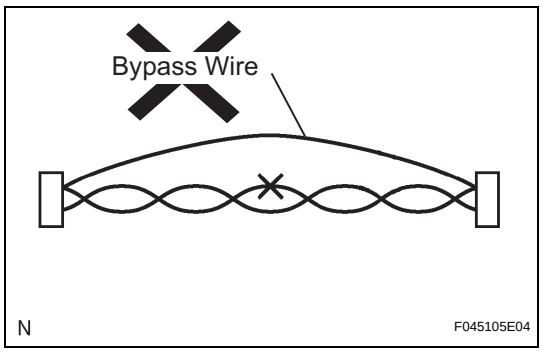

(b) Do not use bypass wiring between the connectors.
NOTICE:
If you use a bypass wire, the characteristic of the twisted wire harness will be lost.

4. CONNECTOR HANDLING

(a) When inserting tester probes into a connector, insert them from the rear of the connector.

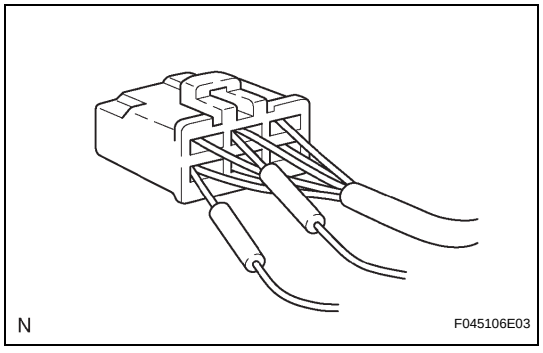

CA

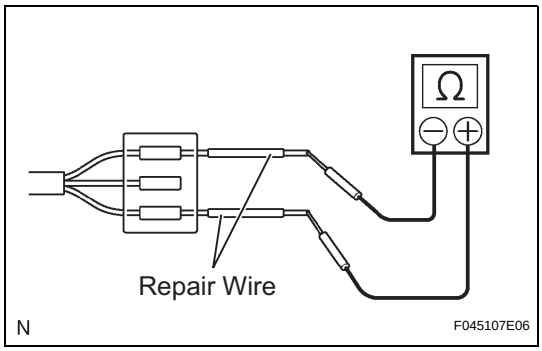

(b) Use a repair wire to check the connector if it is impossible to check continuity from the rear of the connector.